# 2019 Ski-Doo Renegade 600 ACE, 900 ACE & Turbo Series

**If you're on a computer and don't see the clickable index on the left, please see the directions that were sent in the email with the download link, please check your junk mail if you don't see it.**

**This manual is made up of the base manual with all needed supplements organized into one easy to use manual.**

**If you bought this manual from any other seller, they are reselling my work. Please leave them negative feedback & email me at bestshopmanuals@gmail.com, especially if you bought from the eBay user recrepairinfo.**

Our goal is to be one of the BEST sellers on eBay and the internet by providing you with the BEST customer service and the BEST manuals on the market.

Thank you for choosing us.

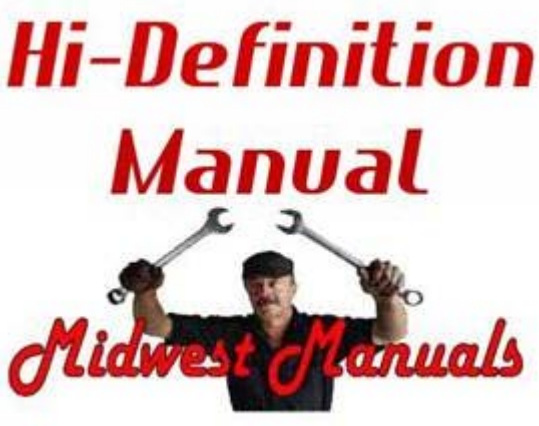

# SAFETY NOTICE

This manual has been prepared as a guide to servicing and repair the Ski-Doo® snowmobile from the REV™ G4 platform.

This edition was primarily published to be used by mechanical technicians who are already familiar with all service procedures relating to BRP products. Mechanical technicians should attend training courses given by BRPTI.

Please note that the instructions in this manual will apply only if proper hand tools and special service tools are used.

The contents of this manual depicts parts and/or procedures applicable to a particular product at the time of writing. Service and warranty bulletins may be published to update the content of this manual. Dealer modifications that were carried out after manufacturing of the product, whether or not authorized by BRP, are not included.

In addition, the sole purpose of the illustrations throughout the manual, is to assist identification of the general configuration of the parts. They are not to be interpreted as technical drawings or exact replicas of the parts.

The use of BRP parts is most strongly recommended when considering replacement of any component. Dealer and/or distributor assistance should be sought in case of doubt.

The engines and the corresponding components identified in this document should not be utilized on product(s) other than those mentioned in this document.

It is understood that certain modifications may render use of the vehicle illegal under existing federal, provincial and state regulations.

This manual emphasizes particular information which, is denoted by the following wording and symbols:

**⚠ WARNING**

Indicates a potential hazard that, if not avoided, could result in serious injury or death.

**⚠ CAUTION** Indicates a hazardous situation which, if not avoided, could result in minor or moderate injury.

***NOTICE*** Indicates an instruction which, if not followed, could result in severe damage to vehicle components or other property.

NOTE: Indicates supplementary information required to fully complete an instruction.

Although the mere reading of such information does not eliminate the hazard, your understanding of the information provided will promote its correct use.

Always observe common shop safety practice.

Unless otherwise noted, the engine must be stopped and the tether cord must be removed prior to perform any services.

Torque wrench tightening specifications must be strictly adhered to. Use the torque values and service products as in the exploded views or in the procedures when noted.

Locking devices when removed must be replaced (e.g.: locking tabs, elastic stop nuts, self-locking fasteners, cotter pins, etc.).

Hoses, cables and locking ties removed during a procedure must be reinstalled as per factory standards.

When ordering parts always refer to the specific model *PARTS CATALOGS*.

We strongly recommend that any services be carried out and/or verified by a highly skilled professional mechanic.

It is understood that this manual may be translated into another language. In the event of any discrepancy, the English version shall prevail.

BRP disclaims liability for all damages and/or injuries resulting from the improper use of the contents of this publication.

# INTRODUCTION

The information and component/system descriptions contained in this manual are correct at time of writing. BRP however, maintains a policy of continuous improvement of its products without imposing upon itself any obligation to install them on products previously manufactured.

Due to late changes, there may be some differences between the manufactured product and the description and/or specifications in this document.

BRP reserves the right at any time to discontinue or change specifications, designs, features, models or equipment without incurring obligation.

## VEHICLE INFORMATION

### VEHICLE IDENTIFICATION NUMBER (VIN)

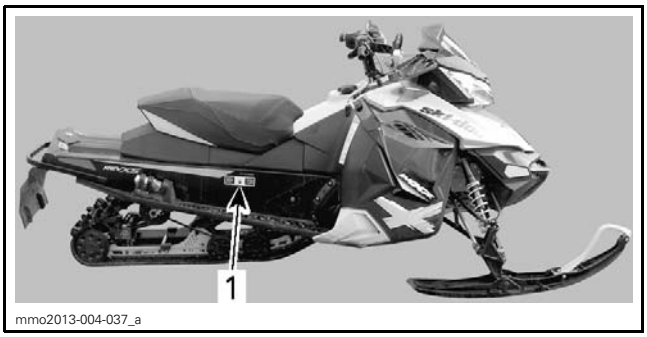


*TYPICAL*
*1. Vehicle identification number*

#### Identification Number Description

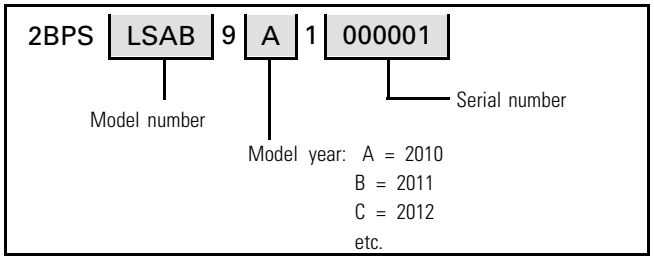


### ENGINE IDENTIFICATION NUMBER (EIN)

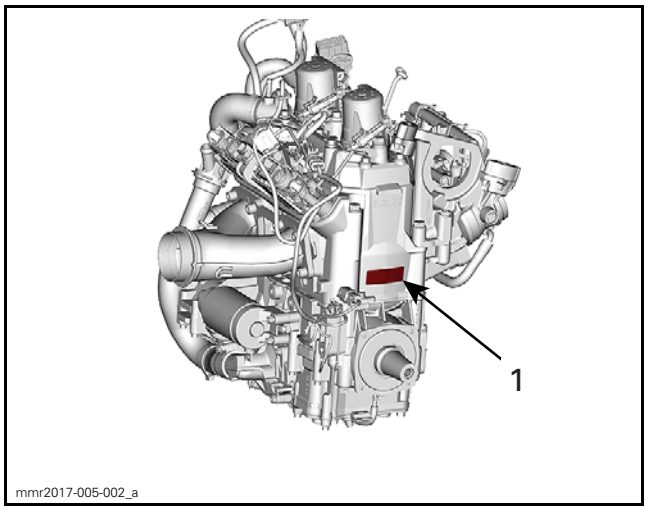


*850 E-TEC*
*1. Engine serial number*

### SNOWMOBILE LIFTING

To lift the snowmobile securely, it is important to place the hooks of the lifting tool into the reinforcement holes of the footrests.

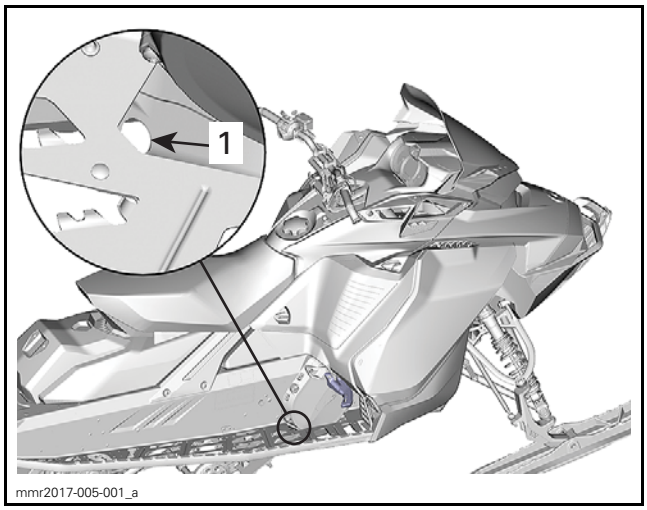


*1. Reinforced holes in footrest*

**NOTICE** Do not use footrest opening or steering column to lift the snowmobile. Frame or steering system could be seriously damaged.

# ENGINE EMISSIONS INFORMATION

## MANUFACTURER'S RESPONSIBILITY

Manufacturers of engines must determine the exhaust emission levels for each engine horsepower family and certify these engines with the United States of America Environmental Protection Agency (EPA). An emissions control information label, showing emission levels and engine specifications, must be placed on each vehicle at the time of manufacture.

## DEALER RESPONSIBILITY

When servicing any vehicle that carry an emissions control information label, adjustments must be kept within published factory specifications.

Replacement or repair of any emission related component must be executed in a manner that maintains emission levels within the prescribed certification standards.

Dealers are not to modify the engine in any manner that would alter the horsepower or allow emission levels to exceed their predetermined factory specifications.

Exceptions include manufacturer's prescribed changes.

## OWNER RESPONSIBILITY

The owner/operator is required to have engine maintenance performed to maintain emission levels within prescribed certification standards.

The owner/operator is not to, and should not allow anyone else to modify the engine in any manner that would alter the horsepower or allow emissions levels to exceed their predetermined factory specifications.

## EMISSION REGULATIONS

The vehicle you are servicing may have been certified to applicable emission regulations in your country or state. Not as an exhaustive list; this may include standards for engine exhaust emissions, crankcase emissions, permeation emissions and evaporative emissions. Servicing procedures in this manual must be strictly followed in order to keep the vehicle within the factory specifications. Failure to follow servicing procedures in this manual may lead a vehicle to be out of compliance with applicable emission regulations.

When servicing any vehicle; adjustments must be kept within published factory specifications. Replacement or repair of any emission related component must be executed in a manner that maintains emission levels within the applicable certification standards. Nobody is allowed to modify the engine in any manner that would alter the horsepower or allow emission levels to exceed their predetermined factory specifications. Exceptions include manufacturer’s prescribed changes.

The owner/operator is required to have engine maintenance performed to maintain emission levels within the prescribed certification standards. The owner/operator is allowed and should not allow anyone else to modify the engine in any manner that would alter the horsepower or allow emissions levels to exceed their predetermined factory specifications.

# MANUAL INFORMATION

## MANUAL PROCEDURES

Many of the procedures in this manual are interrelated. Before undertaking any task, you should read and thoroughly understand the entire section or subsection in which the procedure is contained.

**⚠ WARNING**

**Unless otherwise specified, the engine should be turned OFF and cold for all maintenance and repair procedures.**

A number of procedures throughout the book require the use of special tools. Before starting any procedure, be sure that you have on hand all required tools, or their approved equivalents.

The use of RIGHT and LEFT indications in the text are always referenced to the driving position (sitting on the vehicle).

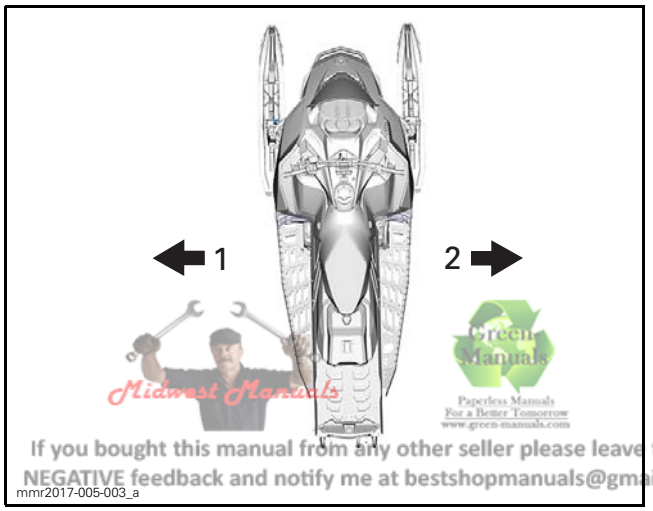


Midwest Manuals
Green Manuals
Paperless Manuals For a Better Tomorrow www.green-manuals.com
If you bought this manual from any other seller please leave them NEGATIVE feedback and notify me at bestshopmanuals@gmail.com

1. *Left*
2. *Right*

This manual uses technical terms which may be different from the ones of the *PARTS CATALOGS*.

When ordering parts always refer to the specific model *PARTS CATALOGS*.

**NOTICE** **Most fasteners are metric, and most components are built with parts dimensioned using the metric system. Consult the appropriate *PARTS CATALOG* to obtain and use the correct parts and fasteners. Mismatched or incorrect fasteners could cause damage to the vehicle.**

## MANUAL LAYOUT

This manual is divided into many major sections as can be seen in the main table of contents at the beginning of the manual.

Each section is divided into various subsections, and again, each subsection has one or more divisions.

Illustrations and photos show the typical construction of various assemblies and, in all cases, may not reproduce the full detail or exact shape of the parts used in a particular model vehicle. However, they represent parts which have the same or a similar function.

## TYPICAL PAGE

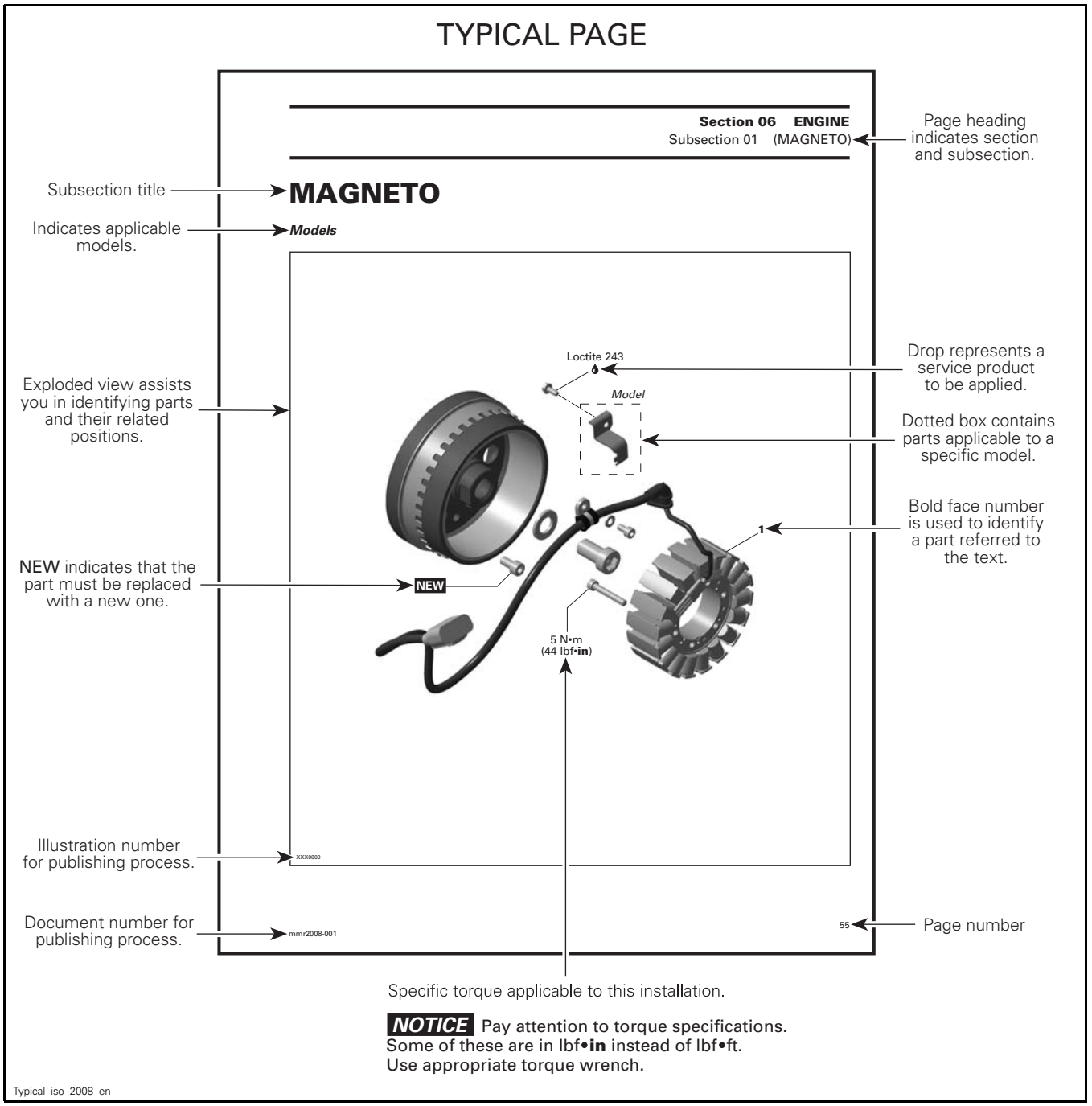


Typical_iso_2008_en

## TYPICAL PAGE



Tittle in bold indicates category of information to be carried out.

### GENERAL

**NOTE:** The following procedures can be done without removing the engine.

During assembly/installation, use the torque values and service products as in the exploded views.

Reference to a specific section or subsection.

Clean threads before applying a threadlocker. Refer to the *SELF-LOCKING FASTENERS* and *LOCTITE APPLICATION* sections at the beginning of this manual for complete procedure.

**⚠ WARNING**

**Torque wrench tightening specifications must be strictly adhered to.**
**Locking devices (e.g.: locking tabs, elastic stop nuts, self-locking fasteners, etc.) must be replaced with new ones.**

### PROCEDURES

Indicates component procedures apply to.

MAGNETO FLYWHEEL

**Magneto Flywheel Cleaning**

Clean all metal components in a non-ferrous metal cleaner.

**CAUTION: Clean magneto flywheel using only a clean cloth.**

Indicates specific procedure to be carried out.

**Magneto Flywheel Removal**

Remove muffler, refer to the *EXHAUST SYSTEM* section.

Remove acoustic panel.

Remove rewind starter.

Remove starting pulley **no. 2**.

Bold face number following part name refers to exploded view at beginning of subsection.

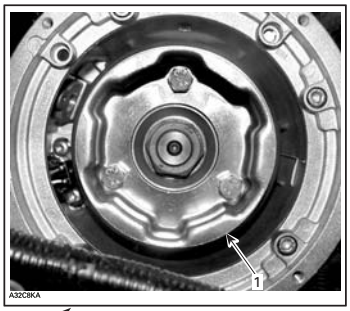


*TYPICAL*
*1. Starting pulley*

"TYPICAL" indicates a general view which may not represent exact details.

Call-outs pertaining to above illustration.

**NOTE:** To remove starting pulley bolts, hold magneto flywheel with a socket as shown.

*TYPICAL*

Illustration always follows text to which it applies.

***Models***

Remove the connecting flange retaining the rewind starter to the engine housing.

Italic bold face typesetting indicates a procedure applicable to a specific model(s).



typical_txt_2008_en

# TIGHTENING TORQUE

Tighten fasteners to the torque specified in the exploded view(s) and/or in the written procedure. When a torque is not specified, refer to the following table.

**⚠ WARNING**

Torque wrench tightening specifications must be strictly adhered to.
Locking devices when removed (e.g.: locking tabs, elastic stop nuts, self-locking fasteners, cotter pins, etc.) must be replaced.

In order to avoid a poor assembly, tighten screws, bolts, or nuts in accordance with the following procedure:

1. Manually screw all screws, bolts and/or nuts.
2. Apply half the recommended torque value.
3. Tighten fastener to the recommended torque value.

***NOTICE*** Be sure to use the recommended tightening torque for the specified fastener used.

NOTE: When possible, always apply torque on the nut.

NOTE: Always torque screws, bolts and/or nuts using a crisscross pattern when multiple fasteners are used to secure a part (eg. a cylinder head). Some parts must be torqued according to a specific sequence and torque pattern as detailed in the installation procedure.

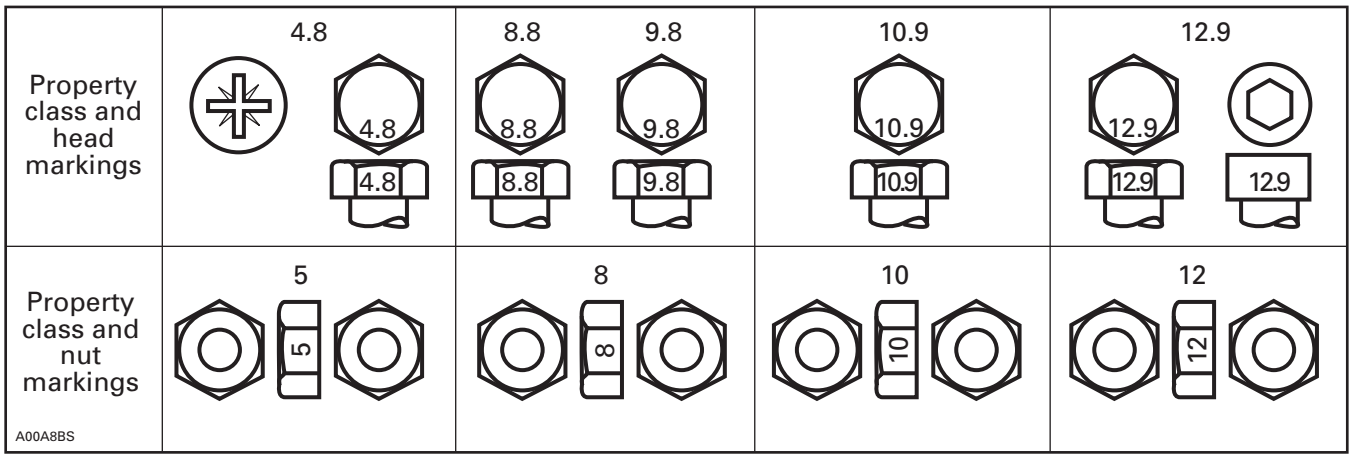


| FASTENER SIZE | FASTENER GRADE/TORQUE | | | |
|---|---|---|---|---|
| | 5.8 Grade | 8.8 Grade | 10.9 Grade | 12.9 Grade |
| M4 | 1.5 – 2 N•m (13 – 18 lbf•**in**) | 2.5 – 3 N•m (22 – 27 lbf•**in**) | 3.5 N•m - 4 N•m (31 lbf•**in** - 35 lbf•**in**) | 4 N•m - 5 N•m (35 lbf•**in** - 44 lbf•**in**) |
| M5 | 3 N•m - 3.5 N•m (27 lbf•**in** - 31 lbf•**in**) | 4.5 N•m - 5.5 N•m (40 lbf•**in** - 49 lbf•**in**) | 7 N•m - 8.5 N•m (62 lbf•**in** - 75 lbf•**in**) | 8 N•m - 10 N•m (71 lbf•**in** - 89 lbf•**in**) |
| M6 | 6.5 N•m - 8.5 N•m (58 lbf•**in** - 75 lbf•**in**) | 8 N•m - 12 N•m (71 lbf•**in** - 106 lbf•**in**) | 10.5 – 15 N•m (93 – 133 lbf•**in**) | 16 N•m (142 lbf•**in**) |
| M8 | 15 N•m (133 lbf•**in**) | 25 N•m (18 lbf•ft) | 32 N•m (24 lbf•ft) | 40 N•m (30 lbf•ft) |
| M10 | 29 N•m (21 lbf•ft) | 48 N•m (35 lbf•ft) | 61 N•m (45 lbf•ft) | 73 N•m (54 lbf•ft) |
| M12 | 52 N•m (38 lbf•ft) | 85 N•m (63 lbf•ft) | 105 N•m (77 lbf•ft) | 128 N•m (94 lbf•ft) |
| M14 | 85 N•m (63 lbf•ft) | 135 N•m (100 lbf•ft) | 170 N•m (125 lbf•ft) | 200 N•m (148 lbf•ft) |

# FASTENER INFORMATION

**NOTICE** Most components in the vehicles are built with parts dimensioned in the metric system. Most fasteners are metric and must not be replaced by customary fasteners or vice-versa. Mismatched or incorrect fasteners could cause damage to the vehicle or possible personal injury.

## SELF-LOCKING FASTENERS PROCEDURE

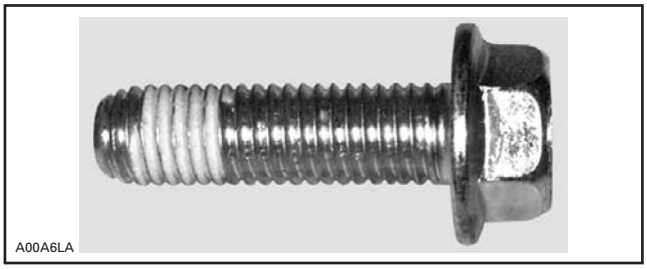


*TYPICAL — SELF-LOCKING FASTENER*

The following describes common procedures used when working with self-locking fasteners.

Use a metal brush or a tap to properly clean a threaded hole, then use a solvent. Allow the solvent time to act, approximately 30 minutes, then wipe off. Solvent utilization is to ensure proper adhesion of the product used for locking the fastener.

## LOCTITE® APPLICATION PROCEDURE

The following describes common procedures used when working with Loctite products.

NOTE: Always use proper strength Loctite product as recommended in this shop manual.

### Threadlocker Application for Uncovered Holes (Bolts and Nuts)

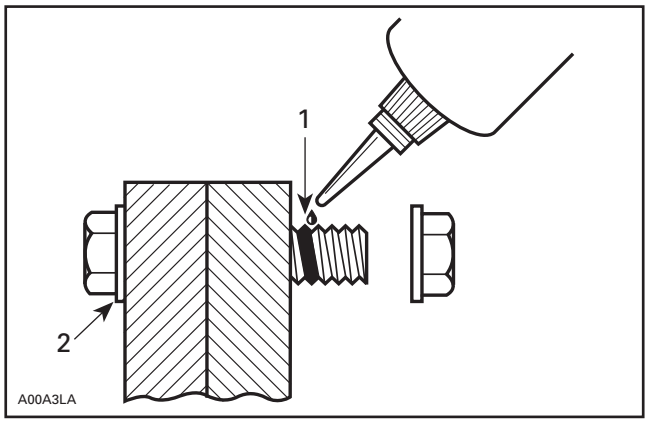


*1. Apply here*
*2. Do not apply*

1. Clean threads (bolt and nut) with solvent.
2. Apply LOCTITE 7649 (PRIMER) (P/N 293 800 041) on threads and allow to dry.
3. Choose proper strength Loctite threadlocker.
4. Fit bolt in the hole.
5. Apply a few drops of threadlocker at proposed tightened nut engagement area.
6. Position nut and tighten as required.

### Threadlocker Application for Blind Holes

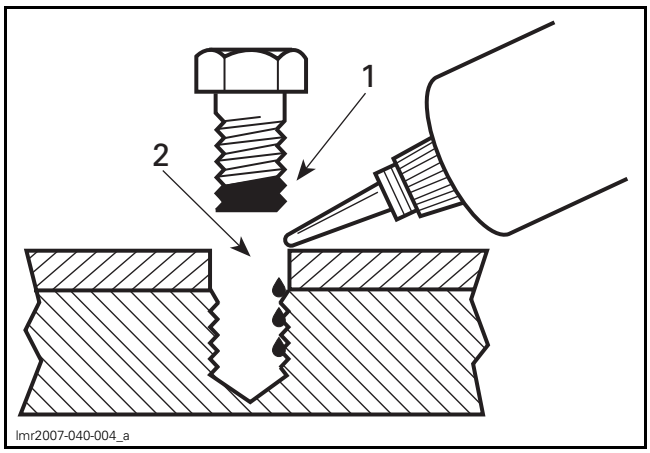


*1. On fastener threads*
*2. On threads and at the bottom of hole*

1. Clean threads (bolt and hole) with solvent.
2. Apply LOCTITE 7649 (PRIMER) (P/N 293 800 041) on threads (bolt and nut) and allow to dry for 30 seconds.
3. Choose proper strength Loctite threadlocker.

4. Apply several drops along the threaded hole and at the bottom of the hole.
5. Apply several drops on bolt threads.
6. Tighten as required.

## Threadlocker Application for Stud Installation in Blind Holes

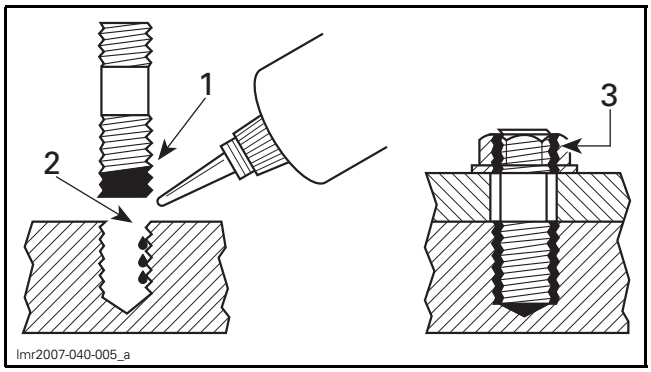


*1. On stud threads*
*2. On threads and in the hole*
*3. On retaining nut threads*

1. Clean threads (stud and hole) with solvent.
2. Apply LOCTITE 7649 (PRIMER) (P/N 293 800 041) on threads and allow to dry.
3. Put 2 or 3 drops of proper strength Loctite threadlocker on female threads and in hole.

NOTE: To avoid a hydro lock situation, do not apply too much Loctite.

4. Apply several drops of proper strength Loctite on stud threads.
5. Install stud.
6. Install cover, part, etc.
7. Apply a few drops of proper strength Loctite on uncovered stud threads.
8. Install and tighten retaining nut(s) as required.

## Threadlocker Application for Pre-Assembled Parts

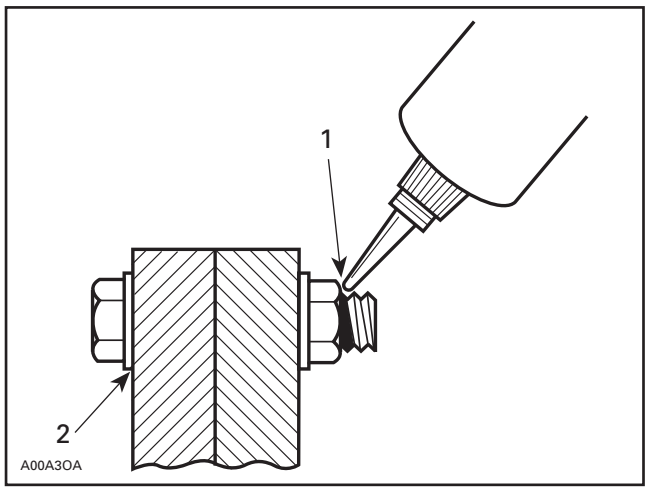


*1. Apply here*
*2. Do not apply*

1. Clean bolts and nuts with solvent.
2. Assemble components.
3. Tighten nuts.
4. Apply a few drops of proper strength Loctite on bolt/nut contact surfaces.
5. Avoid touching metal with tip of flask.

NOTE: For preventive maintenance on existing equipment, retighten nuts and apply proper strength Loctite on bolt/nut contact surfaces.

## Threadlocker Application for an Adjustment Screw

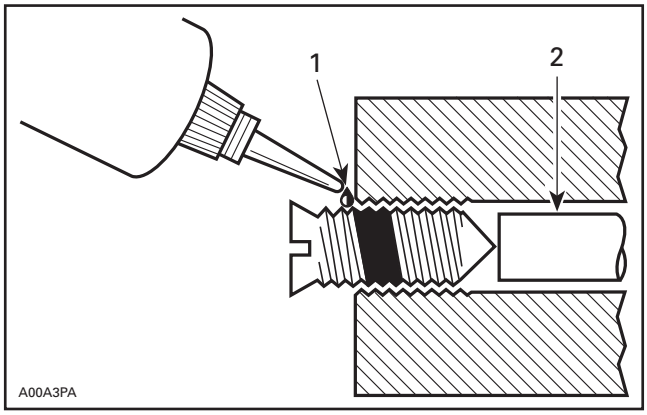


*1. Apply here*
*2. Plunger*

1. Adjust screw to proper setting.
2. Apply a few drops of proper strength Loctite threadlocker on screw/body contact surfaces.
3. Avoid touching metal with tip of flask.

NOTE: If it is difficult to readjust, heat screw with a soldering iron (232°C (450°F)).

## Application for Stripped Thread Repair

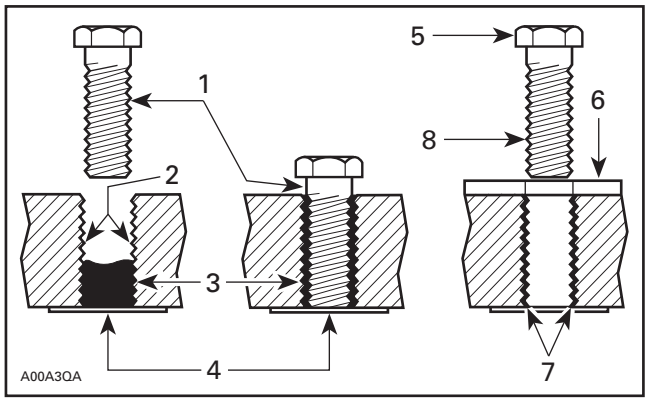


1. *Release agent*
2. *Stripped threads*
3. *Form-A-Thread*
4. *Tapes*
5. *Cleaned bolt*
6. *Plate*
7. *New threads*
8. *Threadlocker*

### Standard Thread Repair

Follow instructions on Loctite FORM-A-THREAD 81668 package.

If a plate is used to align bolt:

1. Apply release agent on mating surfaces.
2. Put waxed paper or similar film on the surfaces.
3. Twist bolt when inserting it to improve thread conformation.

NOTE: NOT intended for engine stud repairs.

### Repair of Small Holes/Fine Threads

Option 1: Enlarge damaged hole, then follow *STANDARD THREAD REPAIR* procedure.

Option 2: Apply FORM-A-THREAD on the screw and insert in damaged hole.

### Permanent Stud Installation (Light Duty)

1. Use a stud of the desired thread length.
2. DO NOT apply release agent on stud.
3. Follow Standard Thread Repair procedure.
4. Allow 30 minutes for Loctite FORM-A-THREAD to cure.
5. Complete part assembly.

## Gasket Compound Application

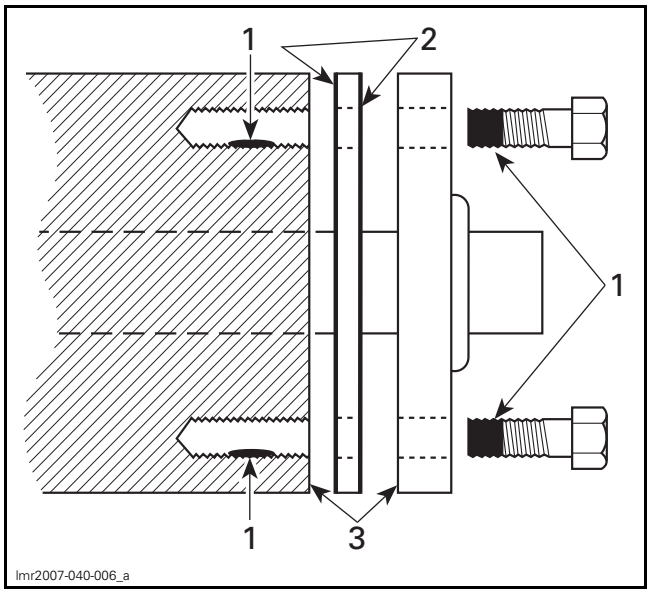


1. *Proper strength Loctite*
2. *Loctite Primer N (P/N 293 800 041) and Gasket Eliminator 518 (P/N 293 800 038) on both sides of gasket*
3. *Loctite Primer N only*

1. Remove old gasket and other contaminants using LOCTITE CHISEL (GASKET REMOVER) (P/N 413 708 500). Use a mechanical means only if necessary.

NOTE: Avoid grinding.

2. Clean both mating surfaces with solvent.
3. Spray Loctite Primer N on both mating surfaces and on both sides of gasket and allow to dry 1 or 2 minutes.
4. Apply LOCTITE 518 (P/N 293 800 038) on both sides of gasket, using a clean applicator.
5. Place gasket on mating surfaces and assemble parts immediately.

NOTE: If the cover is bolted to blind holes, apply proper strength Loctite in the hole and on threads. Tighten fastener.

If holes are sunken, apply proper strength Loctite on bolt threads.

6. Tighten as usual.

## Threadlocker Application for Mounting on a Shaft

### Mounting with a Press

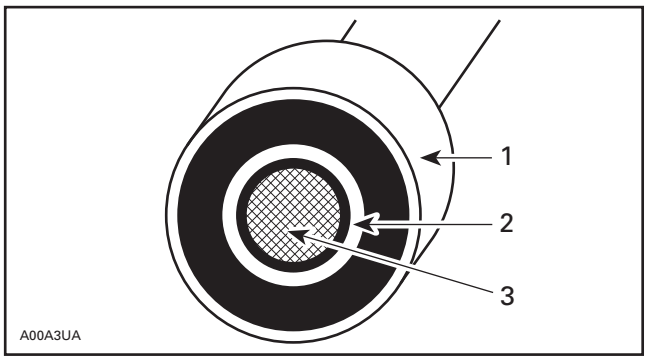


*1. Bearing*
*2. Proper strength Loctite*
*3. Shaft*

1. Clean shaft external contact surface.
2. Clean internal contact surface of part to be installed on shaft.
3. Apply a strip of proper strength Loctite on circumference of shaft contact surface at insertion or engagement point.

NOTE: Retaining compound is always forced out when applied on shaft.

4. DO NOT use antiseize Loctite or any similar product.
5. No curing period is required.

### Mounting in Tandem

1. Apply retaining compound on internal contact surface (bore) of parts to be installed.
2. Continue parts assembly as per previous illustration.

## Threadlocker Application for Case-In Components (Metallic Gaskets)

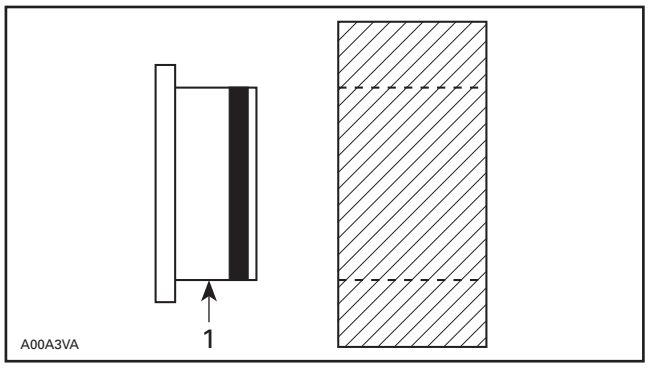


*1. Proper strength Loctite*

1. Clean inner housing diameter and outer gasket diameter.
2. Spray housing and gasket with LOCTITE 7649 (PRIMER) (P/N 293 800 041).
3. Apply a strip of proper strength Loctite on leading edge of outer metallic gasket diameter.

NOTE: Any Loctite product can be used here. A low strength liquid is recommended as normal strength and gap are required.

4. Install according to standard procedure.
5. Wipe off excess product.
6. Allow 30 minutes for product to cure.

NOTE: Normally used on worn-out housings to prevent leaking or sliding.

It is generally not necessary to remove gasket compound applied on outer gasket diameter.

# SAFETY NOTICE

This manual has been prepared as a guide to servicing and repair the Ski-Doo® snowmobile from the REV™ Gen4 platform.

This edition was primarily published to be used by mechanical technicians who are already familiar with all service procedures relating to BRP products. Mechanical technicians should attend training courses given by BRPTI.

Please note that the instructions in this manual will apply only if proper hand tools and special service tools are used.

The contents of this manual depicts parts and/or procedures applicable to a particular product at the time of writing. Service and warranty bulletins may be published to update the content of this manual. Dealer modifications that were carried out after manufacturing of the product, whether or not authorized by BRP, are not included.

In addition, the sole purpose of the illustrations throughout the manual, is to assist identification of the general configuration of the parts. They are not to be interpreted as technical drawings or exact replicas of the parts.

The use of BRP parts is most strongly recommended when considering replacement of any component. Dealer and/or distributor assistance should be sought in case of doubt.

The engines and the corresponding components identified in this document should not be utilized on product(s) other than those mentioned in this document.

It is understood that certain modifications may render use of the vehicle illegal under existing federal, provincial and state regulations.

This manual emphasizes particular information which, is denoted by the following wording and symbols:

**⚠ WARNING**

Indicates a potential hazard that, if not avoided, could result in serious injury or death.

**⚠ CAUTION** Indicates a hazardous situation which, if not avoided, could result in minor or moderate injury.

***NOTICE*** Indicates an instruction which, if not followed, could result in severe damage to vehicle components or other property.

NOTE: Indicates supplementary information required to fully complete an instruction.

Although the mere reading of such information does not eliminate the hazard, your understanding of the information provided will promote its correct use.

Always observe common shop safety practice.

Unless otherwise noted, the engine must be stopped and the tether cord must be removed prior to perform any services.

Torque wrench tightening specifications must be strictly adhered to. Use the torque values and service products as in the exploded views or in the procedures when noted.

Locking devices when removed must be replaced (e.g.: locking tabs, elastic stop nuts, self-locking fasteners, cotter pins, etc.).

Hoses, cables and locking ties removed during a procedure must be reinstalled as per factory standards.

When ordering parts always refer to the specific model *PARTS CATALOGS*.

We strongly recommend that any services be carried out and/or verified by a highly skilled professional mechanic.

It is understood that this manual may be translated into another language. In the event of any discrepancy, the English version shall prevail.

BRP disclaims liability for all damages and/or injuries resulting from the improper use of the contents of this publication.

## IMPORTANT SAFETY PRECAUTIONS

We do not provide warnings about many basic shop safety practices (e.g.: Use Grinding Wheel – wear safety glasses). If you have not received shop safety training or do not feel confident about your knowledge of safe servicing practices, we recommend that you do not attempt to perform the procedures described in BRP shop manuals.

You should have a clear understanding of all basic shop safety practices. You should be wearing the appropriate clothing, using appropriate safety

equipment and taking all necessary safety precautions. Please be especially careful of the following:

- Read and understand all instructions before you begin a procedure or repair.
- Ensure you have the proper tools, any necessary replacement parts and the skills to perform the tasks safely and completely.
- Protect your eyes by using approved and properly fitted safety glasses.
- Use other protective wear when necessary, for example safety shoes and gloves.
- Unless the service procedure requires that the engine remain running, make sure the engine is off **before** beginning service.
- Be sure there is adequate ventilation whenever you run the engine, to avoid the risk of Carbon Monoxide poisoning.
- To avoid injury from moving parts, make sure your hands, fingers and clothing are out of the way when the engine is running.
- Gasoline vapors and hydrogen gases from batteries are explosive. Keep all cigarettes, sparks and flames away from the battery, fuel-related components and other enclosed compartments.
- Never use gasoline to clean parts, always use an approved nonflammable solvent.
- Never drain or store gasoline in an open container.

**⚠ WARNING**

**The foregoing list represents general safety practices. For details on workplace health and safety requirements in your area, consult your local workplace health and safety agency or association.**

We have provided you with some of the most important general service safety precautions, above. We cannot, however, warn you of every conceivable hazard that can arise in performing the service and repair procedures depicted in BRP manuals. Only you can decide whether or not you should perform a given task.

# INTRODUCTION

The information and component/system descriptions contained in this manual are correct at time of writing. BRP however, maintains a policy of continuous improvement of its products without imposing upon itself any obligation to install them on products previously manufactured.

Due to late changes, there may be some differences between the manufactured product and the description and/or specifications in this document.

BRP reserves the right at any time to discontinue or change specifications, designs, features, models or equipment without incurring obligation.

## VEHICLE INFORMATION

### VEHICLE IDENTIFICATION NUMBER (VIN)

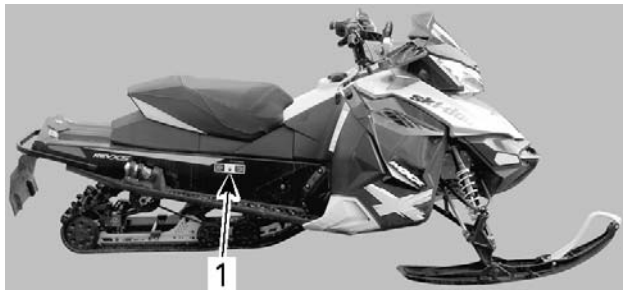


*TYPICAL*
*1. Vehicle identification number*

#### Identification Number Description

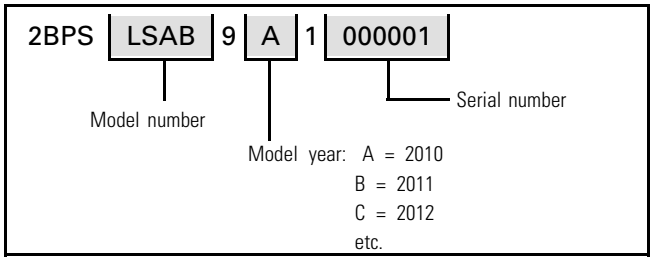


### ENGINE IDENTIFICATION NUMBER (EIN)

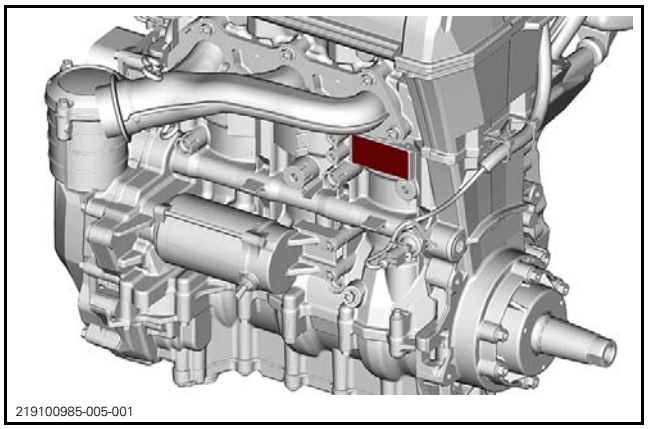


*900 ACE*

### SNOWMOBILE LIFTING

To lift the snowmobile securely, it is important to place the hooks of the lifting tool into the reinforcement holes of the footrests.

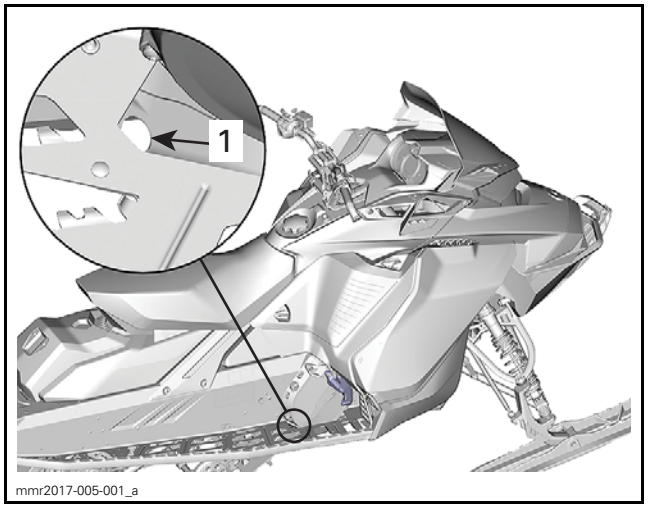


*1. Reinforced holes in footrest*

**NOTICE** Do not use footrest opening or steering column to lift the snowmobile. Frame or steering system could be seriously damaged.

# ENGINE EMISSIONS INFORMATION

## MANUFACTURER'S RESPONSIBILITY

Manufacturers of engines must determine the exhaust emission levels for each engine horsepower family and certify these engines with the United States of America Environmental Protection Agency (EPA). An emissions control information label, showing emission levels and engine specifications, must be placed on each vehicle at the time of manufacture.

## DEALER RESPONSIBILITY

When servicing any vehicle that carry an emissions control information label, adjustments must be kept within published factory specifications.

Replacement or repair of any emission related component must be executed in a manner that maintains emission levels within the prescribed certification standards.

Dealers are not to modify the engine in any manner that would alter the horsepower or allow emission levels to exceed their predetermined factory specifications.

Exceptions include manufacturer's prescribed changes.

## OWNER RESPONSIBILITY

The owner/operator is required to have engine maintenance performed to maintain emission levels within prescribed certification standards.

The owner/operator is not to, and should not allow anyone else to modify the engine in any manner that would alter the horsepower or allow emissions levels to exceed their predetermined factory specifications.

## EMISSION REGULATIONS

The vehicle you are servicing may have been certified to applicable emission regulations in your country or state. Not as an exhaustive list; this may include standards for engine exhaust emissions, crankcase emissions, permeation emissions and evaporative emissions. Servicing procedures in this manual must be strictly followed in order to keep the vehicle within the factory specifications. Failure to follow servicing procedures in this manual may lead a vehicle to be out of compliance with applicable emission regulations.

When servicing any vehicle; adjustments must be kept within published factory specifications. Replacement or repair of any emission related component must be executed in a manner that maintains emission levels within the applicable certification standards. Nobody is allowed to modify the engine in any manner that would alter the horsepower or allow emission levels to exceed their predetermined factory specifications. Exceptions include manufacturer’s prescribed changes.

The owner/operator is required to have engine maintenance performed to maintain emission levels within the prescribed certification standards. The owner/operator is allowed and should not allow anyone else to modify the engine in any manner that would alter the horsepower or allow emissions levels to exceed their predetermined factory specifications.

# MANUAL INFORMATION

## MANUAL PROCEDURES

Many of the procedures in this manual are interrelated. Before undertaking any task, you should read and thoroughly understand the entire section or subsection in which the procedure is contained.

**⚠ WARNING**

**Unless otherwise specified, the engine should be turned OFF and cold for all maintenance and repair procedures.**

A number of procedures throughout the book require the use of special tools. Before starting any procedure, be sure that you have on hand all required tools, or their approved equivalents.

The use of RIGHT and LEFT indications in the text are always referenced to the driving position (sitting on the vehicle).

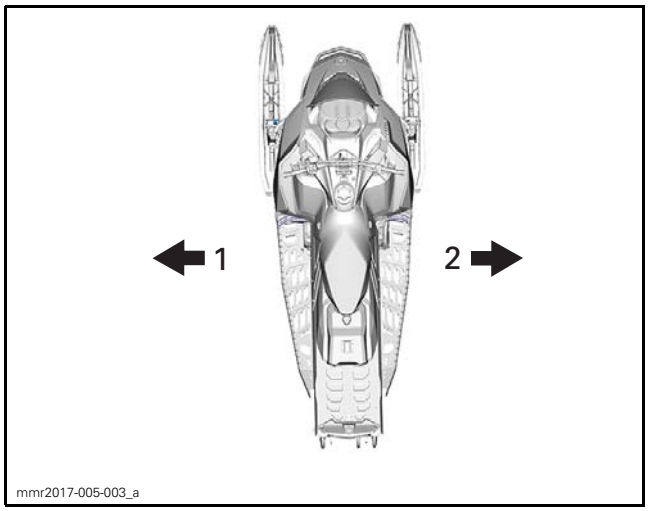


*1. Left*
*2. Right*

This manual uses technical terms which may be different from the ones of the *PARTS CATALOGS*.

When ordering parts always refer to the specific model *PARTS CATALOGS*.

**NOTICE** Most fasteners are metric, and most components are built with parts dimensioned using the metric system. Consult the appropriate *PARTS CATALOG* to obtain and use the correct parts and fasteners. Mismatched or incorrect fasteners could cause damage to the vehicle.

## MANUAL LAYOUT

This manual is divided into many major sections as can be seen in the main table of contents at the beginning of the manual.

Each section is divided into various subsections, and again, each subsection has one or more divisions.

Illustrations and photos show the typical construction of various assemblies and, in all cases, may not reproduce the full detail or exact shape of the parts used in a particular model vehicle. However, they represent parts which have the same or a similar function.

## TYPICAL PAGE

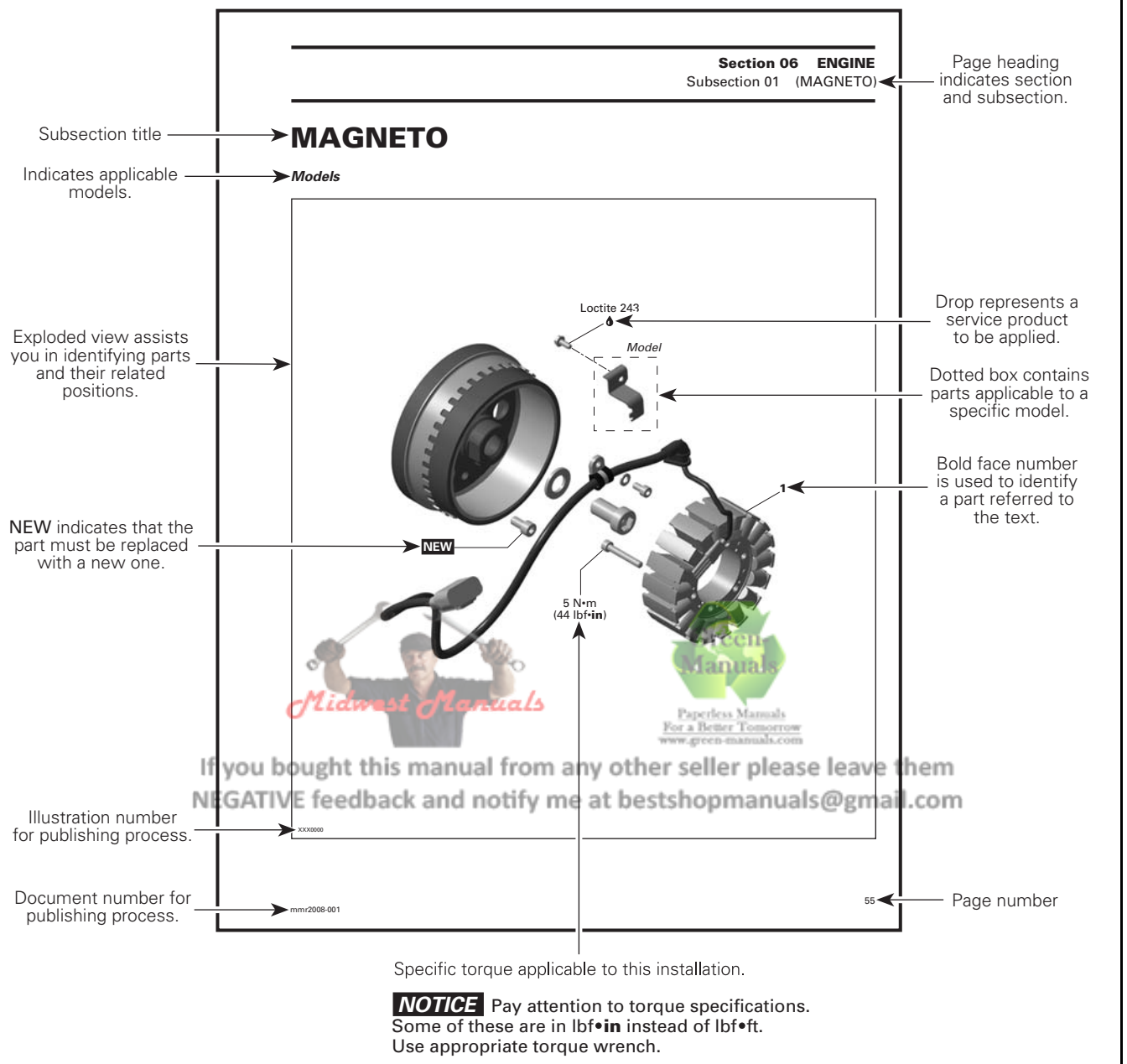


Midwest Manuals
Green Manuals
Paperless Manuals
For a Better Tomorrow
www.green-manuals.com
If you bought this manual from any other seller please leave them
NEGATIVE feedback and notify me at bestshopmanuals@gmail.com

# TYPICAL PAGE



Tittle in bold indicates category of information to be carried out.

## GENERAL

**NOTE:** The following procedures can be done without removing the engine.

During assembly/installation, use the torque values and service products as in the exploded views.

Clean threads before applying a threadlocker. Refer to *SELF-LOCKING FASTENERS* and *LOCTITE APPLICATION* sections at the beginning of this manual for complete procedure.

Reference to a specific section or subsection.

**⚠ WARNING**

**Torque wrench tightening specifications must be strictly adhered to.**
**Locking devices (e.g.: locking tabs, elastic stop nuts, self-locking fasteners, etc.) must be replaced with new ones.**

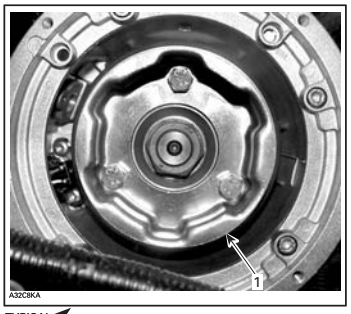


*TYPICAL*
*1. Starting pulley*

"TYPICAL" indicates a general view which may not represent exact details.

Call-outs pertaining to above illustration.

## PROCEDURES

Indicates component procedures apply to.

### MAGNETO FLYWHEEL

#### Magneto Flywheel Cleaning

Clean all metal components in a non-ferrous metal cleaner.

**CAUTION: Clean magneto flywheel using only a clean cloth.**

Indicates specific procedure to be carried out.

#### Magneto Flywheel Removal

Remove muffler, refer to the *EXHAUST SYSTEM* section.

Remove acoustic panel.

Remove rewind starter.

Remove starting pulley **no. 2**.

**NOTE:** To remove starting pulley bolts, hold magneto flywheel with a socket as shown.

*TYPICAL*

Illustration always follows text to which it applies.

***Models***

Remove the connecting flange retaining the rewind starter to the engine housing.

Italic bold face typesetting indicates a procedure applicable to a specific model(s).



Bold face number following part name refers to exploded view at beginning of subsection.

typical_txt_2008_en

# TIGHTENING TORQUE

Tighten fasteners to the torque specified in the exploded view(s) and/or in the written procedure. When a torque is not specified, refer to the following table.

**⚠ WARNING**

**Torque wrench tightening specifications must be strictly adhered to.**
**Locking devices when removed (e.g.: locking tabs, elastic stop nuts, self-locking fasteners, cotter pins, etc.) must be replaced.**

In order to avoid a poor assembly, tighten screws, bolts, or nuts in accordance with the following procedure:

1. Manually screw all screws, bolts and/or nuts.
2. Apply half the recommended torque value.
3. Tighten fastener to the recommended torque value.

***NOTICE*** **Be sure to use the recommended tightening torque for the specified fastener used.**

NOTE: When possible, always apply torque on the nut.

NOTE: Always torque screws, bolts and/or nuts using a crisscross pattern when multiple fasteners are used to secure a part (eg. a cylinder head). Some parts must be torqued according to a specific sequence and torque pattern as detailed in the installation procedure.

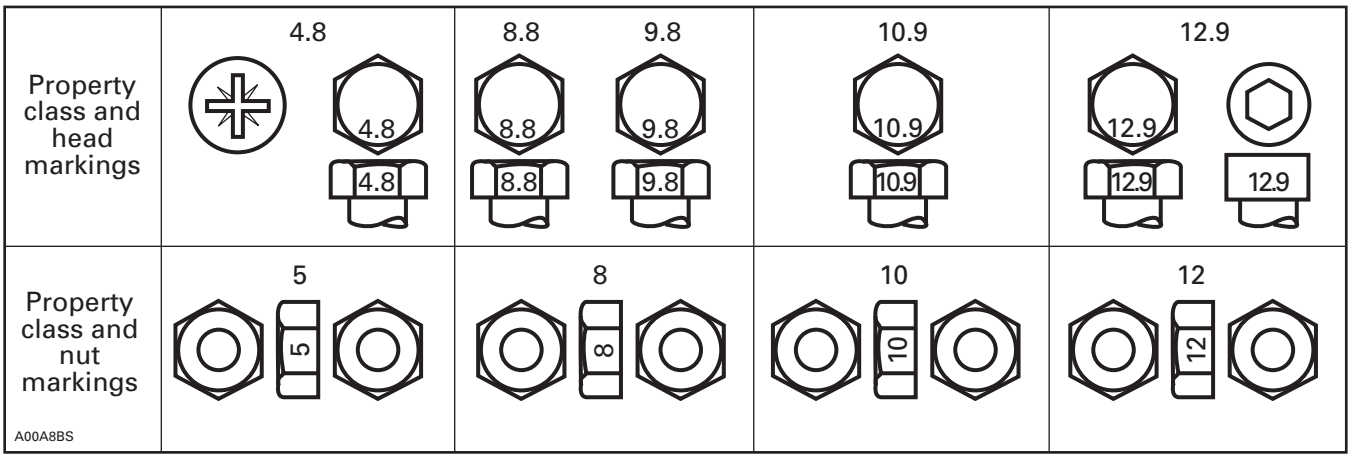


| FASTENER SIZE | FASTENER GRADE/TORQUE | | | |
|---|---|---|---|---|
| | 5.8 Grade | 8.8 Grade | 10.9 Grade | 12.9 Grade |
| M4 | 1.5 – 2 N•m (13 – 18 lbf•**in**) | 2.5 – 3 N•m (22 – 27 lbf•**in**) | 3.5 N•m - 4 N•m (31 lbf•**in** - 35 lbf•**in**) | 4 N•m - 5 N•m (35 lbf•**in** - 44 lbf•**in**) |
| M5 | 3 N•m - 3.5 N•m (27 lbf•**in** - 31 lbf•**in**) | 4.5 N•m - 5.5 N•m (40 lbf•**in** - 49 lbf•**in**) | 7 N•m - 8.5 N•m (62 lbf•**in** - 75 lbf•**in**) | 8 N•m - 10 N•m (71 lbf•**in** - 89 lbf•**in**) |
| M6 | 6.5 N•m - 8.5 N•m (58 lbf•**in** - 75 lbf•**in**) | 8 N•m - 12 N•m (71 lbf•**in** - 106 lbf•**in**) | 10.5 – 15 N•m (93 – 133 lbf•**in**) | 16 N•m (142 lbf•**in**) |
| M8 | 15 N•m (133 lbf•**in**) | 25 N•m (18 lbf•ft) | 32 N•m (24 lbf•ft) | 40 N•m (30 lbf•ft) |
| M10 | 29 N•m (21 lbf•ft) | 48 N•m (35 lbf•ft) | 61 N•m (45 lbf•ft) | 73 N•m (54 lbf•ft) |
| M12 | 52 N•m (38 lbf•ft) | 85 N•m (63 lbf•ft) | 105 N•m (77 lbf•ft) | 128 N•m (94 lbf•ft) |
| M14 | 85 N•m (63 lbf•ft) | 135 N•m (100 lbf•ft) | 170 N•m (125 lbf•ft) | 200 N•m (148 lbf•ft) |

# FASTENER INFORMATION

**NOTICE** Most components in the vehicles are built with parts dimensioned in the metric system. Most fasteners are metric and must not be replaced by customary fasteners or vice-versa. Mismatched or incorrect fasteners could cause damage to the vehicle or possible personal injury.

## SELF-LOCKING FASTENERS PROCEDURE

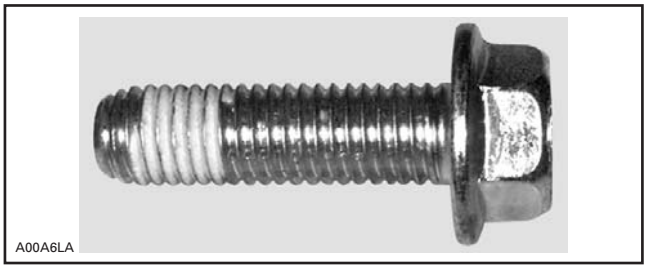


*TYPICAL — SELF-LOCKING FASTENER*

The following describes common procedures used when working with self-locking fasteners.

Use a metal brush or a tap to properly clean a threaded hole, then use a solvent. Allow the solvent time to act, approximately 30 minutes, then wipe off. Solvent utilization is to ensure proper adhesion of the product used for locking the fastener.

## LOCTITE® APPLICATION PROCEDURE

The following describes common procedures used when working with Loctite products.

NOTE: Always use proper strength Loctite product as recommended in this shop manual.

### Threadlocker Application for Uncovered Holes (Bolts and Nuts)

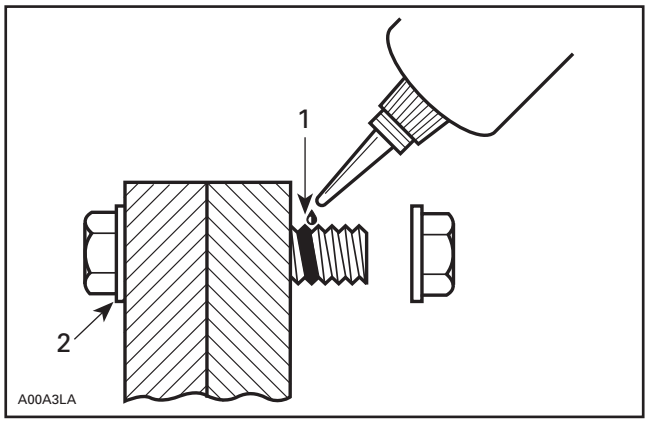


*1. Apply here*
*2. Do not apply*

1. Clean threads (bolt and nut) with solvent.
2. Apply LOCTITE 7649 (PRIMER) (P/N 293 800 041) on threads and allow to dry.
3. Choose proper strength Loctite threadlocker.
4. Fit bolt in the hole.
5. Apply a few drops of threadlocker at proposed tightened nut engagement area.
6. Position nut and tighten as required.

### Threadlocker Application for Blind Holes

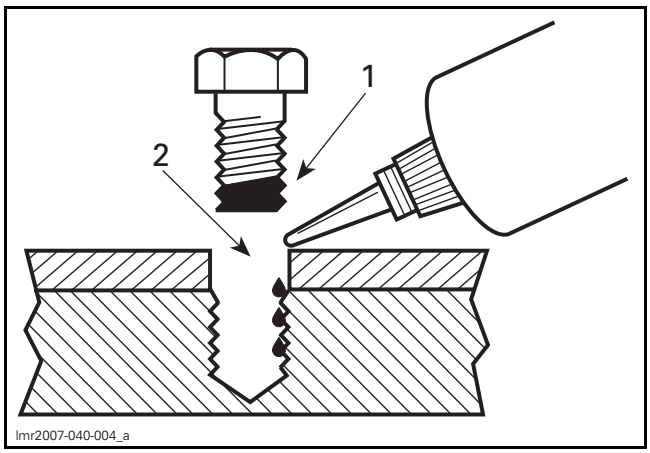


*1. On fastener threads*
*2. On threads and at the bottom of hole*

1. Clean threads (bolt and hole) with solvent.
2. Apply LOCTITE 7649 (PRIMER) (P/N 293 800 041) on threads (bolt and nut) and allow to dry for 30 seconds.
3. Choose proper strength Loctite threadlocker.

4. Apply several drops along the threaded hole and at the bottom of the hole.
5. Apply several drops on bolt threads.
6. Tighten as required.

## Threadlocker Application for Stud Installation in Blind Holes

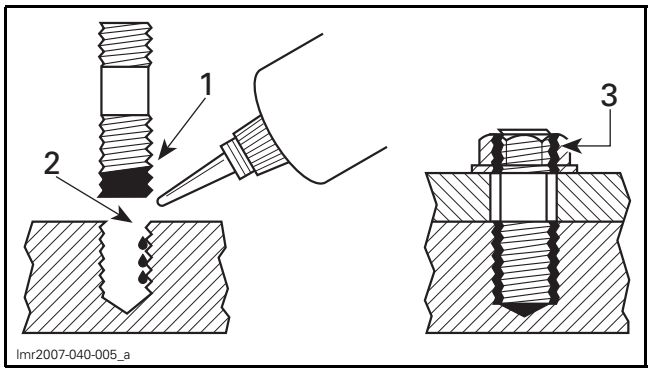


*1. On stud threads*
*2. On threads and in the hole*
*3. On retaining nut threads*

1. Clean threads (stud and hole) with solvent.
2. Apply LOCTITE 7649 (PRIMER) (P/N 293 800 041) on threads and allow to dry.
3. Put 2 or 3 drops of proper strength Loctite threadlocker on female threads and in hole.

NOTE: To avoid a hydro lock situation, do not apply too much Loctite.

4. Apply several drops of proper strength Loctite on stud threads.
5. Install stud.
6. Install cover, part, etc.
7. Apply a few drops of proper strength Loctite on uncovered stud threads.
8. Install and tighten retaining nut(s) as required.

## Threadlocker Application for Pre-Assembled Parts

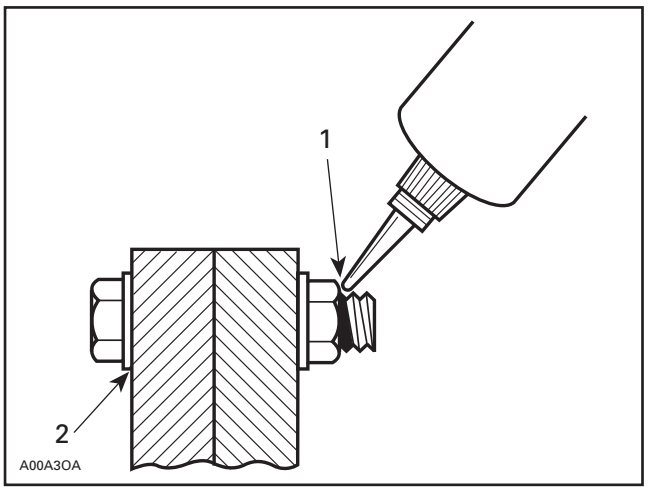


*1. Apply here*
*2. Do not apply*

1. Clean bolts and nuts with solvent.
2. Assemble components.
3. Tighten nuts.
4. Apply a few drops of proper strength Loctite on bolt/nut contact surfaces.
5. Avoid touching metal with tip of flask.

NOTE: For preventive maintenance on existing equipment, retighten nuts and apply proper strength Loctite on bolt/nut contact surfaces.

## Threadlocker Application for an Adjustment Screw

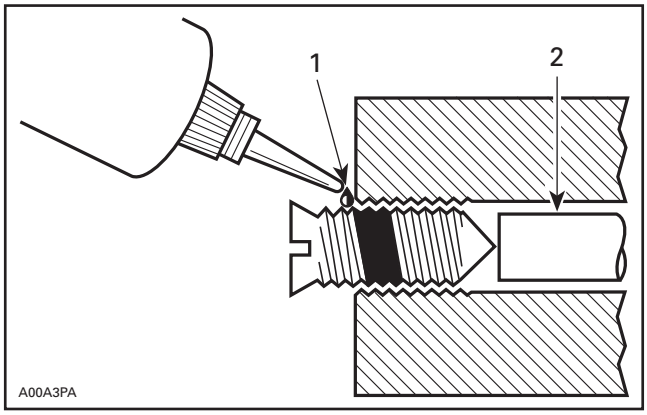


*1. Apply here*
*2. Plunger*

1. Adjust screw to proper setting.
2. Apply a few drops of proper strength Loctite threadlocker on screw/body contact surfaces.
3. Avoid touching metal with tip of flask.

NOTE: If it is difficult to readjust, heat screw with a soldering iron (232°C (450°F)).

## Application for Stripped Thread Repair

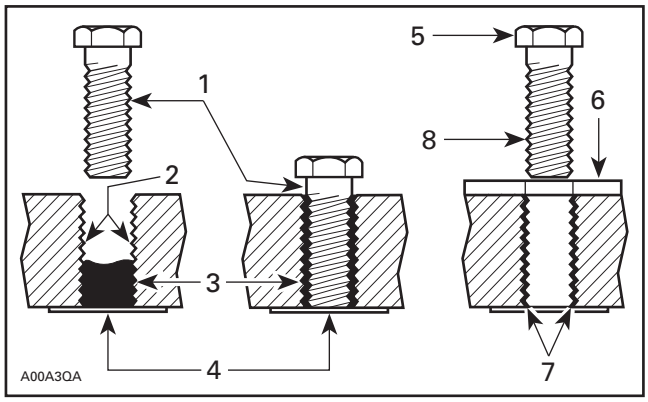


*1. Release agent*
*2. Stripped threads*
*3. Form-A-Thread*
*4. Tapes*
*5. Cleaned bolt*
*6. Plate*
*7. New threads*
*8. Threadlocker*

### Standard Thread Repair

Follow instructions on Loctite FORM-A-THREAD 81668 package.

If a plate is used to align bolt:

1. Apply release agent on mating surfaces.
2. Put waxed paper or similar film on the surfaces.
3. Twist bolt when inserting it to improve thread conformation.

NOTE: NOT intended for engine stud repairs.

### Repair of Small Holes/Fine Threads

Option 1: Enlarge damaged hole, then follow *STANDARD THREAD REPAIR* procedure.

Option 2: Apply FORM-A-THREAD on the screw and insert in damaged hole.

### Permanent Stud Installation (Light Duty)

1. Use a stud of the desired thread length.
2. DO NOT apply release agent on stud.
3. Follow Standard Thread Repair procedure.
4. Allow 30 minutes for Loctite FORM-A-THREAD to cure.
5. Complete part assembly.

## Gasket Compound Application

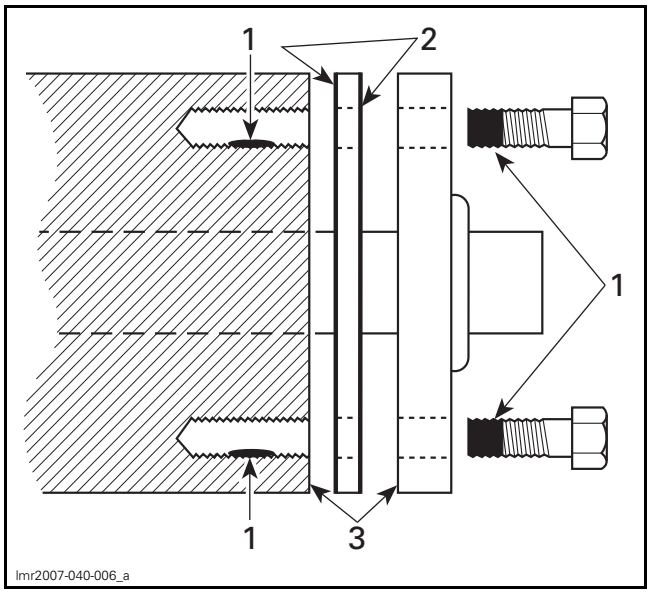


*1. Proper strength Loctite*
*2. Loctite Primer N (P/N 293 800 041) and Gasket Eliminator 518 (P/N 293 800 038) on both sides of gasket*
*3. Loctite Primer N only*

1. Remove old gasket and other contaminants using LOCTITE CHISEL (GASKET REMOVER) (P/N 413 708 500). Use a mechanical means only if necessary.

NOTE: Avoid grinding.

2. Clean both mating surfaces with solvent.
3. Spray Loctite Primer N on both mating surfaces and on both sides of gasket and allow to dry 1 or 2 minutes.
4. Apply LOCTITE 518 (P/N 293 800 038) on both sides of gasket, using a clean applicator.
5. Place gasket on mating surfaces and assemble parts immediately.

NOTE: If the cover is bolted to blind holes, apply proper strength Loctite in the hole and on threads. Tighten fastener.

If holes are sunken, apply proper strength Loctite on bolt threads.

6. Tighten as usual.

## Threadlocker Application for Mounting on a Shaft

### Mounting with a Press

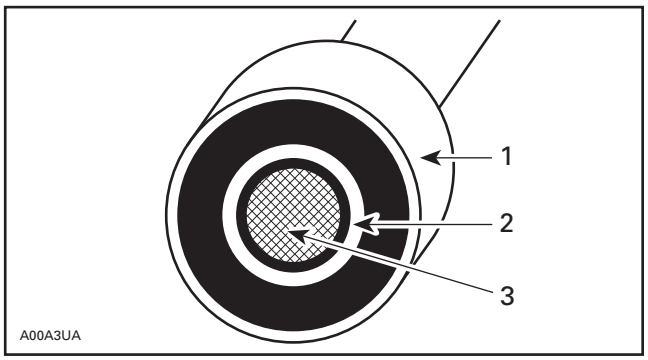


*1. Bearing*
*2. Proper strength Loctite*
*3. Shaft*

1. Clean shaft external contact surface.
2. Clean internal contact surface of part to be installed on shaft.
3. Apply a strip of proper strength Loctite on circumference of shaft contact surface at insertion or engagement point.

NOTE: Retaining compound is always forced out when applied on shaft.

4. DO NOT use antiseize Loctite or any similar product.
5. No curing period is required.

### Mounting in Tandem

1. Apply retaining compound on internal contact surface (bore) of parts to be installed.
2. Continue parts assembly as per previous illustration.

## Threadlocker Application for Case-In Components (Metallic Gaskets)

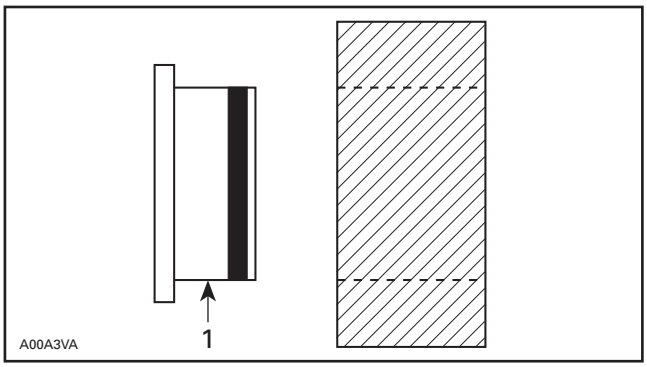


*1. Proper strength Loctite*

1. Clean inner housing diameter and outer gasket diameter.
2. Spray housing and gasket with LOCTITE 7649 (PRIMER) (P/N 293 800 041).
3. Apply a strip of proper strength Loctite on leading edge of outer metallic gasket diameter.

NOTE: Any Loctite product can be used here. A low strength liquid is recommended as normal strength and gap are required.

4. Install according to standard procedure.
5. Wipe off excess product.
6. Allow 30 minutes for product to cure.

NOTE: Normally used on worn-out housings to prevent leaking or sliding.

It is generally not necessary to remove gasket compound applied on outer gasket diameter.

# PERIODIC MAINTENANCE SCHEDULE (ACE AND 4-TEC)

NOTE: The maintenance schedule does not exempt the pre-ride inspection.

Procedures are detailed in *PERIODIC MAINTENANCE PROCEDURES* subsection.

| EVERY 3 000 KM (2,000 MI) OR EVERY YEAR AT PRESEASON (WHICHEVER COMES FIRST) |
|---|
| Perform pre-ride inspection |
| Check fault codes |
| Charge battery (on models with electric starter) |
| Adjust drive chain |
| Change chaincase oil |
| Inspect brake hose, pads and disk |
| Check coolant density |
| Inspect drive belt |
| Visually inspect and clean drive pulley |
| Tighten drive pulley retaining screw to specified torque |
| Clean driven pulley |
| Inspect engine seals and gaskets for leaks |
| Inspect exhaust system and check for leaks |
| Tighten exhaust manifold screws or nuts to specified torque |
| Adjust and align track |
| Inspect rear suspension (including stopper straps and slider shoes) |
| Lubricate rear suspension (lubricate whenever the vehicle is used in wet conditions (rain, puddles)) |
| Inspect fuel lines and connections |
| Inspect front suspension |
| Inspect tie-rod ends and alignment |
| Adjust headlight beam aiming |

| EVERY 6 000 KM (4,000 MI) OR AT PRE-SEASON (WHICHEVER COMES FIRST) |
|---|
| Change engine oil and filter |

| EVERY 6 000 KM (4,000 MI) OR 2 YEARS (WHICHEVER COMES FIRST) |
|---|
| Replace brake fluid |
| Clean and lubricate rewind starter |
| Replace fuel pump outlet filter |
| Inspect engine rubber mounts |

| EVERY 10 000 KM (6,000 MI) OR 3 YEARS (WHICHEVER COMES FIRST) |
|---|
| Replace spark plugs |
| Inspect oil injection pump strainer and clean if needed |
| Replace the following drive pulley wear parts: spring cover bushing and ramps |

Midwest Manuals
Green Manuals
Paperless Manuals For a Better Tomorrow
If you bought this manual from any other seller please leave them NEGATIVE feedback and notify me at bestshopmanuals@gmail.com

| EVERY 5 YEARS |
| --- |
| Replace engine coolant |

# PERIODIC MAINTENANCE SCHEDULE

Procedures are detailed in *PERIODIC MAINTENANCE PROCEDURES* subsection.

| PRE RIDE INSPECTION | |
|---|---|
| Body including seat, footrests, lights, air filter, controls and instruments | Check condition and remove snow or ice |
| Skis and steering actions | Check for free movement and proper operation |
| Fuel and injection oil | Check for proper level and no leaks |
| Coolant | Check for proper level and no leaks |
| Brake fluid | Check for proper level and no leaks |
| Storage compartment | Check for proper latching and no heavy or breakable objects |
| Throttle lever | Check for proper action |
| Track | Check condition and remove snow or ice |
| Slider shoes | Check for proper operation |
| Brake lever | Check for proper operation |
| Parking brake, brake | Check for proper operation |
| Emergency engine stop switch and engine cut-off switch (tether cord cap) | Check for proper action. Tether cord must be attached to operator clothing eyelet |
| Lights | Check for proper operation |
| Ski and runners | Check for proper condition (and operation if adjustable) |
| Drive belt | Check condition for cracks, fraying or abnormal wear |

| EVERY YEAR AT PRESEASON OR 3 000 KM (2,000MI) (WHICHEVER COMES FIRST) |
|---|
| Perform *PRE-RIDE INSPECTION* |
| Check fault codes |
| Charge battery |
| Adjust drive chain |
| Inspect track tension, adjust and align (if necessary) |
| Inspect brake hose, pads and disk |
| Check coolant density |
| Inspect drive belt |
| Inspect and clean drive pulley |
| Tighten drive pulley retaining screw to specified torque |
| Inspect and clean driven pulley |
| Inspect engine seals and gaskets for leaks |
| Lubricate rear suspension (lubricate whenever the vehicle is used in wet conditions (rain, puddles) |
| Inspect exhaust system and check for leaks |
| Tighten exhaust manifold screws or nuts to specified torque |
| Inspect fuel lines and connections |
| Inspect front suspension |
| Inspect rear suspension (including stopper straps and slider shoes) |
| Inspect tie-rod ends and ski alignment |
| Adjust headlight beam aiming |

| EVERY 6 000 KM (4,000 MI) OR AT PRE-SEASON (WHICHEVER COMES FIRST) |
|---|
| Change engine oil and filter |

| EVERY 2 YEAR OR 6 000KM (4,000 MI) (WHICHEVER COMES FIRST) |
|---|
| Replace brake fluid |
| Change chaincase oil |
| Inspect engine rubber mounts |

| EVERY 3 YEARS OR 10 000KM (6,000 MI) (WHICHEVER COMES FIRST) |
|---|
| Replace spark plugs |
| Replace turbo exhaust gasket (on applicable model) |

| EVERY 5 YEARS |
|---|
| Replace engine coolant |
| Replace in-line fuel filter |

# PERIODIC MAINTENANCE PROCEDURES

## SERVICE TOOLS

| Description | Part Number | Page |
|---|---|---|
| TENSIOMETER | 414 348 200 | 13 |

## SERVICE PRODUCTS

| Description | Part Number | Page |
|---|---|---|
| BRAKE FLUID GTLMA DOT4 | 293 600 131 | 10 |
| BRP PREMIXED COOLANT | 219 700 362 | 1 |
| PULLEY FLANGE CLEANER | 413 711 809 | 9, 12 |
| SUSPENSION GREASE | 293 550 033 | 15–16 |
| XPS 4-STROKE SYNTHETIC OIL | 293 600 112 | 4 |
| XPS FUEL STABILIZER | 413 408 601 | 7 |
| XPS SYNTHETIC GEAR OIL (75W 140) | 293 600 140 | 12 |
| XPS SYNTHETIC GREASE | 293 550 010 | 11 |

# GENERAL

This subsection provides general maintenance instructions. Where detailed instructions for disassembly or reassembly is required, refer to the applicable subsection.

# PROCEDURES

## ENGINE

### Cooling System Inspection

Inspect cooling system pressure cap, hoses and clamps for leaks.

Test pressure cap for proper operation.

### Recommended Engine Coolant

| RECOMMENDED SERVICE PRODUCT | ACCEPTABLE |
|---|---|
| BRP premixed coolantBRP PREMIXED COOLANT (P/N 219 700 362) | A blend of 50% distilled water with 50% antifreeze (especially formulated for aluminum engines |

To prevent antifreeze deterioration, always use the same brand. Never mix different brands unless cooling system is completely flushed and refilled.

**NOTICE** To prevent rust formation or freezing condition, always replenish the system with the BRP premixed coolant or with 50% antifreeze and 50% distilled water. Do not use tap water, straight antifreeze or straight water in the system. Tap water contains minerals and impurities which build up in the system. During cold weather, straight water causes the system to freeze while straight antifreeze thickens (like slush ice) and does not have the same efficiency. Always use ethylene glycol antifreeze containing corrosion inhibitors specifically recommended for aluminum engines.

### Engine Coolant Level Verification

Check coolant level at room temperature with the cap removed. Liquid should be at cold level line (engine cold) of coolant tank.

NOTE: When checking level at low temperature it may be slightly lower then the mark.

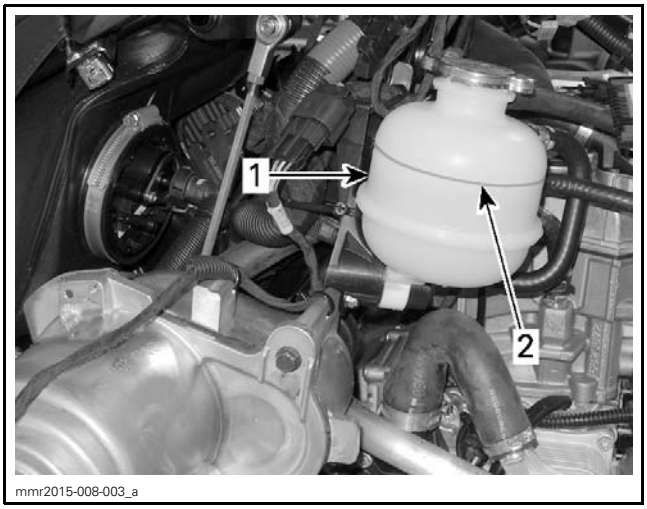

mmr2015-008-003_a

*1. Coolant tank*
*2. COLD LEVEL line*

## Engine Coolant Strength Verification

Remove pressure cap.

Use an antifreeze tester to test coolant strength.

| MINIMUM RECOMMENDED COOLANT STRENGTH |
|---|
| -30°C (-22°F) |

## Engine Coolant Replacement

### Cooling System Draining

**⚠ WARNING**

**Never drain or refill the cooling system when engine is hot.**

1. Remove body parts as required to access to the water pump (RH side).
2. Place a large drain pan under the vehicle bottom pan.
3. Remove drain screw at water pump to drain coolant.

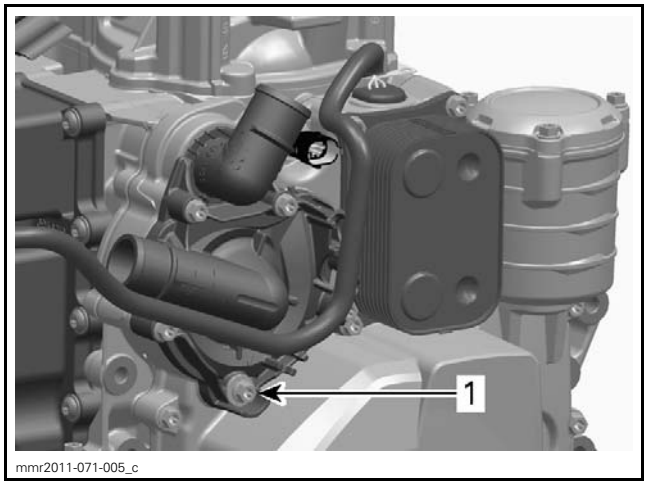

mmr2011-071-005_c

*1. Drain screw*

4. Remove coolant reservoir cap.
5. When coolant level is low enough, lift the rear of vehicle to drain the heat exchangers.

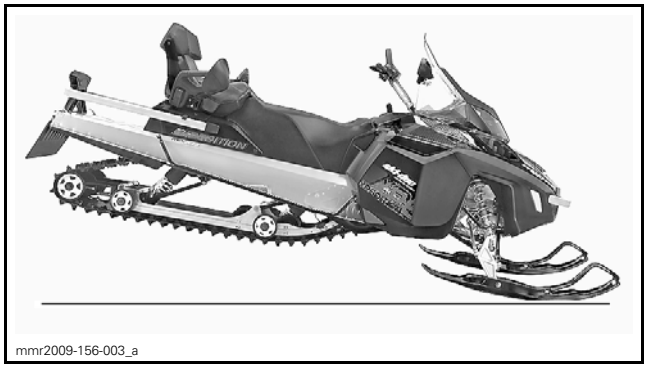
mmr2009-156-003_a

6. Install **NEW** sealing washer on drain screw.
7. Tighten drain screw to specification.

| TIGHTENING TORQUE | |
|---|---|
| Drain screw | 9 N•m ± 1 N•m (80 lbf•**in** ± 9 lbf•**in**) |

### Cooling System Refilling and Bleeding

1. Apply parking brake.
2. From underneath the back end of the chassis, remove the heat exchanger drain plug.

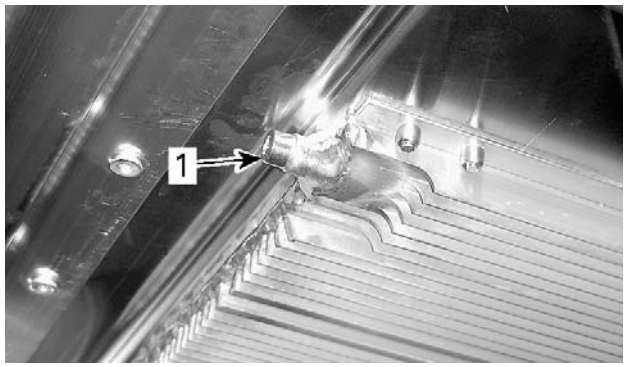


*1. Drain plug*

3. Fill coolant reservoir until coolant comes out of heat exchanger.
4. Install drain plug and tighten it to specification.

| TIGHTENING TORQUE | |
|---|---|
| Drain plug | 10 N•m (89 lbf•**in**) |

5. Lift front of vehicle by 25 cm ± 5 cm (10 in ± 2 in) and support safely.

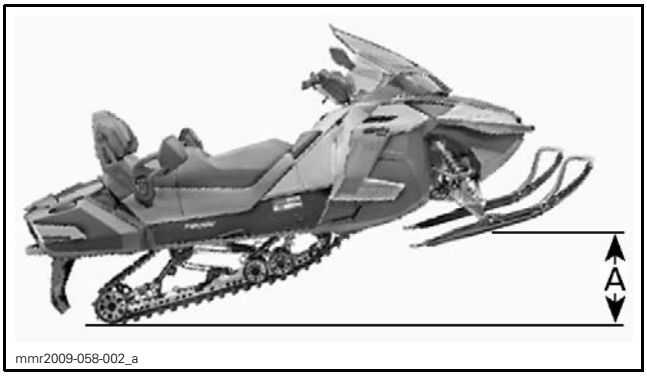


*TYPICAL VIEW*
*A. 25 cm ± 5 cm (10 in ± 2 in)*

6. Fill coolant tank up to COLD LEVEL line.

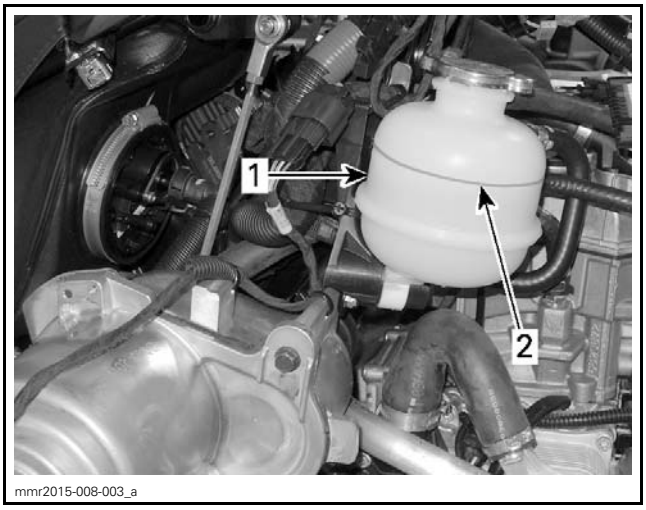


*1. Coolant tank*
*2. COLD LEVEL line*

7. Start engine.
8. Add coolant up to COLD LEVEL line while engine is idling until rear heat exchangers are warm to the touch (about 4 to 5 minutes).

NOTE: Always monitor coolant level while filling coolant tank to avoid an empty coolant reservoir, and thus allow air to enter the system.

9. Install pressure cap.

Lower vehicle back on the ground.

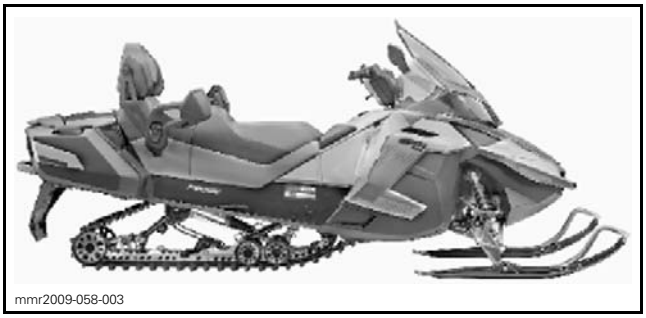


*TYPICAL VIEW*

10. Lift rear of vehicle and support it safely.

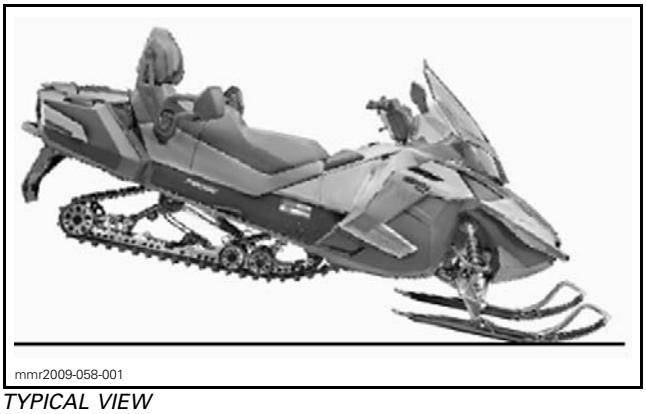


*TYPICAL VIEW*

**⚠ WARNING**

**Before revving engine, ensure that the track is free of particles which could be thrown out while track is rotating. Keep hands, tools, feet and clothing clear of track. Always lift the snowmobile on a wide-base stand with a rear deflector panel. Ensure no one is standing in close proximity to the snowmobile, especially at the rear of the track. Centrifugal force could cause debris, damaged or loose studs, pieces of torn track, or an entire track to be violently thrown backwards out of the frame with tremendous force, possibly resulting in the loss of a leg or other serious injury.**

11. Remove parking brake.
12. Activate throttle lever 3 - 4 times to bring engine speed to 7000 RPM.
13. Apply the brake.
14. Lower vehicle back on ground.

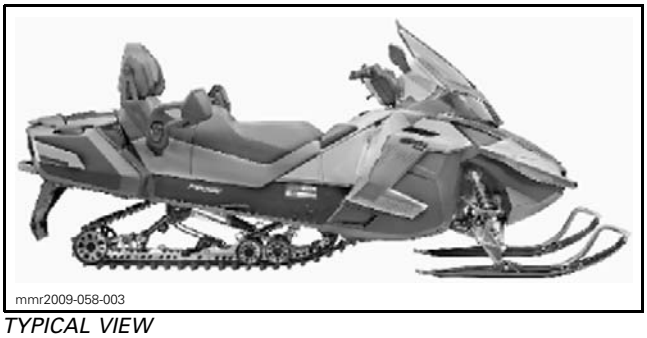
mmr2009-058-003

*TYPICAL VIEW*

15. Stop engine.
16. Add coolant up to 15 mm (1/2 in) above the COLD LEVEL line.
17. When engine has completely cooled down, recheck coolant level in coolant tank and refill up to line if needed.
18. Perform *ENGINE COOLANT STRENGTH VERIFICATION*. See procedure in this subsection.
19. Adjust mixture if necessary.
20. Reinstall removed parts.
21. Run vehicle a few minutes then recheck coolant level.

## Recommended Engine Oil

| RECOMMENDED ENGINE OIL |
|---|
| XPS 4-STROKE SYNTHETIC OIL (P/N 293 600 112) |

**NOTICE** **The engine of this snowmobile has been developed and validated using the BRP XPS™ Synthetic 4-stroke oil. BRP strongly recommends the use of its XPS Synthetic 4-stroke oil at all times. Damages caused by oil which is not suitable for the engine will not be covered by the BRP limited warranty.**

If the recommended oil is not available, use SAE 0W-40 synthetic-based oil that meets or exceeds the requirements for API service classification SM.

## Engine Oil Level Verification

**NOTICE** **Operating the engine with an improper oil level may cause severe engine damage. Follow this procedure to obtain a precise reading of the engine oil level.**

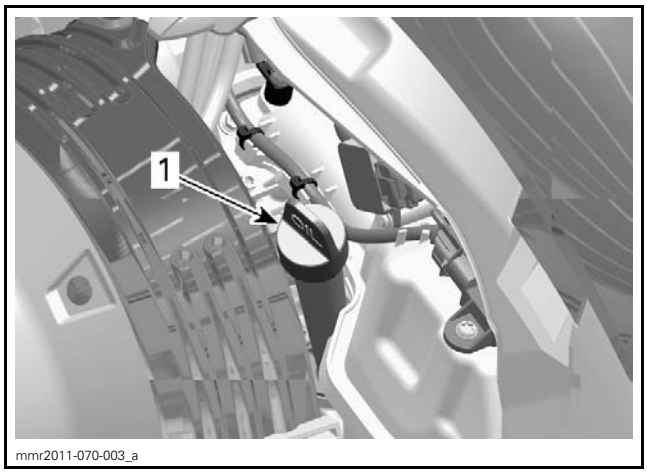

mmr2011-070-003_a

*TYPICAL - LH SIDE*
*1. Oil tank dipstick*

With the engine at normal operating temperature (90°C (194°F) at oil tank surface), place vehicle on a level surface and proceed as follows to check oil level:

1. Start engine and let it idle for at least 20 seconds.
2. Stop engine.
3. Open the LH side panel.
4. If applicable, remove the drive belt guard. Refer to *DRIVE BELT* subsection.
5. Unscrew and remove dipstick and wipe clean.
6. Insert dipstick in the filler tube and again tighten it.

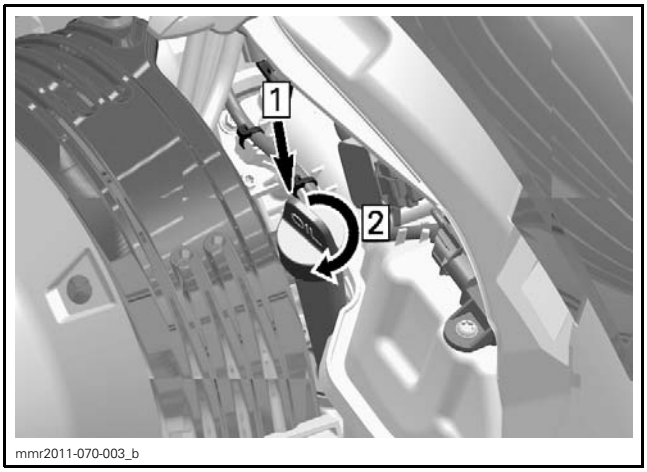


*TYPICAL*
*Step 1: Insert dipstick*
*Step 2: Tighten dipstick.*

7. Remove dipstick again and check oil level. It should be near or equal to the upper mark.

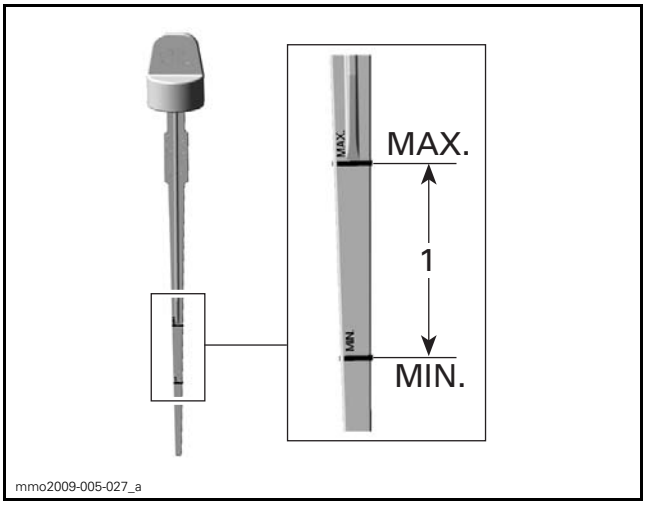


*1. Operating range*

8. To add oil, place a funnel into the filler tube to avoid spillage.
   8.1 Add a small amount of oil and recheck oil level.
   8.2 Repeat the operation until oil level reaches the dipstick's upper mark. Do not overfill.

NOTE: The oil quantity between MIN. and MAX. mark is approximately 500 ml (16.9 U.S. oz).

9. Reinstall dipstick and properly tighten it.
10. Wipe off any oil spillage.
11. Install drive belt guard.
12. Close the LH side panel.

## Engine Oil Replacement

**⚠ WARNING**

**The engine oil can be very hot. Wait until engine oil is warm.**

***NOTICE*** **Engine oil and oil filter must be replaced at the same time.**

1. Bring engine to its normal operating temperature (90°C (194°F) at oil tank surface).
2. Place vehicle on a level surface.
3. Remove the LH side panel.
4. Remove dipstick.

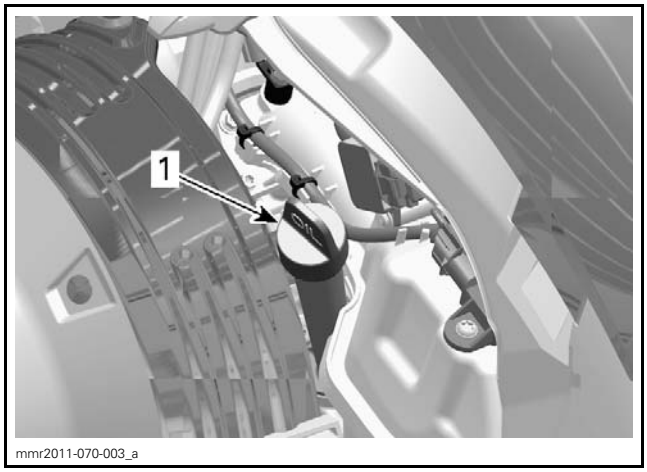


*LH SIDE OF VEHICLE*
*1. Oil tank dipstick*

5. Remove oil filter. Refer to *ENGINE OIL FILTER REPLACEMENT* in this subsection.
6. From underneath the vehicle, access the drain plug:
   6.1 Remove the access cover retaining screw.

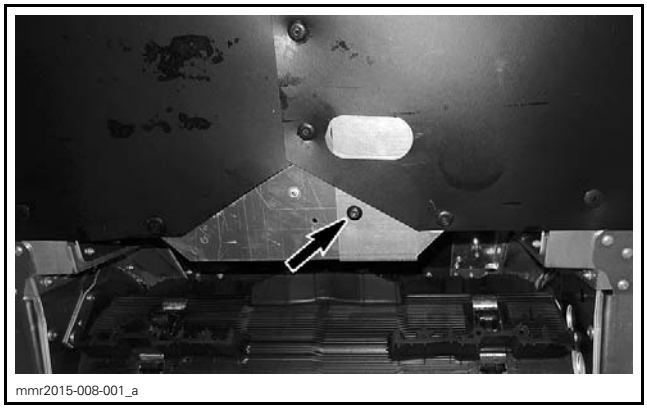


   6.2 Slide the access cover back to clear the bottom pan opening.

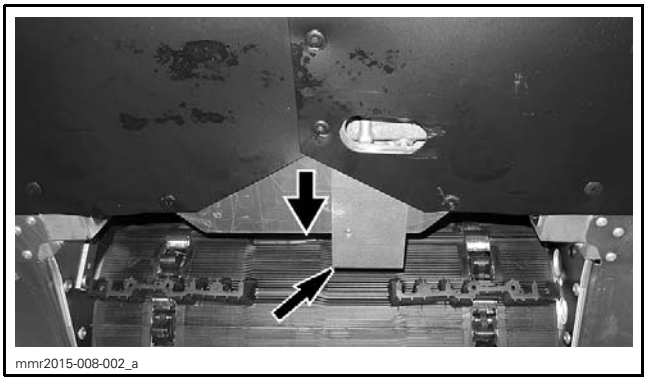
mmr2015-008-002_a

7. Clean drain plug area.
8. Place a drain pan under the bottom pan opening.
9. Remove engine drain plugs in the following order.
   9.1 Main drain plug.
   9.2 Secondary drain plug.

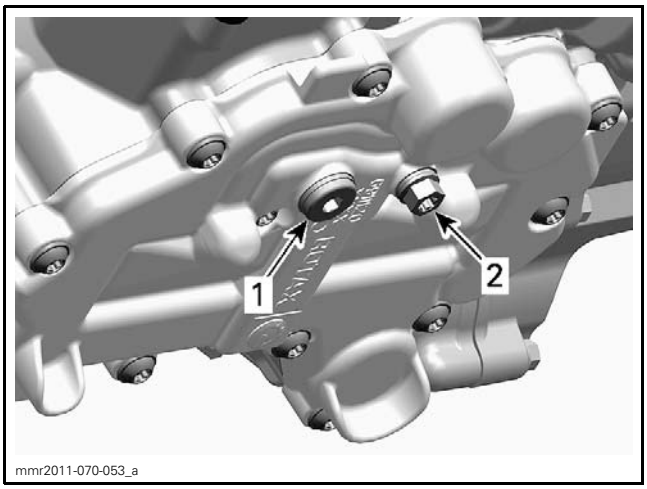

mmr2011-070-053_a

*600 ACE ENGINE SHOWN*
*UNDERNEATH THE ENGINE*
1. *Main drain plug*
2. *Secondary drain plug*

10. Allow oil to drain completely.
11. Install **NEW** sealing washers on oil drain plugs.

***NOTICE*** **Never use a sealing washer a second time. Always replace with a new one.**

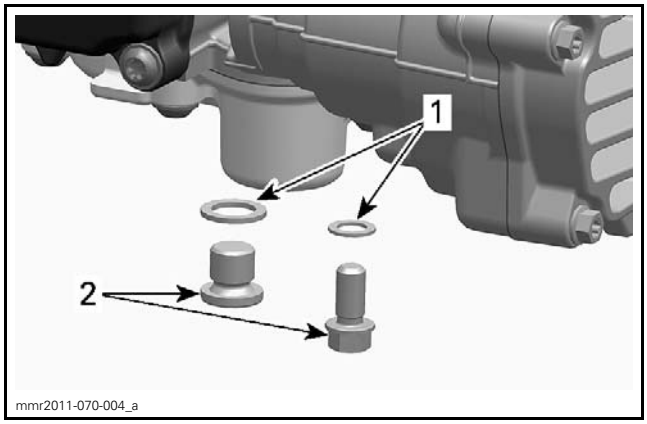

mmr2011-070-004_a

1. *Sealing washer*
2. *Oil drain plug*

12. Install drain plugs and tighten to the specified torque.

| TIGHTENING TORQUE | |
|---|---|
| Drain plugs | 15 N•m ± 2 N•m (133 lbf•**in** ± 18 lbf•**in**) |

13. Replace *OIL FILTER*, see procedure in this subsection.
14. Refill oil tank at the proper level with the recommended oil.

| APPROXIMATE ENGINE OIL CAPACITY (WITH FILTER) | |
|---|---|
| 600 ACE | 2.1 L (2.2 qt (U.S. liq.)) |
| 900 ACE | 3.3 L (3.5 qt (U.S. liq.)) |

15. Reinstall dipstick in oil tank and properly tighten it.
16. Start engine and let it idle for a few minutes.
17. Ensure there are no leaks.
18. Stop engine and check oil level as explained in this subsection. Refill if necessary.
19. Dispose oil and filter as per your local environmental regulations.

## Engine Oil Filter Replacement

### Oil Filter Removal

1. Remove the RH side panels.
2. Clean oil filter area.
3. Remove:
   – Oil filter cover screws
   – Oil filter cover with O-ring
   – Oil filter.

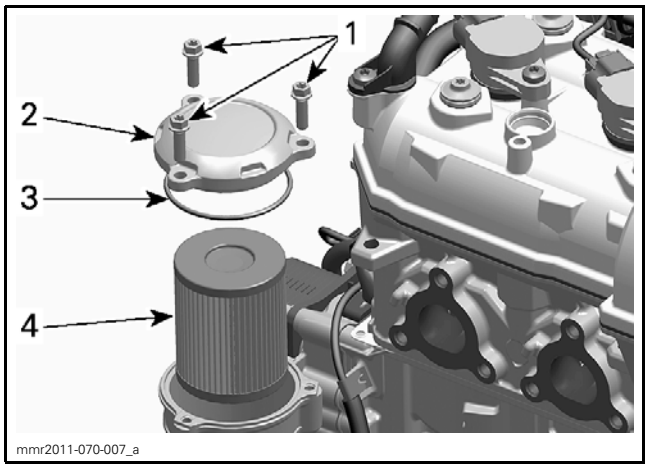


1. *Oil filter cover screws*
2. *Oil filter cover*
3. *O-ring*
4. *Oil filter*

4. Dispose filter as per your local environmental regulations.

### Oil Filter Installation

1. Check the oil filter inlet and outlet orifices inside oil filter receptacle (integrated part of magneto cover) for dirt and contaminations.

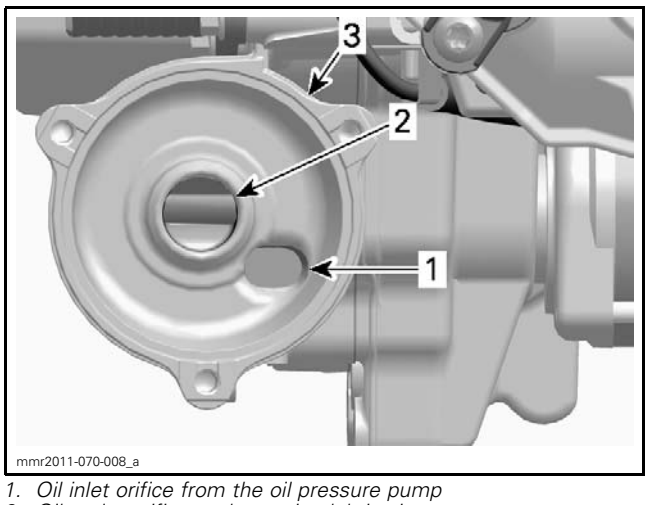


1. *Oil inlet orifice from the oil pressure pump*
2. *Oil outlet orifice to the engine lubrication system*
3. *Oil filter receptacle*

2. Install a NEW O-ring on oil filter cover.
3. Lubricate filter seal and cover O-ring with engine oil.

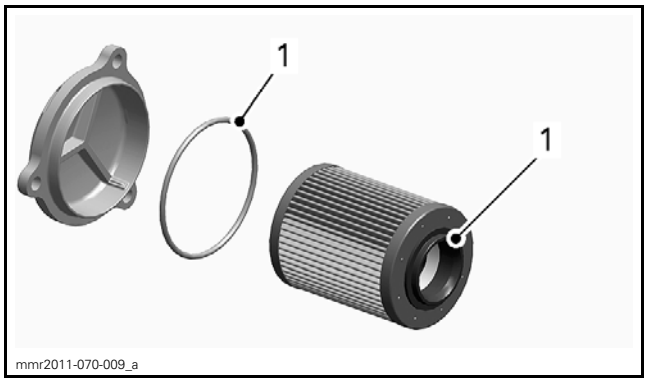


1. *Lubricate with engine oil*

4. Install the oil filter cover.
5. Tighten oil filter cover screws to the specified torque.

| TIGHTENING TORQUE | |
|---|---|
| Oil Filter Cover | 9 N•m ± 1 N•m (80 lbf•**in** ± 9 lbf•**in**) |

## Engine Seals and Gaskets Inspection

Visually inspect the seal and gasket areas for leaks.

## Exhaust System Inspection

Check the following components for leaks, cracks, or other damage:

– Muffler
– Exhaust pipes
– Manifold.

# AIR INTAKE SYSTEM

## Throttle Body Connecting Socket

Visually inspect throttle body connecting socket for cracks or other damages.

Replace if necessary. Refer to *INTAKE MANIFOLD* in the *AIR INTAKE SYSTEM* subsection.

# FUEL SYSTEM

## Fuel System Protection

With the new fuel additives used today, it is critical to add a fuel stabilizer to the fuel during storage to prevent fuel deterioration, gum formation and fuel system gumming. Follow manufacturers instructions for proper use.

| RECOMMENDED PRODUCT |
|---|
| XPS FUEL STABILIZER (P/N 413 408 601) |

**NOTICE** The fuel stabilizer should be added prior to engine lubrication, to ensure fuel system component protection against varnish deposits.

1. Pour fuel stabilizer in fuel tank.
2. Fill up fuel tank completely.
3. Run engine sufficiently for fuel with stabilizer to be distributed to entire fuel system.
4. Ensure there is no water inside fuel tank.

**NOTICE** Do not drain fuel system.

## Fuel Line and Connection Inspection

Visually inspect all fuel lines and connections for cracks or leaks.

## Fuel Pump Outlet Filter Replacement

NOTE: The fuel pump outlet filter is housed within the mounting flange of the fuel pump module. It can be replaced without removing the fuel pump module from the fuel tank.

1. Disconnect fuel pump electrical connector to deactivate fuel pump.
2. Start and run engine until it stalls.
3. Place several shop rags under the fuel pump pressure hose fitting to prevent fuel from leaking onto the connectors of the voltage regulator/rectifier unit.
4. Remove following parts from fuel pump module.

NOTE: Do not remove fuel pump module from fuel tank.

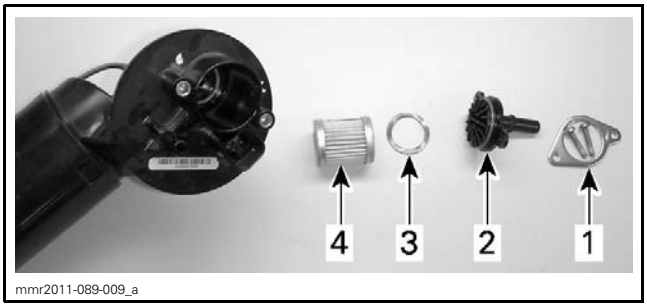

mmr2011-089-009_a

1. *Filter cover retainer with screws (2)*
2. *Filter cover*
3. *Wave spring*
4. *Filter element.*

5. Install NEW O-ring seals on filter cover and in filter housing.

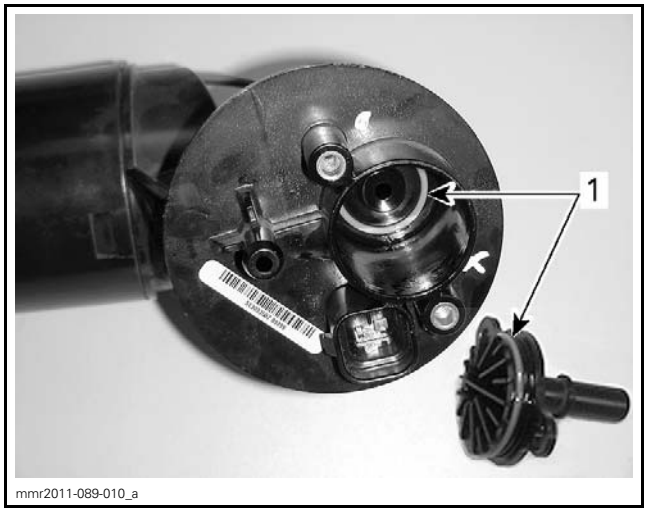

mmr2011-089-010_a

1. *New O-ring seals*

6. Insert filter element as per following illustration.

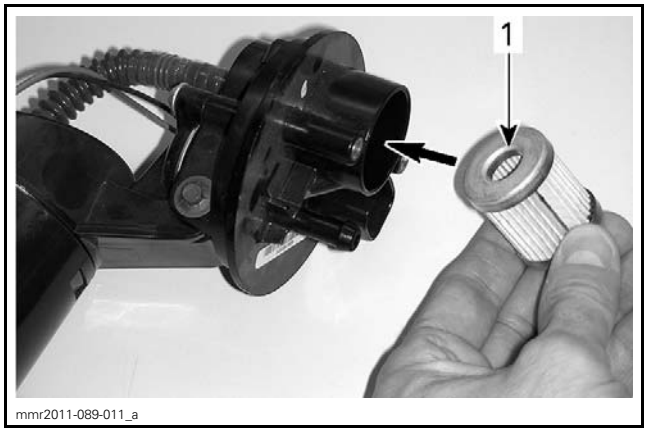

mmr2011-089-011_a

1. *This end in first*

7. Install remaining filter parts.

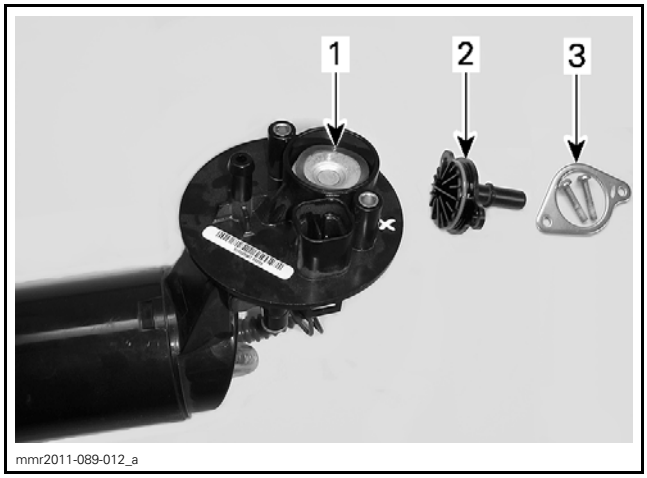

mmr2011-089-012_a

1. *Wave spring*
2. *Filter cover*
3. *Cover retainer with screws (2)*

| TIGHTENING TORQUE | |
|---|---|
| Filter cover screw | 3 N•m (27 lbf•**in**) |

8. Reconnect fuel pump module (pressure hose and electrical connector), refer to *FUEL PUMP INSTALLATION (600 ACE)* in the *FUEL TANK AND FUEL PUMP* subsection.
9. Carry out a *FUEL SYSTEM PRESSURIZATION AND LEAK TEST* as detailed in the *FUEL TANK AND FUEL PUMP* subsection.
10. Install remaining parts in the reverse order of removal, refer to *FUEL TANK INSTALLATION* in this subsection.

## Throttle Body Inspection and Cleaning

Clean throttle plates and throttle body bores using PULLEY FLANGE CLEANER (P/N 413 711 809).

# ELECTRICAL SYSTEM

## Battery Charging

To charge battery, refer to *CHARGING SYSTEM* subsection.

## Spark Plug Inspection and Replacement

### Spark Plug Removal

1. Remove ignition coil from spark plug. Refer to *IGNITION SYSTEM* subsection.
2. Using an approved spark plug socket, release the torque applied to the spark plug and unscrew a few turns.

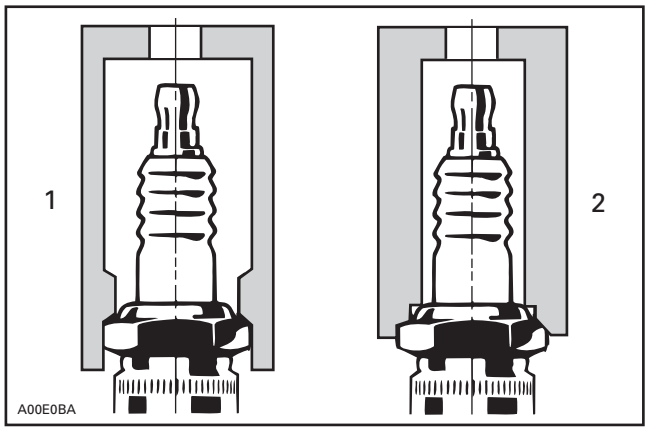


*1. Aproved socket*
*2. Improper socket*

3. Clean the spark plug and cylinder head with pressurize air.
4. Remove spark plug.

### Troubleshooting a Fouled Spark Plug

Fouling of the spark plug is indicated by irregular running or misfiring of the engine, decreased engine speed due to misfiring, reduced performance, and increased fuel consumption.

Other possible causes are: a incorrect or bad fuel, defective ignition system, incorrect spark plug gap, loss of compression, or lubricating oil entering the combustion chamber.

The plug face of a fouled spark plug has either a wet or dry black carbon deposit. Such coatings form a conductive connection between the center electrode and the ground electrode.

### Spark Plug Analysis

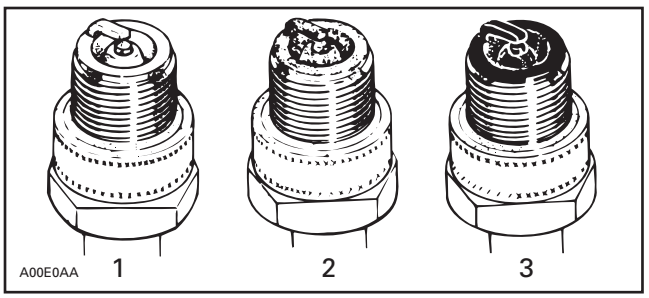


*TYPICAL*
*1. Overheated (light gray, white)*
*2. Normal (light brown, brown)*
*3. Fouled (black, wet or dry, dark deposits, gray, melted coating)*

The plug face reveals the condition of the engine, operating condition, method of driving and fuel mixture. For this reason it is advisable to inspect the spark plug at prescribed intervals, examining the plug face (i.e. the part of the plug projecting into the combustion chamber).

### Spark Plug Installation

Prior to installation, ensure the contact surfaces of the cylinder head and spark plug are free of grime.

1. Using a wire feeler gauge, check electrode gap as specified in the following chart.

**NOTICE** **Do not adjust gap on this type of spark plug. The adjustment could weaken negative electrodes which may lead to electrode breakage and severe engine damage.**

| SPARK PLUG | GAP mm (in) | TIGHNTENING TORQUE |
|---|---|---|
| NGK MR7BI-8 | 0.7 mm to 0.8 mm (.028 in to .031 in) **NOT** adjustable | 13 N•m (115 lbf•**in**) |

2. Hand screw spark plug into cylinder head. Then, tighten the spark plug clockwise to specified torque with an approved spark plug socket.
3. Install ignition coil. Refer to *IGNITION SYSTEM* subsection.
4. Complete the installation in the reverse order of the removal.

# ELECTRICAL SYSTEM (LIGHTS)

## Headlights Beam Aiming Adjustment

Refer to *LIGHTS, GAUGE AND ACCESSORIES* subsection.

# DRIVE SYSTEM AND BRAKE

## Recommended Brake Fluid

Always use brake fluid meeting the specification DOT 4 such as BRAKE FLUID GTLMA DOT4 (P/N 293 600 131).

## Brake Fluid Level Verification

With the vehicle on a level surface, position steering in straight-ahead position to ensure reservoir is level.

Brake fluid must always be above the MIN. line when brake lever is squeezed.

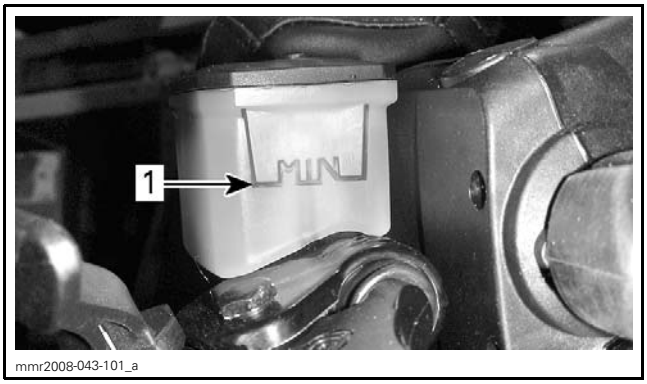

mmr2008-043-101_a

*TYPICAL*
*1. MINIMUM line*

Add fluid as required. Do not overfill.

NOTE: A low level may indicate leaks or worn brake pads.

## Brake Fluid Replacement

To drain brake fluid, proceed as follows:

1. Place vehicle on a level surface.
2. Remove reservoir cover with its diaphragm.

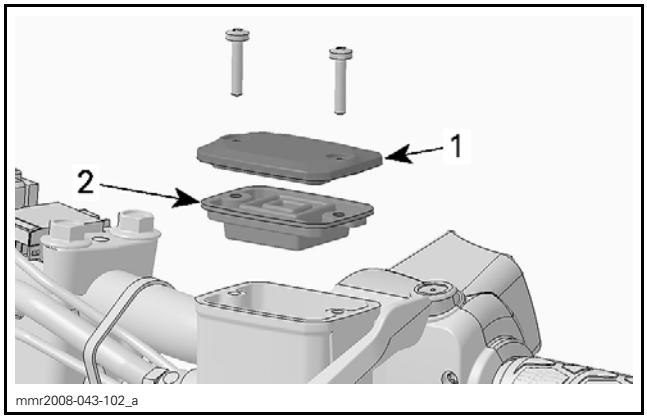

mmr2008-043-102_a

*TYPICAL*
*1. Reservoir cover*
*2. Diaphragm*

3. Connect a clear hose to caliper bleeder.
4. Place the other end of hose in a container.
5. Loosen bleeder and pump brake lever until no more fluid flows out of bleeder.

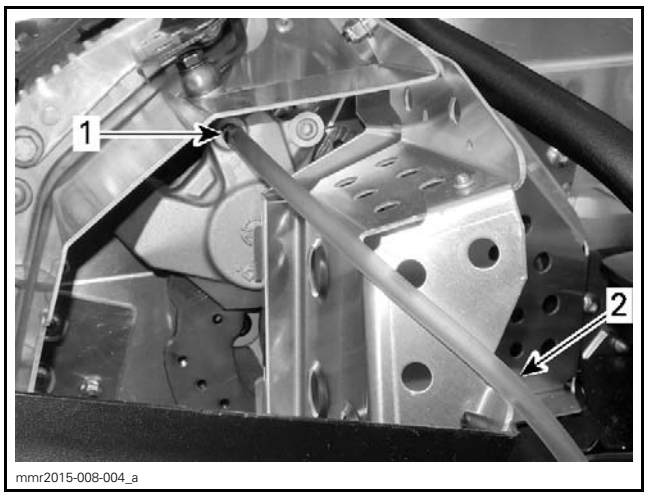

mmr2015-008-004_a

*TYPICAL*
*1. Bleeder*
*2. Clear hose to used brake fluid catch container*

To fill brake system when it is empty, proceed as follows:

1. Ensure reservoir cover is removed.
2. Using a large syringe and a suitable tube, inject brake fluid slowly into the caliper.

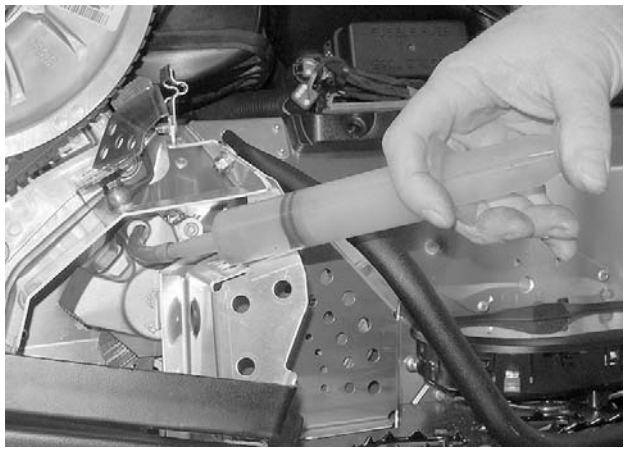
mmr2015-008-005

*TYPICAL*

3. Continue to inject brake fluid until master cylinder reservoir is half full.
4. Close bleeder.
5. Fill up reservoir and install cover.
6. Squeeze brake lever.
   6.1 If brake lever is firm, bleeding of the brake system is not required. Torque bleeder as specified.

| TIGHTENING TORQUE | |
|---|---|
| Brake caliper bleeder | 9 N•m (80 lbf•**in**) |

   6.2 If brake lever is spongy, refer to *BRAKE SYSTEM BLEEDING* in this subsection.

## Brake System Bleeding

1. Install a clear hose on bleeder.
2. Place the other end in a container partially filled with clean brake fluid.
3. Pump up brake system pressure using the brake lever until lever resistance is felt.
4. Squeeze and hold brake lever and open bleeder. When the lever touches the handlebar, do not release it and close the bleeder.
5. Release brake lever slowly.
6. Repeat the procedure until no more air bubbles appear in hose.

NOTE: Check fluid level often to prevent air from being pumped into the circuit.

7. Install cover on reservoir.
8. Squeeze brake lever.

NOTE: If brake lever feels firm; bleeding procedure is complete. Torque bleeder as specified. If brake lever is still spongy; go to step 9

| TIGHTENING TORQUE | |
|---|---|
| Brake caliper bleeder | 9 N•m (80 lbf•**in**) |

9. Push back brake pads with caliper still installed and squeeze brake lever.
10. Repeat step 2 to step 5.
11. Torque bleeder as specified.
12. Adjust brake fluid reservoir level.
13. Install diaphragm and cover on reservoir.

## Brake Hose, Pads and Disc Inspection

### Break-In Inspection

Visually inspect the brake hose for leaks or any damage.

Visually inspect pads and disc for abnormal wear or any damage.

### Scheduled Maintenance and Preseason

Visually inspect the brake hose for leaks or any damage.

Refer to *BRAKE* subsection and carry out:
– *BRAKE PAD INSPECTION*
– *BRAKE DISC INSPECTION*.

## Brake Lever Pivot Lubrication

1. Remove brake lever pivot screw.
2. Lubricate brake lever pivot screw using recommended product.

| SERVICE PRODUCT | |
|---|---|
| Brake lever pivot | XPS SYNTHETIC GREASE (P/N 293 550 010) |

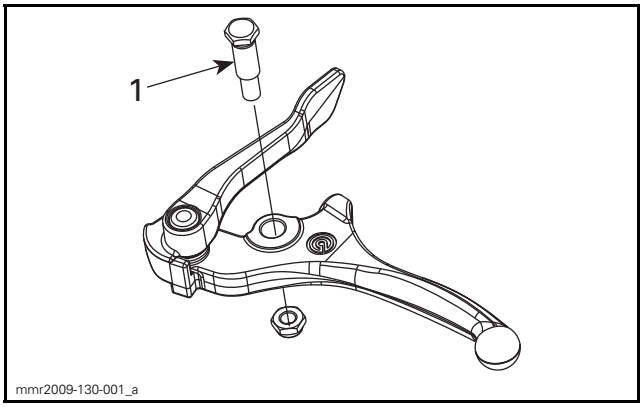

mmr2009-130-001_a

*1. Lubricate this surface*

3. Install brake lever pivot screw.
4. Torque nut on brake lever pivot screw as specified.

| TIGHTENING TORQUE | |
|---|---|
| Pivot screw brake lever | 6 N•m (53 lbf•**in**) |

## Drive Belt Inspection

Refer to *DRIVE BELT* subsection.

## Drive Pulley Inspection and Cleaning

Refer to *DRIVE PULLEY* subsection.

## Drive Pulley Retaining Screw Tightening

Refer to *DRIVE PULLEY* subsection.

## Driven Pulley Inspection and Cleaning

Inspect pulley sheaves for dirt, marks or scratches.

Test sliding sheave operation.

Use PULLEY FLANGE CLEANER (P/N 413 711 809) and a clean rag to clean pulley sheaves as necessary.

NOTE: When removing dust on the cam, avoid altering the teflon coating. Use a dry cloth only.

## Driven Pulley Spring Preload

Refer to *DRIVEN PULLEY AND COUNTERSHAFT* subsection.

# DRIVE SYSTEM (GEARBOX)

## Recommended Gearbox Oil

| RECOMMENDED GEARBOX OIL |
|---|
| XPS SYNTHETIC GEAR OIL (75W 140) (P/N 293 600 140) |

***NOTICE*** **The gearbox of this snowmobile has been developed and validated using the XPS™ Synthetic gear oil. BRP strongly recommends the use of its XPS Synthetic gear oil at all times. Damages caused by oil which is not suitable for the gearbox will not be covered by the BRP limited warranty.**

## Gearbox Oil Level Verification

With the vehicle on a level surface, check the oil level by removing the check plug on the left side of gearbox.

Oil level must reach the threaded hole's lower edge.

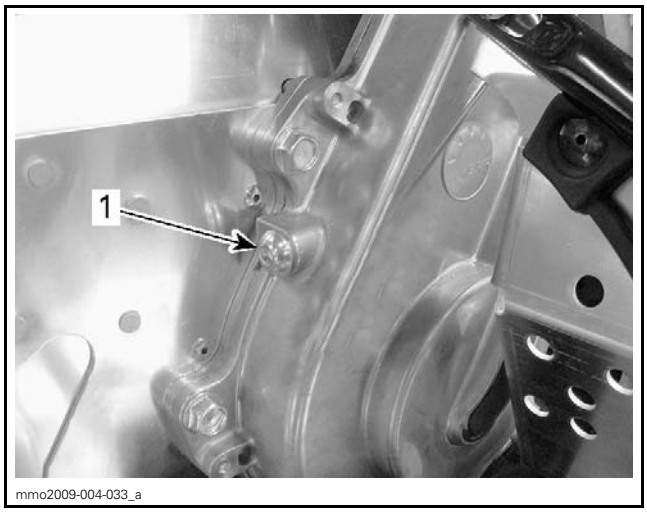


*1. Check plug*

1. Reinstall check plug and torque to 10 N•m ± 1 N•m (89 lbf•**in** ± 9 lbf•**in**).

## Gearbox Oil Replacement

### Gearbox Oil Draining

1. Place the vehicle on a level surface.
2. Place a drain pan under gearbox drain plug area.
3. Remove filler cap.
4. Remove the drain plug located at the bottom of gearbox.

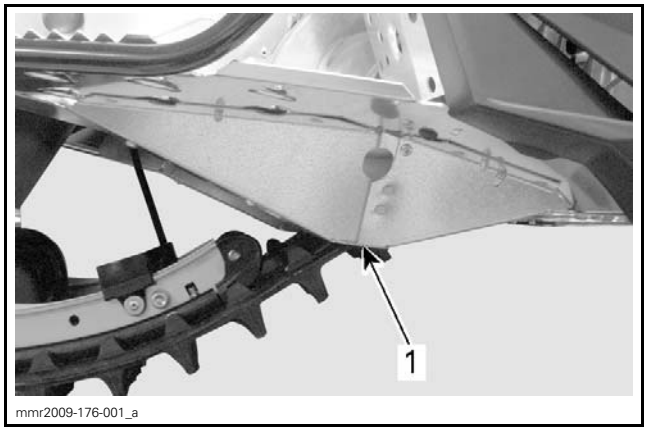


*1. Drain plug access hole*

5. Wait a while to allow all oil to drain out of gearbox.
6. Install drain plug and torque to specification.

| TIGHTENING TORQUE | |
|---|---|
| Gearbox drain plug | 8 N•m (71 lbf•**in**) |

### Gearbox Oil Filling

NOTE: Vehicle must be on a level surface.

1. Remove the filler cap.

2. Remove oil level check plug.

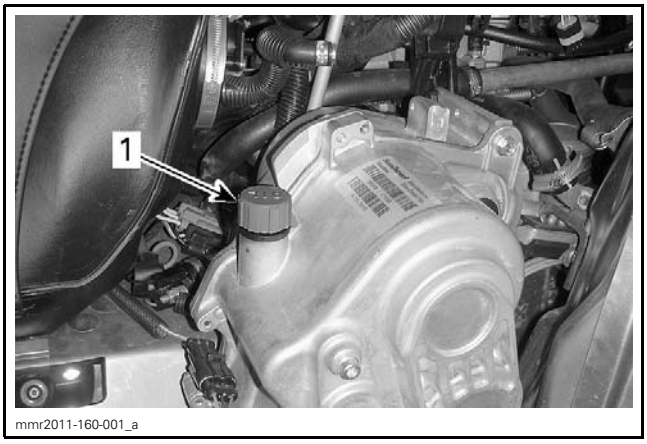

mmr2011-160-001_a

*1. Filler cap*

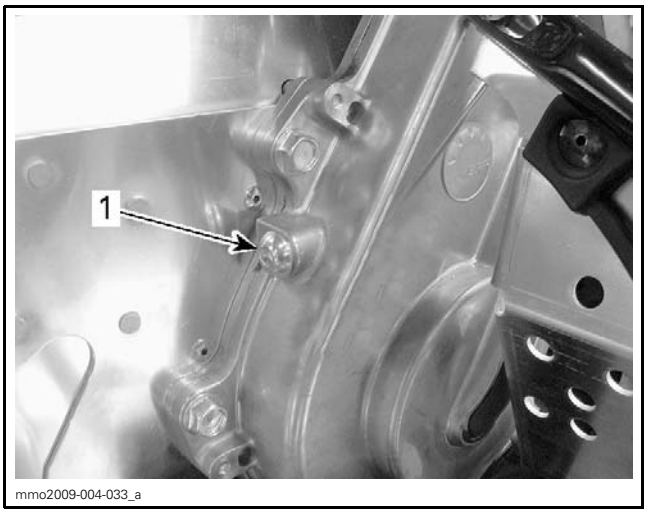

mmo2009-004-033_a

*1. Check plug*

3. Pour recommended oil into gearbox through the filler hole.

NOTE: Oil level is correct when it just begins to come out of the check plug orifice.

4. Reinstall check plug and torque to specification.

| TIGHTENING TORQUE | |
|---|---|
| Oil level check plug | 10 N•m (89 lbf•**in**) |

# DRIVE SYSTEM (TRACK)

## Track Adjustment and Alignment

Track tension and alignment are interrelated. Do not adjust one without checking the other. Track tension procedure must be carried out prior to track alignment.

### Track Tension Verification

1. Lift rear of vehicle and support it off the ground.
2. Allow rear suspension to fully extend.
3. Preset the TENSIOMETER (P/N 414 348 200) as specified in the following table.

414348200

| TRACK TENSIOMETER PRESETTING | |
|---|---|
| DEFLECTION O-RING (BOTTOM) | LOAD O-RING (TOP) |
| 4.5 cm (1.772 in) | 0 kgf (0 lbf) |

mmr2009-133-003_b

*DEFLECTION SETTING*
*1. Bottom O-ring*

4. Position the tensiometer on track, halfway between front and rear idler wheels.
5. Push the tensiometer downwards until bottom O-ring (deflection) be aligned with the bottom of slider shoe.

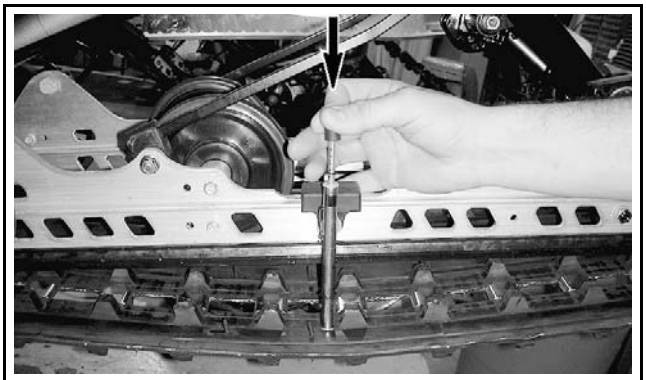
mmr2009-133-001_a

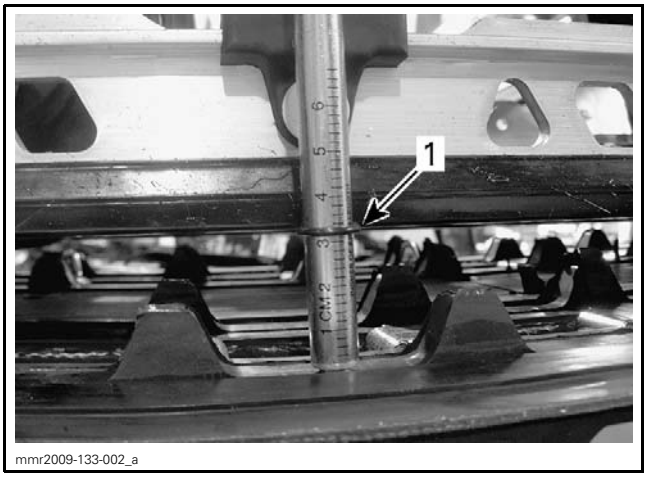


*1. Deflection O-ring aligned with slider shoe*

6. Read load recorded by the upper O-ring on the tensiometer.

*LOAD READING*
*1. Upper O-ring*

Load reading must be as per the following table.

| TRACK ADJUSTMENT SPECIFICATION | |
|---|---|
| TRACK DEFLECTION SETTING | 4.5 cm (1-9/16 in) |
| TRACK LOAD READING | 6.0 kgf to 8.5 kgf (13 lbf to 19 lbf) |

7. If load reading is not in accordance with the specification, adjust track tension. Refer to *TRACK TENSION ADJUSTMENT*.

**NOTICE** Too much tension will result in power loss and excessive stresses on suspension components.

Track Tension Adjustment

NOTE: After track tension adjustment, ride the snowmobile in snow for 15 to 20 minutes and recheck track tension.

1. Lift rear of vehicle and support it off the ground.
2. Remove rear idler wheel caps.

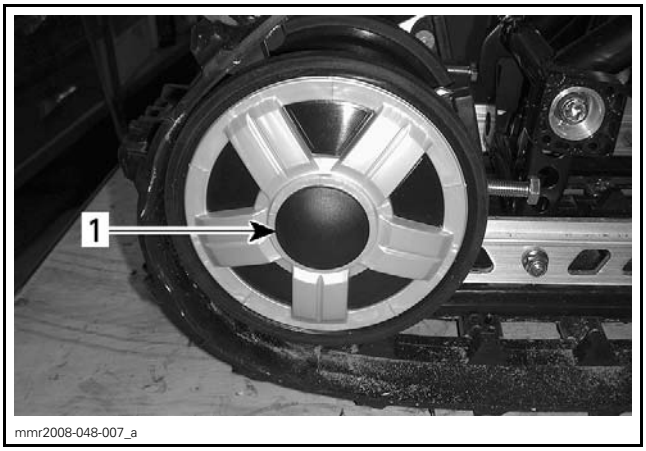


*TYPICAL*
*1. RH rear idler wheel cap*

3. Loosen rear axle screws (one each side).

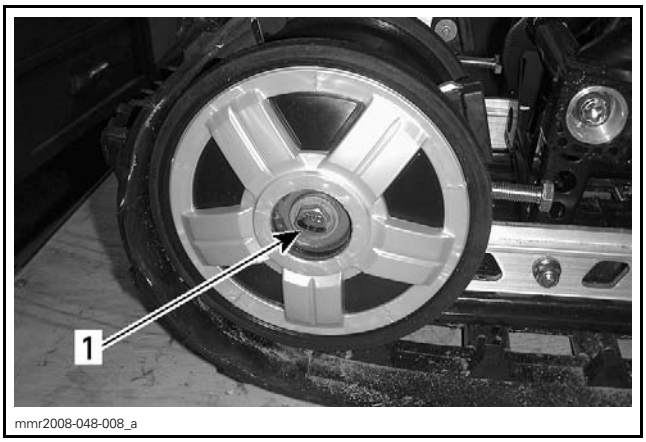


*TYPICAL*
*1. RH rear axle screw*

4. Tighten or loosen both adjustment screws to increase or decrease track tension.

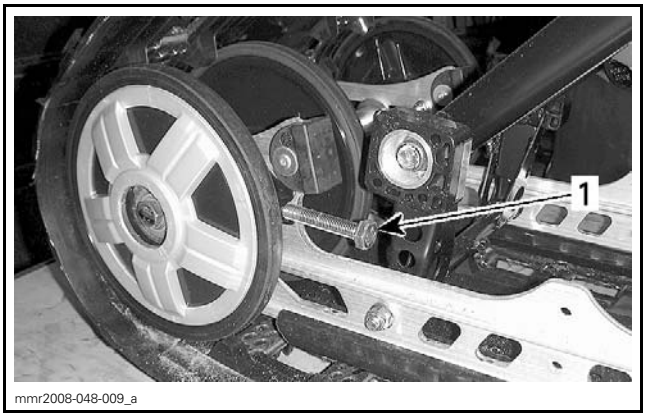


*TYPICAL*
*1. RH adjustment screw*

5. Verify track tension, refer to *TRACK TENSION VERIFICATION* in this subsection.

### Track Alignment

**⚠ WARNING**

**Before checking track alignment, ensure that the track is free of all particles which could be thrown out while track is rotating. Keep hands, tools, feet and clothing clear of track. Ensure no one is standing in close proximity to the vehicle. Never rotate at high speed.**

1. Start engine and accelerate slightly until the track barely turns. This must be done in a short period of time (1 to 2 minutes).
2. Ensure the track is well centered; equal distance on both sides between edges of track guides and slider shoes.

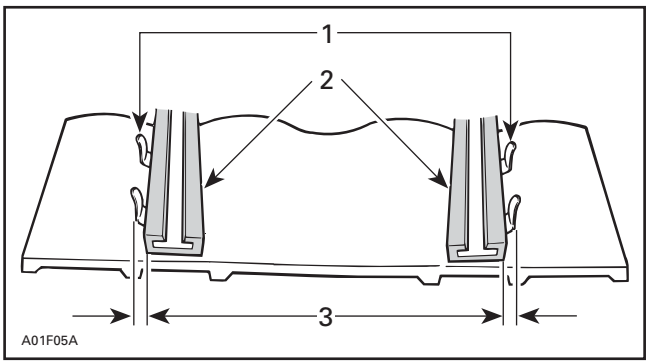


*1. Guides*
*2. Slider shoes*
*3. Equal distance*

3. To correct track alignment:
   3.1 Stop engine.
   3.2 Loosen rear wheel screws.
   3.3 Tighten adjustment screw on side where the slider shoe is the farthest from the track inset guides.

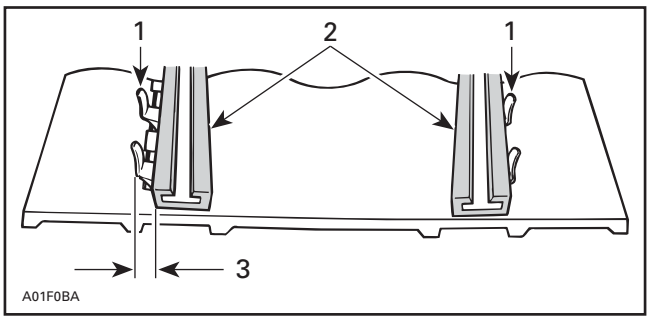


*1. Track guides*
*2. Slider shoes*
*3. Tighten on this side*

4. Restart engine.
5. Rotate track slowly and recheck alignment.
6. If satisfactory alignment is achieved:
   6.1 Tighten idler wheel retaining screws.

| TIGHTENING TORQUE | |
|---|---|
| Idler wheel screw | 48 N•m (35 lbf•ft) |

   6.2 Reinstall wheel caps.

# CHASSIS (SUSPENSION)

## Front Suspension Inspection

Visually inspect front suspension for tightness of components:
- Arms
- Stabilizer bar
- Shock absorbers
- Ball joints.

## Front Suspension Lubrication (Skandic Models)

Lubricate front suspension at grease fittings using recommended product.

| SERVICE PRODUCT | |
|---|---|
| Front suspension | SUSPENSION GREASE (P/N 293 550 033) |

Generally, 4 to 5 grease gun strokes is sufficient.

NOTE: If too much grease is injected, the overflow will come out at steering levers and ski legs. Wipe off any excess of grease to avoid contact with other parts.

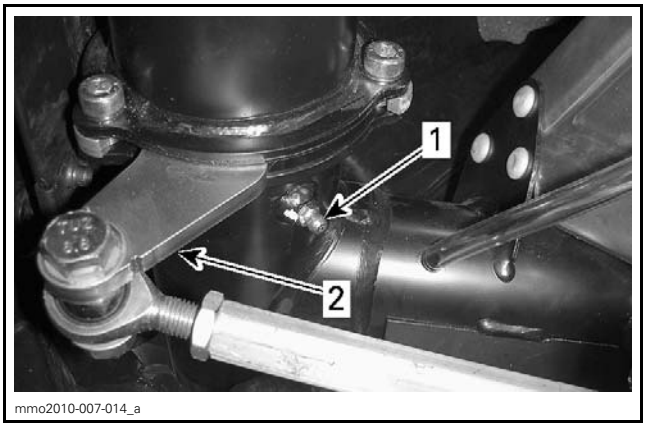


*LH SIDE SHOWN*
*1. Grease fitting*
*2. Steering arm*

## Rear Suspension, Stopper Straps and Slider Shoes Inspection

### Rear Suspension Mechanism and Stopper Straps Inspection

1. Inspect rear suspension components for wear, deterioration or damage, replace defective parts if necessary.
2. Inspect stopper straps for wear or cracks.
3. Check bolt and nut securing straps for tightness. If loose, inspect strap holes for deformation. Replace strap if necessary.

### Slider Shoe Inspection

Slider shoes are worn out and must be replaced when there is just 1 mm to 2 mm (.04 in to .08 in) of remaining material exceeding the molding line.

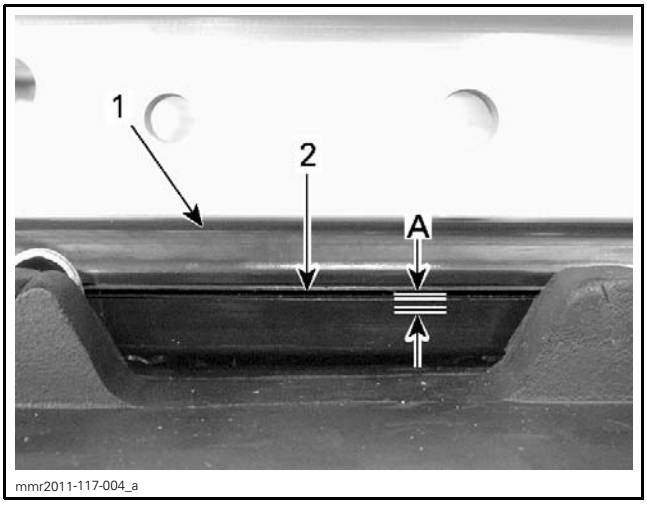


*1. Slider shoe*
*2. Molding line*
*A. Minimum thickness: 1 mm to 2 mm (.04 in to .08 in)*

**NOTICE** Slider shoes must always be replaced in pairs.

## Rear Suspension Lubrication

Lubricate the following suspension pivots at grease fittings using recommended product.

| SERVICE PRODUCT | |
|---|---|
| Rear suspension | SUSPENSION GREASE (P/N 293 550 033) |

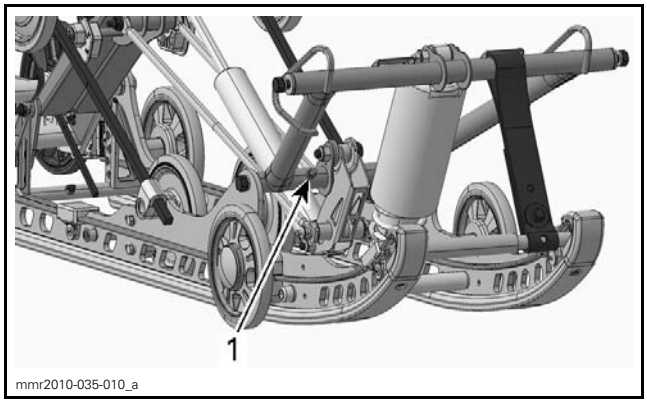


*FRONT ARM - LOWER SHAFT*
*1. Grease fitting*

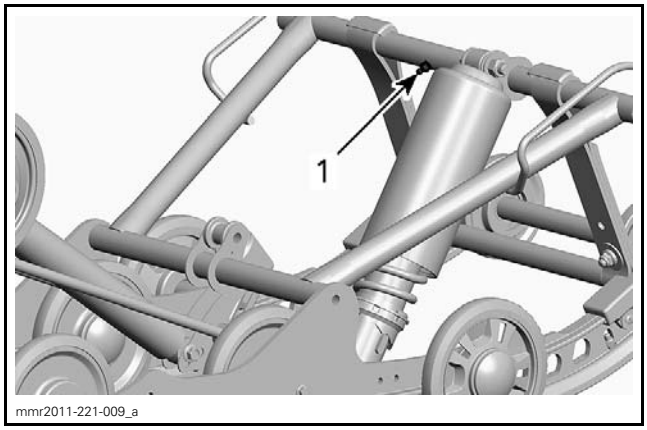


*FRONT ARM - UPPER SHAFT*
*1. Grease fitting*

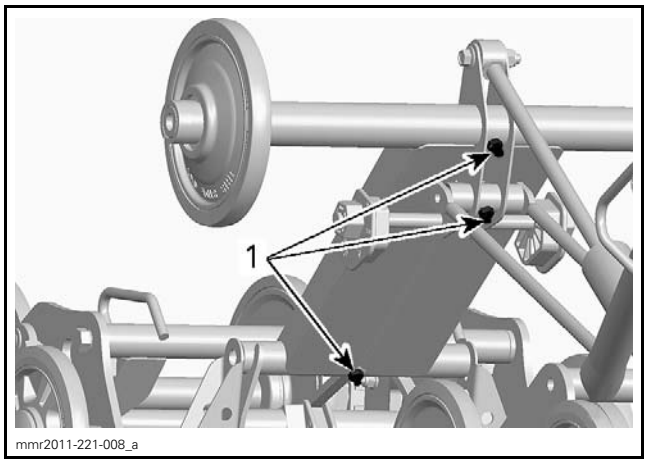


*REAR ARM*
*1. Grease fitting*

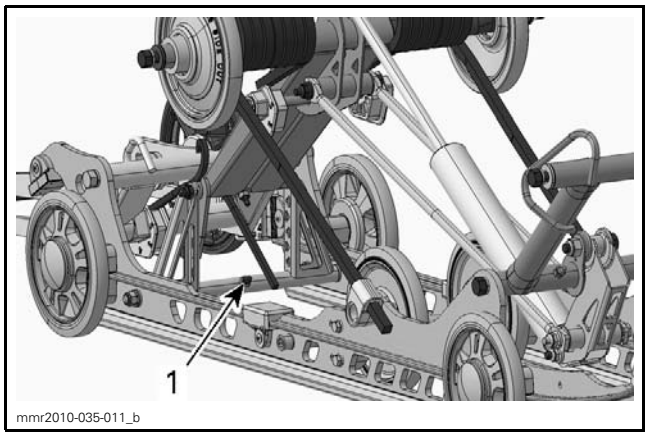


*PIVOT ARM*
*1. Grease fitting*

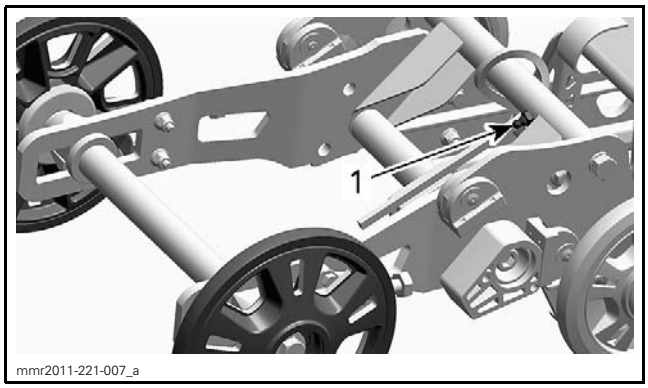


*REAR EXTENSION*
*1. Grease fitting*

# CHASSIS (STEERING)

## Ski and Runner Inspection

Lift the front of vehicle and check ski runners for wear or damage (missing or broken carbide). Replace if necessary.

Inspect ski for excessive wear or other damage. Replace if necessary.

## Steering Mechanism Inspection

Visually inspect steering mechanism for tightness of components (steering arms, tie rods, ski bolts, ski legs, etc.).

# STORAGE PROCEDURE

## SERVICE PRODUCTS


| Description | Part Number | Page |
|---|---|---|
| BRP HEAVY DUTY CLEANER | 293 110 001 | 2 |
| CLEANER AND DEGREASER PRO C1 | 779262 | 2 |
| CLUTCH AND PULLEY FLANGE CLEANER PRO S1 | 779244 | 2 |
| FUEL STABILIZER (EUR) | 779183 | 1 |
| FUEL STABILIZER | 779171 | 1 |
| LUB. & ANTI-CORROSIVE | 779168 | 2 |
| LUBRICANT AND ANTI-CORROSIVE (EUR) | 779224 | 2 |
| OIL STORAGE (EUR) (619590094) | 779225 | 1 |
| OIL STORAGE (EXCEPT USA) | 779173 | 1 |
| OIL STORAGE (USA) | 779182 | 1 |
| PULLEY FLANGE CLEANER (F) | 619 600 022 | 2 |


## GENERAL

If the vehicle is not used or is to be stored for an extended period of time, more than 4 months, be sure to perform the storage procedures described below.

Where applicable, refer to the appropriate subsections in this manual for the required tasks outlined in these procedures.

## PROCEDURES

To facilitate the inspection and ensure adequate lubrication of components, it is recommended to clean the entire vehicle. Refer to *VEHICLE CLEANING* in this subsection.

### FUEL SYSTEM

#### Fuel System Protection

With the new fuel additives, it is critical to use the a fuel stabilizer or an equivalent to prevent fuel deterioration and fuel system gumming. Follow the manufacturer's instructions for proper use.

| COUNTRY | SERVICE PRODUCT |
|---|---|
| Scandinavia | FUEL STABILIZER (EUR) (P/N 779183) |
| All other countries | FUEL STABILIZER (P/N 779171) |

***NOTICE*** **Fuel stabilizer should be added prior to engine lubrication to ensure fuel system components protection against varnish deposits.**

Pour fuel stabilizer in fuel tank. Fill up fuel tank.

### ENGINE

#### Engine Internal Lubrication

Engine internal parts must be lubricated to protect them from rust formation during the storage period.

Proceed as follows:

1. Remove spark plugs, refer to *IGNITION COILS AND SPARK PLUGS* subsection.
2. Spray storage oil into each cylinder.

NOTE: Use the storage oil as per country availability.

| COUNTRY | SERVICE PRODUCT |
|---|---|
| Scandinavia | OIL STORAGE (EUR) (619590094) (P/N 779225) |
| USA | OIL STORAGE (USA) (P/N 779182) |
| All other countries | OIL STORAGE (EXCEPT USA) (P/N 779173) |

3. Press start button, 1 or 2 seconds maximum, to lubricate cylinders.
4. Reinstall the spark plugs.

NOTE: Do not run engine during storage period.

#### Exhaust System

Block muffler outlet with a rag.

#### CVT Protection

Remove drive belt. Refer to *DRIVE BELT* subsection.

Inspect and clean pulleys.

| COUNTRY | SERVICE PRODUCT |
|---|---|
| Scandinavia | PULLEY FLANGE CLEANER (F) (P/N 619 600 022) |
| All other countries | CLUTCH AND PULLEY FLANGE CLEANER PRO S1 (P/N 779244) |

Protect pulley faces with anti-corrosive lubricant.

| COUNTRY | SERVICE PRODUCT |
|---|---|
| Scandinavia | LUBRICANT AND ANTI-CORROSIVE (EUR) (P/N 779224) |
| All other countries | LUB. & ANTI-CORROSIVE (P/N 779168) |

NOTE: Do not reinstall drive belt.

# ELECTRICAL SYSTEM

## Removing the Battery

Remove the battery.

Charge and store battery as per battery manufacturers instructions.

# CHASSIS

## Lubricating the Suspension

Inspect front suspensions Refer to *FRONT SUSPENSION* subsection.

Inspect and lubricate rear suspension. Refer to *REAR SUSPENSION* subsection.

## Track

Lift the rear of vehicle until track is clear of the ground.

Do not release track tension.

## Cleaning the Vehicle

Wash and dry the vehicle.

**NOTICE** Never use a high pressure washer to clean the vehicle. USE LOW PRESSURE ONLY (like a garden hose). The high pressure can cause electrical or mechanical damages.

Remove any dirt or rust.

To clean the vinyl or plastic parts, use only flannel clothes with degreaser.

| SERVICE PRODUCT |
|---|
| CLEANER AND DEGREASER PRO C1 (P/N 779262) |

**NOTICE** It is necessary to use flannel cloths on plastic parts to avoid damaging surfaces. Never clean plastic parts with strong detergent, degreasing agent, paint thinner, acetone, products containing chlorine, etc.

To clean the entire vehicle, including metallic parts use BRP cleaner.

| SERVICE PRODUCT |
|---|
| BRP HEAVY DUTY CLEANER (P/N 293 110 001) |

Inspect the vehicle and repair any damage. Touch up all metal spots where paint has been scratched off. Spray all metal parts with anti-corrosive lubricant.

| COUNTRY | SERVICE PRODUCT |
|---|---|
| Scandinavia | LUBRICANT AND ANTI-CORROSIVE (EUR) (P/N 779224) |
| All other countries | LUB. & ANTI-CORROSIVE (P/N 779168) |

## Vehicle Protection

Protect the vehicle with a cover to prevent dust accumulation during storage.

**NOTICE** The vehicle has to be stored in a cool and dry place and covered with an opaque tarpaulin. This will prevent sun rays and grime from affecting plastic components and vehicle finish.

# PRESEASON PREPARATION

Proper vehicle preparation is necessary when a vehicle has not been used for more than three months. Using the *MAINTENANCE SCHEDULE*, perform the items titled *EVERY YEAR AT PRESEASON*.

# ENGINE REMOVAL AND INSTALLATION

## SERVICE TOOLS


| Description | Part Number | Page |
|---|---|---|
| CLUTCH PULLER | 529 036 275 | 6 |
| ENGINE LIFTING TOOL | 529 036 217 | 6 |
| FUEL HOSE DISCONNECT TOOL | 529 036 037 | 5 |

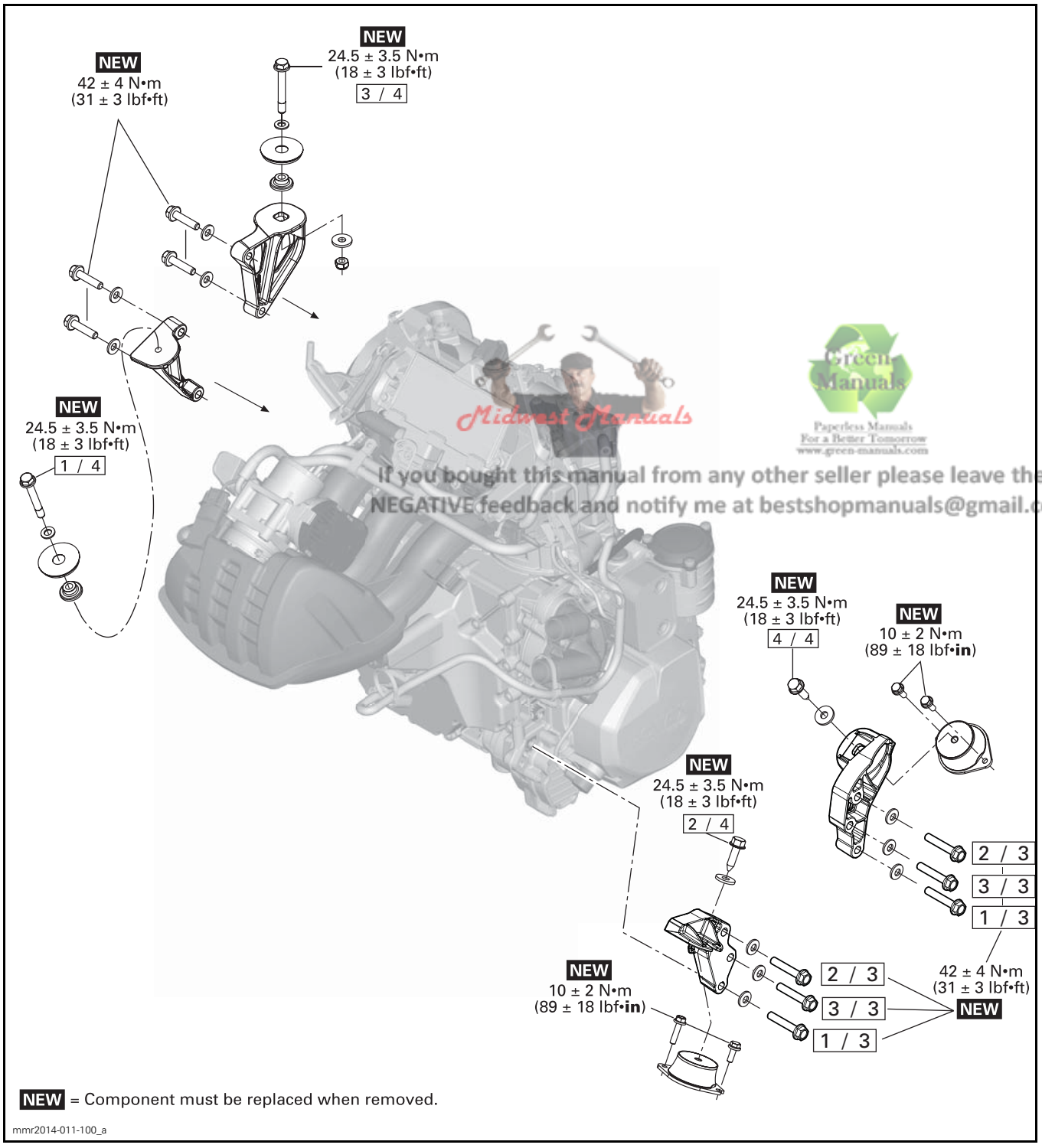


Midwest Manuals
Green Manuals
Paperless Manuals
For a Better Tomorrow
www.green-manuals.com
If you bought this manual from any other seller please leave them
NEGATIVE feedback and notify me at bestshopmanuals@gmail.com

# GENERAL

During assembly/installation, use the torque values and service products as shown in the exploded view.

Clean threads before applying a threadlocker. Refer to *SELF-LOCKING FASTENERS* and *LOCTITE APPLICATION* at the beginning of this manual for complete procedure.

**⚠ WARNING**

**Torque wrench tightening specifications must be strictly adhered to.**
**Locking devices when removed (e.g.: locking tabs, elastic stop nuts, cotter pins, etc.) must be replaced with a new ones.**

***NOTICE*** **Hoses, cables and locking ties removed during a procedure must be reinstalled as per factory standards.**

# PROCEDURES

## ENGINE

### Engine Removal

Place vehicle on a workstation equipped with an engine-lifting hoist.

1. Refer to appropriate subsection and remove:

*REV-XR Models*

– Side panels
– Hood
– Upper bottom pans
– Console
– Air intake silencer and gauge support assembly.

*REV-XS Models*

– Side panels
– Upper body module and its support
– Bottom pan cover
– Rear console.

*All Models*

2. Remove the seat.
3. Move fuel tank rearward without removing it. Refer to *FUEL TANK AND FUEL PUMP* subsection.
4. Remove rear upper screw on RH side bottom pan panel.

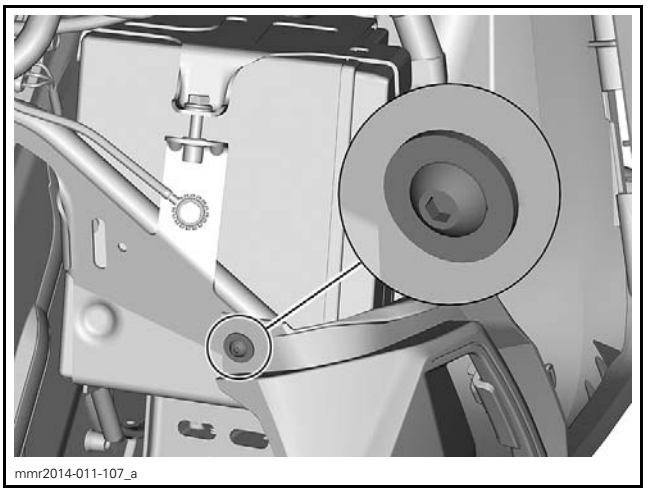
mmr2014-011-107_a

*REV-XS ONLY*

5. Disconnect black (–) cable from battery.

MAG Side Operations

1. Remove breather hose from coolant reservoir. Discard Oetiker clamp.
2. Refer to *EXHAUST SYSTEM* subsection and remove:
   – Muffler
   – Exhaust pipes
   – Exhaust manifold.
3. Drain engine coolant by unscrewing lower screw of water pump.

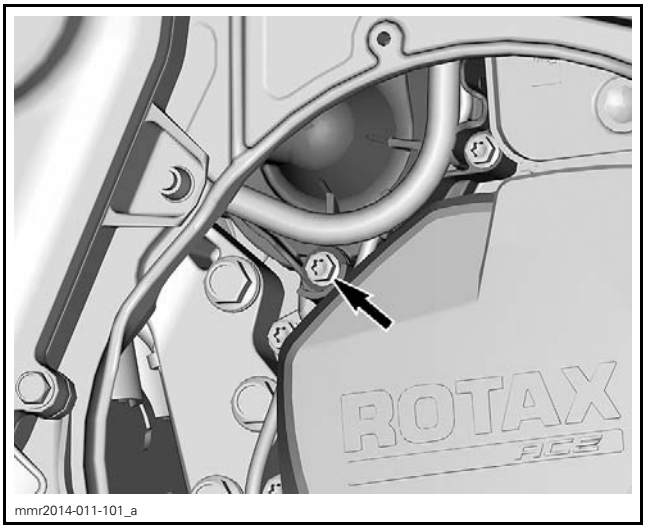

mmr2014-011-101_a

4. Disconnect outlet hose from thermostat housing.

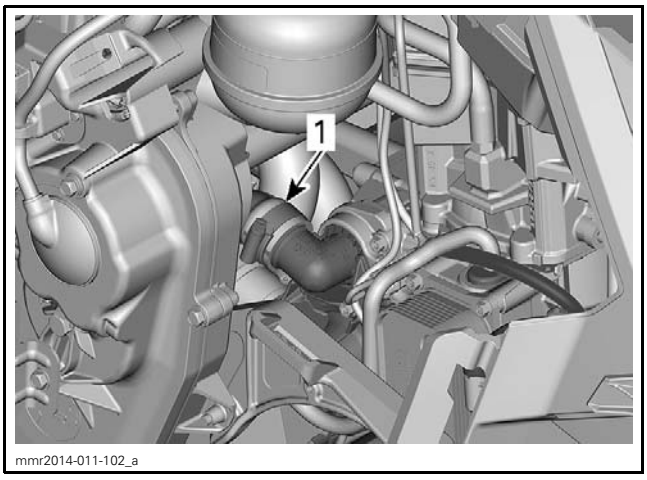


*EXCEPT AIR RADIATOR EQUIPPED MODEL*
*1. Thermostat housing outlet hose*

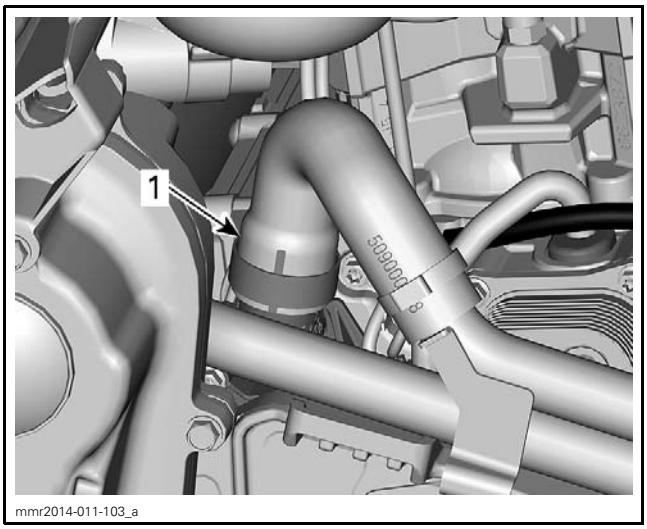


*AIR RADIATOR EQUIPPED MODEL*
*1. Thermostat housing outlet hose*

5. Remove locking tie on water pump inlet hose.
6. Disconnect coolant inlet hose from water pump.

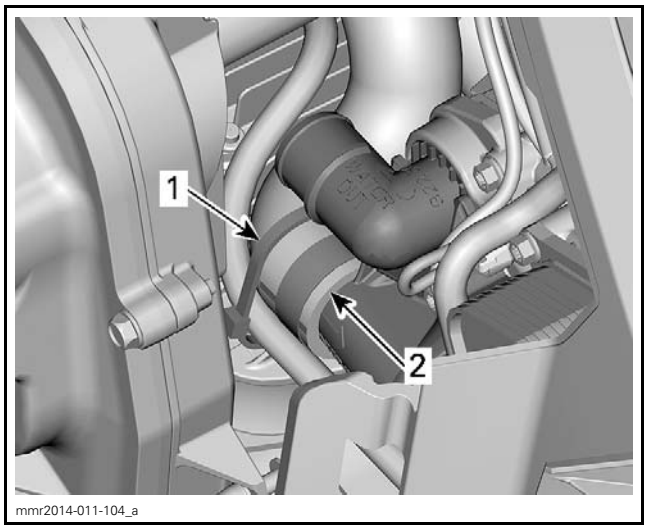


*RH FRAME MEMBER REMOVED FOR CLARITY*
*1. Locking tie*
*2. Water pump inlet hose*

7. Remove locking tie securing magneto connector wires.
8. Disconnect magneto connector from voltage regulator.

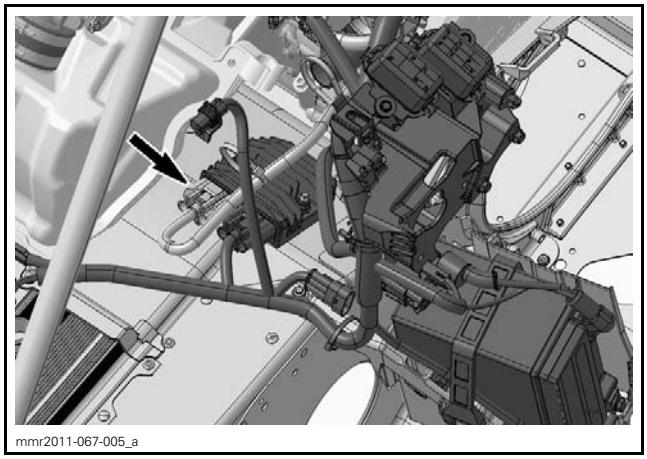


*SOME PARTS REMOVED FOR CLARITY PURPOSE*

9. Remove locking ties securing harness of ECM connector A to ECM support.

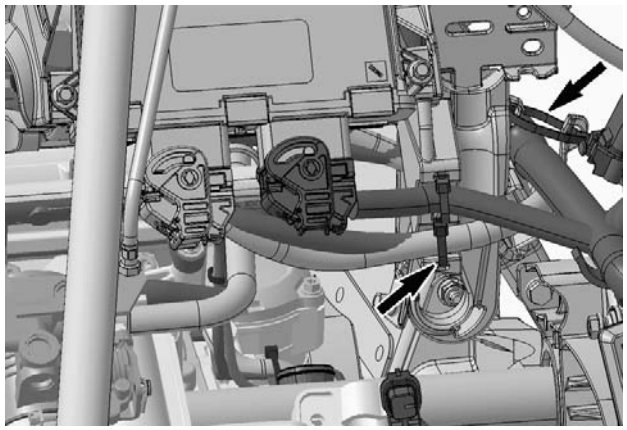
mmr2011-175-001_a

*TYPICAL - SOME PARTS REMOVED FOR CLARITY PURPOSE*

10. Disconnect both ECM connector from ECM.

mmr2011-067-007_a

Refer to *CONNECTOR INFORMATION* subsection in 2013 REV-XS / REV-XM shop manual (P/N 219 100 731).

11. Disconnect engine harness connector located in front of ECM support.

mmr2011-067-008_a

12. Disconnect fuel hose from fuel rail using the FUEL HOSE DISCONNECT TOOL (P/N 529 036 037).

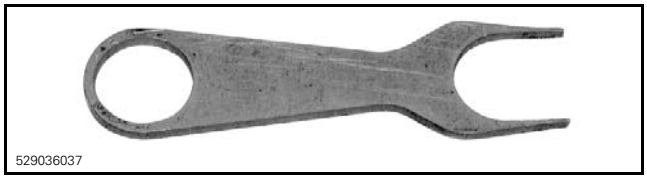
529036037

NOTE: Wrap a rag around fuel hose end to catch leakage.

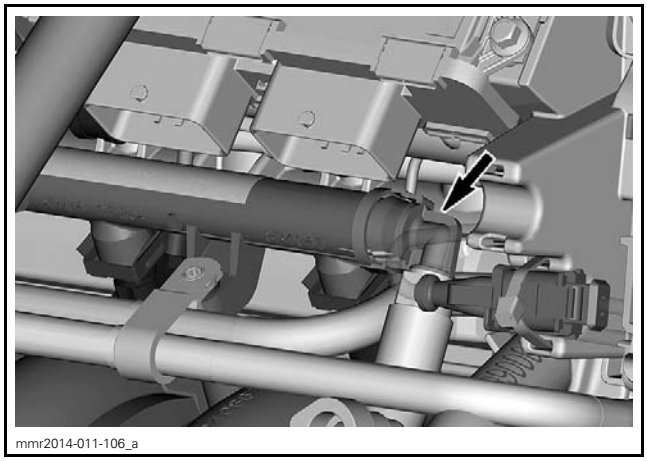
mmr2014-011-106_a

**⚠ CAUTION** Wipe out any fuel leakage.

13. Disconnect blow-by hose from valve cover.

mmr2011-067-011_a

14. Remove screw securing rear MAG rubber mount to engine support.

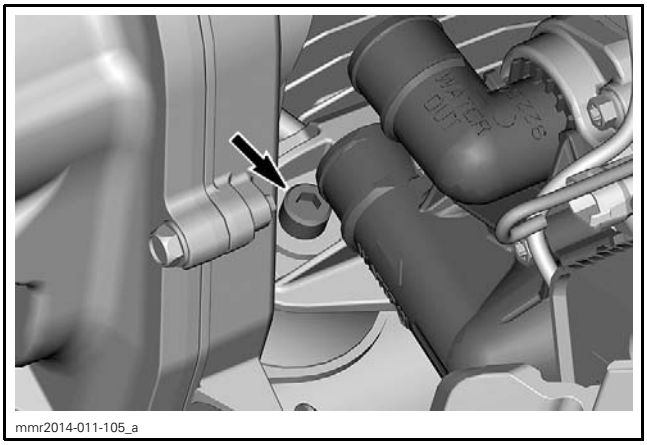

mmr2014-011-105_a

15. Remove screw securing front MAG rubber mount to engine support.

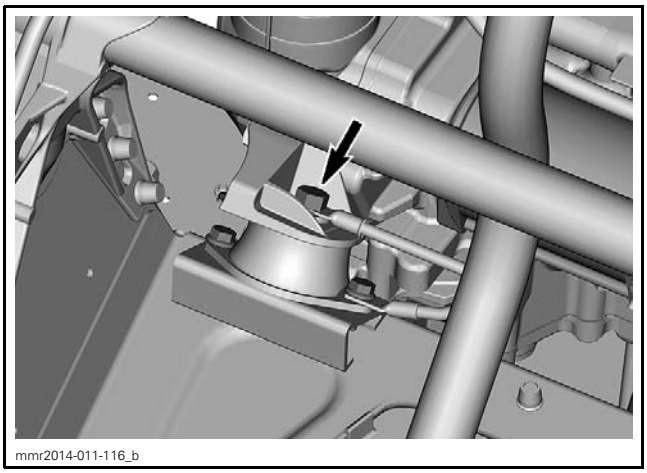
mmr2014-011-116_b

16. Disconnect starter cable from solenoid.

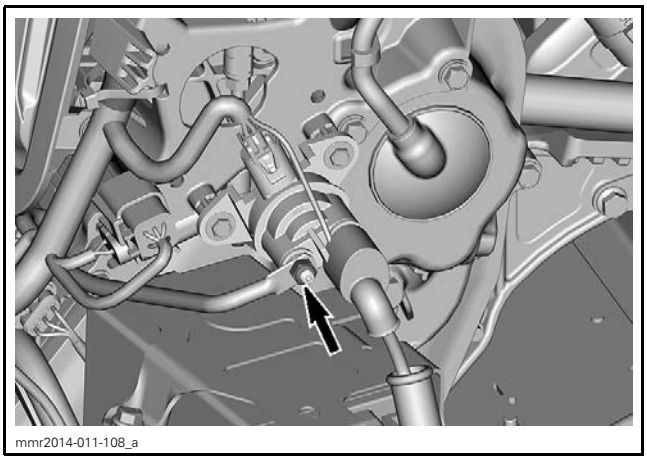
mmr2014-011-108_a

## PTO Side Operations

1. Refer to *DRIVE SYSTEM* section and remove:
   - Drive pulley
   - Driven pulley
   - Countershaft.

NOTE: Use the new CLUTCH PULLER (P/N 529 036 275) to remove the drive pulley on this engine.

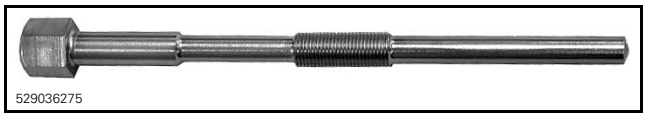
529036275

2. Remove LH side upper column support.

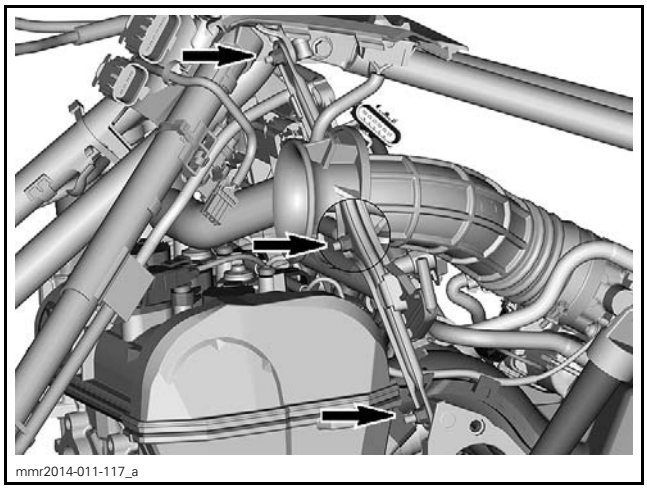
mmr2014-011-117_a

*RETAINING SCREWS*

3. Remove brake hose from brake caliper and discard sealing washers.

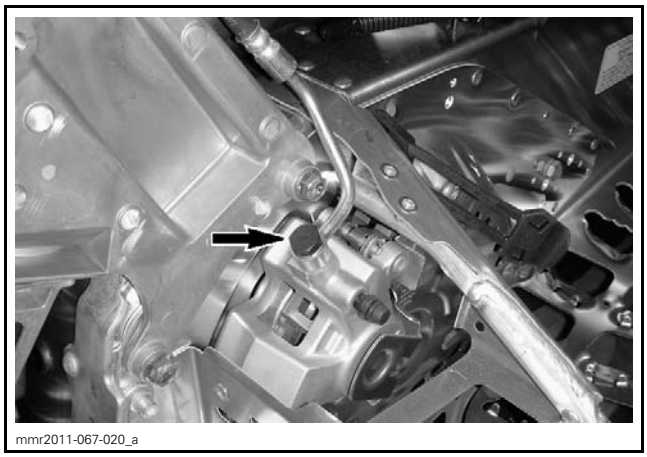
mmr2011-067-020_a

4. Install the ENGINE LIFTING TOOL (P/N 529 036 217) instead of exhaust manifold.

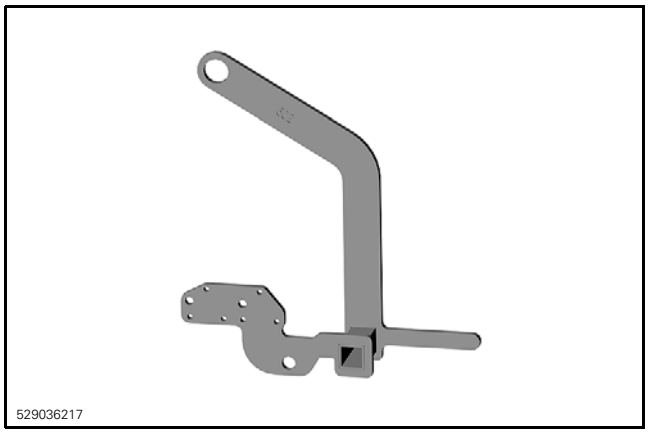


5. Secure lifting tool using exhaust manifold screws.
6. Slightly lift engine.
7. Remove countershaft bearing support. Refer to *DRIVEN PULLEY AND COUNTERSHAFT* subsection.

**NOTICE** Move ECM support rearward to avoid to damage fuel rail during engine removal.

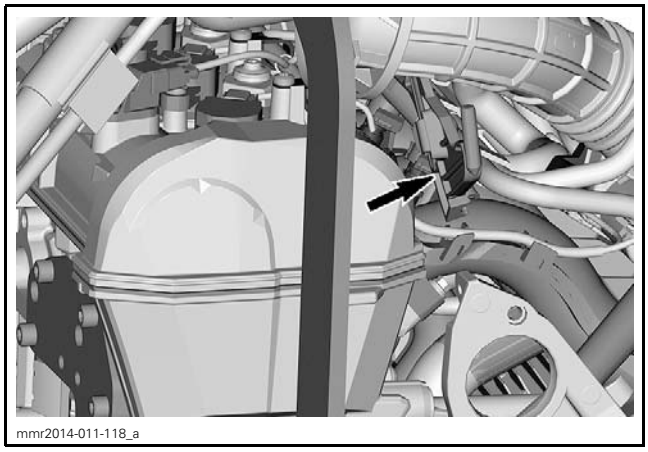


8. Lift engine then slide it out of vehicle.

**NOTICE** Make sure the starter cable is moving out freely from behind the chaincase.

## Engine Installation

The installation is the reverse of removal procedure, however pay attention to the following.

Install NEW self-locking screws where required, refer to exploded view at the beginning of this subsection.

Refill and bleed brake system. Refer to *PERIODIC MAINTENANCE PROCEDURES* subsection.

Tighten Banjo fitting on brake caliper with NEW sealing washers. Refer to *BRAKE* subsection for tightening torque.

| TIGHTENING TORQUE | |
|---|---|
| Banjo Fitting | 35 N•m (26 lbf•ft) |

Properly tighten countershaft bearing support. Refer to *DRIVEN PULLEY* subsection for tightening sequence.

Tighten engine rubber mount screws to specification as per the following sequence.

| TIGHTENING TORQUE | |
|---|---|
| Engine rubber mount screws (M8) | 24.5 N•m ± 3.5 N•m (18 lbf•ft ± 3 lbf•ft) |

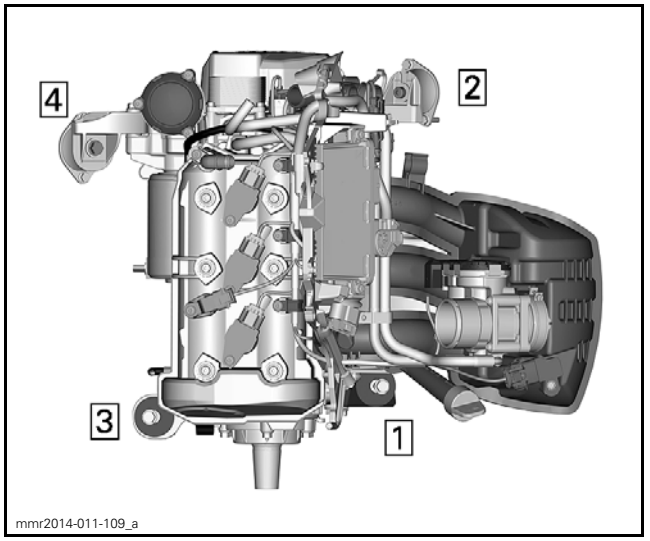


*TIGHTENING SEQUENCE*

# ENGINE SUPPORTS

## Engine Support Inspection

Check if engine supports are cracked, bent or damaged. Replace if necessary.

## Front Engine Support Replacement (PTO Side)

1. Remove body parts and components as required to access to the engine support.
2. Remove and discard bolt securing rubber mount to engine support.

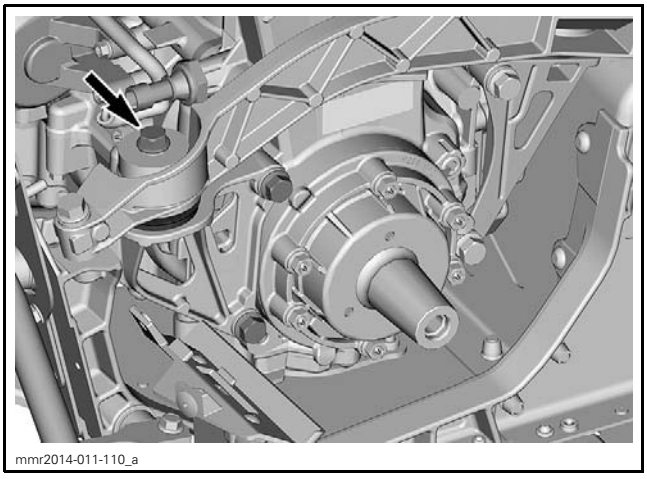
mmr2014-011-110_a

*SOME PARTS REMOVED FOR CLARITY PURPOSE*

3. Remove and discard screws securing engine to engine support.

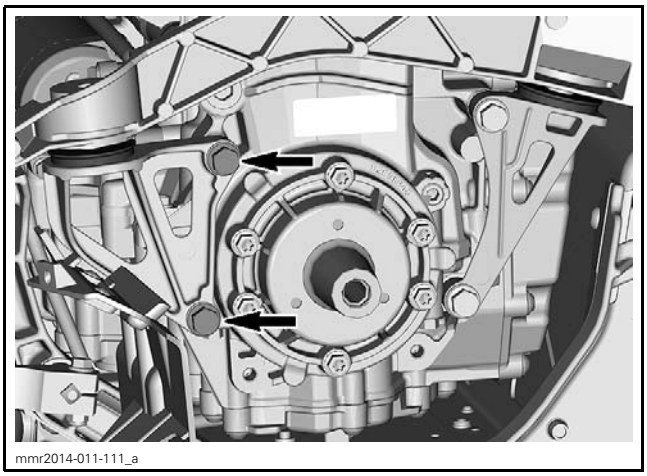
mmr2014-011-111_a

*SOME PARTS REMOVED FOR CLARITY PURPOSE*

4. Replace engine support.
5. Install **NEW** screws to secure engine support on engine.
6. Tighten engine support screws to specification as per the following sequence.

| TIGHTENING TORQUE | |
|---|---|
| Engine support screws | 42 N•m ± 4 N•m (31 lbf•ft ± 3 lbf•ft) |

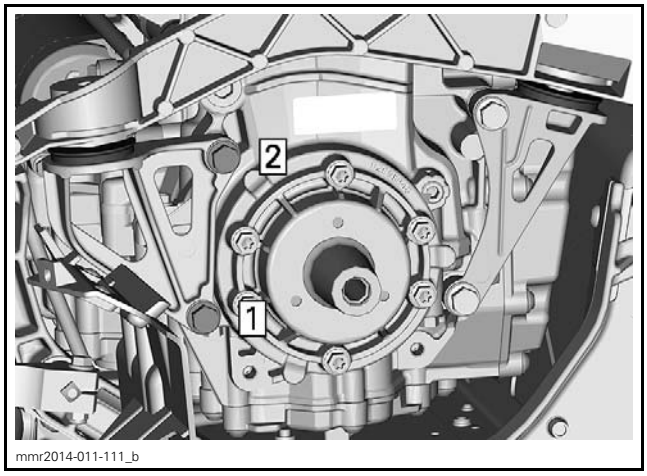

mmr2014-011-111_b

*TIGHTENING SEQUENCE*

7. Install **NEW** bolt to secure engine rubber mount on engine support.
8. Tighten engine rubber mount screw to specification.

| TIGHTENING TORQUE | |
|---|---|
| Engine rubber mount screws (M8) | 24.5 N•m ± 3.5 N•m (18 lbf•ft ± 3 lbf•ft) |

**NOTE:** It is normal that a gap (4 mm (5/32 in)) is visible between engine stopper and countershaft bearing support. This gap will allow engine to move and reduce vibration.

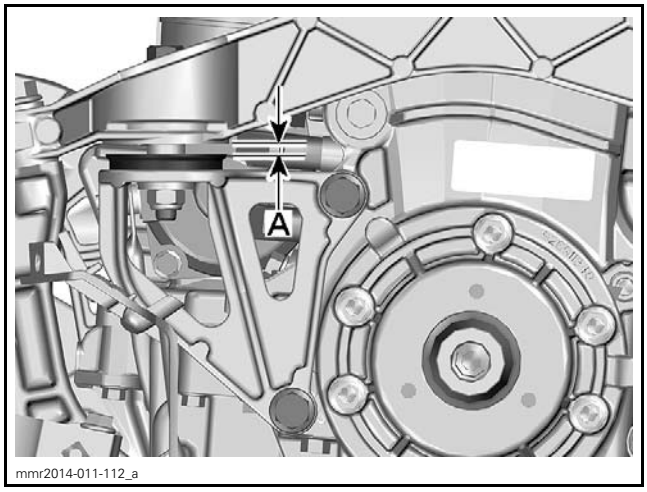

mmr2014-011-112_a

*A. Normal gap*

9. Install body parts and components as the reverse of removal procedure.

## Rear Engine Support Replacement (PTO Side)

To replace rear engine support, refer to *FRONT ENGINE SUPPORT REPLACEMENT (PTO SIDE)*. However pay attention to the following.

Tighten engine support screws to specification as per the following sequence.

| TIGHTENING TORQUE | |
|---|---|
| Engine support screws | 42 N•m ± 4 N•m (31 lbf•ft ± 3 lbf•ft) |

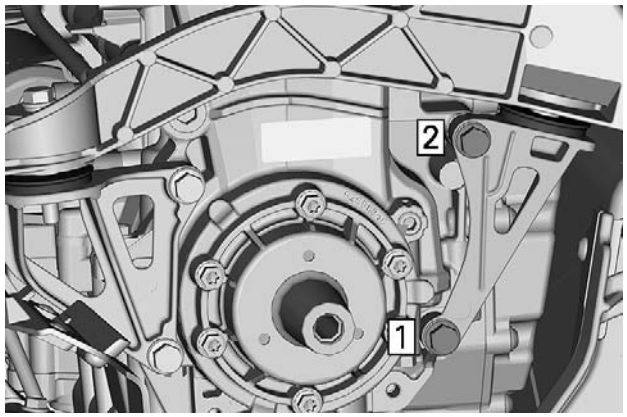

mmr2014-011-113_a

*TIGHTENING SEQUENCE*

## Front Engine Support Replacement (MAG Side)

1. Remove body parts and components as required to access to the engine support.
2. Remove and discard screw securing rubber mount to engine support.

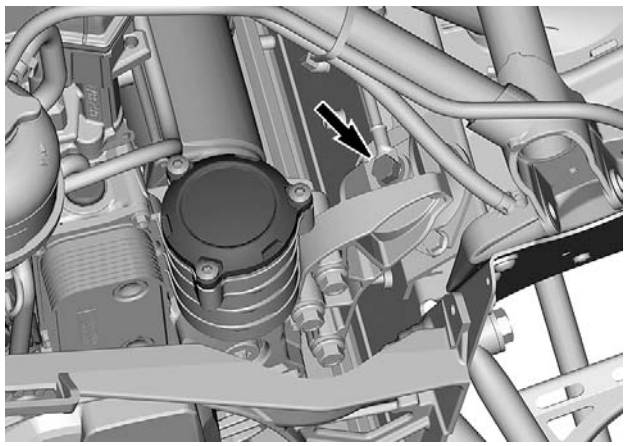
mmr2014-011-114_a

*SOME PARTS REMOVED FOR CLARITY PURPOSE*

3. Remove and discard screws securing engine to engine support.

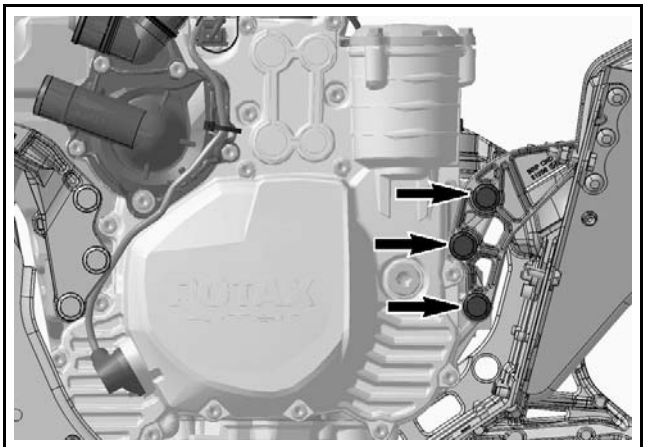
mmr2011-067-032_b

*SOME PARTS REMOVED FOR CLARITY PURPOSE*

4. Replace engine support.
5. Install **NEW** screws to secure engine support on engine.
6. Tighten engine support screws to specification as per the following sequence.

| TIGHTENING TORQUE | |
|---|---|
| Engine support screws | 42 N•m ± 4 N•m (31 lbf•ft ± 3 lbf•ft) |

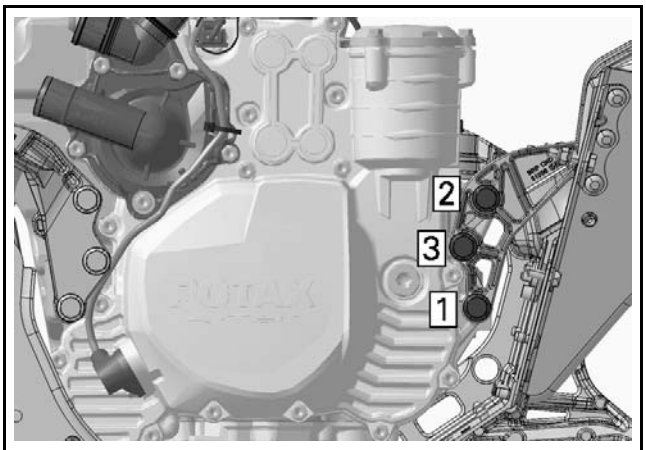

mmr2011-067-032_a

*TIGHTENING SEQUENCE*

7. Install **NEW** screw to secure engine rubber mount on engine support.
8. Tighten engine rubber mount screw to specification.

| TIGHTENING TORQUE | |
|---|---|
| Engine rubber mount screws (M8) | 24.5 N•m ± 3.5 N•m (18 lbf•ft ± 3 lbf•ft) |

9. Install body parts and components as the reverse of removal procedure.

## Rear Engine Support Replacement (MAG Side)

To replace rear engine support, refer to *FRONT ENGINE SUPPORT REPLACEMENT (MAG SIDE)*. However pay attention to the following.

Tighten engine support screws to specification as per the following sequence.

| TIGHTENING TORQUE | |
|---|---|
| Engine support screws | 42 N•m ± 4 N•m (31 lbf•ft ± 3 lbf•ft) |

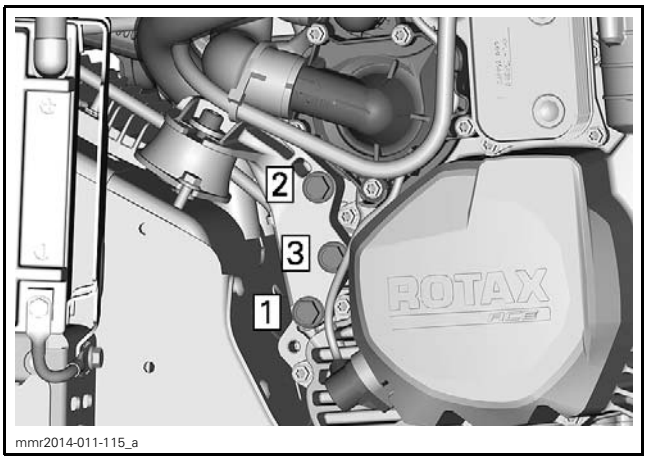


*TIGHTENING SEQUENCE*

# ENGINE RUBBER MOUNTS

## Engine Rubber Mount Inspection

Check rubber mounts. Replace them if brittle, cracked or damaged.

## Front and Rear Engine Rubber Mount Replacement (PTO Side)

1. Remove countershaft bearing support. Refer to *DRIVEN PULLEY* subsection.
2. Replace engine rubber mount.
3. Install countershaft bearing support. Refer to *DRIVEN PULLEY* subsection.

## Front and Rear Engine Rubber Mount Replacement (MAG Side)

1. Remove body parts and components as required to access to the engine rubber mount.
2. Remove and discard screw securing rubber mount to engine support.
3. Remove and discard screws securing rubber mount to frame.

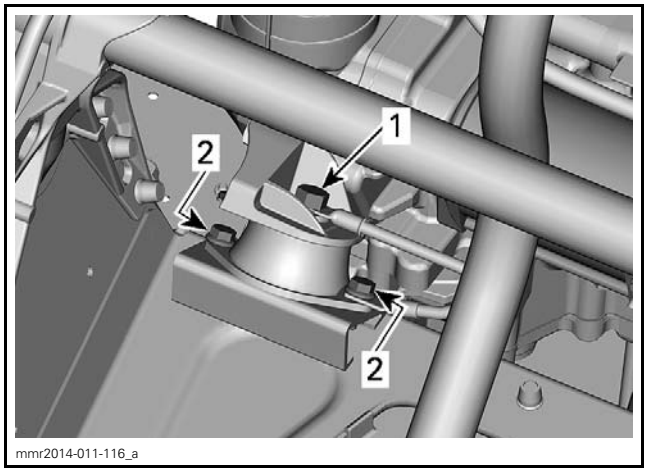


*TYPICAL - FRONT ENGINE RUBBER MOUNT SHOWN*
*1. Screw securing rubber mount to engine support (M8)*
*2. Screws securing rubber mount to frame (M6)*

4. Replace engine rubber mount.
5. Install **NEW** screws to secure engine rubber mount.
6. Tighten engine rubber mount screws to specification.

| TIGHTENING TORQUE | |
|---|---|
| Engine rubber mount screws (M8) | 24.5 N•m ± 3.5 N•m (18 lbf•ft ± 3 lbf•ft) |

| TIGHTENING TORQUE | |
|---|---|
| Engine rubber mount screws (M6) | 10 N•m ± 2 N•m (89 lbf•**in** ± 18 lbf•**in**) |

7. Install body parts and components as the reverse of removal procedure.

# ENGINE REMOVAL AND INSTALLATION

## SERVICE TOOLS

| Description | Part Number | Page |
|---|---|---|
| ENGINE LIFTING TOOL | 529 036 217 | 5 |
| FUEL HOSE DISCONNECT TOOL | 529 036 037 | 3 |

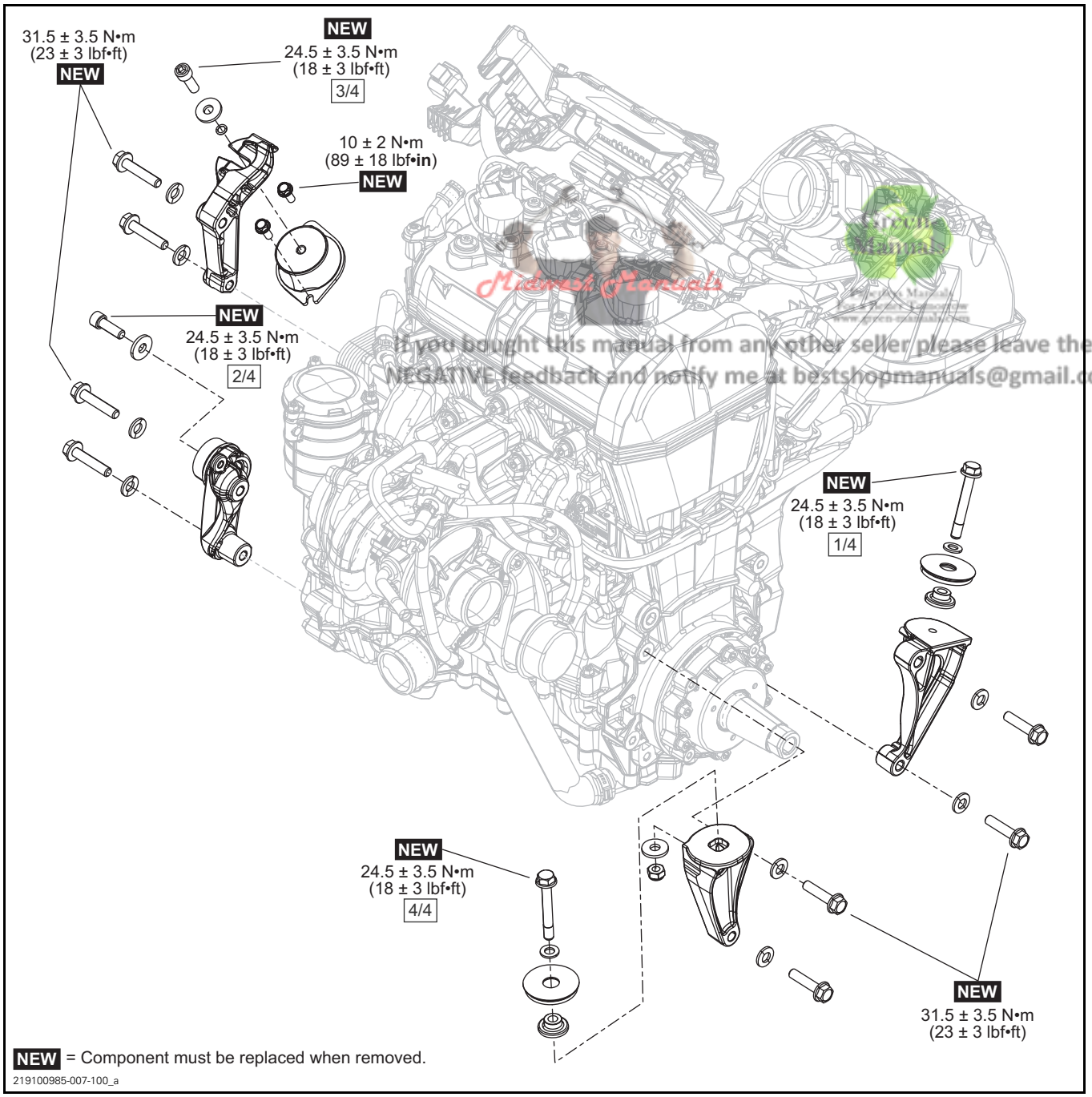


Midwest Manuals
If you bought this manual from any other seller please leave them NEGATIVE feedback and notify me at bestshopmanuals@gmail.com

# GENERAL

During assembly or installation, use the torque values and service products as shown in the exploded view.

Clean threads before applying a threadlocker. Refer to *SELF-LOCKING FASTENERS* and *LOCTITE APPLICATION* at the beginning of this manual for complete procedure.

**⚠ WARNING**

**Torque wrench tightening specifications must be strictly adhered to.**
**Locking devices when removed (e.g.: locking tabs, elastic stop nuts, cotter pins, etc.) must be replaced with a new ones.**

***NOTICE*** **Hoses, cables and locking ties removed during a procedure must be reinstalled as per factory standards.**

# PROCEDURES

## ENGINE

### Removing the Engine

Place vehicle on a workstation equipped with an engine-lifting hoist.

1. Remove fuel pressure. Refer to *ELECTRIC FUEL PUMP* in *FUEL TANK AND FUEL PUMP* subsection.
2. Disconnect the battery.

***NOTICE*** **Always disconnect BLACK (-) cable first, then the RED (+) cable.**

3. Refer to appropriate subsection and remove:
   – Upper body module
   – LH bottom pan
4. Drain coolant. Refer to *COOLING SYSTEM - VEHICLE COMPONENT* subsection.

#### *Without Turbocharger*

5. Remove the exhaust manifold. Refer to *EXHAUST SYSTEM* subsection.

#### *With Turbocharger*

6. Remove the Turbocharger. Refer to *TURBOCHARGER* subsection.

#### MAG Side Operations

1. Disconnect throttle body coolant return hose from coolant reservoir. Discard Oetiker clamp.

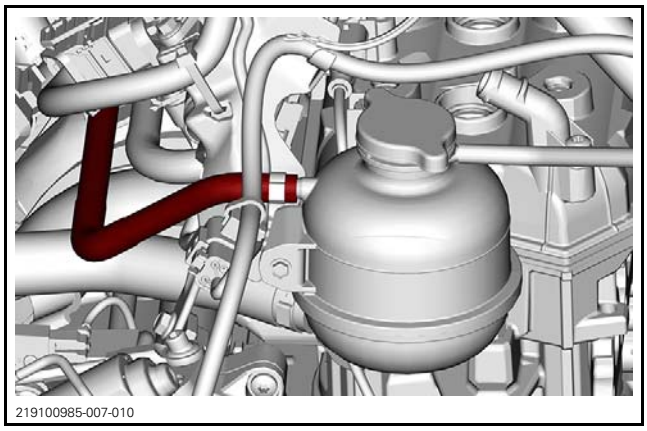


2. Disconnect outlet hose from thermostat housing.

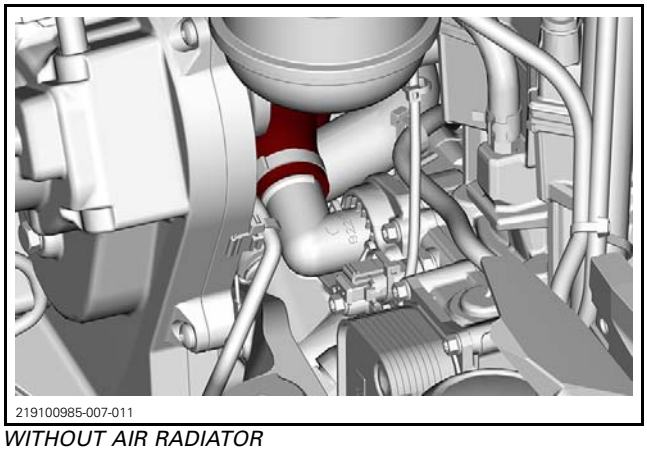


*WITHOUT AIR RADIATOR*

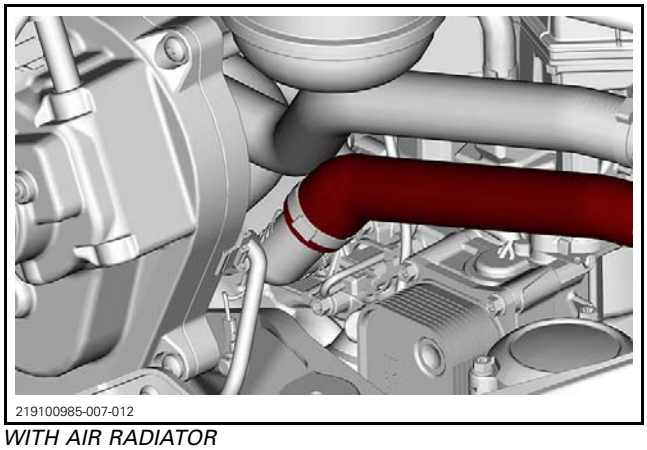


*WITH AIR RADIATOR*

3. Remove locking tie on water pump inlet hose.
4. Disconnect coolant inlet hose from water pump.

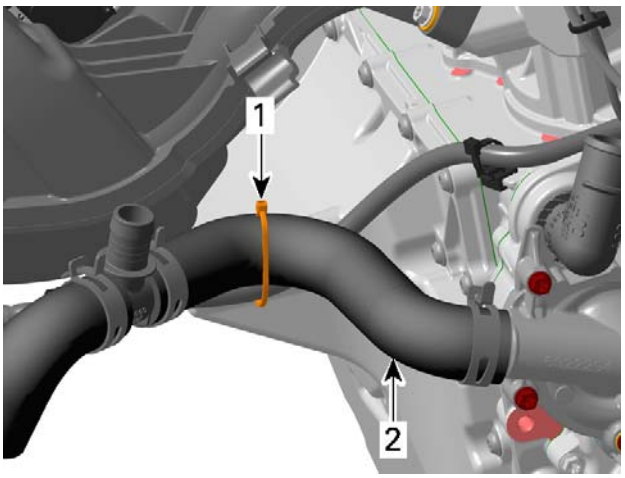

RTX19_900ACE-004_007_b

1. *Locking tie*
2. *Water pump inlet hose*

5. Remove locking tie securing magneto connector wires.

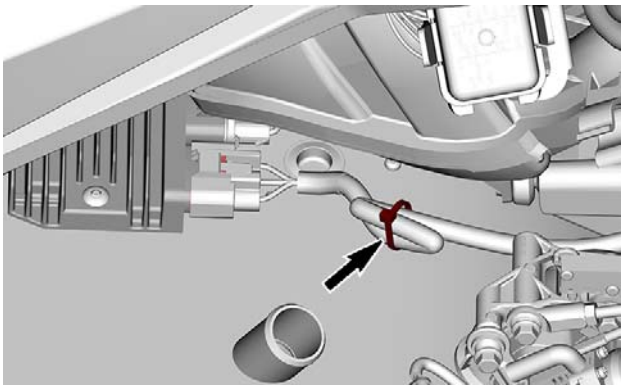
219100985-007-013_a

6. Remove locking ties securing harness of ECM connector A to ECM support.

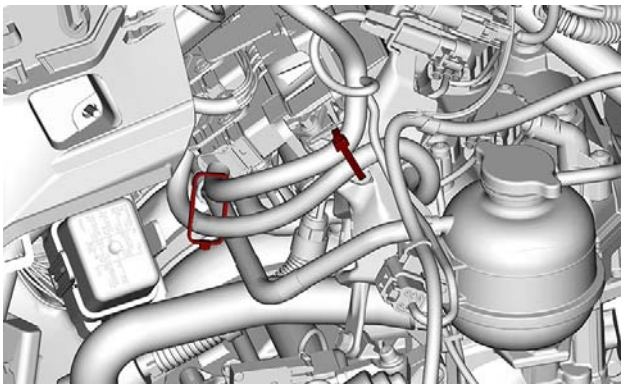
219100985-007-005

7. Disconnect ECM connector A from ECM.

mmr2011-067-007_a

8. Disconnect engine harness connector located in front of ECM support.

mmr2011-067-008_a

9. Disconnect fuel hose from fuel rail.

| REQUIRED TOOL | |
|---|---|
| FUEL HOSE DISCONNECT TOOL (P/N 529 036 037) | |

NOTE: Wrap a rag around fuel hose end to catch leakage.

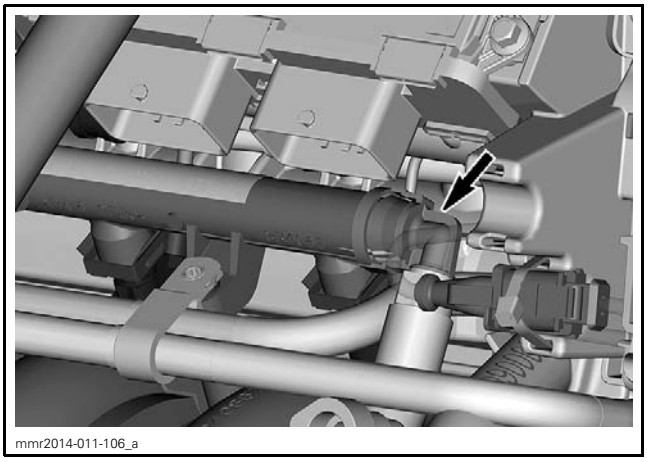
mmr2014-011-106_a

10. Disconnect blow-by hose from valve cover.

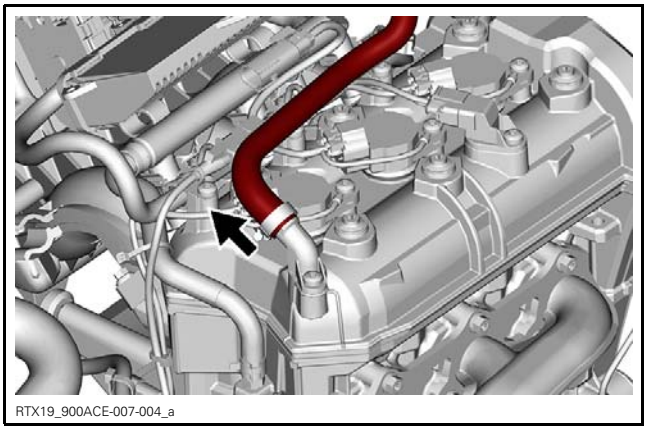
RTX19_900ACE-007-004_a

11. Remove screw securing rear MAG rubber mount to engine support.

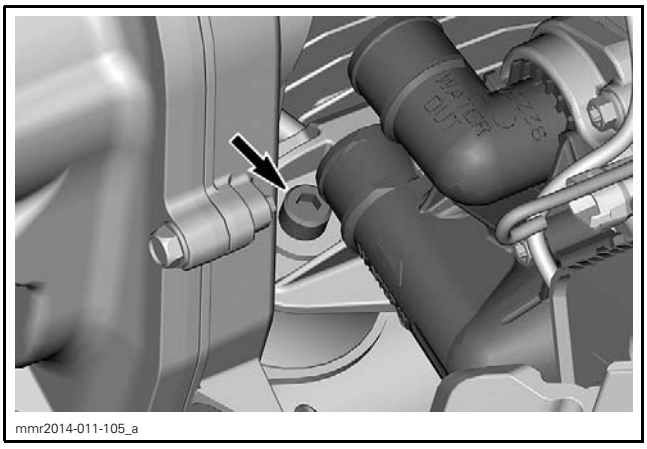
mmr2014-011-105_a

12. Remove screw securing front MAG rubber mount to engine support.

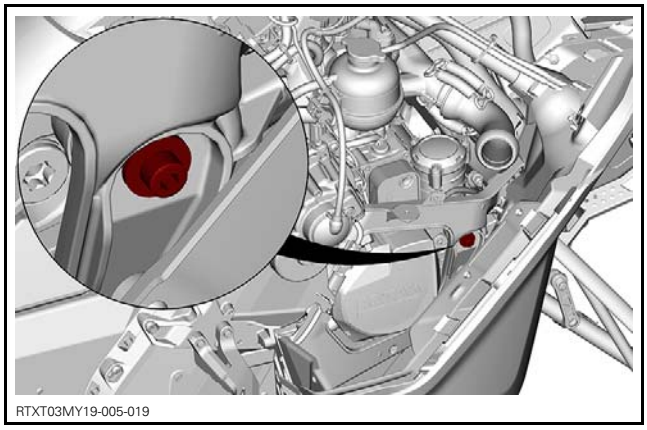
RTXT03MY19-005-019

13. Disconnect engine ground cable from frame.

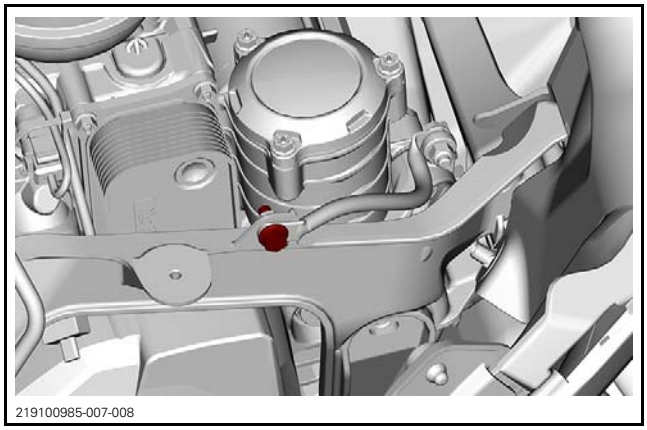
219100985-007-008

## PTO Side Operations

1. Refer to *DRIVE SYSTEM* section and remove:
   - Drive pulley
   - Driven pulley and countershaft.
2. Disconnect starter cable from starter.

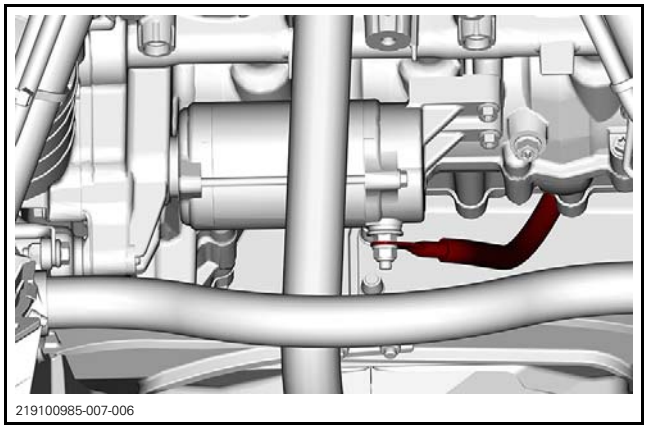
219100985-007-006

3. Remove LH side upper column support.

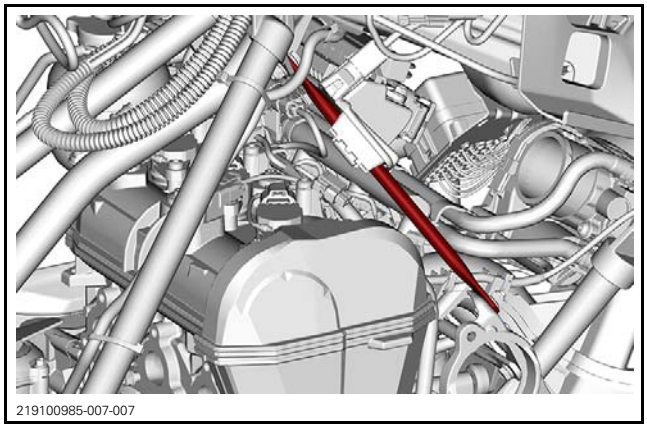
219100985-007-007

4. Install the engine lifting tool instead of exhaust manifold.

| REQUIRED TOOL | |
|---|---|
| ENGINE LIFTING TOOL (P/N 529 036 217) | |

5. Secure lifting tool using exhaust manifold screws.
6. **Slightly** lift engine.
7. Remove countershaft bearing support. Refer to *FRAME* subsection.
8. Disconnect the magneto connector from the voltage regulator while pulling the engine out of vehicle.

## Installing the Engine

The installation is the reverse of the removal procedure. However, pay attention to the following.

Install **NEW** self-locking screws and nuts where required. Refer to exploded view at the beginning of this subsection.

Refill and bleed cooling system. Refer to *COOLING SYSTEM - VEHICLE COMPONENTS* subsection.

Properly tighten countershaft bearing support. Refer to *FRAME* subsection for tightening sequence.

Tighten engine rubber mount screws to specification. Refer to the exploded view for tightening torque and sequence.

# ENGINE SUPPORTS

## Engine Support Inspection

Check if engine supports are cracked, bent or damaged. Replace if necessary.

## Replacing the Front Engine Support (PTO Side)

1. Remove body parts and components as required to access to the engine support.
2. Remove and discard bolt securing rubber mount to engine support.

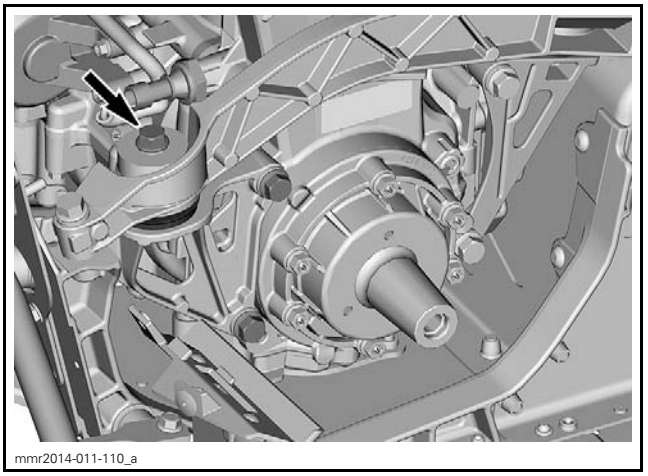
mmr2014-011-110_a

*SOME PARTS REMOVED FOR CLARITY PURPOSE*

3. Remove and discard screws securing engine to engine support.

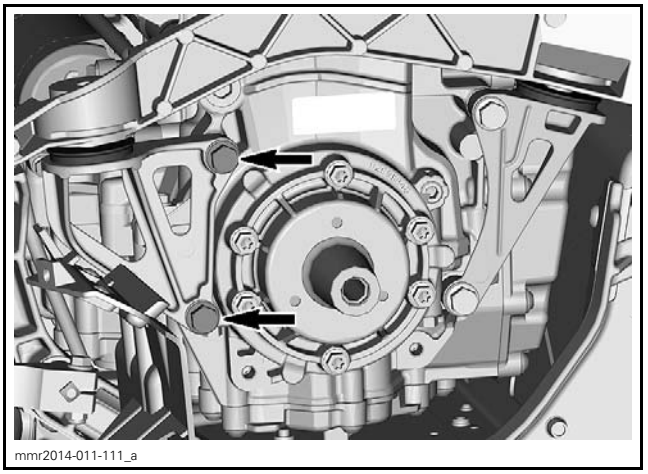
mmr2014-011-111_a

*SOME PARTS REMOVED FOR CLARITY PURPOSE*

4. Replace engine support.
5. Install conical washer as per following illustrations.

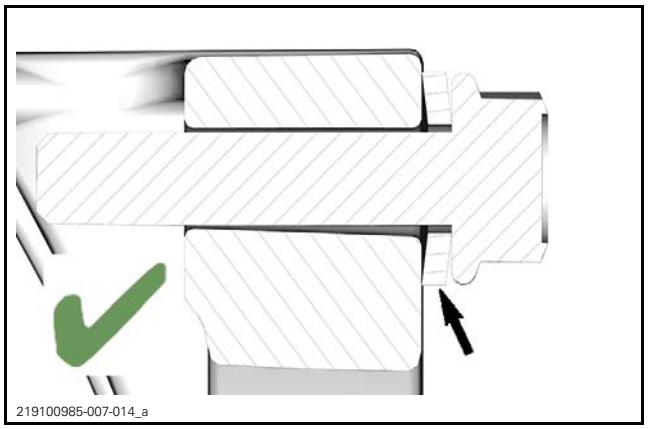


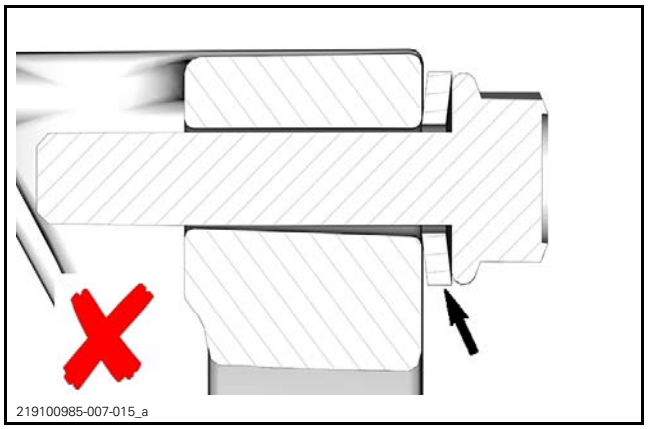


6. Install NEW screws to secure engine support on engine.
7. Tighten engine support screws to specification.

| TIGHTENING TORQUE | |
|---|---|
| Engine support screws | 31.5 N•m ± 3.5 N•m (23 lbf•ft ± 3 lbf•ft) |

8. Install NEW bolt to secure engine rubber mount on engine support.
9. Tighten engine rubber mount screw to specification.

| TIGHTENING TORQUE | |
|---|---|
| Engine rubber mount screws (M8) | 24.5 N•m ± 3.5 N•m (18 lbf•ft ± 3 lbf•ft) |

NOTE: It is normal that a gap (4 mm (5/32 in)) is visible between engine stopper and countershaft bearing support. This gap will allow engine to move and reduce vibration.

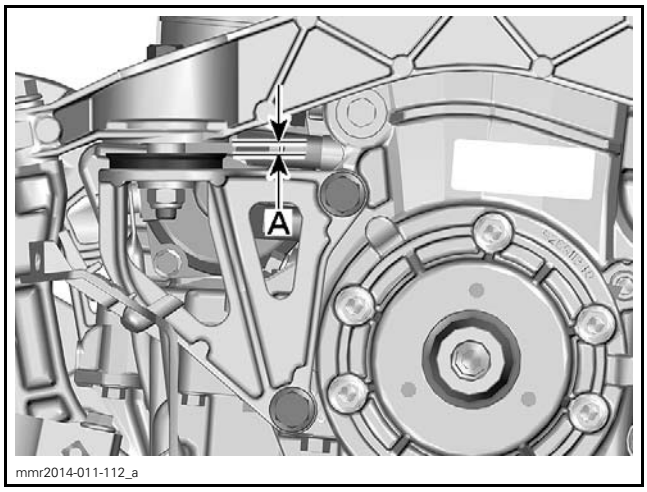


*A. Normal gap*

10. Install remaining parts.

### Replacing the Rear Engine Support (PTO Side)

To replace rear engine support, refer to *REPLACING THE FRONT ENGINE SUPPORT (PTO SIDE)*.

### Replacing the Front Engine Support (MAG Side)

To replace the front engine support, move the engine 25 mm (1 in)towards LH side. Refer to *REPLACING THE THERMOSTAT* procedure in the *COOLING SYSTEM - ENGINE COMPONENTS* subsection.

For support installation, refer to *REPLACING THE FRONT ENGINE SUPPORT (PTO SIDE)*.

### Replacing the Rear Engine Support (MAG Side)

To replace rear engine support, remove the engine. Refer to procedure in this subsection.

For support installation, refer to *REPLACING THE FRONT ENGINE SUPPORT (PTO SIDE)*.

## ENGINE RUBBER MOUNTS

### Engine Rubber Mount Inspection

Check rubber mounts. Replace them if brittle, cracked or damaged.

### Replacing the Front and Rear Engine Rubber Mount (PTO Side)

1. Remove countershaft bearing support. Refer to *FRAME* subsection.
2. Replace engine rubber mount.
3. Install countershaft bearing support. Refer to *FRAME* subsection.

## Replacing the Front Engine Rubber Mount (MAG Side)

The front engine support on MAG side must be replaced with the rubber mount. Refer to *REPLACING THE FRONT ENGINE SUPPORT (MAG SIDE)*.

## Replacing the Rear Engine Rubber Mount (MAG Side)

1. Remove the engine. Refer to procedure in this subsection.
2. Remove and discard screws securing rubber mount to frame.

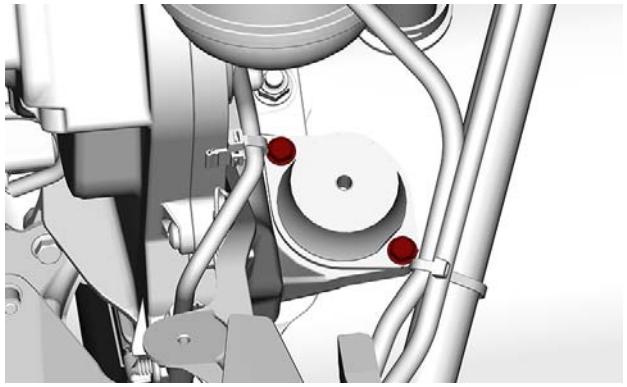

219100985-007-009

3. Replace engine rubber mount.
4. Install NEW screws to secure engine rubber mount.
5. Tighten engine rubber mount screws to specification.

| TIGHTENING TORQUE | |
|---|---|
| Engine rubber mount screws (M8) | 24.5 N•m ± 3.5 N•m (18 lbf•ft ± 3 lbf•ft) |
| Engine rubber mount screws (M6) | 10 N•m ± 2 N•m (89 lbf•**in** ± 18 lbf•**in**) |

6. Install remaining parts.

# AIR INTAKE SYSTEM

## SERVICE TOOLS

| Description | Part Number | Page |
|---|---|---|
| SMALL HOSE PINCHER | 295 000 076 | 47 |

# INTAKE MANIFOLD

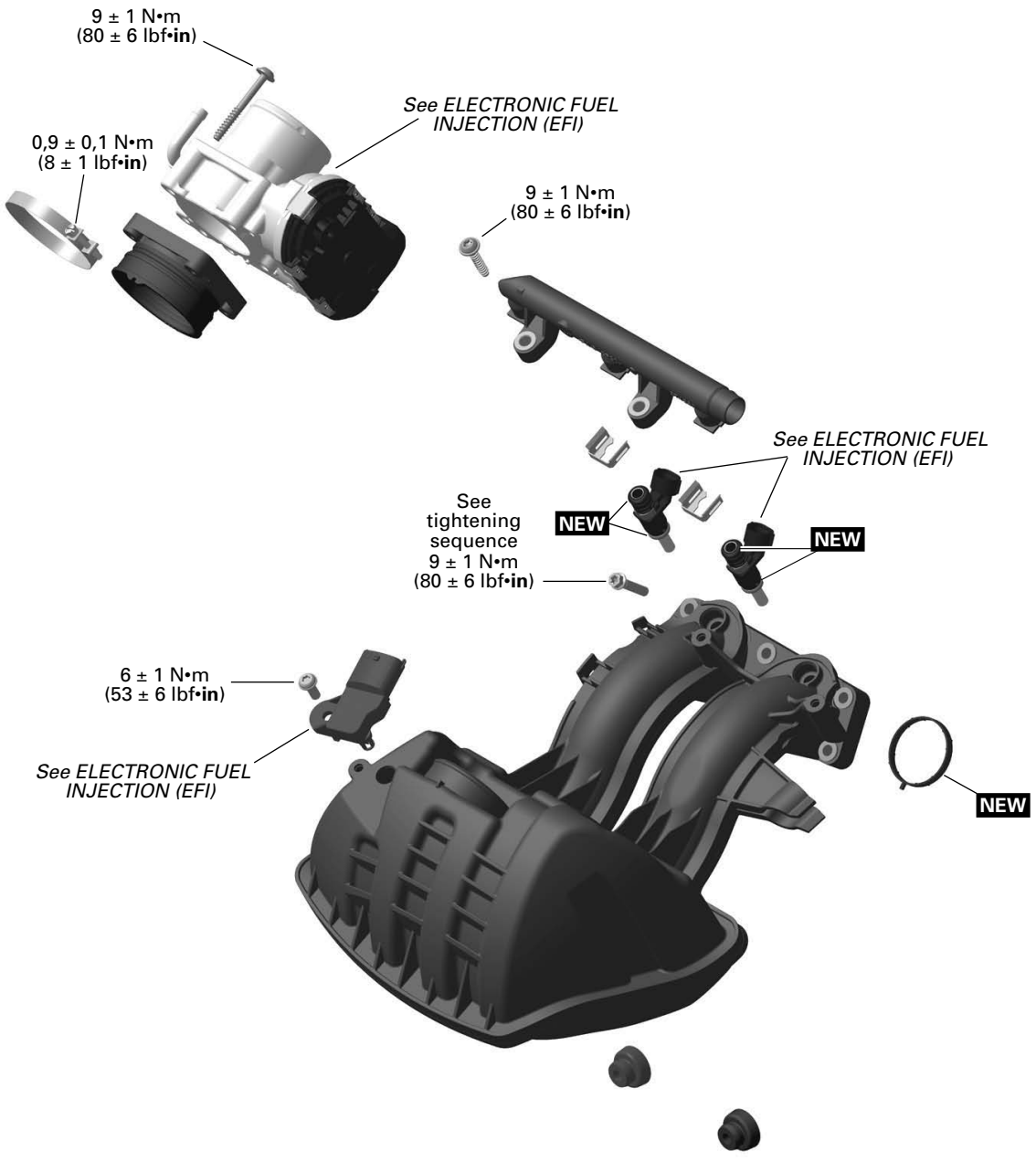


**NEW** = Component must be replaced when removed.

mmr2015-035-001_a

# AIR INTAKE SILENCER

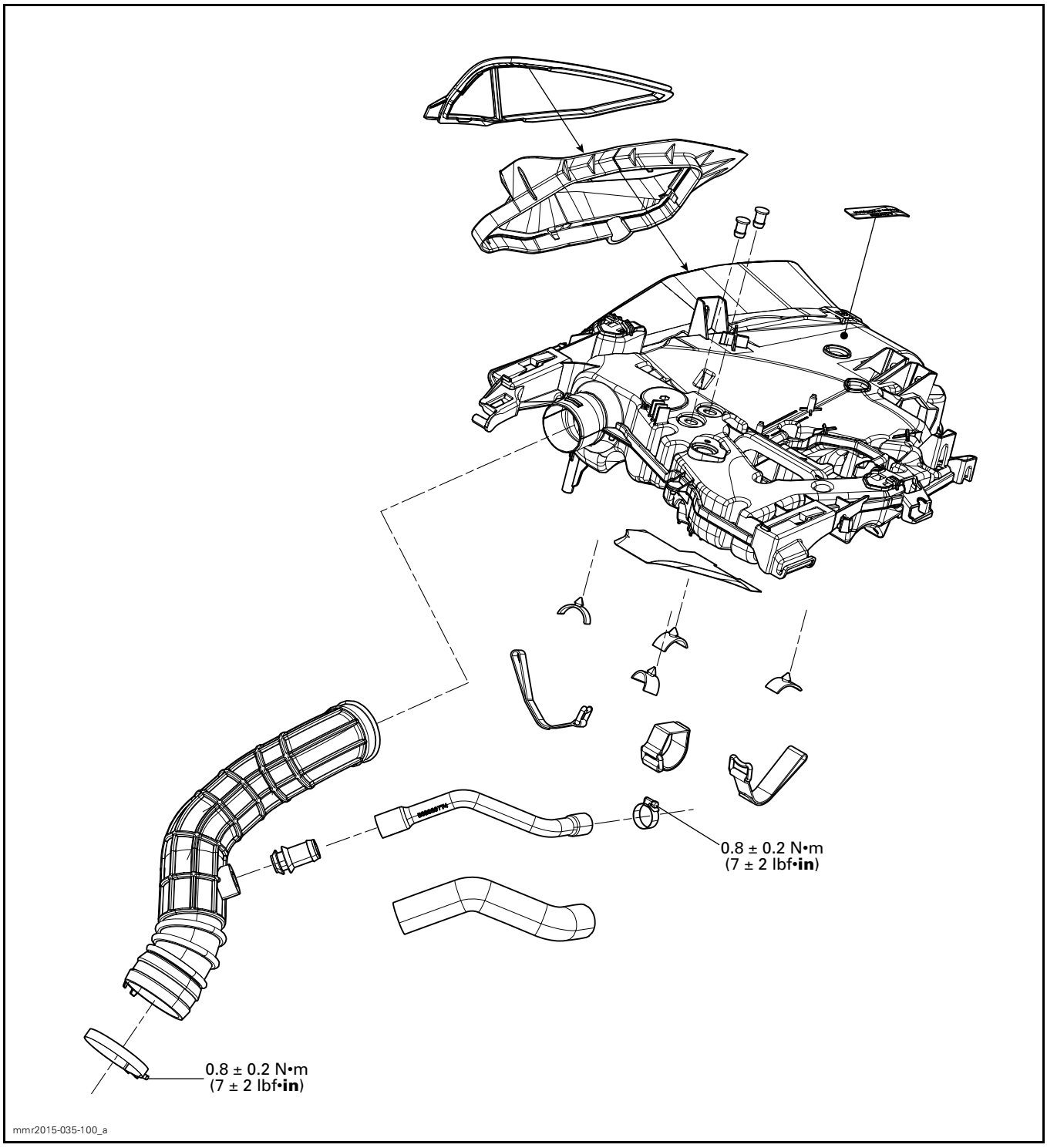

# PROCEDURES

## AIR INLET FILTERS

### Air Filter Removal

1. Refer to *BODY* subsection and remove the following:
   – LH and RH upper side panels
   – Hood.
2. To remove hood mounted filter, simply pull it out.

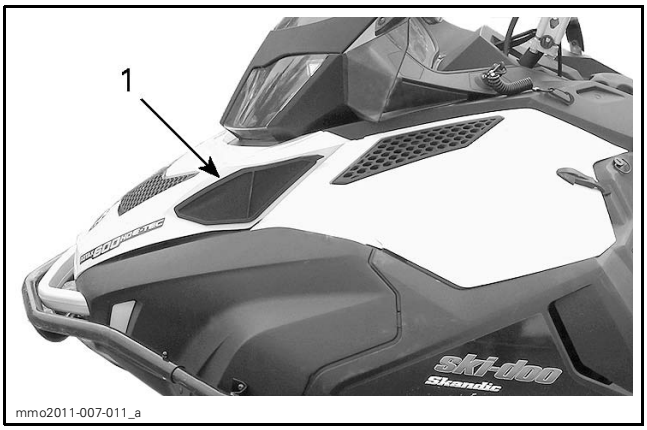


mmo2011-007-011_a

*1. Hood mounted air filter*

3. To remove filter from air intake silencer:
   3.1 Remove hood adapter from air inlet of air intake silencer.

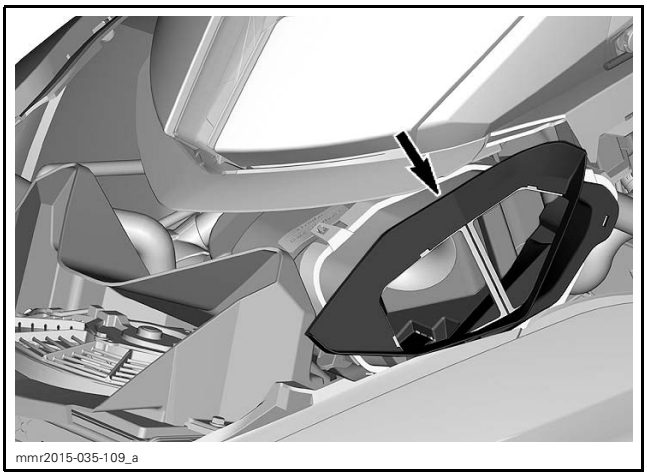

mmr2015-035-109_a

*AIR INLET ADAPTER*

   3.2 Release retaining tabs and pull filter off air inlet.

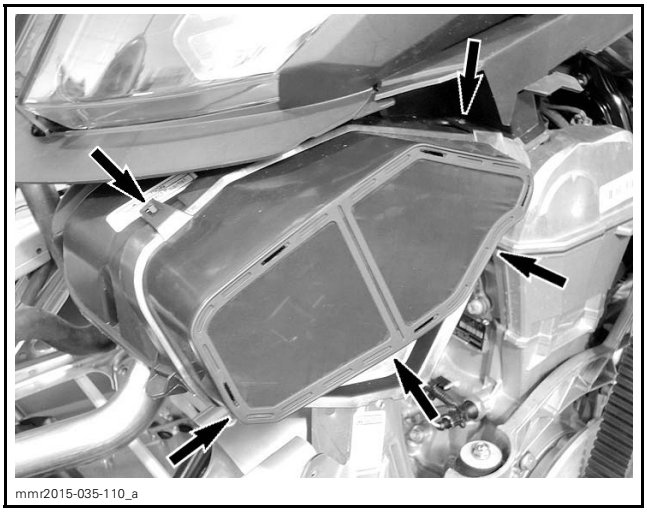

mmr2015-035-110_a

*AIR INLET FILTER*

### Air Filter Cleaning

Gently clean with fresh water and mild soap.

Replace air filter as required.

NOTE: If the filter is very dirty, clean the interior of the air intake silencer at the same time.

### Air Filter Installation

Reverse the removal procedures. Make sure filters are properly secured.

## AIR INTAKE SILENCER

### Air Intake Silencer Removal as a Unit with Headlight/Gauge Module

1. Remove multifunction gauge. Refer to *LIGHTS, GAUGE AND ACCESSORIES* subsection.
2. Disconnect headlight connectors.

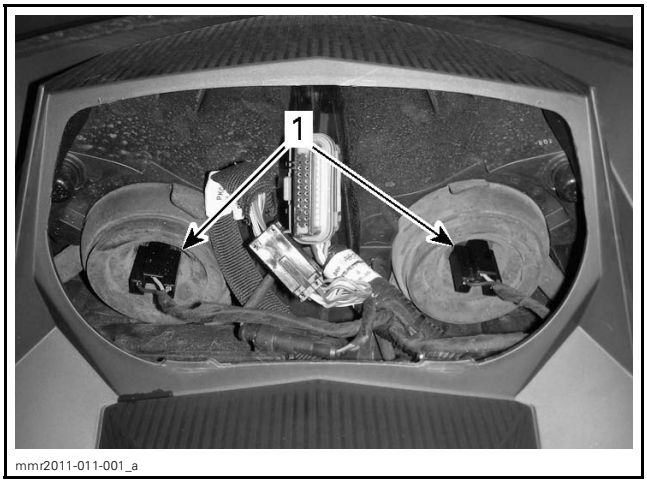


mmr2011-011-001_a

*TYPICAL*
*1. Headlight connectors*

3. Refer to *BODY* subsection and remove:
   – LH and RH upper side panels
   – Hood.
4. Remove front console screws on each side.

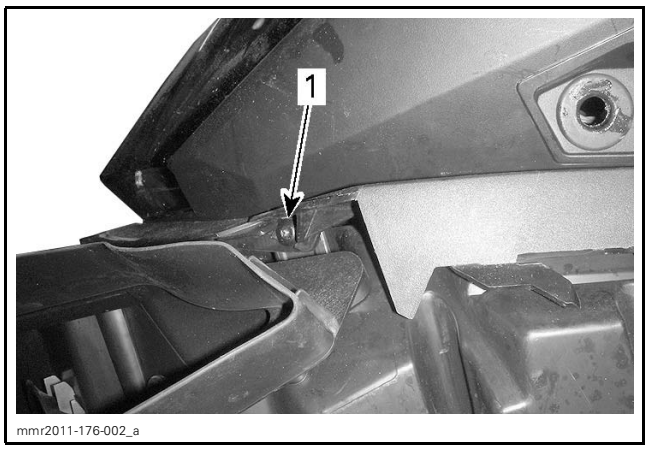


*1. LH front console screw*

5. Detach front of console from headlight/gauge module.

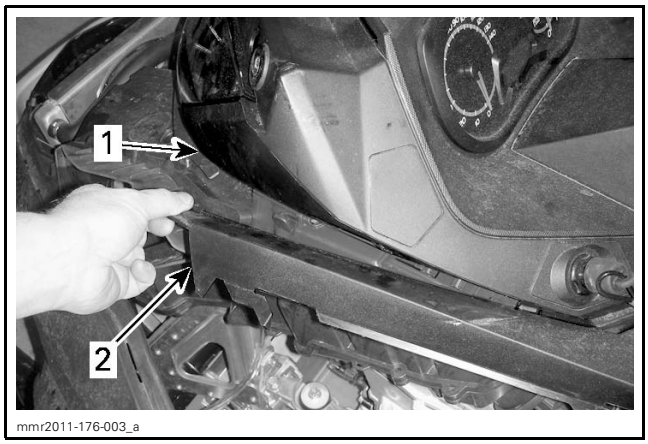


*1. Headlight/gauge module*
*2. Console*

6. Disconnect 12-volt outlet and engine cut-off switch.

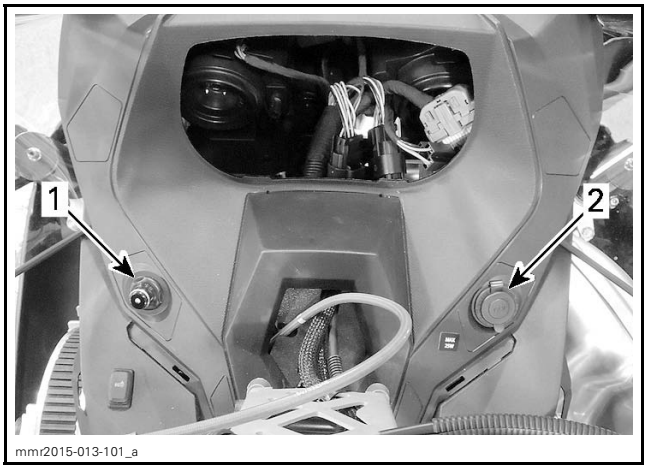


*1. Engine cut-off switch*
*2. 12 Volt outlet*

7. Disconnect intake hose from air intake silencer.

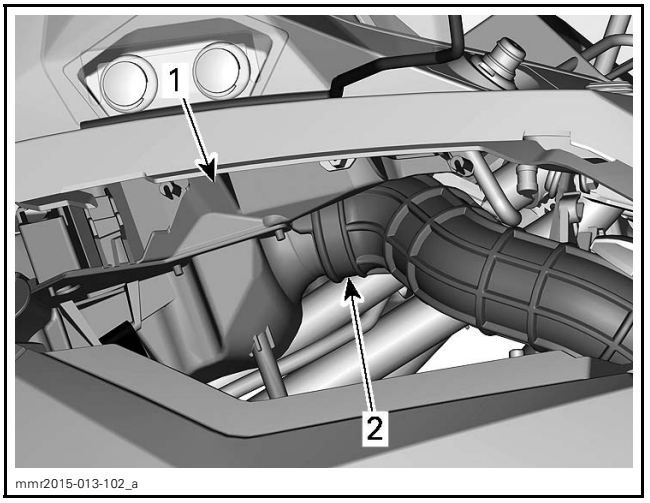


*LH SIDE OF ENGINE COMPARTMENT*
*1. Air intake silencer*
*2. Intake hose*

8. Detach the hook-and-loop fasteners (3).

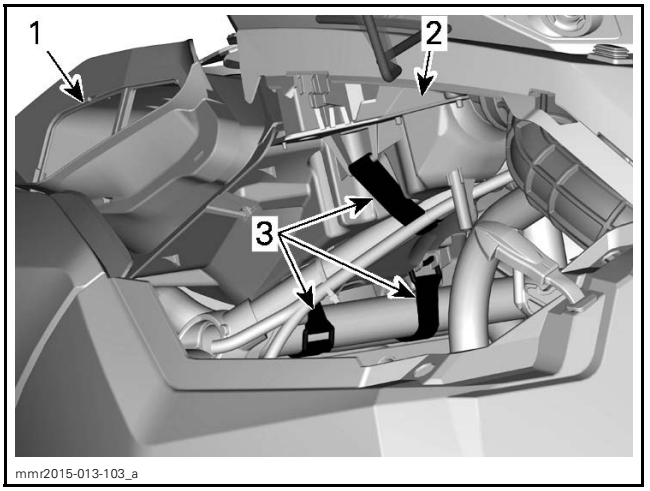


*LH SIDE OF ENGINE COMPARTMENT*
*1. Air inlet*
*2. Air intake silencer*
*3. Hook-and-loop fasteners*

9. Remove air intake silencer and headlight/gauge module from vehicle.

### Air Intake Silencer Removal

1. Proceed with *AIR INTAKE SILENCER REMOVAL AS A UNIT WITH HEADLIGHT/GAUGE MODULE*.
2. Separate air intake silencer from headlight/gauge module. Refer to *BODY* subsection.

### Air Intake Silencer Installation

Reverse the removal procedure. However, pay attention to the following.

Ensure all parts are reinstalled as specified in their applicable subsection.

Ensure intake hose is completely inserted on air intake silencer.

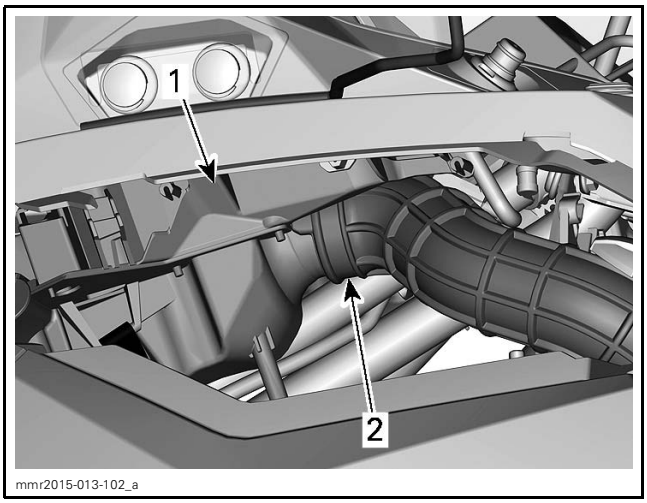


*LH SIDE OF ENGINE COMPARTMENT*
1. *Air intake silencer*
2. *Intake hose flange*

Ensure hook-and-loop fasteners are properly installed.

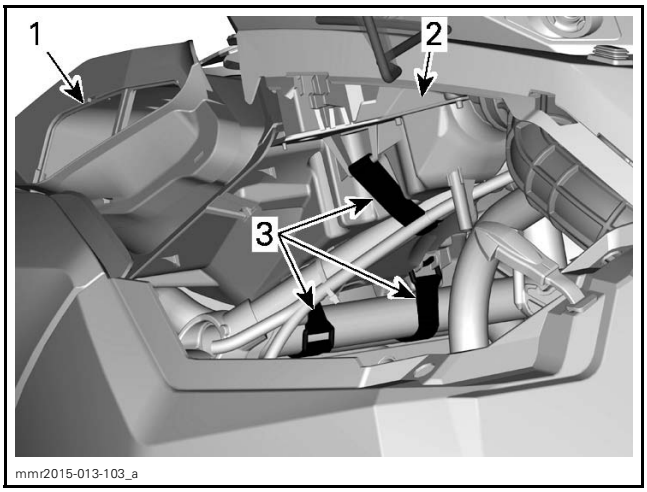


*LH SIDE OF ENGINE COMPARTMENT*
1. *Air inlet*
2. *Air intake silencer*
3. *Hook-and-loop fasteners*

## INTAKE MANIFOLD

### Intake Manifold Access

Refer to appropriate subsections and remove:
- Side panels (both sides)
- Air intake silencer and headlight/gauge support module
- Pulley guard
- Fuel tank
- Driven pulley and countershaft.

### Intake Manifold Removal

1. Loosen clamp securing breather hose to engine and disconnect hose.

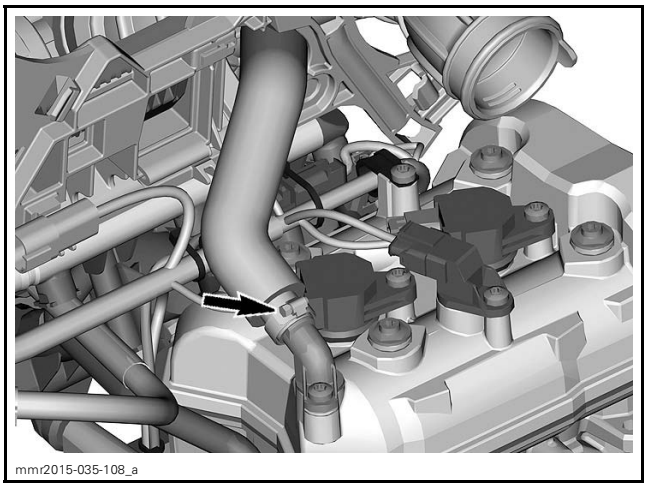


2. Loosen clamp securing air intake hose to throttle body.

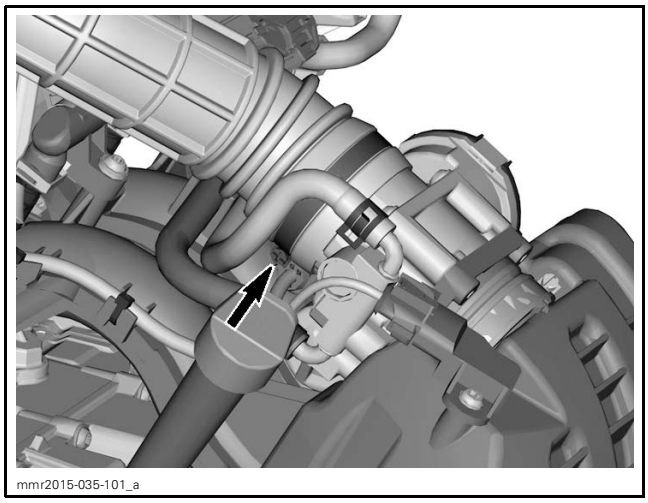
mmr2015-035-101_a

3. Remove air intake and breather hoses.

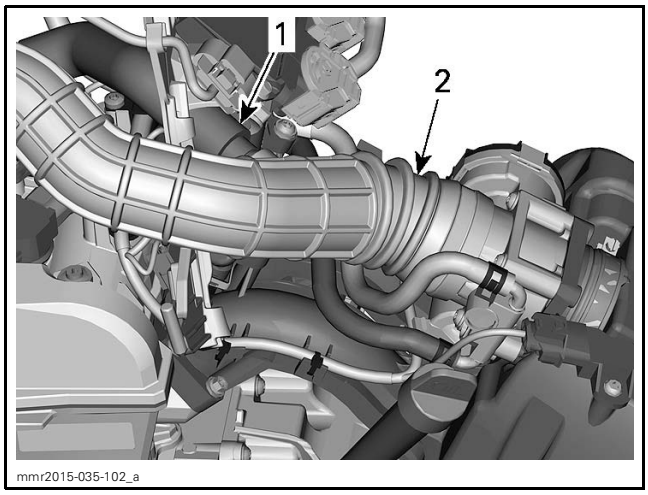

mmr2015-035-102_a

*1. Breather hose*
*2. Air intake hose*

4. Cut locking ties securing MAPTS (manifold absolute pressure and temperature sensor) and ETC (electric throttle control) harness to intake manifold.

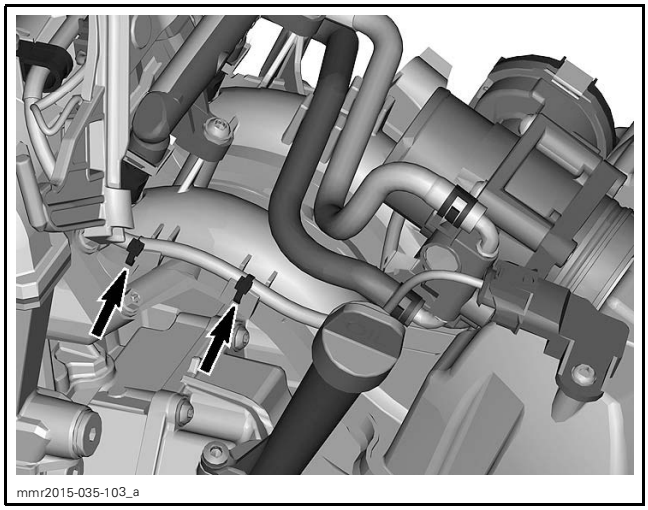
mmr2015-035-103_a

5. Disconnect MAPTS and ETC connectors.

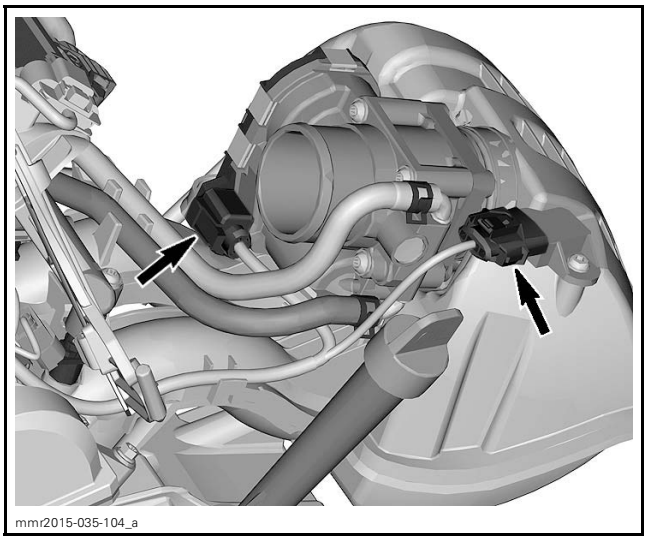
mmr2015-035-104_a

6. Disconnect both ECM connectors

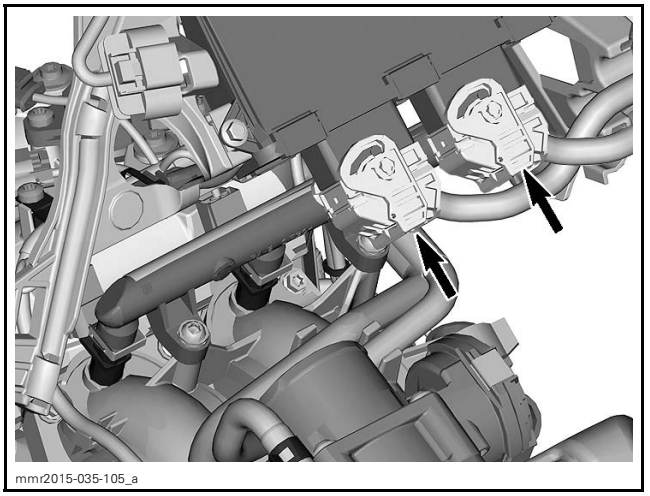
mmr2015-035-105_a

***ECM CONNECTORS***

7. Install a hose pincher on each coolant hose connected to throttle body.

| REQUIRED TOOL | |
|---|---|
| SMALL HOSE PINCHER (P/N 295 000 076) | 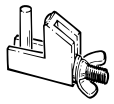 |

8. Disconnect coolant hoses from throttle body.

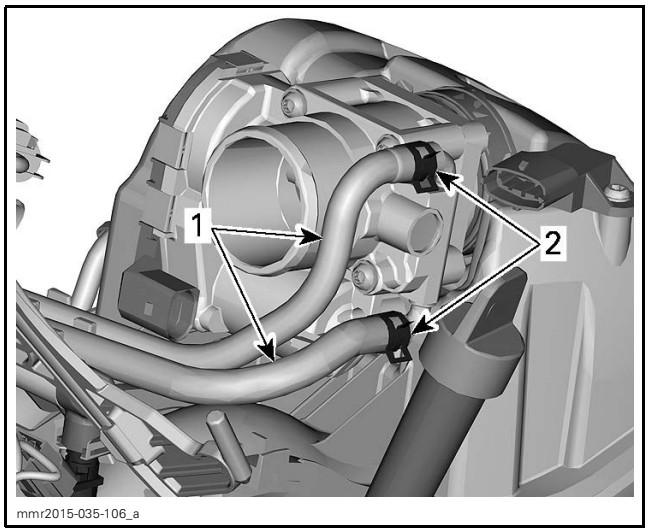


*1. Install hose pinchers here*
*2. Disconnect hoses here*

9. Disconnect fuel injector connectors.

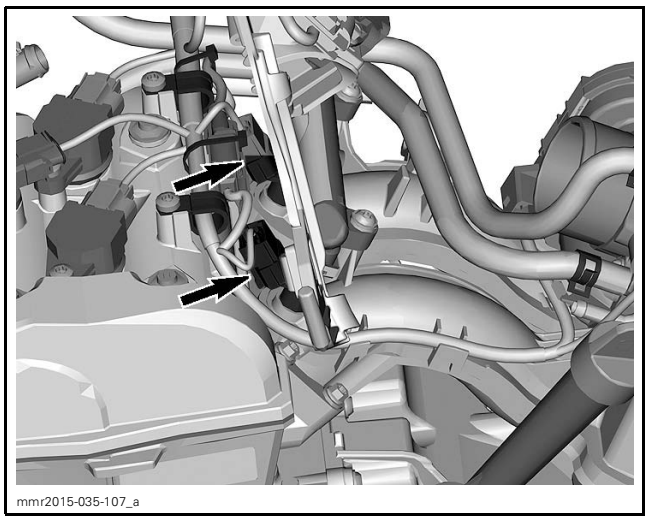


*INJECTOR CONNECTORS*

10. Remove screws securing intake manifold to cylinder head.

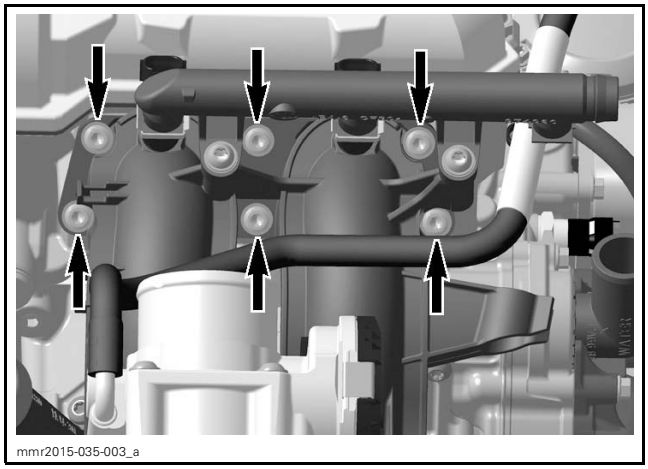


*INTAKE MANIFOLD SCREWS*

11. Remove intake manifold from engine.
12. Remove and discard intake manifold gaskets.
13. If required, remove the following parts from intake manifold:
    – Throttle body with connecting socket. Refer to *ELECTRONIC FUEL INJECTION (EFI)* subsection
    – MAPTS. Refer to *ELECTRONIC FUEL INJECTION (EFI)* subsection
    – Fuel rail with injectors. Refer to *ELECTRONIC FUEL INJECTION (EFI)* subsection.

## Intake Manifold Inspection

Check intake manifold for cracks, warping at flanges or any other visible damages. Replace if required.

Drain intake manifold if any liquids accumulated.

Flush intake manifold with solvent and let it dry out.

## Connecting Socket Inspection

Check connecting socket for cracks, warping at flanges or any other visible damages. If required, remove it from throttle body and replace it.

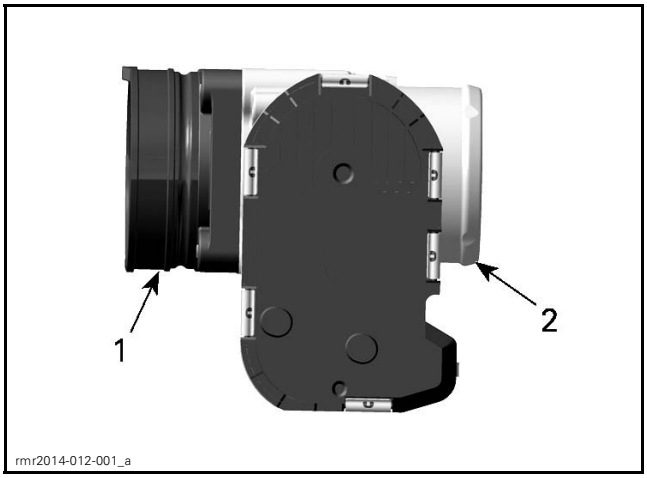


*1. Connecting socket*
*2. Throttle body*

## Intake Manifold Installation

Reverse the removal procedure. However, pay attention to the following.

If removed, refer to *ELECTRONIC FUEL INJECTION (EFI)* subsection to install:

– MAPTS
– Fuel rail with injectors.

Install **NEW** gaskets with tab properly inserted in notch.

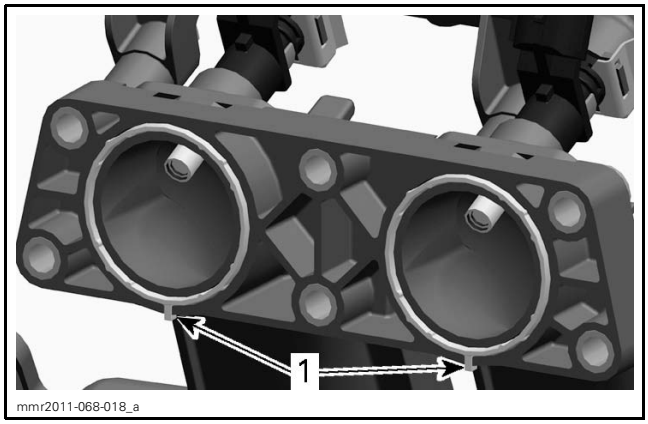


*1. Gaskets tab properly inserted*

Ensure rubber grommets are properly inserted.

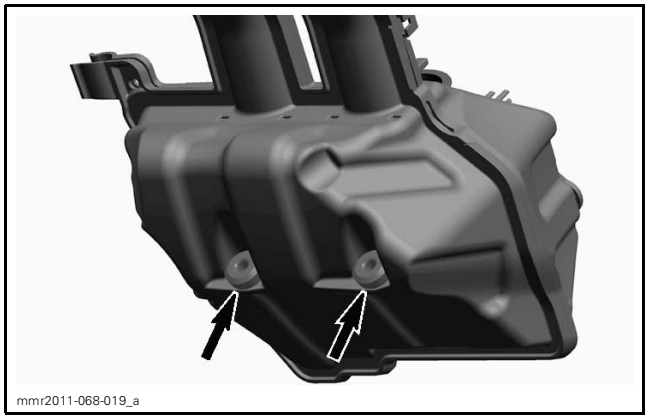


*RUBBER GROMMETS*

Tighten intake manifold screws to specification as per the following sequence.

| INTAKE MANIFOLD SCREWS | |
|---|---|
| Tightening torque | 9 N•m ± 1 N•m (80 lbf•**in** ± 9 lbf•**in**) |

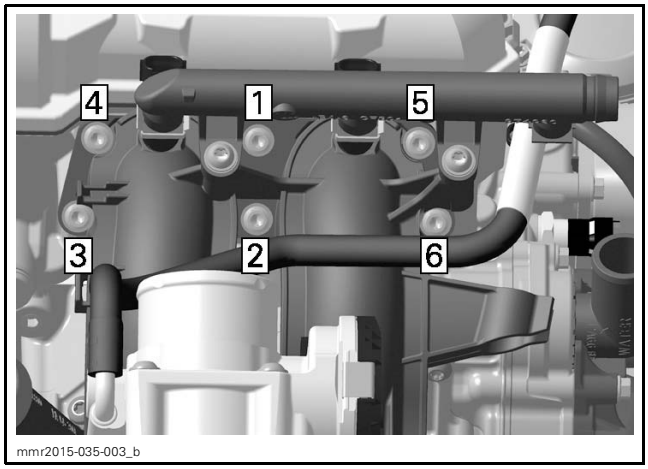


*TIGHTENING SEQUENCE*

If removed, install throttle body on connecting socket.

Make sure to index intake manifold pin with throttle body positioning bore.

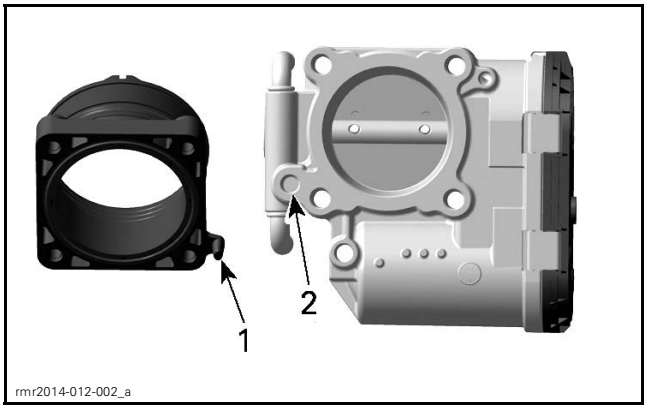


*1. Intake manifold pin*
*2. Throttle body positioning bore*

Tighten throttle body screws to specification as per the following sequence.

| THROTTLE BODY SCREWS | |
|---|---|
| Tightening torque | 9 N•m ± 1 N•m (80 lbf•**in** ± 9 lbf•**in**) |

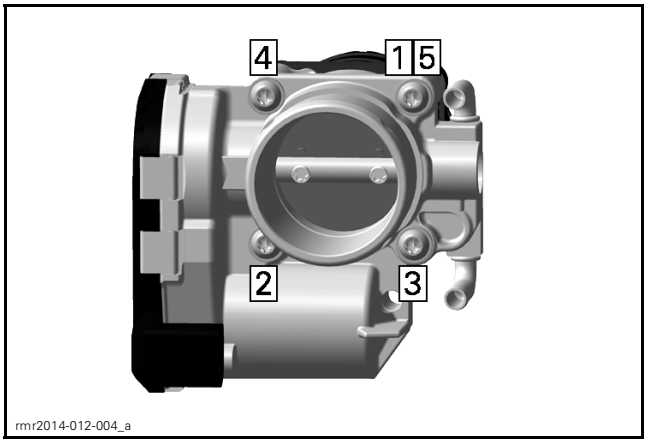


*TIGHTENING SEQUENCE*

Make sure to index connecting socket notch with the intake manifold tab.

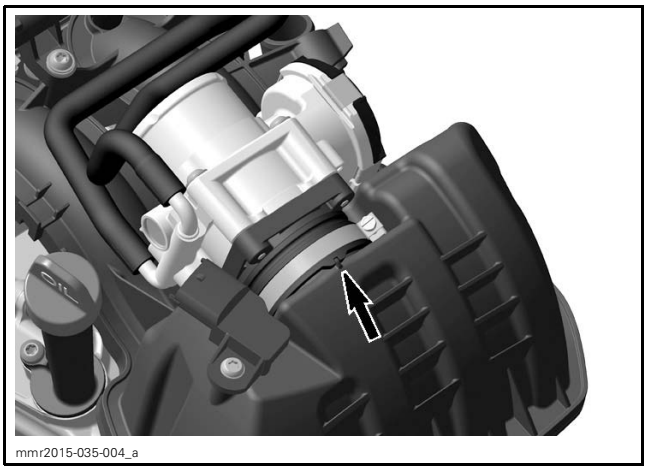


*INTAKE MANIFOLD TAB*

Install connecting socket clamp in proper position and tighten to specification.

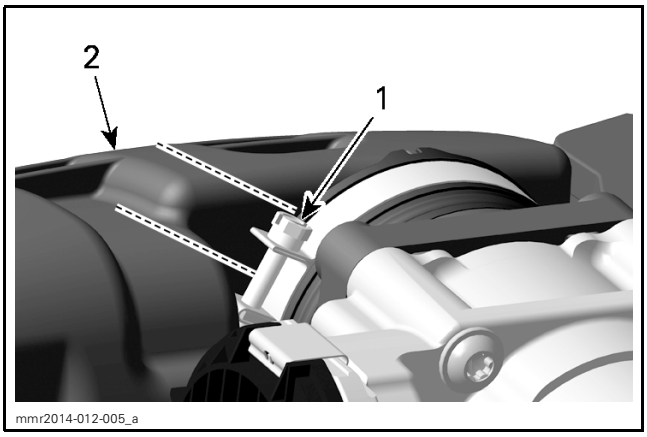


*ALLOWED POSITION OF CLAMP SCREW*
*1. Screw of clamp*
*2. Intake manifold*

| CONNECTING SOCKET CLAMP | |
|---|---|
| Tightening torque | 0.9 N•m ± 0.1 N•m (8 lbf•**in** ± 1 lbf•**in**) |

# AIR INTAKE SYSTEM

*Models without Turbocharger*

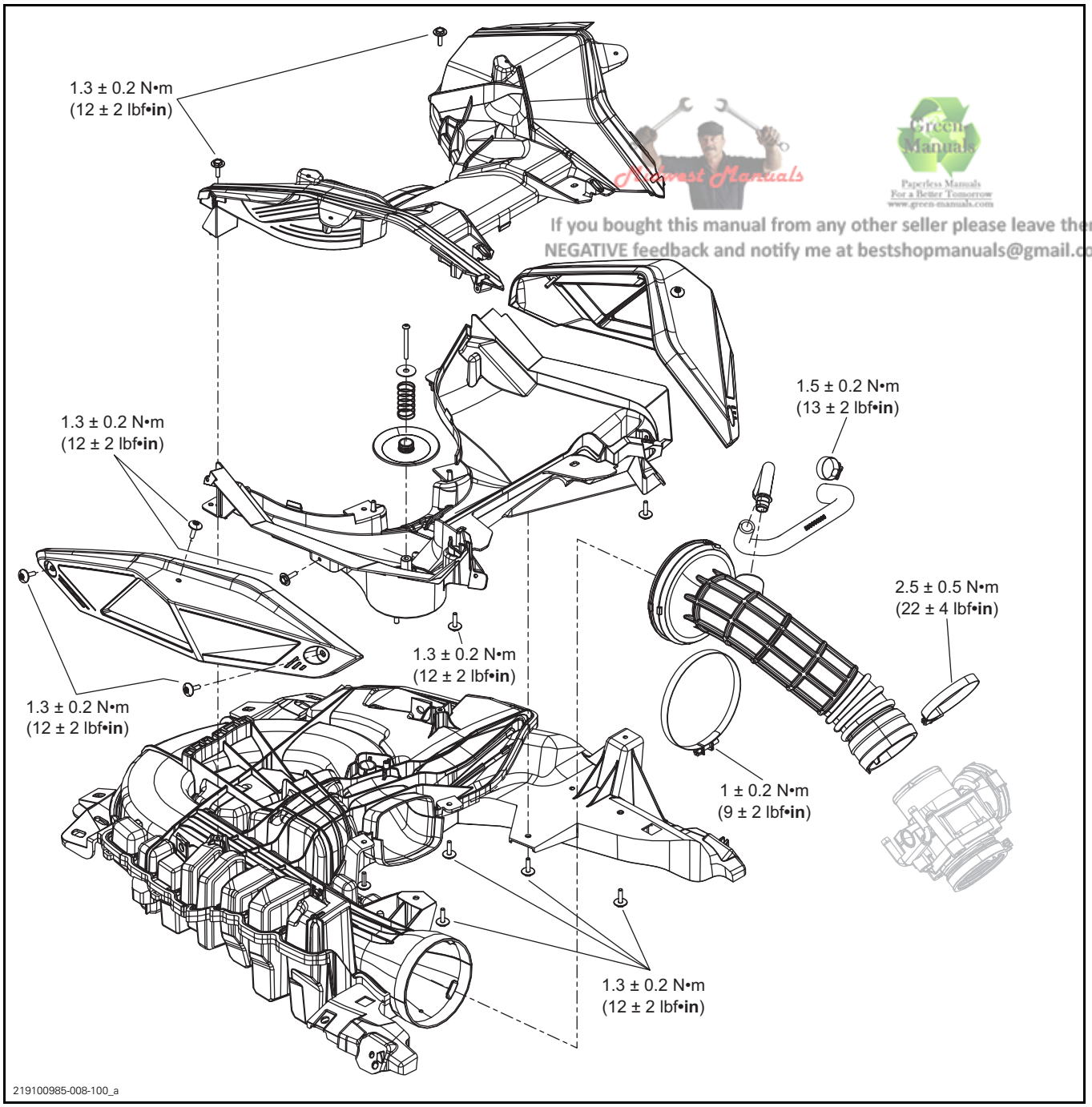


Midwest Manuals
Green Manuals
Paperless Manuals For a Better Tomorrow www.green-manuals.com
If you bought this manual from any other seller please leave them NEGATIVE feedback and notify me at bestshopmanuals@gmail.com

*Models with Turbocharger*

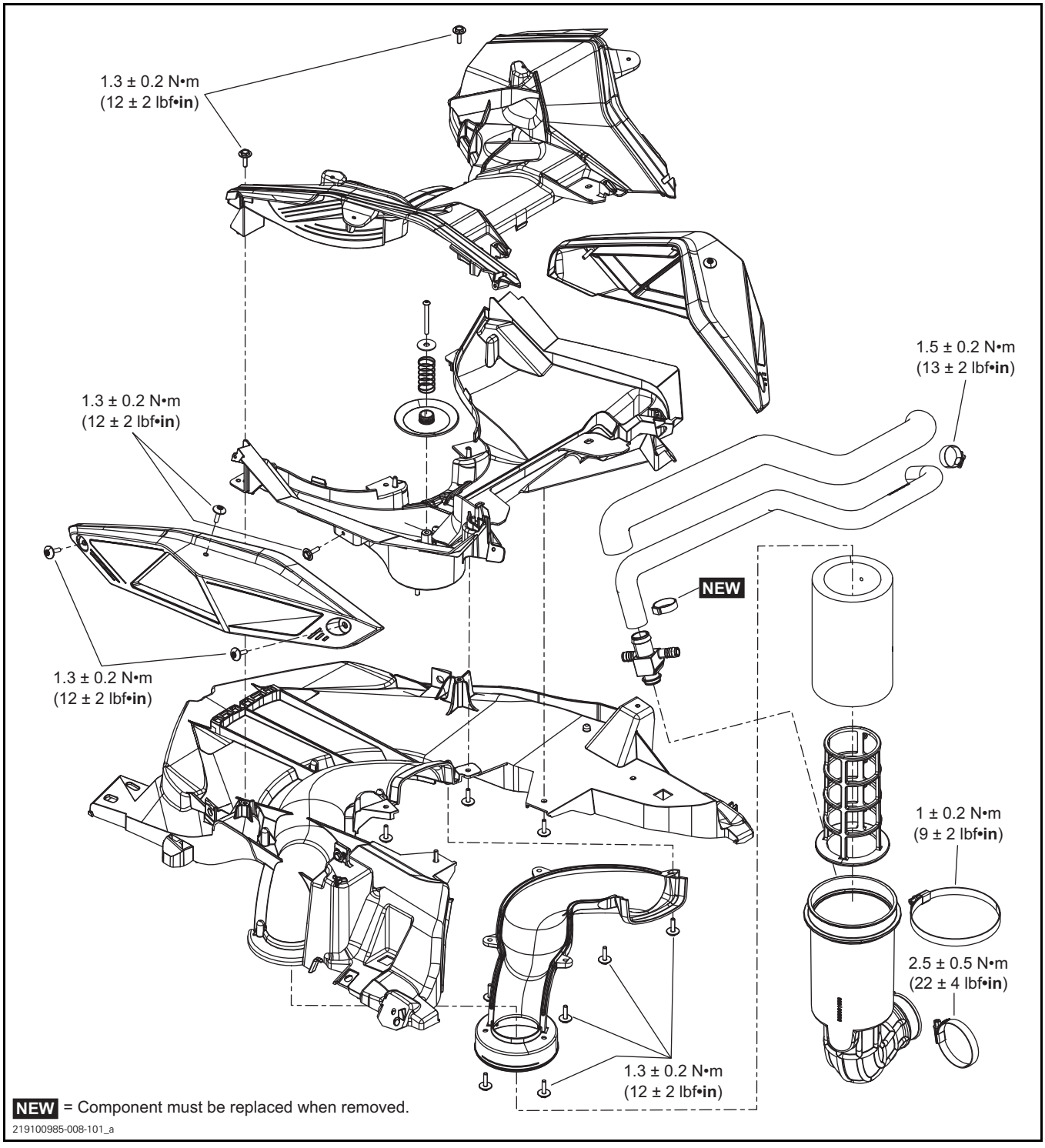

# GENERAL

**⚠ WARNING**

Torque wrench tightening specifications must be strictly adhered to.
Locking devices must be replaced with a new ones when removed (e.g.: locking tabs, elastic stop nuts, cotter pins, etc.).

***NOTICE*** Hoses, cables and locking ties removed during a procedure must be reinstalled as per factory standards.

# PROCEDURES

## AIR FILTER (MESH)

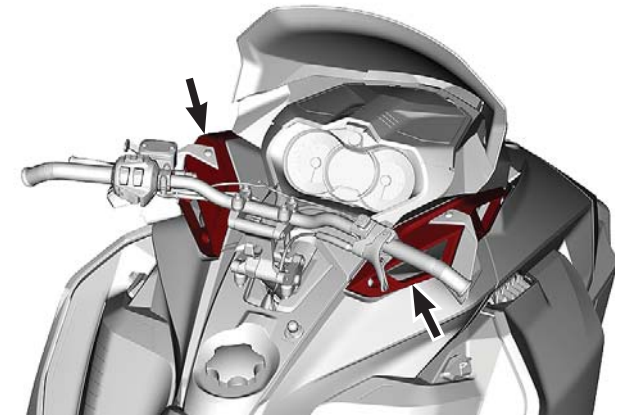

mmr2017-014-001_a

The same procedure applies for RH and LH side.

### Removing the Air Filter

Remove screws from mesh filter housing.

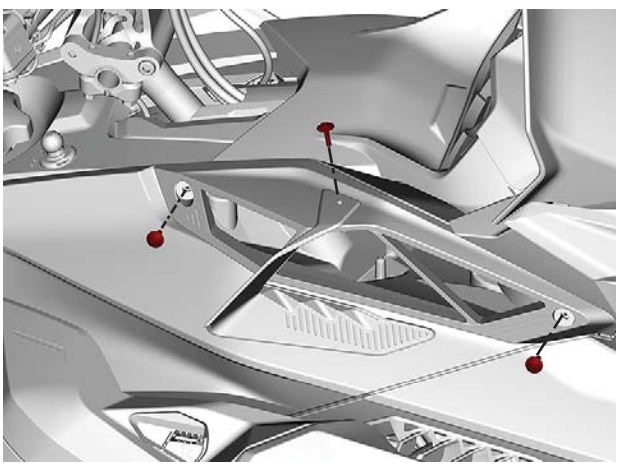

mmr2017-014-002_a

Remove the air deflector if equipped.

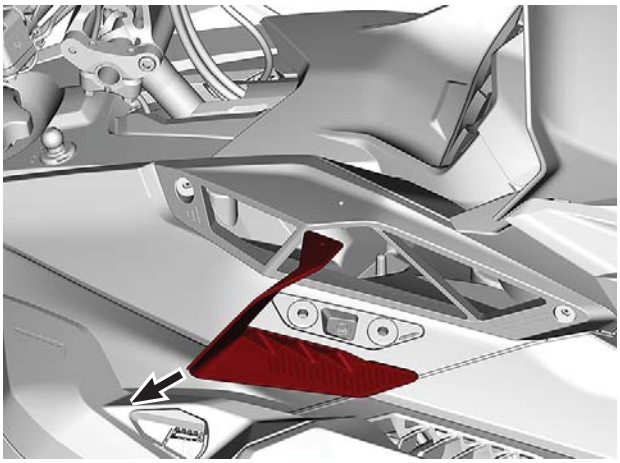

mmr2017-014-003_a

Remove the mesh filter housing from the upper body module.

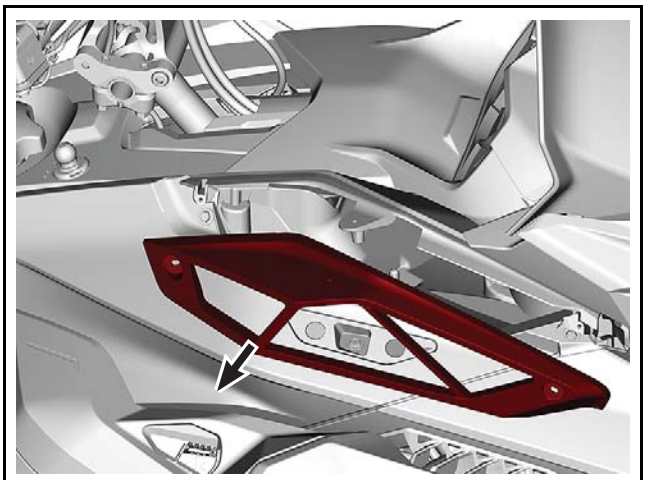

mmr2017-014-004_a

### Cleaning the Air Filter

Clean with fresh water and mild soap.

Replace air filter if required.

NOTE: If the filter is very dirty, clean the interior of secondary air intake silencer at the same time.

### Installing the Air Filter

The installation is the reverse of the removal procedure.

# AIR INTAKE SILENCER

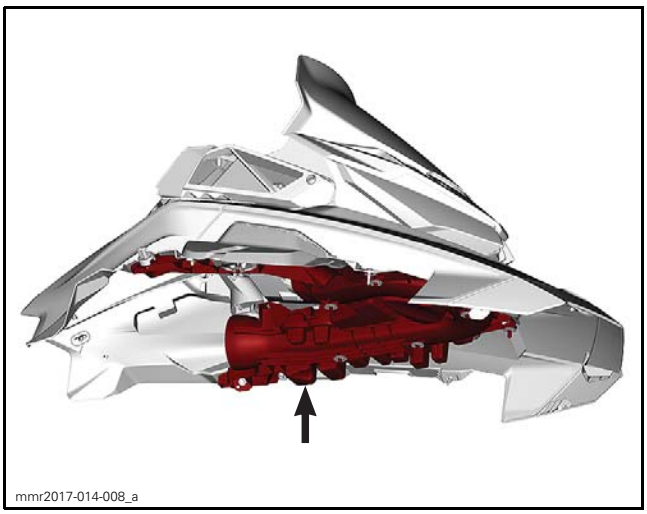
mmr2017-014-008_a

## Removing the Air Intake Silencer

The procedure is the same for both sides.

1. Remove the upper body module. Refer to the *BODY* subsection.
2. Remove the air filters.
3. Remove the following parts and screws.

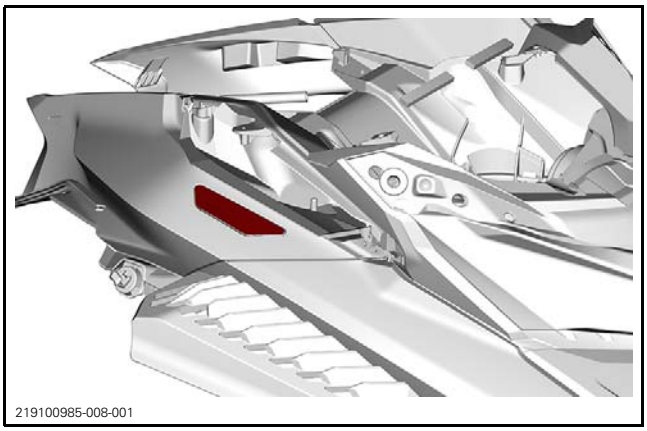
219100985-008-001

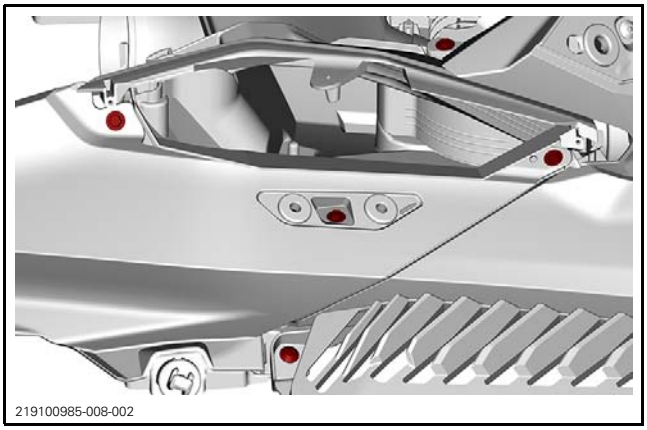
219100985-008-002

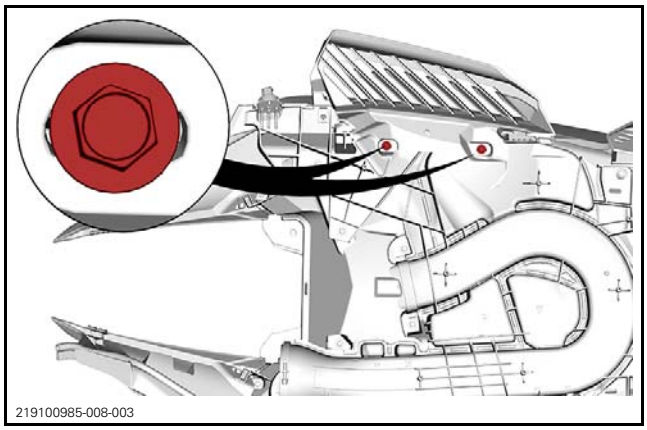
219100985-008-003

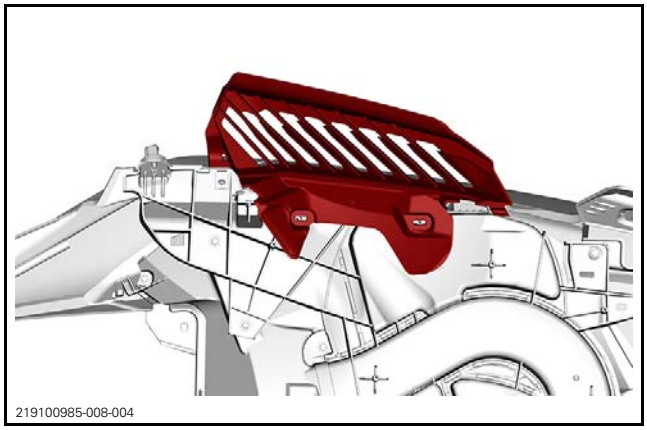
219100985-008-004

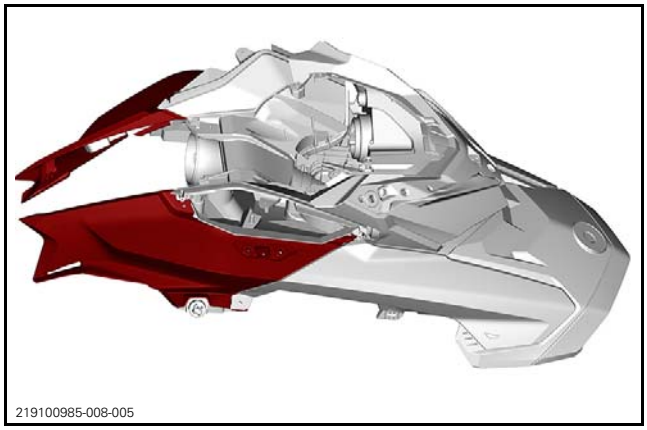
219100985-008-005

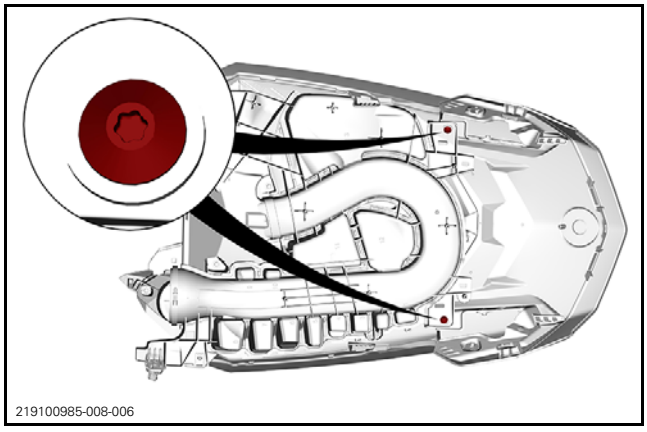
219100985-008-006

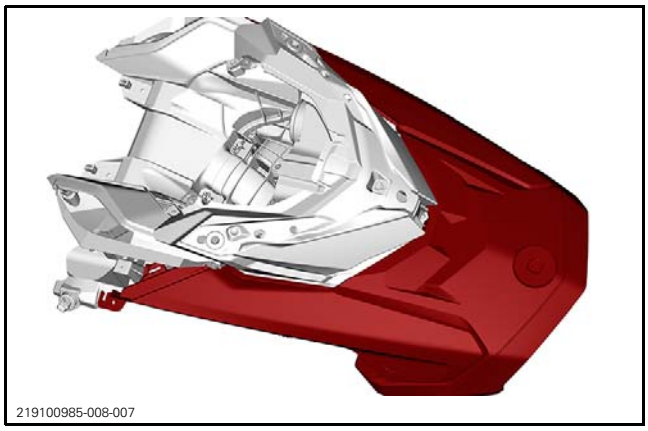
219100985-008-007

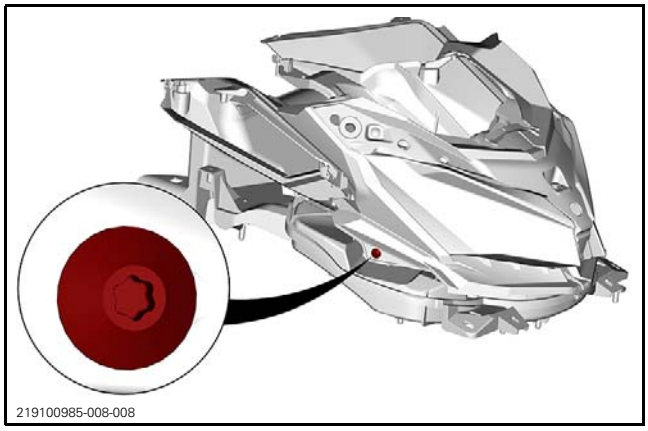
219100985-008-008

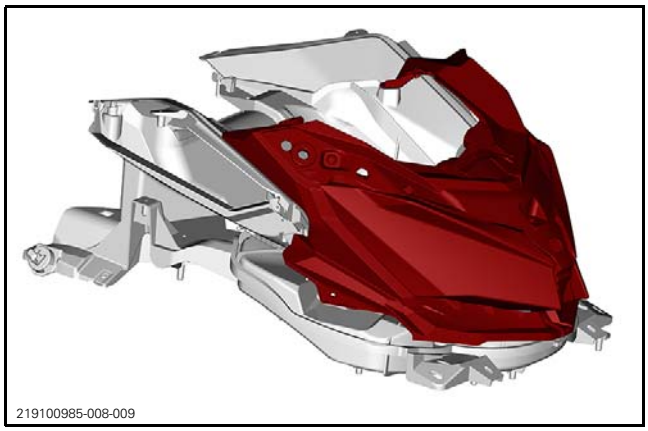
219100985-008-009

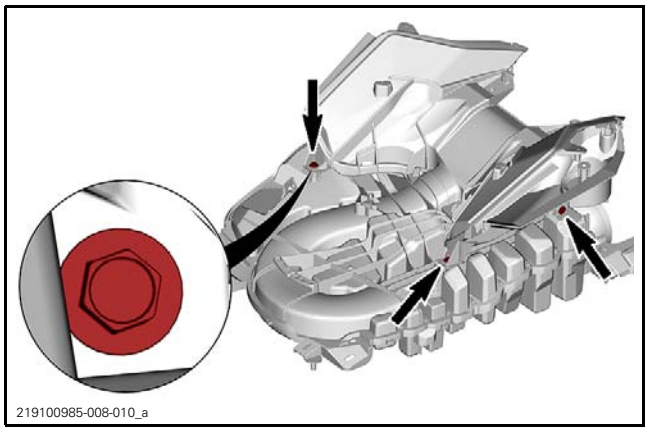
219100985-008-010_a

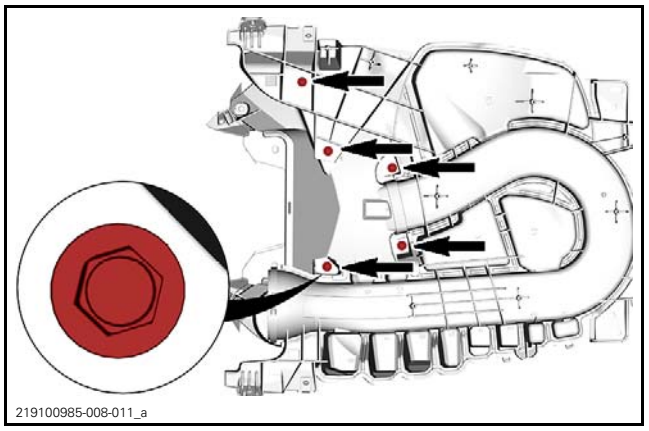
219100985-008-011_a

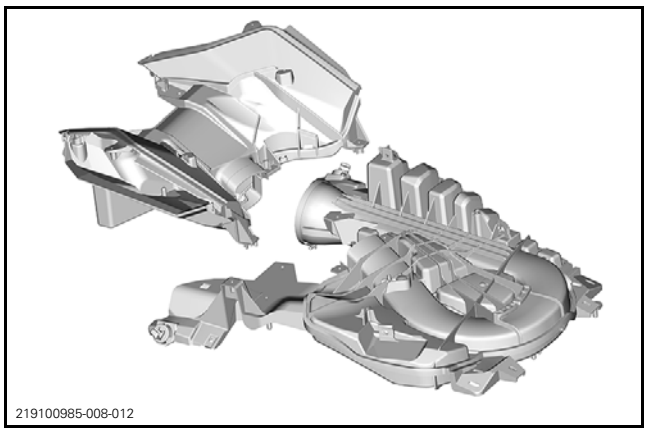
219100985-008-012

## Installing the Air Intake Silencer

The installation is the reverse of the removal procedure.

# EXHAUST SYSTEM

## SERVICE TOOLS


| Description | Part Number | Page |
|---|---|---|
| SPRING INSTALLER/REMOVER | 529 035 983 | 3–4 |


## SERVICE TOOLS – OTHER SUPPLIER


| Description | Part Number | Page |
|---|---|---|
| SNAP-ON 10 MM SOCKET | tmm10 | 5 |
| SNAP-ON WOBBLE 8" EXTENSION | tmxwp8 | 5 |

Midwest Manuals
Green Manuals
If you bought this manual from any other seller please leave them
NEGATIVE feedback and notify me at beschopmanuals@gmail.com

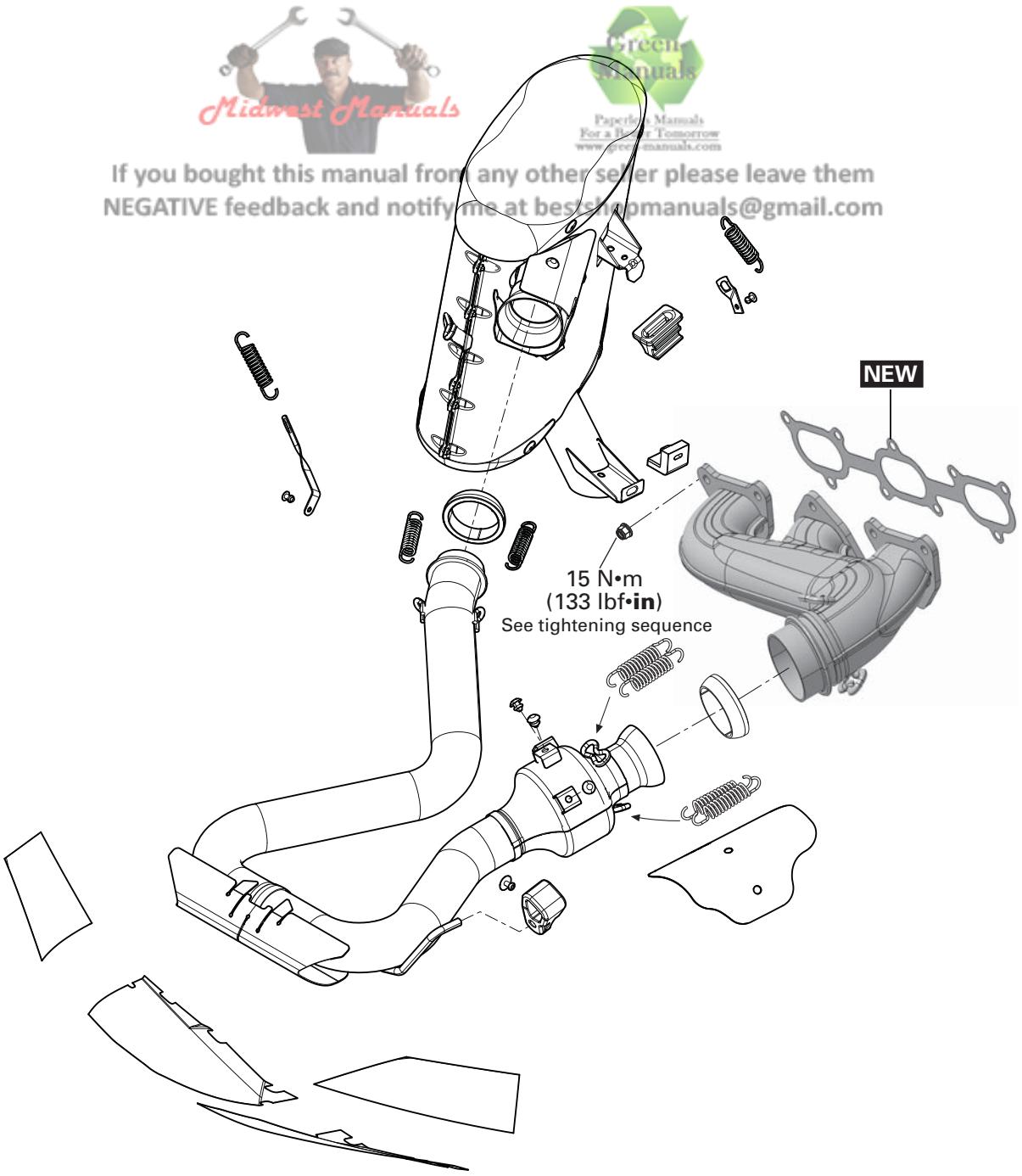


**NEW** = Component must be replaced when removed.

mmr2016-013-100_a

# GENERAL

**⚠ WARNING**

To avoid potential burns, never touch exhaust system components immediately after the engine has been running because these components are very hot. Let engine and exhaust system cool down before performing any servicing.

During assembly/installation, use the torque value and service products as in the exploded view.

**⚠ WARNING**

Torque wrench tightening specifications must be strictly adhered to.
Locking devices (e.g.: locking tabs, elastic stop nuts, self-locking fasteners, cotter pins, etc.) must be replaced with new ones.

# PROCEDURES

## MUFFLER

### Muffler Removal

1. Refer to appropriate subsection and remove:
– Both side panels
– Upper body module (REV-XS)
– Bottom pan cover.
2. Remove springs securing the muffler.

| REQUIRED TOOL | |
|---|---|
| SPRING INSTALLER/REMOVER (P/N 529 035 983) | |

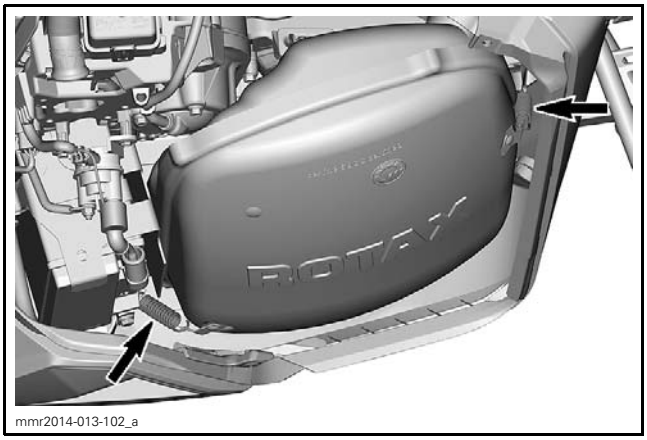

mmr2014-013-102_a
*TYPICAL*

3. Remove springs securing the exhaust pipe to the muffler.

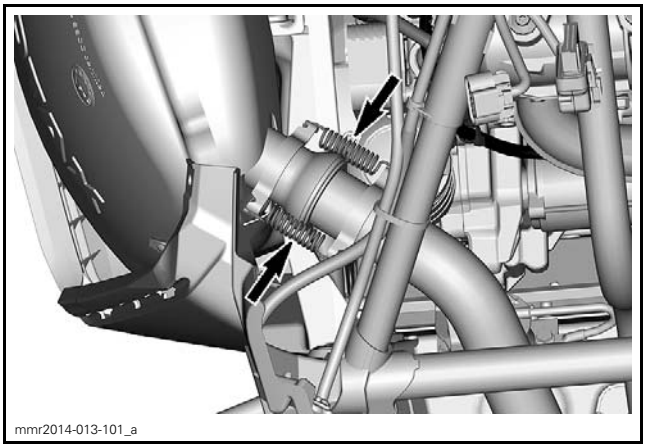
mmr2014-013-101_a
*TYPICAL*

4. Lift up muffler to free the retaining hook.

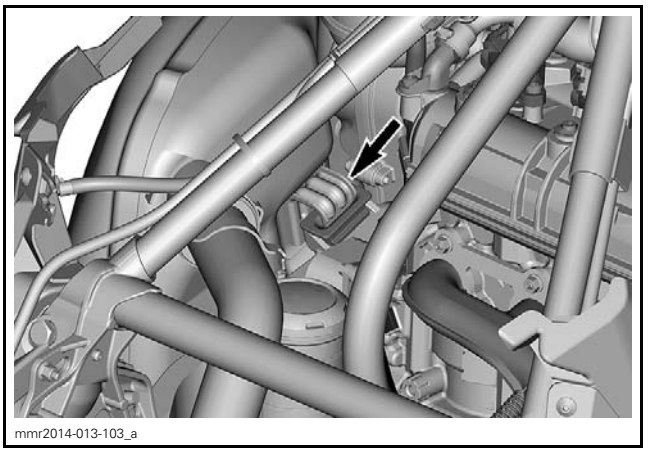
mmr2014-013-103_a
*TYPICAL*

5. Remove the muffler.
6. Remove exhaust gasket.

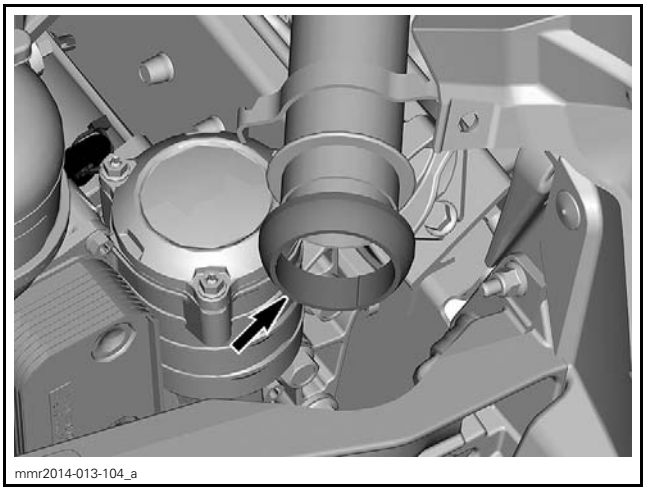
mmr2014-013-104_a
*TYPICAL*

### Muffler Inspection

Check the muffler for cracks or other damages.
Check grommet condition.

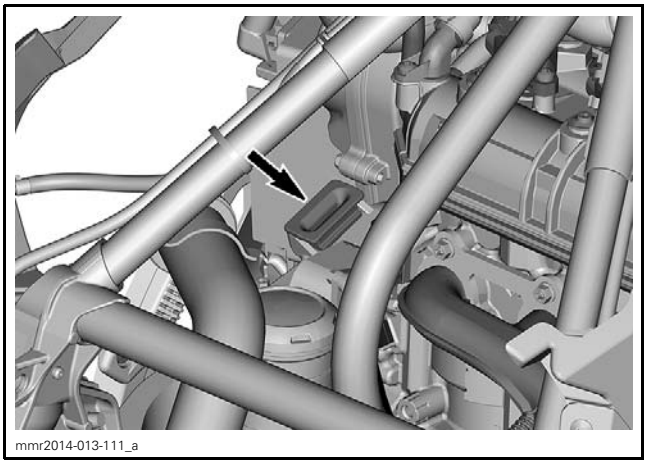
mmr2014-013-111_a

*TYPICAL*

Inspect gasket condition. Replace as required.

## Muffler Installation

For installation, reverse the removal procedure. However, pay attention to the following:

Ensure springs do not touch each other. Move apart as necessary.

# EXHAUST PIPE

## Exhaust Pipe Removal

1. Remove the muffler. Refer to *MUFFLER REMOVAL* in this subsection.
2. Remove the belt guard. Refer to *DRIVE BELT* subsection.
3. Remove all exhaust springs (4) from exhaust pipe.

| REQUIRED TOOL | |
|---|---|
| SPRING INSTALLER/REMOVER (P/N 529 035 983) | |

NOTE: Start with the two springs under the pipe at exhaust manifold end.

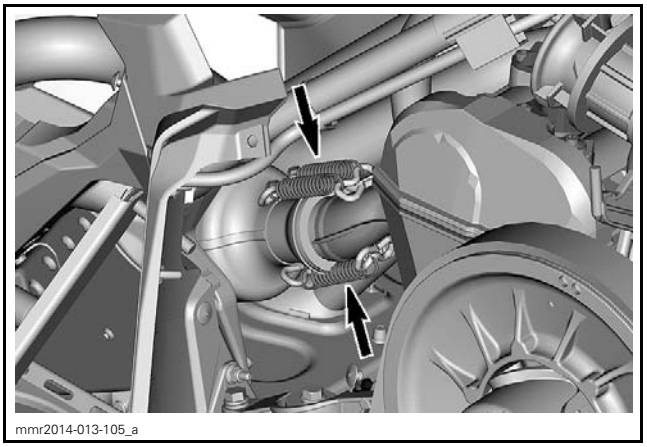
mmr2014-013-105_a

*TYPICAL*

4. On **Models with Front Radiator**.

4.1 Disconnect front radiator cooling fan connector.

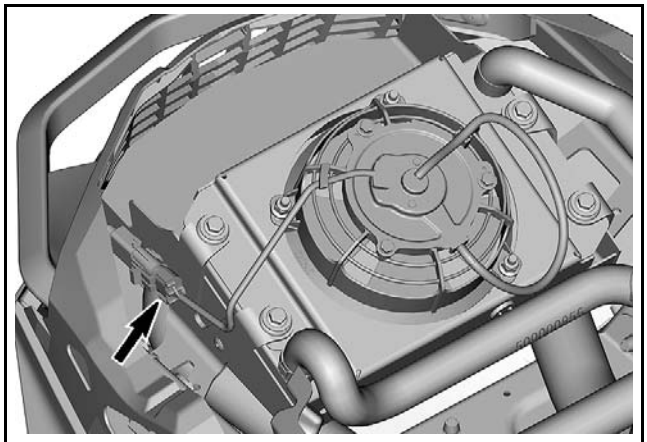
mmr2014-015-103_a

4.2 Remove connector housing from radiator support.

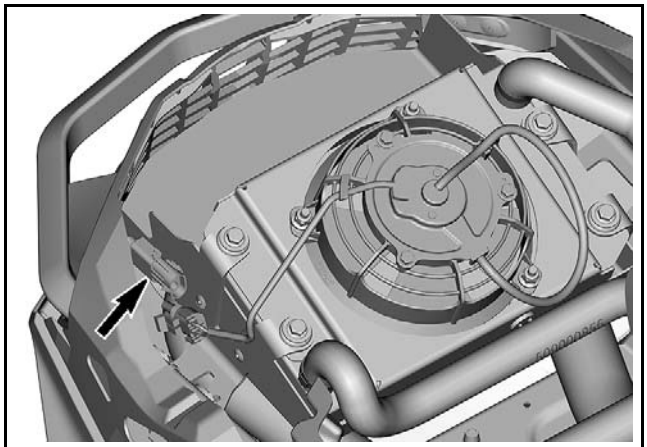
mmr2014-015-104_b

4.3 Remove screws securing the radiator support to frame.

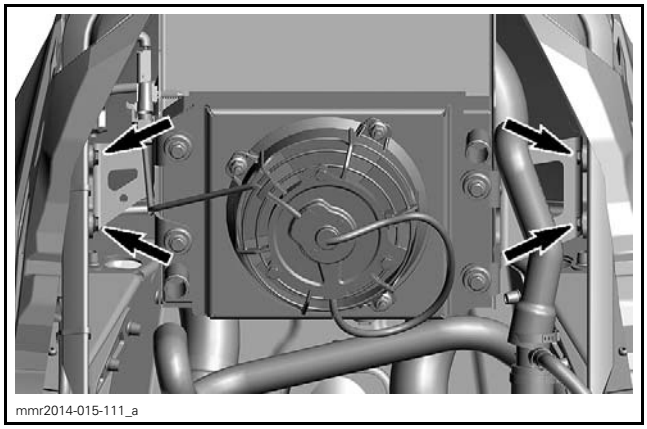
mmr2014-015-111_a

4.4 Move the radiator aside in order to clear the exhaust pipe.

5. Pull out the exhaust pipe until the hook gets out of the anti vibration rubber mount.

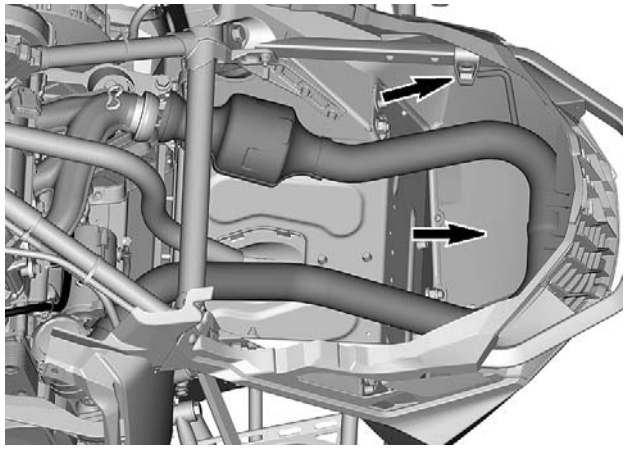
mmr2014-013-106_a

6. Remove the pipe by moving it towards the engine clearing the exhaust manifold in order to allow the middle section of the pipe to clear the bottom pan.

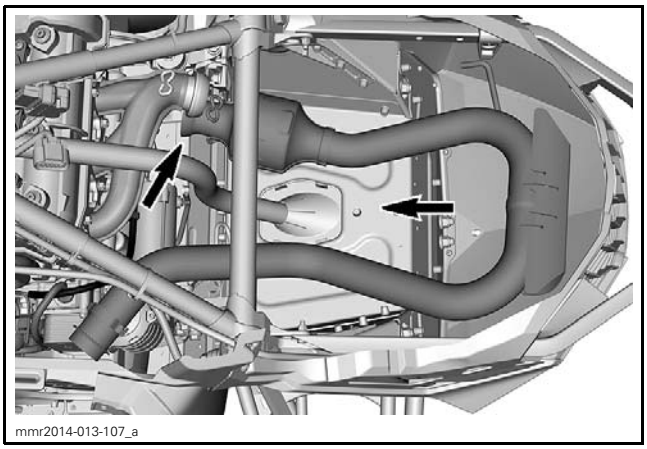
mmr2014-013-107_a

7. Remove exhaust gasket.

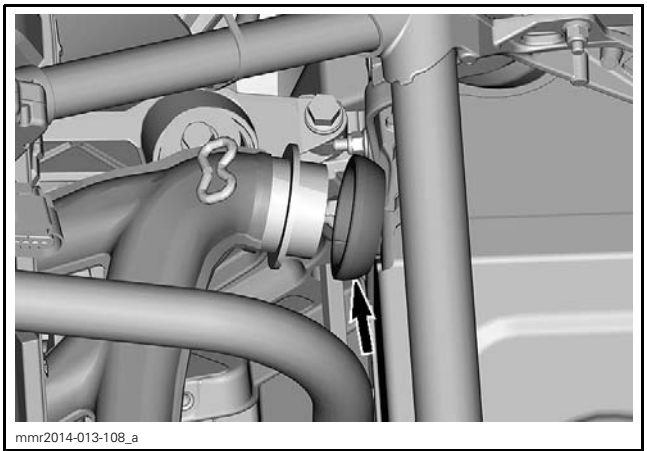
mmr2014-013-108_a

## Exhaust Pipe Inspection

Check exhaust pipe for:
– Damages
– Cracks.

Inspect gasket condition. Replace as required.

## Exhaust Pipe Installation

For installation, reverse the removal procedure. However, pay attention to the following:

Ensure springs do not touch each other. Move apart as necessary.

# EXHAUST MANIFOLD

## Exhaust Manifold Access

Refer to procedures in this subsection to remove:
– Muffler
– Exhaust pipe.

## Exhaust Manifold Removal

1. Remove *EXHAUST PIPE*, see procedure in this subsection.
2. Remove manifold nuts using a 10 mm thin wall socket (1/4 drive) such as the SNAP-ON 10 MM SOCKET (P/N TMM10) with a wobble extension such as the SNAP-ON WOBBLE 8" EXTENSION (P/N TMXWP8).
   2.1 First, loosen both lower central nuts.

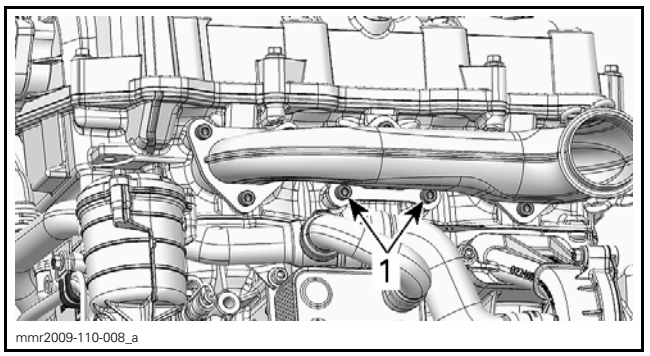

mmr2009-110-008_a

*1. Lower central nuts*

   2.2 Loosen the 7 other nuts.
   2.3 Lift up the front portion of the exhaust manifold and remove lower nuts.
   2.4 Remove the remaining nuts.
3. Remove the exhaust manifold.
4. Remove and discard the exhaust manifold gasket.

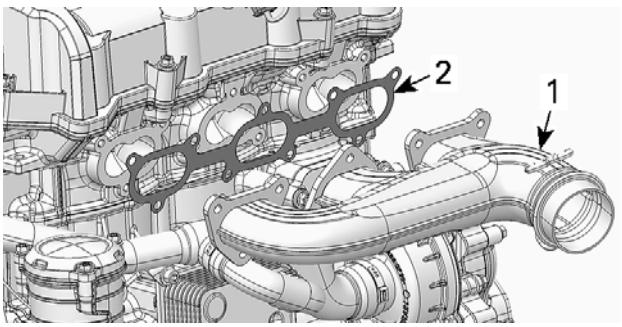


*1. Exhaust manifold*
*2. Gasket*

## Exhaust Manifold Inspection

Check if the manifold is cracked or damaged. Replace if necessary.

## Manifold Installation

1. Install the exhaust manifold with a NEW gasket.
2. Position exhaust manifold on cylinder head.
3. Lift up the front portion of the exhaust manifold and install both lower central nuts.
4. Install all other nuts.
5. Tighten nuts as per specification and tightening sequence.

| TIGHTENING TORQUE | |
|---|---|
| Exhaust manifold nuts | 15 N•m (133 lbf•**in**) |

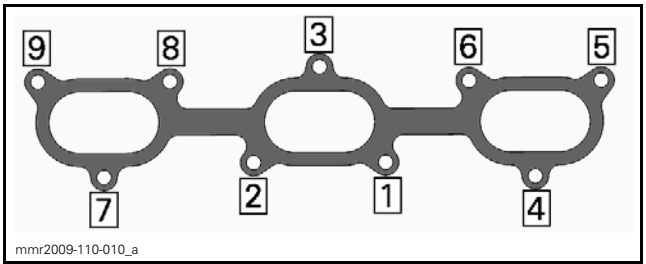


*TIGHTENING SEQUENCE*

6. Install exhaust pipe and muffler.

# EXHAUST SYSTEM

## SERVICE TOOLS

| Description | Part Number | Page |
|---|---|---|
| SPRING INSTALLER/REMOVER | 529 035 983 | 3 |

*Models without Turbocharger*

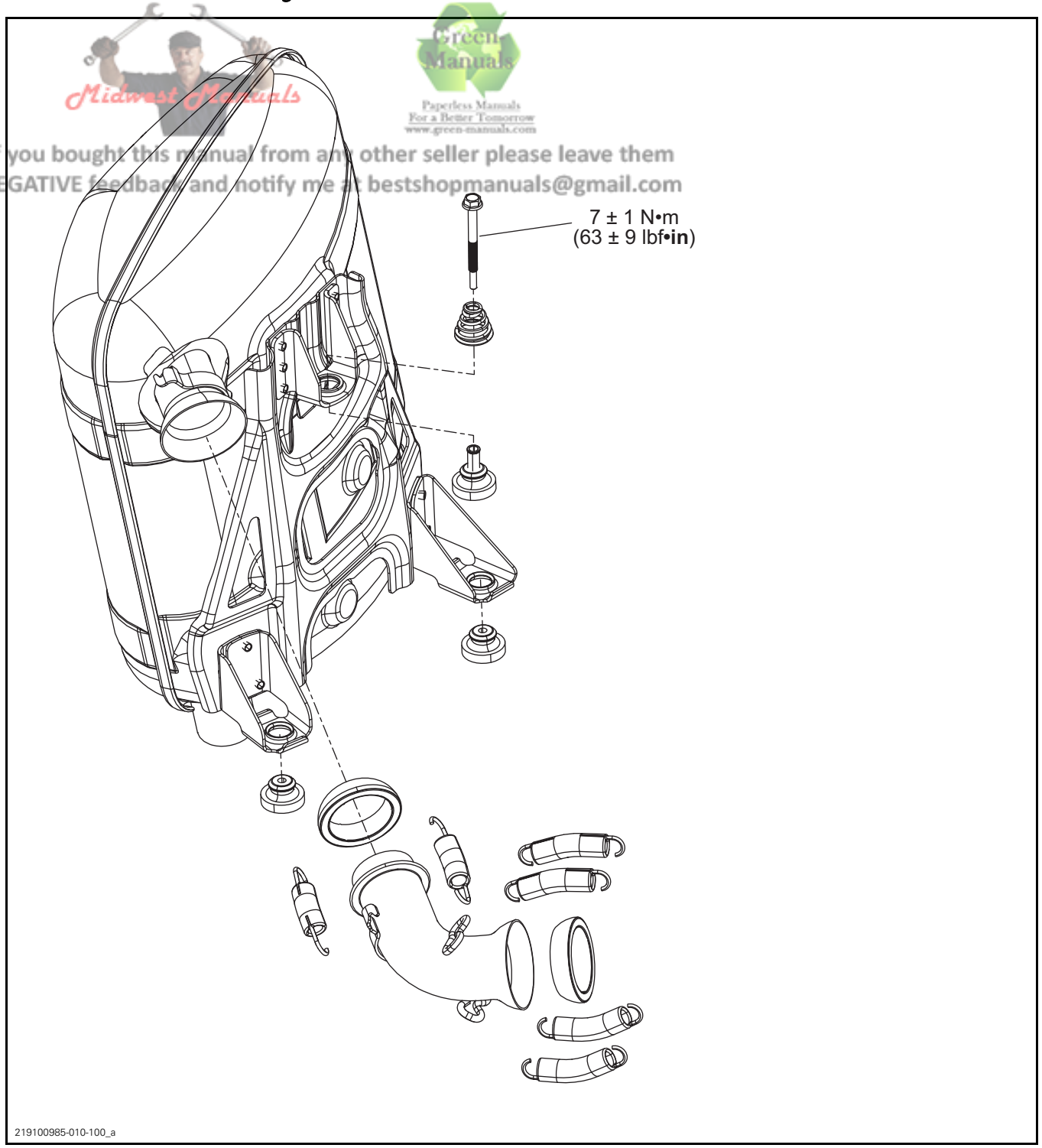


Midwest Manuals
Green Manuals
Paperless Manuals
For a Better Tomorrow
www.green-manuals.com
If you bought this manual from any other seller please leave them
NEGATIVE feedback and notify me at bestshopmanuals@gmail.com

*Models with Turbocharger*

Midwest Manuals
Green Manuals
Paperless Manuals
For a Better Tomorrow
www.green-manuals.com
If you bought this manual from any other seller please leave them
NEGATIVE feedback and notify me at bestshopmanuals@gmail.com

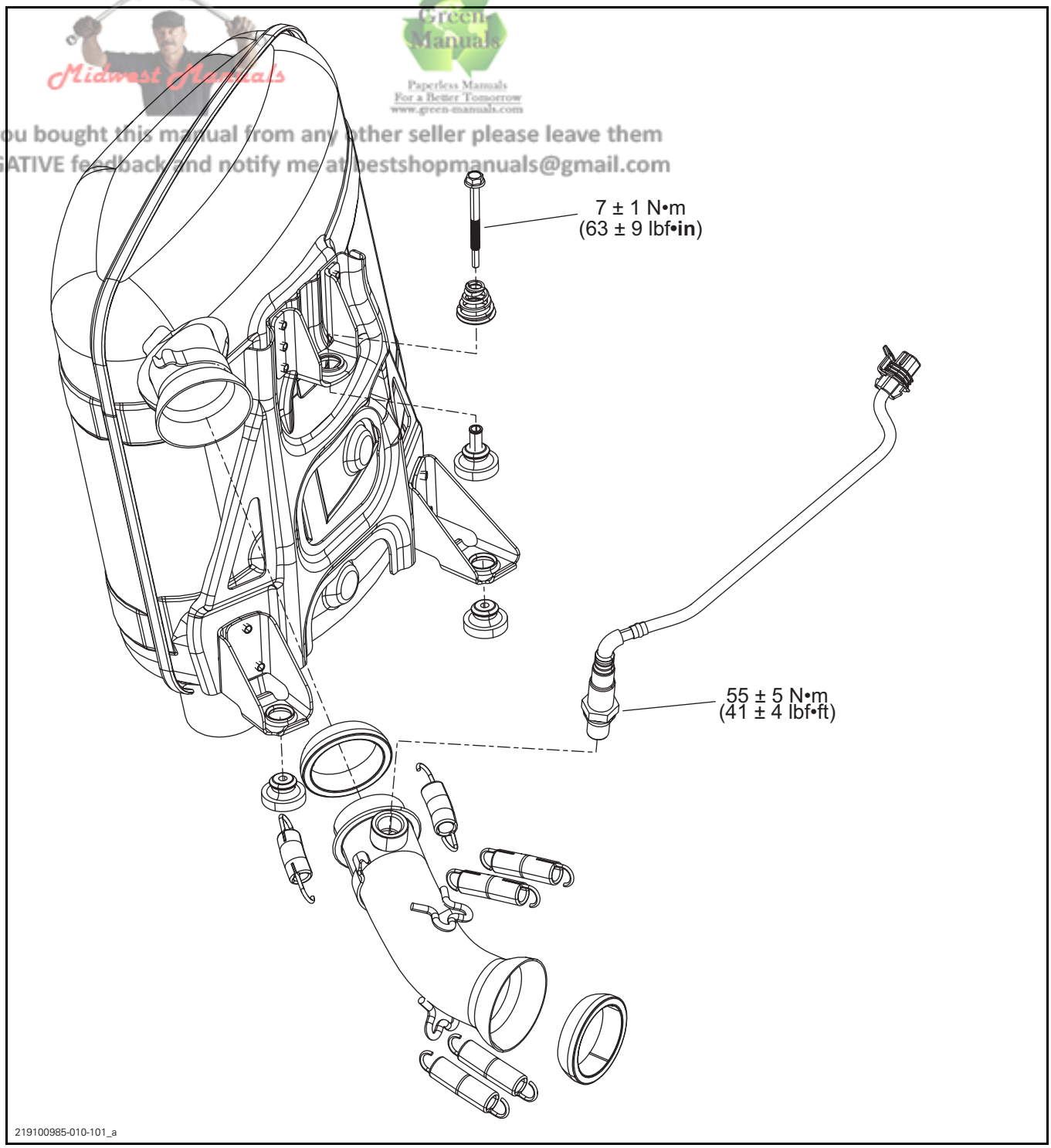

# GENERAL

**⚠ WARNING**

To avoid potential burns, never touch exhaust system components immediately after the engine has been running because these components are very hot. Let engine and exhaust system cool down before performing any servicing.

During assembly/installation, use the torque value and service products as in the exploded view.

**⚠ WARNING**

Torque wrench tightening specifications must be strictly adhered to.
Locking devices (e.g.: locking tabs, elastic stop nuts, self-locking fasteners, cotter pins, etc.) must be replaced with new ones.

# MAINTENANCE

## INSPECTING THE EXHAUST SYSTEM COMPONENTS

Check the following components for leaks, cracks, or other damages:
- Springs and retainers
- Exhaust system mounts
- Muffler
- Exhaust pipe
- Donut gaskets
- Shields
- Manifold.

## REPLACING THE TURBO EXHAUST GASKET (APPLICABLE MODELS)

1. Remove the exhaust pipe. Refer to procedure in this subsection.
2. Replace the exhaust gasket.

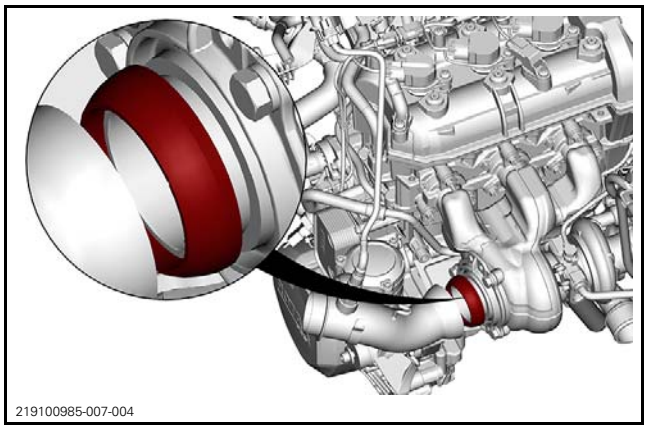


# PROCEDURES

## MUFFLER

### Removing the Muffler

1. Remove the upper body module. Refer to *BODY* subsection.
2. Remove exhaust springs retaining the exhaust pipe to the muffler.

| REQUIRED TOOL | |
|---|---|
| SPRING INSTALLER/REMOVER (P/N 529 035 983) | |

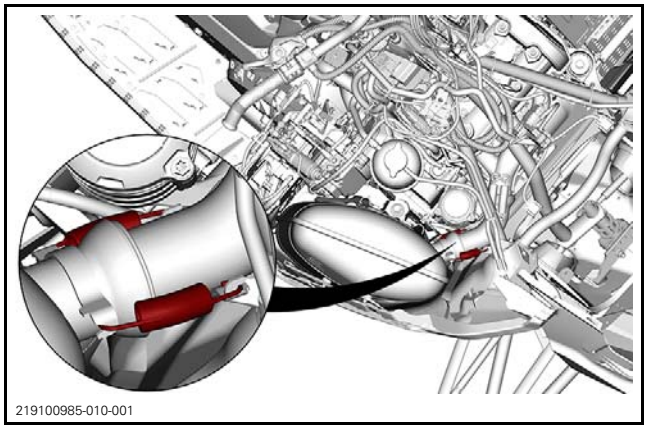


3. Behind the muffler, remove the retaining screw and its spring.

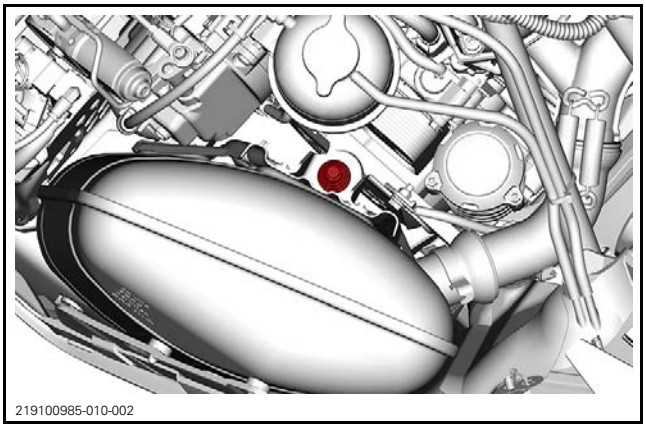
219100985-010-002

4. Remove the muffler.
5. Remove exhaust gasket.

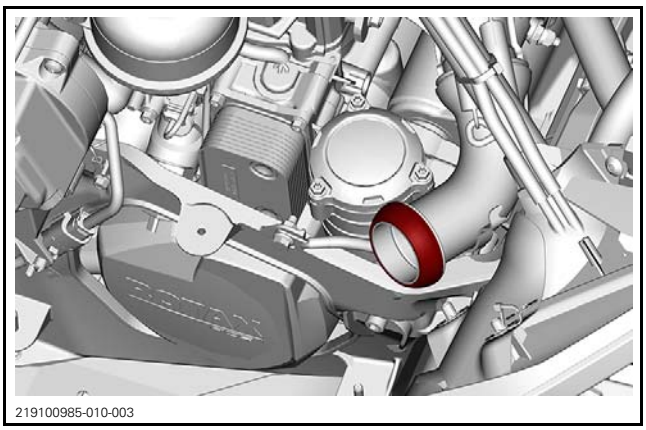
219100985-010-003

## Inspecting the Muffler

Check the muffler for cracks or other damages.

Check grommet condition.

Inspect exhaust gasket condition. Replace as required.

## Installing the Muffler

The installation is the reverse of the removal procedure. However, pay attention to the following.

| TIGHTENING TORQUE | |
|---|---|
| Muffler retaining screw | 7 N•m ± 1 N•m (62 lbf•**in** ± 9 lbf•**in**) |

# EXHAUST PIPE

## Removing the Exhaust Pipe

1. Remove the muffler.

### *Models with Turbocharger*

2. Disconnect the oxygen sensor.

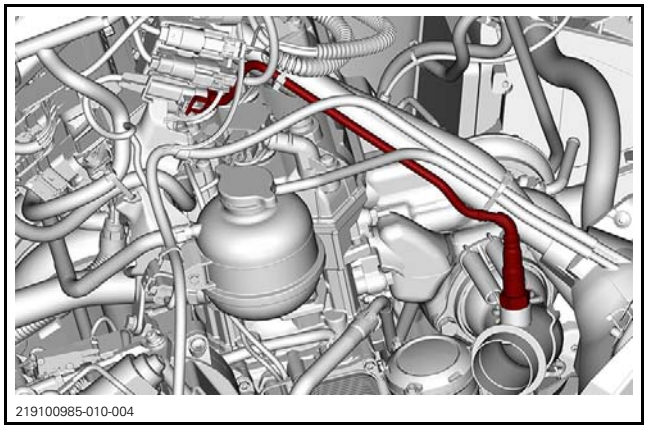
219100985-010-004

### *All Models*

3. Remove exhaust springs retaining the exhaust pipe to the exhaust manifold.

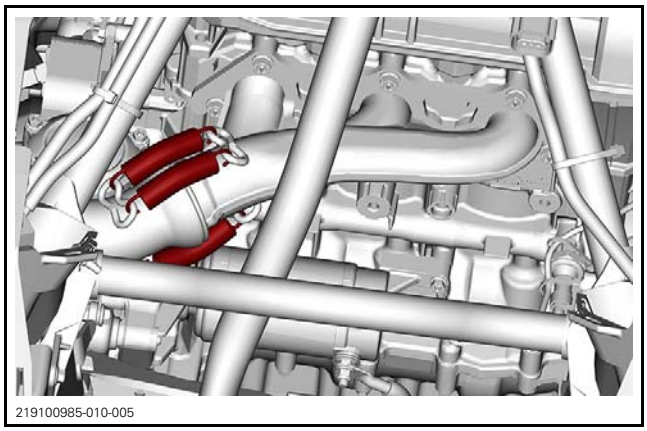
219100985-010-005

*WITHOUT TURBOCHARGER*

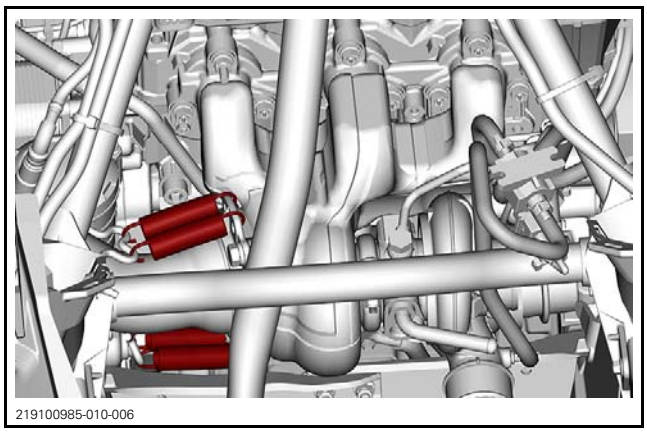
219100985-010-006

*WITH TURBOCHARGER*

4. Remove tuned pipe.
5. Remove exhaust gasket.

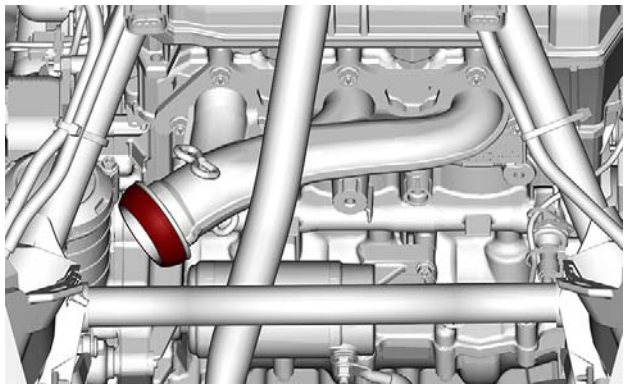
219100985-010-007

## Inspecting the Exhaust Pipe

Check exhaust pipe for:

– Damages

– Cracks.

Inspect exhaust gasket condition. Replace as required.

## Installing the Exhaust Pipe

The installation is the reverse of the removal procedure.

# INTAKE MANIFOLD

## SERVICE TOOLS

| Description | Part Number | Page |
|---|---|---|
| SMALL HOSE PINCHER | 295 000 076 | 3 |

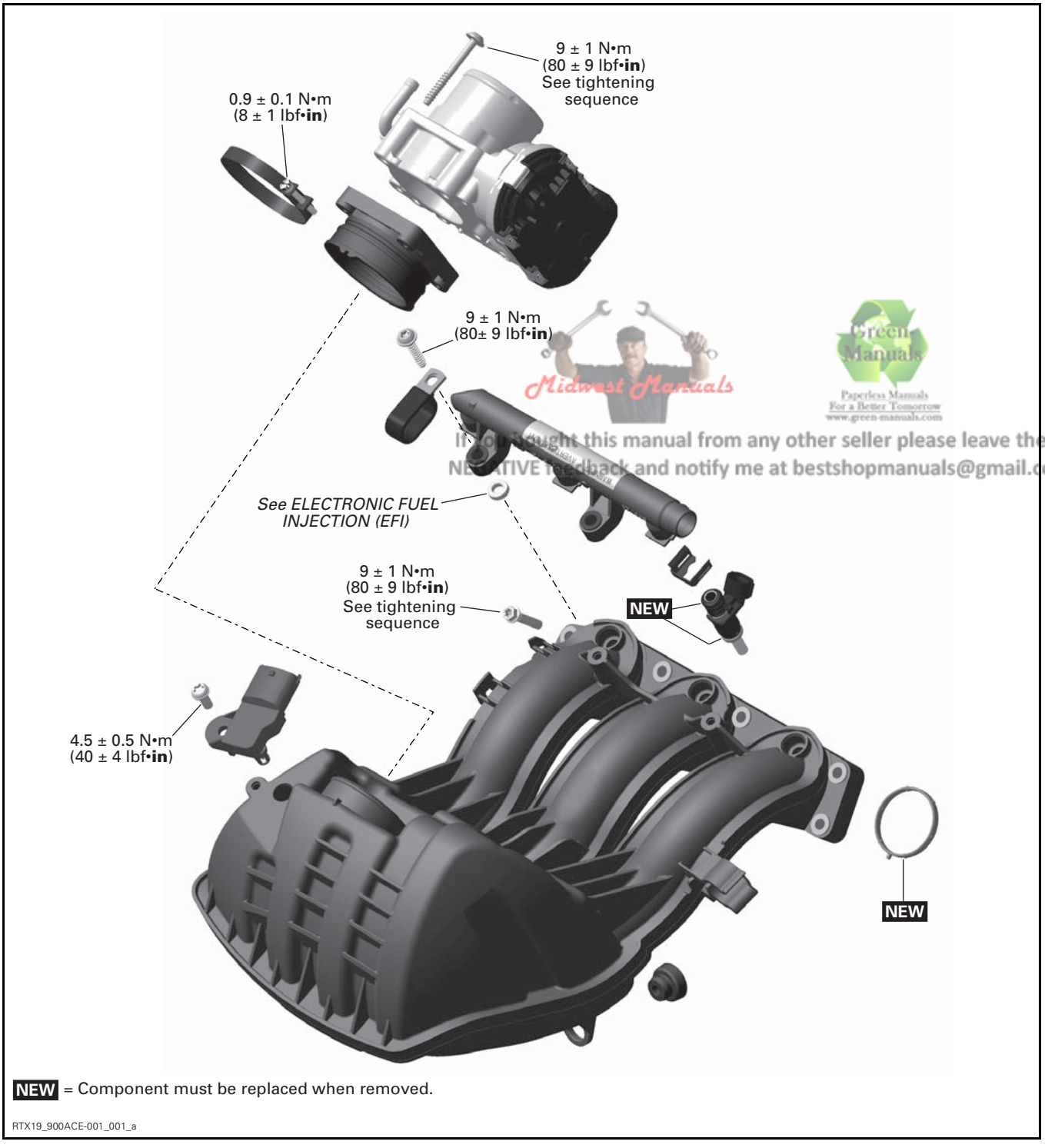


Midwest Manuals
Green Manuals
Paperless Manuals
For a Better Tomorrow
www.green-manuals.com
If you bought this manual from any other seller please leave them
NEGATIVE feedback and notify me at bestshopmanuals@gmail.com

**NEW** = Component must be replaced when removed.

RTX19_900ACE-001_001_a

# PROCEDURES

## INTAKE MANIFOLD

### Intake Manifold Access

Refer to appropriate subsections and remove:
- Side panels (both sides)
- Air intake silencer and gauge support module
- Pulley guard
- Fuel tank
- Driven pulley and countershaft.

### Removing the Intake Manifold

1. Loosen clamp securing breather hose to engine and disconnect hose.

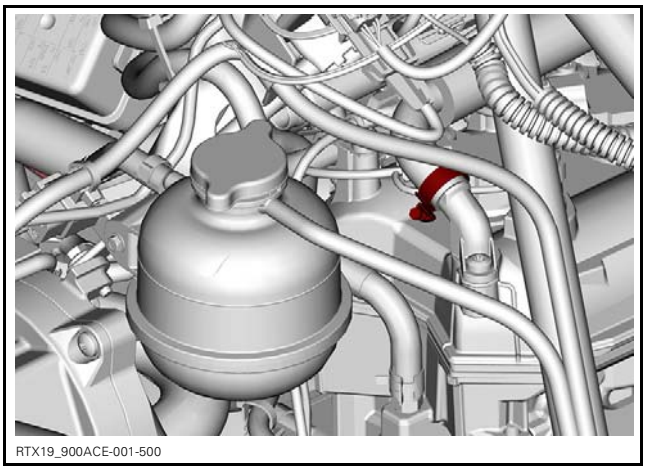

RTX19_900ACE-001-500

2. Loosen clamp securing air intake hose to throttle body.

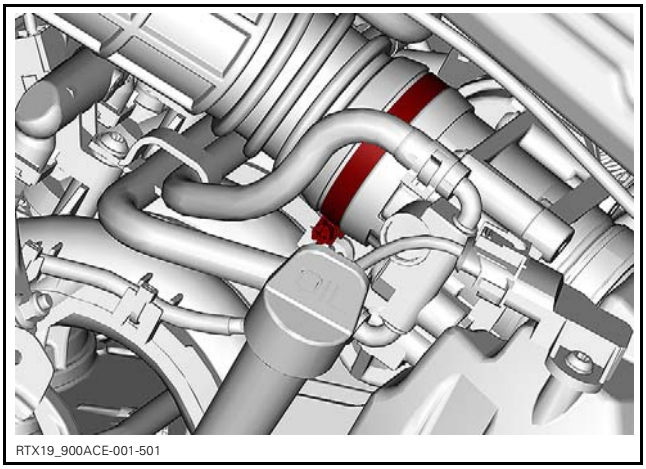

RTX19_900ACE-001-501

3. Remove air intake and breather hoses.

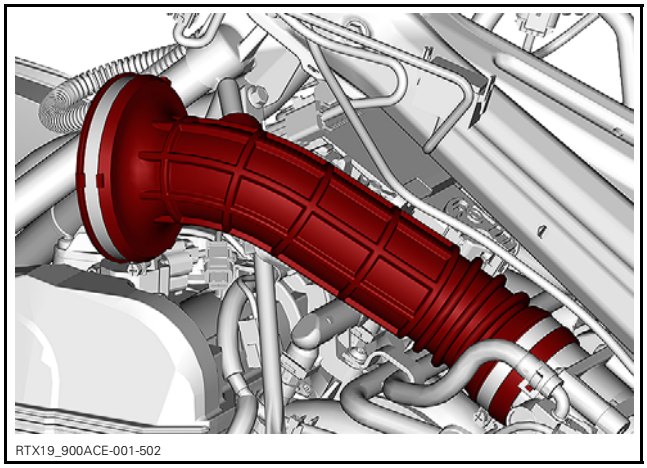

RTX19_900ACE-001-502

4. Cut locking ties securing MAPTS (manifold absolute pressure and temperature sensor) and ETC (electric throttle control) harness to intake manifold.

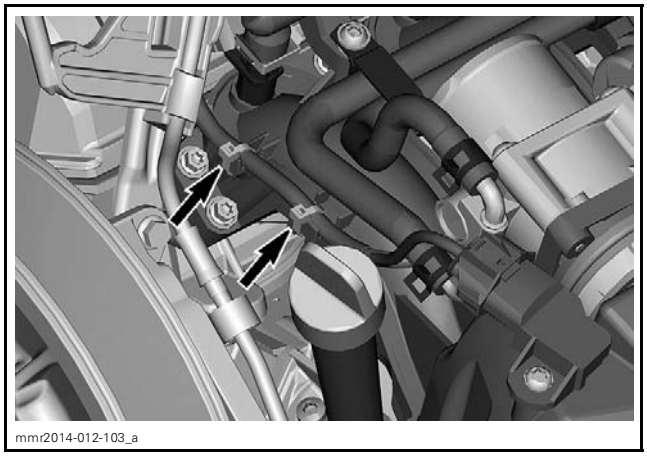

mmr2014-012-103_a

5. Disconnect MAPTS and ETC connectors.

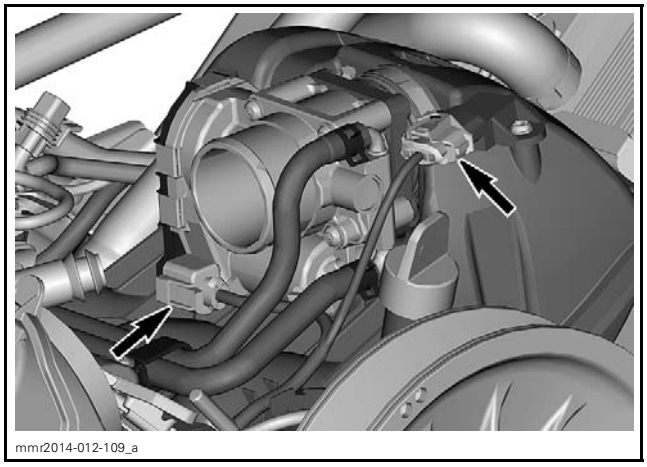

mmr2014-012-109_a

6. Disconnect both ECM connectors

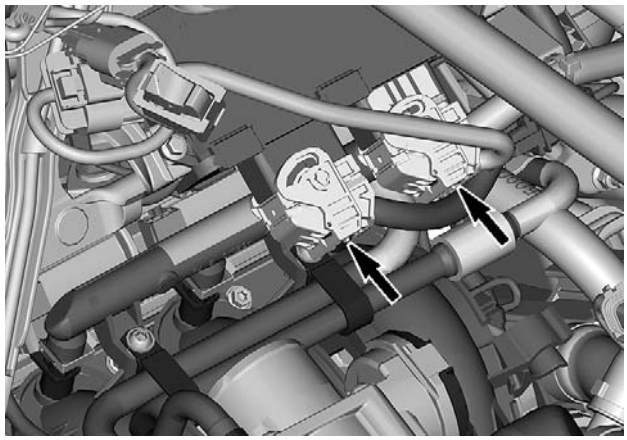
mmr2014-012-113_a

7. Remove screws securing fuel rail and coolant hoses to intake manifold.

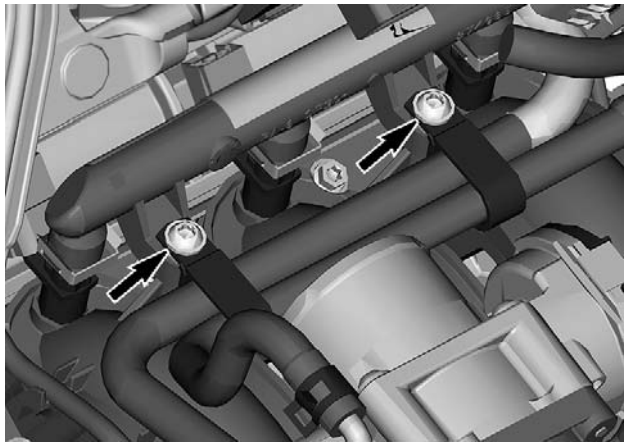
mmr2014-012-105_a

8. Install a hose pincher on each coolant hose connected to throttle body and disconnect the hoses from the throttle body.

| REQUIRED TOOL | |
|---|---|
| SMALL HOSE PINCHER (P/N 295 000 076) | 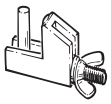 |

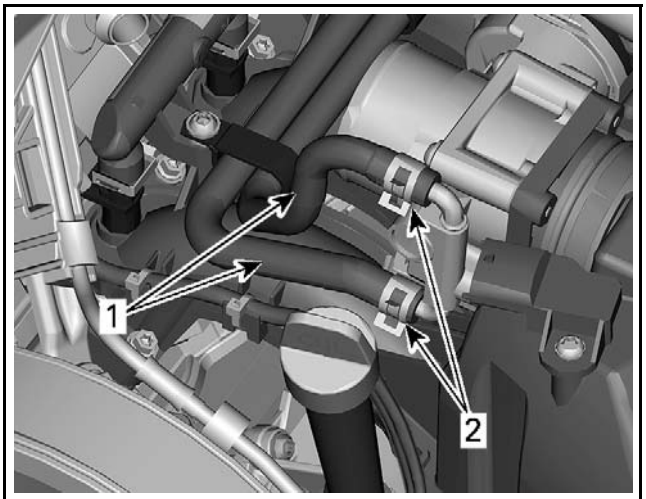

mmr2015-013-104_a

*1. Install hose pinchers here*
*2. Disconnect hoses here*

9. Disconnect fuel injector connectors.

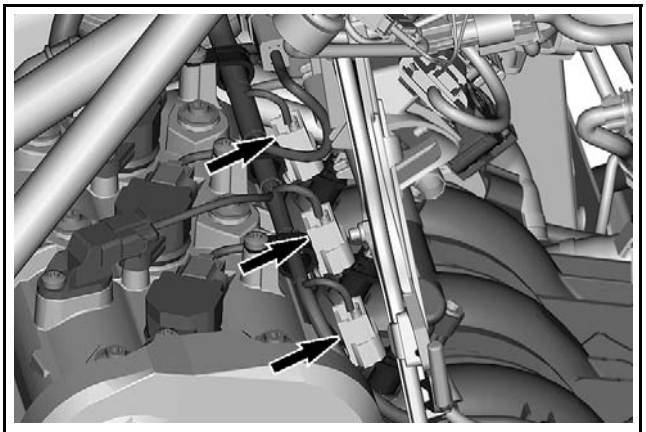
mmr2014-012-114_a

*INJECTOR CONNECTORS*

10. Remove screws securing intake manifold to cylinder head.

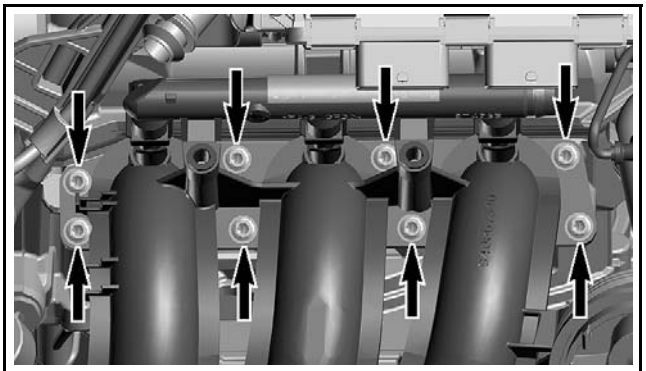
mmr2014-012-106_a

*INTAKE MANIFOLD SCREWS*

11. Remove intake manifold from engine.
12. Remove and discard intake manifold gaskets.

13. If required, refer to *ELECTRONIC FUEL INJECTION (EFI)* subsection and remove the following parts from intake manifold:
    – Throttle body with connecting socket
    – MAPTS
    – Fuel rail with injectors.

## Inspecting the Intake Manifold

Check intake manifold for cracks, warping at flanges or any other visible damage. Replace if required.

Drain intake manifold of any accumulated liquids.

Flush intake manifold with solvent and let dry.

## Inspecting the Connecting Socket

Check connecting socket for cracks, warping at flanges or any other visible damage. If required, remove it from throttle body and replace it.

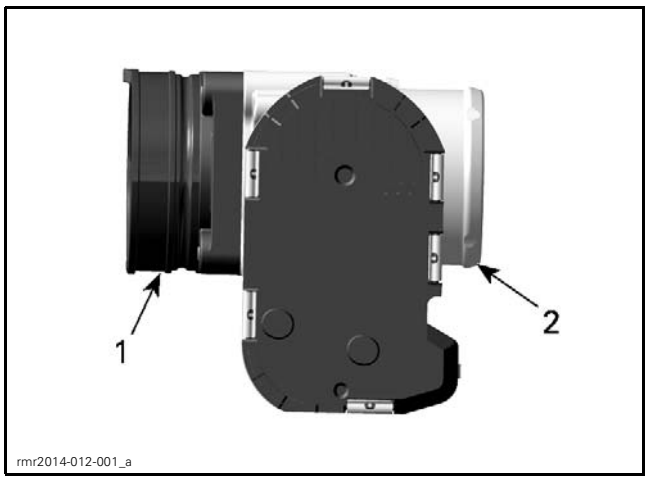


1. *Connecting socket*
2. *Throttle body*

## Installing the Intake Manifold

Reverse the removal procedure. However, pay attention to the following.

If removed, refer to *ELECTRONIC FUEL INJECTION (EFI)* subsection to install:

– MAPTS

– Fuel rail with injectors.

Install NEW gaskets with tab properly inserted in notch.

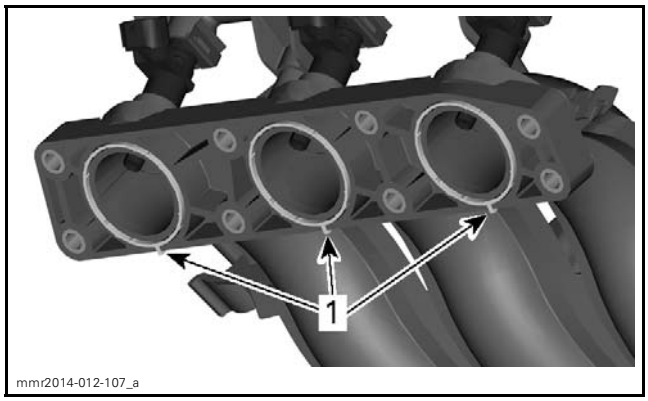


1. *Gaskets tab properly inserted*

Ensure rubber grommets are properly inserted.

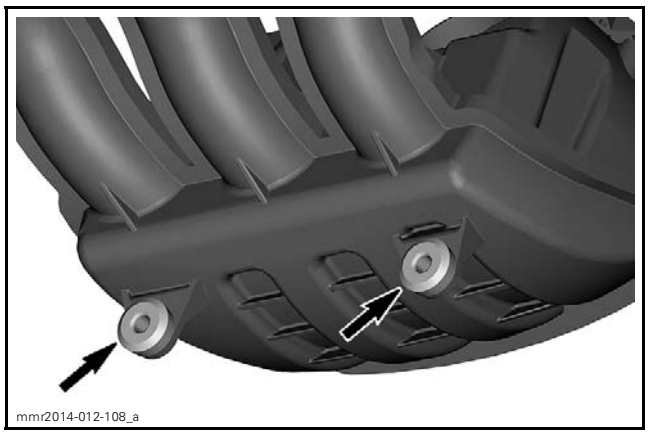


*RUBBER GROMMETS*

Tighten intake manifold screws to specification as per the following sequence.

| TIGHTENING TORQUE | |
|---|---|
| Intake manifold screws | 9 N•m ± 1 N•m (80 lbf•**in** ± 9 lbf•**in**) |

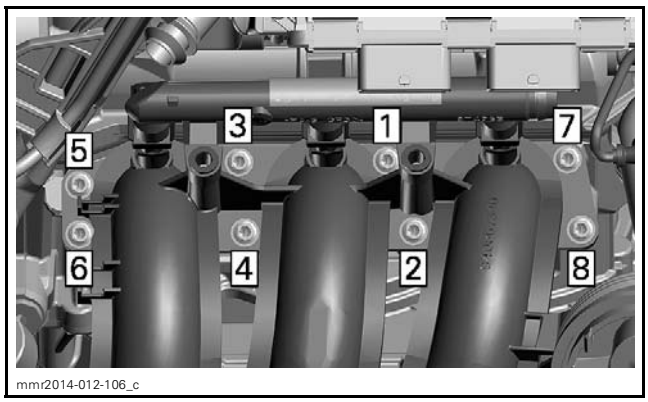


*TIGHTENING SEQUENCE*

If removed, install throttle body on connecting socket.

Make sure to index intake manifold pin with throttle body positioning bore.

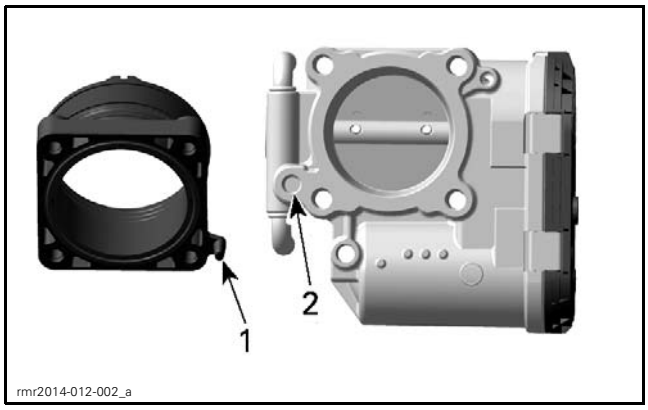


1. *Intake manifold pin*
2. *Throttle body positioning bore*

Tighten throttle body screws to specification as per the following sequence.

| TIGHTENING TORQUE | |
|---|---|
| Throttle body screws | 9 N•m ± 1 N•m (80 lbf•**in** ± 9 lbf•**in**) |

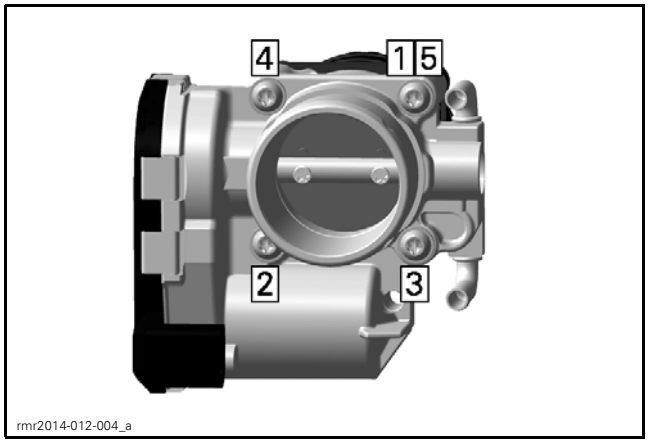


*TIGHTENING SEQUENCE*

Make sure to index connecting socket notch with the intake manifold tab.

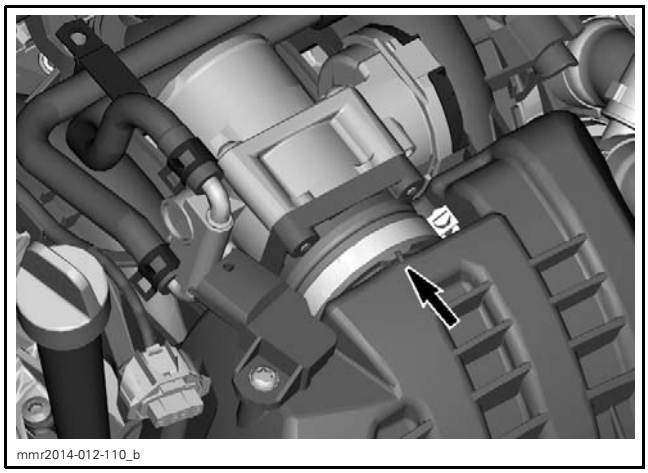


*INTAKE MANIFOLD TAB*

Install connecting socket clamp in proper position and tighten to specification.

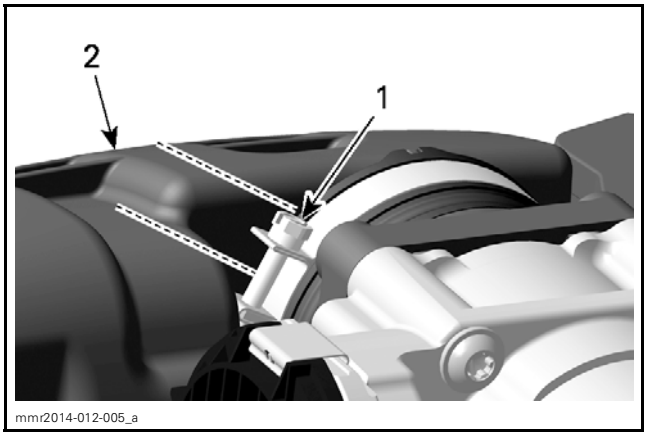


*ALLOWED POSITION OF CLAMP SCREW*

1. *Screw of clamp*
2. *Intake manifold*

| TIGHTENING TORQUE | |
|---|---|
| Connecting socket clamp | 0.9 N•m ± 0.1 N•m (8 lbf•**in** ± 1 lbf•**in**) |

# EXHAUST MANIFOLD

Midwest Manuals
If you bought this manual from any other seller please leave them NEGATIVE feedback and notify me at bestshopmanuals@gmail.com

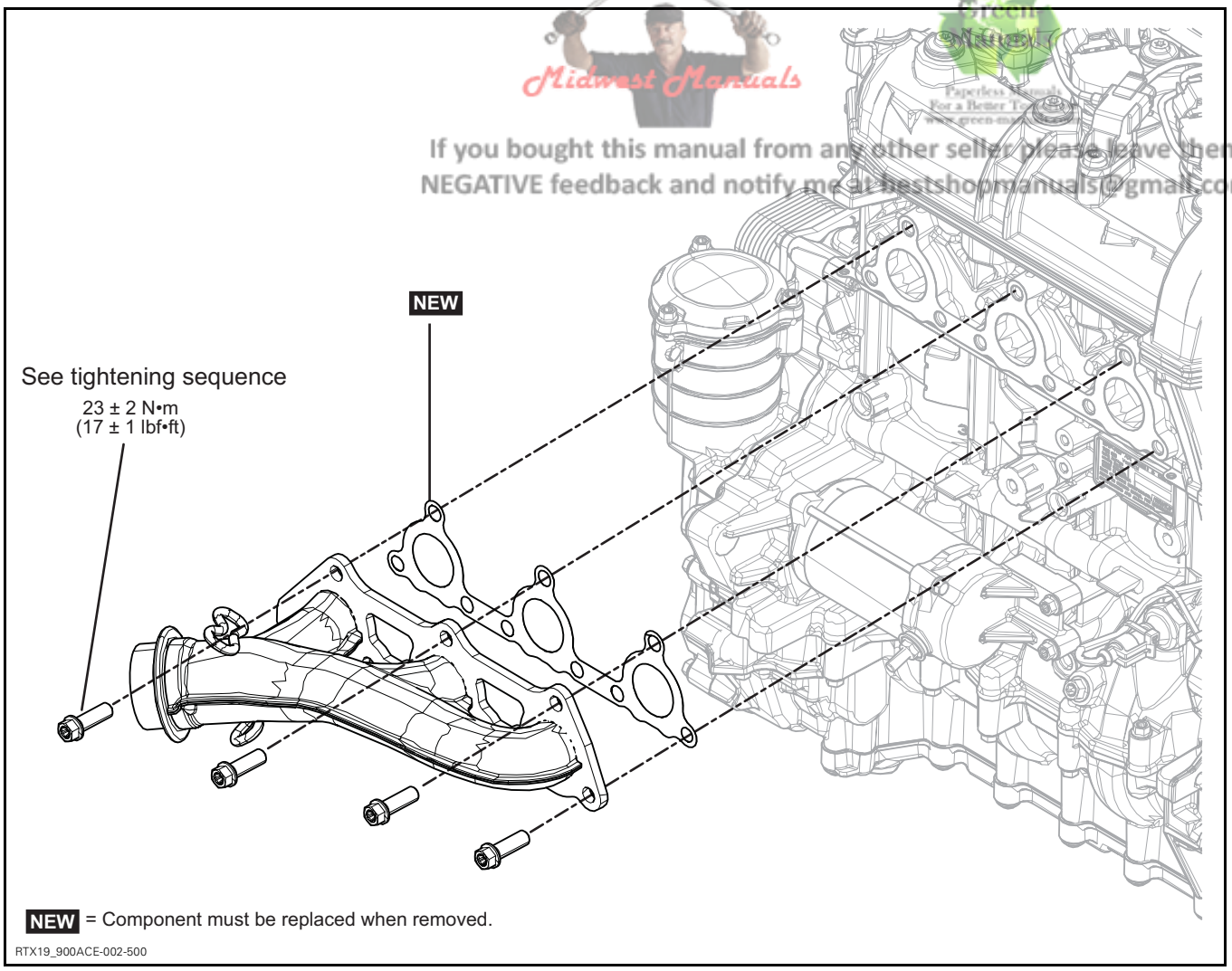


NEW = Component must be replaced when removed.

RTX19_900ACE-002-500

# GENERAL

**⚠ WARNING**

To avoid potential burns, never touch exhaust system components immediately after the engine has been running because these components are very hot. Let engine and exhaust system cool down before performing any servicing.

# PROCEDURES

## EXHAUST MANIFOLD

### Removing the Exhaust Manifold

1. Remove exhaust manifold screws (9).

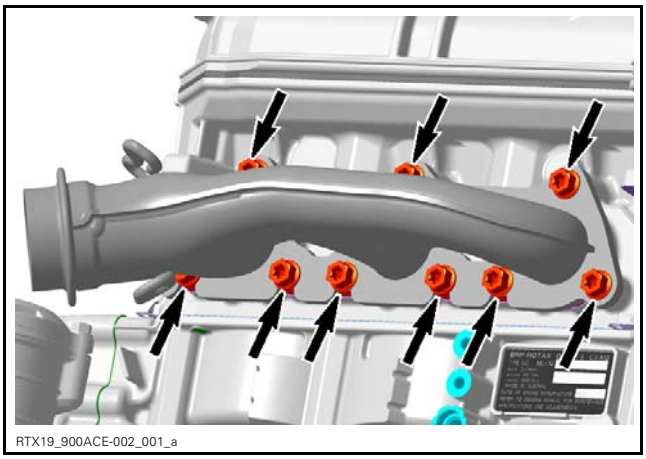

RTX19_900ACE-002_001_a

2. Remove exhaust manifold.
3. Remove and discard exhaust manifold gasket.

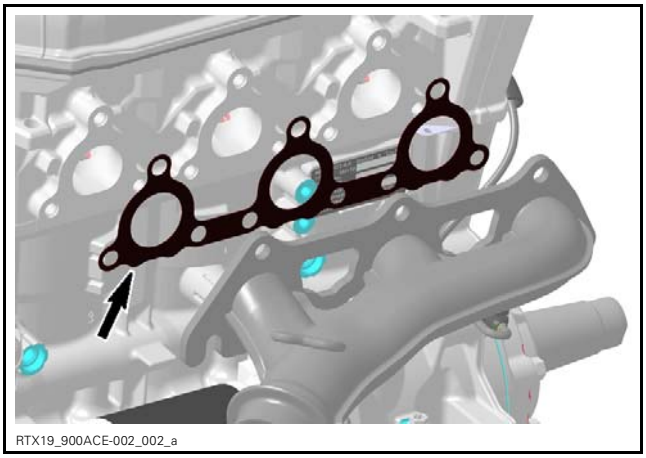

RTX19_900ACE-002_002_a

### Inspecting the Exhaust Manifold

Check if the manifold is cracked or damaged. Replace if necessary.

### Installing the Exhaust Manifold

Install **NEW** exhaust manifold gasket and exhaust manifold screws as shown.

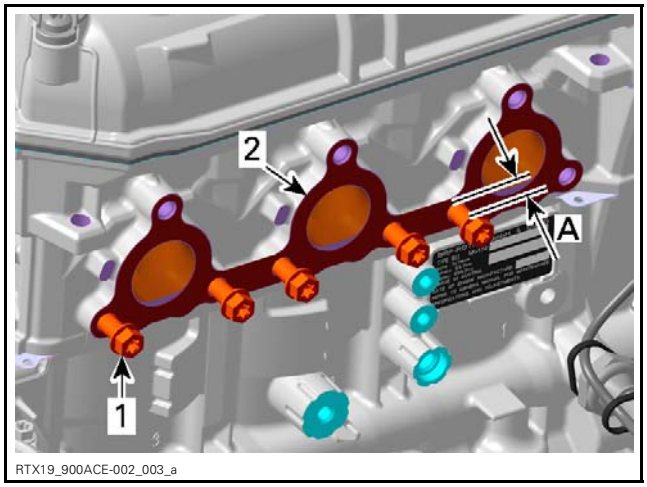


RTX19_900ACE-002_003_a

*1. Exhaust manifold screws*
*2. Gasket*
*A. 15 mm (.6 in)*

Fit the exhaust manifold on the previously installed screws.

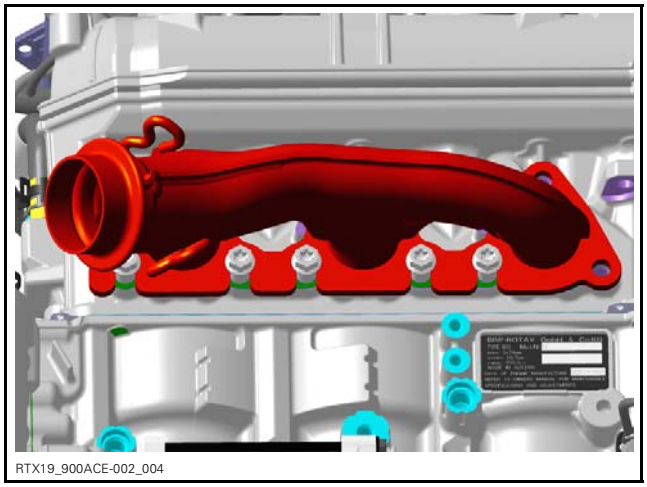

RTX19_900ACE-002_004

Install the remaining exhaust manifold screws and tighten them to specification as per the following tightening sequence .

***NOTICE*** **Do not use an impact wrench to tighten exhaust manifold screws.**

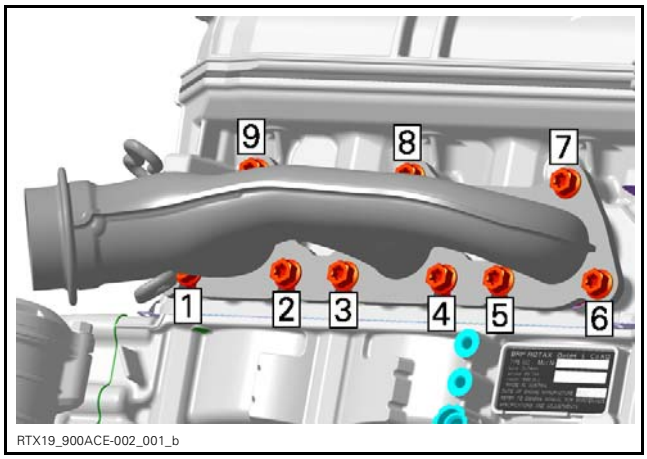


*TIGHTENING SEQUENCE*

| TIGHTENING TORQUE | |
|---|---|
| Step A | 5 N•m ± 0.5 N•m<br>(44 lbf•**in** ± 4 lbf•**in**) |
| Step B | 23 N•m ± 2 N•m<br>(17 lbf•ft ± 1 lbf•ft) |

# LUBRICATION SYSTEM

## SERVICE TOOLS


| Description | Part Number | Page |
|---|---|---|
| ADAPTER HOSE | 529 035 652 | 54 |
| ECM ADAPTER TOOL | 529 036 166 | 56 |
| FLUKE 115 MULTIMETER | 529 035 868 | 56 |
| OIL PRESSURE TEST CAP | 529 036 158 | 54 |
| PRESSURE GAUGE | 529 035 709 | 54 |


## SERVICE PRODUCTS


| Description | Part Number | Page |
|---|---|---|
| LOCTITE 243 (BLUE) | 293 800 060 | 57 |

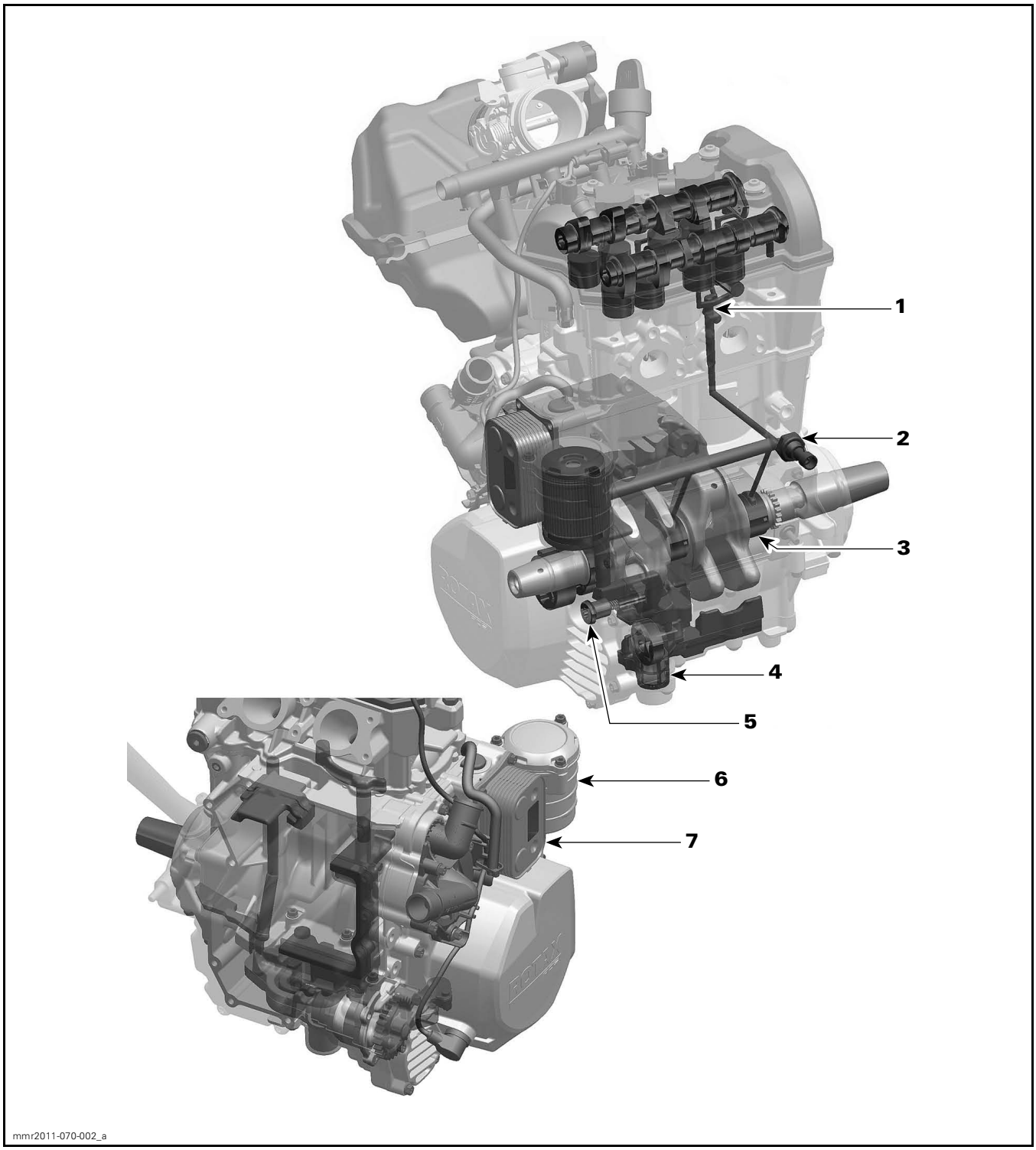


*TYPICAL*
*ENGINE LUBRICATION CIRCUIT*

1. Oil channel to camshaft bearing
2. Oil pressure switch
3. Crankshaft main bearing
4. Oil strainer
5. Oil pressure regulator
6. Oil filter
7. Oil cooler

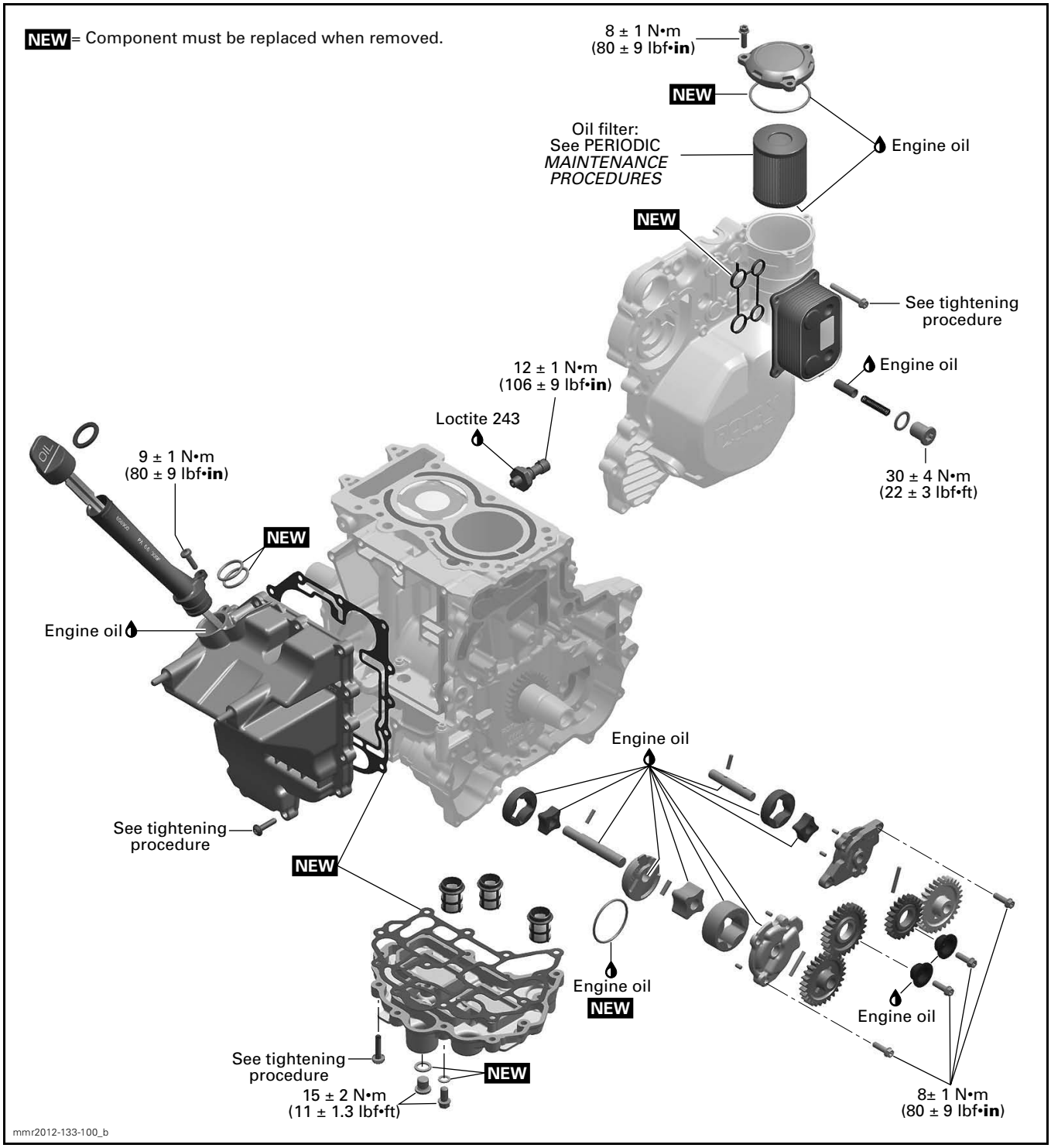
NEW = Component must be replaced when removed.
8 ± 1 N•m
(80 ± 9 lbf•in)
NEW
Oil filter:
See PERIODIC
MAINTENANCE
PROCEDURES
Engine oil
NEW
See tightening
procedure
Engine oil
12 ± 1 N•m
(106 ± 9 lbf•in)
Loctite 243
30 ± 4 N•m
(22 ± 3 lbf•ft)
9 ± 1 N•m
(80 ± 9 lbf•in)
NEW
Engine oil
Engine oil
See tightening
procedure
NEW
Engine oil
NEW
Engine oil
See tightening
procedure
NEW
15 ± 2 N•m
(11 ± 1.3 lbf•ft)
8± 1 N•m
(80 ± 9 lbf•in)
mmr2012-133-100_b

# GENERAL

## SYSTEM DESCRIPTION

This engine uses dry sump lubrication. The oil from the cylinder block, timing chain chamber and magneto cover is pumped by two suction pumps.

Both suction pumps are integrated into one module.

The 20 mm (.79 in) large oil suction pump returns the crankshaft and magneto chamber oil to the reservoir.

The 11 mm (.43 in) small oil suction pump returns the timing chain chamber oil to the oil reservoir.

An oil filter and three oil strainers are used to filter dirt and debris from the oil circuit.

The oil strainers are located between oil sump cover and crankcase lower underneath the oil pressure pump.

The oil pressure is provided by a pump and regulated by a spring loaded pressure regulator.

# INSPECTION

## ENGINE OIL PRESSURE TEST

1. Remove the RH side panel.
2. Completely tighten adapter hose on oil pressure test cap.

| REQUIRED TOOLS | |
|---|---|
| ADAPTER HOSE (P/N 529 035 652) | |
| OIL PRESSURE TEST CAP (P/N 529 036 158) | |

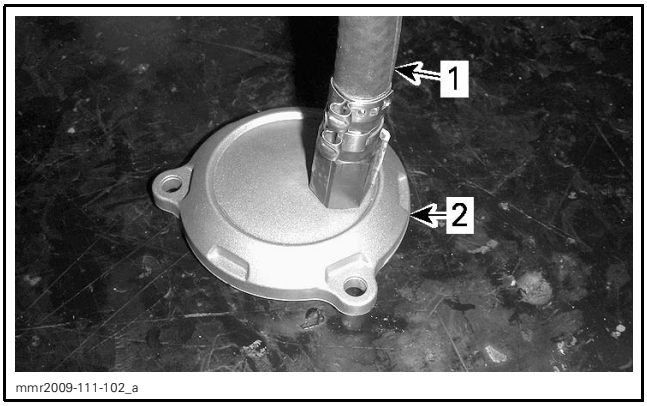

mmr2009-111-102_a

*1. Adapter hose*
*2. Oil pressure test cap*

3. Install oil pressure test cap on oil filter reservoir. Position adapter hose near engine.

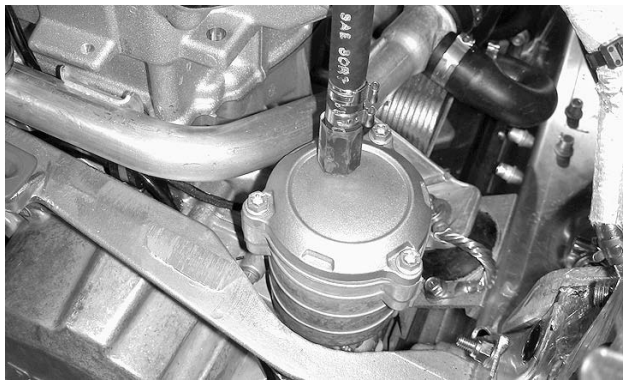
mmr2009-111-103

*TYPICAL*

4. Connect pressure gauge to adapter hose.

| REQUIRED TOOL | |
|---|---|
| PRESSURE GAUGE (P/N 529 035 709) | |

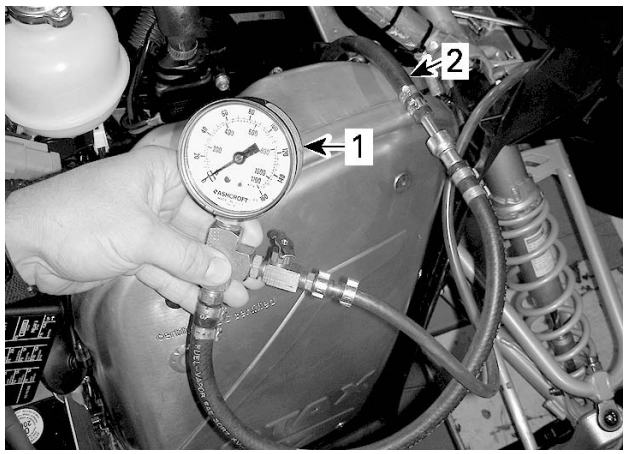

mmr2009-111-104_a

*TYPICAL*
*1. Pressure gauge*
*2. Adapter hose*

5. Start engine and check oil pressure.

| ENGINE OIL PRESSURE @ 80°C (176°F) | |
|---|---|
| ENGINE SPEED | MINIMUM PRESSURE |
| Idle | 60 kPa (8.7 PSI) |
| 4000 RPM | 400 kPa (58 PSI) |

If the engine oil pressure is out of specification, refer to *TROUBLESHOOTING* in this subsection.

6. Remove engine oil pressure test tools.
7. Reinstall all removed parts. Refer to applicable subsection.

# TROUBLESHOOTING

Always check for fault codes. If a fault code is detected, service the fault code first.

## LOW OR NO ENGINE OIL PRESSURE

1. Oil level is too low.
   - *Refill engine oil.*
   - *Check for high oil consumption. See below.*
   - *Check for oil leaks (oil leaking out of leak indicator hole, gaskets, oil seal or O-rings). Repair or replace.*
2. Defective or clogged oil filter.
   - *Replace engine oil and filter.*
3. Use of a bad grade oil.
   - *Replace engine oil with BRP recommended oil.*
4. Oil pressure regulator valve sticks open, or spring load is insufficient.
   - *Clean oil regulator piston and its bore. Replace if necessary.*
   - *Measure spring free length. Replace if out of specification.*
5. Oil pump(s) worn or damaged.
   - *Check if oil pump drive gears are damaged. Replace if necessary.*
   - *Check oil pump rotors and its bore for wear limits. Replace if out of specification.*
6. Engine oil strainer is clogged.
   - *Remove and clean engine oil strainer.*
7. Heavy wear on plain bearings.
   - *Check radial clearance of plain bearings. Replace if out of specification.*

## HIGH OIL CONSUMPTION

1. Oil in breathing system.
   - *Check if breather V-ring is brittle, hard or damaged. Replace V-ring.*
   - *Check if oil separator cover is damaged or missing.*
2. Valve stem seals worn or damaged.
   - *Replace valve stem seals.*
3. Piston rings worn out (blue colored exhaust smoke).
   - *Replace piston rings.*

## OIL CONTAMINATION (WHITE APPEARANCE)

1. Oil seal and rotary seal on water pump shaft leaking.
   - *Replace oil seal, rotary seal and water pump shaft. Change engine oil.*
2. Cylinder head gasket leaking.
   - *Replace cylinder head gasket. Change engine oil.*
3. Cylinder head screws not properly tightened.
   - *Retighten screws with recommended torque. Change engine oil.*
4. Oil cooler gasket leaking.
   - *Replace gasket. Change engine oil.*

# PROCEDURES

## OPS (OIL PRESSURE SWITCH)

### OPS Activation

The oil pressure switch activates if engine oil pressure is lower than the following specified pressure range.

| OIL PRESSURE SWITCH ACTIVATION RANGE |
|---|
| 20 kPa and 40 kPa (2.9 PSI and 5.8 PSI) |

### OPS Access

1. Remove LH side panels.
2. Remove drive belt guard. Refer to *DRIVE BELT* subsection.

### OPS Inspection

First, ensure oil pressure is adequate. Refer to *ENGINE OIL PRESSURE TEST* in this subsection.

If the oil pressure is good, check the resistance of the oil pressure switch.

### OPS Resistance Test

The engine must be warm to check the oil pressure switch properly.

**⚠ WARNING**

**Be careful when working near hot parts. To avoid potential burns, never touch exhaust system components immediately after the engine has been running as these components are very hot. Always wear long sleeves and gloves.**

1. Cut locking tie and disconnect the OPS connector.

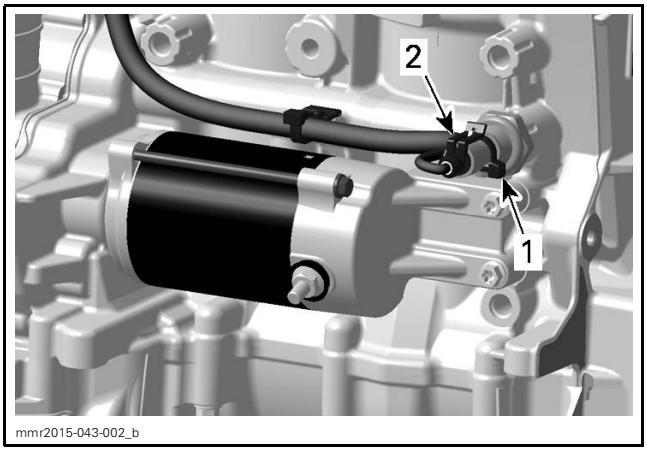


*1. Locking tie*
*2. OPS connector*

2. Check the oil pressure switch resistance.

| REQUIRED TOOL |
|---|
| FLUKE 115 MULTIMETER (P/N 529 035 868) |

3. Read result and compare to table.

| **RESISTANCE (Ω)** | | |
|---|---|---|
| ENGINE NOT RUNNING | | |
| OPS pin | Engine ground | Close to 0 Ω (normally closed switch) |

If resistance is out of specification, replace the oil pressure switch.

If the resistance is correct, continue procedure. It will be necessary to use jumper wires.

4. Install drive belt guard.

5. Start engine.

6. Read result and compare to table.

| **RESISTANCE (Ω)** | | |
|---|---|---|
| ENGINE RUNNING | | |
| OPS pin | Engine ground | Infinitely high (OL) |

If resistance is out of specification, replace the oil pressure switch.

If the resistance is correct, check the oil pressure switch circuit continuity.

## OPS Circuit Continuity Test

1. Disconnect ECM connector A. Refer to *ECM CONNECTOR ACCESS* in *ELECTRONIC FUEL INJECTION (600 ACE)* subsection.

2. Install connector A on the ECM adapter tool.

| REQUIRED TOOL |
|---|
| ECM ADAPTER TOOL (P/N 529 036 166) |

3. Cut locking tie and disconnect the OPS connector.

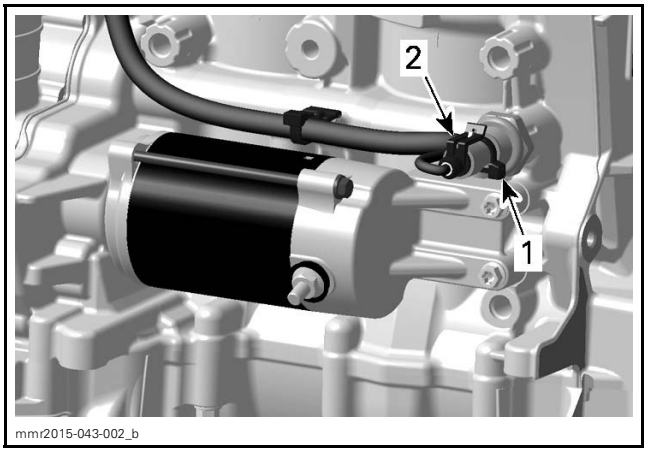


*1. Locking tie*
*2. OPS connector*

4. Check continuity as follows.

| REQUIRED TOOL |
|---|
| FLUKE 115 MULTIMETER (P/N 529 035 868) |

| CIRCUIT CONTINUITY | | |
|---|---|---|
| OPS connector | ECM A pin E3 | Close to 0 Ω |

If the continuity is good and all other tests are performed, try a **NEW** ECM.

If the continuity is bad, repair or replace defective wire or connectors.

## OPS Removal

1. Cut locking tie and unplug the OPS switch connector.

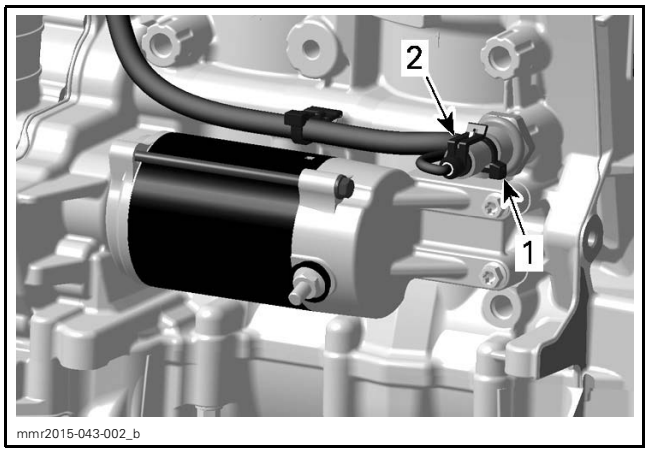


*1. Locking tie*
*2. OPS connector*

2. Unscrew and remove the OPS.

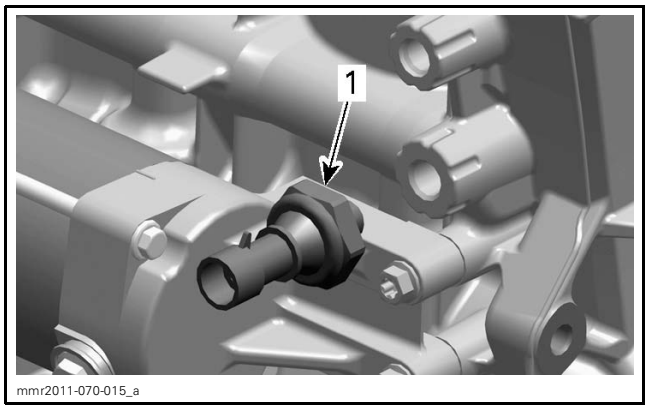


*1. Oil pressure switch*

## OPS Installation

Install oil pressure switch as per the following information.

| OIL PRESSURE SWITCH | |
|---|---|
| Service product | LOCTITE 243 (BLUE) (P/N 293 800 060) |
| Tightening torque | 12 N•m ± 1 N•m (106 lbf•**in** ± 9 lbf•**in**) |

Install all other removed parts.

***NOTICE*** **When installing the locking tie on the OPS connector, take care that the wires do not make a sharp bend.**

# OIL FILLER TUBE

## Oil Filler Tube Access

Remove drive belt guard, refer to *DRIVE BELT* subsection.

## Oil Filler Tube Removal

1. Remove oil filler tube retaining screw.

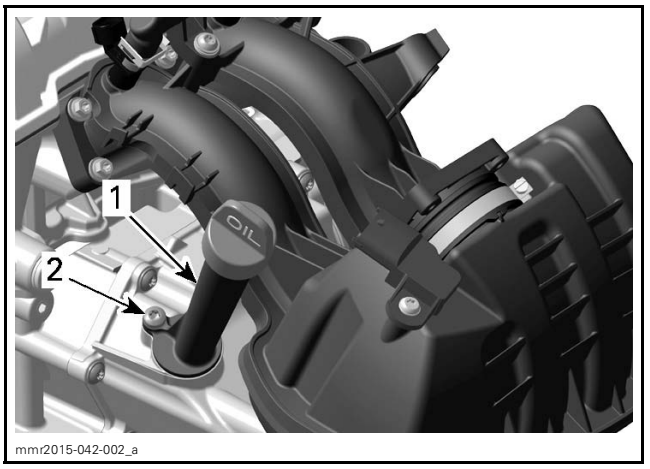


*1. Oil filler tube*
*2. Retaining screw*

2. Pull filler tube out of oil tank cover.

## Oil Filler Tube Installation

1. Install **NEW** O-rings on oil filler tube.

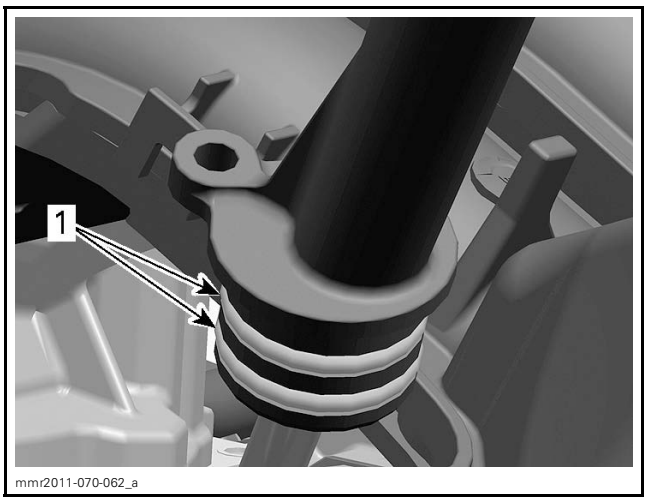


*1. Oil filler tube O-rings*

2. Lubricate oil tank cover bore with engine oil.

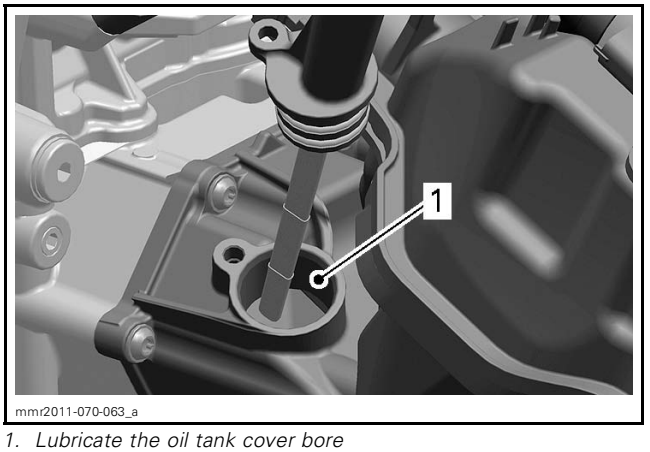


*1. Lubricate the oil tank cover bore*

3. Install oil filler tube.

4. Tighten retaining screw to specified torque.

| OIL FILLER TUBE SCREW | |
|---|---|
| Tightening torque | 9 N•m ± 1 N•m (80 lbf•**in** ± 9 lbf•**in**) |

5. Install all other removed parts.

# OIL TANK

## Oil Tank Cover Removal

1. Drain engine oil. Refer to *PERIODIC MAINTENANCE PROCEDURES* subsection.
2. Remove engine from vehicle. Refer to *ENGINE REMOVAL AND INSTALLATION* subsection.
3. Remove intake manifold. Refer to *AIR INTAKE SYSTEM* subsection.
4. Place a drain pan underneath oil tank.
5. Unscrew oil tank cover retaining screws.

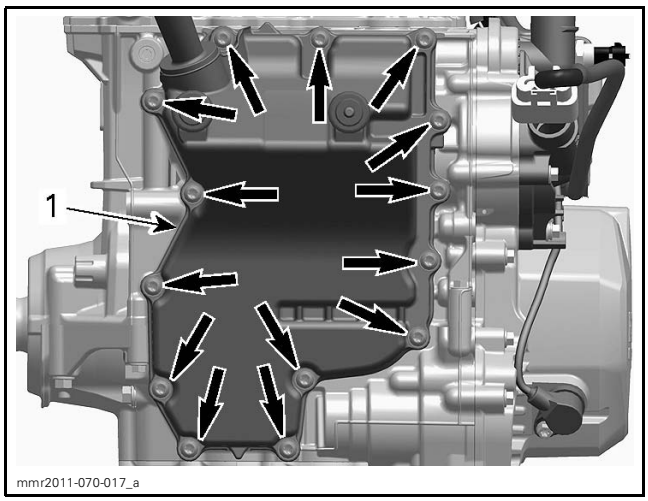


*RETAINING SCREWS*
*1. Oil tank*

6. Remove oil tank from the engine.

## Oil Tank Cover Installation

1. Install **NEW** gasket.
2. Install oil tank on engine, then tighten screws in two steps as follows:
   2.1 Tighten screws to the following specified torque using the specified sequence.

| **OIL TANK SCREWS TIGHTENING SEQUENCE** | |
|---|---|
| STEP A | 5 N•m ± 0.6 N•m (44 lbf•**in** ± 5 lbf•**in**) |

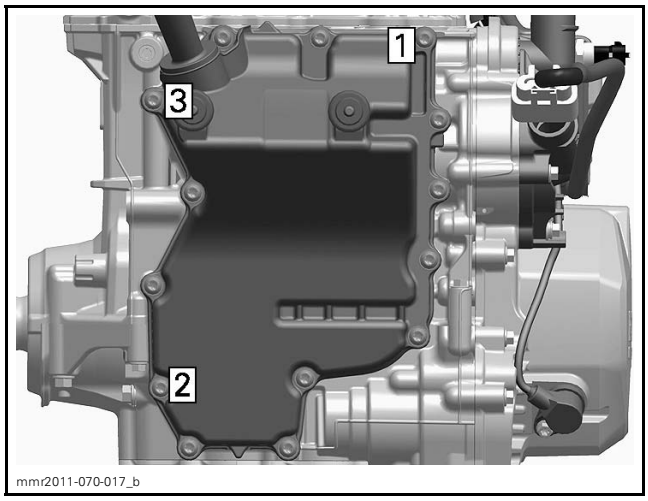


*TIGHTENING SEQUENCE STEP A*

   2.2 Tighten screws to the following specified torque using the specified sequence.

| **OIL TANK SCREWS TIGHTENING SEQUENCE** | |
|---|---|
| STEP B | 9 N•m ± 1 N•m (80 lbf•**in** ± 9 lbf•**in**) |

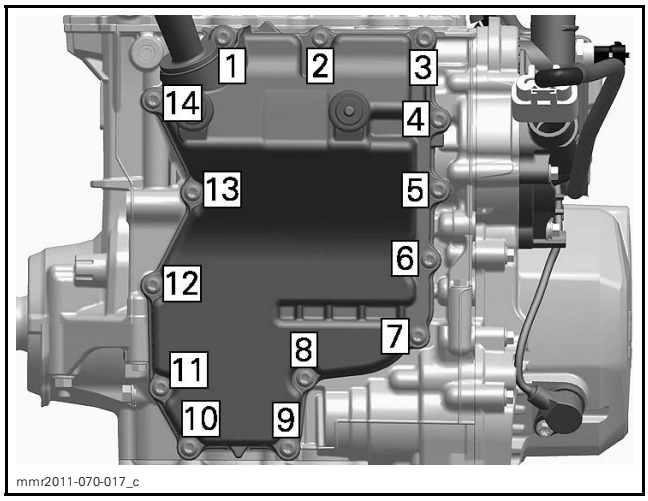


*TIGHTENING SEQUENCE STEP B*

3. Wipe up any oil spillage.
4. Install intake manifold. Refer to *AIR INTAKE SYSTEM* subsection.
5. Install engine in vehicle. Refer to *ENGINE REMOVAL AND INSTALLATION* subsection.
6. Fill up oil tank and check oil level. Refer to *PERIODIC MAINTENANCE PROCEDURES* subsection.

# OIL COOLER

## Oil Cooler Access

Remove muffler, refer to *EXHAUST SYSTEM* subsection.

## Oil Cooler Removal

1. Refer to *PERIODIC MAINTENANCE PROCEDURES* subsection to:
   – Drain engine oil
   – Drain cooling system.
2. Remove oil cooler retaining screws.

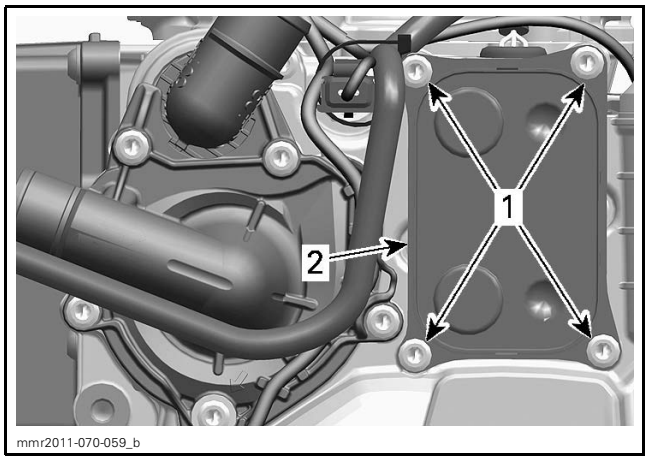


*1. Retaining screws*
*2. Oil cooler*

3. Place rags or towels under oil cooler to catch remaining oil and coolant.
4. Remove oil cooler and its gasket.

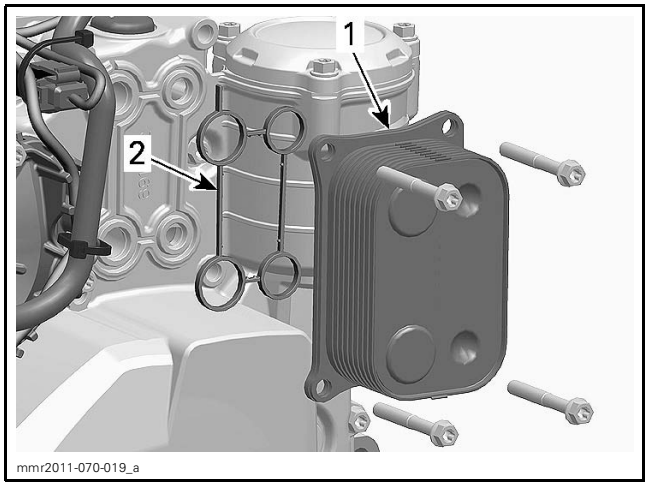


*1. Oil cooler*
*2. Gasket*

## Oil Cooler Inspection

Check oil cooler for cracks and other damage.

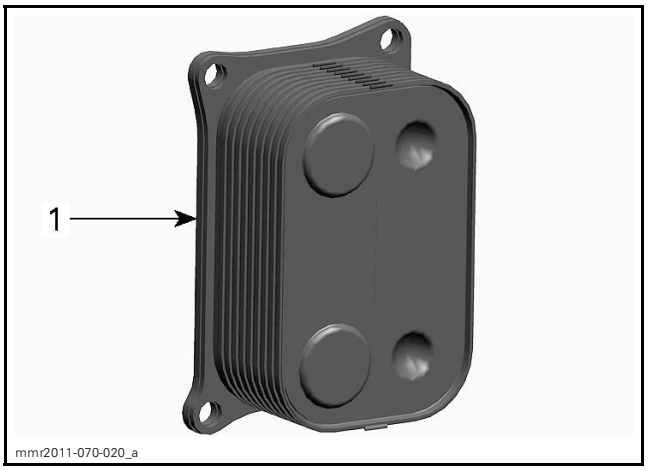


*1. Check for cracks*

Replace parts as necessary.

## Oil Cooler Installation

Reverse the removal procedure. However, pay attention to the following.

Tighten oil cooler screws in two steps to the specified torques using the illustrated sequence.

| OIL COOLER SCREWS TIGHTENING PROCEDURE | |
|---|---|
| STEP A | 5 N•m ± 0.6 N•m (44 lbf•**in** ± 5 lbf•**in**) |
| STEP B | 9 N•m ± 1 N•m (80 lbf•**in** ± 9 lbf•**in**) |

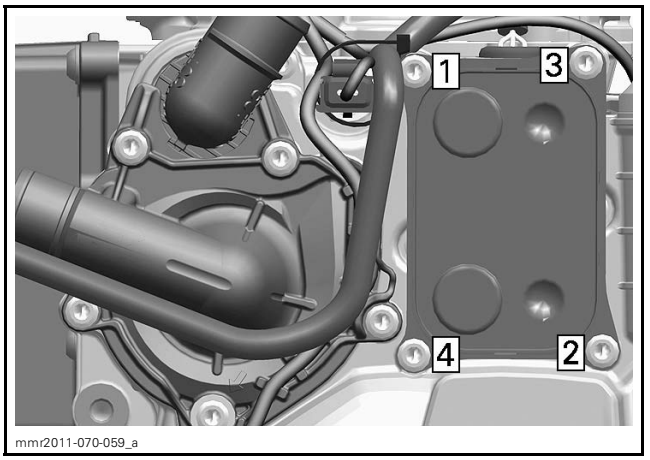


*TIGHTENING SEQUENCE OIL-COOLER*

Wipe up any oil and coolant spillage.

Refer to *PERIODIC MAINTENANCE PROCEDURES* subsection to:
– Fill up oil tank and check oil level
– Refill and bleed cooling system.

# ENGINE OIL PRESSURE REGULATOR

## Oil Pressure Regulator Location

The engine oil pressure regulator is located inside the magneto cover.

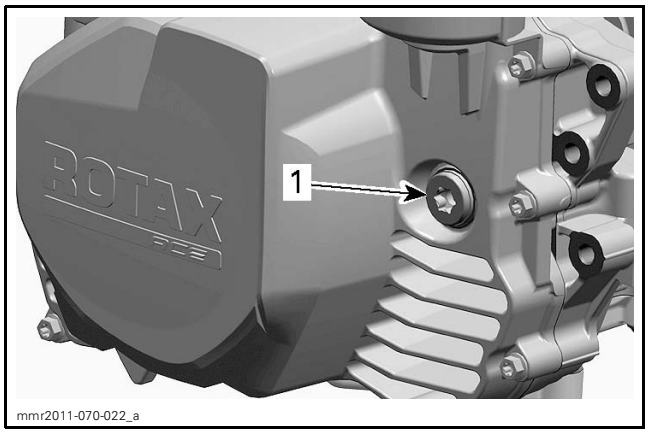


*1. Engine oil pressure regulator*

## Oil Pressure Regulator Access

Remove muffler, refer to *EXHAUST SYSTEM* subsection.

## Oil Pressure Regulator Removal

1. Drain engine oil. Refer to *PERIODIC MAINTENANCE PROCEDURES* subsection.
2. Remove regulator plug and sealing washer. Discard sealing washer.
3. Pull oil pressure regulator parts out of the magneto cover.

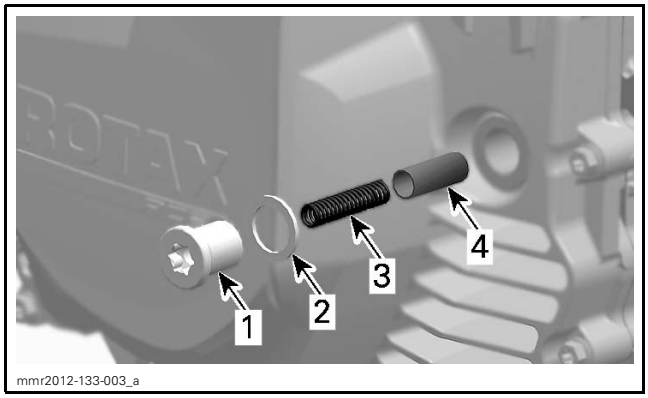


*1. Plug*
*2. Sealing washer*
*3. Regulator spring*
*4. Regulator piston*

## Oil Pressure Regulator Inspection

Clean bore and thread in the magneto cover of any contamination.

Inspect oil pressure regulator piston and bore in cylinder block for scoring or other damages.

Check if piston moves easily in its bore.

Check compression spring for free length.

| SPRING FREE LENGTH | |
|---|---|
| NEW NOMINAL | 46 mm (1.811 in) |
| SERVICE LIMIT | 45 mm (1.772 in) |

Visually check compression spring for squareness.

Replace worn or damaged components.

## Oil Pressure Regulator Installation

Reverse the removal procedure. However, pay attention to the following.

Install a NEW sealing washer on plug.

Tighten regulator plug to the specified torque.

| OIL PRESSURE REGULATOR PLUG | |
|---|---|
| Tightening torque | 17 N•m ± 2 N•m (150 lbf•**in** ± 18 lbf•**in**) |

Wipe up any oil spillage.

Fill up oil tank and check oil level. Refer to *PERIODIC MAINTENANCE PROCEDURES* subsection.

Install all other removed parts. Refer to applicable subsections.

# OIL PUMP DRIVE GEARS

## Oil Pump Drive Gear Location

The oil pump gears are located on the MAG side, behind the magneto cover.

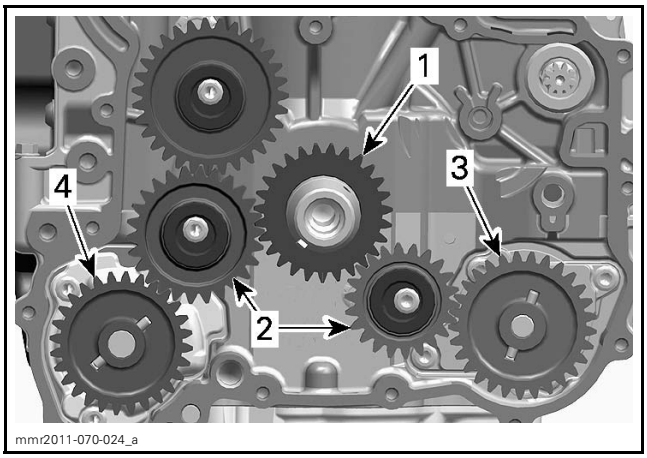


*1. Oil pump drive gear*
*2. Intermediate gears*
*3. Oil pressure pump gear*
*4. Oil suction pump gear*

## Oil Pump Drive Gear Access

Refer to *MAGNETO AND STARTER* subsection to remove:

– Magneto cover
– Rotor
– Sprag clutch gear.

## Oil Pump Drive Gear Removal

1. Unscrew oil pump intermediate gear screws.

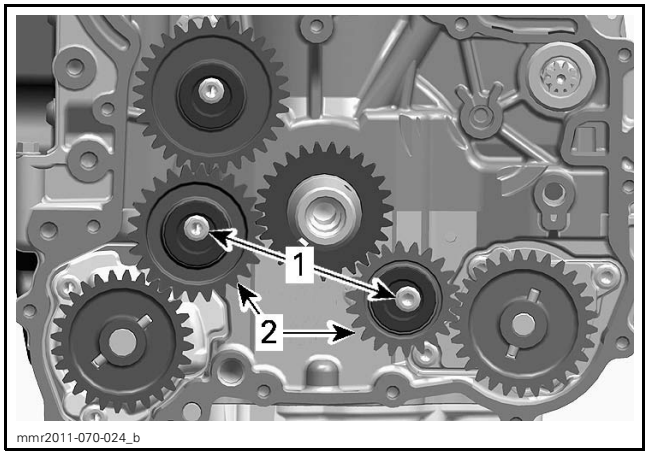


*1. Retaining screws*
*2. Intermediate gears*

2. Remove bearing sleeves and oil pump intermediate gears.

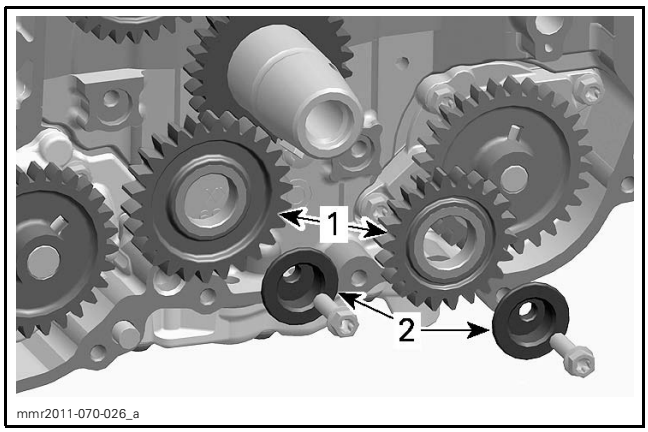


*1. Intermediate gears*
*2. Bearing Sleeves*

3. Remove oil pump gears and needle pins.

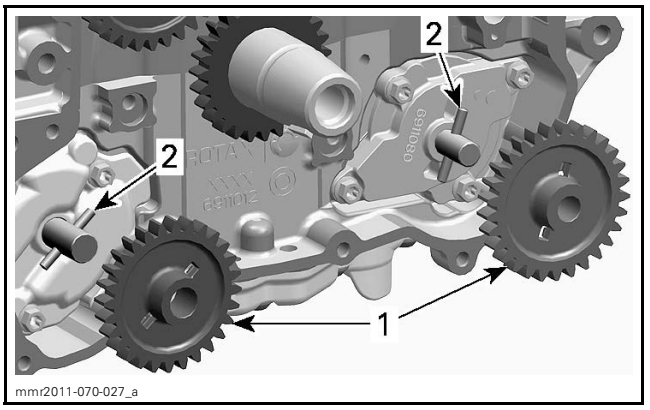


*1. Oil pump gears*
*2. Needle pins*

## Oil Pump Drive Gear Inspection

Inspect gears for wear, cracks or other damage.

Replace if damaged.

## Oil Pump Drive Gear Installation

Reverse the removal procedure, however, pay attention to the following.

1. Be sure to not intermix oil pump gears, see next illustration.
   1.1 Install the BROWN oil pump gear (29 teeth) on oil pressure pump.
   1.2 Install the BLACK oil pump gear (28 teeth) on oil suction pump.

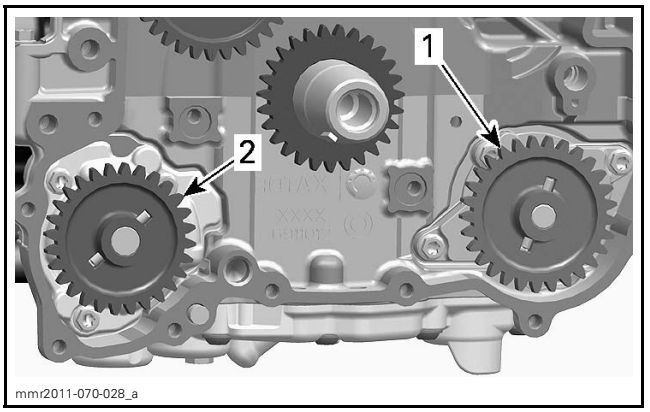


*1. BROWN oil pump gear - 29 teeth*
*2. BLACK oil pump gear - 28 teeth*

2. Lubricate intermediate gears bearing sleeves with engine oil, then install gears.
3. Install all other removed parts.
4. Fill up oil tank and check oil level. Refer to *PERIODIC MAINTENANCE PROCEDURES* subsection.

# OIL PRESSURE PUMP

## Oil Pressure Pump Location

The oil pressure pump is located in the cylinder block, behind the magneto cover.

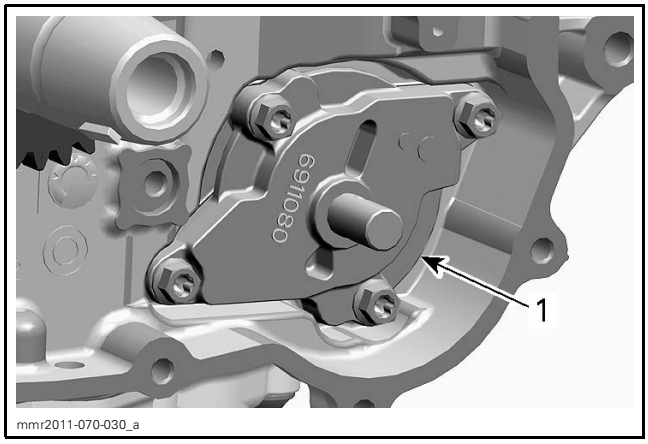


*1. Oil pressure pump*

## Oil Pressure Pump Removal

1. Remove *OIL PUMP DRIVE GEARS*, see procedure in this subsection.
2. Remove oil pump cover.

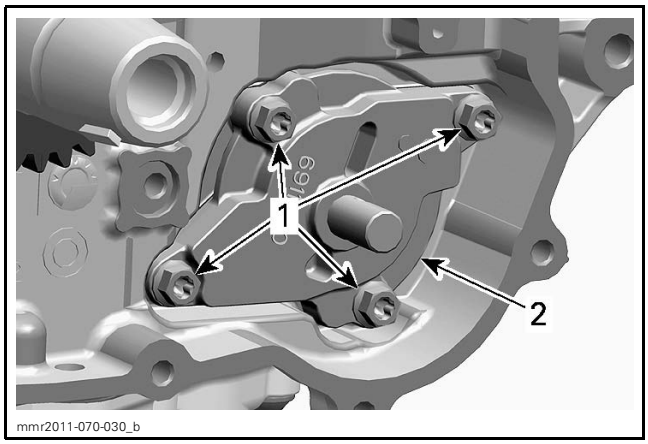


*1. Retaining screws*
*2. Oil pump cover*

3. Remove following parts.

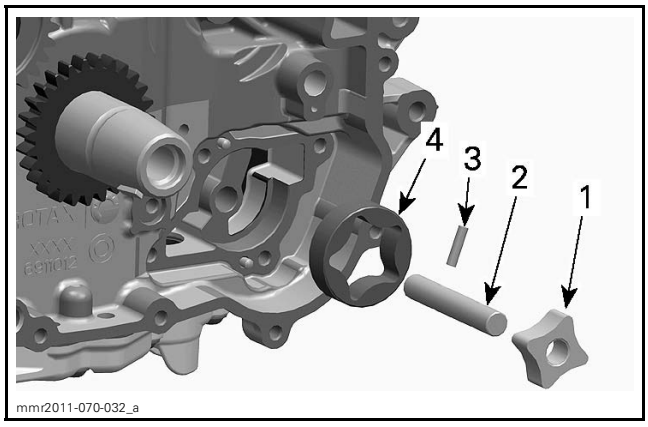


*1. Inner rotor*
*2. Oil pump shaft*
*3. Needle pin*
*4. Outer rotor*

## Oil Pressure Pump Inspection

Inspect oil pump and oil pump cover bore for marks, scratches or other damage. Replace any damaged parts.

Check oil pump cover for damages and for surface straightness with a straight edge.

Check inner rotor for corrosion, worn pin slots or other damages. If so, replace inner and outer rotor at the same time.

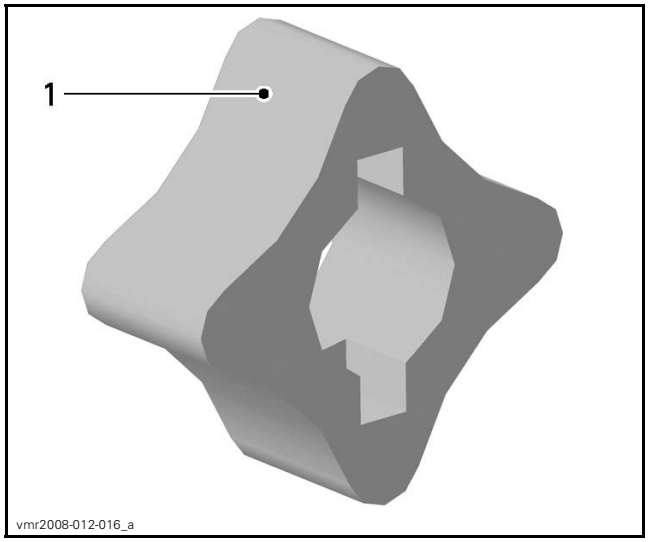


*1. Pitting on the teeth*

### Radial Clearance

Using a feeler gauge, measure the clearance of outer rotor and inner rotor as indicated by the arrows.

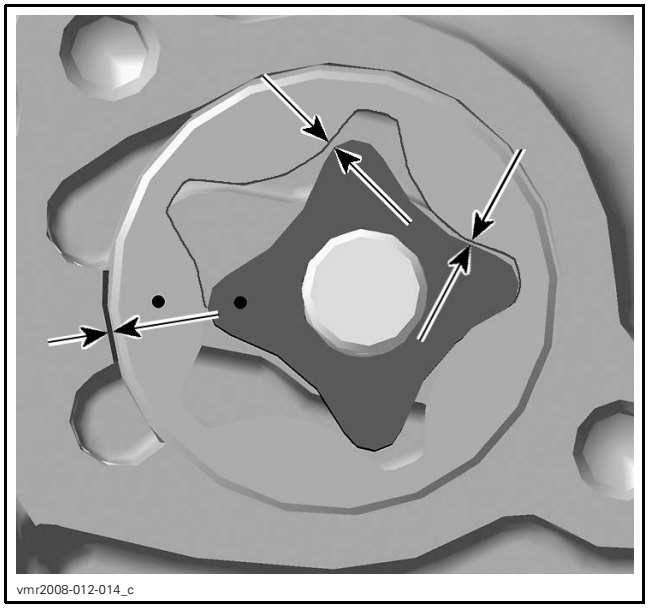
vmr2008-012-014_c

| OIL PUMP RADIAL CLEARANCE | |
|---|---|
| SERVICE LIMIT | 0.25 mm (.0098 in) |

NOTE: If clearance of inner and outer rotors exceeds the tolerance, replace oil pump.

### Axial Clearance

Measure outer rotor thickness with a micrometer.

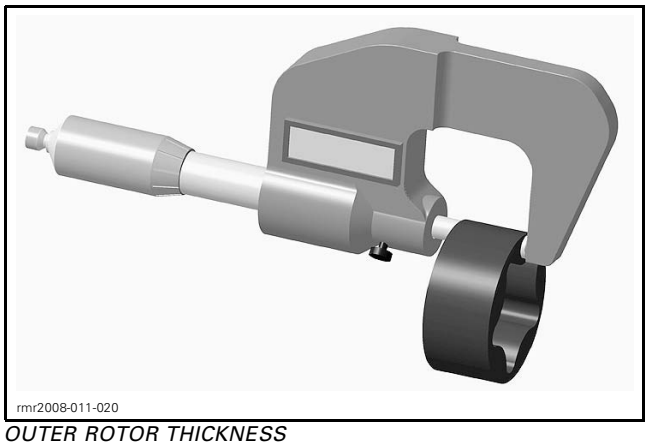
rmr2008-011-020

*OUTER ROTOR THICKNESS*

Using a depth gauge, measure the depth of oil pump bore in the lower crankcase.

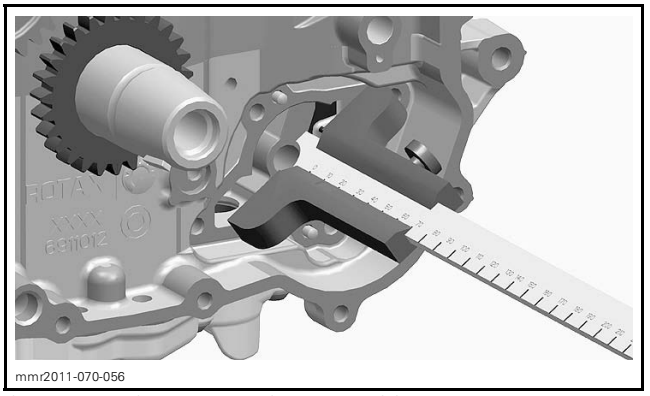
mmr2011-070-056

*OIL PUMP BORE DEPTH (OIL PUMP COVER)*

Substract bore depth from rotor thickness to obtain axial clearance.

| OIL PUMP AXIAL CLEARANCE | |
|---|---|
| SERVICE LIMIT | 0.15 mm (.0059 in) |

NOTE: When the axial clearance of the oil pump assembly increases, the oil pressure decreases.

## Oil Pressure Pump Installation

Reverse the removal procedure, however, pay attention to the following.

1. Lubricate outer rotor with engine oil.

**NOTICE** **Install rotors with the marks outwards.**

2. Install outer rotor in crankcase oil pump bore.

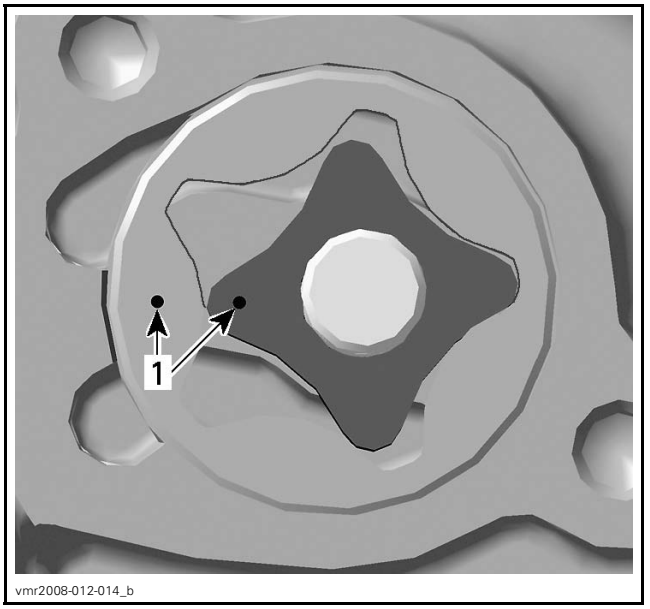

vmr2008-012-014_b

*TYPICAL*
*1. Marks on inner and outer rotor*

3. Install needle pin in oil pump shaft.

**NOTICE** The oil pump shaft is not symmetrical, the longer side must be installed inward.

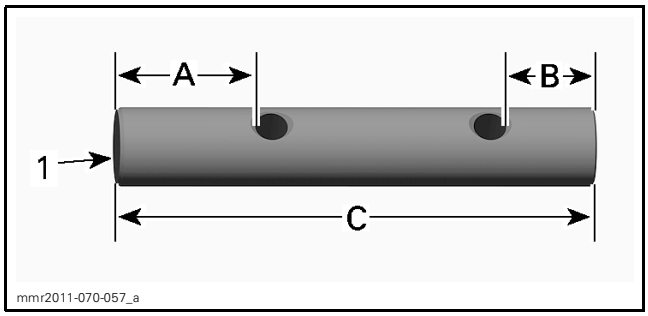


*1. Towards engine*
*A. 16.96 mm (.67 in)*
*B. 11.43 mm (.45 in)*
*C. 60.5 mm (2.38 in)*

4. Place inner rotor on the oil pump shaft. Lubricate oil pump shaft and inner rotor with engine oil.
5. Install oil pump shaft assembly in the crankcase.

After installation of the remaining parts, check for smooth operation of the oil pump assembly and axial play of the oil pump shaft.

6. Fill up oil tank and check oil level. Refer to *PERIODIC MAINTENANCE PROCEDURES* subsection.

Start engine and make sure oil pressure is within specifications (refer to *ENGINE OIL PRESSURE TEST* in this subsection).

# OIL SUCTION PUMP MODULE

## Oil Suction Pump Module Location

The oil suction pump module is located in the cylinder block, behind the magneto cover.

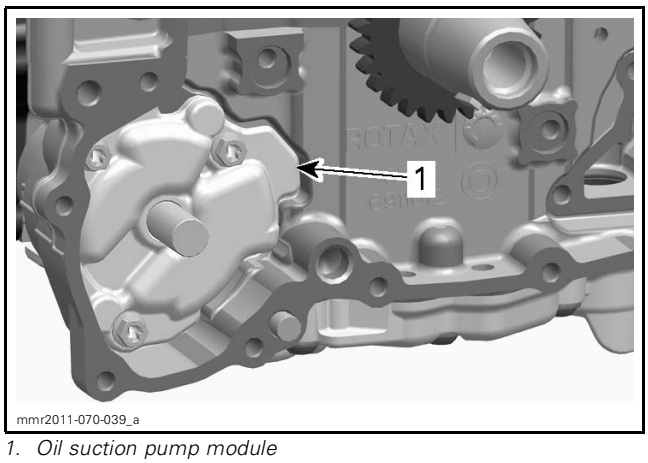


*1. Oil suction pump module*

## Oil Suction Pump Module Disassembly

1. Remove *OIL PUMP DRIVE GEARS*, see procedure in this subsection.
2. Remove oil pump module cover.

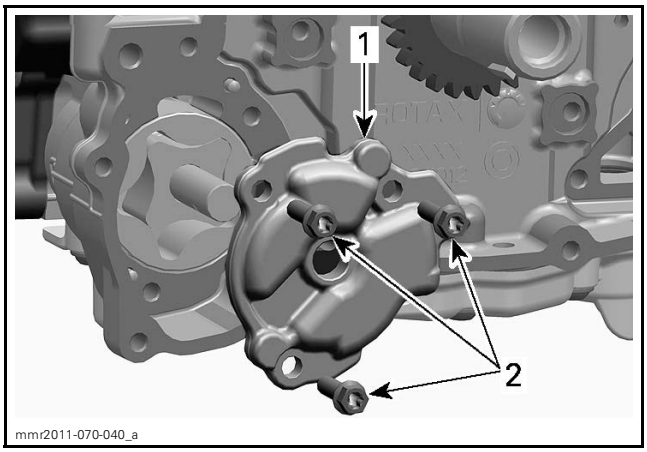


*1. Oil pump module cover*
*2. Retaining screws*

3. Disassemble the large oil suction pump as shown.

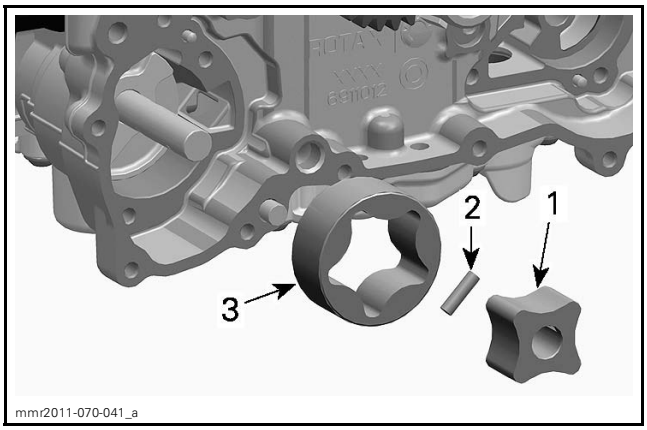


*1. Inner rotor*
*2. Needle pin*
*3. Outer rotor*

4. Disassemble the small oil suction pump as shown.

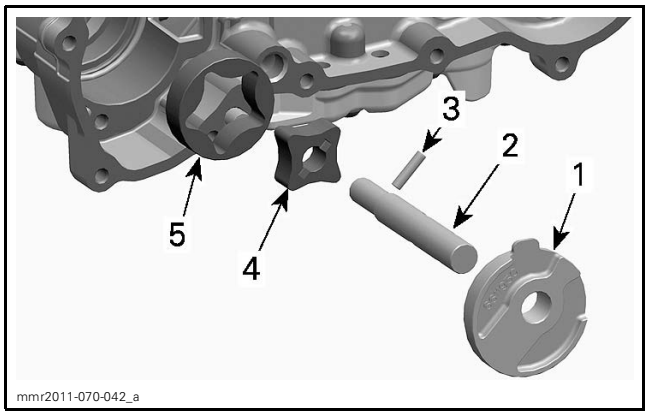


1. *Oil pump cover*
2. *Oil pump shaft*
3. *Needle pin*
4. *Inner rotor*
5. *Outer rotor*

5. Remove and discard the oil pump cover O-ring.

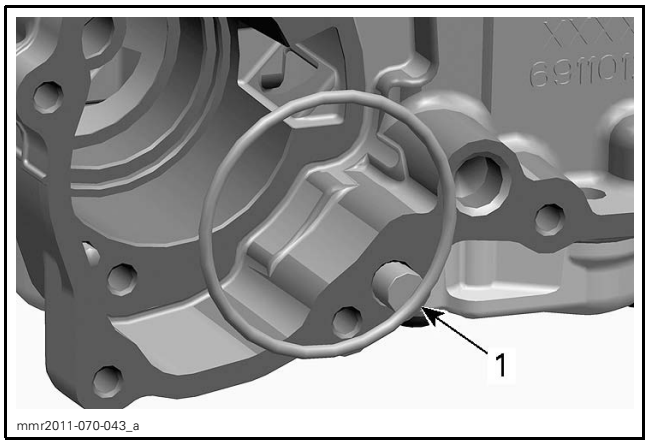


1. *Oil pump cover O-ring*

## Oil Suction Pumps Inspection

The inspection of both oil suction pumps is the same as for the oil pressure pump. Refer to *OIL PRESSURE PUMP* in this subsection.

## Oil Suction Pump Module Assembly

Reverse the removal procedure, however, pay attention to the following.

1. Lubricate small oil suction pump outer rotor with engine oil.

**NOTICE** **When installing the oil pump rotors, make sure both marks are pointing toward the inside of the crankcase.**

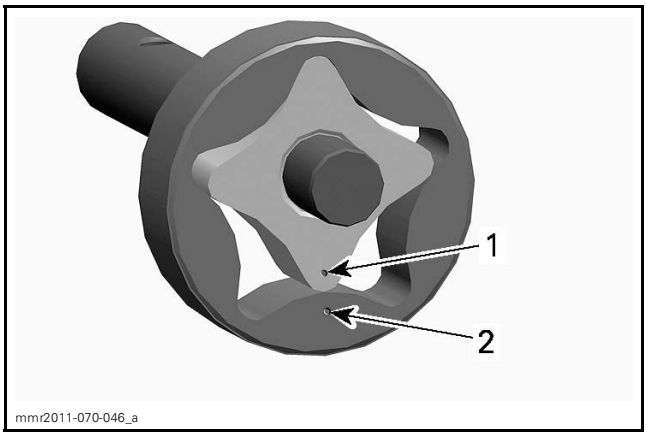


1. *Mark on inner rotor*
2. *Mark on outer rotor*

2. Install small oil suction pump outer rotor into crankcase oil pump bore.

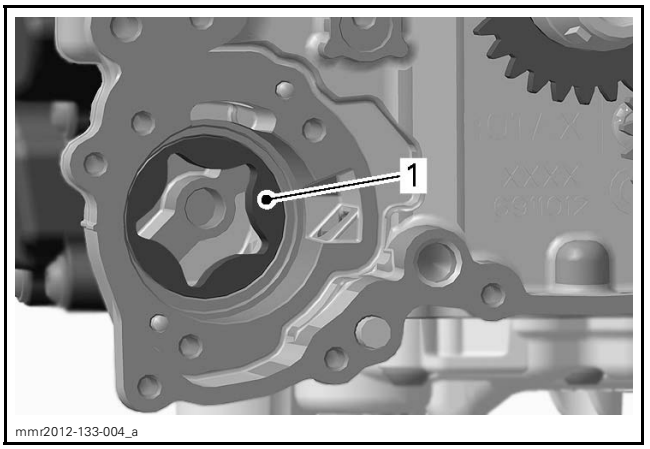


1. *Small oil suction pump outer rotor*

3. Install the needle pin in the bore of the oil pump shaft and place the small inner rotor on the shaft.

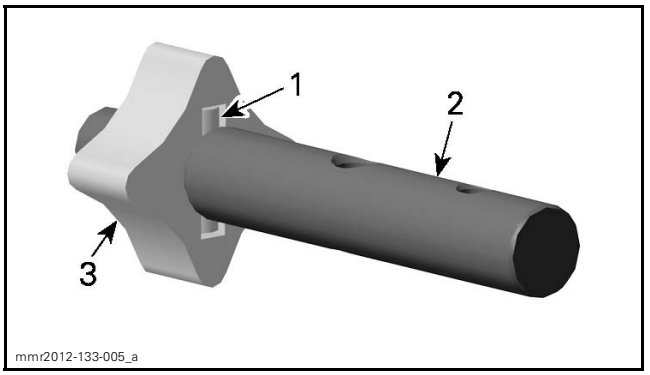


1. *Needle pin*
2. *Oil pump shaft*
3. *Small suction pump inner rotor*

4. Lubricate oil pump shaft and inner rotor with engine oil.
5. Install oil pump shaft assembly into the crankcase.

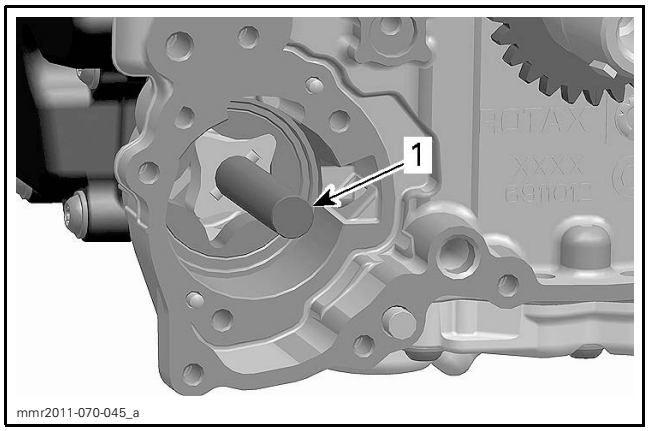


*1. Oil pump shaft with small oil suction pump*

6. Install a NEW oil pump cover O-ring.

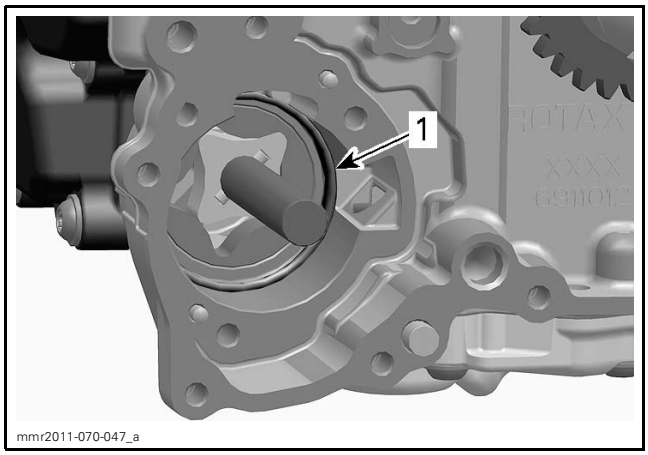


*1. Oil pump cover O-ring*

7. Lubricate both sides of the oil pump cover with engine oil.
8. Align tab of the oil pump cover with the upper recess in the crankcase. Push cover in until a click is heard, indicating the cover is properly installed.

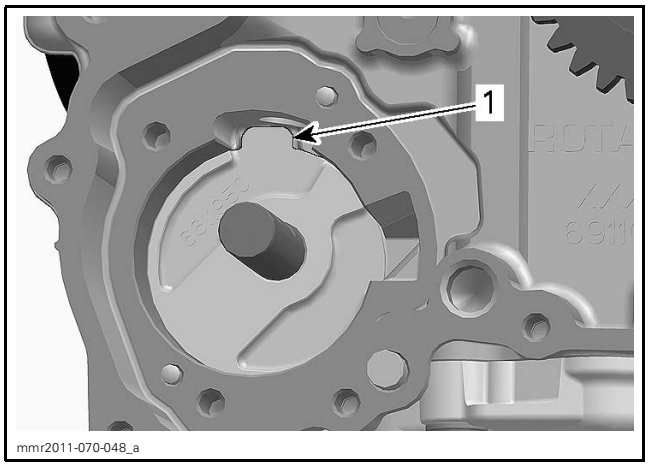


*1. Oil pump cover tab properly positioned*

9. Install large oil suction pump needle pin.
10. Install large oil suction pump inner rotor and outer rotor with the marks outwards.

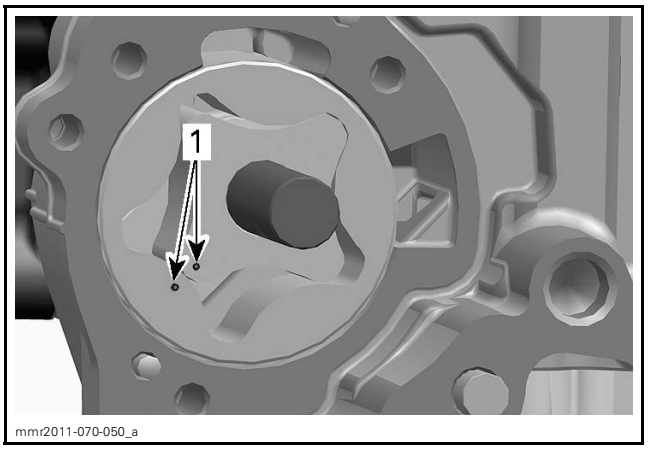


*1. Marks on inner and outer rotor*

11. Lubricate large oil suction pump parts with engine oil.
12. Install other removed parts.

After installation is complete, check for smooth operation of the oil pump assembly and axial play of the oil pump shaft.

13. Fill up oil tank and check oil level. Refer to *PERIODIC MAINTENANCE PROCEDURES* subsection.

Start engine and make sure oil pressure is within specifications (refer to *ENGINE OIL PRESSURE TEST* in this subsection).

# OIL SUMP COVER

## Oil Sump Cover Location

The oil sump cover is located on the engine bottom.

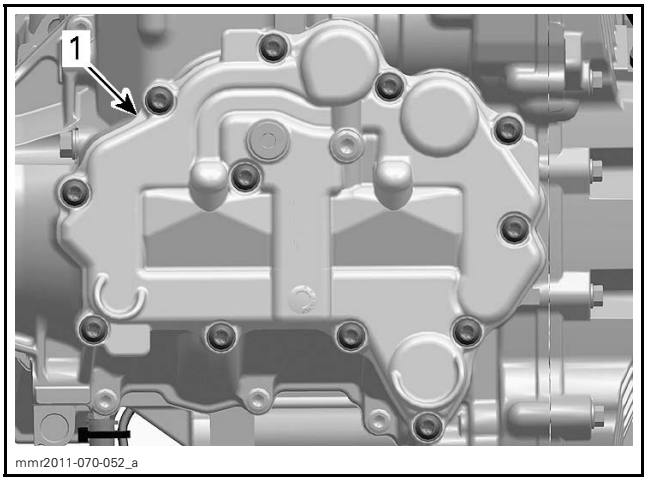


*BOTTOM OF ENGINE*
*1. Oil sump cover*

## Oil Sump Cover Access

Remove engine from vehicle. Refer to *ENGINE REMOVAL AND INSTALLATION* subsection.

## Oil Sump Cover Removal

1. Drain engine oil, refer to *PERIODIC MAINTENANCE PROCEDURES* subsection.

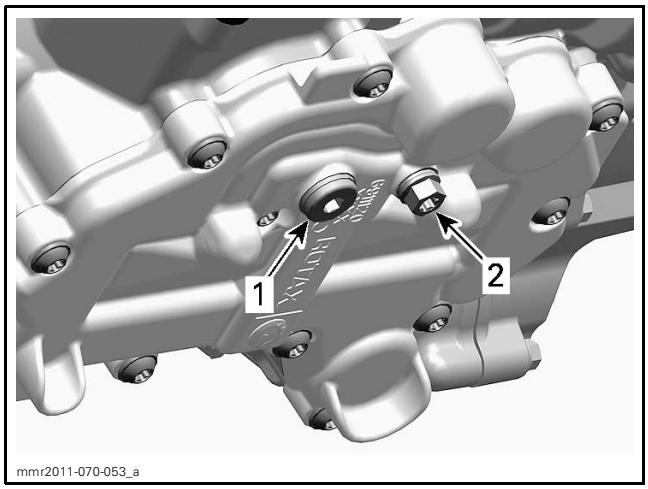


*1. Main drain plug*
*2. Secondary drain plug*

2. Unscrew oil sump cover retaining screws.
3. Remove oil sump cover. Discard gasket.
4. Remove and clean engine oil strainers.

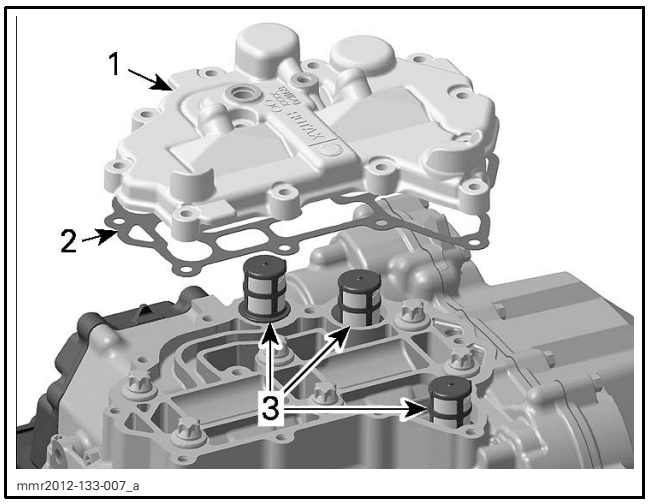


*1. Oil sump cover*
*2. Gasket*
*3. Engine oil strainers*

## Oil Sump Cover Inspection

Clean oil sump cover and engine oil strainers with a part cleaner, then use an air gun to dry it.

Blow out the oil orifices and check if they are not clogged.

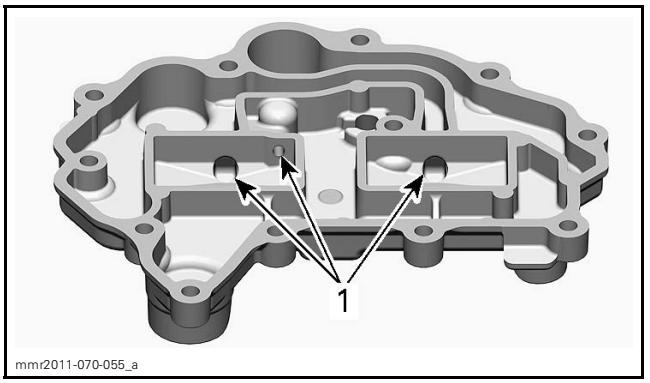


*1. Oil drain bores*

Check oil sump cover for cracks or other damage.

Check oil sump cover for flatness with straight edge.

Replace oil sump cover if necessary.

Check engine oil strainers for damage and change if necessary.

## Oil Sump Cover Installation

1. Install a NEW oil sump cover gasket.
2. Install the strainers as shown.

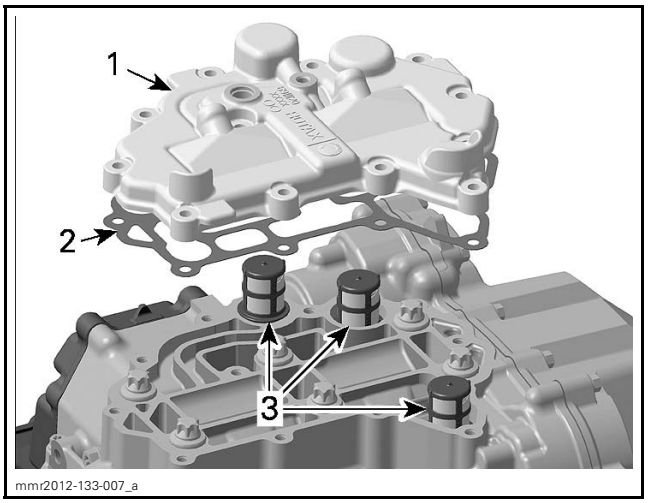


*1. Oil sump cover*
*2. Gasket*
*3. Engine oil strainers*

3. Install oil sump cover on engine, then tighten screws in two steps as follows:
   3.1 Tighten screws to the following specified torque using the specified sequence.

| OIL SUMP COVER SCREWS TIGHTENING PROCEDURE | |
|---|---|
| STEP A | 5 N•m ± 0.6 N•m (44 lbf•**in** ± 5 lbf•**in**) |

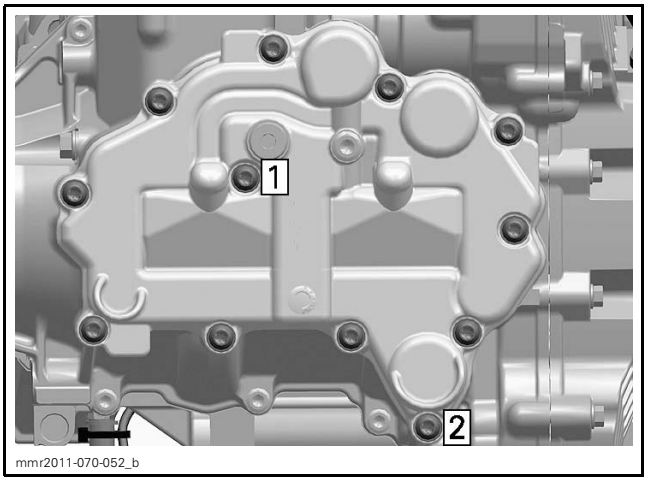


*TIGHTENING SEQUENCE STEP A*

3.2 Tighten screws to the following specified torque using the specified sequence.

| OIL SUMP COVER SCREWS TIGHTENING PROCEDURE | |
|---|---|
| STEP B | 9 N•m to 1 N•m (80 lbf•**in** to 9 lbf•**in**) |

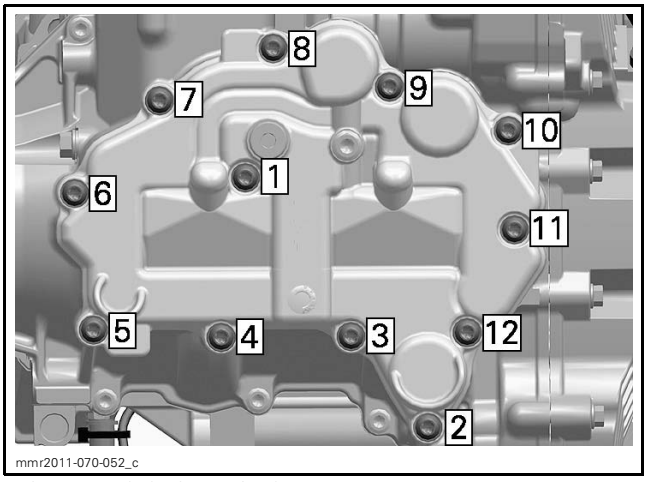


*TIGHTENING SEQUENCE STEP B*

4. Reinstall oil drain plugs using NEW sealing washers.

| OIL DRAIN PLUGS | |
|---|---|
| Tightening torque | 15 N•m ± 2 N•m (133 lbf•**in** ± 18 lbf•**in**) |

5. Install engine in vehicle. Refer to *ENGINE REMOVAL AND INSTALLATION* subsection.

6. Fill up oil tank and check oil level. Refer to *PERIODIC MAINTENANCE PROCEDURES* subsection.

# LUBRICATION SYSTEM

## SERVICE TOOLS

| Description | Part Number | Page |
|---|---|---|
| ECM ADAPTER TOOL | 529 036 166 | 10 |
| FLUKE 115 MULTIMETER | 529 035 868 | 9–10 |
| OIL PRESSURE HOSE | 529 036 394 | 7 |
| PRESSURE GAUGE | 529 036 395 | 7 |

## SERVICE PRODUCTS

| Description | Part Number | Page |
|---|---|---|
| 4T 0W40 SYNTHETIC OIL (EUR) | 779286 | 4 |
| 4T 0W40 SYNTHETIC OIL | 779139 | 4 |
| LOCTITE 243 (BLUE) | 293 800 060 | 8, 10 |

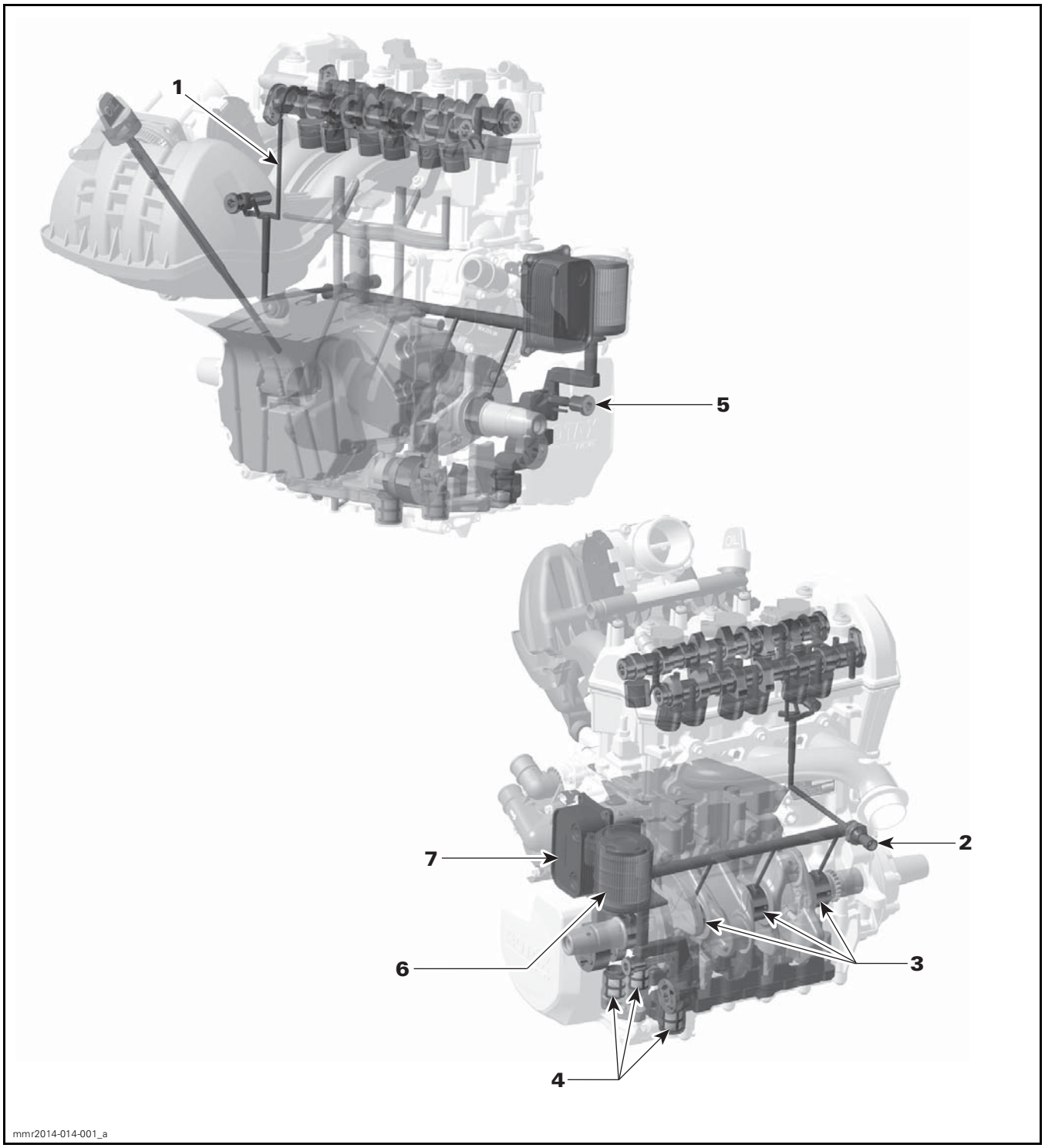


*ENGINE LUBRICATION CIRCUIT*
1. *Oil channel to camshaft bearings*
2. *Oil pressure switch*
3. *Crankshaft main bearings*
4. *Oil strainers*
5. *Oil pressure regulator*
6. *Oil filter*
7. *Oil cooler*

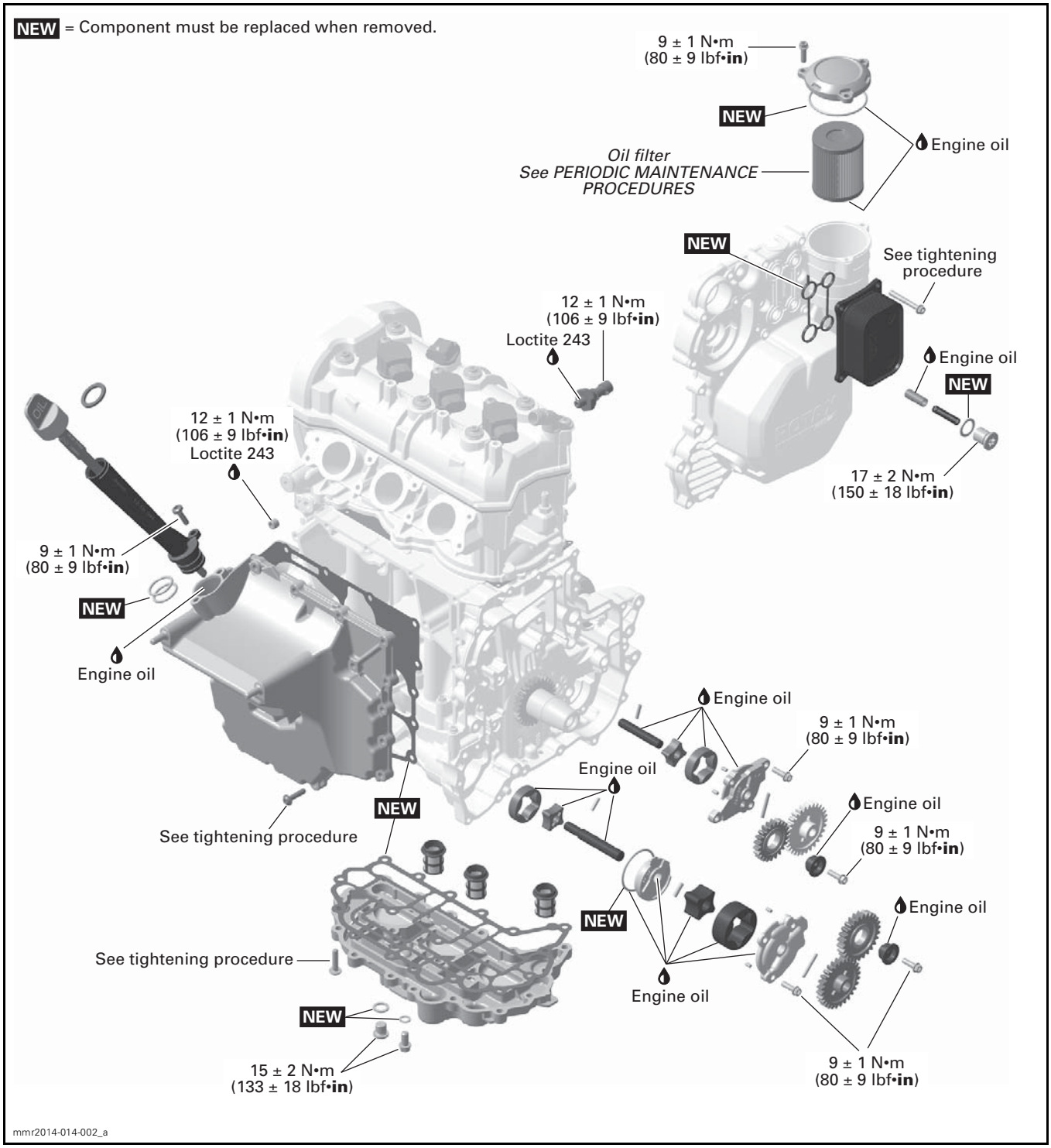
NEW = Component must be replaced when removed.
9 ± 1 N•m
(80 ± 9 lbf•in)
NEW
Engine oil
Oil filter
See PERIODIC MAINTENANCE PROCEDURES
NEW
See tightening procedure
12 ± 1 N•m
(106 ± 9 lbf•in)
Loctite 243
Engine oil
NEW
17 ± 2 N•m
(150 ± 18 lbf•in)
12 ± 1 N•m
(106 ± 9 lbf•in)
Loctite 243
9 ± 1 N•m
(80 ± 9 lbf•in)
NEW
Engine oil
Engine oil
9 ± 1 N•m
(80 ± 9 lbf•in)
Engine oil
Engine oil
9 ± 1 N•m
(80 ± 9 lbf•in)
See tightening procedure
NEW
NEW
Engine oil
See tightening procedure
Engine oil
NEW
15 ± 2 N•m
(133 ± 18 lbf•in)
9 ± 1 N•m
(80 ± 9 lbf•in)
mmr2014-014-002_a

# GENERAL

## SYSTEM DESCRIPTION

This engine uses dry sump lubrication. The oil from the cylinder block, timing chain chamber and magneto cover is pumped by two suction pumps.

Both suction pumps are integrated into one module.

The 20 mm (.79 in) large oil suction pump returns the crankshaft and magneto chamber oil to the reservoir.

The 11 mm (.43 in) small oil suction pump returns the timing chain chamber oil to the oil reservoir.

An oil filter and three oil strainers are used to filter dirt and debris from the oil circuit.

The oil strainers are located between oil sump cover and crankcase lower underneath the oil pressure pump.

The oil pressure is provided by a pump and regulated by a spring loaded pressure regulator.

# MAINTENANCE

## RECOMMENDED ENGINE OIL

Rotax® engines were developed and validated using the XPS™ oil. BRP recommends the use of its XPS engine oil or an equivalent at all time. Do not add any oil additives to the recommended engine oil. Damages caused by the use of an oil not suitable for the engine or by adding of an oil additives may not be covered by the BRP Limited Warranty.

| XPS™ RECOMMENDED ENGINE OIL | |
|---|---|
| Scandinavia | 4T 0W40 SYNTHETIC OIL (EUR) (P/N 779286) |
| All Other Countries | 4T 0W40 SYNTHETIC OIL (P/N 779139) |
| **If THE RECOMMENDED XPS ENGINE OIL IS NOT AVAILABLE** | |
| Use a 0W40 4-stroke SAE synthetic engine oil meeting or exceeding the following lubricant industry specifications:<br>– **API service classification SM**<br>Always check the API service label certification on the oil container, it must contain at least the indicated standard. | |

## ENGINE OIL LEVEL VERIFICATION

**NOTICE** **Operating the engine with an improper oil level may cause severe engine damage. Follow this procedure to obtain a precise reading of the engine oil level.**

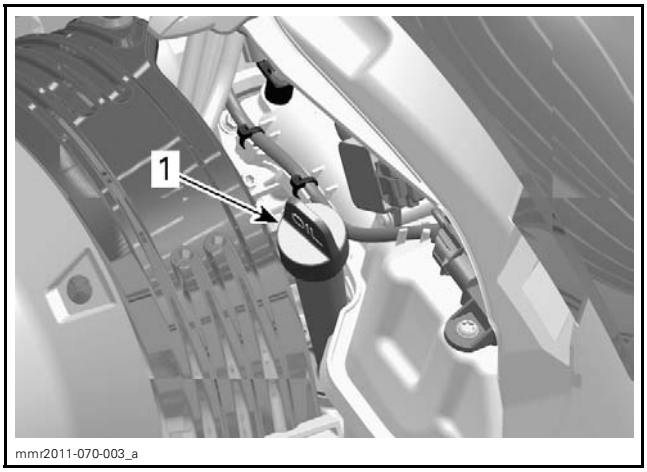


*TYPICAL - LH SIDE*
*1. Oil tank dipstick*

With the engine at normal operating temperature (90°C (194°F) at oil tank surface), place vehicle on a level surface and proceed as follows to check oil level:

1. Start engine and let it idle for at least 20 seconds.
2. Stop engine.
3. Open the LH side panel.
4. If applicable, remove the drive belt guard. Refer to *DRIVE BELT* subsection.
5. Unscrew and remove dipstick and wipe clean.
6. Insert dipstick in the filler tube and again tighten it.

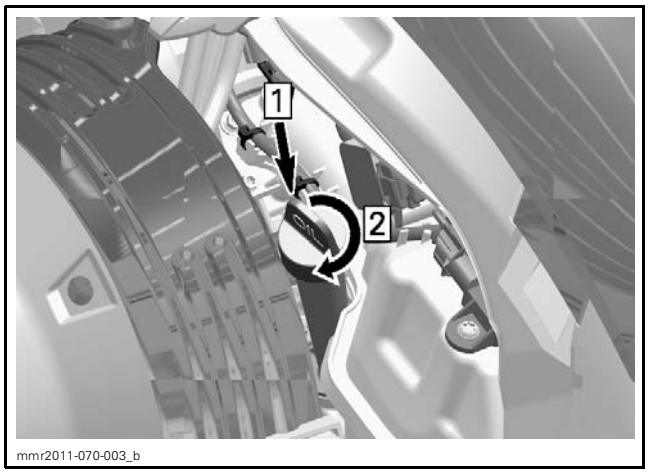


*TYPICAL*
*Step 1: Insert dipstick*
*Step 2: Tighten dipstick.*

7. Remove dipstick again and check oil level. It should be near or equal to the upper mark.

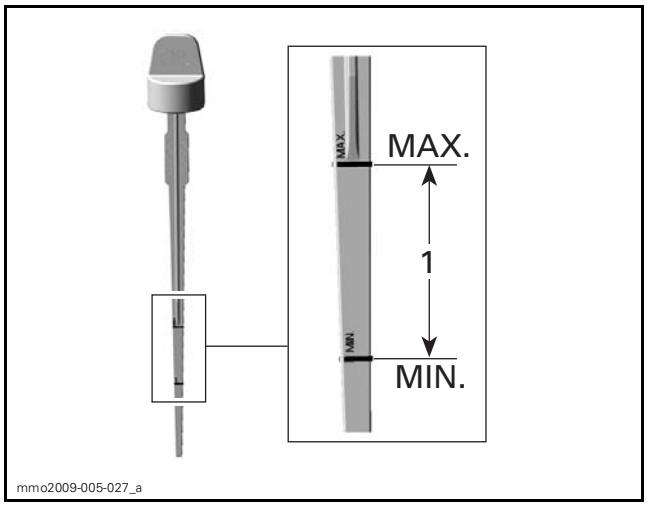


*1. Operating range*

8. To add oil, place a funnel into the filler tube to avoid spillage.
   - 8.1 Add a small amount of oil and recheck oil level.
   - 8.2 Repeat the operation until oil level reaches the dipstick's upper mark. Do not overfill.

**NOTE:** The oil quantity between MIN. and MAX. mark is approximately 500 ml (16.9 U.S. oz).

9. Reinstall dipstick and properly tighten it.
10. Wipe off any oil spillage.
11. Install drive belt guard.
12. Close the LH side panel.

## ENGINE OIL REPLACEMENT

**⚠ CAUTION** The engine oil can be very hot. Wait until engine oil is warm.

**NOTICE** Engine oil and oil filter must be replaced at the same time.

1. Bring engine to its normal operating temperature (90°C (194°F) at oil tank surface).
2. Place vehicle on a level surface.
3. Remove the LH side panel.
4. Remove dipstick.

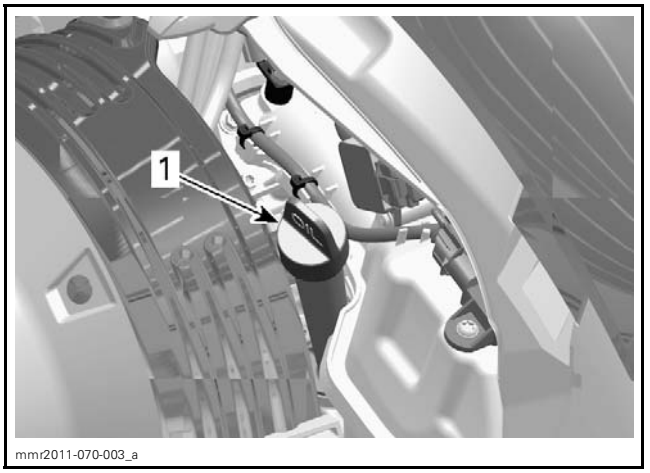


*LH SIDE OF VEHICLE*
*1. Oil tank dipstick*

5. Remove oil filter. Refer to *ENGINE OIL FILTER REPLACEMENT* in this subsection.
6. From underneath the vehicle, remove the drain plug access cover.

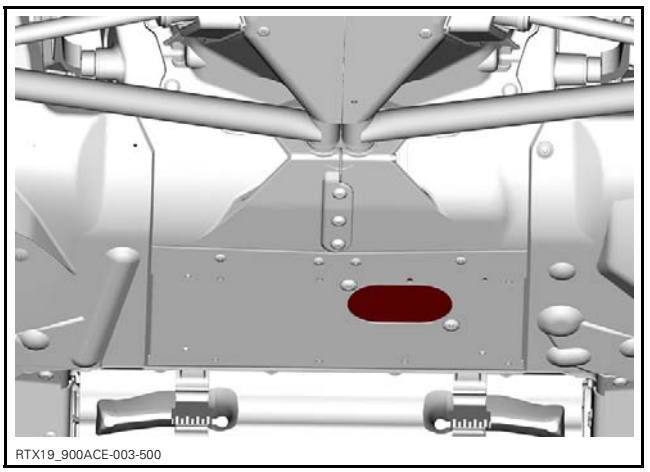


7. Clean drain plug area.
8. Place a drain pan under the bottom pan opening.
9. Remove engine drain plugs in the following order.
   1. Main drain plug.
   2. Secondary drain plug.

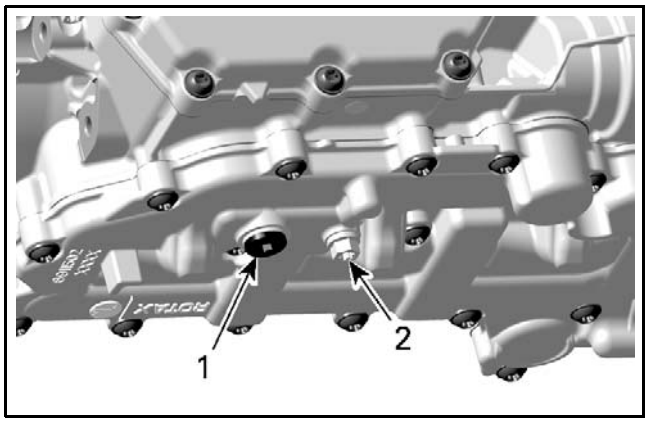


*UNDERNEATH THE ENGINE*
1. *Main drain plug*
2. *Secondary drain plug*

10. Allow oil to drain completely.
11. Install **NEW** sealing washers on oil drain plugs.

***NOTICE*** **Never use a sealing washer a second time. Always replace with a new one.**

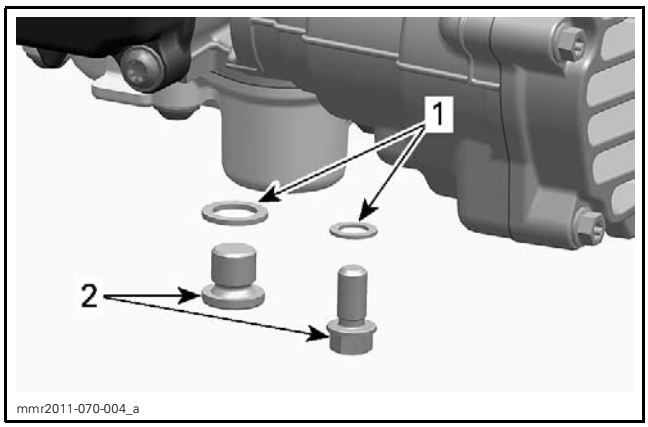


1. *Sealing washer*
2. *Oil drain plug*

12. Install drain plugs and tighten to the specified torque.

| TIGHTENING TORQUE | |
|---|---|
| Drain plugs | 15 N•m ± 2 N•m (133 lbf•**in** ± 18 lbf•**in**) |

13. Replace *OIL FILTER*, see procedure in this subsection.
14. Refill oil tank at the proper level with the recommended oil.

| APPROXIMATE ENGINE OIL CAPACITY (WITH FILTER) |
|---|
| 3.3 L (3.5 qt (U.S. liq.)) |

15. Reinstall dipstick in oil tank and properly tighten it.
16. Start engine and let it idle for a few minutes.
17. Ensure there are no leaks.
18. Stop engine and check oil level as explained in this subsection. Refill if necessary.
19. Dispose oil and filter as per your local environmental regulations.

# ENGINE OIL FILTER REPLACEMENT

## Removing the Oil Filter

1. Remove the RH side panels.
2. Clean oil filter area.
3. Remove:
   – Oil filter cover screws
   – Oil filter cover with O-ring
   – Oil filter.

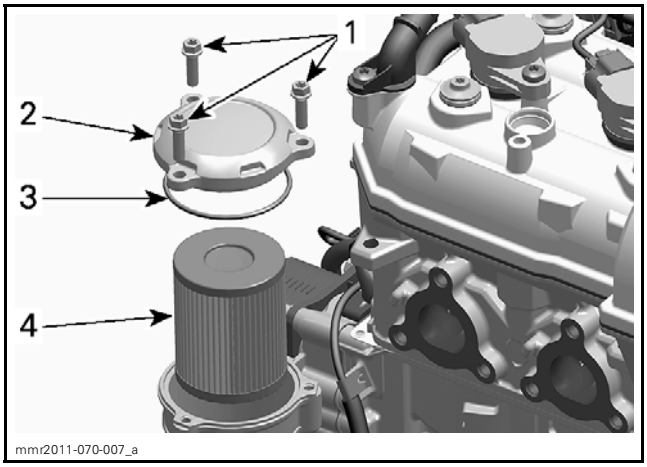


1. *Oil filter cover screws*
2. *Oil filter cover*
3. *O-ring*
4. *Oil filter*

4. Dispose filter as per your local environmental regulations.

## Installing the Oil Filter

1. Check the oil filter inlet and outlet orifices inside oil filter receptacle (integrated part of magneto cover) for dirt and contaminations.

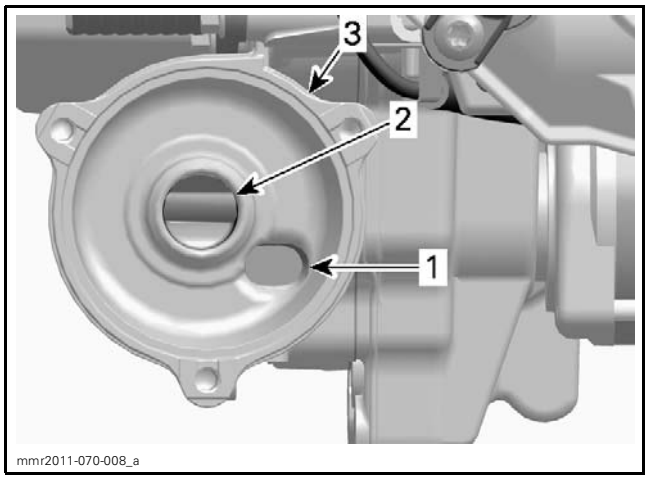


1. *Oil inlet orifice from the oil pressure pump*
2. *Oil outlet orifice to the engine lubrication system*
3. *Oil filter receptacle*

2. Install a **NEW** O-ring on oil filter cover.
3. Lubricate filter seal and cover O-ring with engine oil.

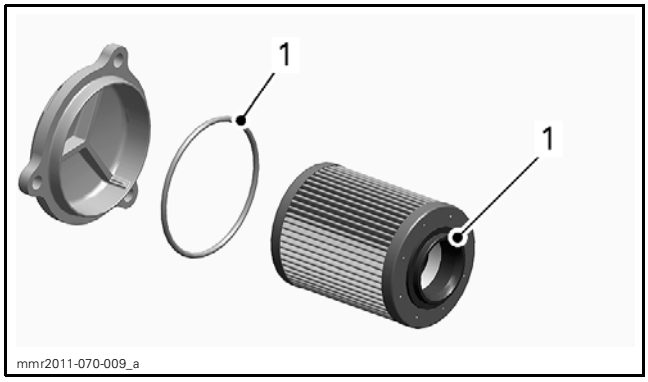


1. *Lubricate with engine oil*

4. Install the oil filter cover.
5. Tighten oil filter cover screws to the specified torque.

| TIGHTENING TORQUE | |
|---|---|
| Oil filter cover | 9 N•m ± 1 N•m (80 lbf•**in** ± 9 lbf•**in**) |

# INSPECTION

## TESTING THE ENGINE OIL PRESSURE

1. Remove countershaft bearing support. Refer to *REMOVING THE COUNTERSHAFT BEARING SUPPORT* in *DRIVEN PULLEY AND COUNTERSHAFT* subsection.
2. Remove oil pressure test plug screw from cylinder block.

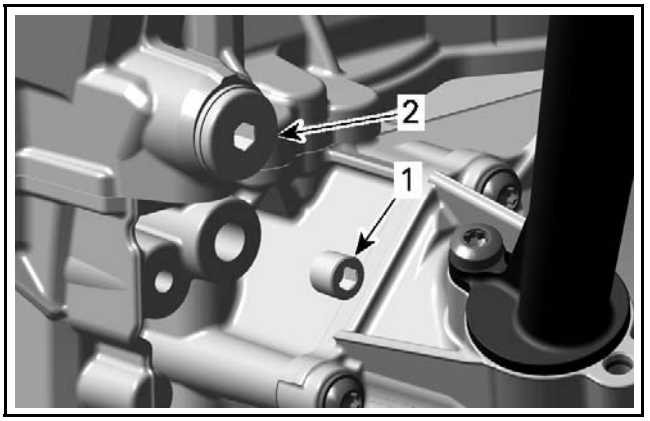


1. *Oil pressure test plug screw*
2. *Timing chain tensioner*

3. Install oil pressure hose on cylinder block.

| REQUIRED TOOLS | |
|---|---|
| OIL PRESSURE HOSE (P/N 529 036 394) | |

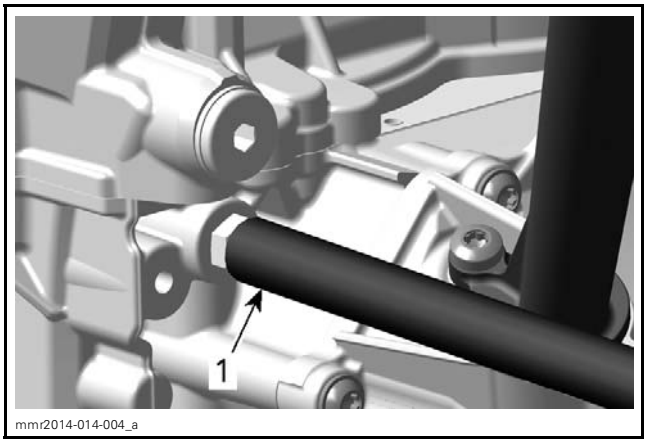


1. *Oil pressure hose*

4. Connect pressure gauge to oil pressure hose.

| REQUIRED TOOL | |
|---|---|
| PRESSURE GAUGE (P/N 529 036 395) | |

5. Start engine and check oil pressure.

| **ENGINE OIL PRESSURE @ 100°C (212°F)** | |
|---|---|
| ENGINE SPEED | MINIMUM PRESSURE |
| Idle | 80 kPa (11.6 PSI) |
| 4000 RPM | 270 kPa (39.16 PSI) |
| 6000 to 7250 RPM | 350 kPa (50.76 PSI) |

If the engine oil pressure is out of specification, refer to *TROUBLESHOOTING* in this subsection.

6. Remove engine oil pressure test tools.
7. Clean threads of oil pressure test plug screw before installing it.
8. Tighten oil pressure test plug screw to specification.

| TIGHTENING TORQUE | |
|---|---|
| Oil pressure test plug screw | 12 N•m ± 1 N•m (106 lbf•**in** ± 9 lbf•**in**) + LOCTITE 243 (BLUE) (P/N 293 800 060) |

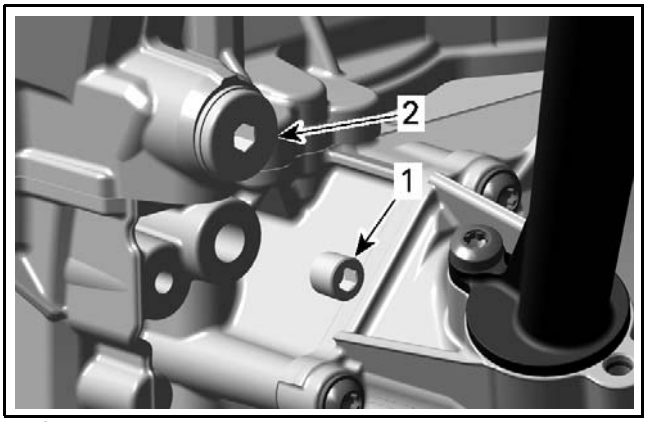


*1. Oil pressure test plug screw*
*2. Timing chain tensioner*

9. Reinstall all removed parts. Refer to applicable subsection.

# TROUBLESHOOTING

Always check for fault codes. If a fault code is detected, service the fault code first.

## LOW OR NO ENGINE OIL PRESSURE

1. Oil level is too low.
   - *Refill engine oil.*
   - *Check for high oil consumption. See below.*
   - *Check for oil leaks (oil leaking out of leak indicator hole, gaskets, oil seal or O-rings). Repair or replace.*
2. Defective or clogged oil filter
   - *Replace engine oil and filter.*
3. Use of a bad grade oil
   - *Replace engine oil with BRP recommended oil.*
4. Oil pressure regulator valve sticks open, or spring load is insufficient.
   - *Clean oil regulator piston and its bore. Replace if necessary.*
   - *Measure spring free length. Replace if out of specification.*
5. Oil pump(s) worn or damaged.
   - *Check if oil pump drive gears are damaged. Replace if necessary.*
   - *Check oil pump rotors and its bore for wear limits. Replace if out of specification.*
6. Engine oil strainer is clogged.
   - *Remove and clean engine oil strainer.*
7. Heavy wear on plain bearings.
   - *Check radial clearance of plain bearings. Replace if out of specification.*

## HIGH OIL CONSUMPTION

1. Oil in breathing system.
   - *Check if breather V-ring is brittle, hard or damaged. Replace V-ring.*
   - *Check if oil separator cover is damaged or missing.*
2. Valve stem seals worn or damaged.
   - *Replace valve stem seals.*
3. Piston rings worn out (blue colored exhaust smoke).
   - *Replace piston rings.*

## OIL CONTAMINATION (WHITE APPEARANCE)

1. Oil seal and rotary seal on water pump shaft leaking.
   - *Replace oil seal, rotary seal and water pump shaft. Change engine oil.*
2. Cylinder head gasket leaking.
   - *Replace cylinder head gasket. Change engine oil.*
3. Cylinder head screws not properly tightened.
   - *Retighten screws with recommended torque. Change engine oil.*
4. Oil cooler gasket leaking.
   - *Replace gasket. Change engine oil.*

# PROCEDURES

## OIL PRESSURE SWITCH (OPS)

### OPS Activation

The oil pressure switch activates when the engine oil pressure is lower than following specified pressure range.

NOTE: ECM does not trigger the OPS signal below 4500 rpm.

| OIL PRESSURE SWITCH ACTIVATION RANGE |
|---|
| 20 kPa to 40 kPa (2.9 PSI to 5.8 PSI) |

## OPS Location

The OPS is located on the front of the engine, beside the left front engine mount.

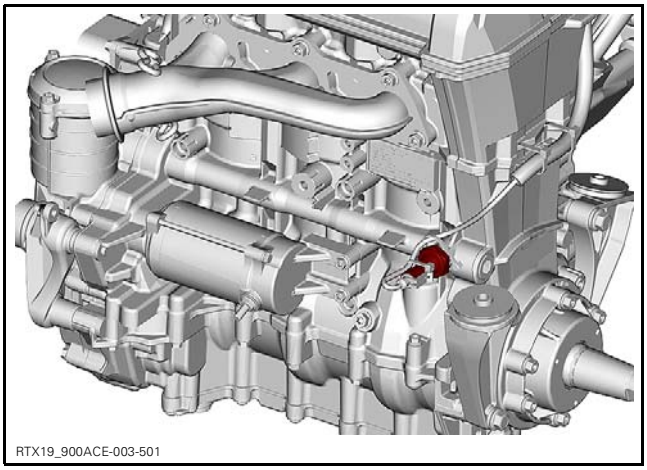
RTX19_900ACE-003-501

## Inspecting the OPS

First, ensure oil pressure is adequate. Refer to *TESTING THE ENGINE OIL PRESSURE* in this subsection.

If the oil pressure is good, check the resistance of the oil pressure switch.

## Testing the OPS Resistance

The engine must be warm to check the oil pressure switch properly.

**⚠ WARNING**

**Be careful when working near hot parts. To avoid potential burns, never touch exhaust system components immediately after the engine has been running as these components are very hot. Always wear long sleeves and gloves.**

1. Cut locking ties and disconnect OPS connector.

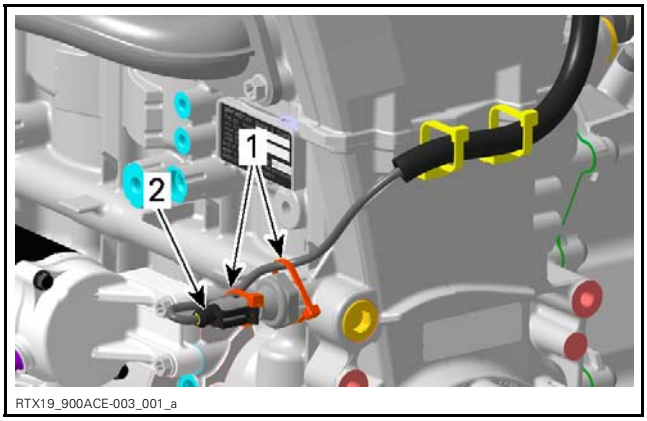

RTX19_900ACE-003_001_a

*UNDER EXHAUST MANIFOLD*
1. *Locking ties*
2. *OPS connector*

2. Check oil pressure switch resistance.

| REQUIRED TOOL | |
|---|---|
| FLUKE 115 MULTIMETER (P/N 529 035 868) | |

3. Read result and compare to table.

| **RESISTANCE (Ω)** | | |
|---|---|---|
| ENGINE NOT RUNNING | | |
| OPS pin | Engine ground | Close to 0 Ω (normally closed switch) |

If resistance is out of specification, replace the oil pressure switch.

If the resistance is correct, continue procedure. It will be necessary to use jumper wires.

4. Install drive belt guard.
5. Start engine.
6. Read result and compare to table.

| **RESISTANCE (Ω)** | | |
|---|---|---|
| ENGINE RUNNING | | |
| OPS pin | Engine ground | Infinitely high (OL) |

If resistance is out of specification, replace the oil pressure switch.

If the resistance is correct, check the oil pressure switch circuit continuity.

## Testing the OPS Circuit Continuity

1. Disconnect ECM connector A. Refer to *ECM CONNECTOR ACCESS* in *ELECTRONIC FUEL INJECTION) (900ACE)* subsection.
2. Install connector A on the ECM adapter tool.

| REQUIRED TOOL | |
|---|---|
| ECM ADAPTER TOOL (P/N 529 036 166) | |

3. Cut locking ties and disconnect the OPS connector.

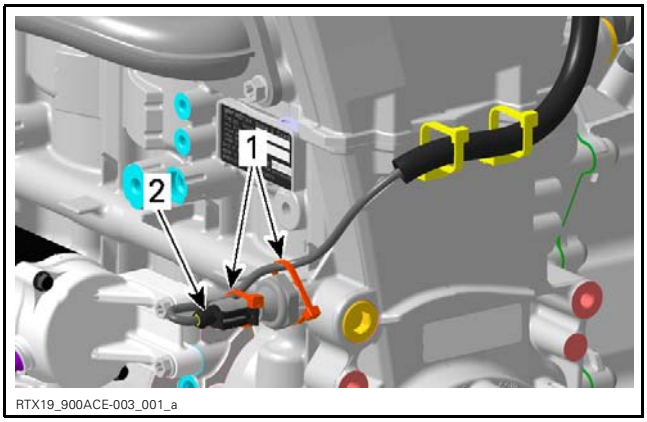


*1. Locking ties*
*2. OPS connector*

4. Check continuity as follows.

| REQUIRED TOOL | |
|---|---|
| FLUKE 115 MULTIMETER (P/N 529 035 868) | |

| CIRCUIT CONTINUITY | | |
|---|---|---|
| OPS connector | ECM A pin E3 | Close to 0 Ω |

If the continuity is good and all other tests are performed, try a **NEW** ECM.

If the continuity is bad, repair or replace defective wire or connectors.

## Removing the OPS

1. Cut locking ties and unplug the OPS switch connector.

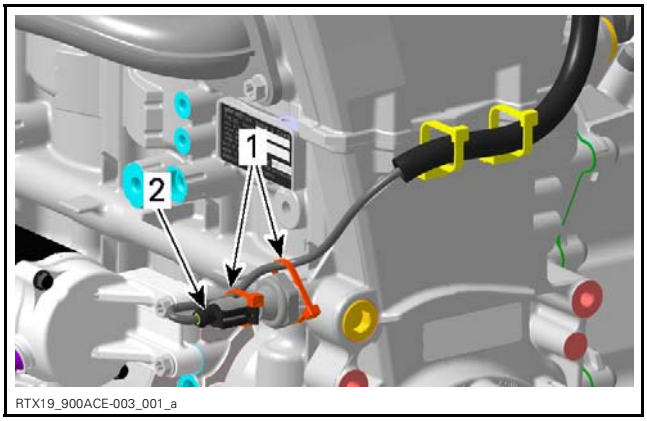


*1. Locking ties*
*2. OPS connector*

2. Unscrew and remove the OPS.

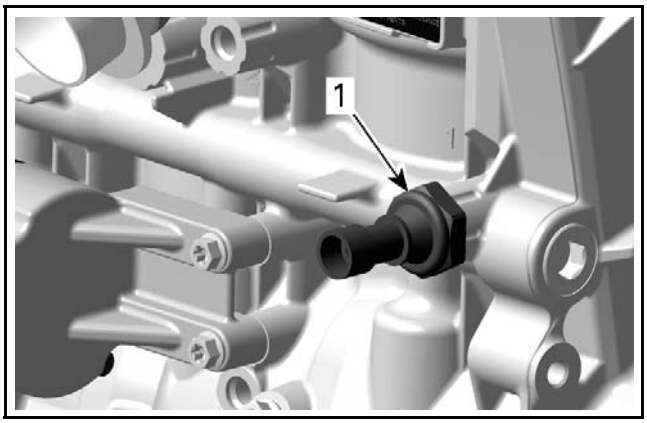


*1. Oil pressure switch*

## Installing the OPS

Install oil pressure switch as per following information.

| TIGHTENING TORQUE | |
|---|---|
| Oil pressure switch | 12 N•m ± 1 N•m (106 lbf•**in** ± 9 lbf•**in**) + LOCTITE 243 (BLUE) (P/N 293 800 060) |

Install all other removed parts.

***NOTICE*** **When installing the locking tie on the OPS connector, avoid making a sharp bend in the wires.**

# OIL FILLER TUBE

## Oil Filler Tube Location

The oil filler tube is located on the rear left side of the engine, on the oil tank.

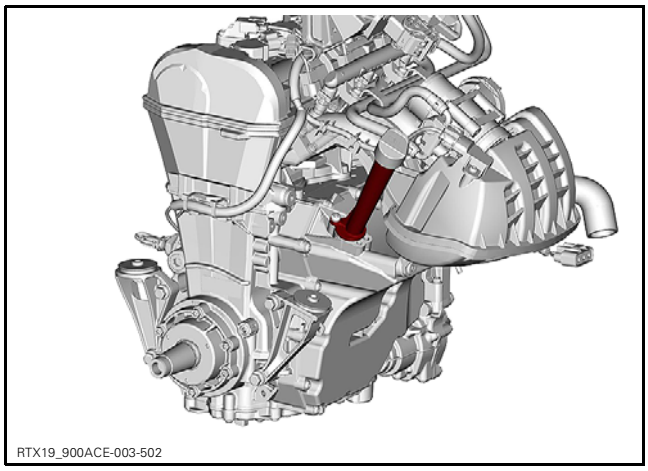
RTX19_900ACE-003-502

## Removing the Oil Filler Tube

1. Remove oil filler tube retaining screw.

*1. Oil filler tube*
*2. Retaining screw*

2. Pull filler tube out of oil tank cover

## Installing the Oil Filler Tube

1. Install **NEW** O-rings on oil filler tube.

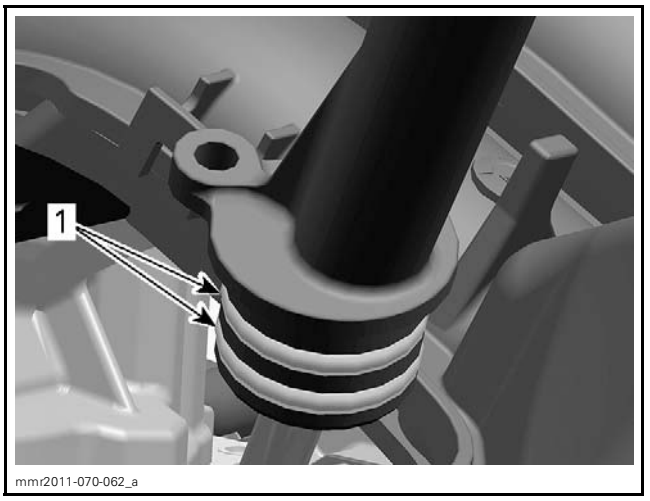

mmr2011-070-062_a

*1. Oil filler tube O-rings*

2. Lubricate oil tank cover bore with engine oil.

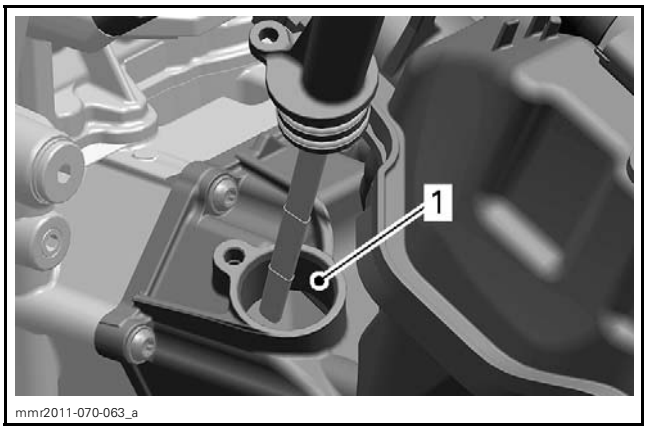

mmr2011-070-063_a

*1. Lubricate the oil tank cover bore*

3. Install oil filler tube.
4. Tighten retaining screw to specified torque.

| TIGHTENING TORQUE | |
|---|---|
| Oil filler tube screw | 9 N•m ± 1 N•m (80 lbf•**in** ± 9 lbf•**in**) |

5. Install all other removed parts.

# OIL TANK

## Removing the Oil Tank Cover

1. Drain engine oil. Refer to *ENGINE OIL REPLACEMENT* in this subsection.
2. Remove engine from vehicle. Refer to *ENGINE REMOVAL AND INSTALLATION* subsection.
3. Remove intake manifold. Refer to *AIR INTAKE SYSTEM* subsection.
4. Place a drain pan underneath oil tank.
5. Unscrew oil tank cover retaining screws.

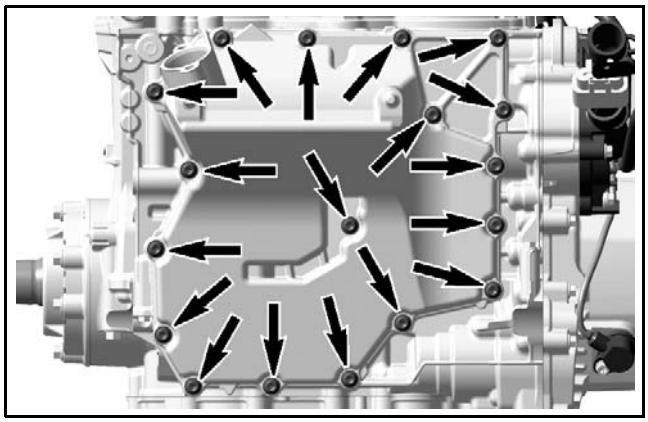

*RETAINING SCREWS*
*1. Oil tank*

6. Remove oil tank from the engine.

## Installing the Oil Tank Cover

1. Install **NEW** gasket.
2. Install oil tank on engine, then tighten screws in two steps as follows:
   2.1 Tighten screws to the following specified torque using the specified sequence.

| TIGHTENING TORQUE (FOLLOW THE SEQUENCE) | | |
|---|---|---|
| Oil tank screws | STEP A | 5 N•m ± 0.6 N•m (44 lbf•**in** ± 5 lbf•**in**) |

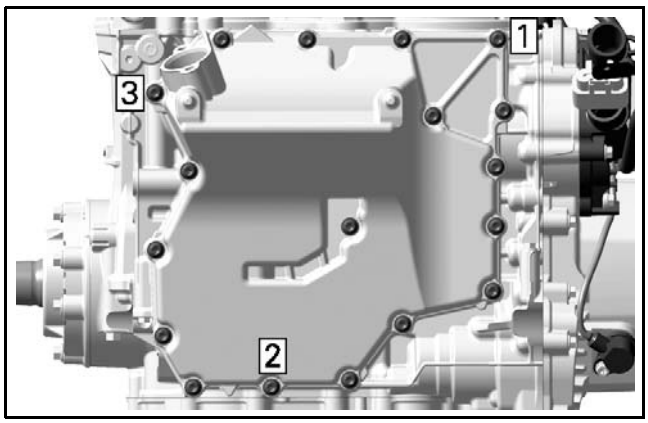


*TIGHTENING SEQUENCE STEP A*

   2.2 Tighten screws to the following specified torque using the specified sequence.

| TIGHTENING TORQUE (FOLLOW THE SEQUENCE) | | |
|---|---|---|
| Oil tank screws | STEP B | 9 N•m ± 1 N•m (80 lbf•**in** ± 9 lbf•**in**) |

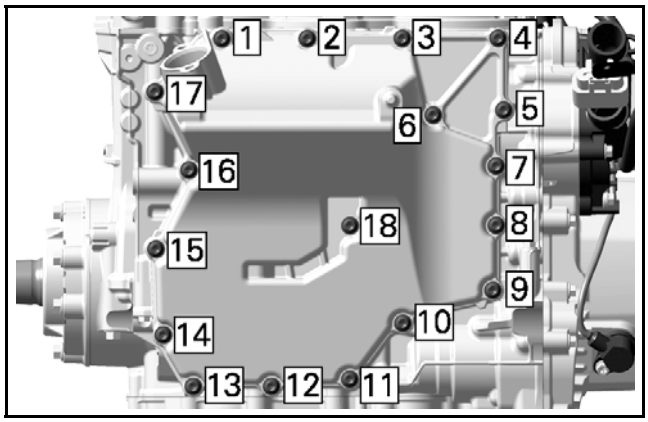


*TIGHTENING SEQUENCE STEP B*

3. Wipe up any oil spillage.
4. Install intake manifold. Refer to *AIR INTAKE SYSTEM* subsection.
5. Install engine in vehicle. Refer to *ENGINE REMOVAL AND INSTALLATION* subsection.
6. Fill up oil tank and check oil level. Refer to *ENGINE OIL REPLACEMENT* in this subsection.

# OIL COOLER

## Oil Cooler Location

The oil cooler is located on the right side of the engine, beside the oil filter.

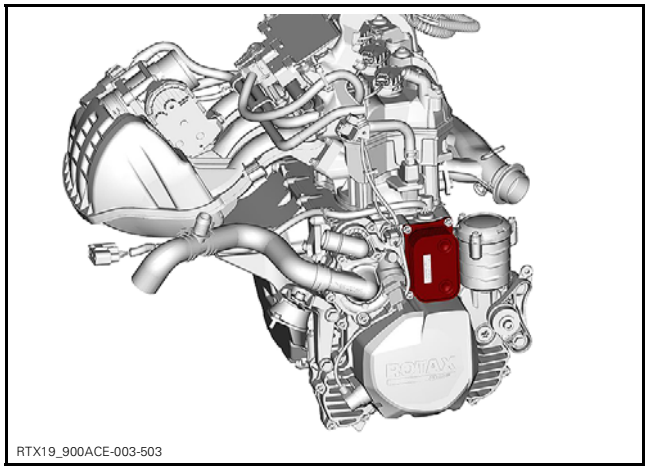


## Removing the Oil Cooler

1. Refer to *ENGINE OIL REPLACEMENT* in this subsection to :
   – Drain engine oil
   – Drain cooling system.
   .
2. Remove oil cooler retaining screws.

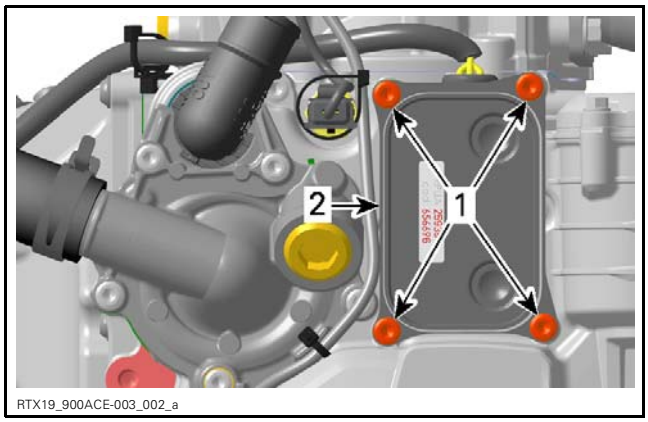

RTX19_900ACE-003_002_a

1. *Retaining screws*
2. *Oil cooler*

3. Place rags or towels under oil cooler to catch remaining oil and coolant.
4. Remove oil cooler and its gasket.

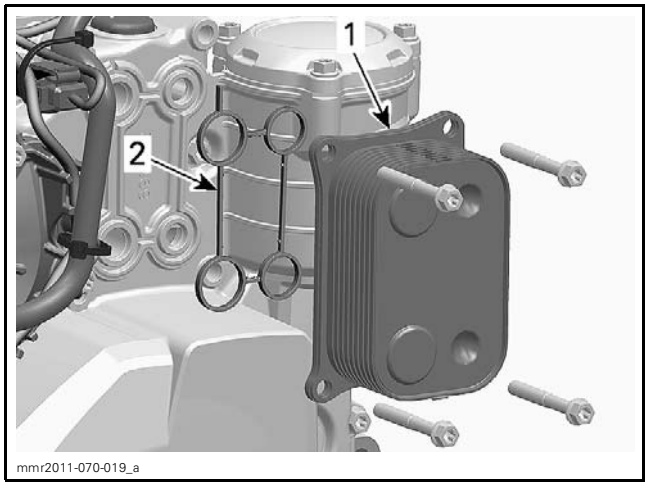

mmr2011-070-019_a

1. *Oil cooler*
2. *Gasket*

## Inspecting the Oil Cooler

Check oil cooler for cracks and other damage.

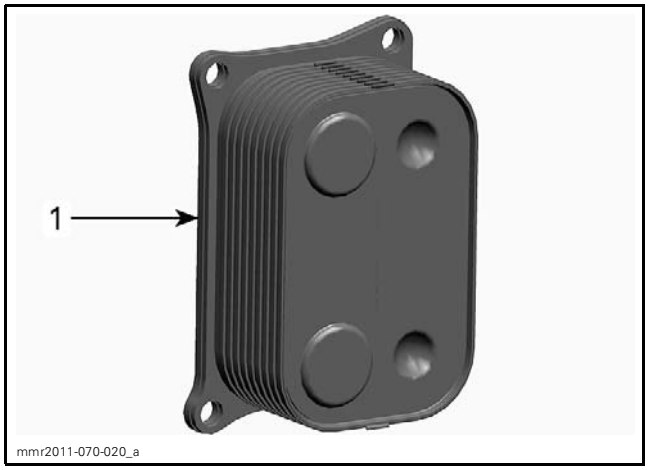

mmr2011-070-020_a

1. *Check for cracks*

Replace parts as necessary.

## Installing the Oil Cooler

Reverse the removal procedure. However, pay attention to the following.

Tighten oil cooler screws in two steps to the specified torques using the illustrated sequence.

| TIGHTENING TORQUE | | |
|---|---|---|
| Oil cooler screw | STEP A | 5 N•m ± 0.6 N•m (44 lbf•**in** ± 5 lbf•**in**) |

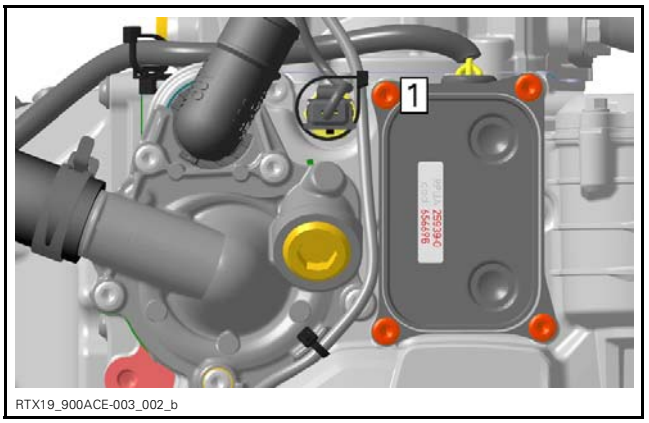

RTX19_900ACE-003_002_b

*TIGHTENING SEQUENCE OIL COOLER*

| TIGHTENING TORQUE | | |
|---|---|---|
| Oil cooler screws | STEP B | 9 N•m ± 1 N•m (80 lbf•**in** ± 9 lbf•**in**) |

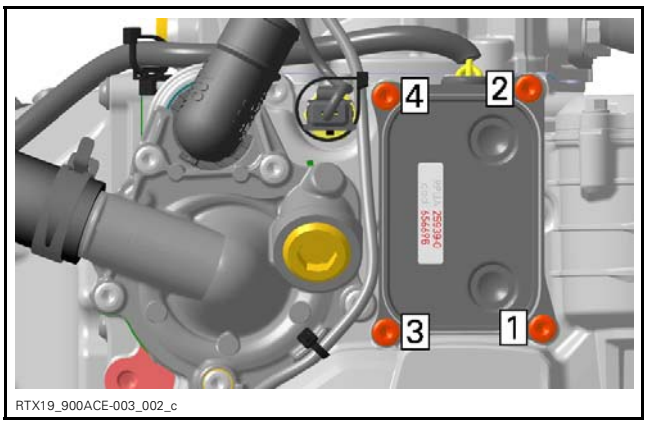

RTX19_900ACE-003_002_c

*TIGHTENING SEQUENCE OIL-COOLER*

Wipe up any oil and coolant spillage.

Refer to *MAINTENANCE* in this subsection to:

– Fill up oil tank and check oil level
– Refill and bleed cooling system.

# ENGINE OIL PRESSURE REGULATOR

## Oil Pressure Regulator Location

The engine oil pressure regulator is located inside the magneto cover.

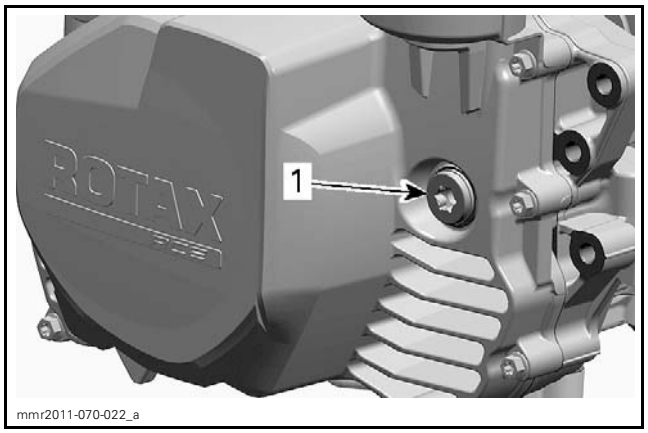


*1. Engine oil pressure regulator*

## Removing the Oil Pressure Regulator

1. Drain engine oil. Refer to *ENGINE OIL REPLACEMENT* in this subsection.
2. Remove regulator plug and sealing washer. Discard sealing washer.
3. Pull oil pressure regulator parts out of the magneto cover.

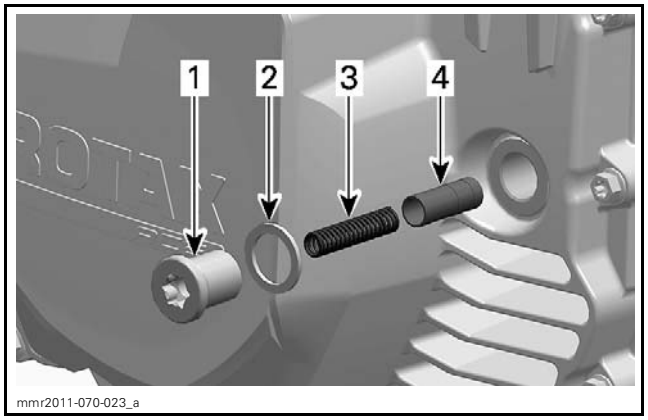


*1. Plug*
*2. Sealing washer*
*3. Regulator spring*
*4. Regulator piston*

## Inspecting the Oil Pressure Regulator

Clean bore and thread in the magneto cover of any contamination.

Inspect oil pressure regulator piston and bore in cylinder block for scoring or other damages.

Check if piston moves easily in its bore.

Check compression spring for free length.

| SPRING FREE LENGTH | |
|---|---|
| New nominal | 46 mm (1.811 in) |
| Service limit | 45 mm (1.772 in) |

Visually check compression spring for squareness.

Replace worn or damaged components.

## Installing the Oil Pressure Regulator

Reverse the removal procedure. However, pay attention to the following.

Install a **NEW** sealing washer on plug.

Tighten regulator plug to the specified torque.

| TIGHTENING TORQUE | |
|---|---|
| Oil pressure regulator plug | 17 N•m ± 2 N•m (150 lbf•**in** ± 18 lbf•**in**) |

Wipe up any oil spillage.

Fill up oil tank and check oil level. Refer to *ENGINE OIL REPLACEMENT* in this subsection.

Install all other removed parts. Refer to applicable subsections.

# OIL PUMP DRIVE GEARS

## Oil Pump Drive Gear Location

The oil pump gears are located on the MAG side, behind the magneto cover.

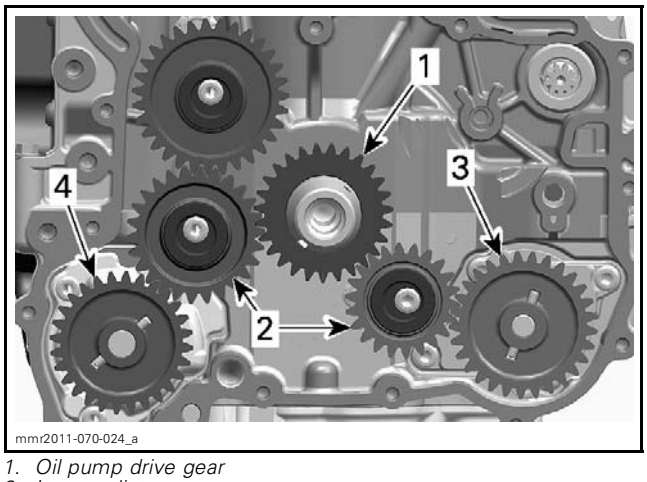


*1. Oil pump drive gear*
*2. Intermediate gears*
*3. Oil pressure pump gear*
*4. Oil suction pump gear*

## Oil Pump Drive Gear Access

Refer to *MAGNETO AND STARTER* subsection to remove:

– Magneto cover

– Rotor
– Sprag clutch gear.

## Removing the Oil Pump Drive Gear

1. Unscrew oil pump intermediate gear screws.

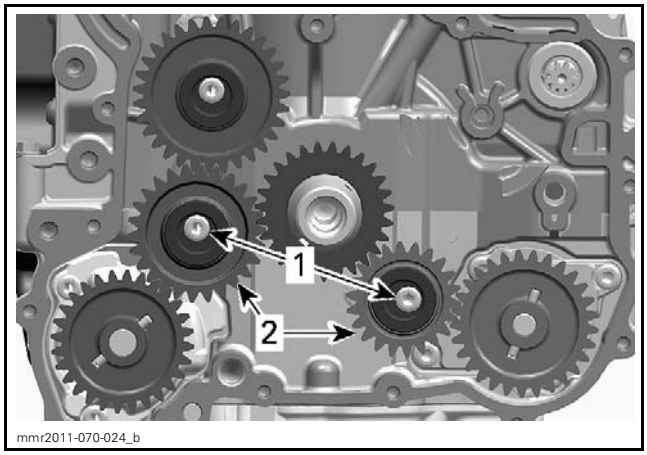


*1. Retaining screws*
*2. Intermediate gears*

2. Remove bearing sleeves and oil pump intermediate gears.

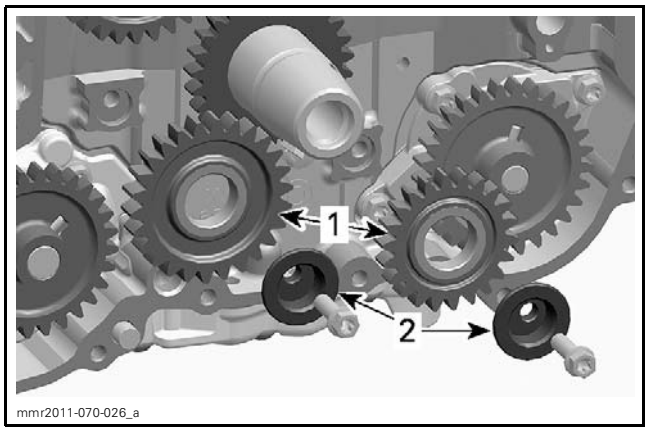


*1. Intermediate gears*
*2. Bearing Sleeves*

3. Remove oil pump gears and needle pins.

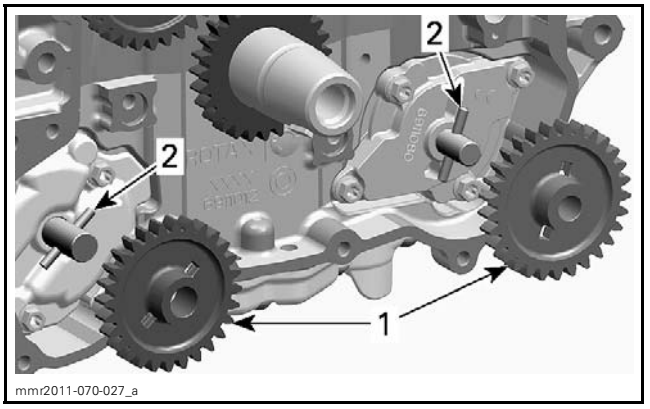


*1. Oil pump gears*
*2. Needle pins*

## Inspecting the Oil Pump Drive Gear

Inspect gears for wear, cracks or other damage.

Replace if damaged.

## Installing the Oil Pump Drive Gear

The installation is the reverse of the removal procedure. However, pay attention to the following.

1. Be sure to not intermix oil pump gears, see next illustration.
   1.1 Install the BROWN oil pump gear (29 teeth) on oil pressure pump.
   1.2 Install the BLACK oil pump gear (28 teeth) on oil suction pump.

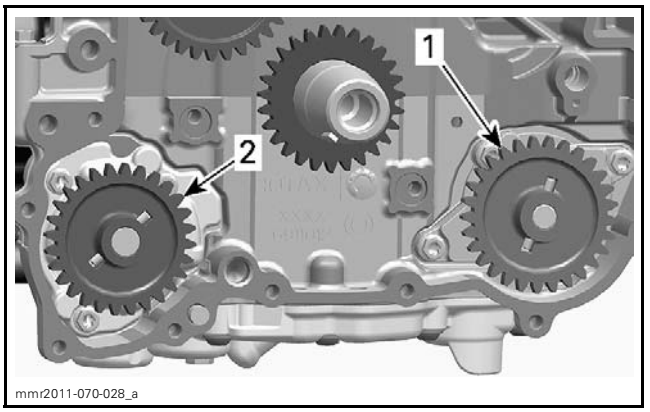


*1. BROWN oil pump gear - 29 teeth*
*2. BLACK oil pump gear - 28 teeth*

2. Lubricate intermediate gears bearing sleeves with engine oil, then install gears.
3. Install all other removed parts.
4. Fill up oil tank and check oil level. Refer to *ENGINE OIL REPLACEMENT* in this subsection.

# OIL PRESSURE PUMP

## Oil Pressure Pump Location

The oil pressure pump is located in the cylinder block, behind the magneto cover.

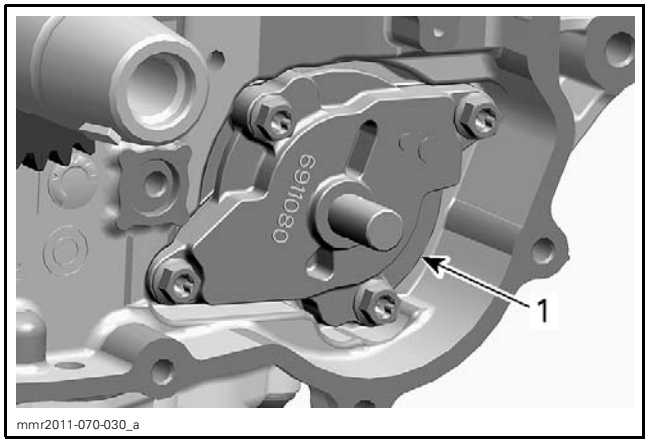


*1. Oil pressure pump*

## Removing the Oil Pressure Pump

1. Remove *OIL PUMP DRIVE GEARS*, see procedure in this subsection.
2. Remove oil pump cover.

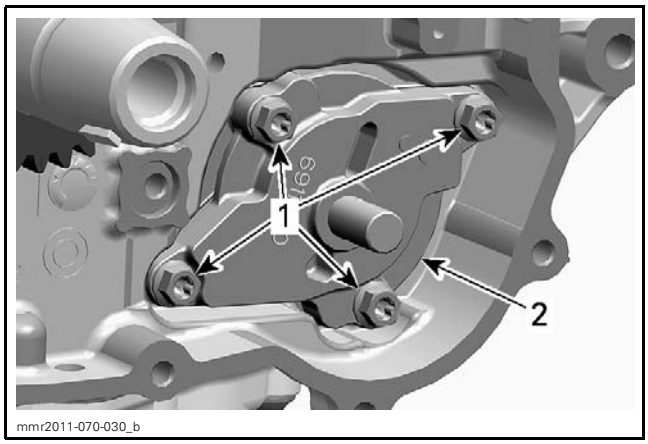


*1. Retaining screws*
*2. Oil pump cover*

3. Remove following parts.

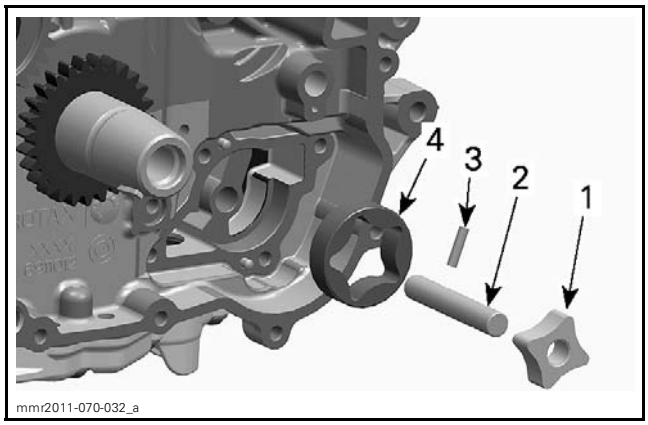


*1. Inner rotor*
*2. Oil pump shaft*
*3. Needle pin*
*4. Outer rotor*

## Inspecting the Oil Pressure Pump

Inspect oil pump and oil pump cover bore for marks, scratches or other damage. Replace any damaged parts.

Check oil pump cover for damages and for surface straightness with a straight edge.

Check inner rotor for corrosion, worn pin slots or other damages. If so, replace inner and outer rotor at the same time.

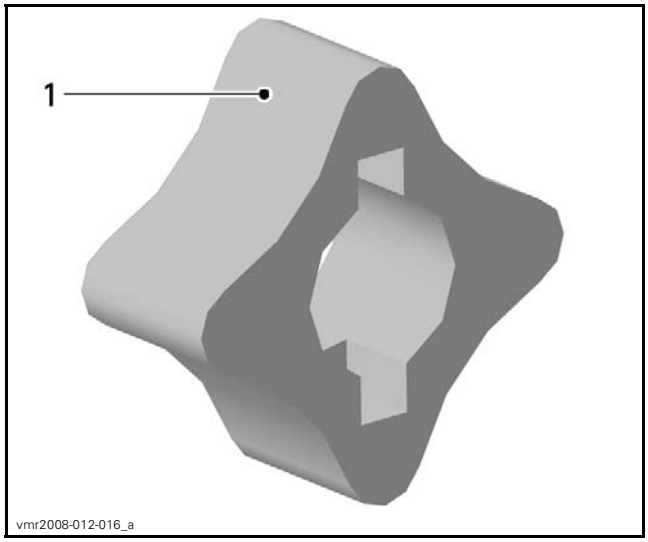


*1. Pitting on the teeth*

### Radial Clearance

Using a feeler gauge, measure the clearance of outer rotor and inner rotor as indicated by the arrows.

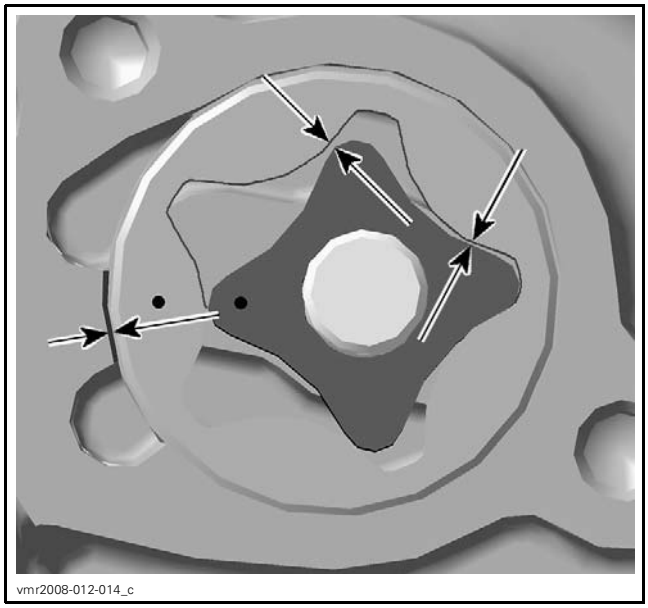
vmr2008-012-014_c

| OIL PUMP RADIAL CLEARANCE | |
|---|---|
| Service limit | 0.25 mm (.0098 in) |

NOTE: If clearance of inner and outer rotors exceeds the tolerance, replace oil pump.

### Axial Clearance

Measure outer rotor thickness with a micrometer.

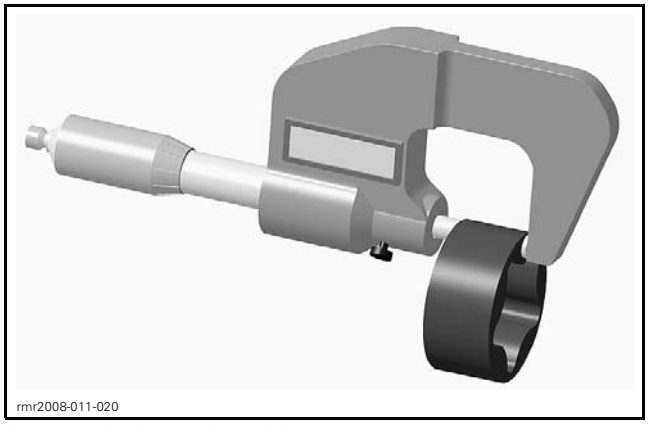
rmr2008-011-020

*OUTER ROTOR THICKNESS*

Using a depth gauge, measure the depth of oil pump bore in the lower crankcase.

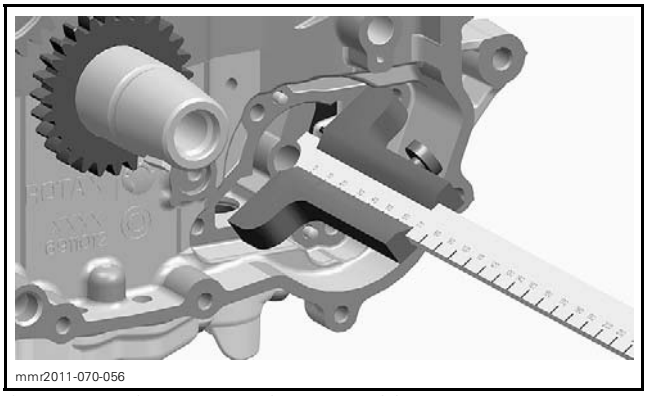
mmr2011-070-056

*OIL PUMP BORE DEPTH (OIL PUMP COVER)*

Substract bore depth from rotor thickness to obtain axial clearance.

| OIL PUMP AXIAL CLEARANCE | |
|---|---|
| Service limit | 0.15 mm (.0059 in) |

NOTE: When the axial clearance of the oil pump assembly increases, the oil pressure decreases.

## Installing the Oil Pressure Pump

The installation is the reverse of the removal procedure. However, pay attention tot he following.

1. Lubricate outer rotor with engine oil.

**NOTICE** **Install rotors with the marks outwards.**

2. Install outer rotor in crankcase oil pump bore.

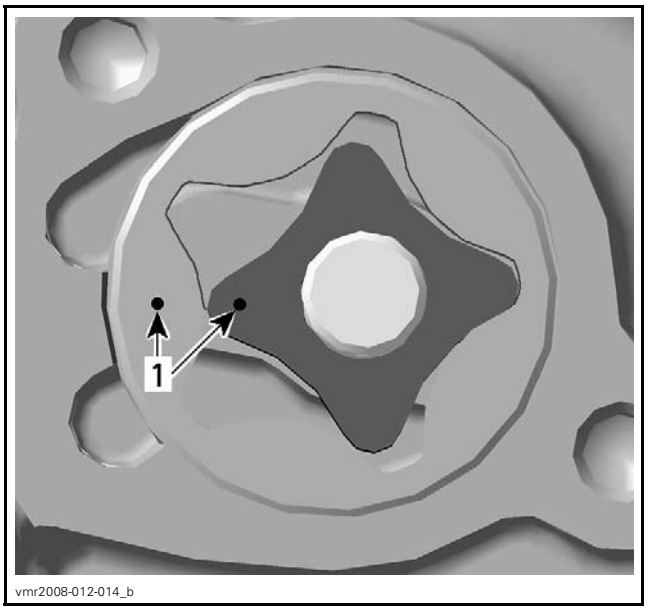

vmr2008-012-014_b

*TYPICAL*
*1. Marks on inner and outer rotor*

3. Install needle pin in oil pump shaft.

**NOTICE** The oil pump shaft is not symmetrical, the longer side must be installed inward.

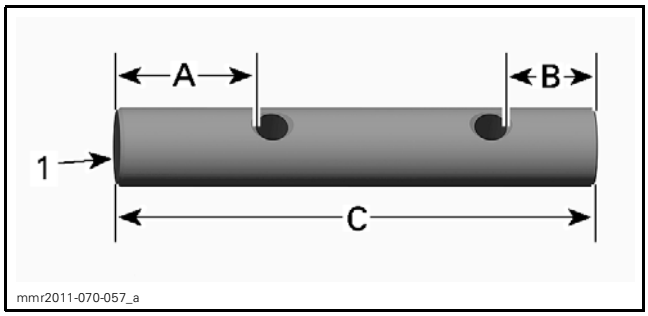


*1. Towards engine*
*A. 16.96 mm (.67 in)*
*B. 11.43 mm (.45 in)*
*C. 60.5 mm (2.38 in)*

4. Place inner rotor on the oil pump shaft. Lubricate oil pump shaft and inner rotor with engine oil.
5. Install oil pump assembly in the crankcase.

After installation of the remaining parts, check for smooth operation of the oil pump assembly and axial play of the oil pump shaft.

6. Fill up oil tank and check oil level. Refer to *ENGINE OIL REPLACEMENT* in this subsection.

Start engine and make sure oil pressure is within specifications (refer to *TESTING THE ENGINE OIL PRESSURE* in this subsection).

# OIL SUCTION PUMP MODULE

## Oil Suction Pump Module Location

The oil suction pump module is located in the cylinder block, behind the magneto cover.

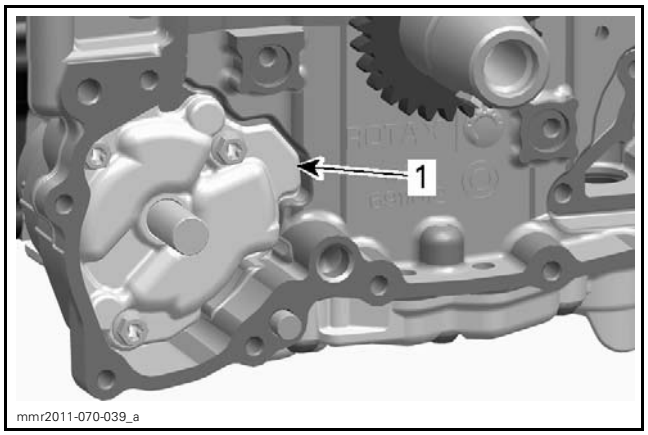


*1. Oil suction pump module*

## Disassembling the Oil Suction Pump Module

1. Remove *OIL PUMP DRIVE GEARS*, see procedure in this subsection.
2. Remove oil pump module cover.

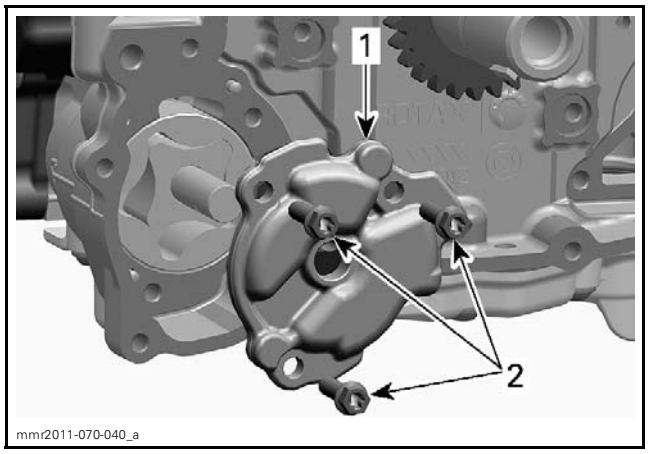


*1. Oil pump module cover*
*2. Retaining screws*

3. Disassemble the large oil suction pump as shown.

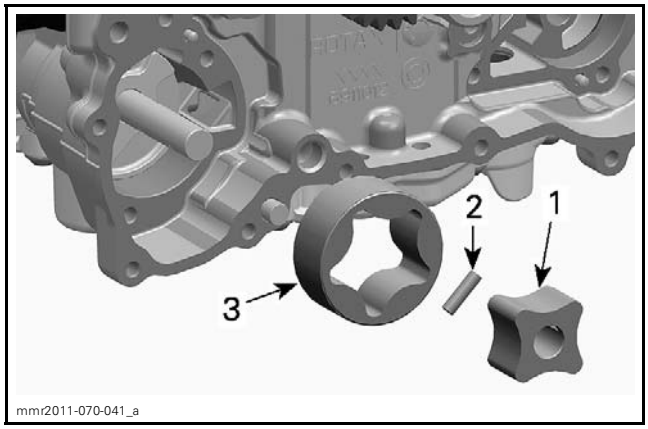


*1. Inner rotor*
*2. Needle pin*
*3. Outer rotor*

4. Disassemble the small oil suction pump as shown.

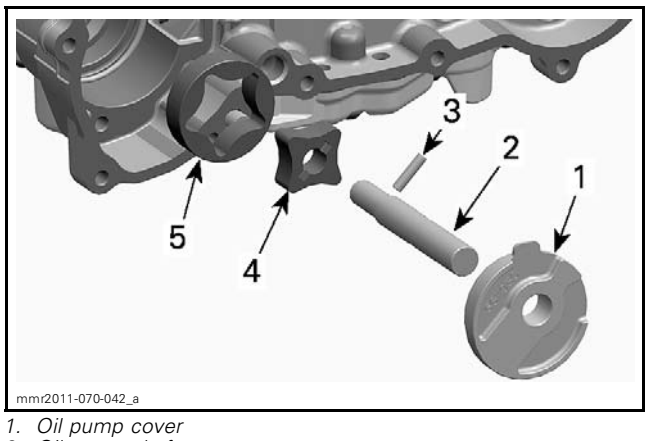


*1. Oil pump cover*
*2. Oil pump shaft*
*3. Needle pin*
*4. Inner rotor*
*5. Outer rotor*

5. Remove and discard the oil pump cover O-ring.

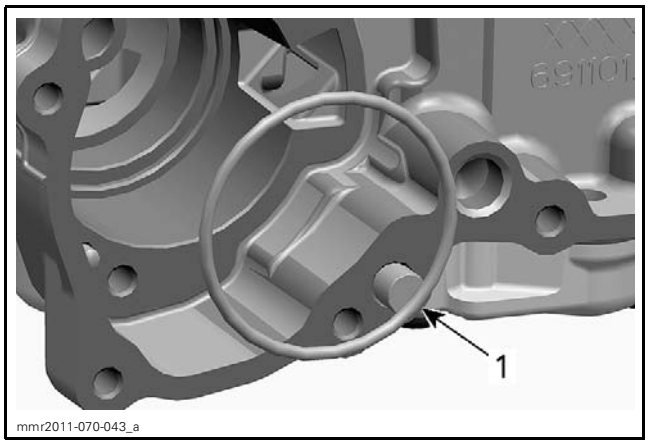


*1. Oil pump cover O-ring*

## Inspecting the Oil Suction Pumps

The inspection of both oil suction pumps is the same as for the oil pressure pump. Refer to *OIL PRESSURE PUMP* in this subsection.

## Assembling the Oil Suction Pump Module

The installation is the reverse of the removal procedure. However, pay attention to the following.

1. Lubricate small oil suction pump outer rotor with engine oil.

**NOTICE** **When installing the oil pump rotors, make sure both marks are pointing toward the inside of the crankcase.**

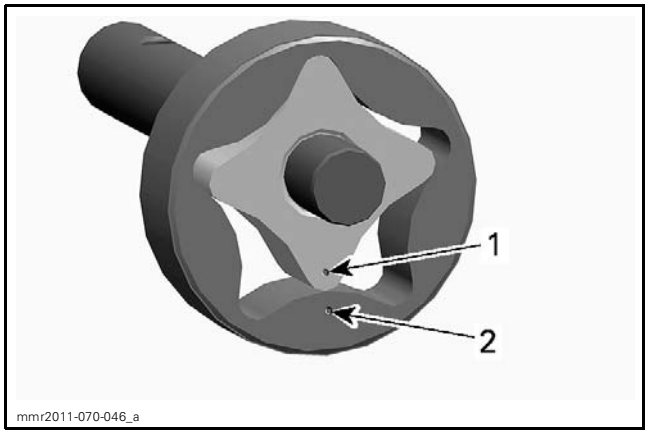


*1. Mark on inner rotor*
*2. Mark on outer rotor*

2. Install small oil suction pump outer rotor into crankcase oil pump bore.

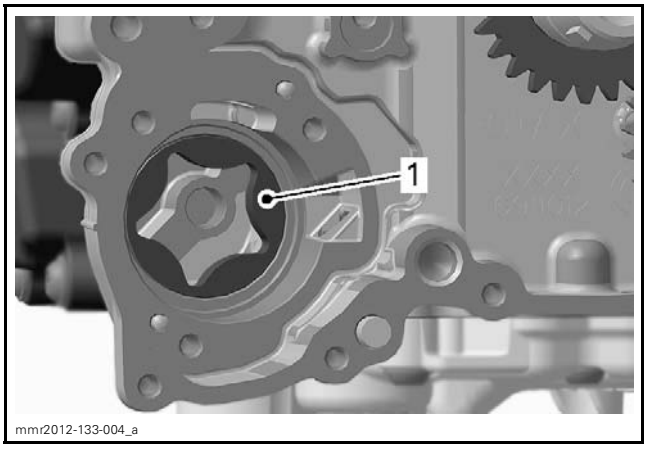


*1. Small oil suction pump outer rotor*

3. Install the needle pin in the bore of the oil pump shaft and place the small inner rotor on the shaft.

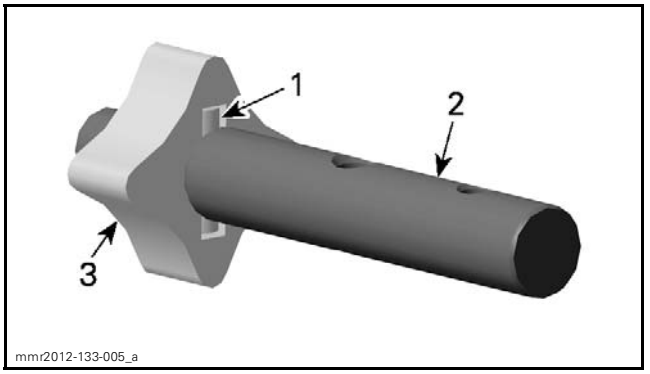


*1. Needle pin*
*2. Oil pump shaft*
*3. Small suction pump inner rotor*

4. Lubricate oil pump shaft and inner rotor with engine oil.
5. Install oil pump shaft assembly into the crankcase.

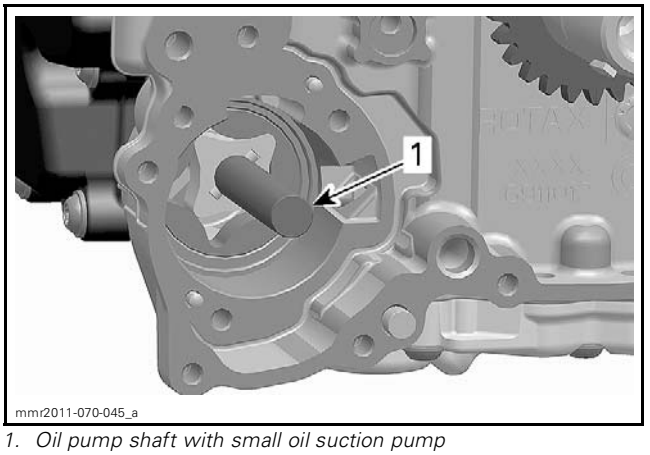


*1. Oil pump shaft with small oil suction pump*

6. Install a NEW oil pump cover O-ring.

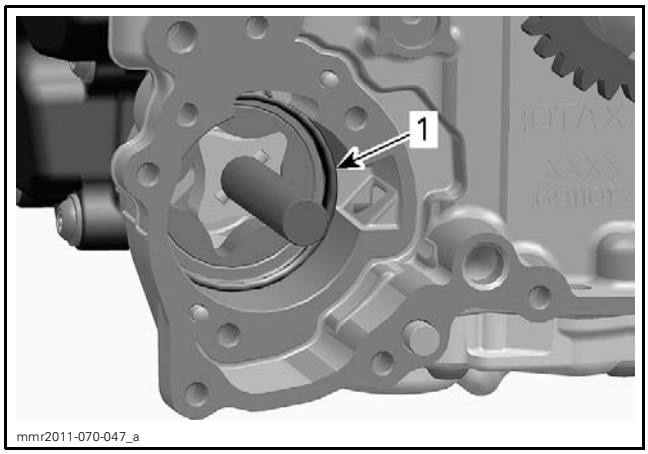


*1. Oil pump cover O-ring*

7. Lubricate both sides of the oil pump cover with engine oil.
8. Align tab of the oil pump cover with the upper recess in the crankcase. Push cover in until a click is heard, indicating the cover is properly installed.

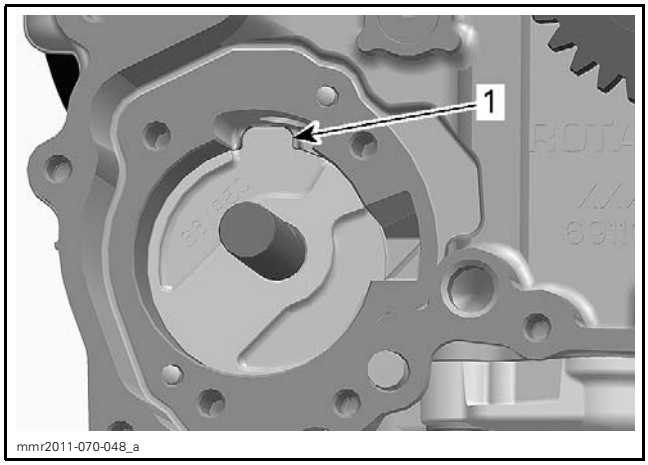


*1. Oil pump cover tab properly positioned*

9. Install large oil suction pump needle pin.
10. Install large oil suction pump inner rotor and outer rotor with the marks outwards.

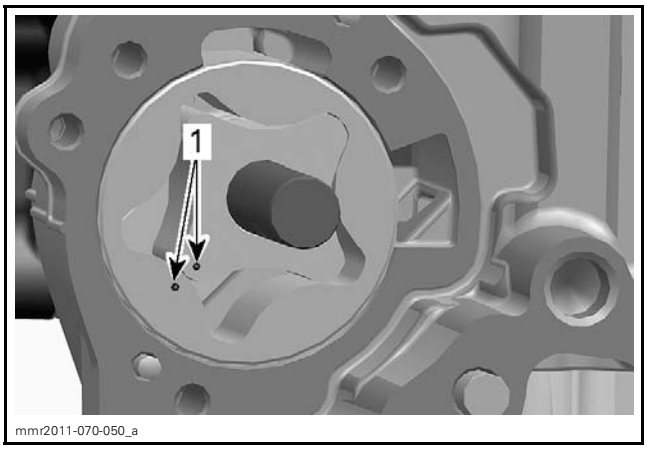


*1. Marks on inner and outer rotor*

11. Lubricate large oil suction pump parts with engine oil.
12. Install other removed parts.

After installation is complete, check for smooth operation of the oil pump assembly and axial play of the oil pump shaft.

13. Fill up oil tank and check oil level. Refer to *ENGINE OIL REPLACEMENT* in this subsection.

Start engine and make sure oil pressure is within specifications (refer to *TESTING THE ENGINE OIL PRESSURE* in this subsection).

# OIL SUMP COVER

## Oil Sump Cover Location

The oil sump cover is located on the engine bottom.

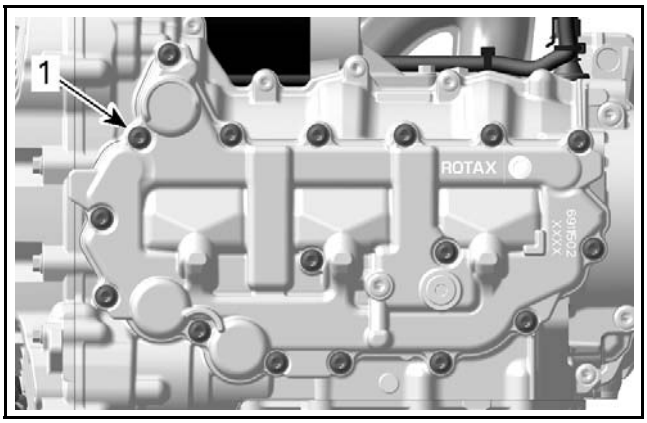


*BOTTOM OF ENGINE*
*1. Oil sump cover*

## Removing the Oil Sump Cover

1. Remove engine from vehicle. Refer to *ENGINE REMOVAL AND INSTALLATION* subsection.
2. Drain engine oil, refer to *ENGINE OIL REPLACEMENT* in this subsection.

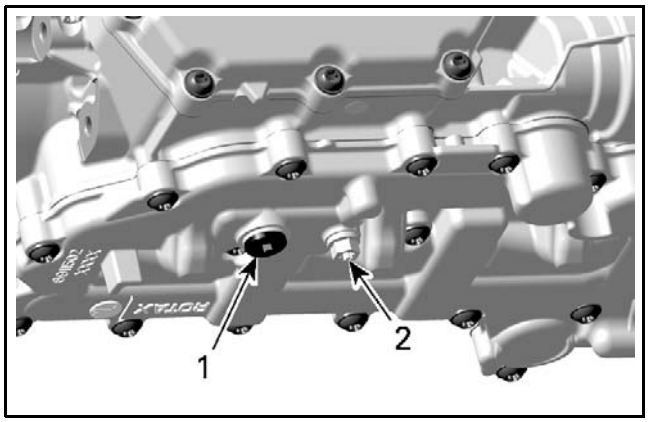


*1. Main drain plug*
*2. Secondary drain plug*

3. Unscrew oil sump cover retaining screws.
4. Remove oil sump cover. Discard gasket.
5. Remove and clean engine oil strainers.

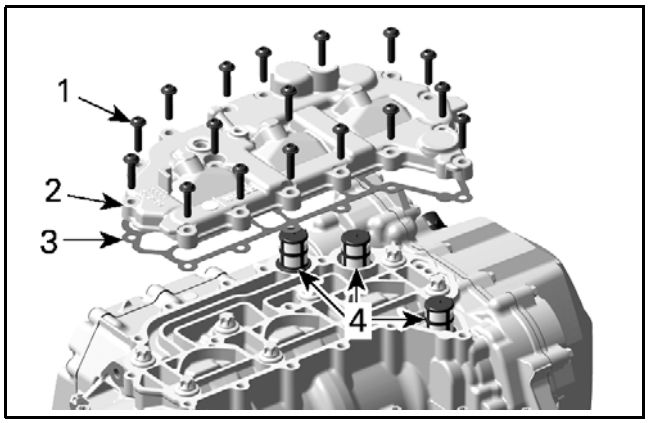


*1. Retaining screws*
*2. Oil sump cover*
*3. Gasket*
*4. Engine oil strainers*

## Inspecting the Oil Sump Cover

Clean oil sump cover and engine oil strainers with a part cleaner, then use an air gun to dry it.

Blow out the oil orifices and check if they are not clogged.

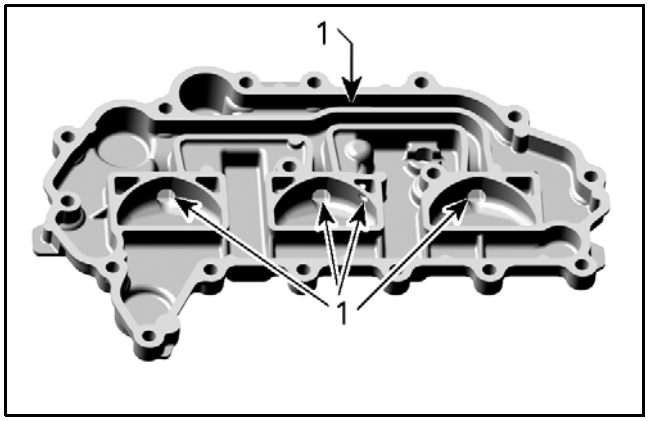


*1. Oil drain bores*

Check oil sump cover for cracks or other damage.

Check oil sump cover for flatness with straight edge.

Replace oil sump cover if necessary.

Check engine oil strainer for damage and change if necessary.

## Installing the Oil Sump Cover

1. Install a **NEW** oil sump cover gasket.
2. Install the strainers as shown.

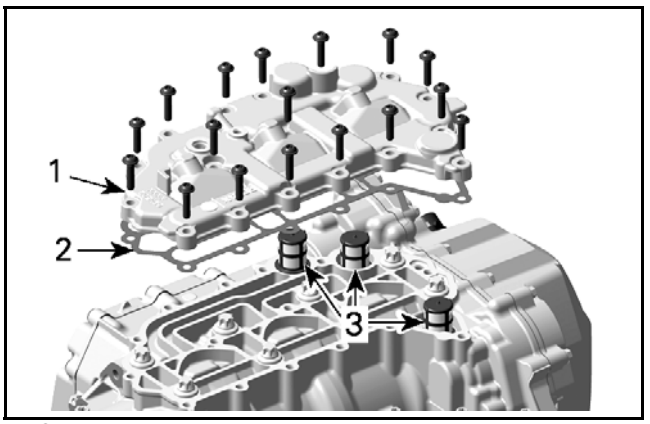


*1. Oil sump cover*
*2. Gasket*
*3. Oil strainers*

3. Install oil sump cover on engine, then tighten screws in two steps as follows:
   3.1 Tighten screws to the following specified torque using the specified sequence.

| TIGHTENING TORQUE (FOLLOW THE SEQUENCE) | | |
|---|---|---|
| Oil sump cover screws | STEP A | 5 N•m ± 0.6 N•m (44 lbf•**in** ± 5 lbf•**in**) |

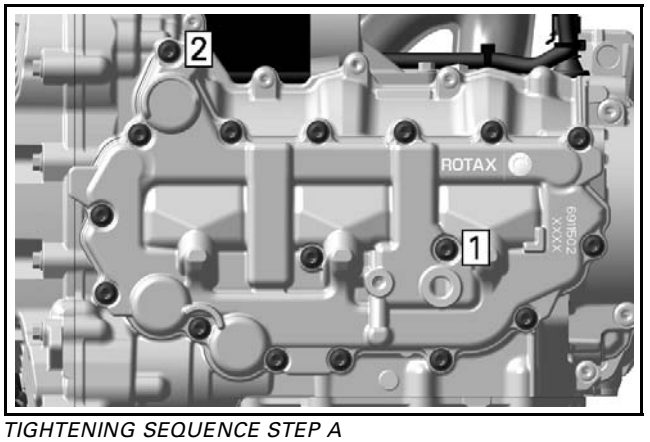


*TIGHTENING SEQUENCE STEP A*

3.2 Tighten screws to the following specified torque using the specified sequence.

| TIGHTENING TORQUE (FOLLOW THE SEQUENCE) | | |
|---|---|---|
| Oil sump cover screws | STEP B | 9 N•m ± 1 N•m (80 lbf•**in** ± 9 lbf•**in**) |

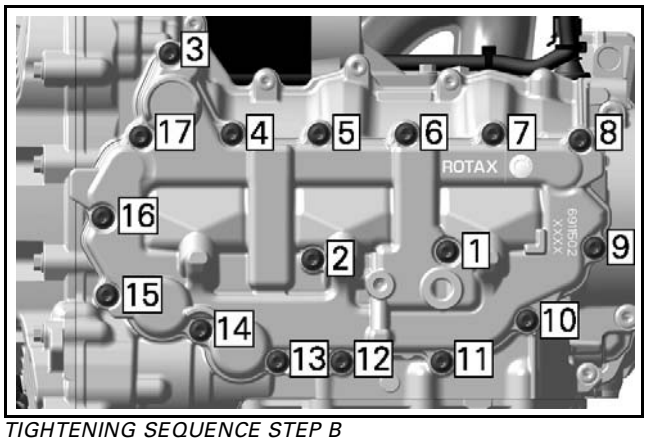


*TIGHTENING SEQUENCE STEP B*

4. Reinstall oil drain plugs using **NEW** sealing washers.

| TIGHTENING TORQUE | |
|---|---|
| Main and secondary drain plug | 15 N•m ± 2 N•m (133 lbf•**in** ± 18 lbf•**in**) |

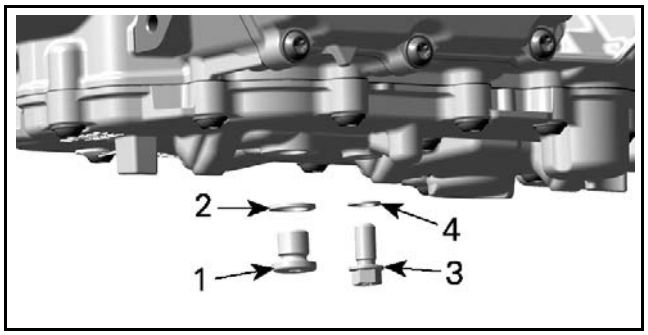


1. *Main drain plug*
2. *Sealing washer*
3. *Secondary drain plug*
4. *Sealing washer*

5. Install engine in vehicle. Refer to *ENGINE REMOVAL AND INSTALLATION* subsection.
6. Fill up oil tank and check oil level. Refer to *ENGINE OIL REPLACEMENT* in this subsection.

# LUBRICATION SYSTEM

## SERVICE TOOLS

| Description | Part Number | Page |
|---|---|---|
| ECM ADAPTER TOOL | 529 036 166 | 9 |
| FLUKE 115 MULTIMETER | 529 035 868 | 9 |
| OIL PRESSURE HOSE | 529 036 394 | 7 |
| PRESSURE GAUGE | 529 036 395 | 7 |

## SERVICE PRODUCTS

| Description | Part Number | Page |
|---|---|---|
| 4T 0W40 SYNTHETIC OIL (EUR) | 779286 | 4 |
| 4T 0W40 SYNTHETIC OIL | 779139 | 4 |

Midwest Manuals
Green Manuals
Paperless Manuals
For a Better Tomorrow
www.green-manuals.com
If you bought this manual from any other seller please leave them
NEGATIVE feedback and notify me at bestshopmanuals@gmail.com

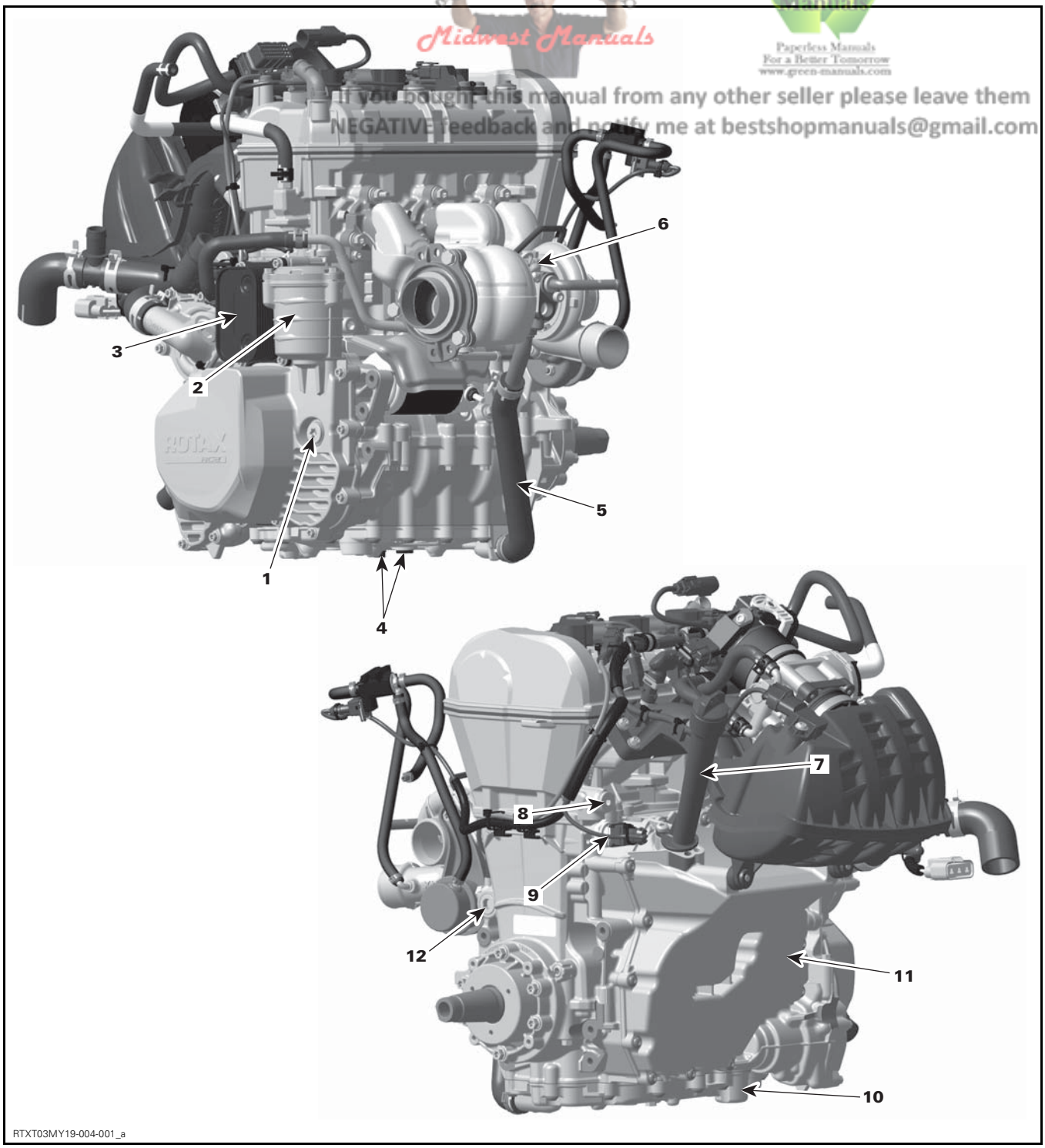


RTXT03MY19-004-001_a

1. *Oil pressure regulator*
2. *Oil filter*
3. *Oil cooler*
4. *Drain plugs*
5. *Oil return hose*
6. *Oil pressure line (connection to turbo charger)*
7. *Oil dip stick*
8. *Chain tensioner*
9. *Oil pressure switch*
10. *Oil strainers*
11. *Oil tank*
12. *Oil pressure line (connection to cylinder block)*

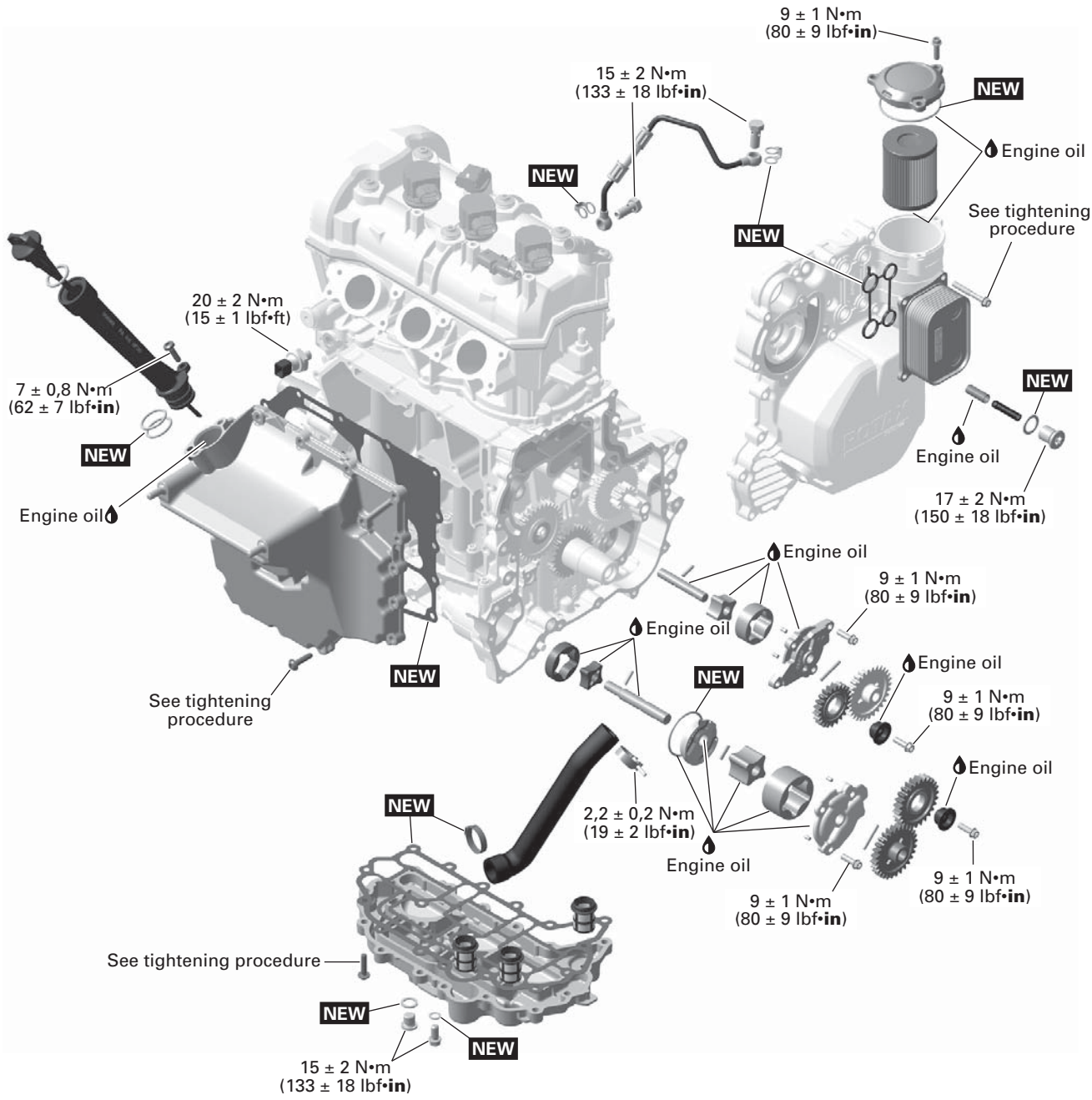


**NEW** = Component must be replaced when removed.

RTXT03MY19-004-002_a

# GENERAL

## SYSTEM DESCRIPTION

This engine uses dry sump lubrication. The oil from the cylinder block, timing chain chamber and magneto cover is pumped by two suction pumps.

Both suction pumps are integrated into one module.

The 20 mm (.79 in) large oil suction pump returns the crankshaft and magneto chamber oil to the reservoir.

The 11 mm (.43 in) small oil suction pump returns the timing chain chamber oil to the oil reservoir.

An oil filter and three oil strainers are used to filter dirt and debris from the oil circuit.

The oil strainers are located between oil sump cover and crankcase lower underneath the oil pressure pump.

The oil pressure is provided by a pump and regulated by a spring loaded pressure regulator.

# MAINTENANCE

## RECOMMENDED ENGINE OIL

Rotax® engines were developed and validated using the XPS™ oil. BRP recommends the use of its XPS engine oil or an equivalent at all time. Do not add any oil additives to the recommended engine oil. Damages caused by the use of an oil not suitable for the engine or by adding of an oil additives may not be covered by the BRP Limited Warranty.

| XPS™ RECOMMENDED ENGINE OIL | |
|---|---|
| Scandinavia | 4T 0W40 SYNTHETIC OIL (EUR) (P/N 779286) |
| All other countries | 4T 0W40 SYNTHETIC OIL (P/N 779139) |
| **IF THE RECOMMENDED XPS ENGINE OIL IS NOT AVAILABLE** | |
| Use a 0W40 4-stroke SAE synthetic engine oil meeting or exceeding the following lubricant industry specifications:<br>– API service classification SM or SN<br>Always check the API service label certification on the oil container, it must contain at least the indicated standard. | |

## ENGINE OIL LEVEL VERIFICATION

**NOTICE** **Operating the engine with an improper oil level may cause severe engine damage. Follow this procedure to obtain a precise reading of the engine oil level.**

With the engine at normal operating temperature (90°C (194°F) at oil tank surface), place vehicle on a level surface and proceed as follows to check oil level:

1. Start engine and let it idle for at least 30 seconds.
2. Stop engine.
3. Open the LH side panel.
4. Unscrew and remove dipstick and wipe clean.

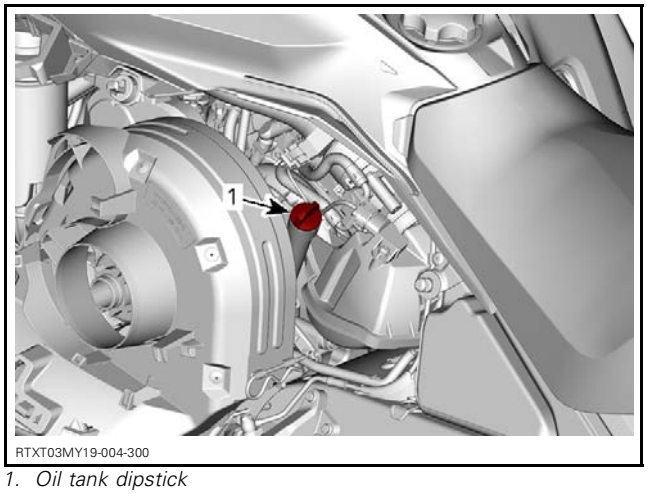


*1. Oil tank dipstick*

5. Put the dipstick back in the filler tube and fully tighten it
6. Remove dipstick again and check oil level. It should be near or equal to the MAX mark.

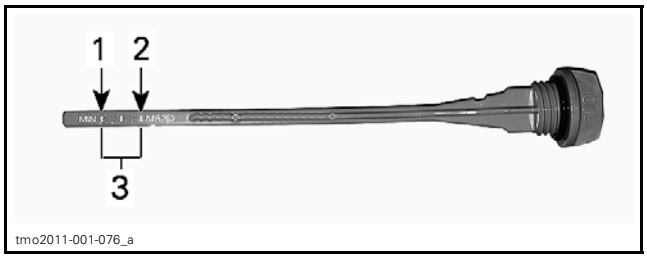


*TYPICAL*
*1. MIN*
*2. MAX*
*3. Operating range*

7. To add oil, place a funnel into the filler tube to avoid spillage.
   7.1 Add a small amount of oil and recheck oil level.

7.2 Repeat the operation until oil level reaches the dipstick's MAX mark. Do not overfill.

**NOTE:** The oil quantity between MIN. and MAX. mark is approximately 500 ml (16.9 U.S. oz).

8. Reinstall dipstick and properly tighten it.
9. Wipe off any oil spillage.
10. Close the LH side panel.

## ENGINE OIL REPLACEMENT

**⚠ CAUTION** The engine oil can be very hot. Wait until engine oil is warm.

***NOTICE*** **Engine oil and oil filter must be replaced at the same time.**

1. Bring engine to its normal operating temperature (90°C (194°F) at oil tank surface).
2. Place vehicle on a level surface.
3. Remove the LH side panel.
4. Remove dipstick.

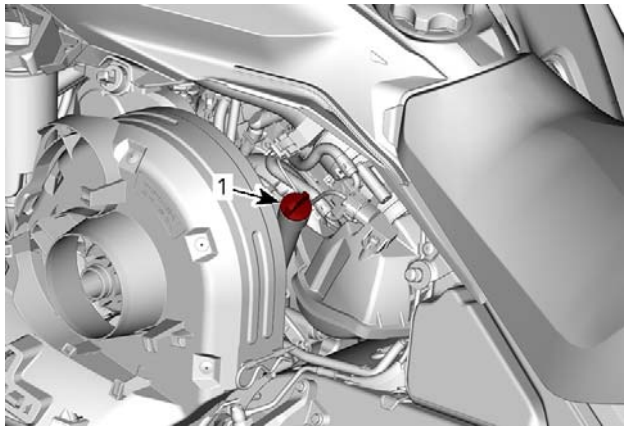


*LH SIDE OF VEHICLE*
*1. Oil tank dipstick*

5. Remove oil filter. Refer to *ENGINE OIL FILTER REPLACEMENT* in this subsection.
6. From underneath the vehicle, access the drain plug:
   6.1 Remove one access cover retaining screw and loosen the other.
   6.2 Pivot the access cover to clear the bottom pan opening.

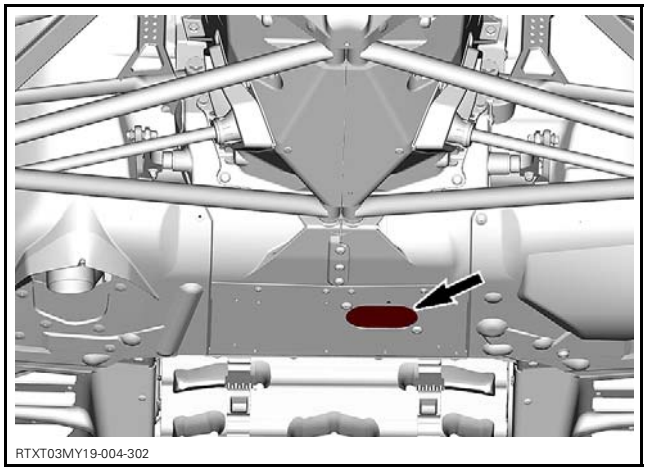


*DRAIN PLUGS ACCESS COVER*

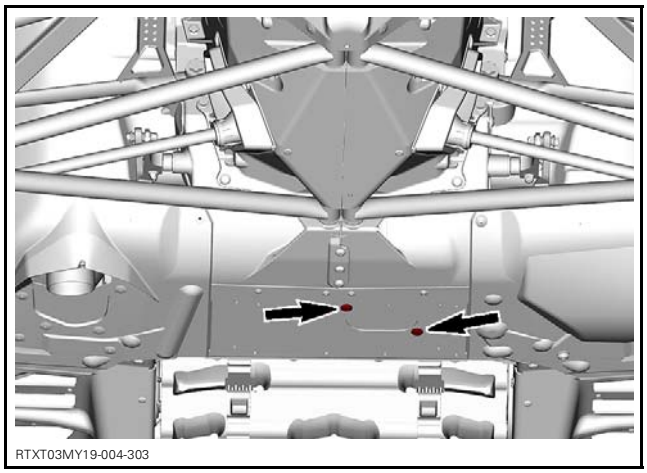


*ACCESS COVER SCREWS*

7. Clean drain plug area.
8. Place a drain pan under the bottom pan opening.
9. Remove engine drain plugs in the following order.
   9.1 Main drain plug.
   9.2 Secondary drain plug.

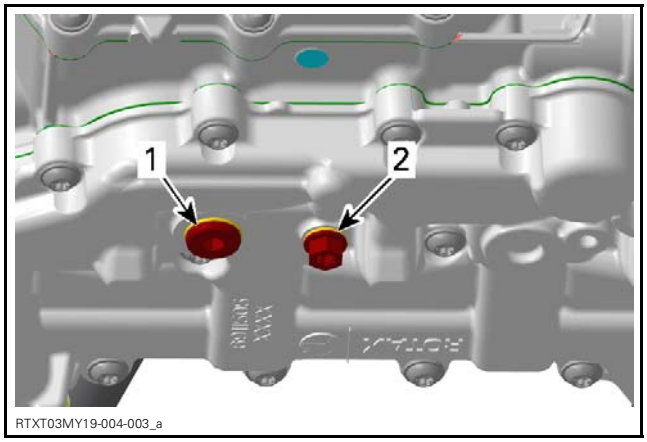


*1. Main drain plug*
*2. Secondary drain plug*

10. Allow oil to drain completely.
11. Install **NEW** sealing washers on oil drain plugs.

**NOTICE** **Never use a sealing washer a second time. Always replace with a new one.**

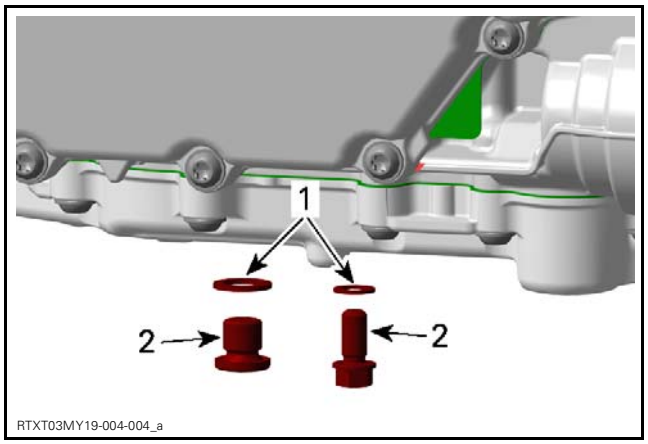


*1. Sealing washers*
*2. Oil drain plugs*

12. Install drain plugs and tighten to the specified torque.

| TIGHTENING TORQUE | |
|---|---|
| Drain plugs | 15 N•m ± 2 N•m (133 lbf•**in** ± 18 lbf•**in**) |

13. Replace *OIL FILTER*, see procedure in this subsection.
14. Refill oil tank at the proper level with the recommended oil.

| APPROXIMATE ENGINE OIL CAPACITY (WITH FILTER) |
|---|
| 3.3 L (3.5 qt (U.S. liq.)) |

15. Reinstall dipstick in oil tank and properly tighten it.
16. Start engine and let it idle for a few minutes.
17. Ensure there are no leaks.
18. Stop engine and check oil level as explained in this subsection. Refill if necessary.
19. Dispose oil and filter as per your local environmental regulations.

# ENGINE OIL FILTER REPLACEMENT

## Removing the Oil Filter

1. Remove the RH side panel.
2. Remove the muffler. Refer to *EXHAUST SYSTEM* subsection.
3. Clean oil filter area.
4. Remove:
   – Oil filter cover screws
   – Oil filter cover with O-ring
   – Oil filter.

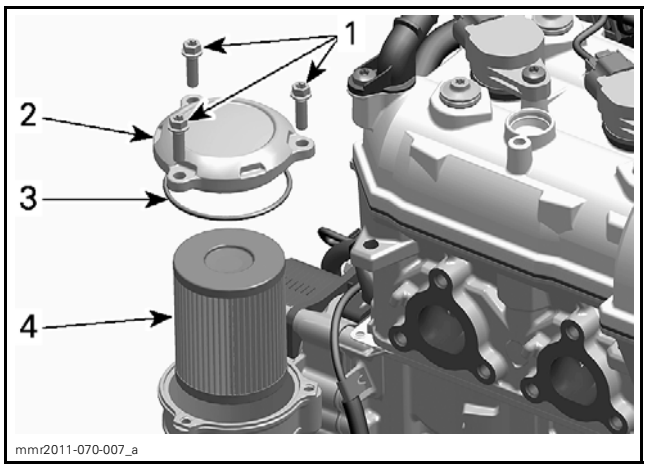


*TYPICAL*
*1. Oil filter cover screws*
*2. Oil filter cover*
*3. O-ring*
*4. Oil filter*

5. Dispose filter as per your local environmental regulations.

## Installing the Oil Filter

1. Check the oil filter inlet and outlet orifices inside oil filter housing (integrated in magneto cover) for dirt and contaminations.

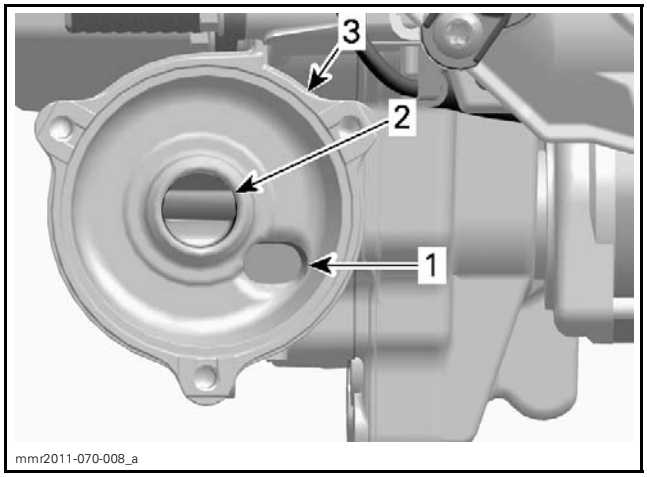


*1. Oil inlet orifice from the oil pressure pump*
*2. Oil outlet orifice to the engine lubrication system*
*3. Oil filter housing*

2. Install a **NEW** O-ring on oil filter cover.
3. Lubricate filter seal and cover O-ring with engine oil.

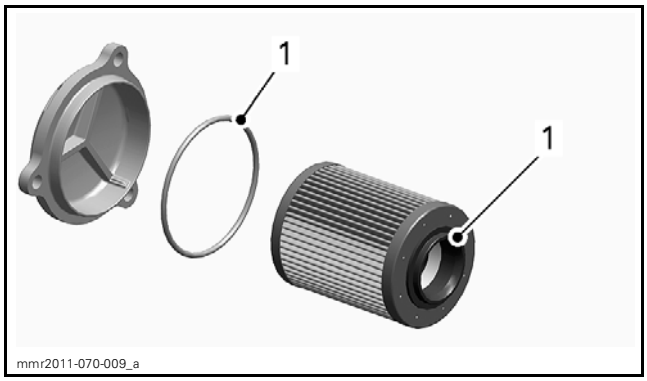


*1. Lubricate with engine oil*

4. Install the oil filter cover.
5. Tighten oil filter cover screws to the specified torque.

| TIGHTENING TORQUE | |
|---|---|
| Oil filter cover screws | 9 N•m ± 1 N•m (80 lbf•**in** ± 9 lbf•**in**) |

# INSPECTION

## ENGINE OIL PRESSURE TEST

1. Remove countershaft bearing support. Refer to *DRIVEN PULLEY AND COUNTERSHAFT* subsection.
2. Disconnect oil pressure switch connector.
3. Remove oil pressure switch from cylinder block.

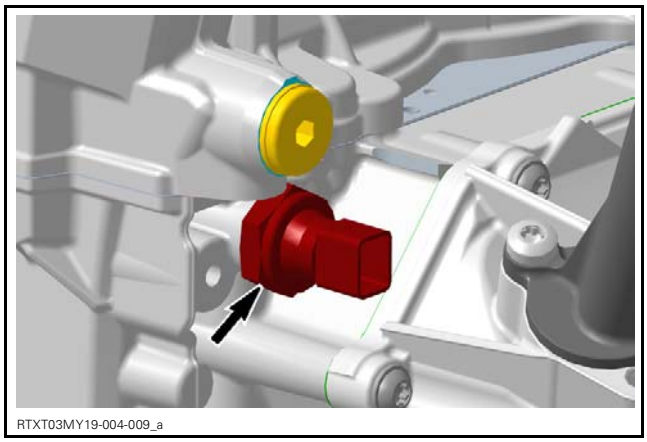


4. Install adapter hose on cylinder block.

| REQUIRED TOOLS | |
|---|---|
| OIL PRESSURE HOSE (P/N 529 036 394) | |

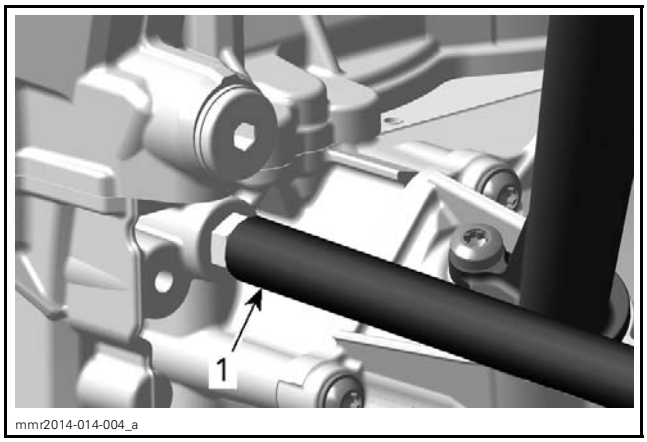


*1. Adapter hose*

5. Connect pressure gauge to the oil pressure hose.

| REQUIRED TOOL | |
|---|---|
| PRESSURE GAUGE (P/N 529 036 395) | |

6. Start engine and check oil pressure.

| **ENGINE OIL PRESSURE @ 100°C (212°F) ENGINE OIL TEMPERATURE** | |
|---|---|
| ENGINE SPEED | MINIMUM PRESSURE |
| Idle | 80 kPa (11.6 PSI) |
| 4000 RPM | 260 kPa (37.71 PSI) |
| 6000 to 8000 RPM | 300 kPa (43.51 PSI) |

If the engine oil pressure is out of specification, refer to *TROUBLESHOOTING* in this subsection.

7. Remove engine oil pressure test tools.
8. Clean threads of oil pressure switch before installing it.
9. For the installation of the oil pressure switch, refer to *INSTALLING THE OPS* in this subsection.
10. Install all other removed parts.

# TROUBLESHOOTING

Always check for fault codes. If a fault code is detected, service the fault code first.

## LOW OR NO ENGINE OIL PRESSURE

1. Oil level is too low.
   - *Refill engine oil.*
   - *Check for high oil consumption. See below.*
   - *Check for oil leaks (oil leaking out of leak indicator hole, gaskets, oil seal or O-rings). Repair or replace.*
2. Defective or clogged oil filter
   - *Replace engine oil and filter.*
3. Use of a bad grade oil
   - *Replace engine oil with BRP recommended oil.*
4. Oil pressure regulator valve sticks open, or spring load is insufficient.
   - *Clean oil regulator piston and its bore. Replace if necessary.*
   - *Measure spring free length. Replace if out of specification.*
5. Defective oil pressure switch, oil pressure warning light does not disappear.
   - *Test the OPS, see procedure in this subsection.*
6. Oil pump(s) worn or damaged.
   - *Check if oil pump drive gears are damaged. Replace if necessary.*
   - *Check oil pump rotors and its bore for wear limits. Replace if out of specification.*
7. Engine oil strainer is clogged.
   - *Remove and clean engine oil strainer.*
8. Heavy wear on plain bearings.
   - *Check radial clearance of plain bearings. Replace if out of specification.*

## HIGH OIL CONSUMPTION

1. Oil in breathing system.
   - *Check if breather V-ring is brittle, hard or damaged. Replace V-ring.*
   - *Check if oil separator cover is damaged or missing.*
2. Valve stem seals worn or damaged.
   - *Replace valve stem seals.*
3. Piston rings worn out (blue colored exhaust smoke).
   - *Replace piston rings.*

## OIL CONTAMINATION (WHITE APPEARANCE)

1. Oil cooler gasket leaking.
   - *Replace gasket. Change engine oil.*
2. Cylinder head screws not properly tightened.
   - *Retighten screws with recommended torque. Change engine oil.*
3. Cylinder head gasket leaking.
   - *Replace cylinder head gasket. Change engine oil.*
4. Damaged engine parts (e.g. cylinder head, cylinder block,..).
   - *Check damages or cracks on engine parts. Replace defective part. Change engine oil.*
5. Oil seal and rotary seal on water pump shaft leaking.
   - *Replace oil seal, rotary seal and water pump shaft. Change engine oil.*

# PROCEDURES

## OIL PRESSURE SWITCH (OPS)

### OPS Activation

The oil pressure switch activates when the engine oil pressure is lower than following specified pressure range.

NOTE: ECM does not trigger the OPS signal below 2500 rpm.

| OIL PRESSURE SWITCH ACTIVATION RANGE |
|---|
| 20 kPa to 50 kPa (2.9 PSI to 7.3 PSI) |

### OPS Access

1. Remove countershaft bearing support. Refer to *REMOVING THE COUNTERSHAFT BEARING SUPPORT* in *DRIVEN PULLEY AND COUNTERSHAFT* subsection.

### Inspecting the OPS

First, check the oil pressure switch. Perform *TESTING THE OPS RESISTANCE* and *TESTING THE OPS CIRCUIT CONTINUITY*..

If the oil pressure switch is good, ensure oil pressure is adequate. Refer to *ENGINE OIL PRESSURE TEST* in this subsection.

### Testing the OPS Resistance

The engine must be warm to check the oil pressure switch properly.

**⚠ WARNING**

**Be careful when working near hot parts. Always wear long sleeves and gloves.**

1. Cut locking tie and disconnect OPS connector.

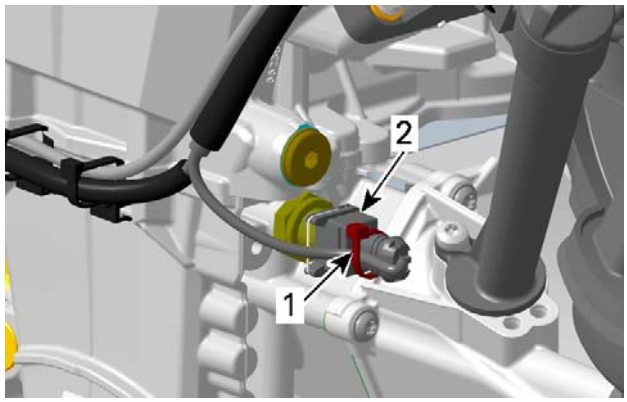

RTXT03MY19-004-008_a

*1. Locking tie*
*2. OPS connector*

2. Check oil pressure switch resistance.

| REQUIRED TOOL | |
|---|---|
| FLUKE 115 MULTIMETER (P/N 529 035 868) | |

3. Read result and compare to table.

| **RESISTANCE (Ω)** | | |
|---|---|---|
| ENGINE NOT RUNNING | | |
| OPS pin | Engine ground | Close to 0 Ω (normally closed switch) |

If resistance is out of specification, replace the oil pressure switch.

If the resistance is correct, continue procedure. It will be necessary to use jumper wires.

4. Install the countershaft bearing support and the driven pulley.
5. Start engine.
6. Read result and compare to table.

| **RESISTANCE (Ω)** | | |
|---|---|---|
| ENGINE RUNNING | | |
| OPS pin | Engine ground | Infinitely high (OL) |

If resistance is out of specification, replace the oil pressure switch.

If the resistance is correct, check the oil pressure switch circuit continuity.

## Testing the OPS Circuit Continuity

1. Install the ECM connector A on the ECM adapter tool.

| REQUIRED TOOL | |
|---|---|
| ECM ADAPTER TOOL (P/N 529 036 166) | |

2. Cut locking tie and disconnect the OPS connector.

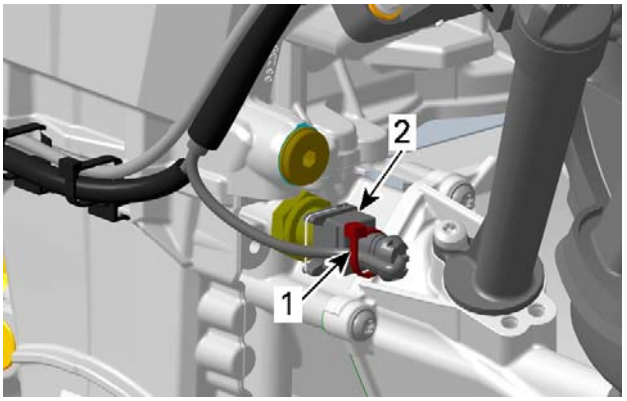

RTXT03MY19-004-008_a

*1. Locking tie*
*2. OPS connector*

3. Check continuity as follows.

| REQUIRED TOOL | |
|---|---|
| FLUKE 115 MULTIMETER (P/N 529 035 868) | |

| CIRCUIT CONTINUITY | | |
|---|---|---|
| OPS connector | ECM A pin E3 | Close to 0 Ω |

If the continuity is good and all other tests are performed, try a **NEW** ECM.

If the continuity is bad, repair or replace defective wire or connectors.

## Removing the OPS

1. Cut locking tie and unplug the OPS switch connector.

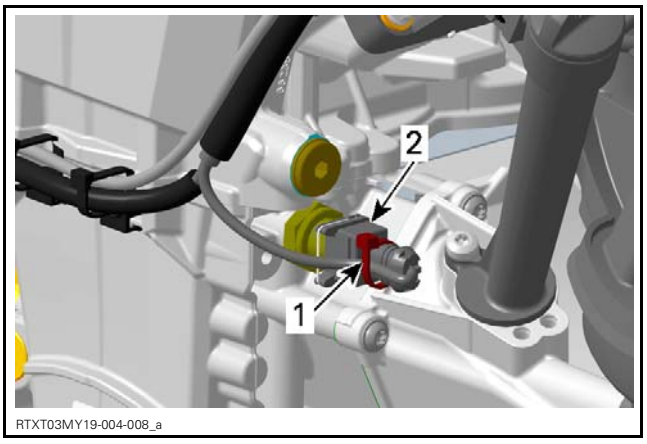

RTXT03MY19-004-008_a

1. *Locking tie*
2. *OPS connector*

2. Unscrew and remove the OPS.

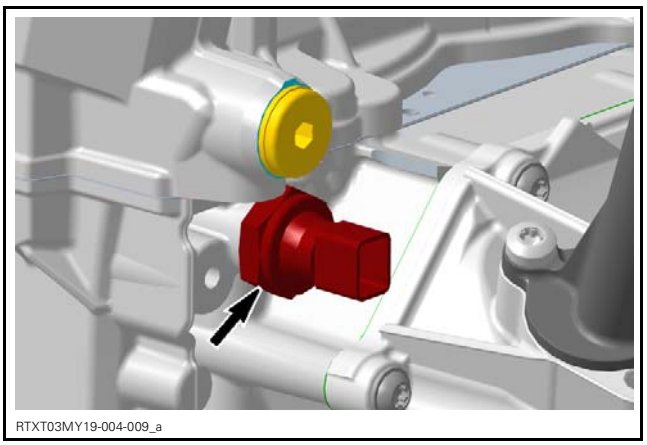
RTXT03MY19-004-009_a

## Installing the OPS

Install oil pressure switch as per following information.

| TIGHTENING TORQUE | |
|---|---|
| Oil pressure switch | 20 N•m ± 2 N•m (15 lbf•ft ± 1 lbf•ft) |

Install all other removed parts.

**NOTICE When installing the locking tie on the OPS connector, avoid making a sharp bend in the wires.**

# OIL FILLER TUBE

## Oil Filler Tube Access

Remove countershaft bearing support. Refer to *REMOVING THE COUNTERSHAFT BEARING SUPPORT* in *DRIVEN PULLEY AND COUNTERSHAFT* subsection.

## Removing the Oil Filler Tube

1. Remove oil filler tube retaining screw.

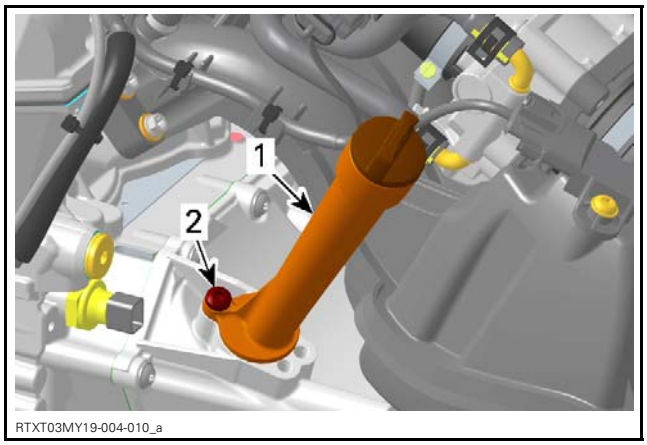

RTXT03MY19-004-010_a

1. *Oil filler tube*
2. *Retaining screw*

2. Pull filler tube out of oil tank cover

## Installing the Oil Filler Tube

1. Install **NEW** O-rings on oil filler tube.

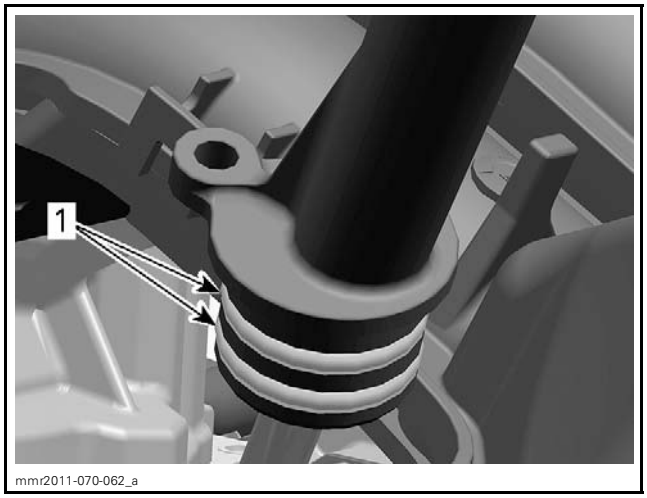

mmr2011-070-062_a

1. *Oil filler tube O-rings*

2. Lubricate oil tank cover bore with engine oil.

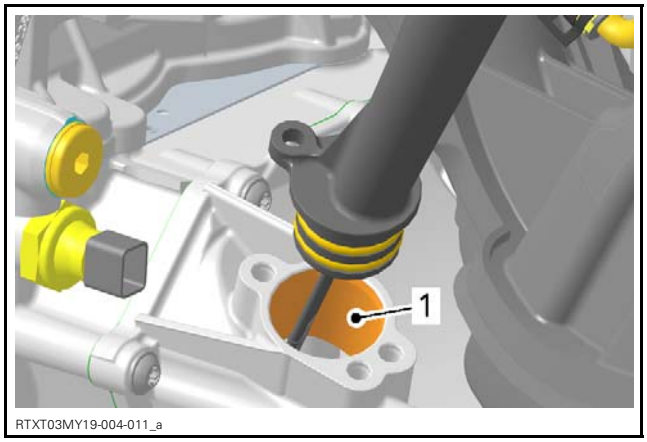

RTXT03MY19-004-011_a

1. *Lubricate the oil tank cover bore*

3. Install oil filler tube.

4. Tighten retaining screw to specified torque.

| TIGHTENING TORQUE | |
|---|---|
| Oil filler tube screw | 7 N•m ± 0.8 N•m (62 lbf•**in** ± 7 lbf•**in**) |

5. Install all other removed parts.

# OIL TANK

## Removing the Oil Tank Cover

1. Remove engine from vehicle. Refer to *ENGINE REMOVAL AND INSTALLATION* subsection.
2. Remove intake manifold. Refer to *INTAKE MANIFOLD* subsection.
3. Place a drain pan underneath oil tank.
4. Unscrew oil tank cover retaining screws.

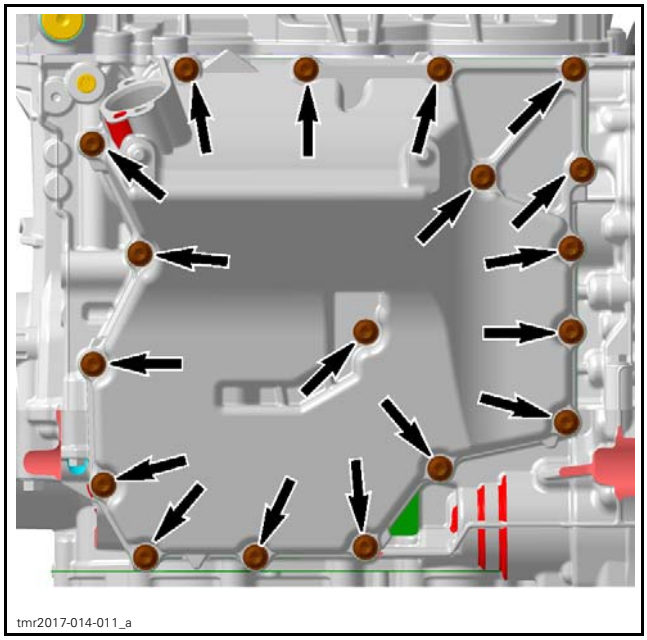


*RETAINING SCREWS*

5. Remove oil tank from the engine.

## Installing the Oil Tank Cover

1. Install **NEW** gasket.
2. Install oil tank on engine, then tighten screws in two steps as follows:
   2.1 Tighten screws to the following specified torque using the specified sequence.

| TIGHTENING TORQUE | | |
|---|---|---|
| Oil tank screws | STEP A | 5 N•m ± 0.6 N•m (44 lbf•**in** ± 5 lbf•**in**) |

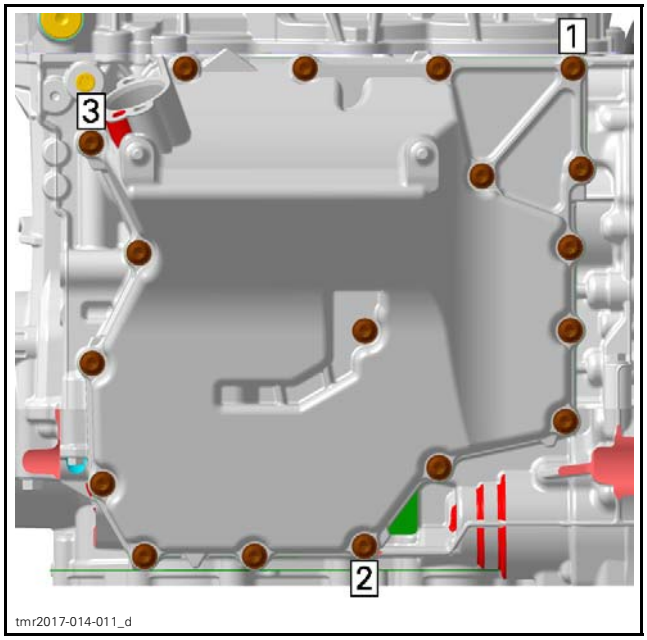


*TIGHTENING SEQUENCE STEP A*

   2.2 Tighten screws to the following specified torque using the specified sequence.

| TIGHTENING TORQUE | | |
|---|---|---|
| Oil tank screws | STEP B | 11 N•m ± 1 N•m (97 lbf•**in** ± 9 lbf•**in**) |

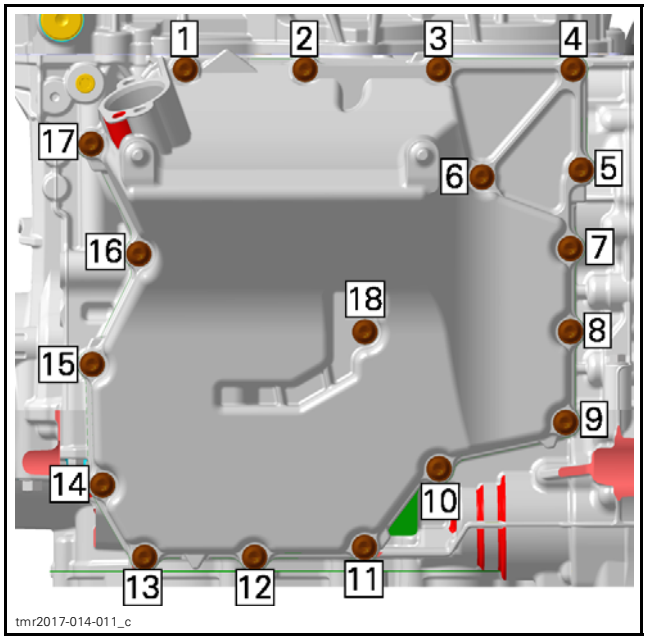


*TIGHTENING SEQUENCE STEP B*

3. Wipe up any oil spillage.
4. Install intake manifold. Refer to *INTAKE MANIFOLD* subsection.
5. Install engine in vehicle. Refer to *ENGINE REMOVAL AND INSTALLATION* subsection.
6. Fill up oil tank and check oil level.

# OIL COOLER

## Oil Cooler Access

Remove muffler, refer to *EXHAUST SYSTEM* subsection.

## Removing the Oil Cooler

1. Drain engine oil. Refer to procedure in this subsection.
2. Drain cooling system. Refer to *COOLING SYSTEM* subsection..
3. Remove oil cooler retaining screws.

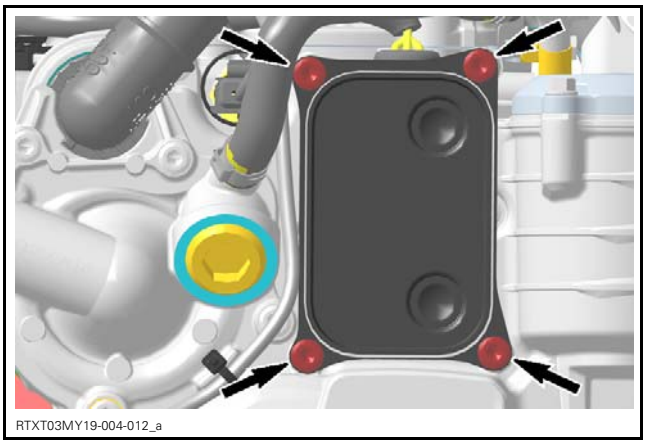

RTXT03MY19-004-012_a

4. Place rags or towels under oil cooler to catch remaining oil and coolant.
5. Remove oil cooler and gasket.

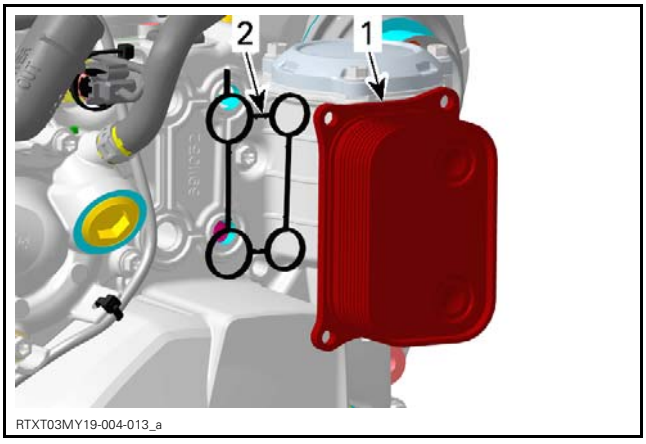


RTXT03MY19-004-013_a

1. *Oil cooler*
2. *Gasket*

## Inspecting the Oil Cooler

Check oil cooler for cracks and other damage.

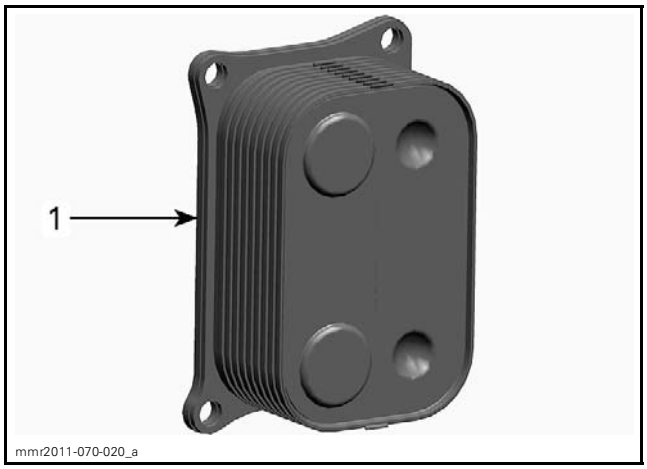


mmr2011-070-020_a

1. *Check for cracks*

Replace parts as necessary.

## Installing the Oil Cooler

The installation is the reverse of the removal procedure. However, pay attention to the following.

Tighten oil cooler screws in two steps to the specified torques using the illustrated sequence.

| TIGHTENING TORQUE | | |
|---|---|---|
| Oil cooler screws | STEP A | 5 N•m ± 0.6 N•m (44 lbf•**in** ± 5 lbf•**in**) |
| | STEP B | 9 N•m ± 1 N•m (80 lbf•**in** ± 9 lbf•**in**) |

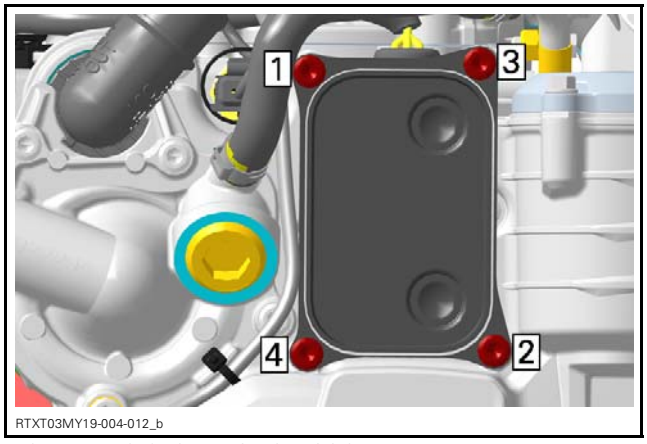


RTXT03MY19-004-012_b

*TIGHTENING SEQUENCE OIL-COOLER*

Wipe up any oil and coolant spillage.

Fill up oil tank and check oil level. Refer to procedure in this subsection.

Refill and bleed cooling system. Refer to *COOLING SYSTEM* subsection.

# ENGINE OIL PRESSURE REGULATOR

## Oil Pressure Regulator Location

The engine oil pressure regulator is located inside the magneto cover.

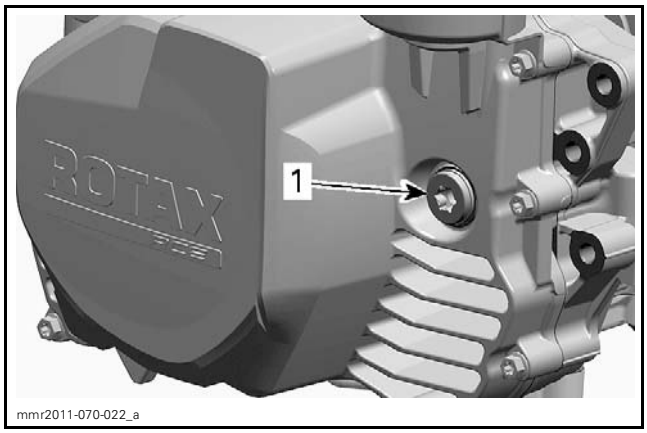


*1. Engine oil pressure regulator*

## Removing the Oil Pressure Regulator

1. Remove muffler, refer to *EXHAUST SYSTEM* subsection.
2. Drain engine oil. Refer to procedure in this subsection.
3. Remove:
   – Regulator plug
   – Sealing washer (discard it).
4. Pull oil pressure regulator parts out of the magneto cover.

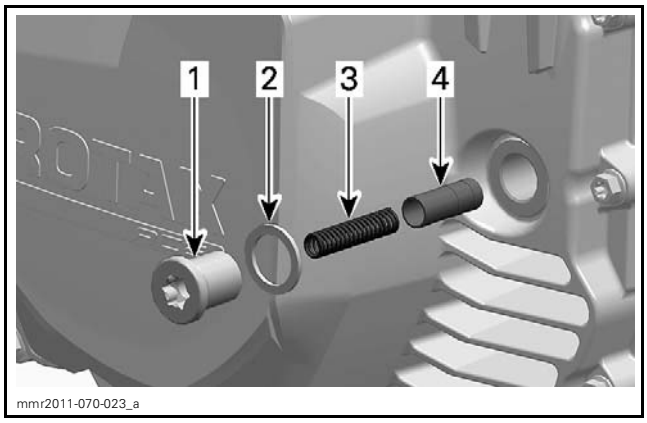


*1. Plug*
*2. Sealing washer (discard)*
*3. Regulator spring*
*4. Regulator piston*

## Inspecting the Oil Pressure Regulator

Clean bore and thread in the magneto cover of any contamination.

Inspect oil pressure regulator piston and bore in cylinder block for scoring or other damages.

Check if piston moves easily in its bore.

Check compression spring for free length.

| SPRING FREE LENGTH | |
|---|---|
| New nominal | 46 mm (1.811 in) |
| Service limit | 45 mm (1.772 in) |

Visually check compression spring for squareness.

Replace worn or damaged components.

## Installing the Oil Pressure Regulator

The installation is the reverse of the removal procedure. However, pay attention to the following.

Install a **NEW** sealing washer on plug.

Tighten regulator plug to the specified torque.

| TIGHTENING TORQUE | |
|---|---|
| Oil pressure regulator plug | 17 N•m ± 2 N•m (150 lbf•**in** ± 18 lbf•**in**) |

Wipe up any oil spillage.

Fill up oil tank and check oil level. Refer to procedure in this subsection.

Install all other removed parts. Refer to applicable subsections.

# OIL PUMP DRIVE GEARS

## Oil Pump Drive Gear Location

The oil pump gears are located on the MAG side, behind the magneto cover.

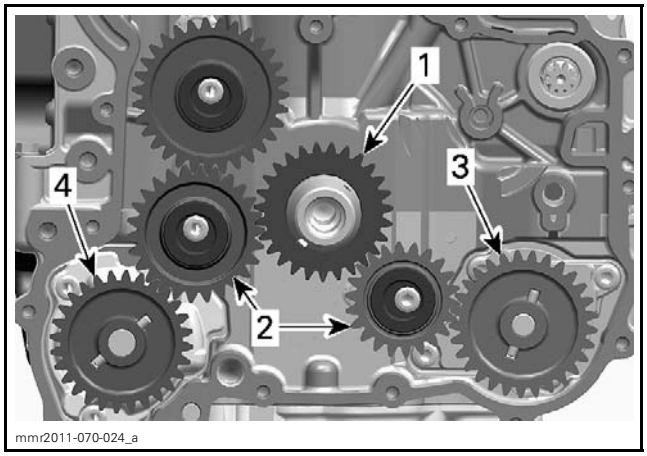


*1. Oil pump drive gear*
*2. Intermediate gears*
*3. Oil pressure pump gear*
*4. Oil suction pump gear*

## Removing the Oil Pump Drive Gear

1. Refer to *MAGNETO AND STARTER* subsection to remove:
   – Magneto cover
   – Rotor
   – Sprag clutch gear.
2. Unscrew oil pump intermediate gear screws.

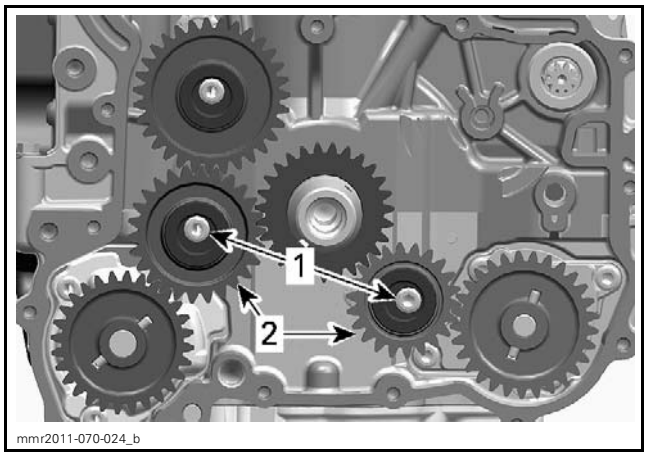


*1. Retaining screws*
*2. Intermediate gears*

3. Remove bearing sleeves and oil pump intermediate gears.

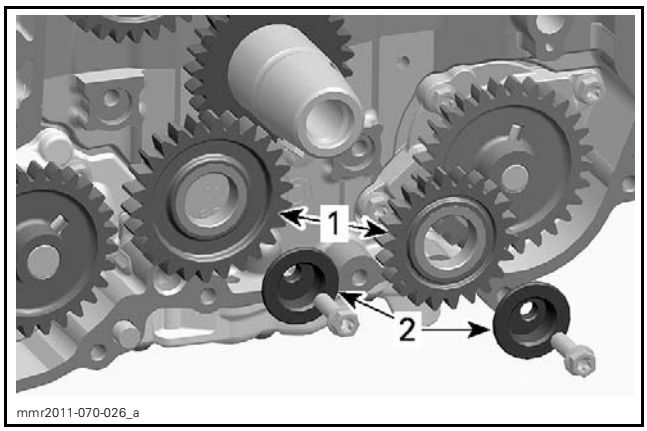


*1. Intermediate gears*
*2. Bearing Sleeves*

4. Remove oil pump gears and needle pins.

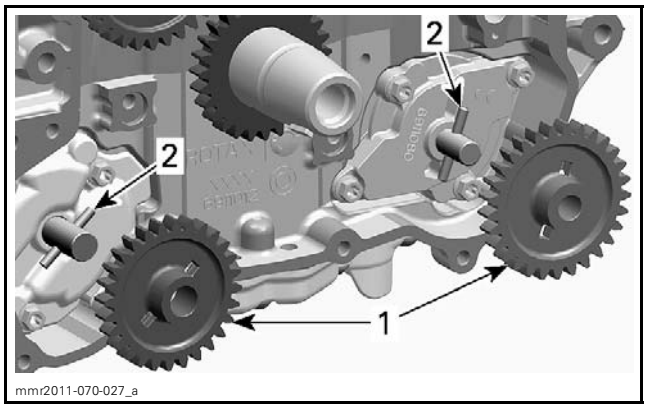


*1. Oil pump gears*
*2. Needle pins*

## Inspecting the Oil Pump Drive Gear

Inspect gears for wear, cracks or other damage.

Replace if damaged.

## Installing the Oil Pump Drive Gear

The installation is the reverse of the removal procedure. However, pay attention to the following.

1. Be sure to not intermix oil pump gears, see next illustration.
   1.1 Install the BROWN oil pump gear (29 teeth) on oil pressure pump.
   1.2 Install the BLACK oil pump gear (28 teeth) on oil suction pump.

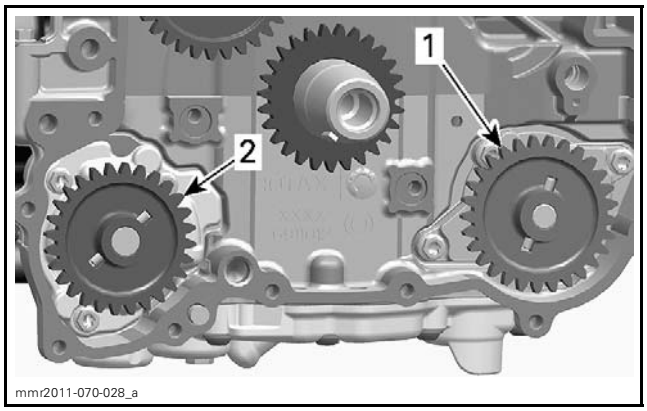


*1. BROWN oil pump gear - 29 teeth*
*2. BLACK oil pump gear - 28 teeth*

2. Lubricate intermediate gears bearing sleeves with engine oil, then install gears.
3. Install all other removed parts.
4. Fill up oil tank and check oil level. Refer to procedure in this subsection.

# OIL PRESSURE PUMP

## Oil Pressure Pump Location

The oil pressure pump is located in the cylinder block, behind the magneto cover.

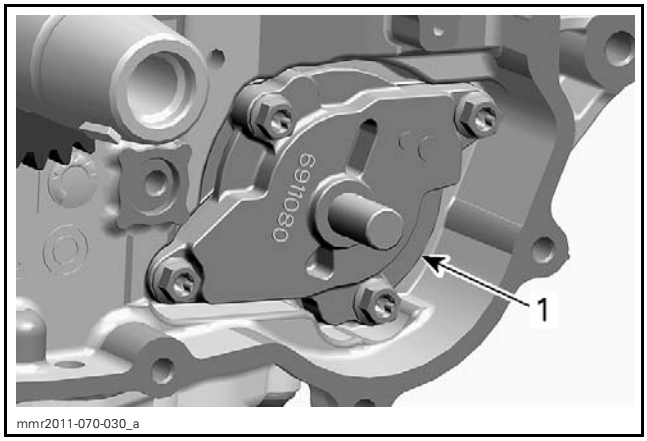


*1. Oil pressure pump*

## Removing the Oil Pressure Pump

1. Remove *OIL PUMP DRIVE GEARS*, see procedure in this subsection.
2. Remove oil pump cover.

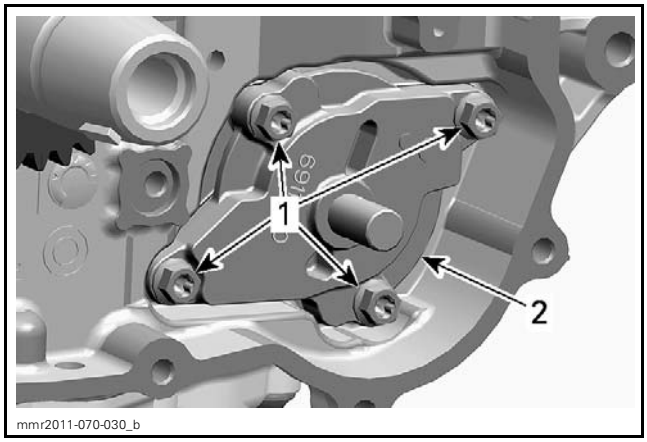


*1. Retaining screws*
*2. Oil pump cover*

3. Remove following parts.

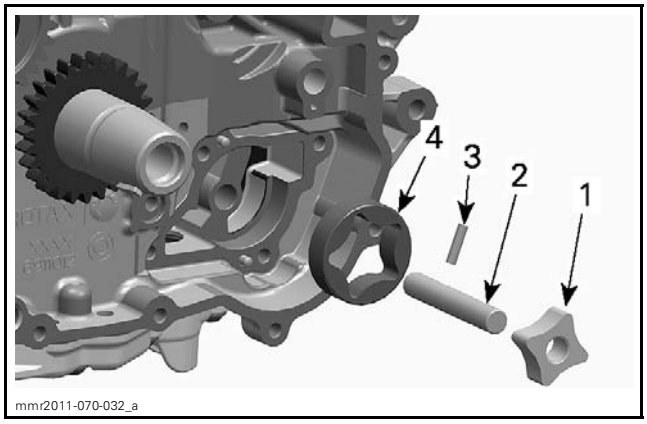


*1. Inner rotor*
*2. Oil pump shaft*
*3. Needle pin*
*4. Outer rotor*

## Inspecting the Oil Pressure Pump

Inspect oil pump and oil pump cover bore for marks, scratches or other damage. Replace any damaged parts.

Check oil pump cover for damages and for surface straightness with a straight edge.

Check inner rotor for corrosion, worn pin slots or other damages. If so, replace inner and outer rotor at the same time.

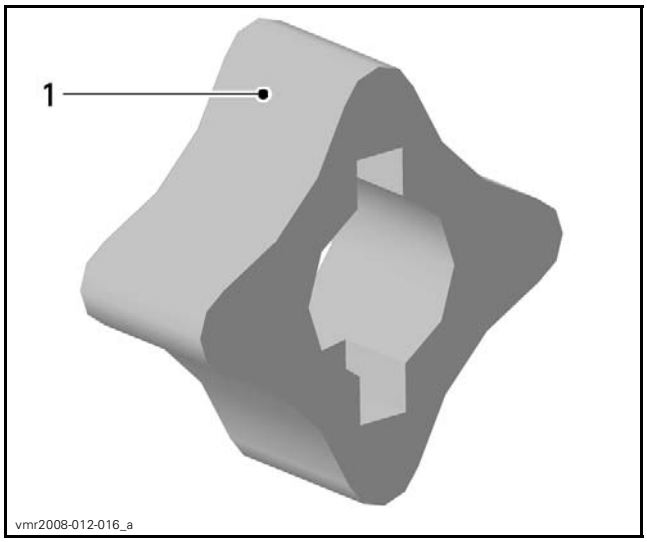


*1. Pitting on the teeth*

### Radial Clearance

Using a feeler gauge, measure the clearance of outer rotor and inner rotor as indicated by the arrows.

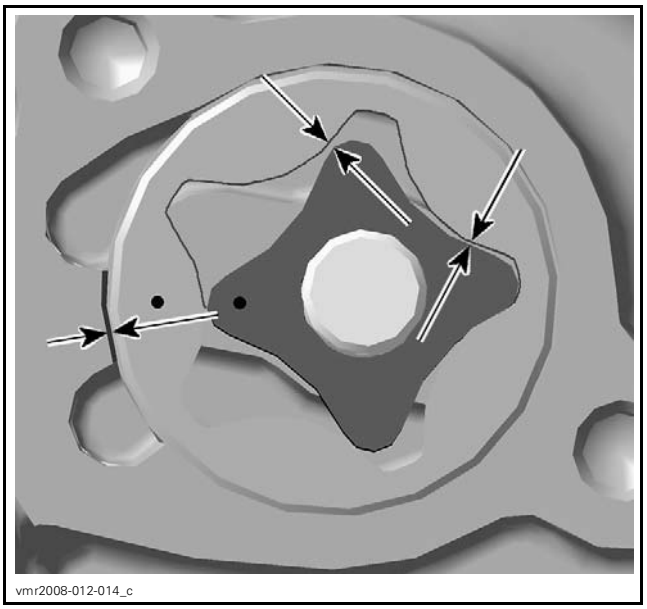
vmr2008-012-014_c

| OIL PUMP RADIAL CLEARANCE | |
|---|---|
| Service limit | 0.25 mm (.0098 in) |

NOTE: If clearance of inner and outer rotors exceeds the tolerance, replace oil pump.

### Axial Clearance

Measure outer rotor thickness with a micrometer.

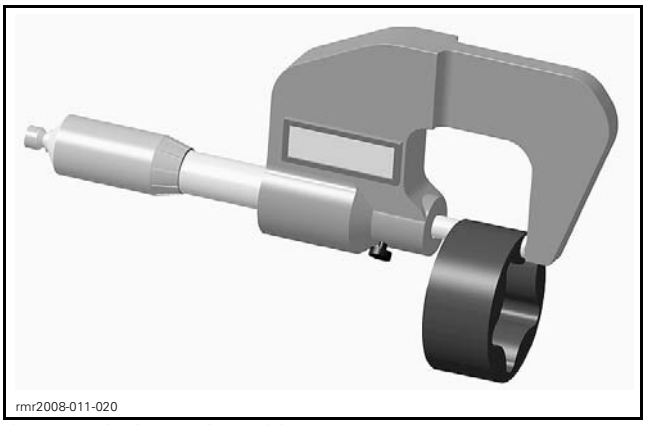
rmr2008-011-020

*OUTER ROTOR THICKNESS*

Using a depth gauge, measure the depth of oil pump bore in the lower crankcase.

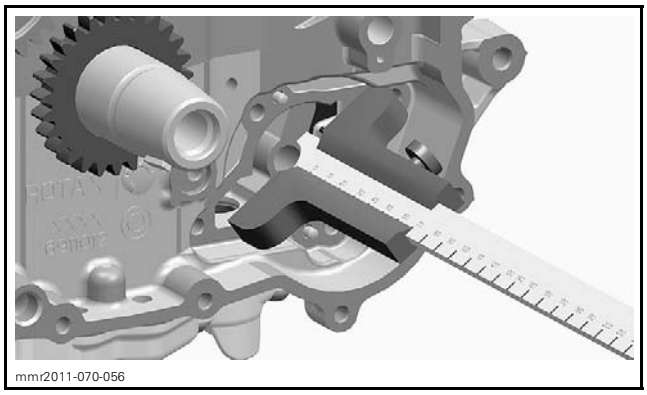
mmr2011-070-056

*OIL PUMP BORE DEPTH (OIL PUMP COVER)*

Substract bore depth from rotor thickness to obtain axial clearance.

| OIL PUMP AXIAL CLEARANCE | |
|---|---|
| Service limit | 0.15 mm (.0059 in) |

NOTE: When the axial clearance of the oil pump assembly increases, the oil pressure decreases.

## Installing the Oil Pressure Pump

The installation is the reverse of the removal procedure. However, pay attention to the following.

1. Lubricate outer rotor with engine oil.

**NOTICE** **Install rotors with the marks outwards.**

2. Install outer rotor in crankcase oil pump bore.

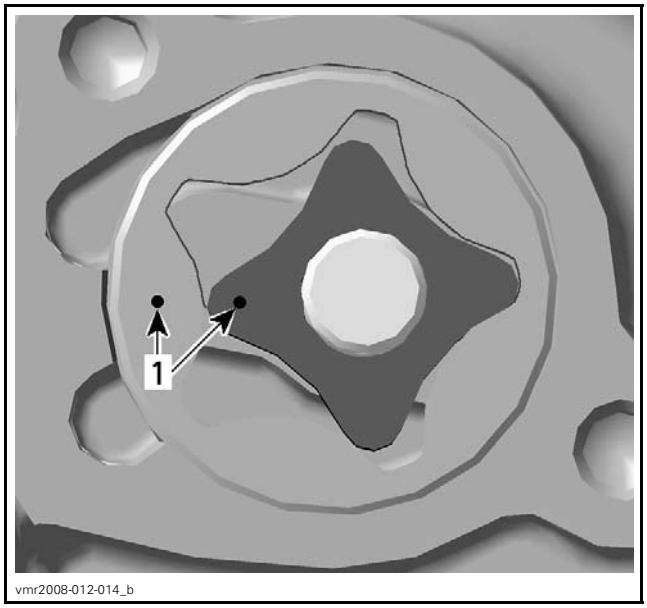

vmr2008-012-014_b

*TYPICAL*
*1. Marks on inner and outer rotor*

3. Install needle pin in oil pump shaft.

**NOTICE** **The oil pump shaft is not symmetrical, the longer side must be installed inward.**

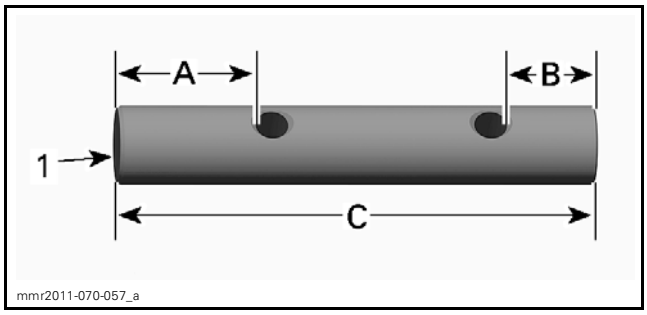


*1. Towards engine*

*A. 16.96 mm (.67 in)*
*B. 11.43 mm (.45 in)*
*C. 60.5 mm (2.38 in)*

4. Place inner rotor on the oil pump shaft. Lubricate oil pump shaft and inner rotor with engine oil.
5. Install oil pump assembly in the crankcase.

After installation of the remaining parts, check for smooth operation of the oil pump assembly and axial play of the oil pump shaft.

6. Fill up oil tank and check oil level. Refer to procedure in this subsection.

Start engine and make sure oil pressure is within specifications (refer to *ENGINE OIL PRESSURE TEST* in this subsection).

# OIL SUCTION PUMP MODULE

## Oil Suction Pump Module Location

The oil suction pump module is located in the cylinder block, behind the magneto cover.

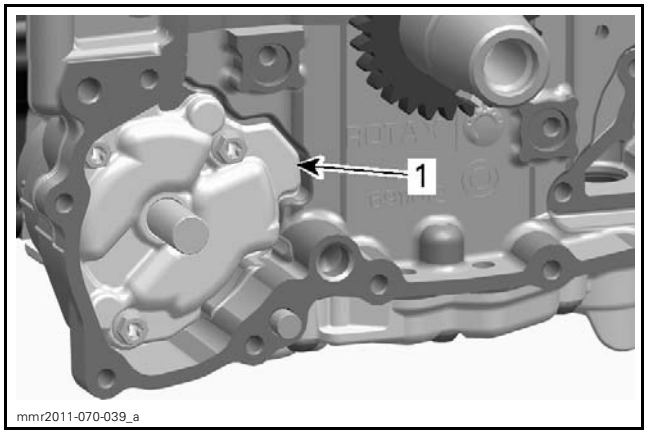


*1. Oil suction pump module*

## Disassembling the Oil Suction Pump Module

1. Remove *OIL PUMP DRIVE GEARS*, see procedure in this subsection.
2. Remove oil pump module cover.

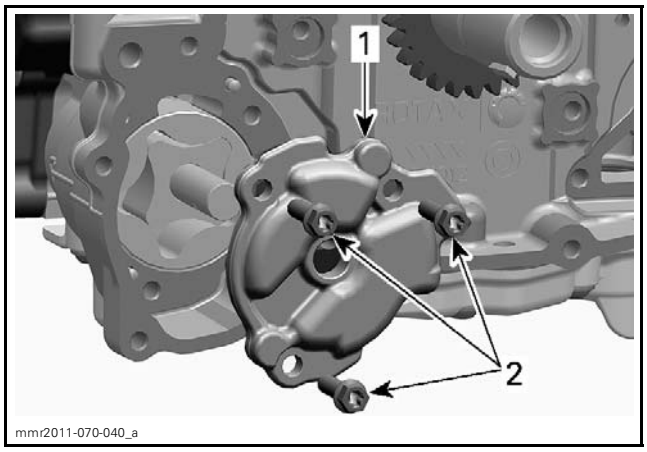


*1. Oil pump module cover*
*2. Retaining screws*

3. Disassemble the large oil suction pump as shown.

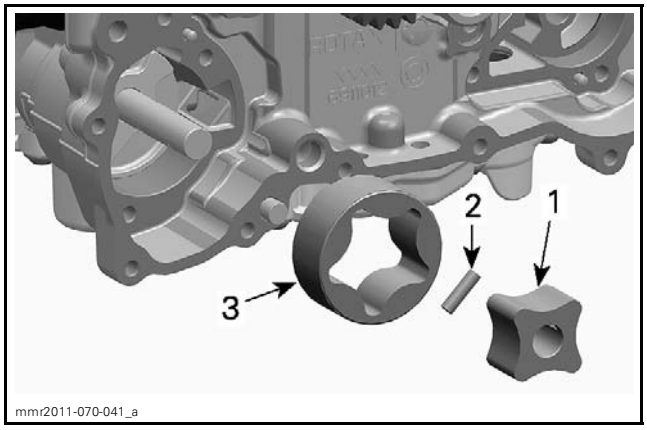


*1. Inner rotor*
*2. Needle pin*
*3. Outer rotor*

4. Disassemble the small oil suction pump as shown.

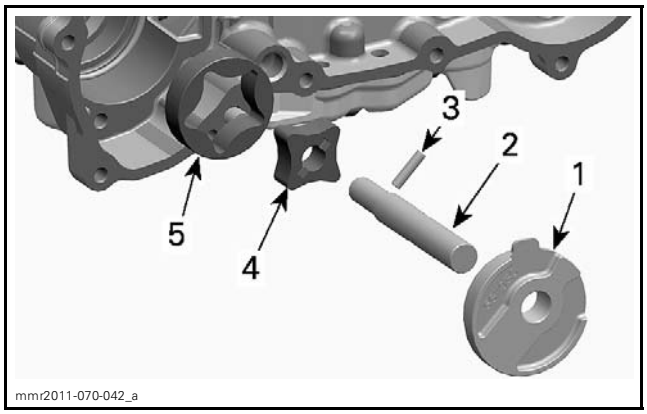


*1. Oil pump cover*
*2. Oil pump shaft*
*3. Needle pin*
*4. Inner rotor*
*5. Outer rotor*

5. Remove and discard the oil pump cover O-ring.

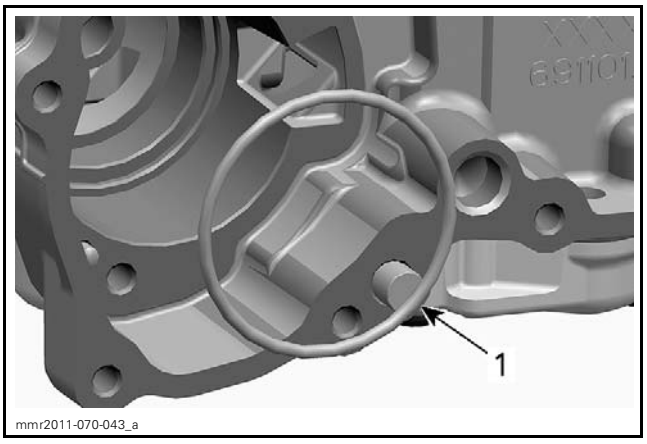


*1. Oil pump cover O-ring*

## Inspecting the Oil Suction Pumps

The inspection of both oil suction pumps is the same as for the oil pressure pump. Refer to *OIL PRESSURE PUMP* in this subsection.

## Assembling the Oil Suction Pump Module

The assembly is the reverse of the disassembly procedure. However, pay attention to the following.

1. Lubricate small oil suction pump outer rotor with engine oil.

**NOTICE** **When installing the oil pump rotors, make sure both marks are pointing toward the inside of the crankcase.**

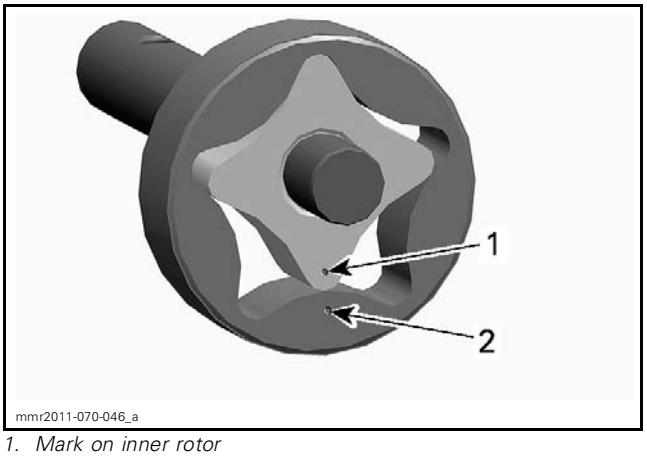


*1. Mark on inner rotor*
*2. Mark on outer rotor*

2. Install small oil suction pump outer rotor into crankcase oil pump bore.

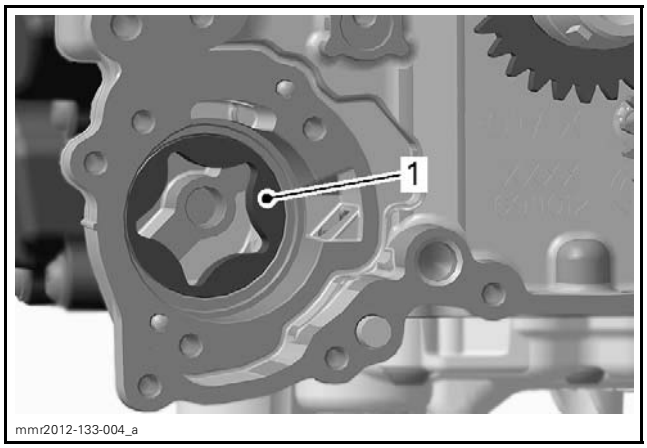


*1. Small oil suction pump outer rotor*

3. Install the needle pin in the bore of the oil pump shaft and place the small inner rotor on the shaft.

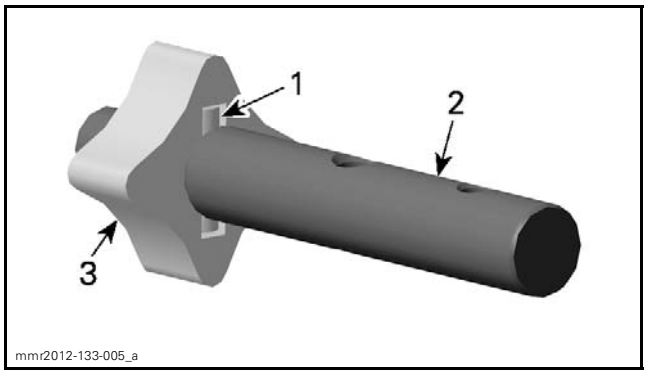


*1. Needle pin*
*2. Oil pump shaft*
*3. Small suction pump inner rotor*

4. Lubricate oil pump shaft and inner rotor with engine oil.
5. Install oil pump shaft assembly into the crankcase.

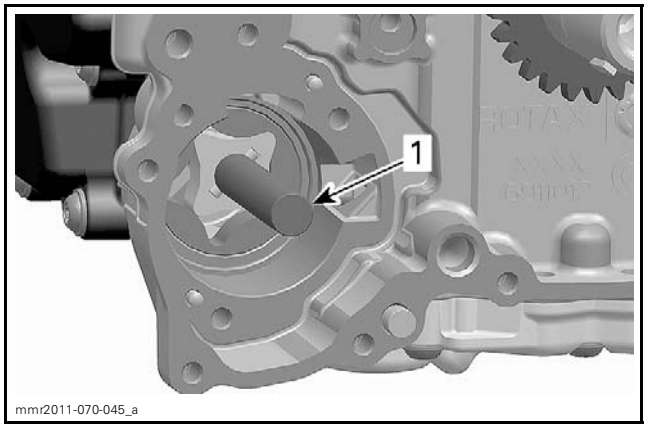


*1. Oil pump shaft with small oil suction pump*

6. Install a **NEW** oil pump cover O-ring.

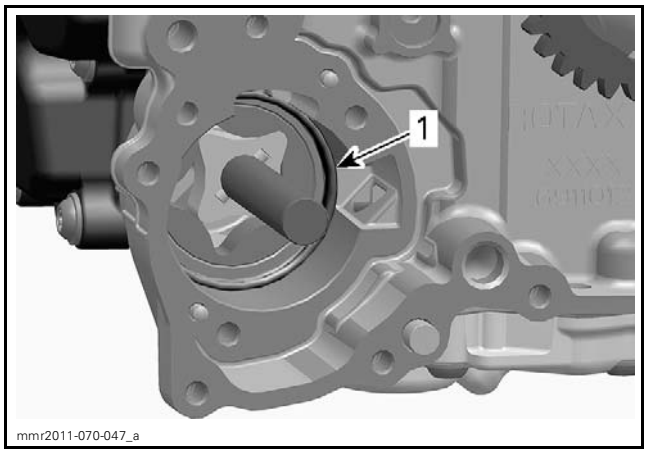


*1. Oil pump cover O-ring*

7. Lubricate both sides of the oil pump cover with engine oil.
8. Align tab of the oil pump cover with the upper recess in the crankcase. Push cover in until a click is heard, indicating the cover is properly installed.

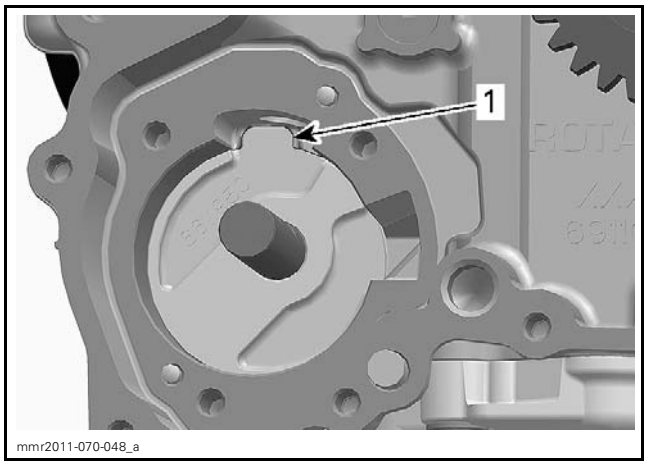


*1. Oil pump cover tab properly positioned*

9. Install large oil suction pump needle pin.
10. Install large oil suction pump inner rotor and outer rotor with the marks outwards.

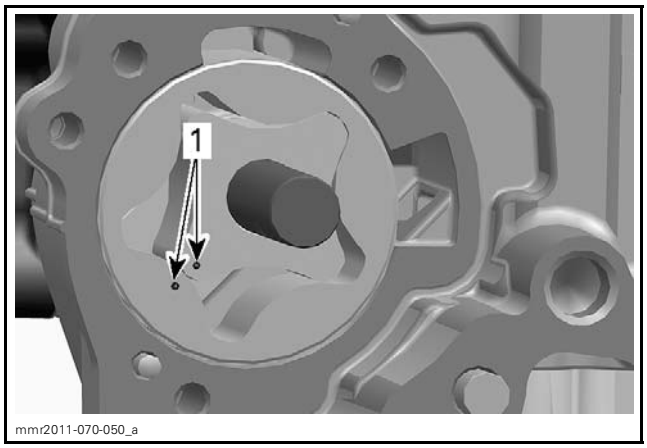


*1. Marks on inner and outer rotor*

11. Lubricate large oil suction pump parts with engine oil.
12. Install other removed parts.

After installation is complete, check for smooth operation of the oil pump assembly and axial play of the oil pump shaft.

13. Fill up oil tank and check oil level. Refer to procedure in this subsection.

Start engine and make sure oil pressure is within specifications (refer to *ENGINE OIL PRESSURE TEST* in this subsection).

# OIL SUMP COVER

## Oil Sump Cover Location

The oil sump cover is located on the engine bottom.

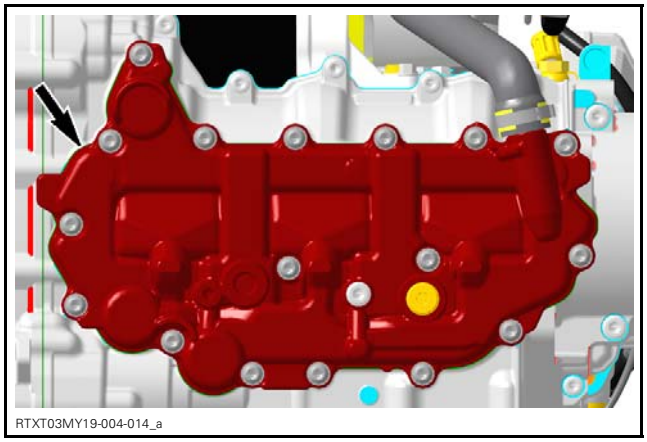


## Removing the Oil Sump Cover

1. Remove engine from vehicle. Refer to *ENGINE REMOVAL AND INSTALLATION* subsection.
2. Drain engine oil, refer to procedure in this subsection.

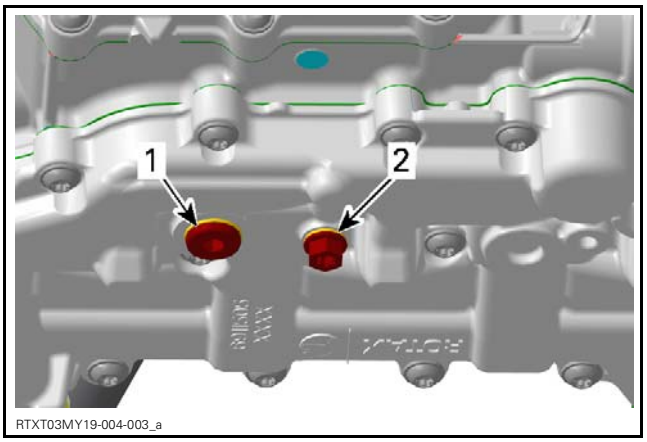


*1. Main drain plug*
*2. Secondary drain plug*

3. Remove clamp and turbo charger oil return hose.

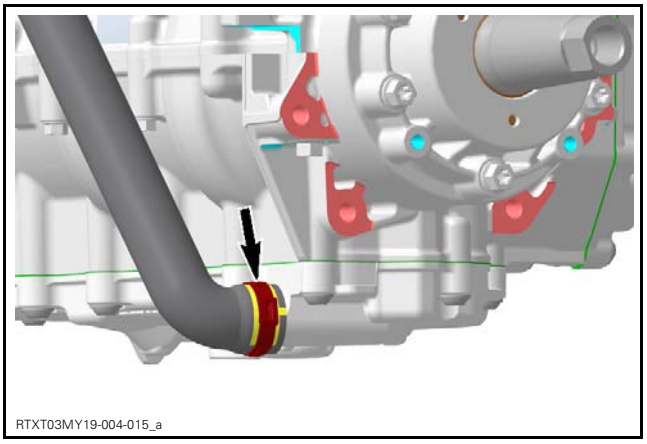


4. Unscrew oil sump cover retaining screws.
5. Remove oil sump cover. Discard gasket.
6. Remove and clean engine oil strainers.

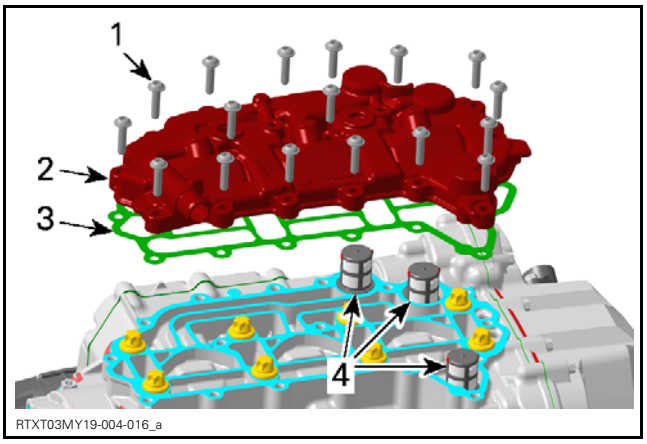


*1. Retaining screws*
*2. Oil sump cover*
*3. Gasket*
*4. Engine oil strainers*

## Inspecting the Oil Sump Cover

Clean oil sump cover and engine oil strainers with a part cleaner, then use an air gun to dry it.

Blow out the oil orifices and check if they are not clogged.

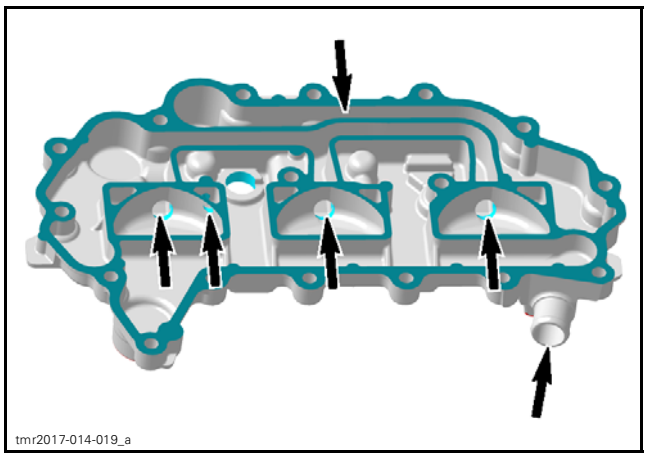


Check oil sump cover for cracks or other damage.

Check oil sump cover for flatness with straight edge.

Replace oil sump cover if necessary.

Check engine oil strainer for damage and change if necessary.

## Installing the Oil Sump Cover

1. Install a **NEW** oil sump cover gasket.
2. Install the strainers as shown.

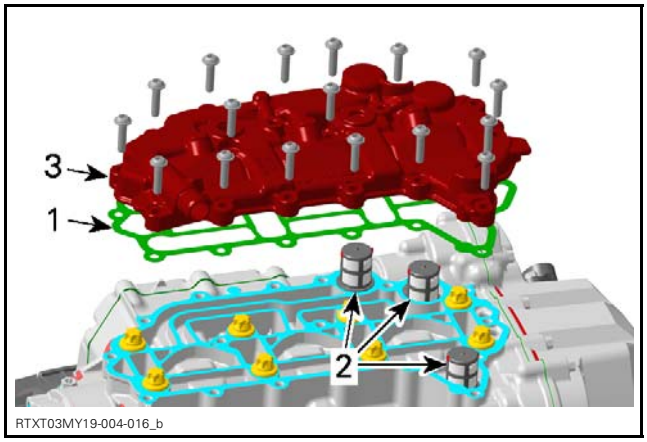


*1. Gasket*
*2. Oil strainers*
*3. Oil sump cover*

3. Install oil sump cover on engine, then tighten screws in two steps as follows:
   3.1 Tighten screws to the following specified torque using the specified sequence.

| TIGHTENING TORQUE | | |
|---|---|---|
| Oil sump cover screws | STEP A | 5 N•m ± 0.6 N•m (44 lbf•**in** ± 5 lbf•**in**) |

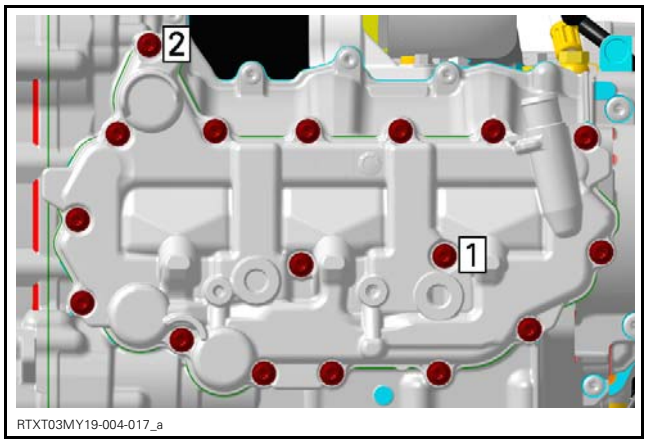


*TIGHTENING SEQUENCE STEP A*

3.2 Tighten screws to the following specified torque using the specified sequence.

| TIGHTENING TORQUE | | |
|---|---|---|
| Reused cylinder block | STEP B | 9 N•m ± 1 N•m (80 lbf•**in** ± 9 lbf•**in**) |
| New cylinder block | | 11 N•m ± 1 N•m (97 lbf•**in** ± 9 lbf•**in**) |

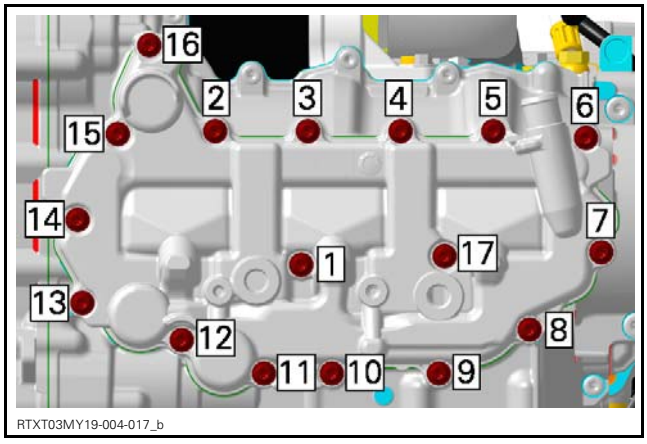


*TIGHTENING SEQUENCE STEP B*

4. Reinstall oil drain plugs. Refer to *ENGINE OIL REPLACEMENT*
5. Install engine in vehicle. Refer to *ENGINE REMOVAL AND INSTALLATION* subsection.
6. Fill up oil tank and check oil level. Refer to procedure in this subsection.

# COOLING SYSTEM

## SERVICE TOOLS

| Description | Part Number | Page |
|---|---|---|
| HANDLE | 420 877 650 | 77 |
| OIL SEAL PUSHER | 529 036 210 | 77 |
| ROTARY SEAL INSTALLER | 529 036 211 | 77–78 |
| TEST CAP | 529 035 991 | 72 |
| VACUUM/PRESSURE PUMP | 529 021 800 | 72 |

Midwest Manuals
Green Manuals
Paperless Manuals
For a Better Tomorrow
www.green-manuals.com

## SERVICE PRODUCTS

If you bought this manual from any other seller please leave them NEGATIVE feedback and notify me at bestshopmanuals@gmail.com

| Description | Part Number | Page |
|---|---|---|
| DOW CORNING 111 | 413 707 000 | 74 |
| SUPER LUBE GREASE | 293 550 030 | 77 |

# ENGINE COMPONENTS

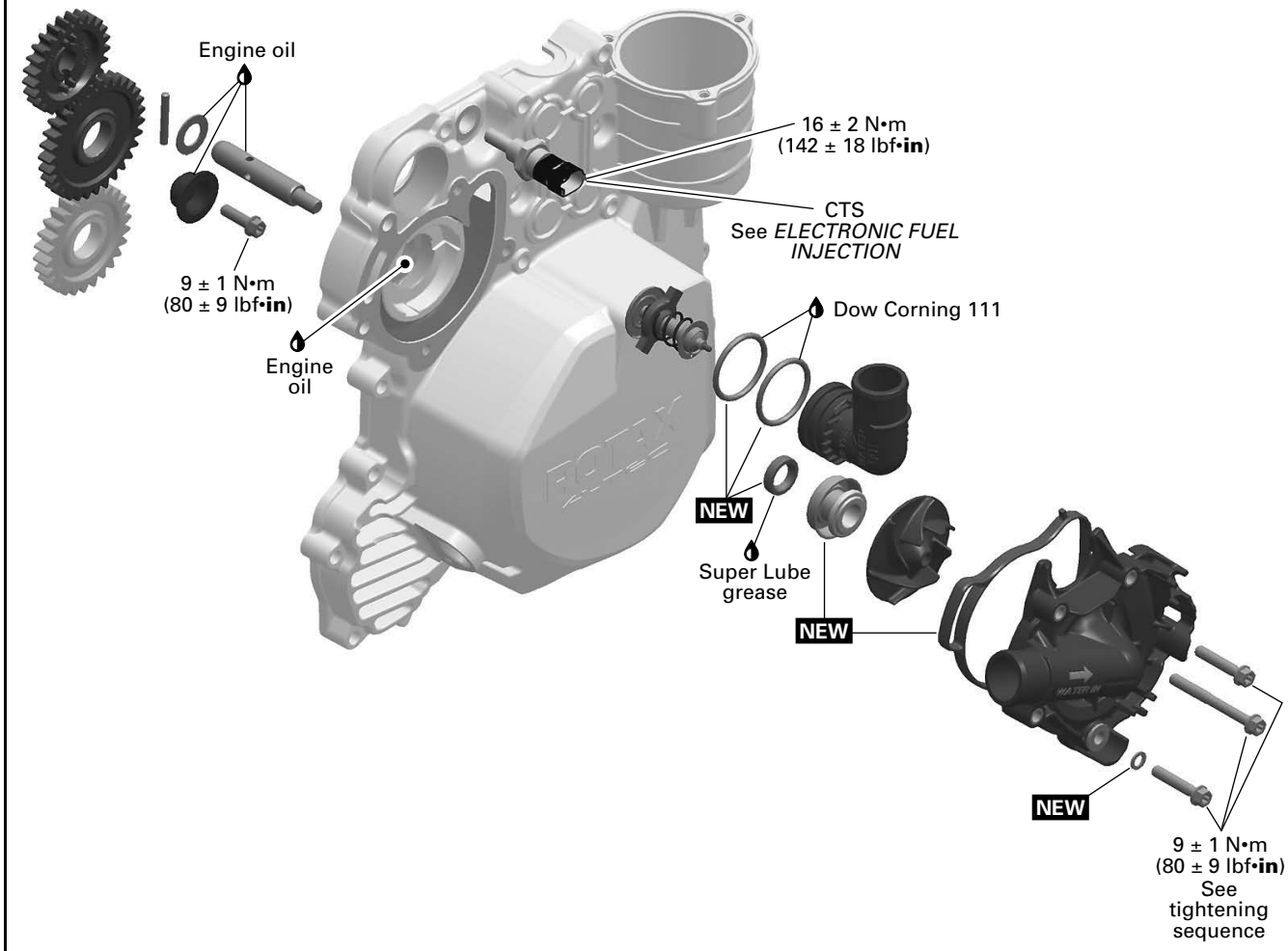


NEW = Component must be replaced when removed

mmr2011-071-200_e

# VEHICLE COMPONENTS

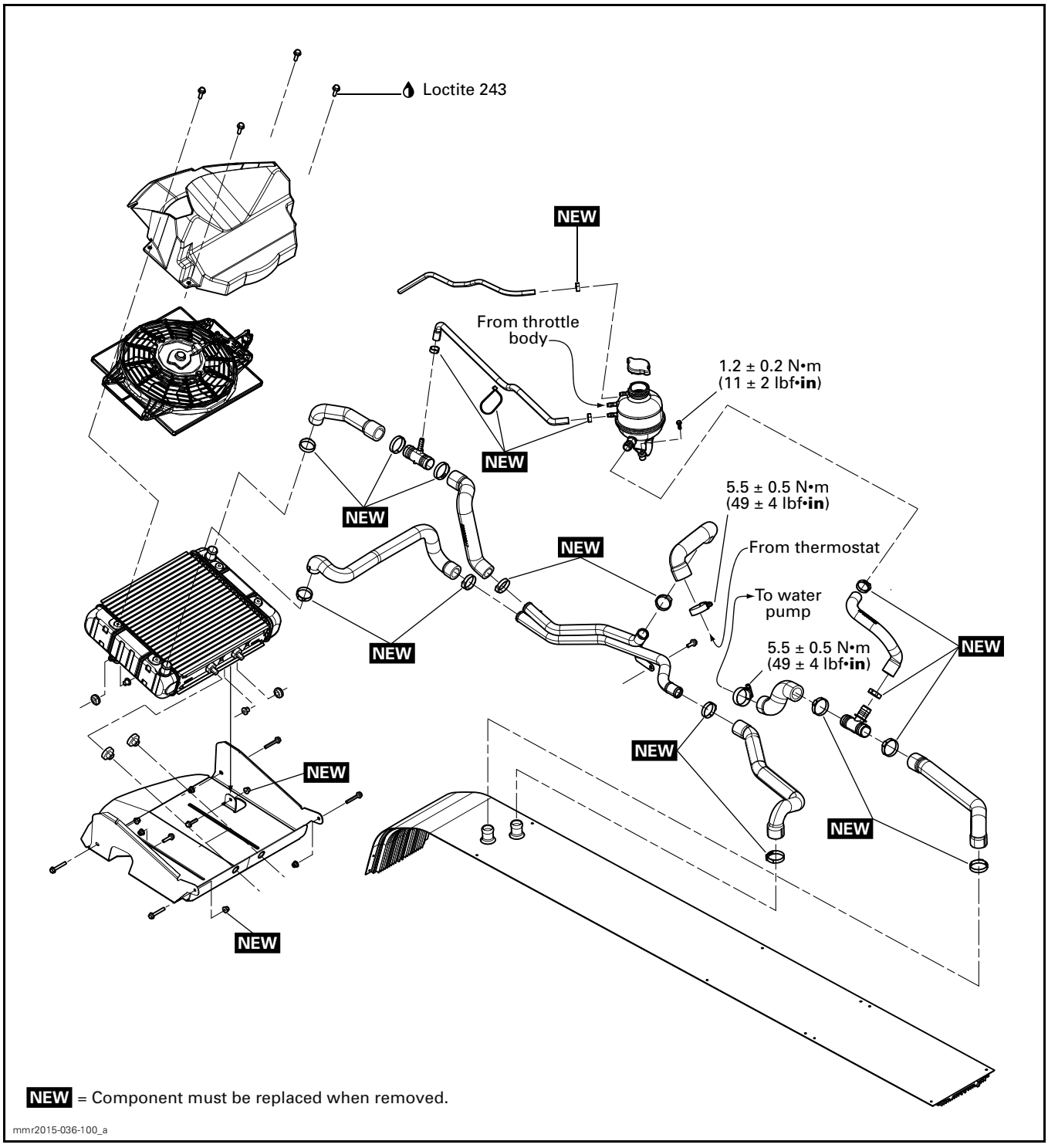

# GENERAL

For a better understanding, some illustrations were taken with engine out of vehicle.

NOTE: It is a good practice to check for fault codes using B.U.D.S. software as a first troubleshooting step. Refer to the *DIAGNOSTIC AND FAULT CODES* subsection.

**⚠ WARNING**

**To avoid potential burns, do not remove the coolant tank cap or loosen the cooling drain plug if the engine is hot.**

# INSPECTION

## COOLING SYSTEM LEAK TEST

NOTE: This test confirms if there is a leak in the cooling system, including the engine.

Pressurize cooling system through coolant reservoir.

| REQUIRED TOOLS | |
|---|---|
| TEST CAP (P/N 529 035 991) | |
| VACUUM/PRESSURE PUMP (P/N 529 021 800) | |

| COOLING SYSTEM LEAK TEST |
|---|
| 100 kPa (15 PSI) |

mmr2015-016-103

*TYPICAL*

If pressure drops, check all hoses and engine for coolant leaks. Spray a soap/water solution and look for air bubbles.

Check the leak indicator hole for an oil or coolant leak.

NOTE: In general leaking coolant indicates a damaged rotary seal. Leaking oil indicates a damaged oil seal. If either seal is leaking, both seals must be replaced at the same time. Refer to *WATER PUMP* in this subsection.

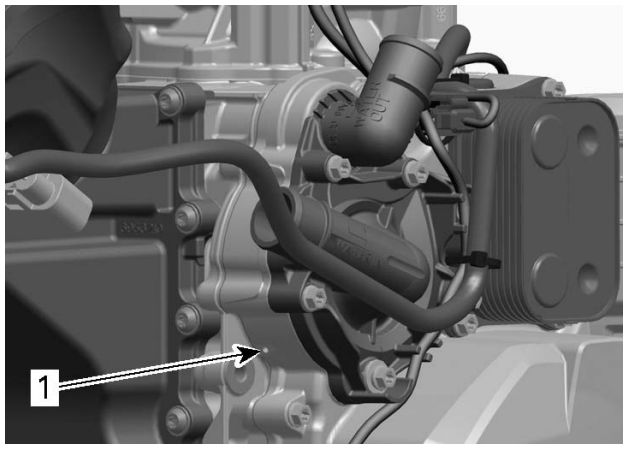


mmr2011-071-029_a

*1. Leak indicator hole*

# TROUBLESHOOTING

The following is provided to help in diagnosing the probable source of troubles. It is a guideline and should not be assumed to show all causes for all problems.

Always check for fault codes. If a fault code is detected, service the fault code first.

## ENGINE OVERHEATING

1. Low coolant level.
   - *Refill and check for leaks (coolant leaking out of leak indicator hole, hoses or clamps missing or defective, or cylinder head gaskets leaks). Repair or replace.*
2. Dirty heat exchanger.
   - *Clean heat exchanger fins. Replace heat exchanger as required.*
3. Air in cooling system.
   - *Refill and bleed cooling system.*
4. Defective thermostat (does not open when engine is warm up).
   - *Replace thermostat.*
5. Defective water pump.
   - *Inspect and replace defective components.*
6. Coolant temperature sensor defective.
   - *Check and replace.*

7. Wrong coolant concentration.
   - *Check and adjust coolant concentration according to BRP's recommendations or replace coolant.*
8. Defective coolant reservoir cap.
   - *Replace cap.*
9. Defective cooling fan.
   - *Check cooling fan motor operation.*
   - *Check fuse and relay of cooling fan motor.*
   - *Check wiring harness of cooling fan motor.*
10. Snow guard is too high.
   - *Check and adjust rear suspension.*

# PROCEDURES

## COOLANT RESERVOIR CAP

### Coolant Reservoir Cap Test

Using a pressure cap tester, check the efficiency of coolant reservoir cap. If the cap does not meet specification, replace the cap.

| CAP OPENING PRESSURE |
|---|
| 110 kPa (16 PSI) |

## COOLANT RESERVOIR

### Coolant Reservoir Removal

1. Install hose pinchers on coolant hoses attached to reservoir.
2. Siphon coolant from reservoir.
3. Disconnect coolant hoses from reservoir.
4. Remove coolant reservoir from vehicle.

### Coolant Reservoir Installation

Reverse the removal procedure. However, pay attention to the following.

Refill and bleed cooling system as described in *PERIODIC MAINTENANCE PROCEDURES* subsection.

## THERMOSTAT

### Thermostat Location

The thermostat is located on engine MAG side.

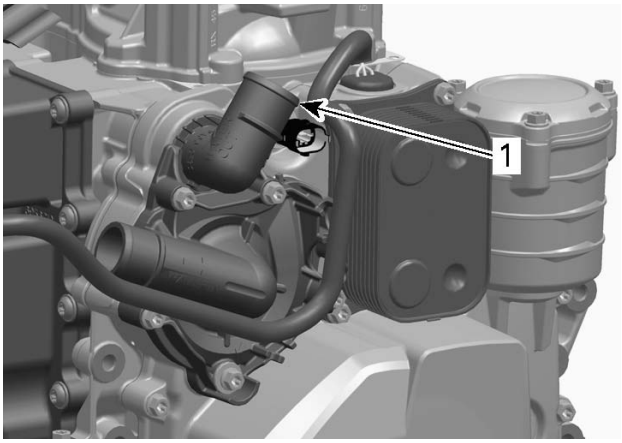


mmr2011-071-005_a

*1. Thermostat housing*

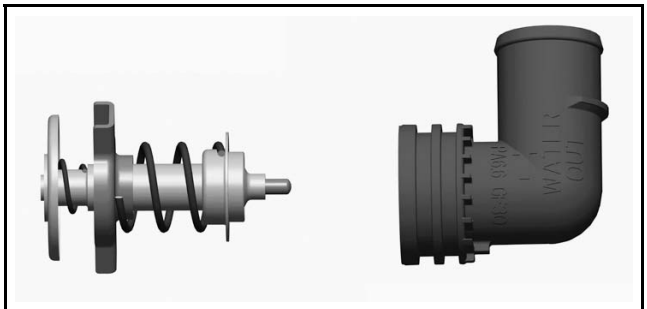

mmr2011-071-006

### Thermostat Access

Remove upper RH side panel.

### Thermostat Removal

1. Drain engine coolant. Refer to *PERIODIC MAINTENANCE PROCEDURES* subsection.
2. Disconnect outlet hose from thermostat housing.

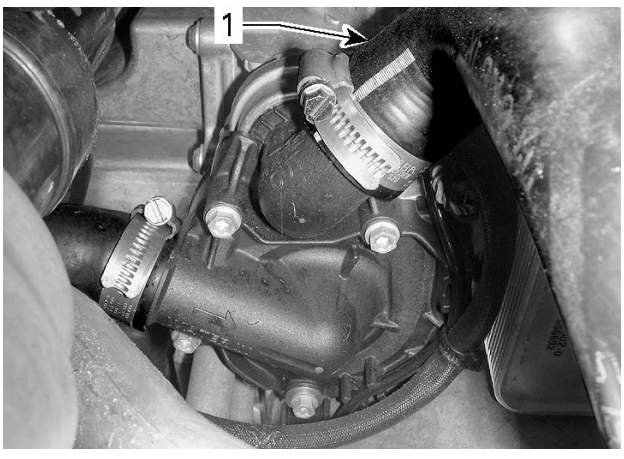


mmr2011-179-001_a

*1. Thermostat outlet hose*

3. Proceed with *WATER PUMP HOUSING REMOVAL*. See procedure in this subsection.
4. Remove thermostat housing then thermostat.

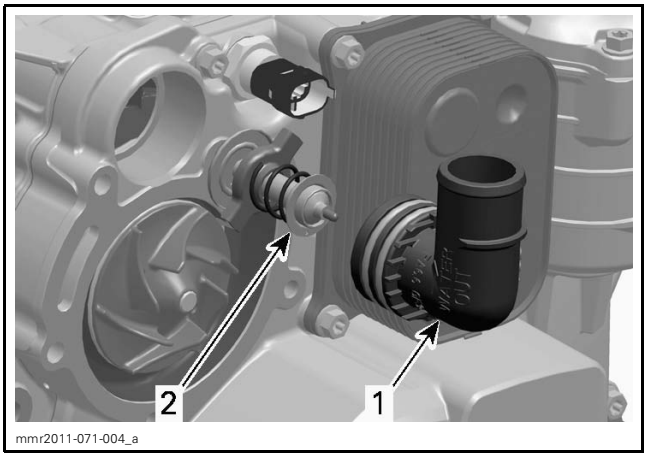


*1. Thermostat housing*
*2. Thermostat*

NOTE: Use shop rags to catch any spilled engine coolant.

## Thermostat Test

To check thermostat, put it in water and heat water.

| THERMOSTAT TEMPERATURE | |
|---|---|
| Starts to open | 75°C (167°F) |
| Fully open | 95°C (203°F) |

Replace thermostat if out of specification.

## Thermostat Installation

Reverse the removal procedure, however pay attention to the following.

Install NEW O-rings on thermostat housing.

Lubricate O-rings.

| THERMOSTAT HOUSING O-RING | |
|---|---|
| Service product | DOW CORNING 111 (P/N 413 707 000) |

Insert thermostat in thermostat housing.

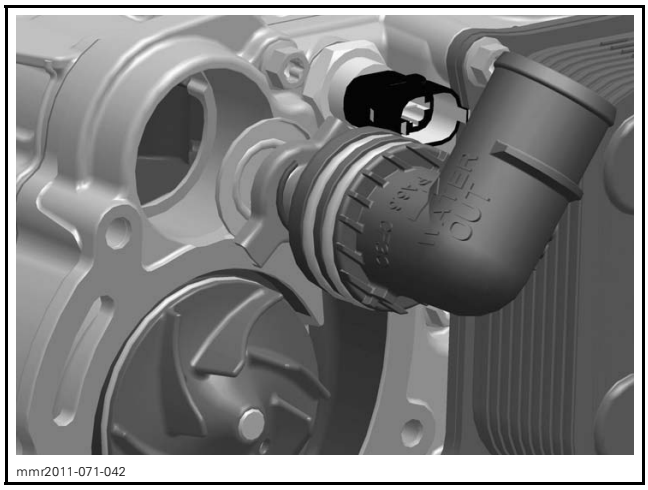


Align both tabs of thermostat with the recess in the magneto cover.

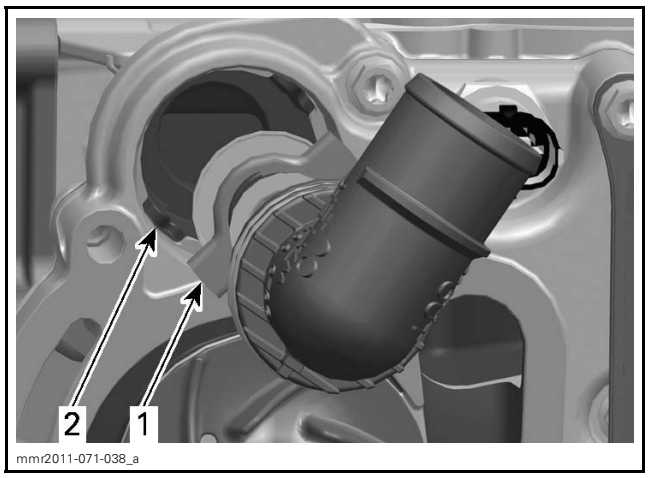


*1. Thermostat tabs*
*2. Magneto cover recess*

Install water pump housing, refer to *WATER PUMP HOUSING INSTALLATION* in this subsection.

Refill and bleed cooling system. Refer to *PERIODIC MAINTENANCE PROCEDURES* subsection.

# WATER PUMP

## Water Pump Location

The water pump is located on engine MAG side.

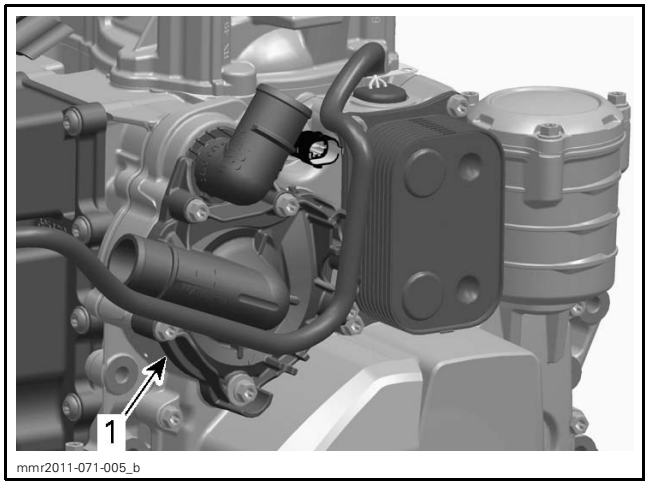


*1. Water pump*

## Water Pump Access

Remove RH side panels.

## Water Pump Housing Removal

1. Drain engine coolant. Refer to *PERIODIC MAINTENANCE PROCEDURES* subsection.
2. Disconnect outlet hose from thermostat housing.
3. Disconnect inlet hose from water pump.

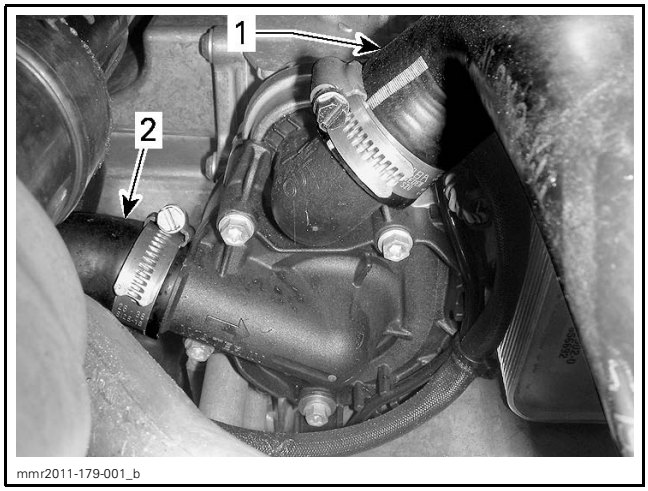


*1. Thermostat outlet hose*
*2. Water pump inlet hose*

4. Remove both locking ties securing magneto wires.

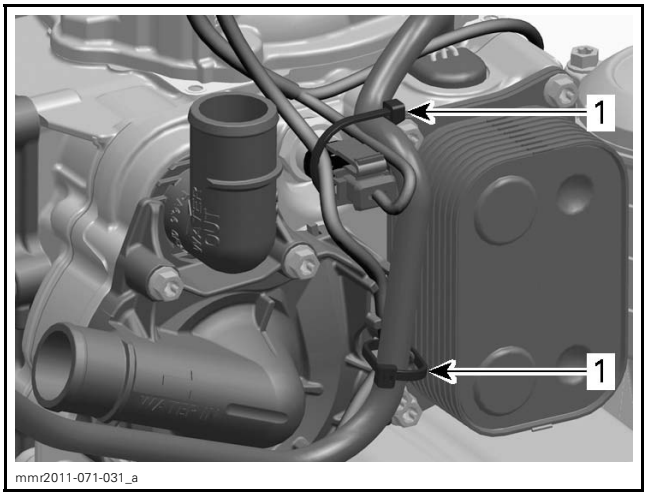


*1. Locking ties*

5. Remove retaining screws of water pump housing.
6. Discard sealing washer.
7. Remove water pump housing from magneto cover.

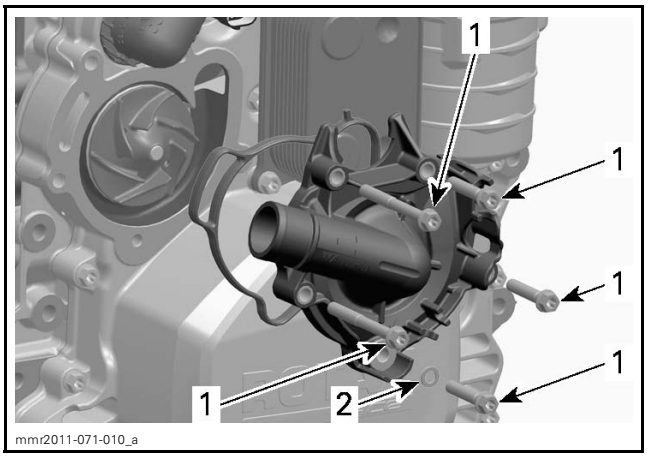


*1. Retaining screws*
*2. Sealing washer*

NOTE: Use shop rags to catch any spilled engine coolant.

## Water Pump Disassembly

1. Unscrew impeller counterclockwise using appropriate pliers.

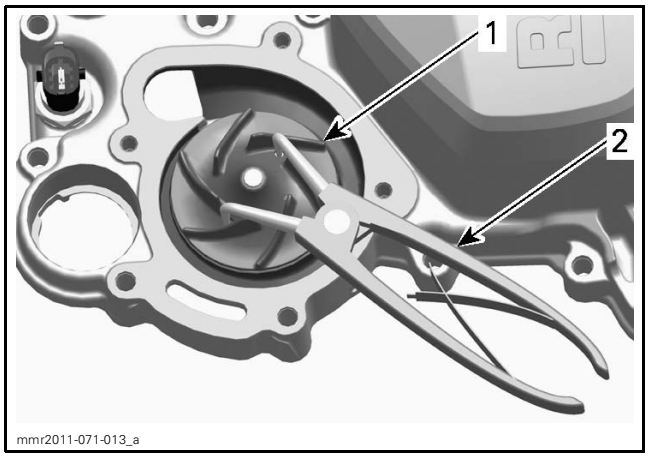


*1. Impeller*
*2. Pliers*

2. Remove magneto cover. Refer to *MAGNETO AND STARTER* subsection.
3. Remove the following components from magneto cover:
   – Water pump gear
   – Needle pin
   – Thrust washer.

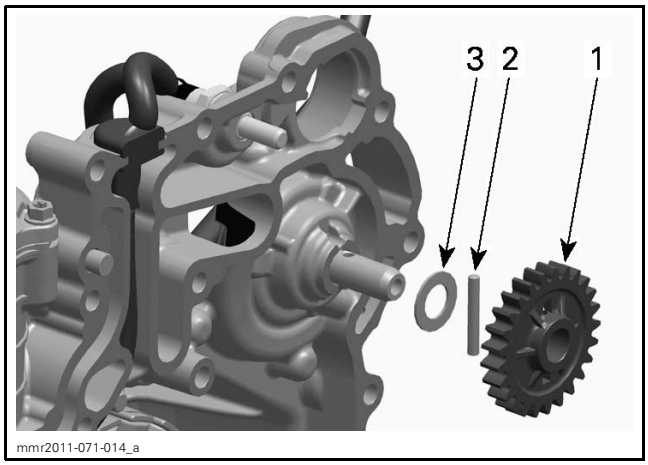


*1. Water pump gear*
*2. Needle pin*
*3. Thrust washer*

4. Remove water pump shaft using a plastic mallet.

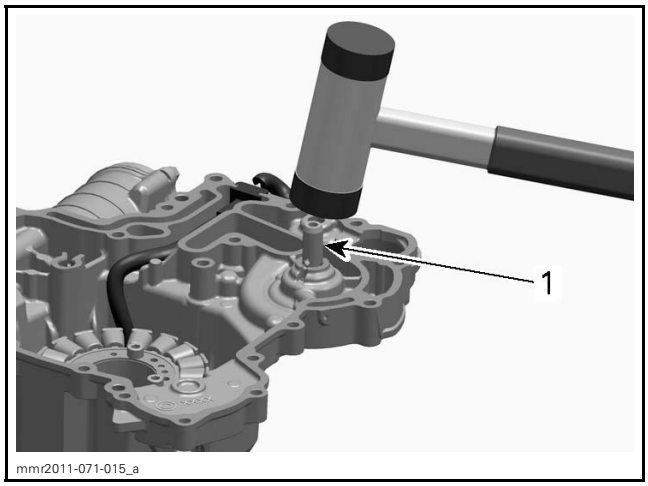


*1. Water pump shaft*

5. Remove the following components from magneto cover:
   – Oil seal
   – Remaining parts of rotary seal.

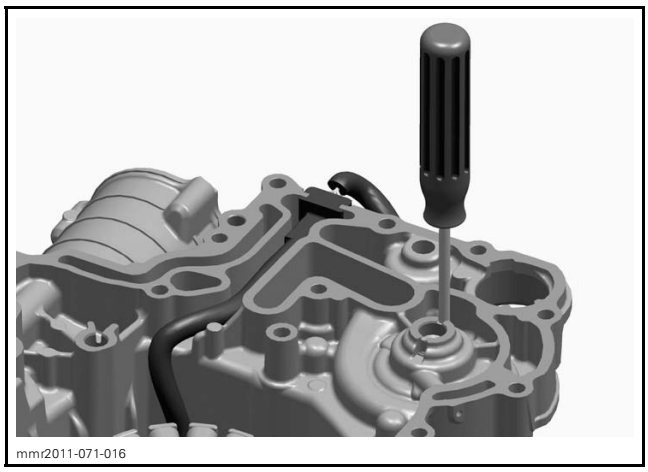


**NOTICE** **Be careful not to damage the surface of the rotary seal bore in the magneto cover.**

6. Separate rotary seal from water pump shaft.

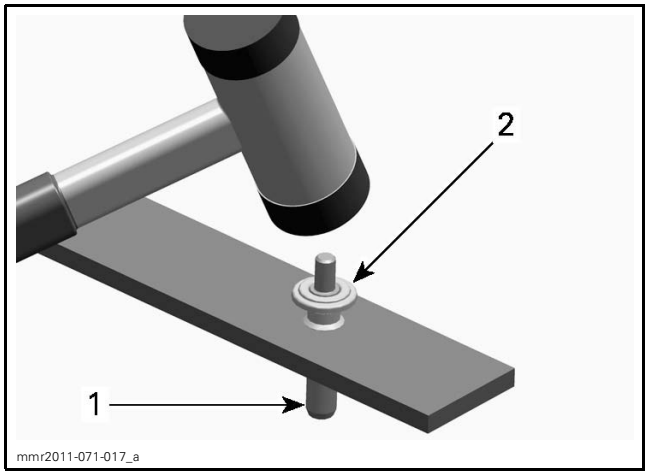


*1. Water pump shaft*
*2. Rotary seal*

## Water Pump Inspection

Check area of water pump housing for cracks or other visible damage.

Check water pump gear for wear or broken teeth.

Check if housing gasket is brittle, hard or damaged.

Check water pump shaft for visible damage.

Replace parts if necessary.

## Water Pump Assembly

NOTE: Always replace oil seal and rotary seal at the same time.

1. Clean rotary seal surface from old sealant.

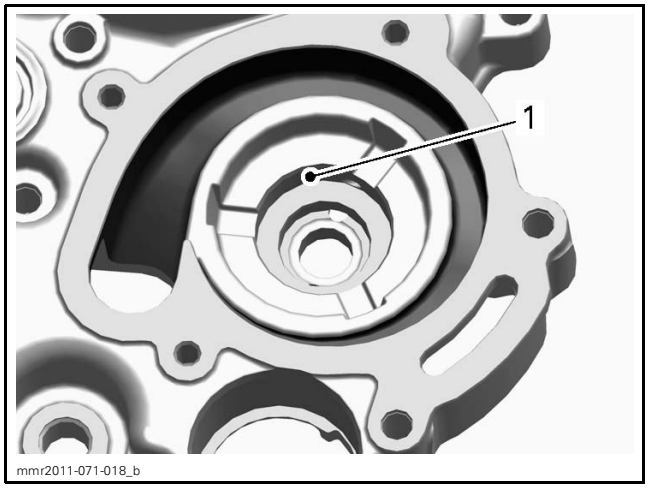


*1. Clean surface*

2. Apply engine oil on the press fit area of oil seal.

***NOTICE*** **Never use engine oil on the press fit area of the rotary seal.**

3. Install NEW oil seal in magneto cover.

| REQUIRED TOOLS | |
|---|---|
| OIL SEAL PUSHER (P/N 529 036 210) | |
| HANDLE (P/N 420 877 650) | |

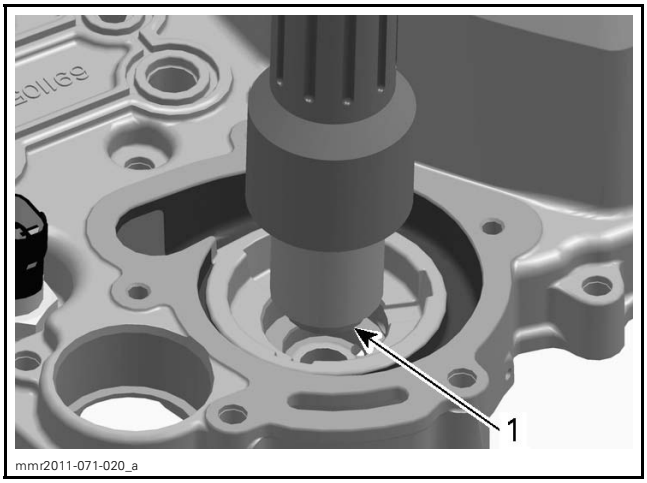


*1. Oil seal*

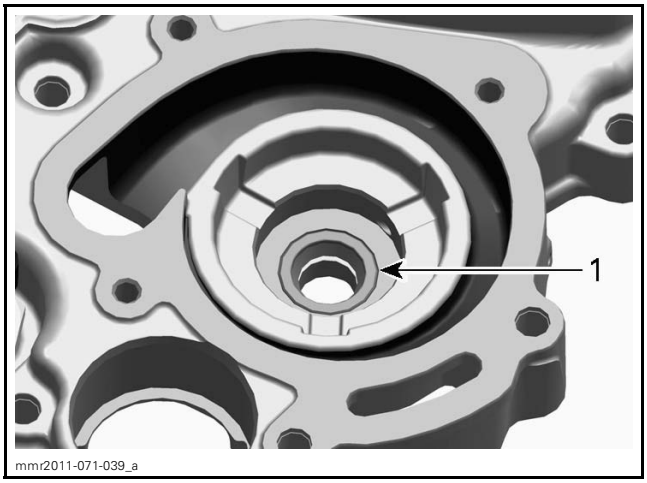


*1. Oil seal correctly installed*

4. Lubricate sealing lip of the oil seal.

| OIL SEAL | |
|---|---|
| Service product | SUPER LUBE GREASE (P/N 293 550 030) |

5. Install NEW rotary seal on magneto cover using a press.

NOTE: Prior to installing, ensure that press fit sealing of rotary seal is not damaged.

| REQUIRED TOOL | |
|---|---|
| Press | |
| ROTARY SEAL INSTALLER (P/N 529 036 211) | |

**NOTICE** Never use a hammer for rotary seal installation. Only use a press to avoid damaging the ceramic component.

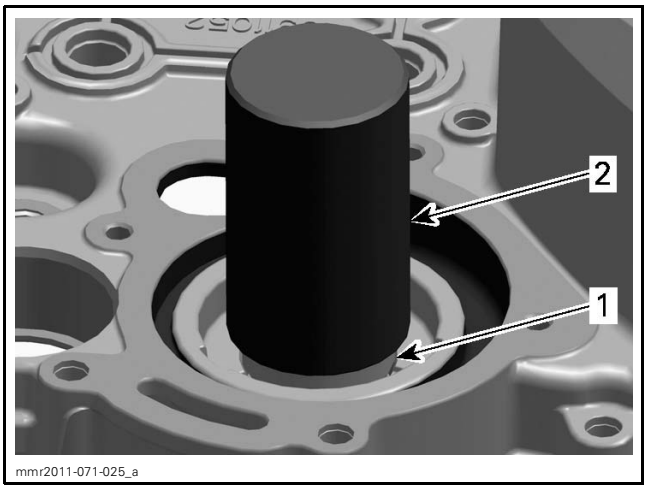


1. *Rotary seal*
2. *Rotary seal installer*

6. Assemble the following components onto water pump shaft.
   – Needle pin
   – Thrust washer.

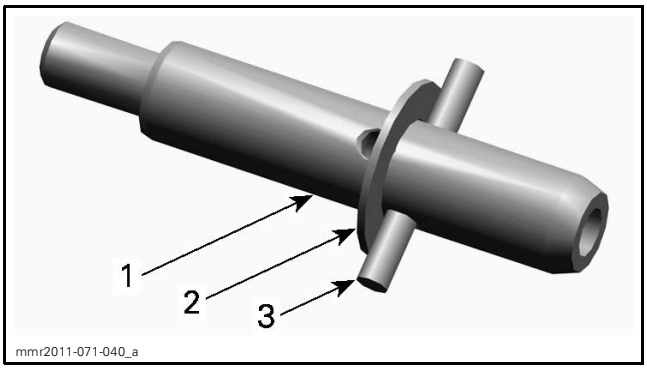


1. *Water pump shaft*
2. *Thrust washer*
3. *Needle pin*

7. Slide water pump shaft into rotary seal using a press.

NOTE: To avoid damaging the rotary seal and to achieve the proper preload support the rotary seal with the ROTARY SEAL INSTALLER (P/N 529 036 211).

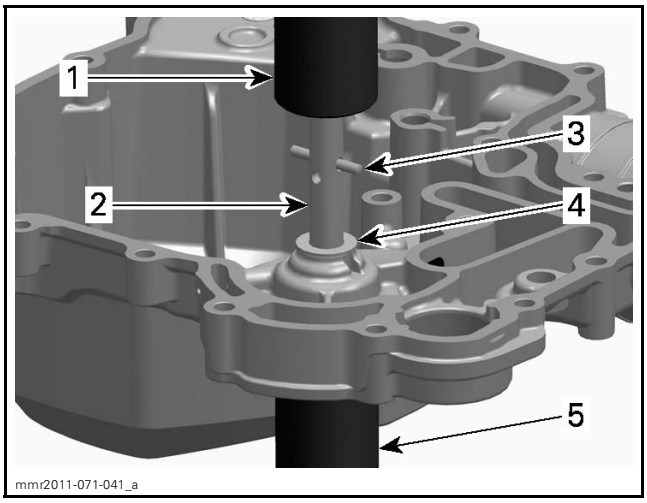


1. *Press*
2. *Water pump shaft*
3. *Needle pin*
4. *Thrust washer*
5. *Rotary seal installer*

8. Carefully press water pump shaft until needle pin touches thrust washer.

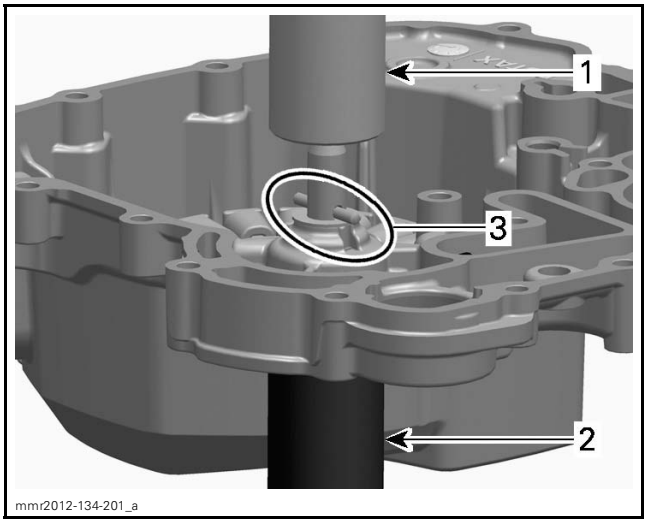


1. *Press*
2. *Rotary seal installer*
3. *Needle pin touches thrust washer*

**NOTICE** Never use a hammer to install water pump shaft into rotary seal.

NOTE: After installation, water pump shaft must rotate freely.

9. Screw impeller clockwise using appropriate pliers.

**NOTICE** Be careful not to damage the impeller vanes during its installation.

10. Install magneto cover. Refer to *MAGNETO AND STARTER* subsection.

## Water Pump Housing Installation

Reverse the removal procedure. However, pay attention to the following.

***NOTICE*** **When installing the water pump housing, ensure the NEW gasket is precisely positioned in the pump housing groove to prevent leakage.**

Install a NEW sealing washer on drain screw.

Tighten water pump housing retaining screws as per following procedure.

| WATER PUMP HOUSING SCREWS | |
|---|---|
| Tightening torque | 9 N•m ± 1 N•m (80 lbf•**in** ± 9 lbf•**in**) |

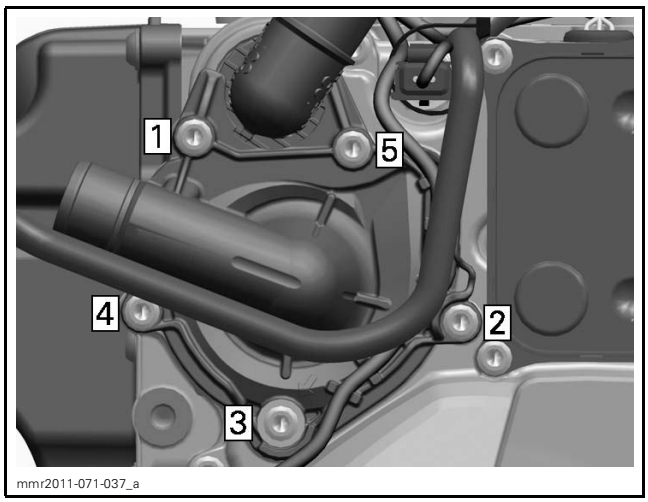


*TIGHTENING SEQUENCE*

Turn thermostat housing to proper position.

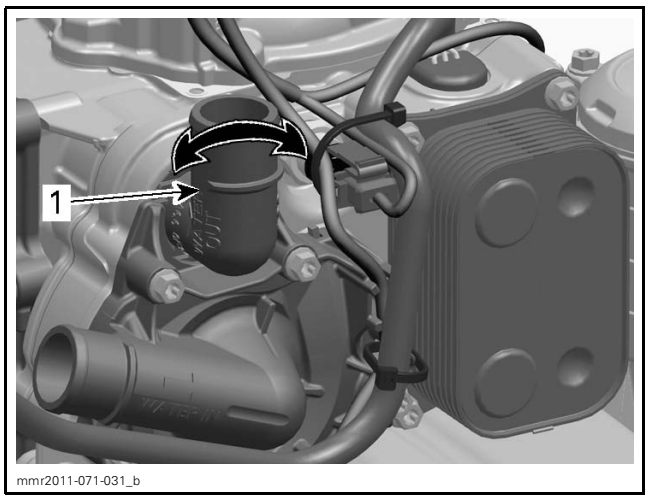


*1. Thermostat housing*

Tighten hose clamps to specification.

| COOLANT HOSE CLAMPS | |
|---|---|
| Tightening torque | 5.5 N•m ± 0.5 N•m (49 lbf•**in** ± 4 lbf•**in**) |

Install remaining parts. Refer to their applicable subsection.

# WATER PUMP DRIVE GEAR

## Water Pump Drive Gear Location

The water pump drive gear is located behind the magneto cover.

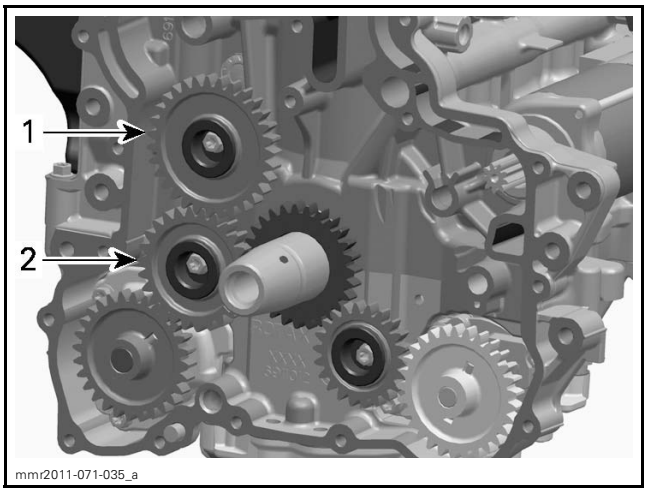


*1. Water pump drive gear (31 teeth)*
*2. Intermediate gear, refer to LUBRICATION SYSTEM*

## Water Pump Drive Gear Access

Remove magneto cover. Refer to *MAGNETO AND STARTER* subsection.

## Water Pump Drive Gear Removal

1. Remove screw securing water pump drive gear.
2. Remove bearing sleeve.
3. Slide off intermediate gear.

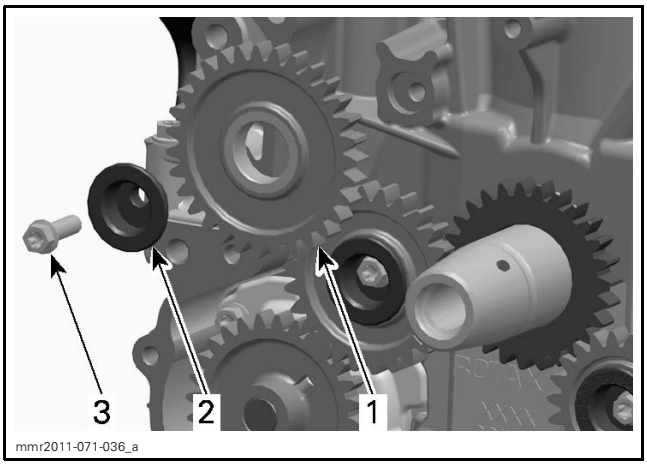


*1. Water pump drive gear (31 teeth)*
*2. Bearing sleeve*
*3. M6 x 20 screw*

### Water Pump Drive Gear Inspection

Inspect gear for wear or other damage.

Replace gear if necessary.

### Water Pump Drive Gear Installation

Reverse the removal procedure. However, pay attention to the following.

Apply engine oil on bearing sleeve.

Tighten water pump drive gear retaining screw to specification.

| WATER PUMP DRIVE GEAR RETAINING SCREW | |
|---|---|
| Tightening torque | 9 N•m ± 1 N•m (80 lbf•**in** ± 9 lbf•**in**) |

## HEAT EXCHANGER

### Heat Exchanger Cleaning and Inspection

Remove all debris between heat exchanger fins.

Check if heat exchanger fins are damaged. Replace if necessary.

NOTE: A heat exchanger with many broken fins does not work properly.

### Heat Exchanger Removal

1. Drain cooling system, refer to *PERIODIC MAINTENANCE PROCEDURES* subsection.
2. Remove engine, refer to *ENGINE REMOVAL AND INSTALLATION* subsection.
3. Remove fuel tank. Refer to *FUEL TANK AND FUEL PUMP* subsection.
4. Remove rear suspension. Refer to the *REAR SUSPENSION (SC-5U)* subsection.
5. Disconnect coolant hoses from heat exchanger.
6. Drill or grind all rivets retaining the heat exchanger to the tunnel. Refer to *FRAME* subsection for drilling procedure.

NOTE: When pushing the rivets out, support the frame around the rivet with a socket on the opposite side to prevent the frame from warping.

7. Remove heat exchanger from the vehicle.

### Heat Exchanger Installation

Reverse the removal procedure.

Refill cooling system as described in *PERIODIC MAINTENANCE PROCEDURES* subsection.

## FRONT AIR COOLED RADIATOR

### Radiator Access

Refer to *BODY* subsection and remove the following:

– Upper and lower side panels (both sides)
– Hood
– Upper bottom pan panels (both sides)
– Front grill.

### Radiator Removal for Access

NOTE: It is not necessary to disconnect or disassemble radiator when removed for access.

1. Remove body parts listed in *RADIATOR ACCESS*.
2. Remove the fasteners that secure the radiator support plate to the front bumper.

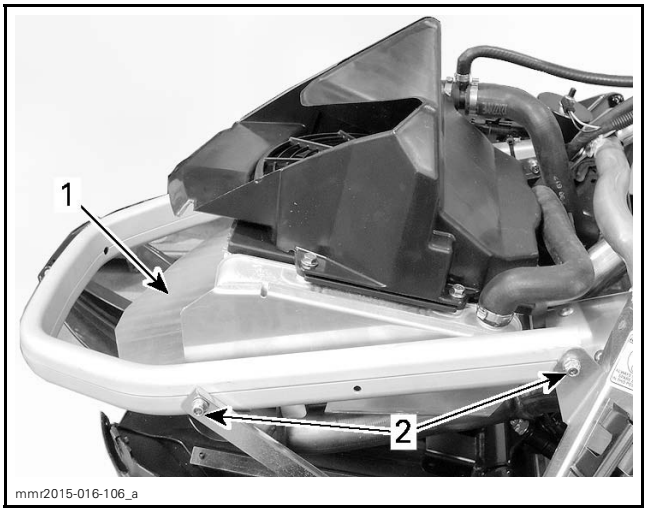


*LEFT SIDE ILLUSTRATED, RIGHT SIMILAR*
*1. Radiator support plate*
*2. Screws and nuts to remove (both sides)*

3. Move radiator to RH side of vehicle.

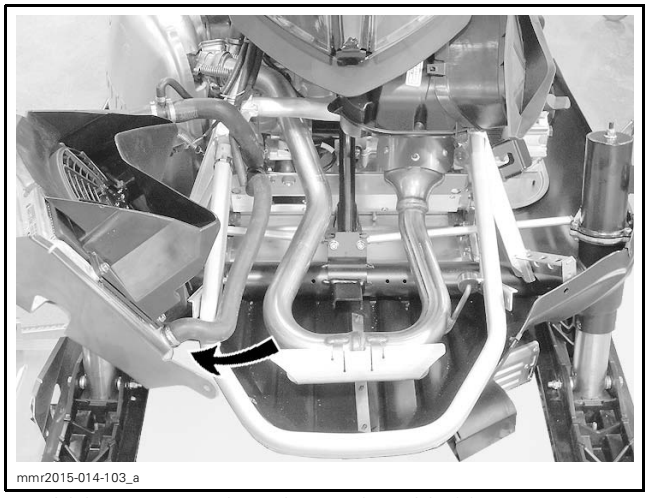
mmr2015-014-103_a

*AIR COOLED RADIATOR MOVED FOR ACCESS*

## Radiator Removal for Replacement

1. Remove body parts listed in *RADIATOR ACCESS*.
2. Drain cooling system, Refer to *PERIODIC MAINTENANCE PROCEDURES* subsection.
3. Disconnect radiator cooling fan connector.

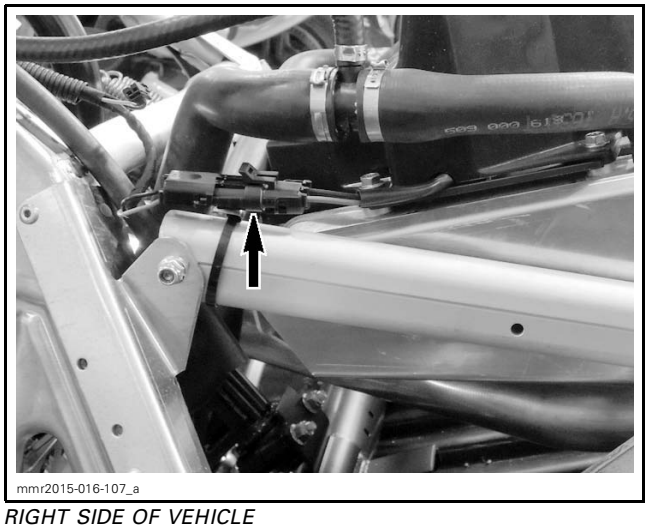
mmr2015-016-107_a

*RIGHT SIDE OF VEHICLE*

4. Disconnect coolant hoses from radiator. Discard Oetiker clamps.

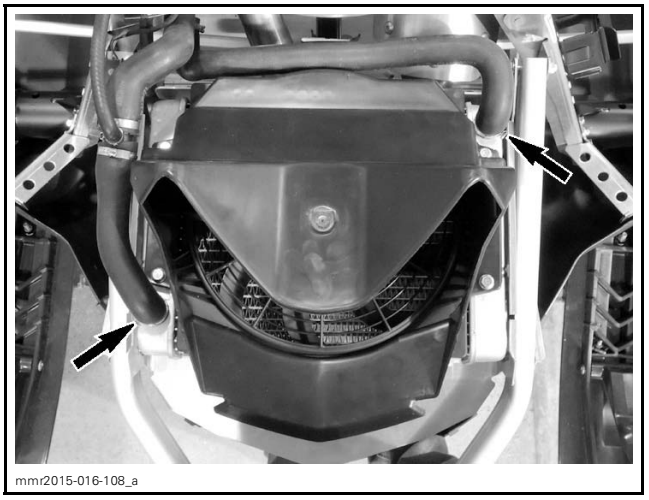
mmr2015-016-108_a

5. Remove screws retaining the the radiator to the radiator support.

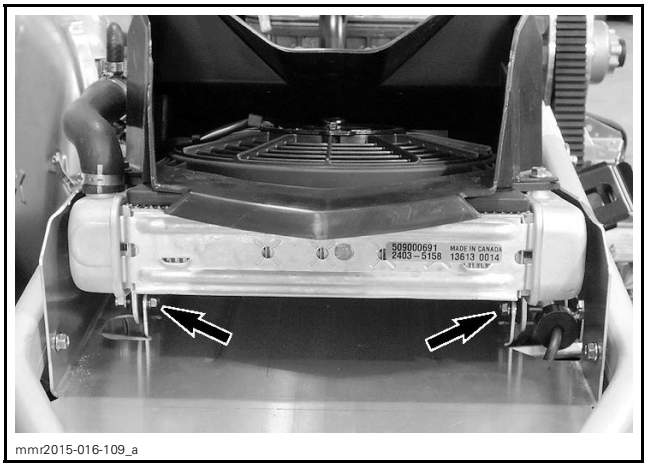
mmr2015-016-109_a

6. At the back of the fan shroud, remove the radiator hose from its support.

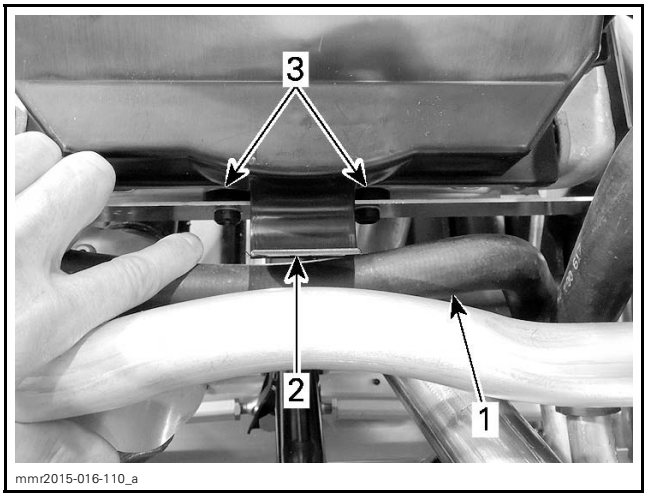

mmr2015-016-110_a

1. *Radiator hose*
2. *Hose support on fan shroud*
3. *Grommets in radiator support*

7. Pull radiator forward off its support grommets and remove radiator from vehicle.
8. Remove fan from radiator. See procedure in this subsection.

### Radiator Installation

Reverse the removal procedure. However, pay attention to the following.

Ensure grommets are installed in radiator support.

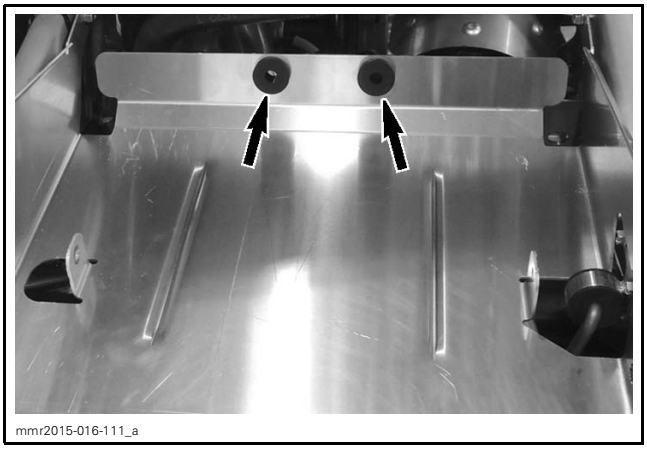
mmr2015-016-111_a

Install **NEW** Oetiker clamps to secure coolant hoses.

Fill and bleed cooling system as described in *PERIODIC MAINTENANCE PROCEDURES* subsection.

## RADIATOR COOLING FAN

### Cooling Fan Operating Conditions

| RADIATOR COOLING FAN | | |
|---|---|---|
| ENGINE TEMPERATURE | COOLING FAN RELAY | COOLING FAN OPERATION |
| > 100°C (212°F) | Close | Starts |
| < 95°C (203°F) | Open | Stops |

### Cooling Fan Relay Location

The cooling fan relay is located in the fuse box. Refer to *POWER DISTRIBUTION* subsection.

### Cooling Fan Configuration in B.U.D.S.

1. Connect vehicle to B.U.D.S., refer to *COMMUNICATION TOOLS AND B.U.D.S.* subsection.
2. In B.U.D.S., select the following:
   - **Read Data** button
   - **Setting** tab
   - **ECM** page.
3. Ensure that **With fan** box is properly checked.

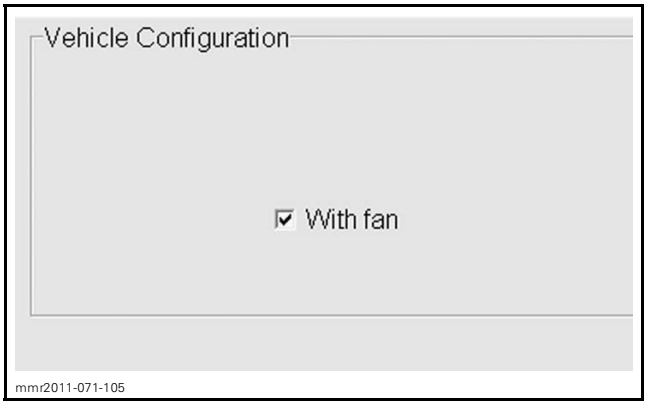

*VEHICLE CONFIGURATION BOX*

### Cooling Fan Testing Sequence

If B.U.D.S is properly configured and cooling fan does not work, follow this testing sequence to diagnose problem.

1. Check for a fault code in B.U.D.S.. Refer to *DIAGNOSTICS AND FAULT CODES* subsection.
2. Check cooling fan fuse. Refer to *POWER DISTRIBUTION* subsection.
3. Carry out the *COOLING FAN TEST USING B.U.D.S.* in this subsection.
4. Retest fan using B.U.D.S. while touching fan relay (R4).
   - If a "click" is felt, see *COOLING FAN MOTOR OPERATION TEST* in this subsection.
   - If a NO "click" is felt, test cooling fan relay. Refer to *POWER DISTRIBUTION* subsection.
5. Carry out the *COOLING FAN INPUT VOLTAGE TEST* in this subsection.
6. Carry out the *COOLING FAN RELAY INPUT VOLTAGE TEST* further in this subsection.
7. Carry out the *COOLING FAN RELAY CONTROL CIRCUIT TEST* further in this subsection.
8. Test for continuity of the following. Refer to wiring diagram.
   - Fan ground circuit
   - Relay control circuit.

### Cooling Fan Test Using B.U.D.S.

1. Connect vehicle to B.U.D.S., refer to *COMMUNICATION TOOLS AND B.U.D.S.* subsection.
2. Depress vehicle start button once to activate the ECM.
3. In B.U.D.S., select the following:
   - **Read Data** button
   - **Activation** tab
   - **ECM** page.

4. Press **Cooling Fan** button to activate cooling fan motor.

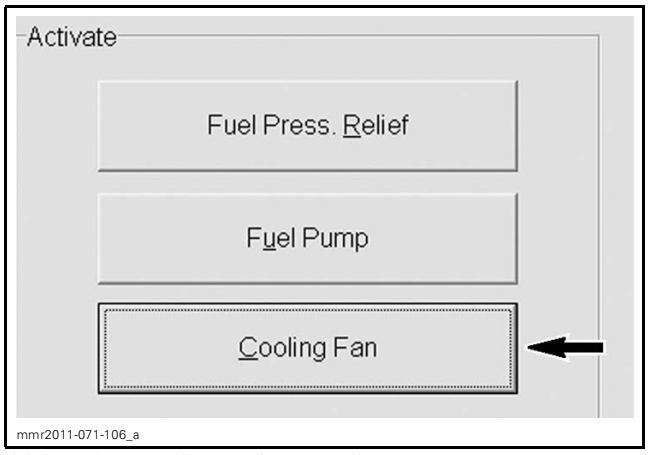


*COOLING FAN ACTIVATION BUTTON*

If cooling fan functions properly, test the coolant temperature sensor.

If cooling fan motor does not work, refer back to *COOLING FAN TESTING SEQUENCE* in this subsection.

NOTE: The engine must be started and the engine temperature must attain > 100°C (212°F) before the coolant temperature sensor signal tells the ECM to turn on the cooling fan. Refer to *COOLING FAN OPERATING CONDITIONS* in this subsection.

## Cooling Fan Motor Operation Test

1. Disconnect radiator cooling fan connector.

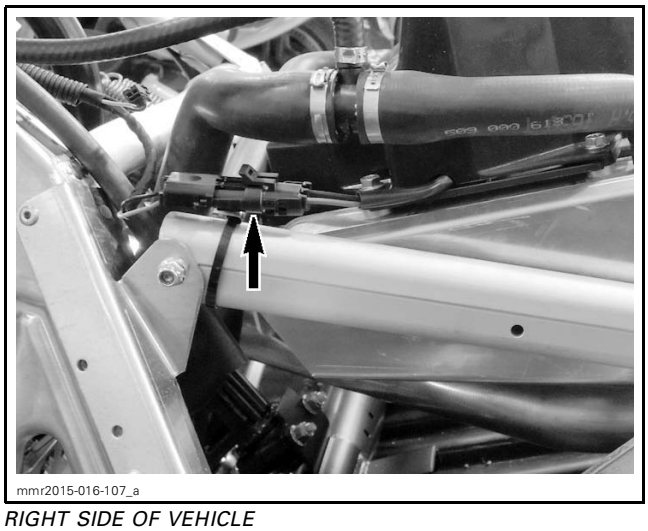


*RIGHT SIDE OF VEHICLE*

2. Check cooling fan connector and terminal condition.
3. Connect a 12 volt battery directly to the fan motor connector.

If motor does not work, replace it.

If motor works, check:
- Fan ground circuit wiring continuity
- Carry out the *COOLING FAN INPUT VOLTAGE TEST* in this subsection.

## Cooling Fan Input Voltage Test

Test conditions:
- Engine running with coolant temperature above 100°C (212°F)
- **OR** cooling fan activated using B.U.D.S. Refer to *COOLING FAN TEST USING B.U.D.S.*

Check input voltage at cooling fan connector (harness side).

| COOLING FAN INPUT VOLTAGE TEST | |
|---|---|
| TEST PROBES | VOLTAGE |
| GRAY/GREEN | Battery voltage (± 12 Vdc) |
| BLACK | |

## Cooling Fan Relay Input Voltage Test

| RELAY INPUT VOLTAGE TEST (CONTACTS) | |
|---|---|
| TEST PROBES | VOLTAGE |
| Fuse box pin 10C | Battery voltage (± 12 Vdc) |
| Battery negative (-) post | |

| RELAY INPUT VOLTAGE TEST (WINDING) | |
|---|---|
| TEST PROBES | VOLTAGE |
| Fuse box pin 10D | Battery voltage (± 12 Vdc) |
| Battery negative (-) post | |

## Cooling Fan Relay Control Circuit Test

Test conditions:
- Engine running with coolant temperature above 100°C (212°F)
- **OR** cooling fan activated using B.U.D.S. Refer to *COOLING FAN TEST USING B.U.D.S.*

| COOLING FAN RELAY CONTROL CIRCUIT TEST | |
|---|---|
| TEST PROBES | VOLTAGE |
| Fuse box pin 12C | Approximately battery voltage (± 12 Vdc) |
| Battery positive (+) post | |

## Cooling Fan Removal

1. Disconnect radiator cooling fan connector.

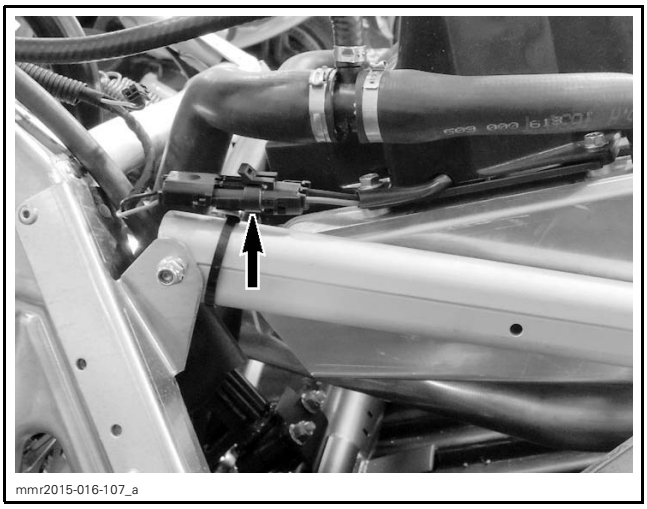
mmr2015-016-107_a

*RIGHT SIDE OF VEHICLE*

2. Remove the 4 screws that secure the fan shroud and fan to the radiator.

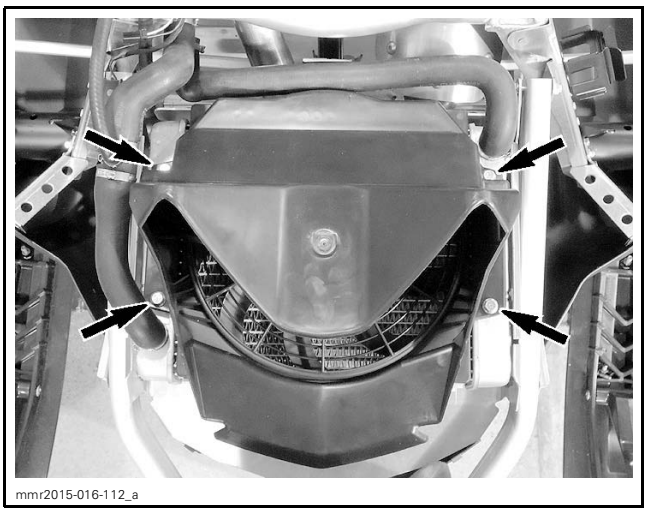
mmr2015-016-112_a

## Cooling Fan Installation

Reverse the removal procedure.

# COOLING SYSTEM - ENGINE COMPONENTS

## SERVICE TOOLS

| Description | Part Number | Page |
|---|---|---|
| HANDLE | 420 877 650 | 9 |
| ROTARY SEAL INSTALLER | 529 036 211 | 9 |
| TEST CAP | 529 035 991 | 3 |
| VACUUM/PRESSURE PUMP | 529 021 800 | 3 |

## SERVICE PRODUCTS

| Description | Part Number | Page |
|---|---|---|
| DOW CORNING 111 | 413 707 000 | 4 |

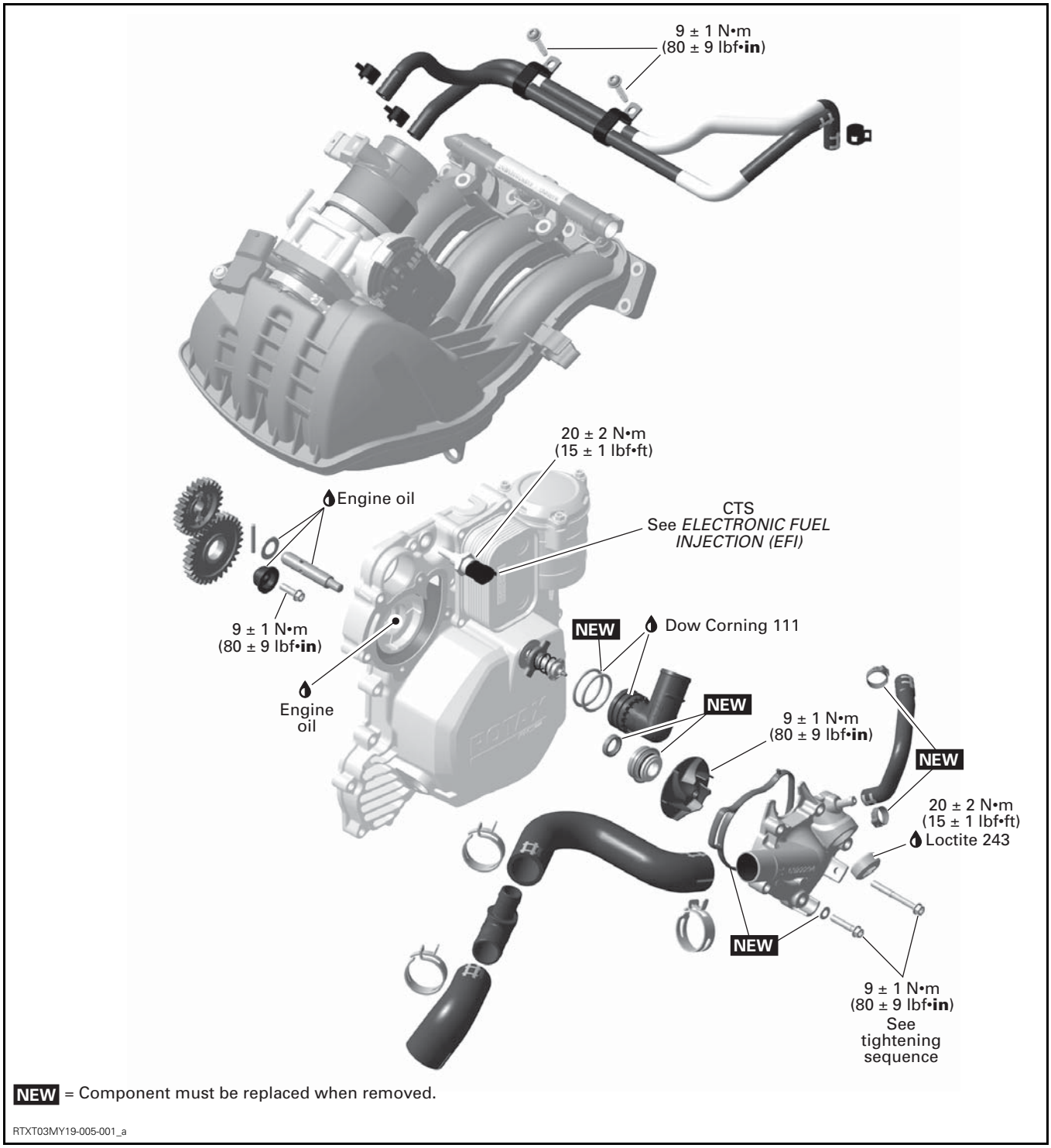


**NEW** = Component must be replaced when removed.

RTXT03MY19-005-001_a

# GENERAL

For a better understanding, some illustrations were taken with engine out of vehicle.

NOTE: It is a good practice to check for fault codes using the BRP diagnostic software (BUDS2) as a first troubleshooting step. Refer to the *DIAGNOSTIC AND FAULT CODES* subsection.

**⚠ WARNING**

**To avoid potential burns, do not remove the coolant tank cap or loosen the cooling drain plug if the engine is hot.**

# INSPECTION

## COOLING SYSTEM LEAK TEST

NOTE: This test confirms if there is a leak in the cooling system, including the engine.

Pressurize cooling system through coolant reservoir.

| REQUIRED TOOLS | |
|---|---|
| TEST CAP (P/N 529 035 991) | |
| VACUUM/PRESSURE PUMP (P/N 529 021 800) | |

| COOLING SYSTEM LEAK TEST |
|---|
| 100 kPa (15 PSI) |

If pressure drops, check all hoses and engine for coolant leaks. Spray a soap/water solution and look for air bubbles.

Check the leak indicator hole for an oil or coolant leak.

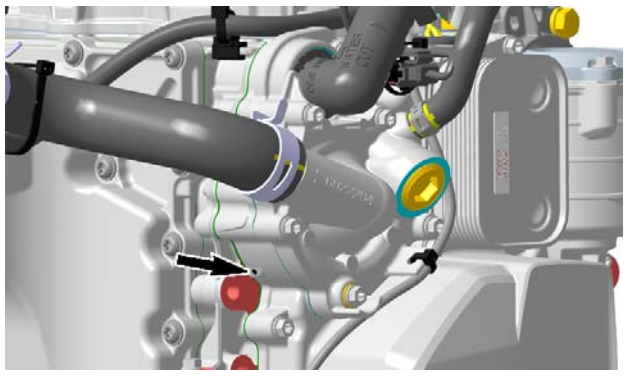

RTXT03MY19-005-003_a

NOTE: In general leaking coolant indicates a damaged rotary seal. Leaking oil indicates a damaged oil seal. If either seal is leaking, both seals must be replaced at the same time. Refer to *WATER PUMP* in this subsection.

# TROUBLESHOOTING

The following is provided to help in diagnosing the probable source of troubles. It is a guideline and should not be assumed to show all causes for all problems.

Always check for fault codes. If a fault code is detected, service the fault code first.

## ENGINE OVERHEATING

1. Low coolant level.
   - *Refill and check for leaks (coolant leaking out of leak indicator hole, hoses or clamps missing or defective, or cylinder head gaskets leaks). Repair or replace.*
2. Dirty heat exchanger.
   - *Clean heat exchanger fins. Replace heat exchanger as required.*
3. Air in cooling system.
   - *Refill and bleed cooling system.*
4. Defective thermostat (does not open when engine is warm up).
   - *Replace thermostat.*
5. Defective water pump.
   - *Inspect and replace defective components.*
6. Coolant temperature sensor defective.
   - *Check and replace.*
7. Wrong coolant concentration.
   - *Check and adjust coolant concentration according to BRP's recommendations or replace coolant.*
8. Defective coolant reservoir cap.
   - *Replace cap.*
9. Defective cooling fan.
   - *Check cooling fan motor operation.*
   - *Check fuse and relay of cooling fan motor.*
   - *Check wiring harness of cooling fan motor.*
10. Snow guard is too high.
    - *Check and adjust rear suspension.*

# PROCEDURES

## THERMOSTAT

### Thermostat Location

The thermostat is located on engine MAG side.

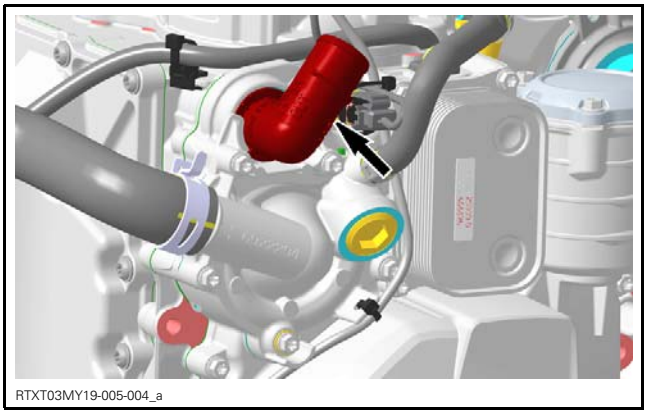

RTXT03MY19-005-004_a

*THERMOSTAT HOUSING*

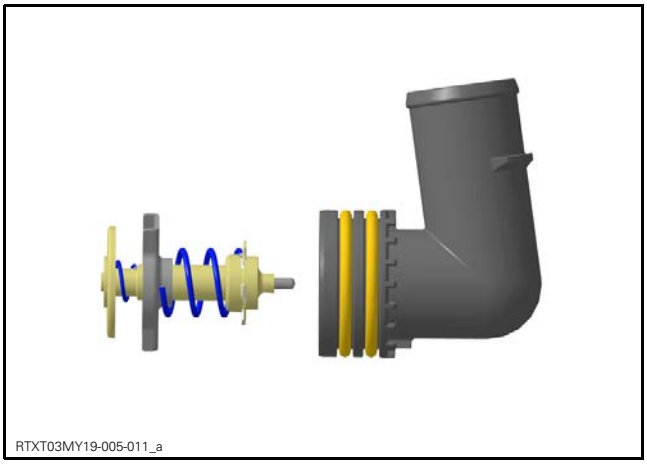

RTXT03MY19-005-011_a

### Removing the Thermostat

1. Remove the water pump housing. Refer to procedure in this subsection.
2. Remove thermostat housing then thermostat.

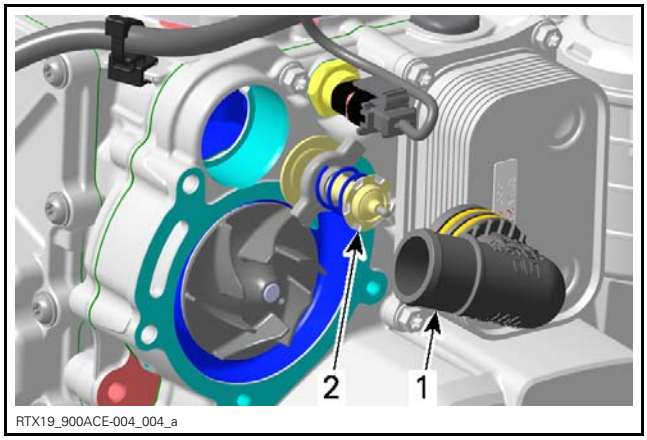


RTX19_900ACE-004_004_a

*1. Thermostat housing*
*2. Thermostat*

NOTE: Use shop rags to catch any spilled engine coolant.

### Testing the Thermostat

To check thermostat, put it in water and heat water.

| THERMOSTAT TEMPERATURE | |
|---|---|
| Starts to open | 75°C (167°F) |
| Fully open | 95°C (203°F) |

Replace thermostat if out of specification.

### Installing the Thermostat

The installation is the reverse of the removal procedure. However pay attention to the following.

Install **NEW** O-rings on thermostat housing.

Lubricate O-rings.

| SERVICE PRODUCT |
|---|
| DOW CORNING 111 (P/N 413 707 000) |

Insert thermostat in thermostat housing.

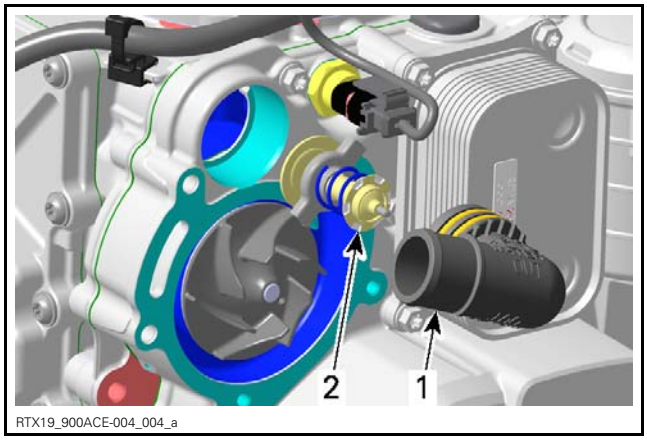


RTX19_900ACE-004_004_a

Align both tabs of thermostat with the recess in the magneto cover.

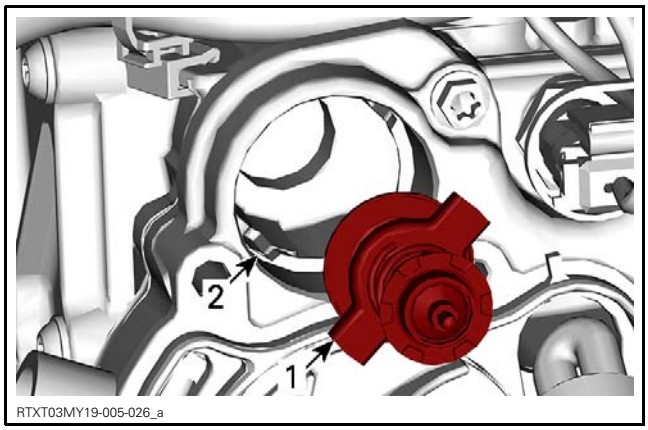

RTXT03MY19-005-026_a

1. *Thermostat tabs*
2. *Magneto cover recess*

Install water pump housing, refer to *INSTALLING THE WATER PUMP HOUSING* in this subsection.

Refill and bleed cooling system. Refer to *MAINTENANCE* in the *COOLING SYSTEM - VEHICLE COMPONENTS* subsection.

# WATER PUMP

## Water Pump Location

The water pump is located on engine MAG side.

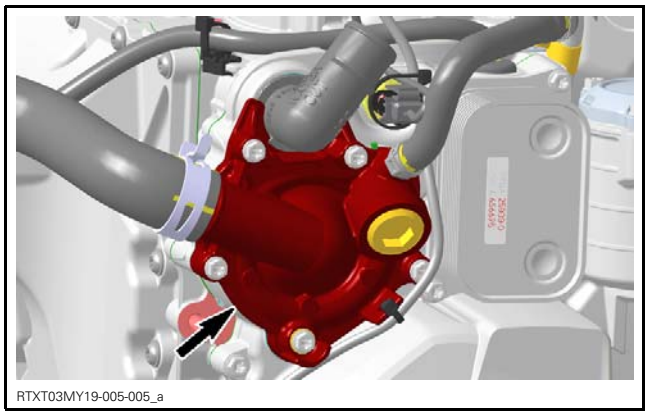
RTXT03MY19-005-005_a

## Removing the Water Pump Housing

Any work on the water pump requires the engine removal. Only the housing may be removed with the engine in place.

1. Refer to the appropriate subsection to remove:
   - Muffler
   - Driven pulley and countershaft
   - LH side hull
   - Reverse handle and its support (if equipped).
2. Drain engine coolant. Refer to *COOLING SYSTEM - VEHICLE COMPONENTS* subsection.
3. Disconnect outlet hose from thermostat housing.
4. Disconnect supercharger cooling hose from water pump (if equipped).
5. Disconnect inlet hose from water pump.

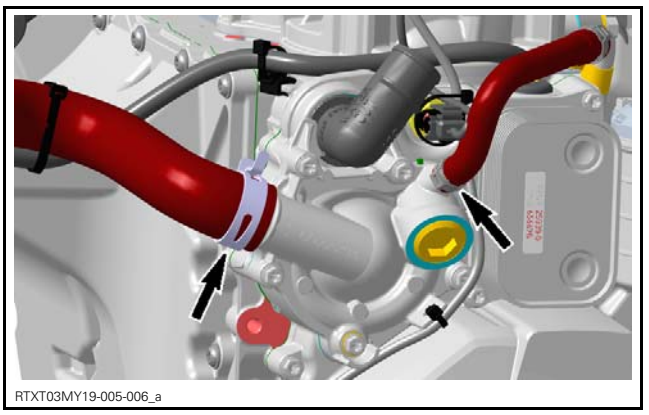
RTXT03MY19-005-006_a

6. Remove locking ties securing CPS wire and the OPS wire.

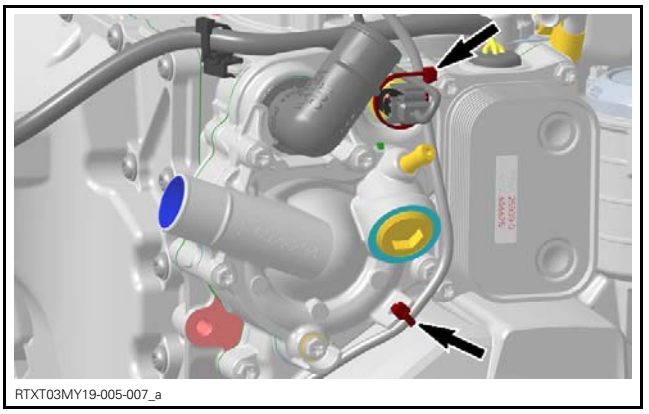
RTXT03MY19-005-007_a

7. Remove the following fasteners.

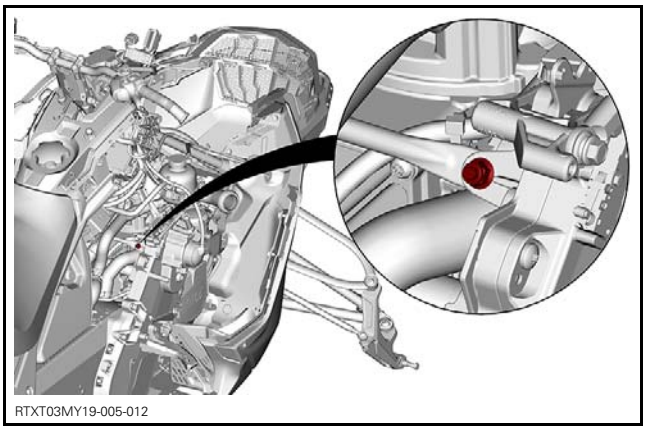
RTXT03MY19-005-012

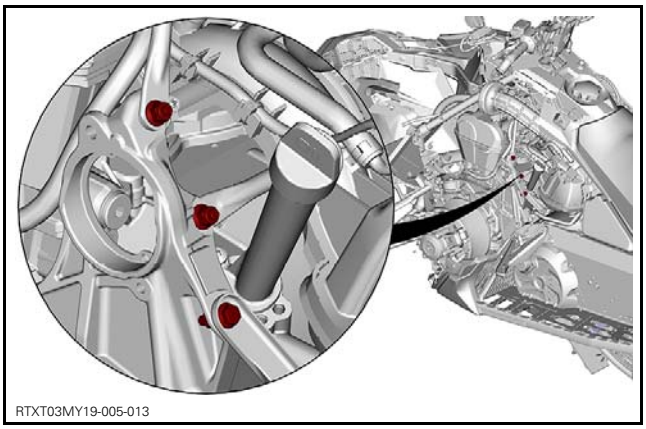
RTXT03MY19-005-013

8. Support the engine on the pulley side and remove the following fasteners.

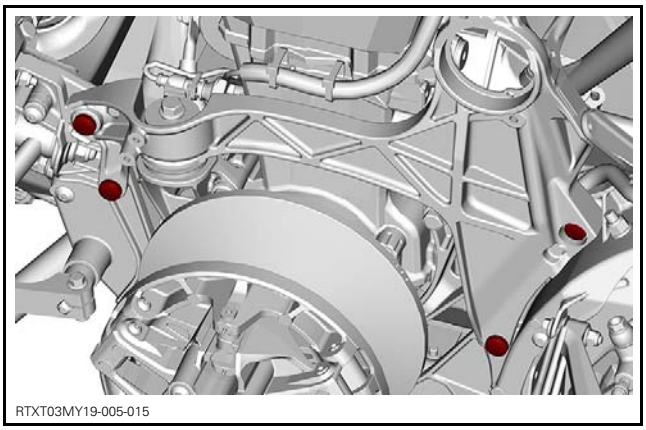
RTXT03MY19-005-015

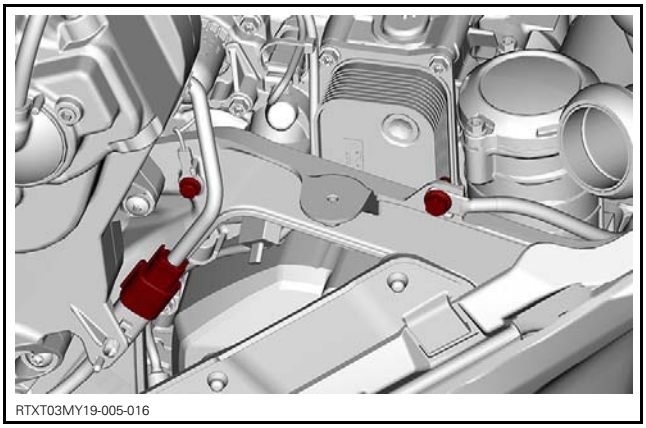
RTXT03MY19-005-016

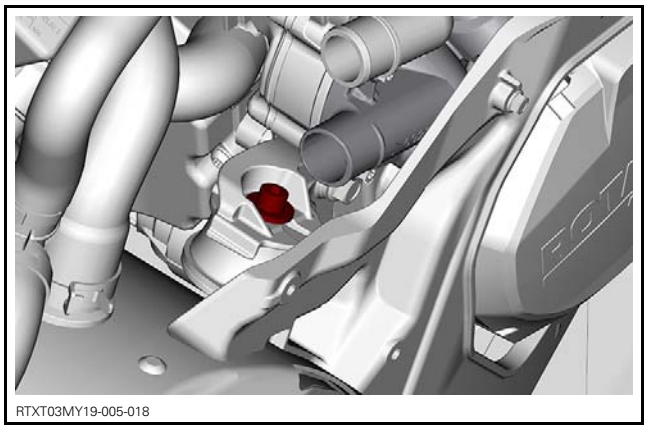
RTXT03MY19-005-018

*CHAINCASE REMOVED FOR CLARITY*

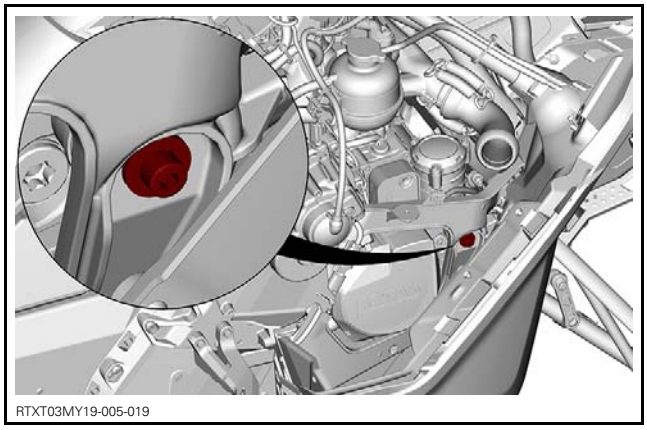
RTXT03MY19-005-019

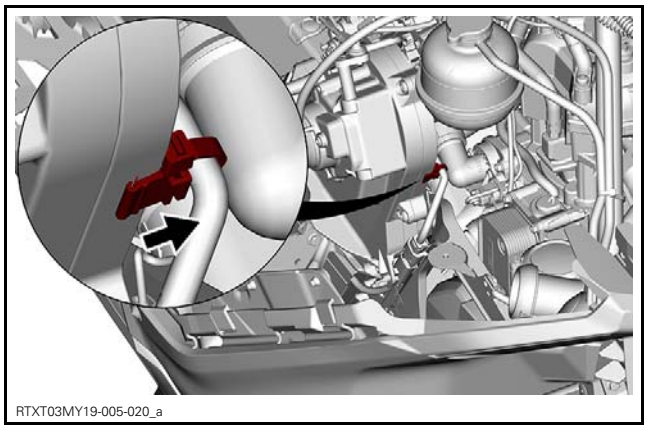
RTXT03MY19-005-020_a

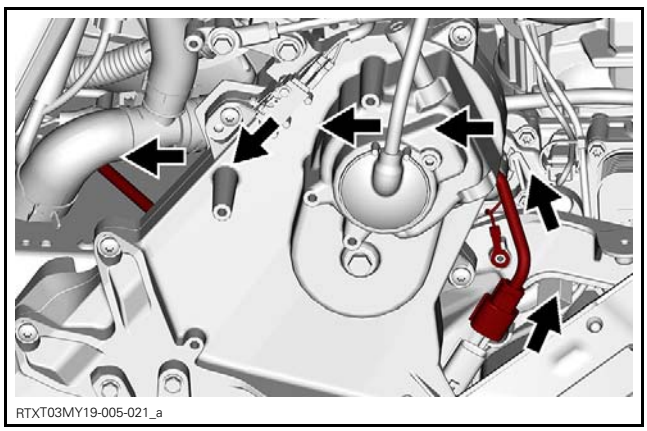
RTXT03MY19-005-021_a

9. Pull on the drive pulley to make room for water pump screws access.

*Turbocharged Engine*

**NOTICE** Make sure the waste gate and the oil return hose clear the frame at all time.

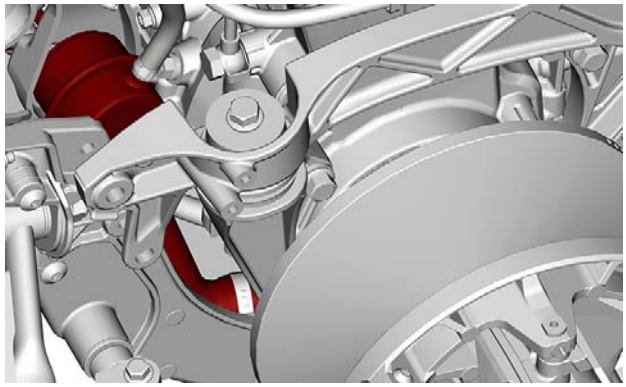
RTXT03MY19-005-022

*All Engine*

10. Place a pry bar between the engine support and the engine rubber mount, and lift the engine to insert a shim between the frame and the magneto cover

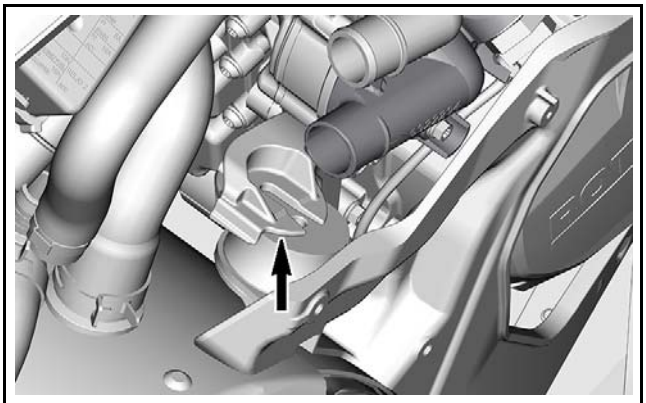
RTXT03MY19-005-023_a

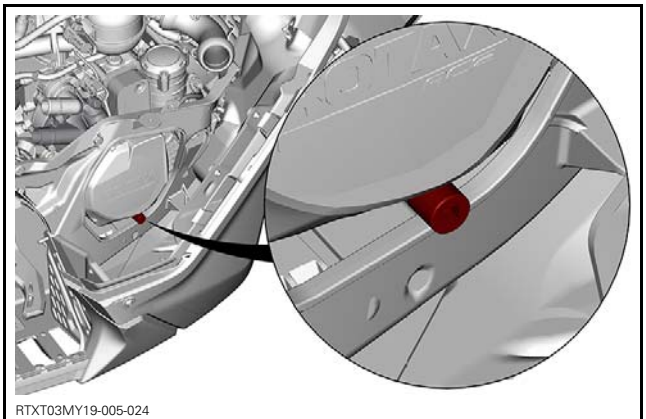
RTXT03MY19-005-024

*12 MM (1/2 IN) SHIM*

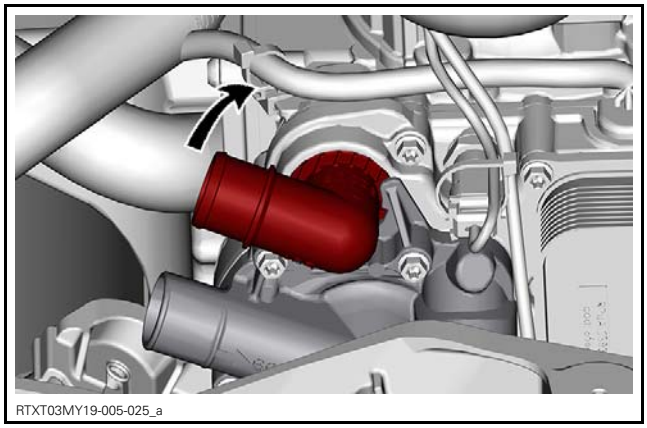
RTXT03MY19-005-025_a

11. Using a compact ratchet wrench and a Torx bit, remove the water pump housing screws.

NOTE: Use shop rags to catch any spilled engine coolant.

## Disassembling the Water Pump

1. Unscrew impeller counterclockwise using appropriate pliers.

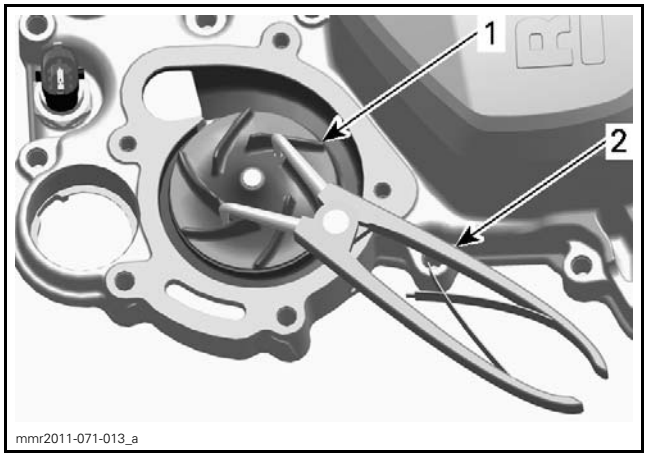

mmr2011-071-013_a

*1. Impeller*
*2. Pliers*

2. Remove magneto cover. Refer to *MAGNETO AND STARTER* subsection.
3. Remove the following components from magneto cover:
   – Water pump gear
   – Needle pin
   – Thrust washer.

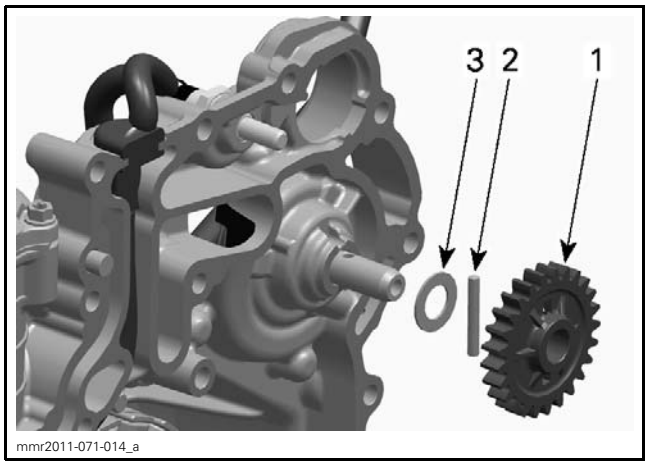

mmr2011-071-014_a

*1. Water pump gear*
*2. Needle pin*
*3. Thrust washer*

4. Remove water pump shaft using a plastic mallet.

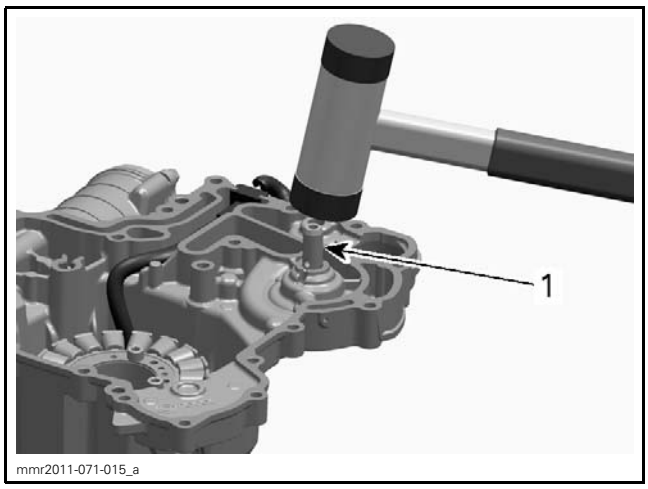

mmr2011-071-015_a

*1. Water pump shaft*

5. Remove the following components from magneto cover:
   – Oil seal
   – Remaining parts of rotary seal.

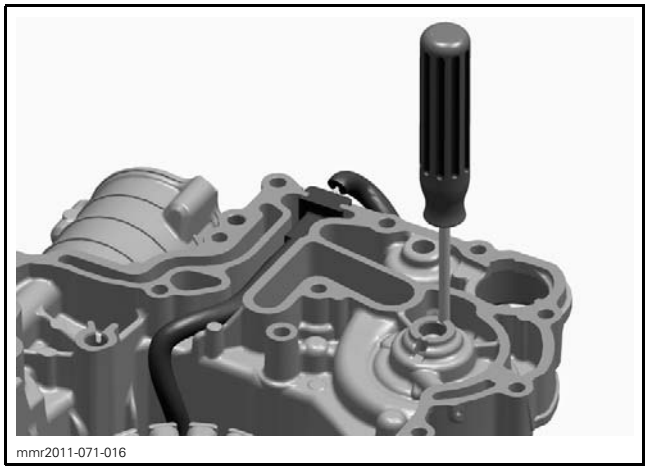
mmr2011-071-016

**NOTICE** Be careful not to damage the surface of the rotary seal bore in the magneto cover.

6. Separate rotary seal from water pump shaft.

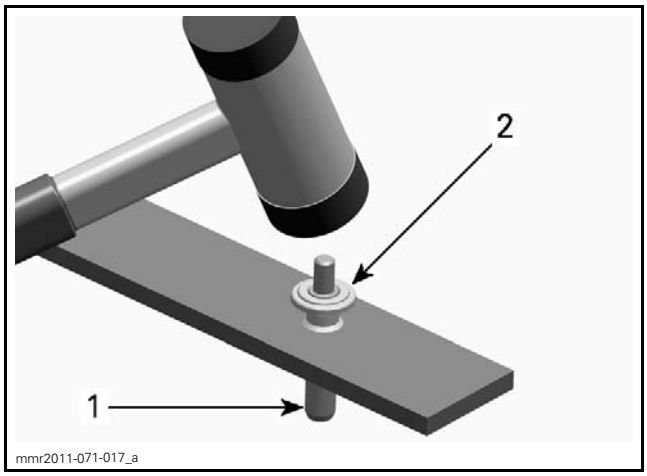

mmr2011-071-017_a

*1. Water pump shaft.*
*2. Rotary seal*

## Inspecting the Water Pump

Check area of water pump housing for cracks or other visible damage.

Check water pump gear for wear or broken teeth.

Check if housing gasket is brittle, hard or damaged.

Check water pump shaft for visible damage.

Replace parts if necessary.

## Assembling the Water Pump

NOTE: Always replace oil seal and rotary seal at the same time.

1. Clean rotary seal surface from old sealant.

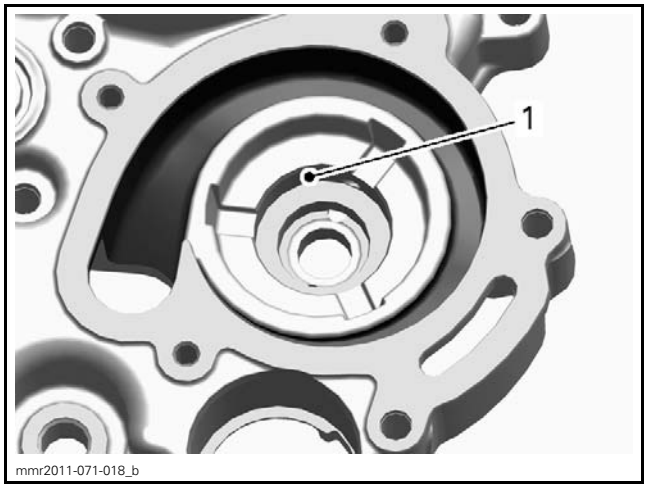

mmr2011-071-018_b

*1. Clean surface*

2. Apply engine oil on press fit area of oil seal.

**NOTICE** Never use engine oil on the press fit area of the rotary seal.

3. Install NEW oil seal in magneto cover.

| REQUIRED TOOLS | |
|---|---|
| (P/N 529 036 210) | |
| HANDLE (P/N 420 877 650) | |

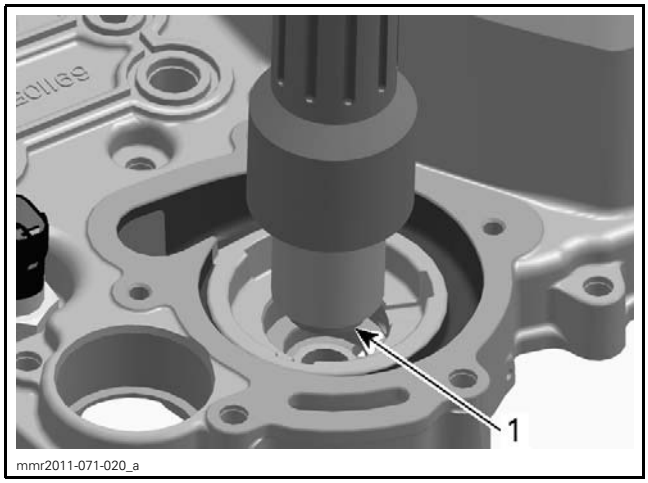


*1. Oil seal*

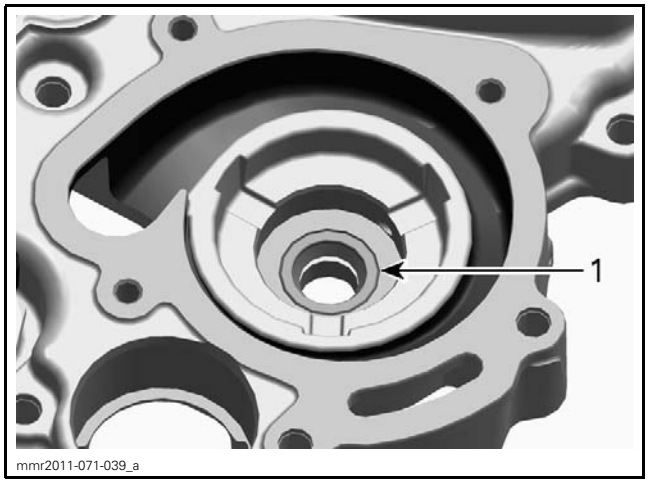


*1. Oil seal correctly installed*

4. Install NEW rotary seal on magneto cover using a press.

NOTE: Prior to installing, ensure that sealing lip of rotary seal is not damaged.

| REQUIRED TOOL | |
|---|---|
| ROTARY SEAL INSTALLER (P/N 529 036 211) | |

**NOTICE** Never use a hammer for rotary seal installation. Only use a press to avoid damaging the ceramic component.

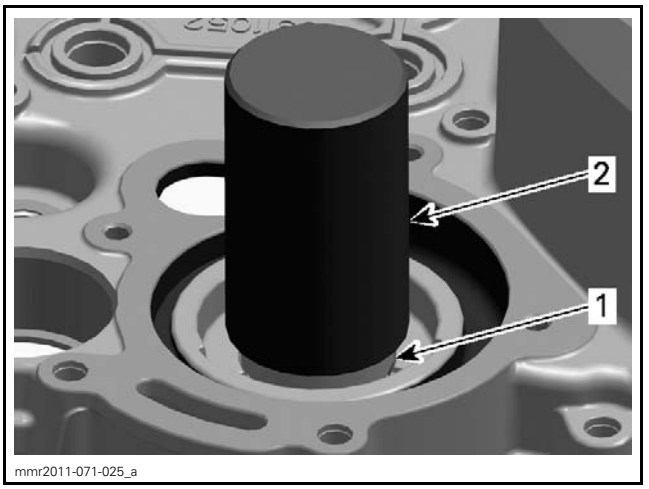


*1. Rotary seal*
*2. Rotary seal installer*

5. Assemble the following components onto water pump shaft.
   – Needle pin
   – Thrust washer.

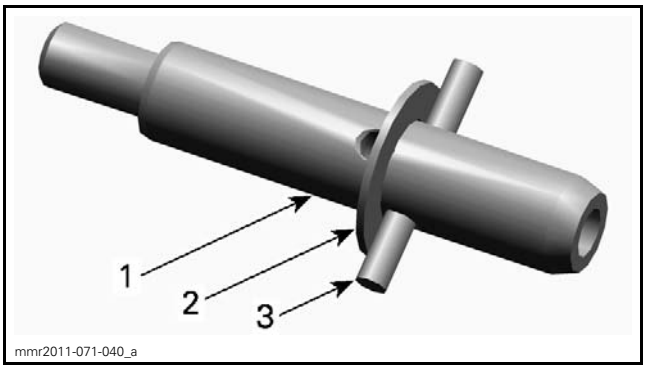


*1. Water pump shaft*
*2. Thrust washer*
*3. Needle pin*

6. Slide water pump shaft into rotary seal using a press.

NOTE: To avoid damaging the rotary seal and to achieve the proper preload support the rotary seal with the rotary seal installer.

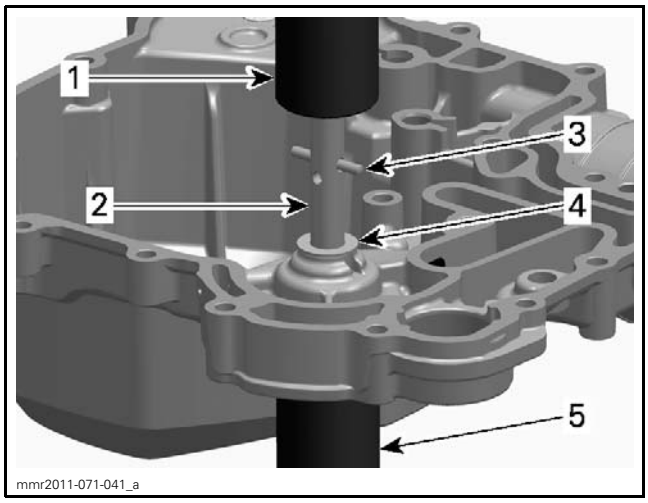


*1. Press*
*2. Water pump shaft*
*3. Needle pin*
*4. Thrust washer*
*5. Rotary seal installer*

7. Carefully press water pump shaft until needle pin touches thrust washer.

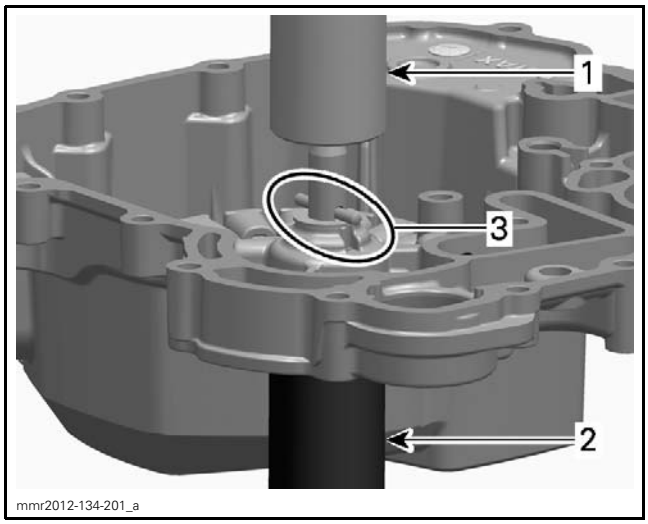


*1. Press*
*2. Rotary seal installer*
*3. Needle pin touches thrust washer*

**NOTICE** Never use a hammer to install water pump shaft into rotary seal.

NOTE: After installation, water pump shaft must rotate freely.

8. Screw impeller clockwise using appropriate pliers.

**NOTICE** Be careful not to damage impeller vanes during its installation.

9. Install magneto cover. Refer to *MAGNETO AND STARTER* subsection.

## Installing the Water Pump Housing

The installation is the reverse of the removal procedure. However, pay attention to the following.

**NOTICE** When installing the water pump housing, ensure the NEW gasket is precisely positioned in the pump housing groove to prevent leakage.

Install a NEW sealing washer on drain screw.

Tighten water pump housing retaining screws to specification as per the following procedure.

| TIGHTENING TORQUE | |
|---|---|
| Water pump housing retaining screws | 9 N•m ± 1 N•m (80 lbf•**in** ± 9 lbf•**in**) |

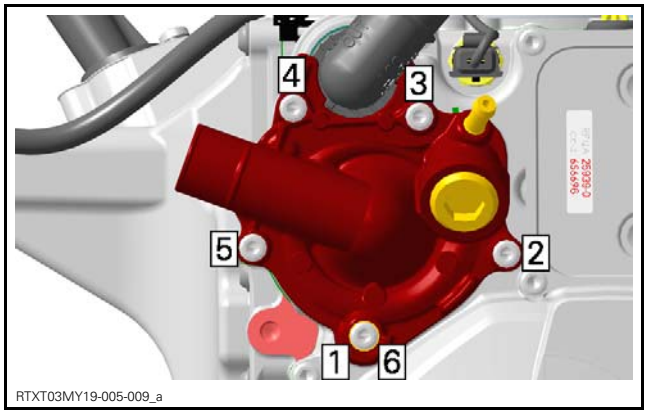


*TIGHTENING SEQUENCE*

Turn thermostat housing to proper position.

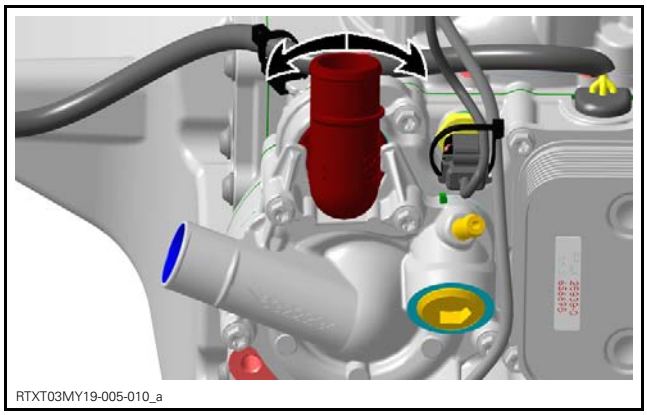


Install hose on thermostat housing with a NEW Oetiker clamp.

Install remaining parts. Refer to their applicable subsection.

# WATER PUMP DRIVE GEAR

## Water Pump Drive Gear Location

The water pump drive gear is located behind the magneto cover.

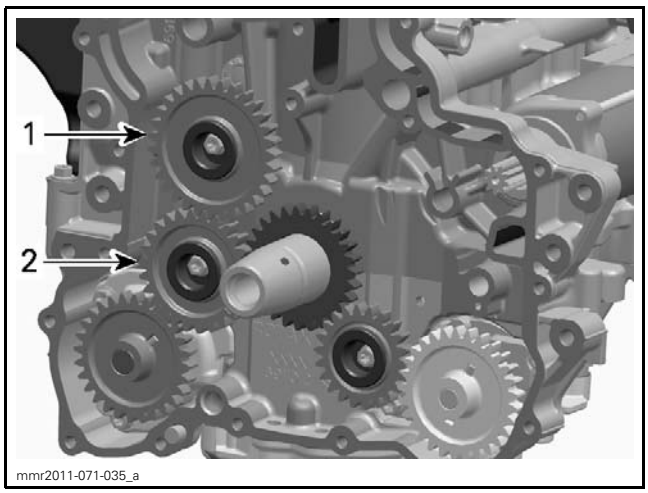


*1. Water pump drive gear 31 T*
*2. Intermediate gear, refer to LUBRICATION SYSTEM*

## Removing the Water Pump Drive Gear

1. Remove engine from vehicle. Refer to *ENGINE REMOVAL AND INSTALLATION* subsection.
2. Refer to *MAGNETO AND STARTER* subsection and remove:
   – Magneto cover
   – Magneto flywheel.
3. Remove screw securing water pump drive gear.
4. Remove bearing sleeve.
5. Slide off water pump drive gear.

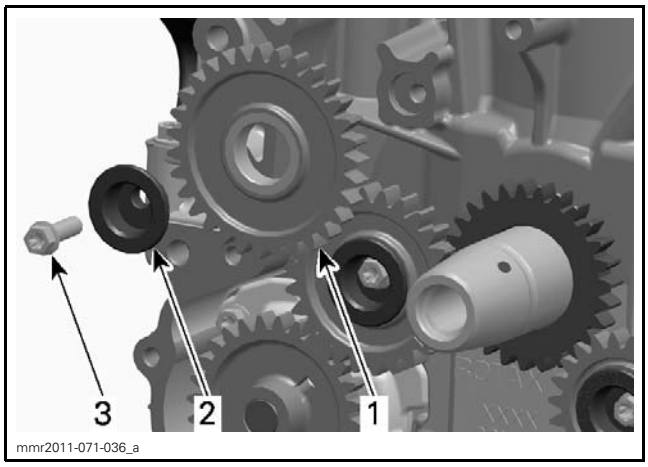


*1. Water pump drive gear 31 T*
*2. Bearing sleeve*
*3. M6 x 20 screw*

## Inspecting the Water Pump Drive Gear

Inspect gear for wear or other damage.

Replace gear if necessary.

## Installing the Water Pump Drive Gear

The installation is the reverse of the removal procedure. However, pay attention to the following.

Apply engine oil on bearing sleeve.

Tighten water pump drive gear to specification.

| TIGHTENING TORQUE | |
|---|---|
| Water pump drive gear retaining screw | 9 N•m ± 1 N•m (80 lbf•**in** ± 9 lbf•**in**) |

# COOLING SYSTEM - VEHICLE

## SERVICE TOOLS

| Description | Part Number | Page |
|---|---|---|
| LARGE HOSE PINCHER | 529 032 500 | 7 |

## SERVICE PRODUCTS

| Description | Part Number | Page |
|---|---|---|
| EXTENDED LIFE PRE-MIXED COOLANT | 779150 | 4 |

*Models without Front Radiator*

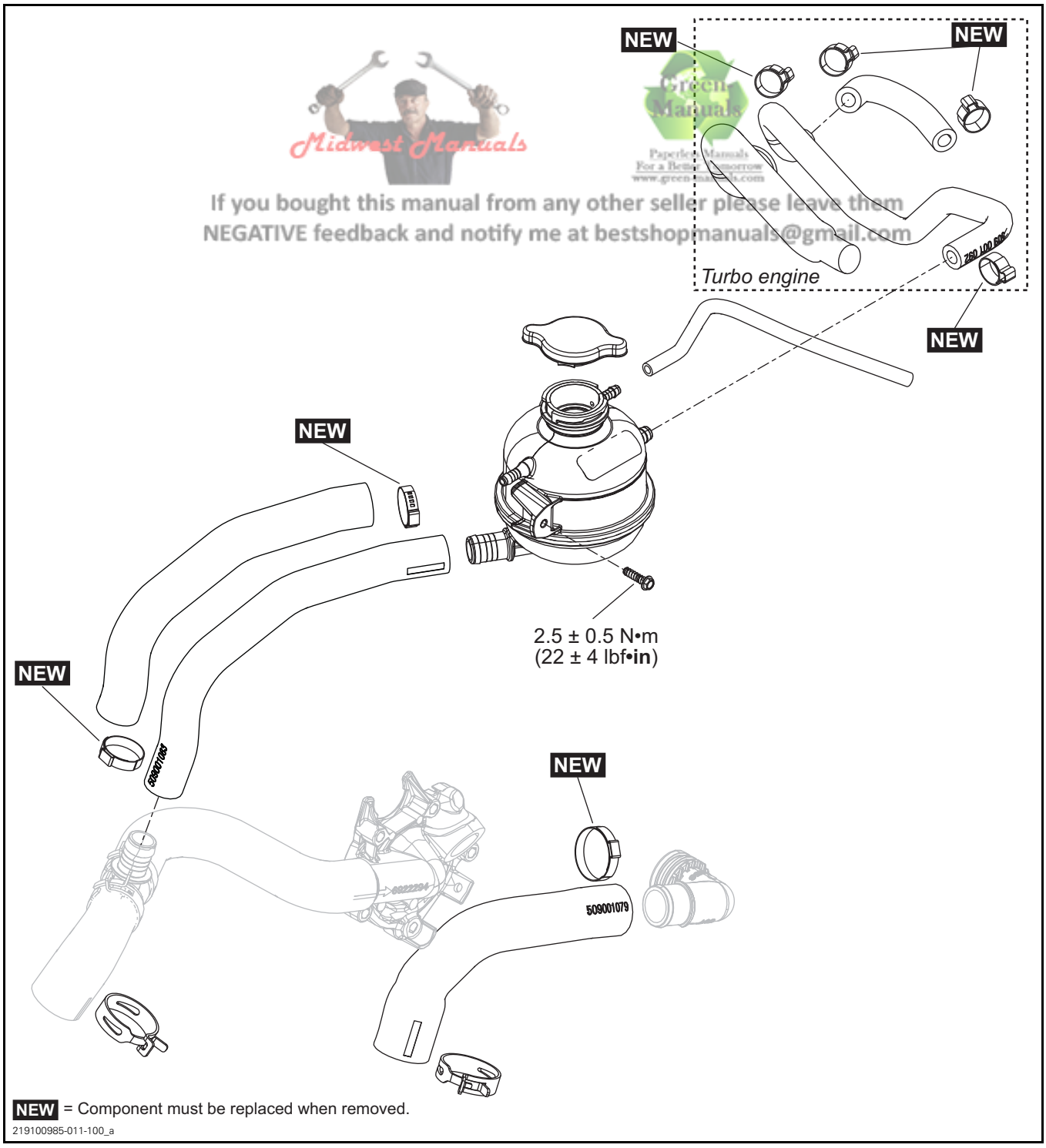


Midwest Manuals
Green Manuals
If you bought this manual from any other seller please leave them NEGATIVE feedback and notify me at bestshopmanuals@gmail.com

*Models with Front Radiator*

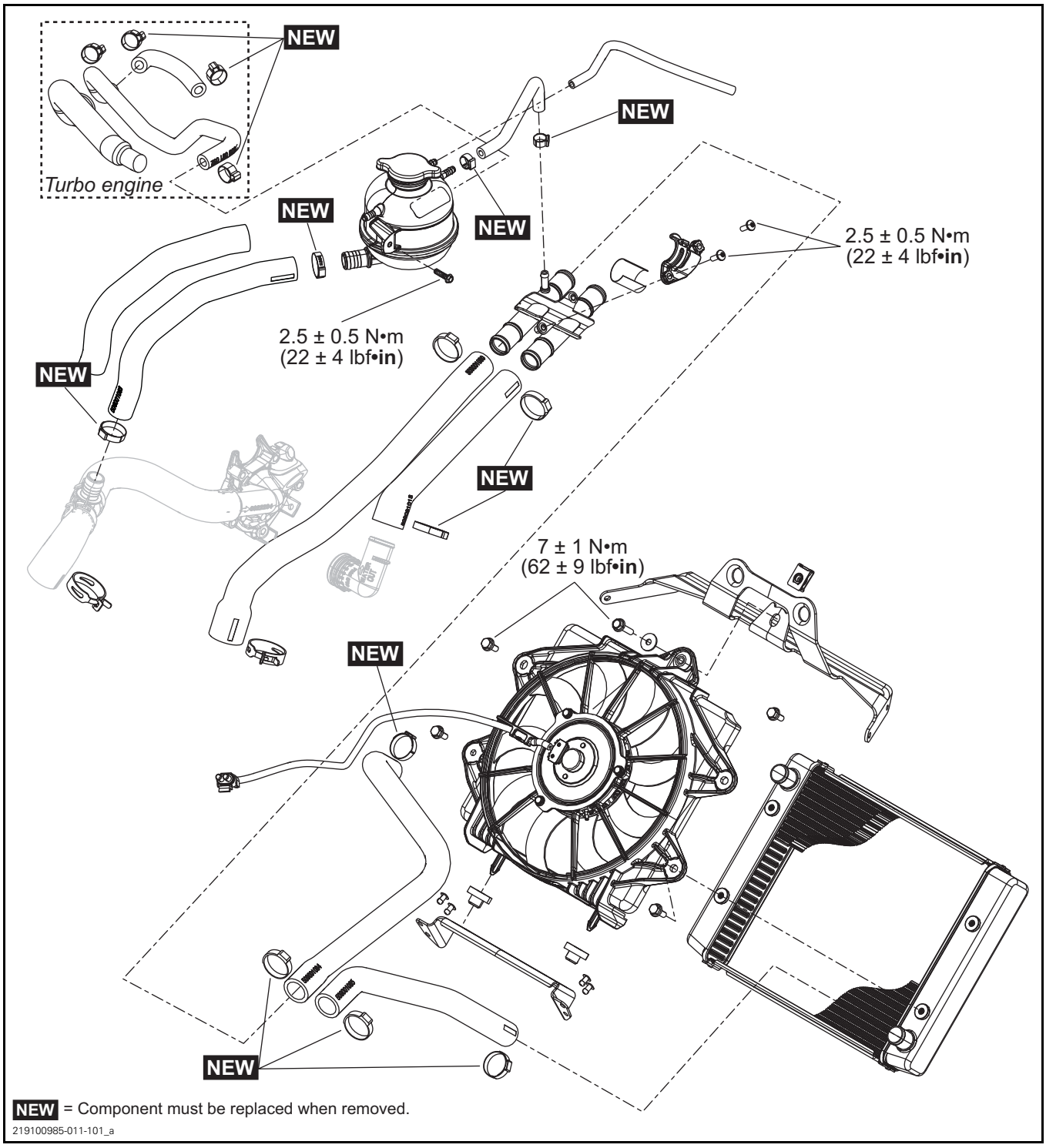

# GENERAL

For a better understanding, some illustrations are taken with engine out of vehicle.

NOTE: It is a good practice to check for fault codes using BUDS2 software as a first troubleshooting step. Refer to the *DIAGNOSTIC AND FAULT CODES* subsection.

During assembly or installation, use the torque values and service products as shown in the exploded views.

Clean threads before applying a threadlocker. Refer to *SELF-LOCKING FASTENERS* and *LOCTITE APPLICATION* at the beginning of this manual for complete procedure.

**⚠ WARNING**

**Torque wrench tightening specifications must strictly be adhered to.**
**Locking devices when removed (e.g.: locking tabs, elastic stop nuts, cotter pin, etc.) must be replaced with new ones.**

***NOTICE*** **Hoses, cables and locking ties removed during a procedure must be reinstalled as per factory standards.**

# MAINTENANCE

**⚠ WARNING**

**Never open coolant tank cap when engine is hot.**

## VERIFYING THE ENGINE COOLANT LEVEL

It is required to remove the upper body module to access the coolant tank cap. Refer to *BODY* subsection.

Check coolant level at room temperature with the cap removed. Liquid should be at cold level line (engine cold) of coolant tank.

NOTE: When checking level at low temperature it may be slightly lower then the mark.

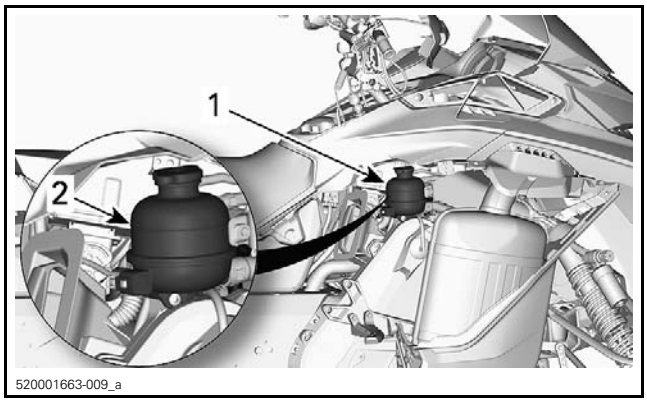


*TYPICAL*
*1. Coolant tank*
*2. COLD LEVEL line*

## VERIFYING THE ENGINE COOLANT STRENGTH

It is required to remove the upper body module to access the coolant tank cap. Refer to *BODY* subsection.

Remove pressure cap.

Use an antifreeze tester to test coolant strength.

| MINIMUM RECOMMENDED COOLANT STRENGTH |
|---|
| -30°C (-22°F) |

## REPLACING THE COOLANT

### Recommended Engine Coolant

| RECOMMENDED SERVICE PRODUCT | ACCEPTABLE |
|---|---|
| EXTENDED LIFE PRE-MIXED COOLANT (P/N 779150) | A blend of 50% distilled water with 50% antifreeze (especially formulated for aluminum engines |

To prevent antifreeze deterioration, always use the same brand. Never mix different brands unless cooling system is completely flushed and refilled.

**NOTICE** To prevent rust formation or freezing condition, always replenish the system with the BRP premixed coolant or with 50% antifreeze and 50% distilled water. Do not use tap water, straight antifreeze or straight water in the system. Tap water contains minerals and impurities which build up in the system. During cold weather, straight water causes the system to freeze while straight antifreeze thickens (like slush ice) and does not have the same efficiency. Always use ethylene glycol antifreeze containing corrosion inhibitors specifically recommended for aluminum engines.

## Draining the Cooling System

**⚠ WARNING**

Never drain or refill the cooling system when engine is hot.

1. Remove body parts as required to access to the water pump.
2. Place a large drain pan under the vehicle bottom pan.
3. Remove drain screw at water pump to drain coolant.

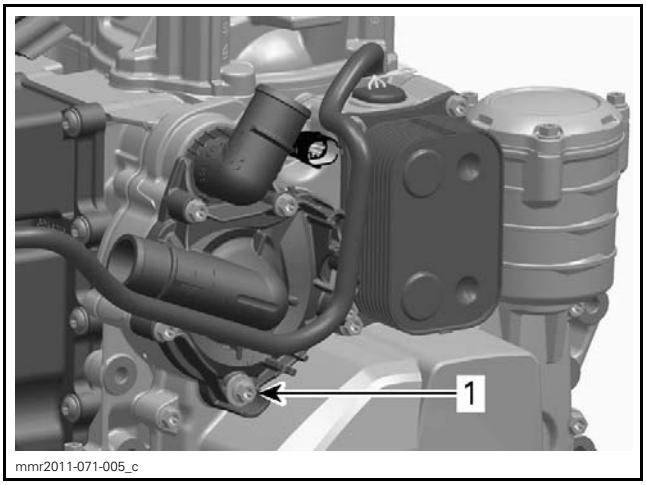


*1. Drain screw*

4. Remove coolant reservoir cap slowly.
5. When coolant level is low enough, lift the rear of vehicle to drain the heat exchangers.

*TYPICAL*

6. Install **NEW** sealing washer on drain screw.
7. Tighten drain screw to specification.

| TIGHTENING TORQUE | |
|---|---|
| Drain screws | 9 N•m ± 1 N•m (80 lbf•**in** ± 9 lbf•**in**) |

## Refilling and Bleeding the Cooling System

1. Apply parking brake.
2. Lift front of vehicle as shown and support it safely.

*TYPICAL*
*A. 25 cm ± 5 cm (10 in ± 2 in)*

3. Refill coolant tank up to COLD LEVEL line.

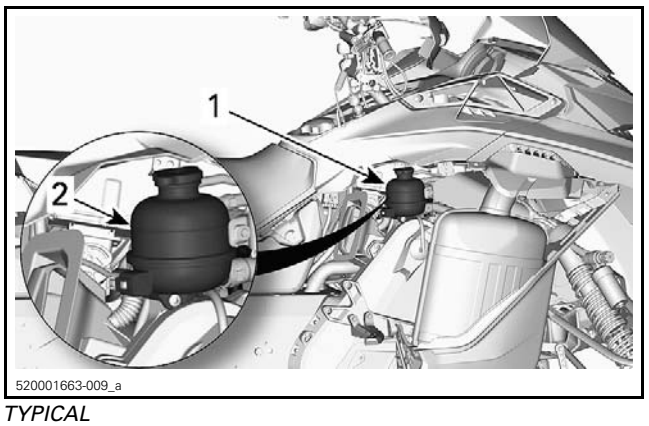


*TYPICAL*
*1. Coolant tank*
*2. COLD LEVEL line*

4. Start engine.

5. Refill up to line while engine is idling until rear heat exchangers are warm to the touch (about 4 to 5 minutes).

NOTE: Always monitor coolant level while filling coolant tank to avoid emptying and thus allowing air to enter the system.

6. Install pressure cap.
7. Lower vehicle back on the ground.
8. Lift rear of vehicle and support it safely.

*TYPICAL*

**⚠ WARNING**

**Before revving engine, ensure that the track is free of particles which could be thrown out while track is rotating. Keep hands, tools, feet and clothing clear of track. Always lift the snowmobile on a wide-base stand with a rear deflector panel. Ensure no one is standing in close proximity to the snowmobile, especially at the rear of the track. Centrifugal force could cause debris, damaged or loose studs, pieces of torn track, or an entire track to be violently thrown backwards out of the frame with tremendous force, possibly resulting in the loss of a leg or other serious injury.**

9. Remove parking brake.
10. Activate throttle lever 3 - 4 times to bring engine speed to 7000 RPM.
11. Apply the brake.
12. Lower vehicle back on ground.
13. Stop engine.
14. Add coolant up to 15 mm (1/2 in) above the COLD LEVEL line.

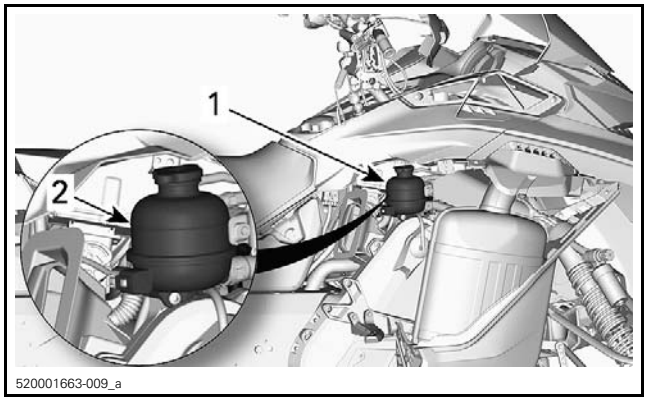


*TYPICAL*
*1. Coolant tank*
*2. Coolant 15 mm (1/2 in) above COLD LEVEL line*

15. When engine has completely cooled down, recheck coolant level in coolant tank and refill up to line if needed.
16. Perform *VERIFYING THE ENGINE COOLANT STRENGTH*. Refer to procedure in this subsection.
17. Adjust mixture as necessary.
18. Reinstall removed parts.
19. Run vehicle a few minutes then recheck coolant level.

# PROCEDURES

## COOLANT RESERVOIR CAP

### Testing the Coolant Reservoir Cap

Using a pressure cap tester, check the efficiency of coolant reservoir cap. If the efficiency is weak, replace the cap.

| CAP OPENING PRESSURE |
|---|
| 110 kPa (16 PSI) |

## COOLANT RESERVOIR

### Removing the Coolant Reservoir

1. Remove the upper body module. Refer to *BODY* subsection.
2. Siphon coolant reservoir.
3. Disconnect coolant hoses from reservoir.
4. Remove coolant reservoir from vehicle.

### Inspecting the Coolant Reservoir

Check if the reservoir is cracked or melted. Replace if necessary.

## Installing the Coolant Reservoir

The installation is the reverse of the removal procedure. However, pay attention to the following.

Install **NEW** Oetiker clamps.

Refill and bleed cooling system as described in *MAINTENANCE*.

# FRONT RADIATOR (IF EQUIPPED)

## Removing the Front Radiator

1. Remove the upper body module. Refer to *BODY* subsection.

### *With Intercooler*

2. Remove the intercooler. Refer to *INTERCOOLER* subsection.
3. Cut cooling fan harness locking ties.

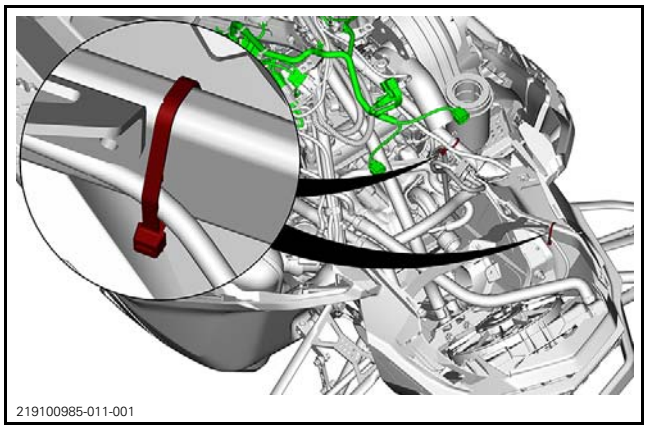


4. Disconnect front radiator cooling fan connector.
5. Install hose pincher on both radiator hoses.

| REQUIRED TOOL | |
|---|---|
| LARGE HOSE PINCHER (P/N 529 032 500) | |

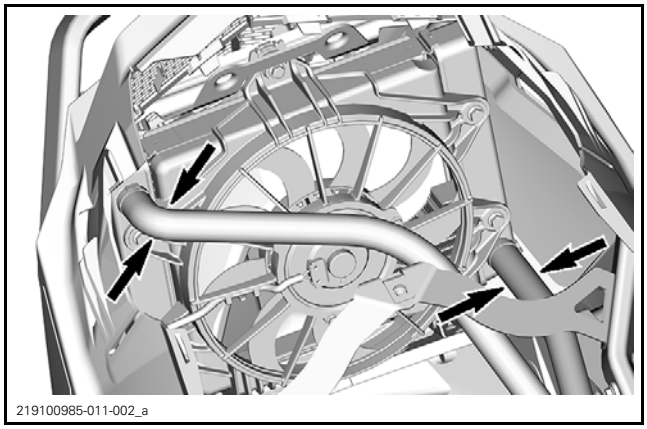


6. Remove Oetiker clamps and discard.
7. Disconnect upper coolant hose from radiator.

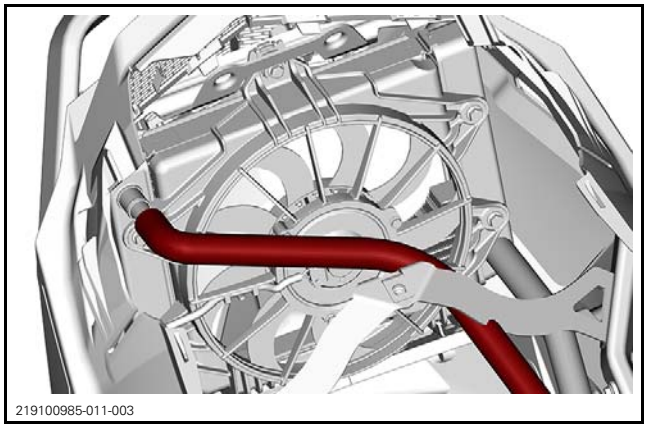


8. Siphon coolant from radiator.
9. Disconnect lower coolant hose from radiator.

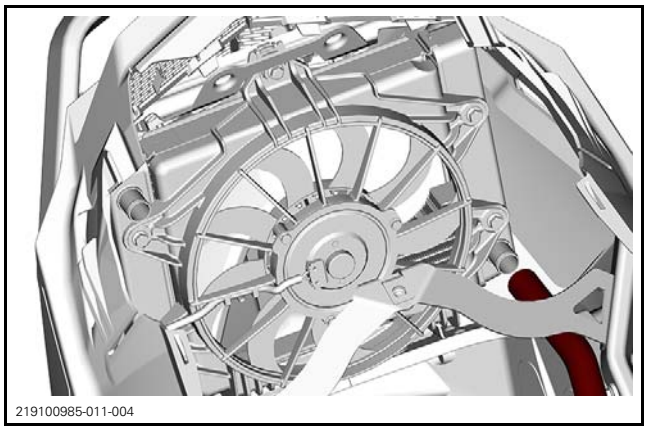


10. Remove screw securing the radiator shroud to frame.

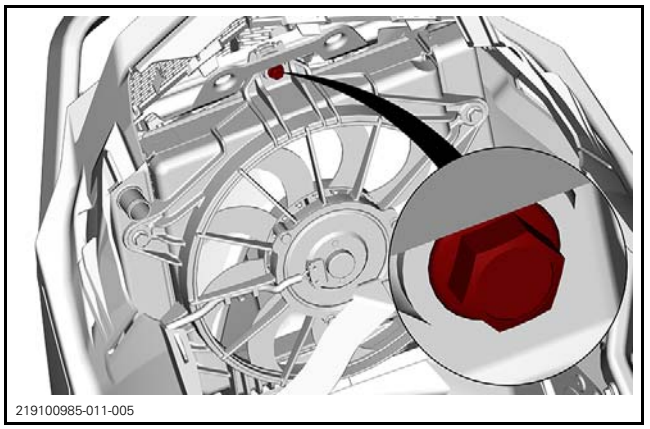


11. Remove front radiator assembly from vehicle.
12. Remove screws securing radiator to shroud.

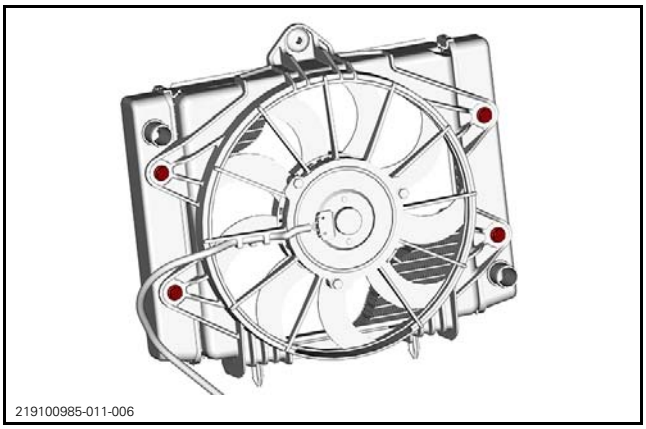
219100985-011-006

## Installing the Front Radiator

The installation is the reverse of the removal procedure. However, pay attention to the following.

Install **NEW** Oetiker clamps to secure coolant hoses.

# COOLING FAN

## Cooling Fan Operating Condition

| RADIATOR COOLING FAN | | |
|---|---|---|
| ENGINE TEMPERATURE | COOLING FAN RELAY | COOLING FAN OPERATION |
| > 100°C (212°F) | Close | Starts |
| < 95°C (203°F) | Open | Stops |

NOTE: If voltage decrease to 11 V and cooling fan is running, the ECM will shut it off. If voltage remains low and coolant temperature reaches 118°C (244°F), the ECM will turn on the cooling fan.

## Cooling Fan Configuration in BUDS2

1. Connect vehicle to the BRP diagnostic software (BUDS2). Refer to *COMMUNICATION TOOLS AND B.U.D.S.* subsection.
2. In BUDS2, select the following:
   - **Settings** page
   - **ECM** button.
3. Ensure that **With fan** box is properly checked.

## Testing the Cooling Fan Motor Operation

1. Go to:
   - **Functions** page
   - **ECM** button.
2. Press **Cooling Fan** button to activate cooling fan motor.
3. If cooling fan motor does not work, continue with *COOLING FAN TESTING SEQUENCE*.

## Cooling Fan Testing Sequence

If BUDS2 is properly configured and cooling fan does not work, follow this testing sequence to diagnose problem.

1. Check cooling fan connector and terminal condition.
2. Check cooling fan fuse.
   - Refer to *POWER DISTRIBUTION*.
3. Check cooling fan relay.
   - Refer to *POWER DISTRIBUTION*.
4. Check cooling fan motor operation.
   - Refer to *TESTING THE COOLING FAN MOTOR OPERATION*.
5. Check input voltage at cooling fan motor.

NOTE: Engine must be started and engine temperature must be > 100°C (212°F).

| **INPUT VOLTAGE AT COOLING FAN MOTOR** | |
|---|---|
| TEST PROBES | VOLTAGE |
| Pin B | Battery voltage (±12 Vdc) |
| Pin A | |

6. Check input voltage at cooling fan relay.

| **INPUT VOLTAGE AT COOLING FAN RELAY** | |
|---|---|
| TEST PROBES | VOLTAGE |
| Pin 85 | Battery voltage (±12 Vdc) |
| Battery negative (-) post | |

| **INPUT VOLTAGE AT COOLING FAN RELAY** | |
|---|---|
| TEST PROBES | VOLTAGE |
| Pin 30 | Battery voltage (±12 Vdc) |
| Battery negative (-) post | |

7. Check ECM ground continuity test (relay).

| **ECM GROUND CONTINUITY TEST (RELAY)** | |
|---|---|
| TEST PROBES | VOLTAGE |
| ECM-B pin J4 | Close to 0 Ω |
| Relay pin 86 | |

# MAGNETO AND STARTER

## SERVICE TOOLS

| Description | Part Number | Page |
|---|---|---|
| CRANKSHAFT PROTECTOR | 529 036 213 | 91 |
| FLUKE 115 MULTIMETER | 529 035 868 | 89 |
| FLYWHEEL PULLER | 420 976 235 | 91 |

## SERVICE PRODUCTS

| Description | Part Number | Page |
|---|---|---|
| KLÜEBER PASTE 46 MR 401 | 420 297 616 | 96 |
| LOCTITE 243 (BLUE) | 293 800 060 | 90, 92 |
| LOCTITE 648 (GREEN) | 413 711 400 | 93 |
| LOCTITE CHISEL (GASKET REMOVER) | 413 708 500 | 87 |
| PULLEY FLANGE CLEANER | 413 711 809 | 91, 93 |

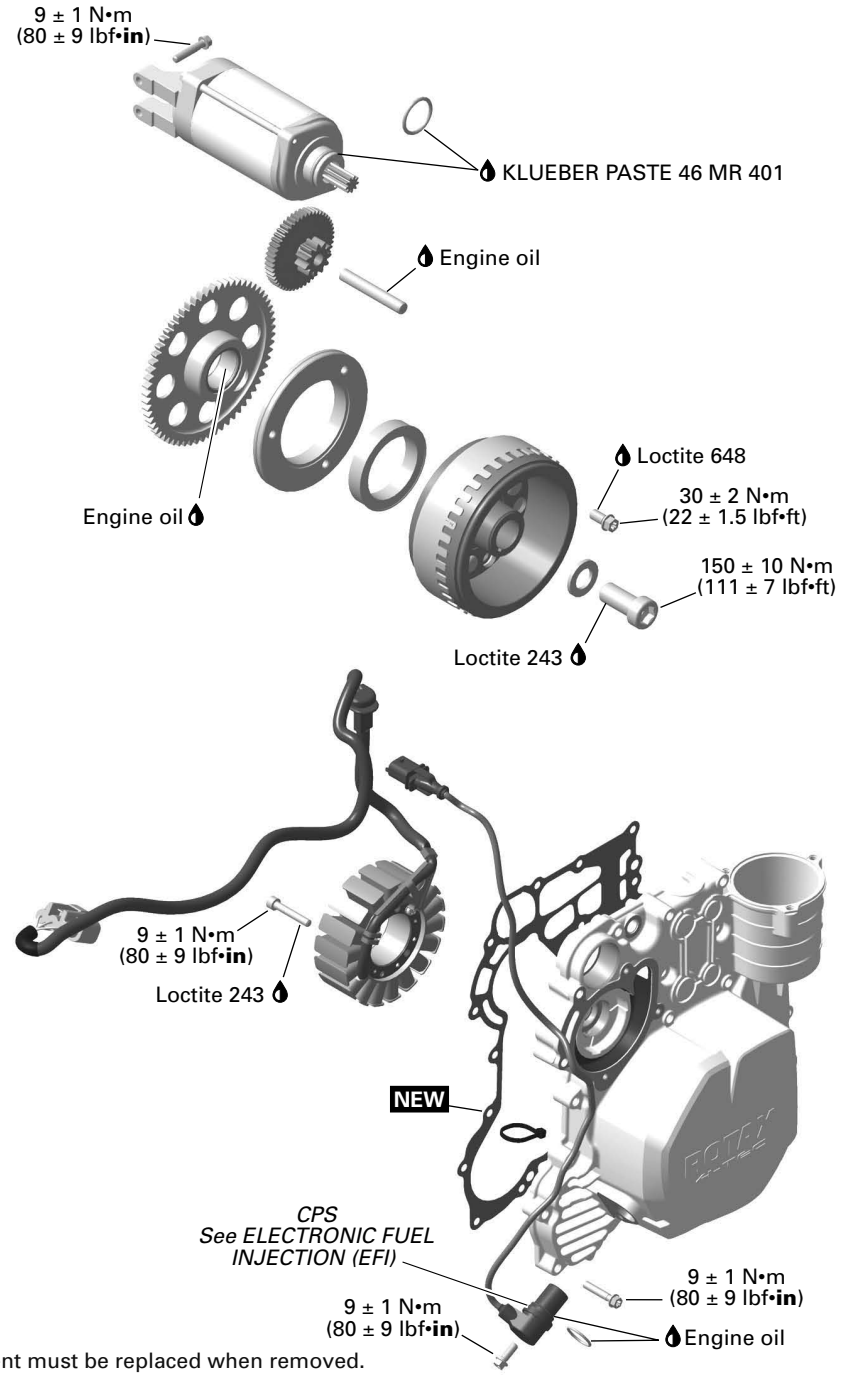


mmr2015-043-001_a

# TROUBLESHOOTING

Always check for fault codes. If a fault code is detected, service the fault code first. Refer to *DIAGNOSTIC AND FAULT CODES* subsection.

## ENGINE DOES NOT CRANK

1. Battery voltage too low.
   - *Check battery condition.*
2. Starter is turning but engine does not crank.
   - *Check sprag clutch for wear or other damages.*
3. Starter is defective.
   - *Check starter condition. Perform STARTER OPERATION TEST and STARTER VOLTAGE DROP TEST.*
4. Engine is only cranking 1 - 2 seconds before it stops.
   - *Check battery condition.*

# PROCEDURES

## MAGNETO COVER

### Magneto Cover Access

1. Refer to applicable subsection and remove:
   – Air intake silencer and headlight/gauge module as an assembly
   – Muffler
   – Exhaust pipes.
2. Detach coolant tank from the frame.
3. Detach radiator coolant pipes from frame.

### Magneto Cover Removal

1. Cut the locking tie securing the stator wiring and disconnect stator connector.
2. Disconnect the CTS connector.
3. Refer to *PERIODIC MAINTENANCE PROCEDURES* and drain:
   – Engine oil
   – Engine coolant.
4. Refer to *COOLING SYSTEM* and remove:
   – Water pump housing
   – Thermostat housing.
5. Refer to *LUBRICATION SYSTEM* subsection and remove:
   – Oil pressure regulator
   – Oil cooler.
6. Remove the CPS.

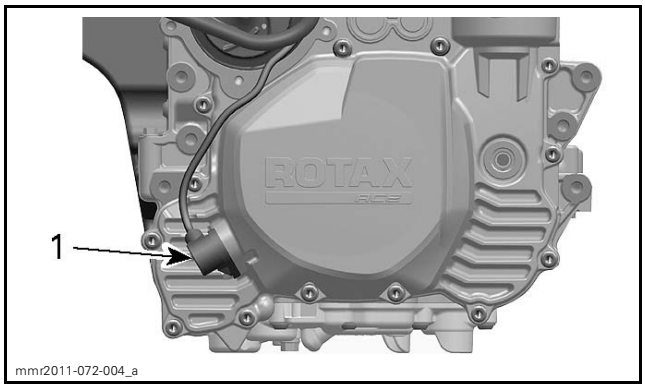


*1. CPS*

7. Remove magneto cover retaining screws.

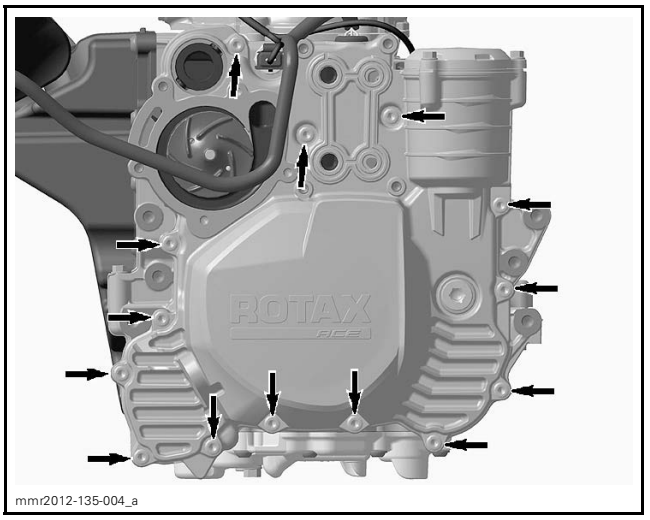


*MAGNETO COVER SCREWS*

8. Pull magneto cover off.

### Magneto Cover Inspection

Check magneto cover for cracks or other damage. Replace if necessary.

### Magneto Cover Installation

1. Clean magneto cover.

| MAGNETO COVER CLEANING | |
|---|---|
| Service product | LOCTITE CHISEL (GASKET REMOVER) (P/N 413 708 500) |

2. Install a NEW magneto cover gasket.
3. Ensure starter drive gear pin is in place.
4. Apply engine oil on starter drive gear pin.

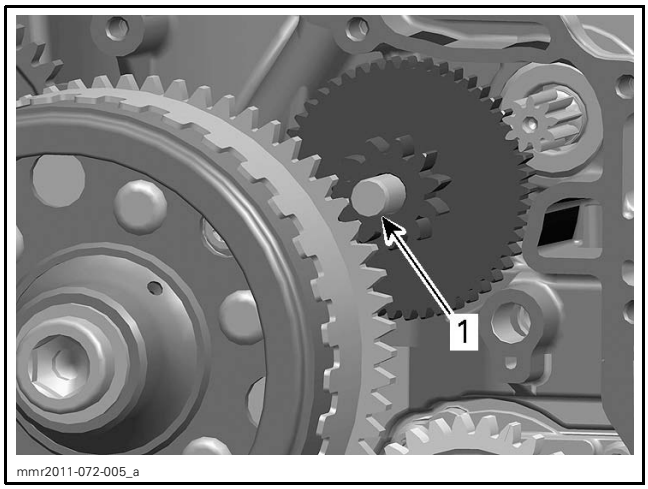


*1. Starter drive gear pin*

5. Apply engine oil on water pump shaft.

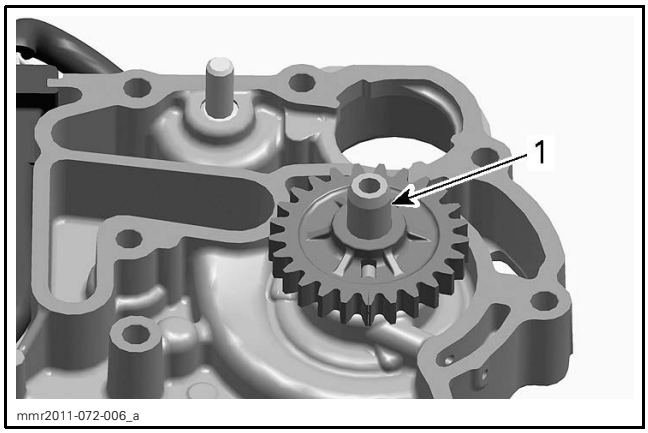


*1. Water pump shaft - apply engine oil*

**NOTICE** Make sure the stator cable harness is embedded in the cover channel provided. The part of the harness that is out of the channel must be tight, otherwise it might chafe or jam.

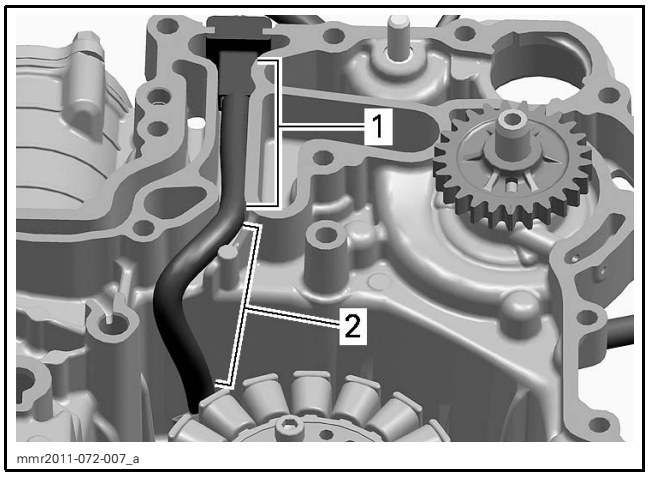


*1. Embedded in that area*
*2. Tight in this area*

6. Carefully install magneto cover.

**⚠ CAUTION** Magnetic force between magneto flywheel and stator is very high. Avoid finger contusions.

7. Tighten to specification magneto cover screws according to the following sequence.

| MAGNETO COVER SCREWS | |
|---|---|
| Tightening torque | 9 N•m ± 1 N•m (80 lbf•**in** ± 9 lbf•**in**) |

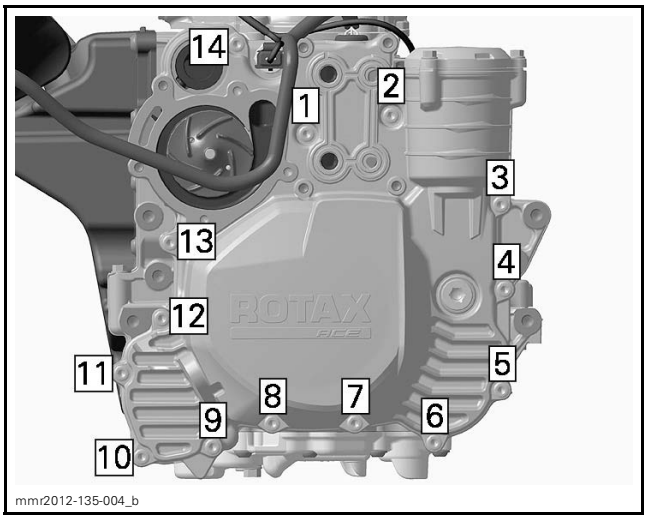


*TIGHTENING SEQUENCE*

8. Install all other removed parts, refer to applicable subsections.

# STATOR

## Stator Connector Access

1. Move fuel tank backward. Refer to *MOVING FUEL TANK REARWARD FOR SERVICING* in *FUEL TANK AND FUEL PUMP* subsection.
2. Disconnect magneto connector from voltage regulator.

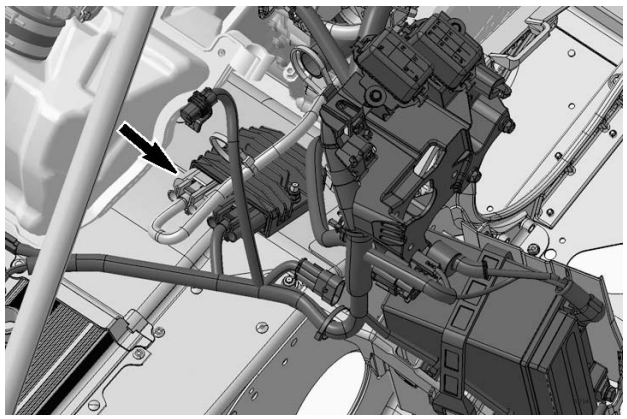
mmr2011-067-005_a

*TYPICAL - SOME PARTS REMOVED FOR CLARITY*

## Stator Continuity Test

1. Disconnect the magneto connector from voltage regulator, refer to *STATOR CONNECTOR ACCESS* in this subsection.
2. Set multimeter to Ω.

| REQUIRED TOOL | |
|---|---|
| FLUKE 115 MULTIMETER (P/N 529 035 868) | |

3. Probe between each pair of YELLOW wires by touching (NOT inserting) terminals lock tabs as shown.

***NOTICE*** **Never insert a multimeter probe into a terminal as it would ruin the terminal.**

vbs2012-014-001

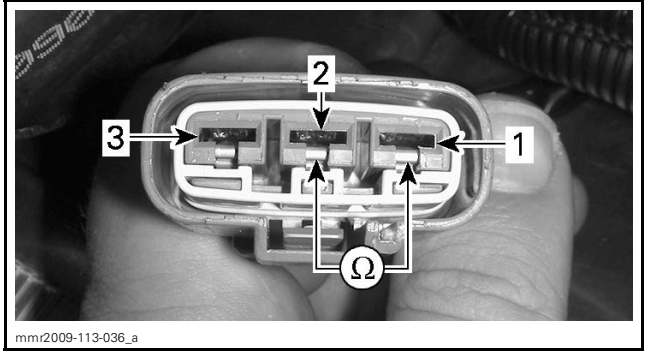

mmr2009-113-036_a

*1. Pin #1*
*2. Pin #2*
*3. Pin #3*

4. Read resistance as per following table.

| STATOR CONTINUITY TEST | |
|---|---|
| YELLOW WIRES (EACH PAIR) | RESISTANCE @ 20°C (68°F) |
| Pins 1 and 2 | 0.1 - 1 Ω |
| Pins 1 and 3 | |
| Pins 2 and 3 | |

If any resistance reading is not as specified, the stator or the wiring (including connector) is open and needs to be repaired or replaced.

If resistance is good, perform the stator insulation test.

## Stator Insulation Test

1. Connect multimeter between any YELLOW wire and chassis ground.

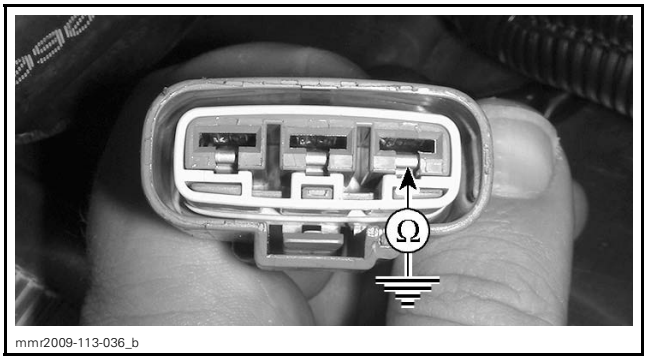

mmr2009-113-036_b

2. Read resistance.

| STATOR INSULATION TEST | |
|---|---|
| PROBE POSITIONS | RESISTANCE @ 20°C (68°F) |
| Any YELLOW wire and chassis ground | Infinity (OL) |

If any resistance reading is not as specified, the stator or the wiring is shorted to ground and needs to be repaired or replaced.

If the insulation test is good, perform the output voltage test.

## Stator Output Voltage Test

1. Disconnect stator at voltage regulator.

NOTE: To ease access, move fuel tank back carefully, but do not disconnect. Refer to *FUEL TANK AND FUEL PUMP*.

2. Start engine and let it reach its operating temperature.
3. Set multimeter to Vac scale.
4. With engine idling, connect multimeter between each pair of YELLOW wires.

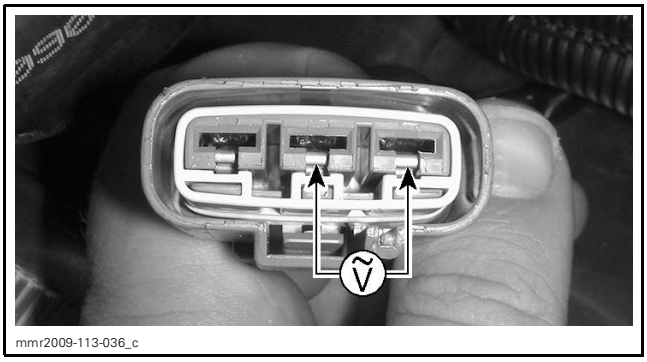

mmr2009-113-036_c

5. Read voltage.

| STATOR OUTPUT VOLTAGE TEST | | |
|---|---|---|
| TEST ENGINE SPEED | TERMINAL | VOLTAGE |
| Idle speed | 1 and 2 | ± 25 Vac |
| | 1 and 3 | |
| | 2 and 3 | |

If any voltage reading is significantly lower than specification, replace the stator.

## Stator Removal

1. Remove the *MAGNETO COVER*, see procedure in this subsection.
2. Remove stator retaining screws.

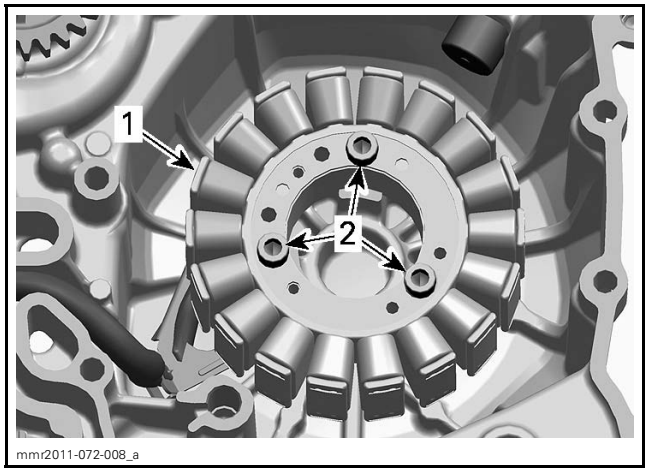

mmr2011-072-008_a

*1. Stator*
*2. Stator retaining screws*

3. Remove stator.

## Stator Inspection

Check stator windings and insulation for cracks and other damages. If damaged replace it.

Check if stator wires are brittle, hard or otherwise damaged.

## Stator Installation

1. Ensure stator cable is underneath cable holder during installation of stator.

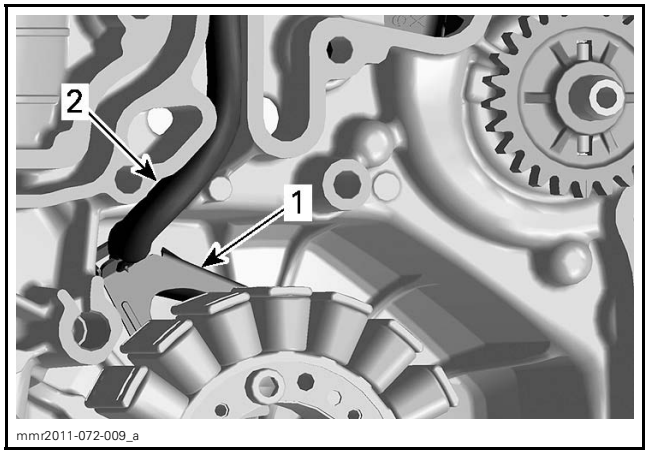

mmr2011-072-009_a

*1. Cable holder*
*2. Stator cable*

2. Install stator retaining screws and tighten to specified torque.

| STATOR RETAINING SCREWS | |
|---|---|
| Service product | LOCTITE 243 (BLUE) (P/N 293 800 060) |
| Tightening torque | 9 N•m ± 1 N•m (80 lbf•**in** ± 9 lbf•**in**) |

3. Reinstall *MAGNETO COVER*, see procedure in this subsection.

# ROTOR

## Rotor Removal

1. Remove *MAGNETO COVER*, see procedure in this subsection.
2. Lock crankshaft. Refer to *BOTTOM END* subsection.
3. Remove rotor retaining screw and lock washer.

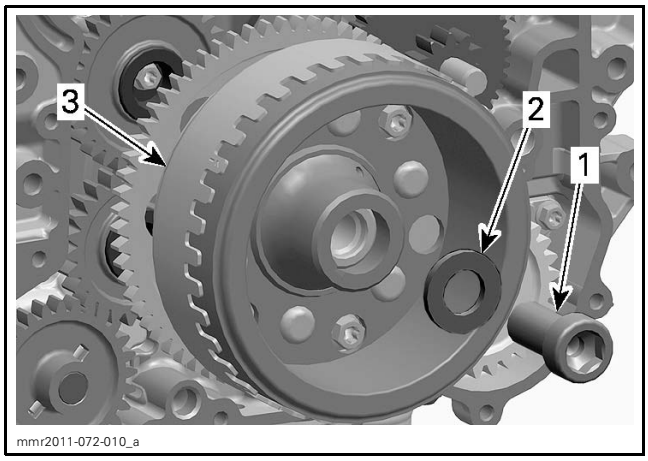


*1. Retaining screw*
*2. Lock washer*
*3. Rotor*

4. Remove rotor.

| REQUIRED TOOLS | |
|---|---|
| CRANKSHAFT PROTECTOR (P/N 529 036 213) | |
| FLYWHEEL PULLER (P/N 420 976 235) | |

NOTE: Apply some grease on the crankshaft protector surface to ease puller operation.

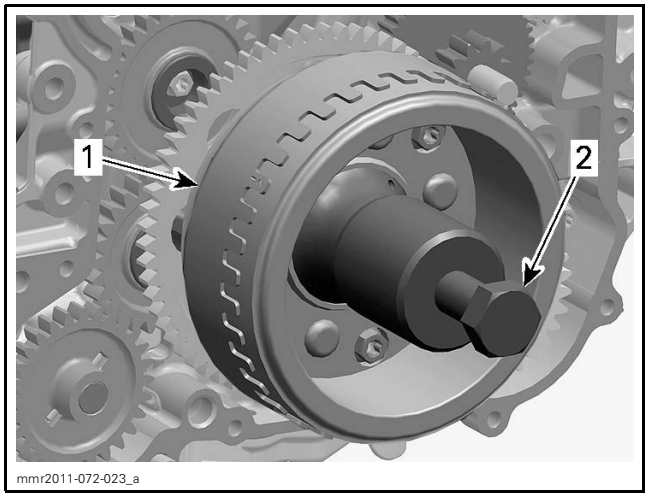


*1. Rotor*
*2. Flywheel puller screw*

## Rotor Inspection

Check the inner side of the rotor for scratches or other damage.

Check keyway for wear or damages.

Check if trigger wheel teeth are bent or otherwise damaged.

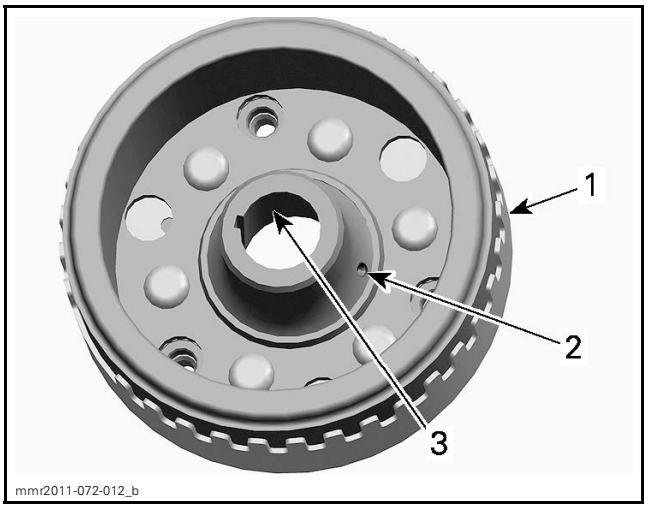


*1. Rotor with trigger wheel*
*2. Oil passage in magneto hub*
*3. Rotor taper*

Check woodruff key and keyway on crankshaft for wear or damages.

Replace parts as necessary.

## Rotor Installation

Reverse the removal procedure. However, pay attention to the following.

1. Blow compressed air through oil passage in magneto hub. Check if it is clogged.
2. Using PULLEY FLANGE CLEANER (P/N 413 711 809), clean:
   - The oil passage
   - The crankshaft threads
   - The crankshaft taper
   - The rotor taper.

**NOTICE** **Taper on crankshaft and rotor must be free of grease.**

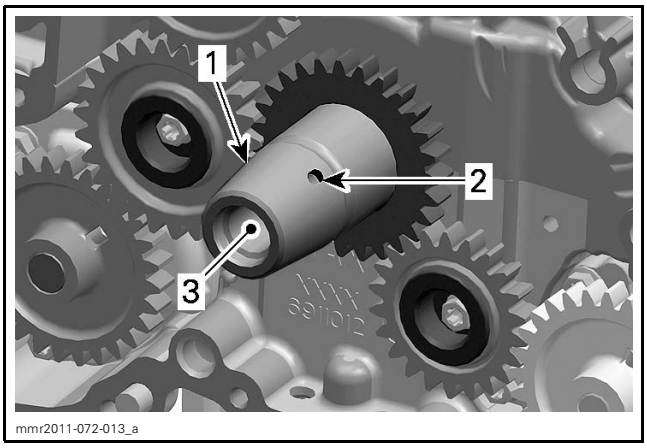

mmr2011-072-013_a

1. *Crankshaft MAG side*
2. *Oil passage*
3. *Thread*

3. Apply oil on sprag clutch and needle bearing.
4. Install sprag clutch gear onto the rotor.

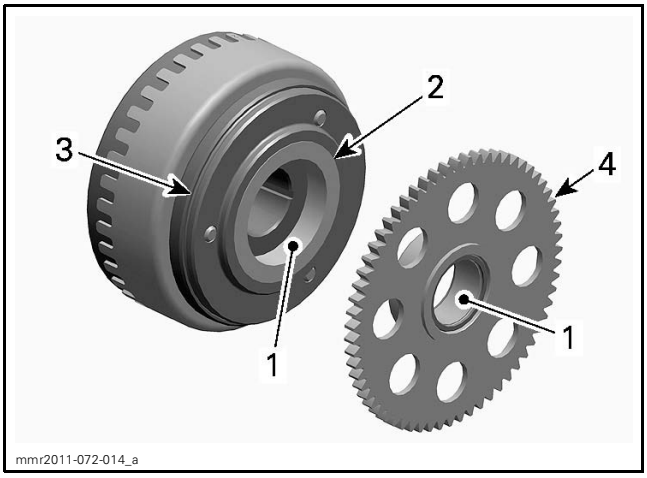

mmr2011-072-014_a

1. *Apply engine oil here*
2. *Sprag clutch*
3. *Sprag clutch housing*
4. *Sprag clutch gear*

5. Slide rotor along with the sprag clutch gear onto the crankshaft. The woodruff key and keyway must be aligned.
6. Rotate sprag clutch gear counterclockwise to align with starter double gear.

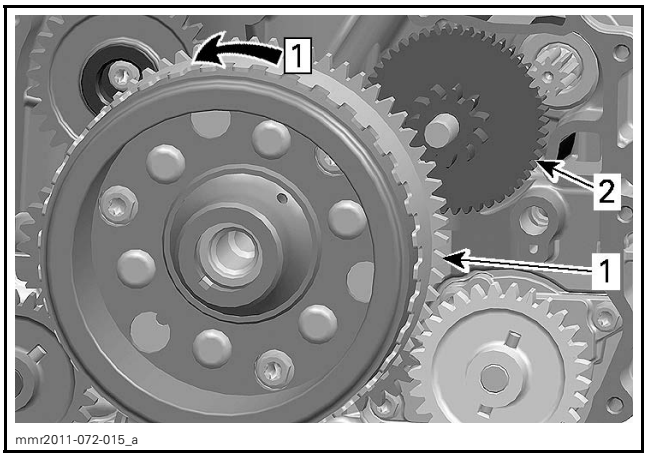

mmr2011-072-015_a

*Step 1: Rotate to align teeth*

1. *Sprag clutch gear*
2. *Starter double gear*

7. Install washer and retaining screw.
8. Tighten to specified torque.

| ROTOR RETAINING SCREW | |
|---|---|
| Service product | LOCTITE 243 (BLUE) (P/N 293 800 060) |
| Tightening torque | 150 N•m ± 10 N•m (111 lbf•ft ± 7 lbf•ft) |

# SPRAG CLUTCH

## Sprag Clutch Removal

1. Remove the *MAGNETO COVER*, see procedure in this subsection.
2. Lock crankshaft. Refer to *CYLINDER BLOCK* subsection.
3. Loosen and remove sprag clutch housing screws.

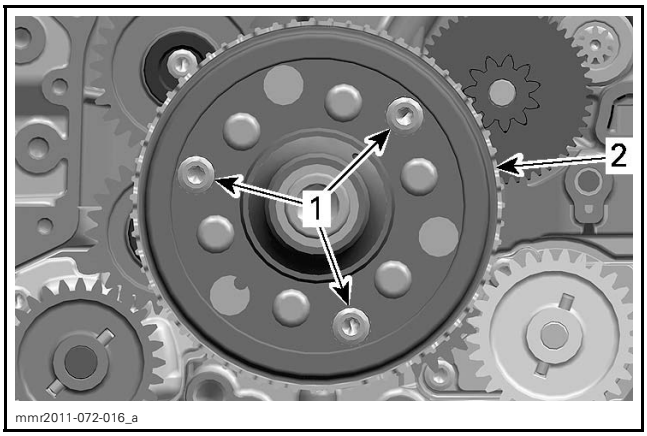

mmr2011-072-016_a

1. *Sprag clutch housing screws*
2. *Rotor*

4. Remove *ROTOR*, see procedure in this subsection.
5. Remove sprag clutch housing.

6. Remove sprag clutch from sprag clutch housing.

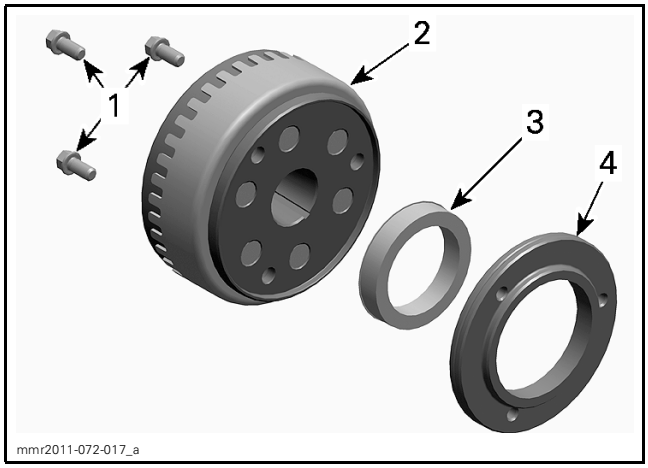


1. *Sprag clutch housing screws*
2. *Rotor*
3. *Sprag clutch*
4. *Sprag clutch housing*

## Sprag Clutch Inspection

Inspect sprag clutch and sprag clutch housing for wear and damage.

Check the collar of the sprag clutch gear, refer to *SPRAG CLUTCH GEAR* in this subsection.

Rotate sprag clutch gear clockwise. Gear must rotate freely.

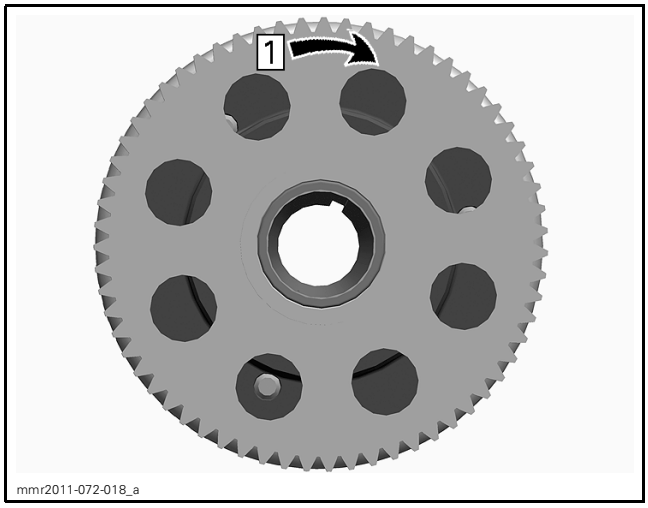


*Step 1: Free*

Rotate sprag clutch gear counterclockwise. Gear must lock.

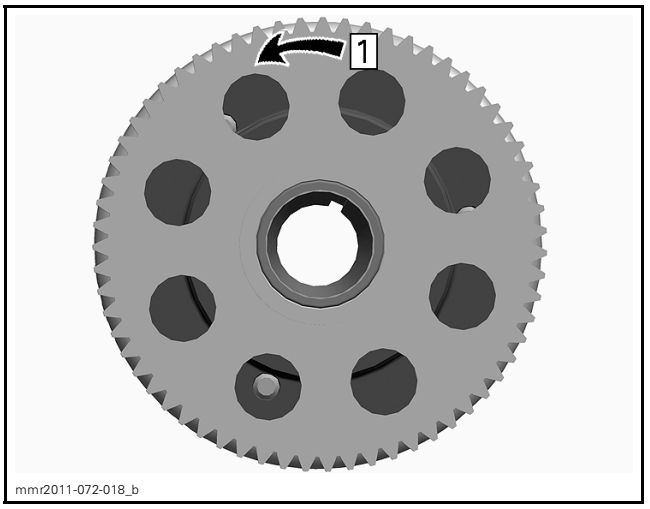


*Step 1: Lock*

## Sprag Clutch Installation

1. Clean sprag clutch housing with a parts cleaner.

**NOTICE** **Threads of sprag clutch housing must be free of any lubricants.**

| SPRAG CLUTCH HOUSING | |
|---|---|
| Service product | PULLEY FLANGE CLEANER (P/N 413 711 809) |

2. Apply thread locker on threads of sprag clutch housing screws.

| SPRAG CLUTCH HOUSING SCREWS | |
|---|---|
| Service product | LOCTITE 648 (GREEN) (P/N 413 711 400) |

3. Loosely install screws.
4. Apply engine oil on sprag clutch and sprag clutch gear needle bearing.

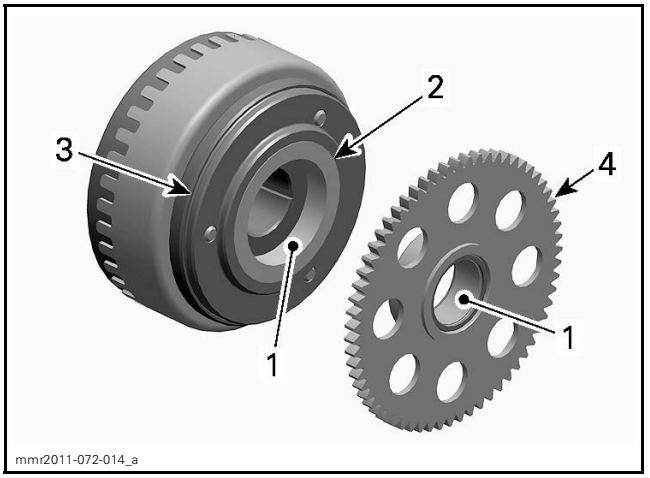


1. *Apply engine oil here*
2. *Sprag clutch*
3. *Sprag clutch housing*
4. *Sprag clutch gear*

5. Install *ROTOR*, see procedure in this subsection.
6. Tighten sprag clutch housing screws to the specified torque.

| SPRAG CLUTCH HOUSING SCREWS | |
|---|---|
| Tightening torque | 30 N•m ± 2 N•m (22 lbf•ft ± 1 lbf•ft) |

7. Install all other removed parts.

# SPRAG CLUTCH GEAR

## Sprag Clutch Gear Removal

1. Remove rotor and sprag clutch gear together. Refer to *ROTOR* in this subsection.
2. Pull sprag clutch gear out of the rotor.

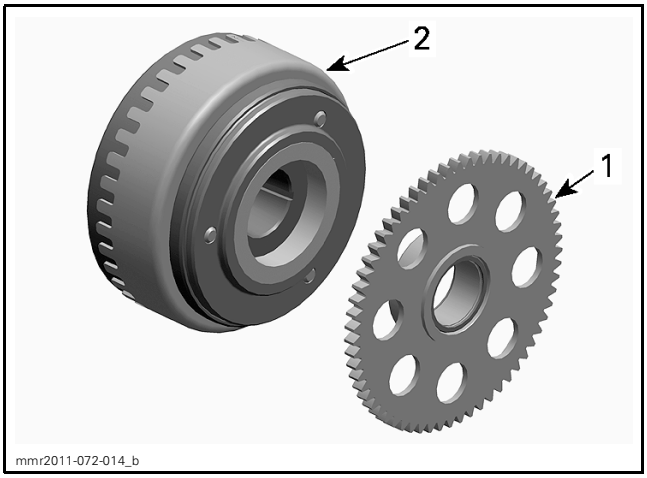


*1. Sprag clutch gear*
*2. Rotor*

## Sprag Clutch Gear Inspection

Inspect gear, especially teeth and sprag clutch collar for wear and other damage.

Check needle bearing for wear and pittings.

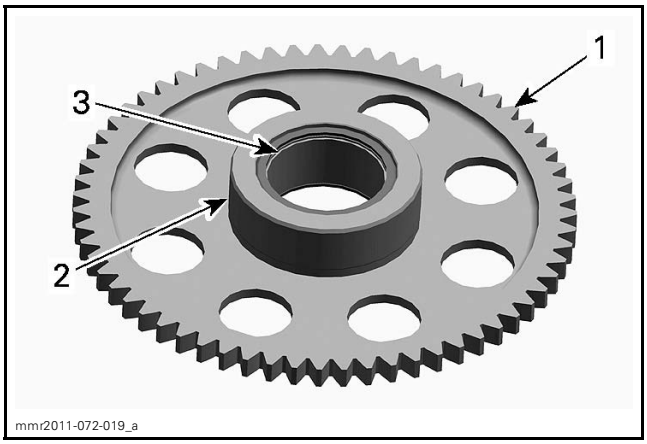


*1. Teeth*
*2. Collar*
*3. Needle bearing*

Replace sprag clutch gear if necessary.

## Sprag Clutch Gear Installation

Reverse the removal procedure. However, pay attention to the following.

NOTE: Apply engine oil on needle bearing and collar of sprag clutch gear.

# STARTER DRIVE GEARS

The starter drive gears are located on the engine MAG side, behind the magneto cover.

## Starter Drive Gear Removal

1. Remove *MAGNETO COVER*, see procedure in this subsection.
2. Remove location pin and starter double gear.

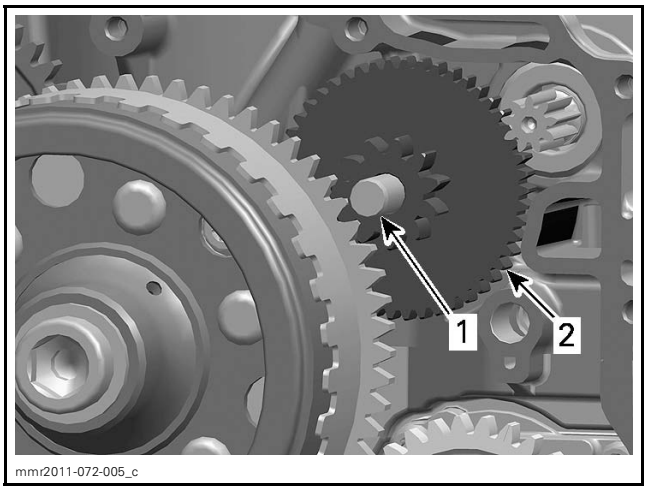


*1. Location pin*
*2. Starter double gear*

## Starter Drive Gear Inspection

Inspect starter drive gears and location pin for wear and damage.

Replace parts if necessary.

### Starter Drive Gear Installation

Reverse the removal procedure. However, pay attention to the following.

Apply engine oil on the location pin.

## STARTER

### Starter Operation Test

Before carrying out any starter test, make sure:
- Battery is fully charged and in good condition
- Cable connections at battery, starter and solenoid are tight
- Cables are in good condition.

1. Disconnect the negative battery cable.

**⚠ WARNING**

**Sparks can occur when connecting jumper cables. To avoid fire hazard, be sure that no flammable liquids or fuel vapors are in the test area.**

2. Using booster cables and a fully charged battery (or a power pack), carefully supply current directly to the starter.
   2.1 Connect the negative booster cable or power pack cable to a good ground such as an engine support.
   2.2 Momentarily touch the starter positive terminal.

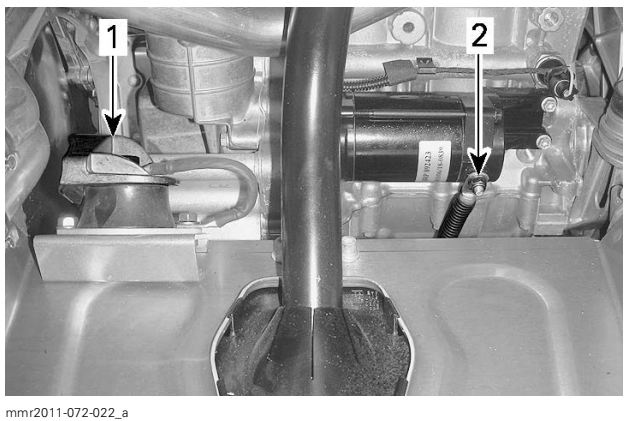


*TYPICAL*
*1. Engine support*
*2. Starter positive terminal*

If starter turns at normal speed, test the starting circuit. Refer to *STARTING SYSTEM* subsection.

If starter turns slowly, carry out the *STARTER VOLTAGE DROP TEST (AT BATTERY)*.

If starter does not turn, replace starter.

### Starter Voltage Drop Test (at Battery)

NOTE: This test will confirm if starter draws too much current. Battery must be fully charged and in good condition.

1. Set the multimeter to Vdc.
2. Probes battery posts.
3. Crank engine in drowned mode (accelerator held all the way in).
4. Read voltage while cranking.

NOTE: Battery voltage will drop approximately 2 Vdc and fluctuate with starter cranking load.

If the result is close to battery voltage, the starter is in good condition.

If the result is below battery voltage (- 2 Vdc and more), the starter may be defective.

### Starter Access

Refer to appropriate section and remove:
- LH side panel
- Drive belt guard.

### Starter Removal

1. Disconnect the BLACK (-) cable from the battery.
2. Remove starter cable from starter.
3. Remove starter retaining screws.

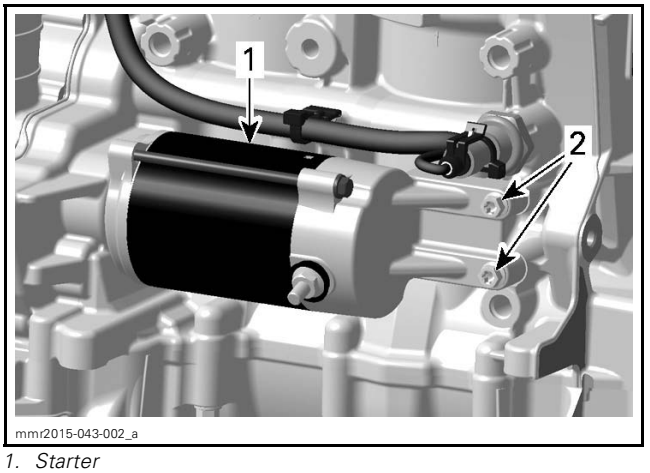


*1. Starter*
*2. Starter retaining screws*

4. Remove starter from engine.

### Starter Installation

1. Ensure starter and engine mating surfaces are free of debris.

**NOTICE** **Serious problems may arise if the starter is not properly aligned.**

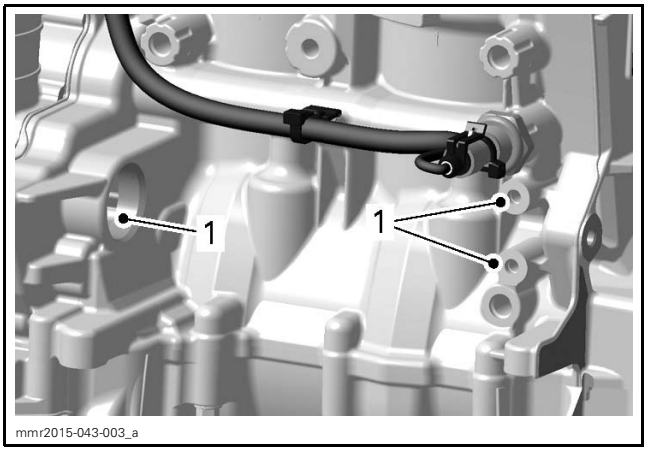


*1. Clean mating surfaces*

2. Lubricate starter boss and starter O-ring before installation.

| STARTER BOSS +O-RING | |
|---|---|
| Service product | KLÜEBER PASTE 46 MR 401 (P/N 420 297 616) |

*1. Lubricate starter boss*
*2. Lubricate starter O-ring*

3. Insert starter gear in engine.
4. Install starter screws and tighten to specified torque.

| STARTER SCREWS | |
|---|---|
| Tightening torque | 9 N•m ± 1 N•m (80 lbf•**in** ± 9 lbf•**in**) |

5. Connect starter cable to starter terminal and tighten nut to specified torque.

| STARTER CABLE NUT | |
|---|---|
| Tightening torque | 7 N•m ± 1 N•m (62 lbf•**in** ± 9 lbf•**in**) |

6. Install all other removed parts.
7. Reconnect BLACK (-) cable on battery post.

**⚠ WARNING**

Always connect RED (+) starter cable first, and BLACK (-) battery cable last. Whenever connecting the RED (+) cable to the starter motor, always make sure the BLACK (-) battery cable is disconnected to prevent electric shock.

8. Test for proper starter operation.

Midwest Manuals
Green Manuals
Paperless Manuals for a Better Tomorrow www.green-manuals.com
If you bought this manual from any other seller please leave them NEGATIVE feedback and notify me at bestshopmanuals@gmail.com

# MAGNETO AND STARTER

## SERVICE TOOLS

| Description | Part Number | Page |
|---|---|---|
| CRANKSHAFT PROTECTOR | 529 036 213 | 7 |
| FLYWHEEL PULLER | 420 976 235 | 7 |

## SERVICE PRODUCTS

| Description | Part Number | Page |
|---|---|---|
| BRAKE AND PARTS CLEANER PRO S2 | 779245 | 7, 9 |
| KLÜEBER PASTE 46 MR 401 | 420 297 616 | 11 |
| LOCTITE 243 (BLUE) | 293 800 060 | 6, 8 |
| LOCTITE 648 (GREEN) (F) | 619 600 012 | 9 |
| LOCTITE 648 (GREEN) | 413 711 400 | 9 |
| LOCTITE CHISEL (GASKET REMOVER) | 413 708 500 | 3 |

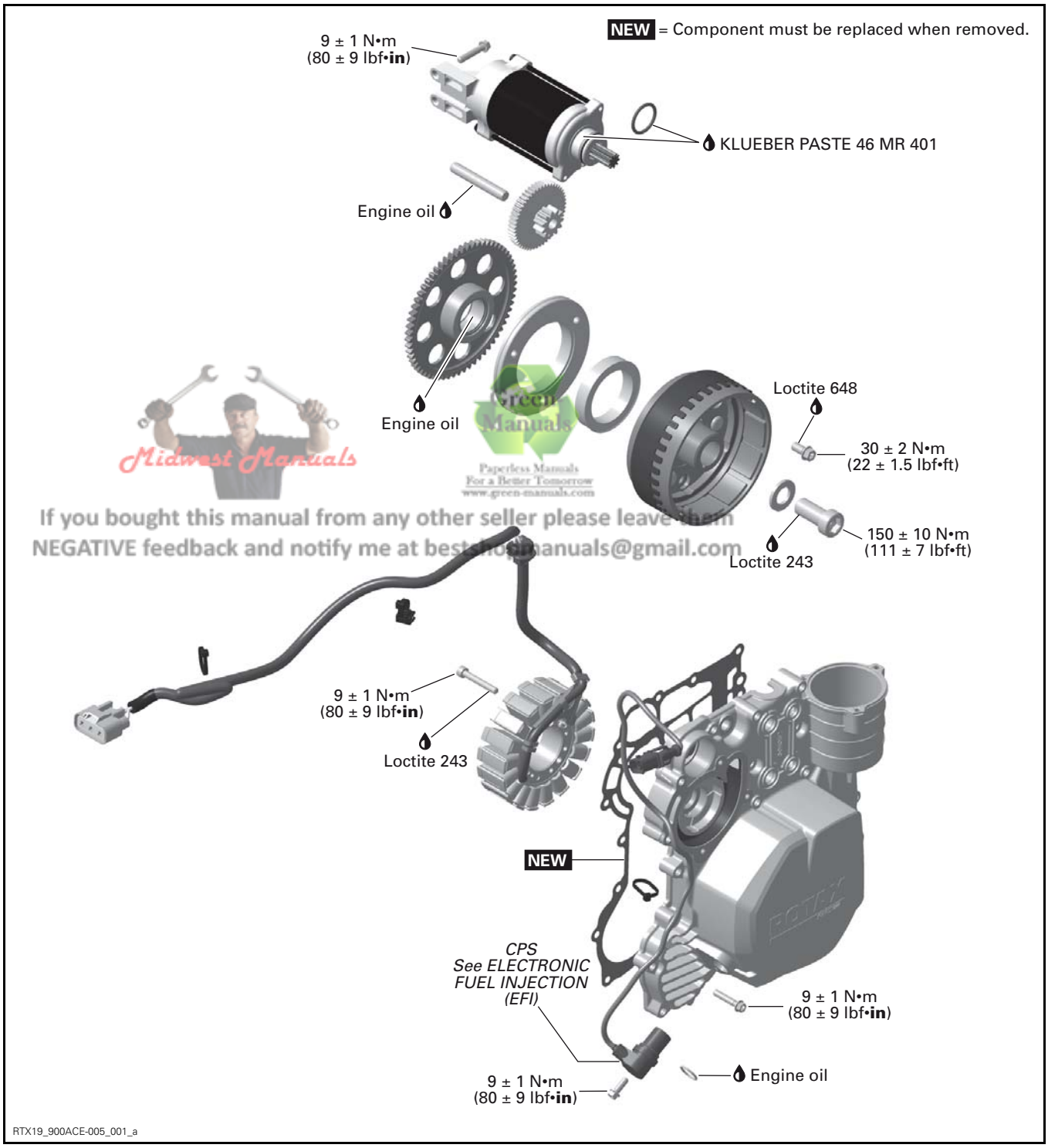


Midwest Manuals
Green Manuals
Paperless Manuals
For a Better Tomorrow
www.green-manuals.com
If you bought this manual from any other seller please leave them
NEGATIVE feedback and notify me at bestfloridamanuals@gmail.com

# TROUBLESHOOTING

Always check for fault codes. If a fault code is detected, service the fault code first. Refer to *DIAGNOSTIC AND FAULT CODES* subsection.

## ENGINE DOES NOT CRANK

1. Battery voltage too low.
   - *Check battery condition.*
2. Starter is turning but engine does not crank.
   - *Check sprag clutch for wear or other damages.*
3. Starter is defective.
   - *Check starter condition. Perform TESTING THE STARTER OPERATION and TESTING THE STARTER VOLTAGE DROP.*
4. Engine is only cranking 1 - 2 seconds before it stops.
   - *Check battery condition.*

# PROCEDURES

## MAGNETO COVER

### Magneto Cover Location

The magneto cover is located on the right side of the engine.

NOTE: Magneto cover cannot be removed without removing engine from vehicle.

### Removing the Magneto Cover

1. Refer to *ENGINE REMOVAL AND INSTALLATION* and remove engine.
2. Refer to *LUBRICATION SYSTEM* and drain engine oil.
3. Refer to *COOLING SYSTEM* and remove:
   – Water pump housing
   – Thermostat housing.
4. Refer to *LUBRICATION SYSTEM* subsection and remove:
   – Oil pressure regulator
   – Oil cooler.
5. Remove the CPS.

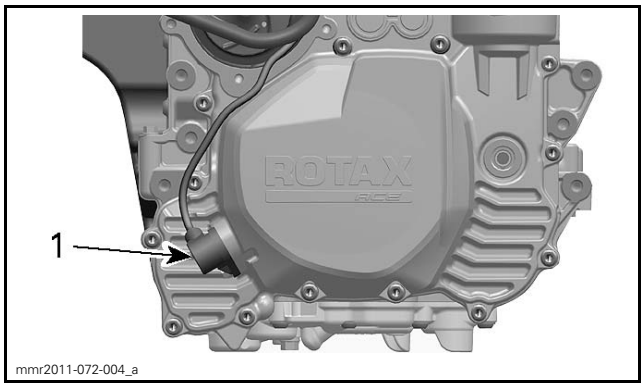


*1. CPS*

6. Remove magneto cover retaining screws.

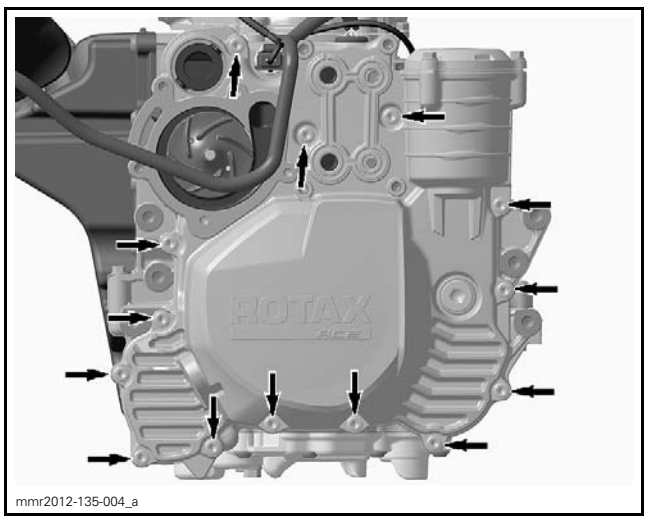


*MAGNETO COVER SCREWS*

7. Place an oil pan under magneto area to catch remaining oil.
8. Pull magneto cover off.

### Inspecting the Magneto Cover

Check magneto cover for cracks or other damage. Replace if necessary.

### Installing the Magneto Cover

1. Clean magneto cover.

| SERVICE PRODUCT |
| --- |
| LOCTITE CHISEL (GASKET REMOVER) (P/N 413 708 500) |

2. Install a NEW magneto cover gasket.
3. Ensure starter drive gear pin is in place.
4. Apply engine oil on starter drive gear pin.

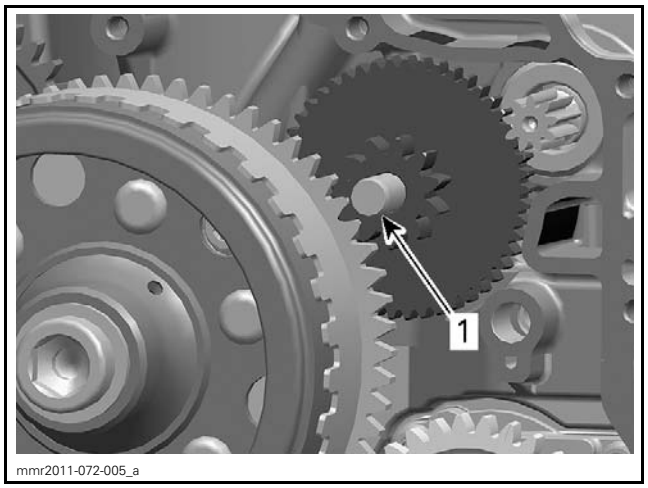


*APPLY ENGINE OIL*
*1. Starter drive gear pin*

5. Apply engine oil on water pump shaft.

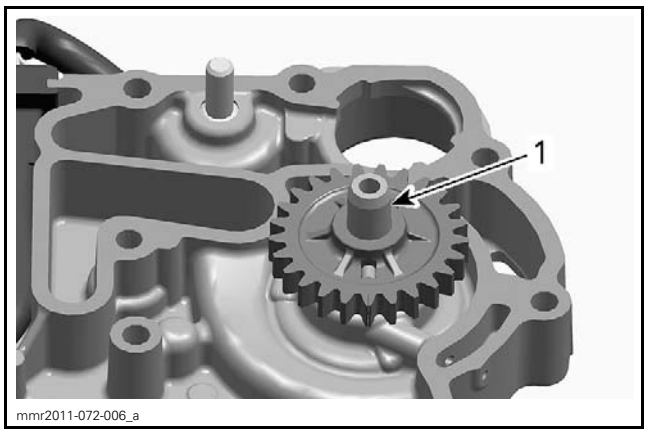


*1. Water pump shaft - apply engine oil*

**NOTICE** Make sure the stator cable harness is embedded in the cover channel provided. The part of the harness that is out of the channel must be tight, otherwise it might chafe or jam.

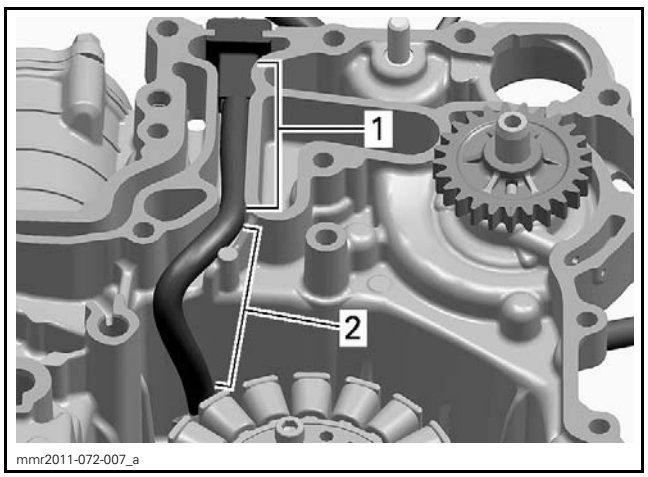


*1. Embedded in that area*
*2. Tight in this area*

6. Carefully install magneto cover.

**⚠ CAUTION** Magnetic force between magneto flywheel and stator is very high. Avoid finger contusions.

7. Tighten to specification magneto cover screws according to the following sequence.

| TIGHTENING TORQUE | |
|---|---|
| Magneto cover screws | 9 N•m ± 1 N•m (80 lbf•**in** ± 9 lbf•**in**) |

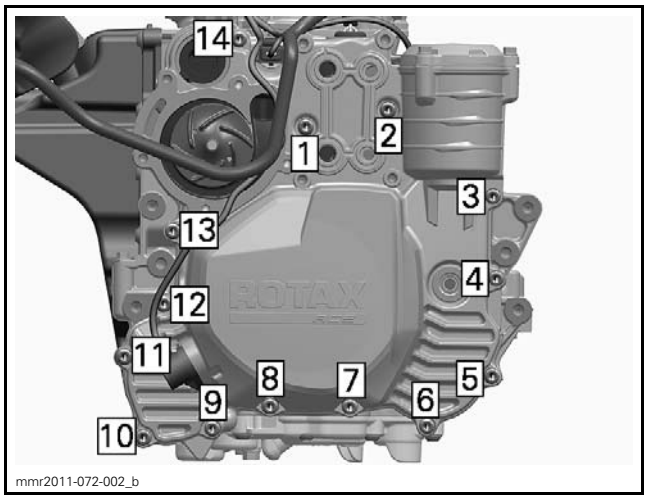


*TIGHTENING SEQUENCE*

8. Install all other removed parts, refer to applicable subsections.

# STATOR

## Stator Connector Location

The stator connector is located on the tunnel, under the front of the fuel tank.

To reach it, move fuel tank backward. Refer to *MOVING FUEL TANK REARWARD FOR SERVICING* in *FUEL TANK AND FUEL PUMP* subsection.

## Testing the Stator Continuity

1. Disconnect the stator connector from voltage regulator.
2. Set multimeter to Ω.
3. Probe each pair of YELLOW wires by touching (NOT inserting) terminals lock tabs as shown.

**NOTICE** Never insert a multimeter probe into a terminal as it would ruin the terminal.

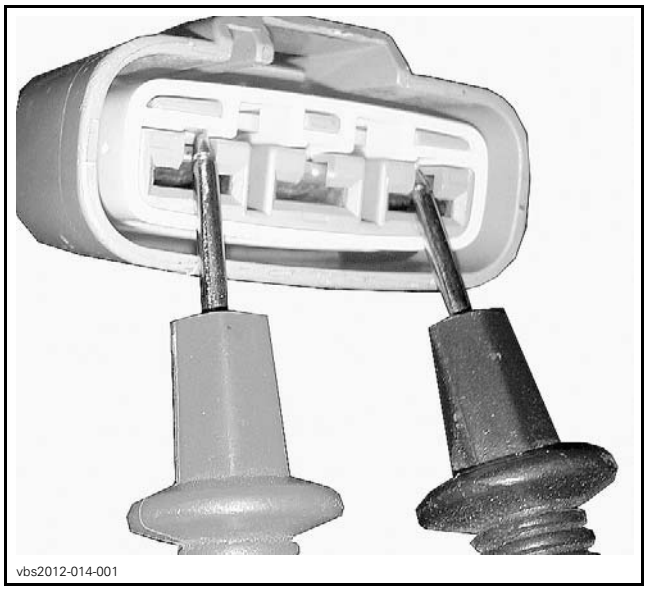
vbs2012-014-001

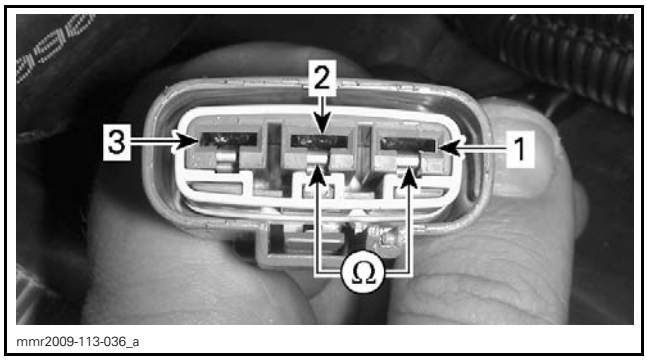

mmr2009-113-036_a

1. *Pin #1*
2. *Pin #2*
3. *Pin #3*

4. Read resistance as per following table.

| STATOR CONTINUITY TEST | |
|---|---|
| YELLOW WIRES (EACH PAIR) | RESISTANCE @ 20°C (68°F) |
| Pins 1 and 2 | 0.1 - 1 Ω |
| Pins 1 and 3 | |
| Pins 2 and 3 | |

If any resistance reading is not as specified, the stator or the wiring (including connector) is open and needs to be repaired or replaced.

If resistance is good, perform the stator insulation test.

## Testing the Stator Insulation

1. Connect multimeter between any YELLOW wire and chassis ground.

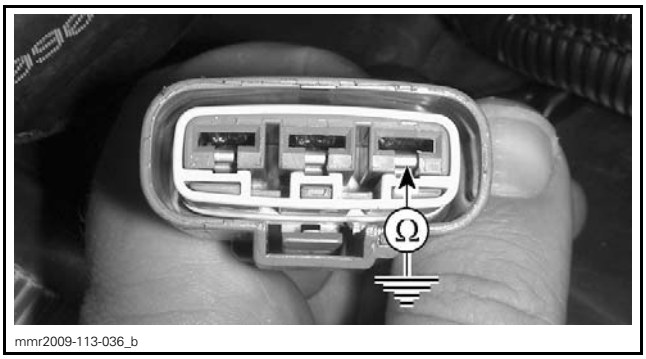

mmr2009-113-036_b

2. Read resistance.

| STATOR INSULATION TEST | |
|---|---|
| PROBE POSITIONS | RESISTANCE @ 20°C (68°F) |
| Any YELLOW wire and chassis ground | Infinity (OL) |

If any resistance reading is not as specified, the stator or the wiring is shorted to ground and needs to be repaired or replaced.

If the insulation test is good, perform the output voltage test.

## Testing the Stator Output Voltage

1. Disconnect stator at voltage regulator.

NOTE: To ease access, move fuel tank back carefully, but do not disconnect. Refer to *FUEL TANK AND FUEL PUMP*.

2. Start engine and let it reach its operating temperature.
3. Set multimeter to Vac scale.
4. With engine idling, connect multimeter between each pair of YELLOW wires.

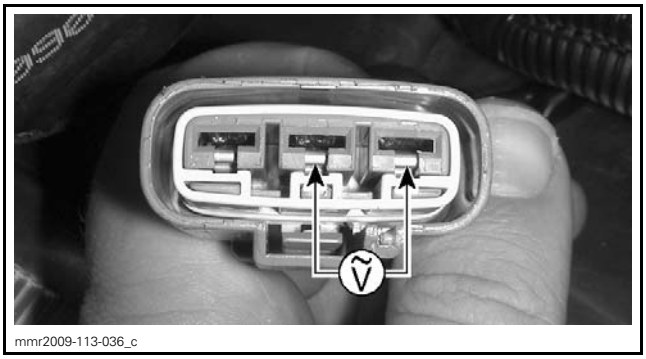

mmr2009-113-036_c

5. Read voltage.

| STATOR OUTPUT VOLTAGE TEST | | |
|---|---|---|
| TEST ENGINE SPEED | TERMINAL | VOLTAGE |
| Idle speed | 1 and 2 | ± 25 Vac |
| | 1 and 3 | |
| | 2 and 3 | |

If any voltage reading is significantly lower than specification, replace the stator.

## Removing the Stator

1. Remove the *MAGNETO COVER*, see procedure in this subsection.
2. Remove stator retaining screws.

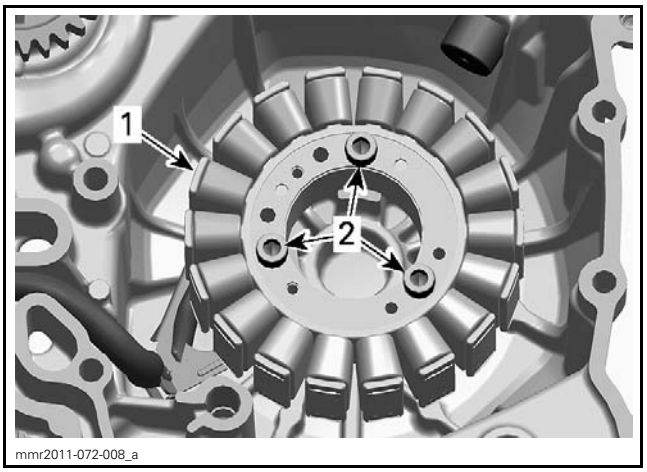


*1. Stator*
*2. Stator retaining screws*

3. Remove stator.

## Inspecting the Stator

Check stator windings and insulation for cracks and other damages. If damaged replace it.

Check if stator wires are brittle, hard or otherwise damaged.

## Installing the Stator

1. Ensure stator cable is underneath cable holder during installation of stator.

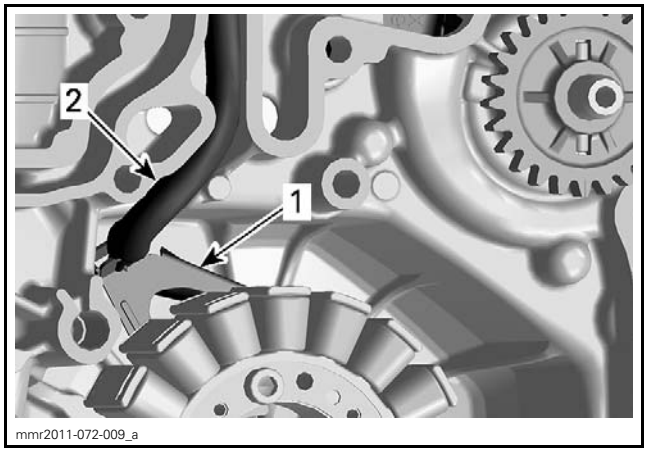


*1. Cable holder*
*2. Stator cable*

2. Install stator retaining screws and tighten to specified torque.

| TIGHTENING TORQUE | |
|---|---|
| Stator retaining screws | 9 N•m ± 1 N•m (80 lbf•**in** ± 9 lbf•**in**) + LOCTITE 243 (BLUE) (P/N 293 800 060) |

3. Reinstall *MAGNETO COVER*, see procedure in this subsection.

# ROTOR

## Removing the Rotor

1. Remove *MAGNETO COVER*, see procedure in this subsection.
2. Lock crankshaft. Refer to *BOTTOM END* subsection.
3. Remove rotor retaining screw and lock washer.

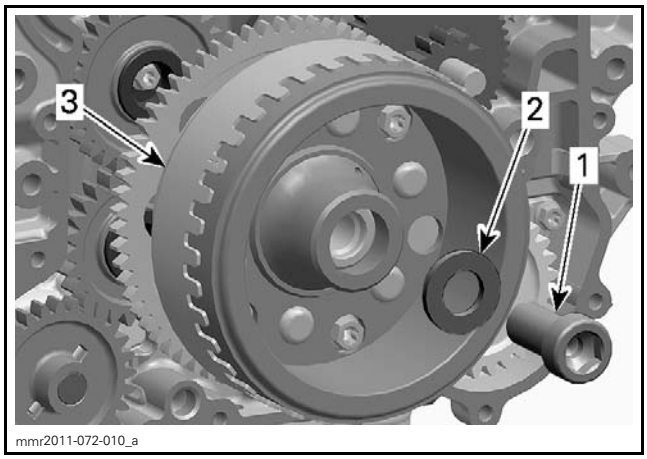


*1. Retaining screw*
*2. Lock washer*
*3. Rotor*

4. Remove rotor.

| REQUIRED TOOL | |
|---|---|
| CRANKSHAFT PROTECTOR (P/N 529 036 213) | |
| FLYWHEEL PULLER (P/N 420 976 235) | |

NOTE: Apply some grease on the crankshaft protector surface to ease puller operation.

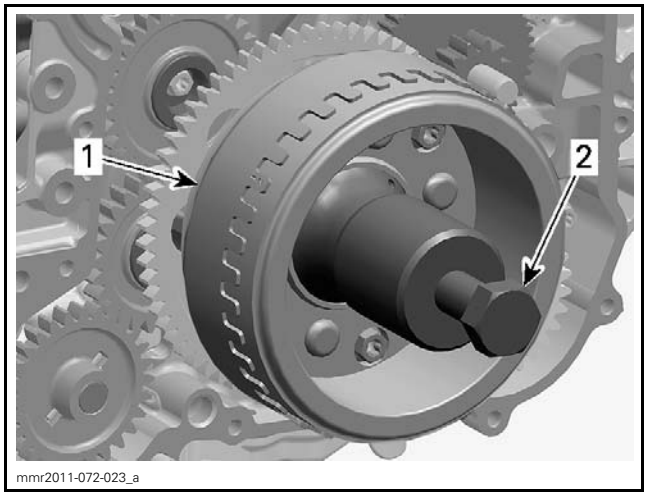


*1. Rotor*
*2. Flywheel puller screw*

## Inspecting the Rotor

Check the inner side of the rotor for scratches or other damage.

Check keyway for wear or damages.

Check if trigger wheel teeth are bent or otherwise damaged.

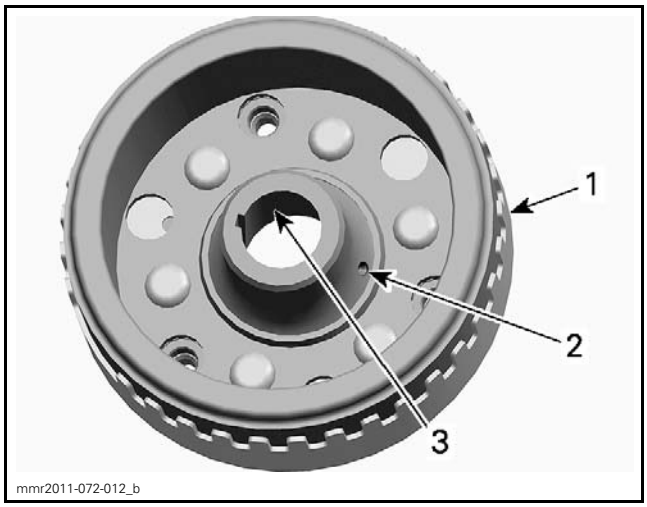


*1. Rotor with trigger wheel*
*2. Oil passage in magneto hub*
*3. Rotor taper*

Check woodruff key and keyway on crankshaft for wear or damages.

Replace parts as necessary.

## Installing the Rotor

Reverse the removal procedure. However, pay attention to the following.

1. Blow compressed air through oil passage in magneto hub. Check if it is clogged.
2. Clean:
   – The oil passage
   – The crankshaft thread
   – The crankshaft taper
   – The rotor taper.

| SERVICE PRODUCT |
|---|
| BRAKE AND PARTS CLEANER PRO S2 (P/N 779245) |

**NOTICE** Taper on crankshaft and rotor must be free of grease.

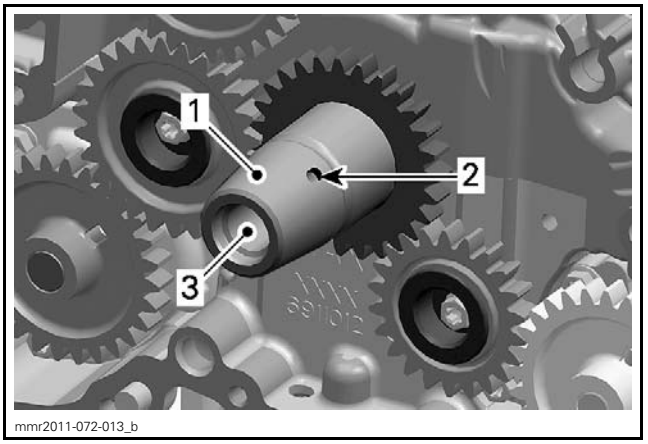


*1. Crankshaft taper*
*2. Oil passage*
*3. Thread*

3. Apply oil on sprag clutch and needle bearing.
4. Install sprag clutch gear onto the rotor.

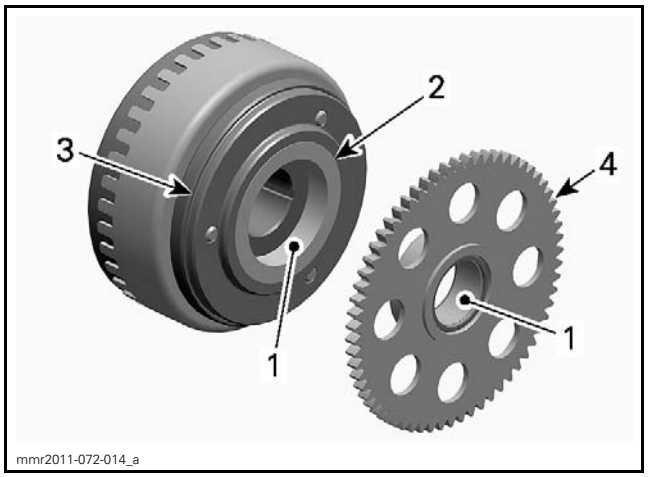


*1. Apply engine oil here*
*2. Sprag clutch*
*3. Sprag clutch housing*
*4. Sprag clutch gear*

5. Slide rotor along with the sprag clutch gear onto the crankshaft. The woodruff key and keyway must be aligned.
6. Rotate sprag clutch gear counterclockwise to align with starter double gear.

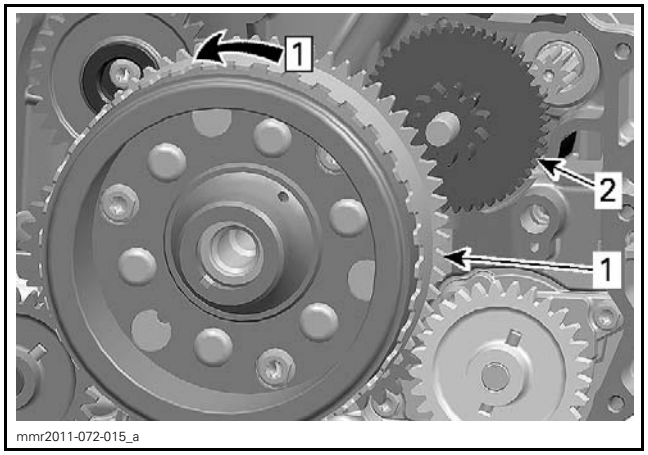


*Step 1: Rotate to align teeth*

*1. Sprag clutch gear*
*2. Starter double gear*

7. Install washer and retaining screw.
8. Tighten to specified torque.

| TIGHTENING TORQUE | |
|---|---|
| Rotor retaining screw | 150 N•m ± 10 N•m (111 lbf•ft ± 7 lbf•ft) + LOCTITE 243 (BLUE) (P/N 293 800 060) |

# SPRAG CLUTCH

## Removing the Sprag Clutch

1. Remove the *MAGNETO COVER*, see procedure in this subsection.
2. Lock crankshaft. Refer to *BOTTOM END* subsection.
3. Loosen and remove sprag clutch housing screws.

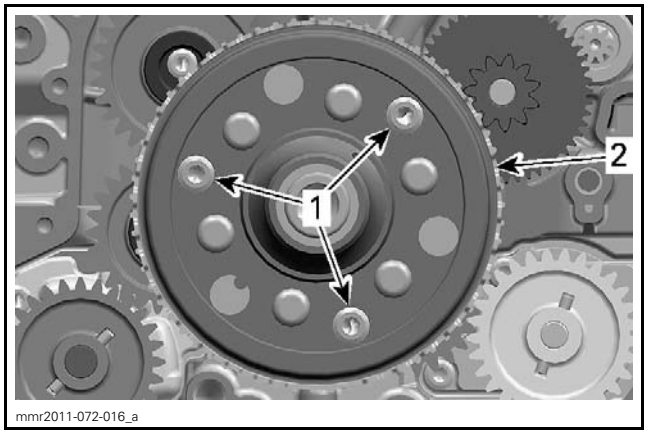


*1. Sprag clutch housing screws*
*2. Rotor*

4. Remove *ROTOR*, see procedure in this subsection.
5. Remove sprag clutch housing.
6. Remove sprag clutch from sprag clutch housing.

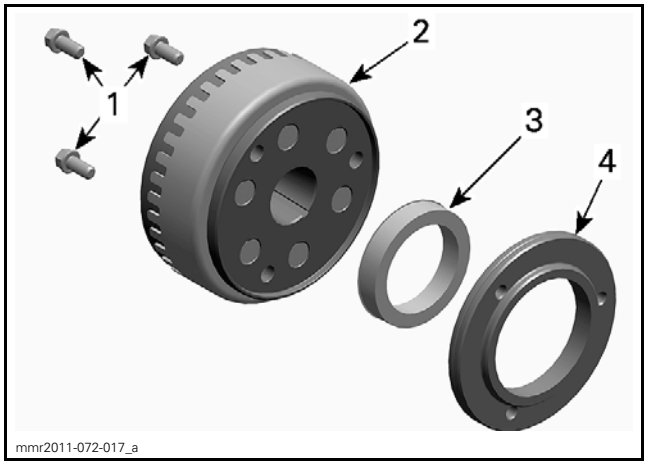


*1. Sprag clutch housing screws*
*2. Rotor*
*3. Sprag clutch*
*4. Sprag clutch housing*

## Inspecting the Sprag Clutch

Inspect sprag clutch and sprag clutch housing for wear and damage.

Check the collar of the sprag clutch gear, refer to *SPRAG CLUTCH GEAR* in this subsection.

Rotate sprag clutch gear clockwise. Gear must rotate freely.

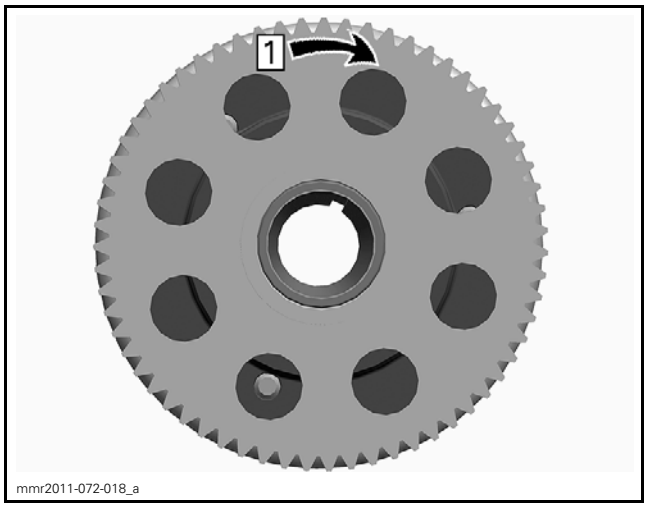


*Step 1: Free*

Rotate sprag clutch gear counterclockwise. Gear must lock.

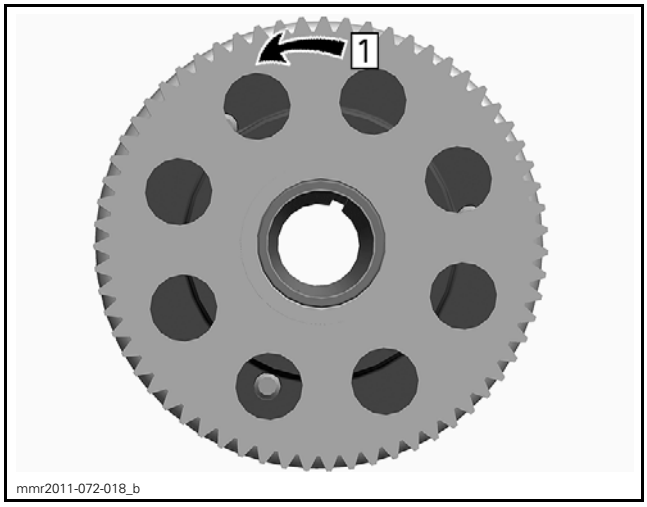


*Step 1: Lock*

## Installing the Sprag Clutch

1. Clean sprag clutch housing with a parts cleaner.

**NOTICE** **Threads of sprag clutch housing must be free of any lubricants.**

| SERVICE PRODUCT |
|---|
| BRAKE AND PARTS CLEANER PRO S2 (P/N 779245) |

2. Apply thread locker on threads of sprag clutch housing screws.

| COUNTRY | SERVICE PRODUCT |
|---|---|
| Scandinavia | LOCTITE 648 (GREEN) (F) (P/N 619 600 012) |
| All other countries | LOCTITE 648 (GREEN) (P/N 413 711 400) |

3. Loosely install screws.
4. Apply engine oil on sprag clutch and sprag clutch gear needle bearing.

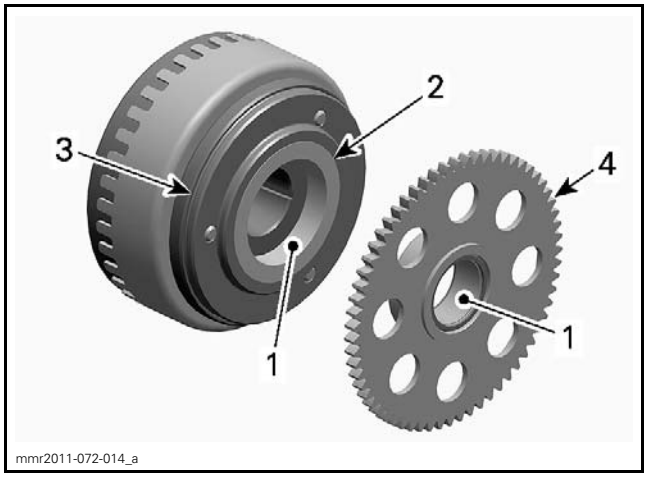


*1. Apply engine oil here*
*2. Sprag clutch*
*3. Sprag clutch housing*
*4. Sprag clutch gear*

5. Install *ROTOR*, see procedure in this subsection.
6. Tighten sprag clutch housing screws to the specified torque.

| TIGHTENING TORQUE | |
|---|---|
| Sprag clutch housing screws | 30 N•m ± 2 N•m (22 lbf•ft ± 1 lbf•ft) |

7. Install all other removed parts.

# SPRAG CLUTCH GEAR

## Removing the Sprag Clutch Gear

1. Remove rotor and sprag clutch gear together. Refer to *ROTOR* in this subsection.
2. Pull sprag clutch gear out of the rotor.

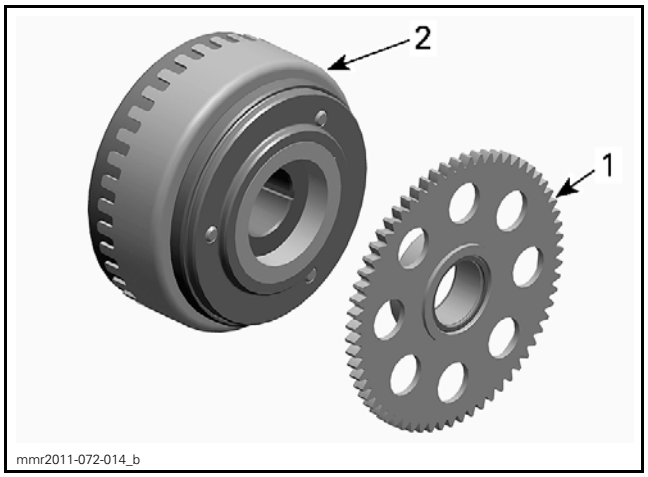


*1. Sprag clutch gear*
*2. Rotor*

### Inspecting the Sprag Clutch Gear

Inspect gear, especially teeth and sprag clutch collar for wear and other damage.

Check needle bearing for wear and pittings.

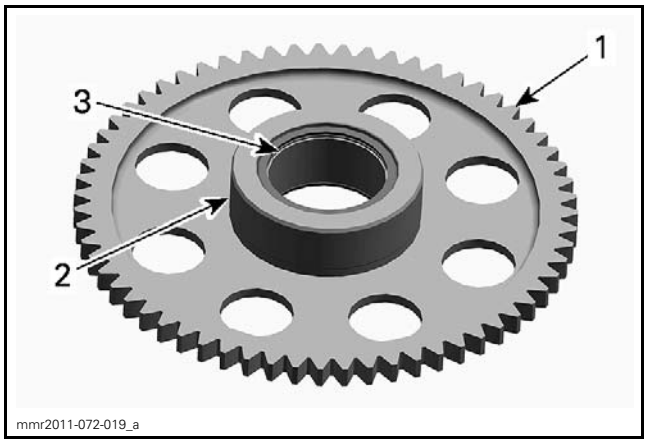


*1. Teeth*
*2. Collar*
*3. Needle bearing*

Replace sprag clutch gear if necessary.

### Installing the Sprag Clutch Gear

Reverse the removal procedure. However, pay attention to the following.

NOTE: Apply engine oil on needle bearing and collar of sprag clutch gear.

## STARTER DRIVE GEARS

The starter drive gears are located on the engine MAG side, behind the magneto cover.

### Removing the Starter Drive Gear

1. Remove *MAGNETO COVER*, see procedure in this subsection.
2. Remove location pin and starter double gear.

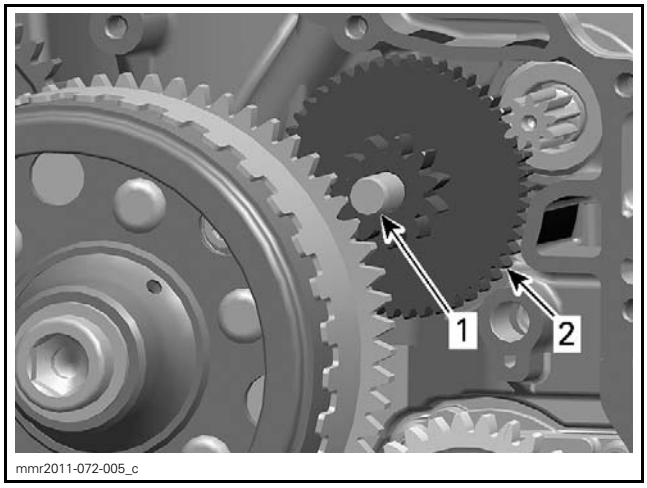


*1. Location pin*
*2. Starter double gear*

### Inspecting the Starter Drive Gear

Inspect starter drive gears and location pin for wear and damage.

Replace parts if necessary.

### Installing the Starter Drive Gear

Reverse the removal procedure. However, pay attention to the following.

Apply engine oil on the location pin.

## STARTER

### Testing the Starter Operation

Before carrying out any starter test, make sure:

– Battery is fully charged and in good condition.
– Cable connections at battery, starter and solenoid are tight.
– Cables are in good condition.

1. Disconnect the negative battery cable.

**⚠ WARNING**

**Sparks can occur when connecting jumper cables. To avoid fire hazard, be sure that no flammable liquids or fuel vapors are in the test area.**

2. Using booster cables and a fully charged battery (or a power pack), carefully supply current directly to the starter.
   2.1 Connect the negative booster cable or power pack cable to a good ground such as an engine support.

2.2 Momentarily touch the starter positive terminal.

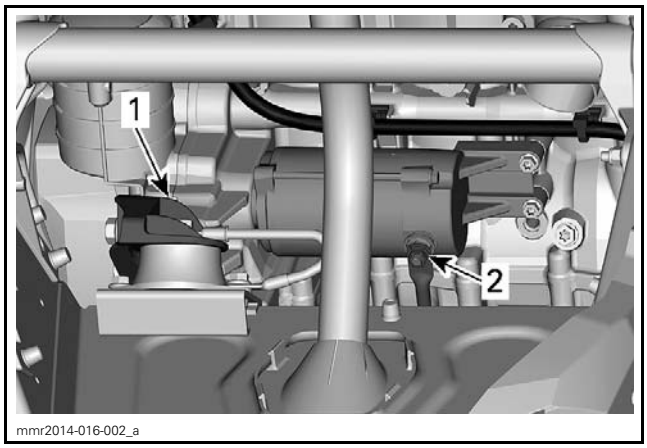


*1. Engine support*
*2. Starter positive terminal*

If starter turns at normal speed, test the starting circuit. Refer to *STARTING SYSTEM* subsection.

If starter turns slowly, carry out the *TESTING THE STARTER VOLTAGE DROP (AT BATTERY)*.

If starter does not turn, replace starter.

## Testing the Starter Voltage Drop (at Battery)

NOTE: This test will confirm if starter draws too much current. Battery must be fully charged and in good condition.

1. Set multimeter to Vdc.
2. Probe battery posts.
3. Crank engine in drowned mode (accelerator held all the way in).
4. Read voltage while cranking.

NOTE: Battery voltage will drop approximately 2 Vdc and fluctuate with starter cranking load.

If the result is close to battery voltage, the starter is in good condition.

If the result is below battery voltage (- 2 Vdc and more), the starter may be defective.

## Starter Location

The starter is located on the front of the engine, under the exhaust manifold..

## Removing the Starter

1. Disconnect the BLACK (–) cable from the battery.
2. Remove starter cable from starter.
3. Remove starter retaining screws.

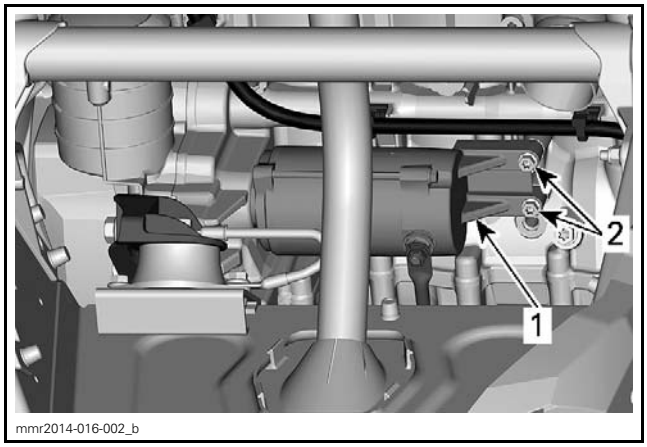


*1. Starter*
*2. Starter retaining screws*

4. Remove starter from engine.

## Installing the Starter

1. Ensure starter and engine mating surfaces are free of debris.

**NOTICE** **Serious problems may arise if the starter is not properly aligned.**

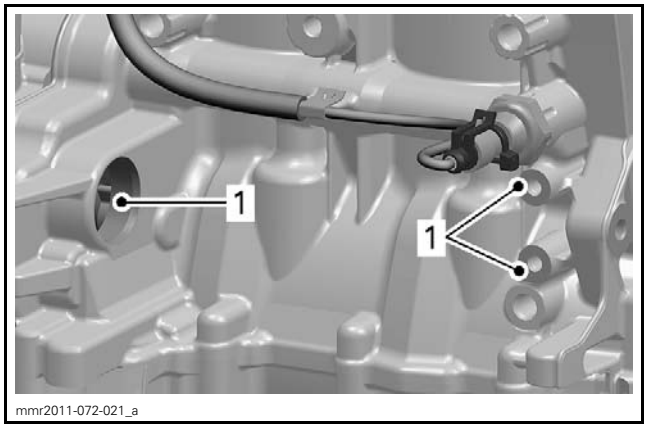


*1. Clean mating surfaces*

2. Lubricate starter boss and starter O-ring before installation.

| SERVICE PRODUCT |
| --- |
| KLÜEBER PASTE 46 MR 401 (P/N 420 297 616) |

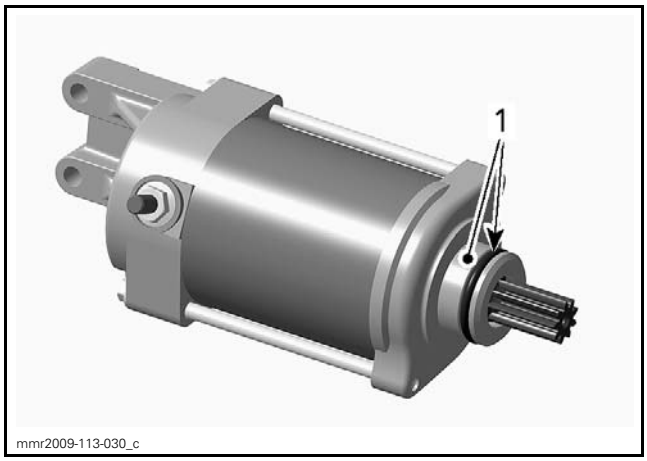


*1. Lubricate starter boss*
*2. Lubricate starter O-ring*

3. Insert starter gear in engine.
4. Install starter screws and tighten to the specified torque.

| TIGHTENING TORQUE | |
|---|---|
| Starter screws | 9 N•m ± 1 N•m (80 lbf•**in** ± 9 lbf•**in**) |

5. Connect starter cable to starter terminal and tighten nut to specified torque.

| TIGHTENING TORQUE | |
|---|---|
| Starter cable nut | 7 N•m ± 1 N•m (62 lbf•**in** ± 9 lbf•**in**) |

6. Install all other removed parts.
7. Reconnect BLACK (–) cable on battery post.

***NOTICE*** **Always connect RED (+) starter cable first, and BLACK (-) battery cable last.**

8. Test for proper starter operation.

# MAGNETO AND STARTER

## SERVICE TOOLS

| Description | Part Number | Page |
|---|---|---|
| CRANKSHAFT PROTECTOR | 529 036 213 | 7 |
| FLUKE 115 MULTIMETER | 529 035 868 | 4 |
| FLYWHEEL PULLER | 420 976 235 | 7 |

## SERVICE PRODUCTS

| Description | Part Number | Page |
|---|---|---|
| BRAKE AND PARTS CLEANER PRO S2 | 779245 | 7, 9 |
| KLÜEBER PASTE 46 MR 401 | 420 297 616 | 11 |
| LOCTITE 243 (BLUE) | 293 800 060 | 6, 8 |
| LOCTITE 648 (GREEN) | 413 711 400 | 9 |
| LOCTITE CHISEL (GASKET REMOVER) | 413 708 500 | 3 |

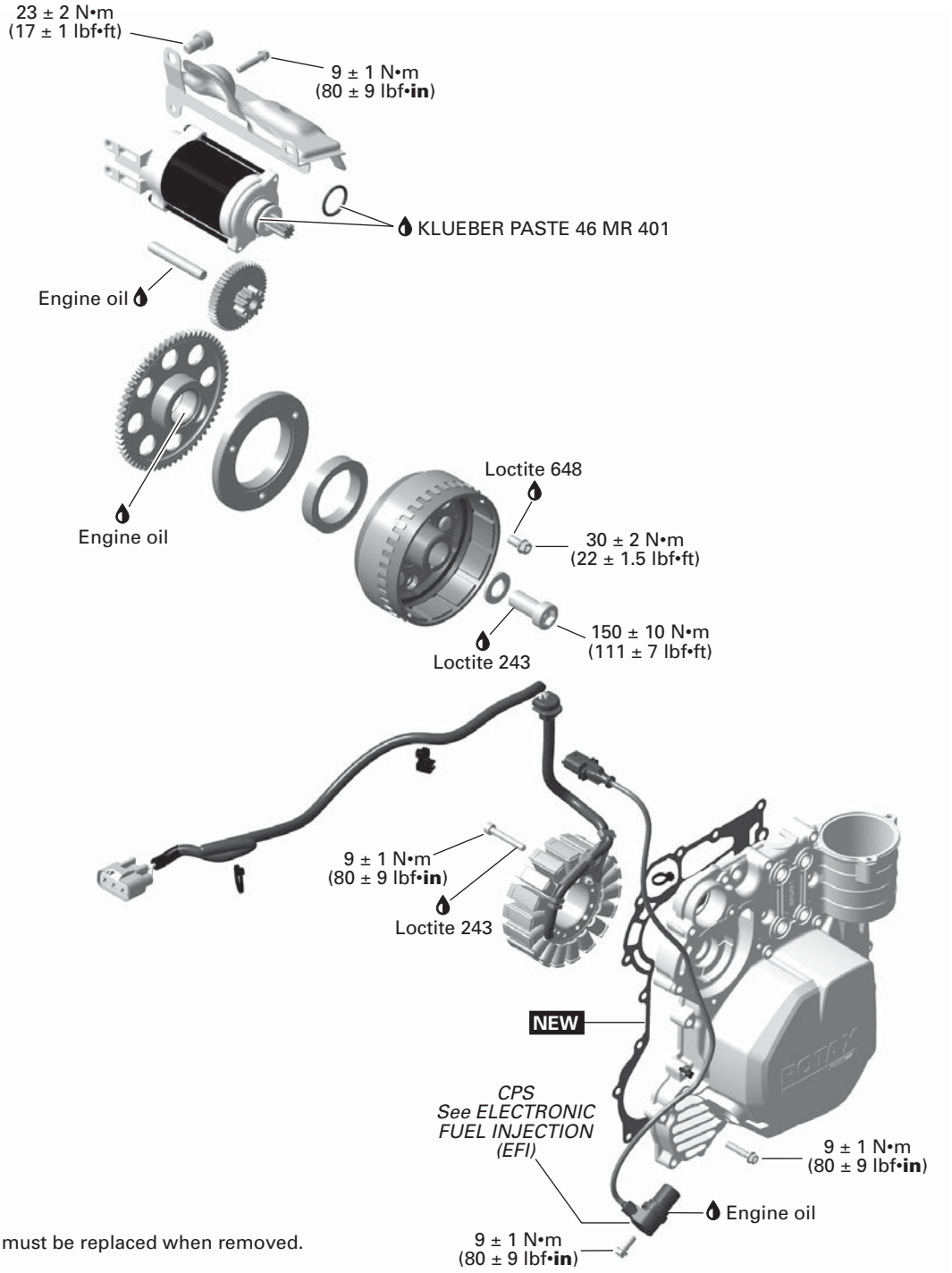


**NEW** = Component must be replaced when removed.

RTXT03MY19-006-001_a

# TROUBLESHOOTING

Always check for fault codes. If a fault code is detected, service the fault code first. Refer to *DIAGNOSTIC AND FAULT CODES* subsection.

## ENGINE DOES NOT CRANK

1. Battery voltage too low.
   - *Check battery condition.*
2. Starter is turning but engine does not crank.
   - *Check sprag clutch for wear or other damages.*
3. Starter is defective.
   - *Check starter condition. Perform TESTING THE STARTER OPERATION and TESTING THE STARTER VOLTAGE DROP.*
4. Engine is only cranking 1 - 2 seconds before it stops.
   - *Check battery condition.*

# PROCEDURES

## MAGNETO COVER

### Removing the Magneto Cover

1. Refer to *ENGINE REMOVAL AND INSTALLATION* and remove engine.
2. Refer to *LUBRICATION SYSTEM* and drain engine oil.
3. Refer to *COOLING SYSTEM* and remove:
   – Water pump housing
   – Thermostat housing.
4. Refer to *LUBRICATION SYSTEM* subsection and remove:
   – Oil pressure regulator
   – Oil cooler.
5. Remove the CPS.

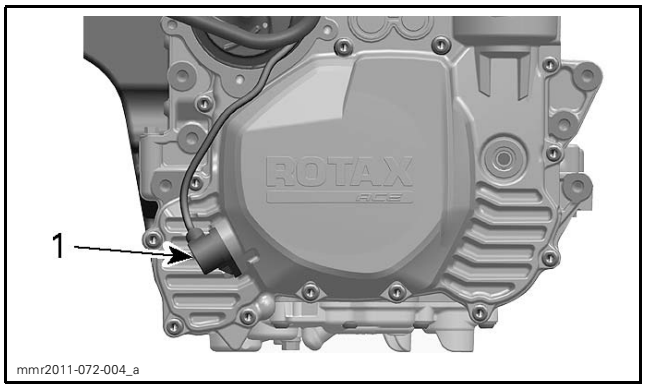


*1. CPS*

6. Remove magneto cover retaining screws.

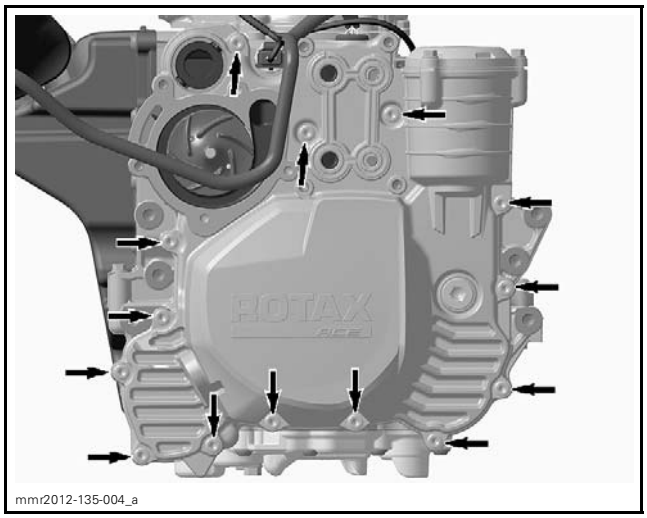


*MAGNETO COVER SCREWS*

7. Place an oil pan under magneto area to catch remaining oil.
8. Pull magneto cover off.
9. Discard the magneto cover gasket.

### Inspecting the Magneto Cover

Check magneto cover for cracks or other damage. Replace if necessary.

### Installing the Magneto Cover

1. Clean magneto cover.

| MAGNETO COVER CLEANING | |
|---|---|
| Service product | LOCTITE CHISEL (GASKET REMOVER) (P/N 413 708 500) |

2. Install a NEW magneto cover gasket.
3. Ensure starter drive gear pin is in place.
4. Apply engine oil on starter drive gear pin.

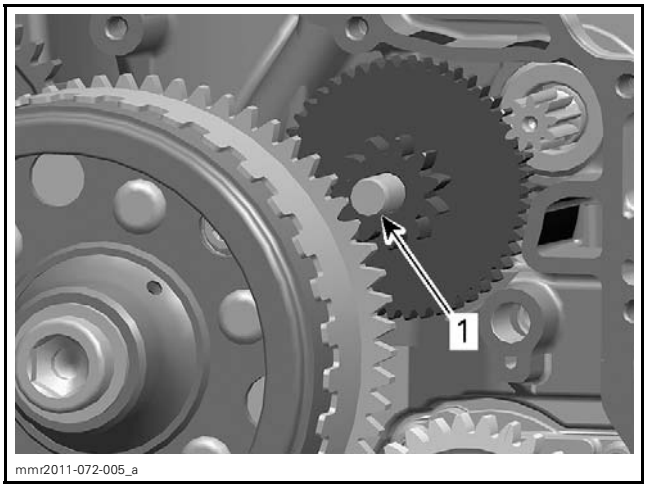


*APPLY ENGINE OIL*
*1. Starter drive gear pin*

5. Apply engine oil on water pump shaft.

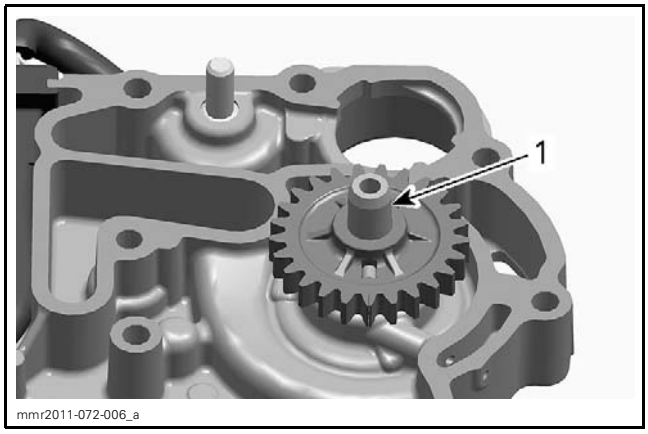


*1. Water pump shaft - apply engine oil*

**NOTICE** Make sure the stator cable harness is embedded in the cover channel provided. The part of the harness that is out of the channel must be tight, otherwise it might chafe or jam.

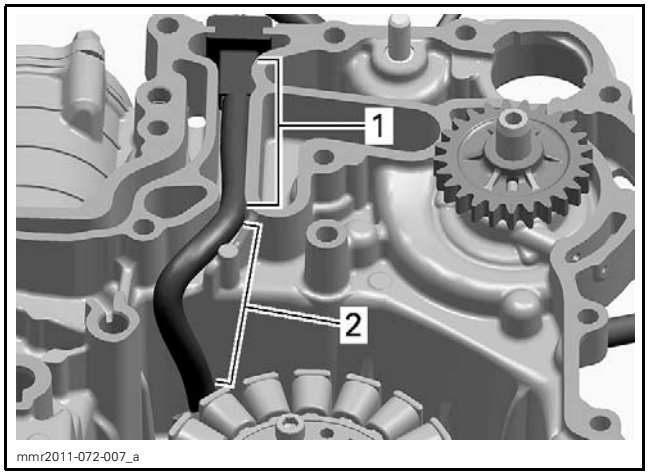


*1. Embedded in that area*
*2. Tight in this area*

6. Carefully install magneto cover.

**⚠ CAUTION** Magnetic force between magneto flywheel and stator is very high. Avoid finger contusions.

7. Tighten to specification magneto cover screws according to the following sequence.

| TIGHTENING TORQUE | |
|---|---|
| Magneto cover screws | 9 N•m ± 1 N•m (80 lbf•**in** ± 9 lbf•**in**) |

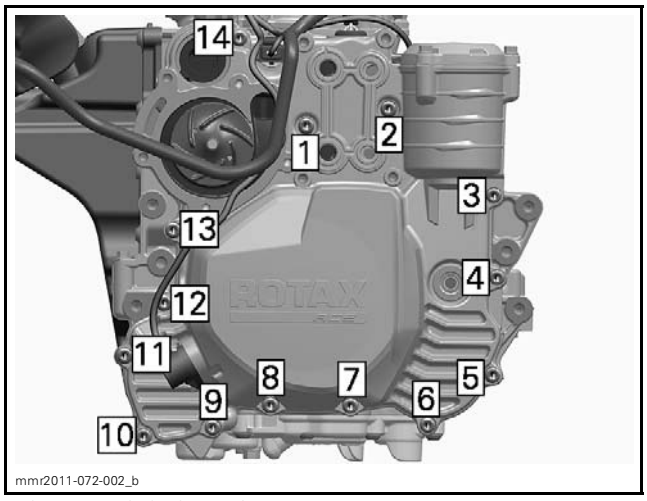


*TIGHTENING SEQUENCE*

8. Install all other removed parts, refer to applicable subsections.

# STATOR

## Stator Connector Location

1. Move fuel tank backward to reach the stator connector. Refer to *MOVING FUEL TANK REARWARD FOR SERVICING* in *FUEL TANK AND FUEL PUMP* subsection.

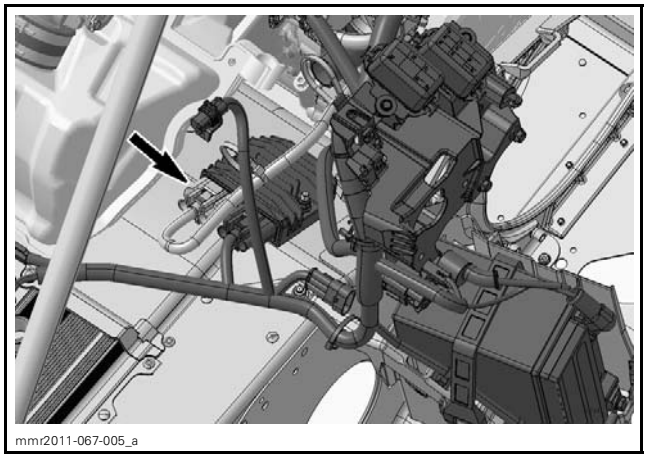


*TYPICAL - SOME PARTS REMOVED FOR CLARITY*

## Testing the Stator Continuity

1. Disconnect the stator connector from voltage regulator, refer to *STATOR CONNECTOR LOCATION* in this subsection.
2. Set multimeter to Ω.

| REQUIRED TOOL | |
|---|---|
| FLUKE 115 MULTIMETER (P/N 529 035 868) | |

3. Probe each pair of YELLOW wires by touching (NOT inserting) terminals lock tabs as shown.

**NOTICE** Never insert a multimeter probe into a terminal as it would ruin the terminal.

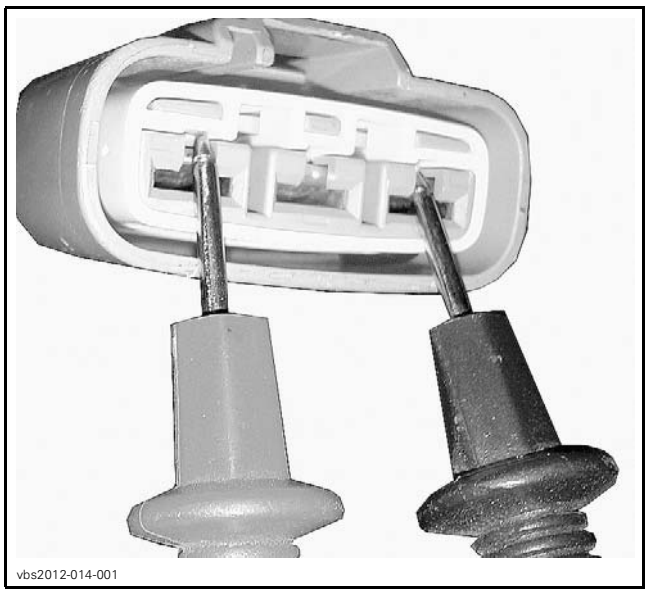
vbs2012-014-001

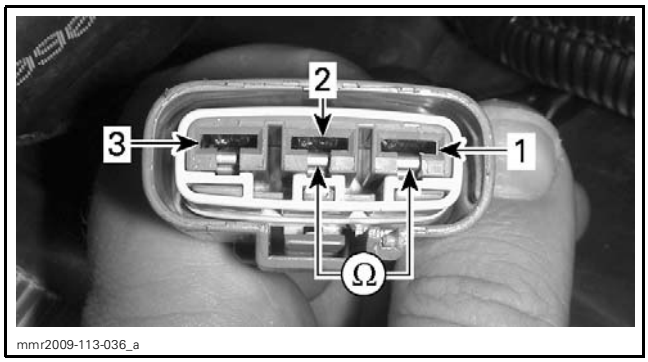

mmr2009-113-036_a

1. *Pin #1*
2. *Pin #2*
3. *Pin #3*

4. Read resistance as per following table.

| STATOR CONTINUITY TEST | |
|---|---|
| YELLOW WIRES (EACH PAIR) | RESISTANCE @ 20°C (68°F) |
| Pins 1 and 2 | 0.1 - 1 Ω |
| Pins 1 and 3 | |
| Pins 2 and 3 | |

If any resistance reading is not as specified, the stator or the wiring (including connector) is open and needs to be repaired or replaced.

If resistance is good, perform the stator insulation test.

## Testing the Stator Insulation

1. Connect multimeter between any YELLOW wire and chassis ground.

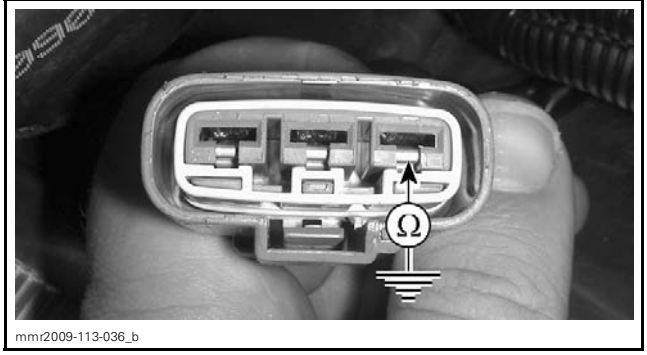

mmr2009-113-036_b

2. Read resistance.

| STATOR INSULATION TEST | |
|---|---|
| PROBE POSITIONS | RESISTANCE @ 20°C (68°F) |
| Any YELLOW wire and chassis ground | Infinity (OL) |

If any resistance reading is not as specified, the stator or the wiring is shorted to ground and needs to be repaired or replaced.

If the insulation test is good, perform the output voltage test.

## Testing the Stator Output Voltage

1. Start engine and let it reach its operating temperature.
2. Set multimeter to Vac scale.
3. With engine idling, connect multimeter between each pair of YELLOW wires.

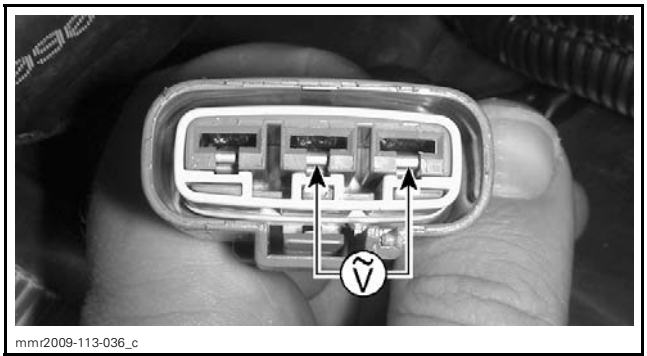

mmr2009-113-036_c

4. Read voltage.

| STATOR OUTPUT VOLTAGE TEST | | |
|---|---|---|
| TEST ENGINE SPEED | TERMINAL | VOLTAGE |
| Idle speed | 1 and 2 | ± 25 Vac |
| | 1 and 3 | |
| | 2 and 3 | |

If any voltage reading is significantly lower than specification, replace the stator.

## Removing the Stator

1. Remove the *MAGNETO COVER*, see procedure in this subsection.
2. Remove stator retaining screws.

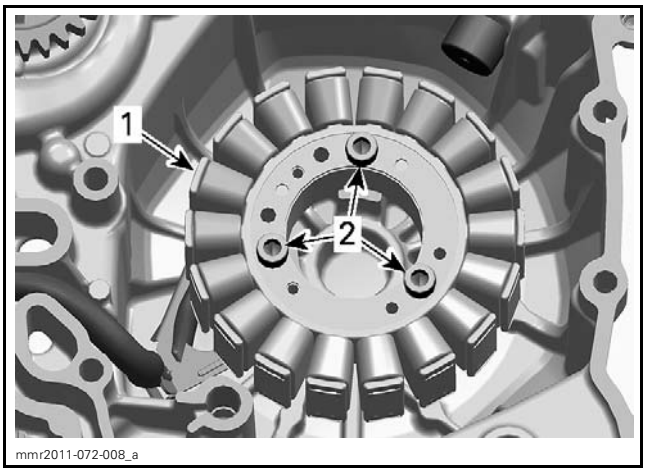

mmr2011-072-008_a

*1. Stator*
*2. Stator retaining screws*

3. Remove stator.

## Inspecting the Stator

Check stator windings and insulation for cracks and other damages. If damaged replace it.

Check if stator wires are brittle, hard or otherwise damaged.

## Installing the Stator

1. Ensure stator cable is underneath cable holder during installation of stator.

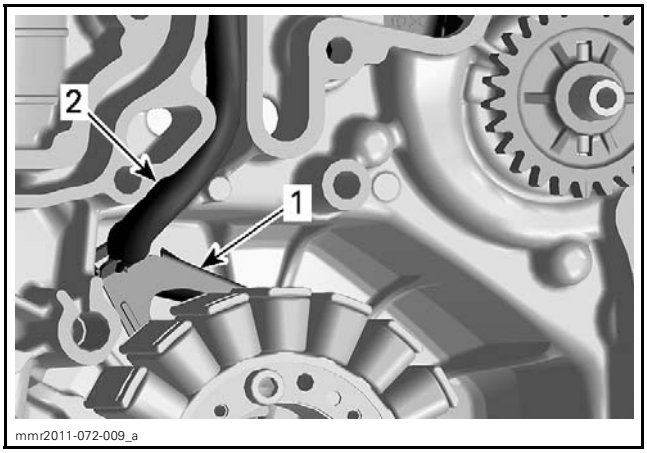

mmr2011-072-009_a

*1. Cable holder*
*2. Stator cable*

2. Install stator retaining screws and tighten to specified torque.

| TIGHTENING TORQUE | |
|---|---|
| Stator retaining screws | 9 N•m ± 1 N•m (80 lbf•**in** ± 9 lbf•**in**) + LOCTITE 243 (BLUE) (P/N 293 800 060) |

3. Reinstall *MAGNETO COVER*, see procedure in this subsection.

# ROTOR

## Removing the Rotor

1. Remove *MAGNETO COVER*, see procedure in this subsection.
2. Lock crankshaft. Refer to *BOTTOM END* subsection.
3. Remove rotor retaining screw and lock washer.

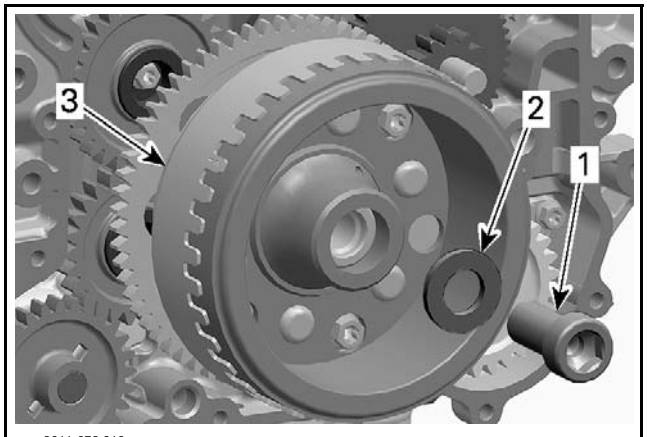

mmr2011-072-010_a

*1. Retaining screw*
*2. Lock washer*
*3. Rotor*

4. Remove rotor.

| REQUIRED TOOLS | |
|---|---|
| CRANKSHAFT PROTECTOR (P/N 529 036 213) | |
| FLYWHEEL PULLER (P/N 420 976 235) | |

NOTE: Apply some grease on the crankshaft protector surface to ease puller operation.

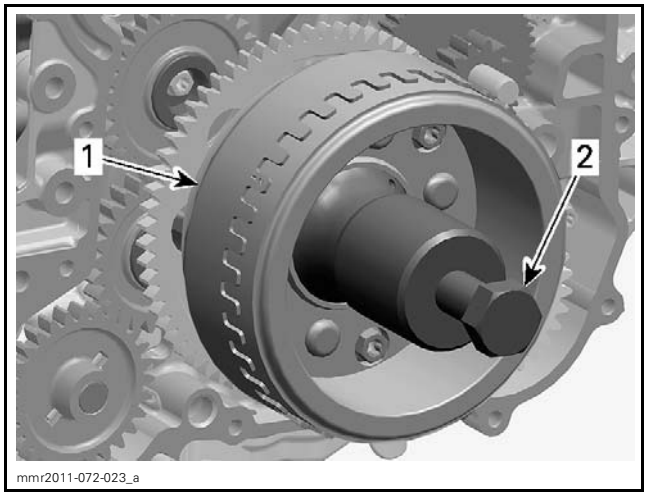


1. *Rotor*
2. *Flywheel puller screw*

## Inspecting the Rotor

Check the inner side of the rotor for scratches or other damage.

Check keyway for wear or damages.

Check if trigger wheel teeth are bent or otherwise damaged.

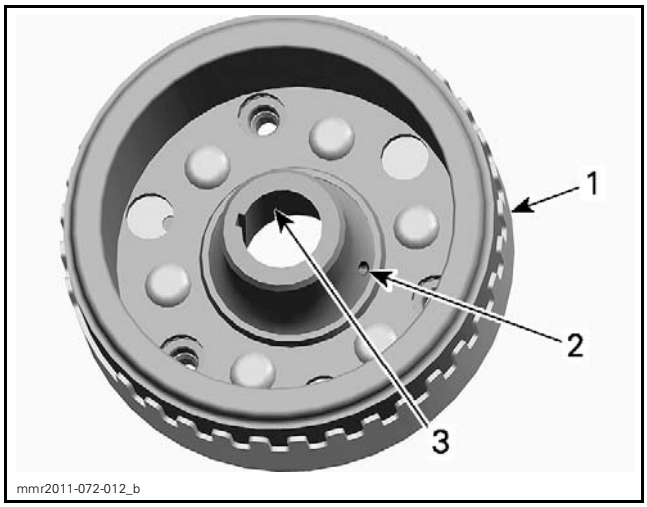


1. *Rotor with trigger wheel*
2. *Oil passage in magneto hub*
3. *Rotor taper*

Check woodruff key and keyway on crankshaft for wear or damages.

Replace parts as necessary.

## Installing the Rotor

The installation is the reverse of the removal procedure. However, pay attention to the following.

1. Blow compressed air through oil passage in magneto hub. Check if it is clogged.
2. Using BRAKE AND PARTS CLEANER PRO S2 (P/N 779245), clean:
   - The oil passage
   - The crankshaft thread
   - The crankshaft taper
   - The rotor taper.

**NOTICE** **Taper on crankshaft and rotor must be free of grease.**

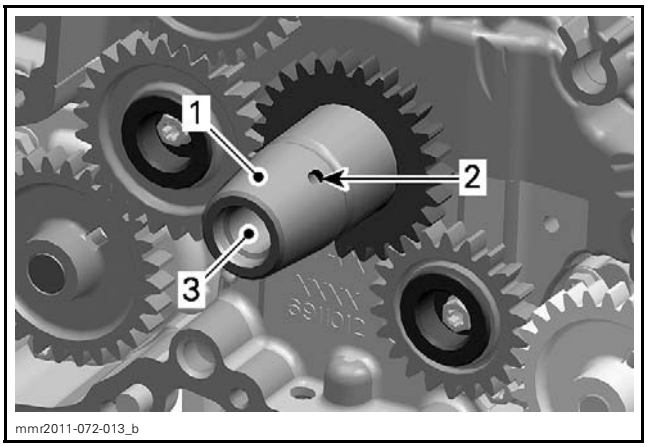


1. *Crankshaft taper*
2. *Oil passage*
3. *Thread*

3. Apply oil on sprag clutch and needle bearing.
4. Install sprag clutch gear onto the rotor.

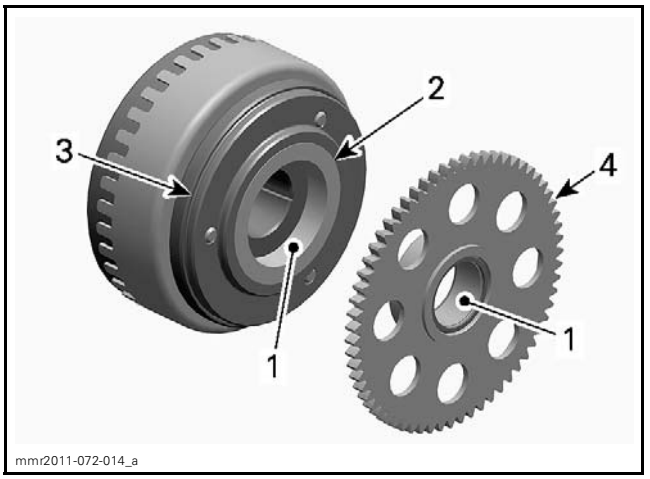


1. *Apply engine oil here*
2. *Sprag clutch*
3. *Sprag clutch housing*
4. *Sprag clutch gear*

5. Slide rotor along with the sprag clutch gear onto the crankshaft. The woodruff key and keyway must be aligned.
6. Rotate sprag clutch gear counterclockwise to align with starter double gear.

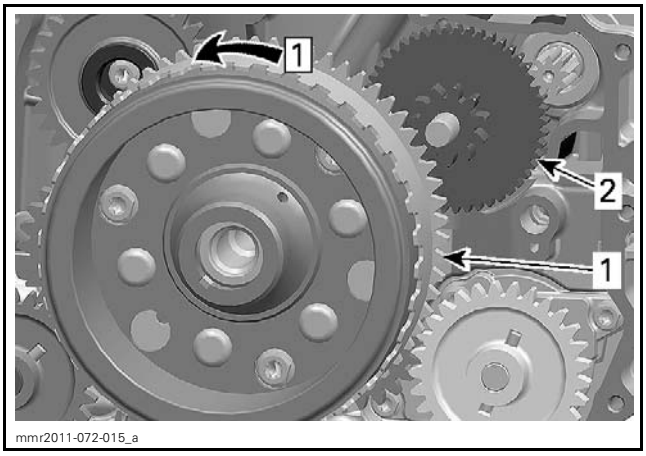


*Step 1: Rotate to align teeth*

1. *Sprag clutch gear*
2. *Starter double gear*

7. Install washer and retaining screw.
8. Tighten to specified torque.

| TIGHTENING TORQUE | |
|---|---|
| Rotor retaining screw | 150 N•m ± 10 N•m (111 lbf•ft ± 7 lbf•ft) + LOCTITE 243 (BLUE) (P/N 293 800 060) |

# SPRAG CLUTCH

## Removing the Sprag Clutch

1. Remove the *MAGNETO COVER*, see procedure in this subsection.
2. Lock crankshaft. Refer to *BOTTOM END* subsection.
3. Loosen and remove sprag clutch housing screws.

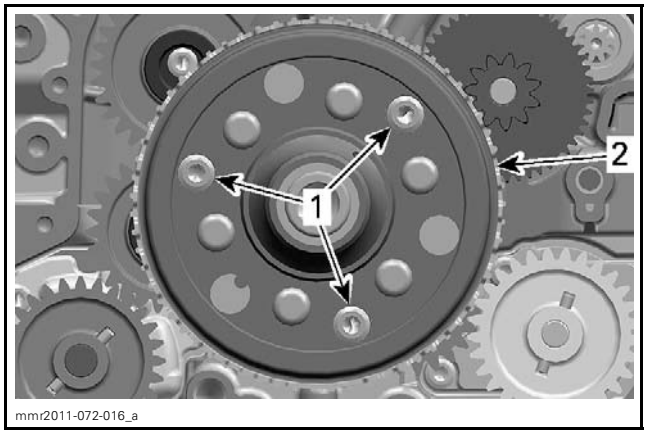


1. *Sprag clutch housing screws*
2. *Rotor*

4. Remove *ROTOR*, see procedure in this subsection.
5. Remove sprag clutch housing.
6. Remove sprag clutch from sprag clutch housing.

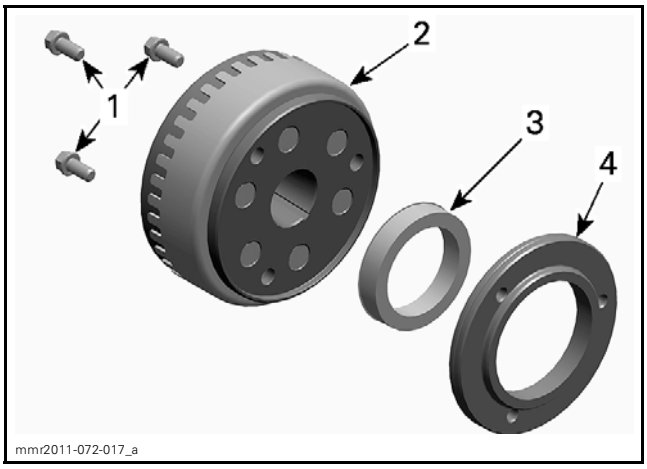


1. *Sprag clutch housing screws*
2. *Rotor*
3. *Sprag clutch*
4. *Sprag clutch housing*

## Inspecting the Sprag Clutch

Inspect sprag clutch and sprag clutch housing for wear and damage.

Check the collar of the sprag clutch gear, refer to *SPRAG CLUTCH GEAR* in this subsection.

Rotate sprag clutch gear clockwise. Gear must rotate freely.

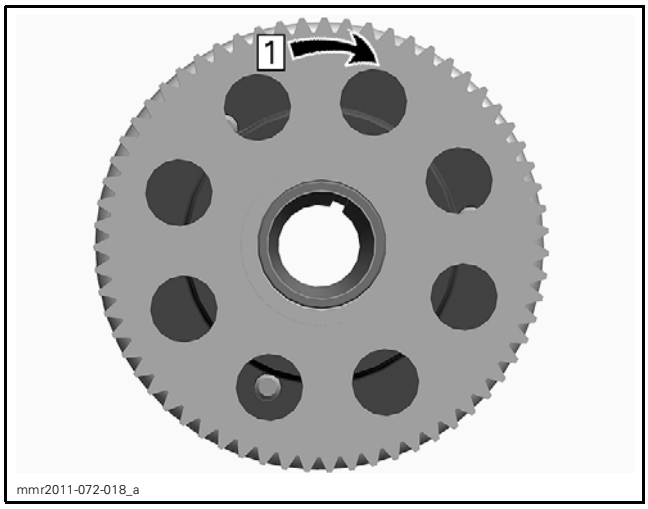


*Step 1: Free*

Rotate sprag clutch gear counterclockwise. Gear must lock.

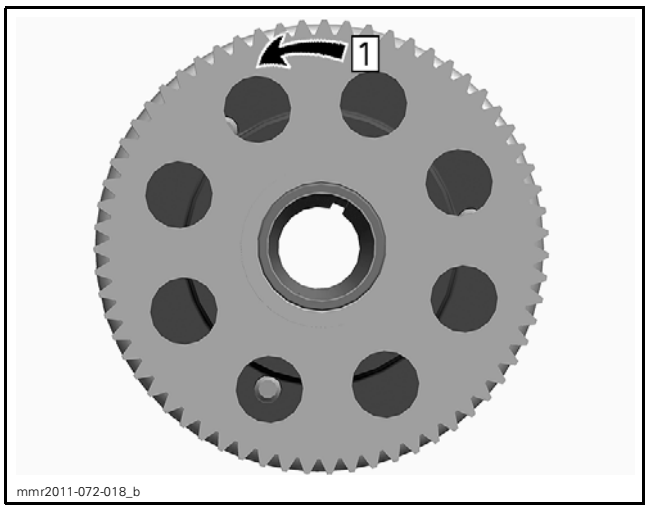


*Step 1: Lock*

## Installing the Sprag Clutch

1. Clean sprag clutch housing with a parts cleaner.

**NOTICE** **Threads of sprag clutch housing must be free of any lubricants.**

| SPRAG CLUTCH HOUSING | |
|---|---|
| Service product | BRAKE AND PARTS CLEANER PRO S2 (P/N 779245) |

2. Apply thread locker on threads of sprag clutch housing screws.

| SPRAG CLUTCH HOUSING SCREWS | |
|---|---|
| Service product | LOCTITE 648 (GREEN) (P/N 413 711 400) |

3. Loosely install screws.
4. Apply engine oil on sprag clutch and sprag clutch gear needle bearing.

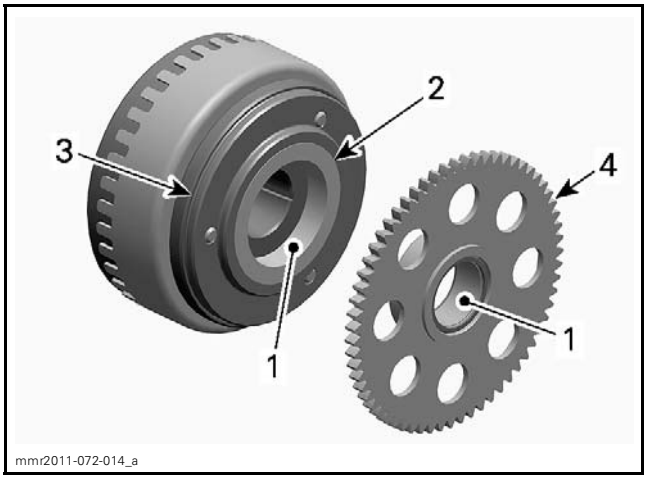


1. *Apply engine oil here*
2. *Sprag clutch*
3. *Sprag clutch housing*
4. *Sprag clutch gear*

5. Install *ROTOR*, see procedure in this subsection.
6. Tighten sprag clutch housing screws to the specified torque.

| TIGHTENING TORQUE | |
|---|---|
| Sprag clutch housing screws | 30 N•m ± 2 N•m (22 lbf•ft ± 1 lbf•ft) |

7. Install all other removed parts.

# SPRAG CLUTCH GEAR

## Removing the Sprag Clutch Gear

1. Remove rotor and sprag clutch gear together. Refer to *ROTOR* in this subsection.
2. Pull sprag clutch gear out of the rotor.

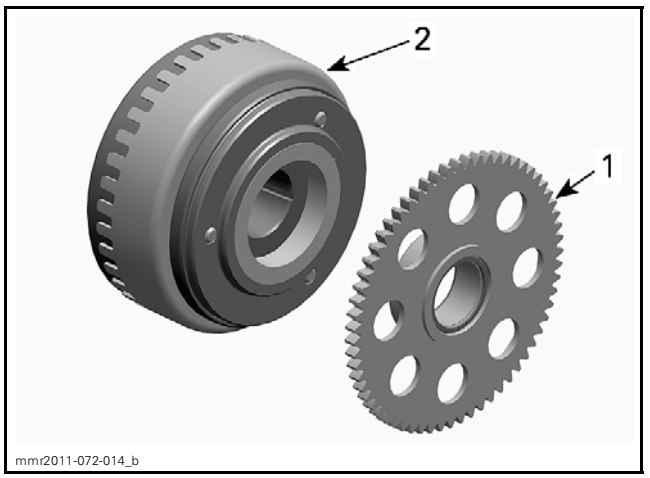


1. *Sprag clutch gear*
2. *Rotor*

### Inspecting the Sprag Clutch Gear

Inspect gear, especially teeth and sprag clutch collar for wear and other damage.

Check needle bearing for wear and pittings.

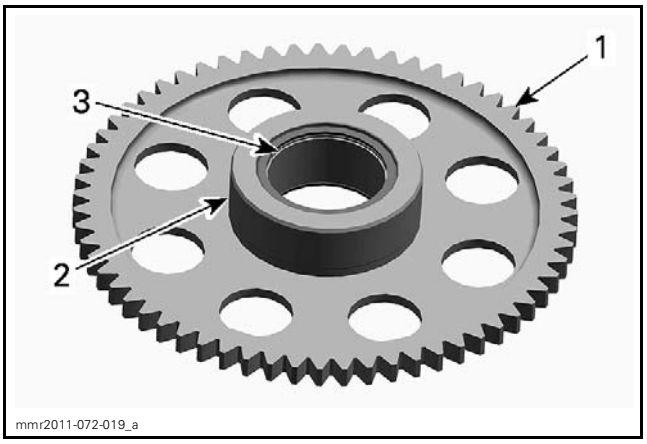


*1. Teeth*
*2. Collar*
*3. Needle bearing*

Replace sprag clutch gear if necessary.

### Installing the Sprag Clutch Gear

Reverse the removal procedure. However, pay attention to the following.

NOTE: Apply engine oil on needle bearing and collar of sprag clutch gear.

## STARTER DRIVE GEARS

The starter drive gears are located on the engine MAG side, behind the magneto cover.

### Removing the Starter Drive Gear

1. Remove *MAGNETO COVER*, see procedure in this subsection.
2. Remove location pin and starter double gear.

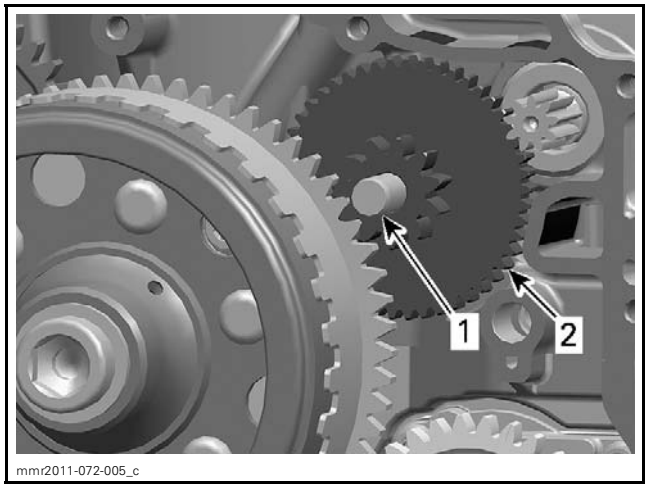


*1. Location pin*
*2. Starter double gear*

### Inspecting the Starter Drive Gear

Inspect starter drive gears and location pin for wear and damage.

Replace parts if necessary.

### Installing the Starter Drive Gear

The installation is the reverse of the removal procedure. However, pay attention to the following.

Apply engine oil on the location pin.

## STARTER

### Testing the Starter Operation

Before carrying out any starter test, make sure:

– Battery is fully charged and in good condition.
– Cable connections at battery, starter and solenoid are tight.
– Cables are in good condition.

1. Disconnect the negative battery cable.

**⚠ WARNING**

**Sparks can occur when connecting jumper cables. To avoid fire hazard, be sure that no flammable liquids or fuel vapors are in the test area.**

2. Using booster cables and a fully charged battery (or a power pack), carefully supply current directly to the starter.
   2.1 Connect the negative booster cable or power pack cable to a good ground such as an engine support.
   2.2 Momentarily touch the starter positive terminal.

If starter turns at normal speed, test the starting circuit. Refer to *STARTING SYSTEM* subsection.

If starter turns slowly, carry out the *STARTER VOLTAGE DROP TEST (AT BATTERY)*.

If starter does not turn, replace starter.

## Testing the Starter Voltage Drop (at Battery)

NOTE: This test will confirm if starter draws too much current. Battery must be fully charged and in good condition.

1. Set multimeter to Vdc.
2. Probe battery posts.
3. Crank engine in drowned mode (accelerator held all the way in).
4. Read voltage while cranking.

NOTE: Battery voltage will drop approximately 2 Vdc and fluctuate with starter cranking load.

If the result is close to battery voltage, the starter is in good condition.

If the result is below battery voltage (- 2 Vdc and more), the starter may be defective.

## Removing the Starter

1. Remove turbo charger. Refer to *TURBO CHARGER* subsection.
2. Disconnect the BLACK (–) cable from the battery.
3. Remove starter cable from starter.
4. Remove heat shield and starter retaining screws.

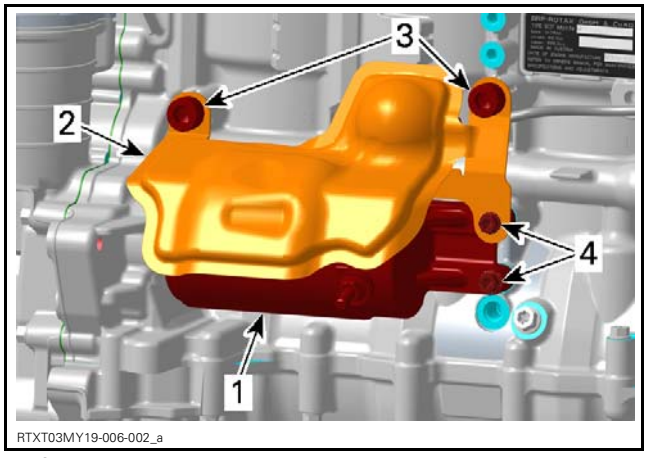


1. *Starter*
2. *Heat shield*
3. *Heat shield retaining screws (2x)*
4. *Starter retaining screws (2x)*

5. Remove starter from engine.

## Installing the Starter

1. Ensure starter and engine mating surfaces are free of debris.

**NOTICE** **Serious problems may arise if the starter is not properly aligned.**

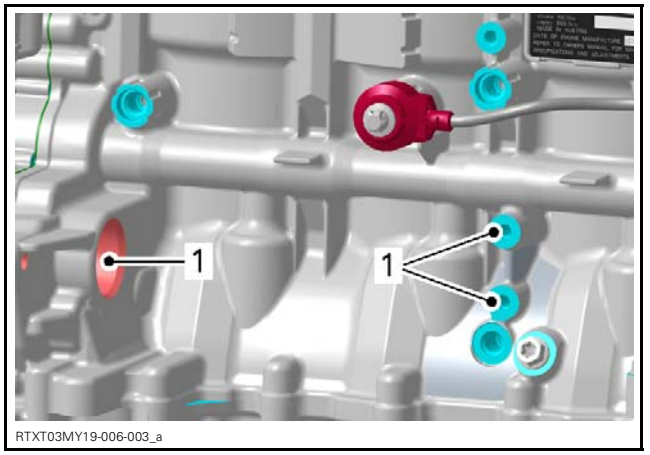


1. *Clean mating surfaces*

2. Lubricate starter boss and starter O-ring before installation.

| STARTER BOSS +O-RING | |
|---|---|
| Service product | KLÜEBER PASTE 46 MR 401 (P/N 420 297 616) |

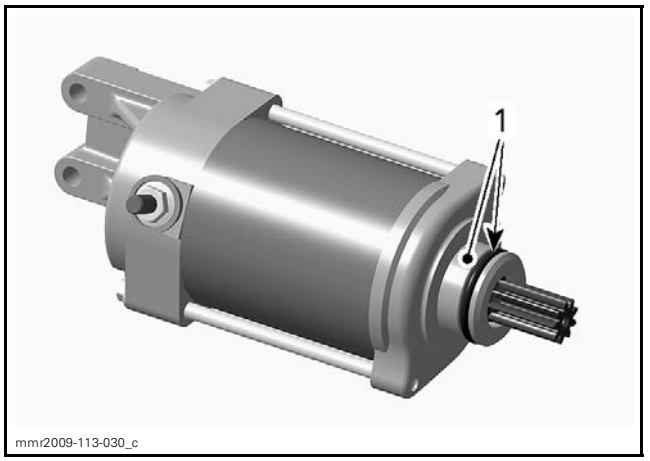


1. *Lubricate starter boss*
2. *Lubricate starter O-ring*

3. Insert starter gear in engine.
4. Install heat shield.
5. Install heat shield and starter retaining screws and tighten to the specified torque.

| TIGHTENING TORQUE | |
|---|---|
| Starter retaining screws M6 | 9 N•m ± 1 N•m (80 lbf•**in** ± 9 lbf•**in**) |
| Heat shield retaining screws M10 | 23 N•m ± 2 N•m (17 lbf•ft ± 1 lbf•ft) |

6. Connect starter cable to starter terminal and tighten nut to specified torque.

| TIGHTENING TORQUE | |
|---|---|
| Starter cable nut | 7 N•m ± 1 N•m (62 lbf•**in** ± 9 lbf•**in**) |

7. Install all other removed parts.
8. Reconnect BLACK (–) cable on battery post.

***NOTICE*** Always connect RED (+) starter cable first, and BLACK (-) battery cable last.

9. Test for proper starter operation.

# INTERCOOLER

## SERVICE TOOLS

| Description | Part Number | Page |
|---|---|---|
| VACUUM/PRESSURE PUMP | 529 021 800 | 2 |

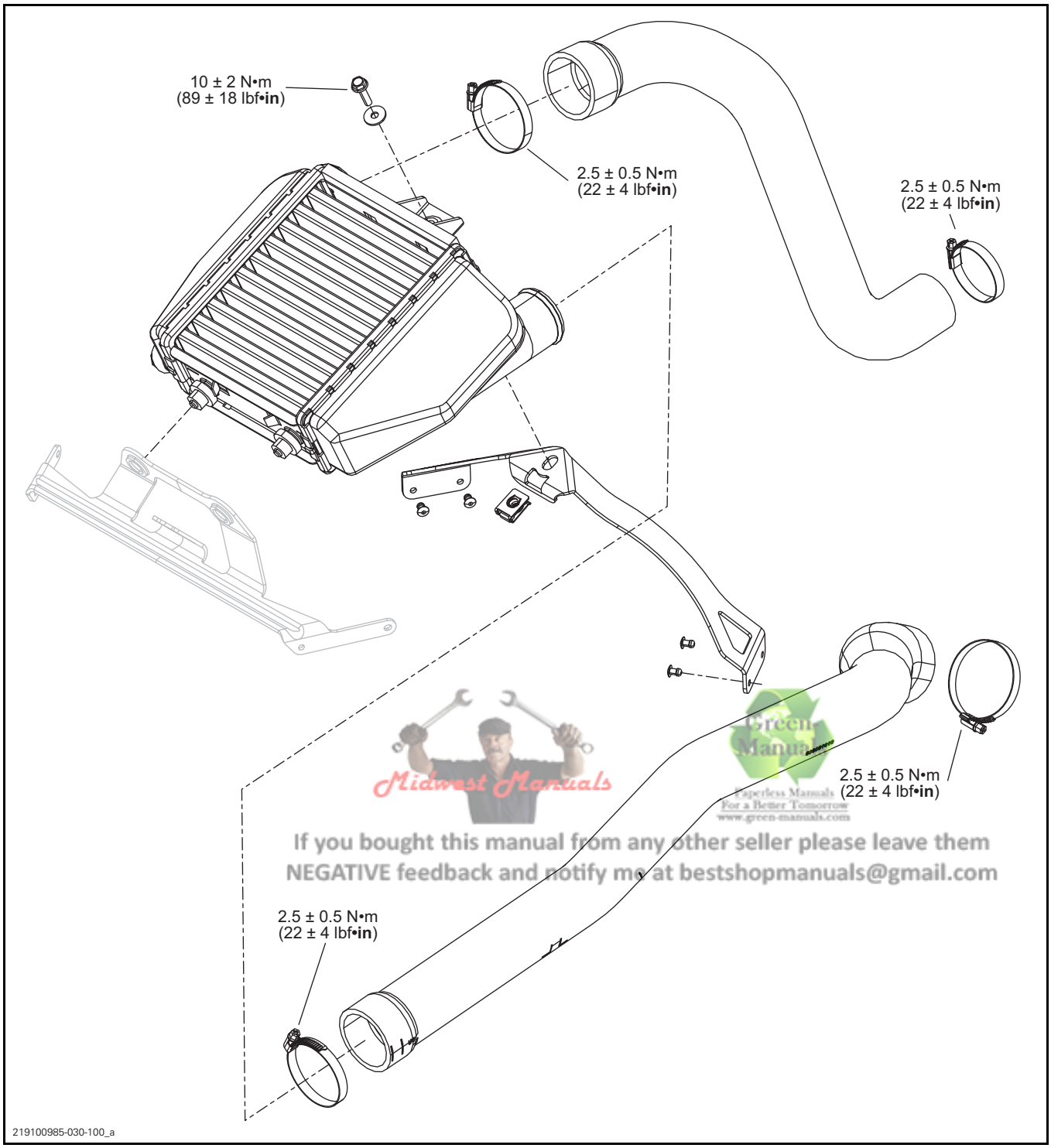


Midwest Manuals
Green Manuals
Paperless Manuals For a Better Tomorrow
www.green-manuals.com
If you bought this manual from any other seller please leave them NEGATIVE feedback and notify me at bestshopmanuals@gmail.com

# GENERAL

An exhaust gas turbocharger heats the air that it compresses.

The intercooler cools the hot compressed air from the compressor outlet.

# INSPECTION

NOTE: When vehicle is running at operating temperature, intercooler outlet air temperature should be lower than inlet air temperature. The temperature difference will vary with atmospheric conditions.

Check radiating fins for clogging or damage.

Remove any obstructions with compressed air or low pressure water.

## Leak Test

| REQUIRED TOOL | |
|---|---|
| VACUUM/PRESSURE PUMP (P/N 529 021 800) | |

Block outlet hose.

Unplug the inlet hose from the intercooler.

Install the pressure pump with an adaptor on the inlet fitting.

Pressurize the intercooler.

**NOTICE** Testing at higher pressures can damage the system.

| PRESSURE TEST |
|---|
| 100 kPa (14.5 PSI) for 2 minutes minimum |

If there is a pressure drop, first spray tool, hoses and adapters with a soapy water solution to ensure they are not leaking. If they are not leaking, replace the intercooler.

# PROCEDURES

## INTERCOOLER ACCESS

Remove the upper body module. Refer to *BODY* subsection.

## REMOVING THE INTERCOOLER

**NOTICE** When removing the intercooler, always plug the turbocharger hoses with clean rags to prevent dirt from entering the turbo.

1. Cut locking tie securing outlet hose.

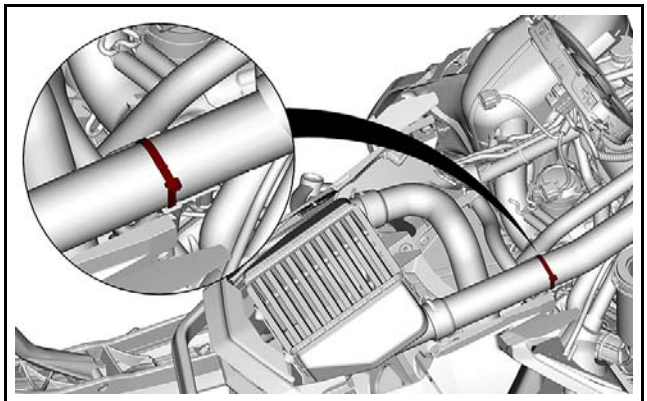

219100985-030-003

2. Loosen the clamps and disconnect both intercooler hoses.

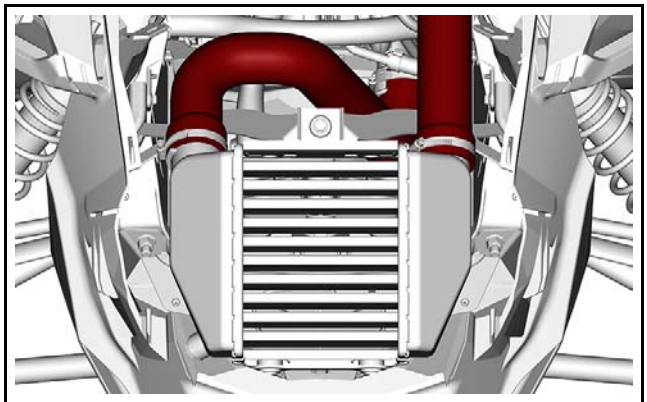

219100985-030-001

3. Remove the intercooler retaining screws.

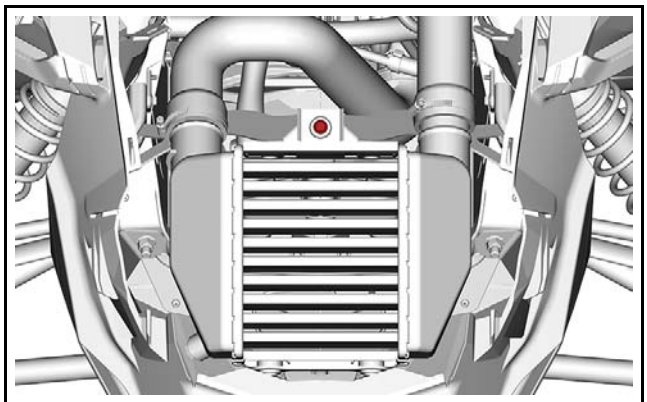

219100985-030-002

4. Remove intercooler.

# INSTALLING THE INTERCOOLER

The installation is the reverse of the removal procedure.

# TIMING CHAIN

## SERVICE PRODUCTS

| Description | Part Number | Page |
|---|---|---|
| LOCTITE 243 (BLUE) | 293 800 060 | 100, 105 |
| LOCTITE 767 (ANTISEIZE LUBRICANT) | 293 800 070 | 103 |
| SUPER LUBE GREASE | 293 550 030 | 103 |

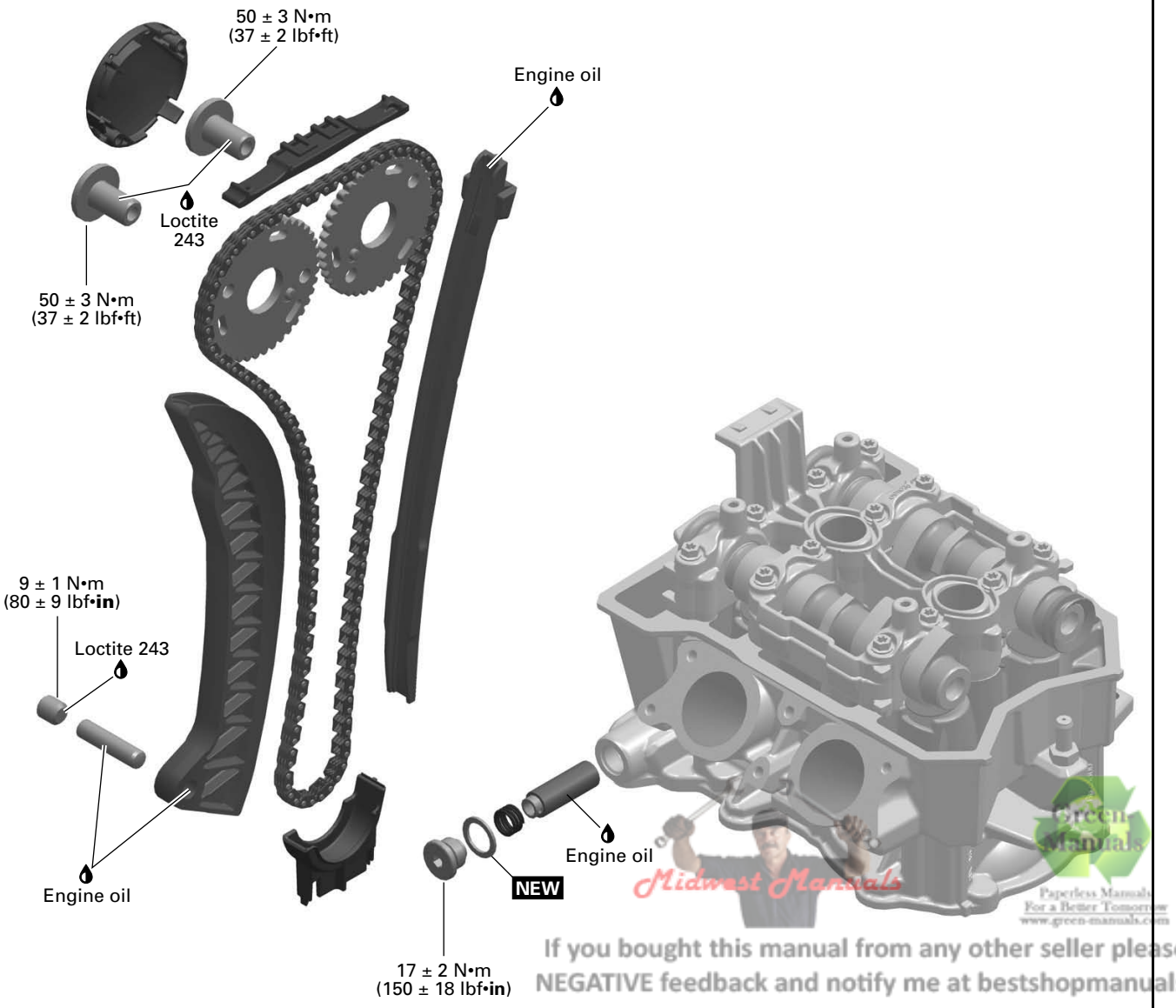


Midwest Manuals
Green Manuals
Paperless Manuals For a Better Tomorrow www.green-manuals.com
If you bought this manual from any other seller please leave them NEGATIVE feedback and notify me at bestshopmanuals@gmail.com

**NEW** = Component must be replaced when removed.

mmr2011-073-001_b

# GENERAL

Engine removal is necessary to work on the following components:

– Timing chain

– Timing chain guide (tensioner side).

When disassembling parts that are duplicated in the engine, (e.g.: valves, springs, etc.), it is strongly recommended to note their position and to keep the parts of the same assembly as a "group". If you find a defective component, it will be much easier to find the cause of the failure. Since parts were broken-in together during engine operation, they will maintain their matched fit when reassembled together within their "group".

# TROUBLESHOOTING

The following is provided to help in diagnosing the probable source of troubles. It is a guideline and should not be assumed to provide solutions to every cause of all problems.

## UNUSUAL ENGINE NOISE OR VIBRATIONS

1. Faulty chain tensioner.
   - *Replace chain tensioner.*
2. Chain guide(s) worn out.
   - *Replace chain guide(s).*
3. Stretched timing chain or worn sprockets.
   - *Replace timing chain and sprockets.*
4. Camshaft timing gear screws loose.
   - *Retighten screws to recommended torque.*
5. Incorrect camshaft timing adjustment.
   - *Replace damaged components and readjust camshaft timing.*

## ENGINE LACKS ACCELERATION OR POWER

1. Incorrect camshaft timing adjustment.
   - *Replace damaged components and readjust camshaft timing.*

# PROCEDURES

## TIMING CHAIN TENSIONER

### Timing Chain Tensioner Location

The timing chain tensioner is located in the cylinder head beside the intake port of the PTO cylinder.

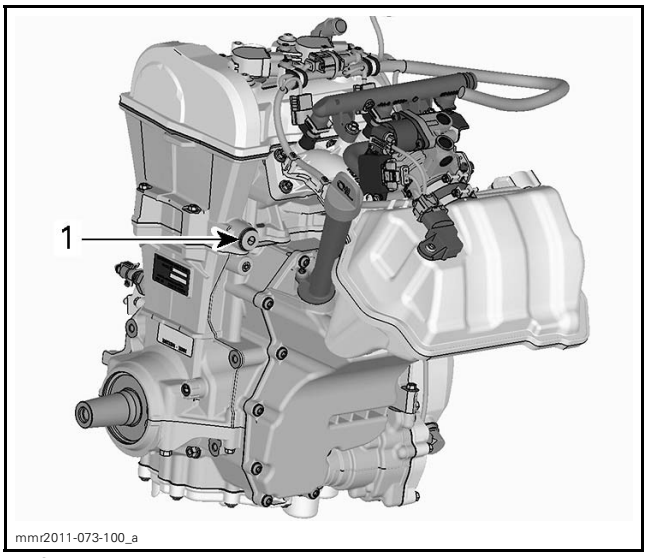


*1. Screw plug location, timing chain tensioner*

### Timing Chain Tensioner Access

Remove driven pulley and countershaft. Refer to *DRIVEN PULLEY AND COUNTERSHAFT* subsection.

### Timing Chain Tensioner Removal

1. Lock crankshaft, refer to *BOTTOM END* subsection.
2. Remove screw plug and discard the sealing washer.
3. Pull out spring and chain tensioner.

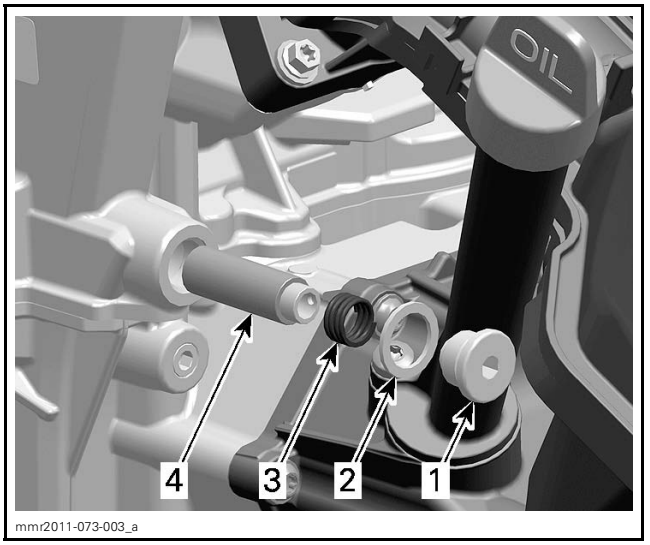


*1. Screw plug*
*2. Sealing washer*
*3. Spring*
*4. Chain tensioner*

### Timing Chain Tensioner Inspection

1. Check chain tensioner for scoring and freedom of movement in bore.

2. Compress chain tensioner and check for proper operation.

NOTE: The chain tensioner is difficult to compress when properly charged with oil, and easily compressed when it is not.

3. Check spring for straightness, corrosion and other visible damage.

### Timing Chain Tensioner Installation

1. Apply engine oil on chain tensioner.
2. Insert chain tensioner in its bore with the plunger pointing outwards.

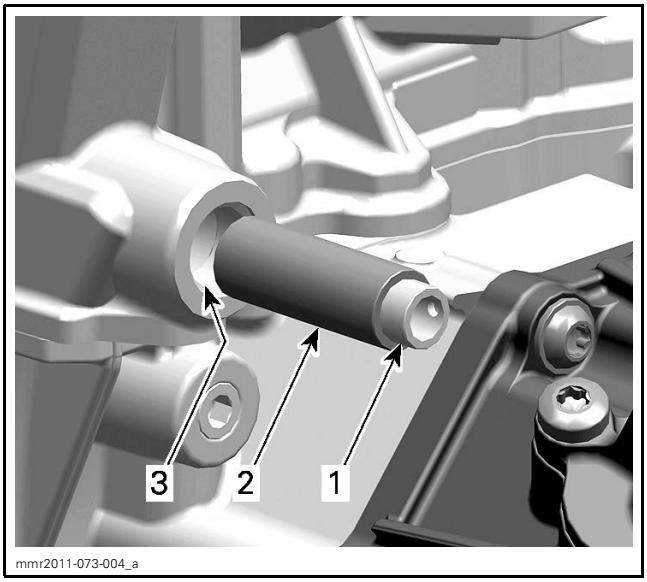


*TIMING CHAIN TENSIONER INSTALLATION*
1. *Plunger*
2. *Chain tensioner*
3. *Tensioner bore in cylinder head*

3. Install spring on chain tensioner.
4. Tighten screw plug to specified torque.

| SCREW PLUG TIMING CHAIN TENSIONER | |
|---|---|
| Sealing washer | NEW |
| Tightening torque | 17 N•m ± 2 N•m (150 lbf•**in** ± 18 lbf•**in**) |

5. Install all other removed parts.

## CAMSHAFT TIMING GEARS

### Camshaft Timing Gear Removal

1. Remove camshaft assembly. Refer to *BOTTOM END* subsection.
2. Clamp camshaft in a vice using aluminium protectors.

**NOTICE** **Take care not damaging the cams.**

3. Unscrew and remove camshaft timing gear screw.
4. Remove camshaft timing gear.

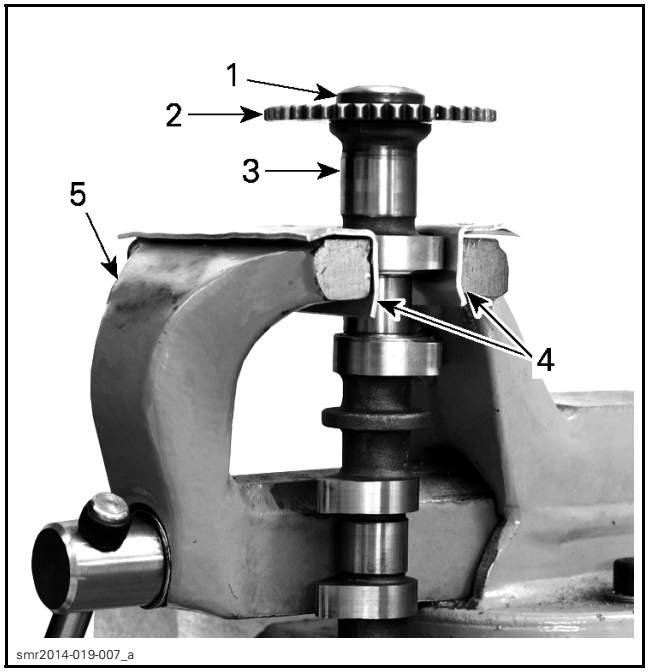


*TYPICAL*
1. *Camshaft timing gear screw*
2. *Camshaft timing chain gear*
3. *Camshaft*
4. *Aluminium protectors*
5. *Vice*

### Camshaft Timing Gear Inspection

Check camshaft timing gears for wear or deterioration. If a gear is worn or damaged, replace camshaft timing gears and timing chain as a set.

NOTE: For crankshaft timing gear inspection, refer to *BOTTOM END* subsection.

### Camshaft Timing Gear Installation

Reverse the removal procedure. However, pay attention to the following details.

Tighten camshaft timing gear screw to specification.

**NOTICE** **Do not torque timing gear screws when camshafts are installed in cylinder head to avoid overstressing timing chain.**

| TIMING GEAR SCREWS | |
|---|---|
| Service product | LOCTITE 243 (BLUE) (P/N 293 800 060) |
| Tightening torque | 50 N•m ± 3 N•m (37 lbf•ft ± 2 lbf•ft) |

**NOTICE** Improper camshaft timing will damage engine components. Make sure camshafts and crankshaft are still locked. If not, lock them before beginning this procedure. Refer to *CAMSHAFTS* in the *TOP END* subsection.

Install breather cover on exhaust camshaft.

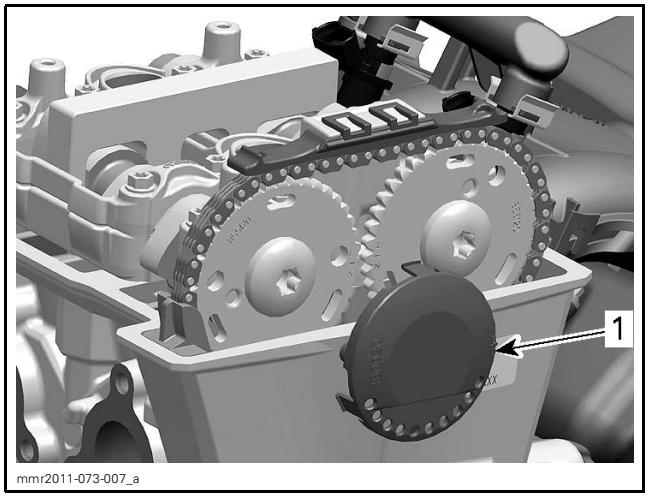


*1. Breather cover*

Install remaining parts.

# TIMING CHAIN

## Timing Chain Removal

1. Remove engine from vehicle. Refer to *ENGINE REMOVAL AND INSTALLATION* subsection.
2. Remove air intake manifold, refer to *AIR INTAKE SYSTEM* subsection.
3. Remove valve cover, refer to *BOTTOM END* subsection.
4. Refer to *LUBRICATION SYSTEM* subsection and remove the following parts:
   - Oil tank
   - Oil pressure regulator valve
   - Oil cooler
   - Oil sump cover.
5. Refer to *COOLING SYSTEM* subsection and remove following parts:
   - Water pump housing
   - Thermostat.
6. Check timing chain for excessive radial play while still installed on timing gears.

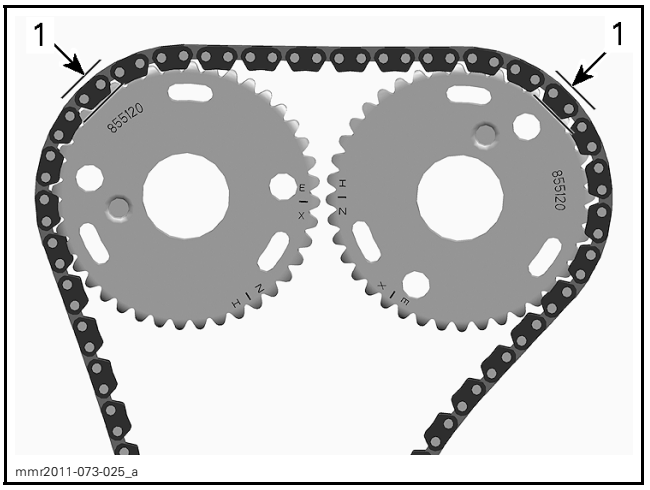


*1. Radial play*

7. Remove the *CAMSHAFTS*, refer to *BOTTOM END* subsection.
8. Refer to *MAGNETO AND STARTER* subsection and remove the following parts:
   - Magneto cover
   - Rotor
   - Starter drive gears.
9. Remove oil pump intermediate gears, refer to *LUBRICATION SYSTEM* subsection.

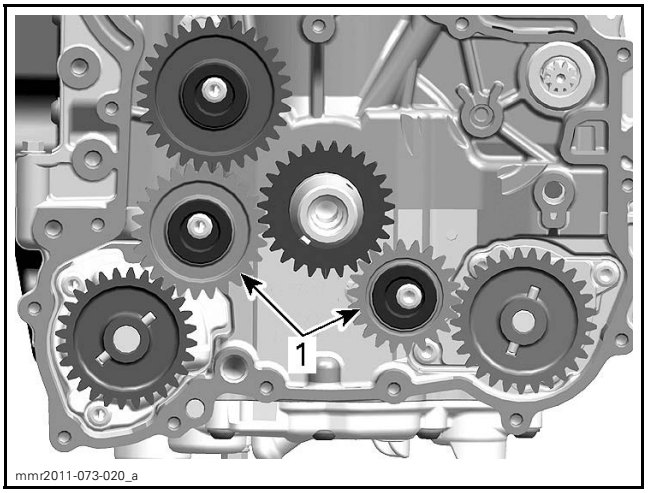


*1. Oil pump intermediate gears*

10. Remove crankshaft locking bolt.
11. Separate cylinder block, refer to *BOTTOM END* subsection.
12. Remove crankshaft thrust washers.

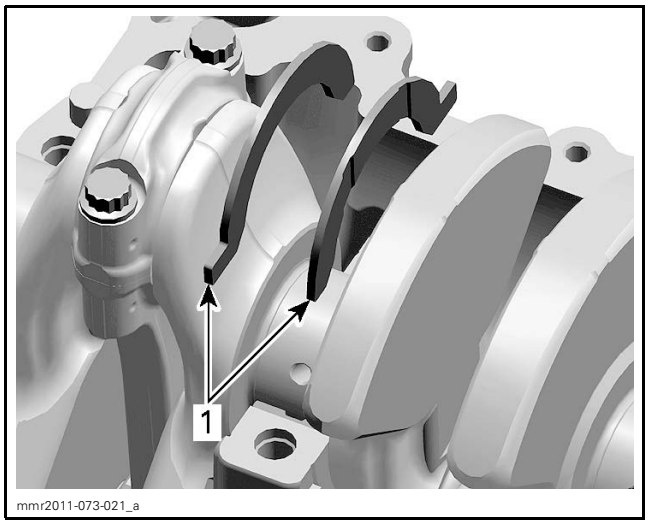


*1. Crankshaft thrust washers*

13. Remove retaining ring that secures the oil seal and PTO ball bearing.
14. Slightly lift the crankshaft and remove oil seal and PTO ball bearing.

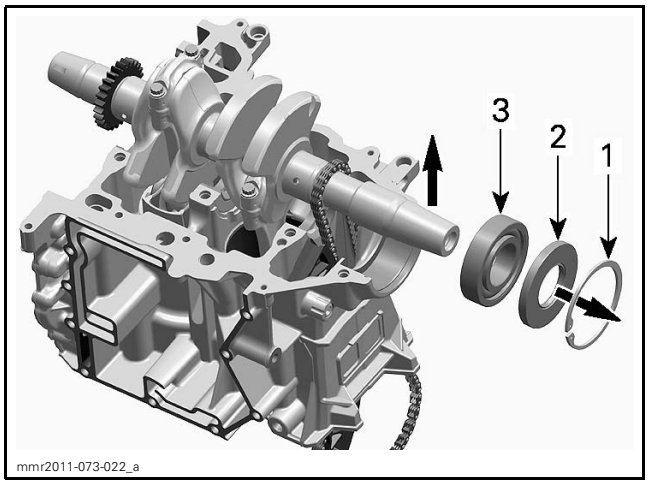


*1. Retaining ring*
*2. Oil seal*
*3. Ball bearing*

15. Remove timing chain.

NOTE: Make a mark on the timing chain to indicate the operating direction of the chain before removal.

16. Remove lower timing chain guide from lower half of cylinder block.

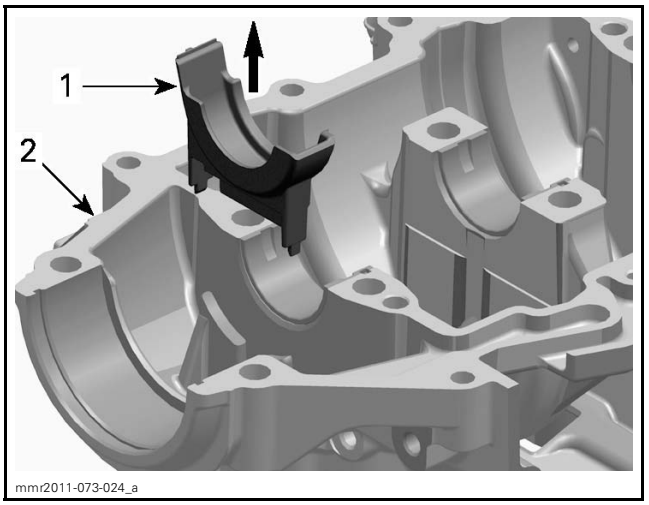


*1. Lower timing chain guide*
*2. Lower half of cylinder block*

## Timing Chain Inspection

Check timing chain for wear and teeth condition.

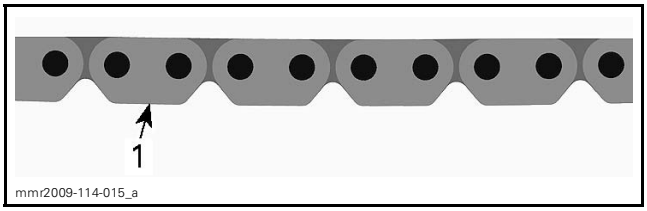


*1. Check teeth condition*

**NOTICE** **If timing chain is excessively worn or damaged, replace timing chain and camshaft timing gears as a set.**

Check lower chain guide for wear, cracks or deformation. Replace as required.

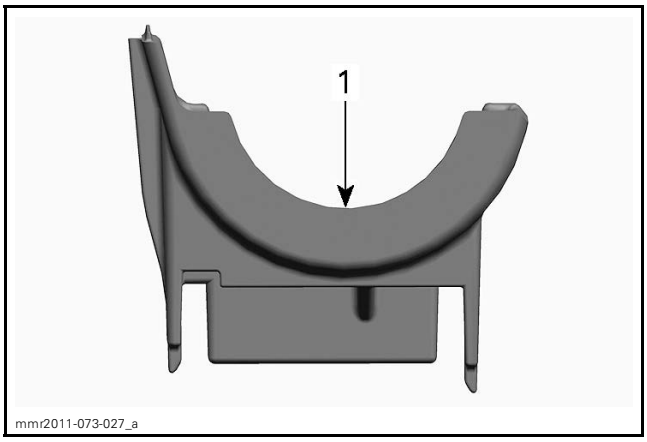


*1. Lower chain guide*

Replace lower chain guide if timing chain wear grooves are visible.

| CHAIN GUIDE GROOVE DEPTH | |
|---|---|
| SERVICE LIMIT | No timing chain wear groove allowed |

NOTE: Also check the chain guide, tensioner side. Refer to *CHAIN GUIDE INSPECTION (TENSIONER SIDE)* further in this subsection.

## Timing Chain Installation

Reverse of the removal procedure. However, pay attention to the following details.

1. Install timing chain.

NOTE: If the same timing chain is reinstalled, be sure to reinstall it in the same operating direction as marked during removal procedure.

2. Apply LOCTITE 767 (ANTISEIZE LUBRICANT) (P/N 293 800 070) on crankshaft at PTO bearing surface area.

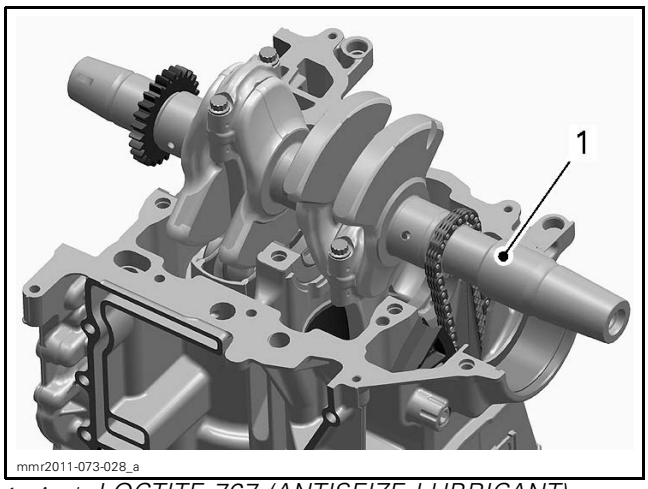


*1. Apply LOCTITE 767 (ANTISEIZE LUBRICANT) (P/N 293 800 070) here*

NOTE: After bearing installation, clean oil seal running surface on crankshaft.

3. Lubricate sealing lip of oil seal with SUPER LUBE GREASE (P/N 293 550 030).
4. Reinstall PTO ball bearing and oil seal on crankshaft.

**NOTICE** **Oil seal must be installed with sealing lip toward the engine.**

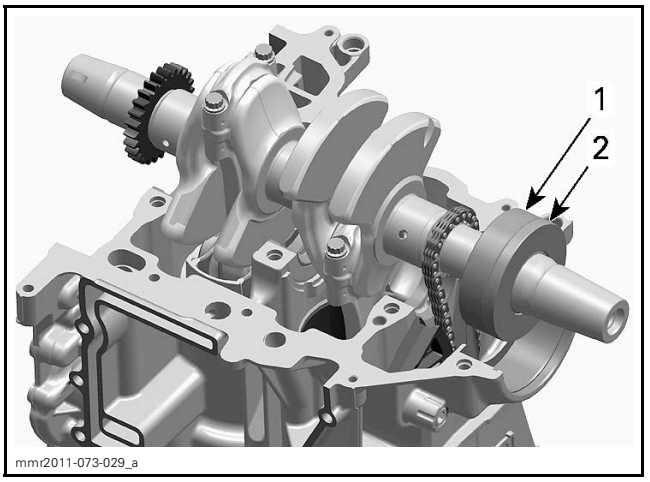


*1. PTO ball bearing*
*2. Oil seal*

5. Install crankshaft and push ball bearing and oil seal against axial stop.

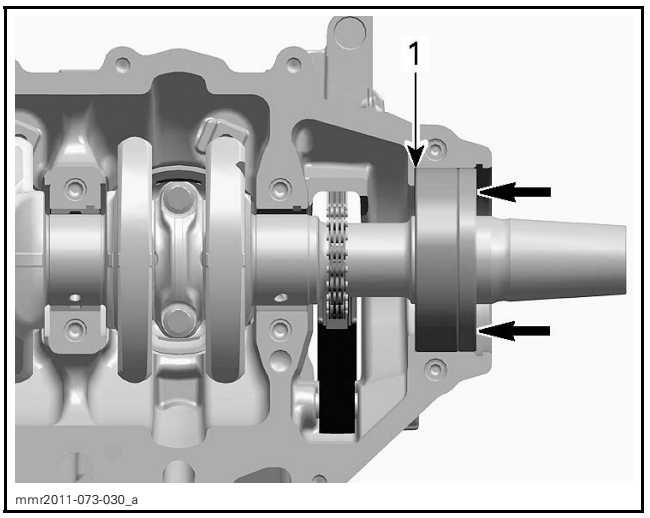


*1. PTO ball bearing against axial stop*

6. Install retaining ring.

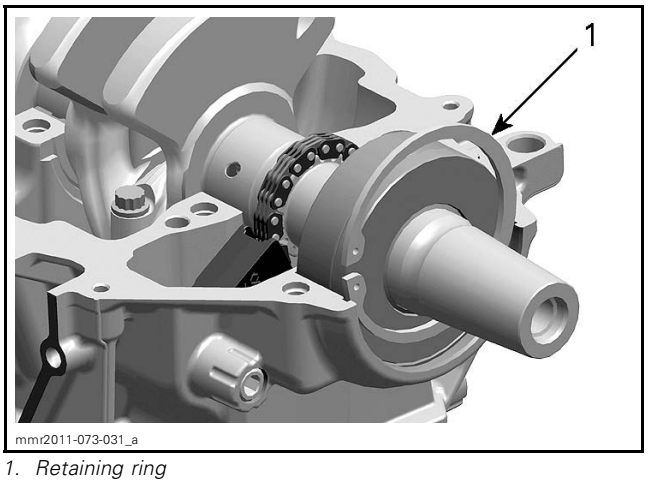


*1. Retaining ring*

7. Properly install the crankshaft thrust washers with the slots facing against crankshaft counterweights.

NOTE: Crankshaft thrust washers must be flush with the cylinder block sealing surface.

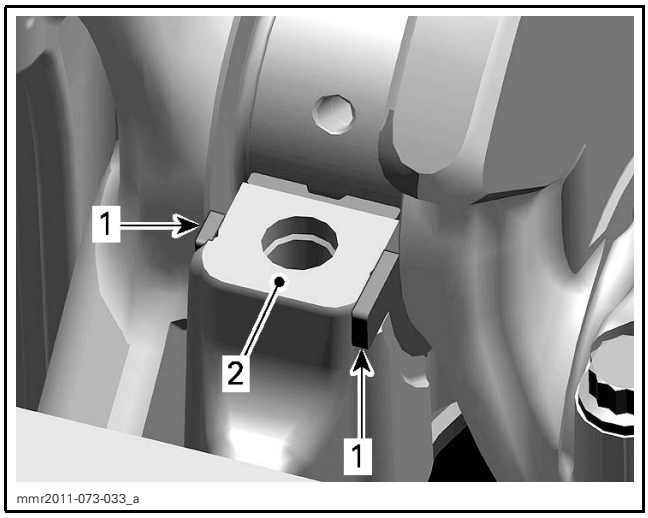


*1. Crankshaft thrust washers*
*2. Sealing surface*

8. Reinstall lower chain guide in lower half of cylinder block.

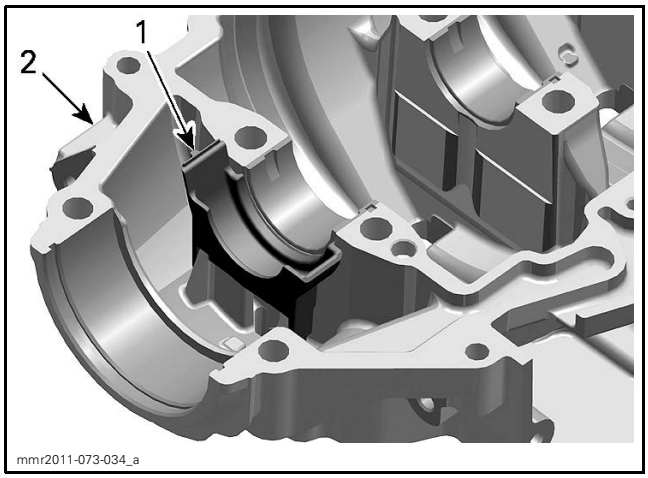


*1. Lower chain guide*
*2. Lower half of cylinder block*

9. Reassemble cylinder block, refer to *BOTTOM END* subsection.
10. Reinstall timing chain properly on camshaft timing gears. Refer to *CAMSHAFT INSTALLATION* in the *BOTTOM END* subsection.

**NOTICE** **Improper camshaft timing will damage engine components.**

11. Install all other removed parts.

NOTE: Be sure to remove camshaft and crankshaft locking tools when timing chain is completely installed.

## CHAIN GUIDE (TENSIONER SIDE)

### Chain Guide Removal (Tensioner Side)

NOTE: Removal of chain guide is not recommended if there is no need for replacement.

1. Remove the *CAMSHAFTS*. Refer to *BOTTOM END* subsection.
2. Remove screw plug that covers the chain guide bearing pin.

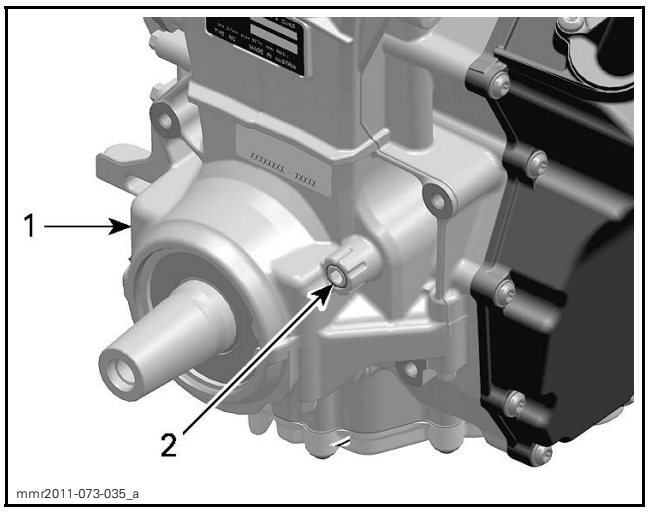


*1. Cylinder block PTO side*
*2. Screw plug location*

3. Use an M6 bolt to pull chain guide bearing pin out of cylinder block.

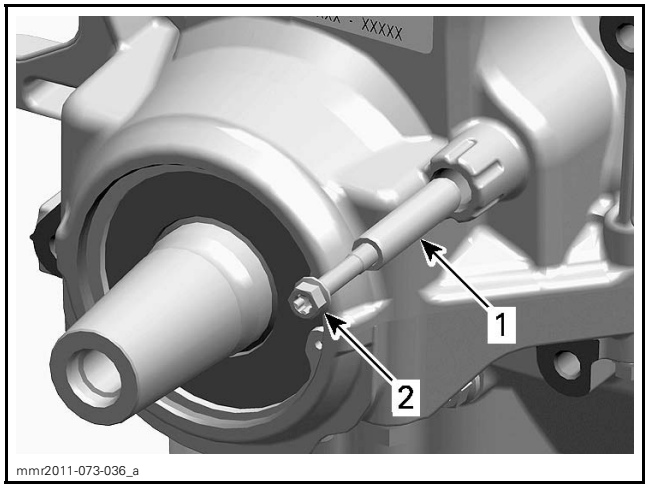


*1. Chain guide bearing pin*
*2. M6 bolt*

4. Remove chain guide (tensioner side).

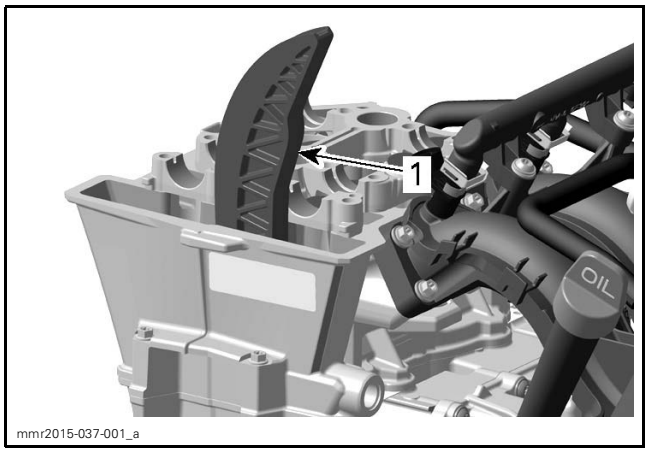


*1. Chain guide (tensioner side)*

## Chain Guide Inspection (Tensioner Side)

Check chain guide for wear, cracks or deforming. Replace as required.

Replace chain guide if groove depth caused by timing chain exceeds service limit.

| CHAIN GUIDE GROOVE DEPTH | |
|---|---|
| SERVICE LIMIT | 1 mm (.039 in) |

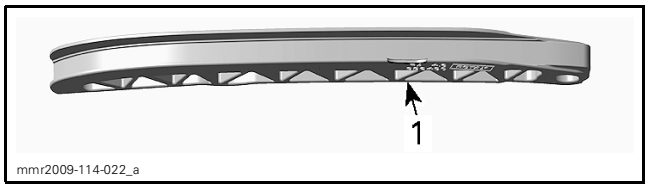


*TYPICAL*
*1. Chain guide*

## Chain Guide Installation (Tensioner Side)

Reverse of the removal procedure. However, pay attention to the following details.

1. Insert chain guide.
2. Apply engine oil on bearing pin and install it with M6 threads facing outwards.

***NOTICE*** **Ensure chain guide bearing pin is properly inserted in the chain guide.**

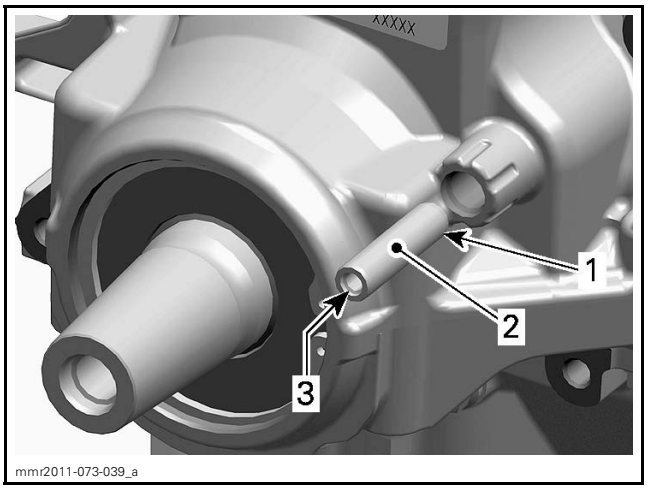


*1. Bearing pin*
*2. Apply engine oil here*
*3. M6 threads facing outwards*

3. Tighten screw plug as specified.

NOTE: Install screw plug only in final assembled cylinder block to avoid warping of sealing surface.

| SCREW PLUG | |
|---|---|
| Service product | LOCTITE 243 (BLUE) (P/N 293 800 060) |
| Tightening torque | 9 N•m ± 1 N•m (80 lbf•**in** ± 9 lbf•**in**) |

4. Properly reinstall camshaft timing gears. Refer to *CAMSHAFTS* in the *TOP END* subsection.

***NOTICE*** **Improper camshaft timing will damage engine components.**

# TIMING CHAIN

## SERVICE PRODUCTS

| Description | Part Number | Page |
|---|---|---|
| LOCTITE 243 (BLUE) | 293 800 060 | 4, 7 |

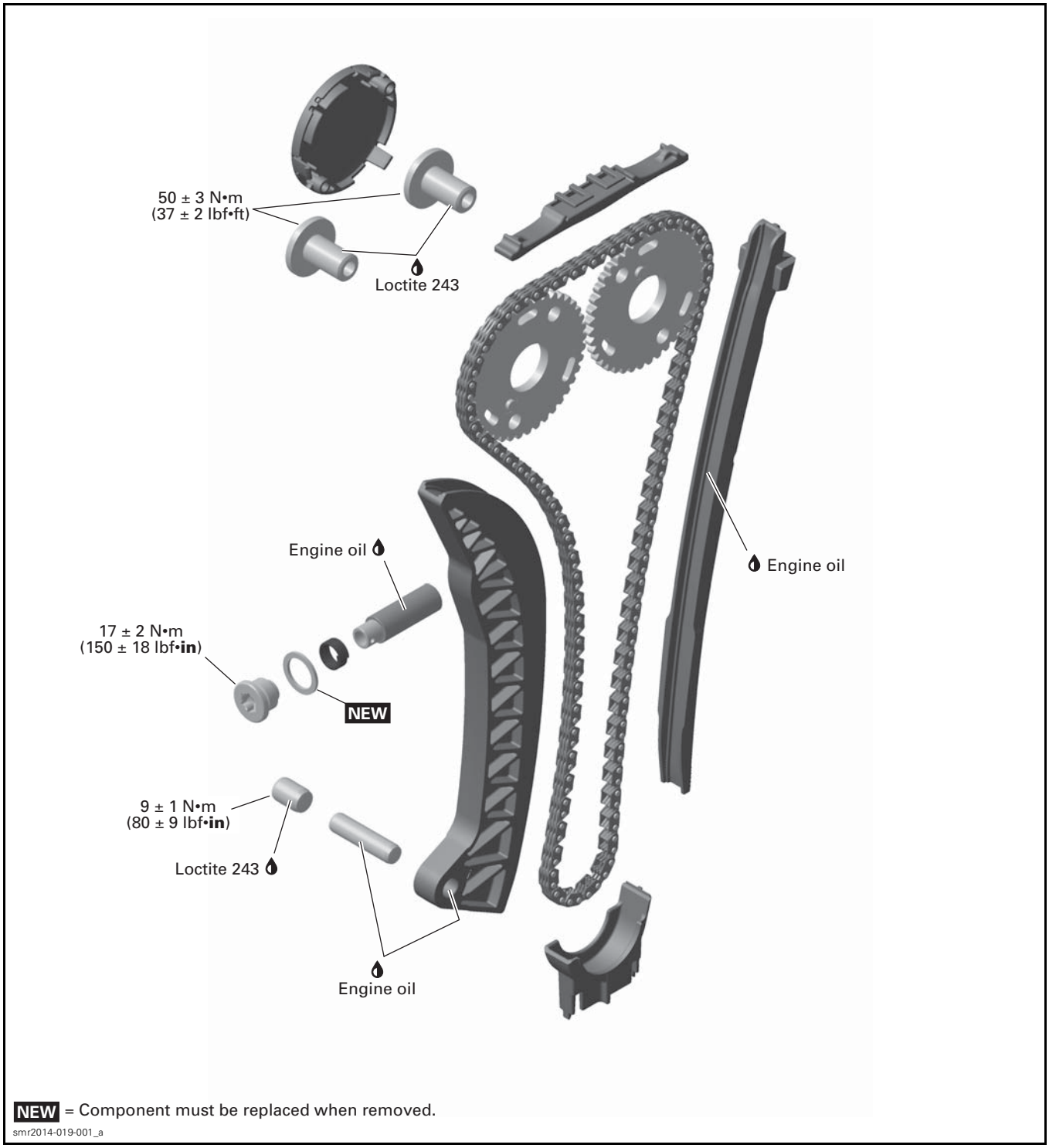

# GENERAL

Engine removal is necessary to work on the following components:
– Timing chain
– Timing chain guide (tensioner side).

Disconnect the BLACK (-) cable from the battery, then RED (+) cable before working on the engine.

**NOTICE** **Always disconnect BLACK (-) cable first and reconnect last.**

During assembly/installation, use torque values and service products as specified in the exploded view.

Clean threads before applying a threadlocker. Refer to *SELF-LOCKING FASTENERS* and *LOCTITE APPLICATION* at the beginning of this manual for complete procedure.

**⚠ WARNING**

**Torque wrench tightening specifications must be strictly adhered to.**
**Locking devices when removed (e.g.: locking tabs, elastic stop nuts, cotter pin, etc.) must be replaced.**

Hoses, cables or locking ties removed during a procedure must be reinstalled as per factory standards.

When disassembling parts that are duplicated in the engine, (e.g.: valves, springs, etc.), it is strongly recommended to note their position and to keep the parts of the same assembly as a "group". If you find a defective component, it will be much easier to find the cause of the failure. Since parts were broken-in together during engine operation, they will maintain their matched fit when reassembled together within their "group".

# TROUBLESHOOTING

The following is provided to help in diagnosing the probable source of troubles. It is a guideline and should not be assumed to provide solutions to every cause of all problems.

## UNUSUAL ENGINE NOISE OR VIBRATIONS

1. **Faulty chain tensioner.**
   *- Replace chain tensioner.*
2. **Chain guide(s) worn out.**
   *- Replace chain guide(s).*
3. **Stretched timing chain or worn sprockets.**
   *- Replace timing chain and sprockets.*
4. **Camshaft timing gear screws loose.**
   *- Retighten screws to recommended torque.*
5. **Incorrect camshaft timing adjustment.**
   *- Replace damaged components and readjust camshaft timing.*

## ENGINE LACKS ACCELERATION OR POWER

1. **Incorrect camshaft timing adjustment.**
   *- Replace damaged components and readjust camshaft timing.*

# PROCEDURES

## TIMING CHAIN TENSIONER

### Timing Chain Tensioner Location

The timing chain tensioner is located in the cylinder head beside the intake port of the PTO cylinder.

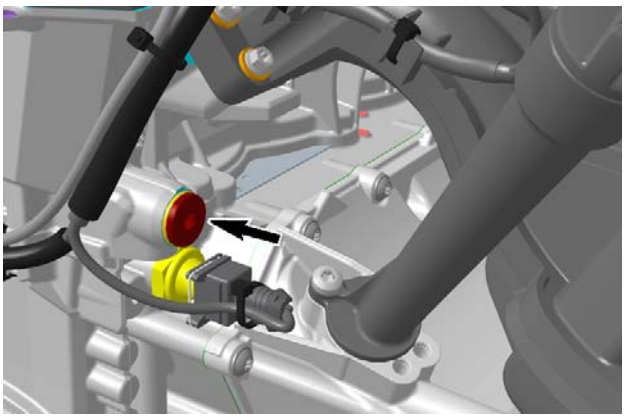


*SCREW PLUG, TIMING CHAIN TENSIONER*

### Removing the Timing Chain Tensioner

1. Lock crankshaft, refer to *CYLINDER BLOCK* subsection.
2. Remove screw plug and discard the sealing washer.
3. Pull out spring and chain tensioner.

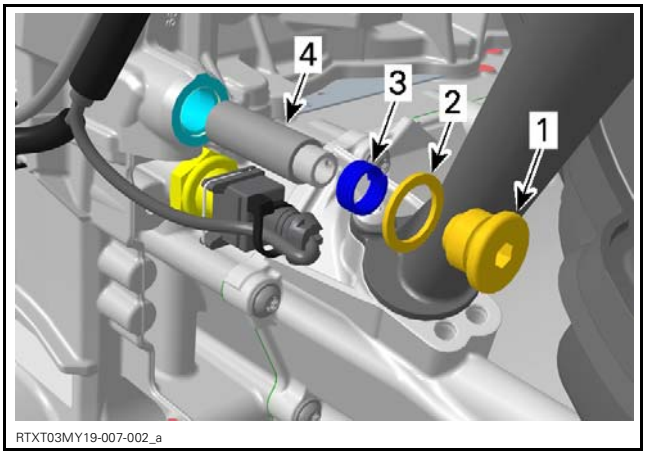


1. *Screw plug*
2. *Sealing washer*
3. *Spring*
4. *Chain tensioner*

## Inspecting the Timing Chain Tensioner

1. Check chain tensioner for scoring and freedom of movement in bore.
2. Compress chain tensioner and check for proper operation.

NOTE: The chain tensioner is difficult to compress when properly charged with oil, and easily compressed when it is not.

3. Check spring for straightness, corrosion and other visible damage.

## Installing the Timing Chain Tensioner

1. Apply engine oil on chain tensioner.
2. Insert chain tensioner in its bore with the plunger pointing outwards.

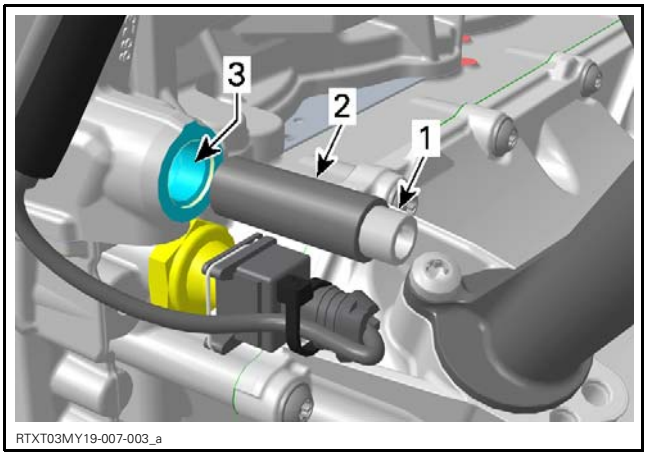


*TIMING CHAIN TENSIONER INSTALLATION*
1. *Plunger*
2. *Chain tensioner*
3. *Tensioner bore in cylinder head*

3. Install spring on chain tensioner.
4. Tighten screw plug with a NEW sealing washer to specified torque.

| TIGHTENING TORQUE | |
|---|---|
| Screw plug timing chain tensioner | 17 N•m ± 2 N•m (150 lbf•**in** ± 18 lbf•**in**) |

5. Install all other removed parts.

# CAMSHAFT TIMING GEARS

## Removing the Camshaft Timing Gear

Remove camshaft assembly. Refer to *CYLINDER HEAD* subsection.

Clamp camshaft in a vice using aluminium protectors.

**NOTICE** **Take care not damaging the cams.**

Unscrew and remove camshaft timing gear screw.

Remove camshaft timing gear.

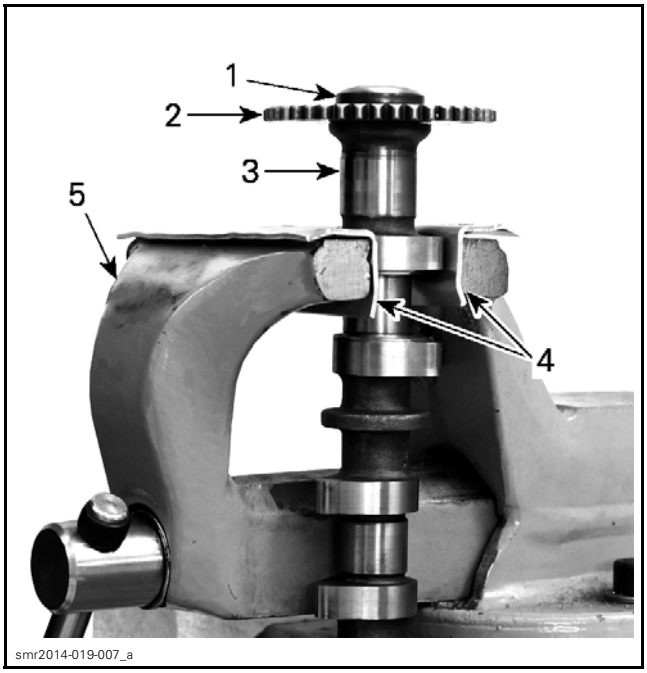


1. *Camshaft timing gear screw*
2. *Camshaft timing chain gear*
3. *Camshaft*
4. *Aluminium protectors*
5. *Vice*

## Inspecting the Camshaft Timing Gear

Check camshaft timing gears for wear or deterioration. If a gear is worn or damaged, replace camshaft timing gears and timing chain as a set.

NOTE: For crankshaft timing gear inspection, refer to *CYLINDER BLOCK* subsection.

## Installing the Camshaft Timing Gear

Installation is the reverse of the removal procedure. However, pay attention to the following details.

Tighten camshaft timing gear screw to specification.

**NOTICE** **Do not torque timing gear screws when camshafts are installed in cylinder head to avoid overstressing timing chain.**

| TIGHTENING TORQUE | |
|---|---|
| Timing gear screws | 50 N•m ± 3 N•m<br>(37 lbf•ft ± 2 lbf•ft)<br>+<br>LOCTITE 243 (BLUE)<br>(P/N 293 800 060) |

**NOTICE** **Improper camshaft timing will damage engine components. Make sure camshafts and crankshaft are still locked. If not, lock them before beginning this procedure. Refer to *CAMSHAFTS* in the *CYLINDER HEAD* subsection.**

Install breather cover on exhaust camshaft.

NOTE: Check condition of the breather cover before installation. Replace if necessary.

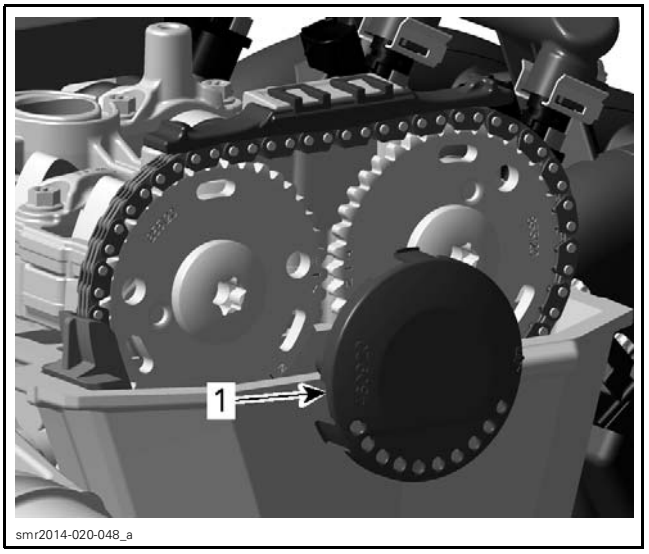


smr2014-020-048_a

*1. Breather cover*

Install remaining parts.

# TIMING CHAIN

## Removing the Timing Chain

1. Remove engine from vehicle. Refer to *ENGINE REMOVAL AND INSTALLATION* subsection.
2. Remove air intake manifold, refer to *AIR INTAKE SYSTEM* subsection.
3. Remove valve cover, refer to *CYLINDER HEAD* subsection.
4. Refer to *LUBRICATION SYSTEM* subsection and remove the following parts:
   – Oil tank
   – Oil pressure regulator valve
   – Oil cooler
   – Oil sump cover.
5. Refer to *COOLING SYSTEM (ENGINE)* subsection and remove following parts:
   – Water pump housing
   – Thermostat.
6. Check timing chain for excessive radial play while still installed on timing gears.

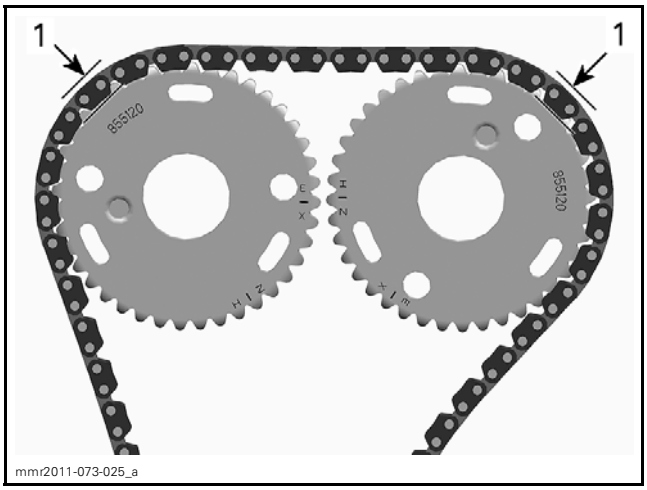


mmr2011-073-025_a

*1. Radial play*

7. Remove the *CAMSHAFTS*, refer to *CYLINDER HEAD* subsection.
8. Refer to *MAGNETO AND STARTER* subsection and remove the following parts:
   – Magneto cover
   – Rotor
   – Starter drive gears.
9. Remove oil pump intermediate gears, refer to *LUBRICATION SYSTEM* subsection.

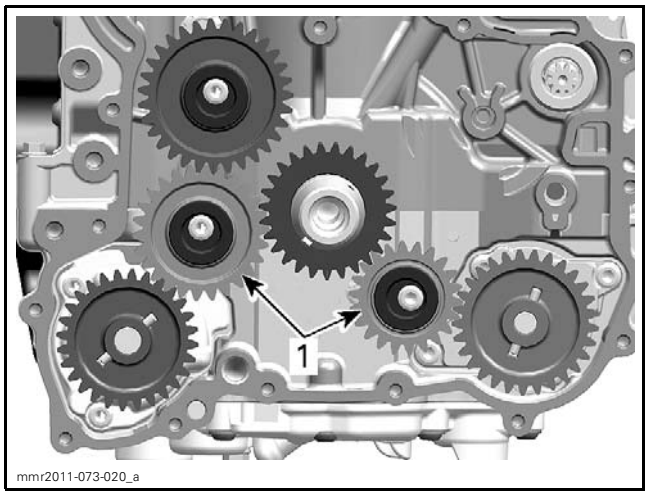


*1. Oil pump intermediate gears*

10. Remove crankshaft locking bolt.
11. Separate cylinder block, refer to *CYLINDER BLOCK* subsection.
12. Slightly lift the crankshaft, then remove timing chain.

NOTE: Make a mark on the timing chain to indicate the operating direction of the chain before removal.

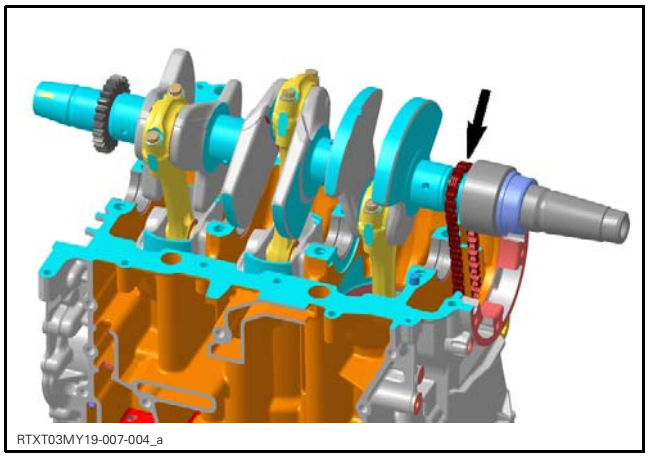


13. Remove lower timing chain guide from lower half of cylinder block.

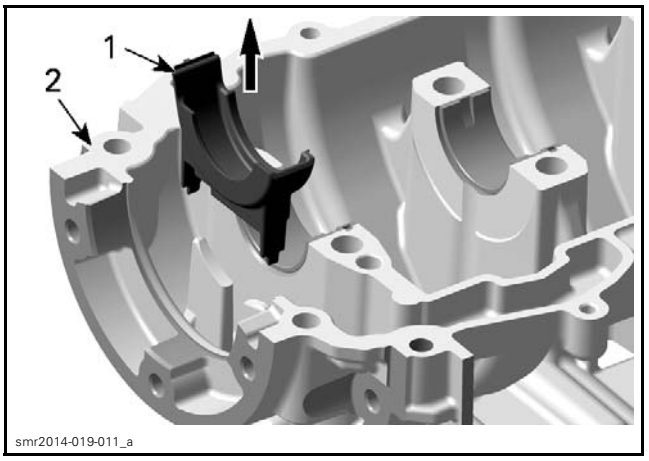


*1. Lower timing chain guide*
*2. Lower half of cylinder block*

## Inspecting the Timing Chain

Check timing chain for wear and teeth condition.

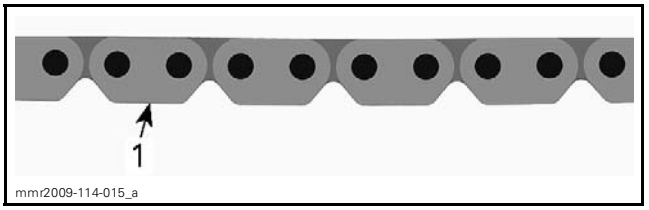


*1. Check teeth condition*

**NOTICE If timing chain is excessively worn or damaged, replace timing chain and camshaft timing gears as a set.**

Check lower chain guide for wear, cracks or deformation. Replace as required.

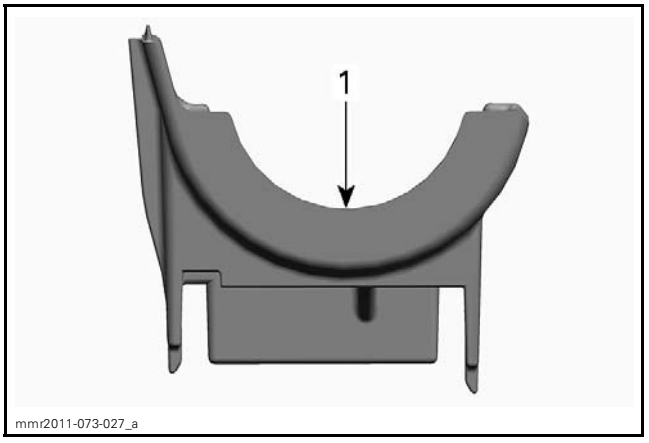


*1. Lower chain guide*

Replace lower chain guide if timing chain wear grooves are visible.

| CHAIN GUIDE GROOVE DEPTH | |
|---|---|
| Service limit | No timing chain wear groove allowed |

NOTE: Also check the chain guide, tensioner side. Refer to *INSPECTING THE CHAIN GUIDE (TENSIONER SIDE)* in this subsection.

### Installing the Timing Chain

The installation is the reverse of the removal procedure. However, pay attention to the following details.

1. Install timing chain on crankshaft timing gear.

NOTE: If the same timing chain is reinstalled, be sure to reinstall it in the same operating direction as marked during removal procedure.

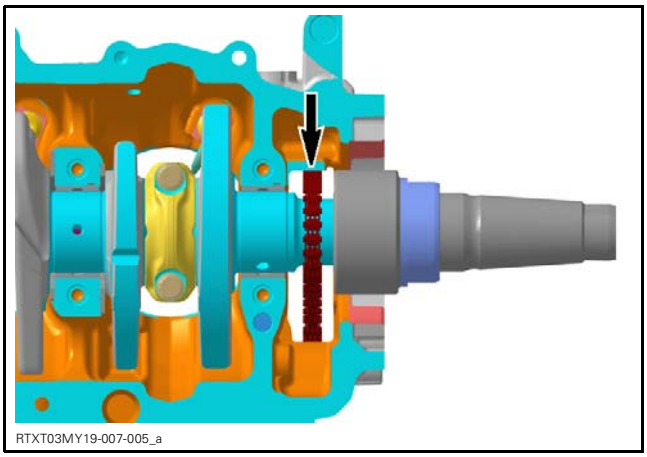

RTXT03MY19-007-005_a

2. Reinstall lower chain guide in lower half of cylinder block.

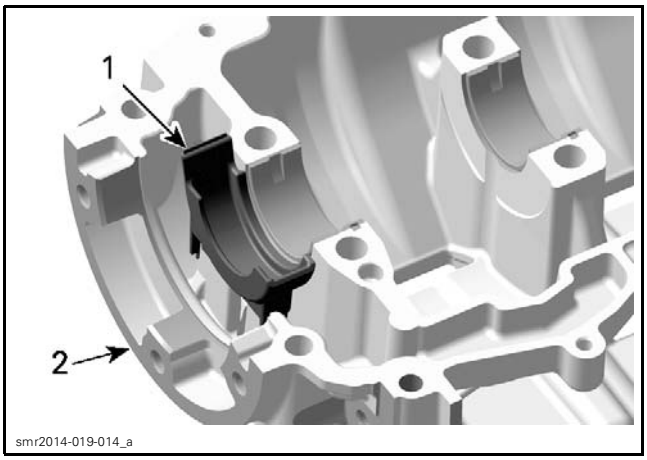


smr2014-019-014_a

1. *Lower chain guide*
2. *Lower half of cylinder block*

3. Reassemble cylinder block, refer to *CYLINDER BLOCK* subsection.
4. Lock crankshaft, refer to *CRANKSHAFT LOCKING PROCEDURE* in the *CYLINDER BLOCK* subsection.
5. Reinstall timing chain properly on camshaft timing gears. Refer to *INSTALLING THE CAMSHAFT* in the *CYLINDER HEAD* subsection.

**NOTICE Improper camshaft timing will damage engine components.**

6. Install all other removed parts.

NOTE: Be sure to remove camshaft and crankshaft locking tools when timing chain is completely installed.

## CHAIN GUIDE (TENSIONER SIDE)

### Removing the Chain Guide (Tensioner Side)

NOTE: Removal of chain guide is not recommended if there is no need for replacement.

1. Remove the *CAMSHAFTS*. Refer to *CYLINDER HEAD* subsection.
2. Remove screw plug that covers the chain guide bearing pin.

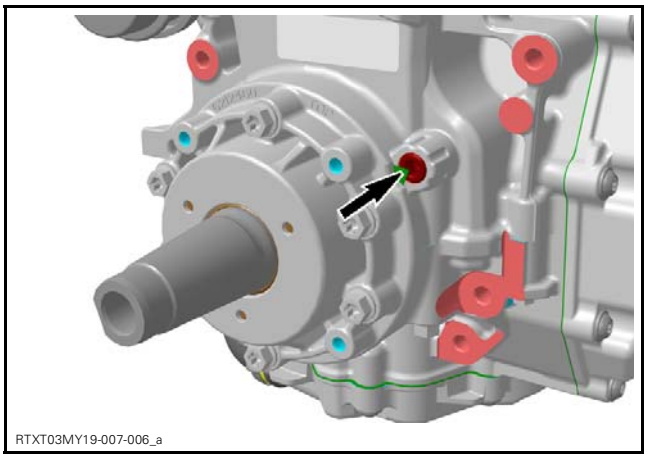

RTXT03MY19-007-006_a

3. Use an M6 bolt to pull chain guide bearing pin out of cylinder block.

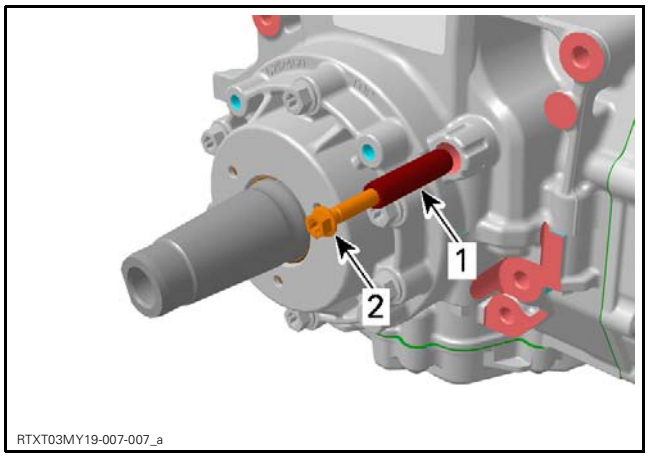


*1. Chain guide bearing pin*
*2. M6 bolt*

4. Remove chain guide (tensioner side).

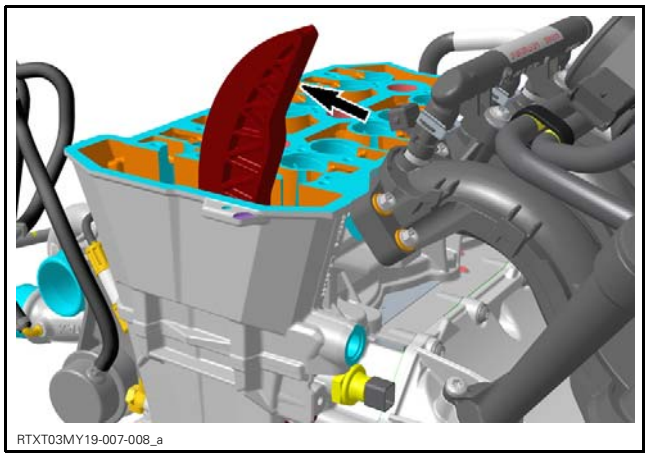


## Inspecting the Chain Guide (Tensioner Side)

Check chain guide for wear, cracks or deforming. Replace as required.

Replace chain guide if groove depth caused by timing chain exceeds service limit.

| CHAIN GUIDE GROOVE DEPTH | |
|---|---|
| Service limit | 1 mm (.039 in) |

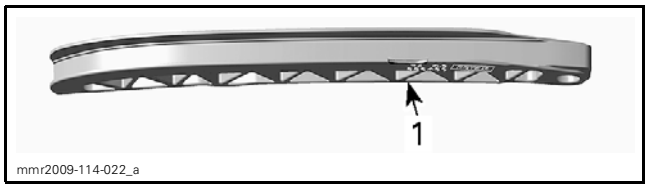


*TYPICAL*
*1. Chain guide*

## Installing the Chain Guide (Tensioner Side)

The installation is the reverse of the removal procedure however, pay attention to the following details.

1. Insert chain guide.
2. Apply engine oil on bearing pin and install it with M6 threads facing outwards.

**NOTICE** **Ensure chain guide bearing pin is properly inserted in the chain guide.**

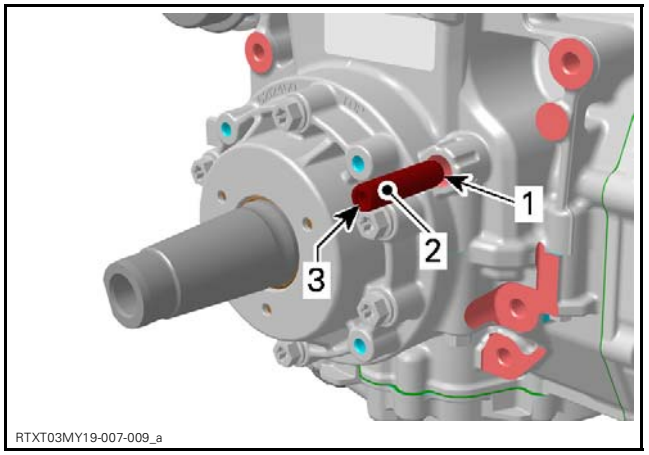


*1. Bearing pin*
*2. Apply engine oil here*
*3. M6 threads facing outwards*

3. Tighten screw plug as specified.

NOTE: Install screw plug only in final assembled cylinder block to avoid warpage of sealing surface.

| TIGHTENING TORQUE | |
|---|---|
| Screw plug | 9 N•m ± 1 N•m (80 lbf•**in** ± 9 lbf•**in**) + LOCTITE 243 (BLUE) (P/N 293 800 060) |

4. Properly reinstall camshafts. Refer to *CAMSHAFTS* in the *CYLINDER HEAD* subsection.

**NOTICE** **Improper camshaft timing will damage engine components.**

# TOP END

## SERVICE TOOLS

| Description | Part Number | Page |
|---|---|---|
| CAMSHAFT LOCKING TOOL | 529 036 206 | 119 |
| ENGINE LEAK DOWN TEST KIT | 529 035 661 | 111 |
| VALVE SPRING COMPRESSOR CUP | 529 036 209 | 125 |
| VALVE SPRING COMPRESSOR | 529 035 724 | 125 |

## SERVICE TOOLS – OTHER SUPPLIER

| Description | Part Number | Page |
|---|---|---|
| SNAP-ON VALVE HOLDER | VL2 | 128 |
| SNAP-ON VALVE STEM SEAL PLIERS | YA 8230 | 126 |

# VALVE COVER

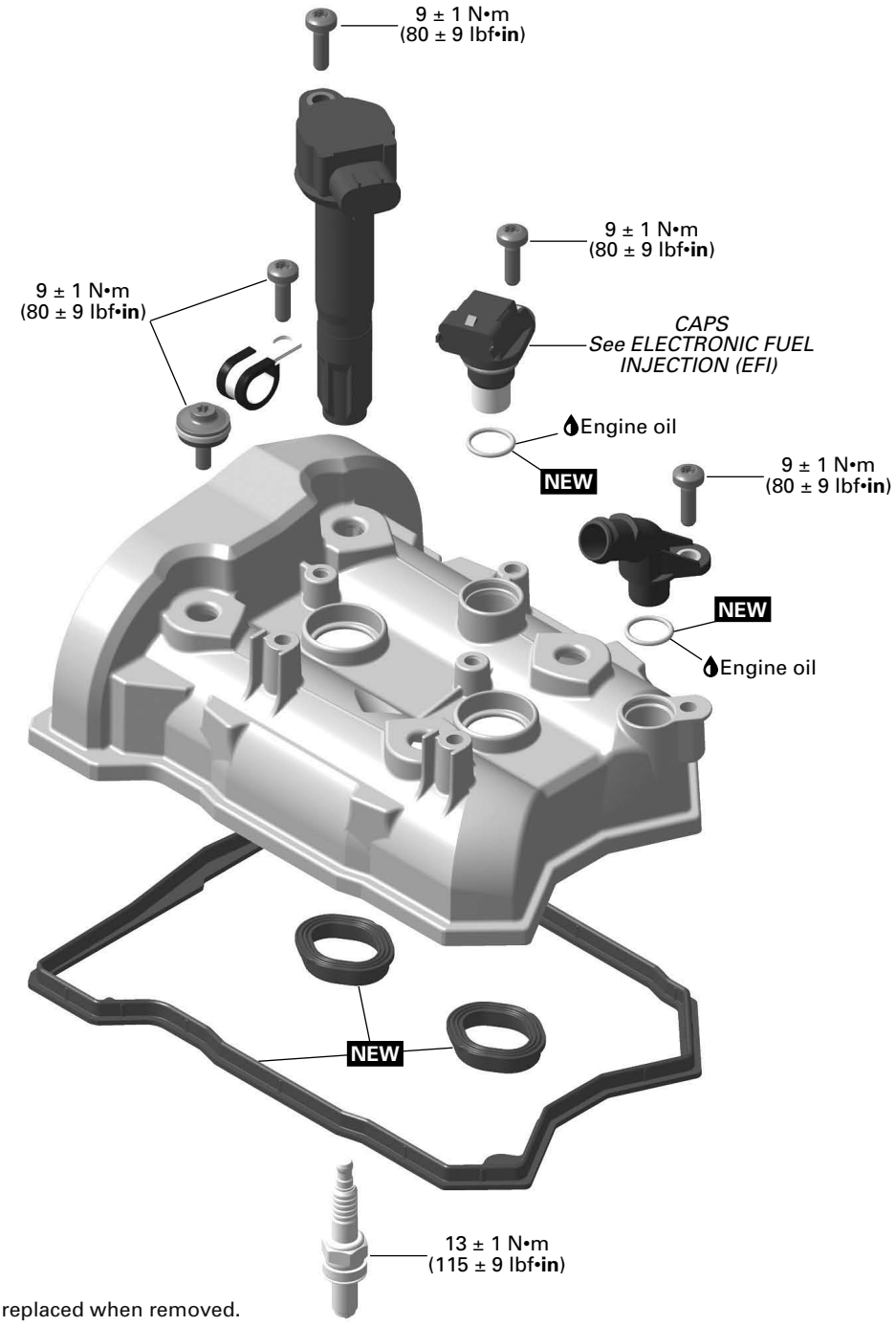


**NEW** = Component must be replaced when removed.

mmr2015-038-002_a

# CAMSHAFTS

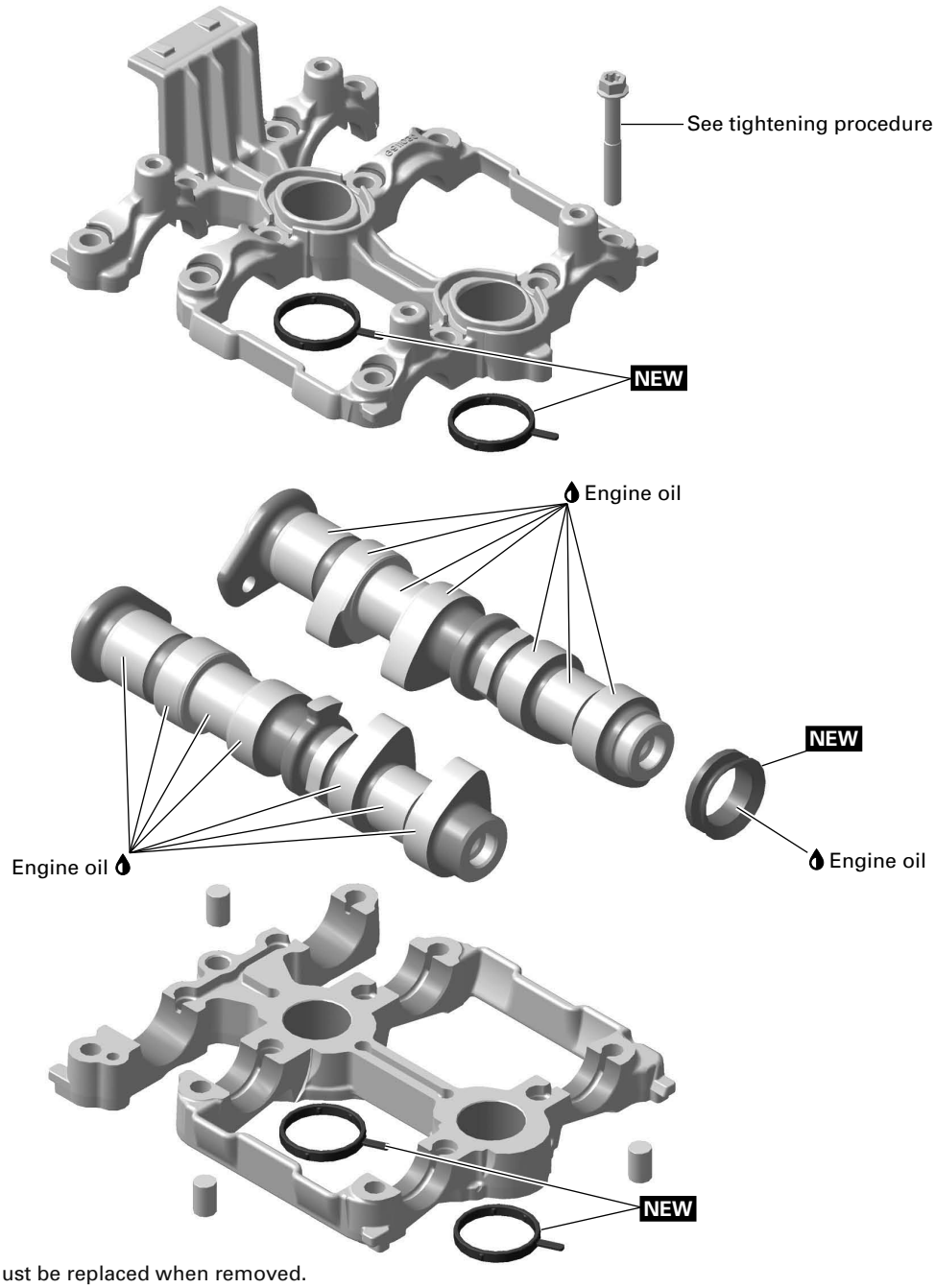


**NEW** = Component must be replaced when removed.

mmr2015-038-001_a

# CYLINDER HEAD

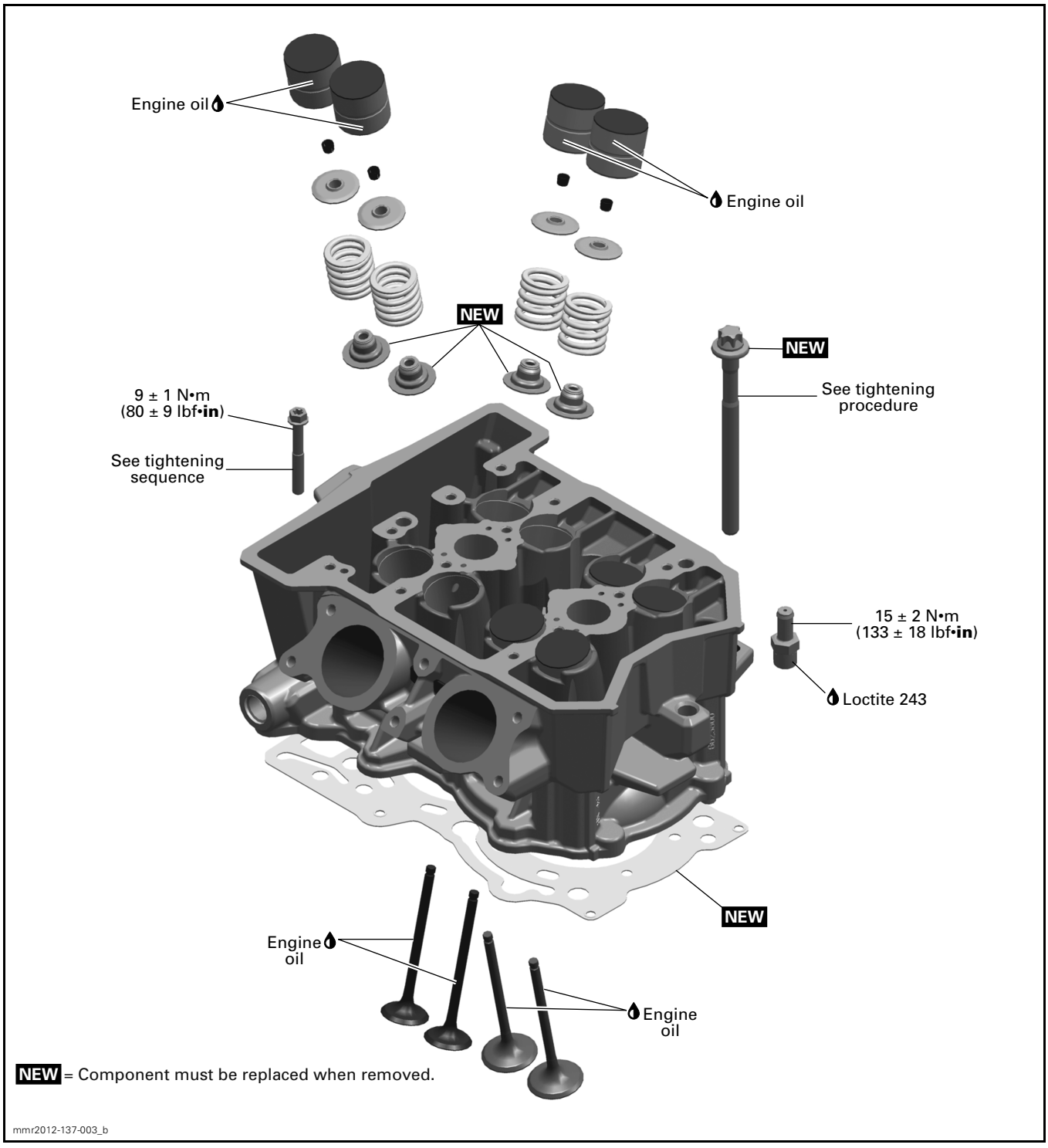

# GENERAL

NOTE: For a better understanding, some illustrations are taken with engine out of the vehicle.

Disconnect the battery before working on the engine.

**⚠ WARNING**

**Always disconnect BLACK (-) cable first and reconnect last.**

When disassembling parts that are duplicated in the engine, (e.g.: valves, springs, etc.), it is strongly recommended to note their position and to keep the parts of the same assembly as a "group". If you find a defective component, it will be much easier to find the cause of the failure. Since parts were break-in together during the engine operation, they will keep their matched fit when parts are reassemble together within their "group".

# INSPECTION

## CYLINDER LEAK TEST

### General

Before performing the cylinder leak test, verify the following:

– Clamp tightness
– Hoses condition.

NOTE: For best accuracy, the leak test should be done with the engine at normal operating temperature.

**⚠ CAUTION Engine parts could be hot.**

NOTE: The following steps are the same for each cylinder.

### Preparation

1. Remove the *VALVE COVER*, see procedure in this subsection.
2. Remove spark plug.
3. Using the drive pulley, turn the engine counterclockwise to bring piston to TDC of compression stoke. Use a dial gauge or a suitable tool to position the piston to TDC.

NOTE: The piston must be set precisely to TDC of compression stroke. If not, the engine will continue to rotate when pressure builds up.

| RECOMMENDED TOOLS | |
|---|---|
| Dial gauge | |
| Dial gauge extension/adapter | |

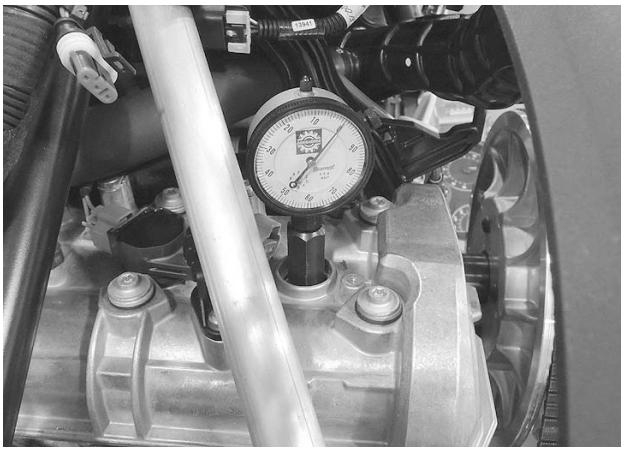

mmr2015-019-102

### Leak Test

1. Install a gauge adaptor into spark plug hole.

| REQUIRED TOOL | |
|---|---|
| ENGINE LEAK DOWN TEST KIT (P/N 529 035 661) | |

2. Connect the leak down tester to an adequate air supply.
3. Set gauge needle to zero.

NOTE: All testers have specific instructions on gauge operation and required pressure. Refer to manufacturer's instructions.

4. Supply combustion chamber with air pressure.

mmr2015-019-103

5. Note the amount or percentage of leakage (depending on tester).

| LEAKAGE PERCENTAGE | ENGINE CONDITION |
|---|---|
| 0% to 15% | Excellent condition |
| 16% to 25% | Good condition |
| 26% to 40% | Fair condition; reduced engine performance |
| 41% and higher | Poor condition, diagnose and repair engine |

## Diagnosis

Listen for air leaks.

– Air escaping on intake port or throttle body means leaking intake valve(s).
– Air escaping on exhaust port means leaking exhaust valve(s).
– Air bubbles out of coolant tank means leaking cylinder head gasket.
– Air or coolant escaping from cylinder head means damaged gasket or loosened screws.
– Air escaping into crankcase area means excessively worn cylinder or broken piston rings.
– Air or oil escaping from crankcase means damaged gasket or loosened screws.

## Repair Tips

Blue exhaust gas means damaged or worn piston rings or valve stem seals.

White exhaust gas means damaged cylinder head gasket.

Coolant tank cap opening without overheat means damaged cylinder head gasket.

Leaking valves can be caused by carbon deposits or burnt valve face.

## Assembly

Reverse the preparation procedure.

# TROUBLESHOOTING

Always check for fault codes. If a fault code is detected, service the fault code first. Refer to *DIAGNOSTIC AND FAULT CODES* subsection.

NOTE: When diagnosing an engine problem, always perform the cylinder leak test. This will help pinpoint a problem. Refer to *CYLINDER LEAK TEST* in this subsection.

## UNUSUAL ENGINE NOISE OR VIBRATIONS

1. Discharged or defective valve lifters.
   - *Check engine oil pressure, refer to LUBRICATION SYSTEM subsection.*
   - *Replace valve lifters.*
2. Camshaft(s) or camshaft holder(s) worn out.
   - *Check and replace damaged parts.*
3. Faulty chain tensioner.
   - *Replace chain tensioner. Refer to TIMING CHAIN subsection.*
4. Chain guide(s) worn out.
   - *Replace chain guide(s). Refer to TIMING CHAIN subsection.*
5. Stretched timing chain or worn out sprockets.
   - *Replace timing chain and sprockets. Refer to TIMING CHAIN subsection.*
6. Loose timing chain gear screws.
   - *Retighten screws with recommended torque.*
7. Incorrect camshaft timing.
   - *Replace damaged components and readjust camshaft timing.*

## OIL LEAKAGE FROM CYLINDER HEAD

1. Leaking valve cover gasket.
   - *Replace valve cover gaskets and retighten valve cover with recommended torque.*
   - *Check valve cover for cracks or other damage.*
2. Leaking spark plug tube O-rings.
   - *Replace spark plug tube O-rings.*
   - *Clean spark plug area from oil spillage.*
3. Blow-by connector is leaking.
   - *Replace blow by connector O-ring.*

4. Leaking cylinder head gasket.
   - *Check cylinder head for damage.*
   - *Replace cylinder head gasket and retighten screws with recommended torquing procedure.*

### ENGINE SUDDENLY TURNS OFF OR LACKS ACCELERATION OR POWER

1. Incorrect camshaft timing.
   - *Replace damaged components and readjust camshaft timing.*
2. Leaking intake or exhaust valves.
   - *Perform a CYLINDER LEAK TEST. Repair or replace damaged components.*
3. Broken valve spring(s).
   - *Replace defective parts.*

# PROCEDURES

## VALVE COVER

### Valve Cover Access

1. Remove the air intake silencer and headlights/gauge support module as a unit. Refer to *AIR INTAKE SYSTEM* subsection.
2. Remove pulley guard.

### Valve Cover Removal

1. Refer to *EXHAUST SYSTEM* subsection and remove the exhaust manifold.
2. Disconnect vent tube from the blow-by-connector.

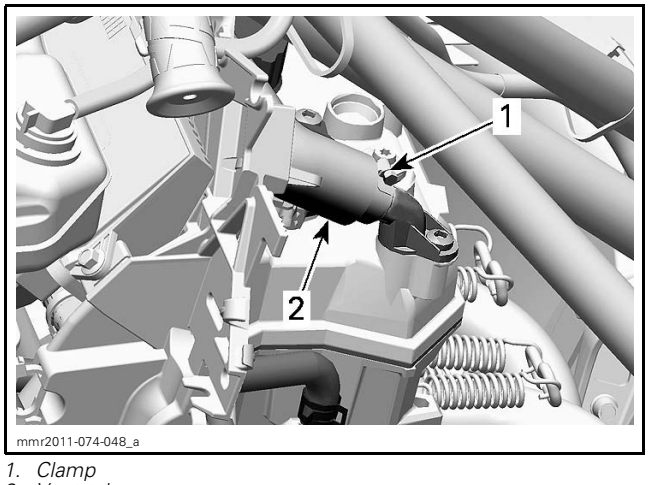


*1. Clamp*
*2. Vent tube*

3. Unplug CAPS (camshaft position sensor).
4. Unplug ignition coils.

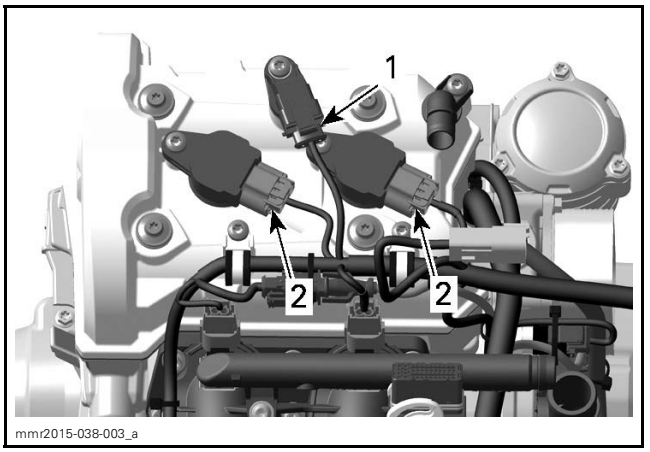


*1. CAPS connector*
*2. Ignition coil connectors*

5. Remove ignition coils with gaskets.

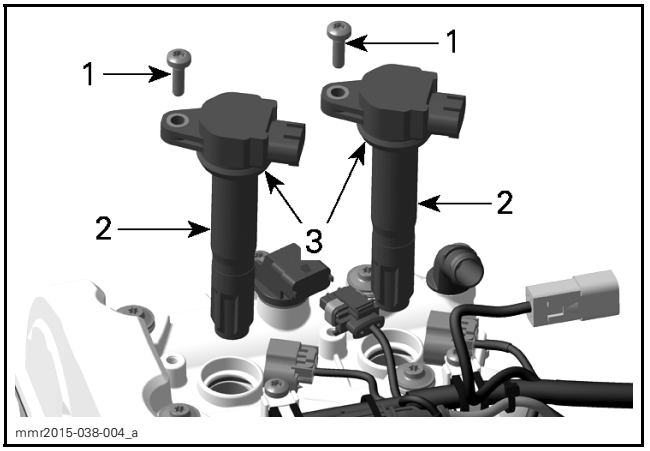


*1. Retaining screws*
*2. Ignition coils*
*3. Gaskets*

6. Remove screws securing the electrical harness to the valve cover.
7. Unplug both fuel injectors.

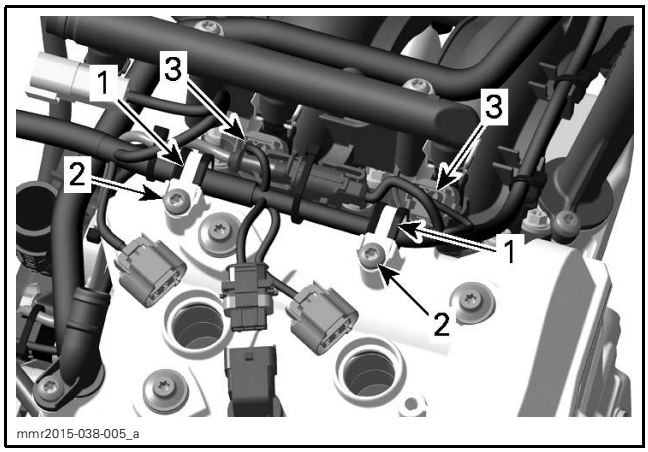

mmr2015-038-005_a

1. *Cable clamps*
2. *Retaining screws*
3. *Fuel injector connector*

8. Remove valve cover retaining screws.

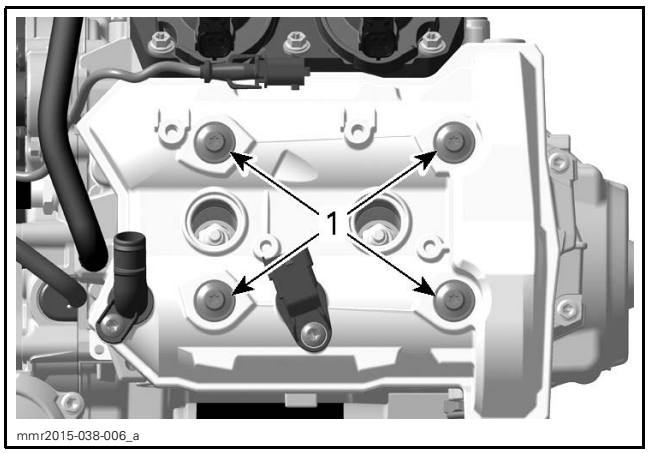

mmr2015-038-006_a

1. *Valve cover screws*

9. Lift and tilt valve cover with gasket towards front of engine.

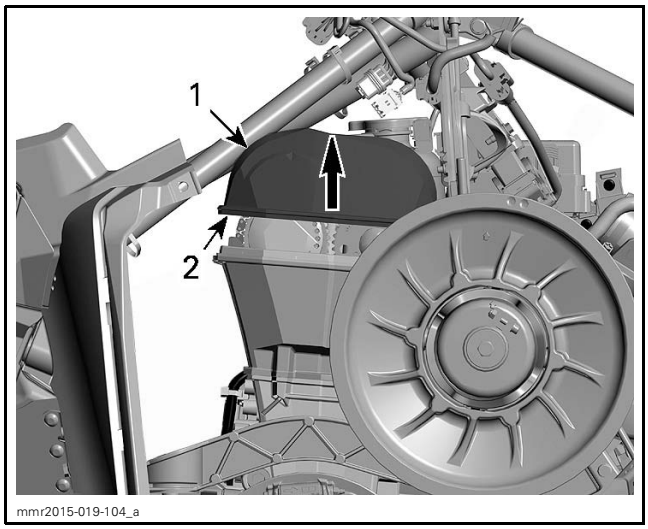

mmr2015-019-104_a

*TYPICAL*
1. *Valve cover*
2. *Gasket*

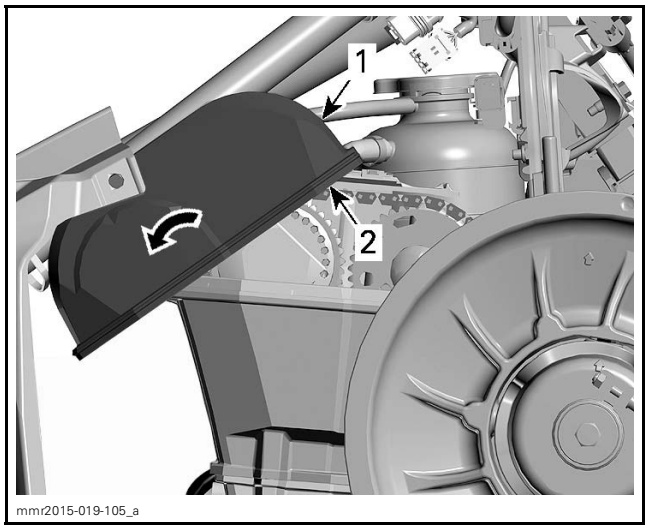

mmr2015-019-105_a

*TYPICAL*
1. *Valve cover*
2. *Gasket*

10. Pull valve cover and gasket out through LH side of vehicle.

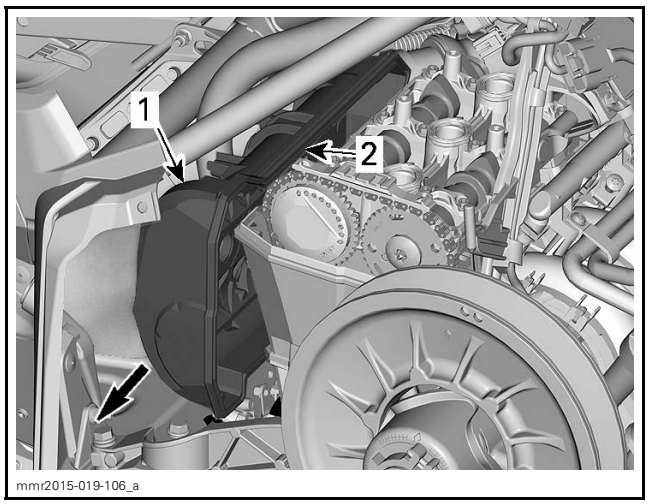

mmr2015-019-106_a

*TYPICAL*
1. *Valve cover*
2. *Gasket*

11. Remove valve cover small gaskets (spark plug tubes).

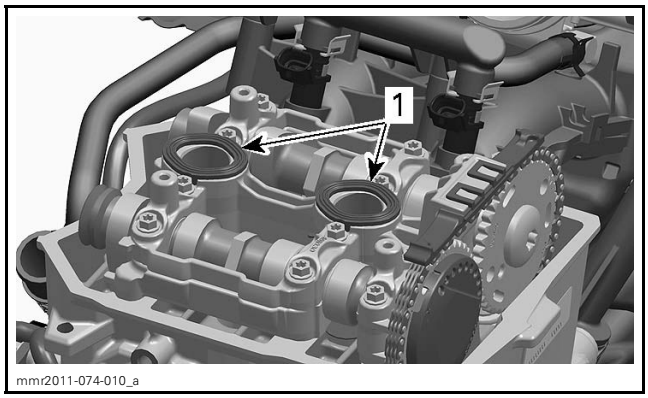

mmr2011-074-010_a

1. *Small gaskets*

## Valve Cover Inspection

Check the valve cover for cracks or other damage.

Check if the valve cover gaskets are brittle, hard or otherwise damaged.

Replace defective parts.

## Valve Cover Installation

For installation reverse the removal procedure. However, pay attention to the following details.

1. Properly fit small gaskets into camshaft holder grooves.
2. Properly fit large gasket into valve cover groove.
3. Apply engine oil to sealing surface of V-ring.

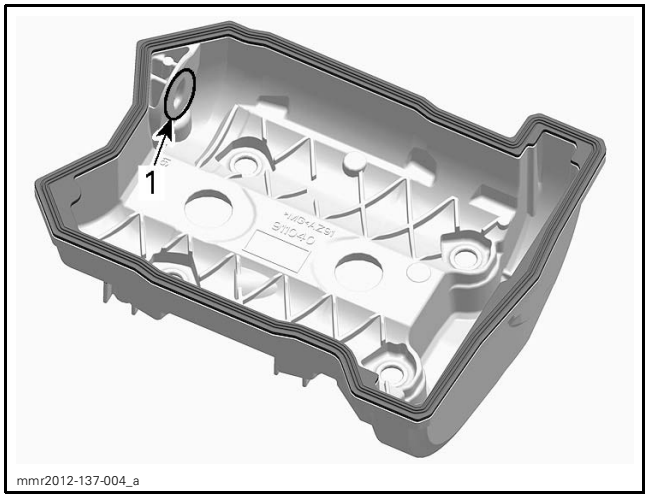


*INSIDE VALVE COVER*
*1. Apply engine oil here*

4. Install valve cover.

**NOTICE** **Adhere to the following procedure, otherwise damage to the V-ring will occur causing crankcase venting malfunction.**

4.1 Move valve cover towards MAG side.

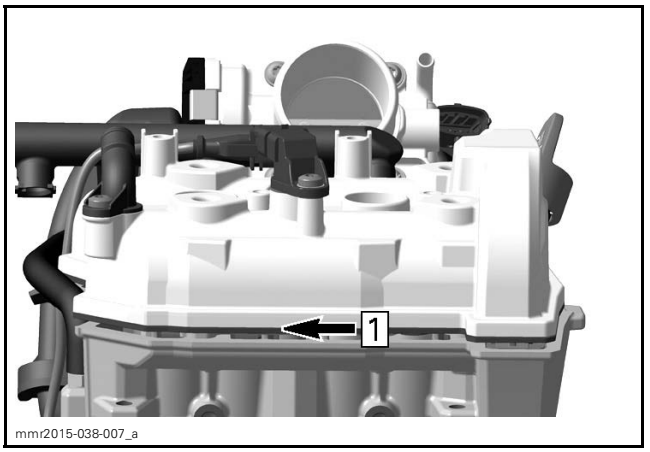


*Step 1: Move valve cover towards MAG side*

4.2 Put valve cover onto cylinder head.

**NOTICE** **Make sure the valve cover gasket is well positioned in the cover groove.**

4.3 Push valve cover towards the PTO side to ensure the V-ring properly seals on sealing surface inside the cover.

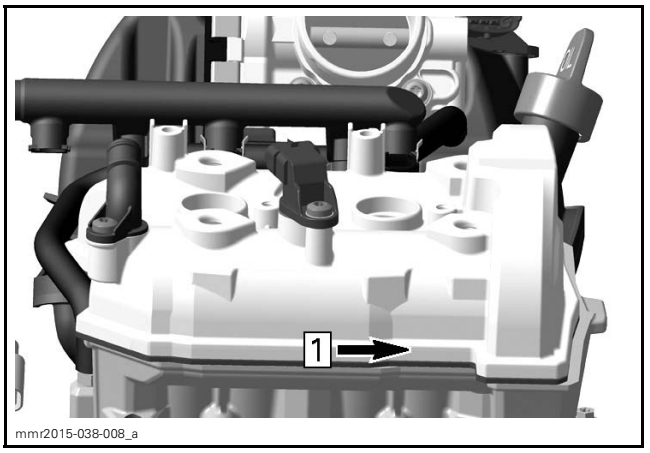


*Step 1: Push valve cover towards PTO side*

5. Install valve cover screws and tighten as per following sequence:

| VALVE COVER SCREWS | |
|---|---|
| Tightening torque | 9 N•m ± 1 N•m (80 lbf•**in** ± 9 lbf•**in**) |

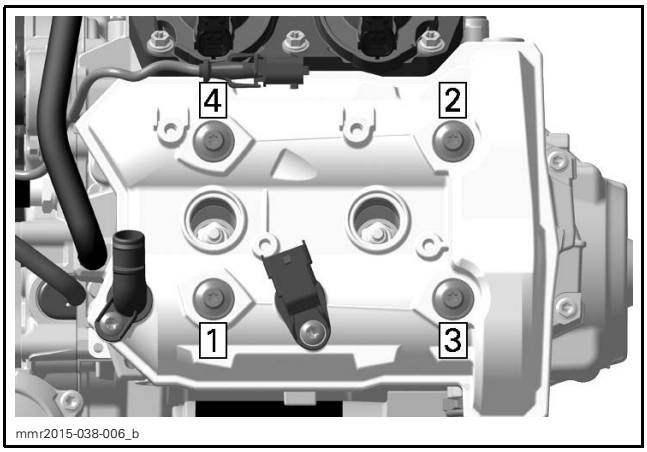


*TIGHTENING SEQUENCE*

# CAMSHAFTS

## Camshaft Removal

1. Remove *VALVE COVER*, see procedure in this subsection.
2. Lock crankshaft, refer to *CRANKSHAFT LOCKING PROCEDURE* in the *BOTTOM END* subsection.

Remove timing chain tensioner. Refer to *TIMING CHAIN* subsection.

3. Remove:

3.1 Breather cover

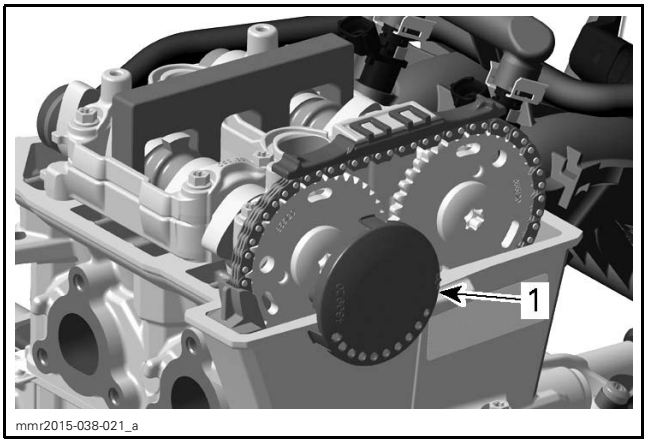


*1. Breather cover*

3.2 Upper timing chain guide

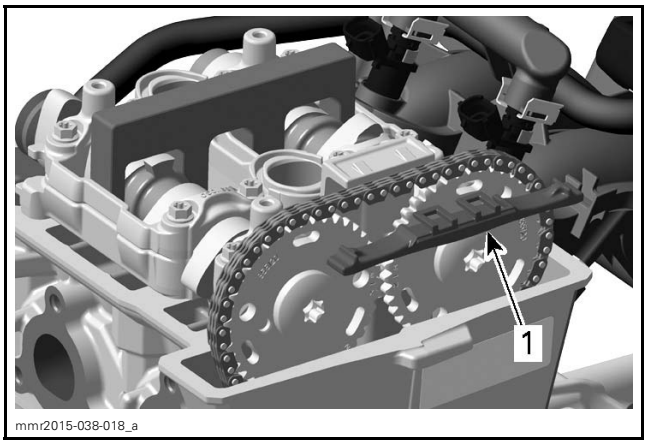


*1. Upper timing chain guide*

3.3 Timing chain guide.

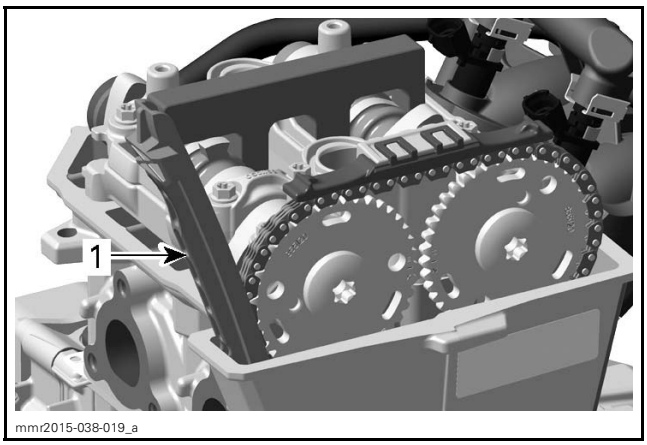


*1. Timing chain guide (exhaust side)*

4. Remove timing chain from camshaft timing gears.
5. Remove camshaft holder retaining screws (x12).

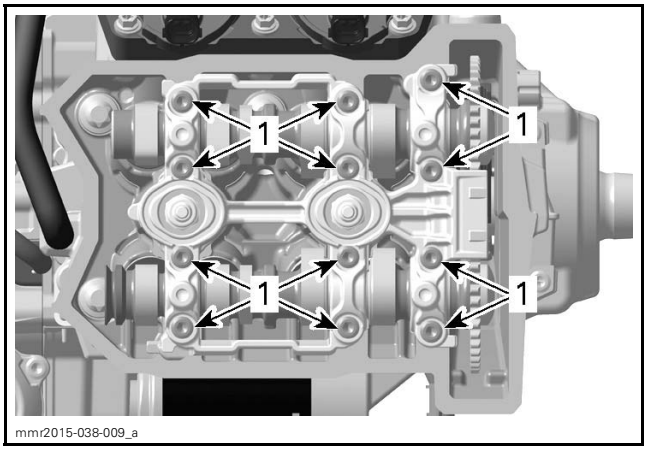


*1. Camshaft holder retaining screws*

6. Remove upper half of camshaft holder.

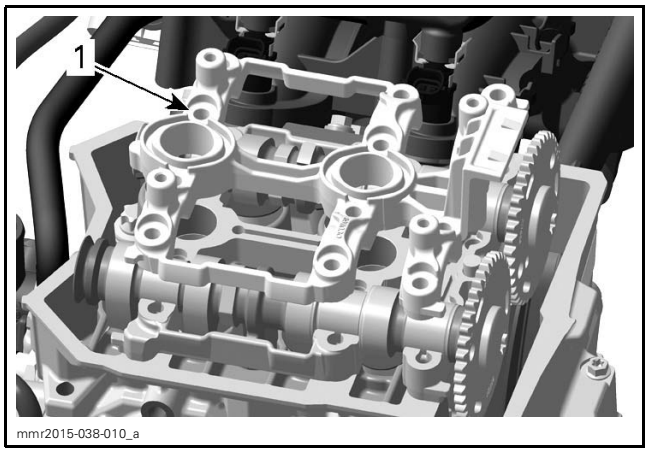


*1. Upper half of camshaft holder*

7. Remove camshafts with timing gears.

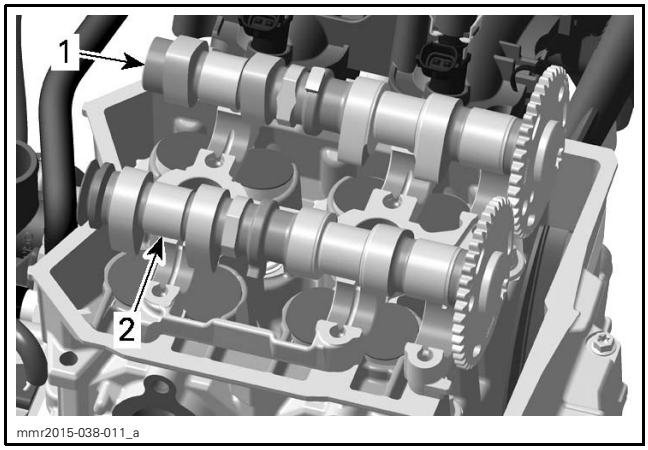


*1. Intake camshaft*
*2. Exhaust camshaft*

NOTE: Remove camshaft timing gears only if necessary. Refer to *TIMING CHAIN* subsection.

## Camshaft Inspection

1. Check each lobe and bearing journal for scoring, scuffing, cracks, or other signs of wear.
2. Check if V-ring is brittle, hard or otherwise damaged.
3. Measure camshaft bearing journal diameter and lobe height, using a micrometer.

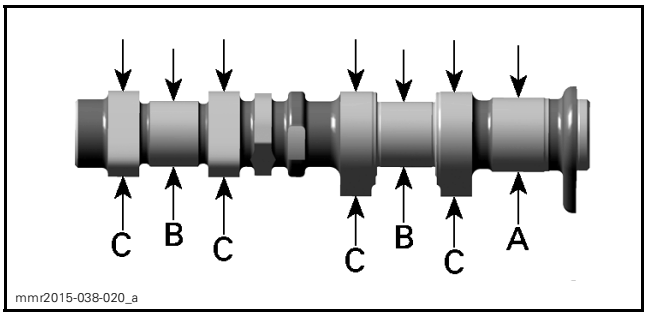


*A. Camshaft journal (PTO)*
*B. Camshaft journal (center and MAG)*
*C. Camshaft lobes*

| CAMSHAFT JOURNAL DIAMETER | |
|---|---|
| PTO JOURNAL (A) | |
| NEW | 25.947 mm to 25.960 mm (1.0215 in to 1.022 in) |
| SERVICE LIMIT | 25.920 mm (1.0205 in) |
| CENTER AND MAG JOURNAL (B) | |
| NEW | 22.947 mm to 22.960 mm (.9034 in to .9039 in) |
| SERVICE LIMIT | 22.920 mm (.9024 in) |

| CAMSHAFT LOBE HEIGHT | |
|---|---|
| INTAKE CAMSHAFT (C) | |
| NEW | 38.70 mm to 38.90 mm (1.524 in to 1.531 in) |
| SERVICE LIMIT | 38.67 mm (1.522 in) |
| EXHAUST CAMSHAFT (C) | |
| NEW | 39.40 mm to 39.60 mm (1.551 in to 1.559 in) |
| SERVICE LIMIT | 39.38 mm (1.55 in) |

For camshaft journal radial clearance and camshaft holder bearing diameter refer to *CAMSHAFT HOLDER* in this subsection.

4. Check timing chain guide for wear, cracks or deformation. Replace as required.
5. Replace timing chain guide if any groove caused by timing chain exceeds service limit.

| CHAIN GUIDE GROOVE DEPTH | |
|---|---|
| SERVICE LIMIT | 1 mm (.039 in) |

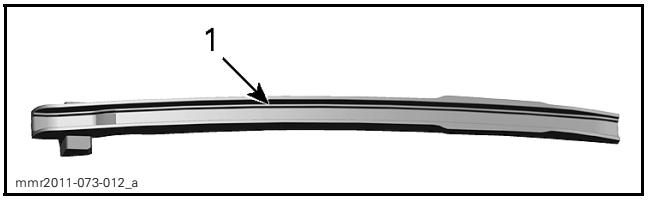


*1. Timing chain guide*

Replace parts if necessary.

## Camshaft Installation

Reverse of the removal procedure. However pay attention to the following details.

1. Ensure crankshaft is still locked.
2. Apply engine oil on camshaft bearings.

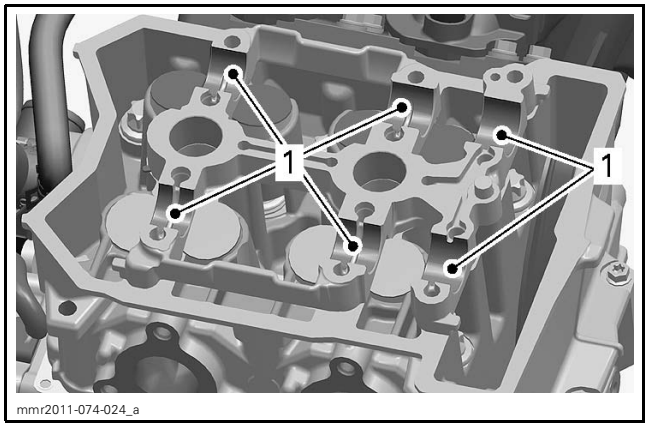


*1. Areas where to apply engine oil*

NOTE: The camshafts are not identical. Any mix-up of the components would lead to engine damage. The exhaust camshaft has a machined area on MAG side for the V-ring.

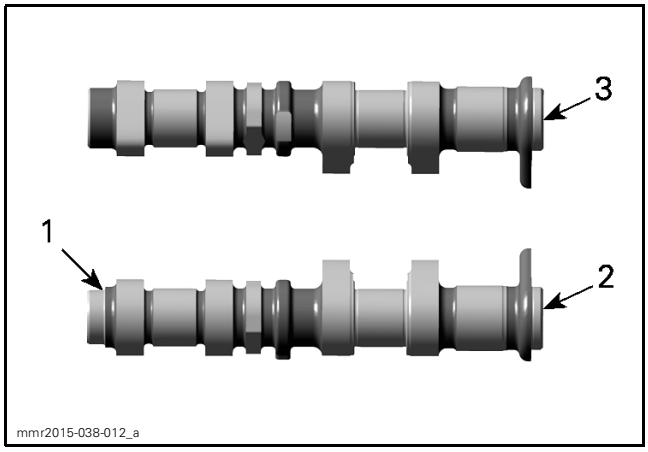


*1. Machined area*
*2. Exhaust camshaft*
*3. Intake camshaft*

3. If removed, reinstall camshaft timing gears on camshafts. Refer to *CAMSHAFT TIMING GEARS* in the *TIMING CHAIN* subsection.
4. Apply engine oil on camshaft journal diameter.
5. Install exhaust camshaft assembly with mark "EX" parallel to cylinder head gasket.

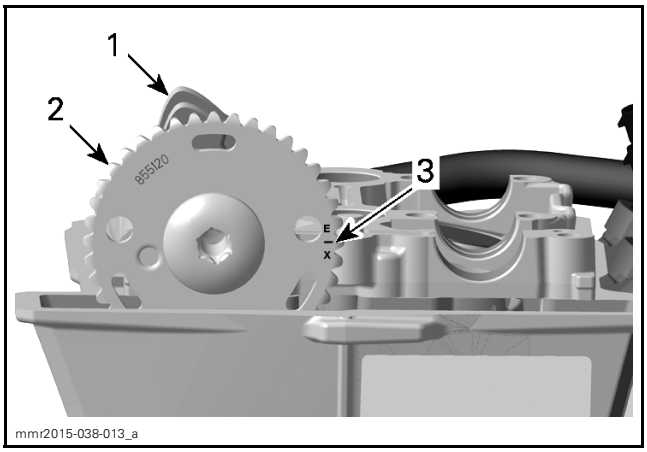


*1. Exhaust camshaft*
*2. Camshaft timing gear*
*3. Mark "EX"*

6. Install intake camshaft assembly with mark "IN" parallel to cylinder head gasket.

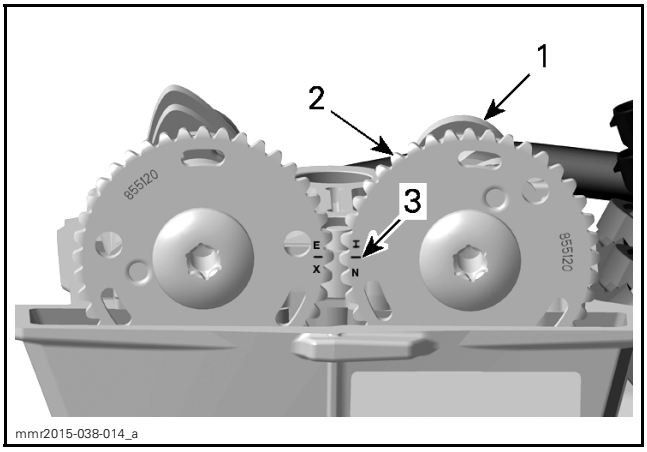


*1. Intake camshaft*
*2. Camshaft timing gear*
*3. Mark "EX"*

7. Install upper half of camshaft holder, then tighten screws as per following sequence:

| CAMSHAFT HOLDER TIGHTENING PROCEDURE | |
|---|---|
| STEP A | 5 N•m ± 0.5 N•m (44 lbf•**in** ± 4 lbf•**in**) |

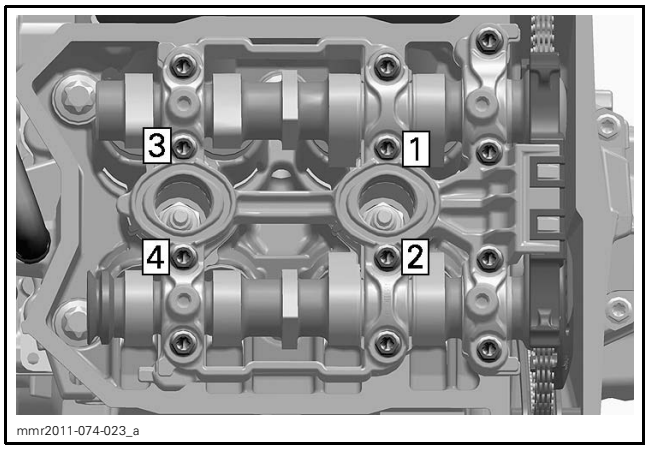


*CAMSHAFT HOLDER TIGHTENING SEQUENCE - STEP A*

| CAMSHAFT HOLDER TIGHTENING PROCEDURE | |
|---|---|
| STEP B | 9 N•m ± 1 N•m (80 lbf•**in** ± 9 lbf•**in**) |

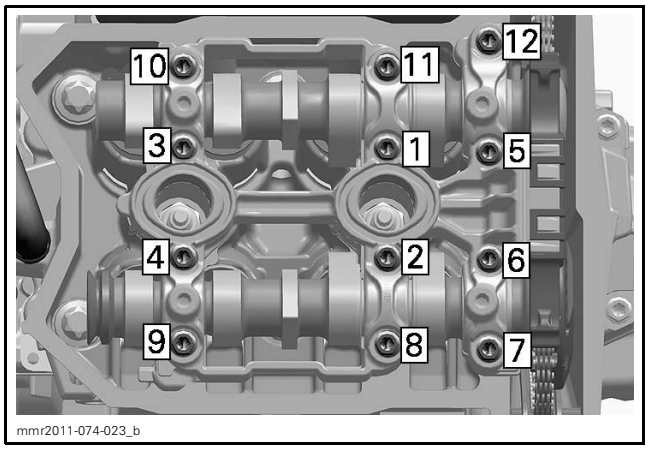


*CAMSHAFT HOLDER TIGHTENING SEQUENCE - STEP B*

**NOTE:** After reassembly of camshafts is completed, check if camshafts can be turned easily.

8. Lock camshafts.

| REQUIRED TOOL | |
|---|---|
| CAMSHAFT LOCKING TOOL (P/N 529 036 206) | |

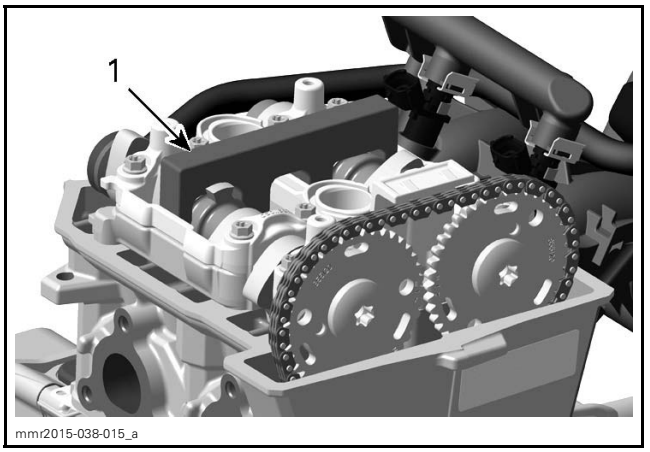


*1. Camshaft locking tool*

9. Lift timing chain out of timing chain compartment.
10. Pull timing chain up on exhaust side and install it on the exhaust camshaft timing gear.

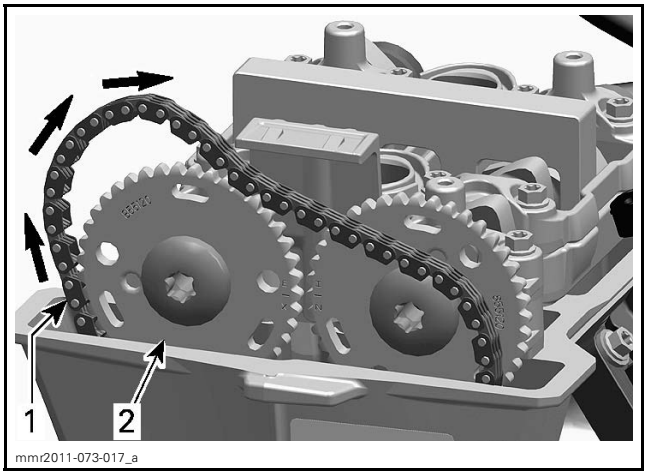


*1. Timing chain*
*2. Exhaust camshaft timing gear*

11. Pull timing chain towards intake side and install it on the intake camshaft timing gear.

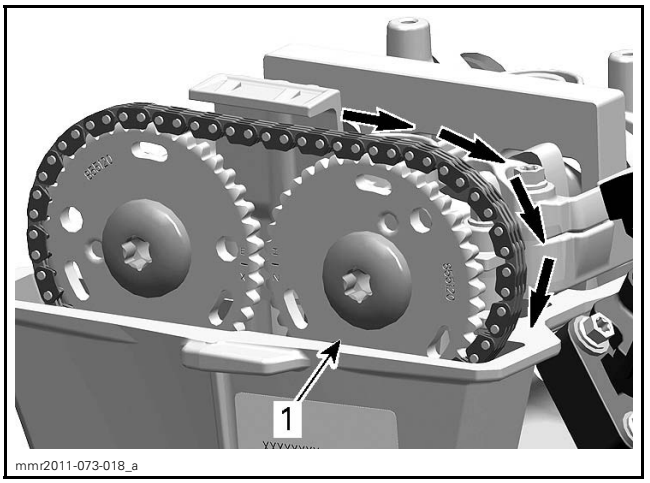


12. Install timing chain guide.

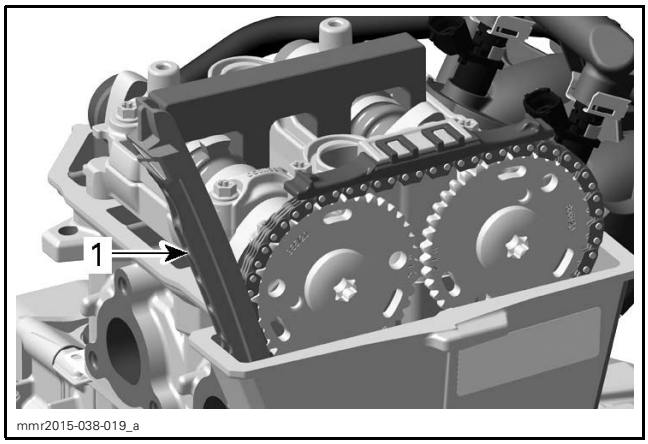


*1. Timing chain guide*

13. Install upper timing chain guide on camshaft holder.

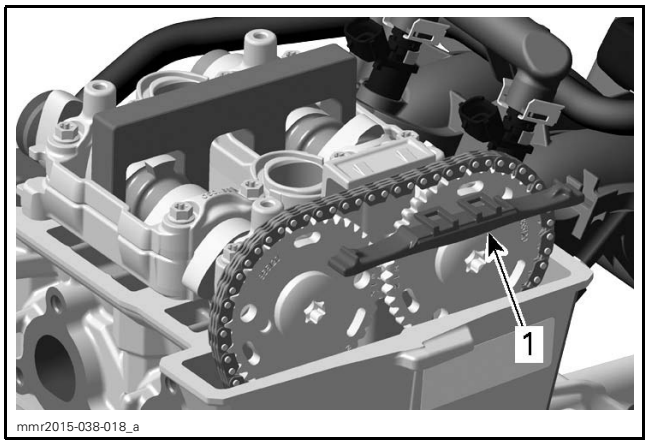


*1. Upper timing chain guide*

14. Install *TIMING CHAIN TENSIONER*, refer to *TIMING CHAIN* subsection.

15. Ensure marks on camshaft timing gears are still aligned. If not, repeat procedure.

**NOTICE** **After installation of timing chain tensioner, the marks "IN" on intake and "EX" on exhaust camshafts must be aligned.**

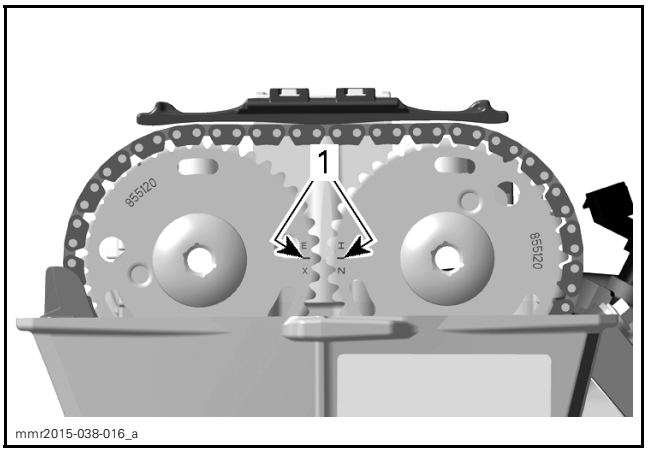


*CAMSHAFT TIMING GEARS*
*1. Marks must be aligned*

16. Install breather cover.

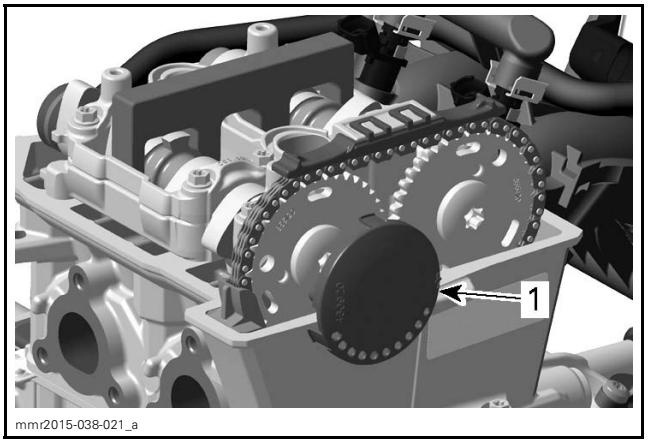


*1. Breather cover*

17. Remove camshaft locking tool.

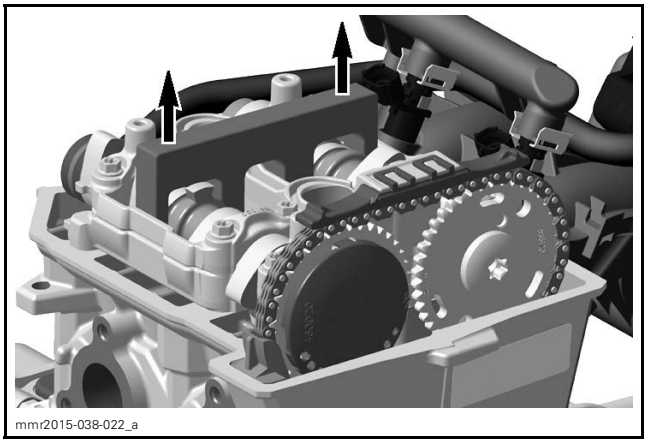


*1. Camshaft locking tool removal*

18. Remove crankshaft locking tool.

# CAMSHAFT HOLDER

## Camshaft Holder Removal

Remove camshafts, see procedure in this subsection.

Remove lower half of camshaft holder with gaskets from cylinder head.

Remove gaskets from camshaft holder halves and discard gaskets.

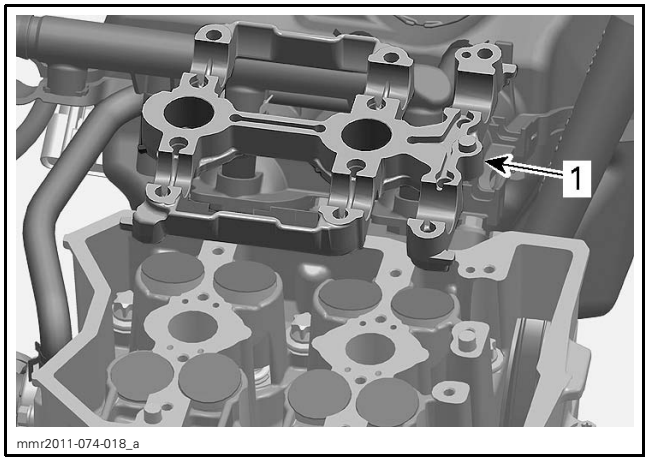


*1. Camshaft holder lower half*

## Camshaft Holder Inspection

Check camshaft holder for scoring, scuffing, cracks, or other signs of wear.

Make sure oil orifices are not clogged. Blow them out with pressurized air.

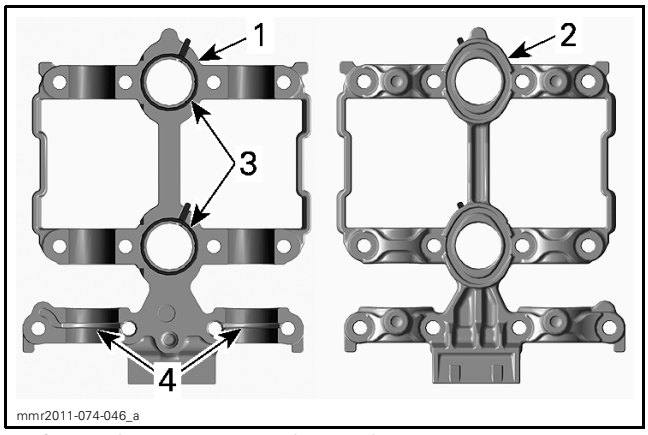


*1. Camshaft holder upper half - view from beneath*
*2. Camshaft holder upper half - view from above*
*3. Gaskets*
*4. Oil orifices*

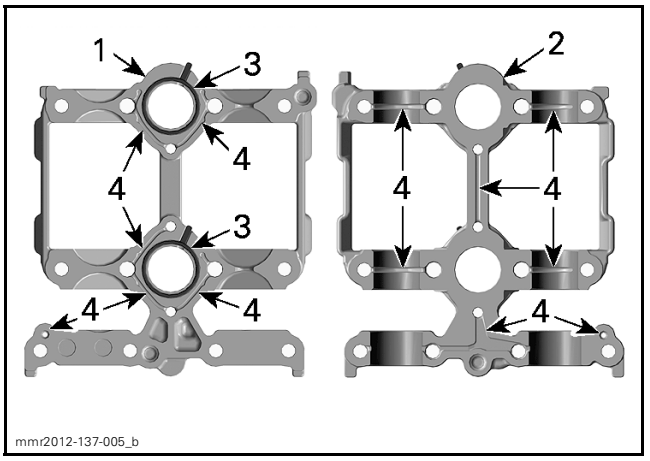


*1. Camshaft holder lower half - view from beneath*
*2. Camshaft holder lower half - view from above*
*3. Gaskets*
*4. Oil orifices*

Install camshaft holder on cylinder head.

Tighten camshaft holder screws to specification, refer to *CAMSHAFT INSTALLATION* in this subsection.

Measure camshaft holder bearing diameter.

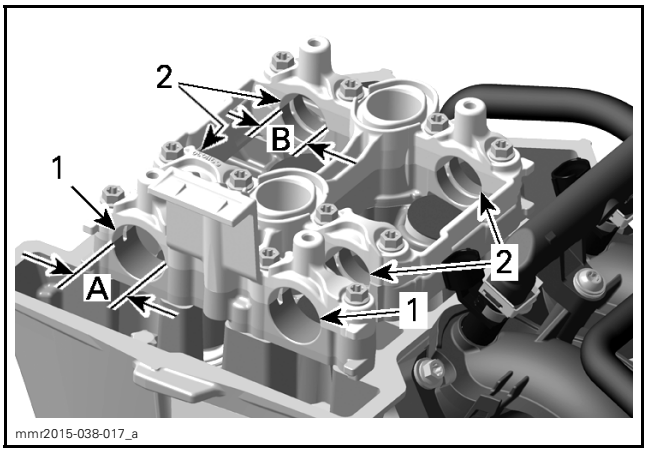


*CAMSHAFT HOLDER BEARINGS*
*1. PTO bearings*
*2. Center and MAG bearings*
*A. Diameter PTO bearing*
*B. Diameter center and MAG bearing*

| CAMSHAFT HOLDER BEARING DIAMETER | |
|---|---|
| PTO BEARING | |
| NEW | 26.000 mm to 26.021 mm (1.024 in to 1.024 in) |
| SERVICE LIMIT | 26.050 mm (1.026 in) |
| CENTER AND MAG BEARING | |
| NEW | 23.000 mm to 23.021 mm (.906 in to .906 in) |
| SERVICE LIMIT | 23.050 mm (.907 in) |

Measure the clearance between camshaft journals and camshaft holder, using the plastic feeler gauge.

NOTE: The plastic feeler gauge is available at automotive parts retailer.

Install camshaft holder lower half on cylinder head.

Place camshafts in lower half of camshaft holder and apply a plastic-gauge on the camshaft bearing journal.

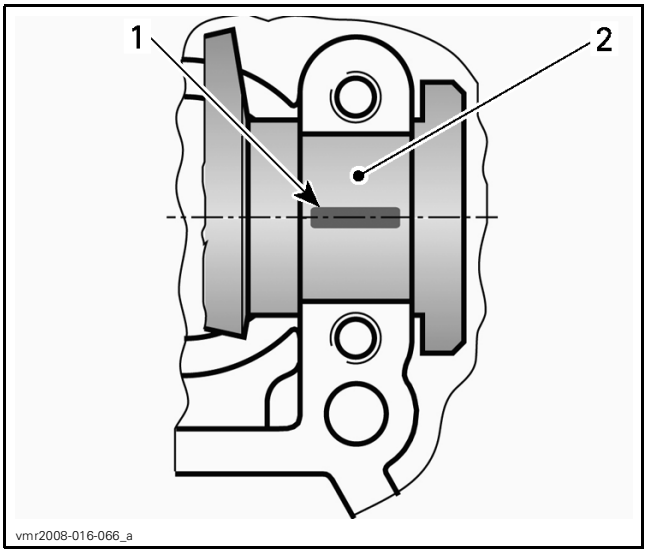


*TYPICAL*
1. *Plastic gauge*
2. *Camshaft bearing journal*

Install camshaft holder upper half in its proper position and tighten screws to specification, refer to *CAMSHAFT INSTALLATION* in this subsection.

Unfasten camshaft holder.

Measure the maximum width of the pressed plastic gauge with the corresponding graduated scale.

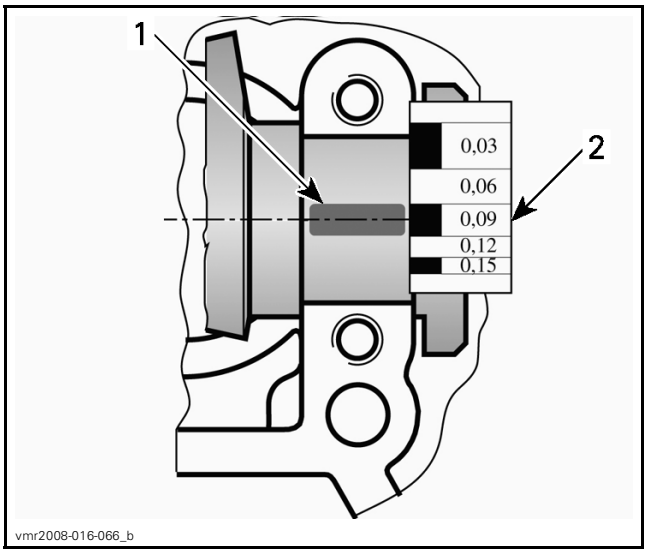


*TYPICAL*
1. *Pressed plastic gauge*
2. *Graduated scale*

| CAMSHAFT JOURNAL RADIAL CLEARANCE | |
|---|---|
| PTO, CENTER AND MAG BEARING | |
| NEW | 0.020 mm to 0.054 mm (.001 in to .002 in) |
| SERVICE LIMIT | 0.080 mm (.003 in) |

Replace parts if necessary.

### Camshaft Holder Installation

Install camshaft holder lower half.

Continue procedure as explained in *CAMSHAFT INSTALLATION* in this subsection.

## HYDRAULIC VALVE LIFTERS

### Hydraulic Valve Lifter Removal

NOTE: Hydraulic valve lifter are maintenance free.

See procedures in this subsection to remove the following:
- Valve cover
- Camshafts
- Camshaft holder.

Pull hydraulic valve lifter out of cylinder head.

NOTE: When disassembling the hydraulic valve lifter, it is strongly recommended to note their original position.

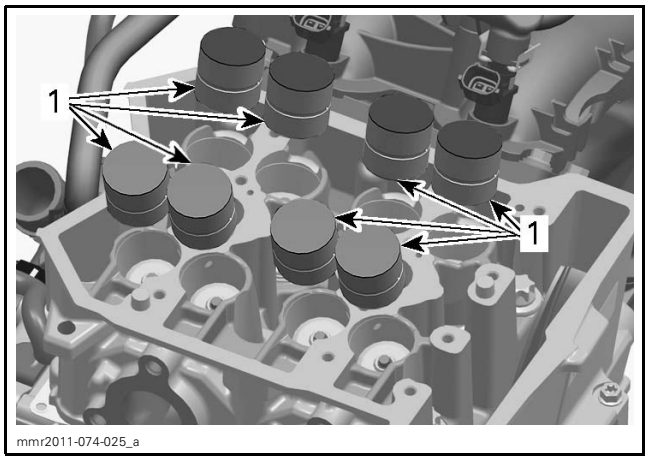


*1. Hydraulic valve lifter*

## Hydraulic Valve Lifter Inspection

1. Check surface of hydraulic valve lifter for scoring or other damage.
2. Measure valve lifter diameter. Replace if out of specification.

| HYDRAULIC VALVE LIFTER | |
|---|---|
| NEW | 28.354 mm to 28.370 mm (1.1163 in to 1.1169 in) |
| SERVICE LIMIT | 28.340 mm (1.1157 in) |
| HYDRAULIC VALVE LIFTER RADIAL CLEARANCE | |
| SERVICE LIMIT | 0.100 mm (.0039 in) |

## Hydraulic Valve Lifter Installation

Reverse the removal procedure. However pay attention to the following details.

Apply engine oil on the outside diameter of the hydraulic valve lifter.

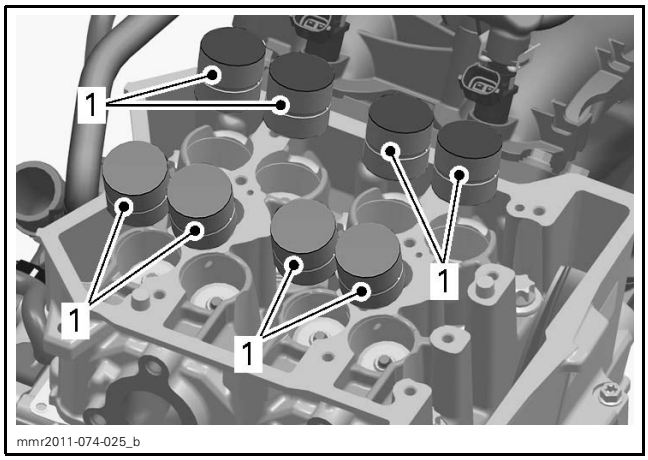


*1. Apply engine oil on outer diameter*

# CYLINDER HEAD

## Cylinder Head Access

Remove engine from vehicle. Refer to *ENGINE REMOVE AND INSTALLATION* subsection.

## Cylinder Head Removal

1. See procedures in this subsection to remove:
   - Valve cover
   - Camshafts
   - Camshaft holder
   - Hydraulic valve lifters.
2. Remove M6 cylinder head screws.

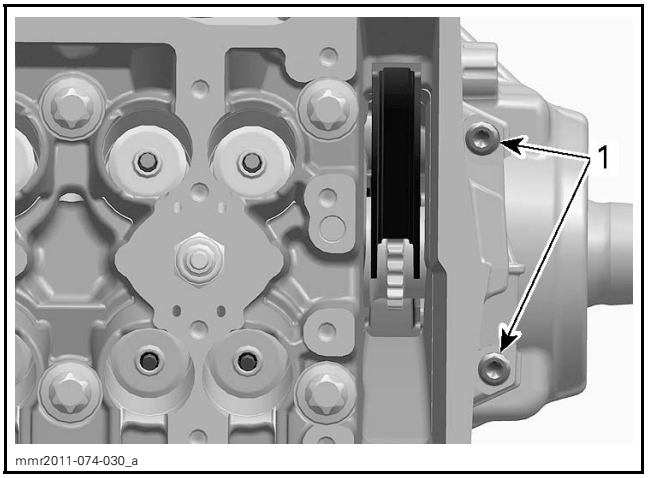


*1. Remove M6 cylinder head screws*

3. Remove and discard M9 cylinder head screws.

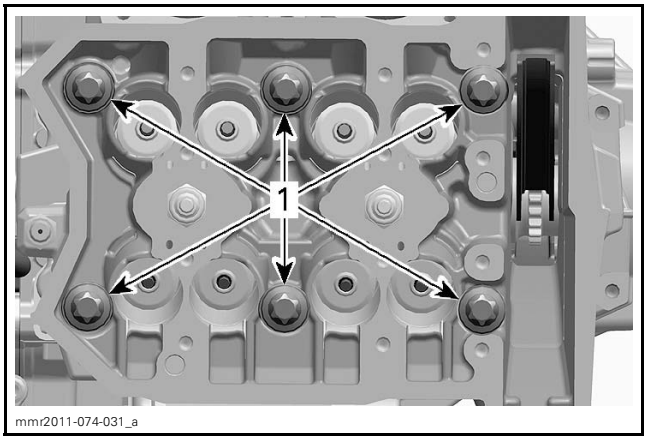


*1. Remove M9 cylinder head screws*

4. Pull cylinder head off the cylinder block.
5. Remove and discard cylinder head gasket.

## Cylinder Head Cleaning

1. Remove carbon deposits from combustion chambers, exhaust ports and piston tops.

2. Clean cylinder head, especially cylinder head screw surface from oil spillage.
3. Blow out the oil orifices with pressurized air and make sure they are not clogged.

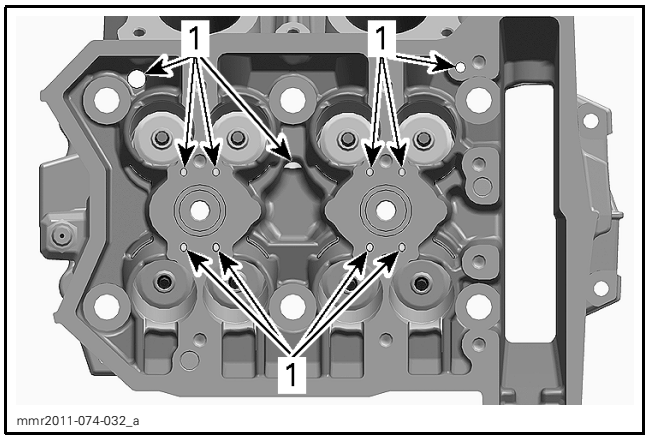


*1. Oil orifices*

## Cylinder Head Inspection

Check for cracks between valve seats or other damage, if so, replace cylinder head.

Check cylinder head mating surface for flatness using a straight edge.

Check hydraulic valve lifter bores for scoring or other damage, if so, replace cylinder head.

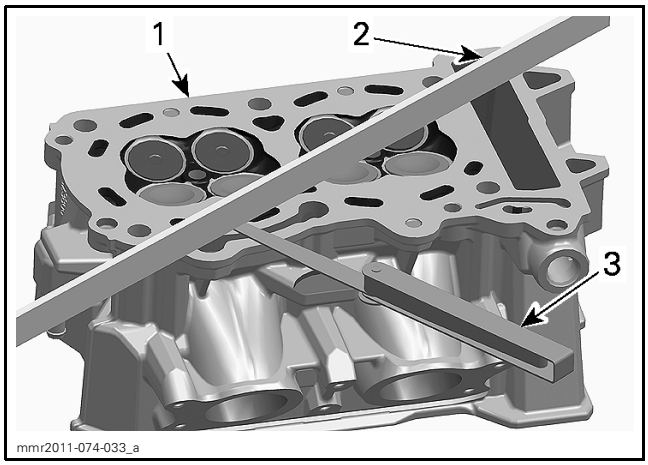


*1. Cylinder head*
*2. Straight edge*
*3. Feeler gauge*

Check for cylinder head warping.

| CYLINDER HEAD WARPAGE | |
|---|---|
| Maximum | 0.15 mm (.0059 in) |

If warping exceeds specification, resurface the cylinder head as follows.

Use a 400 - 600 grit wet sandpaper on a surface plate and gently grind off the mating surface.

NOTE: To ensure an even surface, rotate cylinder head several times during resurfacing.

Replace cylinder head, if resurfacing fails.

## Cylinder Head Installation

Reverse the removal procedure. However, pay attention to the following details.

1. Install a NEW cylinder head gasket.

**NOTICE** Each installation of the cylinder head requires a NEW cylinder head gasket. Using a gasket twice would cause engine damage.

2. Install cylinder head on the cylinder block.
3. Install NEW M9 cylinder head screws.

**NOTICE** This assembly uses stretch screws. Always use NEW screws and strictly adhere to the tightening procedure.

4. Tighten cylinder head screws as follows:

NOTE: Always perform step 1 on all M9 cylinder head screws before going to the next step.

| CYLINDER HEAD M9 SCREWS TIGHTENING PROCEDURE | |
|---|---|
| STEP A | 20 N•m ± 2 N•m (15 lbf•ft ± 1 lbf•ft) |
| STEP B | Additional 150° ± 5° |

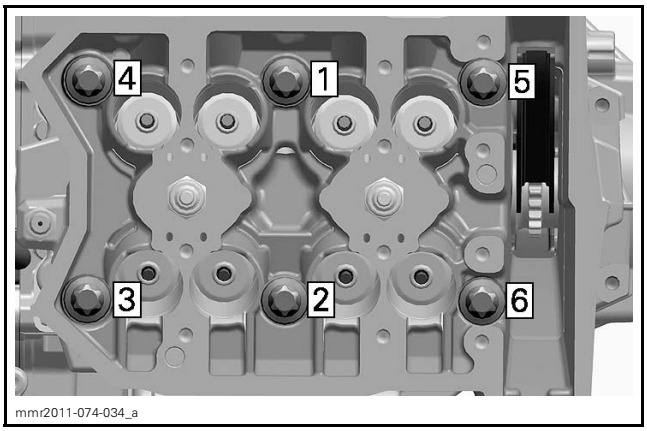


*M9 SCREWS TIGHTENING SEQUENCE*

NOTE: Use a torque angle gauge to carry out step B.

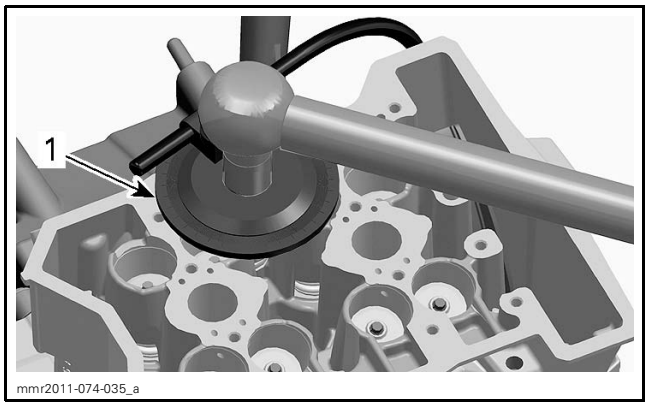


*1. Torque angle gauge*

5. Install M6 screws. Tighten as follows.

| M6 CYLINDER HEAD SCREWS | |
|---|---|
| Tightening torque | 9 N•m ± 1 N•m (80 lbf•**in** ± 9 lbf•**in**) |

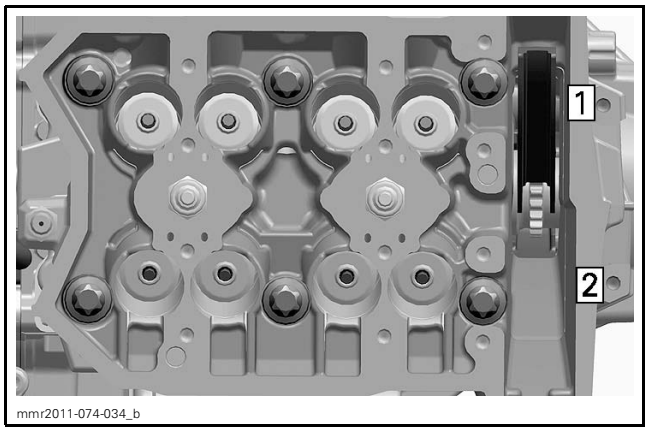


*M6 SCREWS TIGHTENING SEQUENCE*

# VALVE SPRINGS

## Valve Spring Removal

1. Remove *CYLINDER HEAD*, see procedure in this subsection.
2. Compress valve spring.

| REQUIRED TOOLS | |
|---|---|
| VALVE SPRING COMPRESSOR (P/N 529 035 724) | |
| VALVE SPRING COMPRESSOR CUP (P/N 529 036 209) | |

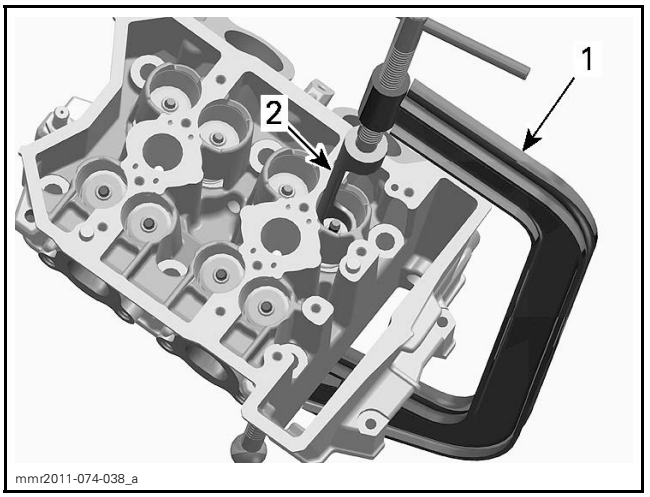


*1. Valve spring compressor clamp*
*2. Valve spring compressor cup*

3. Remove valve cotters.
4. Withdraw valve spring compressor tools.
5. Remove valve spring retainer and valve spring.

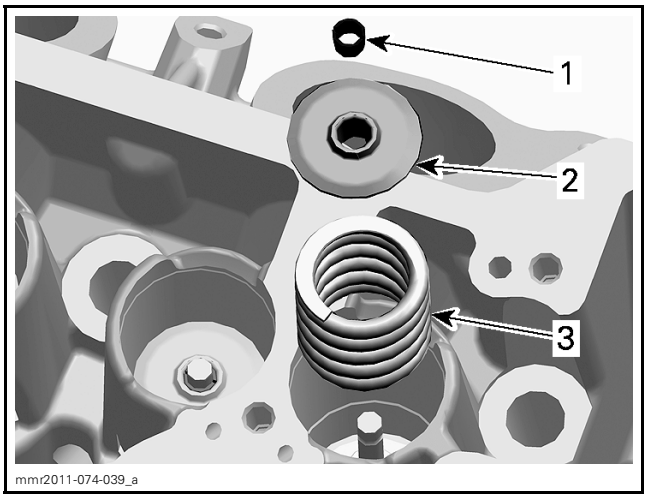


*1. Valve cotters*
*2. Valve spring retainer*
*3. Valve spring*

NOTE: Identify the position of each part very carefully, so it can be reinstalled in its original place.

## Valve Spring Inspection

1. Check valve spring for rust, corrosion or other visible damage.
2. Check valve spring free length and straightness.

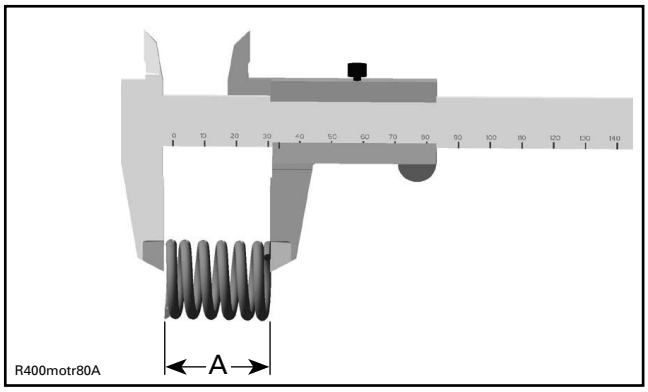


*A. Spring free length*

| VALVE SPRING FREE LENGTH | |
|---|---|
| NEW | 31.35 mm (1.2343 in) |
| SERVICE LIMIT | 29.50 mm (1.1614 in) |

Replace valve spring, if out of specification.

## Valve Spring Installation

Reverse the removal procedure. Pay attention to the following details.

NOTE: Ensure to reinstall all parts in their original position as marked during removal.

Apply some grease on valve cotters, so that they remain in place while releasing the valve spring.

Make sure valve cotters are properly engaged into valve stem groove.

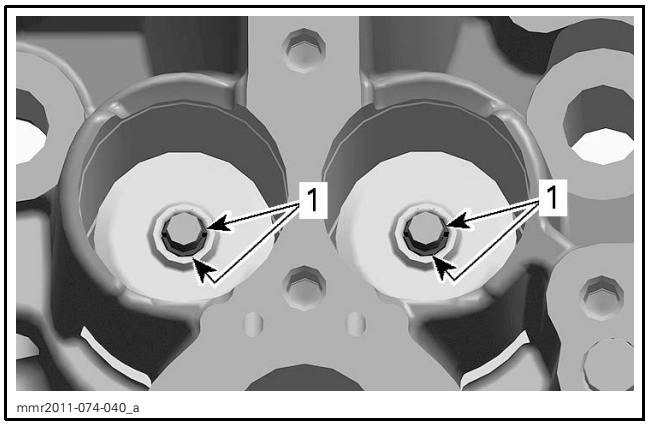


*1. Valve cotters*

After spring is installed, ensure it is properly locked by lightly tapping on valve stem end with a soft hammer so that valve opens and closes a few times.

**NOTICE** **Improperly locked valve spring will cause severe engine damage and hitting the valve stem end with excessive force could damage the valve.**

# VALVES

## Valve Removal

1. Remove *VALVE SPRING*, see procedure in this subsection.
2. Push on the valve stem, then pull valves out of cylinder head.

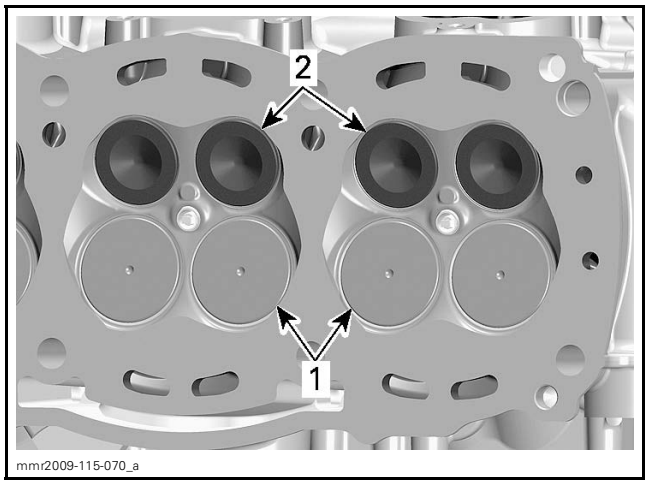


*1. Intake valves 29 mm*
*2. Exhaust valves 25 mm*

3. Remove and discard valve stem seal using special pliers.

| REQUIRED TOOL | |
|---|---|
| SNAP-ON VALVE STEM SEAL PLIERS (P/N YA 8230) | |

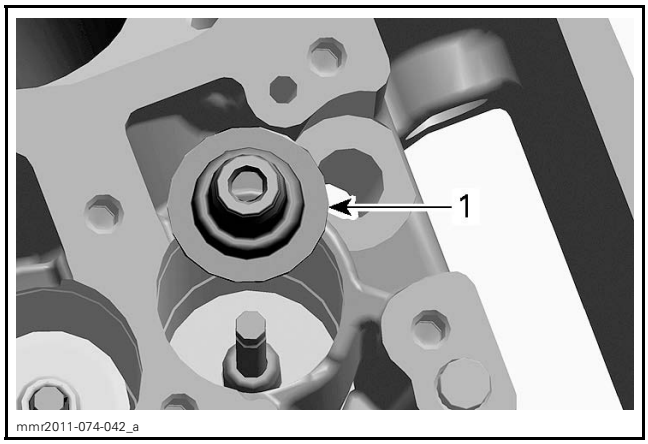


*1. Valve stem seal*

NOTE: Identify the position of each part very carefully, so it can be reinstalled in its original place.

## Valve Inspection

Inspect valve surface, check for abnormal stem wear and bending.

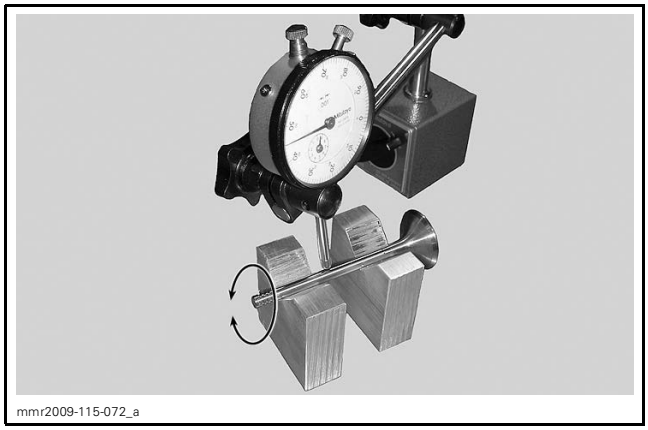
mmr2009-115-072_a

| VALVE OUT OF ROUND<br>INTAKE AND EXHAUST VALVE | |
|---|---|
| NEW | 0.005 mm (.0002 in) |
| SERVICE LIMIT | 0.060 mm (.0024 in) |

Replace valve if out of specification.

### Valve Stem and Valve Guide Clearance

1. Measure valve stem at three places, using a micrometer.

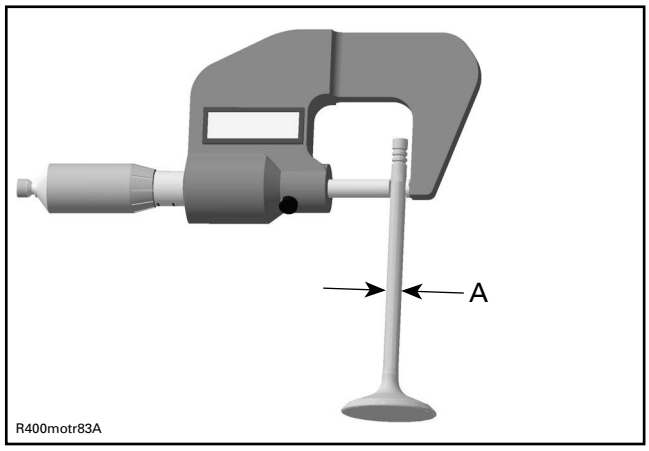


*A. Valves stem diameter*

| VALVE STEM DIAMETER | |
|---|---|
| INTAKE VALVE | |
| NEW | 4.958 mm to 4.972 mm (.1952 in to .1957 in) |
| SERVICE LIMIT | 4.940 mm (.1945 in) |
| EXHAUST VALVE | |
| NEW | 4.956 mm to 4.970 mm (.1951 in to .1957 in) |
| SERVICE LIMIT | 4.940 mm (.1945 in) |

Replace valve if stem is out of specification or if its surface is damaged or worn.

2. Measure valve guide inner diameter, using a small bore gauge.

NOTE: Clean valve guide from carbon deposits before measuring.

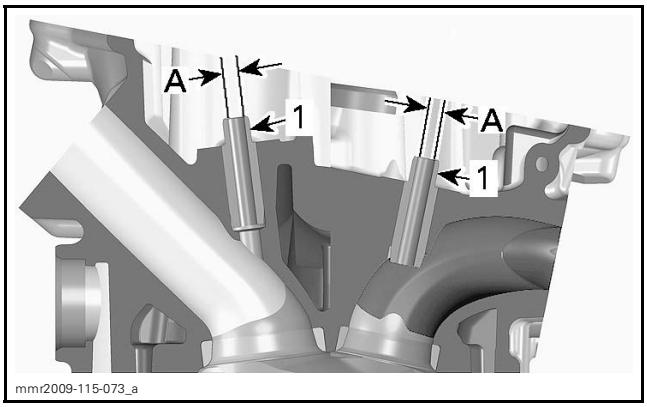


*1. Valve guides*
*A. Valve guide inner diameter*

| VALVE GUIDE INNER DIAMETER | |
|---|---|
| NEW | 5.000 mm to 5.020 mm (.1969 in to .1976 in) |
| SERVICE LIMIT | 5.050 mm (.1988 in) |

Replace cylinder head, if valve guide is out of specification.

### Valve Face and Seat

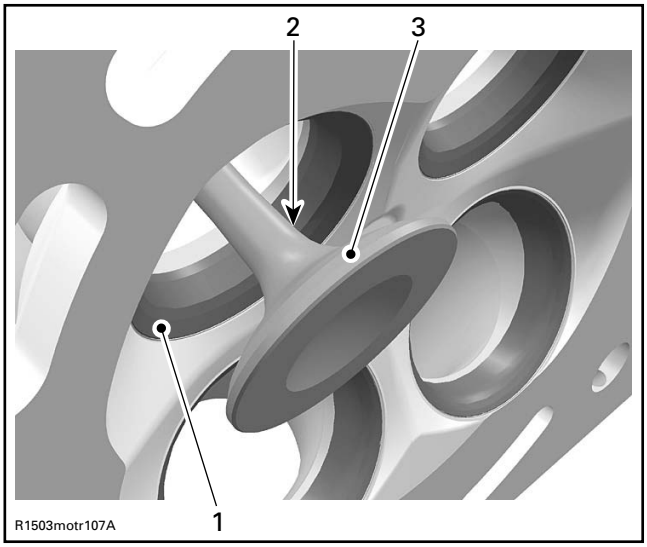


*TYPICAL*
*1. Valve seat*
*2. Exhaust valve contaminated area*
*3. Valve face (contact surface to valve seat)*

1. Check valve face and seat for burning, pitting and other signs of damage.

2. Check if valve seats properly in cylinder head. Proceed as follows.
   2.1 Apply some lapping compound on valve face and work valve on its seat with a lapping tool.

| REQUIRED TOOL |
|---|
| SNAP-ON VALVE HOLDER (P/N VL2) |

   NOTE: The location of contact area should be in center of valve face.
   2.2 Repeat procedure until valve seat and valve face fit together.
3. Measure valve seat contact width, using a caliper.

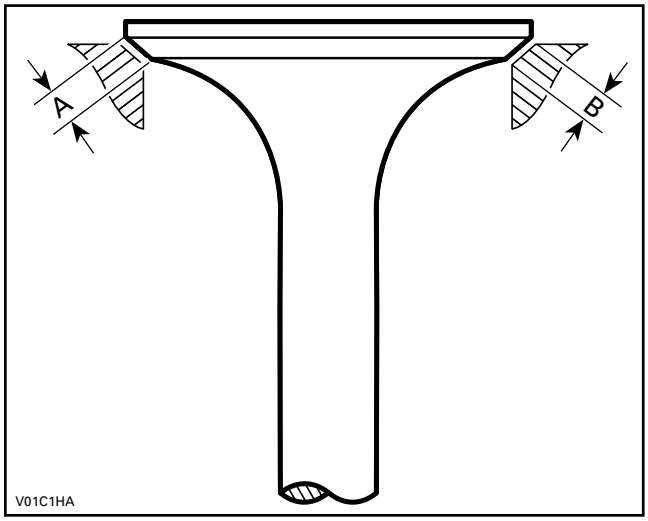


*A. Valve face contact width*
*B. Valve seat contact width*

| VALVE SEAT CONTACT WIDTH | |
|---|---|
| INTAKE VALVE | |
| NEW | 1.05 mm to 1.35 mm (.041 in to .053 in) |
| SERVICE LIMIT | 1.70 mm (.067 in) |
| EXHAUST VALVE | |
| NEW | 1.25 mm to 1.45 mm (.049 in to .057 in) |
| SERVICE LIMIT | 1.80 mm (.071 in) |

Replace parts if out of specification.

## Valve Installation

For installation reverse the removal procedure. Pay attention to the following details.

NOTE: Ensure to reinstall all parts in their original position as marked during removal.

Install a NEW valve stem seal whenever valve is removed.

Apply engine oil on valve stem and carefully slide through cylinder head and valve stem seal.

**NOTICE** **Be careful when passing the valve stem through the sealing lip of the seal.**

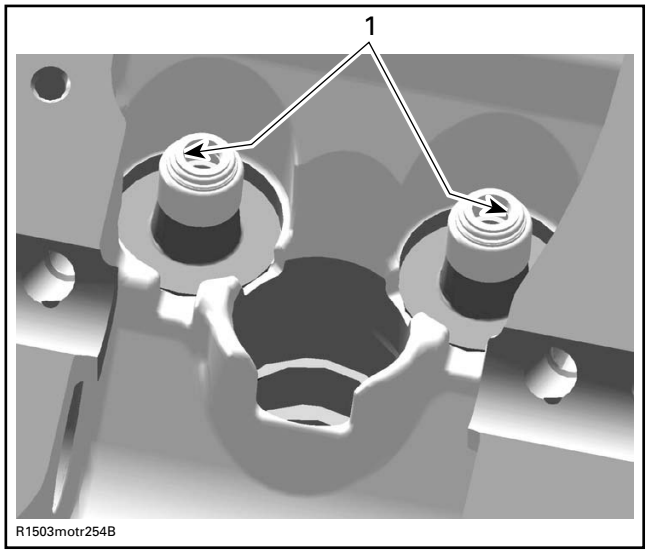


*TYPICAL*
*1. Sealing lips of valve stem seal*

Install *VALVE SPRING*. See procedure in this subsection.

Install all other removed parts.

# CYLINDER HEAD

## SERVICE TOOLS

| Description | Part Number | Page |
|---|---|---|
| CAMSHAFT LOCKING TOOL | 529 036 206 | 12 |
| ENGINE LEAK DOWN TEST KIT | 529 035 661 | 5 |
| VALVE SPRING COMPRESSOR CUP | 529 036 209 | 19 |
| VALVE SPRING COMPRESSOR | 529 035 724 | 19 |

# VALVE COVER

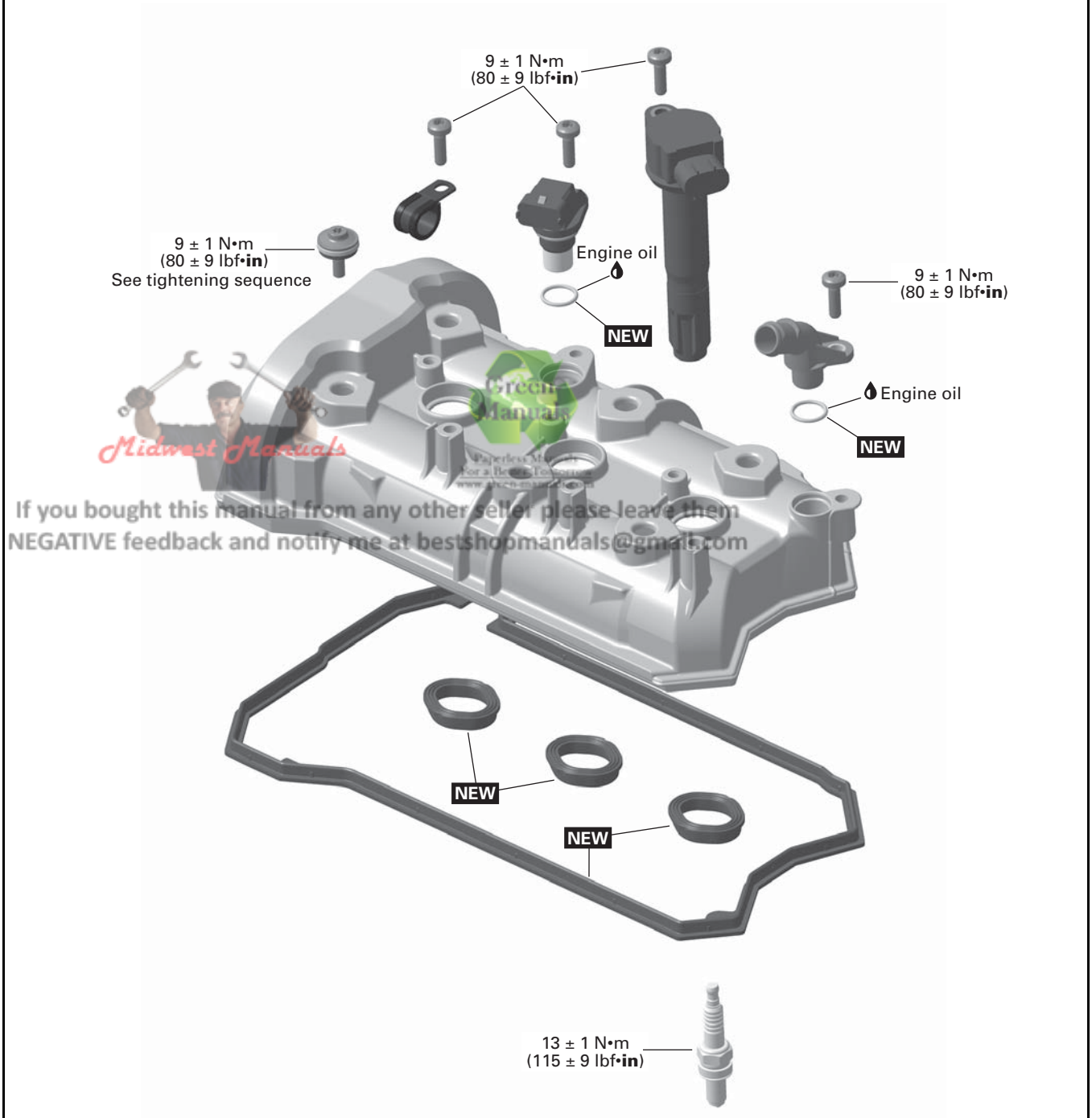


Midwest Manuals
If you bought this manual from any other seller please leave them NEGATIVE feedback and notify me at bestshopmanuals@gmail.com

**NEW** = Component must be replaced when removed.

mmr2014-018-001_a

# CAMSHAFTS

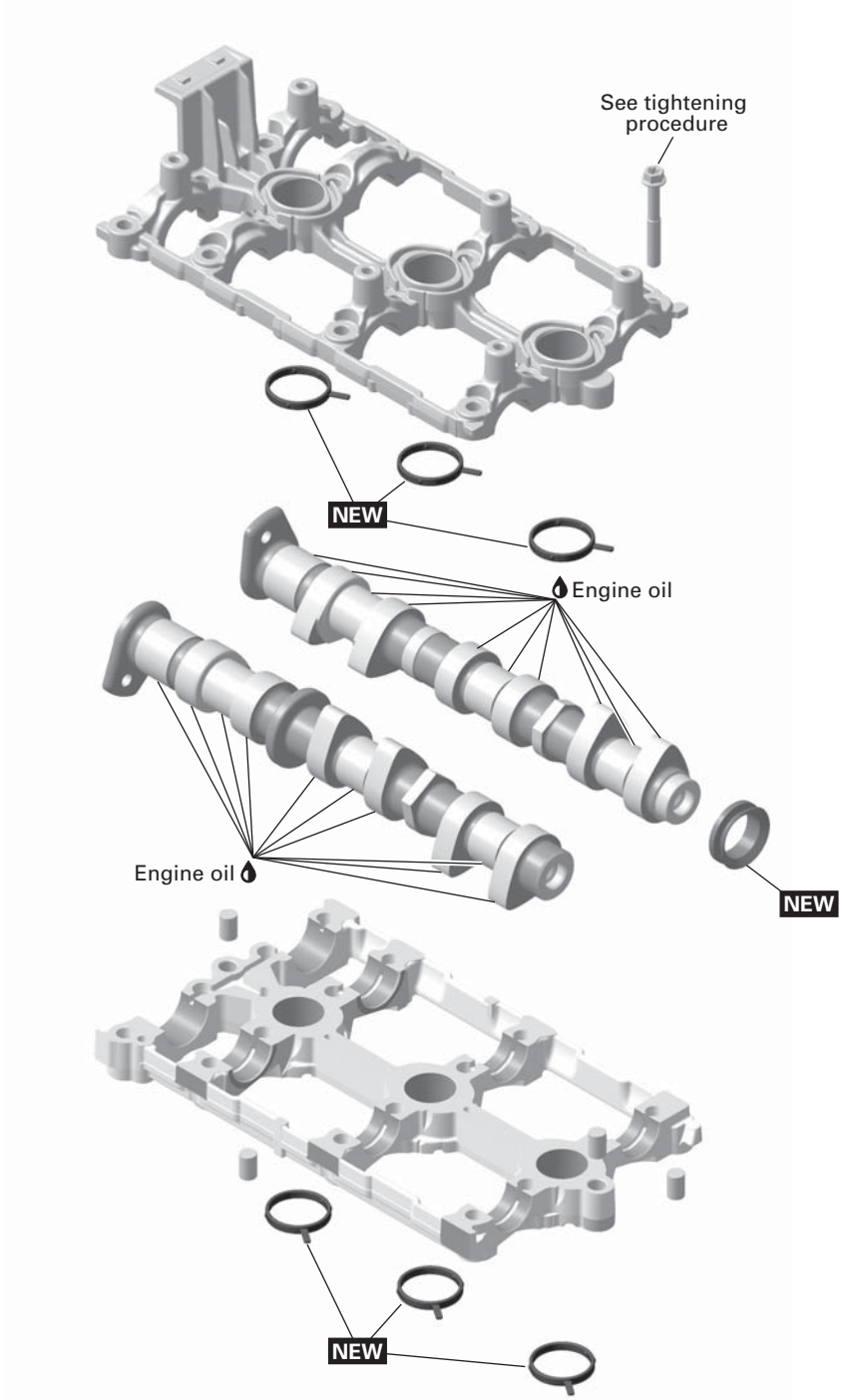


**NEW** = Component must be replaced when removed.

smr2014-020-002_a

# CYLINDER HEAD

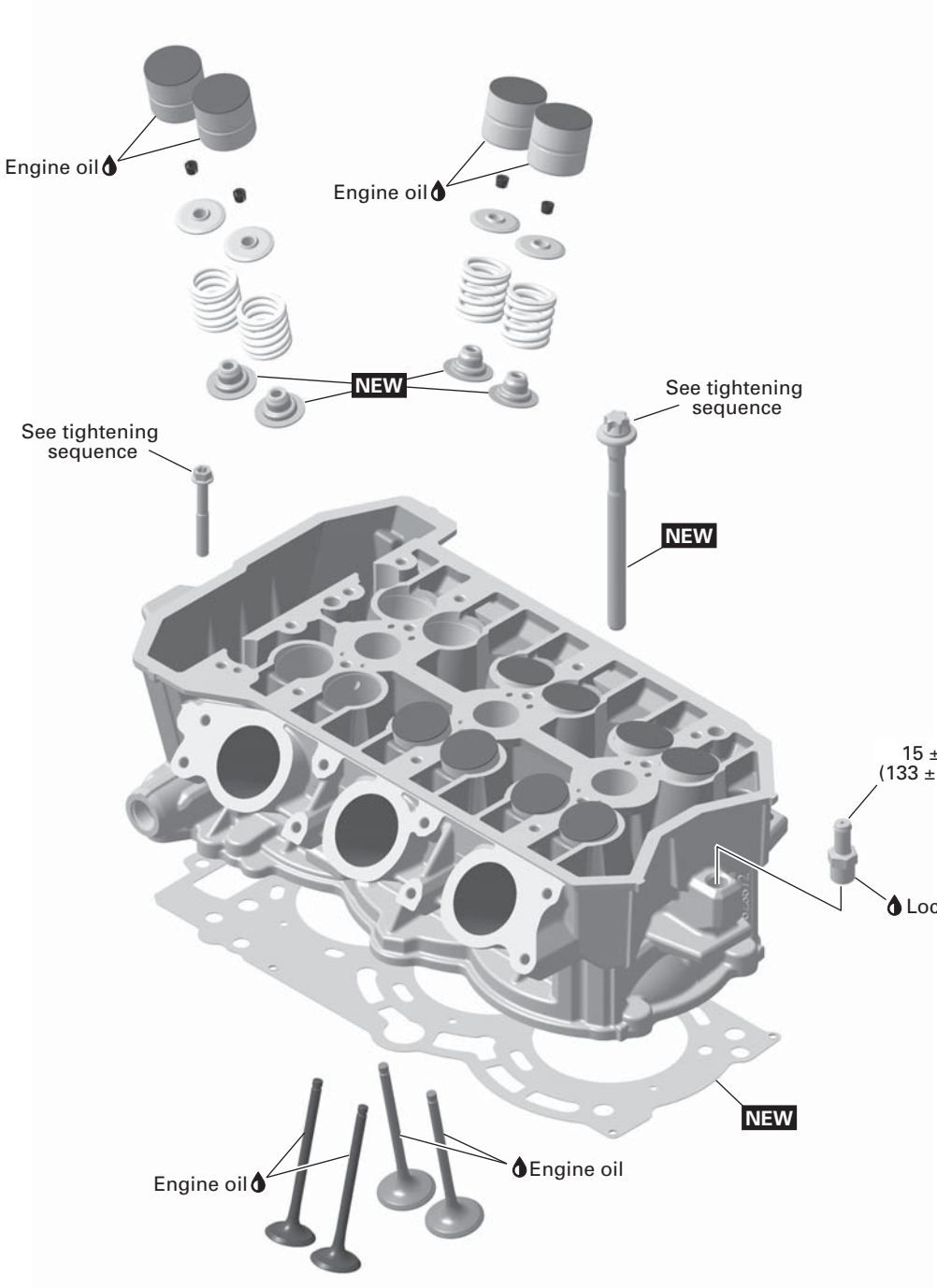


**NEW** = Component must be replaced when removed.

smr2014-020-003_a

# GENERAL

NOTE: For a better understanding, some illustrations are taken with engine out of the vehicle.

Disconnect the battery before working on the engine.

**NOTICE** Always disconnect BLACK (-) cable first and reconnect last.

When disassembling parts that are duplicated in the engine, (e.g.: valves, springs, etc.), it is strongly recommended to note their position and to keep the parts of the same assembly as a "group". If you find a defective component, it will be much easier to find the cause of the failure. Since parts were break-in together during the engine operation, they will keep their matched fit when parts are reassemble together within their "group".

# INSPECTION

## CYLINDER LEAK TEST

### General

Before performing the cylinder leak test, verify the following:

– Clamp tightness
– Hoses condition.

NOTE: For best accuracy, the leak test should be done with the engine at normal operating temperature.

**⚠ CAUTION** Engine parts could be hot.

NOTE: The following steps are the same for each cylinder.

### Preparation

1. Remove the *VALVE COVER*, see procedure in this subsection.
2. Remove spark plug.
3. Using the drive pulley, turn the engine counterclockwise to bring piston to TDC of compression stoke. Use a dial gauge or a suitable tool to position the piston to TDC.

NOTE: The piston must be set precisely to TDC of compression stroke. If not, the engine will continue to rotate when pressure builds up.

| RECOMMENDED TOOLS | |
|---|---|
| Dial gauge | |
| Dial gauge extension/adapter | |

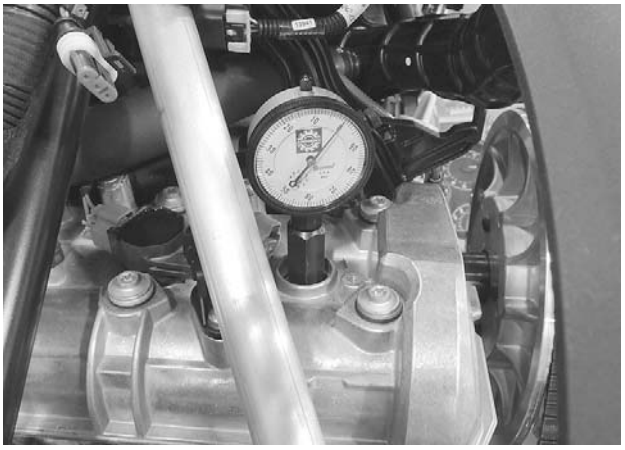

mmr2015-019-102

### Leak Test

1. Install a gauge adaptor into spark plug hole.

| REQUIRED TOOL | |
|---|---|
| ENGINE LEAK DOWN TEST KIT (P/N 529 035 661) | |

2. Connect the leak down tester to an adequate air supply.
3. Set gauge needle to zero.

NOTE: All testers have specific instructions on gauge operation and required pressure. Refer to manufacturer's instructions.

4. Supply combustion chamber with air pressure.

mmr2015-019-103

5. Note the amount or percentage of leakage (depending on tester).

| LEAKAGE PERCENTAGE | ENGINE CONDITION |
|---|---|
| 0% to 15% | Excellent condition |
| 16% to 25% | Good condition |
| 26% to 40% | Fair condition; reduced engine performance |
| 41% and higher | Poor condition, diagnose and repair engine |

## Diagnosis

Listen for air leaks.

– Air escaping on intake port or throttle body means leaking intake valve(s).
– Air escaping on exhaust port means leaking exhaust valve(s).
– Air bubbles out of coolant tank means leaking cylinder head gasket.
– Air or coolant escaping from cylinder head means damaged gasket or loosened screws.
– Air escaping into crankcase area means excessively worn cylinder or broken piston rings.
– Air or oil escaping from crankcase means damaged gasket or loosened screws.

## Repair Tips

Blue exhaust gas means damaged or worn piston rings or valve stem seals.

White exhaust gas means damaged cylinder head gasket.

Coolant tank cap opening without overheat means damaged cylinder head gasket.

Leaking valves can be caused by carbon deposits or burnt valve face.

## Assembly

Reverse the preparation procedure.

# TROUBLESHOOTING

Always check for fault codes. If a fault code is detected, service the fault code first. Refer to *DIAGNOSTIC AND FAULT CODES* subsection.

When diagnosing an engine problem, always perform the cylinder leak test. This will help pinpoint a problem. Refer to *CYLINDER LEAK TEST* in this subsection.

### UNUSUAL ENGINE NOISE OR VIBRATIONS

1. Discharged or defective valve lifters.
   - *Check engine oil pressure, refer to LUBRICATION SYSTEM subsection.*
   - *Replace valve lifters.*
2. Camshaft(s) or camshaft holder(s) worn out.
   - *Check and replace damaged parts.*
3. Faulty chain tensioner.
   - *Replace chain tensioner. Refer to TIMING CHAIN subsection.*
4. Chain guide(s) worn out.
   - *Replace chain guide(s). Refer to TIMING CHAIN subsection.*
5. Stretched timing chain or worn out sprockets.
   - *Replace timing chain and sprockets. Refer to TIMING CHAIN subsection.*
6. Loose timing chain gear screws.
   - *Retighten screws with recommended torque.*
7. Incorrect camshaft timing.
   - *Replace damaged components and readjust camshaft timing.*

### OIL LEAKAGE FROM CYLINDER HEAD

1. Leaking valve cover gasket.
   - *Replace valve cover gaskets and retighten valve cover with recommended torque.*
   - *Check valve cover for cracks or other damage.*
2. Leaking spark plug tube O-rings.
   - *Replace spark plug tube O-rings.*
   - *Clean spark plug area from oil spillage.*
3. Blow-by connector is leaking.
   - *Replace blow by connector O-ring.*

4. Leaking cylinder head gasket.
   - *Check cylinder head for damage.*
   - *Replace cylinder head gasket and retighten screws with recommended torquing procedure.*

### ENGINE SUDDENLY TURNS OFF OR LACKS ACCELERATION OR POWER

1. Incorrect camshaft timing.
   - *Replace damaged components and readjust camshaft timing.*
2. Leaking intake or exhaust valves.
   - *Perform a CYLINDER LEAK TEST. Repair or replace damaged components.*
3. Broken valve spring(s).
   - *Replace defective parts.*

# PROCEDURES

## VALVE COVER

### Removing the Valve Cover

1. Remove the upper body module. Refer to *BODY* subsection.
2. Remove pulley guard.
3. Remove the exhaust manifold.
4. Disconnect vent tube from the blow-by connector.

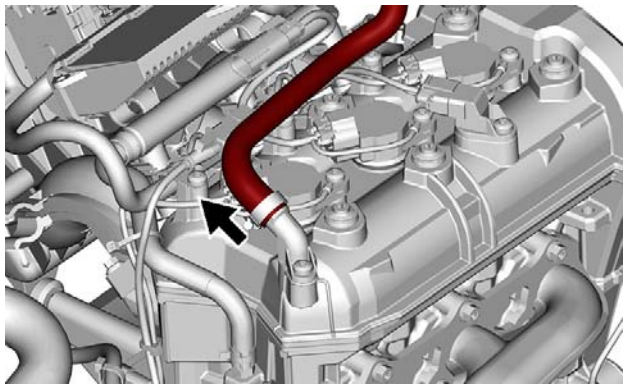

RTX19_900ACE-007-004_a

5. Unplug CAPS (camshaft position sensor).
6. Unplug ignition coils.

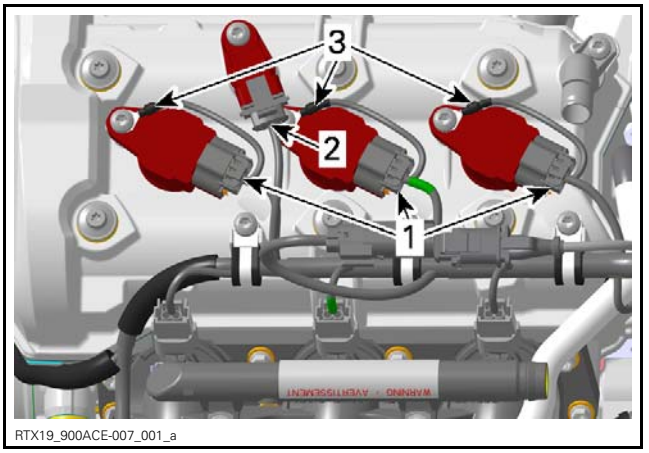


RTX19_900ACE-007_001_a

1. *Ignition coil connectors*
2. *CAPS connector*
3. *Ground wires*

7. Remove ignition coils with gaskets.

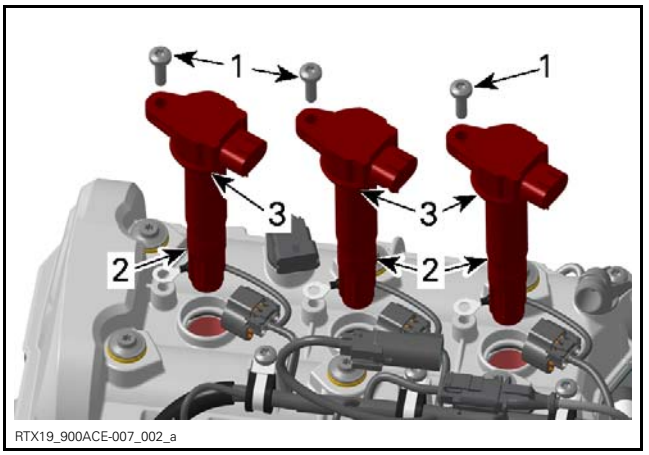


RTX19_900ACE-007_002_a

1. *Retaining screws*
2. *Ignition coils*
3. *Gaskets*

8. Remove screws securing the electrical harness to the valve cover.

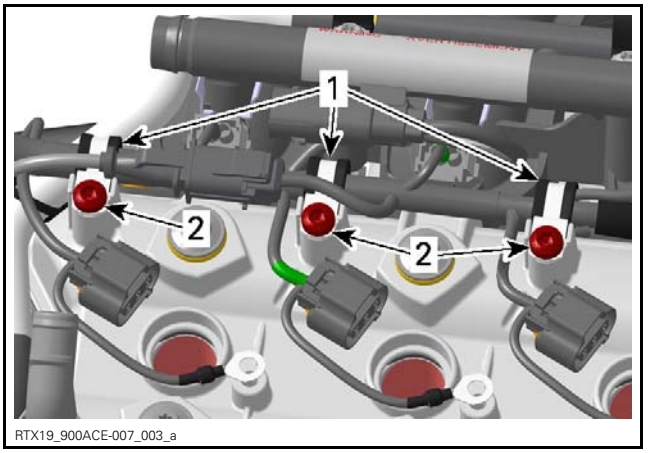


RTX19_900ACE-007_003_a

1. *Cable clamps*
2. *Retaining screws*

9. Remove valve cover retaining screws.

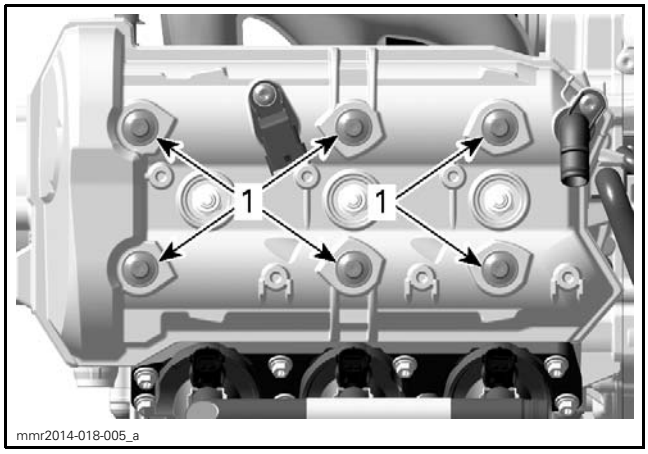

mmr2014-018-005_a

*1. Valve cover screws*

10. Lift and tilt valve cover with gasket towards front of engine.

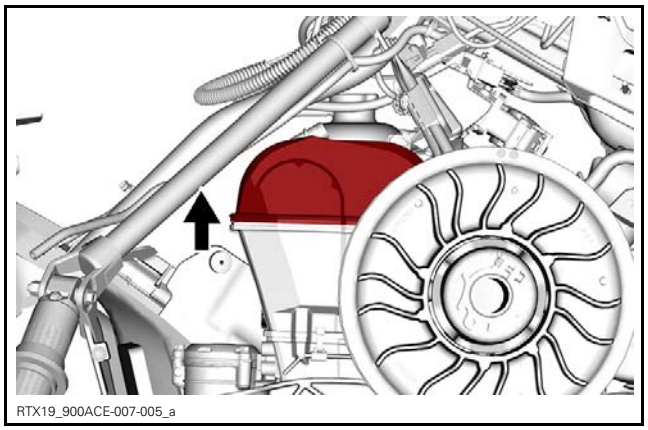
RTX19_900ACE-007-005_a

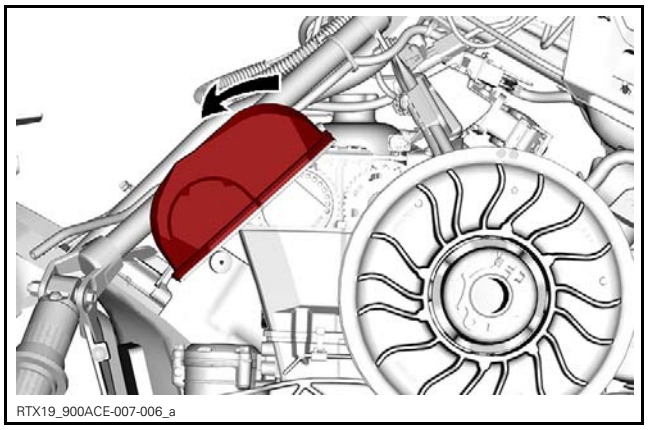
RTX19_900ACE-007-006_a

11. Pull valve cover and gasket out through LH side of vehicle.

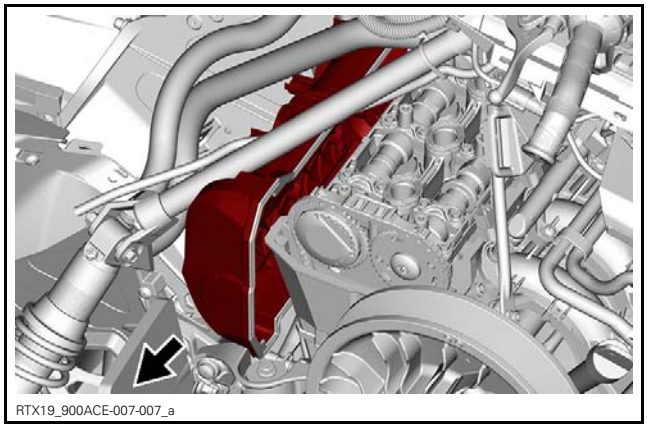
RTX19_900ACE-007-007_a

12. Remove the small valve cover gaskets (spark plug holes).

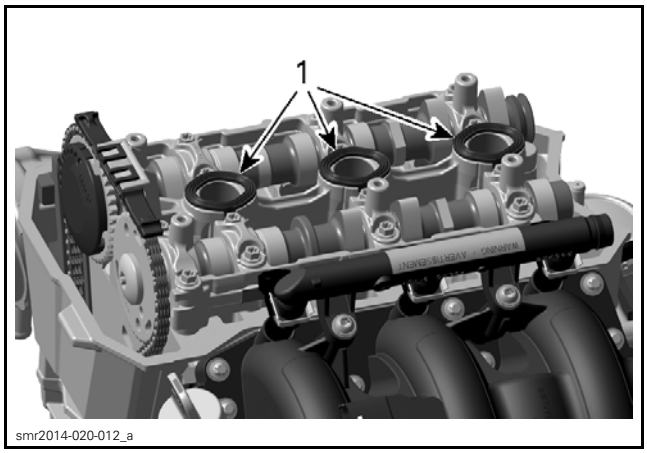

smr2014-020-012_a

*1. Small gaskets*

## Inspecting the Valve Cover

Check the valve cover for cracks or other damage.

Check if the valve cover gaskets are brittle, hard or otherwise damaged.

Replace defective parts.

## Installing the Valve Cover

The installation is the reverse of the removal procedure. However, pay attention to the following details.

1. Properly fit small gaskets into camshaft holder grooves.
2. Properly lay large gasket onto cylinder head flat surface.
3. Apply engine oil to sealing surface of V-ring.

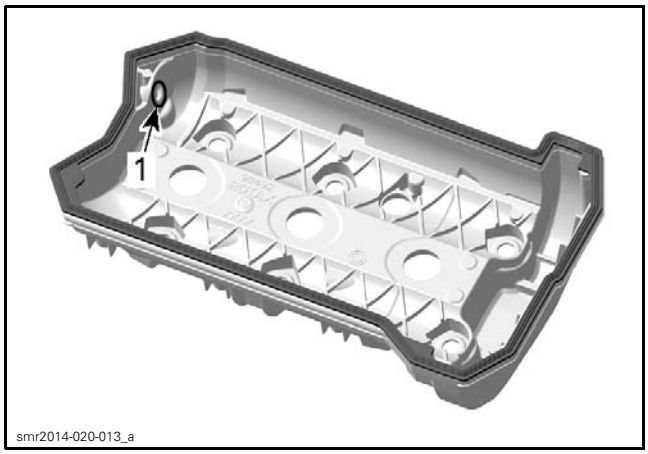


*INSIDE VALVE COVER*
*1. Apply engine oil here*

4. Install valve cover.

**NOTICE** Adhere to the following procedure, otherwise damage to the V-ring will occur causing crankcase venting malfunction.

4.1 Move valve cover towards MAG side.

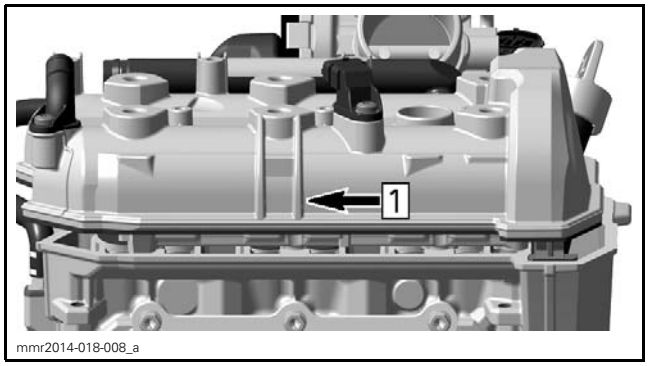


*Step 1: Move valve cover towards MAG side*

4.2 Place valve cover onto cylinder head.

**NOTICE** Make sure the valve cover gasket is well positioned in the cover groove.

4.3 Push valve cover towards PTO side to ensure the V-ring properly seals on sealing surface inside the cover.

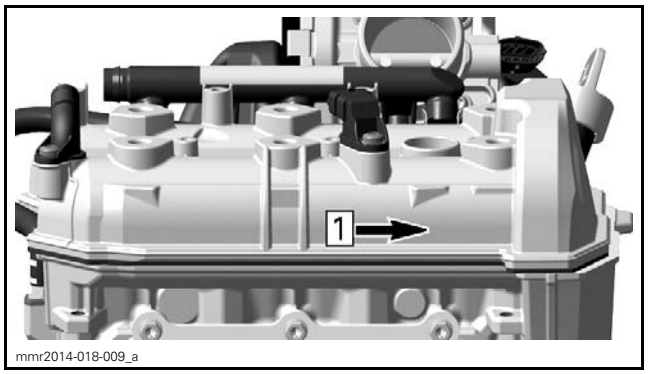


*Step 1: Push valve cover towards PTO side*

5. Install valve cover screws and tighten as per following sequence:

| TIGHTENING TORQUE | | |
|---|---|---|
| Valve cover screws | STEP A | 9 N•m ± 1 N•m (80 lbf•**in** ± 9 lbf•**in**) |
| | STEP B | 9 N•m ± 1 N•m (80 lbf•**in** ± 9 lbf•**in**) |

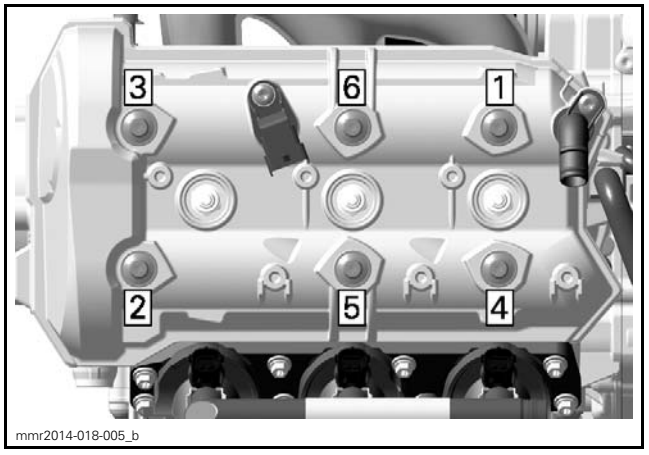


*TIGHTENING SEQUENCE*

# CAMSHAFTS

## Removing the Camshaft

1. Remove *VALVE COVER*, see procedure in this subsection.
2. Lock crankshaft, refer to *CRANKSHAFT LOCKING PROCEDURE* in the *BOTTOM END* subsection.

Remove timing chain tensioner. Refer to *TIMING CHAIN* subsection.

3. Remove the breather cover, the upper timing chain guide and the timing chain guide.

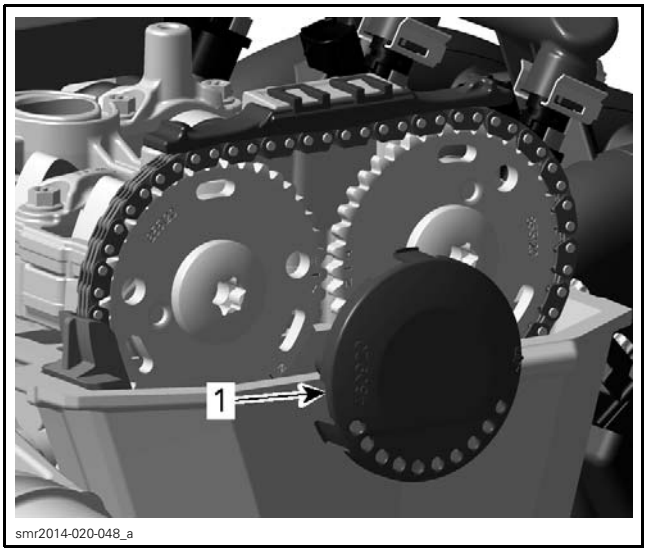

smr2014-020-048_a

*1. Breather cover*

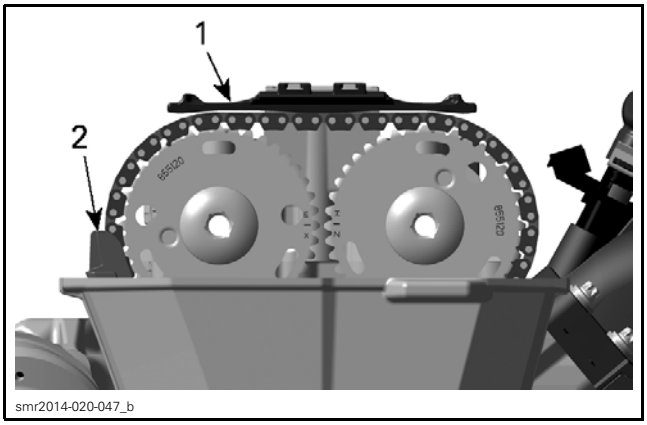

smr2014-020-047_b

*1. Upper timing chain guide*
*2. Timing chain guide*

4. Remove timing chain from camshaft timing gears.
5. Remove camshaft holder retaining screws (x16).

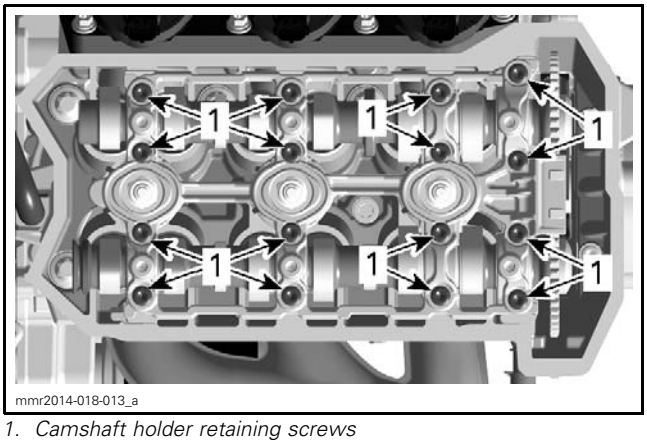

mmr2014-018-013_a

*1. Camshaft holder retaining screws*

6. Remove upper half of camshaft holder.

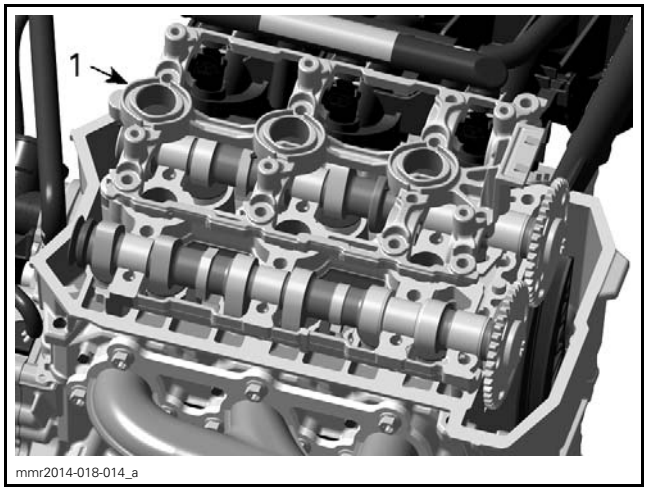

mmr2014-018-014_a

*1. Upper half of camshaft holder*

7. Put timing chain aside.
8. Remove camshafts with timing gears.

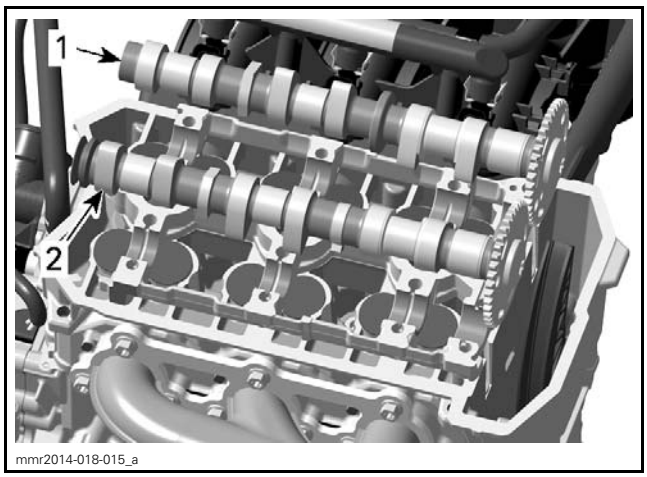

mmr2014-018-015_a

*1. Intake camshaft*
*2. Exhaust camshaft*

NOTE: Remove camshaft timing gears only if necessary. Refer to *TIMING CHAIN* subsection.

## Inspecting the Camshaft

1. Check each lobe and bearing journal for scoring, scuffing, cracks, or other signs of wear.
2. Check if V-ring is brittle, hard or otherwise damaged.
3. Measure camshaft bearing journal diameter and lobe height, using a micrometer.

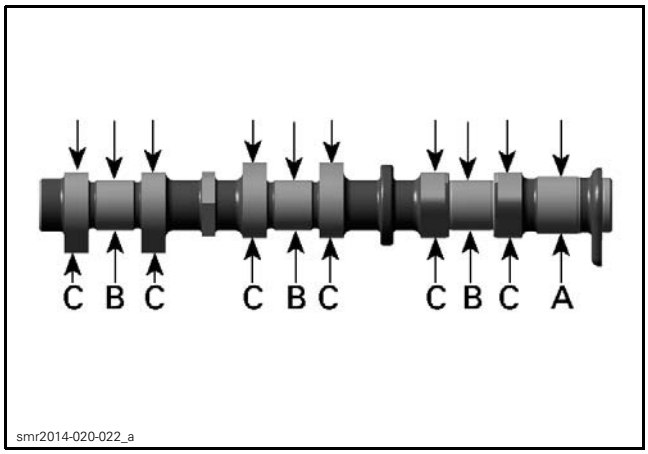


*A. Camshaft journal (PTO)*
*B. Camshaft journal (center and MAG)*
*C. Camshaft lobes*

| CAMSHAFT JOURNAL DIAMETER | | |
|---|---|---|
| PTO journal (A) | New | 25.967 mm to 25.980 mm (1.0223 in to 1.0228 in) |
| | Service limit | 25.940 mm (1.0213 in) |
| Center and MAG journals (B) | New | 22.957 mm to 22.970 mm (.9038 in to .9043 in) |
| | Service limit | 22.930 mm (.9028 in) |

| CAMSHAFT LOBE HEIGHT | | |
|---|---|---|
| Exhaust and Intake Camshaft (C) | New | 38.35 mm to 38.55 mm (1.51 in to 1.518 in) |
| | Service limit | 38.33 mm (1.509 in) |

Replace parts if necessary.

For camshaft journal radial clearance and camshaft holder bearing diameter refer to *CAMSHAFT HOLDER* in this subsection.

4. Check timing chain guide for wear, cracks or deformation. Replace as required.
5. Replace timing chain guide if any groove caused by timing chain exceeds service limit.

| CHAIN GUIDE GROOVE DEPTH | |
|---|---|
| Service limit | 1 mm (.039 in) |

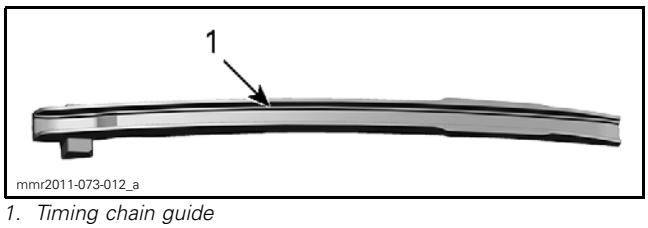


*1. Timing chain guide*

## Installing the Camshaft

The installation is the reverse of the removal procedure. However, pay attention to the following details.

1. Ensure crankshaft is still locked.
2. Apply engine oil on camshaft bearings.

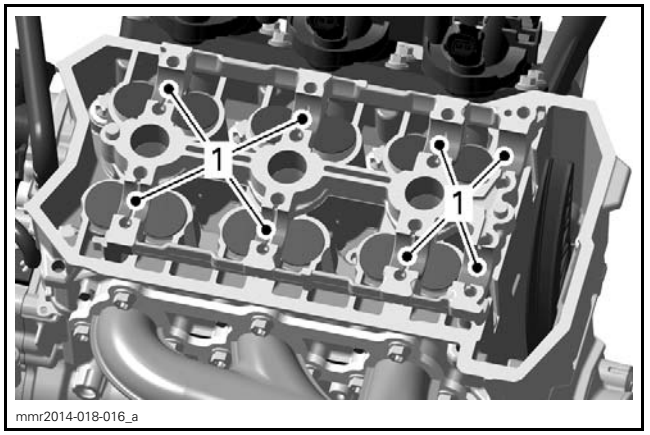


*1. Areas where to apply engine oil*

**NOTE:** The camshafts are not identical. Any mix-up of the components would lead to engine damage. The exhaust camshaft has a machined area on MAG side for the V-ring.

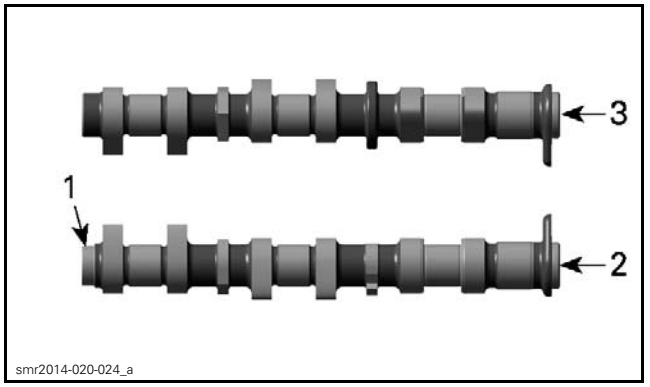


*1. Machined area*
*2. Exhaust camshaft*
*3. Intake camshaft*

3. If removed, reinstall camshaft timing gears on camshafts. Refer to *CAMSHAFT TIMING GEARS* in the *TIMING CHAIN* subsection.
4. Apply engine oil on camshaft journal diameter.
5. Install exhaust camshaft assembly with mark "EX" parallel to cylinder head gasket.

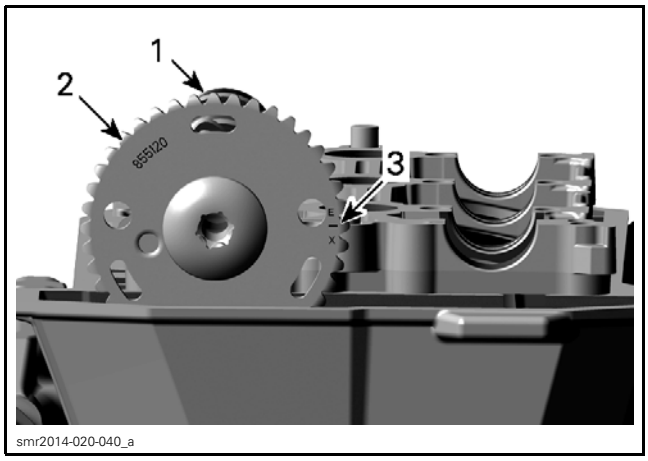


*1. Exhaust camshaft*
*2. Camshaft timing gear*
*3. Mark "EX"*

6. Install intake camshaft assembly with mark "IN" parallel to cylinder head gasket.

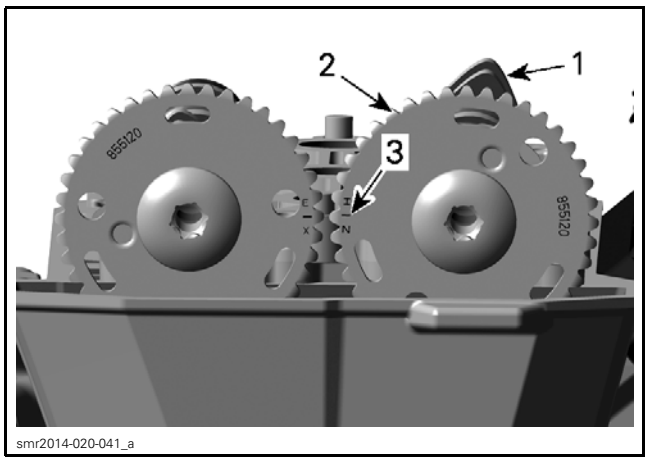


*1. Intake camshaft*
*2. Camshaft timing gear*
*3. Mark "IN"*

7. Install upper half of camshaft holder, then tighten screws as per following sequence:

| TIGHTENING TORQUE | | |
|---|---|---|
| Camshaft holder screws | STEP A | 5 N•m ± 0.5 N•m (44 lbf•**in** ± 4 lbf•**in**) |

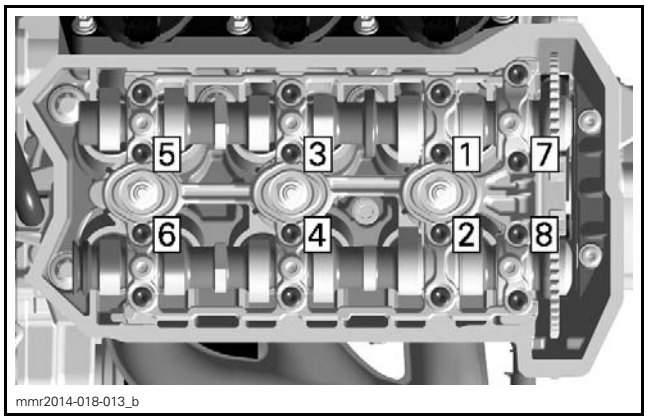


*CAMSHAFT HOLDER TIGHTENING SEQUENCE - STEP A*

| TIGHTENING TORQUE | | |
|---|---|---|
| Camshaft holder screws | STEP B | 9 N•m ± 1 N•m (80 lbf•**in** ± 9 lbf•**in**) |

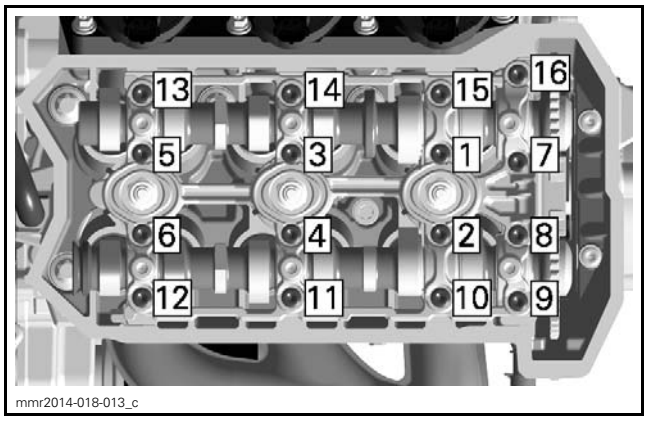


*CAMSHAFT HOLDER TIGHTENING SEQUENCE - STEP B*

NOTE: After reassembly of camshafts is completed, check if camshafts can be turned easily.

8. Lock camshafts.

| REQUIRED TOOL | |
|---|---|
| CAMSHAFT LOCKING TOOL (P/N 529 036 206) | |

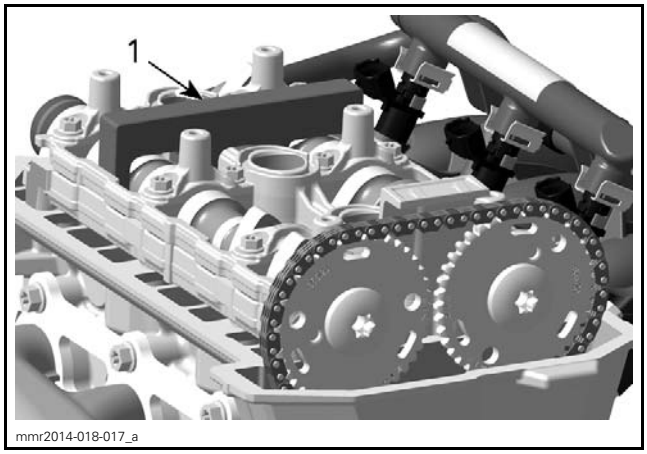


*1. Camshaft locking tool*

9. Lift timing chain out of timing chain compartment.
10. Pull timing chain up on exhaust side and install it on the exhaust camshaft timing gear.

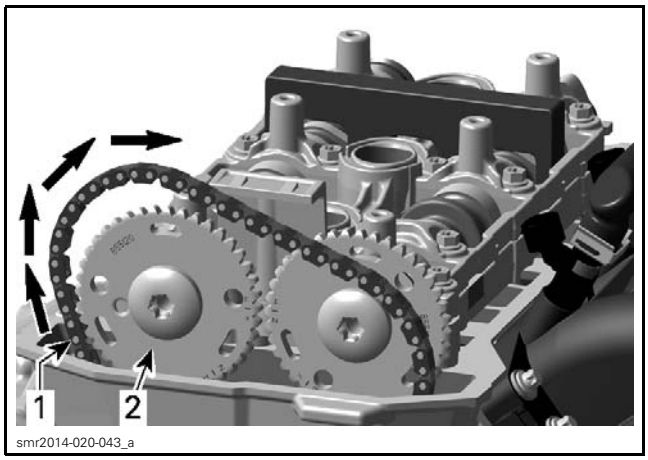


*1. Timing chain*
*2. Exhaust camshaft timing gear*

11. Pull timing chain towards intake side and install it on the intake camshaft timing gear.

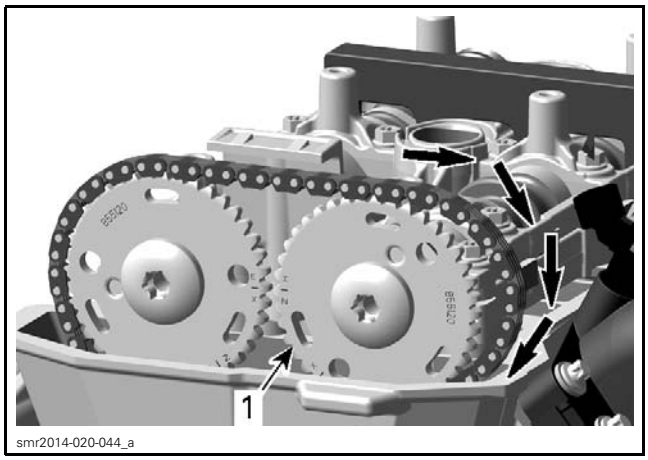


*1. Intake camshaft timing gear*

12. Install timing chain guide.

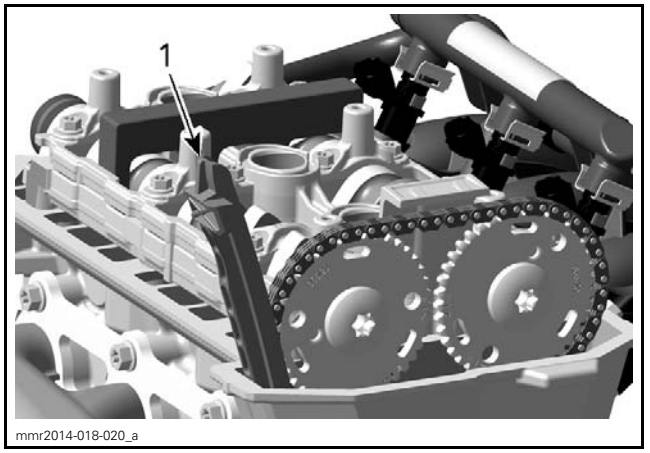


*1. Timing chain guide*

13. Install upper timing chain guide on camshaft holder.

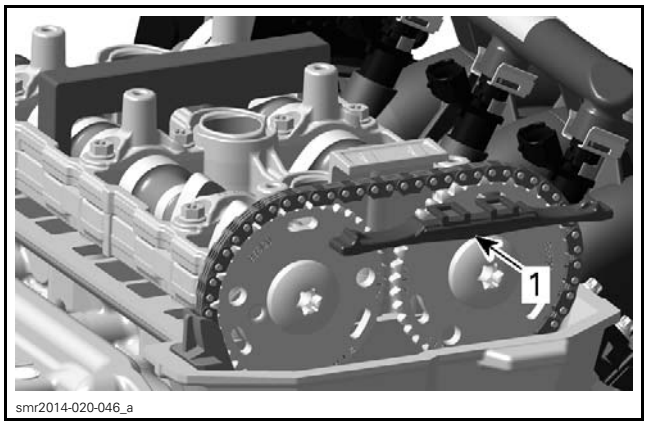


*1. Upper timing chain guide*

14. Install *TIMING CHAIN TENSIONER*, refer to *TIMING CHAIN* subsection.
15. Ensure marks on camshaft timing gears are still aligned. If not, repeat procedure.

**NOTICE** **After installation of timing chain tensioner, the marks "IN" on intake and "EX" on exhaust camshafts must be aligned.**

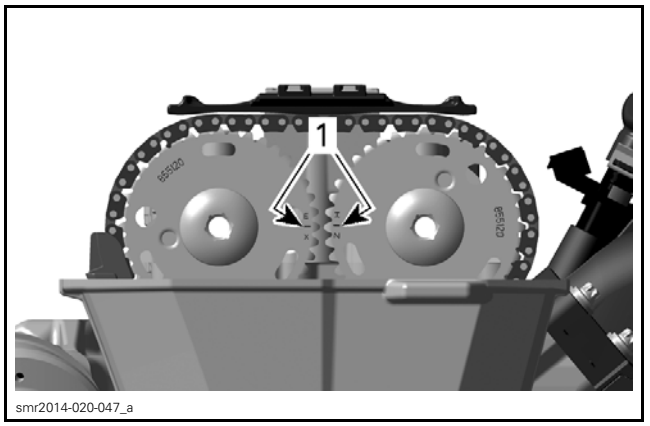


*CAMSHAFT TIMING GEARS*
*1. Marks must be aligned*

16. Install breather cover.

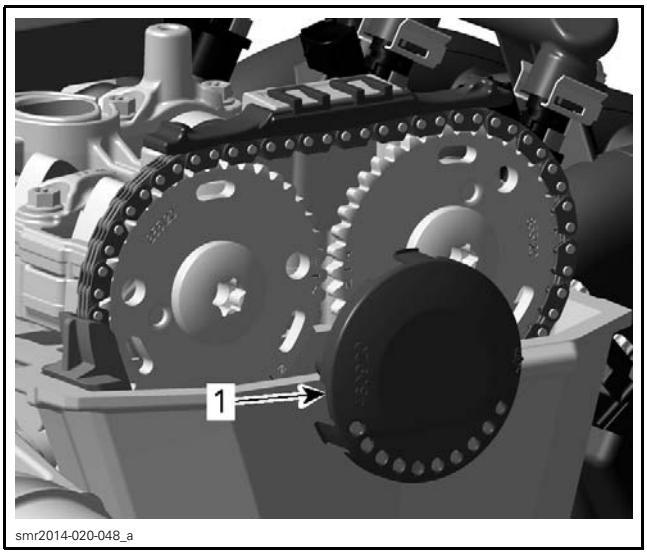


*1. Breather cover*

17. Remove camshaft locking tool.

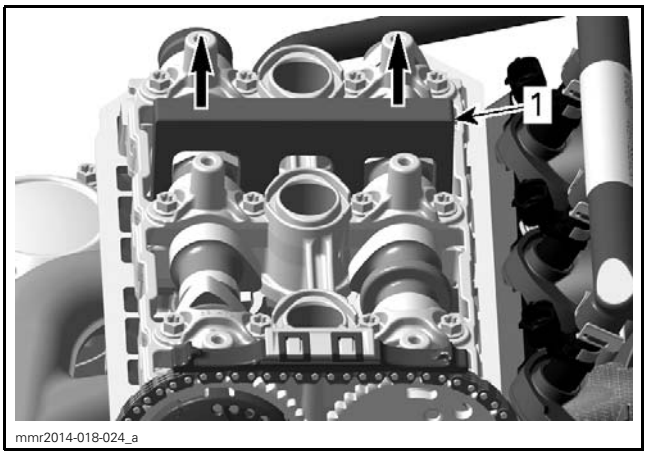


*1. Camshaft locking tool removal*

18. Remove crankshaft locking tool.

# CAMSHAFT HOLDER

## Removing the Camshaft Holder

Remove camshafts, see procedure in this subsection.

Remove lower half of camshaft holder with gaskets from cylinder head.

Remove gaskets from camshaft holder halves and discard gaskets.

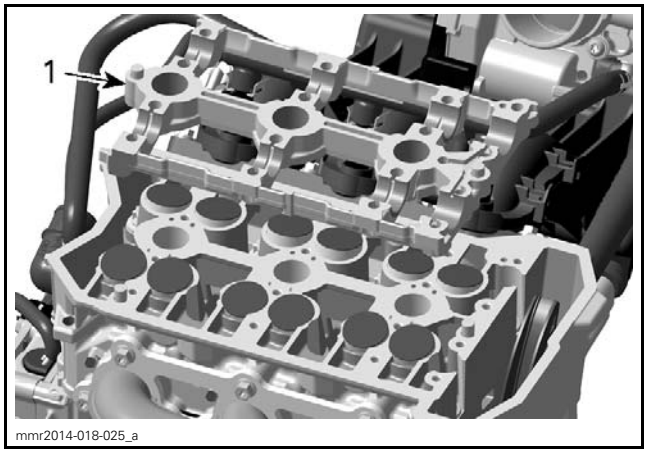


*1. Camshaft holder lower half*

## Inspecting the Camshaft Holder

Check camshaft holder for scoring, scuffing, cracks, or other signs of wear.

Make sure oil orifices are not clogged. Blow them out with pressurized air.

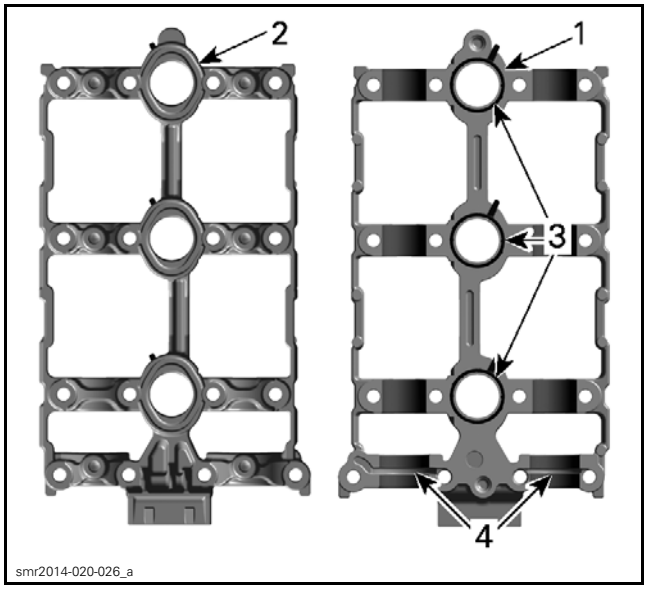


*1. Camshaft holder upper half - view from beneath*
*2. Camshaft holder upper half - view from above*
*3. Gaskets*
*4. Oil orifices*

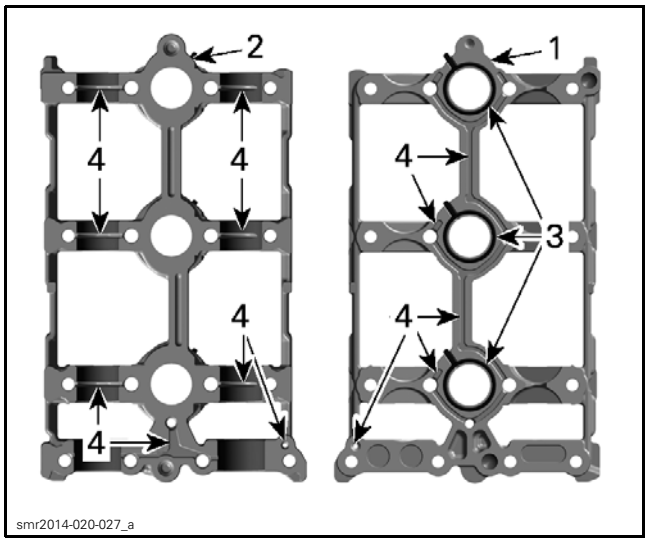


1. *Camshaft holder lower half - view from beneath*
2. *Camshaft holder lower half - view from above*
3. *Gaskets*
4. *Oil orifices*

Install camshaft holder on cylinder head.

Tighten camshaft holder screws to specification, refer to *INSTALLING THE CAMSHAFT* in this subsection.

Measure camshaft holder bearing diameter.

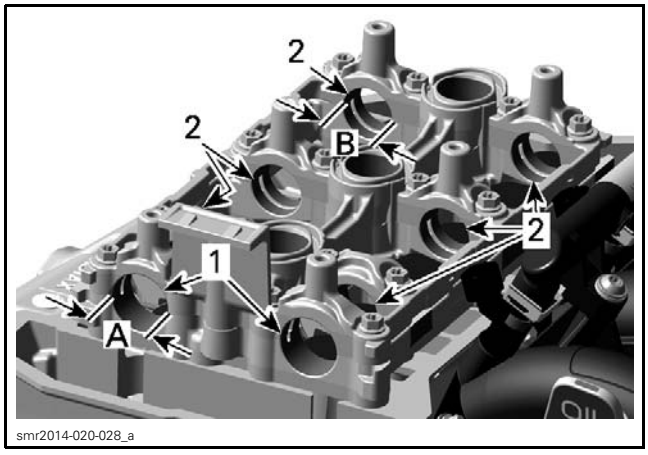


*CAMSHAFT HOLDER BEARINGS*
1. *PTO bearings*
2. *Center and MAG bearings*

*A. Diameter PTO bearing*
*B. Diameter center and MAG bearing*

| CAMSHAFT HOLDER BEARING DIAMETER | | |
|---|---|---|
| PTO bearing | New | 26.000 mm to 26.021 mm (1.024 in to 1.024 in) |
| | Service limit | 26.050 mm (1.026 in) |
| Center and MAG bearings | New | 23.000 mm to 23.021 mm (.906 in to .906 in) |
| | Service limit | 23.050 mm (.907 in) |

Measure the clearance between camshaft journals and camshaft holder, using the plastic feeler gauge.

NOTE: The plastic feeler gauge is available at automotive parts retailer.

Install camshaft holder lower half on cylinder head.

Place camshafts in lower half of camshaft holder and apply a plastic-gauge on the camshaft bearing journal.

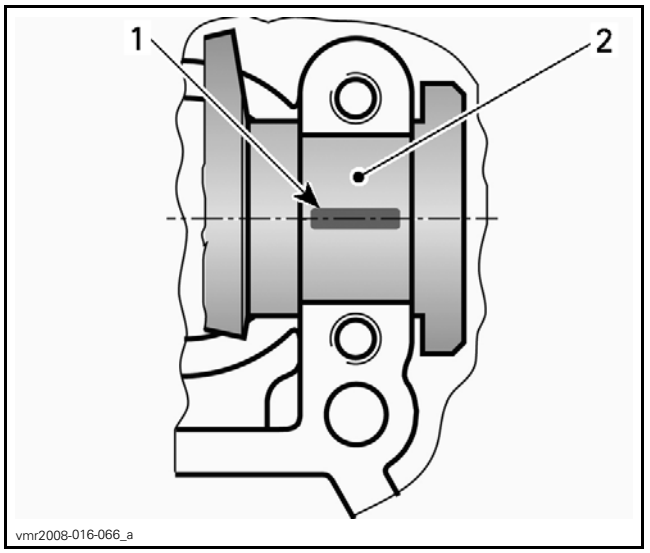


*TYPICAL*
1. *Plastic gauge*
2. *Camshaft bearing journal*

Install camshaft holder upper half in its proper position and tighten screws to specification, refer to *INSTALLING THE CAMSHAFT* in this subsection.

Unfasten camshaft holder.

Measure the maximum width of the pressed plastic gauge with the corresponding graduated scale.

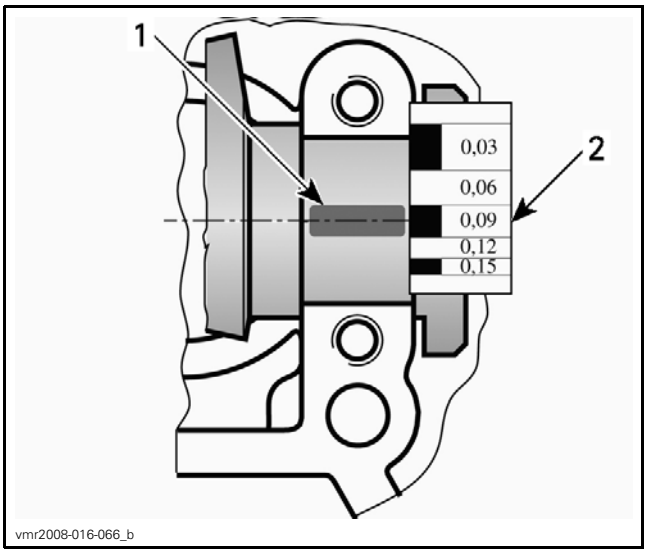


*TYPICAL*
1. *Pressed plastic gauge*
2. *Graduated scale*

| CAMSHAFT JOURNAL RADIAL CLEARANCE (PTO, CENTER AND MAG BEARING) | |
|---|---|
| New | 0.020 mm to 0.054 mm (.001 in to .002 in) |
| Service limit | 0.080 mm (.003 in) |

Replace parts if necessary.

### Installing the Camshaft Holder

Install camshaft holder lower half.

Continue procedure as explained in *INSTALLING THE CAMSHAFT* in this subsection.

## HYDRAULIC VALVE LIFTERS

### Removing the Hydraulic Valve Lifter

NOTE: Hydraulic valve lifter are maintenance free.

See procedures in this subsection to remove the following:

– Valve cover
– Camshafts
– Camshaft holder.

Pull hydraulic valve lifter out of cylinder head.

NOTE: When disassembling the hydraulic valve lifter, it is strongly recommended to note their original position.

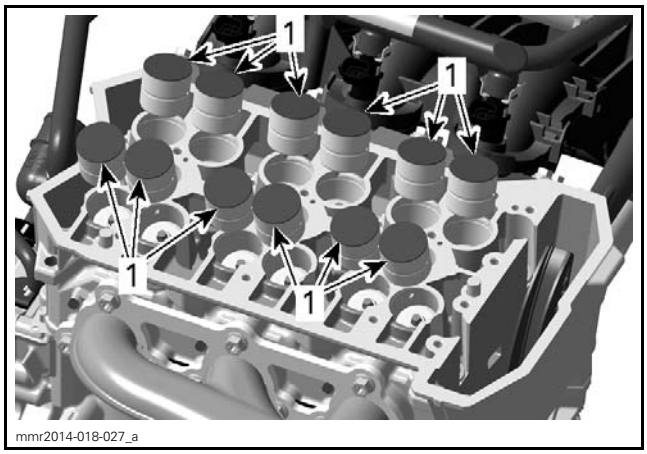


1. *Hydraulic valve lifter*

### Inspecting the Hydraulic Valve Lifter

1. Check surface of hydraulic valve lifter for scoring or other damage.
2. Measure valve lifter diameter. Replace if out of specification.

| HYDRAULIC VALVE LIFTER | |
|---|---|
| New | 28.354 mm to 28.370 mm (1.1163 in to 1.1169 in) |
| Service limit | 28.340 mm (1.1157 in) |

| HYDRAULIC VALVE LIFTER RADIAL CLEARANCE | |
|---|---|
| Service limit | 0.100 mm (.0039 in) |

### Installing the Hydraulic Valve Lifter

The installation is the reverse of the removal procedure. However, pay attention to the following details.

Apply engine oil on the outside diameter of the hydraulic valve lifter.

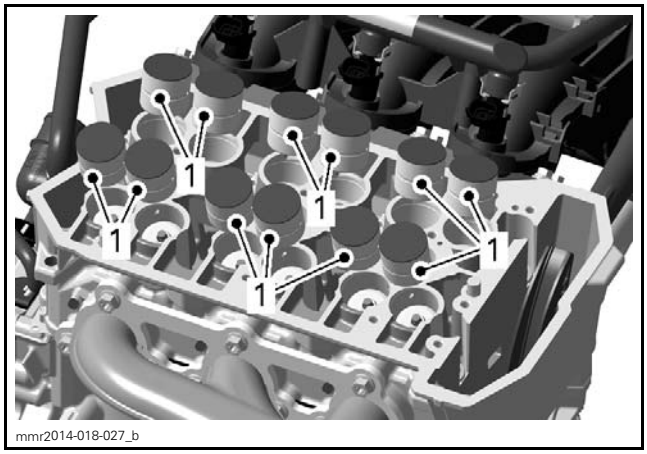


1. *Apply engine oil on outer diameter*

# CYLINDER HEAD

## Removing the Cylinder Head

1. Remove the engine from the vehicle. Refer to *ENGINE REMOVE AND INSTALLATION* subsection.
2. See procedures in this subsection to remove:
   - Valve cover
   - Camshafts
   - Camshaft holder
   - Hydraulic valve lifters.
3. Remove M6 cylinder head screws.

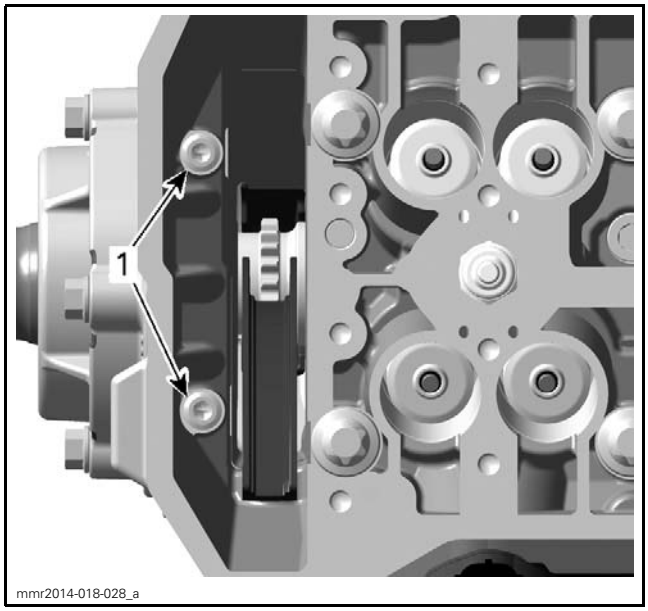


*1. Remove M6 cylinder head screws*

4. Remove and discard M9 cylinder head screws.

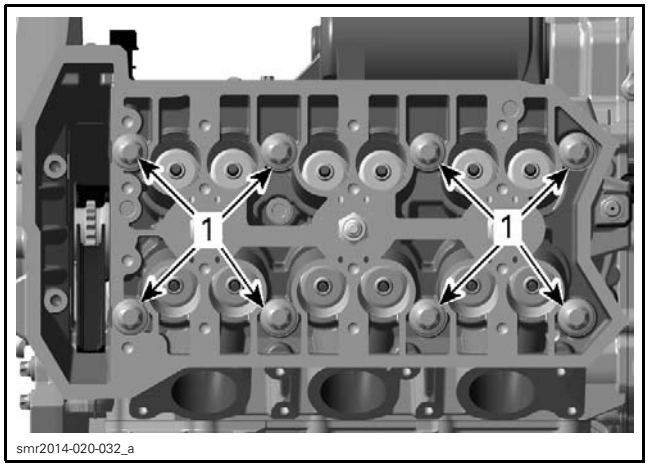


*1. Remove M9 cylinder head screws*

5. Pull cylinder head off the cylinder block.
6. Remove and discard cylinder head gasket.

## Cleaning the Cylinder Head

1. Remove carbon deposits from combustion chambers, exhaust ports and piston tops.
2. Clean cylinder head, especially cylinder head screw surface from oil spillage.
3. Blow out the oil orifices with pressurized air and make sure they are not clogged.

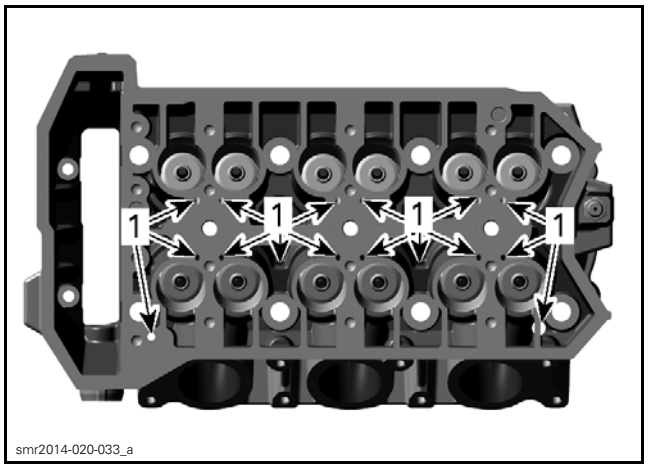


*1. Oil orifices*

## Inspecting the Cylinder Head

Check for cracks between valve seats or other damage, if so, replace cylinder head.

Check cylinder head mating surface for flatness using a straight edge.

Check hydraulic valve lifter bores for scoring or other damage, if so, replace cylinder head.

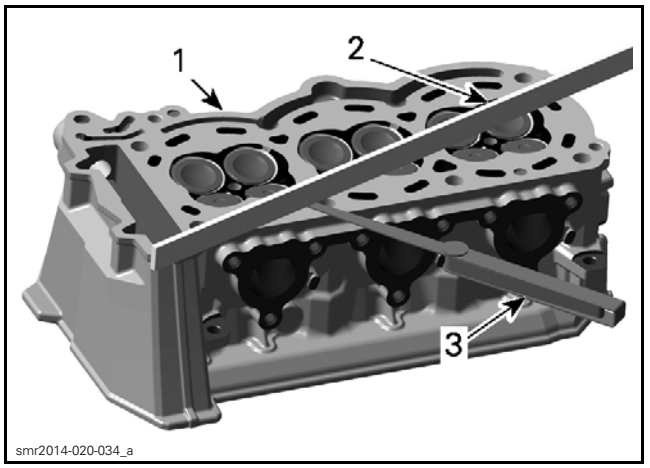


*1. Cylinder head*
*2. Straight edge*
*3. Feeler gauge*

Check for cylinder head warping.

| CYLINDER HEAD WARPAGE | |
|---|---|
| Service limit | 0.15 mm (.0059 in) |

If warping exceeds specification, resurface the cylinder head as follows.

Use a 400 - 600 grit wet sandpaper on a surface plate and gently grind off the mating surface.

NOTE: To ensure an even surface, rotate cylinder head several times during resurfacing.

Replace cylinder head, if resurfacing fails.

## Installing the Cylinder Head

The installation is the reverse of the removal procedure. However, pay attention to the following details.

1. Install a NEW cylinder head gasket.

**NOTICE** Each installation of the cylinder head requires a NEW cylinder head gasket. Using a gasket twice would cause engine damage.

2. Install cylinder head on the cylinder block.

3. Install NEW M9 cylinder head screws.

**NOTICE** This assembly uses stretch screws. Always use NEW screws and strictly adhere to the tightening procedure.

4. Tighten cylinder head screws as follows:

NOTE: Always perform step A on all M9 cylinder head screws before going to step B.

| TIGHTENING TORQUE | | |
|---|---|---|
| Cylinder head M9 screws | STEP A | 20 N•m ± 2 N•m (15 lbf•ft ± 1 lbf•ft) |
| | STEP B | Additional 150° ± 5° |

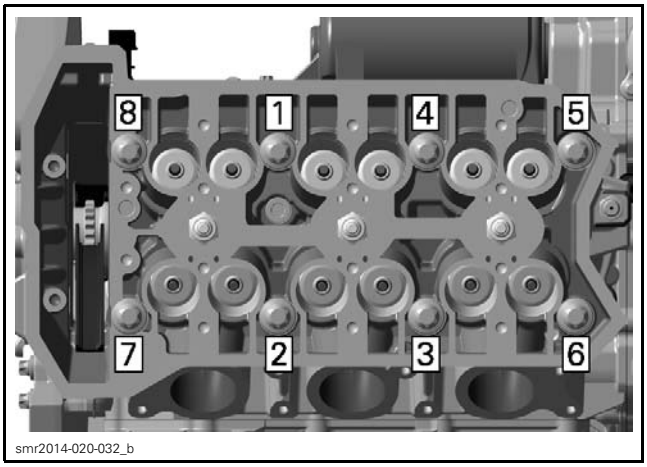

smr2014-020-032_b

*M9 SCREWS TIGHTENING SEQUENCE*

NOTE: Use a torque angle gauge to carry out step B.

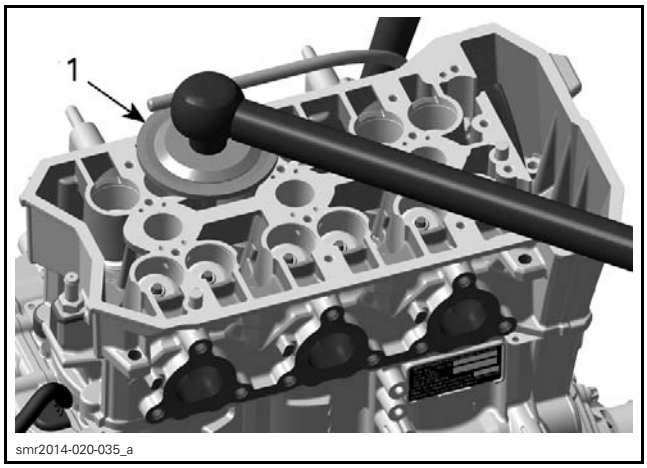

smr2014-020-035_a

*1. Torque angle gauge*

5. Install M6 screws. Tighten as follows.

| TIGHTENING TORQUE | |
|---|---|
| Cylinder head M6 screws | 9 N•m ± 1 N•m (80 lbf•**in** ± 9 lbf•**in**) |

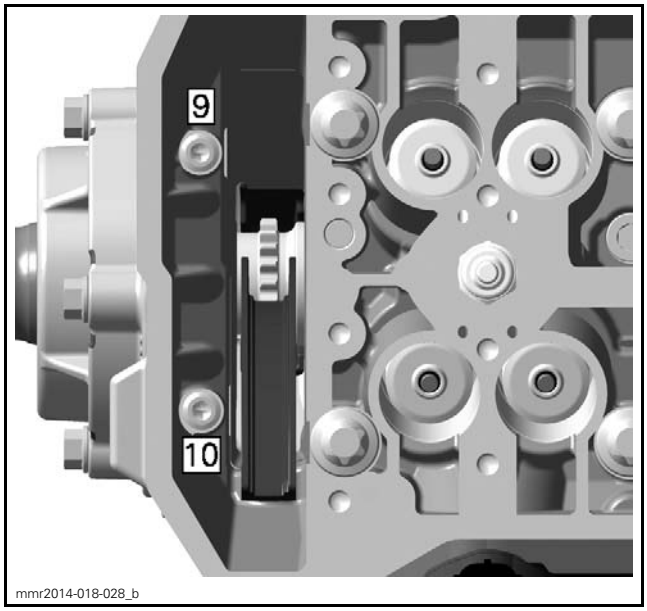

mmr2014-018-028_b

*M6 SCREWS TIGHTENING SEQUENCE*

# VALVE SPRINGS

## Removing the Valve Spring

1. Remove *CYLINDER HEAD*, see procedure in this subsection.
2. Compress valve spring.

| REQUIRED TOOLS | |
|---|---|
| VALVE SPRING COMPRESSOR (P/N 529 035 724) | |
| VALVE SPRING COMPRESSOR CUP (P/N 529 036 209) | |

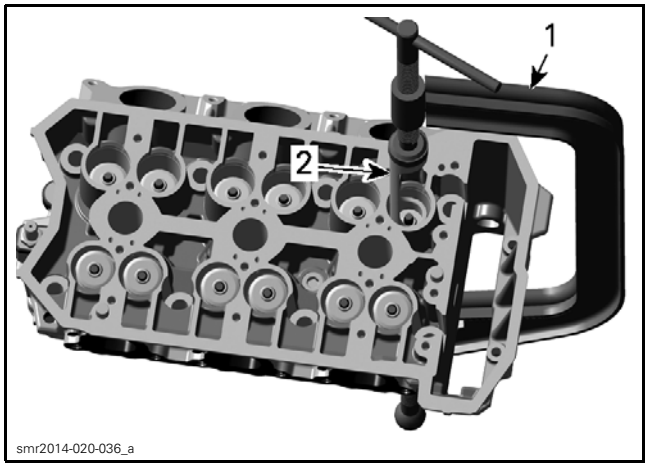


*1. Valve spring compressor clamp*
*2. Valve spring compressor cup*

3. Remove valve cotters.
4. Withdraw valve spring compressor tools.
5. Remove valve spring retainer and valve spring.

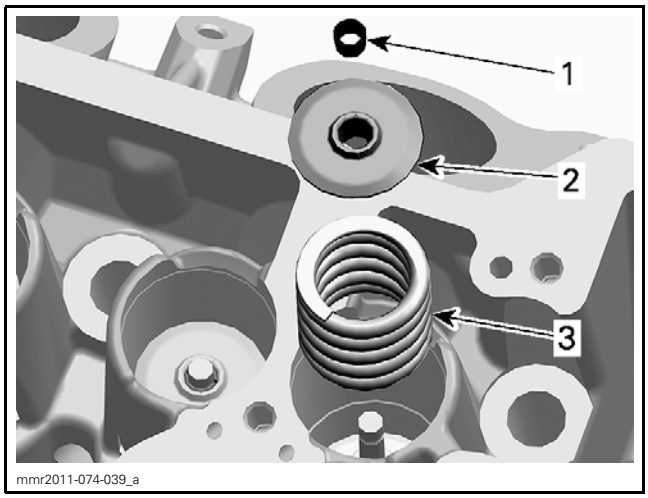


*1. Valve cotters*
*2. Valve spring retainer*
*3. Valve spring*

NOTE: Identify the position of each part very carefully, so it can be reinstalled in its original place.

## Inspecting the Valve Spring

1. Check valve spring for rust, corrosion or other visible damage.
2. Check valve spring free length and straightness.

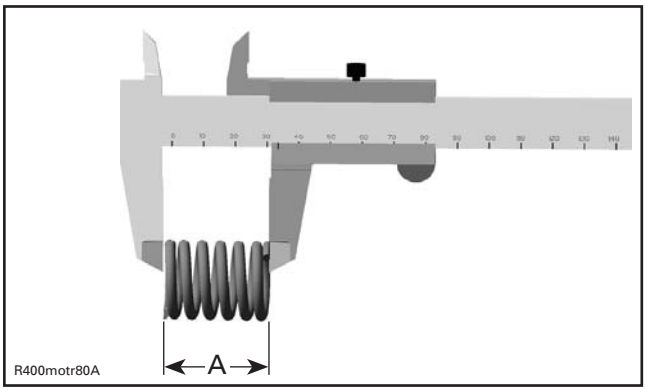


*A. Spring free length*

| VALVE SPRING FREE LENGTH | |
|---|---|
| New | 31.35 mm (1.2343 in) |
| Service limit | 29.50 mm (1.1614 in) |

Replace valve spring, if out of specification.

## Installing the Valve Spring

The installation is the reverse of the removal procedure. However, pay attention to the following details.

NOTE: Ensure to reinstall all parts in their original position as marked during removal.

Apply some grease on valve cotters, so that they remain in place while releasing the valve spring.

Make sure valve cotters are properly engaged into valve stem groove.

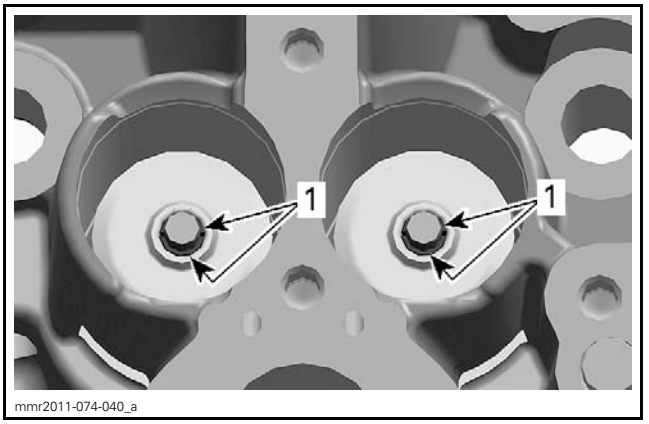


*1. Valve cotters*

After spring is installed, ensure it is properly locked by lightly tapping on valve stem end with a soft punch and a hammer so that valve opens and closes a few times.

**NOTICE** **Improperly locked valve spring will cause severe engine damage and hitting the valve stem end with excessive force could damage the valve.**

# VALVES

## Removing the Valve

1. Remove *VALVE SPRING*, see procedure in this subsection.
2. Push on the valve stem, then pull valves out of cylinder head.

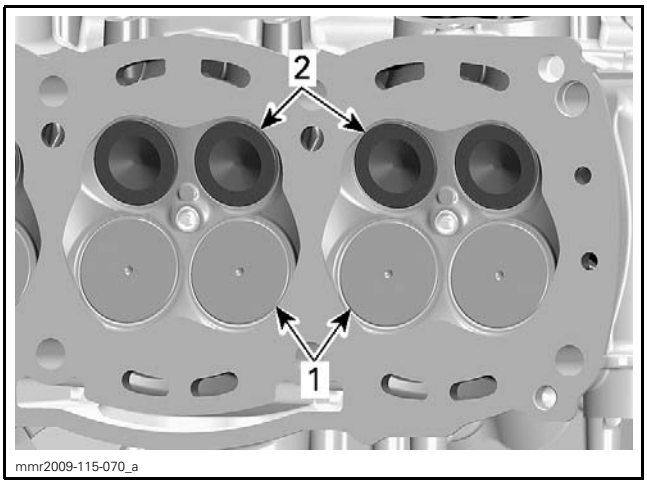


*1. Intake valves 29 mm*
*2. Exhaust valves 25 mm*

NOTE: Identify the position of each part very carefully, so it can be reinstalled in its original place.

3. Remove and discard valve stem seal.

NOTE: Pliers to remove the valve stem seals are available in all automotive parts stores.

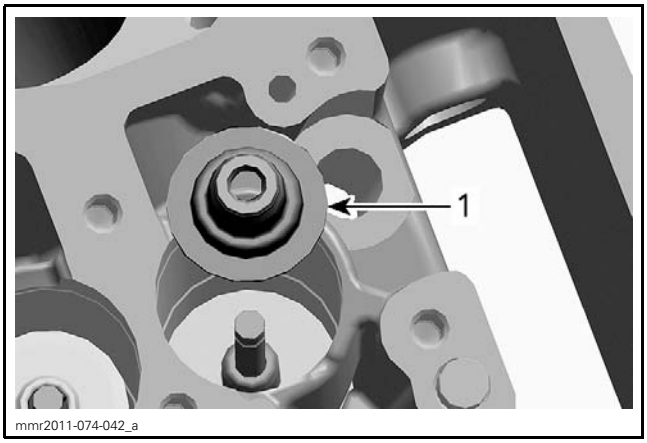


*1. Valve stem seal*

## Inspecting the Valve

Inspect valve surface, check for abnormal stem wear and bending.

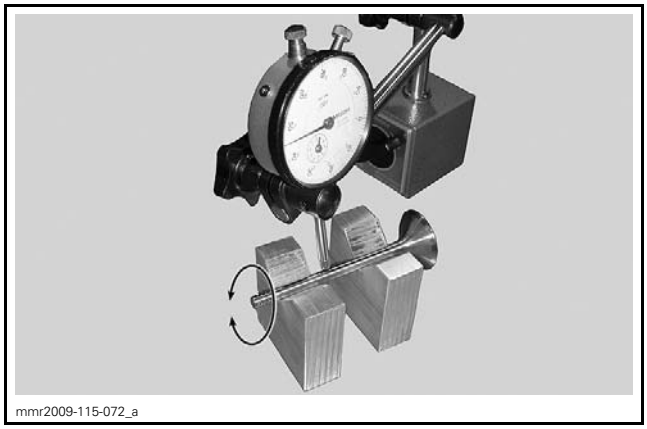


| VALVE OUT OF ROUND<br>INTAKE AND EXHAUST VALVE | |
|---|---|
| New | 0.005 mm (.0002 in) |
| Service limit | 0.060 mm (.0024 in) |

Replace valve if out of specification.

### Valve Stem and Valve Guide Clearance

1. Measure valve stem at three places, using a micrometer.

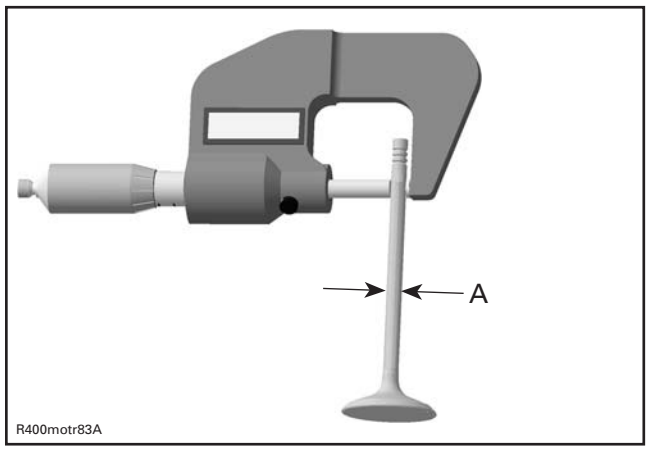


*A. Valves stem diameter*

| VALVE STEM DIAMETER | | |
|---|---|---|
| Intake valve | New | 4.958 mm to 4.972 mm (.1952 in to .1957 in) |
| | Service limit | 4.940 mm (.1945 in) |
| Exhaust valve | New | 4.956 mm to 4.970 mm (.1951 in to .1957 in) |
| | Service limit | 4.940 mm (.1945 in) |

Replace valve if stem is out of specification or if its surface is damaged or worn.

2. Measure valve guide inner diameter, using a small bore gauge.

NOTE: Clean valve guide from carbon deposits before measuring.

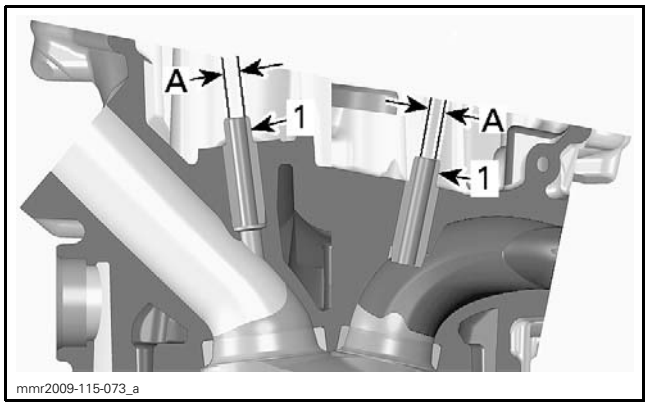


*1. Valve guides*
*A. Valve guide inner diameter*

| VALVE GUIDE INNER DIAMETER | |
|---|---|
| New | 5.000 mm to 5.020 mm (.1969 in to .1976 in) |
| Service limit | 5.050 mm (.1988 in) |

Replace cylinder head, if valve guide is out of specification.

### Valve Face and Seat

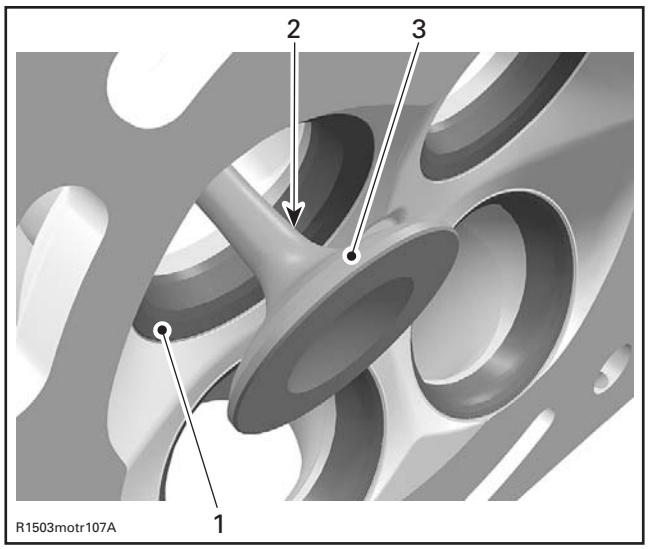


*TYPICAL*
*1. Valve seat*
*2. Exhaust valve contaminated area*
*3. Valve face (contact surface to valve seat)*

1. Check valve face and seat for burning, pitting and other signs of damage.
2. Check if valve seats properly in cylinder head. Proceed as follows.
   2.1 Apply some lapping compound on valve face and work valve on its seat with a lapping tool.

   NOTE: The location of contact area should be in center of valve face.
   2.2 Repeat procedure until valve seat and valve face fit together.
3. Measure valve seat contact width, using a caliper.

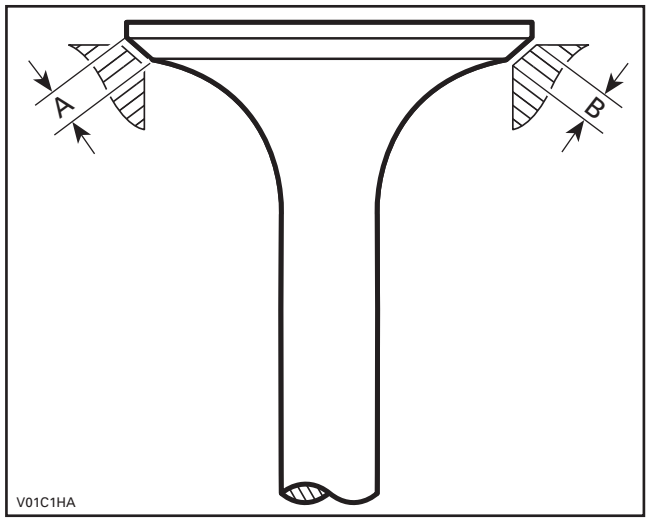


*A. Valve face contact width*
*B. Valve seat contact width*

| VALVE SEAT CONTACT WIDTH (B) | | |
|---|---|---|
| Intake valve | New | 1.05 mm to 1.35 mm (.041 in to .053 in) |
| | Service limit | 1.70 mm (.067 in) |
| Exhaust valve | New | 1.25 mm to 1.45 mm (.049 in to .057 in) |
| | Service limit | 1.80 mm (.071 in) |

Replace parts if out of specification.

## Installing the Valve

The installation is the reverse of the removal procedure. However, pay attention to the following details.

NOTE: Ensure to reinstall all parts in their original position as marked during removal.

Install a NEW valve stem seal whenever valve is removed.

Apply engine oil on valve stem and carefully slide through cylinder head and valve stem seal.

**NOTICE Be careful when passing the valve stem through the sealing lip of the seal.**

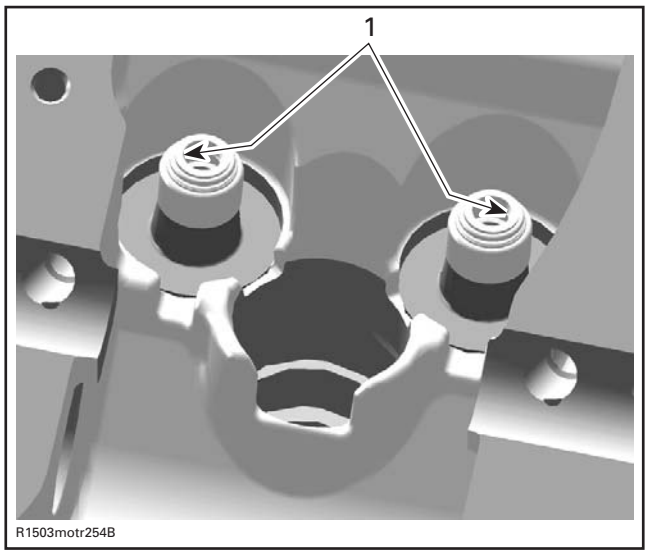


*TYPICAL*
*1. Sealing lips of valve stem seal*

Install *VALVE SPRING*. See procedure in this subsection.

Install all other removed parts.

# CYLINDER HEAD

## SERVICE TOOLS

| Description | Part Number | Page |
|---|---|---|
| CAMSHAFT LOCKING TOOL | 529 036 206 | 12 |
| ENGINE LEAK DOWN TEST KIT | 529 035 661 | 5 |
| VALVE SPRING COMPRESSOR CUP | 529 036 209 | 19 |
| VALVE SPRING COMPRESSOR | 529 035 724 | 19 |

# VALVE COVER

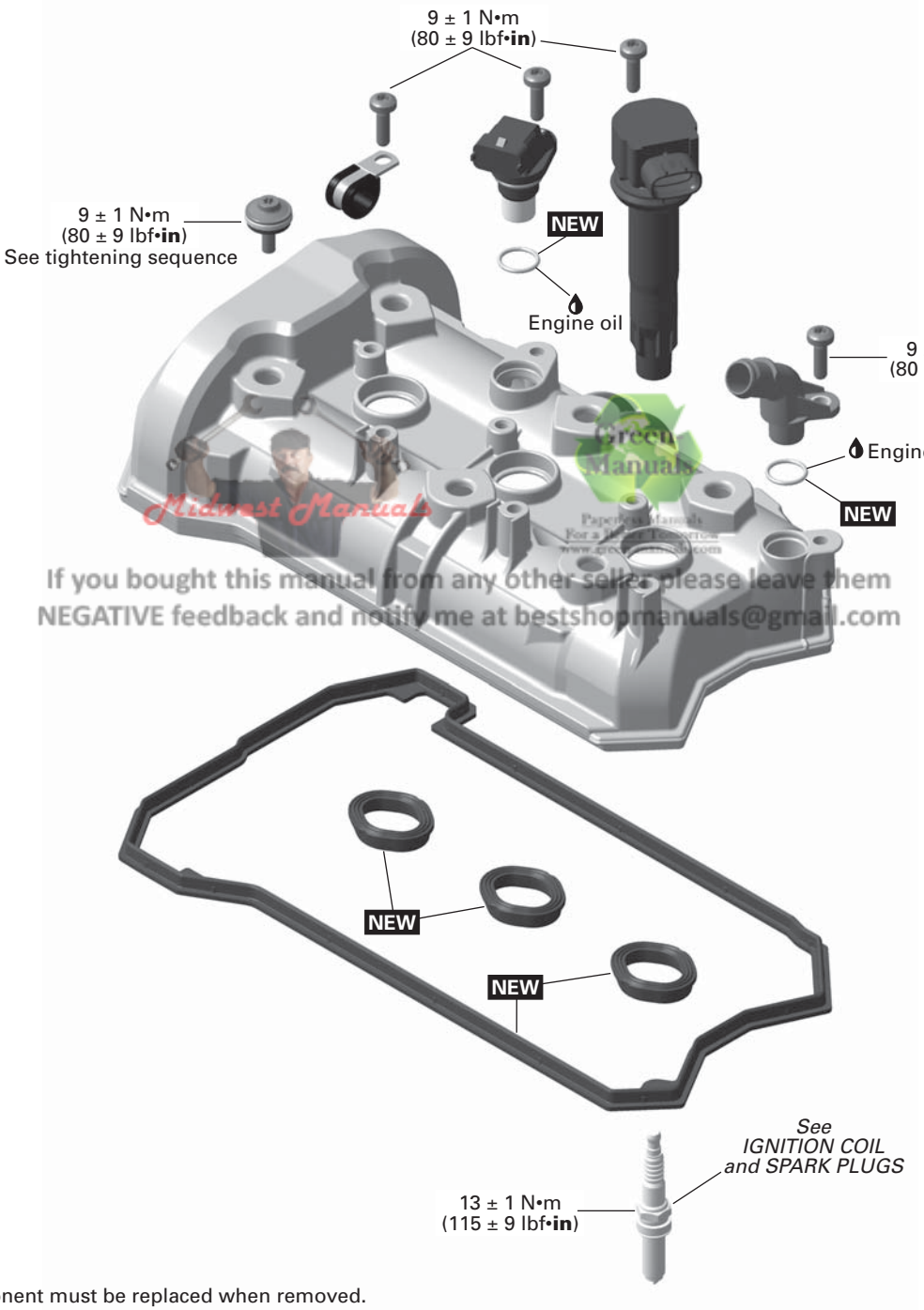


Midwest Manuals
Green Manuals
If you bought this manual from any other seller please leave them NEGATIVE feedback and notify me at bestshopmanuals@gmail.com

**NEW** = Component must be replaced when removed.

RTXT03MY19-008-001_a

# CAMSHAFTS

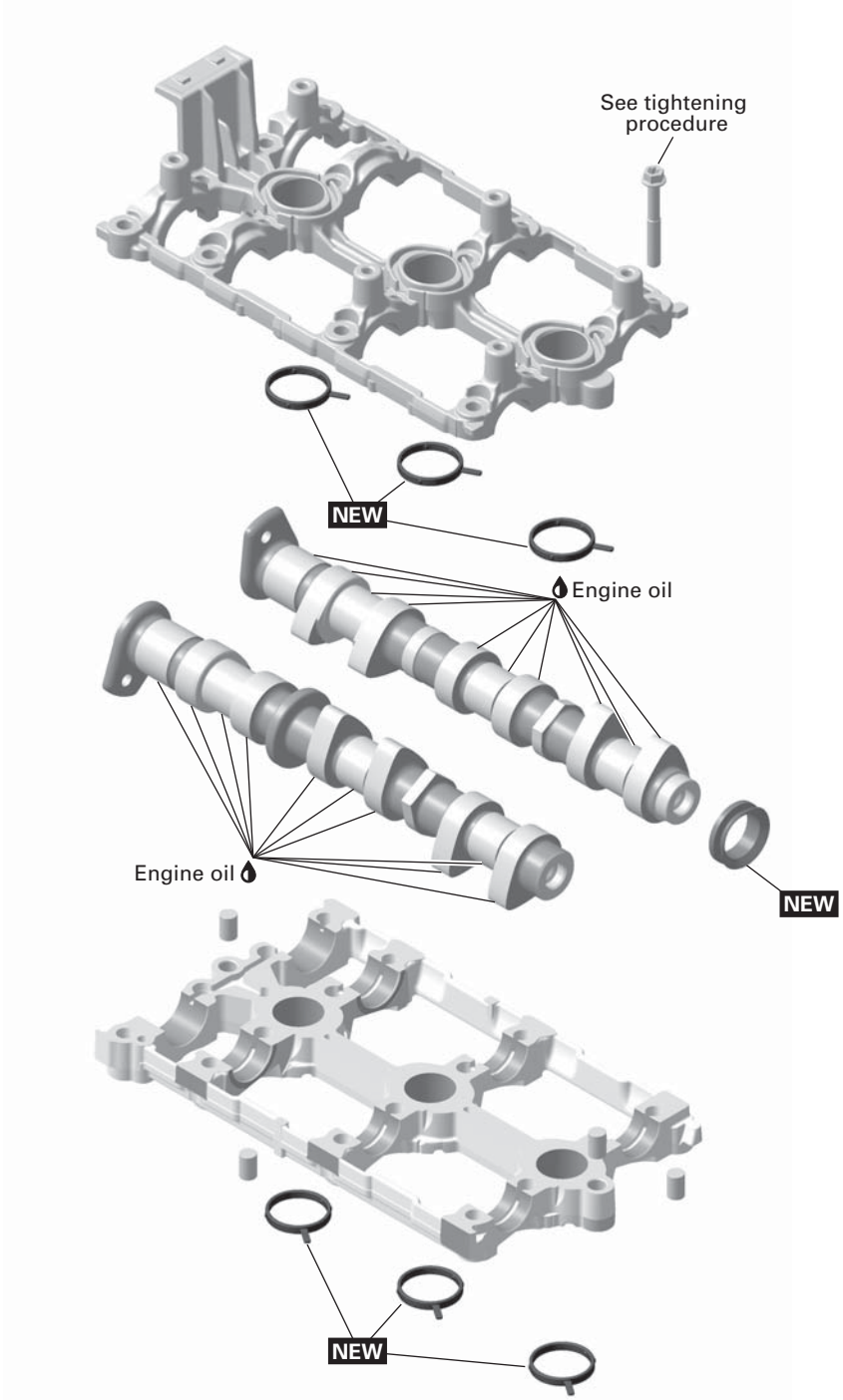


**NEW** = Component must be replaced when removed.

smr2014-020-002_a

# CYLINDER HEAD

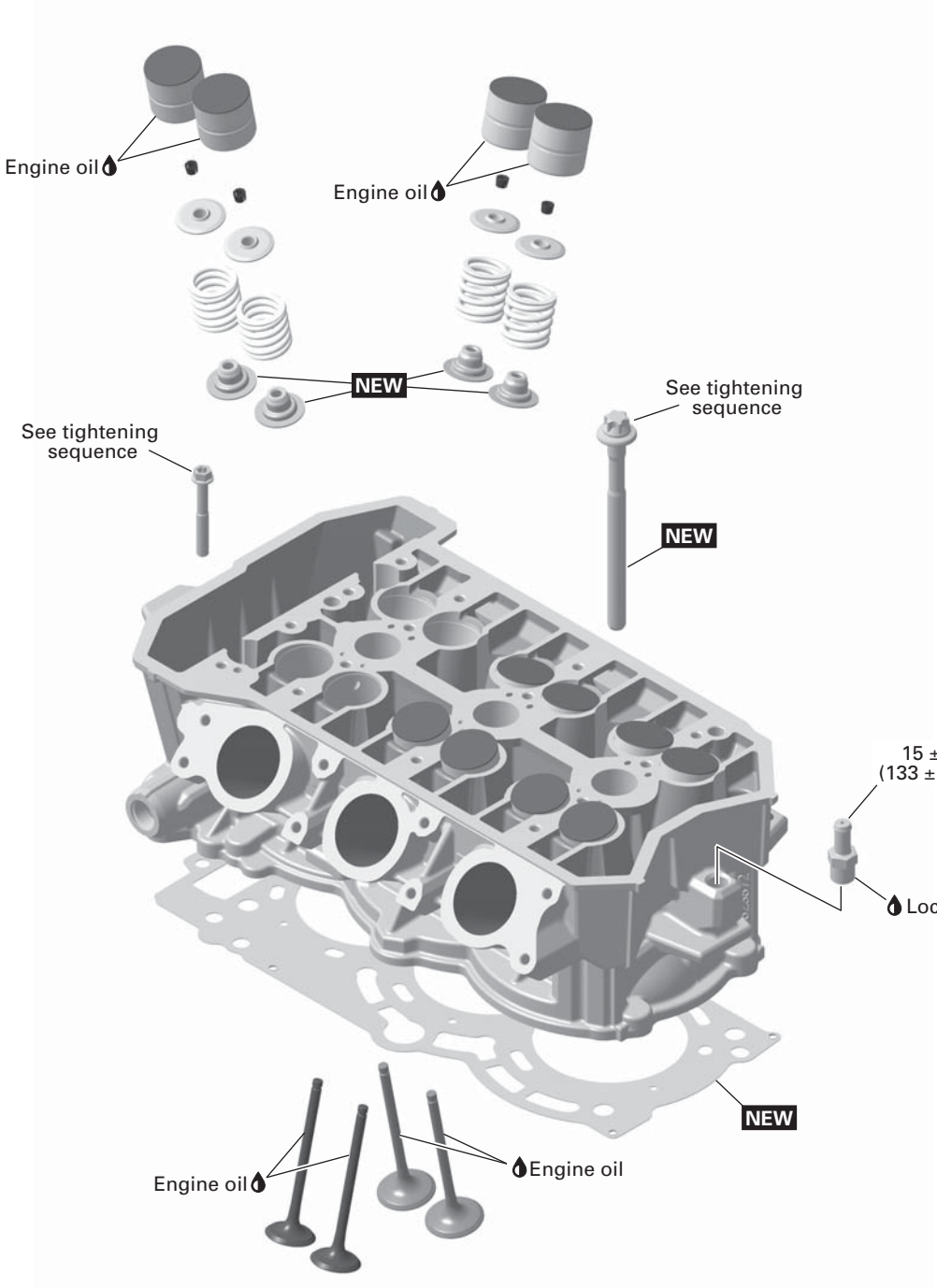


**NEW** = Component must be replaced when removed.

smr2014-020-003_a

# GENERAL

NOTE: For a better understanding, some illustrations are taken with engine out of the vehicle.

Disconnect the battery before working on the engine.

**NOTICE** Always disconnect BLACK (-) cable first and reconnect last.

During assembly/installation, use the torque values and service products as in the exploded views.

Clean threads before applying a threadlocker. Refer to *SELF-LOCKING FASTENERS* and *LOCTITE APPLICATION* at the beginning of this manual for complete procedure.

**⚠ WARNING**

Torque wrench tightening specifications must be strictly adhered to.
Locking devices when removed (e.g.: locking tabs, cotter pin, etc.) must be replaced.

**NOTICE** Hoses, cables or locking ties removed during a procedure must be reinstalled as per factory standards.

When disassembling parts that are duplicated in the engine, (e.g.: valves, springs, etc.), it is strongly recommended to note their position and to keep the parts of the same assembly as a "group". If you find a defective component, it will be much easier to find the cause of the failure. Since parts were break-in together during the engine operation, they will keep their matched fit when parts are reassemble together within their "group".

# INSPECTION

## CYLINDER LEAK TEST

### General

Before performing the cylinder leak test, verify the following:

– Clamp tightness
– Hoses condition.

NOTE: For best accuracy, the leak test should be done with the engine at normal operating temperature.

**⚠ CAUTION** Engine parts could be hot.

NOTE: The following steps are the same for each cylinder.

### Preparation

1. Remove an ignition coil and a spark plug. Refer to *IGNITION COILS AND SPARK PLUGS* subsection.
2. Remove the *VALVE COVER*, see procedure in this subsection.
3. Using the drive pulley, turn the engine counterclockwise to bring piston to TDC of compression stoke. Use a dial gauge or a suitable tool to position the piston to TDC.

NOTE: The piston must be set precisely to TDC of compression stroke. If not, the engine will continue to rotate when pressure builds up.

### Leak Test

1. Install a gauge adaptor into spark plug hole.

| REQUIRED TOOL | |
|---|---|
| ENGINE LEAK DOWN TEST KIT (P/N 529 035 661) | |

2. Connect the leak down tester to an adequate air supply.
3. Set gauge needle to zero.

NOTE: All testers have specific instructions on gauge operation and required pressure. Refer to manufacturer's instructions.

4. Supply combustion chamber with air pressure.
5. Note the amount or percentage of leakage (depending on tester).

| LEAKAGE PERCENTAGE | ENGINE CONDITION |
|---|---|
| 0% to 15% | Excellent condition |
| 16% to 25% | Good condition |
| 26% to 40% | Fair condition; reduced engine performance |
| 41% and higher | Poor condition, diagnose and repair engine |

### Diagnosis

Listen for air leaks.

– Air escaping on intake port or throttle body means leaking intake valve(s).
– Air escaping on exhaust port means leaking exhaust valve(s).

– Air bubbles out of coolant tank means leaking cylinder head gasket.
– Air or coolant escaping from cylinder head means damaged gasket or loosened screws.
– Air escaping into crankcase area means excessively worn cylinder or broken piston rings.
– Air or oil escaping from crankcase means damaged gasket or loosened screws.

### Repair Tips

Blue exhaust gas means damaged or worn piston rings or valve stem seals.

White exhaust gas means damaged cylinder head gasket.

Coolant tank cap opening without overheat means damaged cylinder head gasket.

Leaking valves can be caused by carbon deposits or burnt valve face.

### Assembly

Reverse the preparation procedure.

# TROUBLESHOOTING

Always check for fault codes. If a fault code is detected, service the fault code first. Refer to *DIAGNOSTIC AND FAULT CODES* subsection.

NOTE: When diagnosing an engine problem, always perform the cylinder leak test. This will help pinpoint a problem. Refer to *CYLINDER LEAK TEST* in this subsection.

## UNUSUAL ENGINE NOISE OR VIBRATIONS

1. Discharged or defective valve lifters.
   - *Check engine oil pressure, refer to LUBRICATION SYSTEM subsection.*
   - *Replace valve lifters.*
2. Camshaft(s) or camshaft holder(s) worn out.
   - *Check and replace damaged parts.*
3. Faulty chain tensioner.
   - *Replace chain tensioner. Refer to TIMING CHAIN subsection.*
4. Chain guide(s) worn out.
   - *Replace chain guide(s). Refer to TIMING CHAIN subsection.*
5. Stretched timing chain or worn out sprockets.
   - *Replace timing chain and sprockets. Refer to TIMING CHAIN subsection.*
6. Loose timing chain gear screws.
   - *Retighten screws with recommended torque.*
7. Incorrect camshaft timing.
   - *Replace damaged components and readjust camshaft timing.*

## OIL LEAKAGE FROM CYLINDER HEAD

1. Leaking valve cover gasket.
   - *Replace valve cover gaskets and retighten valve cover with recommended torque.*
   - *Check valve cover for cracks or other damage.*
2. Leaking spark plug tube O-rings.
   - *Replace spark plug tube O-rings.*
   - *Clean spark plug area from oil spillage.*
3. Blow-by connector is leaking.
   - *Replace blow by connector O-ring.*
4. Leaking cylinder head gasket.
   - *Check cylinder head for damage.*
   - *Replace cylinder head gasket and retighten screws with recommended torquing procedure.*

## ENGINE SUDDENLY TURNS OFF OR LACKS ACCELERATION OR POWER

1. Incorrect camshaft timing.
   - *Replace damaged components and readjust camshaft timing.*
2. Leaking intake or exhaust valves.
   - *Perform a CYLINDER LEAK TEST. Repair or replace damaged components.*
3. Broken valve spring(s).
   - *Replace defective parts.*

# PROCEDURES

## VALVE COVER

### Removing the Valve Cover

1. Remove the upper body module. Refer to *BODY* subsection.
2. Remove pulley guard.
3. Remove the exhaust manifold.
4. Disconnect vent tube from the blow-by connector.

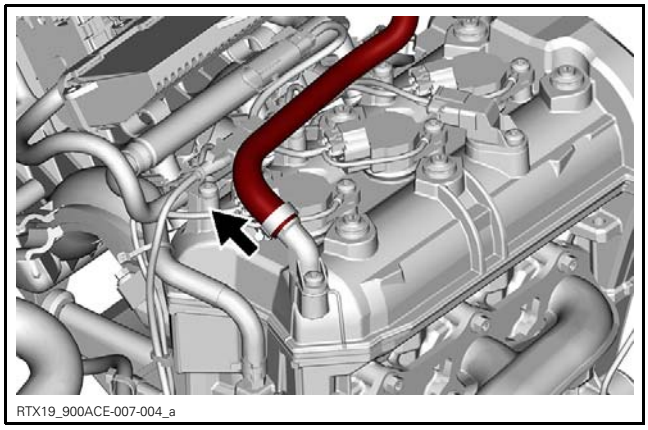
RTX19_900ACE-007-004_a

5. Unplug CAPS (camshaft position sensor).
6. Unplug ignition coils.

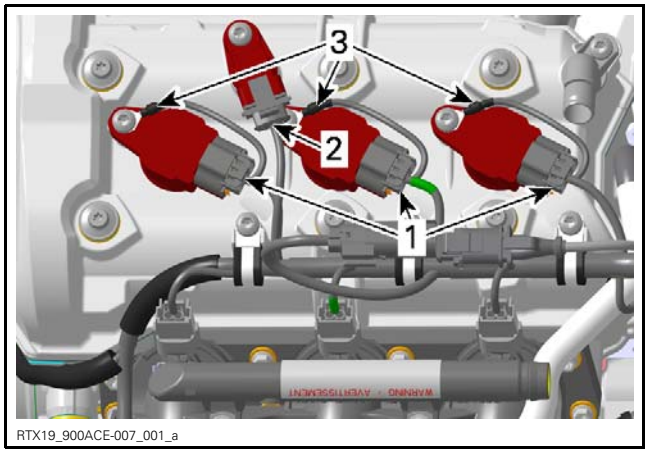

RTX19_900ACE-007_001_a

1. *Ignition coil connectors*
2. *CAPS connector*
3. *Ground wires*

7. Remove ignition coils with gaskets.

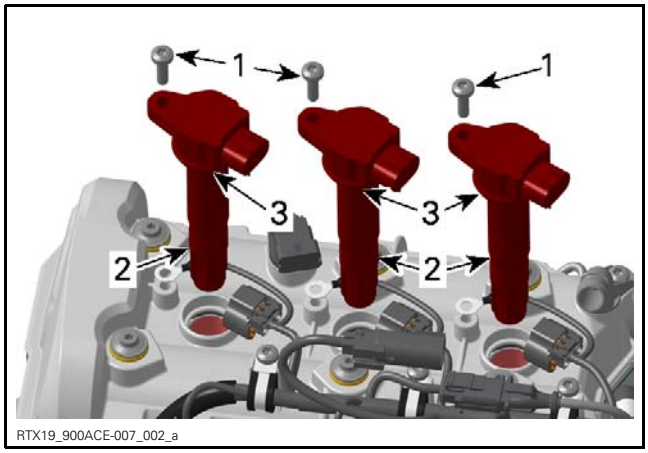

RTX19_900ACE-007_002_a

1. *Retaining screws*
2. *Ignition coils*
3. *Gaskets*

8. Remove screws securing the electrical harness to the valve cover.

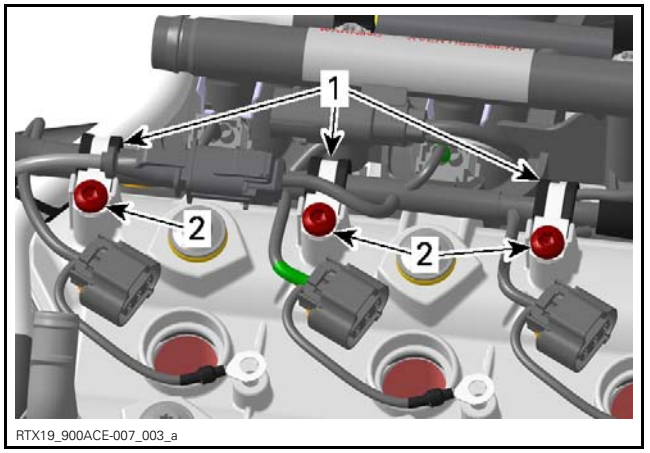

RTX19_900ACE-007_003_a

1. *Cable clamps*
2. *Retaining screws*

9. Remove valve cover retaining screws.

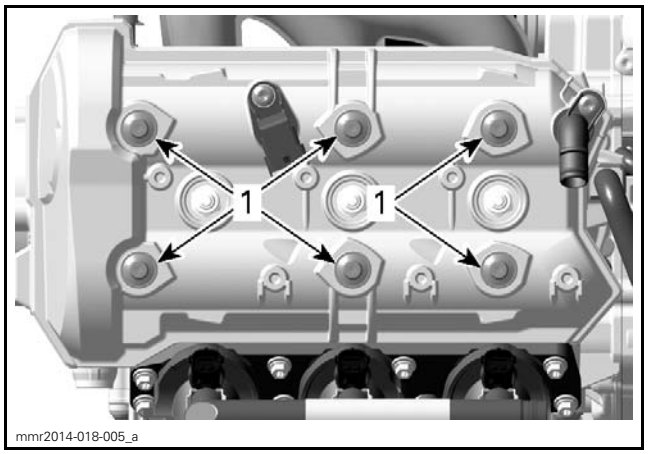

mmr2014-018-005_a

1. *Valve cover screws*

10. Lift and tilt valve cover with gasket towards front of engine.

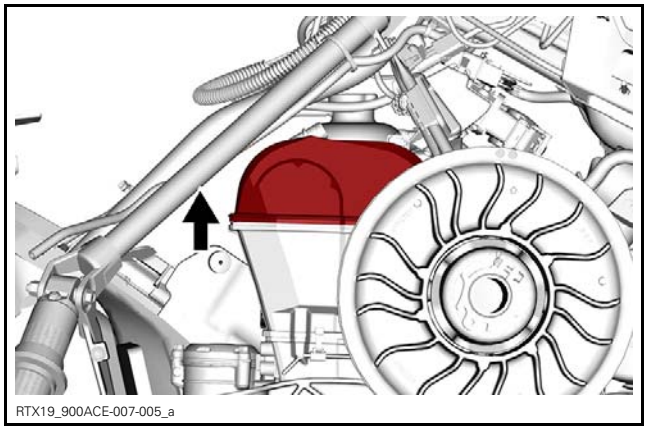
RTX19_900ACE-007-005_a

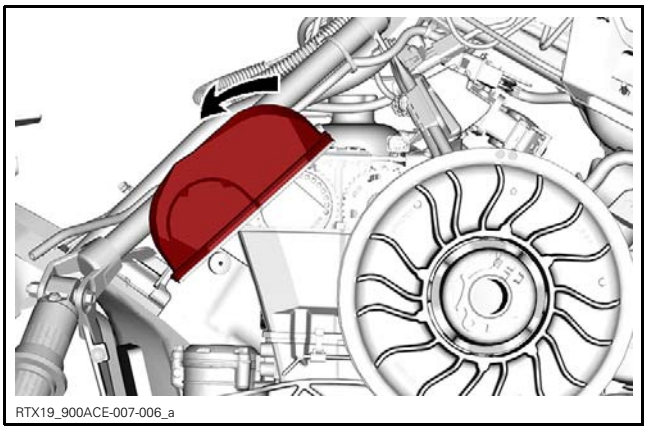
RTX19_900ACE-007-006_a

11. Pull valve cover and gasket out through LH side of vehicle.

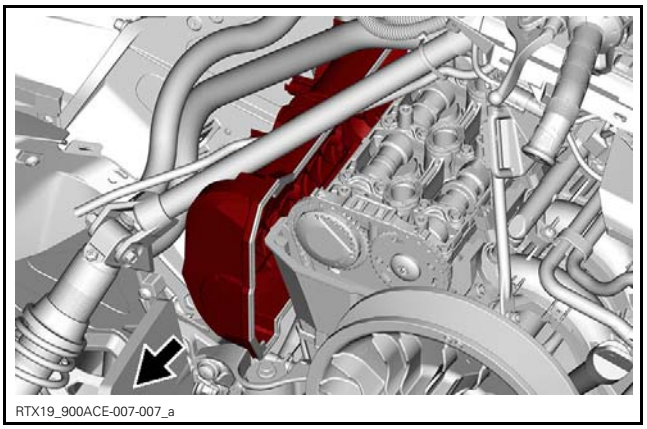
RTX19_900ACE-007-007_a

12. Remove the small valve cover gaskets (spark plug holes).

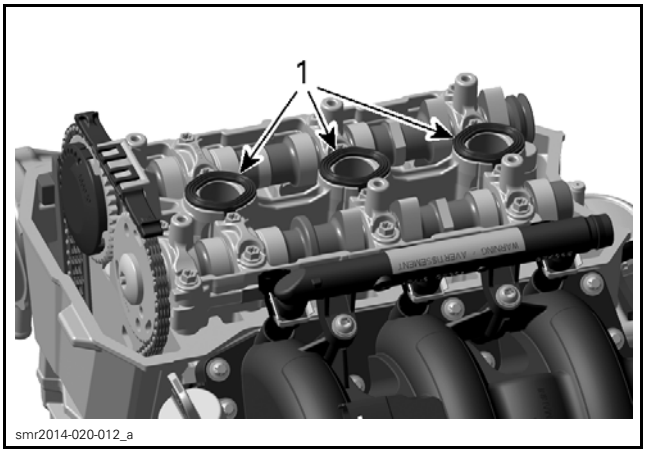

smr2014-020-012_a

*1. Small gaskets*

## Inspecting the Valve Cover

Check the valve cover for cracks or other damage.

Replace defective parts.

## Installing the Valve Cover

For installation reverse the removal procedure. However, pay attention to the following details.

1. Properly fit the NEW small gaskets into the camshaft holder grooves.
2. Properly lay the NEW large gasket onto the cylinder head flat surface.
3. Apply engine oil to the sealing surface of the V-ring.

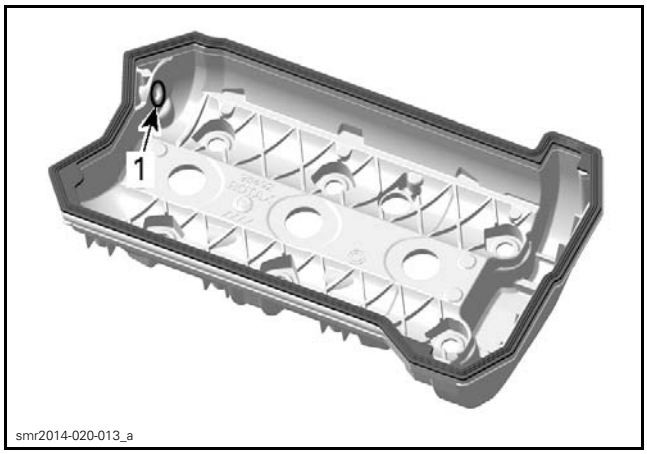

smr2014-020-013_a

*INSIDE VALVE COVER*
*1. Apply engine oil here*

4. Install valve cover.

**NOTICE** **Adhere to the following procedure, otherwise damage to the V-ring will occur causing crankcase venting malfunction.**

4.1 Move the valve cover towards the MAG side.

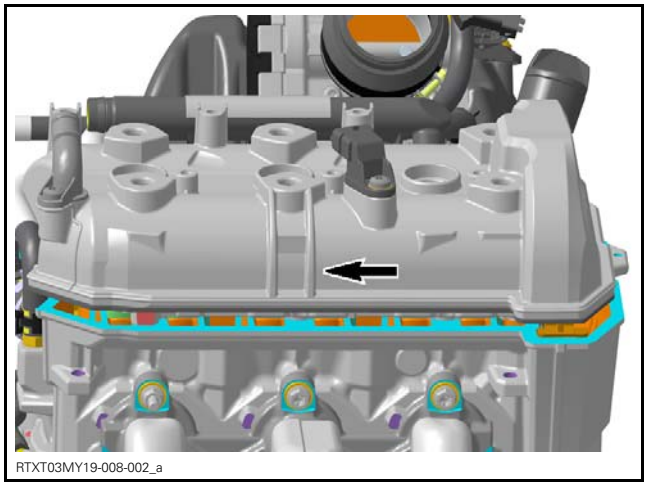
RTXT03MY19-008-002_a

4.2 Put valve cover onto cylinder head.

**NOTICE** **Make sure the valve cover gasket is well positioned in the cover groove.**

4.3 Push valve cover towards the PTO side to ensure that the V-ring properly seals on sealing surface inside the cover.

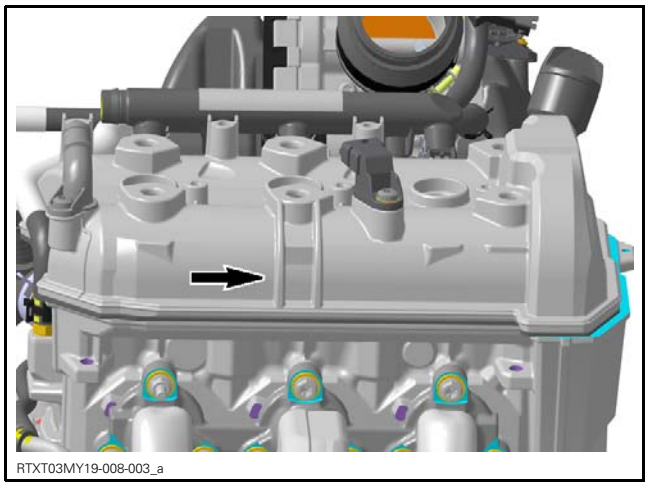
RTXT03MY19-008-003_a

5. Install valve cover screws and tighten as per following sequence:

| TIGHTENING TORQUE | | |
|---|---|---|
| Valve cover screw | Step A | 9 N•m ± 1 N•m (80 lbf•**in** ± 9 lbf•**in**) |
| | Step B | 9 N•m ± 1 N•m (80 lbf•**in** ± 9 lbf•**in**) |

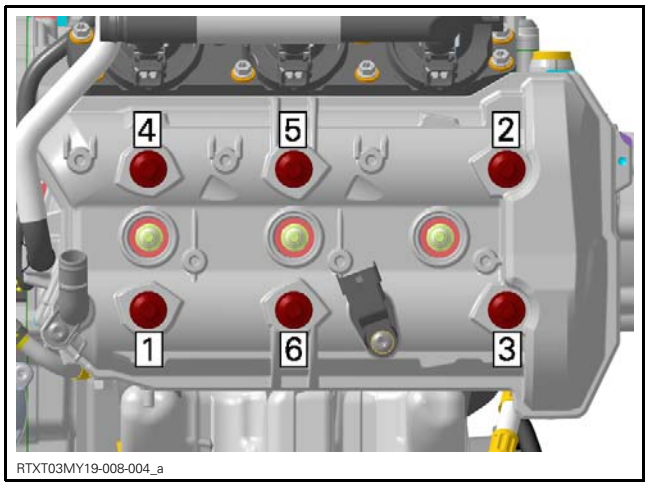

RTXT03MY19-008-004_a

*TIGHTENING SEQUENCE*

# CAMSHAFTS

## Removing the Camshaft

1. Remove *VALVE COVER*, see procedure in this subsection.
2. Lock crankshaft, refer to *CRANKSHAFT LOCKING PROCEDURE* in the *CYLINDER BLOCK* subsection.

Remove timing chain tensioner. Refer to *TIMING CHAIN* subsection.

3. Remove:

3.1 Breather cover

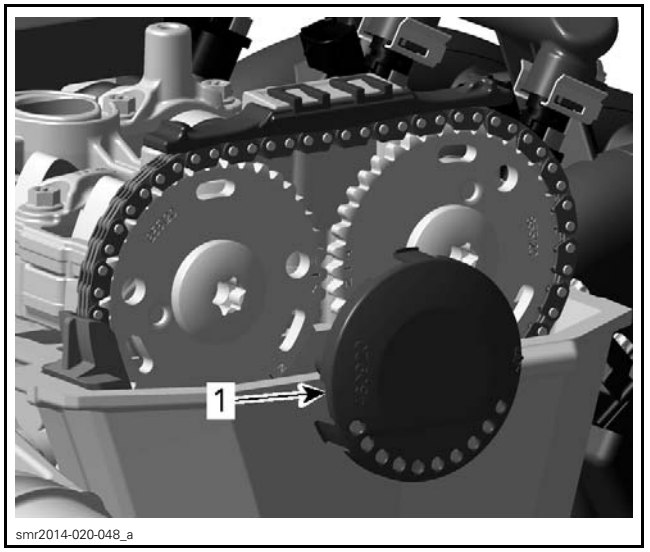

smr2014-020-048_a

*1. Breather cover*

3.2 Upper timing chain guide

3.3 Timing chain guide.

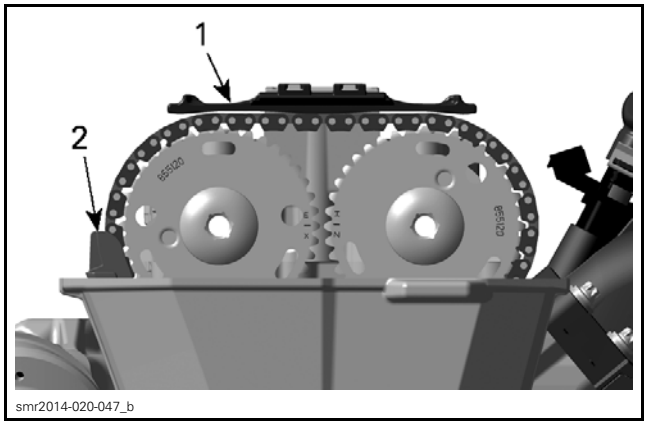

smr2014-020-047_b

*1. Upper timing chain guide*
*2. Timing chain guide*

4. Remove timing chain from camshaft timing gears.
5. Remove camshaft holder retaining screws (x16).

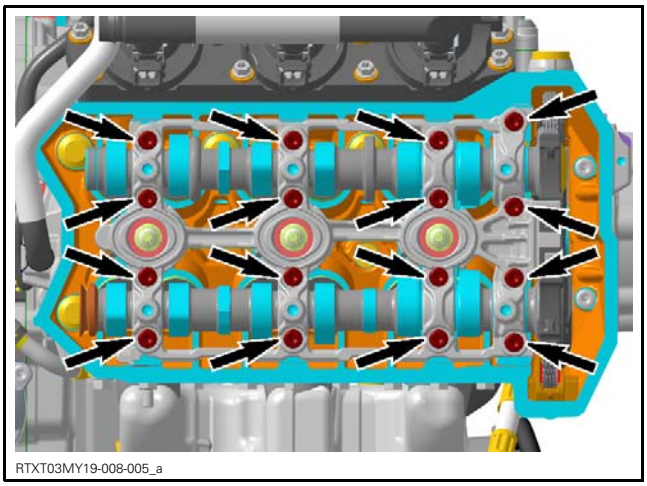
RTXT03MY19-008-005_a

6. Remove the camshaft holder upper half.

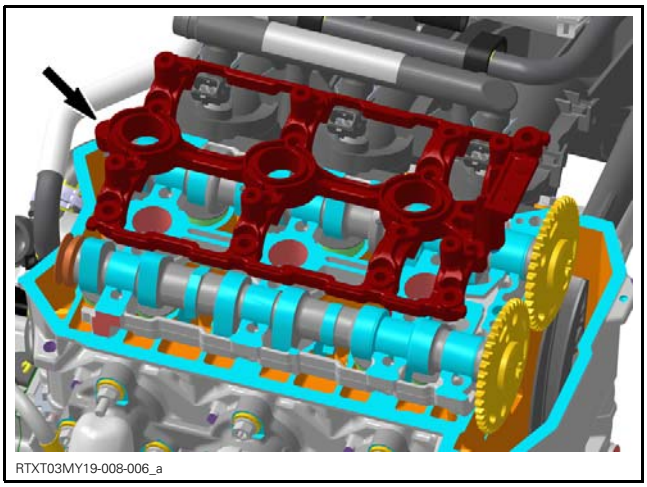
RTXT03MY19-008-006_a

7. Put timing chain aside.
8. Remove camshafts with timing gears.

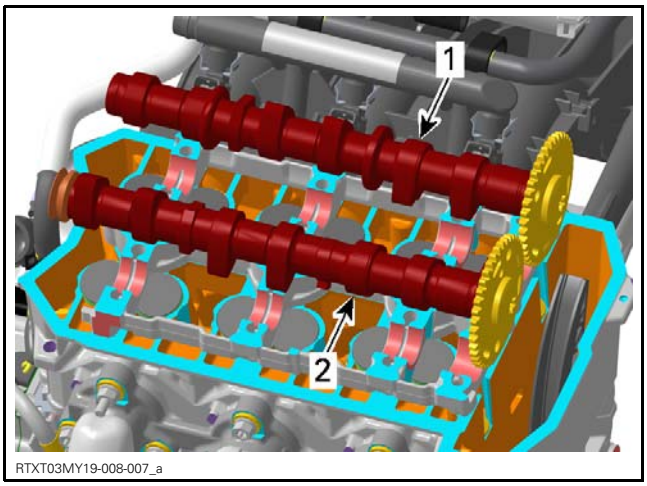

RTXT03MY19-008-007_a

*1. Intake camshaft*
*2. Exhaust camshaft*

9. Remove camshaft timing gears only if necessary. Refer to *TIMING CHAIN* subsection.

## Inspecting the Camshaft

1. Check each lobe and bearing journal for scoring, scuffing, cracks, or other signs of wear.
2. Check V-ring if it is brittle, hard or otherwise damaged.
3. Measure camshaft bearing journal diameter and lobe height, using a micrometer.

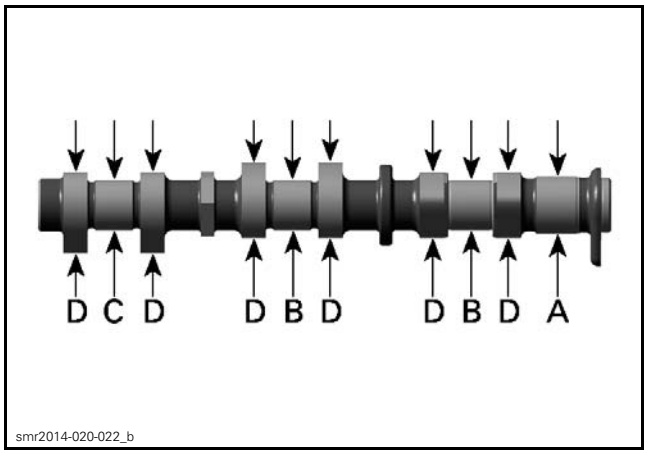

smr2014-020-022_b

*A. Camshaft journal (PTO)*
*B. Camshaft journal (center)*
*C. Camshaft journal (MAG)*
*D. Camshaft lobes*

| CAMSHAFT JOURNAL DIAMETER | | |
|---|---|---|
| PTO journal (A) | New | 25.967 mm to 25.980 mm (1.0223 in to 1.0228 in) |
| | Service limit | 25.940 mm (1.0213 in) |
| Center journals (B) | New | 22.957 mm to 22.970 mm (.9038 in to .9043 in) |
| | Service limit | 22.930 mm (.9028 in) |
| MAG journal (C) | New | 22.967 mm to 22.980 mm (.9042 in to .9047 in) |
| | Service limit | 22.940 mm (.9031 in) |

| CAMSHAFT LOBE HEIGHT | | |
|---|---|---|
| Exhaust and Intake Camshaft (D) | New | 37.40 mm to 37.60 mm (1.472 in to 1.48 in) |
| | Service limit | 38.38 mm (1.511 in) |

Replace parts if necessary.

For camshaft journal radial clearance and camshaft holder bearing diameter refer to *CAMSHAFT HOLDER* in this subsection.

4. Check timing chain guide for wear, cracks or deformation. Replace as required.

5. Replace timing chain guide if any groove caused by timing chain exceeds service limit.

| CHAIN GUIDE GROOVE DEPTH | |
|---|---|
| SERVICE LIMIT | 1 mm (.039 in) |

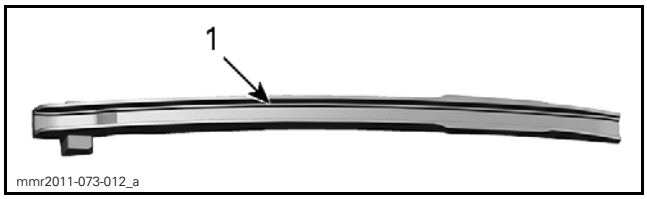


*1. Timing chain guide*

## Installing the Camshaft

The assembly is the reverse of the removal procedure. However pay attention to the following details.

1. Ensure crankshaft is still locked.
2. Apply engine oil on camshaft bearings.

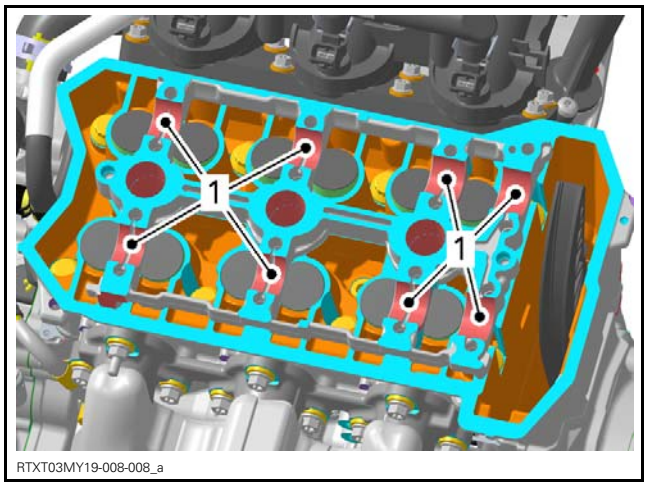


*1. Areas where to apply engine oil*

**NOTE:** The camshafts are not identical. Any mix-up of the components would lead to engine damage. The exhaust camshaft has a machined area on MAG side for the V-ring.

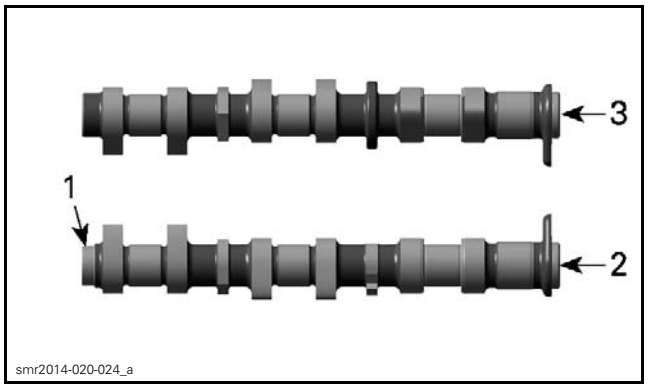


*1. Machined area*
*2. Exhaust camshaft*
*3. Intake camshaft*

3. If removed, reinstall camshaft timing gears on camshafts. Refer to *CAMSHAFT TIMING GEARS* in the *TIMING CHAIN* subsection.
4. Apply engine oil on camshaft journal diameter.
5. Install exhaust camshaft assembly with mark "EX" parallel to cylinder head gasket.

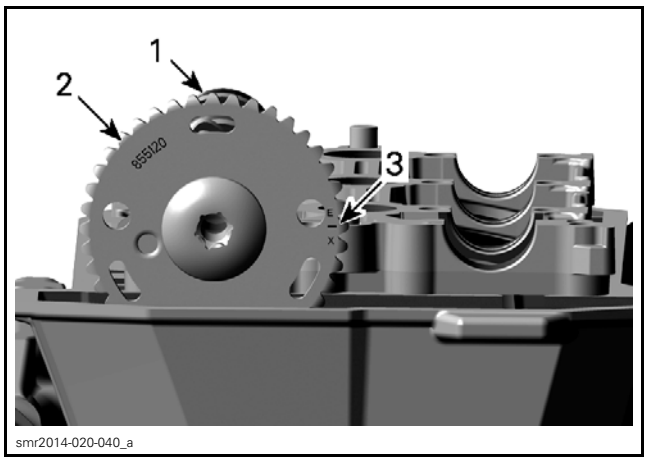


*1. Exhaust camshaft*
*2. Camshaft timing gear*
*3. Mark "EX"*

6. Install intake camshaft assembly with mark "IN" parallel to cylinder head gasket.

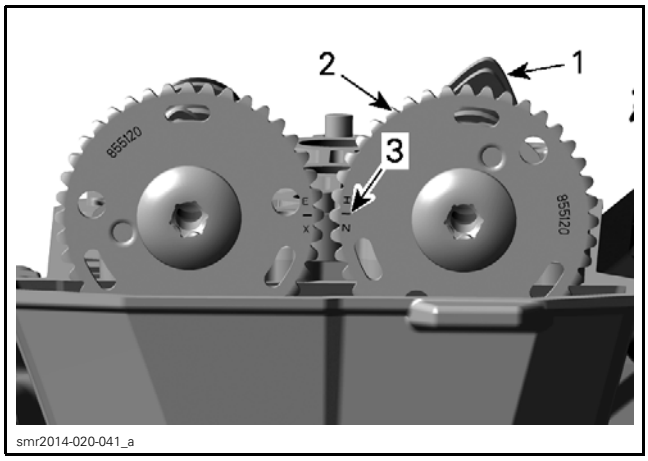

smr2014-020-041_a

1. *Intake camshaft*
2. *Camshaft timing gear*
3. *Mark "IN"*

7. Install the camshaft holder upper half, then tighten screws as per following sequence:

| TIGHTENING TORQUE | | |
|---|---|---|
| Camshaft holder | Step A | 5 N•m ± 0.5 N•m (44 lbf•**in** ± 4 lbf•**in**) |

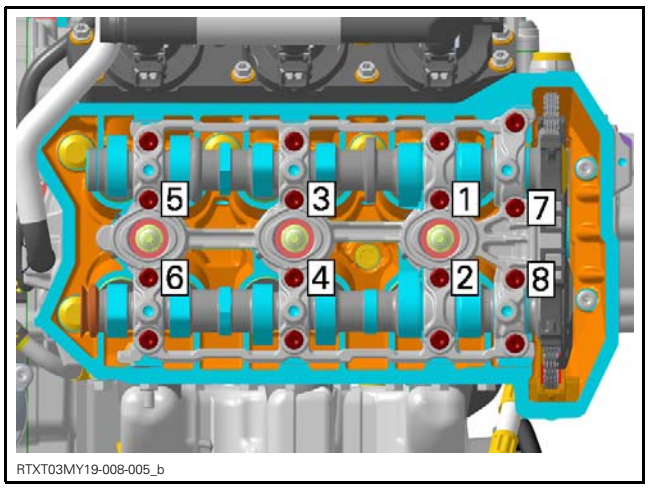

RTXT03MY19-008-005_b

*CAMSHAFT HOLDER TIGHTENING SEQUENCE - STEP A*

| TIGHTENING TORQUE | | |
|---|---|---|
| Camshaft holder | Step B | 9 N•m ± 1 N•m (80 lbf•**in** ± 9 lbf•**in**) |

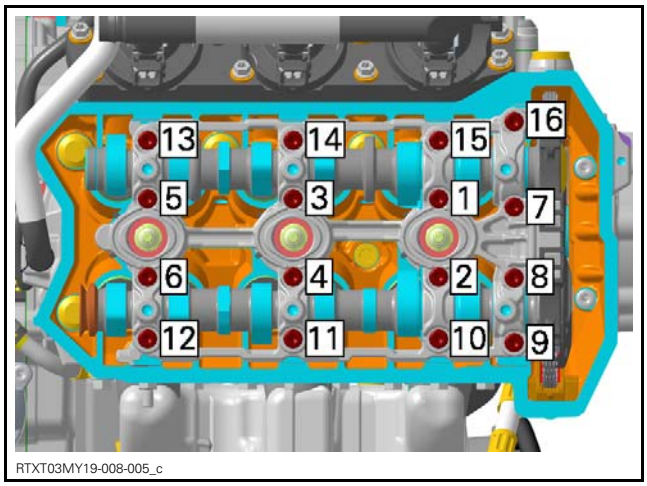

RTXT03MY19-008-005_c

*CAMSHAFT HOLDER TIGHTENING SEQUENCE - STEP B*

NOTE: After the reassembly of the camshafts is completed, check if camshafts can be turned easily.

8. Lock camshafts.

| REQUIRED TOOL | |
|---|---|
| CAMSHAFT LOCKING TOOL (P/N 529 036 206) | |

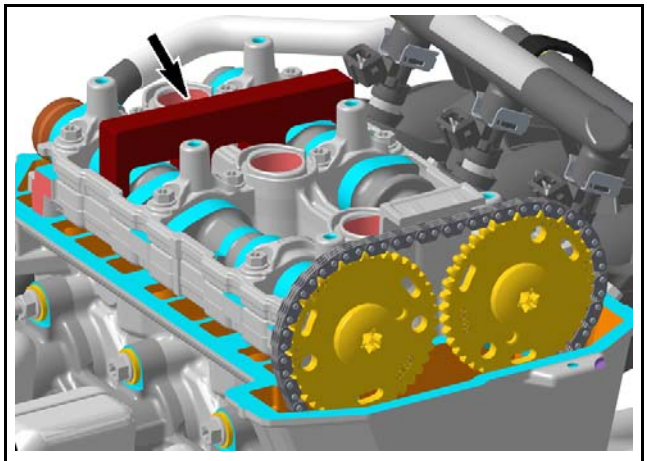
RTXT03MY19-008-009_a

9. Lift timing chain out of timing chain compartment.
10. Pull timing chain up on exhaust side and install it on the exhaust camshaft timing gear.

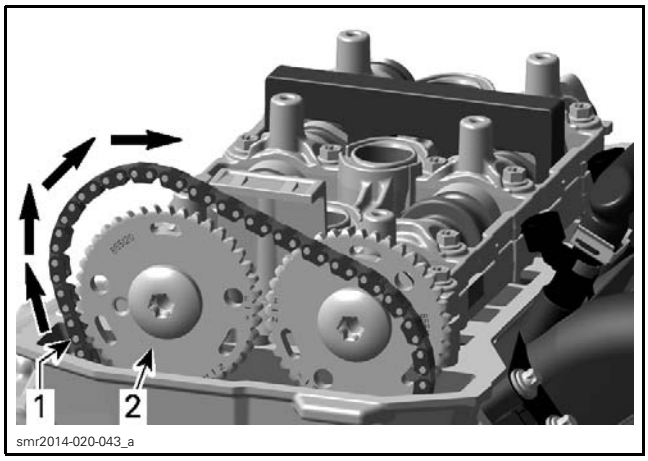


*1. Timing chain*
*2. Exhaust camshaft timing gear*

11. Pull timing chain towards intake side and install it on the intake camshaft timing gear.

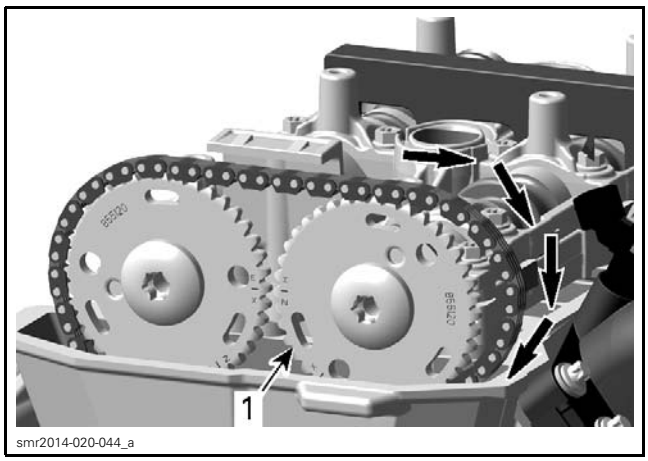


*1. Intake camshaft timing gear*

12. Install timing chain guide.

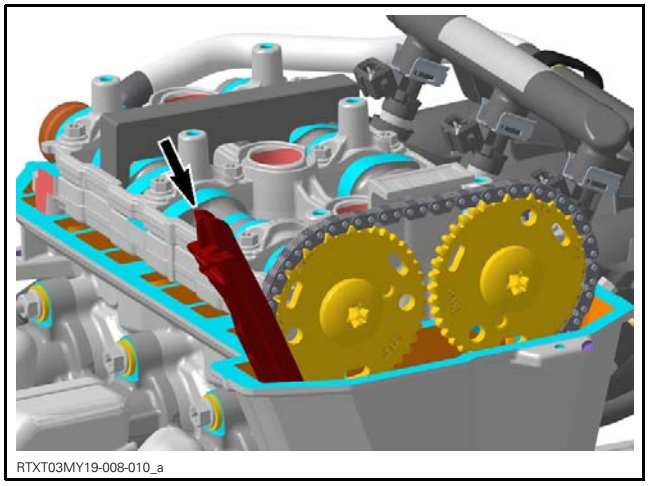


13. Install upper timing chain guide on camshaft holder.

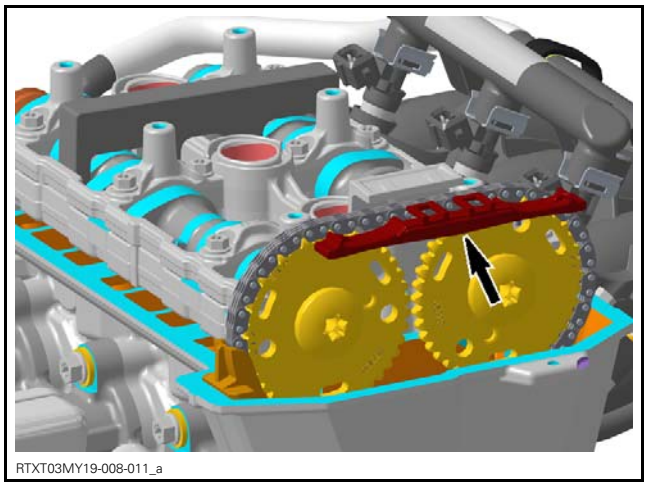


14. Install *TIMING CHAIN TENSIONER*, refer to *TIMING CHAIN* subsection.
15. Ensure marks on camshaft timing gears are still aligned. If not, repeat procedure.

**NOTICE** **After installation of timing chain tensioner, the marks "IN" on intake and "EX" on exhaust camshafts must be aligned.**

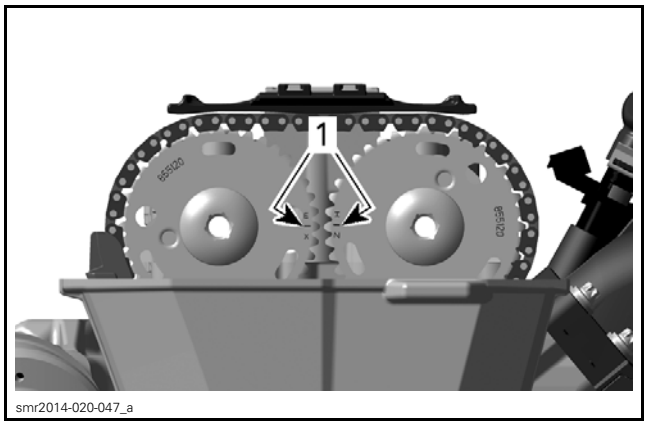


*CAMSHAFT TIMING GEARS*
*1. Marks must be aligned*

16. Install breather cover.

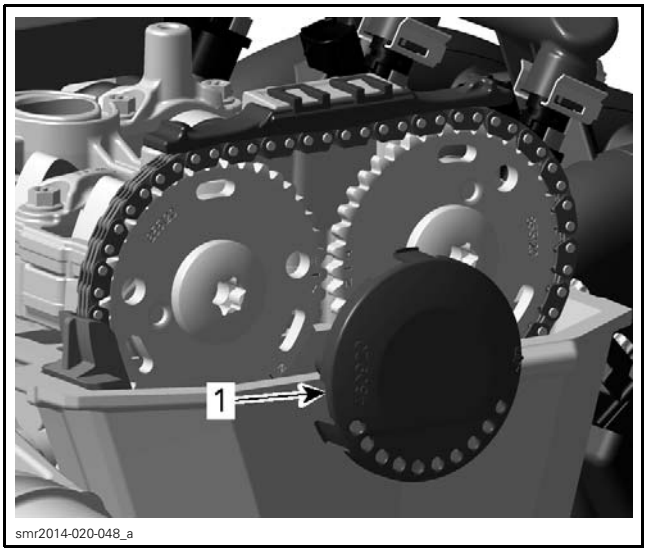


*1. Breather cover*

17. Remove camshaft locking tool.

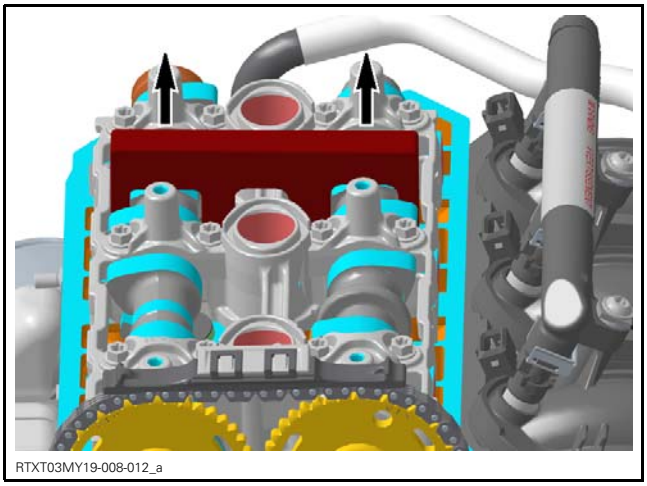


*1. Camshaft locking tool removal*

18. Remove crankshaft locking tool.

# CAMSHAFT HOLDER

## Removing the Camshaft Holder

Remove camshafts, see procedure in this subsection.

Remove the camshaft holder lower half with gaskets from cylinder head.

Remove and discard gaskets from camshaft holder halves.

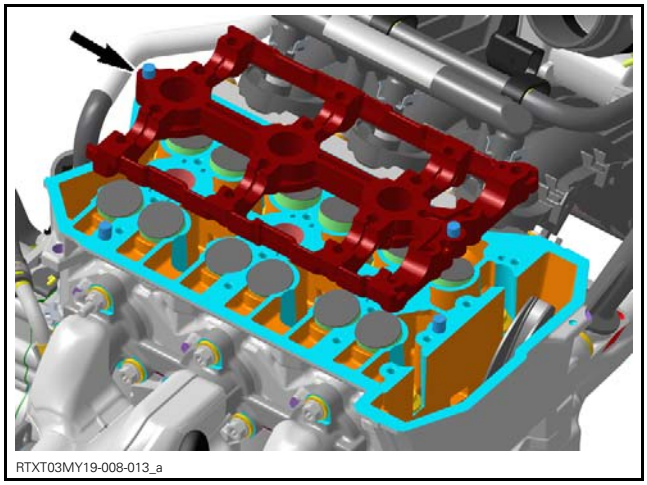


## Inspecting the Camshaft Holder

1. Check camshaft holder for scoring, scuffing, cracks, or other signs of wear.
2. Make sure oil orifices are not clogged. Blow them out with pressurized air.

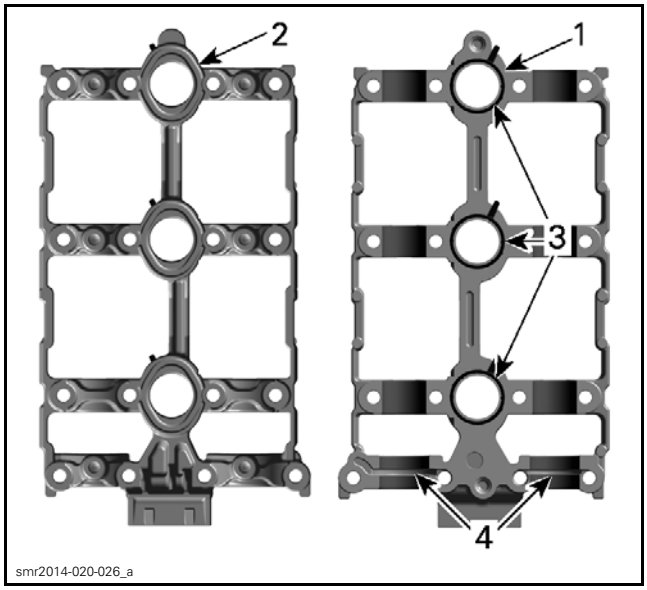


*1. Camshaft holder upper half - view from beneath*
*2. Camshaft holder upper half - view from above*
*3. Gaskets*
*4. Oil orifices*

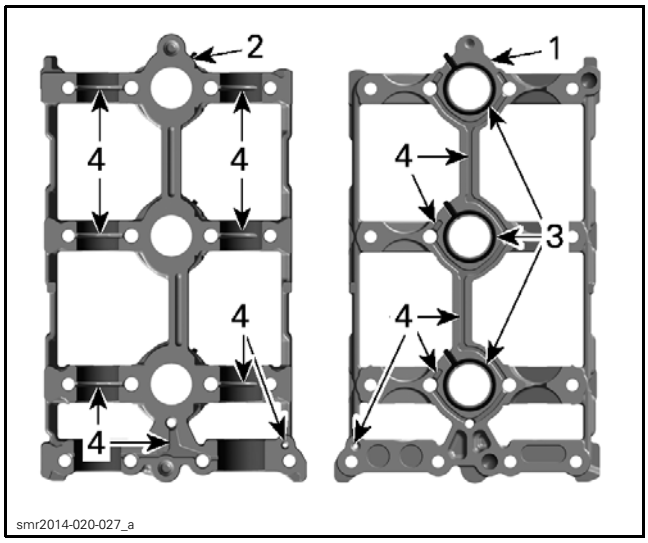


1. *Camshaft holder lower half - view from beneath*
2. *Camshaft holder lower half - view from above*
3. *Gaskets*
4. *Oil orifices*

Install camshaft holder on cylinder head.

Tighten camshaft holder screws to specification, refer to *INSTALLING THE CAMSHAFT* in this subsection.

Measure camshaft holder bearing diameter.

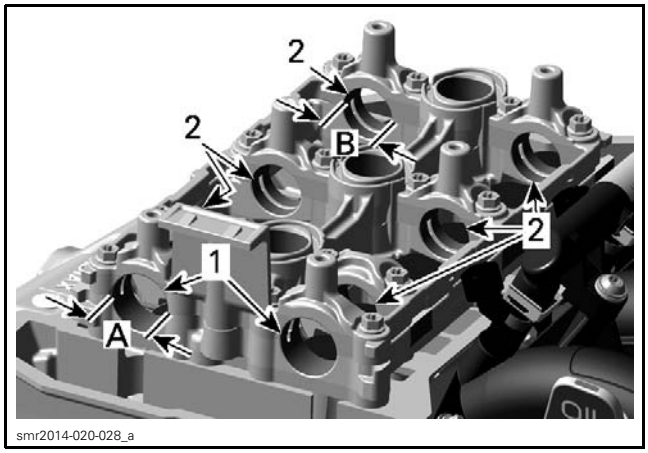


*CAMSHAFT HOLDER BEARINGS*
1. *PTO bearings*
2. *Center and MAG bearings*

*A. Diameter PTO bearing*
*B. Diameter center and MAG bearing*

| CAMSHAFT HOLDER BEARING DIAMETER | | |
|---|---|---|
| PTO bearing | New | 26.000 mm to 26.021 mm (1.024 in to 1.024 in) |
| | Service limit | 26.050 mm (1.026 in) |
| Center and MAG bearings | New | 23.000 mm to 23.021 mm (.906 in to .906 in) |
| | Service limit | 23.050 mm (.907 in) |

Measure clearance between camshaft journals and camshaft holder, using the plastic feeler gauge.

NOTE: The plastic feeler gauge is available at automotive parts retailer.

Install camshaft holder lower half on cylinder head.

Place the camshafts in the camshaft holder lower half and apply a plastic-gauge on the camshaft bearing journal.

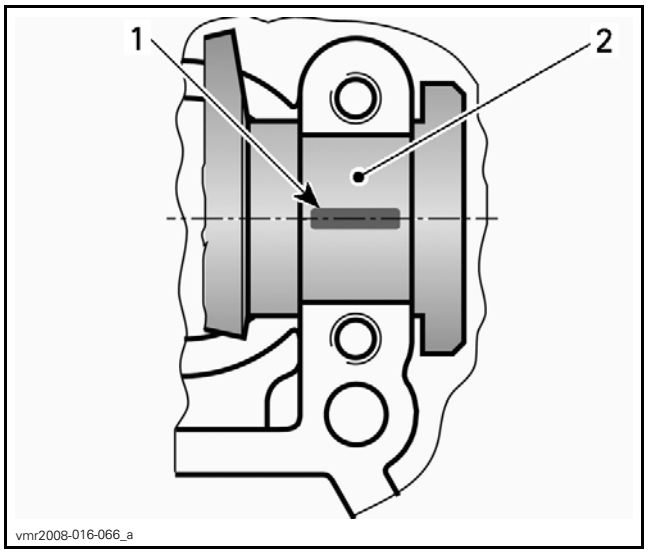


*TYPICAL*
1. *Plastic gauge*
2. *Camshaft bearing journal*

Install camshaft holder upper half in the proper position and tighten screws to specification, refer to *INSTALLING THE CAMSHAFT* in this subsection.

Unfasten camshaft holder.

Measure the maximum width of the pressed plastic gauge with the corresponding graduated scale.

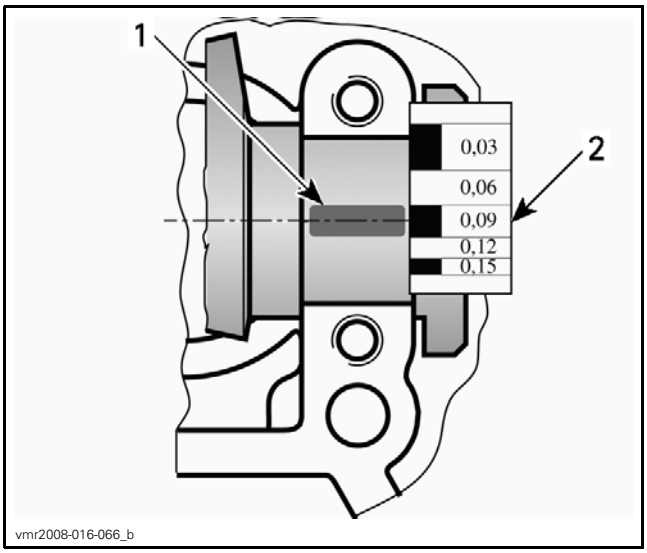


*TYPICAL*
1. *Pressed plastic gauge*
2. *Graduated scale*

| CAMSHAFT JOURNAL RADIAL CLEARANCE | | |
|---|---|---|
| PTO AND MAG BEARING | New | 0.020 mm to 0.054 mm (.001 in to .002 in) |
| | Service limit | 0.080 mm (.003 in) |
| CENTER BEARING | New | 0.03 mm to 0.064 mm (.001 in to .003 in) |
| | Service limit | 0.090 mm (.004 in) |

Replace parts if necessary.

## Installing the Camshaft Holder

Install camshaft holder lower half.

Continue procedure as explained in *INSTALLING THE CAMSHAFT* in this subsection.

# HYDRAULIC VALVE LIFTERS

## Removing the Hydraulic Valve Lifter

NOTE: Hydraulic valve lifter are maintenance free.

See procedures in this subsection to remove:
- Valve cover
- Camshafts
- Camshaft holder.

Pull hydraulic valve lifter off the cylinder head.

NOTE: When disassembling the hydraulic valve lifter, it is strongly recommended to note their original position.

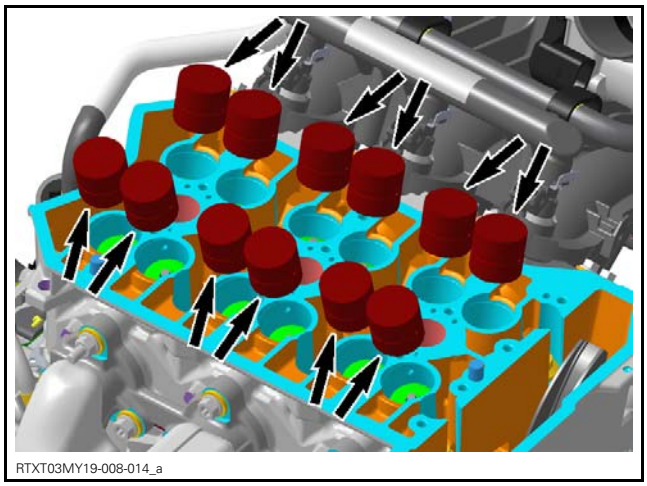


## Inspecting the Hydraulic Valve Lifter

1. Check surface of hydraulic valve lifter for scoring or other damage.
2. Measure valve lifter diameter. Replace if out of specification.

| HYDRAULIC VALVE LIFTER | |
|---|---|
| New | 28.354 mm to 28.370 mm (1.1163 in to 1.1169 in) |
| Service limit | 28.340 mm (1.1157 in) |

| HYDRAULIC VALVE LIFTER RADIAL CLEARANCE | |
|---|---|
| Service limit | 0.100 mm (.0039 in) |

## Installing the Hydraulic Valve Lifter

For installation reverse the removal procedure. However pay attention to the following details.

1. Apply engine oil on the outside diameter of the hydraulic valve lifter.

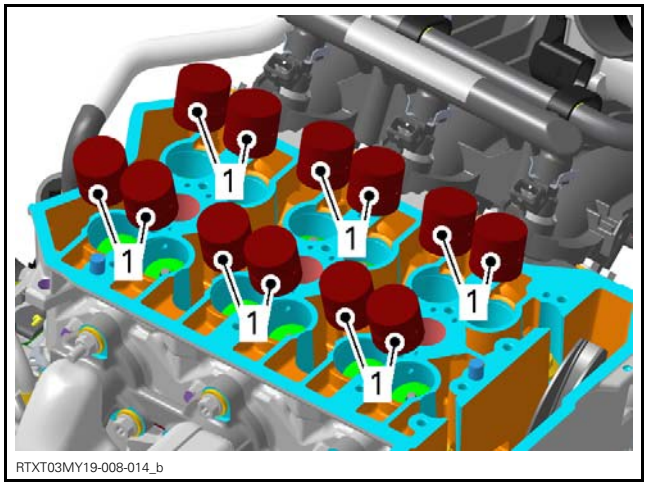


1. *Apply engine oil on outer diameter*

# CYLINDER HEAD

## Removing the Cylinder Head

1. Remove the engine from the vehicle. Refer to *ENGINE REMOVAL AND INSTALLATION* subsection.
2. Remove the following components, see procedures in this subsection.
   - Valve cover
   - Camshafts
   - Camshaft holder
   - Hydraulic valve lifters.
3. Remove M6 cylinder head screws.

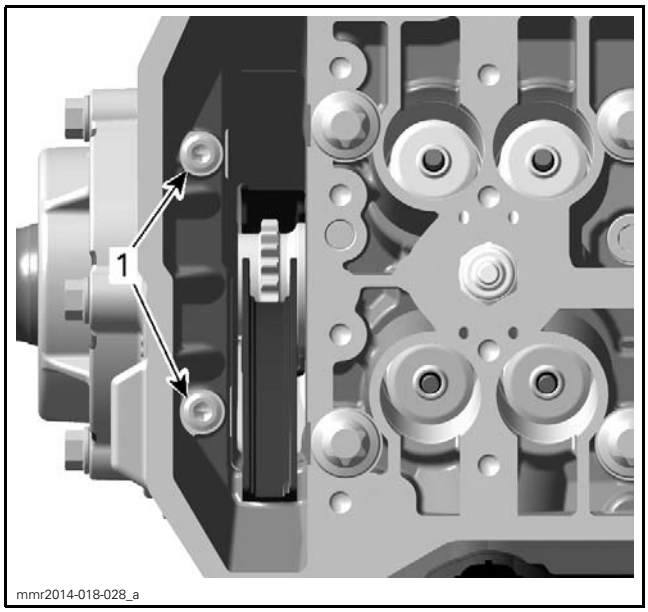


*1. Remove M6 cylinder head screws*

4. Remove and discard M9 cylinder head screws.

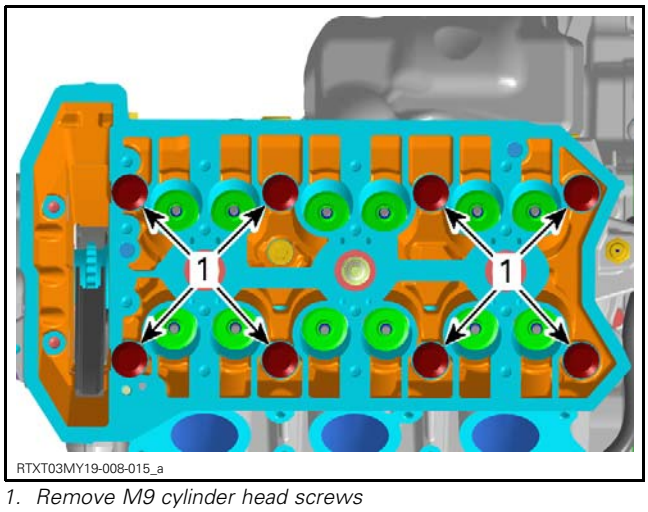


*1. Remove M9 cylinder head screws*

5. Pull cylinder head off the cylinder block.
6. Remove and discard cylinder head gasket.

## Cleaning the Cylinder Head

1. Remove carbon deposits from combustion chambers, exhaust ports and piston tops.
2. Clean cylinder head, especially cylinder head screw surface from oil spillage.
3. Blow out the oil orifices with pressurized air and make sure they are not clogged.

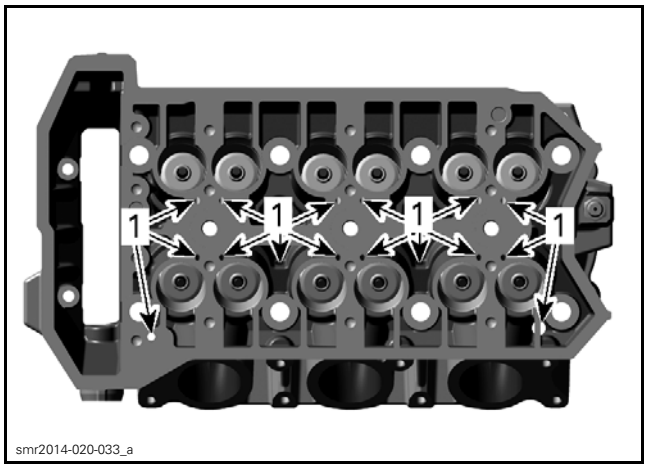


*1. Oil orifices*

## Inspecting the Cylinder Head

Check for cracks between valve seats or other damage, if so, replace cylinder head.

Check cylinder head mating surface for flatness using a straight edge.

Check hydraulic valve lifter bores for scoring or other damage, if so, replace cylinder head.

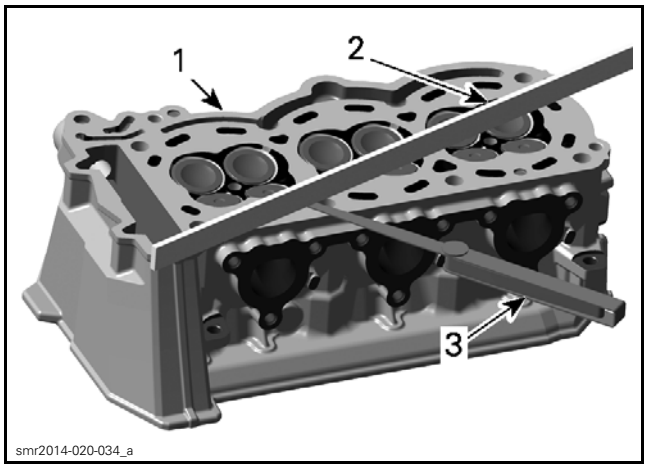


*1. Cylinder head*
*2. Straight edge*
*3. Feeler gauge*

Check cylinder head warpage.

| CYLINDER HEAD WARPAGE | |
|---|---|
| SERVICE LIMIT | 0.15 mm (.0059 in) |

If warpage exceeds specification, resurface the cylinder head as follows.

Use a 400 - 600 grit wet sandpaper on a surface plate and gently grind off the mating surface.

NOTE: To ensure an even surface, rotate cylinder head several times during resurfacing.

Replace cylinder head, if resurfacing fails.

## Installing the Cylinder Head

For installation, reverse the removal procedure. However, pay attention to the following details.

1. Install a **NEW** cylinder head gasket.

***NOTICE*** **Each installation of the cylinder head requires a NEW cylinder head gasket. Using a gasket twice would cause engine damage.**

2. Install cylinder head on the cylinder block.
3. Install **NEW** M9 cylinder head screws.

***NOTICE*** **This assembly uses stretch screws. Always use NEW screws and strictly adhere to the tightening procedure.**

4. Tighten cylinder head screws as follows:

NOTE: Always perform step A on all M9 cylinder head screws before going to the step B.

| TIGHTENING PROCEDURE | | |
|---|---|---|
| Cylinder head M9 screws | Step A | 20 N•m ± 2 N•m (15 lbf•ft ± 1 lbf•ft) |
| | Step B | Additional 150° ± 5° |

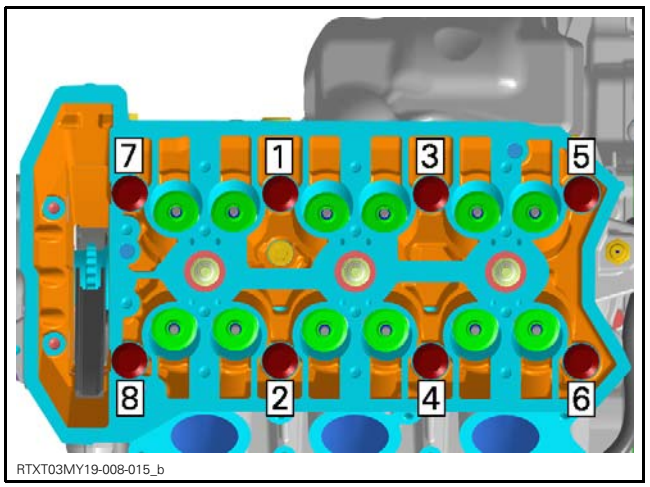

RTXT03MY19-008-015_b

*M9 SCREWS TIGHTENING SEQUENCE*

NOTE: Use a torque angle gauge to carry out the **step B**.

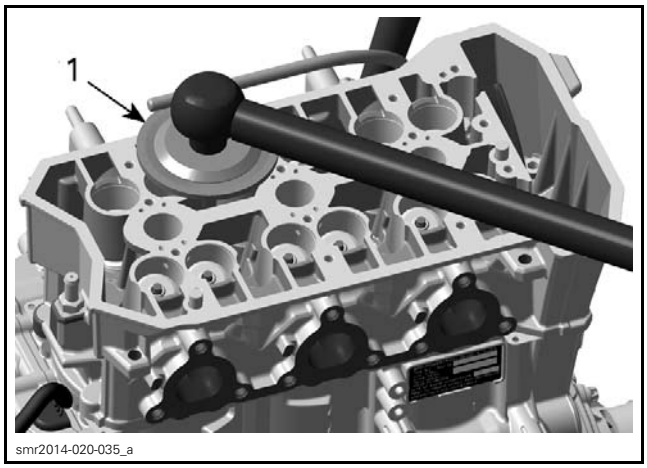

smr2014-020-035_a

*1. Torque angle gauge*

5. Install M6 screws. Tighten as follows.

| TIGHTENING TORQUE | |
|---|---|
| Cylinder head M6 screws | 9 N•m ± 1 N•m (80 lbf•**in** ± 9 lbf•**in**) |

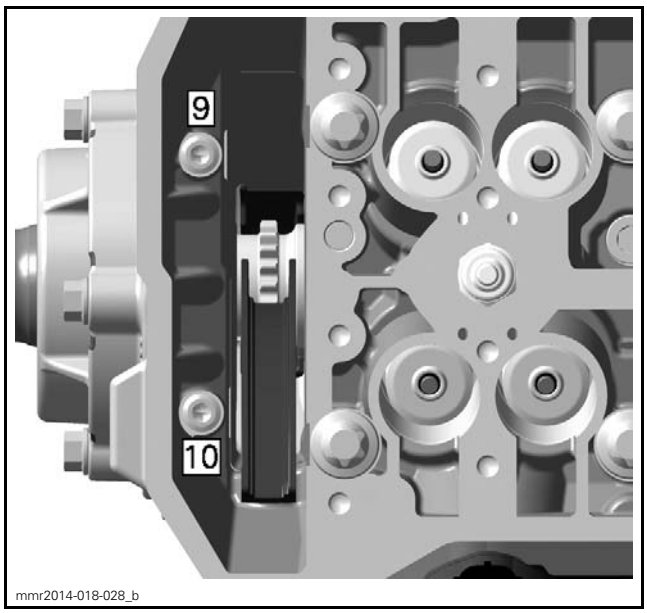

mmr2014-018-028_b

*M6 SCREWS TIGHTENING SEQUENCE*

# VALVE SPRINGS

## Removing the Valve Spring

1. Remove *CYLINDER HEAD*, see procedure in this subsection.
2. Compress valve spring.

| REQUIRED TOOLS | |
|---|---|
| VALVE SPRING COMPRESSOR (P/N 529 035 724) | |
| VALVE SPRING COMPRESSOR CUP (P/N 529 036 209) | |

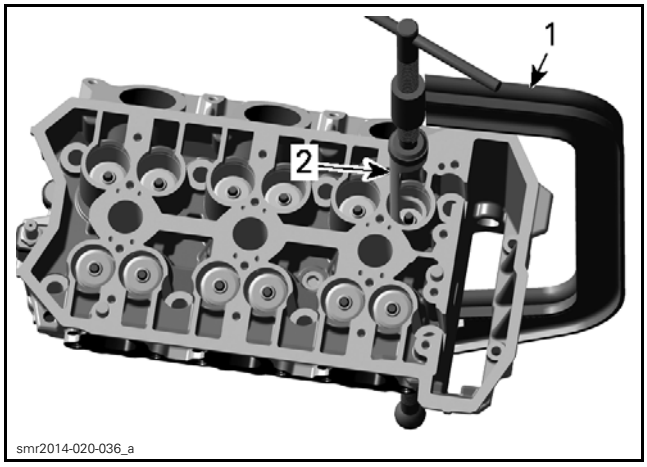


1. *Valve spring compressor clamp*
2. *Valve spring compressor cup*

3. Remove valve cotters.
4. Withdraw valve spring compressor tools.
5. Remove valve spring retainer and valve spring.

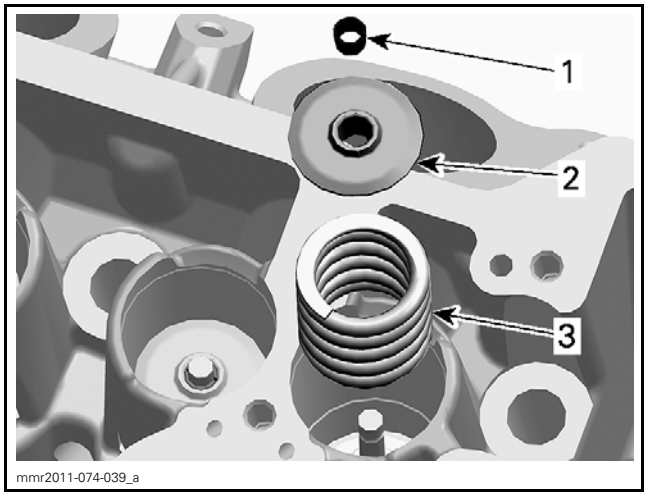


1. *Valve cotters*
2. *Valve spring retainer*
3. *Valve spring*

NOTE: Identify the position of each part very carefully, so it can be reinstalled in its original place.

## Inspecting the Valve Spring

1. Check valve spring for rust, corrosion or other visible damage.
2. Check valve spring free length and straightness.

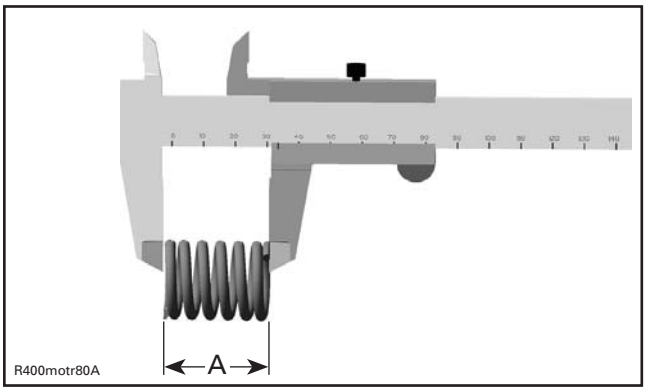


*A. Spring free length*

| VALVE SPRING FREE LENGTH | |
|---|---|
| New | 31.35 mm (1.2343 in) |
| Service limit | 29.50 mm (1.1614 in) |

Replace valve spring, if out of specification.

## Installing the Valve Spring

For installation, reverse the removal procedure. Pay attention to the following details.

NOTE: Ensure to reinstall all parts in their original position as marked during removal.

1. Apply some grease on valve cotters, so that they remain in place while releasing the valve spring.
2. Make sure valve cotters are properly engaged into valve stem groove.

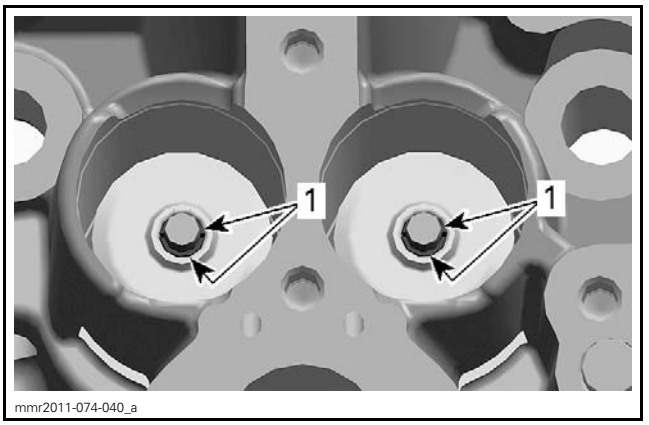


1. *Valve cotters*

3. After spring is installed, ensure it is properly locked by lightly tapping on valve stem end with a soft punch and a hammer so that valve opens and closes a few times.

**NOTICE** **Improperly locked valve spring will cause severe engine damage and hitting the valve stem end with excessive force could damage the valve.**

# VALVES

## Removing the Valve

1. Remove *VALVE SPRING*, see procedure in this subsection.
2. Push on the valve stem, then pull valves out of cylinder head.

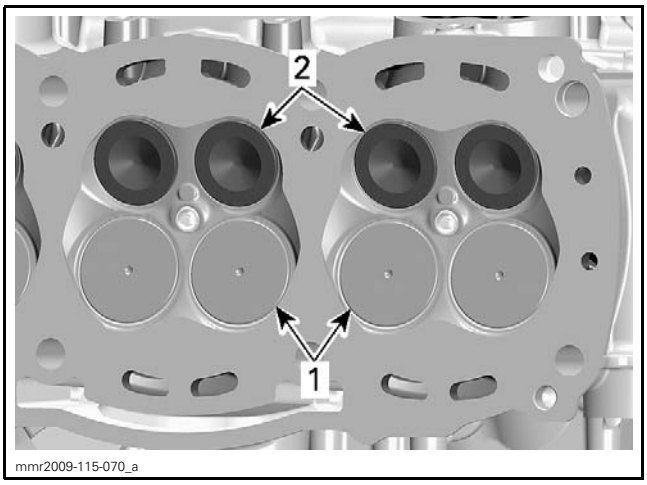


*1. Intake valves 29 mm*
*2. Exhaust valves 25 mm*

3. Remove and discard valve stem seal. Use a valve steam seal pliers available in automotive parts retailers.

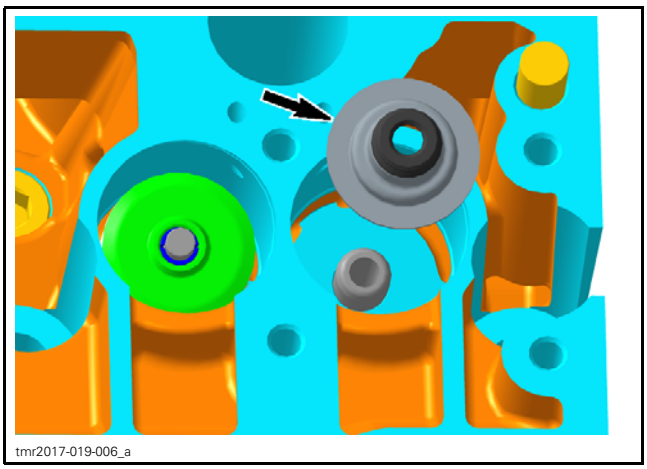


NOTE: Identify the position of each part very carefully, so it can be reinstalled in its original place.

## Inspecting the Valve

Inspect valve surface, check for abnormal stem wear and bending.

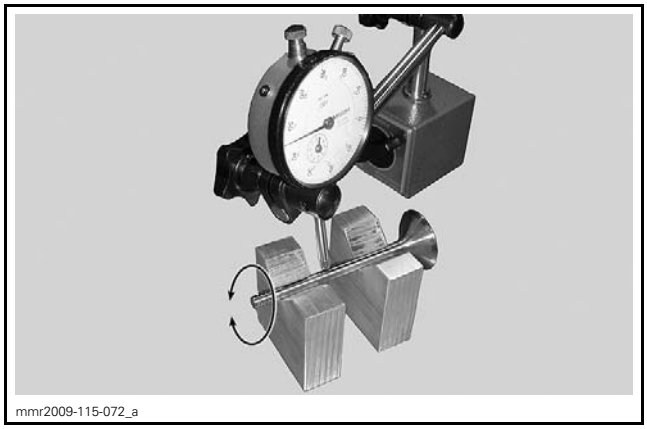


| VALVE OUT OF ROUND<br>INTAKE AND EXHAUST VALVE | |
|---|---|
| New | 0.005 mm (.0002 in) |
| Service limit | 0.060 mm (.0024 in) |

Replace valve if out of specification.

### Valve Stem and Valve Guide Clearance

1. Measure valve stem at three places, using a micrometer.

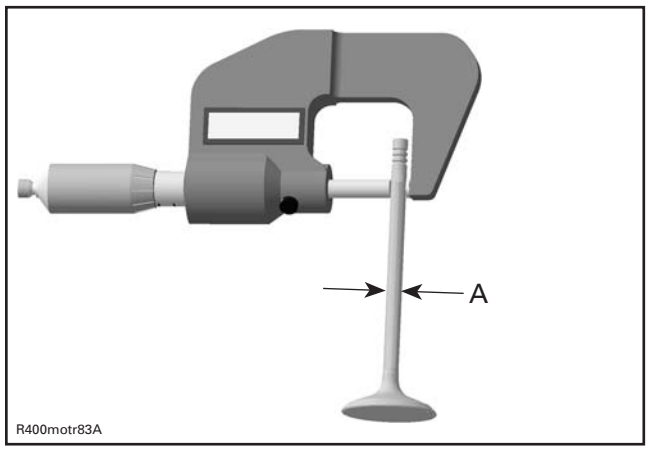


*A. Valves stem diameter*

| VALVE STEM DIAMETER | | |
|---|---|---|
| Intake valve | New | 4.958 mm to 4.972 mm (.1952 in to .1957 in) |
| | Service limit | 4.940 mm (.1945 in) |
| Exhaust valve | New | 4.956 mm to 4.970 mm (.1951 in to .1957 in) |
| | Service limit | 4.940 mm (.1945 in) |

Replace valve if stem is out of specification or if its surface is damaged or worn.

2. Clean valve guide from carbon deposits.
3. Measure valve guide inner diameter, using a small bore gauge.

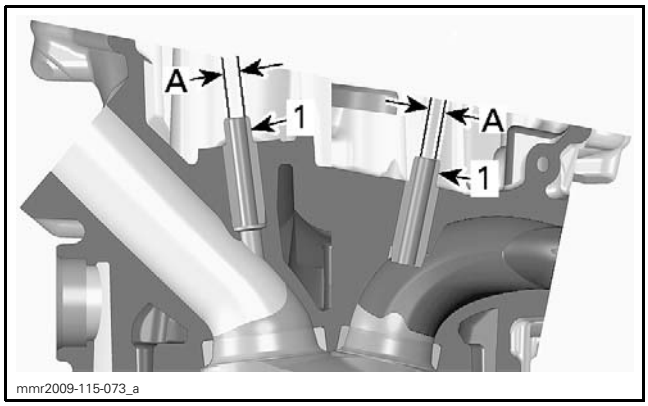


*1. Valve guides*
*A. Valve guide inner diameter*

| VALVE GUIDE INNER DIAMETER | |
|---|---|
| New | 5.000 mm to 5.020 mm (.1969 in to .1976 in) |
| Service limit | 5.050 mm (.1988 in) |

Replace cylinder head, if valve guide is out of specification.

### Valve Face and Seat

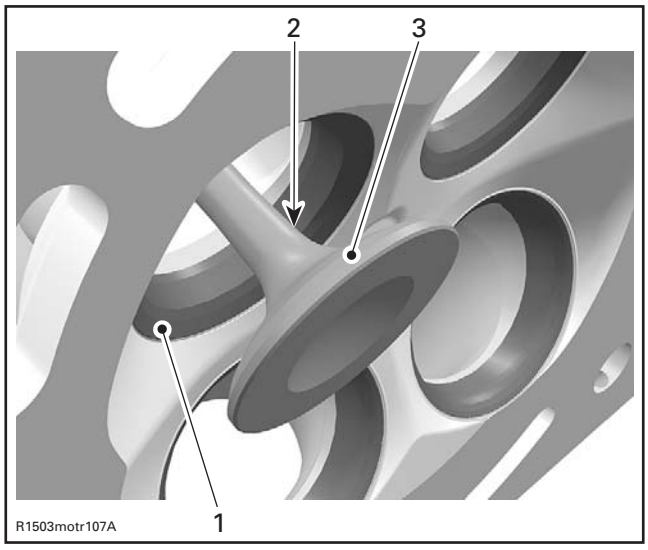


*TYPICAL*
*1. Valve seat*
*2. Exhaust valve contaminated area*
*3. Valve face (contact surface to valve seat)*

1. Check valve face and seat for burning, pitting and other signs of damage.
2. Check if valve seats properly in cylinder head. Proceed as follows.
   2.1 Apply some lapping compound on valve face and work valve on its seat with a lapping tool.

   NOTE: The location of contact area should be in center of valve face.

   2.2 Repeat procedure until valve seat and valve face fit together.
3. Measure valve seat contact width, using a caliper.

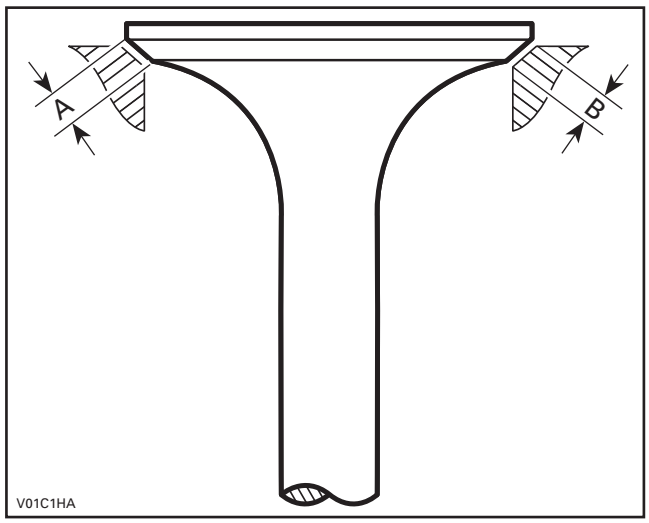


*A. Valve face contact width*
*B. Valve seat contact width*

| VALVE SEAT CONTACT WIDTH (B) | | |
|---|---|---|
| Intake valve | New | 1.05 mm to 1.35 mm (.041 in to .053 in) |
| | Service limit | 1.70 mm (.067 in) |
| Exhaust valve | New | 1.25 mm to 1.45 mm (.049 in to .057 in) |
| | Service limit | 1.80 mm (.071 in) |

Replace parts if out of specification.

## Installing the Valve

For installation reverse the removal procedure. Pay attention to the following details.

**NOTICE Ensure to reinstall all parts in their original position as marked during removal.**

1. Install a NEW valve stem seal whenever valve is removed.
2. Apply engine oil on valve stem and carefully slide through cylinder head and valve stem seal.

**NOTICE Be careful when passing the valve stem through the sealing lip of the seal.**

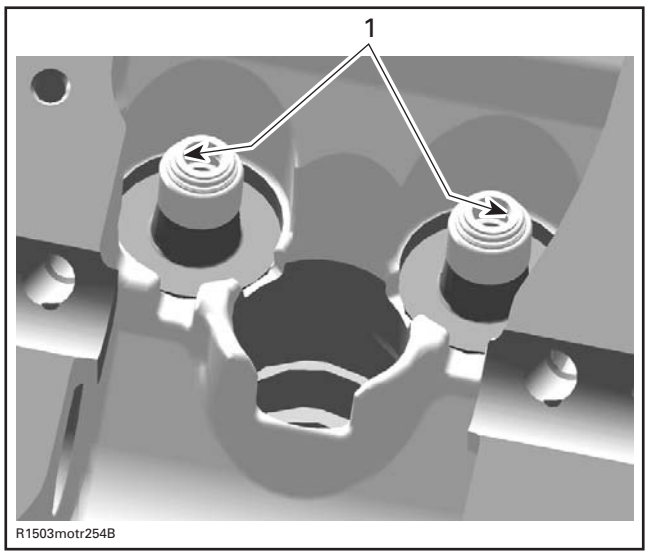


*TYPICAL*
*1. Sealing lips of valve stem seal*

3. Install *VALVE SPRING*. See procedure in this subsection.
4. Install all other removed parts.

# BOTTOM END

## SERVICE TOOLS


| Description | Part Number | Page |
|---|---|---|
| CRANKSHAFT LOCKING TOOL | 529 036 205 | 140 |
| CRANKSHAFT PROTECTOR (PTO) | 420 876 552 | 132 |
| PISTON CIRCLP INSTALLER | 529 036 207 | 146 |
| PISTON RING COMPRESSOR | 529 036 208 | 148 |
| PTO OIL SEAL INSTALLER | 529 036 216 | 133 |


## SERVICE PRODUCTS


| Description | Part Number | Page |
|---|---|---|
| LOCTITE 5910 | 293 800 081 | 138 |
| LOCTITE CHISEL (GASKET REMOVER) | 413 708 500 | 136 |
| SUPER LUBE GREASE | 293 550 030 | 133 |

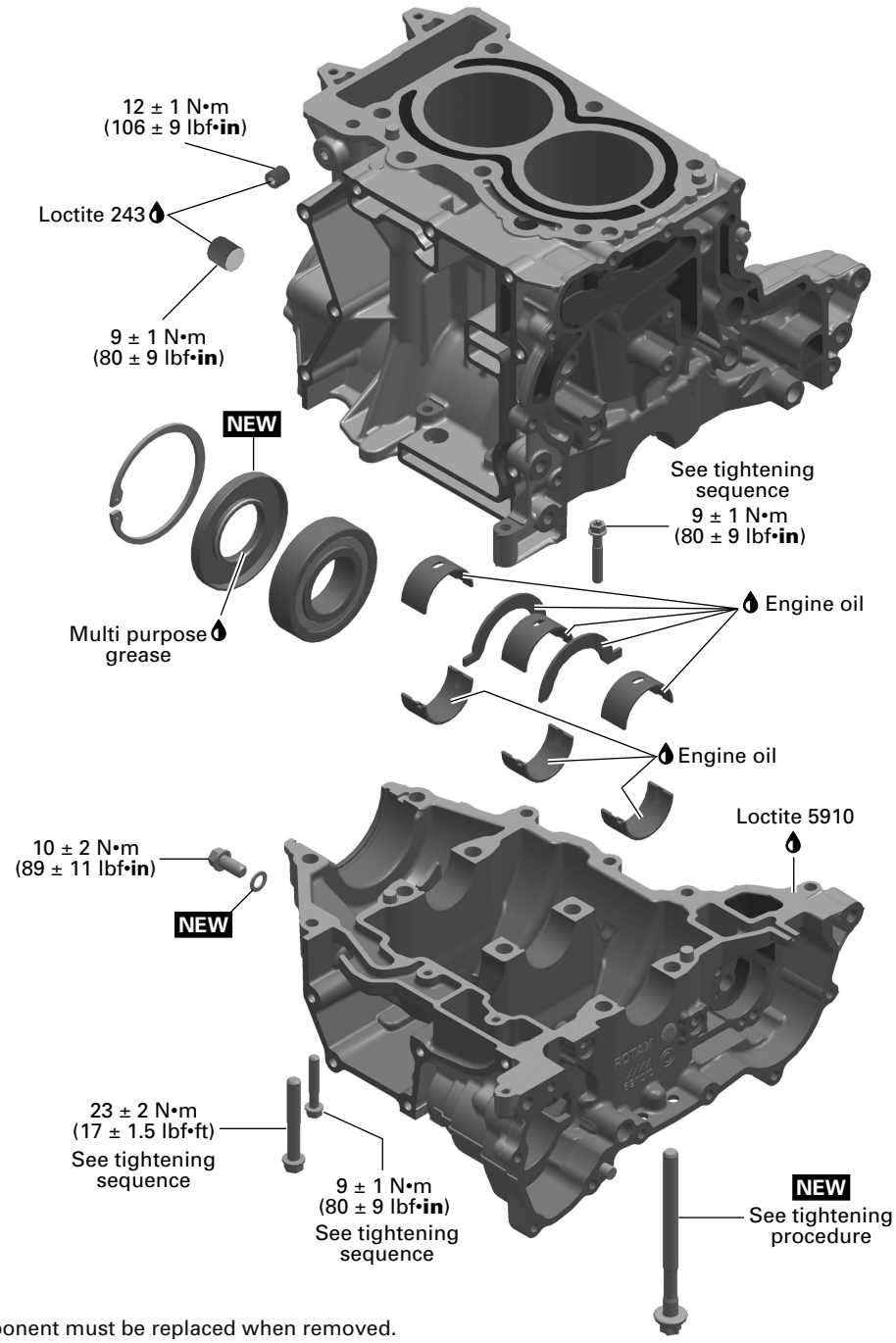


**NEW** = Component must be replaced when removed.

mmr2011-075-001_c

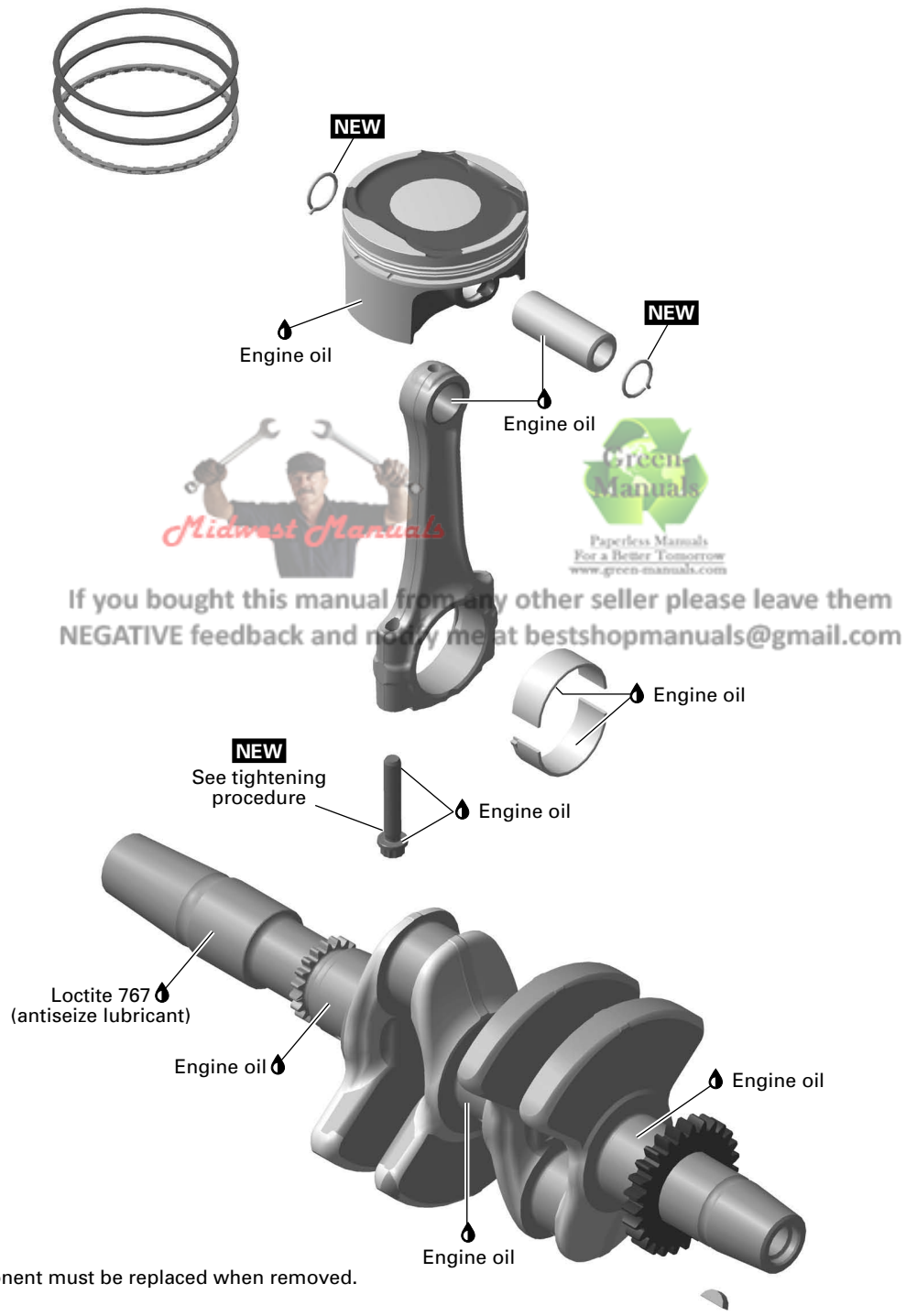


Midwest Manuals
Green Manuals
Paperless Manuals For a Better Tomorrow www.green-manuals.com
If you bought this manual from any other seller please leave them NEGATIVE feedback and notify me at bestshopmanuals@gmail.com

mmr2011-075-002_d

# GENERAL

When disassembling parts that are duplicated in the engine, (e.g.: pistons, connecting rods etc.), it is strongly recommended to note their position and to keep the parts of the same assembly as a "group". If you find a defective component, it would be much easier to find the cause of the failure. Since parts were broken-in during engine operation, they will maintain their matched fit when reassembled together within their "group".

# TROUBLESHOOTING

Always check for fault codes. If a fault code is detected, service the fault code first. Refer to *DIAGNOSTIC AND FAULT CODES* subsection.

## UNUSUAL ENGINE NOISE OR VIBRATIONS

1. Heavy wear on plain bearings.
   - *Check radial play of plain bearings. Replace if out of specification.*
2. Crankshaft axial play out of specification.
   - *Measure crankshaft axial play. If crankshaft axial play is out of specification, replace thrust washers.*
3. Connecting rod axial play out of specification.
   - *Measure connecting rod axial play on crankshaft. Replace connecting rod or crankshaft if out of specification.*
4. Connecting rod screws got loose.
   - *Replace damaged components and retighten screws with the recommended torque.*
5. Crankshaft PTO ball bearing is worn.
   - *Separate crankcase and check ball bearing for excessive play. Replace ball bearing if necessary.*

## BLUE SMOKE IN THE EXHAUST

1. Oil scraper rings worn out.
   - *Replace piston rings.*

## ENGINE SUDDENLY TURNS OFF (POOR IDLING)

1. Piston rings worn out.
   - *Replace piston rings.*
2. Piston/cylinder clearance out of specification.
   - *Check piston/cylinder clearance. Replace if out of specification.*
3. Melted or broken piston.
   - *Replace piston and cylinder block if necessary.*

# PROCEDURES

## PTO OIL SEAL

### PTO Oil Seal Replacement

NOTE: To replace the PTO oil seal, it is not necessary to remove engine from the vehicle.

#### PTO Oil Seal Access

Remove drive pulley. Refer to *DRIVE PULLEY (eDRIVE)* subsection.

#### PTO Oil Seal Removal

1. Use pliers to remove retaining ring.

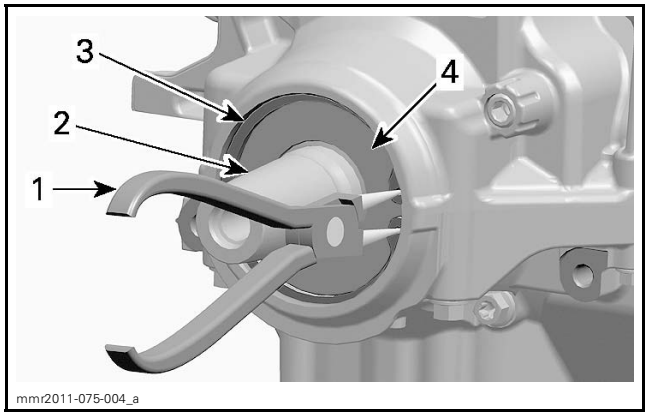


1. *Pliers*
2. *Crankshaft PTO journal*
3. *Retaining ring*
4. *Oil seal*

2. Protect crankshaft.

| REQUIRED TOOL | |
|---|---|
| CRANKSHAFT PROTECTOR (PTO) (P/N 420 876 552) | |

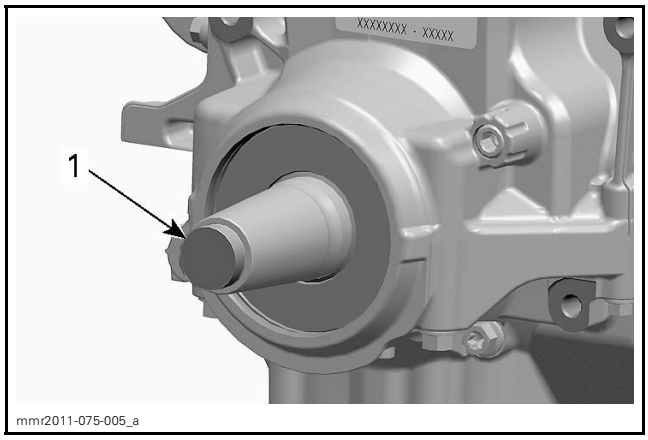


1. *Crankshaft protector*

3. Install the oil seal installer over the crankshaft end PTO.

| REQUIRED TOOL | |
|---|---|
| PTO OIL SEAL INSTALLER (P/N 529 036 216) | |

4. Carefully punch two holes in the old oil seal using a suitable pin.

NOTE: The holes punched in the old seal must allow the self tapping screws to bite into the seal.

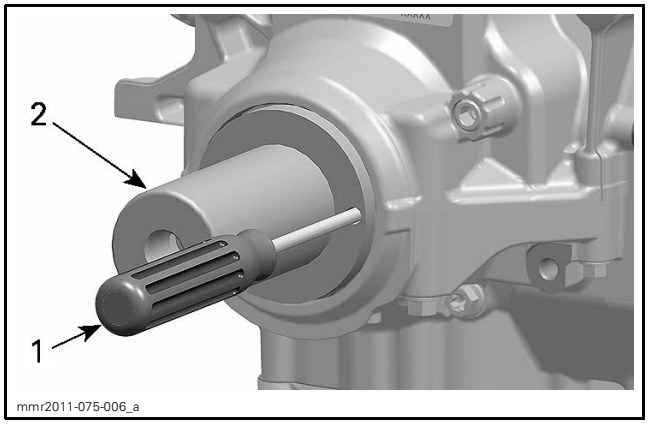


*1. Pin*
*2. Oil seal installer*

5. Thread the self tapping screws provided through the seal installer holes and into the oil seal.

***NOTICE*** **If self tapping screws other than the ones provided are used, their length must not exceed 16 mm (5/8 in).**

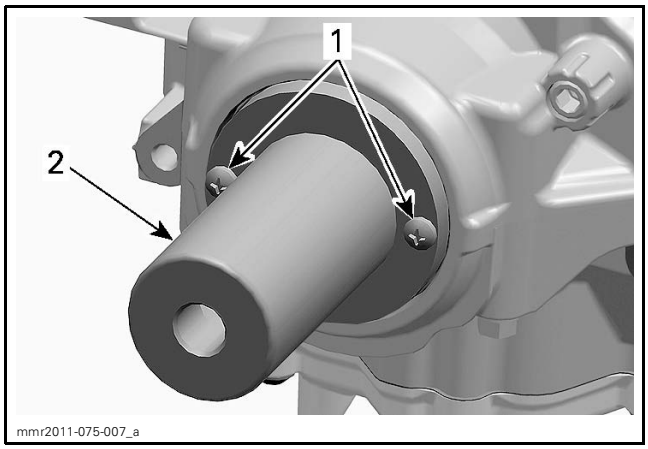


*1. Self tapping screws*
*2. Oil seal installer*

6. Thread the M16 x 1.5 x 40 mm screw provided into the seal installer, then pull the old seal off the crankcase by turning screws in.

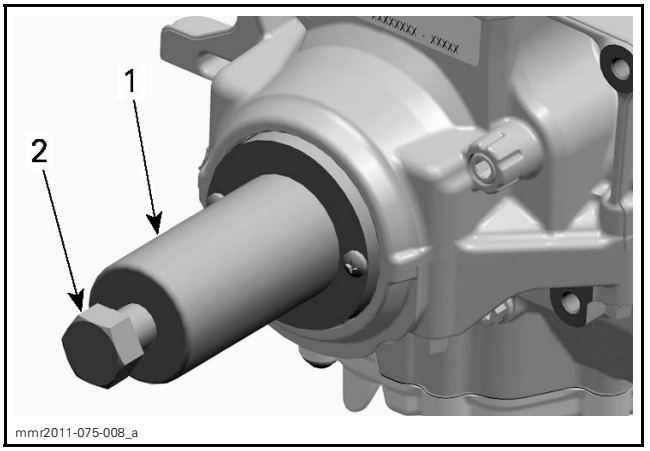


*1. Oil seal installer*
*2. M16 x 1.5 x 40 mm screw*

7. Remove crankshaft protector and clean oil seal area.

### PTO Oil Seal Installation

NOTE: Check the oil seal running surface of crankshaft for grooves, before installation of NEW oil seal.

1. Clean crankshaft PTO side of deposits.
2. Lubricate oil seal sealing lip and outer diameter.

| OIL SEAL SEALING LIP AND OUTER DIAMETER | |
|---|---|
| Service product | SUPER LUBE GREASE (P/N 293 550 030) |

3. Place the NEW oil seal on crankshaft and install it.

***NOTICE*** **Oil seal must be installed with sealing lip in, towards engine.**

| REQUIRED TOOL | |
|---|---|
| PTO OIL SEAL INSTALLER (P/N 529 036 216) | |

3.1 Install oil seal installer tool over the crankshaft PTO end.

3.2 Thread the provided M14 x 1.5 x 55 mm screw in the crankshaft.

3.3 Turn screw in to push the seal in place.

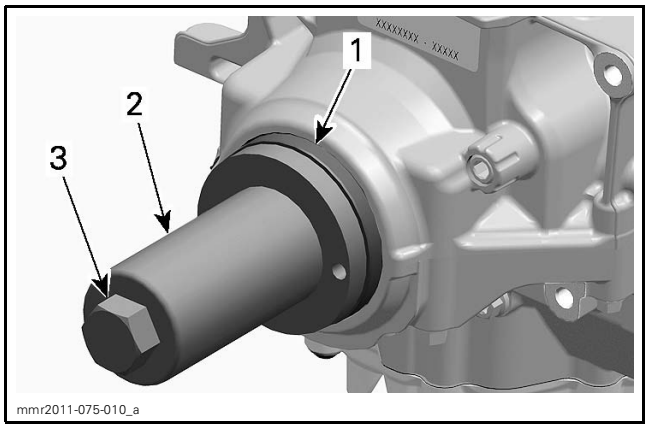


*1. Oil seal*
*2. Oil seal installer*
*3. M14 x 1.5 x 55 mm hex. screw*

4. Install retaining ring.

# CYLINDER BLOCK

## Cylinder Block Disassembly

1. Remove engine from vehicle. Refer to *ENGINE REMOVAL AND INSTALLATION* subsection.
2. Refer to *PERIODIC MAINTENANCE PROCEDURES* and drain engine oil.
3. Refer to *TOP END* subsection and remove:
   – Ignition coils
   – Valve cover
   – Spark plugs.
4. Lock crankshaft, refer to *CRANKSHAFT LOCKING PROCEDURE* in this subsection.
5. Remove air intake manifold. Refer to *AIR INTAKE SYSTEM* subsection.
6. Refer to *COOLING SYSTEM* subsection and remove:
   – Water pump housing
   – Thermostat
   – Water pump drive gear.
7. Refer to *LUBRICATION SYSTEM* subsection and remove:
   – Oil tank
   – Oil cooler
   – Oil pressure regulator
   – Oil pump drive gears and oil pumps
   – Oil sump cover
   – Oil strainers.
8. Refer to *MAGNETO AND STARTER* subsection and remove:
   – Magneto cover
   – Rotor
   – Starter drive gears
   – Electric starter.
9. Refer to *TIMING CHAIN* subsection and remove:
   – Timing chain tensioner
   – Timing chain guides.
10. Refer to *TOP END* subsection and remove:
    – Camshaft holders
    – Cylinder head.

NOTE: Before splitting the cylinder block, measure crankshaft axial play. Refer to *CRANKSHAFT* in this subsection.

11. Remove crankshaft locking tool.
12. Remove cylinder block screws.
    12.1 Start by removing M6 screws.
    12.2 Then remove M8 screws.
    12.3 Finally remove and discard M9 screws.

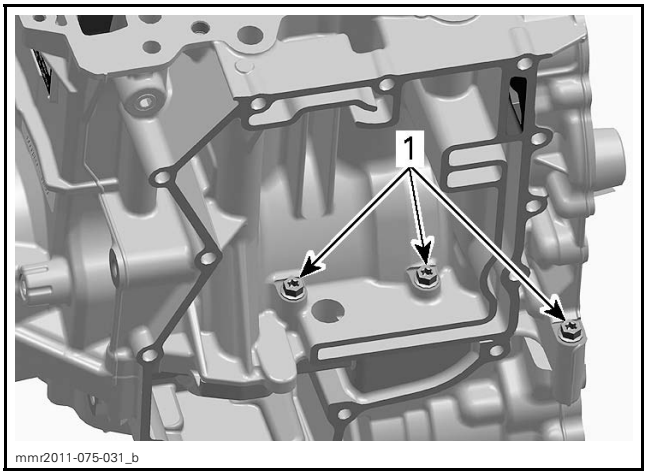


*1. Cylinder block screws (M6) screwed from top to bottom*

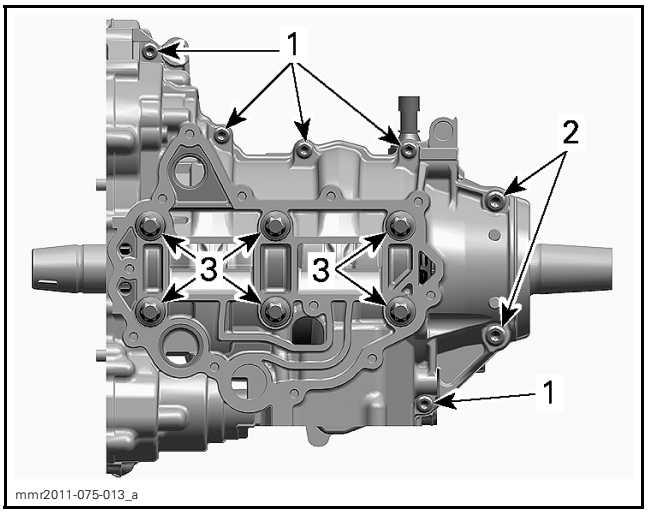


*1. M6 screws*
*2. M8 screws*
*3. M9 screws (discard)*

13. Carefully remove cylinder block lower half using a soft hammer.

NOTE: Take care not to damage the sealing surfaces of the cylinder block halves.

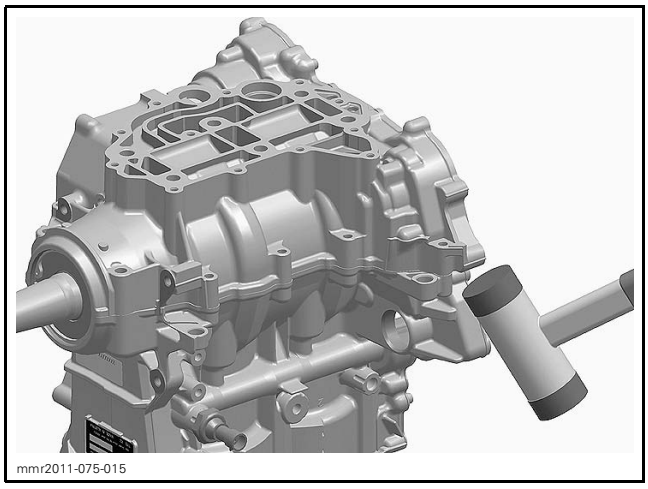
mmr2011-075-015

14. Remove connecting rod caps. Refer to *PISTONS AND CONNECTING RODS* in this subsection.
15. Refer to *CRANKSHAFT* in this subsection and remove:
    – Crankshaft thrust washers
    – Crankshaft.
16. Remove pistons and connecting rods. See procedure in this subsection.

### Plain Bearing Removal

When the plain bearings need to be removed from the cylinder block, mark them to identify the correct position at installation. See the illustration as an example.

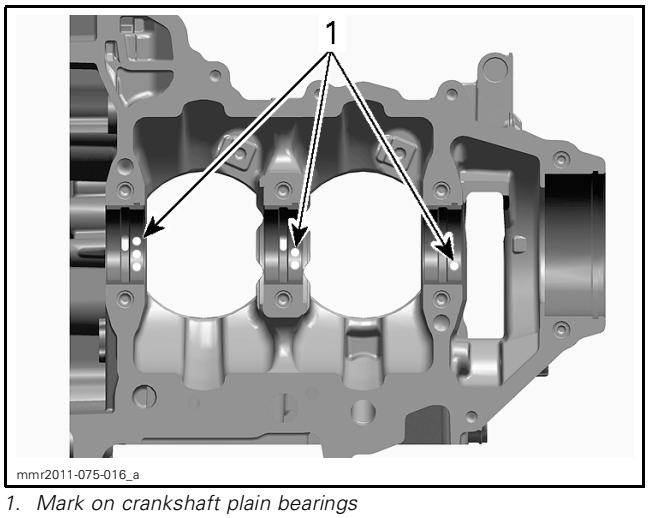

mmr2011-075-016_a

*1. Mark on crankshaft plain bearings*

## Cylinder Block Cleaning

Clean cylinder block using a part cleaner, then use compressed air to dry it.

Blow out the oil orifices using compressed air and make sure they are not clogged.

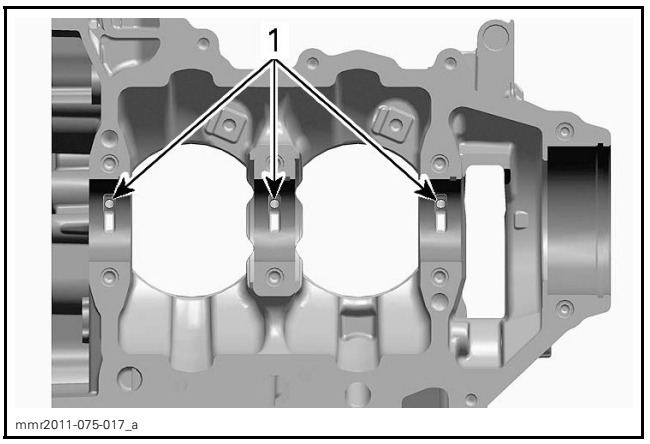

mmr2011-075-017_a

*CYLINDER BLOCK UPPER HALF*
*1. Oil orifices*

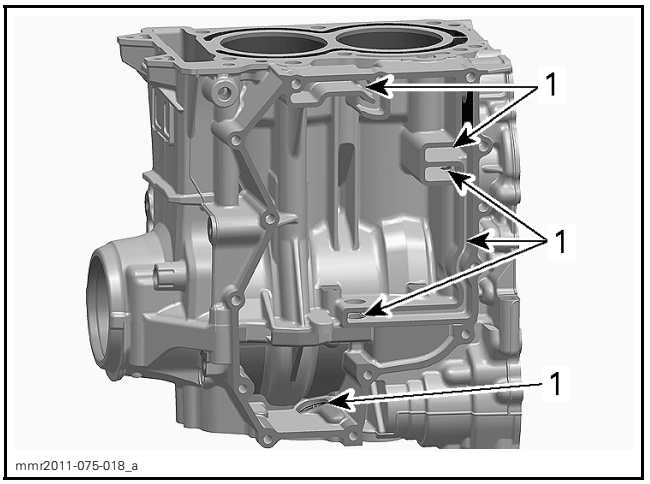

mmr2011-075-018_a

*CYLINDER BLOCK - REAR*
*1. Oil orifices*

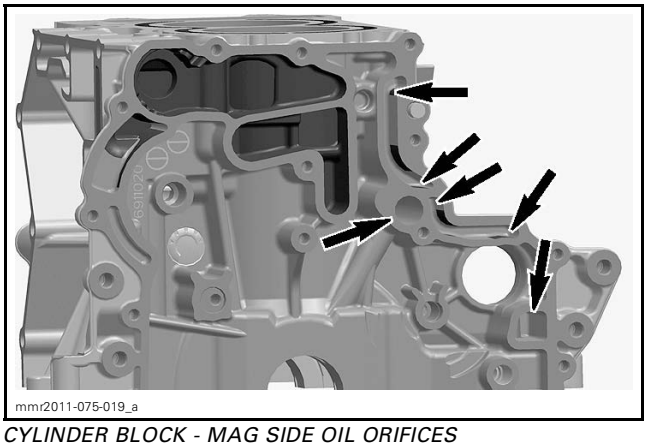
mmr2011-075-019_a

*CYLINDER BLOCK - MAG SIDE OIL ORIFICES*

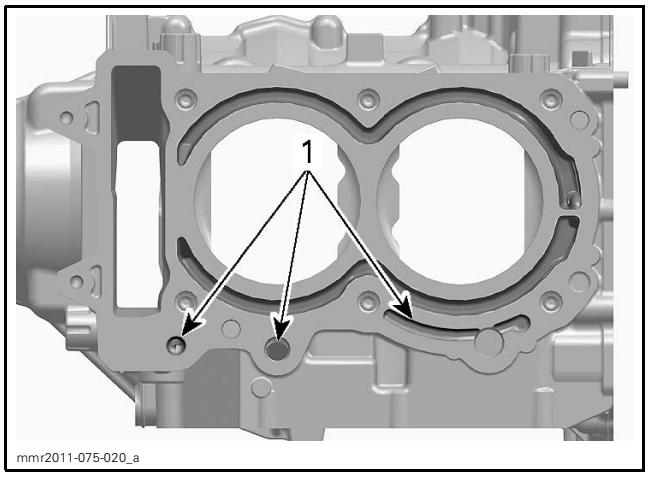


*CYLINDER BLOCK - TOP*
*1. Oil orifices*

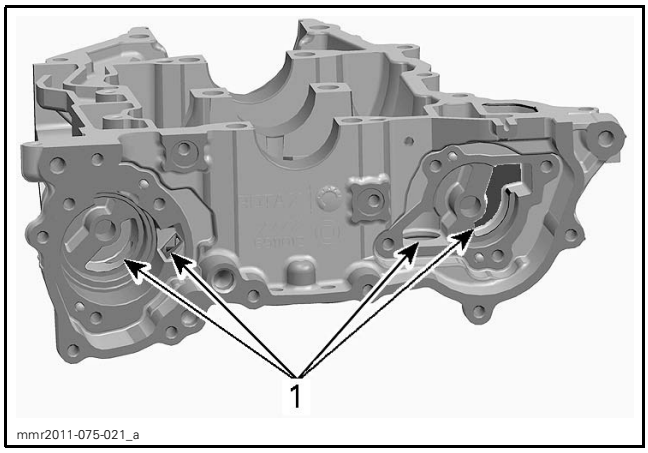


*CYLINDER BLOCK LOWER HALF*
*1. Oil orifices*

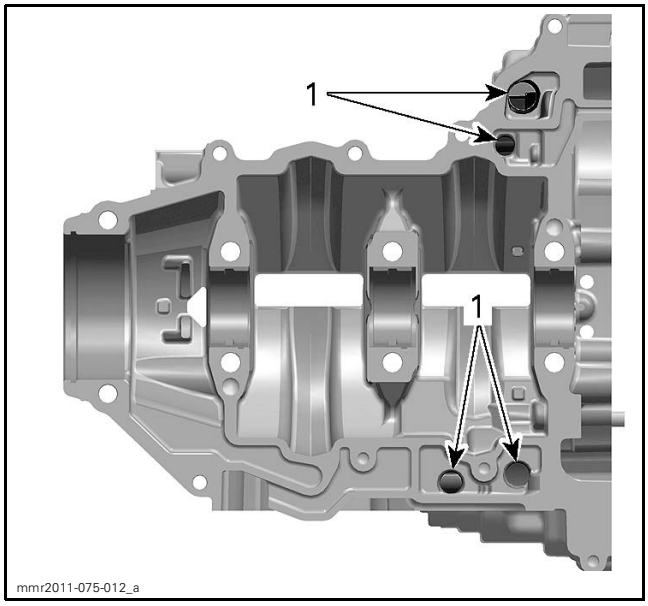


*CYLINDER BLOCK LOWER HALF*
*1. Oil orifices*

Clean all metal components in a solvent.

Clean cylinder block mating surfaces with LOCTITE CHISEL (GASKET REMOVER) (P/N 413 708 500) and a brass wire brush. Brush a first pass in one direction, then make the final brushing perpendicularly (90°) to the first pass (cross hatch).

NOTE: Do not wipe with rags. Use a new clean hand towel only.

## Cylinder Block Inspection

Check cylinder block for cracks or other damage.

Check cylinder block mating surfaces for flatness using a straight edge.

Replace cylinder block if necessary.

Check cylinder bores for cracks, scoring and wear ridges on top and bottom of the cylinders.

### Cylinder Taper

Measure cylinder bore diameter at 4 recommended positions. See illustration.

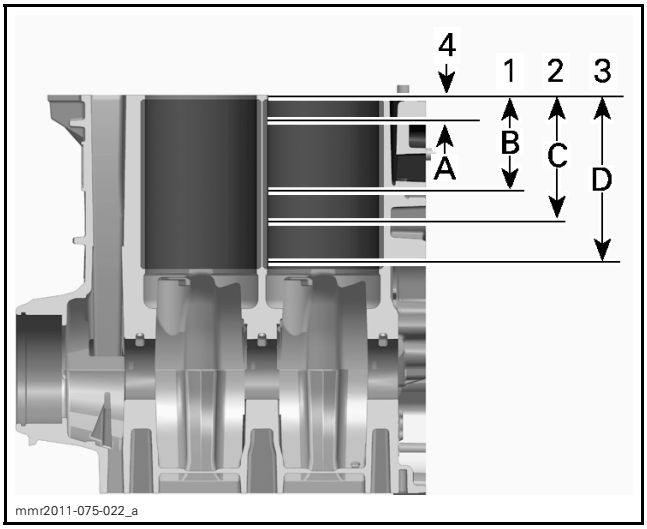


*TYPICAL*
*1. First measure*
*2. Second measure*
*3. Third measure*
*4. Fourth measure*

*A. 5 mm to 10 mm (.197 in to .394 in)*
*B. 30 mm to 35 mm (1.181 in to 1.378 in)*
*C. 57 mm to 62 mm (2.244 in to 2.441 in)*
*D. 111 mm to 113 mm (4.37 in to 4.449 in)*

The difference between measurements should not exceed the service limit mentioned in next table.

| CYLINDER TAPER | |
|---|---|
| NEW MAXIMUM | 0.030 mm (.0012 in) |
| SERVICE LIMIT | 0.050 mm (.002 in) |

### Cylinder Out of Round

Measure cylinder bore diameter as shown, and at same measuring points as for *CYLINDER TAPER*.

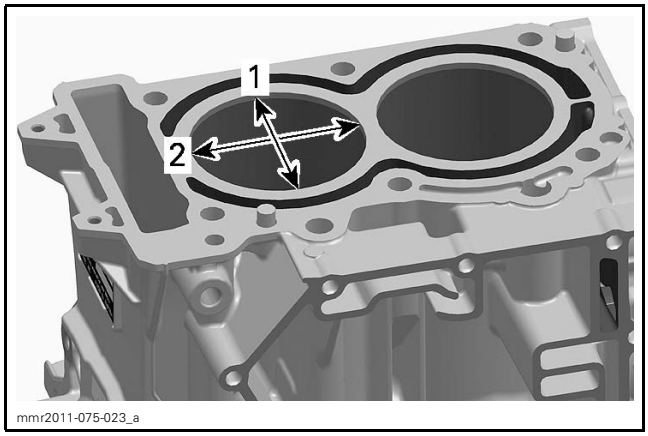


1. *Perpendicular to piston pin axis*
2. *Parallel to piston pin axis*

To obtain the cylinder out of round, calculate the difference between the perpendicular measures.

| CYLINDER OUT OF ROUND | |
|---|---|
| NEW MAXIMUM | 0.008 mm (.0003 in) |
| SERVICE LIMIT | 0.030 mm (.0012 in) |

### Crankshaft Plain Bearings Inside Diameter

Check the plain bearings for scoring or other damages.

Measure plain bearing inside diameter and compare with crankshaft bearing journal diameter (refer to *CRANKSHAFT* in this subsection). Proceed as follows.

– Using the OLD plain bearings, assemble both cylinder block halves together.
– Tighten screws as described in *CYLINDER BLOCK ASSEMBLY*.
– Measure the inside diameter of the crankshaft plain bearings using a bore gauge.

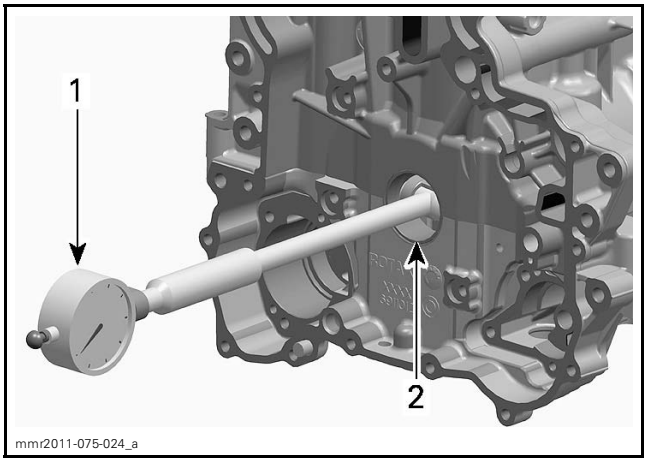


1. *Bore gauge*
2. *Crankshaft plain bearing*

| CRANKSHAFT PLAIN BEARING INSIDE DIAMETER | |
|---|---|
| SERVICE LIMIT | 36.080 mm (1.4205 in) |

Replace bearings if out of specifications.

## Cylinder Block Assembly

Reverse the disassembly procedure. Pay attention to the following details.

1. Correctly reinstall plain bearings as follows.
   1.1 Use NEW bearings if diameters are out of specification. Refer to *PLAIN BEARING INSPECTION* in this subsection.
   1.2 Install bearings with lubrication grooves in the cylinder block upper half.

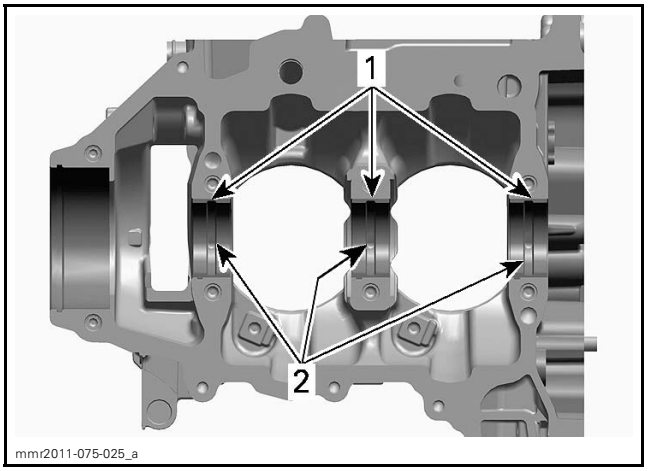


1. *Plain bearings*
2. *Lubrication grooves*

   1.3 Install flat bearings in cylinder block lower half.

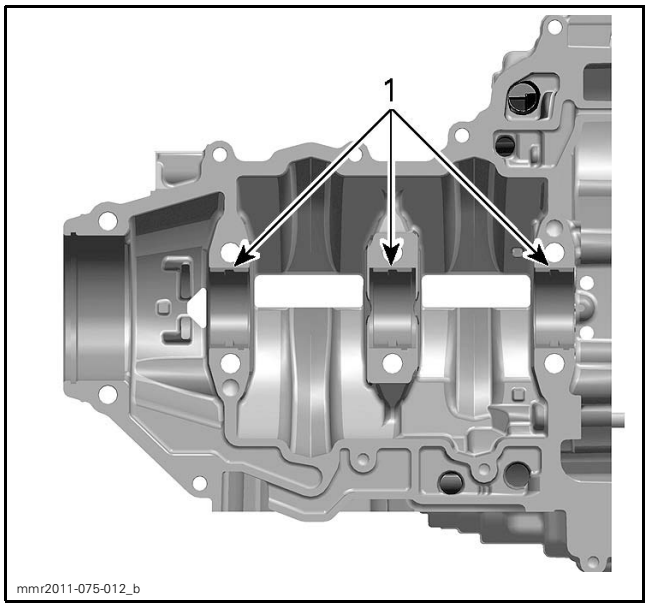


*1. Flat bearings*

**NOTICE** Bearings must be flush with the cylinder block split surface, and their protrusions must fit in the notched areas in the cylinder block seat.

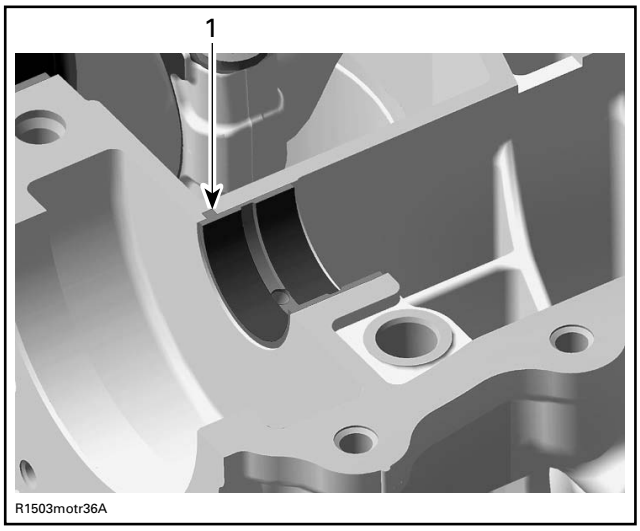


*TYPICAL*
*1. Bearing protrusion in cylinder block notch*

2. Install pistons, refer to *PISTONS AND CONNECTING RODS* in this subsection.
3. Apply engine oil on all plain bearings.
4. Install the following components:
   – Crankshaft and thrust washers (refer to *CRANKSHAFT*)
   – Connecting rod caps (refer to *PISTONS AND CONNECTING RODS*).
5. Apply LOCTITE 5910 (P/N 293 800 081) on mating surface of cylinder block lower half as shown in following illustration.

IMPORTANT: When beginning the application of the cylinder block sealant, the assembly and first tightening must be done within 12 minutes. It is suggested to have all you need on hand to save time.

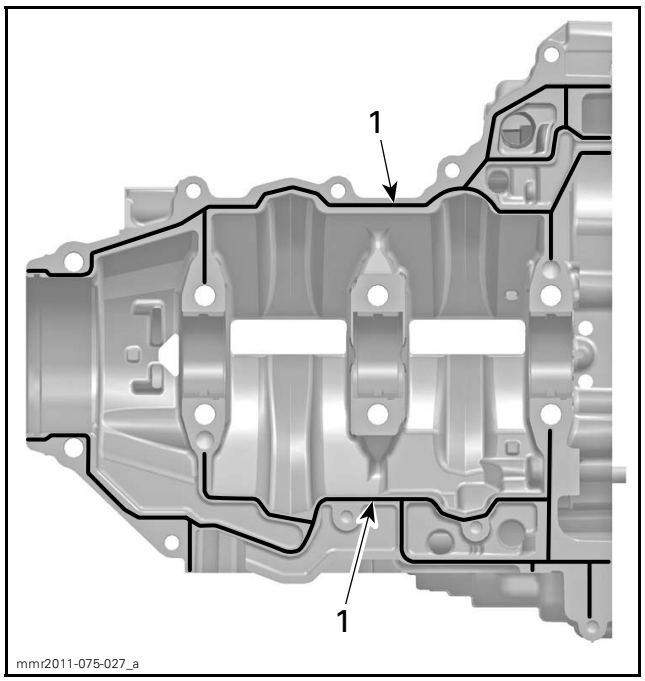


*1. Apply Loctite 5910 following this pattern*

**NOTICE** Ensure not to apply too much sealant, as it will spread out inside the cylinder block.

**NOTICE** Take care to ensure the bypass passage of the engine oil pressure regulator is not clogged with sealant.

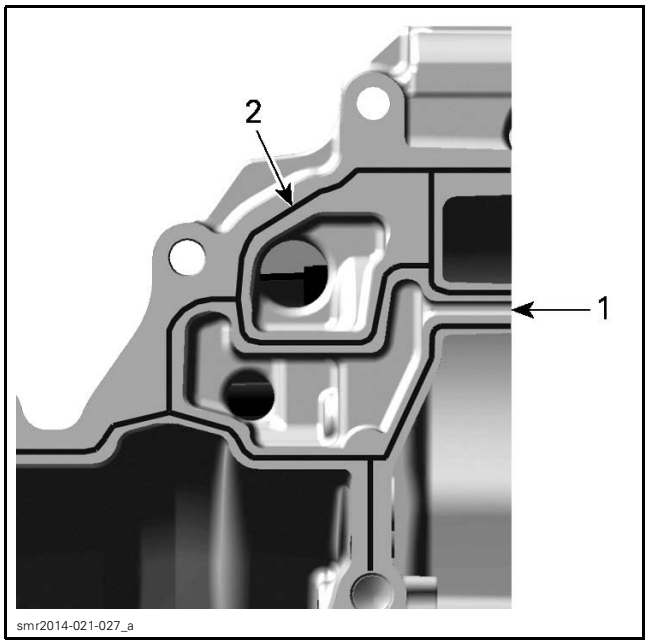


1. *Bypass passage of engine oil pressure regulator*
2. *Loctite 5910 applied*

6. Install **NEW** cylinder block M9 screws and tighten as follows.

**NOTICE** This assembly uses stretch screws. Always use NEW screws and strictly adhere to the tightening procedure.

6.1 Torque the M9 screws according to following sequence.

| CYLINDER BLOCK M9 SCREWS TIGHTENING PROCEDURE | |
|---|---|
| FIRST STEP | 20 N•m ± 2 N•m (15 lbf•ft ± 1 lbf•ft) |

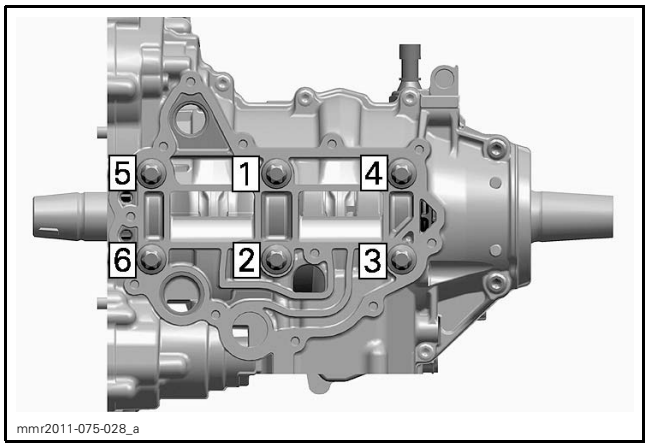


*M9 SCREWS TIGHTENING SEQUENCE - FIRST AND SECOND STEPS*

6.2 Use a torque angle gauge to carry out the second step, following the same sequence.

| CYLINDER BLOCK M9 SCREWS TIGHTENING PROCEDURE | |
|---|---|
| SECOND STEP | Additional 150° ± 5° |

7. Install M8 screws and tighten as follows.

| CYLINDER BLOCK M8 SCREWS | |
|---|---|
| Tightening torque | 23 N•m ± 2 N•m (17 lbf•ft ± 1 lbf•ft) |

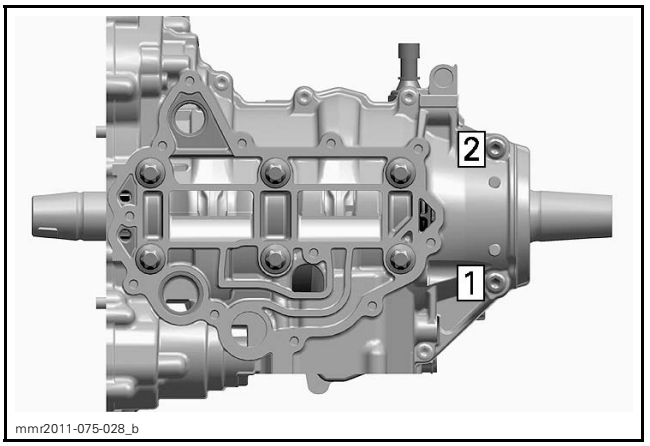


*M8 SCREWS TIGHTENING SEQUENCE*

8. Install M6 screws and tighten as follows.

| CYLINDER BLOCK M6 SCREWS | |
|---|---|
| Tightening torque | 9 N•m ± 1 N•m (80 lbf•**in** ± 9 lbf•**in**) |

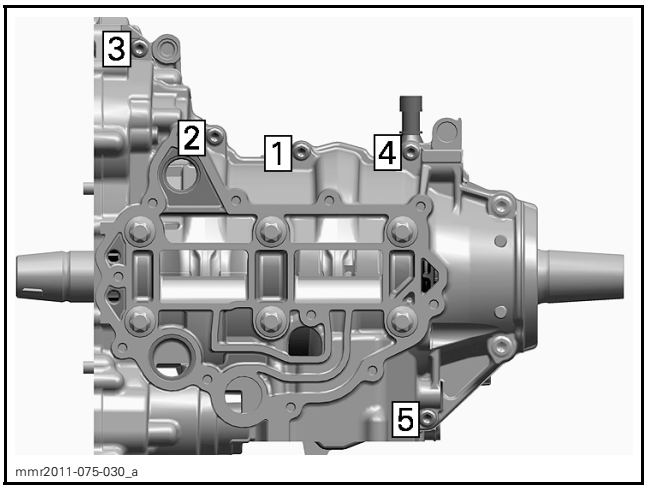


*M6 SCREWS TIGHTENING SEQUENCE (BOTTOM OF CRANKCASE)*

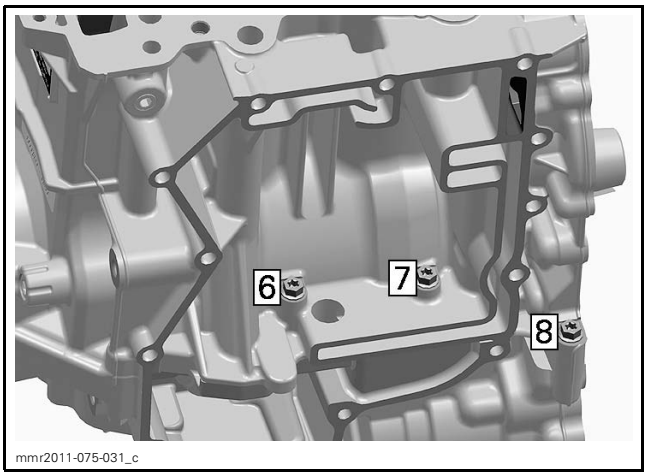


*M6 SCREWS TIGHTENING SEQUENCE (REAR OF CRANKCASE)*

NOTE: Check crankshaft axial play before continuing the assembly. Refer to *CRANKSHAFT* in this subsection.

9. Reassemble engine in accordance with proper assembly procedures.

# CRANKSHAFT

## Crankshaft Locking Procedure

**NOTICE** When the crankshaft is locked, neither first nor second cylinder is set to TDC.

The crankshaft must be locked whenever the magneto rotor retaining nut has to be removed, or whenever working on the valve train.

**NOTICE** When working on the valve train or timing chain, the crankshaft must be locked with the marks "IN" and "EX" on the camshaft timing gears facing each other.

1. If working on the valve train or timing chain, remove the valve cover. Refer to *TOP END* subsection.
2. Remove spark plugs.
3. Remove crankshaft access plug and discard gasket ring.

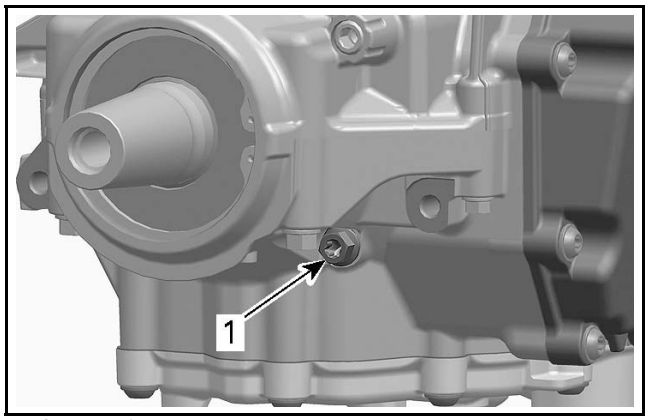


*1. Crankshaft access plug*

4. On PTO side , turn engine crankshaft counterclockwise to the locking position.

To turn the crankshaft, install the drive pulley, or use a suitable screw locked by a counter nut.

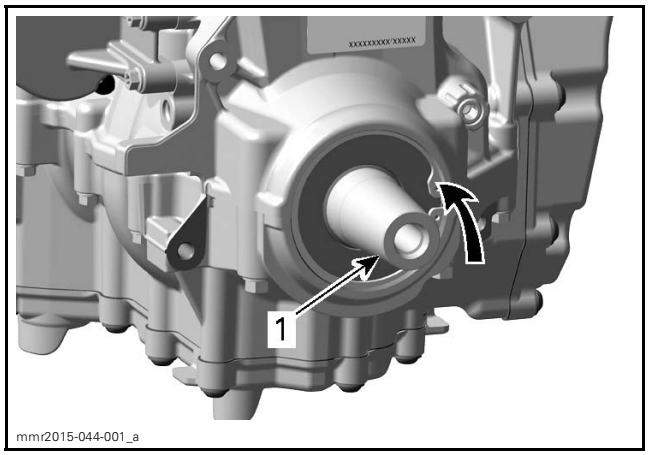


*1. Crankshaft PTO side*

**NOTICE** Crankshaft locking position is reached when marks "IN" and "EX" on the camshaft timing gears face each other.

5. Use a flashlight to check if the crankshaft groove is aligned with the hole.
6. Lock crankshaft.

| REQUIRED TOOL | |
|---|---|
| CRANKSHAFT LOCKING TOOL (P/N 529 036 205) | |

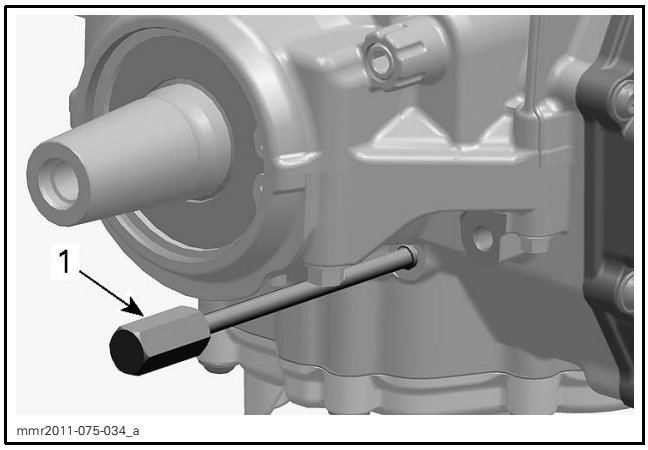


*1. Crankshaft locking tool*

## Crankshaft Removal

1. Disassemble *CYLINDER BLOCK*, see procedure in this subsection.
2. Remove connecting rod caps. Refer to *PISTONS AND CONNECTING RODS* in this subsection.
3. Remove crankshaft thrust washers.

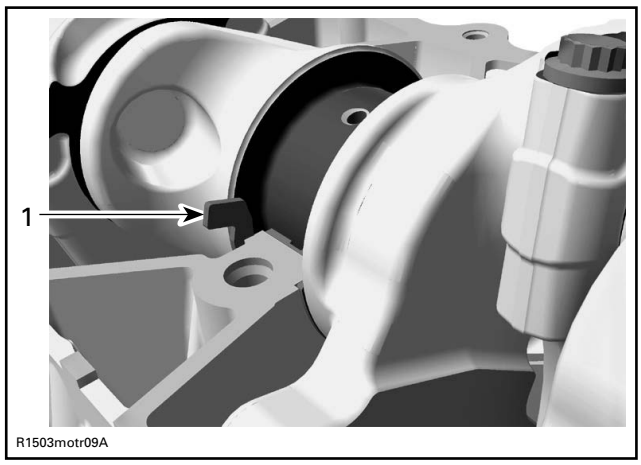


*TYPICAL*
*1. Thrust washer*

4. Remove crankshaft from cylinder block.

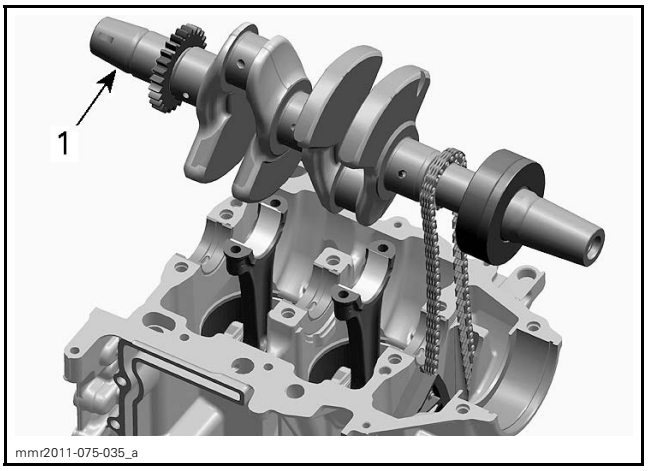


*1. Crankshaft*

## Crankshaft Inspection

Check each bearing journal of crankshaft for scoring, scuffing, cracks or other signs of wear.

Check crankshaft gears for wear or other damage.

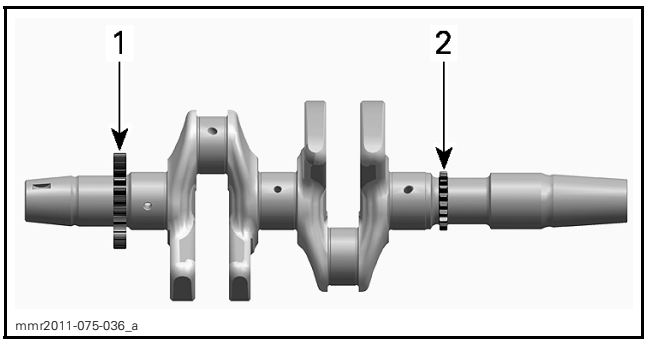


*1. Oil pump drive gear*
*2. Crankshaft timing gear*

Replace crankshaft if damaged.

Blow the oil orifices using compressed air and ensure they are not clogged.

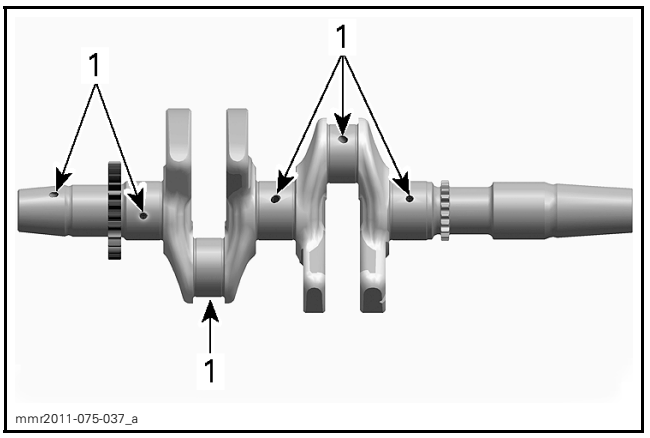


*1. Check oil orifices*

### Crankshaft Radial Play

Measure crankshaft bearing journal diameter using a micrometer.

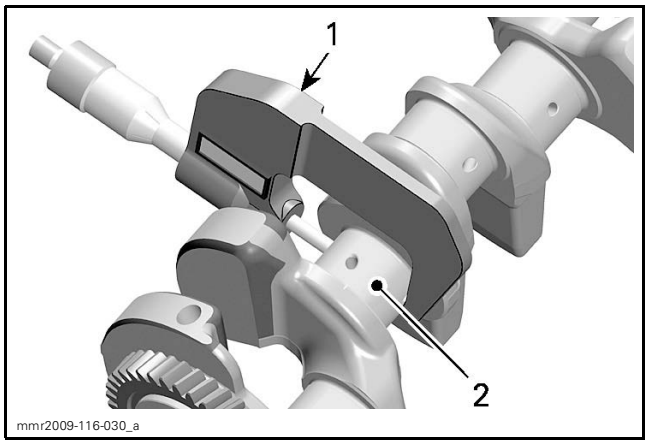


*TYPICAL*
1. *Micrometer*
2. *Crankshaft area for plain bearing*

To obtain crankshaft radial play, calculate the difference between the bearing journal diameter and the crankshaft plain bearings inner diameter (see *CYLINDER BLOCK*) in this subsection.

| CRANKSHAFT BEARING JOURNAL DIAMETER | |
|---|---|
| NEW | 35.990 mm to 36.006 mm (1.4169 in to 1.4176 in) |
| SERVICE LIMIT | 35.960 mm (1.4157 in) |

| CRANKSHAFT RADIAL PLAY | |
|---|---|
| SERVICE LIMIT | 0.080 mm (.0031 in) |

### Crankshaft Pin Diameter

Measure crankshaft pin diameter using a micrometer.

To obtain connecting rod radial play (big end), calculate the difference between the crankshaft pin diameter and the inner diameter of the connecting rod plain bearings (see *CONNECTING ROD INSPECTION*) in this subsection.

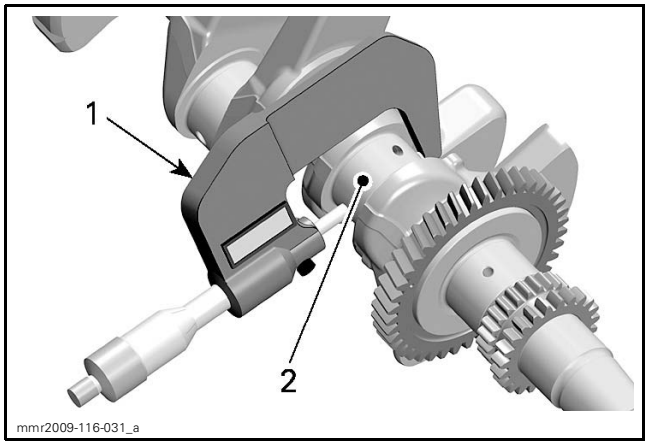


*TYPICAL*
1. *Micrometer*
2. *Crankshaft pin area for plain bearing*

| CRANKSHAFT PIN DIAMETER | |
|---|---|
| NEW | 35.979 mm to 35.995 mm (1.416 in to 1.417 in) |
| SERVICE LIMIT | 35.969 mm (1.416 in) |

| CONNECTING ROD BIG END RADIAL PLAY | |
|---|---|
| SERVICE LIMIT | 0.080 mm (.0031 in) |

### Crankshaft Axial Play

With the crankshaft in the cylinder block, measure the crankshaft axial play, using a dial indicator.

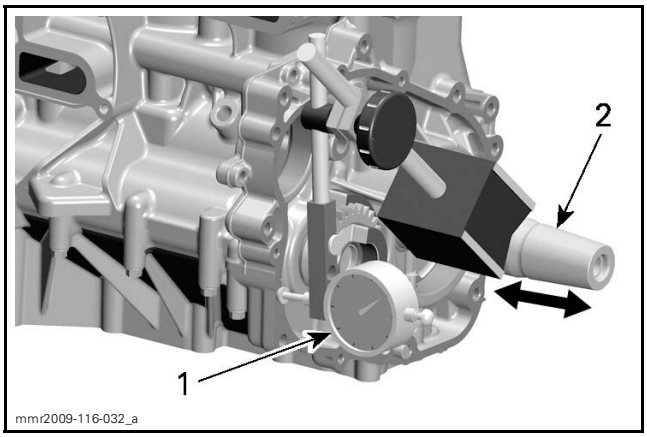


*TYPICAL*
1. *Dial indicator*
2. *Crankshaft*

| CRANKSHAFT AXIAL PLAY | |
|---|---|
| NEW | 0.120 mm to 0.392 mm (.005 in to .015 in) |
| SERVICE LIMIT | 0.450 mm (.018 in) |

If axial play is out of specification, replace the crankshaft thrust washers and repeat measurement.

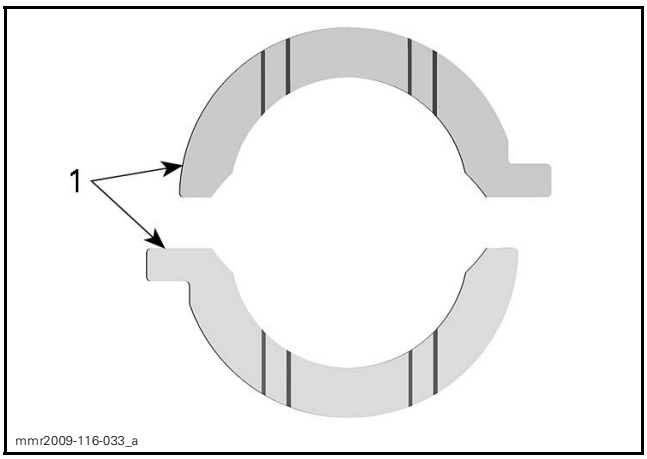


*TYPICAL*
1. *Crankshaft thrust washers*

## Crankshaft Installation

Reverse the removal procedure. However, pay attention to following details.

Turn cylinder block upside down.

**NOTICE** **Be careful that connecting rods do not hit the cylinder block.**

Apply engine oil on all plain bearings before installing them.

Install crankshaft along with the timing chain.

Lubricate (both sides) and reinstall crankshaft thrust washers with the slots facing against crankshaft counterweights.

NOTE: Thrust washers must be flush with cylinder block sealing surface.

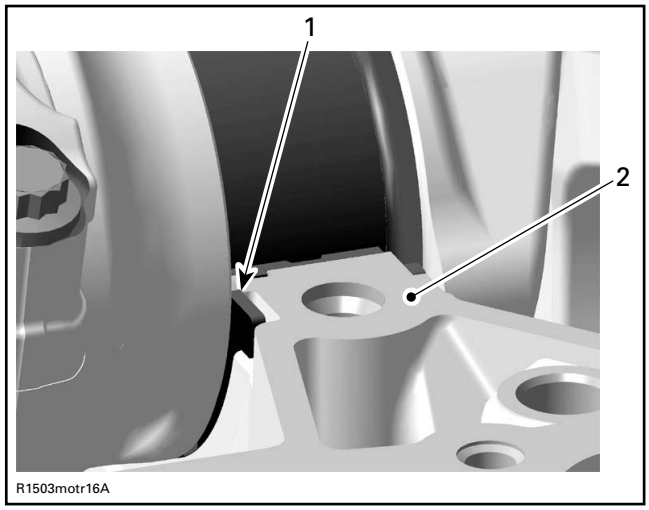


*TYPICAL*
1. *Thrust washer*
2. *Sealing surface*

Install connecting rod caps. Refer to *PISTONS AND CONNECTING RODS* in this subsection.

**NOTICE** **It is absolutely necessary to follow this procedure. Otherwise, severe engine damage can occur.**

Install cylinder block lower half. Refer to *CYLINDER BLOCK* in this subsection.

Lock crankshaft before further assembly of the engine. See *CRANKSHAFT LOCKING PROCEDURE* in this subsection.

# PISTONS AND CONNECTING RODS

## Piston and Connecting Rod Removal

NOTE: It is recommended to measure connecting rod big end axial play prior to removing connecting rod. Refer to *CONNECTING ROD INSPECTION* in this subsection.

1. Disassemble *CYLINDER BLOCK* as per procedure in this subsection.
2. Remove connecting rod cap.

**NOTICE** **Mark cylinder position of connecting rod before disassembly.**

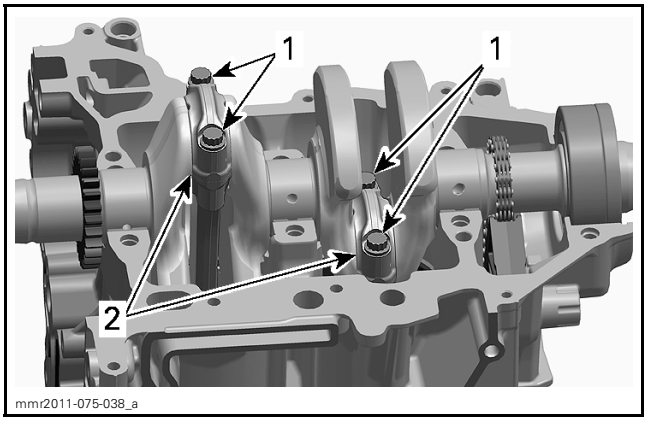


1. *Connecting rod screws*
2. *Connecting rod cap*

3. Remove *CRANKSHAFT* as per procedure in this subsection.
4. Turn cylinder block and push piston and connecting rod out of the cylinder.

## Piston and Connecting Rod Disassembly

1. Remove one piston pin circlip and discard it.

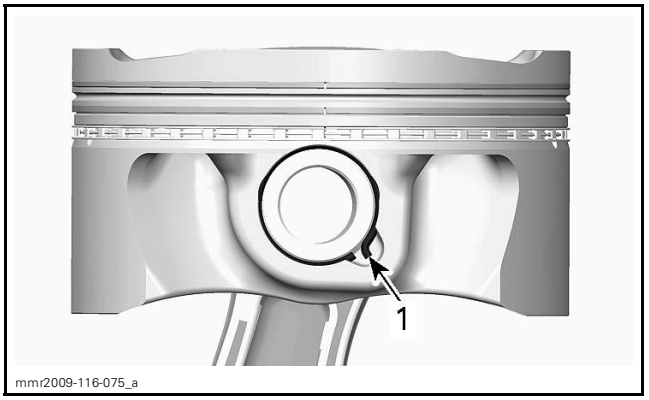


*TYPICAL*
1. *Piston pin circlip*

NOTE: The removal of both piston pin circlips is not necessary to remove the piston pin.

2. Push piston pin out of the piston.

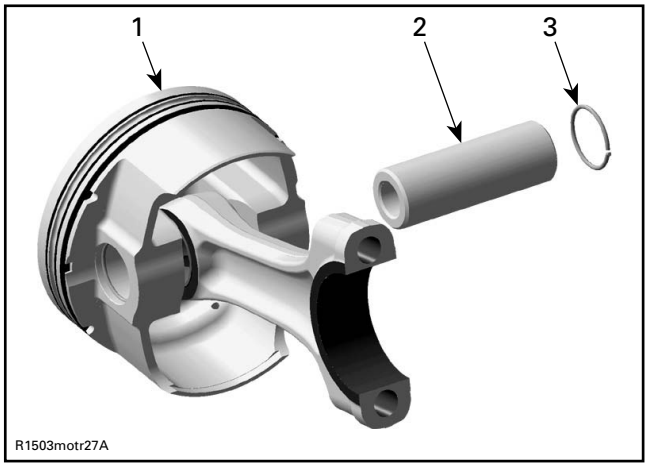


*TYPICAL*
1. *Piston*
2. *Piston pin*
3. *Circlip*

3. Detach piston from connecting rod.

## Connecting Rod Inspection

### Connecting Rod Big End Axial Play

Using a feeler gauge, measure the distance between the butting face of the connecting rod, and the crankshaft counterweight. If the distance exceeds specified tolerance, replace the worn part.

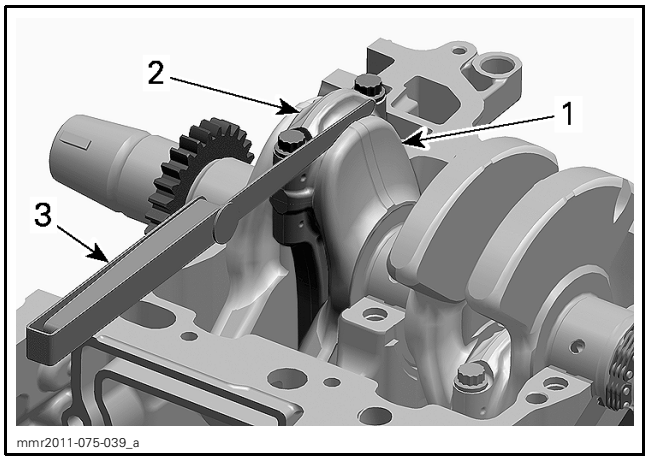


1. *Crankshaft*
2. *Connecting rod*
3. *Feeler gauge*

| CONNECTING ROD BIG END AXIAL PLAY | |
|---|---|
| NEW | 0.100 mm to 0.352 mm (.004 in to .014 in) |
| SERVICE LIMIT | 0.450 mm (.018 in) |

### Connecting Rod Small End Radial Play

Measure connecting rod small end using a bore gauge.

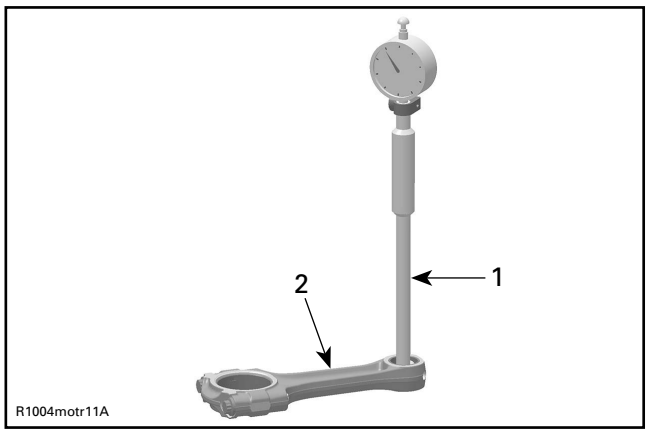


*TYPICAL*
1. *Bore gauge*
2. *Connecting rod*

| CONNECTING ROD SMALL END DIAMETER | |
|---|---|
| NEW | 17.010 mm to 17.020 mm (.6697 in to .6701 in) |
| SERVICE LIMIT | 17.060 mm (.6717 in) |

If the connecting rod small end diameter is out of specification, replace the connecting rod.

To obtain the connecting rod radial play (small end), calculate the difference between the piston pin diameter (*PISTON PIN INSPECTION*) and the inner diameter of the connecting rod small end.

| CONNECTING ROD SMALL END RADIAL PLAY | |
|---|---|
| SERVICE LIMIT | 0.040 mm (.0016 in) |

### Connecting Rod Big End Radial Play

1. Measure inside diameter of connecting rod big end.
   - 1.1 Install the OLD plain bearings as they were mounted initially.
   - 1.2 Perform the tightening procedure as described in *PISTON AND CONNECTING ROD INSTALLATION* in this subsection.

     NOTE: To measure the connecting rod big end diameter, ALWAYS use the OLD connecting rod screws.
   - 1.3 Measure inside diameter in longitudinal direction of the connecting rod.

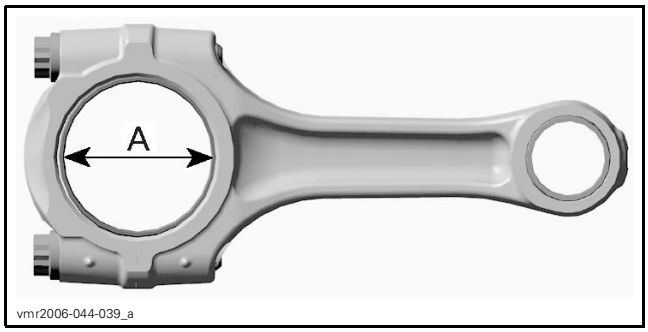


*TYPICAL*
*A. Connecting rod big end bearing*

| CONNECTING ROD BIG END DIAMETER | |
|---|---|
| SERVICE LIMIT | 36.060 mm (1.4197 in) |

To obtain the connecting rod big end radial play, calculate the difference between the big end diameter and the crankshaft pin diameter (see *CRANKSHAFT INSPECTION*) in this subsection.

| CONNECTING ROD BIG END RADIAL PLAY | |
|---|---|
| SERVICE LIMIT | 0.080 mm (.0031 in) |

If connecting rod big end diameter is out of specification, install NEW plain bearings.

## Piston Pin Inspection

Using a woven synthetic abrasive, clean piston pin of deposits.

Inspect piston pin for scoring, cracks or other damage.

Measure piston pin diameter, using a micrometer. See following illustration for proper measurement position.

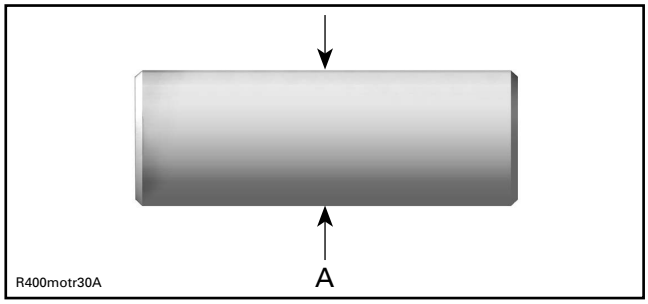


*TYPICAL*
*A. Measure piston pin diameter here*

| PISTON PIN DIAMETER | |
|---|---|
| NEW | 16.996 mm to 17.000 mm (.6691 in to .6693 in) |
| SERVICE LIMIT | 16.986 mm (.6687 in) |

Replace piston pin if out of specification.

## Piston Inspection

Inspect piston for scoring, scuffing, cracks or other damage. Replace piston and piston rings if necessary.

Using a micrometer, measure piston perpendicularly (90°) to piston pin axis at 8.5 mm (11/32 in) from the skirt edge.

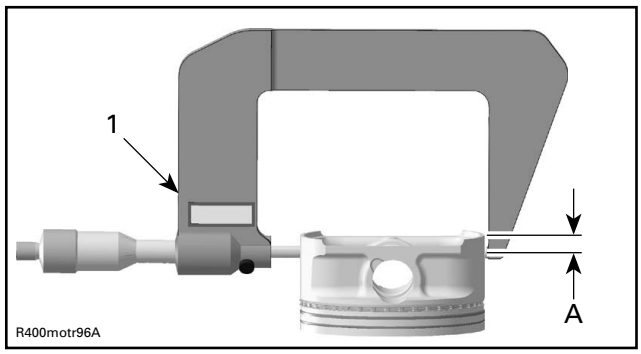


*TYPICAL*
*1. Measuring perpendicularly (90°) to piston pin axis*
*A. 8.5 mm (11/32 in)*

| PISTON MEASUREMENT | |
|---|---|
| NEW | 73.950 mm to 73.966 mm (2.911 in to 2.912 in) |
| SERVICE LIMIT | 73.920 mm (2.9102 in) |

Replace piston if out of specification.

### Piston/Cylinder Clearance

1. Adjust and lock a micrometer to the piston dimension.

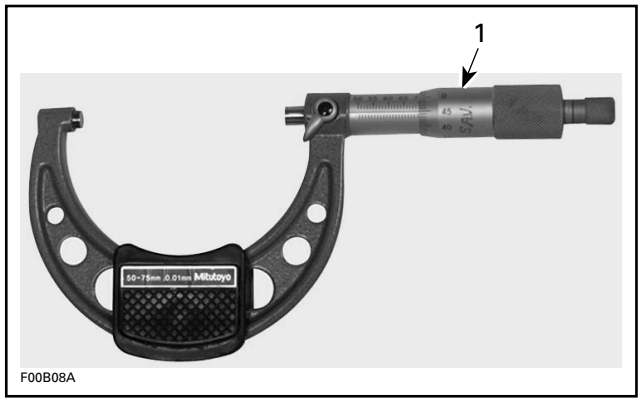


*TYPICAL*
*1. Micrometer set to the piston dimension*

NOTE: Make sure used piston is not worn.

2. With the micrometer locked at step 1, adjust a cylinder bore gauge to the micrometer dimension and set the indicator to 0 (zero).

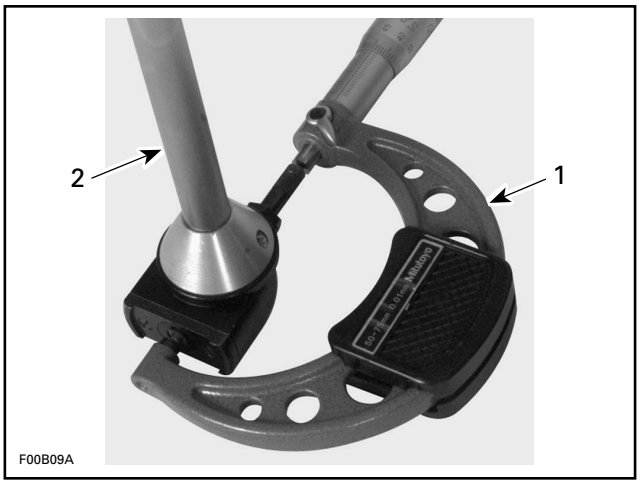


*TYPICAL*
1. *Use the micrometer to set the cylinder bore gauge*
2. *Cylinder bore gauge*

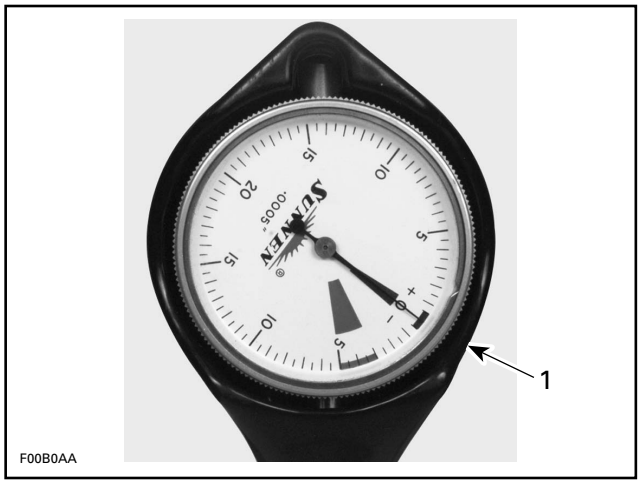


*TYPICAL*
1. *Indicator set to 0 (zero)*

NOTE: Make sure the cylinder bore gauge indicator is set exactly at the same position as with the micrometer, otherwise the reading will be false.

3. Position the cylinder bore gauge 35 mm (1-3/8 in) below the cylinder head mating surface, measuring perpendicularly (90°) to piston pin axis.
4. Read measurement on cylinder bore gauge. The result is the exact piston/cylinder clearance.

| PISTON/CYLINDER CLEARANCE | |
|---|---|
| NEW | 0.037 mm to 0.067 mm (.0015 in to .0026 in) |
| SERVICE LIMIT | 0.080 mm (.0031 in) |

If clearance exceeds specified tolerance, replace piston and repeat measurement procedure.

## Piston and Connecting Rod Assembly

Reverse the disassembly procedure. However, pay attention to the following details.

1. Apply engine oil on piston pin.
2. Insert piston pin in piston and connecting rod.

NOTE: Be sure to reinstall all parts in their original position as marked during removal.

3. Install NEW piston pin circlip(s).

| REQUIRED TOOL | |
|---|---|
| PISTON CIRCLP INSTALLER (P/N 529 036 207) | |

**NOTICE** Always replace removed piston pin circlips by NEW ones.

3.1 Place the circlip in the sleeve and push piston circlip installer handle until circlip reaches the mid position in the sleeve.

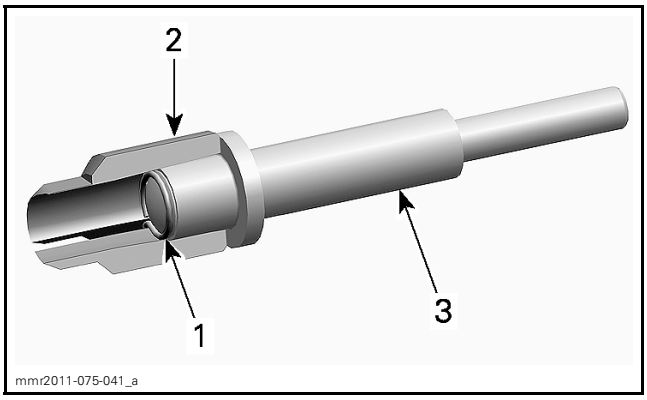


*TYPICAL*
1. *Circlip*
2. *Sleeve*
3. *Installer handle*

3.2 Put the distance sleeve on the installer handle.

3.3 Push piston circlip installer handle until distance sleeve makes contact with the sleeve.

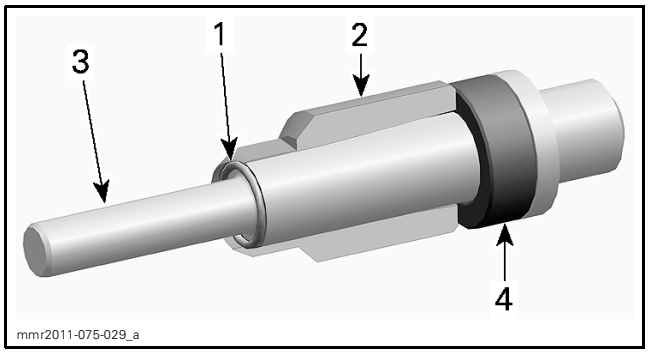


1. *Circlip*
2. *Sleeve*
3. *Installer handle*
4. *Distance sleeve*

3.4 Remove distance sleeve and insert installer handle into the sleeve.

3.5 Insert the end of the handle into the piston pin, then push to engage the circlip in the piston groove.

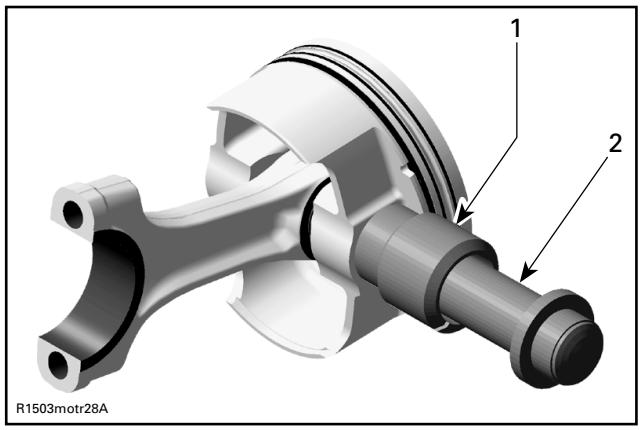


*TYPICAL*
1. *Sleeve with piston circlip inside*
2. *Piston clip installer handle*

NOTE: Ensure the hook of the piston pin circlip is properly positioned.

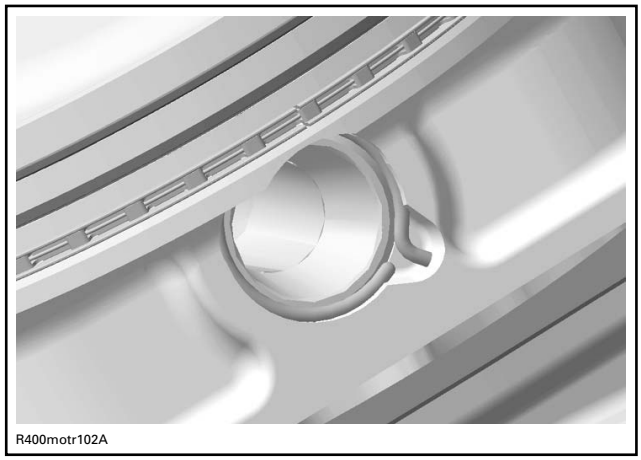


*CORRECT POSITION OF PISTON PIN CIRCLIP*

**NOTICE** If piston pin circlip installation fails, repeat step 3 by using a NEW circlip.

4. Correctly install plain bearings and carefully clean split surface on both sides (cracked area) with compressed air.

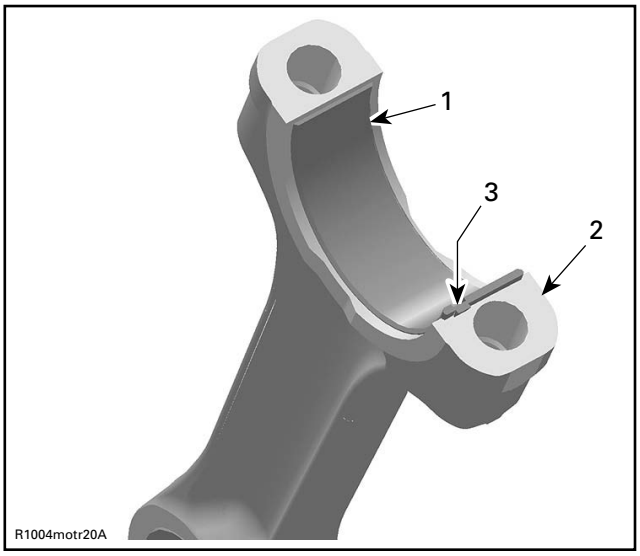


*TYPICAL*
1. *Half bearing of connecting rod big end*
2. *Split surface of the connecting rod*
3. *Protrusion of bearing in line with connecting rod groove*

**NOTICE** The arrow on top of the piston and the punch marks on the connecting rods must always point towards the exhaust.

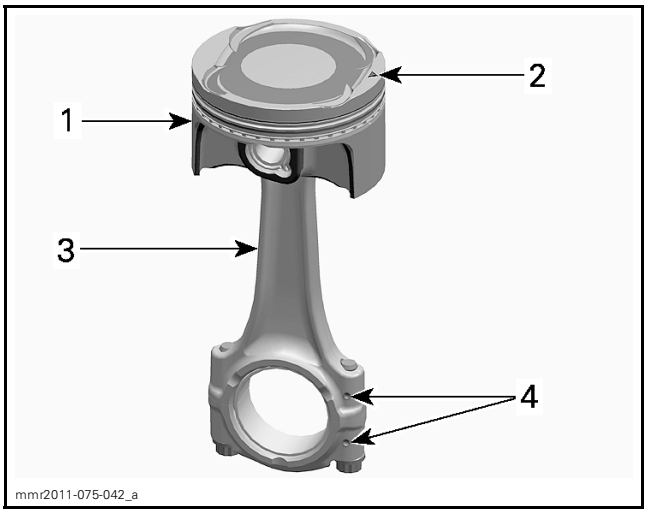


1. *Piston*
2. *Arrow on top*
3. *Connecting rod*
4. *Punch marks*

## Piston and Connecting Rod Installation

1. Using recommended engine oil, lubricate:
   – Piston
   – Piston rings

– Cylinder bore
– Connecting rod bearings.

2. Slide piston in cylinder bore. Pay attention to the following.

| REQUIRED TOOL | |
|---|---|
| PISTON RING COMPRESSOR (P/N 529 036 208) | |

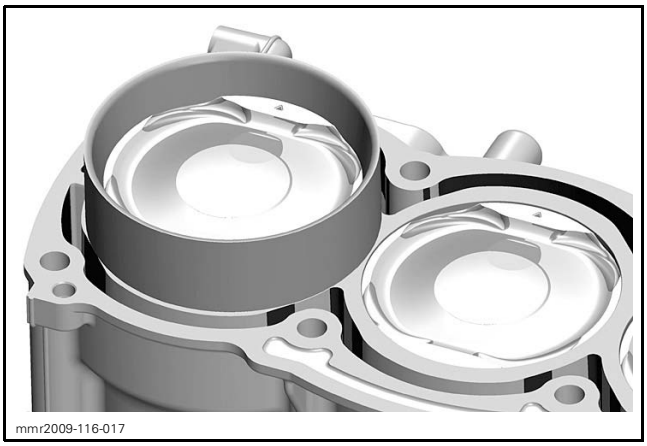


*TYPICAL*

2.1 If reused, install piston in its original bore.

2.2 Make sure piston rings are properly spaced.

**NOTICE** The ring gaps of both compression rings should always be 180° from each other and 90° from the arrow on top of the piston.

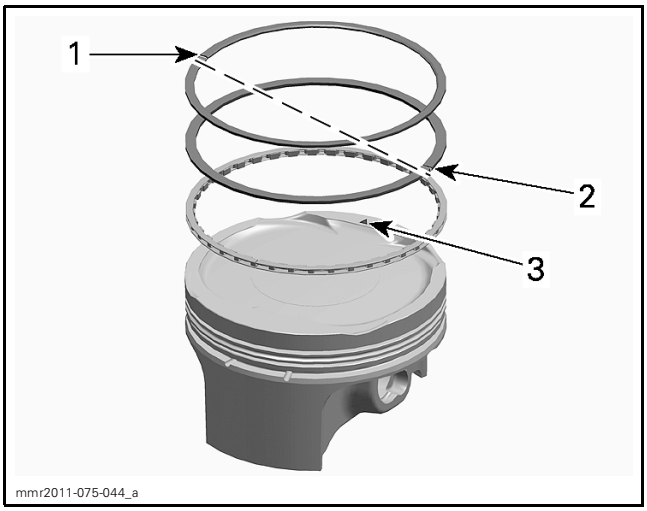


*RING GAPS AT 180° FROM EACH OTHER AND 90° FORM ARROW*
1. *Rectangular ring - ring gap*
2. *Taper-face ring - ring gap*
3. *Arrow*

2.3 The arrow on top of the piston must point towards the exhaust.

**NOTICE** A piston installed with the arrow in the wrong direction would cause serious engine damage.

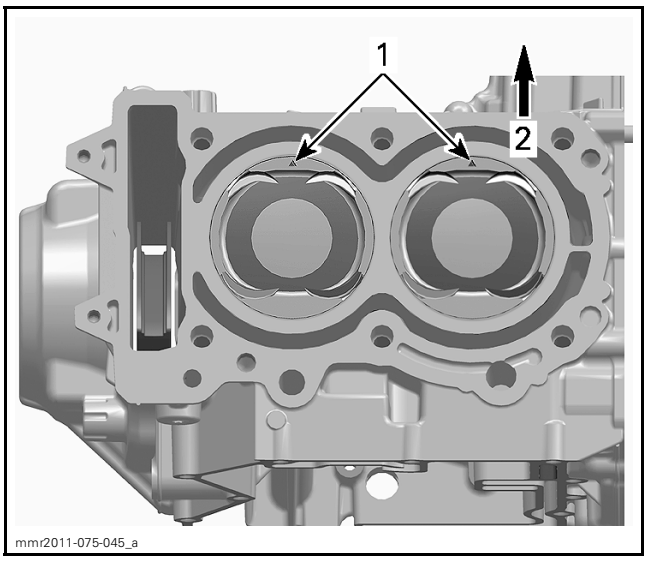


1. *Arrows*
2. *Exhaust*

3. Turn cylinder block upside down.
4. Install *CRANKSHAFT* as per procedure in this subsection.
5. Oil crankshaft pin.
6. Install connecting rod caps.

NOTE: Printed marks on connecting rod and cap must point together.

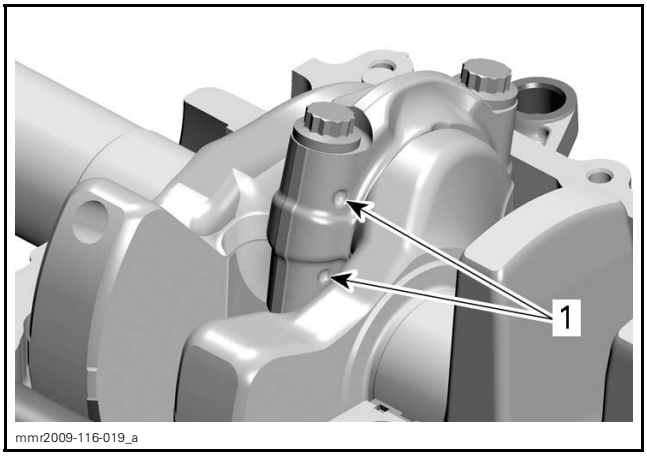


*TYPICAL*
1. *Printed marks*

**NOTICE** This assembly uses stretch screws. Always use NEW screws and strictly adhere to the tightening procedure.

7. Tighten connecting rod screws as follows:
   7.1 Apply oil on connecting rod screw heads.
   7.2 Torque both connecting rod screws of a connecting rod.

| CONNECTING ROD SCREWS TIGHTENING PROCEDURE | |
|---|---|
| FIRST STEP | 12 N•m ± 2 N•m (106 lbf•**in** ± 18 lbf•**in**) |

   7.3 Use a torque angle gauge to carry out the second step.

| CONNECTING ROD SCREWS TIGHTENING PROCEDURE | |
|---|---|
| SECOND STEP | Additional 70° ± 5° |

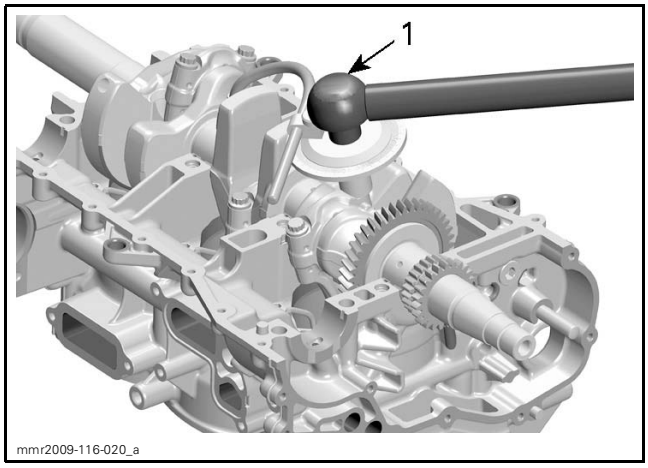


*1. Torque angle gauge*

**NOTICE** Failure to strictly follow this procedure may cause screws to loosen and lead to severe engine damage.

8. Install all other removed parts.

# PISTON RINGS

## Piston Ring Removal

1. Remove piston, see procedure in this subsection.
2. Remove rings from piston.

## Piston Ring Inspection

### Ring/Piston Groove Clearance

Using a feeler gauge measure each ring/piston groove clearance.

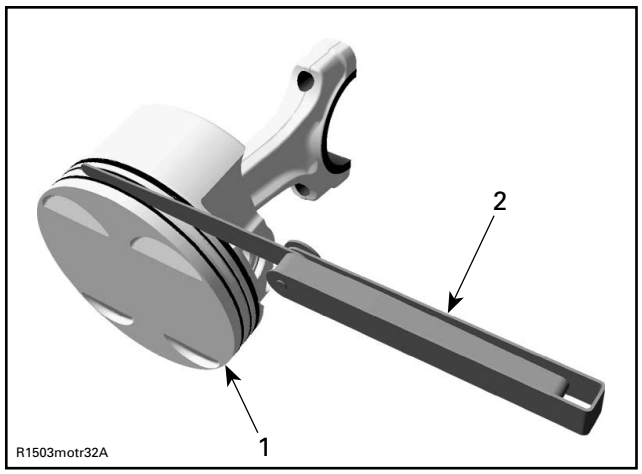


*TYPICAL*
*1. Piston*
*2. Feeler gauge*

| RING/PISTON GROOVE CLEARANCE | |
|---|---|
| UPPER COMPRESSION RING | |
| NEW | 0.030 mm to 0.066 mm (.0012 in to .0026 in) |
| SERVICE LIMIT | 0.120 mm (.0047 in) |
| LOWER COMPRESSION RING | |
| NEW | 0.020 mm to 0.056 mm (.0008 in to .0022 in) |
| SERVICE LIMIT | 0.120 mm (.0047 in) |
| OIL SCRAPER RING | |
| NEW | 0.010 mm to 0.040 mm (.0004 in to .0016 in) |
| SERVICE LIMIT | 0.150 mm (.0059 in) |

If clearance is out of specification, the piston and rings should be replaced.

### Ring End Gap

1. Place piston ring in cylinder bore between 8 mm to 16 mm (5/16 in to 5/8 in) from the top of cylinder.

NOTE: In order to correctly position the ring in the cylinder bore, use a piston as a pusher.

2. Using a feeler gauge, check ring end gap.

| RING END GAP | |
|---|---|
| UPPER COMPRESSION RING | |
| NEW | 0.20 mm to 0.35 mm (.008 in to .014 in) |
| SERVICE LIMIT | 1.20 mm (.047 in) |
| LOWER COMPRESSION RING | |
| NEW | 0.30 mm to 0.50 mm (.012 in to .02 in) |
| SERVICE LIMIT | 1.20 mm (.047 in) |
| OIL SCRAPER RING | |
| NEW | 0.20 mm to 0.70 mm (.0079 in to .0276 in) |
| SERVICE LIMIT | 1.20 mm (.047 in) |

If ring end gap is out of specification, replace piston rings.

## Piston Ring Installation

1. Install piston rings in the following order.

   NOTE: Use a ring expander to prevent breakage during installation. The oil ring must be installed by hand.

   1.1 Install oil scraper ring.

   1.2 Install the lower compression ring with the letter "N" facing up.

   1.3 Install upper compression ring with the letter "N" facing up.

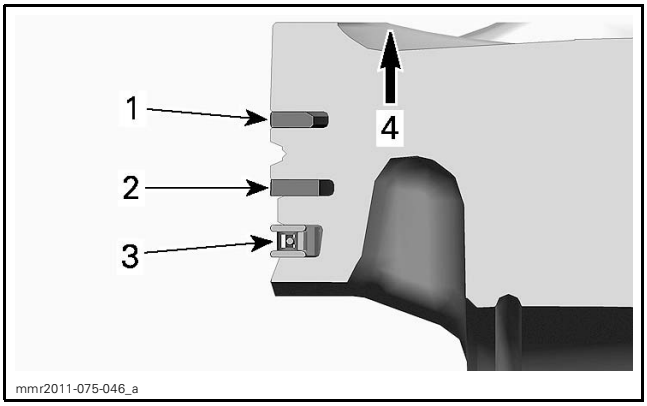


*1. Rectangular ring*
*2. Taper-face ring*
*3. Oil scraper ring*
*4. Letter "N" facing up*

**NOTICE** Ensure the upper and lower compression rings are not interchanged.

2. Ensure rings rotate smoothly after installation.

# CYLINDER BLOCK

## SERVICE TOOLS

| Description | Part Number | Page |
|---|---|---|
| CRANKSHAFT LOCKING TOOL | 529 036 272 | 14 |
| OIL SEAL/BEARING PUSHER | 529 036 284 | 5–6 |
| PISTON CIRCLP INSTALLER | 529 036 207 | 20 |
| PISTON RING COMPRESSOR | 529 036 208 | 22 |

## SERVICE PRODUCTS

| Description | Part Number | Page |
|---|---|---|
| LOCTITE 5910 | 293 800 081 | 11 |
| LOCTITE CHISEL (GASKET REMOVER) | 413 708 500 | 10 |
| SUPER LUBE GREASE | 293 550 030 | 5 |

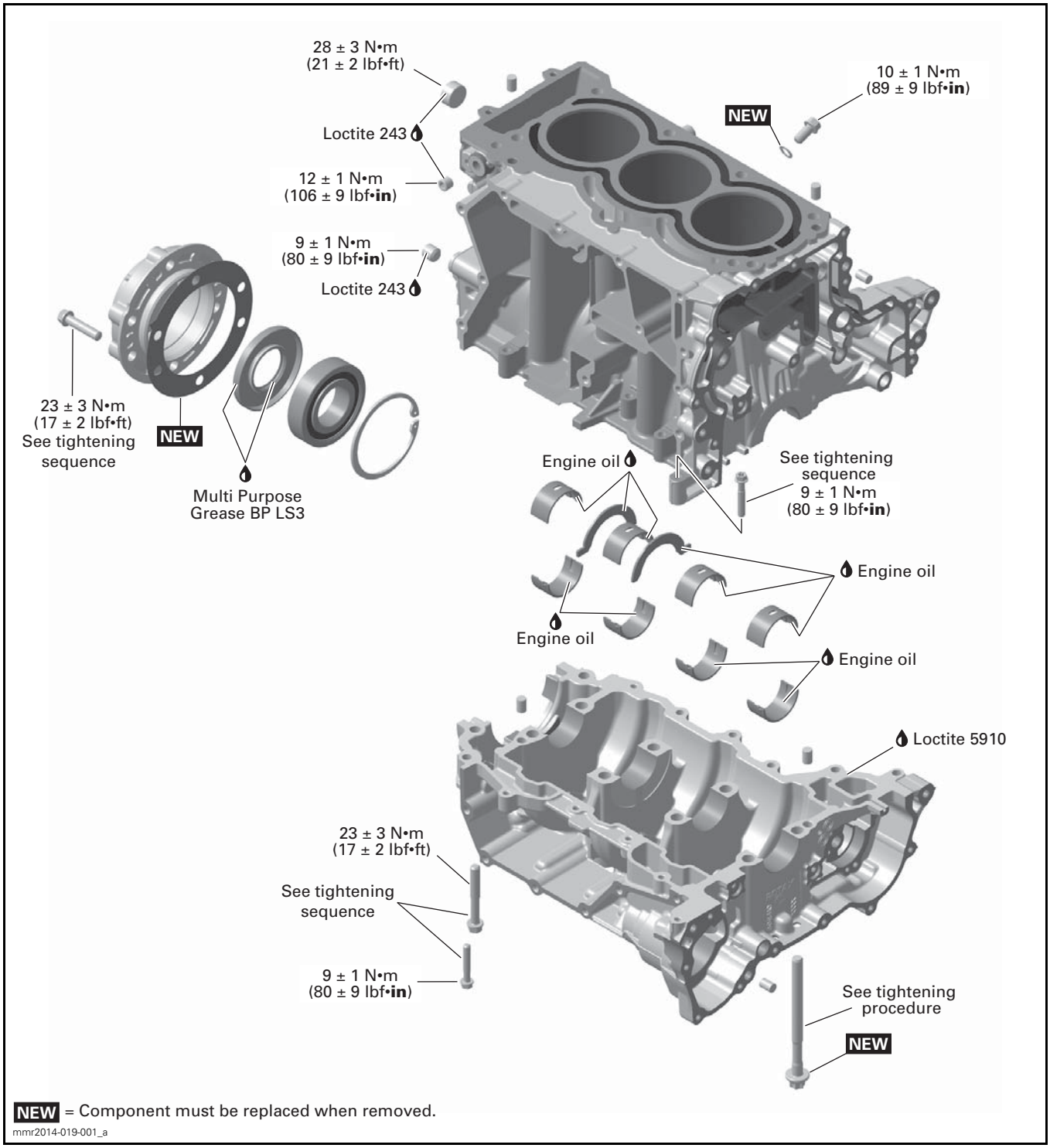


**NEW** = Component must be replaced when removed.

mmr2014-019-001_a

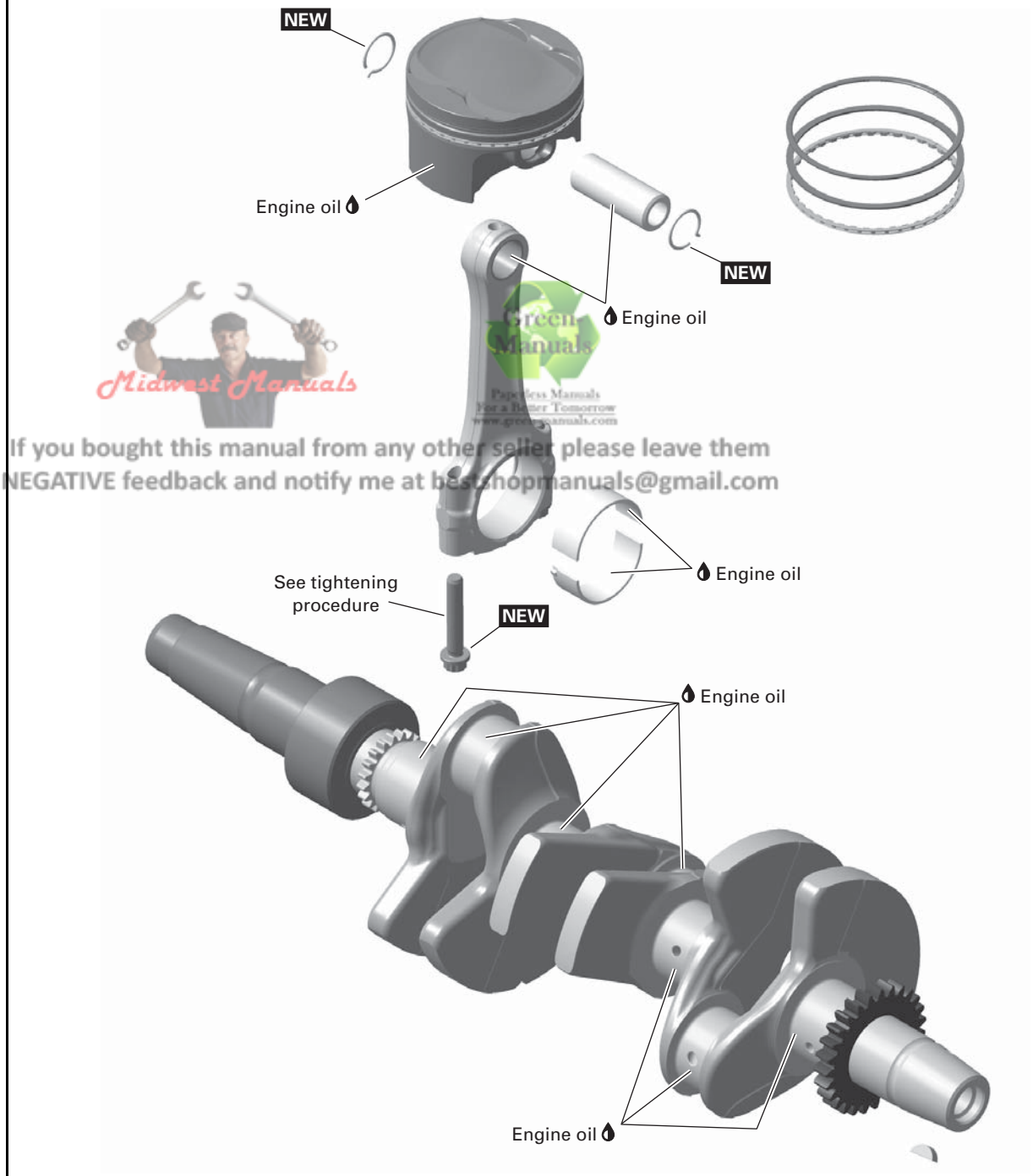


Midwest Manuals
Green Manuals
Paperless Manuals For a Better Tomorrow www.greenmanuals.com
If you bought this manual from any other seller please leave them NEGATIVE feedback and notify me at bestshopmanuals@gmail.com

**NEW** = Component must be replaced when removed.

RTX19_900ACE-008_001_a

# GENERAL

When disassembling parts that are duplicated in the engine, (e.g.: pistons, connecting rods etc.), it is strongly recommended to note their position and to keep the parts of the same assembly as a "group". If you find a defective component, it would be much easier to find the cause of the failure. Since parts were broken-in during engine operation, they will maintain their matched fit when reassembled together within their "group".

# TROUBLESHOOTING

Always check for fault codes. If a fault code is detected, service the fault code first. Refer to *DIAGNOSTIC AND FAULT CODES* subsection.

## UNUSUAL ENGINE NOISE OR VIBRATIONS

1. Heavy wear on plain bearings.
   - *Check radial play of plain bearings. Replace if out of specification.*
2. Crankshaft axial play out of specification.
   - *Measure crankshaft axial play. If crankshaft axial play is out of specification, replace thrust washers.*
3. Connecting rod axial play out of specification.
   - *Measure connecting rod axial play on crankshaft. Replace connecting rod or crankshaft if out of specification.*
4. Connecting rod screws got loose.
   - *Replace damaged components and retighten screws with the recommended torque.*
5. Crankshaft PTO ball bearing is worn.
   - *Remove PTO cover and check ball bearing for excessive play. Replace ball bearing if necessary.*

## BLUE SMOKE IN THE EXHAUST

1. Oil scraper rings worn out.
   - *Replace piston rings.*

## ENGINE SUDDENLY TURNS OFF (POOR IDLING)

1. Piston rings worn out.
   - *Replace piston rings.*
2. Piston/cylinder clearance out of specification.
   - *Check piston/cylinder clearance. Replace if out of specification.*
3. Melted or broken piston.
   - *Replace piston and cylinder block if necessary.*

# PROCEDURES

## PTO COVER AND PTO OIL SEALS

### PTO Cover Access

NOTE: To replace the PTO oil seal, it is not necessary to remove engine from the vehicle.

Remove drive pulley. Refer to *DRIVE PULLEY (e-Drive)* subsection.

### Removing the PTO Cover

Remove screws retaining the PTO cover.

Remove PTO cover and discard gasket.

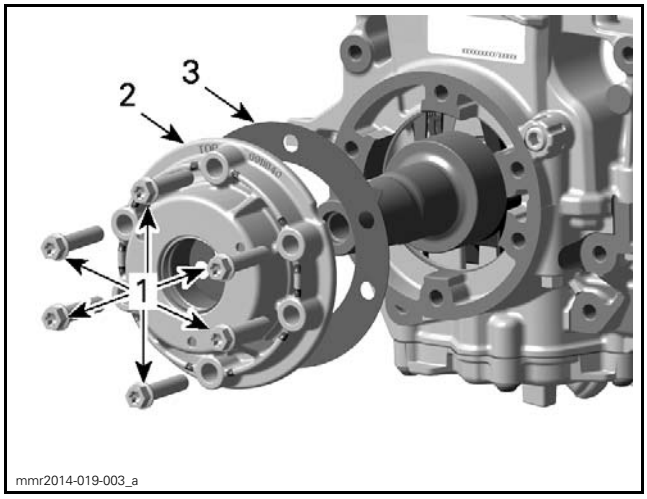


*1. PTO cover screws*
*2. PTO cover*
*3. Gasket*

### PTO Oil Seal and Bearing Replacement

NOTE: Always replace PTO oil seal and ball bearing at the same time.

#### Removing thePTO Oil Seal and Bearing

1. Use pliers to remove inner retaining ring.

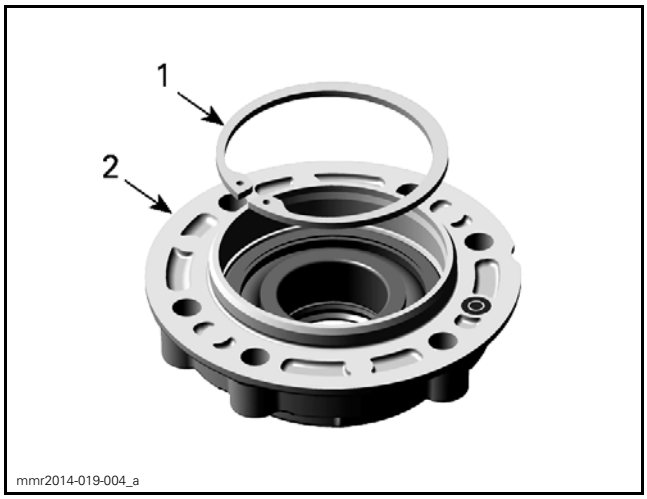


*1. Retaining ring*
*2. PTO cover*

2. Heat PTO cover to 130°C (266°F) before removing ball bearing and oil seal.

**NOTICE** **Clean PTO cover of oil before heating.**

3. Carefully push out oil seal and ball bearing.

| REQUIRED TOOL |
|---|
| Punch 4 mm (.157 in) |

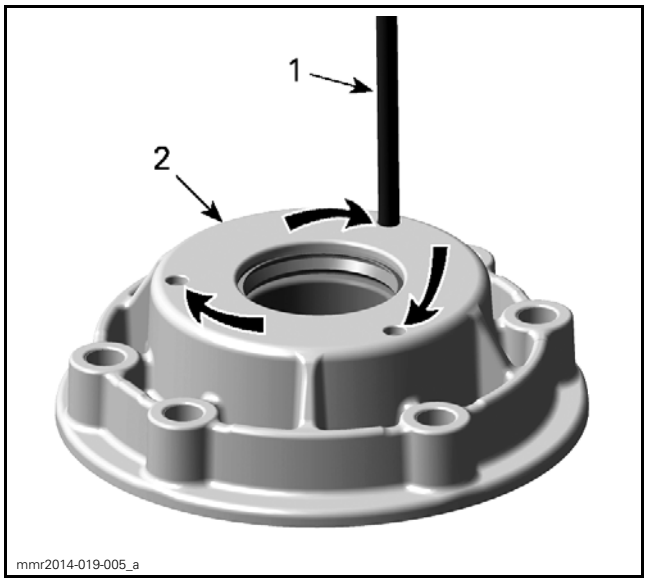


*PUSH OUT CIRCULAR*
*1. Punch*
*2. PTO cover*

4. Remove and discard ball bearing and oil seal.

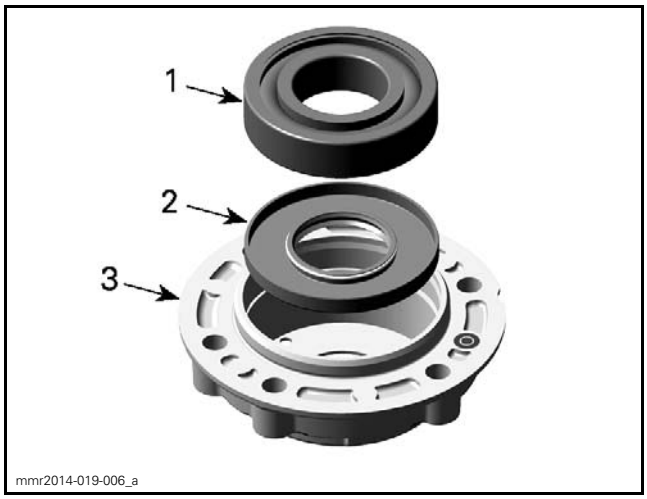


*1. Ball bearing*
*2. Oil seal*
*3. PTO cover*

### Installing the PTO Oil Seal and Bearing

NOTE: Check the oil seal running surface on the crankshaft for grooves and deposits before installation of a NEW oil seal.

1. Clean crankshaft PTO side of deposits.
2. Clean oil seal and ball bearing areas in PTO cover.
3. Lubricate oil seal sealing lip and outer diameter.

| SERVICE PRODUCT |
|---|
| SUPER LUBE GREASE (P/N 293 550 030) |

4. Press NEW oil seal in PTO cover.

**NOTICE** **Oil seal must be installed with sealing lip in, towards the engine.**

| REQUIRED TOOL | |
|---|---|
| OIL SEAL/BEARING PUSHER (P/N 529 036 284) | |

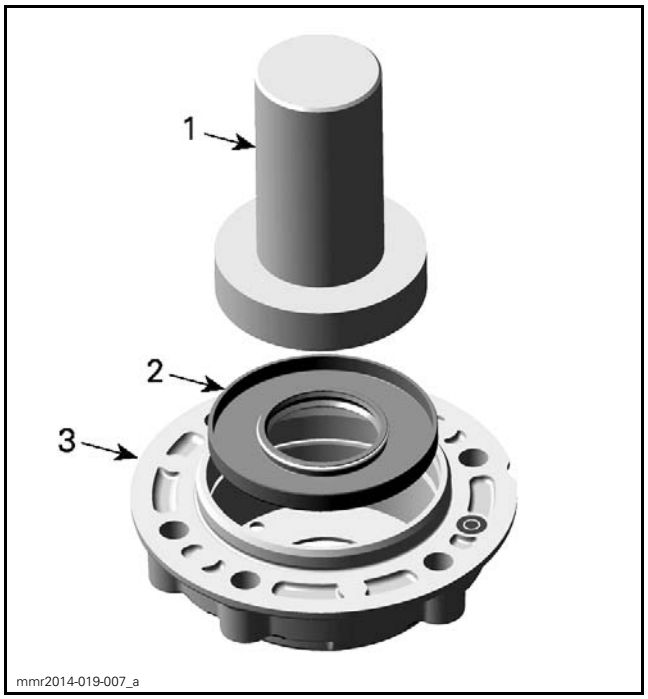


*1. Oil seal/bearing pusher*
*2. Oil seal*
*3. PTO cover*

5. Place NEW ball bearing in PTO cover with open side of plastic cage facing towards the engine.
6. Carefully press in the ball bearing.

***NOTICE*** During installation never push on the inner race of the bearing.

| REQUIRED TOOL | |
|---|---|
| OIL SEAL/BEARING PUSHER (P/N 529 036 284) | |

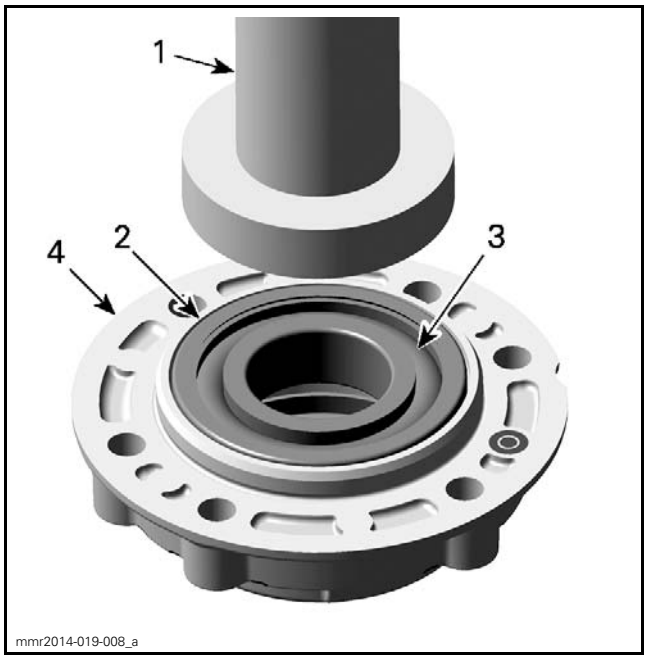


*1. Oil seal/bearing pusher*
*2. Ball bearing*
*3. Open side of plastic cage*
*4. PTO cover*

7. Install retaining ring.

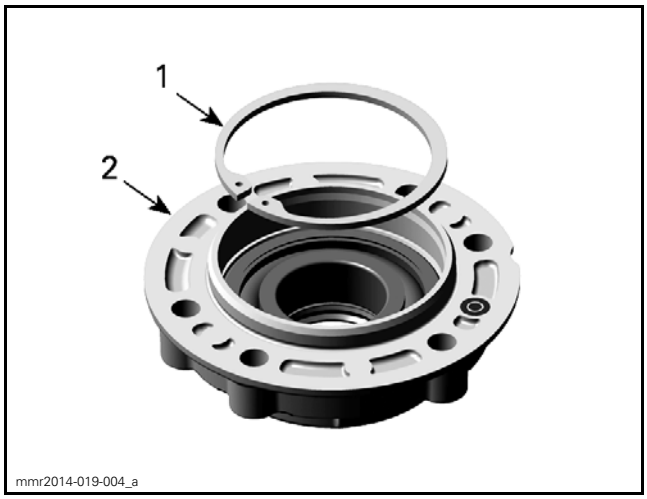


*1. Retaining ring*
*2. PTO cover*

## Installing the PTO Cover

Reverse the removal procedure. However, pay attention to following details.

Install a NEW PTO cover gasket in proper position.

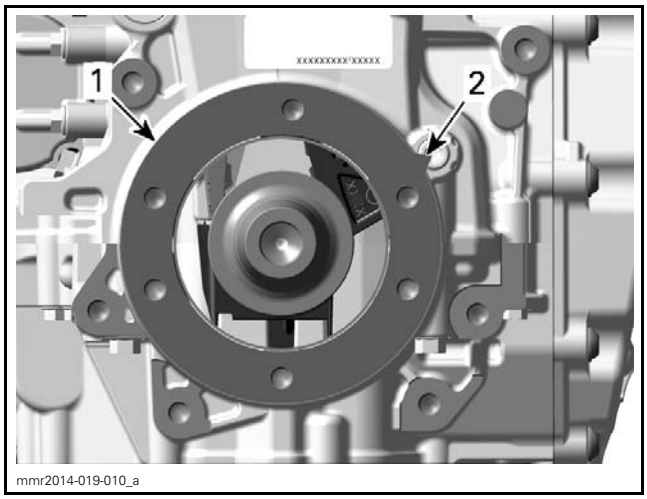


*1. Gasket*
*2. Tab*

Tighten PTO cover screws as per following sequence and specified torque.

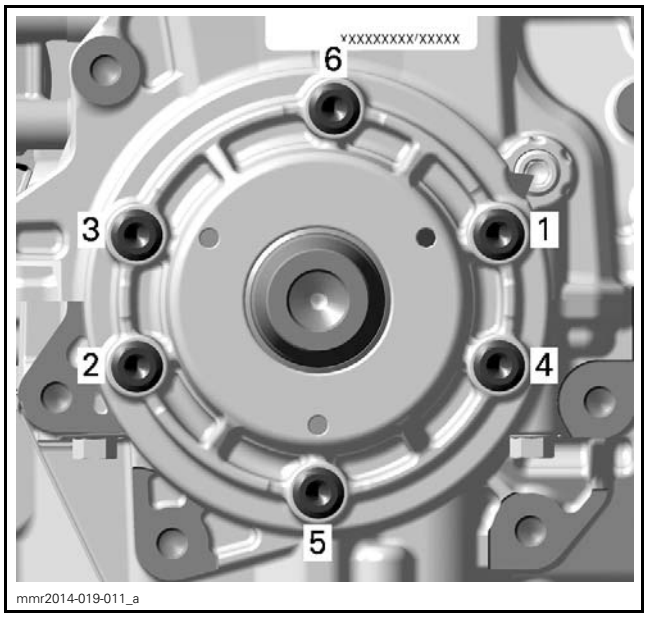


*PTO COVER TIGHTENING SEQUENCE*

| TIGHTENING TORQUE | |
|---|---|
| PTO cover screws | 23 N•m ± 3 N•m (17 lbf•ft ± 2 lbf•ft) |

# CYLINDER BLOCK

## Disassembling the Cylinder Block

1. Remove engine from vehicle. Refer to *ENGINE REMOVAL AND INSTALLATION* subsection.
2. Refer to *LUBRICATION SYSTEM* and drain engine oil.
3. Remove the valve cover. Refer to *TOP END* subsection.
4. Lock crankshaft, refer to *CRANKSHAFT LOCKING PROCEDURE* in this subsection.
5. Remove air intake manifold. Refer to *INTAKE MANIFOLD* subsection.
6. Refer to *COOLING SYSTEM - ENGINE* subsection and remove:
   – Water pump housing
   – Thermostat
   – Water pump drive gear.
7. Refer to *LUBRICATION SYSTEM* subsection and remove:
   – Oil tank
   – Oil cooler
   – Oil pressure regulator
   – Oil pump drive gears and oil pumps
   – Oil sump cover
   – Oil strainers.
8. Refer to *MAGNETO AND STARTER* subsection and remove:
   – Magneto cover
   – Rotor
   – Starter drive gears
   – Electric starter.
9. Refer to *TIMING CHAIN* subsection and remove:
   – Timing chain tensioner
   – Timing chain guides.
10. Refer to *TOP END* subsection and remove:
    – Camshaft holders
    – Cylinder head.
11. Remove PTO cover. Refer to *PTO COVER AND PTO OIL SEAL* in this subsection.

NOTE: Before splitting the cylinder block, measure crankshaft axial play. Refer to *CRANKSHAFT* in this subsection.

12. Remove crankshaft locking tool.
13. Remove cylinder block screws.
    13.1 Start by removing M6 screws.
    13.2 Then remove M8 screws.
    13.3 Finally remove and discard M9 screws.

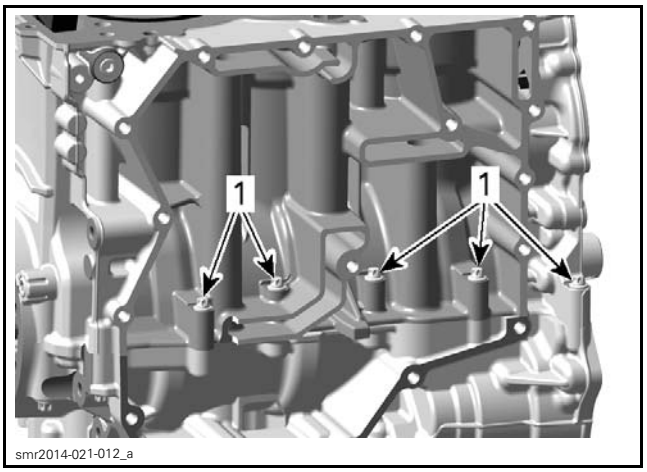


*INTAKE SIDE*
*1. Cylinder block screws (M6) screwed from top to bottom*

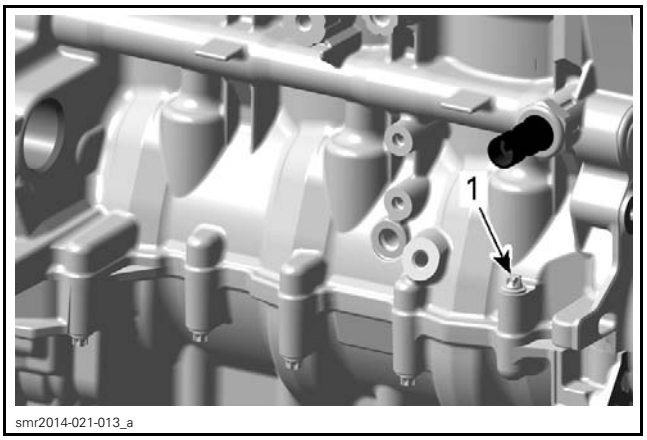


*EXHAUST SIDE*
*1. Cylinder block screw (M6) screwed from top to bottom*

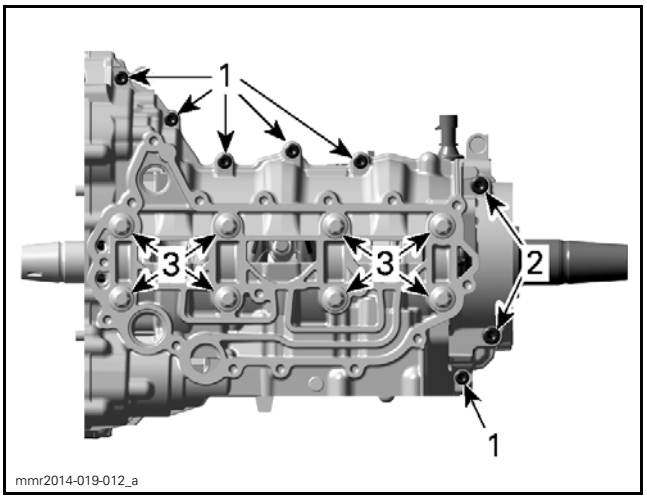


*BOTTOM SIDE*
*1. M6 screws*
*2. M8 screws*
*3. M9 screws (discard)*

14. Carefully remove cylinder block lower half using a soft hammer.

NOTE: Take care not to damage the sealing surfaces of the cylinder block halves.

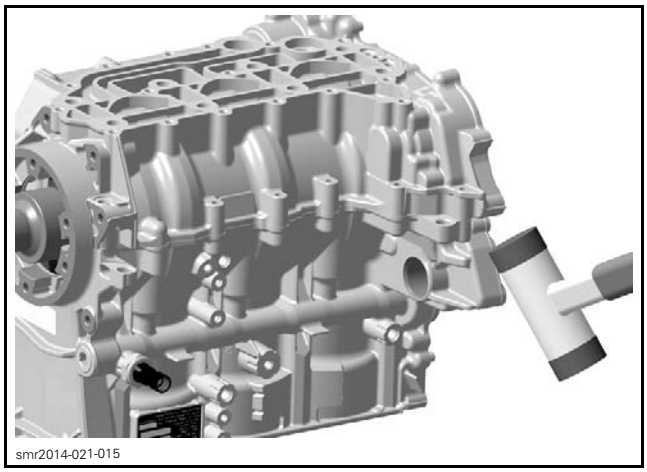


15. Remove connecting rod caps. Refer to *PISTONS AND CONNECTING RODS* in this subsection.
16. Refer to *CRANKSHAFT* in this subsection and remove:
    – Crankshaft thrust washers
    – Crankshaft.
17. Remove pistons and connecting rods. See procedure in this subsection.

### Removing the Plain Bearing

When the plain bearings need to be removed from the cylinder block, mark them to identify the correct position at installation. See the illustration as an example.

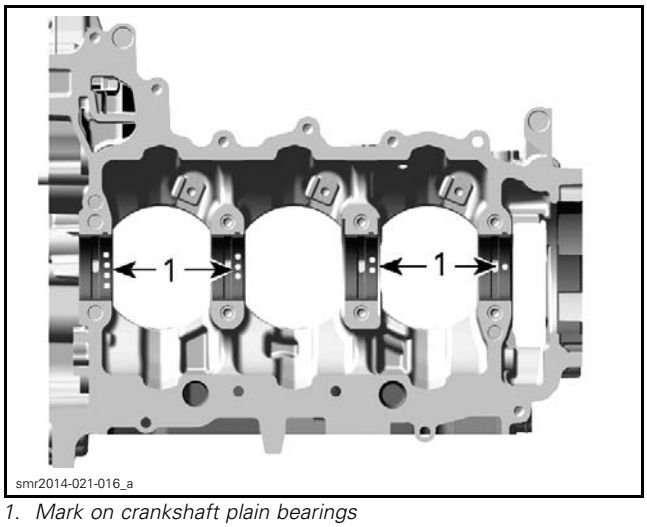


*1. Mark on crankshaft plain bearings*

## Cleaning the Cylinder Block

Clean cylinder block using a part cleaner, then use compressed air to dry it.

Blow out the oil orifices using compressed air and make sure they are not clogged.

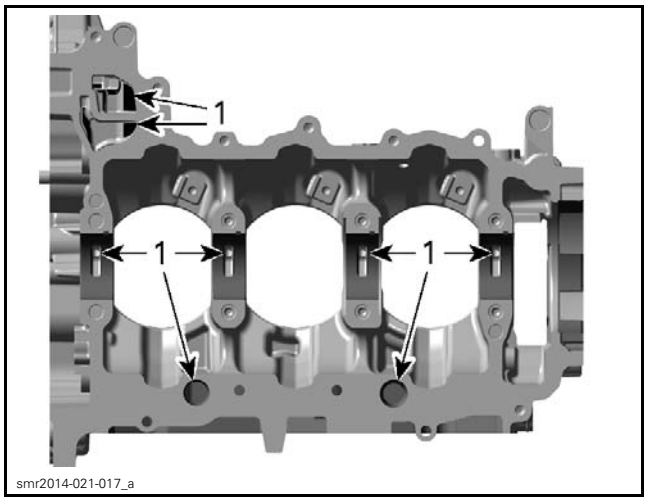


*CYLINDER BLOCK UPPER HALF*
*1. Oil orifices*

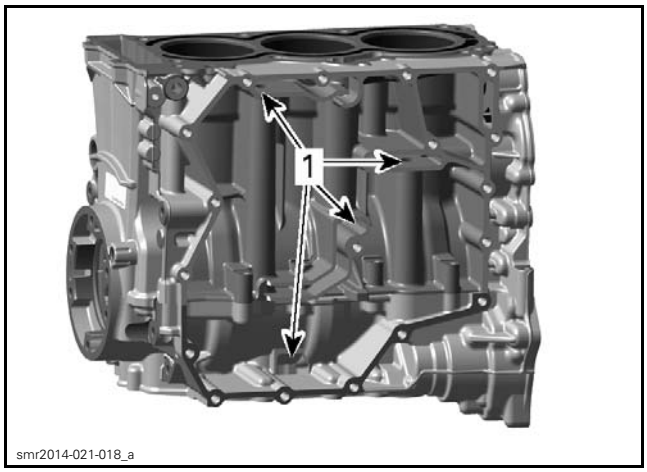


*CYLINDER BLOCK - REAR*
*1. Oil orifices*

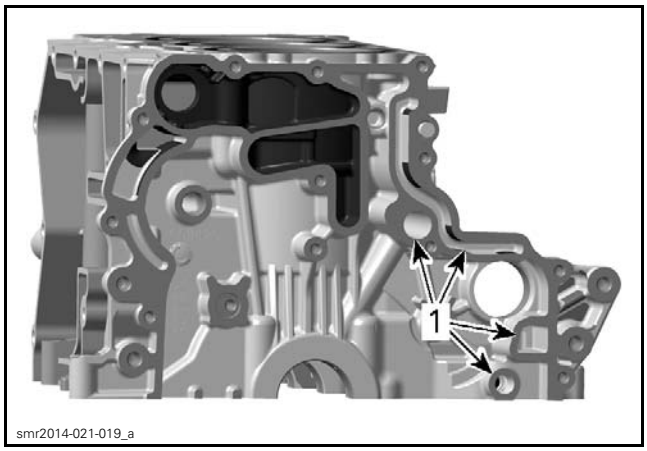


*CYLINDER BLOCK - MAG SIDE*
*1. Oil orifices*

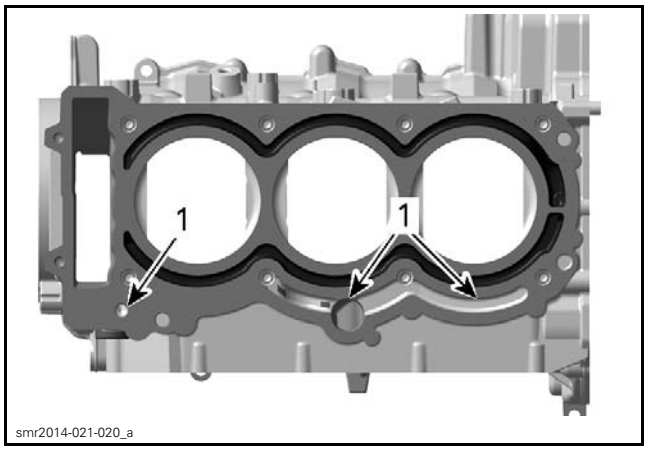


*CYLINDER BLOCK - TOP*
*1. Oil orifices*

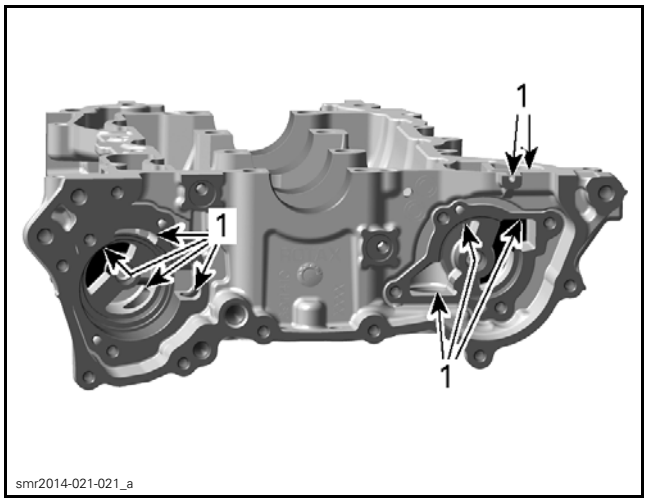


*CYLINDER BLOCK LOWER HALF*
*1. Oil orifices*

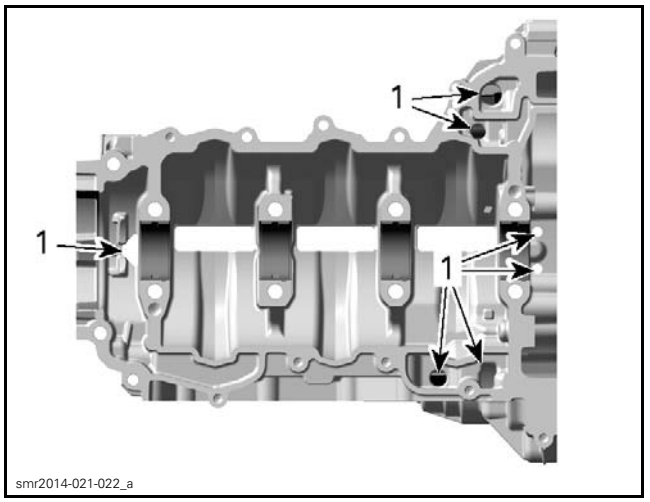


*CYLINDER BLOCK LOWER HALF*
*1. Oil orifices*

Clean all metal components in a solvent.

Clean cylinder block mating surfaces with gasket remover and a brass wire brush. Brush a first pass in one direction then make the final brushing perpendicularly (90°) to the first pass (cross hatch).

NOTE: Do not wipe with rags. Use a new clean hand towel only.

| SERVICE PRODUCT |
|---|
| LOCTITE CHISEL (GASKET REMOVER) (P/N 413 708 500) |

## Inspecting the Cylinder Block

Check cylinder block for cracks or other damage.

Check cylinder block mating surfaces for flatness using a straight edge.

Replace cylinder block if necessary.

Check cylinder bores for cracks, scoring and wear ridges on top and bottom of the cylinders.

### Cylinder Taper

Measure cylinder bore diameter at 4 recommended positions. See illustration.

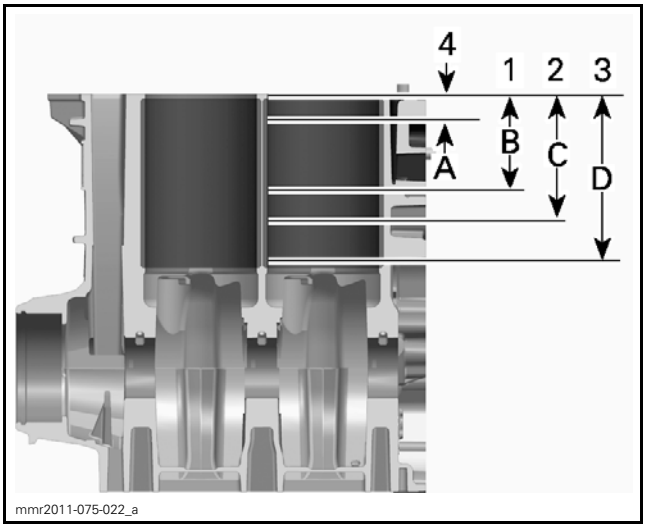


*TYPICAL*
1. *First measure*
2. *Second measure*
3. *Third measure*
4. *Fourth measure*

*A. 5 mm to 10 mm (.197 in to .394 in)*
*B. 30 mm to 35 mm (1.181 in to 1.378 in)*
*C. 57 mm to 62 mm (2.244 in to 2.441 in)*
*D. 111 mm to 113 mm (4.37 in to 4.449 in)*

The difference between measurements should not exceed the service limit mentioned in next table.

| CYLINDER TAPER | |
|---|---|
| New | 0.030 mm (.0012 in) |
| Service limit | 0.050 mm (.002 in) |

### Cylinder Out of Round

Measure cylinder bore diameter as shown, and at same measuring points as for *CYLINDER TAPER*.

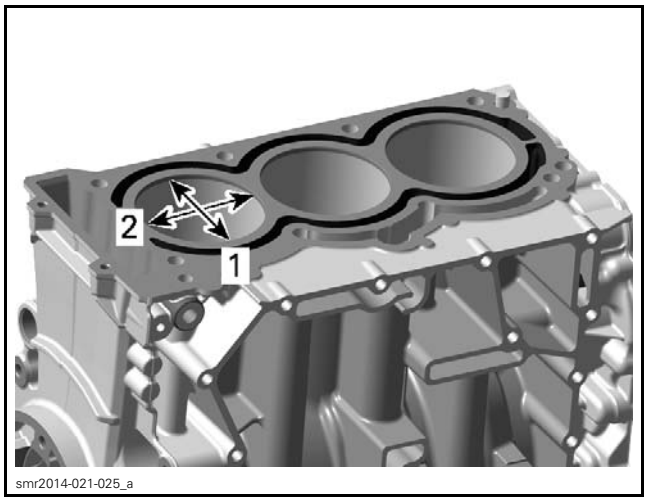


1. *Perpendicular to piston pin axis*
2. *Parallel to piston pin axis*

To obtain the cylinder out of round, calculate the difference between the perpendicular measures.

| CYLINDER OUT OF ROUND | |
|---|---|
| New maximum | 0.008 mm (.0003 in) |
| Service limit | 0.030 mm (.0012 in) |

### Crankshaft Plain Bearings Inside Diameter

Check the plain bearings for scoring or other damages.

Measure plain bearing inside diameter and compare with crankshaft bearing journal diameter (refer to *CRANKSHAFT* in this subsection). Proceed as follows.

– Using the OLD plain bearings, assemble both cylinder block halves together.
– Tighten screws as described in *ASSEMBLING THE CYLINDER BLOCK*.
– Measure the inside diameter of the crankshaft plain bearings using a bore gauge.

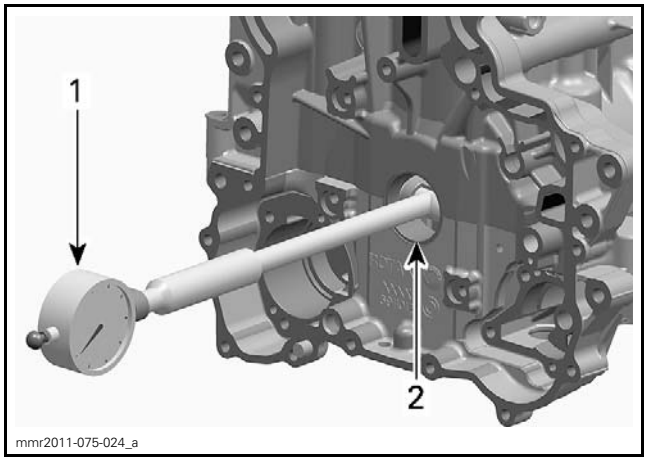


1. *Bore gauge*
2. *Crankshaft plain bearing*

| CRANKSHAFT PLAIN BEARING INSIDE DIAMETER | |
|---|---|
| Service limit | 36.080 mm (1.4205 in) |

Replace bearings if tout of specifications.

## Assembling the Cylinder Block

For assembly, reverse the disassembly procedure. Pay attention to the following details.

1. Correctly reinstall plain bearings as follows.
   1.1 Use NEW bearings if diameters are out of specification. Refer to *CRANKSHAFT PLAIN BEARINGS INSIDE DIAMETER* in this subsection.
   1.2 Install bearings with lubrication grooves in the cylinder block upper half.

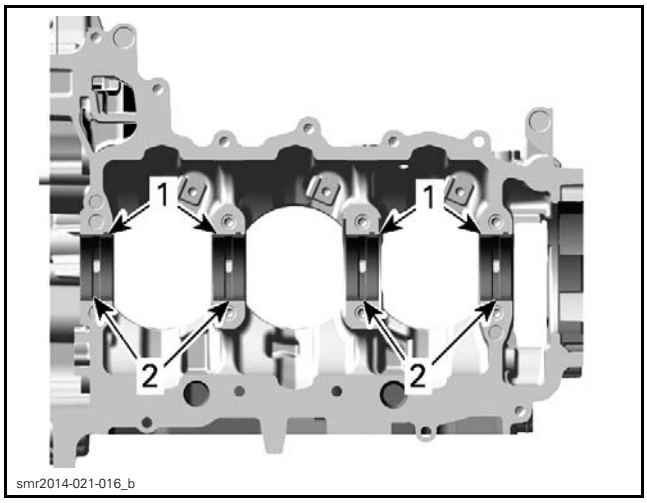


*1. Plain bearings*
*2. Lubrication grooves*

   1.3 Install flat bearings in cylinder block lower half.

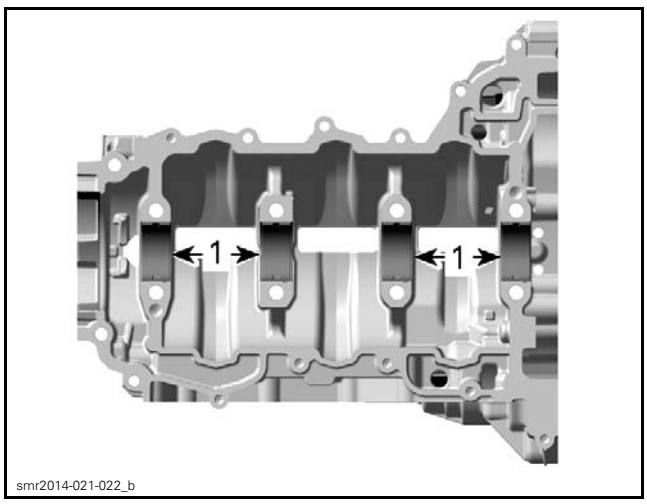


*1. Flat bearings*

**NOTICE** Bearings must be flush with the cylinder block split surface, and their protrusions must fit in the notched areas in the cylinder block seat.

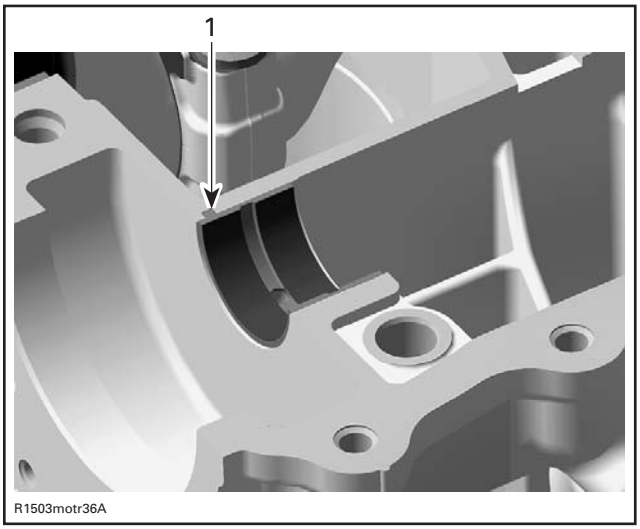


*TYPICAL*
*1. Bearing protrusion in cylinder block notch*

2. Install pistons, refer to *PISTONS AND CONNECTING RODS* in this subsection.
3. Apply engine oil on all plain bearings.
4. Install the following components:
   – Crankshaft and thrust washers (refer to *CRANKSHAFT*)
   – Connecting rod caps (refer to *PISTONS AND CONNECTING RODS*).
5. Apply sealant on mating surface of cylinder block lower half as shown on next illustration.

| SERVICE PRODUCT |
|---|
| LOCTITE 5910 (P/N 293 800 081) |

IMPORTANT: When beginning the application of the cylinder block sealant, the assembly and first tightening must be done within 12 minutes. It is suggested to have all you need on hand to save time.

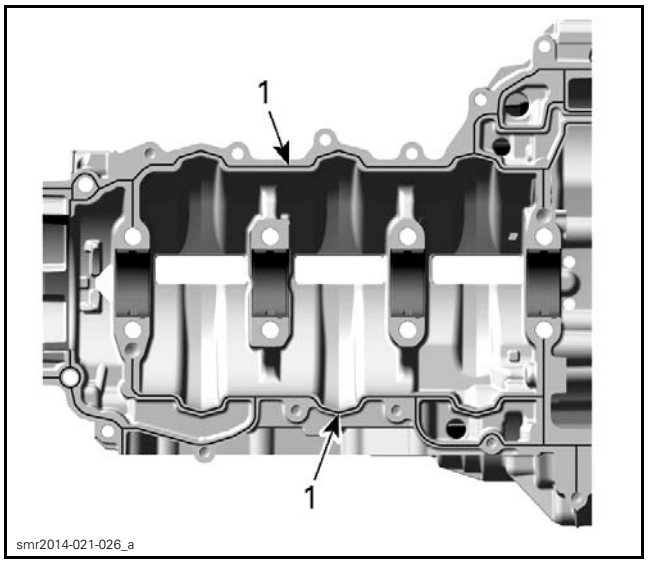


*1. Apply sealant following this pattern*

**NOTICE** Ensure not to apply too much sealant, as it will spread out inside the cylinder block.

**NOTICE** Take care to ensure the bypass passage of the engine oil pressure regulator is not clogged with sealant.

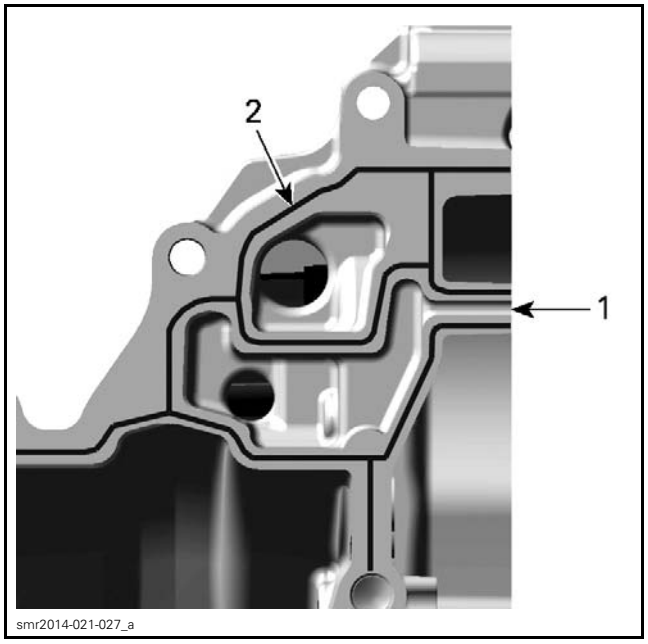


*1. Bypass passage of engine oil pressure regulator*
*2. Sealant applied*

6. Install **NEW** cylinder block M9 screws and tighten as follows.

**NOTICE** This assembly uses stretch screws. Always use NEW screws and strictly adhere to the tightening procedure.

6.1 Torque the M9 screws according to following sequence.

| TIGHTENING TORQUE | | |
|---|---|---|
| Cylinder block M9 screws | STEP A | 20 N•m ± 2 N•m (15 lbf•ft ± 1 lbf•ft) |

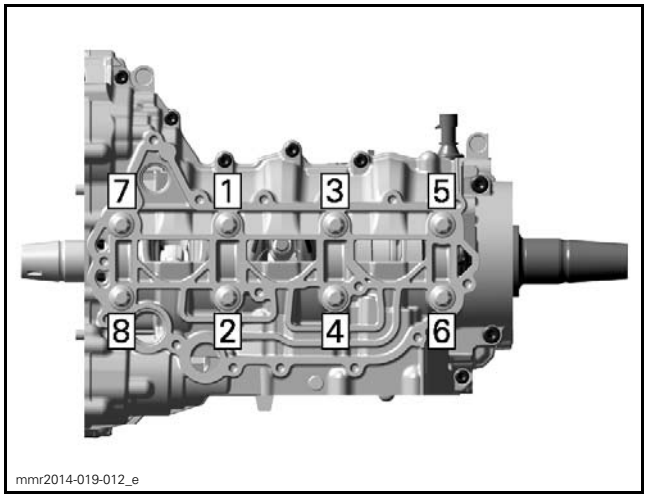


*M9 SCREWS TIGHTENING SEQUENCE - FIRST AND SECOND STEPS*

6.2 Use a torque angle gauge to carry out the second step, following the same sequence.

| TIGHTENING TORQUE | | |
|---|---|---|
| Cylinder block M9 screws | STEP B | Additional 150° ± 5° |

7. Install M8 screws and tighten as follows.

| TIGHTENING TORQUE | |
|---|---|
| Cylinder block M8 screws | 23 N•m ± 2 N•m (17 lbf•ft ± 1 lbf•ft) |

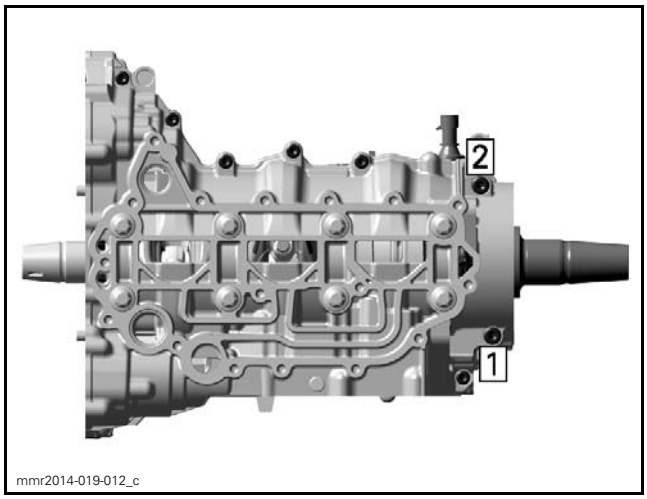


*M8 SCREWS TIGHTENING SEQUENCE*

8. Install the screws and tighten as follows.

| TIGHTENING TORQUE | |
|---|---|
| Cylinder block M6 screws | 9 N•m ± 1 N•m (80 lbf•**in** ± 9 lbf•**in**) |

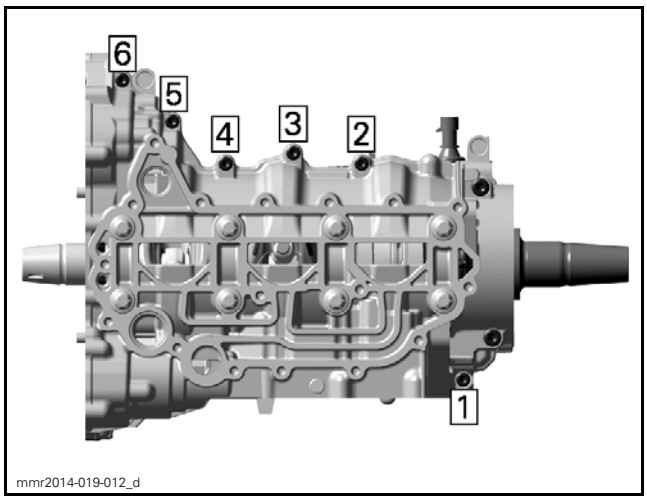


*M6 SCREWS TIGHTENING SEQUENCE (BOTTOM OF CRANKCASE)*

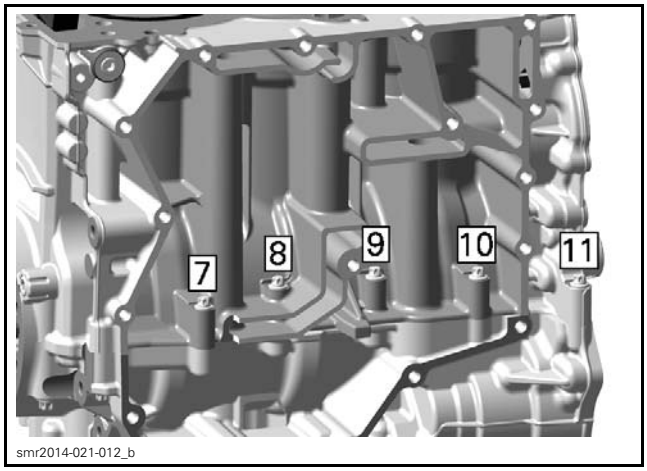


*M6 SCREWS TIGHTENING SEQUENCE (INTAKE SIDE OF CRANKCASE)*

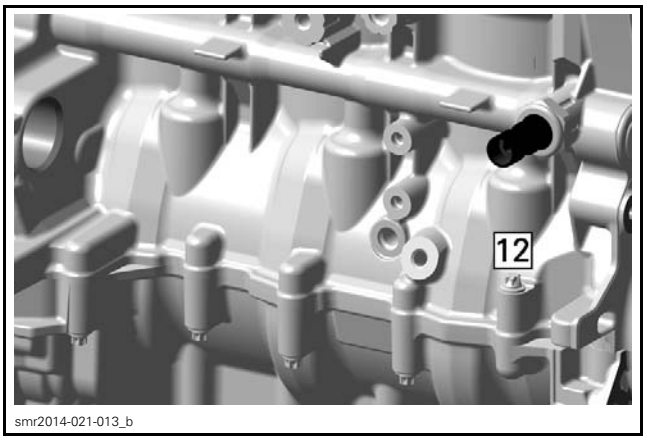


*M6 SCREW TIGHTENING SEQUENCE (EXHAUST SIDE OF CRANKCASE)*

NOTE: Check crankshaft axial play before continuing the assembly. Refer to *CRANKSHAFT* in this subsection.

9. Lubricate PTO oil seals properly before reinstalling the PTO cover. Refer to *PTO COVER AND PTO OIL SEALS* in this subsection.
10. Reassemble engine in accordance with proper assembly procedures.

# CRANKSHAFT

## Crankshaft Locking Procedure

**NOTICE When the crankshaft is locked, the second cylinder is set to TDC.**

The crankshaft must be locked whenever the magneto rotor retaining nut has to be removed, or whenever working on the valve train.

**NOTICE When working on the valve train or timing chain, the crankshaft must be locked with the marks "IN" and "EX" on the camshaft timing gears facing each other.**

1. If working on the valve train or timing chain, remove the valve cover. Refer to *TOP END* subsection.
2. Remove spark plugs.
3. Remove crankshaft access plug and discard gasket ring.

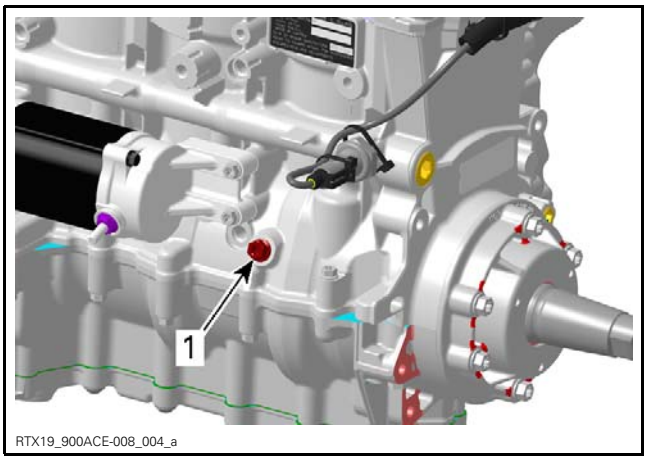


*1. Crankshaft access plug*

4. On PTO side , turn engine crankshaft counterclockwise to bring it to the locking position.

To turn the crankshaft, install the drive pulley, or use a suitable screw locked by a counter nut.

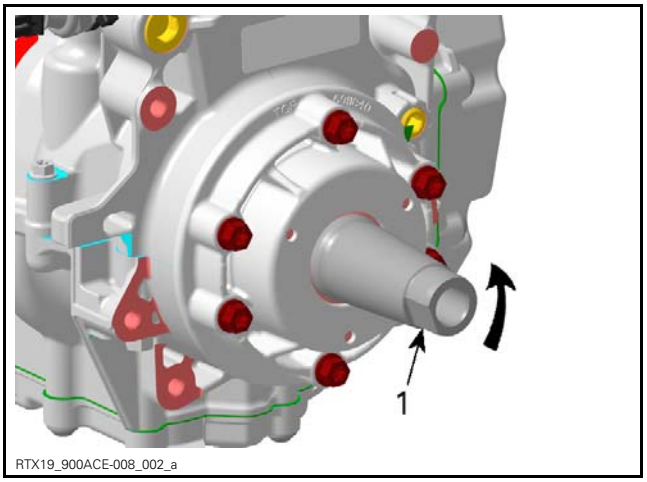


*1. Crankshaft PTO side*

**NOTICE** **Crankshaft locking position is reached when marks "IN" and "EX" on the camshaft timing gears face each other.**

5. Use a flashlight to check if the crankshaft groove is aligned with the hole.
6. Lock crankshaft.

| REQUIRED TOOL | |
|---|---|
| CRANKSHAFT LOCKING TOOL (P/N 529 036 272) | |

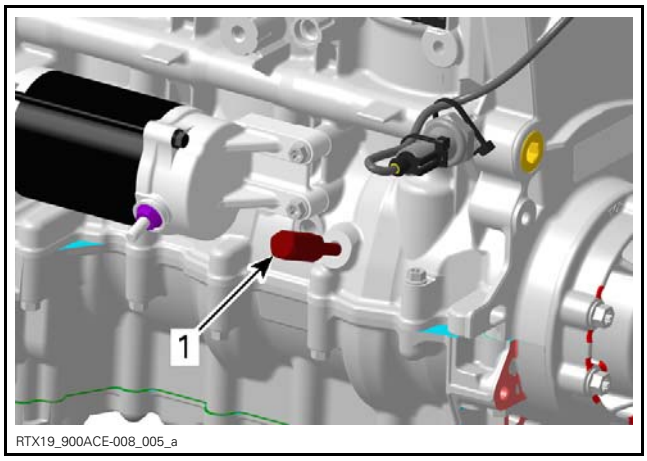


*1. Crankshaft locking tool*

## Removing the Crankshaft

1. Disassemble *CYLINDER BLOCK*, see procedure in this subsection.
2. Remove connecting rod caps. Refer to *PISTONS AND CONNECTING RODS* in this subsection.
3. Remove crankshaft thrust washers.

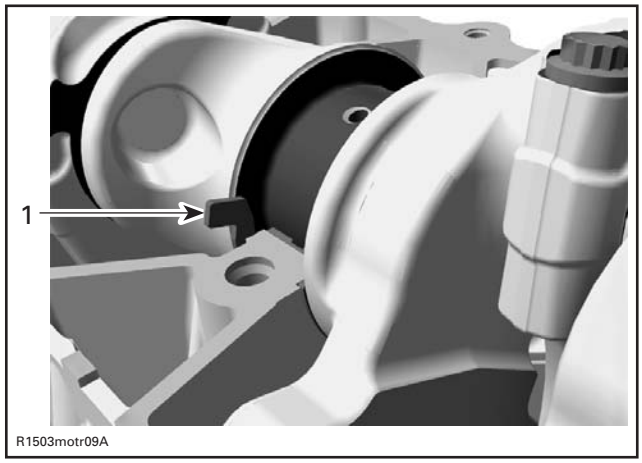


*TYPICAL*
*1. Thrust washer*

4. Remove crankshaft from cylinder block.

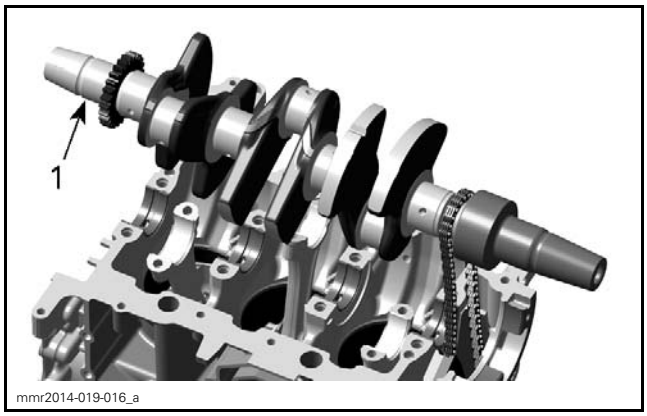


*1. Crankshaft*

## Inspecting the Crankshaft

Check each bearing journal of crankshaft for scoring, scuffing, cracks or other signs of wear.

Check crankshaft gears for wear or other damage.

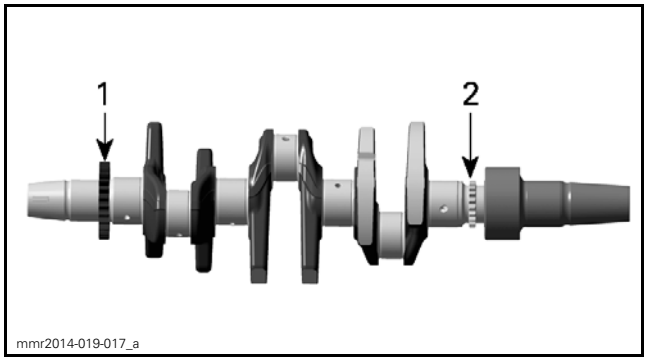


*1. Oil pump drive gear*
*2. Crankshaft timing gear*

Replace crankshaft if damaged.

Blow the oil orifices using compressed air and ensure they are not clogged.

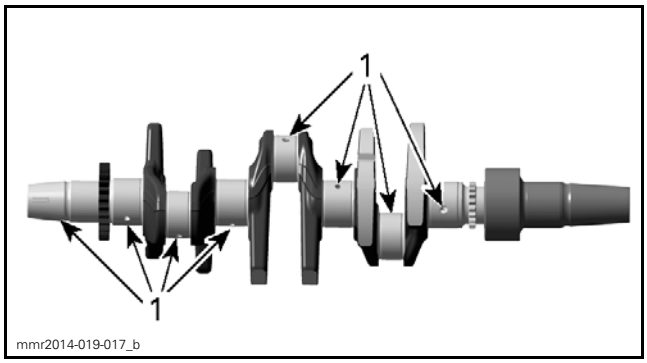


*1. Check oil orifices*

### Crankshaft Radial Play

Measure crankshaft bearing journal diameter, using a micrometer.

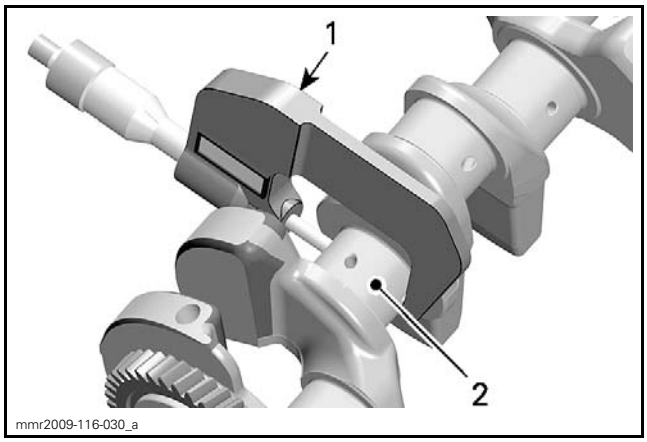


*TYPICAL*
*1. Micrometer*
*2. Crankshaft area for plain bearing*

To obtain crankshaft radial play, calculate the difference between the bearing journal diameter and the crankshaft plain bearings inner diameter (see *CYLINDER BLOCK* in this subsection).

| CRANKSHAFT BEARING JOURNAL DIAMETER | |
|---|---|
| New | 35.990 mm to 36.006 mm (1.4169 in to 1.4176 in) |
| Service limit | 35.960 mm (1.4157 in) |

| CRANKSHAFT RADIAL PLAY | |
|---|---|
| Service limit | 0.08 mm (.0031 in) |

### Crankshaft Pin Diameter

Measure crankshaft pin diameter, using a micrometer.

To obtain connecting rod radial play (big end), calculate the difference between the crankshaft pin diameter and the inner diameter of the connecting rod plain bearings inner diameter (see *INSPECTING THE CONNECTING ROD*) in this subsection.

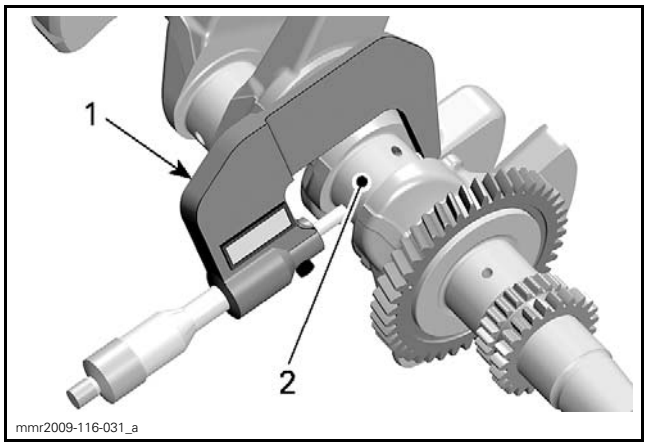


*TYPICAL*
*1. Micrometer*
*2. Crankshaft pin area for plain bearing*

| CRANKSHAFT PIN DIAMETER | |
|---|---|
| New | 35.979 mm to 35.995 mm (1.416 in to 1.417 in) |
| Service limit | 35.969 mm (1.416 in) |

| CONNECTING ROD BIG END RADIAL PLAY | |
|---|---|
| Service limit | 0.08 mm (.0031 in) |

### Crankshaft Axial Play

With the crankshaft in the cylinder block, measure the crankshaft axial play, using a dial indicator.

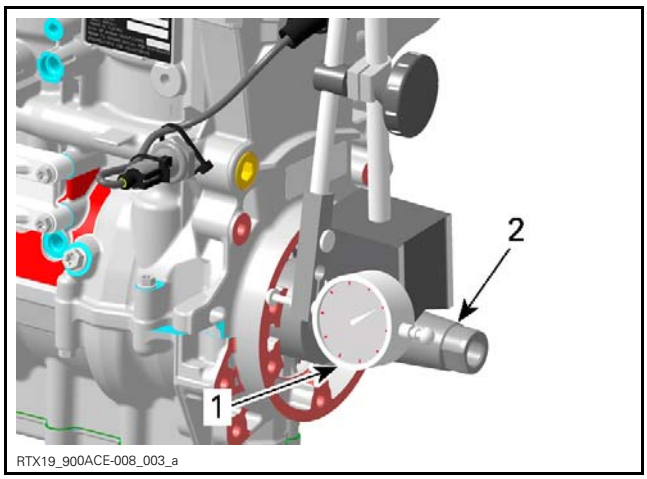


*TYPICAL*
1. *Dial indicator*
2. *Crankshaft*

| CRANKSHAFT AXIAL PLAY | |
|---|---|
| New | 0.120 mm to 0.352 mm (.005 in to .014 in) |
| Service limit | 0.450 mm (.018 in) |

If axial play is out of specification, replace the crankshaft thrust washers and repeat measurement.

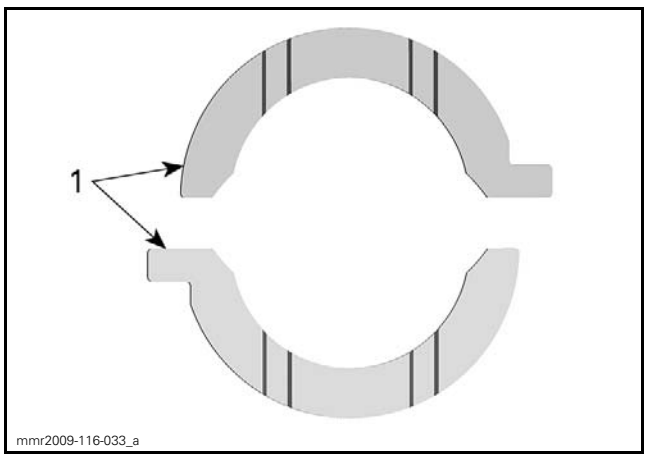


*TYPICAL*
1. *Crankshaft thrust washers*

## Installing the Crankshaft

The reverse is the reverse of the removal procedure. However, pay attention to following details.

Turn cylinder block upside down.

**NOTICE Be careful that connecting rods do not hit the cylinder block.**

Apply engine oil on all plain bearings before installing them.

Install crankshaft along with the timing chain.

Lubricate (both sides) and reinstall crankshaft thrust washers with the slots facing against crankshaft counterweights.

NOTE: Thrust washers have to be flush with the cylinder block sealing surface.

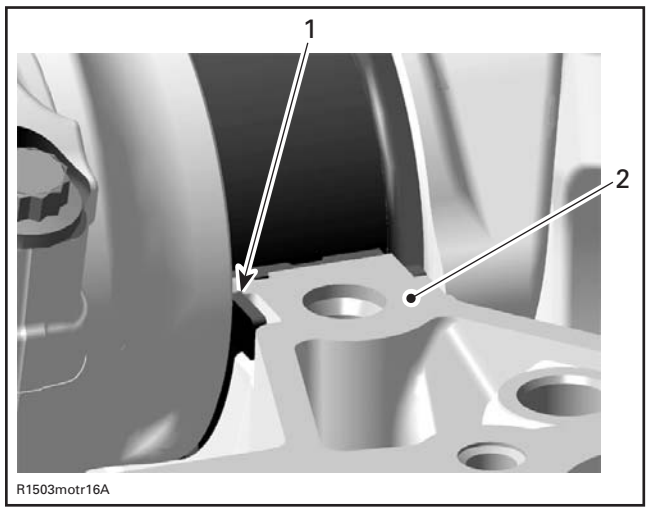


*TYPICAL*
1. *Thrust washer*
2. *Sealing surface*

Install connecting rod caps. Refer to *PISTONS AND CONNECTING RODS* in this subsection.

**NOTICE It is absolutely necessary to follow this procedure. Otherwise severe engine damage can occur.**

Install cylinder block lower half. Refer to *CYLINDER BLOCK* in this subsection.

Lock crankshaft before further assembly of the engine. See *CRANKSHAFT LOCKING PROCEDURE* in this subsection.

# PISTONS AND CONNECTING RODS

## Removing the Piston and Connecting Rod

NOTE: It is recommended to measure connecting rod big end axial play prior to remove connecting rod. Refer to *INSPECTING THE CONNECTING ROD* in this subsection.

1. Disassemble *CYLINDER BLOCK* as per procedure in this subsection.
2. Remove connecting rod cap.

**NOTICE** **Mark cylinder position of connecting rod before disassembly.**

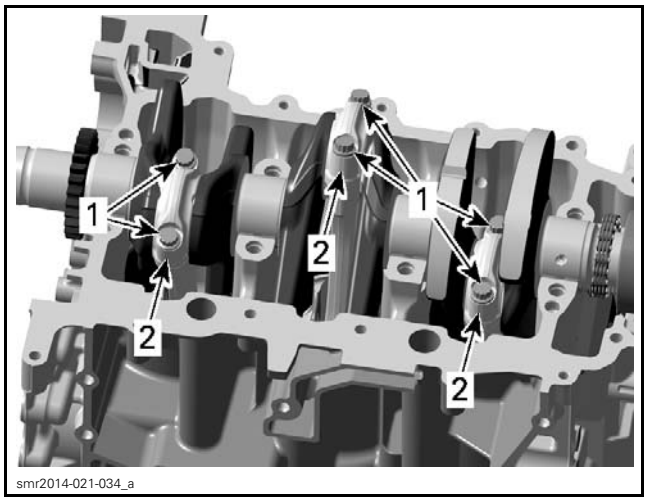


*1. Connecting rod screws*
*2. Connecting rod cap*

3. Remove *CRANKSHAFT* as per procedure in this subsection.
4. Turn cylinder block and push piston and connecting rod out of the cylinder.

## Disassembling the Piston and the Connecting Rod

1. Remove one piston pin circlip and discard it.

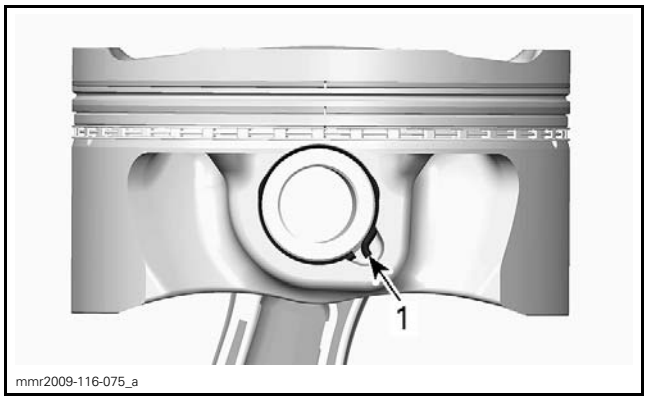


*TYPICAL*
*1. Piston pin circlip*

NOTE: The removal of both piston pin circlips is not necessary to remove the piston pin.

2. Push piston pin out of the piston.

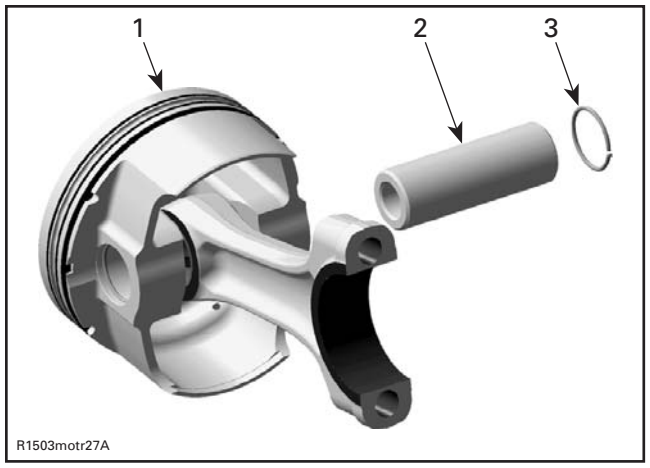


*TYPICAL*
*1. Piston*
*2. Piston pin*
*3. Circlip*

3. Detach piston from connecting rod.

## Inspecting the Connecting Rod

### Connecting Rod Big End Axial Play

Using a feeler gauge, measure the distance between the butting face of the connecting rod and crankshaft counterweight. If the distance exceeds specified tolerance, replace the worn part.

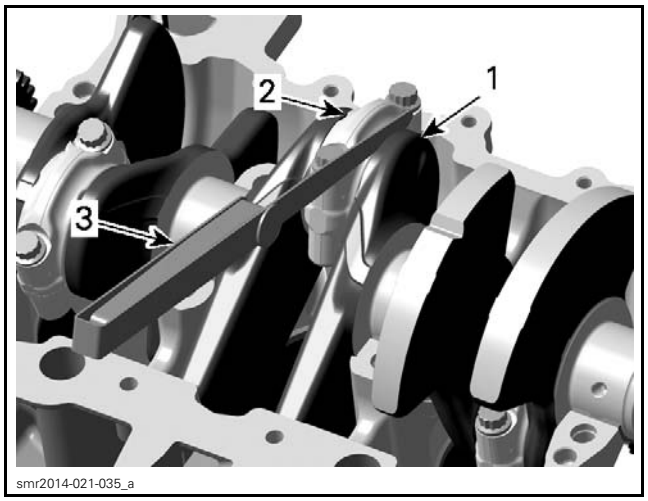


*1. Crankshaft*
*2. Connecting rod*
*3. Feeler gauge*

| CONNECTING ROD BIG END AXIAL PLAY | |
|---|---|
| New | 0.100 mm to 0.352 mm (.004 in to .014 in) |
| Service limit | 0.450 mm (.018 in) |

### Connecting Rod Small End Radial Play

Measure connecting rod small end using a bore gauge.

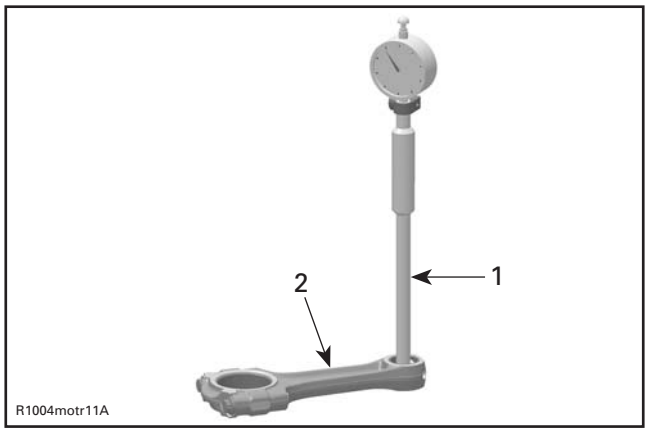


*TYPICAL*
*1. Bore gauge*
*2. Connecting rod*

| CONNECTING ROD SMALL END DIAMETER | |
|---|---|
| New | 17.010 mm to 17.020 mm (.6697 in to .6701 in) |
| Service limit | 17.060 mm (.6717 in) |

If the connecting rod small end diameter is out of specification, replace the connecting rod.

To obtain the connecting rod radial play (small end), calculate the difference between the piston pin diameter (*PISTON PIN INSPECTION*) and the inner diameter of the connecting rod small end.

| CONNECTING ROD SMALL END RADIAL PLAY | |
|---|---|
| Service limit | 0.040 mm (.0016 in) |

### Connecting Rod Big End Radial Play

1. Measure inside diameter of connecting rod big end.
   1.1 Install the OLD plain bearings as they were mounted initially.
   1.2 Perform the tightening procedure as described in *PISTON AND CONNECTING ROD INSTALLATION* in this subsection.

   NOTE: To measure the connecting rod big end diameter, ALWAYS use the OLD connecting rod screws.

   1.3 Measure inside diameter in longitudinal direction of the connecting rod.

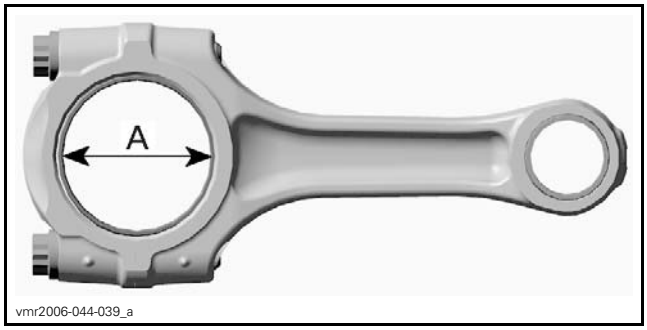


*TYPICAL*
*A. Connecting rod big end bearing*

| CONNECTING ROD BIG END DIAMETER | |
|---|---|
| Service limit | 36.06 mm (1.4197 in) |

To obtain the connecting rod big end radial play, calculate the difference between the big end diameter and the crankshaft pin diameter (see *CRANKSHAFT INSPECTION*) in this subsection.

| CONNECTING ROD BIG END RADIAL PLAY | |
|---|---|
| Service limit | 0.080 mm (.0031 in) |

If connecting rod big end diameter is out of specification, install NEW plain bearings.

## Inspecting the Piston Pin

Using woven synthetic abrasive, clean piston pin of deposits.

Inspect piston pin for scoring, cracks or other damage.

Measure piston pin diameter, using a micrometer. See following illustration for proper measurement position.

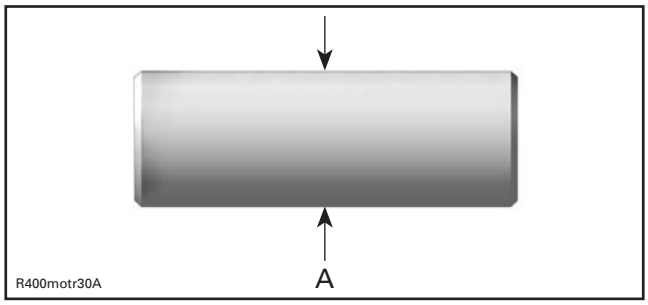


*TYPICAL*
*A. Measure piston pin diameter here*

| PISTON PIN DIAMETER | |
|---|---|
| New | 16.996 mm to 17.000 mm (.6691 in to .6693 in) |
| Service limit | 16.986 mm (.6687 in) |

Replace piston pin if out of specification.

## Inspecting the Piston

Inspect piston for scoring, scuffing, cracks or other damage. Replace piston and piston rings if necessary.

Using a micrometer, measure piston perpendicularly (90°) to piston pin axis at 8.5 mm (11/32 in) from the skirt edge.

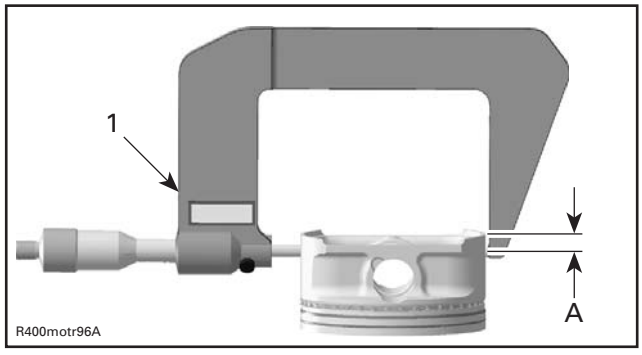


*TYPICAL*
*1. Measuring perpendicularly (90°) to piston pin axis*
*A. 8.5 mm (11/32 in)*

| PISTON MEASUREMENT | |
|---|---|
| New | 73.950 mm to 73.966 mm (2.911 in to 2.912 in) |
| Service limit | 73.920 mm (2.9102 in) |

Replace piston if out of specification.

### Piston/Cylinder Clearance

1. Adjust and lock a micrometer to the piston dimension.

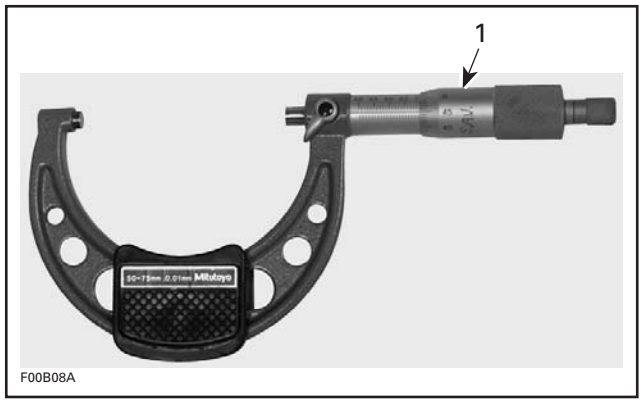


*TYPICAL*
*1. Micrometer set to the piston dimension*

NOTE: Make sure used piston is not worn.

2. With the micrometer locked at step 1, adjust a cylinder bore gauge to the micrometer dimension and set the indicator to 0 (zero).

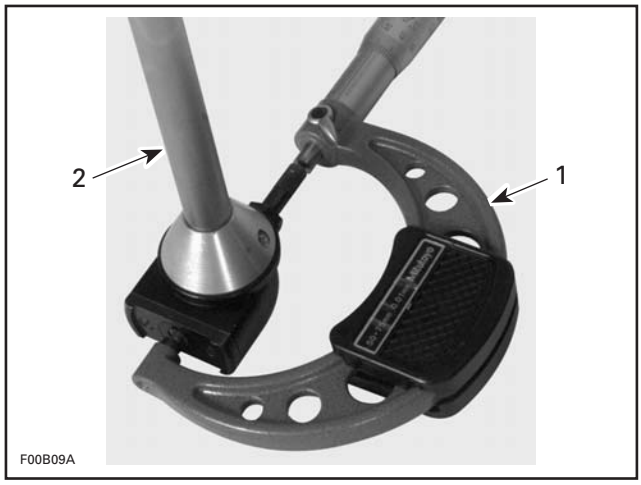


*TYPICAL*
*1. Use the micrometer to set the cylinder bore gauge*
*2. Cylinder bore gauge*

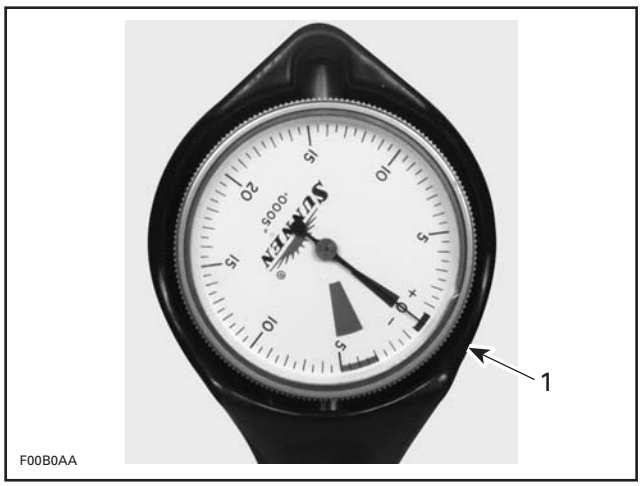


*TYPICAL*
*1. Indicator set to 0 (zero)*

NOTE: Make sure the cylinder bore gauge indicator is set exactly at the same position as with the micrometer, otherwise the reading will be false.

3. Position the cylinder bore gauge 35 mm (1-3/8 in) below the cylinder head mating surface, measuring perpendicularly (90°) to piston pin axis.
4. Read measurement on cylinder bore gauge. The result is the exact piston/cylinder clearance.

| PISTON/CYLINDER CLEARANCE | |
|---|---|
| New | 0.037 mm to 0.067 mm (.0015 in to .0026 in) |
| Service limit | 0.080 mm (.0031 in) |

If clearance exceeds specified tolerance, replace piston and repeat measurement procedure.

## Assembling the Piston and Connecting Rod

Reverse the disassembly procedure. However, pay attention to the following details.

1. Apply engine oil on piston pin.
2. Insert piston pin in piston and connecting rod.

NOTE: Be sure to reinstall all parts in their original position as marked during removal.

3. Install NEW piston pin circlip(s).

| REQUIRED TOOL | |
|---|---|
| PISTON CIRCLP INSTALLER (P/N 529 036 207) | |

**NOTICE** Always replace removed piston pin circlips by NEW ones.

3.1 Place the circlip in the sleeve and push piston circlip installer handle until circlip reaches the mid position in the sleeve.

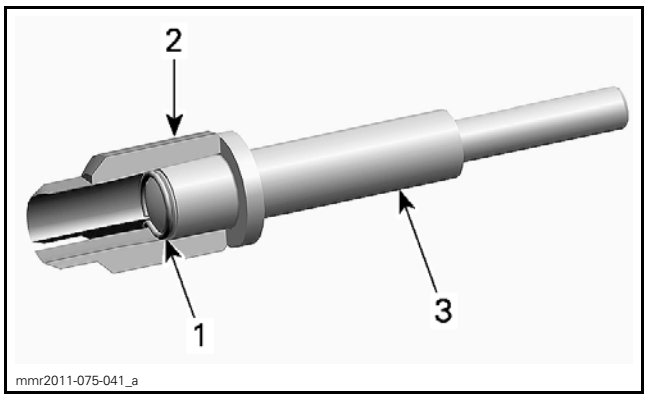


*TYPICAL*
*1. Circlip*
*2. Sleeve*
*3. Installer handle*

3.2 Put the distance sleeve on the installer handle.

3.3 Push piston circlip installer handle until distance sleeve makes contact with the sleeve.

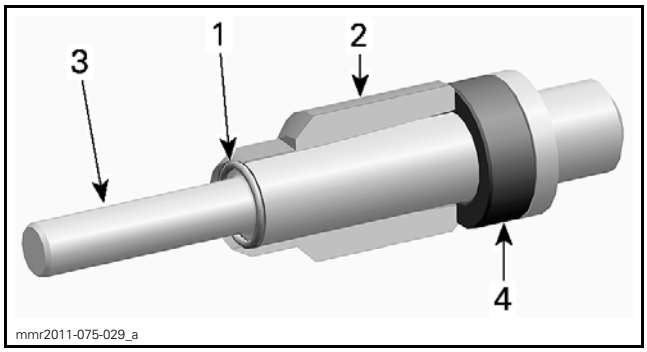


*1. Circlip*
*2. Sleeve*
*3. Installer handle*
*4. Distance sleeve*

3.4 Remove distance sleeve and insert installer handle into the sleeve.

3.5 Insert the end of the handle into the piston pin, then push to engage the circlip into the piston groove.

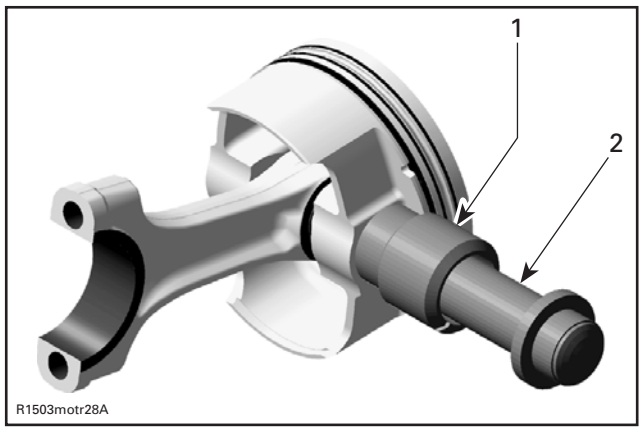


*TYPICAL*
1. *Sleeve with piston circlip inside*
2. *Piston clip installer handle*

NOTE: Ensure the hook of the piston pin circlip is properly positioned.

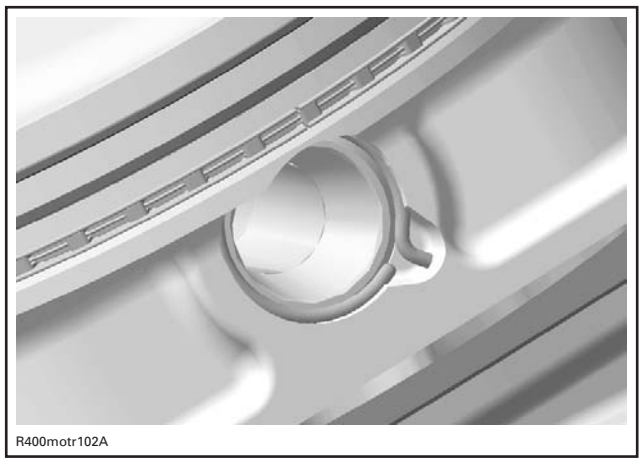


*CORRECT POSITION OF PISTON PIN CIRCLIP*

**NOTICE** If piston pin circlip installation fails, repeat step 3 by using a NEW circlip.

4. Correctly install plain bearings and carefully clean split surface on both sides (cracked area) with compressed air.

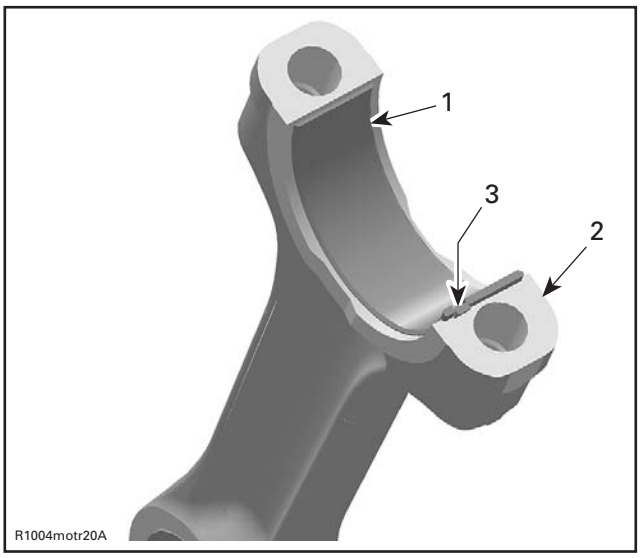


*TYPICAL*
1. *Half bearing of connecting rod big end*
2. *Split surface of the connecting rod*
3. *Protrusion of bearing in line with connecting rod groove*

**NOTICE** The arrow on top of the piston and the punch marks on the connecting rods must always point towards the exhaust.

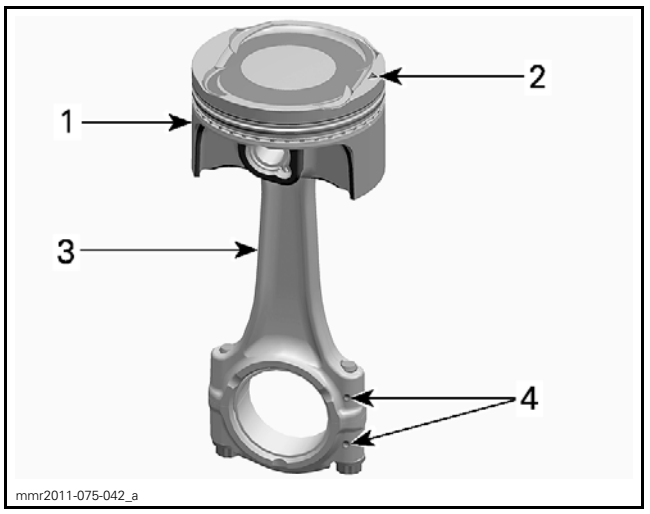


1. *Piston*
2. *Arrow on top*
3. *Connecting rod*
4. *Punched marks*

## Installing the Piston and Connecting Rod

1. Use engine oil and lubricate:
   - Piston
   - Piston rings
   - Cylinder bore
   - Connecting rod bearings.
2. Slide piston in cylinder bore. Pay attention to the following.

| REQUIRED TOOL |
| --- |
| PISTON RING COMPRESSOR (P/N 529 036 208) |

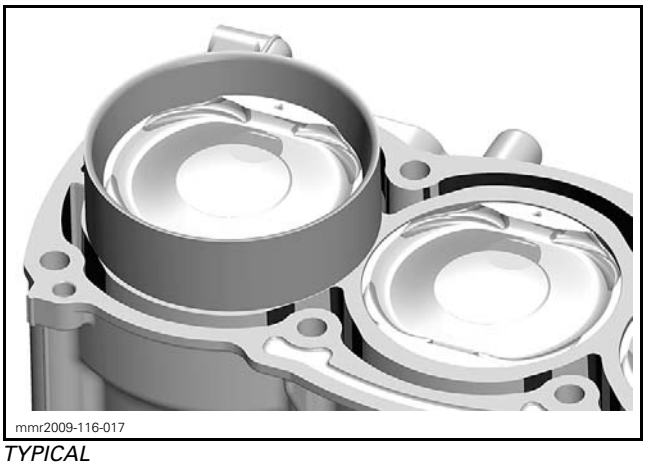


*TYPICAL*

2.1 If reused, install piston in its original bore.

2.2 Make sure piston rings are properly spaced.

**NOTICE** The ring gaps of both compression rings should always be 180° from each other and 90° from the arrow on top of the piston.

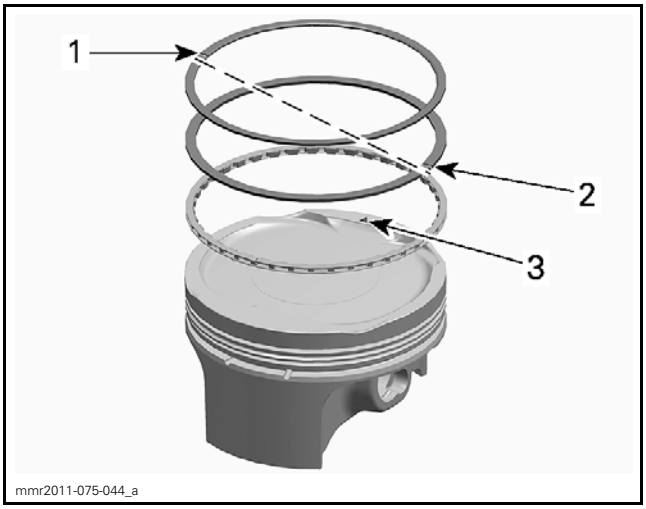


*RING GAPS AT 180° FROM EACH OTHER AND 90° FORM ARROW*
1. *Rectangular ring - ring gap*
2. *Taper-face ring - ring gap*
3. *Arrow*

2.3 The arrow on top of the piston must point towards exhaust.

**NOTICE** A piston installed with the arrow in the wrong direction would cause serious engine damage.

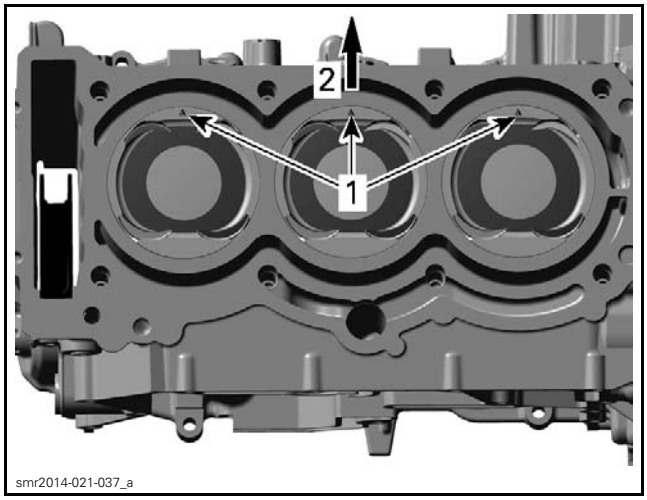


1. *Arrows*
2. *Exhaust*

3. Turn cylinder block upside down.
4. Install *CRANKSHAFT* as per procedure in this subsection.
5. Oil crankshaft pin.
6. Install connecting rod caps.

NOTE: Printed marks on connecting rod and cap must point together.

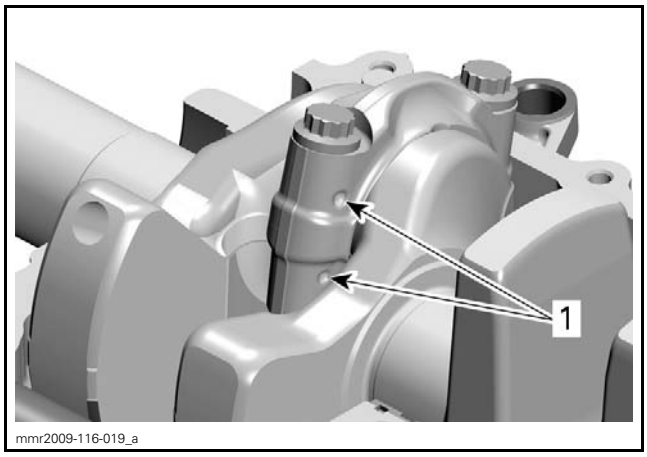


*TYPICAL*
1. *Printed marks*

**NOTICE** This assembly uses stretch screws. Always use NEW screws and strictly adhere to the tightening procedure.

7. Tighten connecting rod screws as follows:

7.1 Torque both connecting rod screws of a connecting rod.

| TIGHTENING TORQUE | | |
|---|---|---|
| Connecting rod screws | STEP A | 12 N•m ± 2 N•m (106 lbf•**in** ± 18 lbf•**in**) |

7.2 Use a torque angle gauge to carry out the second step.

| TIGHTENING TORQUE | | |
|---|---|---|
| Connecting rod screws | STEP B | Additional 70° ± 5° |

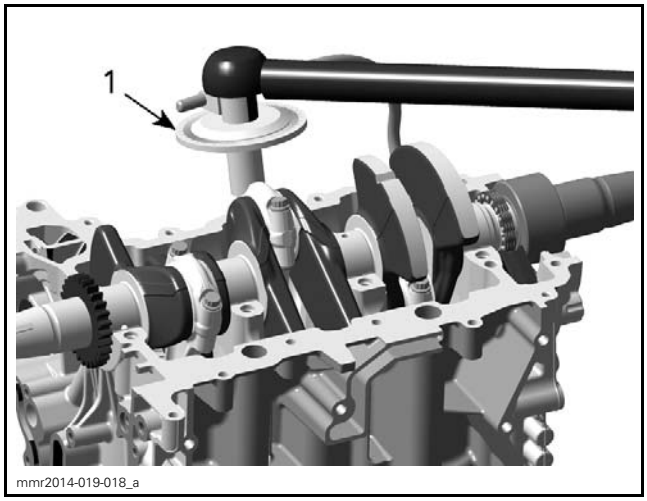


*1. Torque angle gauge*

**NOTICE** Failure to strictly follow this procedure may cause screws to loosen and lead to severe engine damage.

8. Install all other removed parts.

# PISTON RINGS

## Removing the Piston Ring

1. Remove piston, see procedure in this subsection.
2. Remove rings from piston.

## Inspecting the Piston Ring

### Ring/Piston Groove Clearance

Using a feeler gauge measure each ring/piston groove clearance.

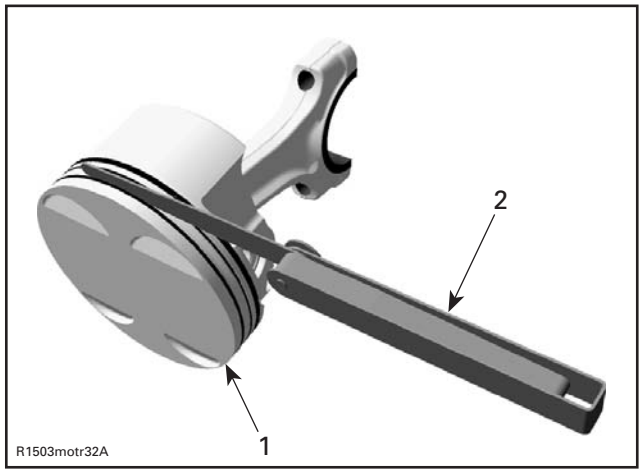


*TYPICAL*
*1. Piston*
*2. Feeler gauge*

| RING/PISTON GROOVE CLEARANCE | | |
|---|---|---|
| Upper compression ring | New | 0.030 mm to 0.066 mm (.0012 in to .0026 in) |
| | Service limit | 0.120 mm (.0047 in) |
| Lower compression ring | New | 0.020 mm to 0.056 mm (.0008 in to .0022 in) |
| | Service limit | 0.120 mm (.0047 in) |
| Oil scraper ring | New | 0.010 mm to 0.040 mm (.0004 in to .0016 in) |
| | Service limit | 0.150 mm (.0059 in) |

If clearance is out of specification, the piston and rings should be replaced.

### Ring End Gap

1. Place piston ring in cylinder bore between 8 mm to 16 mm (5/16 in to 5/8 in) from the top of cylinder.

NOTE: In order to correctly position the ring in the cylinder bore, use a piston as a pusher.

2. Using a feeler gauge, check ring end gap.

| RING END GAP | | |
|---|---|---|
| Upper compression ring | New | 0.20 mm to 0.35 mm (.008 in to .014 in) |
| | Service limit | 1.20 mm (.047 in) |

| RING END GAP | | |
|---|---|---|
| Lower compression ring | New | 0.30 mm to 0.50 mm (.012 in to .02 in) |
| | Service limit | 1.20 mm (.047 in) |
| Oil scraper ring | New | 0.20 mm to 0.70 mm (.0079 in to .0276 in) |
| | Service limit | 1.20 mm (.047 in) |

If ring end gap is out of specification, replace piston rings.

## Installing the Piston Ring

1. Install piston rings in the following order.

   NOTE: Use a ring expander to prevent breakage during installation. The oil ring must be installed by hand.

   1.1 Install oil scraper ring.

   1.2 Install the lower compression ring with the letter "N" facing up.

   1.3 Install upper compression ring with the letter "N" facing up.

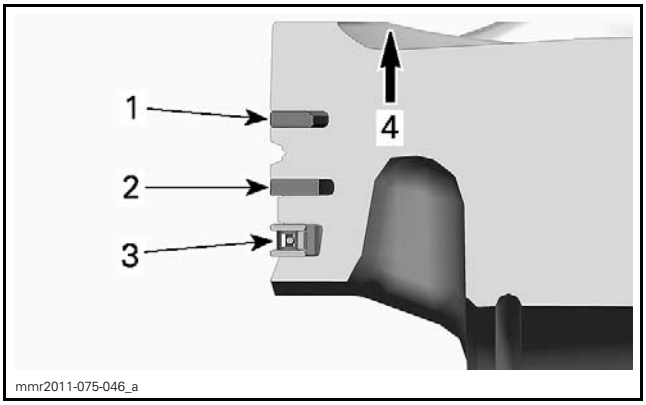


*1. Rectangular ring*
*2. Taper-face ring*
*3. Oil scraper ring*
*4. Letter "N" facing up*

**NOTICE** Ensure the upper and lower compression rings are not interchanged.

2. Ensure rings rotate smoothly after installation.

# CYLINDER BLOCK

## SERVICE TOOLS

| Description | Part Number | Page |
|---|---|---|
| CRANKSHAFT LOCKING TOOL | 529 036 272 | 14 |
| OIL SEAL/BEARING PUSHER | 529 036 284 | 5–6 |
| PISTON CIRCLIP INSTALLER | 529 036 426 | 20 |
| PISTON RING COMPRESSOR | 529 036 208 | 22 |

## SERVICE PRODUCTS

| Description | Part Number | Page |
|---|---|---|
| LOCTITE 243 (BLUE) | 293 800 060 | 7 |
| LOCTITE 5910 | 293 800 081 | 12 |
| LOCTITE CHISEL (GASKET REMOVER) | 413 708 500 | 10 |
| SUPER LUBE GREASE | 293 550 030 | 5 |

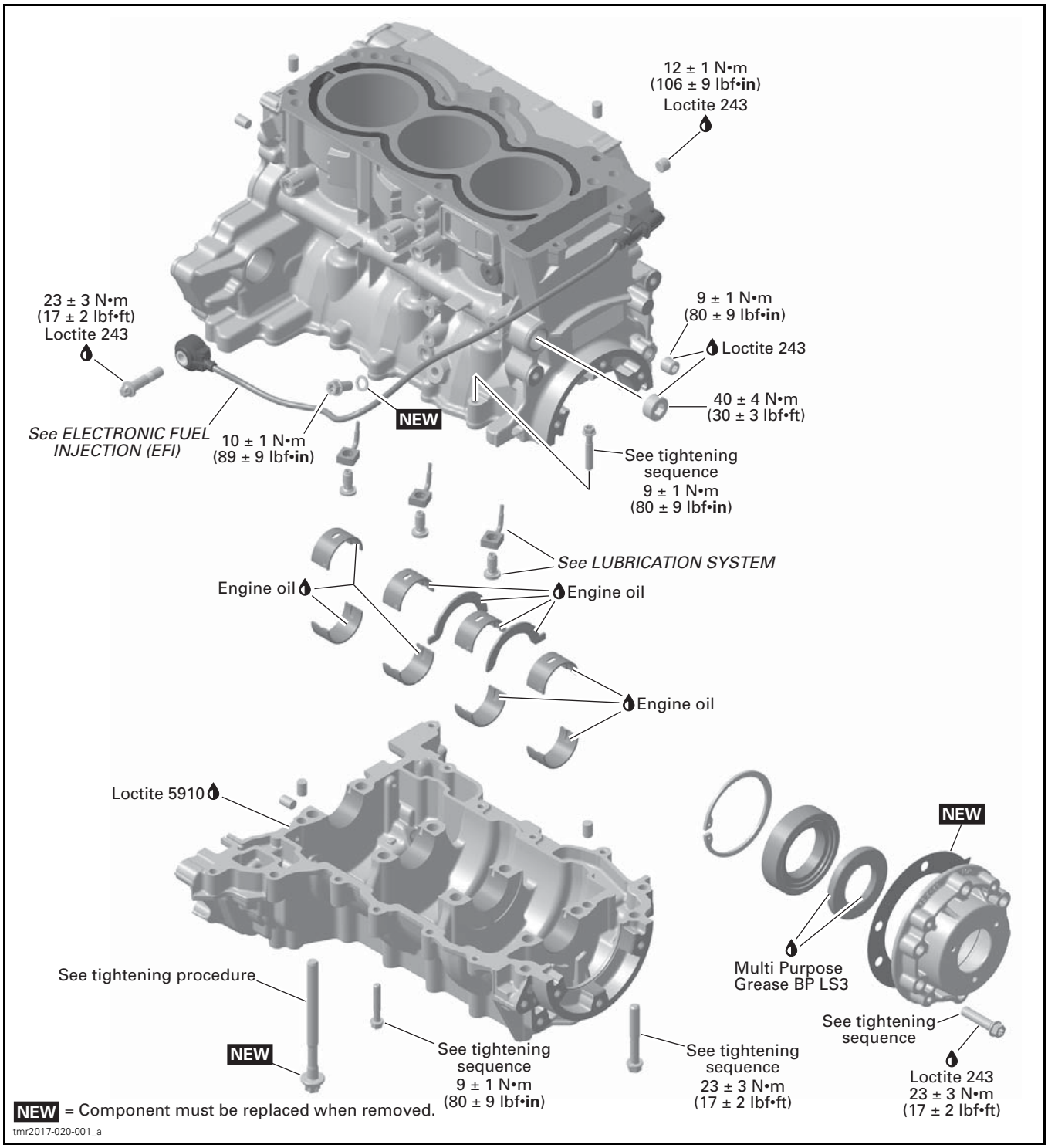
12 ± 1 N•m
(106 ± 9 lbf•in)
Loctite 243
23 ± 3 N•m
(17 ± 2 lbf•ft)
Loctite 243
9 ± 1 N•m
(80 ± 9 lbf•in)
Loctite 243
40 ± 4 N•m
(30 ± 3 lbf•ft)
See ELECTRONIC FUEL INJECTION (EFI)
10 ± 1 N•m
(89 ± 9 lbf•in)
NEW
See tightening sequence
9 ± 1 N•m
(80 ± 9 lbf•in)
See LUBRICATION SYSTEM
Engine oil
Engine oil
Engine oil
Loctite 5910
NEW
Multi Purpose Grease BP LS3
See tightening procedure
NEW
See tightening sequence
9 ± 1 N•m
(80 ± 9 lbf•in)
See tightening sequence
23 ± 3 N•m
(17 ± 2 lbf•ft)
See tightening sequence
Loctite 243
23 ± 3 N•m
(17 ± 2 lbf•ft)
NEW = Component must be replaced when removed.
tmr2017-020-001_a

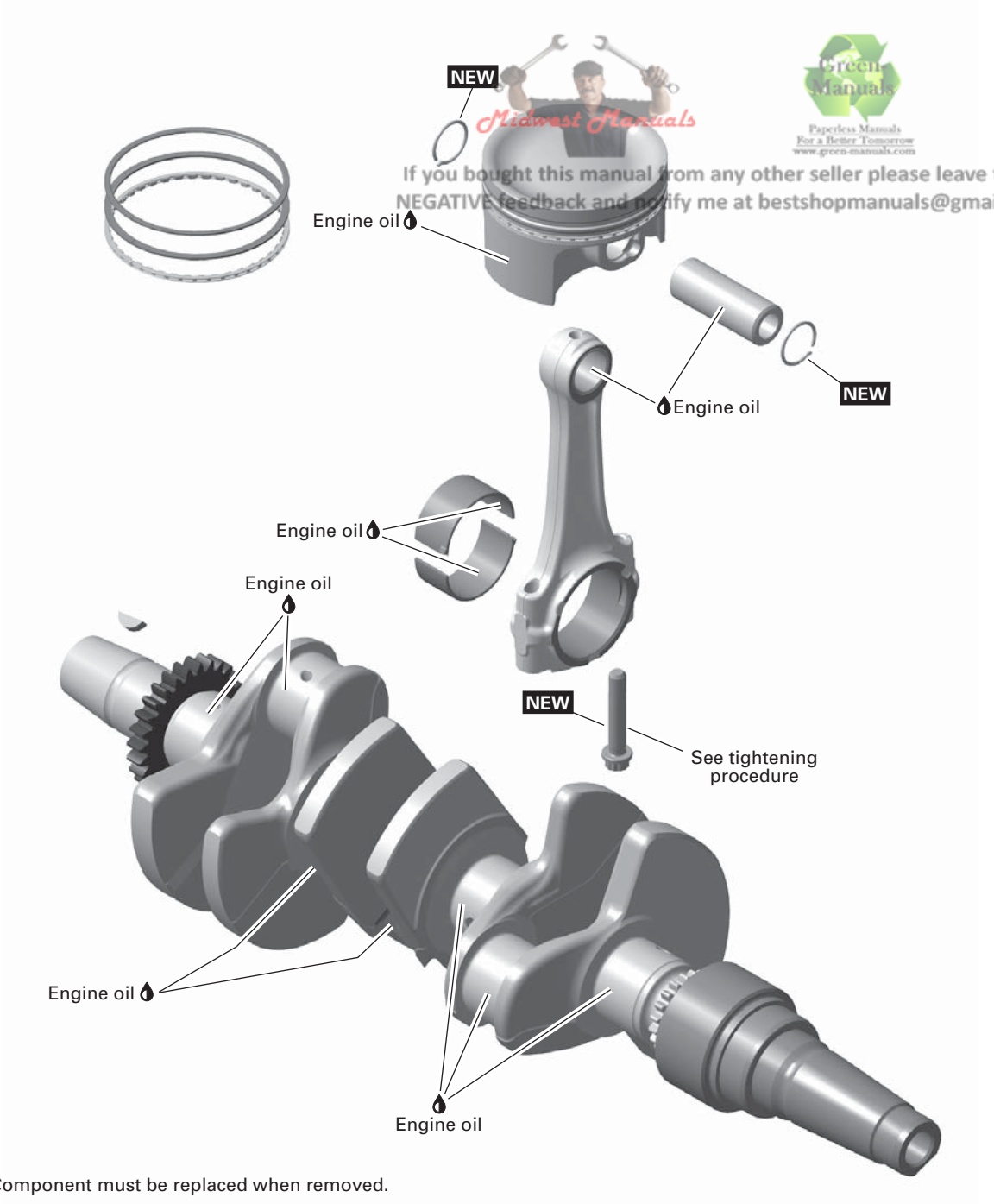


Midwest Manuals
Green Manuals
Paperless Manuals For a Better Tomorrow
www.green-manuals.com
If you bought this manual from any other seller please leave them NEGATIVE feedback and notify me at bestshopmanuals@gmail.com

**NEW** = Component must be replaced when removed.

RTXT03MY19-009-001_a

# GENERAL

When disassembling parts that are duplicated in the engine, (e.g.: pistons, connecting rods etc.), it is strongly recommended to note their position and to keep the parts of the same assembly as a "group". If you find a defective component, it would be much easier to find the cause of the failure. Since parts were broken-in during engine operation, they will maintain their matched fit when reassembled together within their "group".

During assembly/installation, use torque values and service products as in the exploded views.

Clean threads before applying a threadlocker. Refer to *SELF-LOCKING FASTENERS* and *LOCTITE APPLICATION* at the beginning of this manual for complete procedure.

**⚠ WARNING**

**Torque wrench tightening specifications must be strictly adhered to.**
**Locking devices when removed (e.g.: locking tabs, elastic stop nuts, self-locking fasteners, cotter pins, etc.) must be replaced.**

***NOTICE*** **Hoses, cables or locking ties removed during a procedure must be reinstalled as per factory standards.**

# TROUBLESHOOTING

Always check for fault codes. If a fault code is detected, service the fault code first. Refer to *DIAGNOSTIC AND FAULT CODES* subsection.

## UNUSUAL ENGINE NOISE OR VIBRATIONS

1. Heavy wear on plain bearings.
   - *Check radial play of plain bearings. Replace if out of specification.*
2. Crankshaft axial play out of specification.
   - *Measure crankshaft axial play. If crankshaft axial play is out of specification, replace thrust washers.*
3. Connecting rod axial play out of specification.
   - *Measure connecting rod axial play on crankshaft. Replace connecting rod or crankshaft if out of specification.*
4. Connecting rod screws got loose.
   - *Replace damaged components and retighten screws with the recommended torque.*
5. Crankshaft PTO roller bearing is worn.
   - *Remove PTO cover and check roller bearing for excessive play. Replace roller bearing if necessary.*

## BLUE SMOKE IN THE EXHAUST

1. Oil scraper rings worn out.
   - *Replace piston rings.*

## ENGINE SUDDENLY TURNS OFF (POOR IDLING)

1. Piston rings worn out.
   - *Replace piston rings.*
2. Piston/cylinder clearance out of specification.
   - *Check piston/cylinder clearance. Replace if out of specification.*
3. Melted or broken piston.
   - *Replace piston and cylinder block if necessary.*

# PROCEDURES

## PTO COVER AND PTO OIL SEAL

### PTO Cover Access

To replace the PTO oil seal, it is not necessary to remove engine from the vehicle.

Remove drive pulley. Refer to *CONTINUOUSLY VARIABLE TRANSMISSION (CVT* subsection.

### Removing the PTO Cover

Remove screws retaining the PTO cover.

Remove PTO cover and discard gasket.

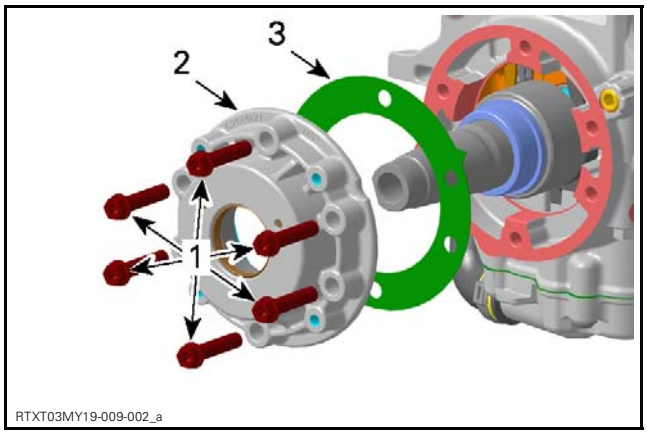


*1. PTO cover screws*
*2. PTO cover*
*3. Gasket*

### PTO Oil Seal and Bearing Replacement

NOTE: Always replace PTO oil seal and roller bearing at the same time.

### Removing the PTO Oil Seal and Bearing

1. Use pliers to remove inner retaining ring.

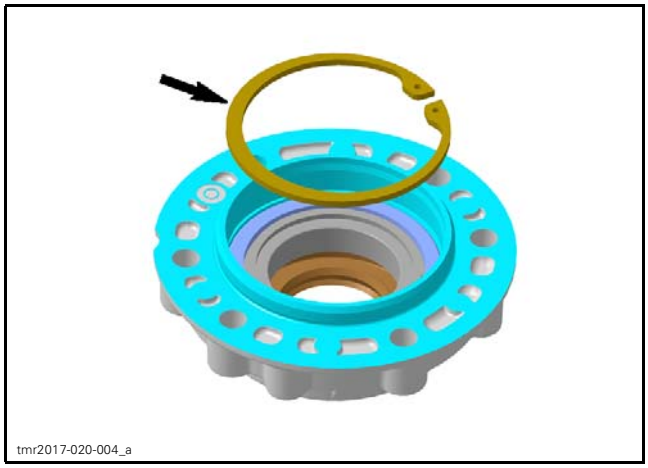


2. Heat PTO cover up to 130°C (266°F) before removing the roller bearing and oil seal.

**NOTICE** Clean PTO cover from oil before heating.

3. Carefully push out oil seal and roller bearing.

| REQUIRED TOOL |
|---|
| Punch 4 mm (.157 in) |

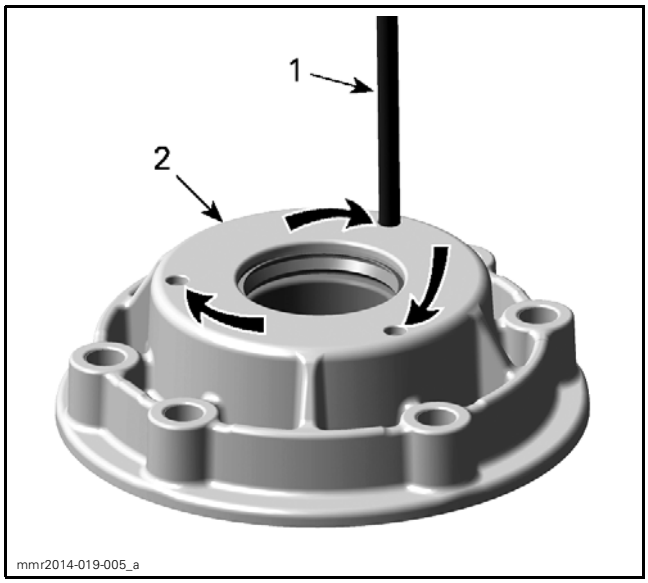


*TYPICAL - PUSH OUT CIRCULAR*
1. *Punch*
2. *PTO cover*

4. Remove and discard roller bearing and oil seal.

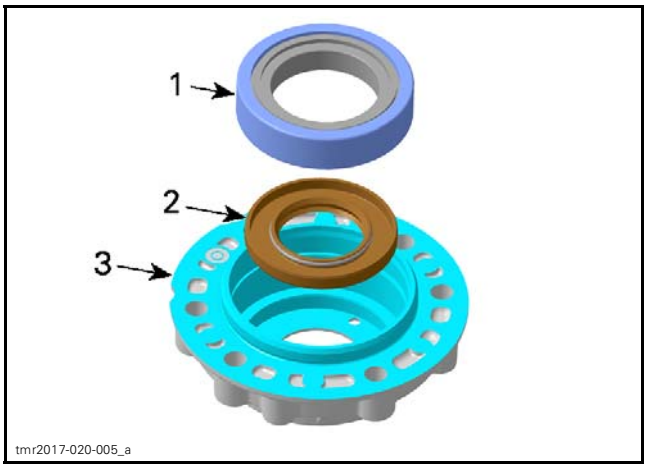


1. *Roller bearing*
2. *Oil seal*
3. *PTO cover*

### Installing the PTO Oil Seal and Bearing

NOTE: Check the oil seal running surface of crankshaft for grooves and deposits, before installation of NEW oil seal.

1. Clean crankshaft PTO side from deposits.
2. Clean oil seal and roller bearing areas in PTO cover.
3. Lubricate oil seal outer diameter and sealing lip.

| OIL SEAL SEALING LIP AND OUTER DIAMETER | |
|---|---|
| Service product | SUPER LUBE GREASE (P/N 293 550 030) |

4. Press NEW oil seal in PTO cover.

**NOTICE** Oil seal must be installed with sealing lip facing to the engine.

| REQUIRED TOOL | |
|---|---|
| OIL SEAL/BEARING PUSHER (P/N 529 036 284) | |

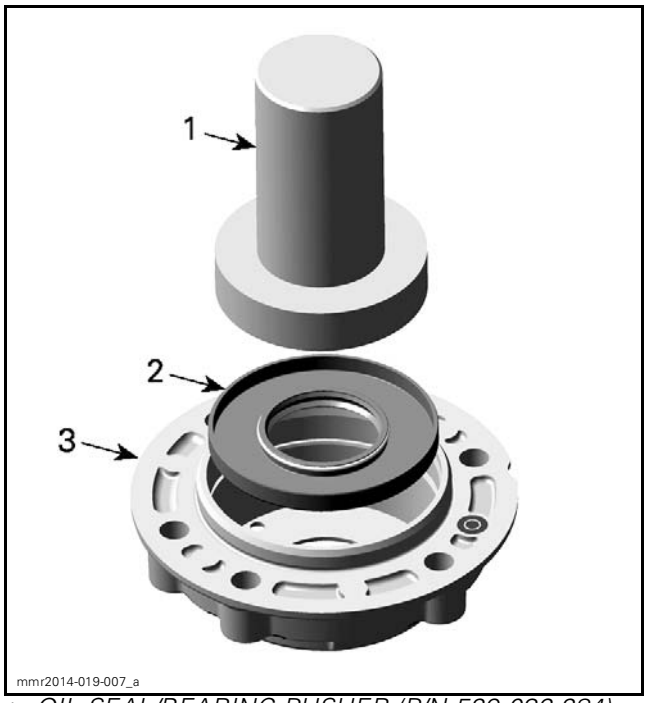


1. *OIL SEAL/BEARING PUSHER (P/N 529 036 284)*
2. *Oil seal*
3. *PTO cover*

5. Place **NEW** roller bearing in PTO cover.
6. Carefully press in the roller bearing.

***NOTICE*** **During installation never push on the inner race of the bearing.**

| REQUIRED TOOL | |
|---|---|
| OIL SEAL/BEARING PUSHER (P/N 529 036 284) | |

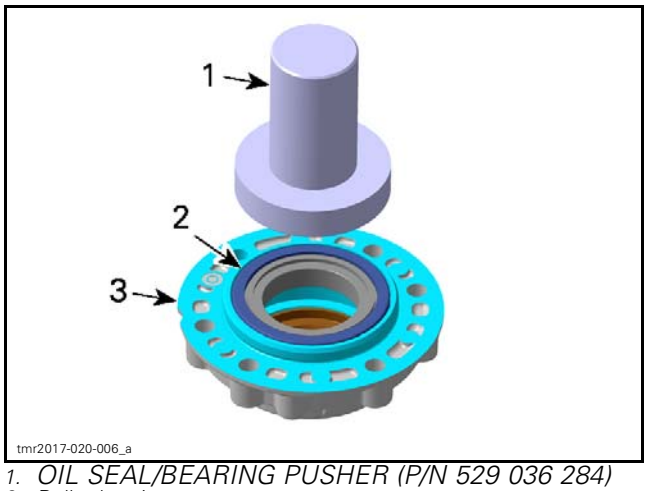


1. *OIL SEAL/BEARING PUSHER (P/N 529 036 284)*
2. *Roller bearing*
3. *PTO cover*

7. Install retaining ring.

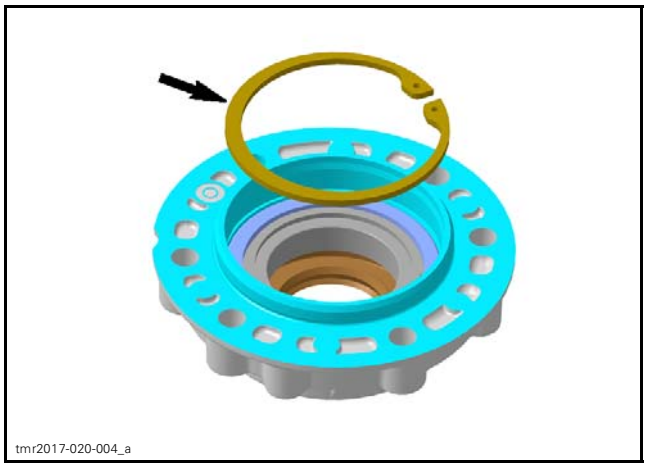


## Installing the PTO Cover

The installation is the reverse of the removal procedure. However, pay attention to the following.

Install a **NEW** PTO cover gasket in proper position.

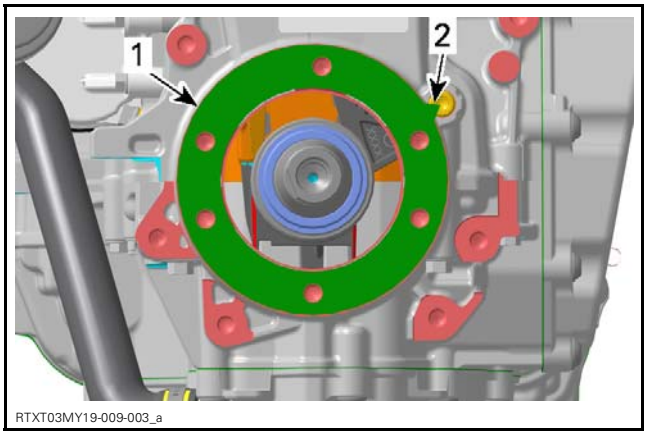


1. *Gasket*
2. *Tab*

Tighten PTO cover screws as per following sequence.

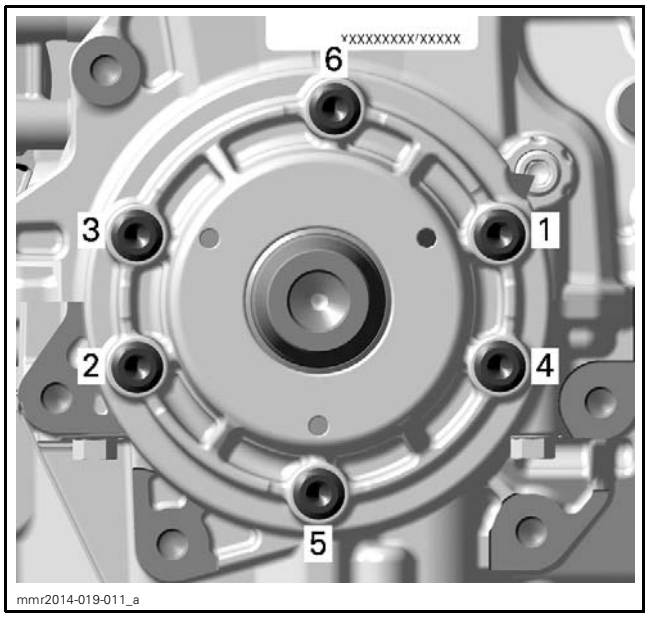


*PTO COVER TIGHTENING SEQUENCE*

| TIGHTENING TORQUE | |
|---|---|
| PTO cover screws | 23 N•m ± 3 N•m (17 lbf•ft ± 2 lbf•ft) + LOCTITE 243 (BLUE) (P/N 293 800 060) |

# CYLINDER BLOCK

## Disassembling the Cylinder Block

1. Remove muffler and tuned pipe. Refer to *EXHAUST SYSTEM* subsection.
2. Remove turbo charger. Refer to *TURBO CHARGER AND INTERCOOLER* subsection.
3. Remove engine from the vehicle. Refer to *ENGINE REMOVAL AND INSTALLATION* subsection.
4. Drain engine oil. Refer to *LUBRICATION SYSTEM* subsection.
5. Refer to *CYLINDER HEAD* subsection and remove:
   – Ignition coils
   – Valve cover
   – Spark plugs.
6. Lock crankshaft, refer to *CRANKSHAFT LOCKING PROCEDURE* in this subsection.
7. Remove air intake manifold. Refer to *AIR INTAKE SYSTEM* subsection.
8. Refer to *COOLING SYSTEM* subsection and remove:
   – Water pump housing
   – Thermostat
   – Water pump drive gear.
9. Refer to *LUBRICATION SYSTEM* subsection and remove:
   – Oil tank
   – Oil cooler
   – Oil pressure regulator
   – Oil pump drive gears and oil pumps
   – Oil sump cover
   – Oil strainers.
10. Refer to *MAGNETO AND STARTER* subsection and remove:
    – Magneto cover
    – Rotor
    – Starter drive gears
    – Electric starter.
11. Refer to *TIMING CHAIN* subsection and remove:
    – Timing chain tensioner
    – Timing chain guides.
12. Refer to *CYLINDER HEAD* subsection and remove:
    – Camshaft holders
    – Cylinder head.
13. Remove PTO cover. Refer to *PTO COVER AND PTO OIL SEAL* in this subsection.

NOTE: Before splitting the cylinder block, measure crankshaft axial play. Refer to *CRANKSHAFT* in this subsection.

14. Remove crankshaft locking tool.
15. Remove cylinder block screws.
    15.1 Start removing the M6 screws.
    15.2 Then remove the M8 screws.
    15.3 Finally remove and discard the M9 screws.

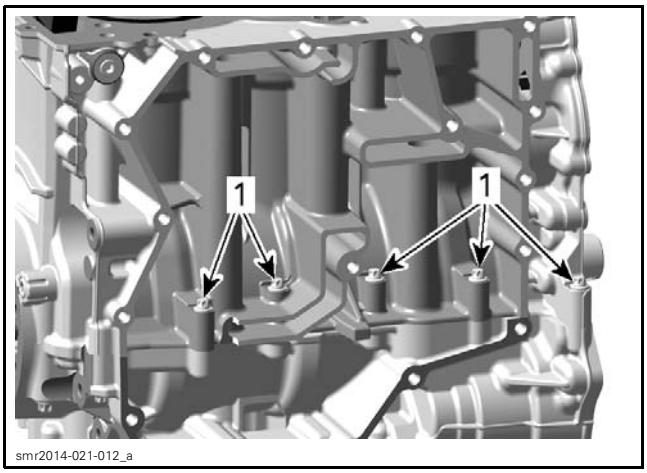


*INTAKE SIDE*
1. *Cylinder block screws (M6) screwed from top to bottom*

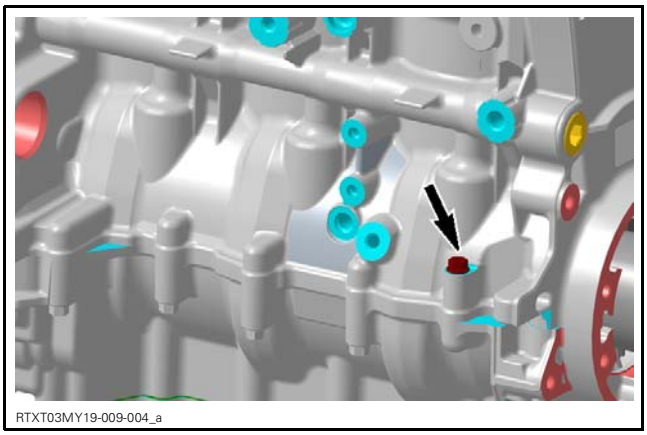


*CYLINDER BLOCK SCREW (M6) SCREWED FROM TOP TO BOTTOM - EXHAUST SIDE*

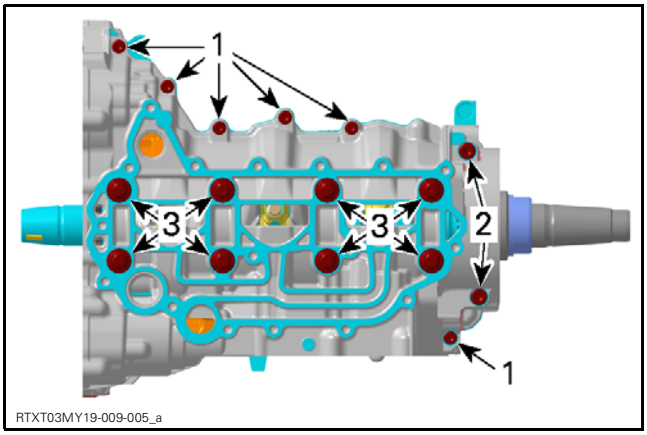


*BOTTOM SIDE*
1. *M6 screws*
2. *M8 screws*
3. *M9 screws (discard)*

16. Carefully remove cylinder block lower half by using a soft hammer.

NOTE: Take care not to damage the sealing surfaces of the cylinder block halves.

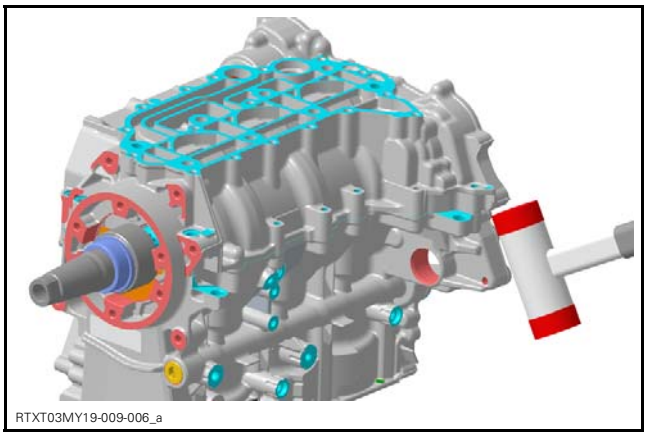


17. Remove connecting rod caps. Refer to *PISTONS AND CONNECTING RODS* in this subsection.
18. Refer to *CRANKSHAFT* in this subsection and remove:
    – Crankshaft thrust washers
    – Crankshaft.
19. Remove pistons and connecting rods. See procedure in this subsection.

### Removing the Plain Bearing

When the plain bearings need to be removed from the cylinder block, mark them to identify the correct position at installation. See the illustration as an example.

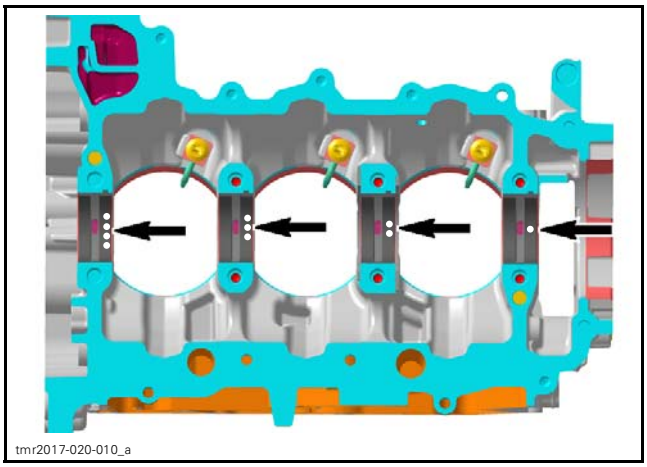


*MARKS ON CRANKSHAFT PLAIN BEARINGS*

## Cleaning the Cylinder Block

Clean cylinder block using a part cleaner, then use compressed air to dry it.

Blow out the oil orifices using compressed air and make sure they are not clogged.

Inspect oil nozzles, refer to *LUBRICATION SYSTEM* subsection.

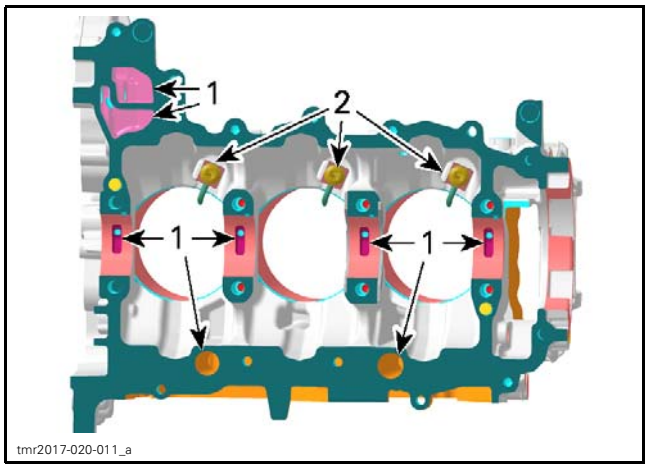


*CYLINDER BLOCK UPPER HALF*
1. *Oil orifices*
2. *Oil nozzles*

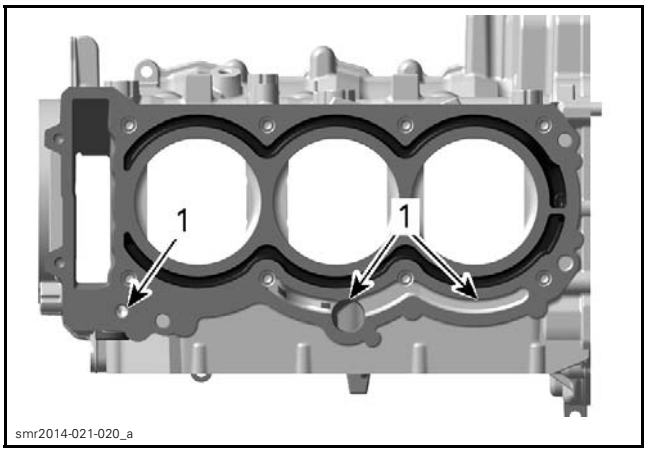


*CYLINDER BLOCK - TOP*
1. *Oil orifices*

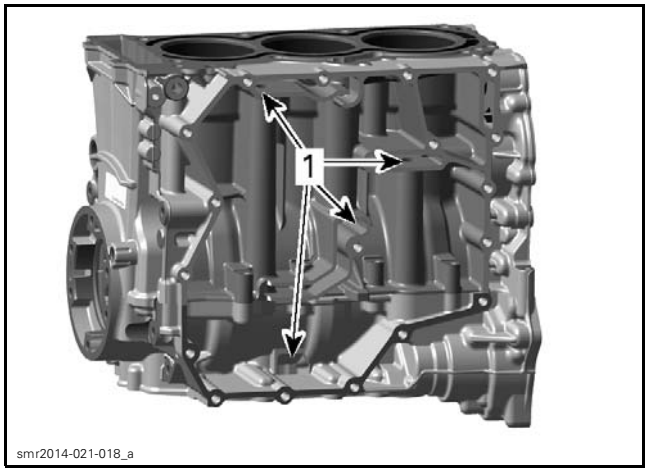


*CYLINDER BLOCK - REAR*
1. *Oil orifices*

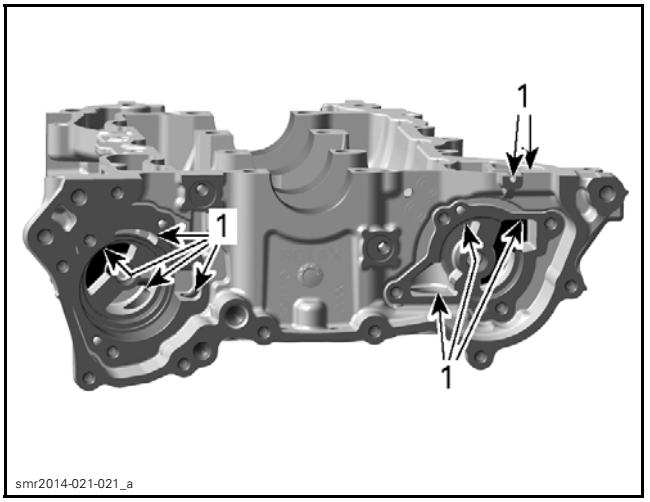


*CYLINDER BLOCK LOWER HALF*
1. *Oil orifices*

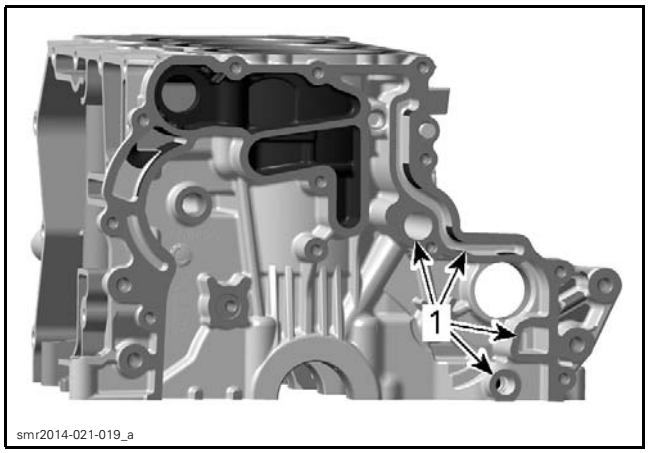


*CYLINDER BLOCK - MAG SIDE*
1. *Oil orifices*

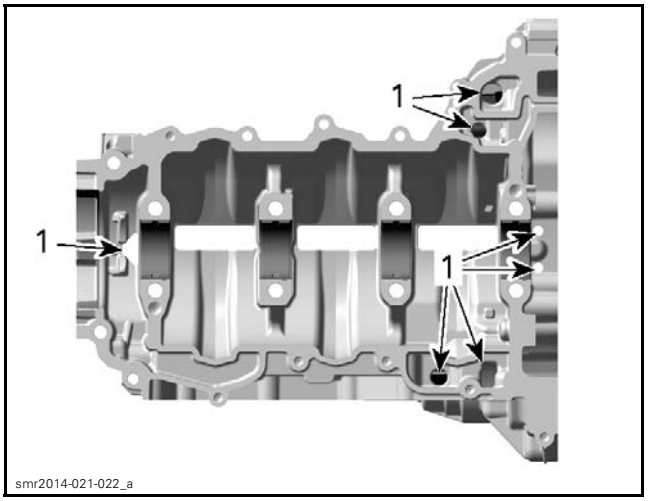


*CYLINDER BLOCK LOWER HALF*
1. *Oil orifices*

Clean all metal components in a solvent.

Clean cylinder block mating surfaces with LOCTITE CHISEL (GASKET REMOVER) (P/N 413 708 500) and a brass brush. Brush a first pass in one direction then make the final brushing perpendicularly (90°) to the first pass (cross hatch).

NOTE: Do not wipe with rags. Use a new clean hand towel only.

## Inspecting the Cylinder Block

Check cylinder block for cracks or other damage.

Check cylinder block mating surfaces for flatness using a straight edge.

Replace cylinder block if necessary.

Check cylinder bores for cracks, scoring and wear ridges on top and bottom of the cylinders.

### Cylinder Taper

Measure cylinder bore diameter at 4 recommended positions. See illustration.

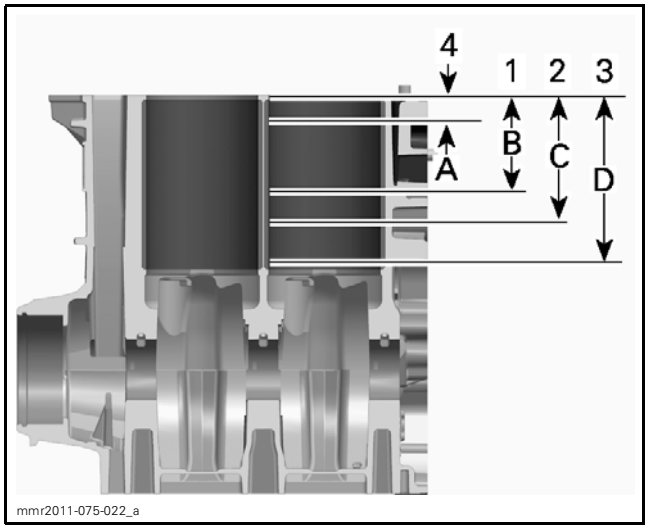


mmr2011-075-022_a

*TYPICAL*
1. *First measure*
2. *Second measure*
3. *Third measure*
4. *Fourth measure*

*A. 5 mm to 10 mm (.197 in to .394 in)*
*B. 30 mm to 35 mm (1.181 in to 1.378 in)*
*C. 57 mm to 62 mm (2.244 in to 2.441 in)*
*D. 111 mm to 113 mm (4.37 in to 4.449 in)*

The difference between measurements should not exceed the service limit mentioned in next table.

| CYLINDER TAPER | |
|---|---|
| NEW MAXIMUM | 0.030 mm (.0012 in) |
| SERVICE LIMIT | 0.050 mm (.002 in) |

### Cylinder Out of Round

Measure cylinder bore diameter as shown and at the same measuring points as for *CYLINDER TAPER*.

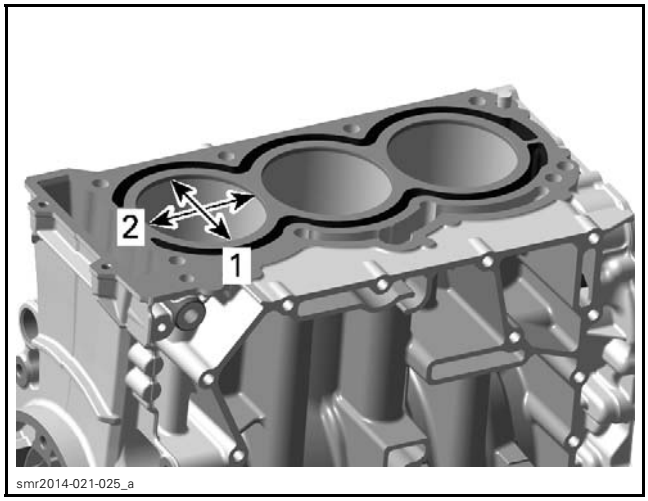


smr2014-021-025_a

1. *Perpendicular to piston pin axis*
2. *Parallel to piston pin axis*

To obtain the cylinder out of round, calculate the difference between the perpendicular measures.

| CYLINDER OUT OF ROUND | |
|---|---|
| NEW MAXIMUM | 0.008 mm (.0003 in) |
| SERVICE LIMIT | 0.030 mm (.0012 in) |

### Inspecting Plain Bearings Diameter

Check the plain bearings for scoring or other damages.

Measure plain bearing inside diameter and compare with crankshaft bearing journal diameter (refer to *CRANKSHAFT* in this subsection). Proceed as follows.

– Use the OLD plain bearings and put both cylinder block halves together.
– Tighten screws as described in *ASSEMBLING THE CYLINDER BLOCK*.
– Measure the inside diameter of the crankshaft plain bearings using a bore gauge.

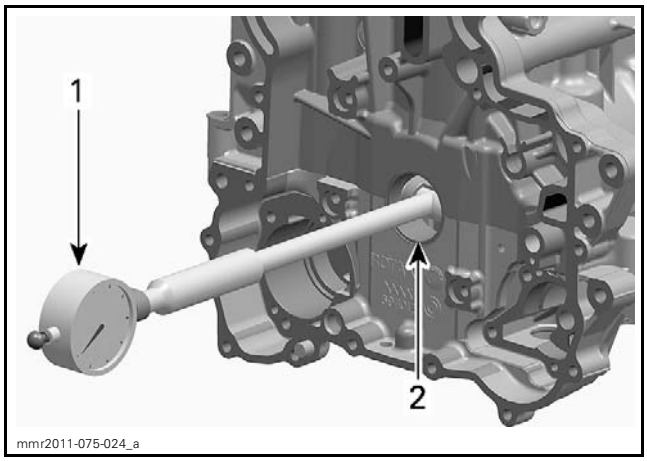


1. *Bore gauge*
2. *Crankshaft plain bearing*

| CRANKSHAFT PLAIN BEARING INSIDE DIAMETER | |
|---|---|
| SERVICE LIMIT | 36.080 mm (1.4205 in) |

Replace bearings if they are out of specifications.

## Assembling the Cylinder Block

For assembly, reverse the disassembly procedure. Pay attention to the following details.

1. Correctly reinstall plain bearings as follows.
   - 1.1 Use NEW bearings if diameters are out of specification. Refer to *INSPECTING PLAIN BEARING DIAMETER* in this subsection.
   - 1.2 Install bearings with lubrication grooves in the cylinder block upper half.

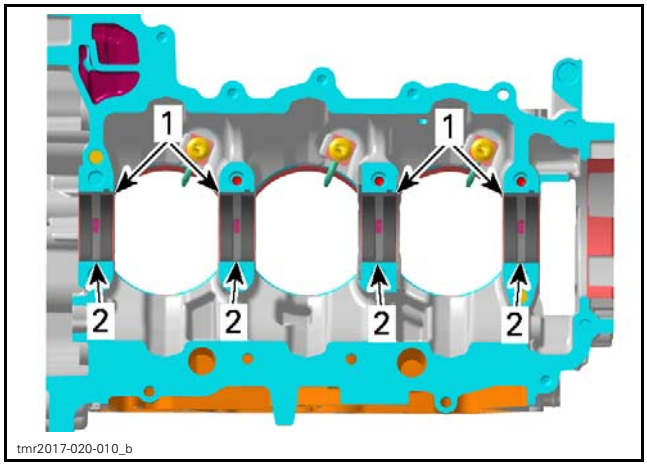


1. *Plain bearings*
2. *Lubrication grooves*

   - 1.3 Install flat bearings in the cylinder block lower half.

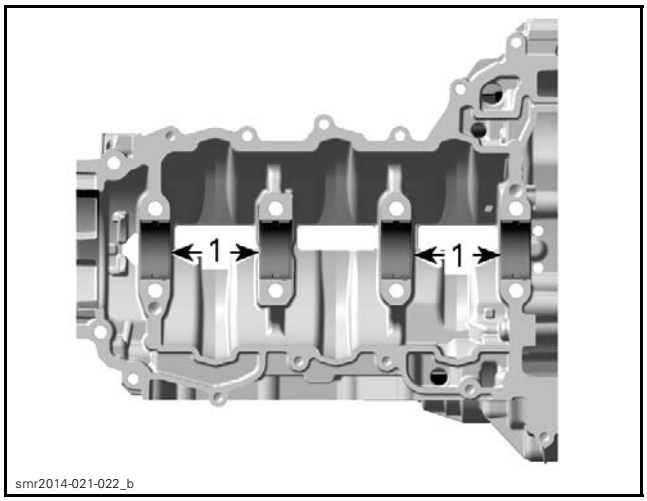


1. *Flat bearings*

   - 1.4 Bearings must be flush with the cylinder block split surface and their protrusions have to fit in the notched areas in the cylinder block seat.

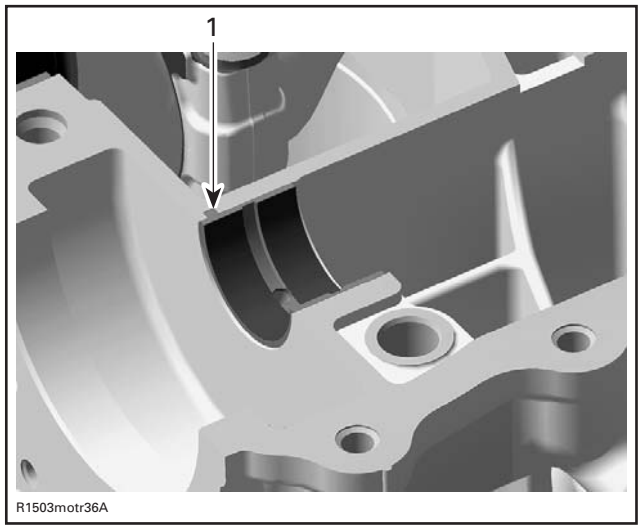


*TYPICAL*
1. *Bearing protrusion in cylinder block notch*

2. Install pistons, refer to *PISTONS AND CONNECTING RODS* in this subsection.
3. Apply engine oil on all plain bearings.
4. Install the following components:
   - Crankshaft and thrust washers (refer to *CRANKSHAFT*)
   - Connecting rod caps (refer to *PISTONS AND CONNECTING RODS*).
5. Apply sealant on mating surface of cylinder block lower half as shown on next illustration.

| CYLINDER BLOCK SEALANT | |
|---|---|
| Service product | LOCTITE 5910 (P/N 293 800 081) |

IMPORTANT: When beginning the application of the cylinder block sealant, the assembly and first tightening have to be done within 12 minutes. It is suggested to have all you need on hand to save time.

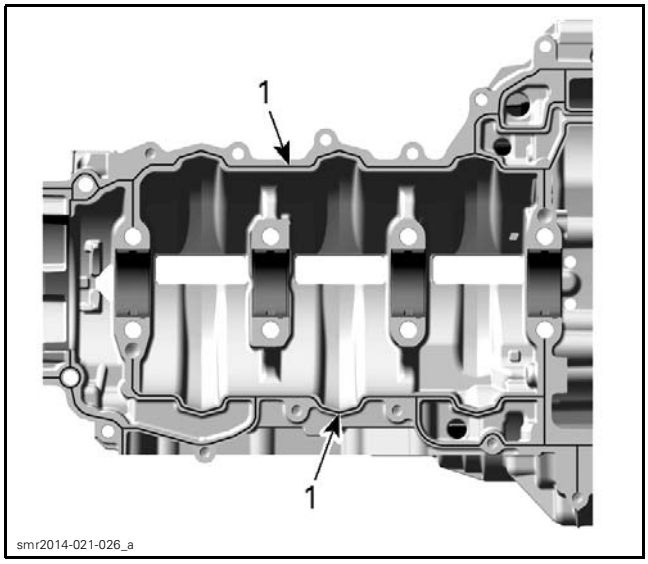


*1. Apply Loctite 5910 following this pattern*

**NOTICE** Ensure not to apply too much sealant, as it will spread out inside the cylinder block.

**NOTICE** Take care that the bypass passage of the engine oil pressure regulator is not clogged with sealant.

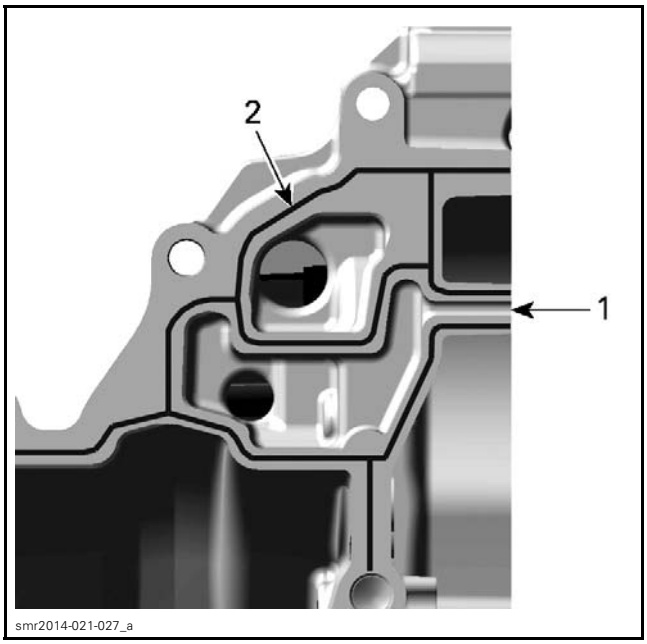


*1. Bypass passage of engine oil pressure regulator*
*2. Loctite 5910 applied*

6. Install **NEW** cylinder block M9 screws and tighten as follows.

**NOTICE** This assembly uses stretch screws. Always use NEW screws and strictly adhere to the tightening procedure.

6.1 Torque the M9 screws according the sequence.

| TIGHTENING PROCEDURE | | |
|---|---|---|
| Cylinder block M9 screws | STEP A | 20 N•m ± 2 N•m (15 lbf•ft ± 1 lbf•ft) |

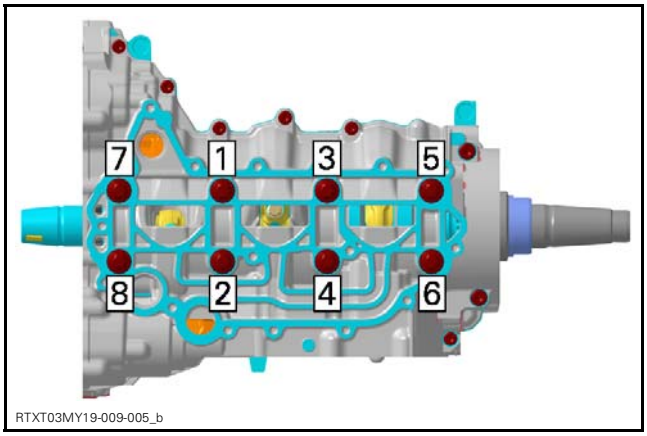


*M9 SCREWS TIGHTENING SEQUENCE - FIRST AND SECOND STEPS*

6.2 Use a torque angle gauge to carry out the second step, following the same sequence.

| TIGHTENING PROCEDURE | | |
|---|---|---|
| Cylinder block M9 screws | STEP B | Additional 150° ± 5° |

7. Install M8 screws and tighten as follows.

| TIGHTENING TORQUE | |
|---|---|
| Cylinder block M8 screws | 23 N•m ± 2 N•m (17 lbf•ft ± 1 lbf•ft) |

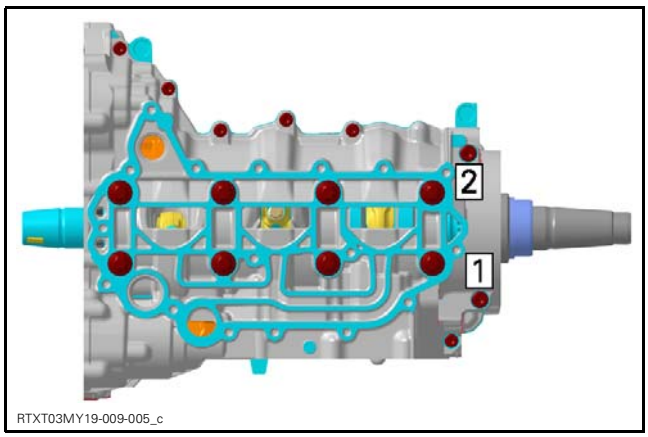


*M8 SCREWS TIGHTENING SEQUENCE*

8. Install the M6 screws and tighten as follows.

| TIGHTENING TORQUE | |
|---|---|
| Cylinder block M6 screws | 9 N•m ± 1 N•m (80 lbf•**in** ± 9 lbf•**in**) |

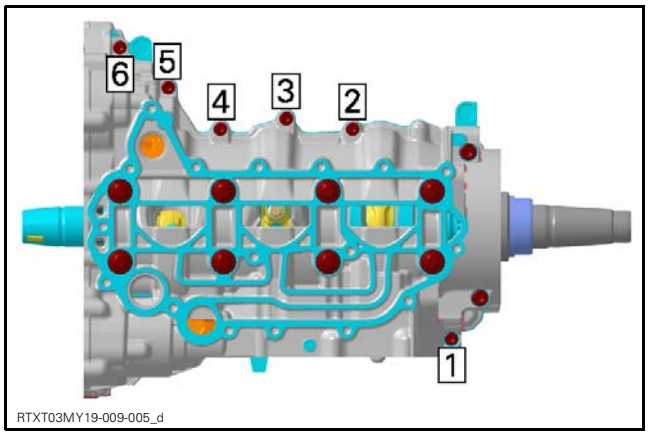


*M6 SCREWS TIGHTENING SEQUENCE (BOTTOM OF CRANKCASE)*

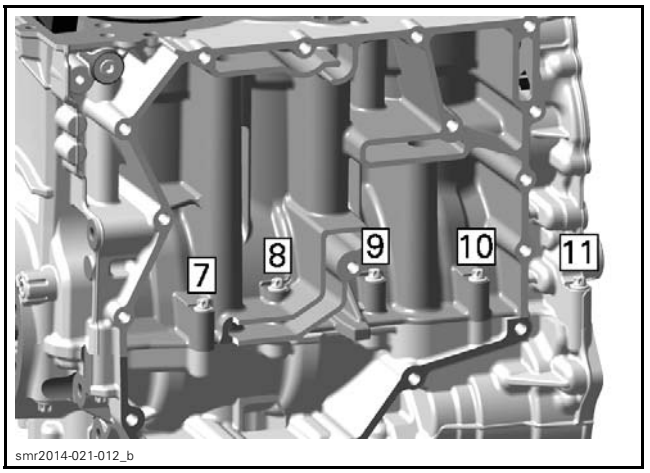


*M6 SCREWS TIGHTENING SEQUENCE (INTAKE SIDE OF CRANKCASE)*

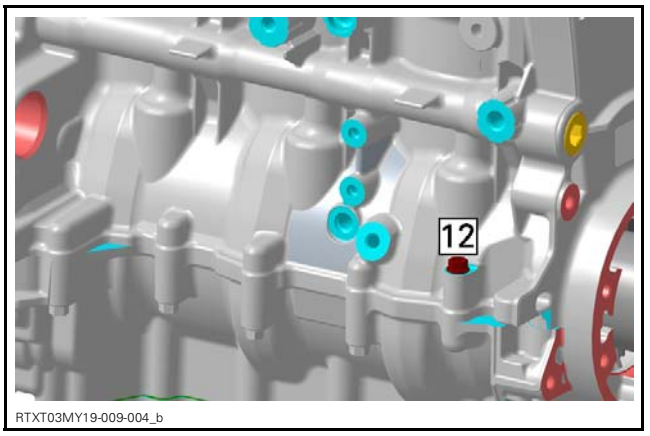


*M6 SCREW TIGHTENING SEQUENCE (EXHAUST SIDE OF CRANKCASE)*

NOTE: Check the crankshaft axial play before continuing the assembly. Refer to *CRANKSHAFT* in this subsection for the procedure.

9. Lubricate PTO oil seal properly before reinstalling the PTO cover. Refer to *PTO COVER AND PTO OIL SEAL* in this subsection.
10. Reassemble engine in accordance with the proper assembly procedures.

# CRANKSHAFT

## Crankshaft Locking Procedure

**NOTICE When crankshaft is locked, the second cylinder is set to TDC.**

Crankshaft must be locked whenever the magneto rotor retaining nut has to be removed or whenever working on the valve train.

**NOTICE** When working on the valve train or timing chain, crankshaft must be locked with the marks "IN" and "EX" on the camshaft timing gears facing each other.

1. If working on the valve train or timing chain, remove the valve cover. Refer to *CYLINDER HEAD* subsection.
2. Remove spark plugs.
3. Remove crankshaft access plug and discard gasket ring.

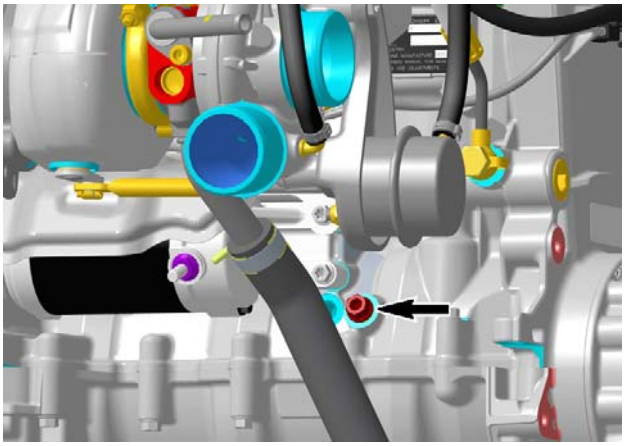

RTXT03MY19-009-007_a

4. Turn engine on PTO side counterclockwise to bring crankshaft to locking position.

For turning the crankshaft install drive pulley or use a suitable screw locked by a counter nut.

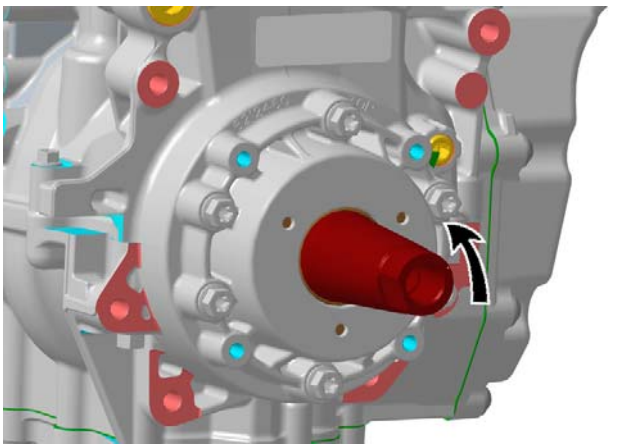

RTXT03MY19-009-008_a

**NOTICE** Crankshaft locking position is reached when marks "IN" and "EX" on the camshaft timing gears face each other.

5. Use a flashlight to check if the groove in the crankshaft is aligned with the hole.
6. Lock crankshaft.

| REQUIRED TOOL | |
|---|---|
| CRANKSHAFT LOCKING TOOL (P/N 529 036 272) | |

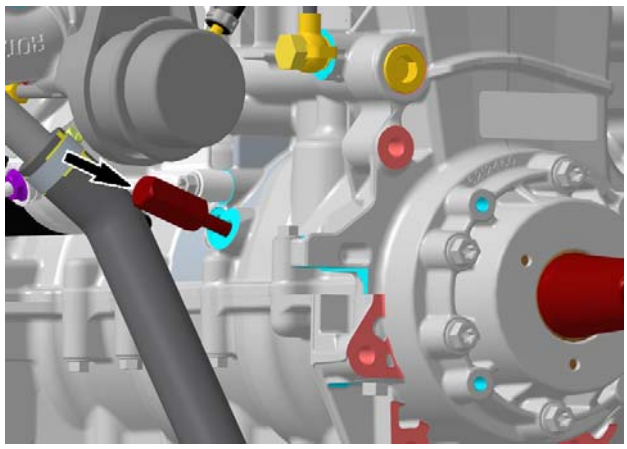

RTXT03MY19-009-009_a

## Removing the Crankshaft

1. Disassemble *CYLINDER BLOCK*, see procedure in this subsection.
2. Remove connecting rod caps. Refer to *PISTONS AND CONNECTING RODS* in this subsection.
3. Remove crankshaft thrust washers.

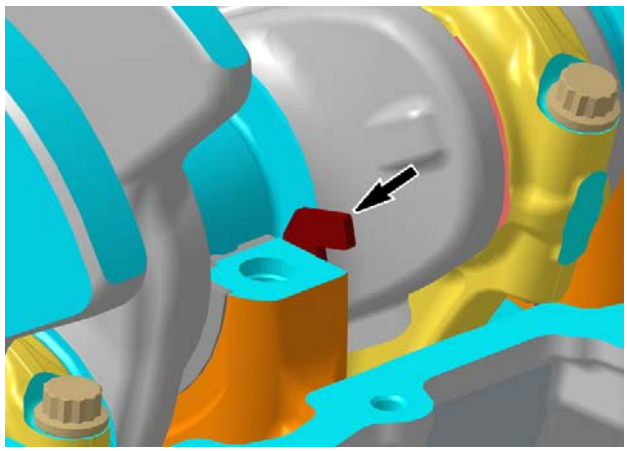

RTXT03MY19-009-010_a

4. Remove crankshaft from cylinder block.

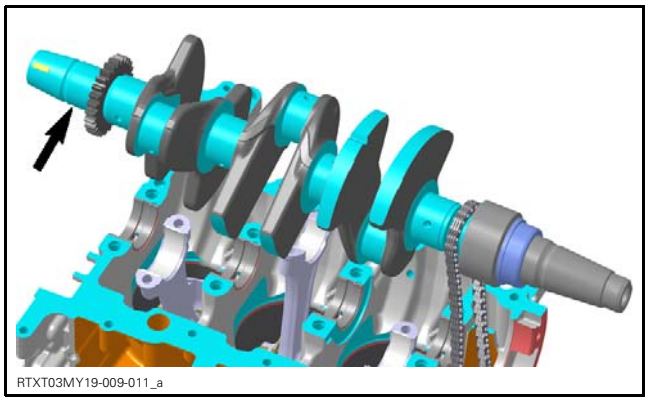
RTXT03MY19-009-011_a

## Inspecting the Crankshaft

Check each bearing journal of crankshaft for scoring, scuffing, cracks or other signs of wear.

Check if crankshaft gears are worn or otherwise damaged.

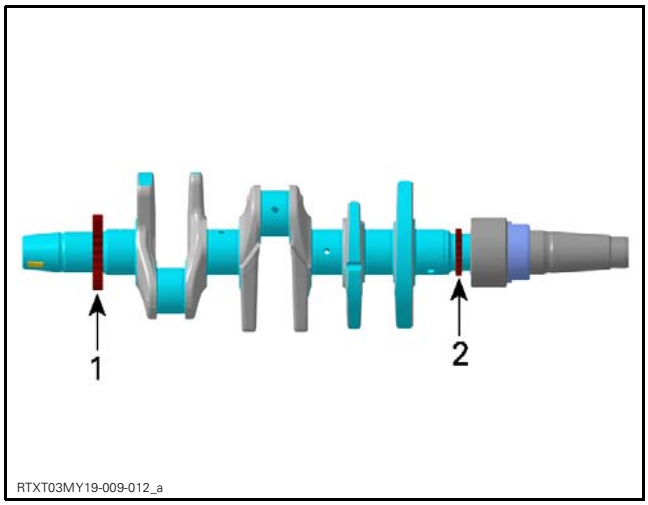

RTXT03MY19-009-012_a

1. *Oil pump drive gear*
2. *Crankshaft timing gear*

Replace crankshaft if damaged.

Blow the oil orifices using compressed air and make sure they are not clogged.

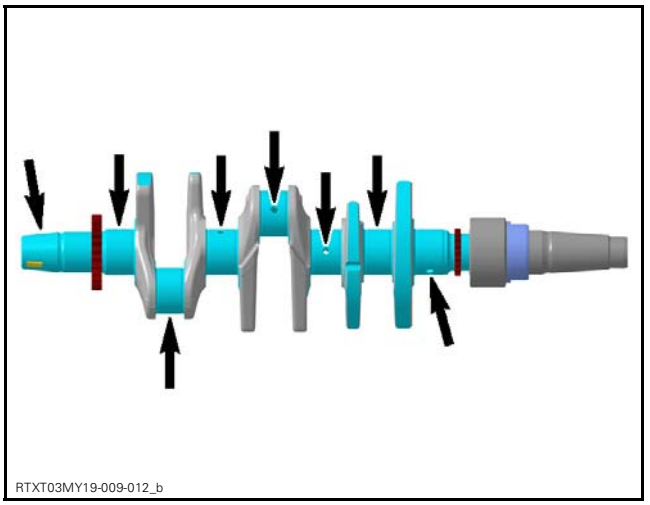
RTXT03MY19-009-012_b

### Crankshaft Radial Play

Measure crankshaft bearing journal diameter, using a micrometer.

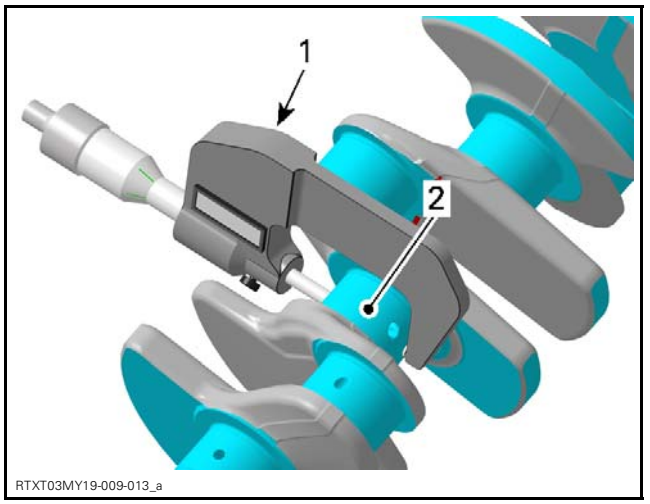

RTXT03MY19-009-013_a

1. *Micrometer*
2. *Crankshaft area for plain bearing*

To obtain the radial play, calculate the difference between the bearing journal diameter and the crankshaft plain bearings inner diameter (see *CYLINDER BLOCK*).

| CRANKSHAFT BEARING JOURNAL DIAMETER | |
|---|---|
| NEW | 35.990 mm to 36.006 mm (1.4169 in to 1.4176 in) |
| SERVICE LIMIT | 35.960 mm (1.4157 in) |

| CRANKSHAFT RADIAL PLAY | |
|---|---|
| SERVICE LIMIT | 0.08 mm (.0031 in) |

### Crankshaft Pin Diameter

Measure crankshaft pin diameter, using a micrometer.

To obtain the radial play, calculate the difference between the crankshaft pin diameter and the connecting rod plain bearings inner diameter (see *INSPECTING THE CONNECTING ROD*).

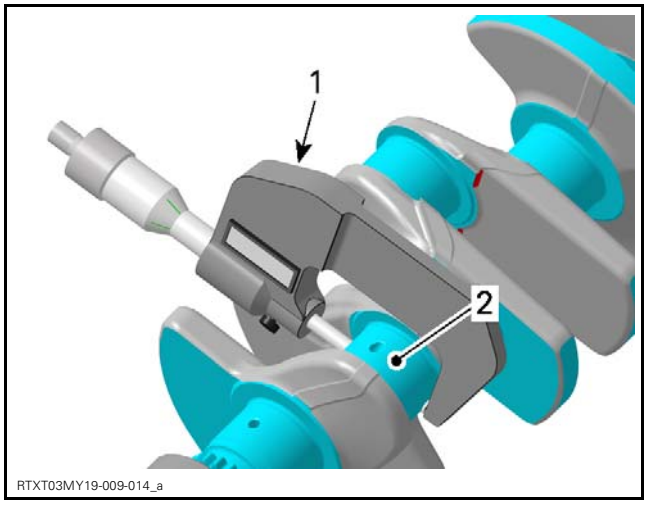


*1. Micrometer*
*2. Crankshaft pin area for plain bearing*

| CRANKSHAFT PIN DIAMETER | |
|---|---|
| NEW | 35.979 mm to 35.995 mm (1.4165 in to 1.4171 in) |
| SERVICE LIMIT | 35.969 mm (1.4161 in) |

| CONNECTING ROD BIG END RADIAL PLAY | |
|---|---|
| SERVICE LIMIT | 0.08 mm (.0031 in) |

### Crankshaft Axial Play

With the crankshaft in the cylinder block, measure the crankshaft axial play, using a dial indicator.

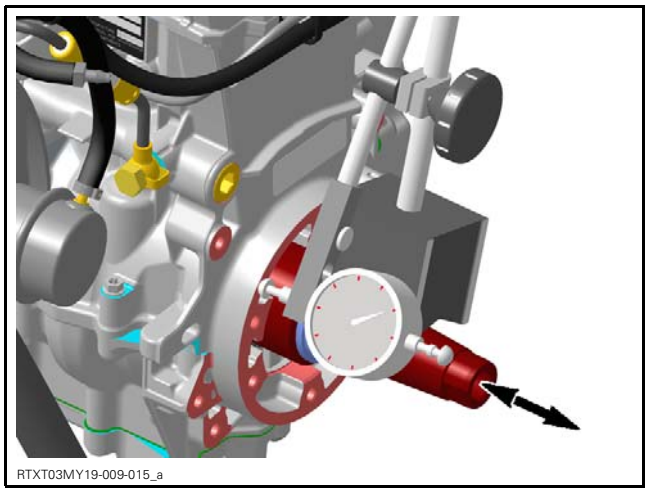


| CRANKSHAFT AXIAL PLAY | |
|---|---|
| NEW | 0.120 mm to 0.352 mm (.005 in to .014 in) |
| SERVICE LIMIT | 0.450 mm (.018 in) |

If play is out of specification, replace the crankshaft thrust washers and repeat measurement.

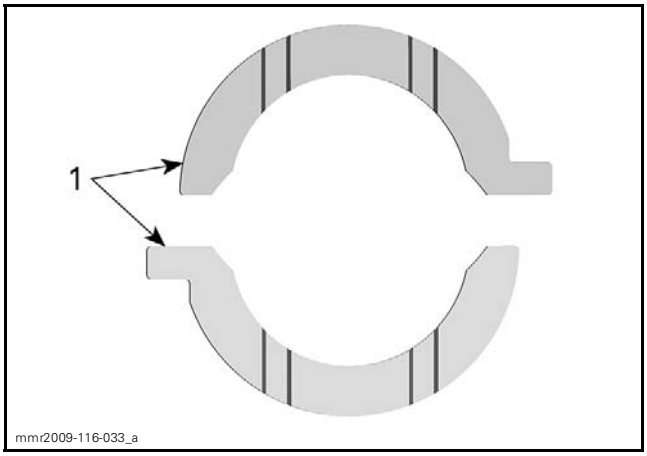


*TYPICAL*
*1. Crankshaft thrust washers*

## Installing the Crankshaft

Reverse the removal procedure. Pay attention to following details.

Turn cylinder block upside down.

**NOTICE** **Be careful that connecting rods do not hit the cylinder block.**

Apply engine oil on all plain bearings before installing them.

Install crankshaft along with the timing chain.

Lubricate (both sides) and reinstall crankshaft thrust washers with the slots facing against crankshaft counterweights.

NOTE: Thrust washers have to be flush with the cylinder block sealing surface.

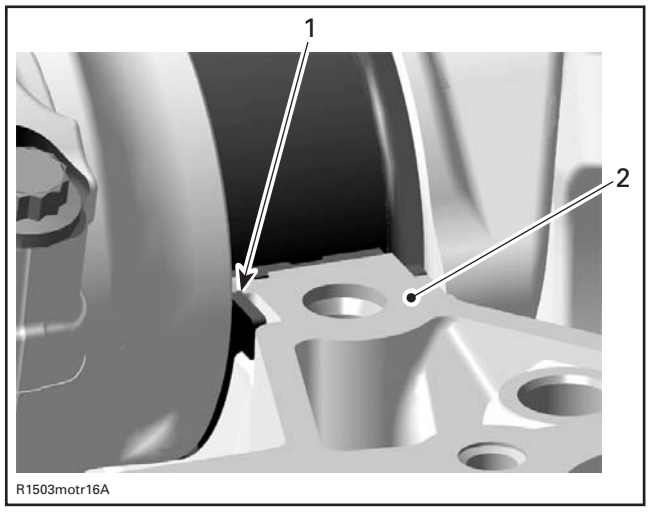


*TYPICAL*
1. *Thrust washer*
2. *Sealing surface*

Install connecting rod caps. Refer to *PISTONS AND CONNECTING RODS* in this subsection.

**NOTICE** **It is absolutely necessary to follow this procedure. Otherwise severe engine damage can occur.**

Install cylinder block lower half. Refer to *CYLINDER BLOCK* in this subsection.

Lock crankshaft before further assembly of the engine. See *CRANKSHAFT LOCKING PROCEDURE* in this subsection.

# PISTONS AND CONNECTING RODS

## Removing the Piston and Connecting Rod

NOTE: It is recommended to measure connecting rod big end axial play prior to remove connecting rod. Refer to *CONNECTING ROD INSPECTION*.

1. Disassemble *CYLINDER BLOCK* as per procedure in this subsection.
2. Remove connecting rod cap.

**NOTICE** **Mark cylinder position of connecting rod before disassembly.**

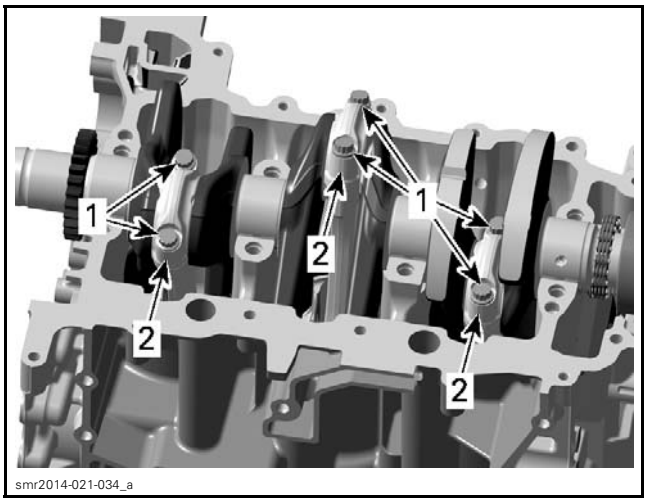


1. *Connecting rod screws*
2. *Connecting rod cap*

3. Remove *CRANKSHAFT* as per procedure in this subsection.
4. Turn cylinder block and push piston with connecting rod out of the cylinder.

## Disassembling the Piston and Connecting Rod

1. Remove one piston pin circlip and discard it.

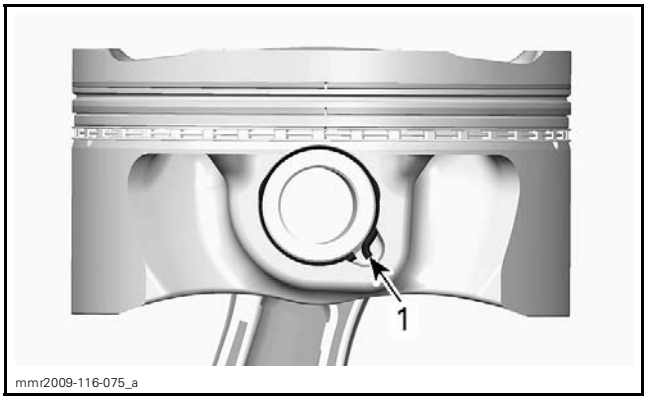


*TYPICAL*
1. *Piston pin circlip*

NOTE: The removal of both piston pin circlips is not necessary to remove the piston pin.

2. Push piston pin out of the piston.

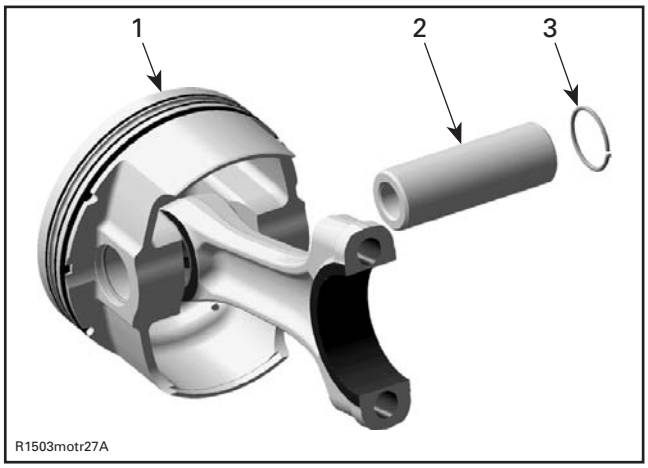


*TYPICAL*
1. *Piston*
2. *Piston pin*
3. *Circlip*

3. Detach piston from connecting rod.

## Inspecting the Connecting Rod

### Connecting Rod Big End Axial Play

Using a feeler gauge, measure distance between butting face of connecting rod and crankshaft counterweight. If the distance exceeds specified tolerance, replace the worn part.

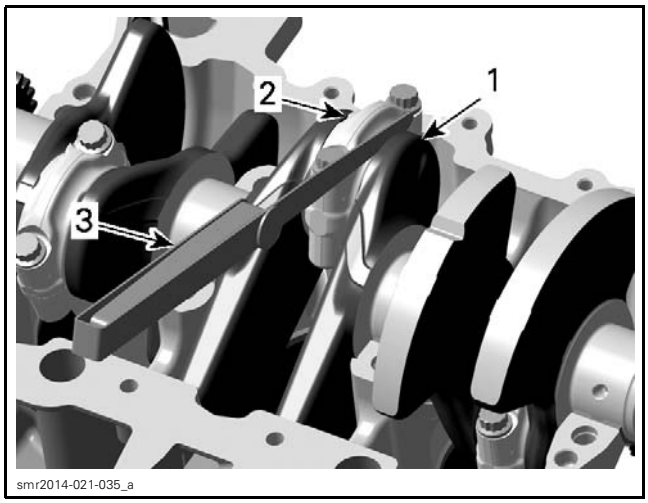


1. *Crankshaft*
2. *Connecting rod*
3. *Feeler gauge*

| CONNECTING ROD BIG END AXIAL PLAY | |
|---|---|
| NEW | 0.100 mm to 0.352 mm (.004 in to .014 in) |
| SERVICE LIMIT | 0.450 mm (.018 in) |

### Connecting Rod Small End Radial Play

Measure connecting rod small end, using a bore gauge.

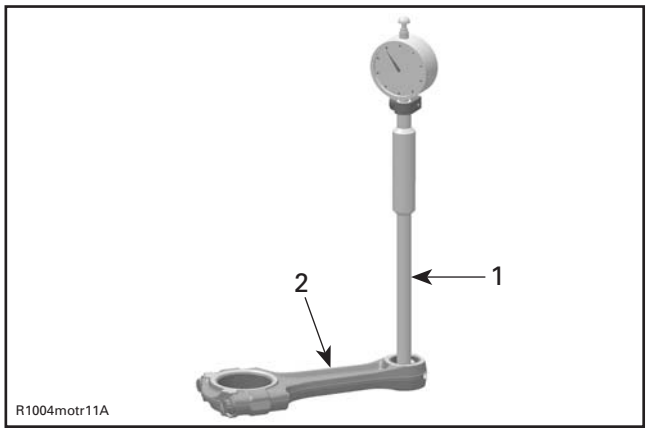


*TYPICAL*
1. *Bore gauge*
2. *Connecting rod*

| CONNECTING ROD SMALL END DIAMETER | |
|---|---|
| NEW | 18.010 mm to 18.020 mm (.7091 in to .7094 in) |
| SERVICE LIMIT | 18.060 mm (.711 in) |

If the connecting rod small end diameter is out of specification, replace the connecting rod.

To obtain the radial play, calculate the difference between the piston pin diameter (*INSPECTING THE PISTON PIN*) and the connecting rod small end inner diameter.

| CONNECTING ROD SMALL END RADIAL PLAY | |
|---|---|
| SERVICE LIMIT | 0.040 mm (.0016 in) |

### Connecting Rod Big End Radial Play

1. Measure inside diameter of connecting rod big end.
   - 1.1 Install the OLD plain bearings as they were mounted initially.
   - 1.2 Perform the tightening procedure as described in *INSTALLING PISTON AND CONNECTING ROD* in this subsection.

     NOTE: To measure the connecting rod big end diameter, ALWAYS use the OLD connecting rod screws.
   - 1.3 Measure inside diameter in longitudinal direction of the connecting rod.

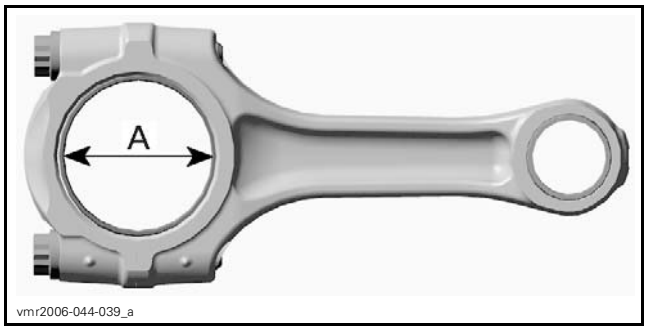


*TYPICAL*
*A. Connecting rod big end bearing*

| CONNECTING ROD BIG END DIAMETER | |
|---|---|
| SERVICE LIMIT | 36.06 mm (1.4197 in) |

To obtain the connecting rod big end radial play, calculate the difference between the big end diameter and the crankshaft pin diameter (see *INSPECTING THE CRANKSHAFT*).

| CONNECTING ROD BIG END RADIAL PLAY | |
|---|---|
| SERVICE LIMIT | 0.080 mm (.0031 in) |

If connecting rod big end diameter is out of specification, install NEW plain bearings.

## Inspecting the Piston Pin

Using synthetic abrasive woven, clean piston pin from deposits.

Inspect piston pin for scoring, cracks or other damage.

Measure piston pin diameter, using a micrometer. See the following illustration for the proper measurement position.

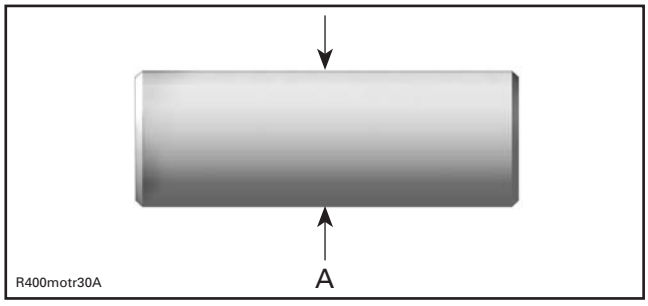


*TYPICAL*
*A. Measure piston pin diameter here*

| PISTON PIN DIAMETER | |
|---|---|
| NEW | 17.996 mm to 18.00 mm (.7085 in to .7087 in) |
| SERVICE LIMIT | 17.986 mm (.7081 in) |

Replace the piston pin if it is out of specification.

## Inspecting the Piston

Inspect piston for scoring, scuffing, cracks or other damage. Replace piston and piston rings if necessary.

Using a micrometer, measure piston perpendicularly (90°) to piston pin axis at 8.5 mm (11/32 in) from the skirt edge.

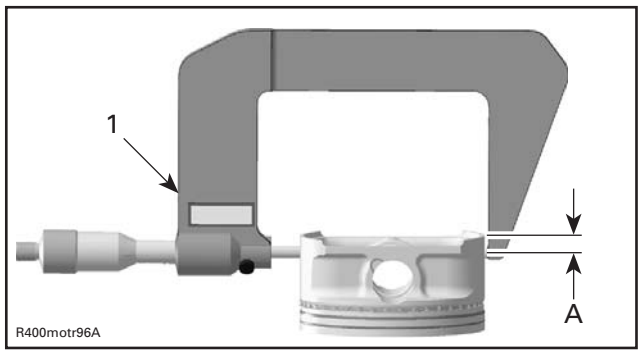


*TYPICAL*
*1. Measuring perpendicularly (90°) to piston pin axis*
*A. 8.5 mm (11/32 in)*

| PISTON MEASUREMENT | |
|---|---|
| NEW | 73.950 mm to 73.966 mm (2.9114 in to 2.912 in) |
| SERVICE LIMIT | 73.920 mm (2.9102 in) |

Replace piston if it is out of specification.

### Piston/Cylinder Clearance

1. Adjust and lock a micrometer to the piston dimension.

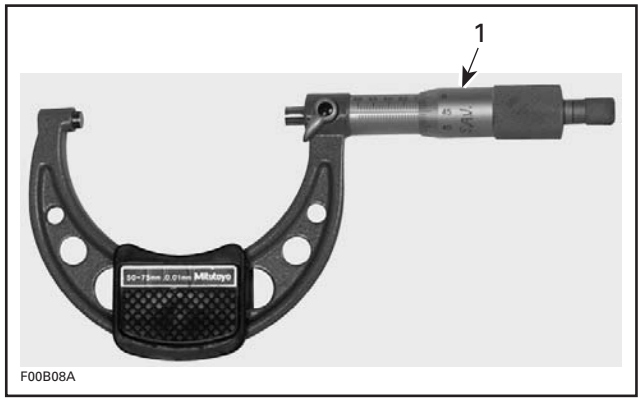


*TYPICAL*
*1. Micrometer set to the piston dimension*

NOTE: Make sure used piston is not worn.

2. With the micrometer locked at step 1, adjust a cylinder bore gauge to the micrometer dimension and set the indicator to 0 (zero).

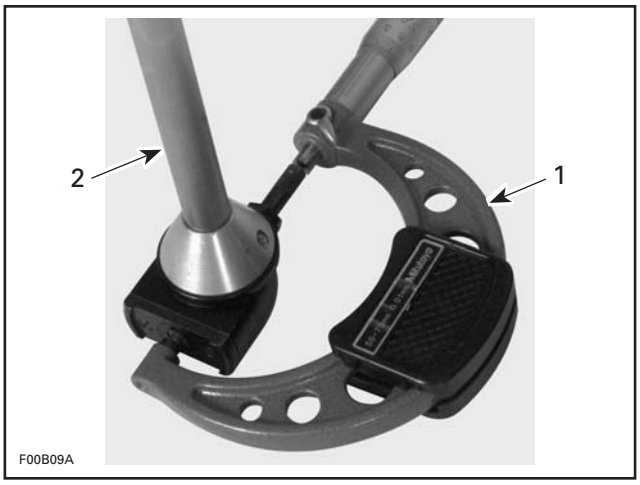


*TYPICAL*
1. *Use the micrometer to set the cylinder bore gauge*
2. *Cylinder bore gauge*

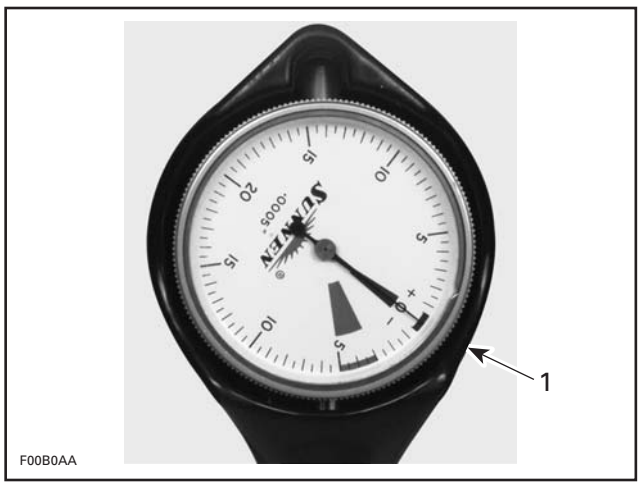


*TYPICAL*
1. *Indicator set to 0 (zero)*

NOTE: Make sure the cylinder bore gauge indicator is set exactly at the same position as with the micrometer, otherwise the reading will be false.

3. Position the cylinder bore gauge 35 mm (1-3/8 in) below the cylinder head mating surface, measuring perpendicularly (90°) to piston pin axis.
4. Read the measurement on the cylinder bore gauge. The result is the exact piston/cylinder clearance.

| PISTON/CYLINDER CLEARANCE | |
|---|---|
| NEW | 0.037 mm to 0.067 mm (.0015 in to .0026 in) |
| SERVICE LIMIT | 0.080 mm (.0031 in) |

If clearance exceeds the specified tolerance, replace the piston and repeat the measurement procedure.

## Assembling Piston and Connecting Rod

For assembly, reverse the disassembly procedure. Pay attention to the following details.

1. Apply engine oil on the piston pin.
2. Insert piston pin into piston and connecting rod.

NOTE: Ensure to reinstall all parts in their original position as marked during removal.

3. Install NEW piston pin circlip(s).

| REQUIRED TOOL | |
|---|---|
| PISTON CIRCLIP INSTALLER (P/N 529 036 426) | |

**NOTICE** **Always replace removed piston pin circlips by NEW ones.**

3.1 Place the circlip in the sleeve and push piston circlip installer handle until circlip reaches the mid position in the sleeve.

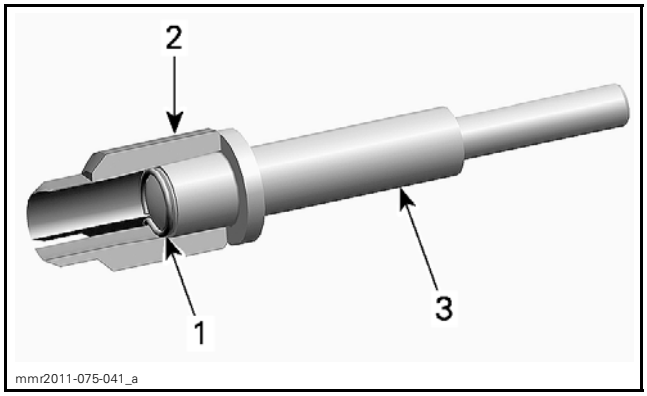


*TYPICAL*
1. *Circlip*
2. *Sleeve*
3. *Installer handle*

3.2 Put the distance sleeve on the installer handle.

3.3 Push piston circlip installer handle until distance sleeve makes contact with the sleeve.

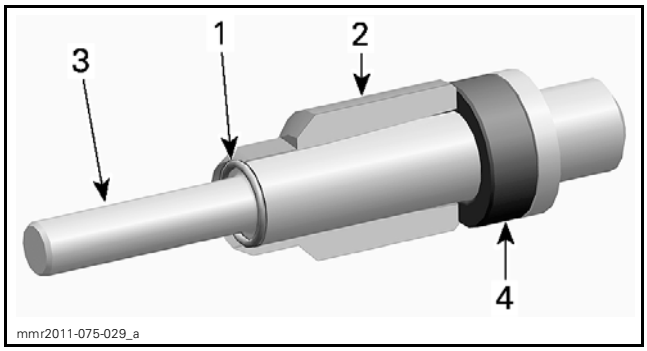


1. *Circlip*
2. *Sleeve*
3. *Installer handle*
4. *Distance sleeve*

3.4 Remove distance sleeve and insert installer handle into the sleeve.

3.5 Insert the end of the handle into the piston pin, then push to engage the circlip into the piston groove.

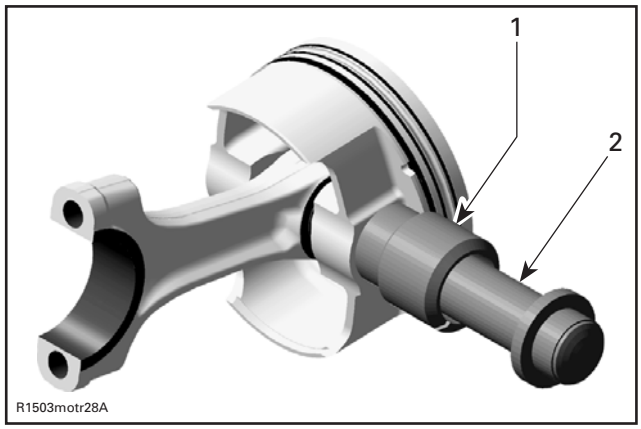


*TYPICAL*
1. *Sleeve with piston circlip inside*
2. *Piston clip installer handle*

NOTE: Take care that the hook of the piston pin circlip is positioned properly.

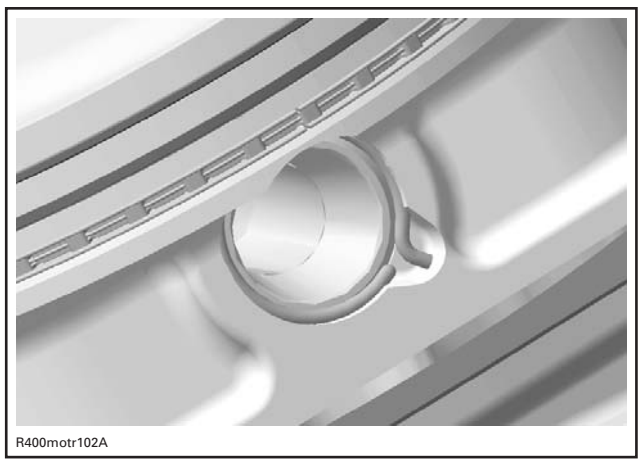


*TYPICAL - CORRECT POSITION OF THE PISTON PIN CIRCLIP*

**NOTICE** If piston pin circlip installation fails, repeat step 3 by using a NEW circlip.

4. Correctly install plain bearings and carefully clean split surface on both sides (cracked area) with compressed air.

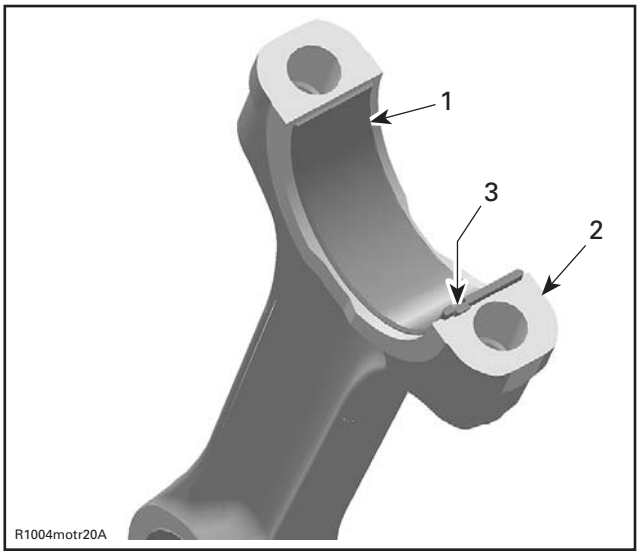


*TYPICAL*
1. *Half bearing of connecting rod big end*
2. *Split surface of the connecting rod*
3. *Protrusion of bearing in line with connecting rod groove*

**NOTICE** The arrow on top of the piston and the punched marks on the connecting rods must always point towards exhaust.

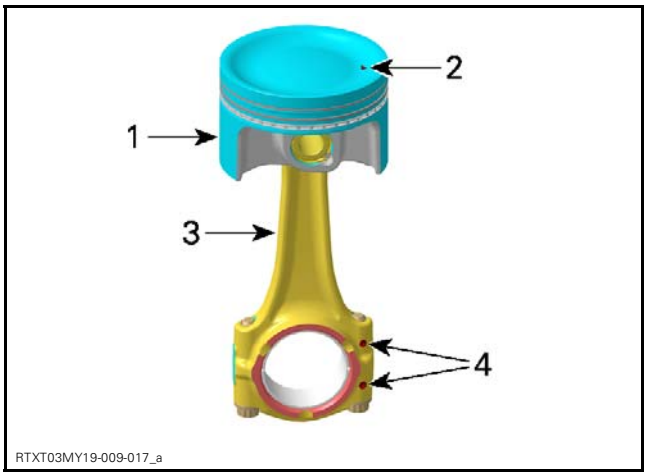


1. *Piston*
2. *Arrow on top*
3. *Connecting rod*
4. *Punched marks*

## Installing the Piston and Connecting Rod

1. Use engine oil and lubricate:
   – Piston
   – Piston rings

– Cylinder bore
– Connecting rod bearings.

2. Slide piston into cylinder bore. Pay attention to the following.

| REQUIRED TOOL | |
|---|---|
| PISTON RING COMPRESSOR (P/N 529 036 208) | |

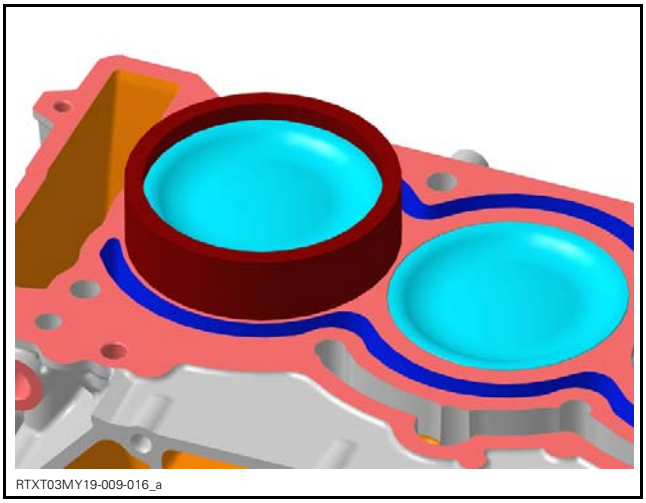


*TYPICAL*

2.1 If reused, install piston in its original bore.

2.2 Make sure piston rings are properly spaced.

**NOTICE** **The ring gaps of both compression rings should always be 180° from each other and 90° from the arrow on top of the piston.**

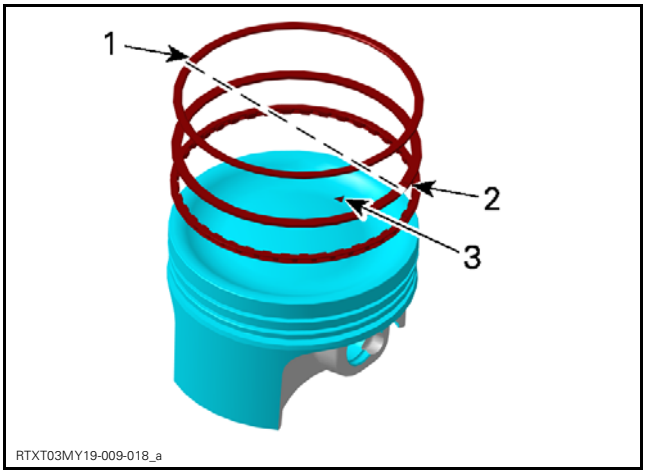


*RING GAPS AT 180° FROM EACH OTHER AND 90° FORM ARROW*
*1. Rectangular ring - ring gap*
*2. Taper-face ring - ring gap*
*3. Arrow*

2.3 The arrow on top of the piston must point towards exhaust.

**NOTICE** **Piston installed with the arrow in the wrong direction would cause serious engine damage.**

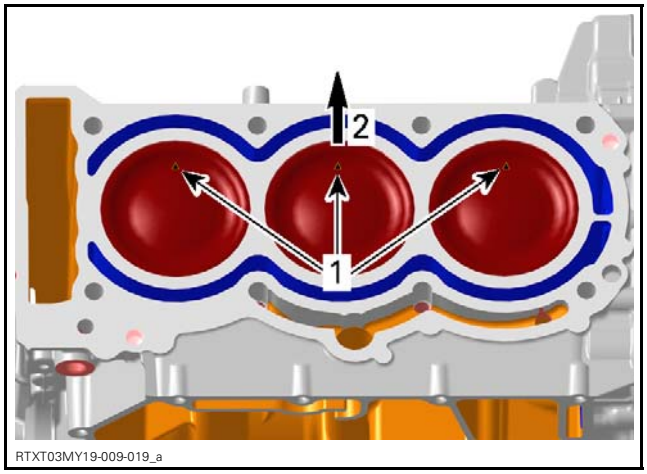


*1. Arrows*
*2. Exhaust*

3. Turn cylinder block upside down.
4. Install *CRANKSHAFT* as per procedure in this subsection.
5. Oil the crankshaft pin.
6. Install connecting rod caps.

NOTE: Printed marks on connecting rod and cap must point together.

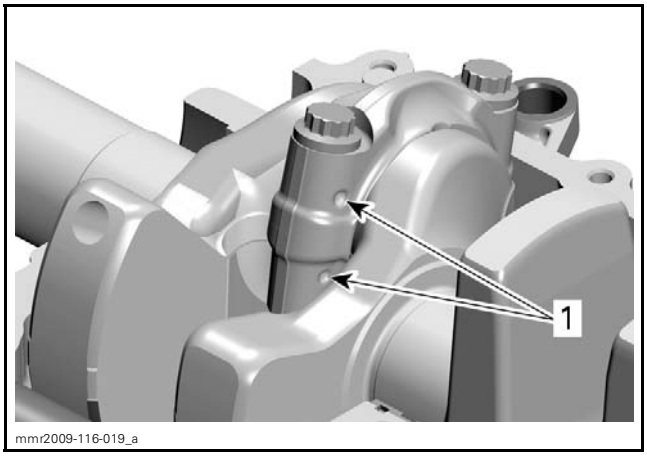


*TYPICAL*
*1. Printed marks*

**NOTICE** **This assembly uses stretch screws. Always use NEW screws and strictly adhere to the tightening procedure.**

7. Tighten connecting rod screws as follows:

7.1 Torque both connecting rod screws of a connecting rod.

| TIGHTENING PROCEDURE | | |
|---|---|---|
| Connecting rod screws | STEP A | 12 N•m ± 2 N•m (106 lbf•**in** ± 18 lbf•**in**) |

7.2 Use a torque angle gauge to carry out the second step.

| TIGHTENING PROCEDURE | | |
|---|---|---|
| Connecting rod screws | STEP B | Additional 70° ± 5° |

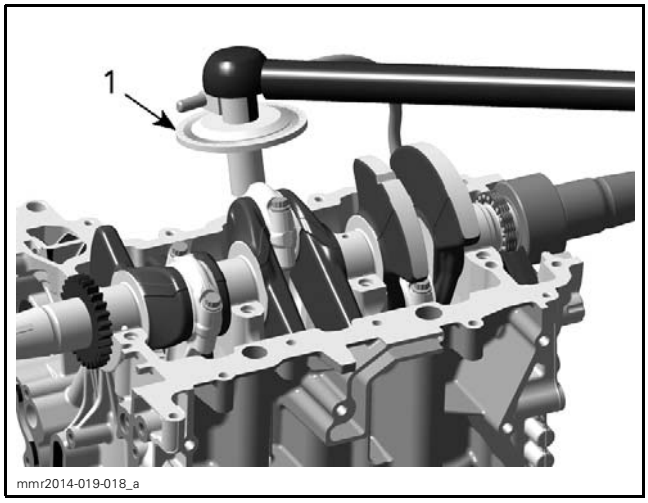


*TYPICAL*

**NOTICE** Failure to strictly follow this procedure may cause screws to loosen and lead to severe engine damage.

8. Install all other removed parts.

# PISTON RINGS

## Removing the Piston Ring

1. Remove piston, see procedure in this subsection.
2. Remove rings from piston.

## Inspecting the Piston Ring

### Ring/Piston Groove Clearance

Using a feeler gauge measure each ring/piston groove clearance.

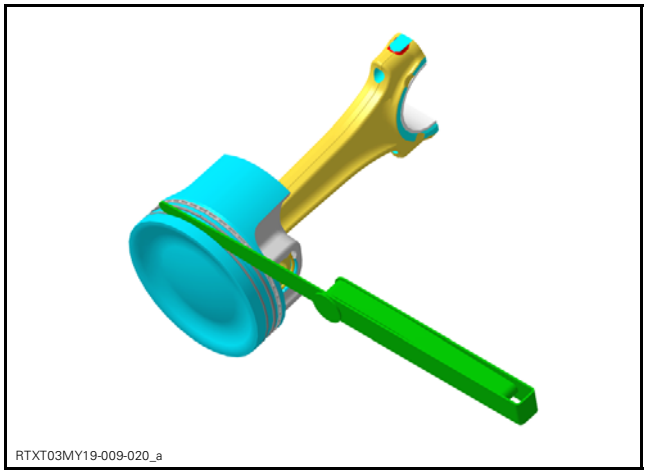


| RING/PISTON GROOVE CLEARANCE | |
|---|---|
| UPPER COMPRESSION RING | |
| NEW | 0.030 mm to 0.066 mm (.0012 in to .0026 in) |
| SERVICE LIMIT | 0.120 mm (.0047 in) |
| LOWER COMPRESSION RING | |
| NEW | 0.020 mm to 0.056 mm (.0008 in to .0022 in) |
| SERVICE LIMIT | 0.120 mm (.0047 in) |
| OIL SCRAPER RING | |
| NEW | 0.010 mm to 0.040 mm (.0004 in to .0016 in) |
| SERVICE LIMIT | 0.150 mm (.0059 in) |

If clearance is out of specification, the piston and rings should be replaced.

### Ring End Gap

1. Place piston ring in the cylinder bore between 8 mm to 16 mm (5/16 in to 5/8 in) from the top of cylinder.

NOTE: In order to correctly position the ring in the cylinder bore, use a piston as a pusher.

2. Using a feeler gauge, check ring end gap.

| RING END GAP | |
|---|---|
| UPPER COMPRESSION RING | |
| NEW | 0.20 mm to 0.35 mm (.008 in to .014 in) |
| SERVICE LIMIT | 1.20 mm (.047 in) |
| LOWER COMPRESSION RING | |
| NEW | 0.30 mm to 0.50 mm (.012 in to .02 in) |
| SERVICE LIMIT | 1.20 mm (.047 in) |
| OIL SCRAPER RING | |
| NEW | 0.20 mm to 0.70 mm (.008 in to .028 in) |
| SERVICE LIMIT | 1.20 mm (.047 in) |

If ring end gap is out of specification, replace piston rings.

## Installing the Piston Ring

1. Install piston rings in the following order.

   NOTE: Use a ring expander to prevent breakage during installation. The oil ring must be installed by hand.

   1.1 Install oil scraper ring.

   1.2 Install the lower compression ring with the letter "N" facing up.

   1.3 Install upper compression ring with the letter "N" facing up.

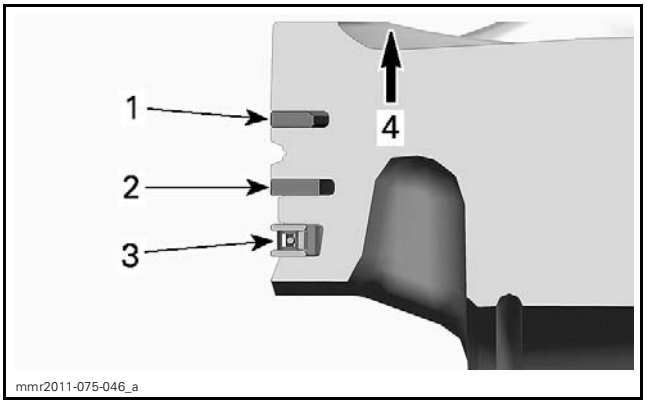


*TYPICAL*
*1. Rectangular ring*
*2. Taper-face ring*
*3. Oil scraper ring*
*4. Letter "N" facing up*

**NOTICE** Ensure that upper and lower compression rings are not interchanged.

2. Check that rings rotate smoothly after installation.

# INTERCOOLER

## SERVICE TOOLS

| Description | Part Number | Page |
|---|---|---|
| VACUUM/PRESSURE PUMP | 529 021 800 | 2 |

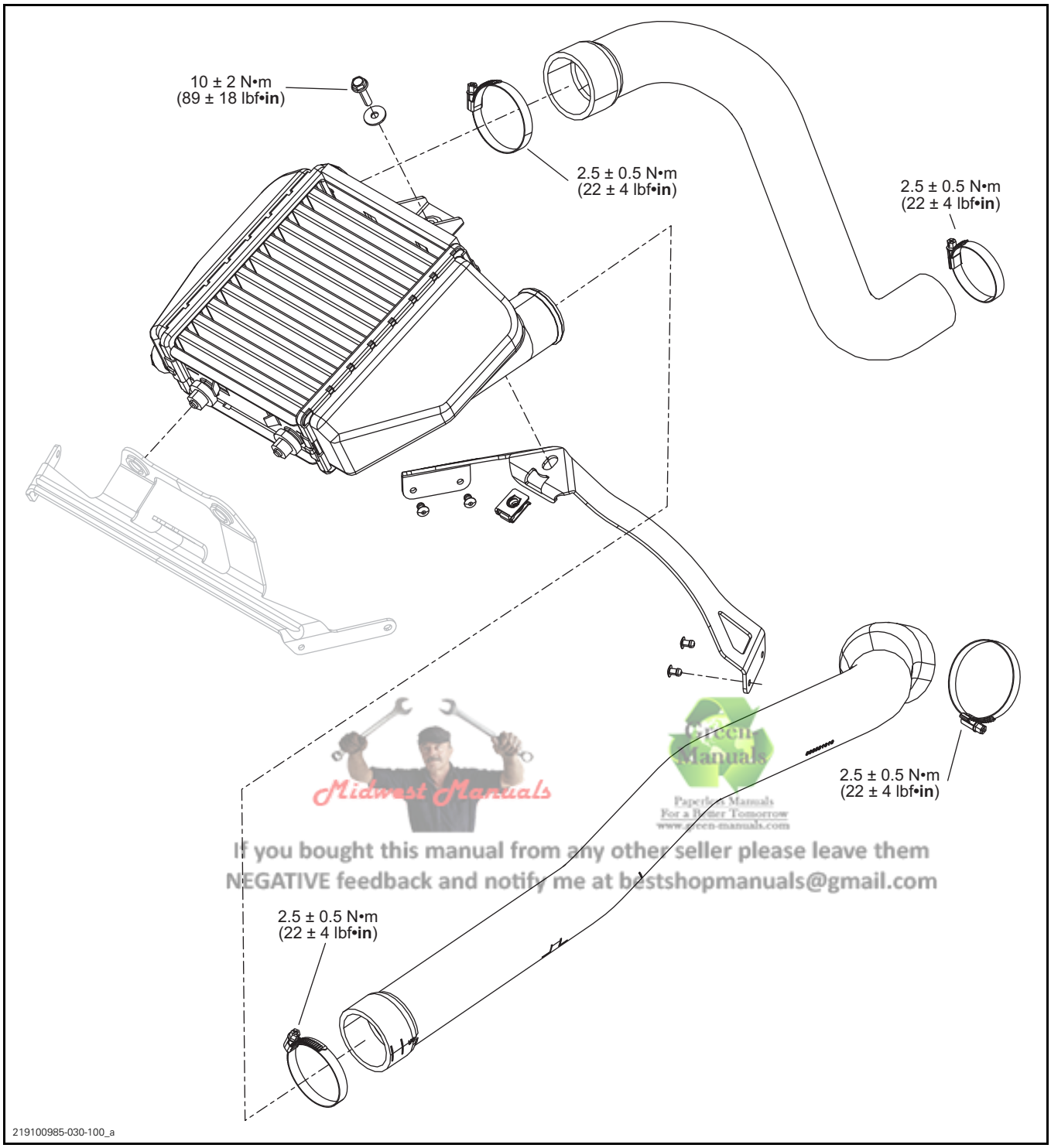


Midwest Manuals
Green Manuals
Paperless Manuals
For a Better Tomorrow
www.green-manuals.com
If you bought this manual from any other seller please leave them
NEGATIVE feedback and notify me at bestshopmanuals@gmail.com

# GENERAL

An exhaust gas turbocharger heats the air that it compresses.

The intercooler cools the hot compressed air from the compressor outlet.

# INSPECTION

NOTE: When vehicle is running at operating temperature, intercooler outlet air temperature should be lower than inlet air temperature. The temperature difference will vary with atmospheric conditions.

Check radiating fins for clogging or damage.

Remove any obstructions with compressed air or low pressure water.

## Leak Test

| REQUIRED TOOL | |
|---|---|
| VACUUM/PRESSURE PUMP (P/N 529 021 800) | |

Block outlet hose.

Unplug the inlet hose from the intercooler.

Install the pressure pump with an adaptor on the inlet fitting.

Pressurize the intercooler.

**NOTICE** Testing at higher pressures can damage the system.

| PRESSURE TEST |
|---|
| 100 kPa (14.5 PSI) for 2 minutes minimum |

If there is a pressure drop, first spray tool, hoses and adapters with a soapy water solution to ensure they are not leaking. If they are not leaking, replace the intercooler.

# PROCEDURES

## INTERCOOLER ACCESS

Remove the upper body module. Refer to *BODY* subsection.

## REMOVING THE INTERCOOLER

**NOTICE** When removing the intercooler, always plug the turbocharger hoses with clean rags to prevent dirt from entering the turbo.

1. Cut locking tie securing outlet hose.

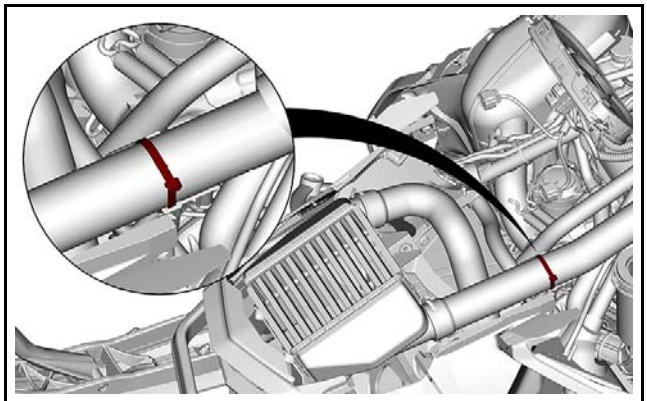

219100985-030-003

2. Loosen the clamps and disconnect both intercooler hoses.

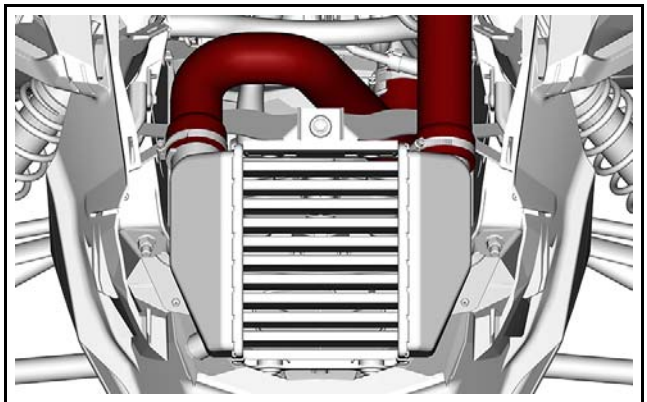

219100985-030-001

3. Remove the intercooler retaining screws.

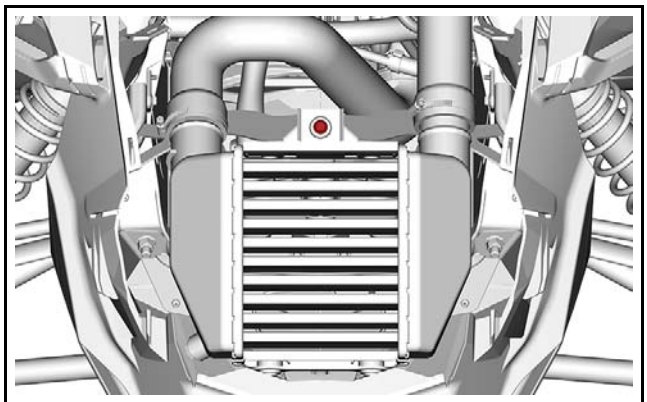

219100985-030-002

4. Remove intercooler.

# INSTALLING THE INTERCOOLER

The installation is the reverse of the removal procedure.

# TURBOCHARGER

## SERVICE TOOLS


| Description | Part Number | Page |
|---|---|---|
| ADAPTER GAUGE (TURBO) | 529 036 461 | 11 |
| ENGINE LEAK DOWN TEST KIT | 529 035 661 | 11 |
| PLUG (TURBO) | 529 036 460 | 11 |
| VACUUM/PRESSURE PUMP | 529 021 800 | 13 |

# TURBOCHARGER

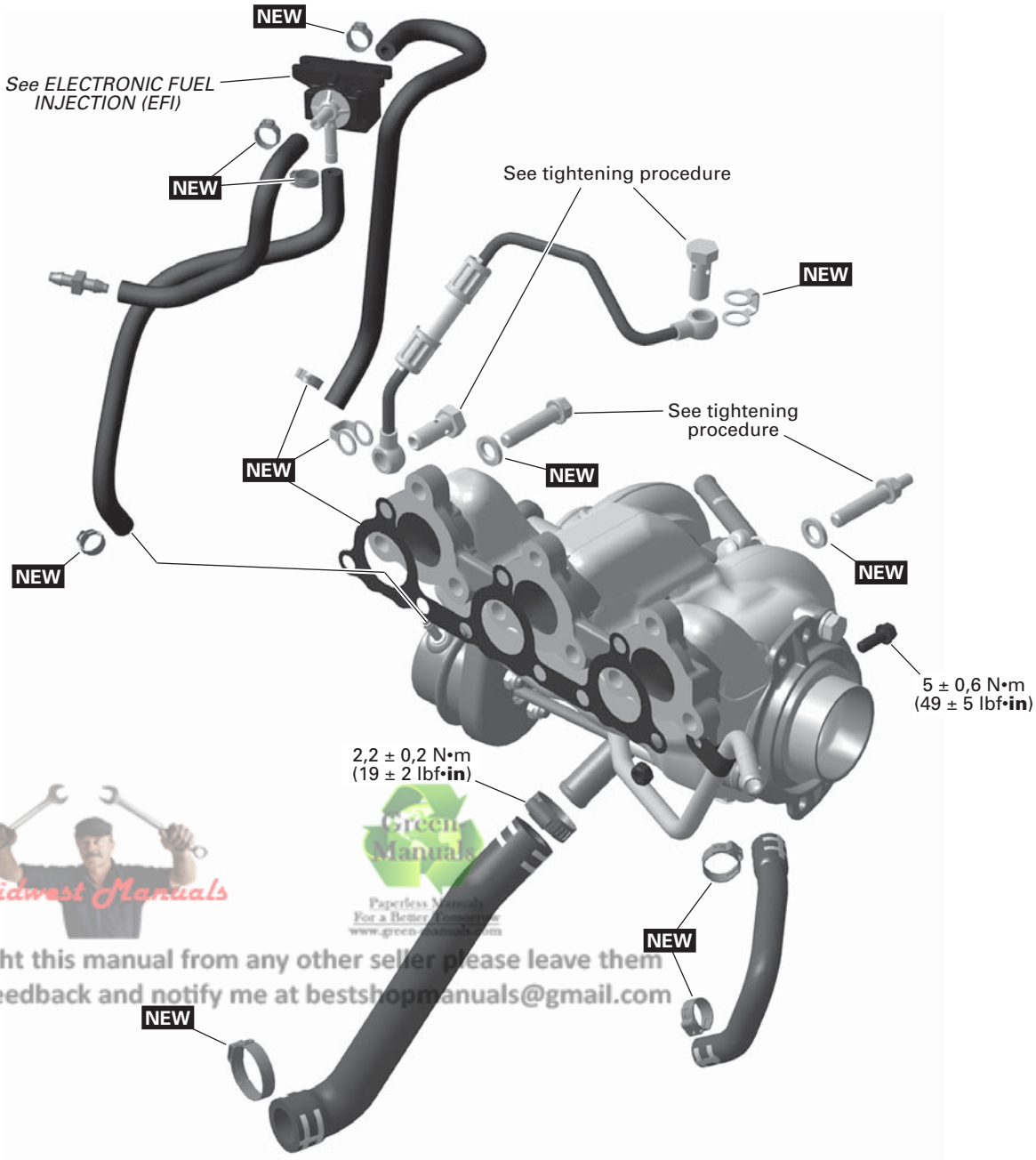


Midwest Manuals
Green Manuals
Paperless Manuals For a Better Tomorrow
www.green-manuals.com
If you bought this manual from any other seller please leave them NEGATIVE feedback and notify me at bestshopmanuals@gmail.com

**NEW** = Component must be replaced when removed.

RTXT03MY19-010-001_a

# GENERAL

## TURBOCHARGER

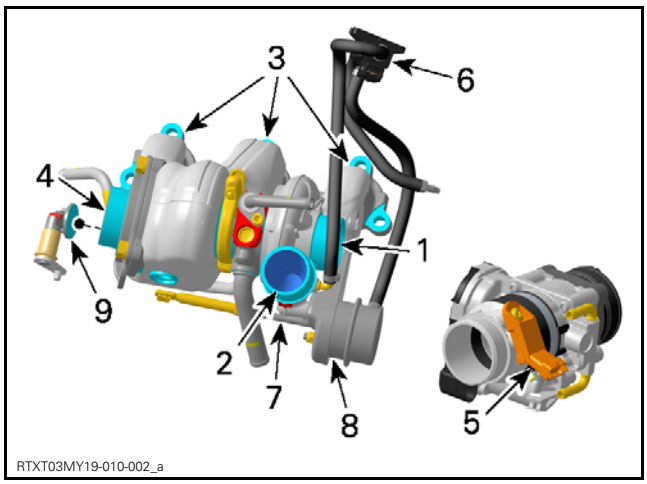


1. *Compressor inlet*
2. *Compressor outlet*
3. *Turbine inlet*
4. *Turbine outlet*
5. *Boost Pressure Sensor (BPS)*
6. *Boost Control Valve (BCV)*
7. *Waste gate actuator rod*
8. *Actuator rod spring*
9. *Waste gate*

### Turbine

The exhaust gases cause the turbine wheel to spin and accelerate. The gases then exit through the turbine outlet towards the muffler.

The turbine wheel drives the compressor wheel through the rotor shaft. When the turbine wheel is spinning, the compressor wheel is spinning at the same speed.

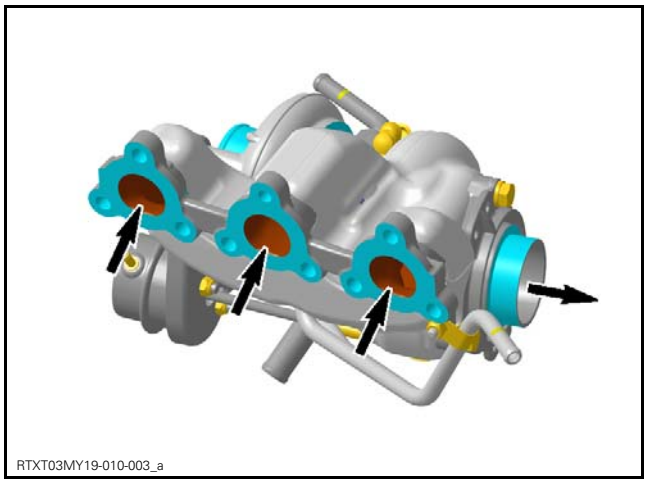


### Compressor

The compressor wheel spinning causes filtered air to enter through the compressor inlet. The air is then compressed and exits through the compressor outlet.

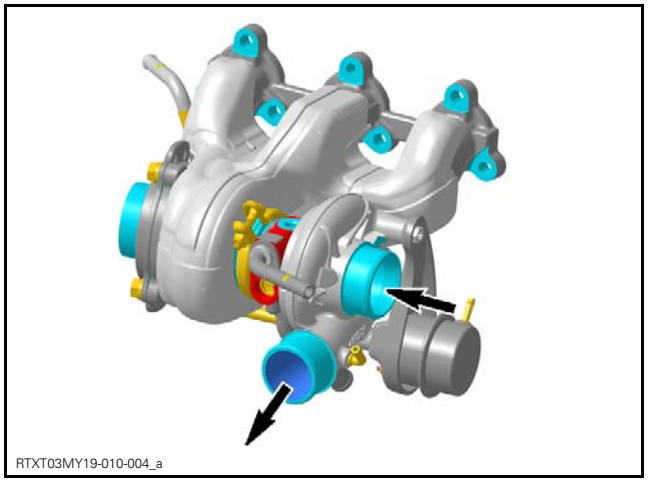


### Boost Pressure Sensor (BPS)

To ensure optimal engine operation in all conditions, the ECM system requires 2 pressure sensors: The BPS and the MAPTS. The BPS measures the air pressure upstream the throttle plate and the MAPTS measures the pressure downstream the throttle plate.

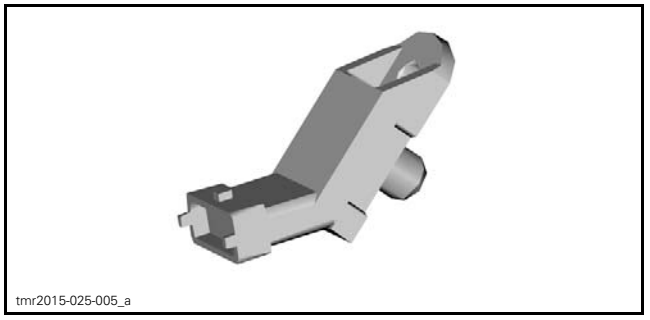


Refer to *ELECTRONIC FUEL INJECTION (EFI)* subsection for testing and replacement.

### Boost Control Valve (BCV)

The BCV controls the pressure acting on the waste gate actuator rod spring. The ECM uses pulse width modulation to control the BCV.

If too high boost pressure is measured by the BPS, the ECM will control the BCV and open the waste gate when the actuation pressure has been reached.

Excess pressure may also be returned to the intake hose before the compressor inlet.

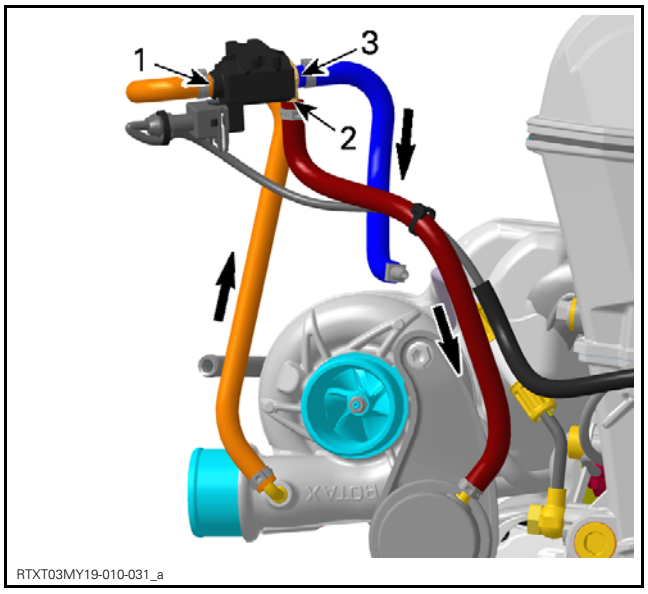


1. *Boost pressure indication port*
2. *Waste gate pressure modulation port*
3. *Excess pressure return port*

NOTE: A BCV malfunction will activate Limp Home Mode.

Refer to *ELECTRONIC FUEL INJECTION (EFI)* subsection for testing and replacement.

## Waste Gate Actuator Rod and Spring

When the BCV allows compressed air to enter the waste gate actuator, the actuator rod will move to open the waste gate.

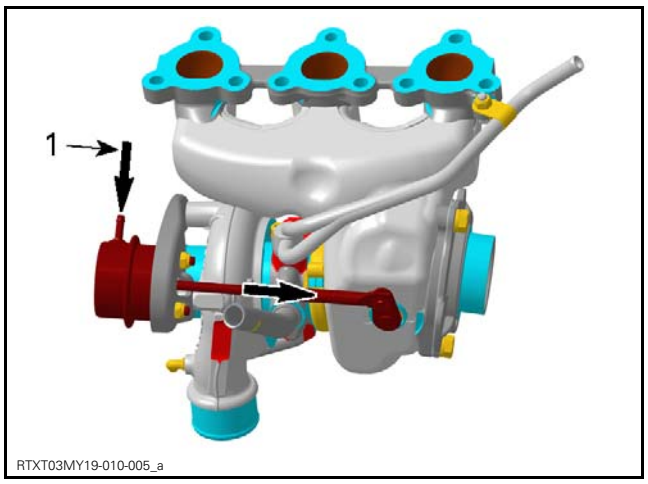


*WASTE GATE OPENS*
1. *Compressed air*

When the air pressure inside the actuator drops, the spring will return the actuator rod to its initial position and close the waste gate.

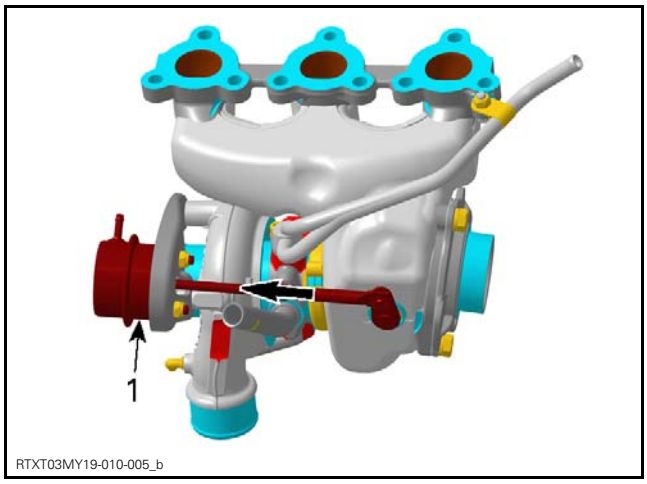


*WASTE GATE CLOSES*
1. *Compression spring inside actuator*

## Waste Gate

The waste gate regulates turbine speed by allowing exhaust gas to bypass the turbine.

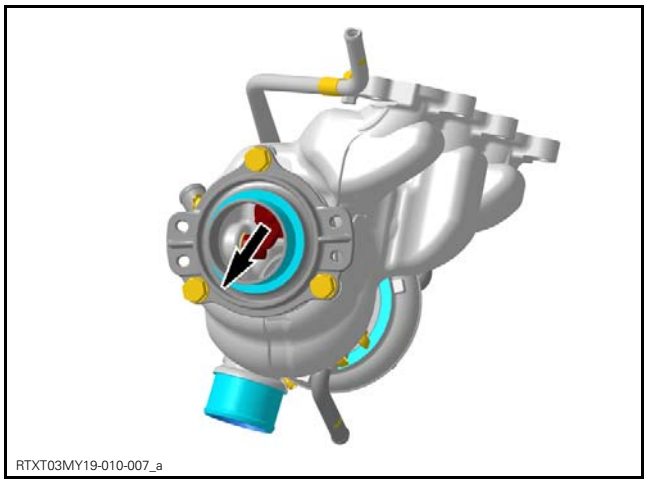


# ADJUSTMENT

## WASTE GATE

NEW turbocharger assembly are factory adjusted. Do not try to adjust the waste gate.

## WASTE GATE ACTUATOR ROD

NEW turbocharger assembly are factory adjusted. Do not try to adjust the waste gate actuator rod.

# MAINTENANCE

The turbocharger is maintenance free. However it is susceptible to damage caused by failures from other systems. Refer to *TROUBLESHOOTING* in this subsection.

**NOTICE** If particles are suspected of entering the exhaust system, take the proper actions to remove them.

**NOTICE** Never operate engine without an air filter.

**NOTICE** Engine oil change intervals and procedure must be respected.

For air filter cleaning, refer to *AIR INTAKE SYSTEM* subsection.

# PRECAUTIONS

## Engine Warming and Cooling

Allow the vehicle to reach operating temperature before placing high demand on the engine. This allows oil to reach the correct viscosity to properly lubricate the turbo.

Allow the vehicle to idle before turning it off. This will allow the engine to lubricate and cool the turbo.

# TROUBLESHOOTING

## LACK OF POWER

1. Cold start
   - *Allow vehicle to reach operating temperature up for turbo to be at maximum efficiency.*
2. Clogged air filter.
   - *Check air filter. Refer to AIR INTAKE SYSTEM subsection.*
3. Intake system collapsed, restricted or leaking.
   - *Check tightness of clamps and screws.*
   - *Damaged or missing gaskets.*
   - *Check for foreign object between air filter and turbocharger.*
   - *Inspect parts for damage, cracks or obstructions. Repair or replace. Refer to AIR INTAKE SYSTEM and INTAKE MANIFOLD subsection.*
4. Exhaust system collapsed, restricted or leaking.
   - *Check if the exhaust system is blocked or damaged. Replace parts as necessary. Refer to EXHAUST SYSTEM subsection.*
   - *Check turbocharger housing for cracks, blown or missing gaskets. Replace parts as necessary. Refer to procedure in this subsection.*
   - *Check for foreign object in the exhaust system.*
5. Fuel pump malfunction.
   - *Perform a fuel pump pressure test and check fuel pump. Refer to FUEL TANK AND FUEL PUMP subsection.*
6. Sensor or injector malfunction.
   - *Check fault codes with the BRP diagnostic software (BUDS2). Refer to ENGINE MANAGEMENT SYSTEM subsection.*
   - *Check fuel injection system is in good condition and correctly adjusted. Refer to ELECTRONIC FUEL INJECTION (EFI) subsection.*
   - *Check Boost Pressure Sensor (BPS). Refer to ELECTRONIC FUEL INJECTION (EFI) subsection.*
   - *Check Turbo Control Valve (BCV) function and for correct installation. Refer to ELECTRONIC FUEL INJECTION (EFI) subsection.*
7. Engine damage or malfunction.
   - *Check for proper valve timing. Refer to TIMING CHAIN subsection.*
   - *Perform engine leak test. Refer to CYLINDER HEAD subsection.*
8. Waste gate malfunction.
   - *Check waste gate actuator. Refer to procedure in this subsection.*
   - *Check waste gate for smooth movement.*
   - *Check Turbo Control Valve (BCV) function and for correct installation. Refer to ELECTRONIC FUEL INJECTION (EFI) subsection.*
9. Intercooler malfunction.
   - *Check if intercooler is clogged or contaminated.*
   - *Check for correct intercooler fan electric connection (direction of rotation).*
10. Turbocharger blocked or damaged.
    - *Check for excessive carbon build up on housing.*
    - *Check for signs of contact of the compressor wheel on housing.*
    - *Check for rotor radial clearance.*
    - *Check if rotor shaft bearing is worn out.*
    - *Check turbocharger housing if damaged or restricted.*

## NOISY PERFORMANCE

1. Support brackets, turbocharger flanges or clamps are loose.
   - *Check tightness of clamps and screws.*
   - *Check if support brackets and parts connected to the turbocharger are not loose or damaged.*
2. Foreign object in intake or exhaust system.
   - *Check and clean intake and/or exhaust system.*
3. Intake system collapsed, restricted or leaking.
   - *Check tightness of clamps and screws.*
   - *Inspect parts for damage, cracks or obstructions.*
   - *Check for damaged or missing gaskets.*
4. Exhaust system collapsed, restricted or leaking.
   - *Check tightness of clamps and screws.*
   - *Inspect parts for damage, cracks or obstructions.*
   - *Check for damaged or missing gaskets.*
5. Turbocharger blocked or damaged.
   - *Check for excessive carbon build up on housing.*
   - *Check for imbalance due to damaged or broken rotor blades.*
   - *Check turbocharger housing if damaged or restricted.*
   - *Check for rotor radial clearance.*
   - *Check if rotor shaft bearing is worn out.*

## BLUE SMOKE AND/OR OIL CONSUMPTION

1. Clogged air filter.
   - *Inspect air filter. Refer to AIR INTAKE SYSTEM subsection.*

2. Intake system collapsed, restricted or leaking.
   - *Check tightness of clamps and screws.*
   - *Inspect parts for damage, cracks or obstructions.*
   - *Check for damaged or missing gaskets.*
3. Use of unsuitable engine oil type.
   - *Replace engine oil by the recommended engine oil.*
4. Excessive carbon build up on housing.
   - *Check for excessive pressure in crankcase and correct function of crankcase ventilation system.*
   - *Check if the oil return hose is clean and not restricted.*

## EXCESSIVE ENGINE OIL IN TURBOCHARGER

1. Worn out bearings of rotor shaft.
   - *Perform a pressure drop test, see procedure in this subsection.*
   - *Note that some oil traces are normal.*
2. Blocked oil return hose.
   - *Check if oil return hose is free.*
3. Plugged crankcase ventilation system.
   - *Check if crankcase ventilation system is blocked.*
4. Intake system collapsed or restricted.
   - *Check tightness of clamps and screws.*
   - *Check for damaged or missing gaskets.*
   - *Check for foreign object between air filter and turbocharger.*
   - *Inspect parts for damage, cracks or obstructions.*
5. Exhaust system collapsed, restricted or leaking.
   - *Check tightness of clamps and screws.*
   - *Inspect parts for damage, cracks or obstructions.*
   - *Check for damaged or missing gaskets.*
   - *Check for foreign object in the exhaust system.*
6. Support brackets, turbocharger flanges or clamps are loose.
   - *Check tightness of clamps and screws.*
   - *Check if support brackets and parts connected to the turbocharger are not loose or damaged.*
7. Excessive carbon build up on housing.
   - *Check if crankcase ventilation system is blocked.*

## DAMAGED ROTOR OF TURBINE OR COMPRESSOR

1. Intake system leaking.
   - *Check for foreign object between air filter and turbocharger.*
   - *Inspect air filter. Refer to AIR INTAKE SYSTEM subsection.*
   - *Check tightness of clamps and screws.*
   - *Inspect parts for damage, cracks or obstructions.*
2. Exhaust system collapsed, restricted or leaking.
   - *Check tightness of clamps and screws.*
   - *Inspect parts for damage, cracks or obstructions.*
   - *Check for damaged or missing gaskets.*
   - *Check for foreign object in the exhaust system.*
3. Turbocharger blocked or damaged
   - *Check for excessive carbon build up on housing.*
   - *Check for rotor radial clearance.*
   - *Check if rotor shaft bearing is worn out.*
   - *Check turbocharger housing if damaged or restricted.*
4. Oil supply hose and/or oil return hose blocked.
   - *Check and/or replace oil hoses, refer to procedures in this subsection.*
5. Too little warm up time.
   - *Extend warm up period.*

## EXCESSIVE RADIAL AND/OR AXIAL CLEARANCE OF ROTOR SHAFT

1. Intake system leaking.
   - *Check for foreign object between air filter and turbocharger.*
   - *Inspect air filter. Refer to AIR INTAKE SYSTEM subsection.*
   - *Inspect parts for damage, cracks or obstructions.*
2. Exhaust system collapsed, restricted or leaking.
   - *Check tightness of clamps and screws.*
   - *Inspect parts for damage, cracks or obstructions.*
   - *Check for damaged or missing gaskets.*
   - *Check for foreign object in the exhaust system.*
3. Insufficient lubrication or oil lag at start up.
   - *Inspect oil pressure line if restricted, blocked or leaking.*
   - *Inspect engine oil filter if restricted or blocked, refer to LUBRICATION SYSTEM subsection.*
   - *Check engine oil pressure, refer to LUBRICATION SYSTEM subsection.*

4. Engine oil contaminated or unsuitable engine oil type.
   - *Replace engine oil and filter, refer to LUBRICATION SYSTEM subsection.*
5. Excessive carbon build up on housing.
   - *Check if crankcase ventilation system is blocked.*
6. Worn out bearings of rotor shaft.
   - *Perform a pressure drop test, see procedure in this subsection.*

# PROCEDURES

## OIL PRESSURE LINE

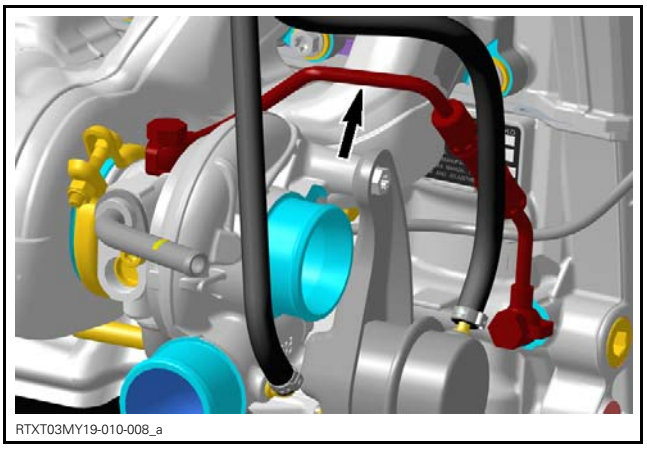
RTXT03MY19-010-008_a

### Oil Pressure Line Access

Remove the upper body module. Refer to *BODY* subsection.

### Removing the Oil Pressure Line

1. Remove:
   – Banjo bolt
   – Double sealing ring (discard it).

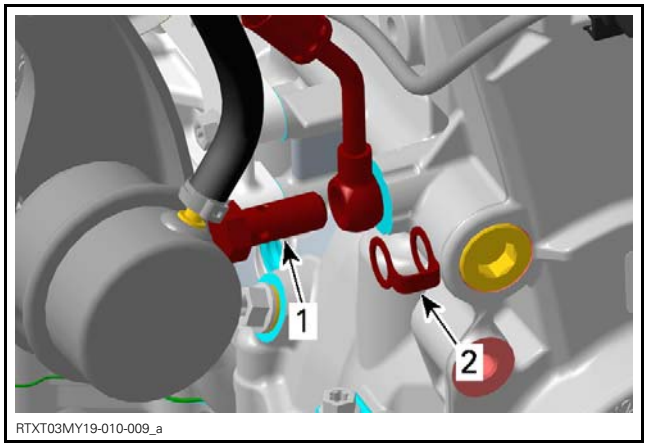

RTXT03MY19-010-009_a

*1. Banjo bolt*
*2. Double sealing ring*

2. Place oil pressure line over a drain pan to catch up oil spillage.
3. Remove:
   – Banjo bolt
   – Double sealing ring (discard it)

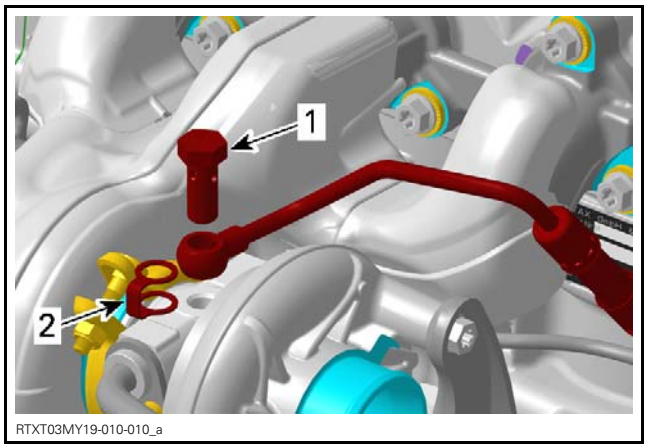

RTXT03MY19-010-010_a

*1. Banjo bolt*
*2. Double sealing ring*

4. Pull oil pressure line out of vehicle.

**NOTICE** Clean all spilled oil.

### Installing the Oil Pressure Line

The installation is the reverse of the removal procedure, however pay attention to the following.

Tighten banjo bolts to specification.

| TIGHTENING TORQUE | | |
|---|---|---|
| Banjo bolts | Step A | 8 N•m (71 lbf•**in**) |
| | Step B | 15.75 N•m ± 0.75 N•m (139 lbf•**in** ± 7 lbf•**in**) |

Refill engine with recommended engine oil. Refer to *LUBRICATION SYSTEM* subsection.

# OIL RETURN HOSE

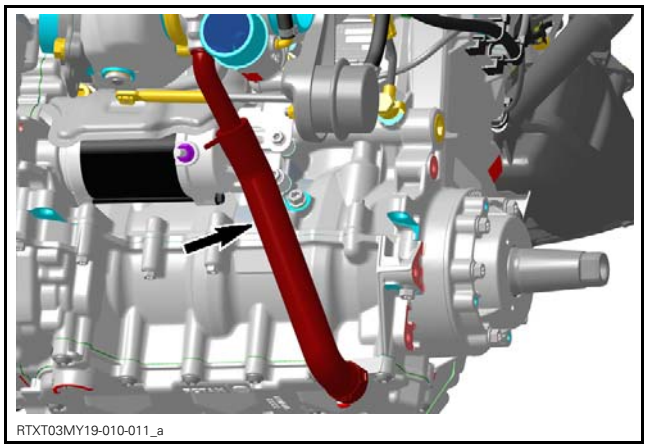
RTXT03MY19-010-011_a

## Oil Return Hose Access

Remove the upper body module. Refer to *BODY* subsection.

## Removing the Oil Return Hose

1. Remove clamp and withdraw hose from oil tube.

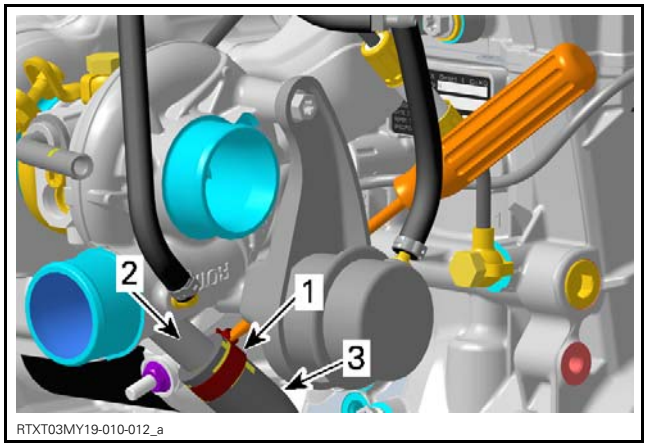

RTXT03MY19-010-012_a

*1. Clamp*
*2. Oil tube*
*3. Hose*

2. Remove and discard 1-ear-clamp and withdraw hose from oil sump cover.

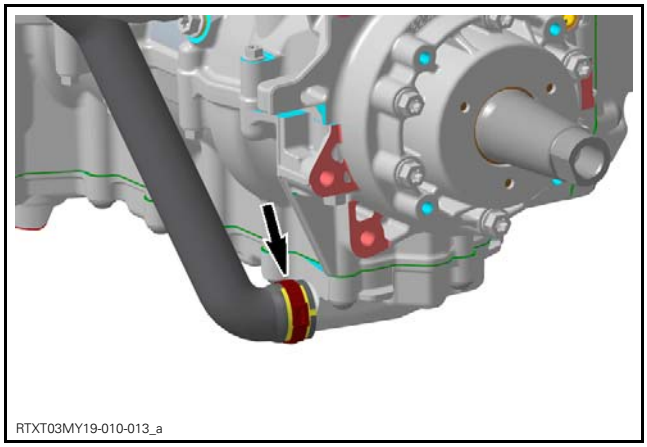
RTXT03MY19-010-013_a

**NOTICE** Clean all spilled oil.

## Installing the Oil Return Hose

The installation is the reverse of the removal procedure. However, pay attention to the following.

Tighten clamp to following specification.

| TIGHTENING TORQUE | |
|---|---|
| Clamp | 2.2 N•m ± 0.2 N•m (19 lbf•**in** ± 2 lbf•**in**) |

Refill engine with recommended engine oil. Refer to *LUBRICATION SYSTEM* subsection.

# TURBOCHARGER

## Removing the Turbocharger

1. Remove the upper body module. Refer to *BODY* subsection.
2. Drain coolant. Refer to *COOLING SYSTEM - VEHICLE COMPONENT* subsection.
3. Remove the muffler and the exhaust pipe. Refer to *EXHAUST SYSTEM* subsection.
4. Remove *OIL PRESSURE LINE* from turbo. Refer to procedure in this subsection.

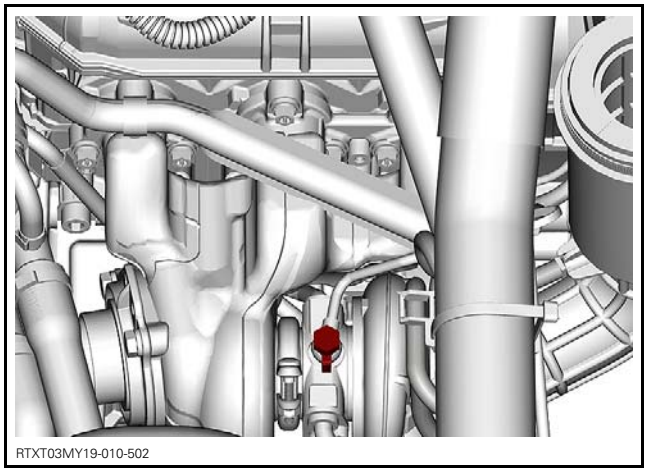
RTXT03MY19-010-502

5. Detach oil return hose from turbo oil tube. Discard the double sealing ring.

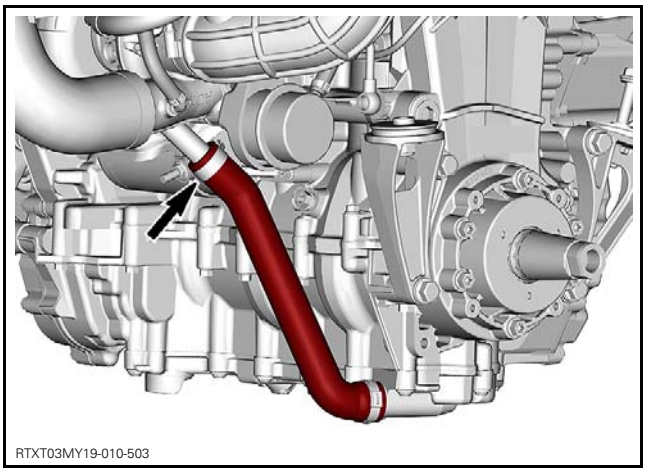

RTXT03MY19-010-503

6. Remove Oetiker clamps and disconnect BCV hoses from turbo and actuator.

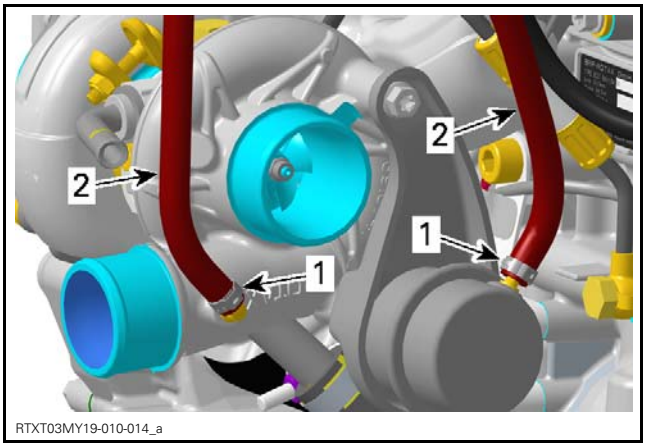


RTXT03MY19-010-014_a

*1. Oetiker clamps*
*2. BCV hoses*

7. Unplug the coolant hose from the inlet tube.

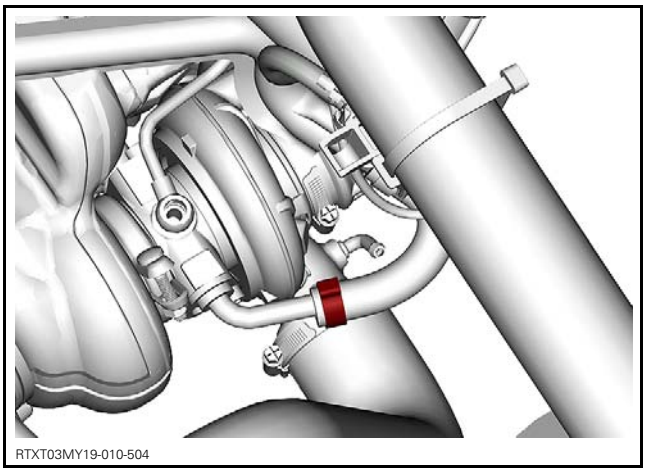

RTXT03MY19-010-504

8. Remove the nut retaining the coolant hose to cylinder head.

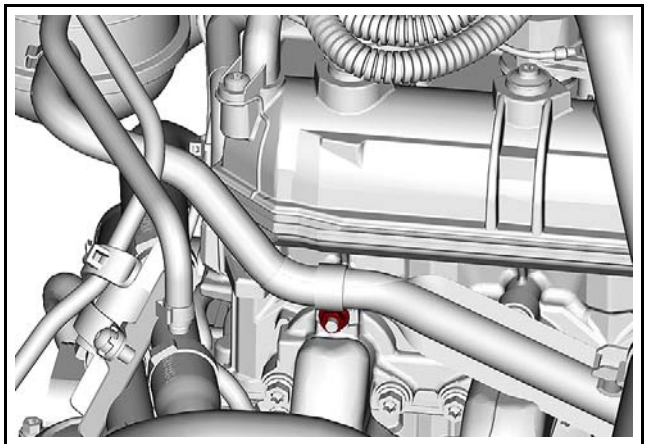

RTXT03MY19-010-505

9. Loosen clamps and disconnect air inlet and outlet hoses.

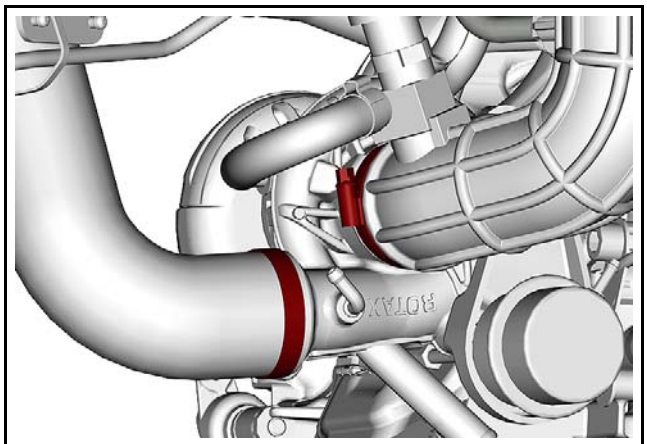

RTXT03MY19-010-506

10. Remove the turbocharger retaining screws and washers.

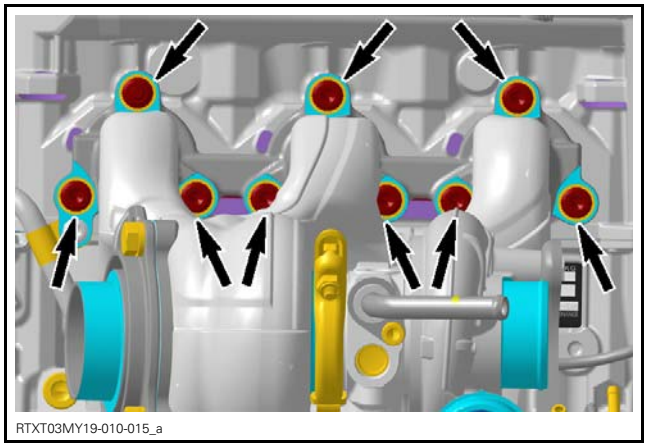

RTXT03MY19-010-015_a

11. Lift turbocharger and pull it out of vehicle.

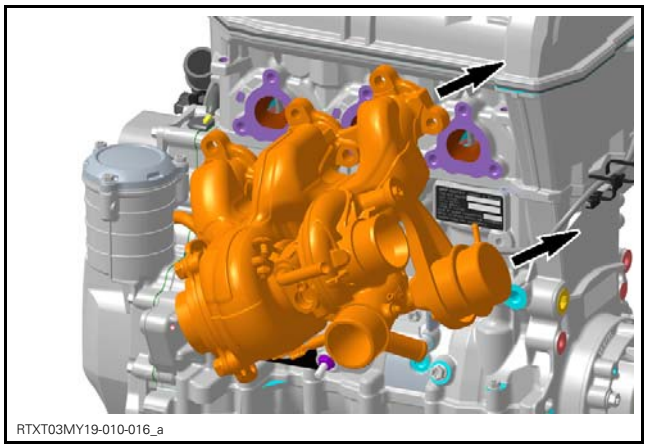
RTXT03MY19-010-016_a

## Inspecting the Turbocharger

Check turbocharger:

– for any damages or cracks
– for corrosion
– for any oil leak
– for contamination and/or oil coking at oil inlet and outlet
– if rotor shaft turns smooth and easily.

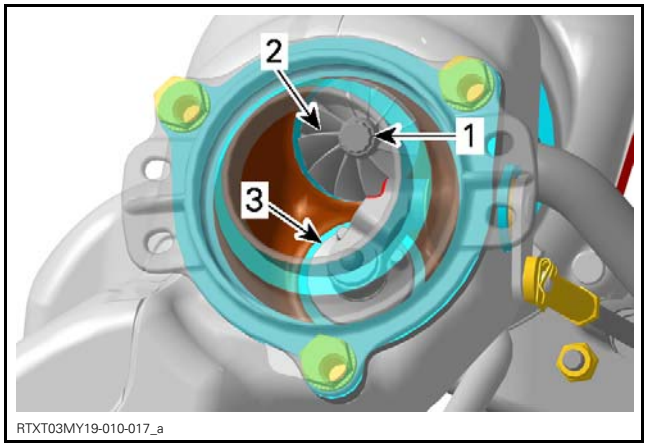

RTXT03MY19-010-017_a

1. *Rotor shaft*
2. *Turbine rotor*
3. *Waste gate*

### Testing the Rotor Shaft Bearing Leakage

| REQUIRED TOOL | |
|---|---|
| ENGINE LEAK DOWN TEST KIT (P/N 529 035 661) | |
| PLUG (TURBO) (P/N 529 036 460) | 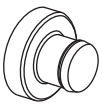 |

Block the oil return hose.

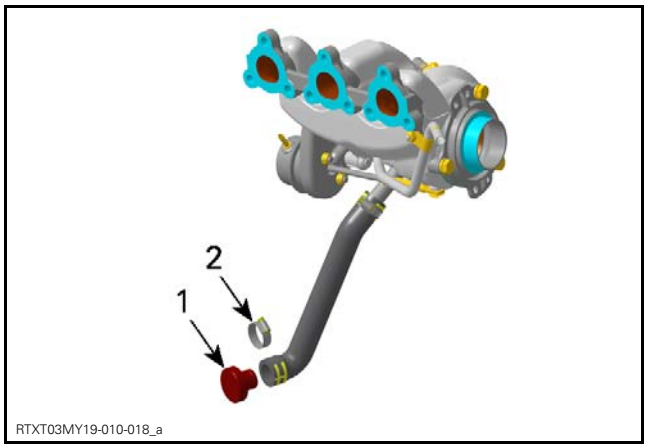

RTXT03MY19-010-018_a

1. *Plug*
2. *Clamp*

Clean oil supply bore.

| REQUIRED TOOL | |
|---|---|
| ADAPTER GAUGE (TURBO) (P/N 529 036 461) | 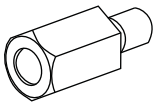 |

Install adapter with o-ring into oil supply bore.

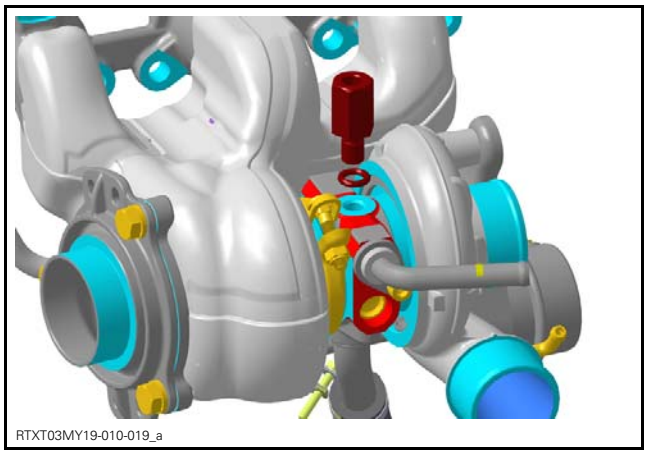
RTXT03MY19-010-019_a

Install gauge adapter into adapter.

Connect leak tester to adequate air supply.

Set needle of measuring gauge to zero.

**NOTE:** All testers have specific instructions on gauge operation and required pressure.

Supply turbocharger with air pressure.

***NOTICE*** **During leakage test apply slightly a alternating radial pressure onto the shaft to achieve a proper test result.**

| ROTOR SHAFT BEARING LEAKAGE TEST | |
|---|---|
| SERVICE LIMIT | 50% |

### Waste Gate Lever and Waste Gate

Remove retaining clip.

Check for waste gate actuator rod play on lever pin.

Disconnect the waste gate actuator rod from the waste gate lever.

Check counter nut of waste gate actuator rod for tightness.

**NOTICE** **Do not open counter nut of waste gate actuator rod. Length of waste gate actuator rod assembly must not change.**

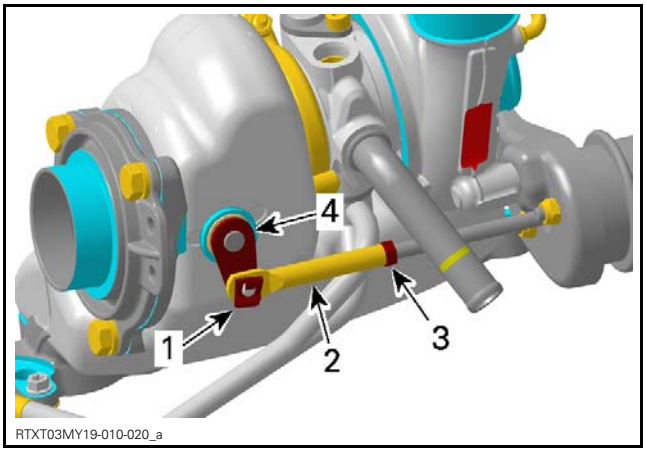

RTXT03MY19-010-020_a

*1. Retaining clip*
*2. Waste gate actuator rod*
*3. Counter nut*
*4. Waste gate lever*

Check the waste gate lever for free movement.

Check waste gate and its seat for wear or damage.

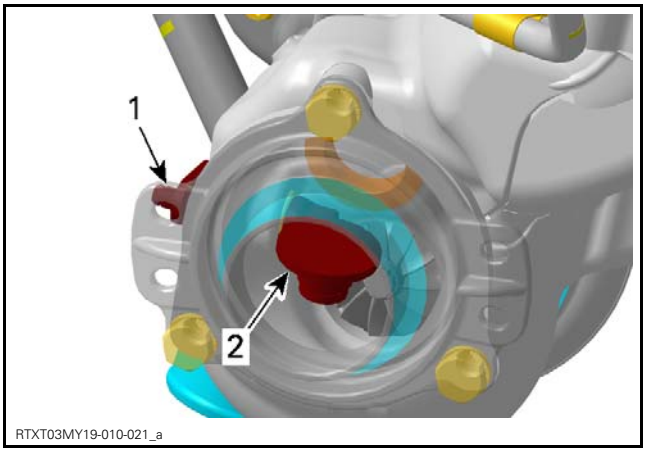

RTXT03MY19-010-021_a

*1. Waste gate lever*
*2. Waste gate*

### Rotor of Turbine and Compressor

Check rotor visually for:

– bent blades
– any damages
– thermal stress (turbine rotor).

Apply slightly a radial pressure onto the shaft to minimize the gap between rotor and housing.

Check radial clearance of the rotors in the complete circumference.

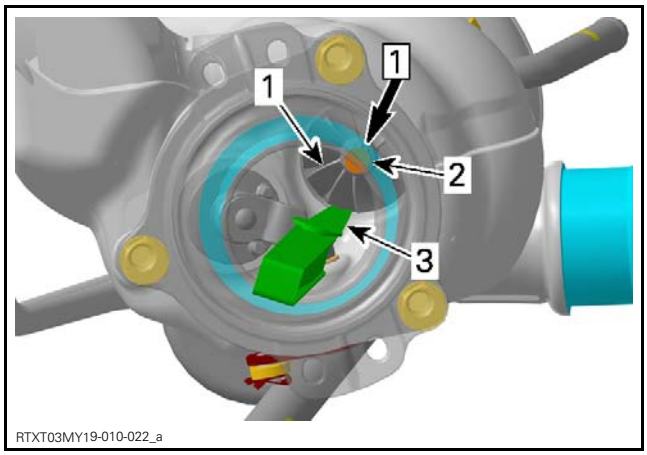

RTXT03MY19-010-022_a

*TURBINE ROTOR*
*Step 1: Push slightly*

*1. Rotor*
*2. Shaft*
*3. Feeler gauge*

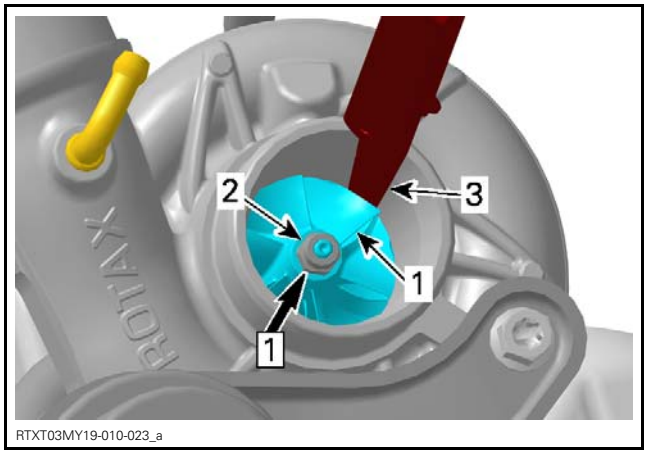

RTXT03MY19-010-023_a

*COMPRESSOR ROTOR*
*Step 1: Push slightly*

*1. Rotor*
*2. Shaft*
*3. Feeler gauge*

| REQUIRED TOOL |
|---|
| Feeler gauge 0.1 mm (.004 in) |

| ROTOR RADIAL CLEARANCE | |
|---|---|
| SERVICE LIMIT | Minimum of 0.1 mm (.004 in) |

### Rotor Shaft

Check discoloration of the shaft due to overheating.

Move rotor shaft back and forth to measure axial clearance by using a dial gauge.

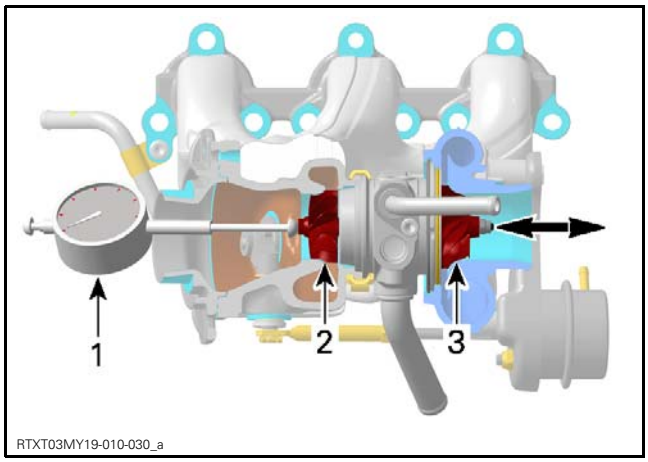


*1. Dial gauge*
*2. Turbine rotor*
*3. Compressor rotor*

| ROTOR SHAFT AXIAL CLEARANCE | |
|---|---|
| SERVICE LIMIT | Maximum of 0.1 mm (.004 in) |

### Waste Gate Actuator

Apply air pressure to the actuator.

Measure movement of waste gate actuator rod at specified air pressure.

| REQUIRED TOOL | |
|---|---|
| Dial gauge | |
| VACUUM/PRESSURE PUMP (P/N 529 021 800) | |

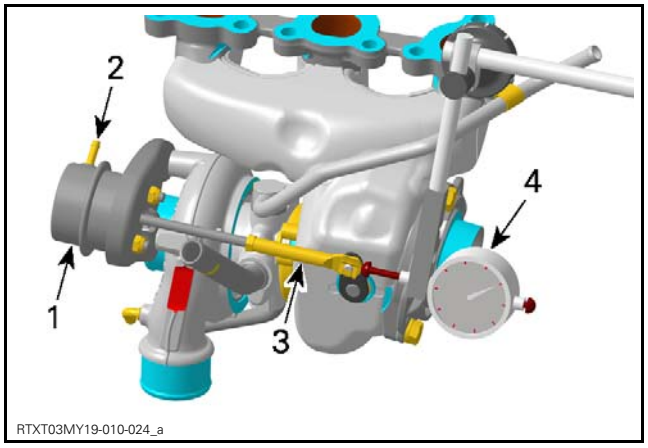


*ALIGN DIAL BORE GAUGE WITH WASTE GATE ACTUATOR ROD*
*1. Actuator*
*2. Fitting for air pressure supply*
*3. Waste gate actuator rod*
*4. Dial gauge*

| MOVEMENT OF WASTE GATE ACTUATOR ROD | |
|---|---|
| AIR PRESSURE | MOVEMENT |
| 43 kPa (6.24 PSI) | 1 mm ± 0.5 mm (.039 in ± .02 in) |
| 57 kPa (8.27 PSI) | 5 mm ± 0.8 mm (.197 in ± .031 in) |

If movement of the waste gate actuator rod is out of specification replace turbo charger

### Turbine Flange Surface

Check warpage of turbine flange.

| REQUIRED TOOL |
|---|
| Straight edge |
| Feeler gauge 0.1 mm (.004 in) |

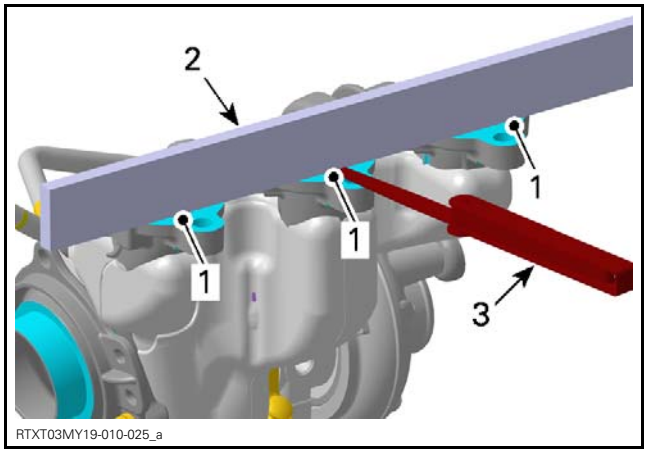


*1. Turbine flange*
*2. Straight edge*
*3. Feeler gauge*

| TURBINE FLANGE WARPAGE | |
|---|---|
| SERVICE LIMIT | Maximum of 0.1 mm (.004 in) |

## Installing the Turbocharger

The installation is the reverse of the removal procedure. However, pay attention to the following.

Place turbocharger retaining screws with **NEW** washers into turbine housing (2x).

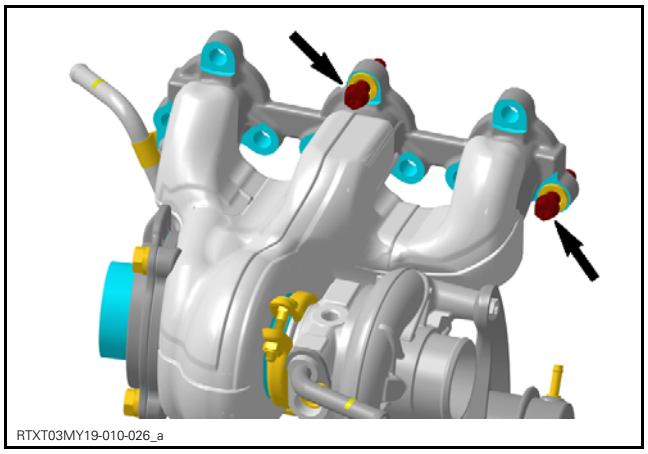
RTXT03MY19-010-026_a

Place NEW gasket on screws with the raised side towards the turbine housing.

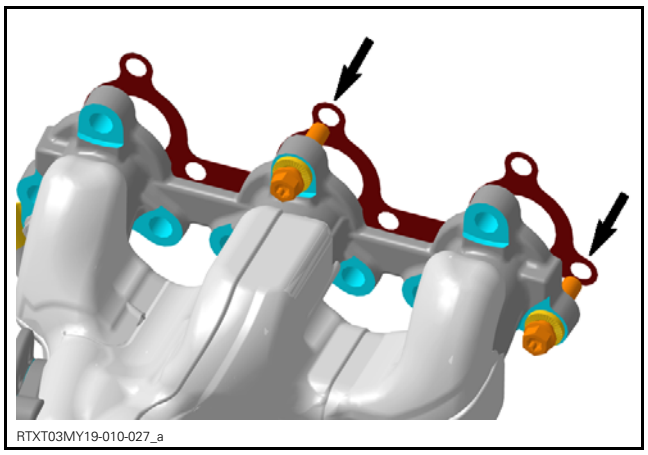
RTXT03MY19-010-027_a

Install turbocharger and hand-tighten the 2 retaining screws.

Install remaining turbo charger retaining screws with NEW washers.

Tighten turbocharger retaining screws according the following sequence.

| TIGHTENING TORQUE | | |
|---|---|---|
| Turbocharger retaining screws | STEP A | 5 N•m ± 0.6 N•m (44 lbf•**in** ± 5 lbf•**in**) |

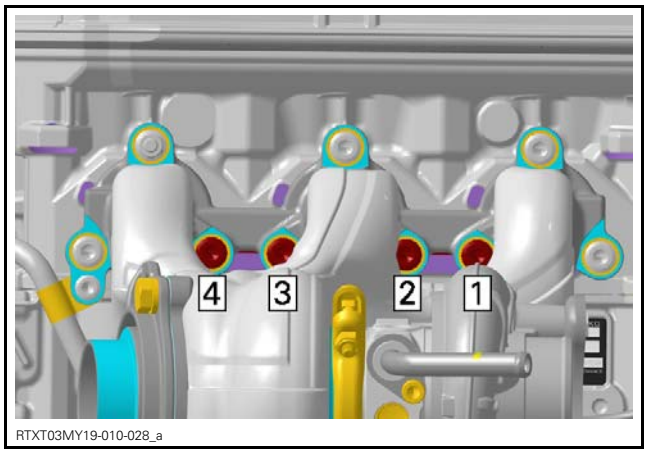

RTXT03MY19-010-028_a

| TIGHTENING TORQUE | | |
|---|---|---|
| Turbocharger retaining screws | STEP B | 23 N•m ± 3 N•m (17 lbf•ft ± 2 lbf•ft) |

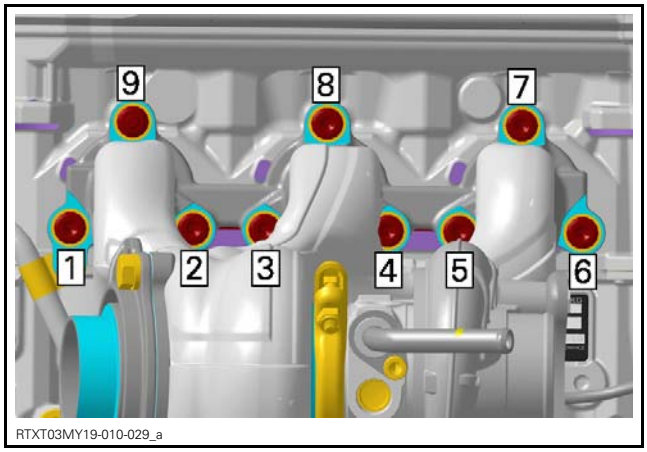

RTXT03MY19-010-029_a

Fill turbocharger at oil supply bore with engine oil and turn rotor shaft until turbocharger is filled completely.

Then immediately install oil return hose and oil supply hose, refer to procedures in this subsection.

Refill engine with recommended engine oil. Refer to *LUBRICATION SYSTEM* subsection.

Install all other parts which were previously removed.

Start the engine and let it idle for a few minutes to ensure proper turbocharger lubrication.

# OVERVIEW (600 ACE)

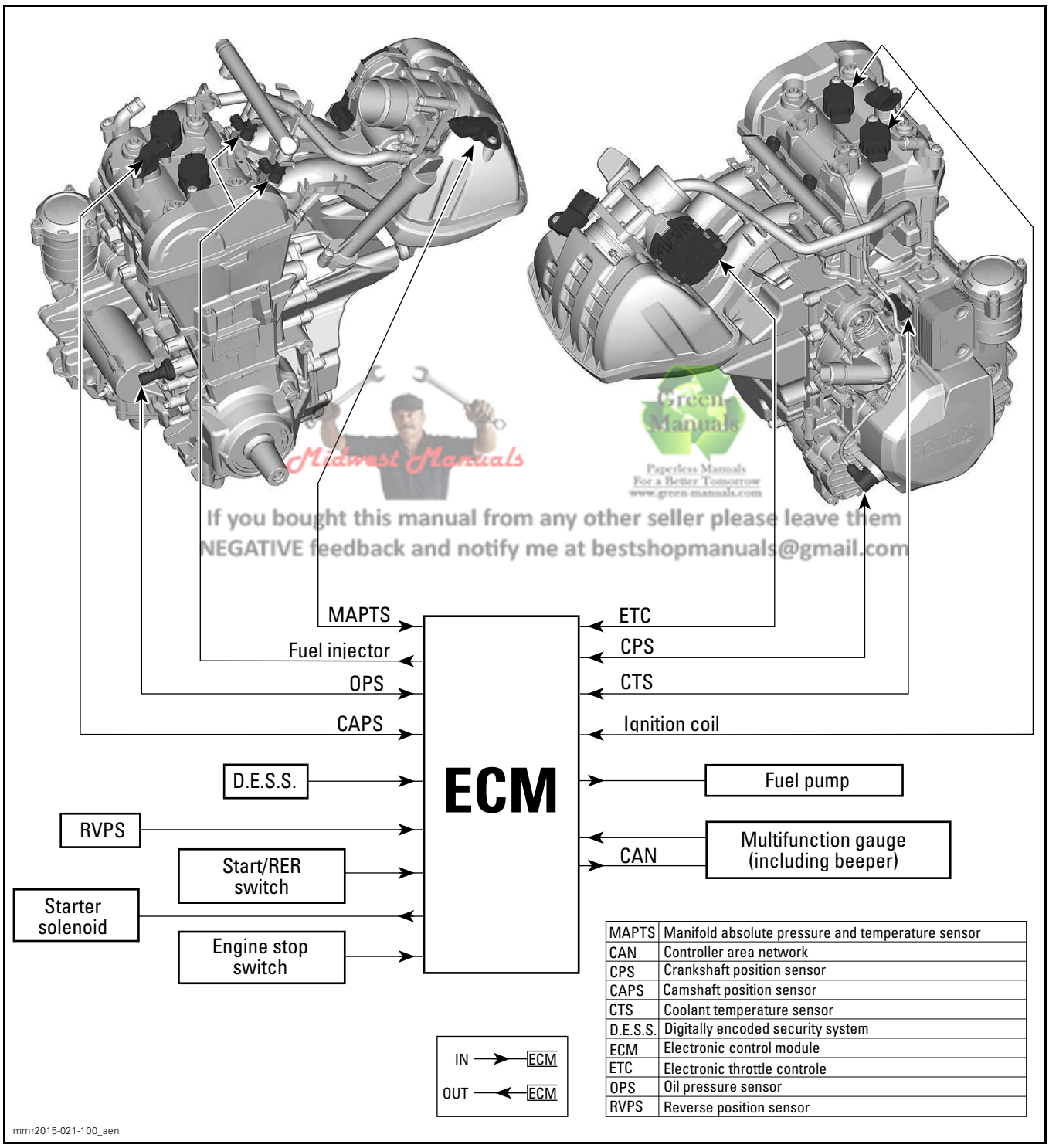


| | |
|---|---|
| MAPTS | Manifold absolute pressure and temperature sensor |
| CAN | Controller area network |
| CPS | Crankshaft position sensor |
| CAPS | Camshaft position sensor |
| CTS | Coolant temperature sensor |
| D.E.S.S. | Digitally encoded security system |
| ECM | Electronic control module |
| ETC | Electronic throttle controle |
| OPS | Oil pressure sensor |
| RVPS | Reverse position sensor |

Midwest Manuals
Green Manuals
Paperless Manuals For a Better Tomorrow www.green-manuals.com
If you bought this manual from any other seller please leave them NEGATIVE feedback and notify me at bestshopmanuals@gmail.com

# GENERAL

## SYSTEM DESCRIPTION

The engine management system (EMS) controls or interacts with the following systems:

– Electronic fuel injection (EFI)
– Digitally Encoded Security System (D.E.S.S.)
– Starting system
– Ignition system
– Lubrication system
– Electrical accessories.

The EMS also features a monitoring system and diagnostic mode to help troubleshooting some problems. Refer to *DIAGNOSTIC AND FAULT CODES* subsection.

### Engine Control Module (ECM)

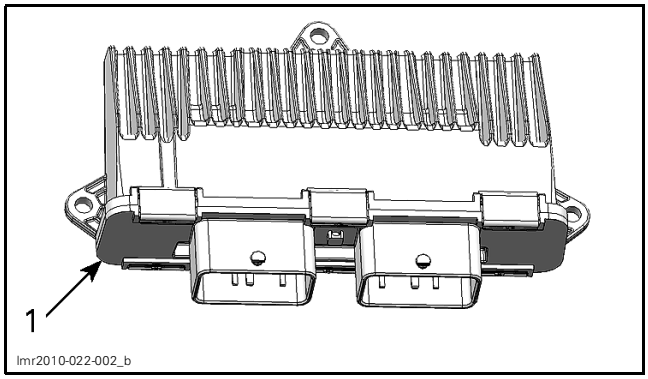


*1. ECM*

The ECM is located above the air intake manifold.

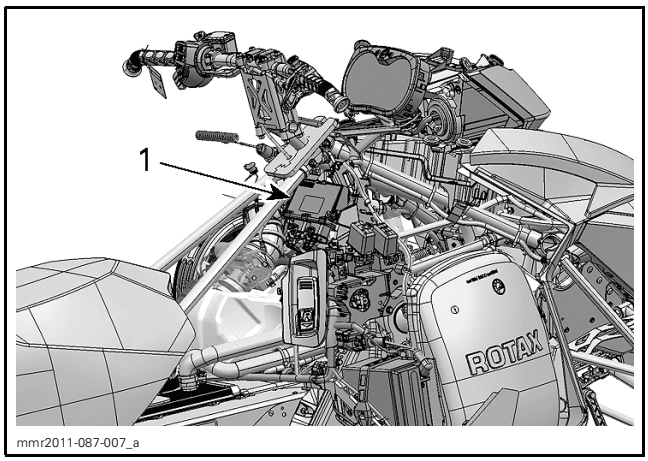


*TYPICAL - ECM LOCATION, FUEL TANK REMOVED FOR CLARITY*
*1. ECM*

The ECM is the central point of the engine management system. It reads inputs, makes computations, uses predetermined parameters and sends signals to the outputs for proper engine management.

The ECM features a permanent memory that will store fault codes, customer information and other engine information when the engine is stopped, and when the battery is removed.

#### Throttle Protection

If the throttle is not completely closed during engine startup, the engine will not start.

To revert to normal operation, release the throttle completely.

#### Engine Drowned Mode

This mode is used to expel fuel by cranking an engine that is fuel flooded. When this mode is active, fuel injectors and ignition coils are disabled.

To activate the drowned mode:

1. Fully squeeze throttle lever and hold.
2. Press the START/RER button.

Drowned mode is now active.

To exit this mode, release throttle and start engine normally.

Engine Overheat Protection

| COOLANT TEMP. | ENGINE OPERATING CONDITION | EMS ACTION |
|---|---|---|
| Above 70°C (158°F) | Idling more than 12 minutes | Engine is stopped.<br>5 seconds before stopping engine:<br>• Beeper is activated.<br>• SHUTDOWN is displayed in multifunction gauge (premium gauge). |
| Within 111°C (232°F) and 117°C (243°F) | Idling more than 12 minutes | Beeper is continuously activated.<br>Temperature light is turned ON.<br>ENGINE_TEMP is displayed in multifunction gauge (premium gauge). |
| Above 110°C (230°F) | Riding | |
| Above 118°C (244°F) | Idling more than 30 seconds | Engine is stopped.<br>5 seconds before stopping engine:<br>• Beeper is activated.<br>• SHUTDOWN is displayed in multifunction gauge (premium gauge). |
| | Riding | Beeper is activated.<br>Temperature light is turned ON.<br>ENGINE_TEMP is displayed in multifunction gauge (premium gauge).<br>Check engine light is turned ON.<br>Engine speed is limited to 5500 RPM.<br>A fault code is set. |

# ENGINE MANAGEMENT SYSTEM (EMS)

*Without Turbocharger*

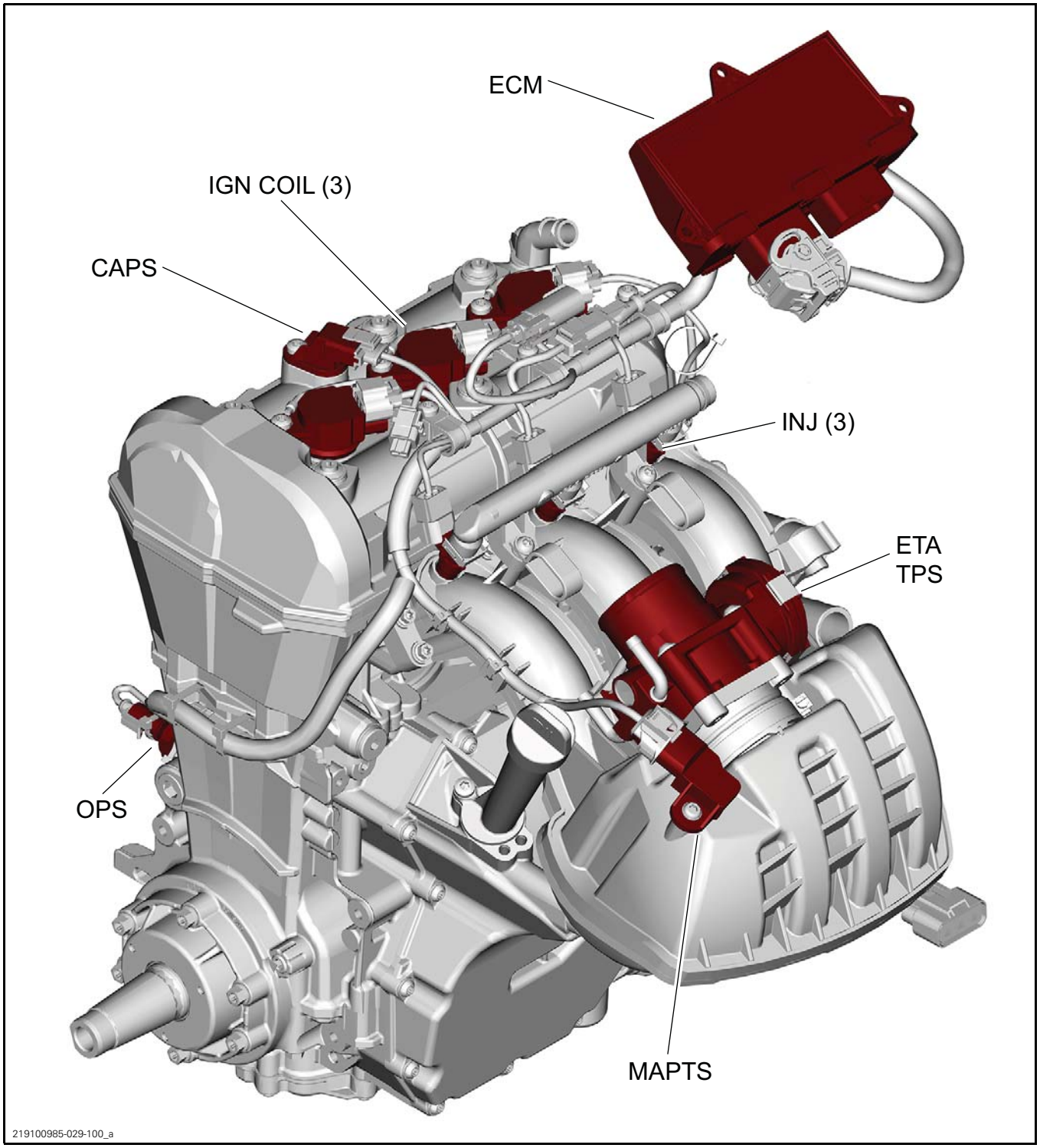


*CAPS = Camshaft Position Sensor*
*ECM = Engine Control Module*
*ETA = Electric Throttle Actuator*
*IGN COIL = Ignition coil*
*INJ = Injector*
*MAPTS = Manifold Air Pressure/Temperature Sensor*
*OPS = Oil Pressure Switch*
*TPS = Throttle Position Sensor*

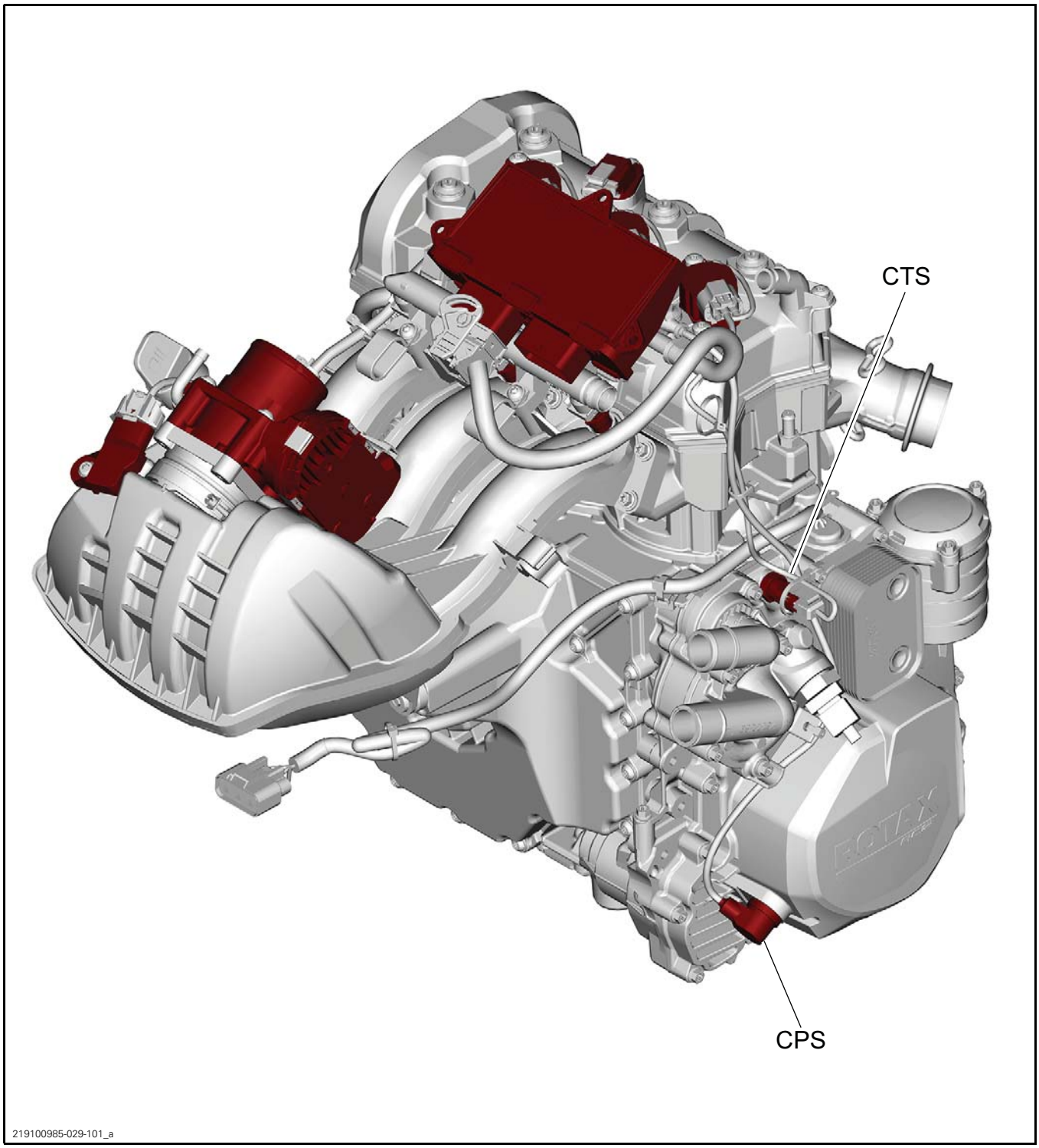


*CPS = Crankshaft Position Sensor*
*CTS = Cooling Temperature Sensor*

*With Turbocharger*

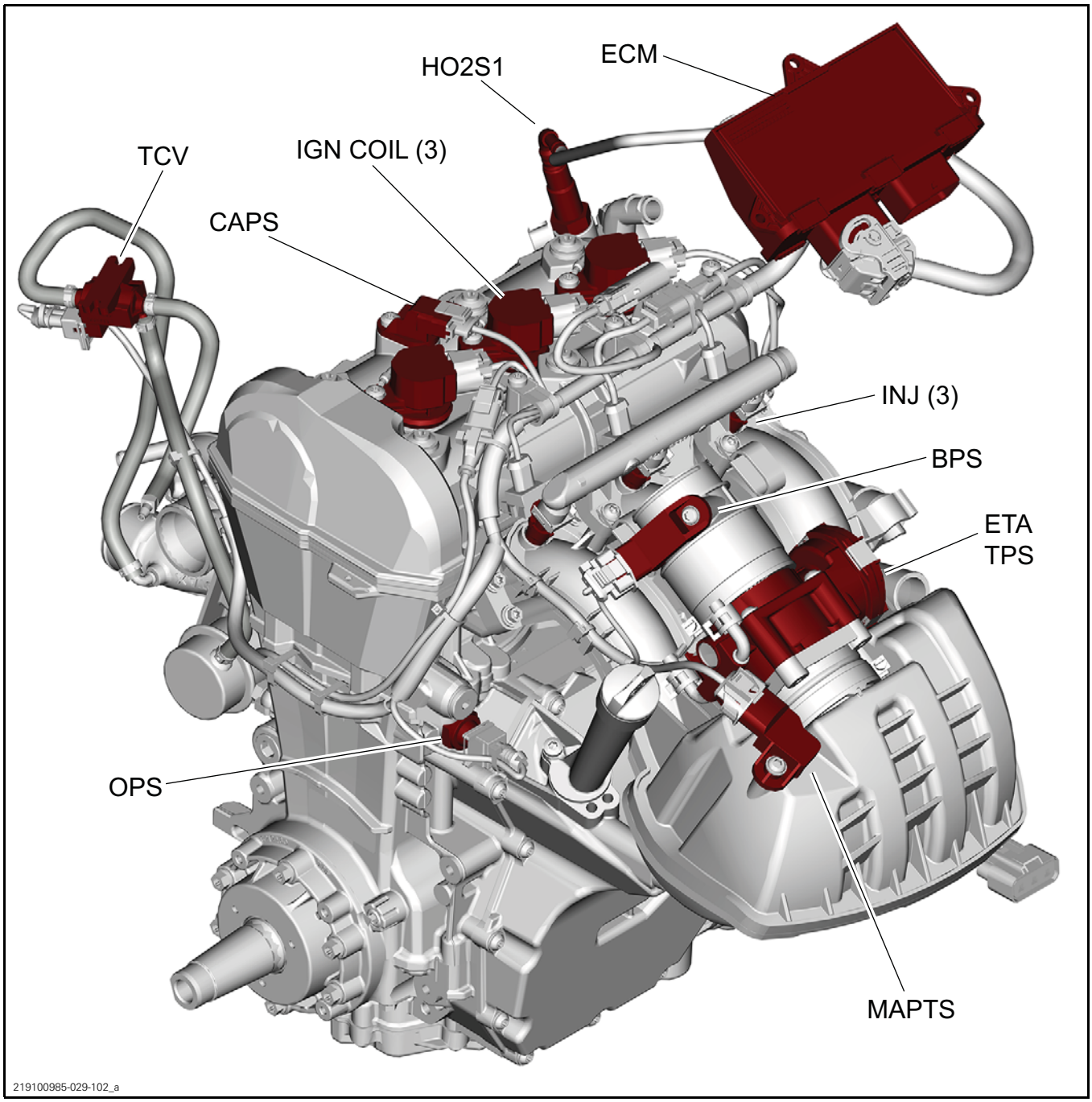


*TCV = Turbo Control Valve*
*BPS = Boost Pressure Sensor*
*CAPS = Camshaft Position Sensor*
*ECM = Engine Control Module*
*ETA = Electric Throttle Actuator*
*HO2S1 = Oxygen sensor*
*IGN COIL = Ignition coil*
*INJ = Injector*
*MAPTS = Manifold Air Pressure/Temperature Sensor*
*OPS = Oil Pressure Switch*
*TPS = Throttle Position Sensor*

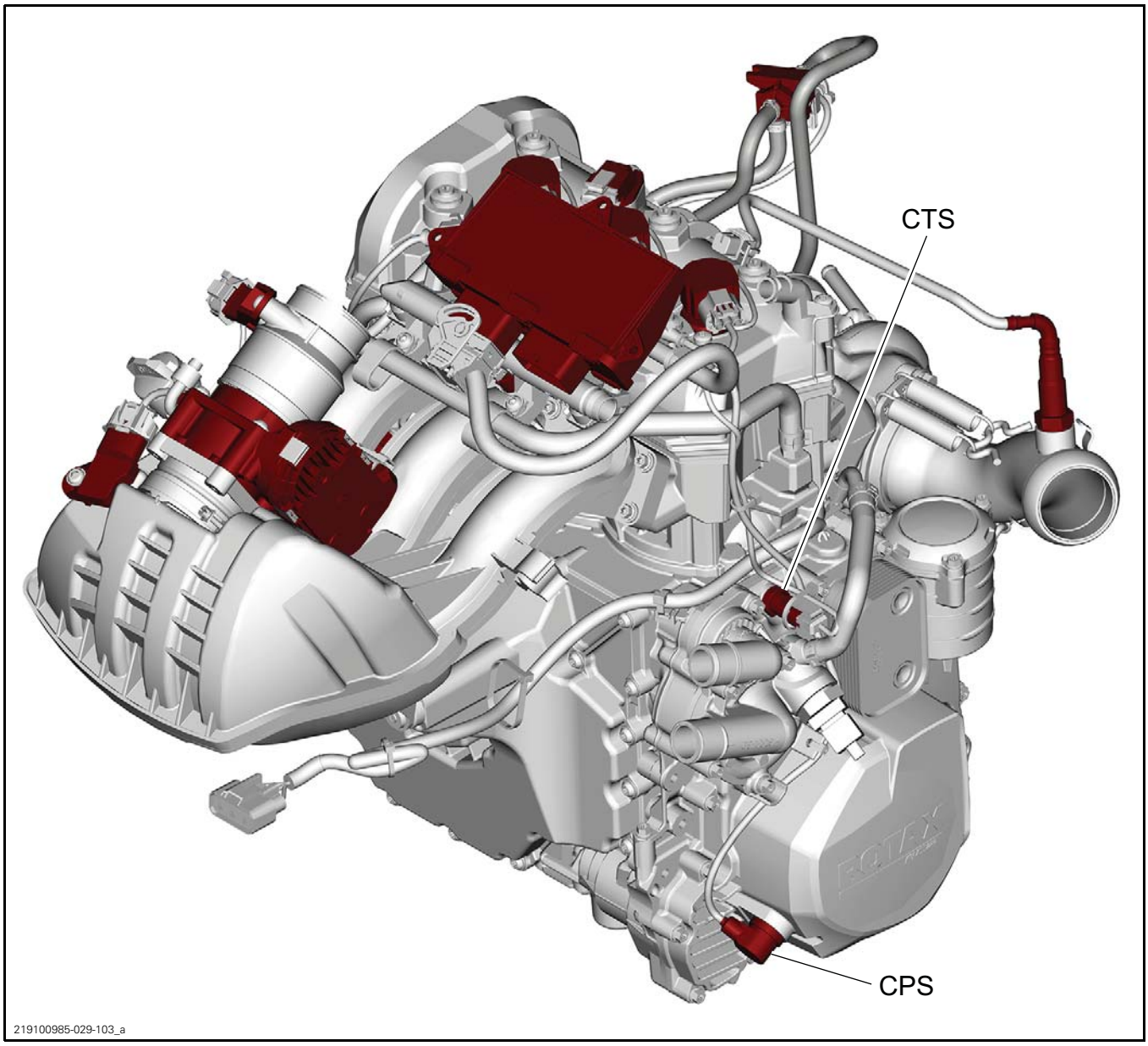


*CPS = Crankshaft Position Sensor*
*CTS = Cooling Temperature Sensor*

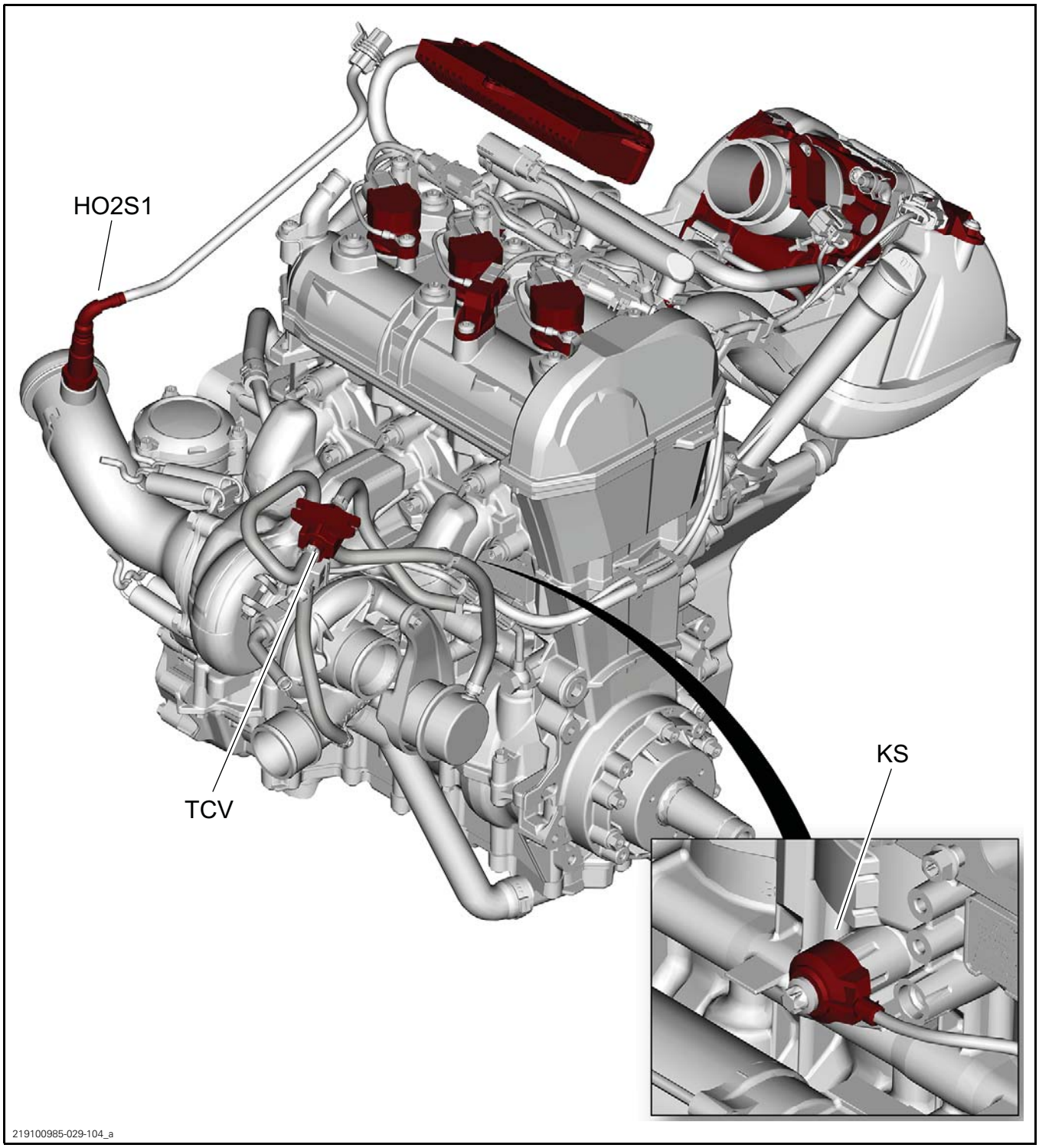


1. *HO2S1 = Oxygen Sensor*
2. *TCV = Turbo Control Valve*
3. *KS = Knock Sensor*

# GENERAL

## SYSTEM DESCRIPTION

The ECM ensures a high power output with clean combustion.

There are 7 main systems that are controlled by the ECM:

1. Electronic Fuel Injection (EFI)
2. Intelligent throttle control (iTC)
3. Cooling system (cooling fan)
4. Ignition system
5. Starting system
6. Fuel system
7. D.E.S.S.

NOTE: For further information related to these systems, refer to the applicable subsection.

The ECM is the central point of the engine management system.

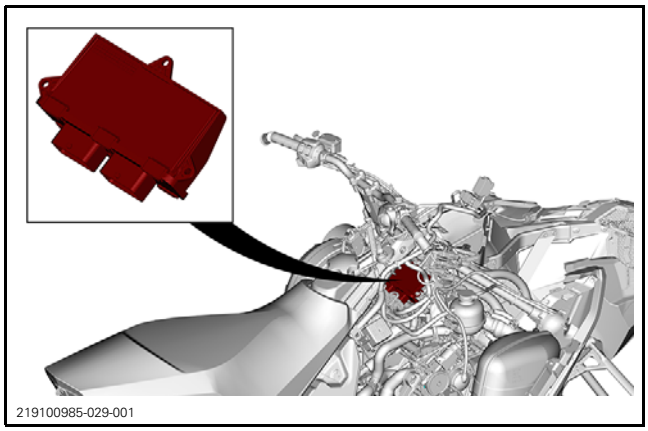


*ECM LOCATION*

The ECM reads input signals from various switches, controls, and sensors, that it compares to predetermined parameters, makes computations, and provides control signal outputs required for proper engine management.

The ECM also interacts through CAN bus with other electronic modules for various functions, information exchange and display of messages. Refer to *CONTROLLER AREA NETWORK (CAN)*.

The ECM also features a permanent memory that will store the information on the various ignition keys programmed to the vehicle, fault codes, customer information, and other engine information, even when the battery is removed from the vehicle.

### Diagnostic Mode

The ECM features a self-diagnostic mode that is activated on system power up (ignition key ON) for certain systems and components, and when the engine is running for others. Refer to *DIAGNOSTIC AND FAULT CODES* subsection for more information.

### Monitoring System

The MONITORING SYSTEM monitors various electrical and electronic components of the engine control systems such as the:

– ETA (Electric Throttle Actuator)
– TPS (Throttle Position Sensor)
– TAS (Throttle Accelerator Sensor)
– ECM (Engine Control Module).

The engine management system provides for redundancies in these components should a failure or partial failure occur to which it will adjust system operation to protect the vehicle and most of importantly, the driver.

Should the engine management system not respond (or not respond correctly) to a failure, then the monitoring system will react to ensure vehicle and driver safety.

The monitoring system therefore ensures the engine management system is functioning correctly.

### Limp Home Mode

When a major component of the EMS is not operating properly, limp home mode will be set.

Engine RPM will be limited and/or engine behavior and control may be modified depending on the cause of the failure.

LIMP HOME will be displayed in the multifunction gauge and the CHECK ENGINE light symbol will be on in the gauge.

A failure of any of the following major components will force the vehicle into LIMP HOME MODE:

– TPS / ETA / TAS
– Injectors
– Low oil pressure
– High engine coolant temp
– MAPTS signal fault.

# COMMUNICATION PROTOCOLS

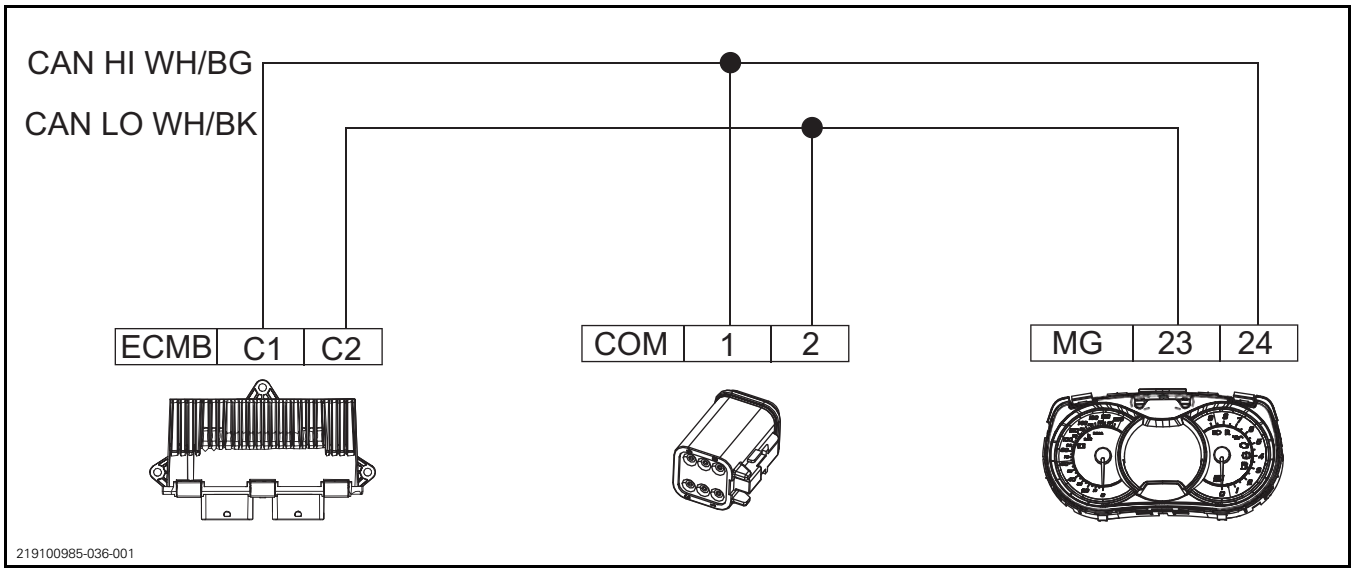


*COM (Diagnostic connector)*
*ECM (Engine control module)*
*MG (Multifunction gauge)*
*WH/BG (White/beige)*
*WH/BK (White/black)*

## GENERAL

### CONTROLLER AREA NETWORK (CAN)

The CAN protocol is an ISO standard for serial data communication.

The ECM forms a network with other components linked with the CAN bus.

The CAN bus (or CAN lines) consist of a pair of wires (WHITE/BEIGE and WHITE/BLACK) that connect every component to each other. The electronic modules are in constant communication within the network.

There are resistors on the CAN lines in the ECM, multifunction gauge and the thermocouple module.

CAN network resistance can be measured from the COM connector pins.

## TROUBLESHOOTING

### CAN COMMUNICATION PROBLEMS

1. Measure CAN network resistance from the COM connector pins.
2. Disconnect modules one by one and observe change in network resistance to find network communication fault.

| CAN NETWORK RESISTANCE | |
|---|---|
| CONDITION | SPECIFICATION ± 10% |
| Good network | 60 Ω |
| ECM<br>or<br>MG network fault | 120 Ω |
| ECM<br>and<br>MG network fault | O.L. |

If the resistance does not vary when a module is unplugged ensure wiring harness and pins are in good condition before replacing a module.

NOTE: There is no resistor in the COM connector.

# COMMUNICATION TOOLS AND B.U.D.S.

## SERVICE TOOLS


| Description | Part Number | Page |
|---|---|---|
| 12 V BATTERY SUPPLY CABLE | 529 035 997 | 1 |
| DIAGNOSTIC CABLE | 710 000 851 | 1 |
| MPI-2 INTERFACE CARD | 529 036 018 | 1 |
| MPI-3 INTERFACE CARD | 529 036 353 | 1 |
| POWER INTERFACE | 515 177 223 | 1 |


## GENERAL

Refer to the **B.U.D.S. directory** on *KNOWLEDGE CENTER* for all BUDS related information, including:

- Download link
- User manual (navigation through menus, programming keys, reading fault codes, writing data to modules etc.)
- Installation instructions
- BRP BUDS chart

## REQUIRED TOOLS

| MANDATORY TOOLS | |
|---|---|
| A personal computer (laptop or desktop) | |
| MPI-2 INTERFACE CARD (P/N 529 036 018) | |
| **OR** | |
| MPI-3 INTERFACE CARD (P/N 529 036 353) | |
| DIAGNOSTIC CABLE (P/N 710 000 851) | |
| POWER INTERFACE (P/N 515 177 223) | |
| 12 V BATTERY SUPPLY CABLE (P/N 529 035 997) | |
| **OPTIONAL TOOL** | |
| Extension cable available at electronic retail outlets. Do not exceed 7.5 m (25 ft) | |

### Multi-Purpose Interface Card (MPI-2 or MPI-3)

The Multi-Purpose Interface (MPI) in conjunction with the diagnostic cable is used with BUDS2 to communicate with the engine control module (ECM) and other modules.

The MPI card uses the power from the PC computer's USB port.

### Power Interface

The power interface and power supply cable allows the connection of a fully charged external battery to provide stable voltage to the unit and BUDS2.

Stable voltage is essential to prevent update crashes.

**Do not** use a charger on the battery (unit or external) during software updates.

The power interface and power supply cable connected to external battery can be used for extended diagnostic time.

mbs2018-006-002

*TYPICAL*

The power interface with or without the power supply cable will keep the unit powered even if the ignition switch is turned off or the D.E.S.S. key is removed.

The power interface has a fuse protected voltmeter included and an extra fuse to protect from polarity inversion of the power supply cable.

# TROUBLESHOOTING

Refer to the BRP BUDS chart to ensure you are using the appropriate hardware and tools.

# COMMUNICATION PROBLEMS

## MPI Connection Troubleshooting

### MPI Status Lights

The MPI includes 2 status lights to show the connection conditions: USB and CAN. **Both lights must be GREEN** for the MPI to function properly. Otherwise, refer to the following charts.

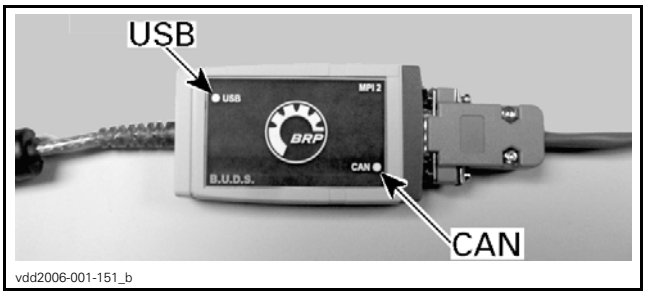


vdd2006-001-151_b

*MPI-2 CARD*

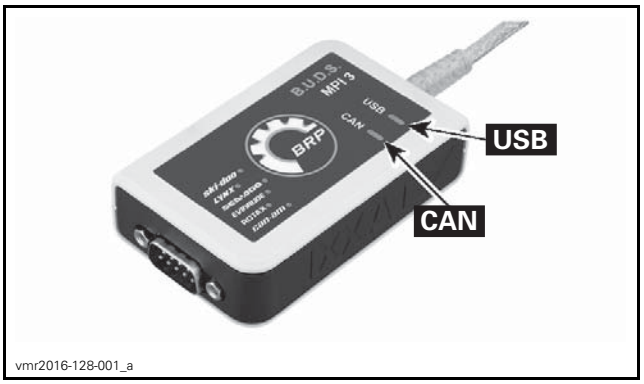


vmr2016-128-001_a

*MPI-3 CARD*

Prerequisite for USB Communication:

– PC Computer turned ON
– MPI connected to PC computer.

| COMMUNICATION PROBLEM (USB) | |
|---|---|
| STATUS | WHAT TO DO |
| USB Light is OFF | – Check USB connection between MPI-2 and PC computer.<br>– Check USB operation on PC computer (hardware or Windows drivers). |
| USB Light is GREEN | – Connections are GOOD. Communication can take place on USB side. |

Prerequisite for CAN Communication:

1. MPI connected to diagnostic connector.
2. The tether cord cap (D.E.S.S. key) is installed on the engine cut-off switch and pull the emergency stop switch.
3. B.U.D.S. started and logged.
4. ECM is powered.

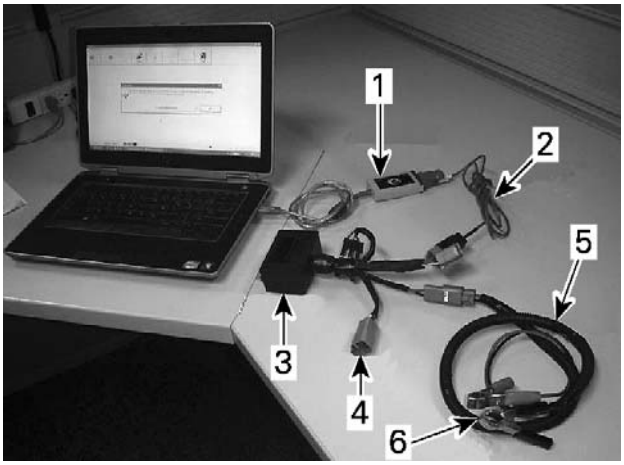


mmr2013-024-002_a

1. *MPI Interface card*
2. *Diagnostic cable*
3. *Power interface*
4. *To vehicle diagnostic connector*
5. *12 V battery supply cable*
6. *To 12 V battery*

NOTE: The battery supply cable is only necessary on models without a battery.

| COMMUNICATION PROBLEM (CAN) | |
|---|---|
| STATUS | WHAT TO DO |
| CAN Light is OFF | – B.U.D.S. does not communicate with the vehicle.<br>– Check connections from computer to vehicle.<br>– Check if B.U.D.S. is started.<br>– Check if vehicle is powered: is cluster turned ON. If it is not ON, install the tether cord cap (D.E.S.S. key) on the engine cut-off switch and pull the emergency stop switch. |
| CAN Light is RED | This occurs when B.U.D.S. looses communication with vehicle.<br>– Check connections from computer to vehicle.<br>– Check if vehicle is powered: is cluster turned ON? If not, install the tether cord cap (D.E.S.S. key) on the engine cut-off switch and pull the emergency stop switch. |
| CAN Light is GREEN | – Connections are GOOD. B.U.D.S. communicates normally with the vehicle. |

## Power Interface Test

When the power interface is connected to the vehicle diagnostic connector and the emergency stop switch is pulled, the multifunction gauge and the headlight should turn on. If any test failed, check the following and repair or replace power interface.

1. Set the emergency stop switch to run position.
2. Power interface fuses.

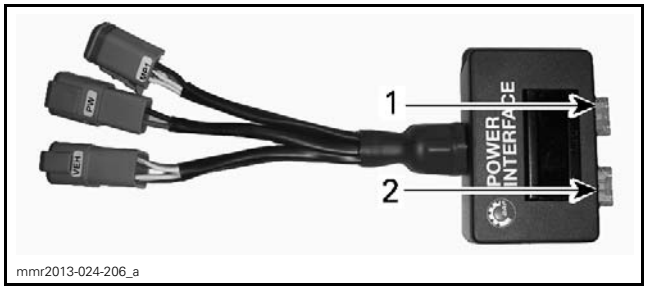


*1. Fuse 1*
*2. Fuse 2*

3. External battery voltage should be displayed on Power interface (primary voltage if engine running).
   3.1 Ensure battery charge is high enough to keep the vehicle ON for the duration of the maintenance.

NOTE: This is especially IMPORTANT if you are updating vehicle software. In case of doubt, charge battery for at least 15 minutes; disconnect charger prior to updating software.

# DIAGNOSTIC AND FAULT CODES

## GENERAL

### MONITORING SYSTEM

This system monitors the electronic components of the EMS (engine management system), the multifunction gauge, and other components of the electrical system to detect if they are faulty or defective. The monitoring system becomes active when the START button is pressed.

NOTE: Some components require the engine to be running to be monitored (fuel injectors for example).

The following components or functions are monitored.

| EMS MONITORING |
|---|
| Battery voltage |
| EMS sensors (TAS, TPS, CPS, CAPS, MAPTS, CTS, OPS). Throttle actuator, ignition coils and fuel injectors |
| ECM |
| CAN |
| Engine starter solenoid (SD) |
| Fuel pump (FP) |
| Multifunction gauge (MG) |
| Cooling Fan Module (CFM) |
| Eco Mode Switch (ECO) |
| Radio Frequency Identification (RFID) |
| Relays |

| MULTIFUNCTION GAUGE MONITORING |
|---|
| Multifunction gauge |
| Light Switch |
| Vehicle Speed Sensor (VSS) |
| MODE switch |
| CAN |
| Fuel level sensor |
| ECM |

When a malfunction is currently detected, the related electronic module:

– Sets an active fault code.
– Adapts the proper protection strategy according to the failure.
– Sends out warning signals to the multifunction gauge which provides beeper codes, fault indicators and fault messages to inform the rider of a particular condition.

When a minor or transient fault occurs, the fault and beeper will cease automatically if the condition that caused the fault no longer exists.

If a minor fault is active, the engine will operate without a noticeable loss of performance.

Releasing the throttle and letting the engine return to idle speed may allow normal operation to resume. If this does not work, try the following:

– Remove tether cord from the engine cut-off switch.
– Wait 3 minutes to allow the ECM to shut down.
– Start engine.
– Check if the fault code is still active.

The electronic system will react differently depending on the fault type. If a severe failure occurs, the engine may not be allowed to be started. In other cases, the engine may operate in limp home mode (reduced RPM) or not be affected at all.

These strategies are used to protect the engine system from damage and to maintain safe operation of the vehicle.

## Engine Overheat Protection

| COOLANT TEMPERATURE | ENGINE OPERATING CONDITION | EMS ACTION |
|---|---|---|
| Above 70°C (158°F) | Idling more than:<br>– 12 minutes (with radiator fan)<br>– 5 minutes (without radiator fan) | Engine is stopped.<br>5 seconds before stopping engine:<br>– Beeper is activated.<br>– SHUTDOWN is displayed in multifunction gauge. |
| Above 110°C (230°F) | Riding | Beeper is continuously activated.<br>Temperature light is turned ON.<br>ENGINE_TEMP is displayed in multifunction gauge. |
| Above 118°C (244°F) | Idling more than 30 seconds | Engine is stopped.<br>5 seconds before stopping engine:<br>– Beeper is activated.<br>– SHUTDOWN is displayed in multifunction gauge. |
| | Riding | Beeper is activated.<br>Temperature light is turned ON.<br>ENGINE_TEMP is displayed in multifunction gauge.<br>Check engine light is turned ON.<br>Engine speed is limited to 5500 RPM.<br>A fault code is set. |

# HOW TO FIND FAULT CODE DESCRIPTIONS

For the latest fault code table, use the **Info Center** submenu in BOSSWeb and search for: Ski-Doo DTC.

**NOTE:** Only select "TST" in the advanced search when searching for a DTC table.

# DIAGNOSTIC AND FAULT CODES

## GENERAL

### FAULT CODE TABLES

| PCODE | MODULE | DESCRIPTION | CAUSE | ACTION |
|---|---|---|---|---|
| P0106 | ECM | Manifold air pressure sensor voltage not plausible. | Vacuum leakage between throttle body and plenum (ex: rubber hose disconnected, loose screws, missing gasket at cylinder head flange, missing injector o-rings, cracks) Air intake duct or filter severely clogged MAPTS sensor Defective Damaged circuit wires, damaged connector or damaged ECM pins, ECM voltage supply. | Make sure sensor connector is fully inserted. Measure voltage between harness connector MAPTS-1and MAPTS-3 (expected value: 4.8 to 5.1 volts). |
| P0107 | ECM | Manifold air pressure sensor voltage too low. | Voltage on system circuit MAPTS-4 reached a low value. Sensor may be disconnected. Circuit wires MAPTS-3 or MAPTS-4 may be disconnected. MAPTS-4 is shorted to ground No 5 volts supply on MAPTS-3 circuit. Damaged sensor. | Make sure sensor's connector is fully inserted. Measure voltage between harness connector MAPTS-1 and MAPTS-3 with the vehicle turned on (expected value: 4.8 to 5.1 volts) Check continuity between ECMA-H2 and MAPTS-1. Check continuity between ECMA-B4 and MAPTS-3. Check continuity between ECMA-G4 and MAPTS-4. |
| P0108 | ECM | Manifold air pressure sensor voltage too high. | Voltage on system circuit MAPTS-4 reached a high value. Circuit wire MAPTS-4 shorted to a supply Circuit wire MAPTS-1 is not connected. Damaged sensor. | Make sure sensor's connector is fully inserted. Measure voltage between harness connector MAPTS-1 and MAPTS-3 with the vehicle turned on (expected value: 4.8 to 5.1 volts) Check continuity between ECMA-H2 and MAPTS-1. Check continuity between ECMA-B4 and MAPTS-3. Check continuity between ECMA-G4 and MAPTS-4. |

| PCODE | MODULE | DESCRIPTION | CAUSE | ACTION |
|---|---|---|---|---|
| P0112 | ECM | Manifold air temperature sensor voltage too high. | Voltage on system circuit MAPTS-2 reached a high value. Sensor may be disconnected. Circuit wires MAPTS-1 or MAPTS-2 may be disconnected. Damaged sensor. | Make sure sensor's connector is fully inserted. If it is correct then disconnect it and perform the following tests. Check MAPTS sensor pins 1 and 2 for approximately 2280 to 2736 ohms at 19 to 21°C (66 to 70°F). If the sensor resistivity is out of range replace the sensor. Check system circuits ECMA-H3 for continuity to terminal 2 of the MAPTS sensor. Check system circuits ECMA-H2 for continuity to terminal 1 of the MAPTS sensor. |
| P0113 | ECM | Manifold air temperature sensor voltage too low. | Voltage on system circuit MAPTS-2 reached a low value. System circuit MAPTS-2 shorted to ground. Damaged sensor. | Disconnect the sensor and check for a change in the fault code. If the fault code stays the same, look for a short circuit on the harness. If the fault code is different, replace the sensor. Check MAPTS sensor pins 1 and 2 for approximately 2280 to 2736 ohms at 19 to 21°C (66 to 70°F). If the sensor resistivity is out of range replace the sensor. If the sensor resistivity is correct according to the specified temperature range then check circuit wire MAPTS-2 for a short to the ground. |
| P0117 | ECM | Engine coolant temperature sensor voltage too high. | Voltage on system circuit CTS-2 reached a high value. Sensor may be disconnected. Circuit wires CTS-1 or CTS-2 may be disconnected. Circuit CTS-2 shorted to 5 or 12 volts. Damaged sensor. | Make sure sensor's connector is fully inserted. Check system circuit ECMA-1A for continuity to terminal 1 of the CTS connector and ECMA-J2 for continuity to terminal 2 of the CTS connector. Check CTS resistivity on the sensor pins for approximately 2280 to 2736 ohms at 19 to 21°C (66 to 70°F). If the sensor resistivity is out of range replace the sensor. |

Midwest Manuals
Green Manuals
Paperless Manuals
For a Better Tomorrow
If you bought this manual from any other seller please leave them NEGATIVE feedback and notify me at bestshopmanuals@gmail.com

| PCODE | MODULE | DESCRIPTION | CAUSE | ACTION |
|---|---|---|---|---|
| P0118 | ECM | Engine coolant temperature sensor voltage too low. | Voltage on system circuit CTS-2 reached a low value. Circuit wire CTS-2 shorted to ground. Damaged sensor. | Disconnect the sensor and check for a change in the fault code. If the fault code stays the same, look for a short circuit on the harness. If the fault code is different, replace the sensor. Check system circuit CTS-2 for resistivity to ground (Expected value = 1.2 Kohms when ECMA connector is still connected). Check system circuit ECMA-1A for continuity to terminal 1 of the CTS connector and ECMA-J2 for continuity to terminal 2 of the CTS connector. Check CTS sensor pins for approximately 2280 to 2736 ohms at 19 to 21°C (66 to 70°F). If the sensor resistivity is out of range replace the sensor. |
| P0122 | ECM | First Throttle Accelerator Sensor (TAS) Short circuit to GND | Damaged circuit wires, damaged throttle position sensor or damaged ECM pins. | Make sure sensor connector is fully inserted. Measure resistance from connector: ECMB-K1 to TAS-D (expected value: < 2 ohms). Measure resistance from connector: ECMB-K3 to TAS-E (expected value: < 2 ohms). Measure resistance from connector: ECMB-E1 to TAS-F (expected value: < 2 ohms). |
| P0123 | ECM | First Throttle Accelerator Sensor (TAS) shorted to supply | Damaged circuit wires, damaged throttle position sensor or damaged ECM pins. | Make sure sensor connector is fully inserted. Measure resistance from connector: ECMB-K1 to TAS-D (expected value: < 2 ohms). Measure resistance from connector: ECMB-K3 to TAS-E (expected value: < 2 ohms). Measure resistance from connector: ECMB-E1 to TAS-F (expected value: < 2 ohms). |

| PCODE | MODULE | DESCRIPTION | CAUSE | ACTION |
|---|---|---|---|---|
| P0127 | ECM | Torque reduction due to high manifold air temperature. | Temperature detected by the MAPTS sensor exceeded the maximum limit. Could happen during extended idling at high ambient temperatures or very low speed with load | |
| P0201 | ECM | Injector Cyl. #1 (PTO) open circuit. | Circuit wires INJ1-1 or INJ1-2 open circuit. Blown fuse. Disconnected injector connector. Disconnected HIC connector. Injector coil open circuit, | Check fuel injector fuse. Make sure injector connector is fully inserted. Make sure HIC connector is connected. Check system circuit ECMA-B3 for continuity to pin 2 of INJ1 connector. Check system circuit INJ-1 for continuity to the fusebox. Check injector resistivity for approximately 14.5 ohms. |
| P0202 | ECM | Injector Cyl. #2 (MAG) open circuit. | Circuit wires INJ2-1 or INJ2-2 open circuit. Blown fuse. Disconnected injector connector. Disconnected HIC connector. Injector coil open circuit. | Check fuel injector fuse. Make sure injector connector is fully inserted. Make sure HIC connector is connected. Check system circuit ECMA-K1 for continuity to pin 2 of INJ1 connector. Check system circuit INJ-1 for continuity to the fusebox. Check injector resistivity for approximately 14.5 ohms. |
| P0217 | ECM | Torque reduction due to high engine coolant temperature. | Warm riding condition, lack of cooling. | Check coolant level. Check for air pocket in cooling system. |
| P0222 | ECM | 2nd Throttle Accelerator Sensor (TAS) shorted to GND | Damaged circuit wires, damaged throttle position sensor or damaged ECM pins. | Make sure sensor connector is fully inserted. Measure resistance from connector: ECMB-J3 to TAS-A (expected value: < 2 ohms). Measure resistance from connector: ECMB-B3 to TAS-B (expected value: < 2 ohms). Measure resistance from connector: ECMB-A3 to TAS-C (expected value: < 2 ohms). |

| PCODE | MODULE | DESCRIPTION | CAUSE | ACTION |
|---|---|---|---|---|
| P0223 | ECM | 2nd Throttle Accelerator Sensor (TAS) shorted to supply | Damaged circuit wires, damaged throttle position sensor, or damaged ECM pins. | Make sure sensor connector is fully inserted. Measure resistance from connector: ECMB-J3 to TAS-A (expected value: < 2 ohms). Measure resistance from connector: ECMB-B3 to TAS-B (expected value: < 2 ohms). Measure resistance from connector: ECMB-A3 to TAS-C (expected value: < 2 ohms). |
| P0231 | ECM | Fuel pump open circuit or shorted to ground. | There is no load on circuit wire ECMB-M1 or it is shorted to ground. Blown fuse. Fuel pump connector is not connected. Fuel pump motor is open. | Check fuse. Make sure the fuel pump connector is fully inserted. Open ECM ACTIVATION page in B.U.D.S. Activate fuel pump and check if it reacts as expected. With vehicule power ON check voltage on FP-C connector (Expected value = battery voltage). Check system circuit ECMB-M1 for continuity to FP-A connector. Measure resistance between FP-C and FP-A (expected value: < 2 ohms) |
| P0232 | ECM | Fuel pump shorted to battery. | Circuit wire ECMB-M1 is shorted to 12 volts. Fuel pump motor is stuck or shorted. | Disconnect the fuel pump and check if the fault disapears. If it does then replace the fuel pump. Ckeck if system circuits FP-A and FP-C are shorted together. |
| P0261 | ECM | Injector Cyl. #1 (PTO) shorted to ground. | Circuit wire INJ1-1 is shorted to ground. | Disconnect injector 1. Measure resistance between injector pin 1 and 2 (Expected value = 10 to 15 ohms). With vehicule power ON and engine not running, check the voltage on pin 2 of the INJ2 connector (Expected value = around 3.3 volts). If the voltage is close to 12 volts check for a short to 12 volts on this circuit. |

Midwest Manuals
Green Manuals
Paperless Manuals For a Better Tomorrow www.green-manuals.com
If you bought this manual from any other seller please leave them NEGATIVE feedback and notify me at bestshopmanuals@gmail.com

| PCODE | MODULE | DESCRIPTION | CAUSE | ACTION |
|---|---|---|---|---|
| P0262 | ECM | Injector Cyl. #1 (PTO) shorted to battery. | Circuit wire INJ1-1 is shorted to battery. Injector coil is shorted. | Disconnect injector 1. Measure resistance between injector pin 1 and 2 (Expected value = 10 to 15 ohms). With vehicule power ON and engine not running, check the voltage on pin 2 of the INJ2 connector (Expected value = around 3.3 volts). If the voltage is close to 12 volts check for a short to 12 volts on this circuit. |
| P0264 | ECM | Injector Cyl. #2 (MAG) shorted to ground. | Circuit wire INJ2-1 is shorted to ground. Injector coil is open | Disconnect injector 2. Measure resistance between injector pin 1 and 2 (Expected value = 10 to 15 ohms). With vehicule power ON and engine not running, check the voltage on pin 2 of the INJ2 connector (Expected value = around 3.3 volts). If the voltage is close to 12 volts check for a short to 12 volts on this circuit. |
| P0265 | ECM | Injector Cyl. #2 (MAG) shorted to battery. | Circuit wire INJ2-1 is shorted to battery. Injector coil is shorted. | Disconnect injector 2. Measure resistance between injector pin 1 and 2 (Expected value = 10 to 15 ohms). With vehicule power ON and engine not running, check the voltage on pin 2 of the INJ2 connector (Expected value = around 3.3 volts). If the voltage is close to 12 volts check for a short to 12 volts on this circuit. |
| P0335 | ECM | Crankshaft signal fault. | Slow engine cranking due to low battery voltage Intermittent signal from crankshaft position sensor. Damaged circuit wires, damaged sensor. Sensor may not be properly secured. | Verify that the battery is properly charged Make sure sensor connector is fully inserted. Measure resistance from connector: ECMA-H1 to CPS-1 (Expected value: < 2 ohms). Measure resistance from connector: ECMA-K2 to CPS-2 (Expected value: < 2 ohms). |

| PCODE | MODULE | DESCRIPTION | CAUSE | ACTION |
|---|---|---|---|---|
| P0340 | ECM | Engine phase determination error. | CAPS signal not plausible, damaged circuit wires, damaged connector or damaged tooth wheel. | Make sure sensor connector is fully inserted. Measure voltage between harness connector CAPS-3 and CAPS-1 (expected value: 11 to 13 volts). Measure resistance between connector ECMA-E2 to CAPS-2. (expected value : <2 ohms) |
| P0359 | ECM | Ignition coil Cyl. #2 (MAG) shorted to battery. | Circuit wire IGN2-3 is shorted to battery. Ignition coil is damaged. | Disconnect ignition coil #2. With vehicule power ON and engine not running check voltage on pin 3 of IGN2 connector. (Expected value = 0 volt). If voltage is close to 12 volts, check for a short on this circuit. |
| P0360 | ECM | Ignition coil Cyl. #1 (PTO) shorted to battery. | Circuit wire IGN1-3 is shorted to battery. Ignition coil is damaged. | Disconnect ignition coil #1. With vehicule power ON and engine not running check voltage on pin 3 of IGN1 connector. (Expected value = 0 volt). If voltage is close to 12 volts, check for a short on this circuit. |
| P0361 | ECM | ECM ignition coil driver #2 (MAG) fault | Ignition coil or HIC connector not connected or damaged. Blown fuse. Broken wire or terminal. | Check if HIC connector connected. Check ignition fuse. Check circuit wire IGN2-3. |
| P0362 | ECM | ECM ignition coil driver #1 (PTO) fault | Ignition coil or HIC connector not connected or damaged. Blown fuse. Broken wire or terminal. | Check if HIC connector connected. Check ignition fuse. Check circuit wire IGN1-3. |
| P0480 | ECM | Fan relay circuit | Blown fuse, damaged or disconnected relay, damaged circuit wires, damaged connectors or damaged ECM output pins. | Check fuse. Disconnect Fan relay. Measure voltage between harness connector CFM-4 and ground (expected value: 11 to 13 volts). Measure resistance from harness connector: ECMB-J4 to CFM-2 (expected value: < 2 ohms). With the engine turned off measure voltage between CFM-2 and ground (expected value: 11 to 13 volts). Use BUDS to activate the fan and measure voltage between CFM-2 and ground (expected value: close to 0 volts). Check fuse F4 |

| PCODE | MODULE | DESCRIPTION | CAUSE | ACTION |
|---|---|---|---|---|
| P0513 | ECM | Invalid Access Key Detected | A non stored access key was detected when key switch was turned to ON. If no access key is available, program a new one and retry. | |
| P0520 | ECM | Engine oil pressure switch functional problem. | Defective oil pressure switch, damaged circuit wires, damaged connector or loose terminals, damaged ECM pins. | Measure resistance between harness connector EOP and ground when engine stopped (expected value < 2 ohms). Measure resistance between harness connector EOP and ground when engine running (expected value = open). Measure resistance from harness connector: EOP to ECMA-E3 (expected value: < 2 ohms). Check if HIC connector is properly connected (engine harness to the vehicle harness). |
| P0523 | ECM | Engine oil pressure switch sticking | Disconnected oil pressure switch Damaged oil pressure switch, damaged circuit wires, damaged connector, damaged ECM pins. | Measure resistance between harness connector EOP and ground when engine stopped (expected value < 2 ohms). Measure resistance between harness connector EOP and ground when engine running (expected value = open). Measure resistance from harness connector: EOP to ECMA-E3 (expected value: < 2 ohms). Check if HIC connector is properly connected (engine harness to the vehicle harness). |
| P0524 | ECM | Low oil pressure. | Oil level too low Engine mechanical problem Defective oil pressure switch, damaged circuit wires, damaged connector, damaged ECM pins. Vehicle was turned upside down with the engine running | Check oil level. Check system circuit ECMA-E3 for continuity to the terminal of the OPS connector. Check oil pressure. If the vehicle was turned upside down while the engine was running, delete the fault |
| P0560 | ECM | Non-plausibility error on system voltage | ECU internal failure in reading system voltage | Replace ECU if fault is persisting |

| PCODE | MODULE | DESCRIPTION | CAUSE | ACTION |
|---|---|---|---|---|
| P0562 | ECM | Battery voltage too low. | Battery voltage dropped under 11 volts. | Check battery voltage for 11 to 13 volts with engine stopped. Check battery voltage for 13.5 to 14.5 volts with engine speed above 2500 RPM. Check connections on regulator. Check charging system. |
| P0563 | ECM | Battery voltage too high. | Battery voltage exceeded 15.6 volts. | Check battery voltage for 11 to 13 volts with engine stopped. Check battery voltage for 13.5 to 14.5 volts with engine speed above 2500 RPM. Check connections on regulator. Check charging system. |
| P060D | ECM | Throttle Accelerator Sensor (TAS) signals not synchronized. | Throttle Accelerator Sensors (TAS) plausibility check error. | Make sure sensor connector is fully inserted. Check voltages on connector TAS-F and TAS-C. Voltage on pin TAS-F must be 2 times greater than voltage on pin TAS-C at any given position of the lever. Check for 5 volts on pin TAS-A and TAS-D. |
| P060E | ECM | Electrical Throttle Actuator (ETA) control fault | Damaged wiring harness<br>Damaged TPS<br>Damaged ECM | Disconnect throttle body Measure resistance between ETC pin 3 and 5 (expected value = 2 to 3 ohms). Disconnect ECMA. Measure resistance from harness connector: ETC-5 to ECMA-L1 (expected value: < 2 ohms). Measure resistance from harness connector: ETC-3 to ECMA-L2 (expected value: < 2 ohms). |
| P0610 | ECM | Variant Coding error. | Faulty variant coding, faulty programming, wrong ECM after replacement | |

| PCODE | MODULE | DESCRIPTION | CAUSE | ACTION |
|---|---|---|---|---|
| P062C | ECM | Loss of vehicle speed information from multifunction gauge. | ECM lost communication with the cluster.<br>Multifunction gauge may be disconnected.<br>Loss of power on the multidunction gauge.<br>Loss of communication with the multidunction gauge via the CAN bus.<br>CAN bus lines shorted together.<br>CAN bus line shorted to ground. | Make sure the multidunction gauge connector is fully inserted.<br>Check for bent pin on the cluster connector<br>Measure voltage between harness connector MG-8 and ground with the vehicle turned on (expected value: 11 to 13 volts).<br>Measure voltage between harness connector MG-9 and ground with the vehicle turned off (expected value: 11 to 13 volts).<br>Measure resistivity between harness connector MG-11 for continuity to the ground (Expected value < 2 ohms).<br>Check continuity between harness connector MG-24 and ECMB-C1<br>Check continuity between harness connector MG-23 and ECMB-C2<br>Resistance between harness connector MG-23 and MG-24 should be around 120 ohms<br>Verify that harness connector MG-23 and MG-24 are not shorted to ground or anything else |

Midwest Manuals
Green Manuals
Paperless Manuals
For a Better Tomorrow
If you bought this manual from any other seller please leave them NEGATIVE feedback and notify me at bestshopmanuals@gmail.com

| PCODE | MODULE | DESCRIPTION | CAUSE | ACTION |
|---|---|---|---|---|
| P0685 | ECM | Lighting relay circuit | Blown fuse, damaged or disconnected relay, damaged circuit wires, damaged connectors or damaged ECM output pins. | Check fuse. Disconnect lighting relay. Measure voltage between harness connector FB-D1 and ground (expected value: 11 to 13 volts). Measure voltage between harness connector FB-D2 and ground (expected value: 11 to 13 volts). Measure resistance from harness connector: ECMB-G1 to FB-C2 (expected value: < 2 ohms). With the engine turned off measure voltage between FB-C2 and ground (expected value: 11 to 13 volts). With the engine turned on measure voltage between FB-C2 and ground (expected value: close to 0 volts). Measure resistance between terminals 85 and 86 on the 2 relays (expected value: 70 to 90 ohms). |
| P0686 | ECM | Lighting relay circuit shorted to ground or open circuit | Blown fuse, damaged or disconnected relay, damaged circuit wires, damaged connectors or damaged ECM output pins. | Check fuse. Disconnect lighting relay. Measure voltage between harness connector FB-D1 and ground (expected value: 11 to 13 volts). Measure voltage between harness connector FB-D2 and ground (expected value: 11 to 13 volts). Measure resistance from harness connector: ECMB-G1 to FB-C2 (expected value: < 2 ohms). With the engine turned off measure voltage between FB-C2 and ground (expected value: 11 to 13 volts). With the engine turned on measure voltage between FB-C2 and ground (expected value: close to 0 volts). Measure resistance between terminals 85 and 86 on the 2 relays (expected value: 70 to 90 ohms). |

| PCODE | MODULE | DESCRIPTION | CAUSE | ACTION |
|---|---|---|---|---|
| P0687 | ECM | Lighting relay circuit shorted to battery + | Damaged relay, damaged circuit wires, damaged connector or damaged ECM output pins. | Check fuse. Disconnect lighting relay. Measure voltage between harness connector FB-D1 and ground (expected value: 11 to 13 volts). Measure voltage between harness connector FB-D2 and ground (expected value: 11 to 13 volts). Measure resistance from harness connector: ECMB-G1 to FB-C2 (expected value: < 2 ohms). With the engine turned off measure voltage between FB-C2 and ground (expected value: 11 to 13 volts). With the engine turned on measure voltage between FB-C2 and ground (expected value: close to 0 volts). Measure resistance between terminals 85 and 86 on the 2 relays (expected value: 70 to 90 ohms). |
| P0691 | ECM | Fan relay circuit shorted to ground or open circuit | Blown fuse, damaged or disconnected relay, damaged circuit wires, damaged connectors or damaged ECM output pins. | Check fuse. Disconnect Fan relay. Measure voltage between harness connector CFM-4 and ground (expected value: 11 to 13 volts). Measure resistance from harness connector: ECMB-J4 to CFM-2 (expected value: < 2 ohms). With the engine turned off measure voltage between CFM-2 and ground (expected value: 11 to 13 volts). Use BUDS to activate the fan and measure voltage between CFM-2 and ground (expected value: close to 0 volts). Check fuse F4 |

| PCODE | MODULE | DESCRIPTION | CAUSE | ACTION |
|---|---|---|---|---|
| P0692 | ECM | Fan relay circuit shorted to battery + | Damaged relay, damaged circuit wires, damaged connector or damaged ECM output pins. | Check fuse. Disconnect Fan relay. Measure voltage between harness connector CFM-4 and ground (expected value: 11 to 13 volts). Measure resistance from harness connector: ECMB-J4 to CFM-2 (expected value: < 2 ohms). With the engine turned off measure voltage between CFM-2 and ground (expected value: 11 to 13 volts). Use BUDS to activate the fan and measure voltage between CFM-2 and ground (expected value: close to 0 volts). Check fuse F4 |
| P1120 | ECM | Wrong ratio between both throttle position sensor (TPS) | Damaged wiring harness Damaged TPS Damaged ECM | Make sure the TPS connector is fully inserted. Reset TPS postion. Measure voltage between harness connector ETC-6 and ETC-2 with the vehicle turned on (expected value: 3.3 volts) Check for short between ETC-1 or ETC-4 and a supply or a ground Check continuity between harness connector ETC-1 and ECMA-F3 Check continuity between harness connector ETC-4 and ECMA-K3 Check continuity between harness connector ETC-6 and ECMA-K4 Check continuity between harness connector ETC-2 and ECMA-A2 |
| P160E | ECM | Electrical Throttle Actuator (ETA) control fault | Damaged wiring harness Damaged TPS Damaged ECM | Disconnect throttle body Measure resistance between ETC pin 3 and 5 (expected value = 2 to 3 ohms). Disconnect ECMA. Measure resistance from harness connector: ETC-5 to ECMA-L1 (expected value: < 2 ohms). Measure resistance from harness connector: ETC-3 to ECMA-L2 (expected value: < 2 ohms). |

| PCODE | MODULE | DESCRIPTION | CAUSE | ACTION |
|---|---|---|---|---|
| P1610 | ECM | Electrical Throttle Actuator (ETA) shorted to supply | Damaged ETC module, damaged circuit wires, damaged connector or damaged ECM output pins. | Disconnect ETC module. Check for a short between ECMA-L1 or ECMA-L2 and a supply Measure resistance from connector: ECMA-L1 to ETC-5 (expected value: < 2 ohms). Measure resistance from connector: ECMA-L2 to ETC-3 (expected value: < 2 ohms). |
| P1611 | ECM | Electrical Throttle Actuator (ETA) shorted to ground | Damaged ETC module, damaged circuit wires, damaged connector or damaged ECM output pins. | Disconnect ETC module. Check for a short between ECMA-1L or ECMA-L2 and gnd Measure resistance from connector: ECMA-L1 to ETC-5 (expected value: < 2 ohms). Measure resistance from connector: ECMA-L2 to ETC-3 (expected value: < 2 ohms). |
| P1612 | ECM | Electrical Throttle Actuator (ETA) signal not plausible | Damaged ETC module, damaged circuit wires, damaged connector or damaged ECM output pins. | Disconnect ETC module. Measure resistance from connector: ECMA-L1 to ETC-5 (expected value: < 2 ohms). Measure resistance from connector: ECMA-L2 to ETA-3 (expected value: < 2 ohms). |
| P1613 | ECM | Electrical Throttle Actuator (ETA) open electrical load | Damaged ETC module, damaged circuit wires, damaged connector or damaged ECM output pins. | Disconnect ETC module. Measure resistance from connector: ECMA-L1 to ETC-5 (expected value: < 2 ohms). Measure resistance from connector: ECMA-L2 to ETA-3 (expected value: < 2 ohms). Measure resistance between ETC-5 and ETC-3 (expected value < 5 ohms) |

| PCODE | MODULE | DESCRIPTION | CAUSE | ACTION |
|---|---|---|---|---|
| P1614 | ECM | Electronic throttle control (ETC) return spring check not passed | Throttle mechanical adjustment. No TPS reset after throttle body/ECM replacement. Damaged throttle body | Check throttle plate movement. Check idle stop for wear. Check throttle position sensor angle at idle, expected value 1-4.5 degrees Perform THROTTLE POSITION SENSOR RESET in B.U.D.S. with throttle grip accelerator not activated since at least 30 seconds. Refer to the SERVICE MANUAL for more details. |
| P1615 | ECM | Electronic throttle control (ETC) position deviation fault | Throttle mechanical adjustment. No TPS reset after throttle body/ECM replacement. | Check throttle plate movement. Check idle stop for wear. Check throttle position sensor angle at idle, expected value 1-4.5 degrees Perform THROTTLE POSITION SENSOR RESET in B.U.D.S. with throttle grip accelerator not activated since at least 30 seconds. Refer to the SERVICE MANUAL for more details. |
| P1616 | ECM | Electronic throttle control (ETC) check of limp-home position failed | Throttle mechanical stop. No TPS reset after throttle body/ECM replacement. | Check throttle plate movement. Check idle stop for wear. Check throttle position sensor angle at idle, expected value 1-4.5 degrees Perform THROTTLE POSITION SENSOR RESET in B.U.D.S. with throttle grip accelerator not activated since at least 30 seconds. Refer to the SERVICE MANUAL for more details. |
| P1619 | ECM | TPS adaptation failure | Wrong throttle body mechanical position during reset of closed TPS or no TPS reset after ECM replacement. | Check idle stop for wear. Perform THROTTLE POSITION SENSOR RESET in B.U.D.S. with throttle grip accelerator not activated since at least 30 seconds. |
| P1620 | ECM | TPS adaptation failure | Wrong throttle body mechanical position during reset of closed TPS or no TPS reset after ECM replacement. | Check idle stop for wear. Perform THROTTLE POSITION SENSOR RESET in B.U.D.S. with throttle grip accelerator not activated since at least 30 seconds. |

| PCODE | MODULE | DESCRIPTION | CAUSE | ACTION |
|---|---|---|---|---|
| P1621 | ECM | TPS adaptation cancelled lower mechanical stop failed | Throttle mechanical stop. No TPS reset after throttle body/ECM replacement. | Check idle stop for wear. Ensure throttle plate is against throttle stop. Check throttle Position sensor angle at idle. Perform THROTTLE POSITION SENSOR RESET in B.U.D.S. with throttle grip accelerator not activated since at least 30 seconds. Refer to the SERVICE MANUAL for more details. |
| P1622 | ECM | TPS adaptation failed | Throttle mechanical stop. No TPS reset after throttle body/ECM replacement. | Check idle stop for wear. Check throttle position sensor angle at idle. Perform THROTTLE POSITION SENSOR RESET in B.U.D.S. with throttle grip accelerator not activated since at least 30 seconds. Refer to the SERVICE MANUAL for more details. |
| P1672 | ECM | Accessories relay circuit shorted to battery + | Damaged relay, damaged circuit wires, damaged connector or damaged ECM output pins. | Check fuse. Disconnect lighting relay. Measure voltage between harness connector FB-C6 and ground (expected value: 11 to 13 volts). Measure voltage between harness connector FB-C5 and ground (expected value: 11 to 13 volts). Measure resistance from harness connector: ECMB-J2 to FB-D5 (expected value: < 2 ohms). With the engine turned off measure voltage between FB-D5 and ground (expected value: 11 to 13 volts). With the engine turned on measure voltage between FB-D5 and ground (expected value: close to 0 volts). Measure resistance between terminals 85 and 86 on the 2 relays (expected value: 70 to 90 ohms). |

| PCODE | MODULE | DESCRIPTION | CAUSE | ACTION |
|---|---|---|---|---|
| P1673 | ECM | Accessories relay circuit shorted to ground or open circuit | Blown fuse, damaged or disconnected relay, damaged circuit wires, damaged connectors or damaged ECM output pins. | Check fuse. Disconnect lighting relay. Measure voltage between harness connector FB-C6 and ground (expected value: 11 to 13 volts). Measure voltage between harness connector FB-C5 and ground (expected value: 11 to 13 volts). Measure resistance from harness connector: ECMB-J2 to FB-D5 (expected value: < 2 ohms). With the engine turned off measure voltage between FB-D5 and ground (expected value: 11 to 13 volts). With the engine turned on measure voltage between FB-D5 and ground (expected value: close to 0 volts). Measure resistance between terminals 85 and 86 on the 2 relays (expected value: 70 to 90 ohms). |
| P1674 | ECM | Accessories relay circuit | Blown fuse, damaged or disconnected relay, damaged circuit wires, damaged connectors or damaged ECM output pins. | Check fuse. Disconnect lighting relay. Measure voltage between harness connector FB-C6 and ground (expected value: 11 to 13 volts). Measure voltage between harness connector FB-C5 and ground (expected value: 11 to 13 volts). Measure resistance from harness connector: ECMB-J2 to FB-D5 (expected value: < 2 ohms). With the engine turned off measure voltage between FB-D5 and ground (expected value: 11 to 13 volts). With the engine turned on measure voltage between FB-D5 and ground (expected value: close to 0 volts). Measure resistance between terminals 85 and 86 on the 2 relays (expected value: 70 to 90 ohms). |
| P16C0 | ECM | ECU ADC plausibility check | Monitoring plausibility check failed. | Check for ECM fault. |
| P16C1 | ECM | ECU ADC test failed | Monitoring plausibility check failed. | Check for ECM fault. |

| PCODE | MODULE | DESCRIPTION | CAUSE | ACTION |
|---|---|---|---|---|
| P16C2 | ECM | ECU monitoring error | Monitoring plausibility check failed. | Check for ECM fault. |
| P16C3 | ECM | Throttle Accelerator Sensors (TAS) monitoring check fault | Monitoring plausibility check failed. | Check for ECM fault. |
| P16C4 | ECM | Engine speed monitoring check fault | Monitoring plausibility check failed. | Check for ECM fault. |
| P16C5 | ECM | Safety fuel cut-off activated monitoring check level 1 | Monitoring plausibility check failed. | Check for ECM fault. |
| P16C6 | ECM | Safety fuel cut-off activated monitoring check level 2 | Monitoring plausibility check failed. | Check for ECM fault. |
| P16C7 | ECM | Throttle valve plausibility check failed | Monitoring plausibility check failed. | Check for ECM fault. |
| P16C8 | ECM | Permitted throttle valve position monitoring check exceeded | Monitoring plausibility check failed. | Check for ECM fault. |
| P16C9 | ECM | function monitoring: monitoring of the emergency switch in level 2 (DFC_MoFEmgcySwOff) | Monitoring plausibility check failed. | Check for ECM fault. |
| P1790 | ECM | Driving mode selector switch | Driving mode selector switch has the up and down selection pressed at the same time | Check for a short between ECMB-D3 or ECO-A with ECM-A1 or ECO-B Check for a short between ECMB-E3 or ECO-C with ECM-A1 or ECO-B |
| P20EB | ECM | Main relay de-energized too late or sticking | Damaged circuit wires Damaged connectors Damaged ECM output pins Damaged main relay | Disconnect main relay. Measure resistance between terminals 85 and 86 on relay (expected value: 70 to 90 ohms). Measure resistance between terminals 30 and 87 on relay (expected value: open circuit). Disconnect relay and measure resistance between terminals FB-A4 and ground (expected value: open circuit). |

| PCODE | MODULE | DESCRIPTION | CAUSE | ACTION |
|---|---|---|---|---|
| P212C | ECM | Throttle position sensor #2 voltage too low. | Low voltage or short to ground on circuit wire ETC-4.<br>No 3.3 volts supply on ETC-6.<br>ETC-1 is shorted to ground<br>Damaged sensor. | Make sure the TPS connector is fully inserted.<br>Reset TPS postion.<br>Measure voltage between harness connector ETC-6 and ETC-2 with the vehicle turned on (expected value: 3.3 volts)<br>Check continuity between harness connector ETC-4 and ECMA-K3<br>Check continuity between harness connector ETC-6 and ECMA-K4<br>Check continuity between harness connector ETC-2 and ECMA-A2<br>Check for a short between ETC-4 and a supply |
| P212D | ECM | Throttle position sensor #2 voltage too high. | Voltage on circuit wire ETC-4 too high.<br>Circuit wire ETC-4 shorted to a supply.<br>Circuit wire ETC-2 is open. | Make sure the TPS connector is fully inserted.<br>Reset TPS postion.<br>Measure voltage between harness connector ETC-6 and ETC-2 with the vehicle turned on (expected value: 3.3 volts)<br>Check continuity between harness connector ETC-4 and ECMA-K3<br>Check continuity between harness connector ETC-6 and ECMA-K4<br>Check continuity between harness connector ETC-2 and ECMA-A2<br>Check for a short between ETC-4 and a supply |
| P2279 | ECM | Air leak from intake plenum | Cracked plenum<br>Leak in air intake system.<br>TPS learning position not done correctly.<br>MAP Sensor problem.<br>Throttle body air leakage. | Reset TPS postion.<br>Check for faulty Air Pressure Sensor.<br>Check for faulty TPS.<br>Check for cracked plenum.<br>Check for leak on the throttle body |
| P2299 | ECM | Throttle and break paddle are used at the same time | | |

| PCODE | MODULE | DESCRIPTION | CAUSE | ACTION |
|---|---|---|---|---|
| P2621 | ECM | Throttle position sensor #1 voltage too low. | Low voltage or short to ground on circuit wire ETC-1. No 3.3 volts supply on ETC-6. ETC-1 is shorted to ground Damaged sensor. | Make sure the TPS connector is fully inserted. Reset TPS postion. Measure voltage between harness connector ETC-6 and ETC-2 with the vehicle turned on (expected value: 3.3 volts) Check continuity between harness connector ETC-1 and ECMA-F3 Check continuity between harness connector ETC-6 and ECMA-K4 Check continuity between harness connector ETC-2 and ECMA-A2 Check for a short between ETC-1 and a supply |
| P2622 | ECM | Throttle position sensor #1 voltage too high. | Voltage on circuit wire ETC-1 too high. Circuit wire ETC-1 shorted to a supply. Circuit wire ETC-2 is open. | Make sure the TPS connector is fully inserted. Reset TPS postion. Measure voltage between harness connector ETC-6 and ETC-2 with the vehicle turned on (expected value: 3.3 volts) Check continuity between harness connector ETC-1 and ECMA-F3 Check continuity between harness connector ETC-6 and ECMA-K4 Check continuity between harness connector ETC-2 and ECMA-A2 Check for a short between ETC-1 and a supply |
| U0167 | ECM | No communication with DESS key. | Damaged circuit wires, damaged or disconnected DESS post, damaged DESS key. | Measure voltage between harness connector RFID-D and ground (expected value: 11 to 13 volts). Check continuity betweem hesness connector RFID-A and ECMB-F2 Check continuity betweem hesness connector RFID-B and ECMB-E4 Check continuity betweem hesness connector RFID-C and ECMB-B2 |

Midwest Manuals
Green Manuals
Paperless Manuals For a Better Tomorrow www.green-manuals.com
If you bought this manual from any other seller please leave them NEGATIVE feedback and notify me at bestshopmanuals@gmail.com

| PCODE | MODULE | DESCRIPTION | CAUSE | ACTION |
|---|---|---|---|---|
| U0400 | ECM | Variant coding failure software incompatibility | Faulty variant coding. Faulty programming. | Try updating the ECM. If the problem persists, make sure the ECM part number is correct for the model it is installed on. |
| U0426 | ECM | DESS key communication error. | Damaged circuit wires, damaged or disconnected DESS post, damaged DESS key. | Measure voltage between harness connector RFID-D and ground (expected value: 11 to 13 volts). Check continuity betweem hesness connector RFID-A and ECMB-F2 Check continuity betweem hesness connector RFID-B and ECMB-E4 Check continuity betweem hesness connector RFID-C and ECMB-B2 |
| U300A | ECM | State of the DESS key switch not plausible | Damaged wiring harness Damaged RFID module | Measure voltage between harness connector RFID-D and ground (expected value: 11 to 13 volts). Check continuity betweem hesness connector RFID-A and ECMB-F2 Check continuity betweem hesness connector RFID-B and ECMB-E4 Check continuity betweem hesness connector RFID-C and ECMB-B2 |

# INTELLIGENT THROTTLE CONTROL (iTC)

## GENERAL

### SYSTEM DESCRIPTION

The iTC is an electronic throttle control system that includes a cableless throttle accelerator sensor (TAS) located on the RH side of handlebar, an electronic throttle control (ETC) located on the throttle body and the engine control module (ECM). The iTC is often referred to as a "throttle by wire" system.

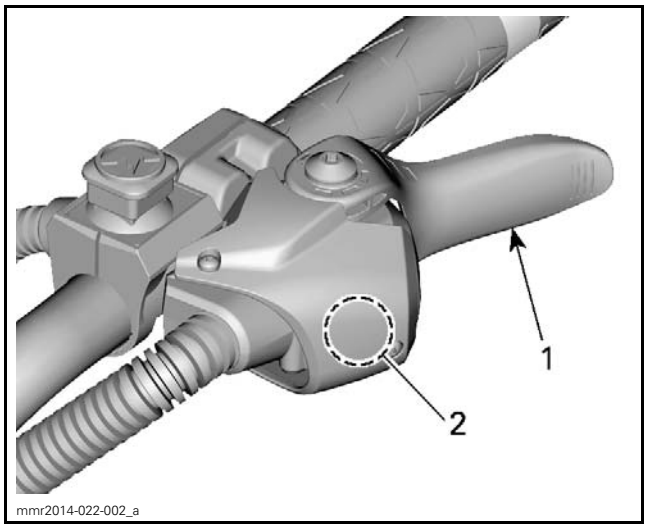


*TYPICAL*
1. *Throttle lever*
2. *Throttle accelerator sensor (TAS)*

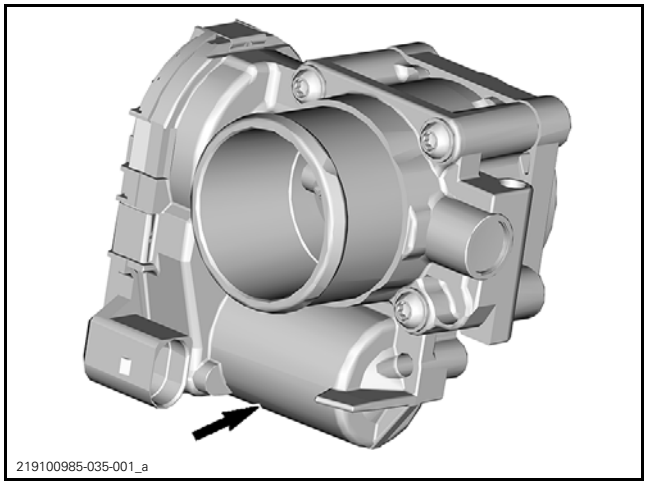


*THROTTLE ACTUATOR*

The ETC is equipped with a motor which controls the throttle opening.

The position of the throttle is measured with two potentiometers.

The ECM evaluates the throttle position with these two measures and controls the motor to reach the desired position.

These potentiometers are powered by the ECM with a voltage of 3.3 volts.

The signals given by these potentiometers vary from 0.33V to 2.97V for (SIGNAL 1) and 2.97V to 0.33V for (SIGNAL 2).

The relation between these two signals is (SIGNAL 1) + (SIGNAL 2) = 3.3V.

When ECM is woken up, throttle body will close completely to reinitialize. For both signals to be properly set at idle position.

If a problem occurs with any of these controls or signals then a diagnostic fault code will be generated.

#### Throttle Accelerator Sensor (TAS)

The throttle accelerator sensor (TAS) is a double hall effect sensor, which translates the position of the lever into two analog voltage and sends a signal to the ECM which is proportional to the throttle lever angle.

These Hall effect sensors are powered by the ECM with a voltage of 5.0 volts.

The signals given by these sensors vary from 0.6V to 2.97V for (SIGNAL 1) and 0.3V to 1.49V for (SIGNAL 2).

The relation between these two signals is (Signal 1) = (Signal 2) X 2.

If a problem occurs with any of these signals then a diagnostic fault code will be generated.

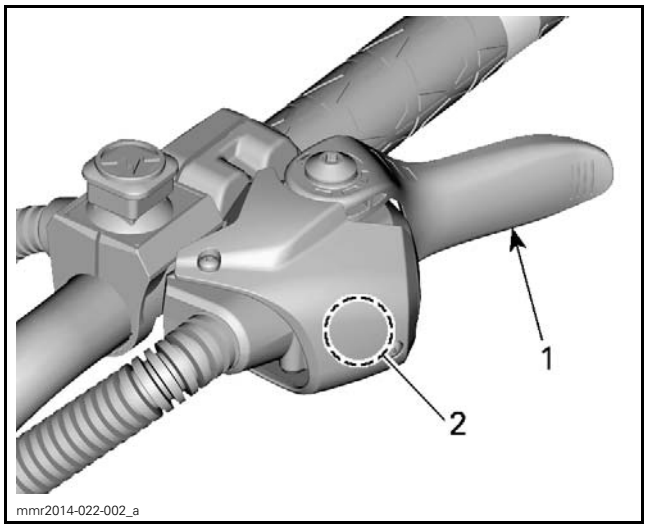


*1. Throttle lever*
*2. Throttle accelerator sensor (TAS)*

# PROCEDURES

## THROTTLE ACCELERATOR SENSOR (TAS)

### Testing the TAS Voltage

Disconnect TAS connector and measure voltage on the main harness side.

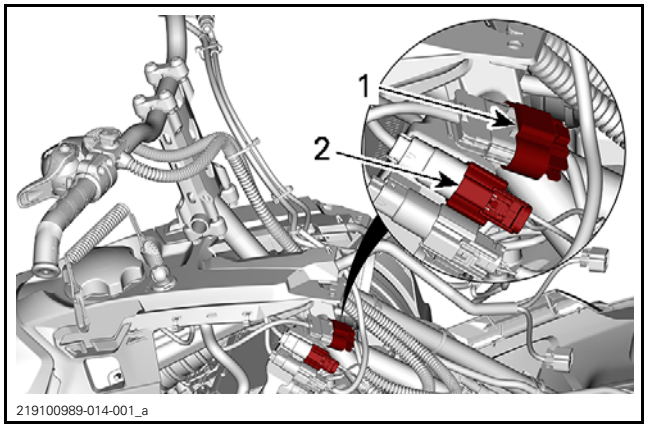


*1. Throttle lever connector*
*2. RH steering connector*

| TAS VOLTAGE TEST | | |
|---|---|---|
| PIN | | VOLTAGE |
| B | A | 5V |
| D | E | 5V |

If not 5V, ECM might be defective, oxidation might be present in circuits or terminals might not have good contact.

Reconnect TAS connector and backprobe to measure voltage.

If 2 for 1 relation is not met for signal 1 and 2 ratio, then TAS sensor is defective. Refer to *REPLACING THE TAS* in this subsection for replacement procedure.

### Replacing the TAS

1. Remove throttle lever housing from vehicle. Refer to *STEERING SYSTEM* subsection.
2. Replace the throttle lever with its housing.

### Testing the ETC Voltage

Disconnect ETC connector on throttle body and measure on the engine harness.

| ETC VOLTAGE TEST | | |
|---|---|---|
| PIN | | VOLTAGE |
| 6 | 2 | 3.3V |

If not 3.3V, ECM is might be defective, oxidation might be present in circuits or terminals might not have good contact.

Reconnect ETC connector and backprobe to measure voltage.

If (Signal 1) + (Signal 2) does not equal 3.3V, then the ETC is defective. Refer to *REPLACING THE ETC* in this subsection for replacement procedure.

### Replacing the ETC

The ETC comes assembled with the complete throttle body unit.

To replace throttle body assembly. Refer to *AIR INTAKE SYSTEM*.

Initialize the Throttle Position Sensor. Refer to *ELECTRONIC FUEL INJECTION* subsection for BUDS2 procedure.

## ECO MODE SWITCH

### Testing the ECO Mode Switch Operation

1. Unclip and raise switch.
2. Disconnect the ECO mode switch connectors.

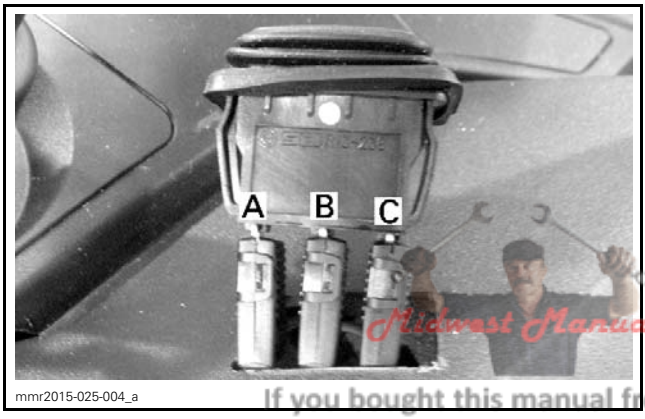

mmr2015-025-004_a

Midwest Manuals
Green Manuals
Paperless Manuals
For a Better Tomorrow
www.green-manuals.com
If you bought this manual from any other seller please leave them
NEGATIVE feedback and notify me at bestshopmanuals@gmail.com

1. *Driving mode switch*
2. *Driving mode switch connector*

3. Set multimeter to Ω.
4. Test the ECO mode switch for continuity as per following table.

| ECO MODE SWITCH CONTINUITY TEST | | |
|---|---|---|
| SWITCH POSITION | PIN | RESISTANCE |
| UP | B to A | 0 Ω |
| Released | B to A | Infinite (OL) |
| DOWN | B to C | 0 Ω |
| Released | B to C | Infinite (OL) |

# ELECTRONIC FUEL INJECTION (600 ACE_iTC)

## SERVICE TOOLS

| Description | Part Number | Page |
|---|---|---|
| ECM ADAPTER TOOL | 529 036 166 | 302–304, 319, 325–327 |
| FLUKE 115 MULTIMETER | 529 035 868 | 302–303, 310, 319, 322, 324–325, 327 |
| FUEL HOSE DISCONNECT TOOL | 529 036 037 | 312 |
| POWER INTERFACE | 515 177 223 | 309 |

## SERVICE TOOLS – OTHER SUPPLIER

| Description | Part Number | Page |
|---|---|---|
| FLUKE AUTOMOTIVE BACK PROBE PIN | TP40 | 322 |
| FLUKE SUREGRIP INSULATED TEST LEADS | TL224 | 322 |

## SERVICE PRODUCTS

| Description | Part Number | Page |
|---|---|---|
| DIELECTRIC GREASE | 293 550 004 | 323 |

# GENERAL

**⚠ WARNING**

When electrically disconnecting or removing the throttle body from the intake manifold, always remove the tether cord from the engine cut-off switch and disconnect the battery.

**⚠ WARNING**

Always disconnect battery prior to working on the fuel system. Always disconnect battery exactly in the specified order, BLACK (-) cable first. Electrical connections should be disconnected prior to disconnecting fuel lines.

**⚠ WARNING**

Fuel is flammable and explosive under certain conditions. Wear safety glasses and work in a well ventilated area. Do not smoke or allow open flames or sparks in the vicinity.

**⚠ WARNING**

Proceed with care and use appropriate safety equipment when working on the fuel system. Wipe off any fuel spillage in the engine compartment. Do not allow fuel to spill on hot engine parts and/or on electrical connectors.

Cover the fuel line connection with an absorbent shop rag before disconnecting them. Slowly disconnect the fuel hose to minimize spilling.

**⚠ WARNING**

Replace any damaged, leaking or deteriorated fuel lines or connections. After working on the fuel system, always pressurize the fuel system and check for fuel leaks. Refer to *FUEL SYSTEM PRESSURIZATION* in *FUEL TANK AND FUEL PUMP* subsection.

## SYSTEM DESCRIPTION

The electronic fuel injection system (EFI) is comprised of various sensors used for detecting ongoing operating conditions of the engine and vehicle, and includes all the components that perform the required adjustments to the engine.

### Electrical System

#### ECM (Electronic Control Module)

The ECM controls the engine operation and the vehicule power management. To control the engine, the ECM reads the inputs from the sensors which it compares to predetermined parameters stored in the ECM (fuel and ignition maps), makes computations, and activates the outputs accordingly (injectors, ignition coils etc.).

#### EFI Sensors

To control the injection system, the engine management uses input signals from the following sensors:

- Camshaft position sensor (CAPS)
- Crankshaft position sensor (CPS)
- Manifold absolute pressure and temperature sensor (MAPTS)
- Throttle position sensor (TPS) which is integrated to the throttle body (Electronic Throttle Control (ETC))
- Throttle accelerator sensor (TAS).
- Coolant Temperature Sensor (CTS)

### Air Intake System

#### Air Filter

Air flows through a mesh screen filter in the air intake silencer mounted over the engine. The mesh filter prevents snow from being drawn into the engine.

Air is then drawn in through the throttle body, the air intake manifold and into the engine.

Manifold absolute pressure and temperature are measured in the intake manifold.

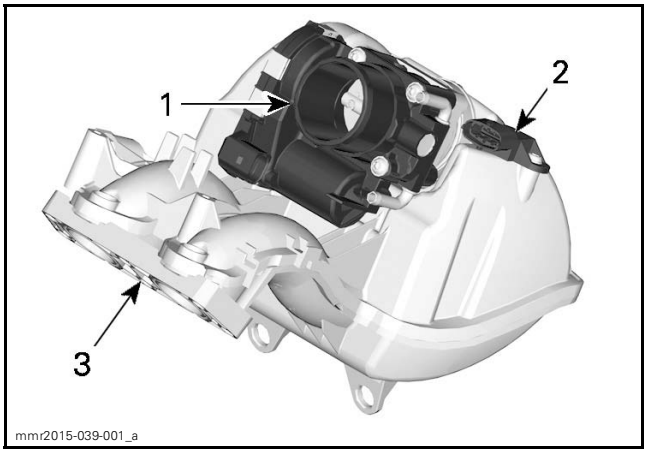


1. *Throttle body (Electronic Throttle Control (ETC))*
2. *Manifold absolute pressure and temperature sensor (MAPTS)*
3. *Intake manifold*

### Throttle Body ((ETC) Electronic Throttle Control)

Air for combustion is drawn in by the engine. The air flows through the throttle body (ETC) and is controlled by a throttle plate.

The Electronic Throttle Control (ETC) is a heated single 46 mm throttle body with integrated dual throttle position sensors (TPS) and electric throttle actuator (ETA) and is mounted on the intake manifold.

The ETA allows the ECM to electronically control the throttle plate opening which regulates the amount of air that enters the engine, and therefore engine speed.

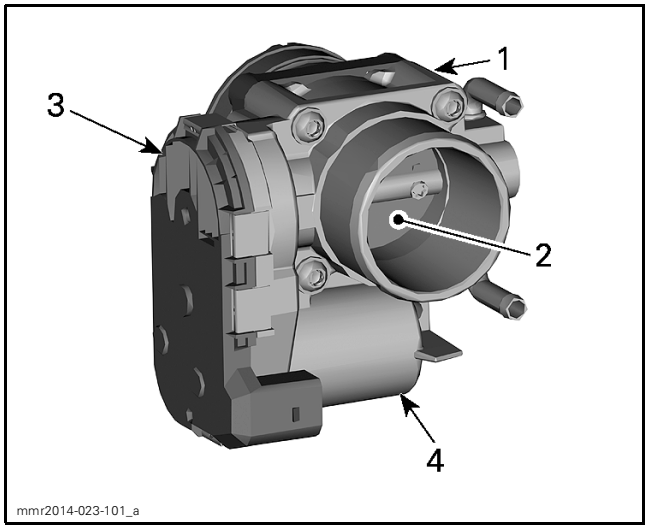


*ELECTRONIC THROTTLE CONTROL (ETC)*

1. *Throttle body*
2. *Throttle plate*
3. *Dual Throttle Position Sensor (TPS)*
4. *Electric throttle actuator (ETA) (electric motor)*

Engine coolant flows through the throttle body (ETC) to prevent potential freezing of the throttle plate.

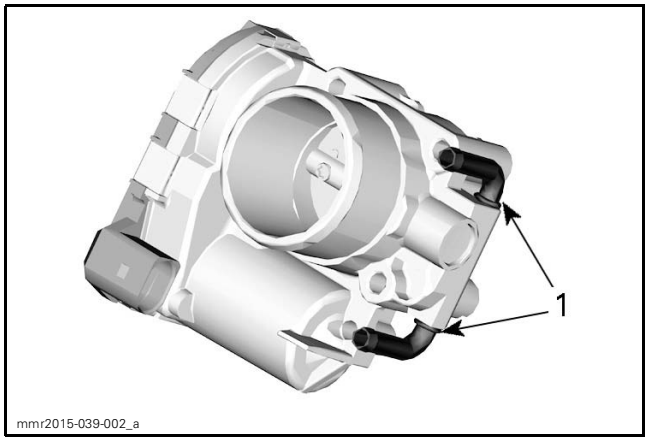


1. *Coolant-heated lines*

## Fuel System

### Fuel Rail

A fuel rail is mounted on the intake manifold. The fuel rail, which is used to secure the injectors to the manifold, also provides to the injectors the fuel pressure that it receives from the fuel pump.

The fuel pressure applied to the fuel rail is regulated by the fuel pressure regulator located in the fuel pump module.

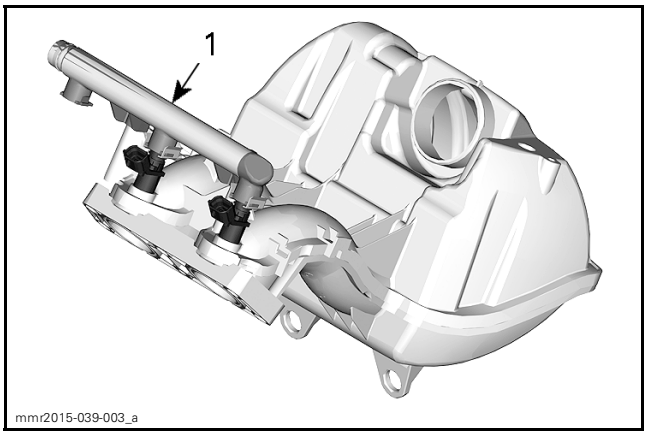


1. *Fuel rail*

### Fuel Injectors

Three fuel injectors are used to inject fuel into the intake ports of the cylinder head. One injector is used per cylinder.

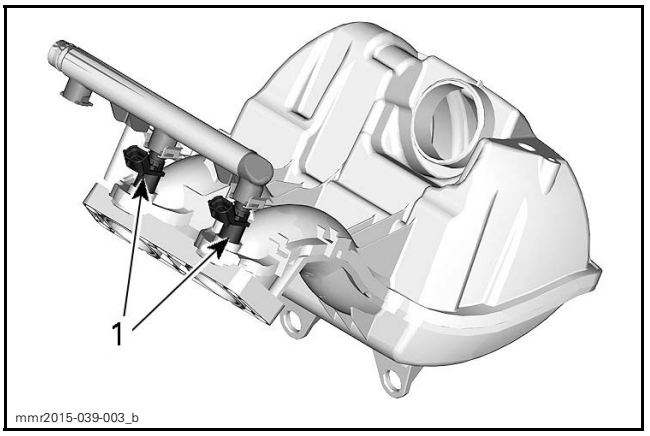


1. *Fuel injectors*

Fuel is injected in accordance with injection signals received from the ECM.

### Fuel Pump

An electric fuel pump with an integrated pressure regulator and fuel system filters is used. For more details on the fuel pump unit, refer to *FUEL TANK AND FUEL PUMP* subsection.

# ADJUSTMENT

## IDLE SPEED

Idle speed is not adjustable. The EMS (Engine Management System) controls the idle speed of the engine through the iTC system by controlling throttle plate opening using the ETA (electric throttle actuator).

The vehicle multifunction gauge can provide a readout of the engine's idle RPM.

Indicated engine RPM may be verified using the applicable B.U.D.S. software version, refer to *COMMUNICATION TOOLS AND B.U.D.S.* subsection.

In B.U.D.S., select the following:

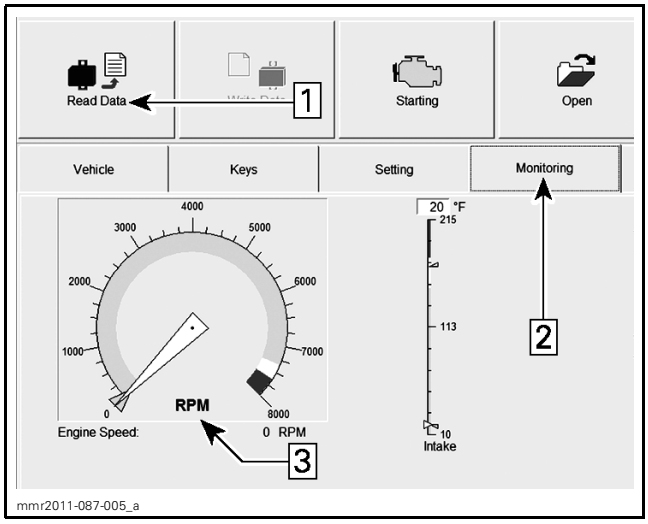


*VERIFYING ENGINE RPM USING B.U.D.S.*
*Step 1: Click on the* **Read Data button**
*Step 2: Select the* **Monitoring** *page tab*
*Step 3: Read the engine* **RPM** *indication*

NOTE: The gauge and B.U.D.S. use the same signal to provide the engine RPM indication.

# TROUBLESHOOTING

## DIAGNOSTIC TIPS

Engine problems are not necessarily related to the fuel injection system.

It is important to ensure that the engine and propulsion system, fuel delivery and electrical systems are functioning normally.

For diagnostics purposes, use B.U.D.S. software. See *COMMUNICATION TOOLS AND B.U.D.S.* subsection.

After a problem has been solved, be sure to clear the fault(s) recorded in the ECM using the B.U.D.S. software.

**⚠ WARNING**

**Electrical actuators and electronic modules may be powered up as soon as the START/RER button is depressed. Always disconnect the battery prior to disconnecting any electrical or electronic parts.**

Never use a battery charger to temporarily substitute the battery as it may cause the ECM to function erratically, or not at all.

Check related-circuit fuse solidity and condition with an ohmmeter. A visual inspection could lead to a false diagnosis.

### Poor Idling

If poor idling is experienced, check the following:
– Poor quality fuel or water in the fuel
– Fault codes using B.U.D.S.
– Throttle body cleanliness
– Engine leaks or other mechanical problem.

### Electrical Related Problems

It is important to check the following in the electrical system:
– Battery voltage
– Fuses
– Ground connections
– Wiring and connectors.

Ensure that all electronic components are original BRP recommended components. Any modification to the wiring harness may lead to poor system operation or generate fault codes.

#### Electrical Connections

Pay particular attention to ensure that terminals and pins are not out of their connectors, corroded, or out of shape.

When probing terminals, pay attention not to deform the terminals as this could cause a loose or intermittent connection that would be difficult to troubleshoot.

NOTE: Do not apply dielectric grease or other lubricants on the ECM connectors.

# PROCEDURES

## ENGINE CONTROL MODULE (ECM)

NOTE: As a first troubleshooting step, always check for applicable fault codes using B.U.D.S. software.

### ECM Location

The ECM is located above the air intake manifold.

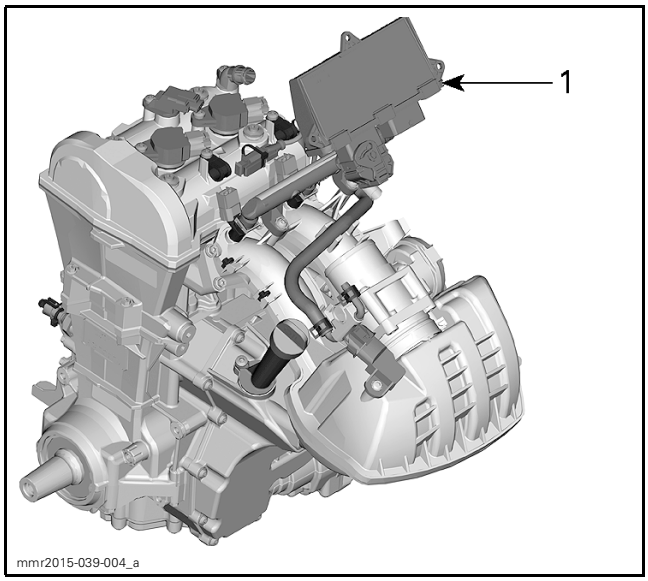


*1. ECM*

### ECM Connector Identification

There are 2 connectors connected to the ECM:

– Engine harness connected to ECM-A
– Vehicle system control harness connected to ECM-B.

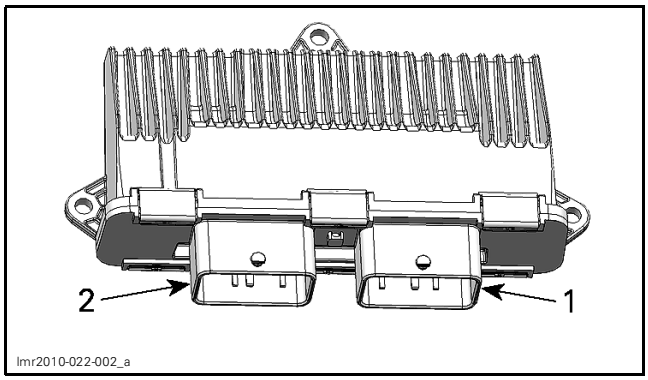


*ECM CONNECTOR IDENTIFICATION - COOLING FINS FACING OUT*
*1. Connector A*
*2. Connector B*

The ECM connectors have 48 pins.

NOTE: For connector information, cleaning and probing, refer to *CONNECTOR INFORMATION* subsection.

### ECM Connector Access

1. Refer to *BODY* subsection and remove the RH side panel.
2. Reach in above the gearbox, between the fuel tank and shift rod.

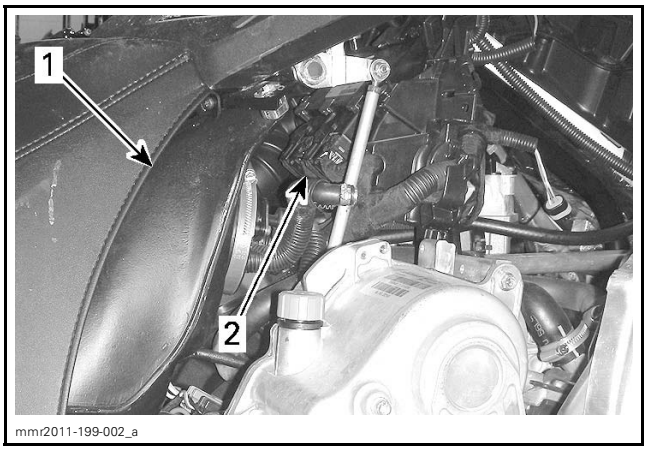


*ECM CONNECTOR ACCESS*
*1. Fuel tank*
*2. ECM connectors*

3. Cut the locking tie(s) that secure the ECM connector harnesses to the ECM support.

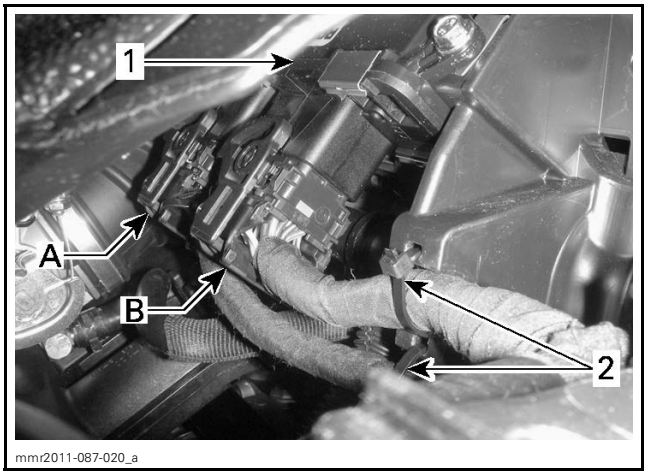


*ECM CONNECTOR ACCESS*
*1. ECM*
*2. Harness locking ties*
*A. ECM-A connector*
*B. ECM-B connector*

NOTE: The ECM is mounted with the cooling fins facing forward. Therefore, ECM A connector is on the LH side of the vehicle, and ECM B connector is on the RH side.

4. Disconnect the ECM connector(s) and pull them outwards for installation on the ECM adapter tool.

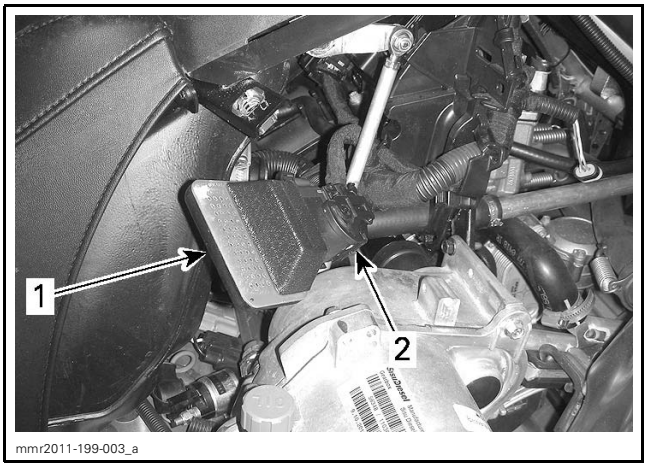


*1. ECM adapter tool*
*2. ECM connector*

## ECM Power Circuit Diagram

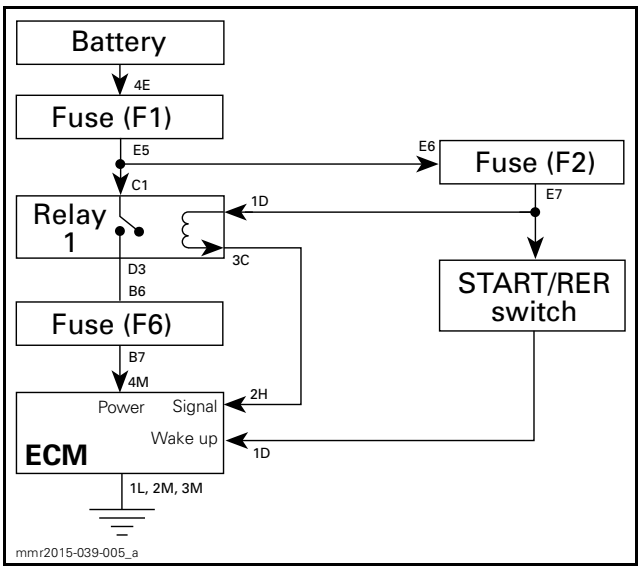


## ECM Power Circuit Validation

Briefly press START/RER button.

This should wake up the ECM . The ECM will then activate relay 1 for approximately 12 seconds after which it will turn off all power. If the tether cord is installed when the START/RER button is pressed, the power will stay on for approximately 40 seconds.

| QUICK INDICATION THAT ECM IS POWERED (ASSUMING THE OBSERVED COMPONENT IS WORKING) |
|---|
| Multifunction gauge comes ON. |
| Fuel pump turns on for approx. 2 seconds (if tether cord installed). |

If ECM does not turn on, check the following:
– Fuse F1, F2 and F6
– Battery voltage. Refer to *CHARGING SYSTEM*
– Relay R1
– START/RER switch. Refer to *STARTING SYSTEM*
– ECM power circuit wires and ground wires.

For testing of fuses and relay R1, refer to *POWER DISTRIBUTION* subsection.

NOTE: When relay 1 is not working, the EMS (engine management system) and the complete vehicle electrical system will not be powered.

## ECM Wake Up Circuit Test

1. Disconnect ECM-B connector, refer to *ECM CONNECTOR ACCESS* in this subsection.
2. Install ECM-B connector on the ECM adapter tool.

| REQUIRED TOOL | |
|---|---|
| ECM ADAPTER TOOL (P/N 529 036 166) | |

3. Use a multimeter and select Vdc.

| REQUIRED TOOL | |
|---|---|
| FLUKE 115 MULTIMETER (P/N 529 035 868) | |

4. While pressing START/RER button, read voltage as follows.

| ECM ADAPTER | BATTERY | READING |
|---|---|---|
| PIN | TERMINAL | VOLTAGE |
| 1D | Negative (Ground) | Battery Voltage |

If voltage is as per specification, refer to *ECM POWER CIRCUIT TEST*.

If voltage is out of specification:
– Test the START/RER switch, refer to *STARTING SYSTEM* subsection.
– If START/RER switch tests good, test wiring and connectors from battery to ECM. Refer to *WIRING DIAGRAM*.

## ECM Power Circuit Test

1. Connect ECM-B connector on the ECM adapter tool.

| REQUIRED TOOL | |
|---|---|
| ECM ADAPTER TOOL (P/N 529 036 166) | |

2. Install an appropriate fused jumper wire between the following terminals on the ECM adapter tool.

| JUMPER WIRE COORDINATES ON ECM ADAPTER | |
|---|---|
| 2H | 2M, 3M or 1L |

NOTE: When the jumper is installed, the multifunction gauge should come on.

If the multifunction gauge did not come on, check the following:
- Fuses F1, F2 and F6
- Relay R1
- Wiring between ECM-B contact 2H and fuse F2
- ECM ground circuit, refer to *CONTINUITY TEST OF ECM GROUND CIRCUITS* in this subsection.

For testing of fuses and relay R1, refer to *POWER DISTRIBUTION* subsection.

If gauge came on, carry on with the following step.

3. Remove fuse F1

4. Set multimeter to Ω.

| REQUIRED TOOL | |
|---|---|
| FLUKE 115 MULTIMETER (P/N 529 035 868) | |

5. Check resistance as follows.

| ECM ADAPTER | BATTERY | READING |
|---|---|---|
| PIN | TERMINAL | Ω |
| 4M | Negative (Ground) | Close to 0 Ω |

If voltage is not measured, check the wiring and connections between ECM and fuse F6, refer to the *WIRING DIAGRAM* subsection.

If all items mentioned in this test and in *ECM WAKE UP CIRCUIT TEST* tested good, try a new ECM.

## Continuity Test of ECM Ground Circuits

1. Connect ECM-B connector on the ECM adapter tool.

| REQUIRED TOOL | |
|---|---|
| ECM ADAPTER TOOL (P/N 529 036 166) | |

2. Set multimeter to Ω and probe adapter terminals as per following table.

| REQUIRED TOOL | |
|---|---|
| FLUKE 115 MULTIMETER (P/N 529 035 868) | |

| ECM ADAPTER | BATTERY | READING |
|---|---|---|
| PIN | TERMINAL | Ω |
| 1L | Negative (Ground) | Close to 0 Ω |
| 2M | | |
| 3M | | |

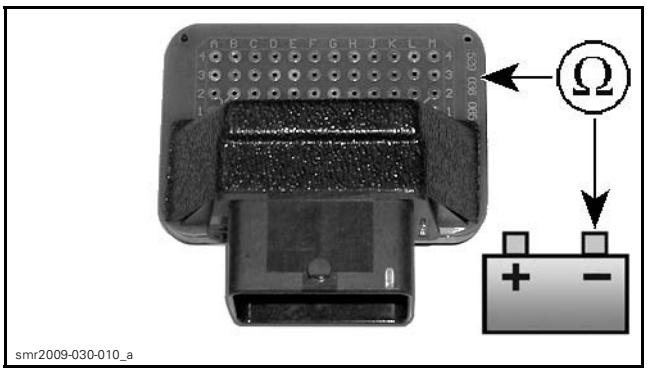


If any measurement is out of specification refer to *POWER DISTRIBUTION* subsection and check the following:
- Wiring and connections
- Engine ground
- Battery ground
- Frame ground.

## ECM CAN Line Test

CAN lines link the ECM, multifunction gauge and vehicle diagnostic connector.

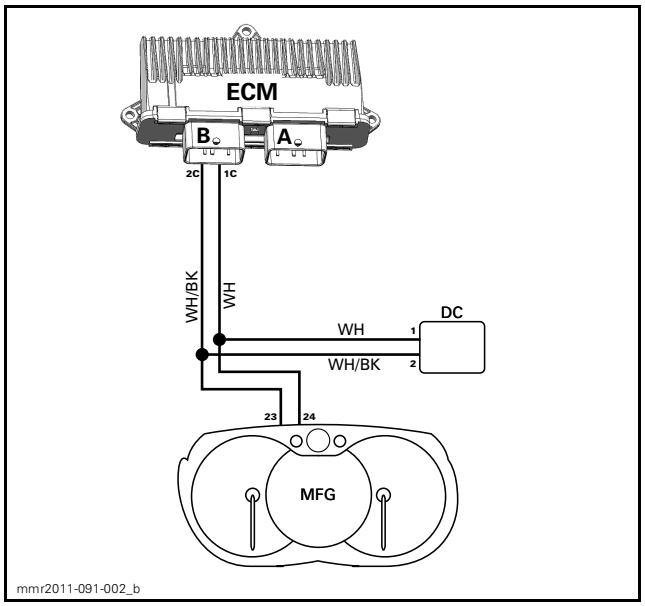


*WH: WHITE*
*WH/BK: WHITE/BLACK*
*MFG (multifunction gauge)*
*ECM (electronic control module)*
*DC (diagnostic connector)*

Test CAN wire continuity as follows.

1. Disconnect ECM connector "B".
2. Disconnect multifunction gauge connector. Refer to *LIGHTS, GAUGE AND ACCESSORIES* subsection.
3. Check wire resistance as follows.

| | |
|---|---|
| ECM ADAPTER TOOL (P/N 529 036 166) | |

| ECM ADAPTER | GAUGE CONNECTOR | MEASUREMENT |
|---|---|---|
| Pin 2C | Pin 23 | Close to 0 Ω |
| Pin 1C | Pin 24 | |

If continuity is out of specification, repair or replace wiring harness between ECM and multifunction gauge.

If continuity is as per specification, carry out the following test.

4. Disconnect vehicle diagnostic connector from its protective cap.
5. Read wire resistance as follows.

| DIAGNOSTIC CONNECTOR | GAUGE CONNECTOR | MEASUREMENT |
|---|---|---|
| Pin 2 | Pin 23 | Close to 0 Ω |
| Pin 1 | Pin 24 | |

If continuity is out of specification, repair or replace wiring harness between diagnostic connector and multifunction gauge.

If continuity is as per specification, CAN lines are functional.

Reconnect connectors and reinstall removed parts.

## ECM Removal

NOTE: If a new ECM is to be installed, first read the procedures in *ECM REPLACEMENT* in this subsection.

1. Disconnect battery cables.

**NOTICE** **Always disconnect the BLACK negative (–) battery cable first, then disconnect RED positive (+) cable.**

2. Refer to *BODY* subsection and remove the LH and RH side panels.
3. Remove the air intake silencer and headlight/gauge module as a unit, refer to *AIR INTAKE SYSTEM* subsection.
4. Disconnect both ECM connectors from ECM.
5. Remove ECM retaining screws and remove the ECM from its support.

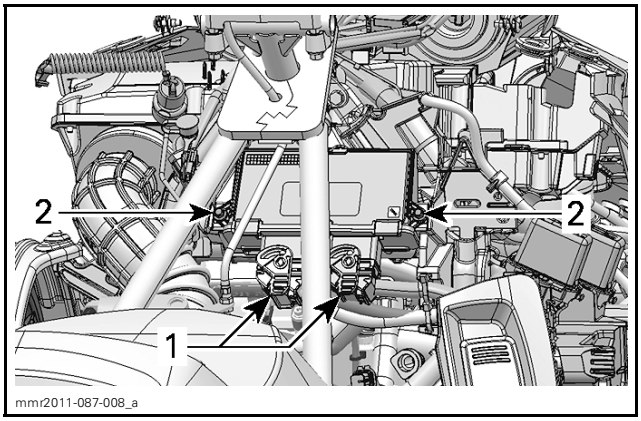


*TYPICAL - ECM REMOVAL*
*1. ECM connectors*
*2. ECM retaining screws*

## ECM Installation

1. Reverse removal procedure however, pay attention to the following.

| ECM SCREW TIGHTENING TORQUE |
|---|
| 2.5 N•m (22 lbf•**in**) |

2. Reconnect ECM connectors.
3. Reconnect battery cables.

**⚠ WARNING**

**Always reconnect the RED (+) battery cable first, then reconnect BLACK (–) cable.**

4. If a new ECM is installed, refer to *ECM REPLACEMENT* in this subsection.

***NOTICE*** **Always replace ECM by the same part number or by a BRP approved equivalent.**

## ECM Replacement

NOTE: Prior to replacing an ECM, ensure that all the recommendations in the general introduction of this subsection have been followed and all applicable testing procedures have been carried out.

When the ECM is replaced, data must be entered into the new ECM . Refer to *ECM DATA TRANSFER* further in this subsection.

## ECM Data Transfer

To transfer the original ECM recorded information to the new ECM, use the B.U.D.S. software and proceed as follows.

1. Connect the original ECM to vehicle.
2. In B.U.D.S., click the Read Data button to load the information from the original ECM.

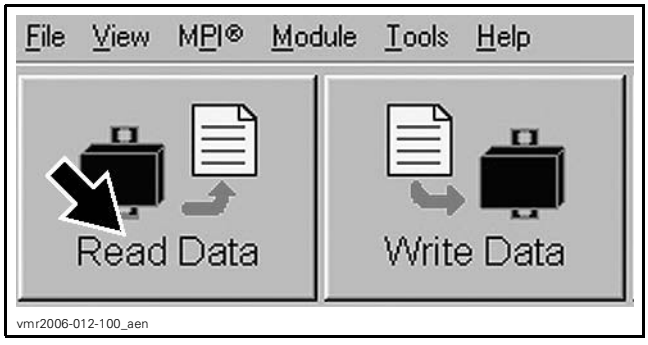


NOTE: Keep B.U.D.S. running while replacing ECMs. The data will remain stored in the PC computer as long as B.U.DS. is running.

3. Get the Data from the saved .mpem file.

   3.1 Click on the Open button.

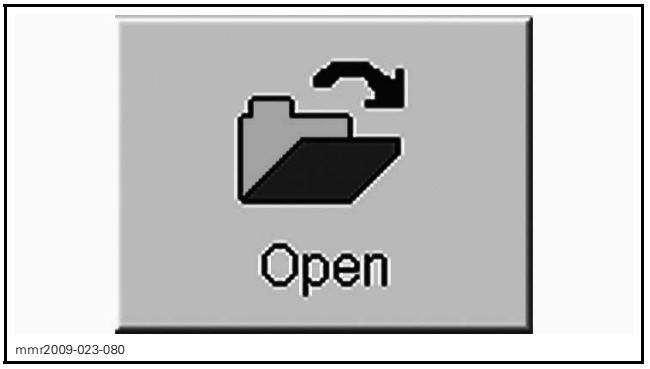


   3.2 Click once on the Folder Up button in the open box.

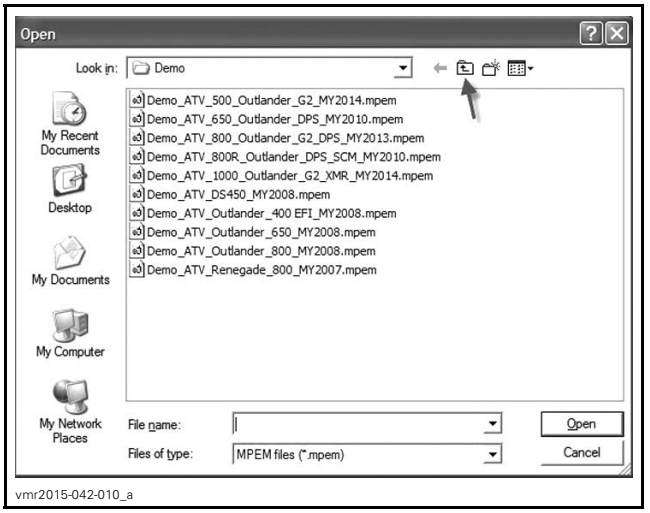


   3.3 Double click on the AutoSave folder.

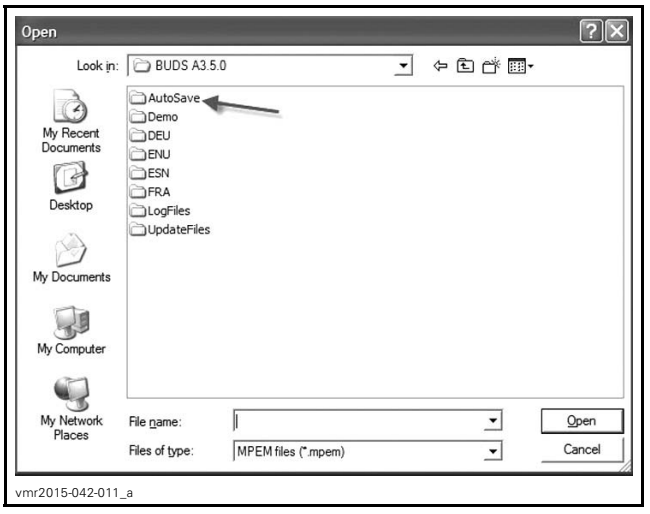


NOTE: You may have to go to another AutoSave folder from a previous version of B.U.D.S.

   3.4 Choose the latest file saved for this specific vehicle.

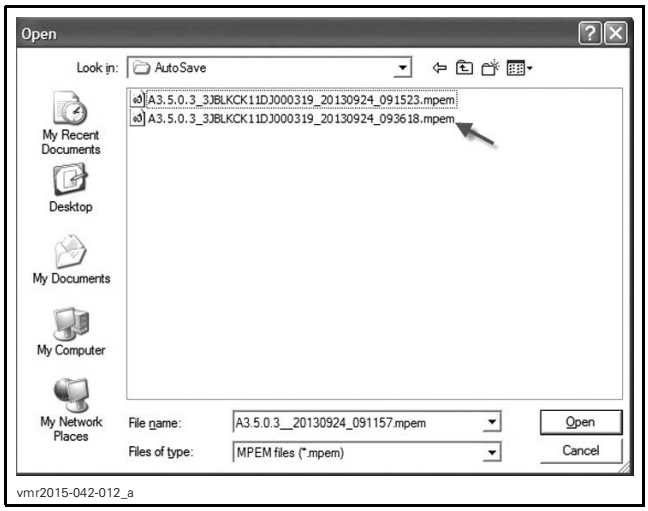

vmr2015-042-012_a

IMPORTANT: Ensure to use the file that specifically matches the vehicle you are servicing.

| NOTE: The file name structure is as follows: |
|---|
| BUDS version_VIN_date read (yyyymmdd)_hour read (hhmmss).mpem |
| Example:<br>**A3.5.0.3_3JBLKCK11DJ000319_20130924_093618.mpem**<br>B.U.D.S. version = A3.5.0.3<br>VIN = 3JBLKCK11DJ000319<br>Date file was read = 2013-09-24<br>Hour file was read = 09h 36m 18s |

4. Go to the Vehicle tab and record the following information.
   - Vehicle (V.I.N.) number
   - Engine number (without the leading "M")
   - Model number
   - Customer.

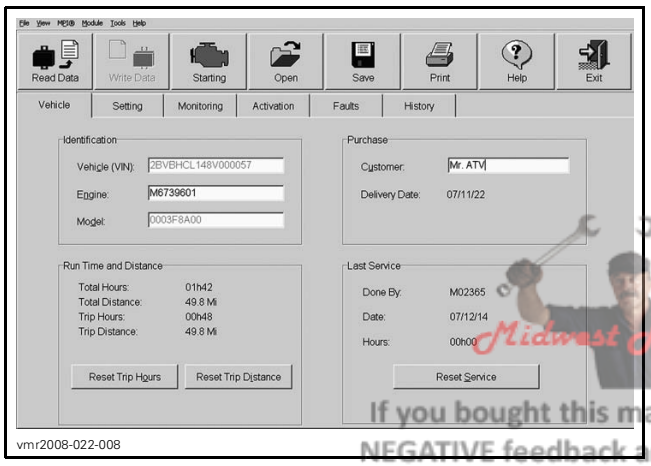

vmr2008-022-008

5. Remove the original ECM.
6. Install the new ECM.
7. In B.U.D.S., click the **Read Data** button to read the new ECM.

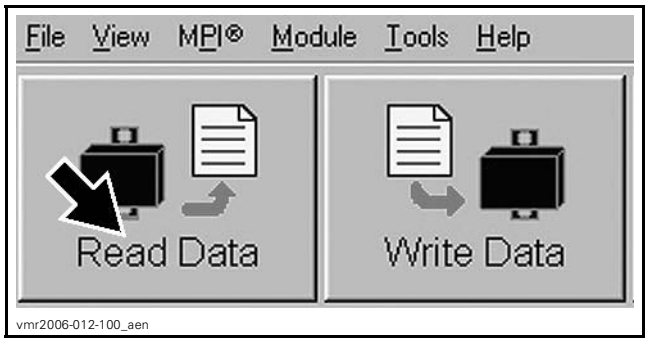

vmr2006-012-100_aen

8. Select the **Vehicle** tab and enter the information you recorded previously.
   - Vehicle serial number
   - Engine number (do not enter the "M" at the beginning of the engine number)
   - Enter model number.
   - Customer name.

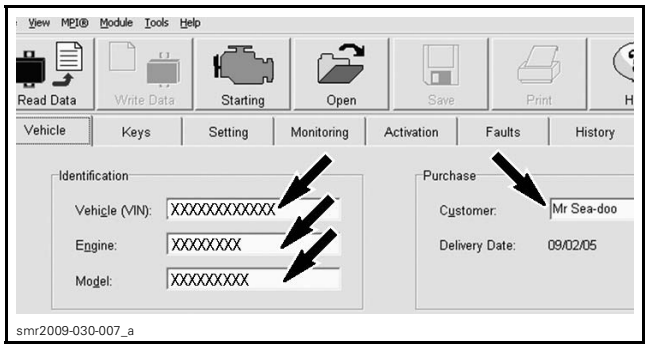

smr2009-030-007_a

*VEHICLE TAB*

9. Click on the following tabs:
   - **History**
   - **Part Replacement**
   - **Add Part in History**.
10. Enter the **old** ECM serial number in the Add Part In History window.

Midwest Manuals
Green Manuals
Paperless Manuals
For a Better Tomorrow
www.green-manuals.com
If you bought this manual from any other seller please leave them
NEGATIVE feedback and notify me at bestshopmanuals@gmail.com

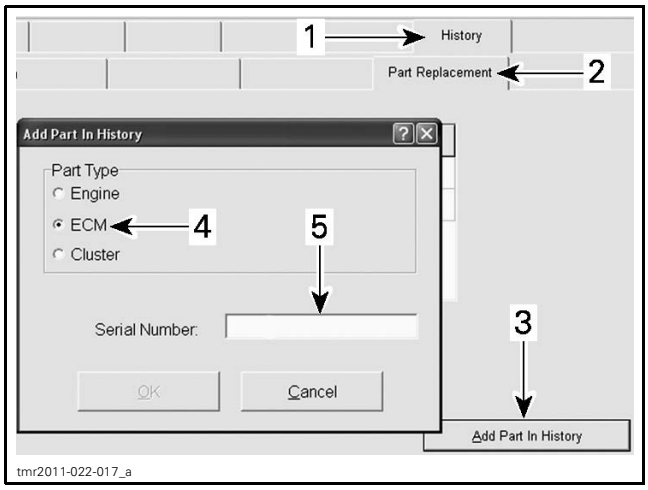


*ADDING PART IN HISTORY*
1. History *tab*
2. Part Replacement *tab*
3. Add part in history *button*
4. ECM *selection*
5. *Add ECM serial number here*

NOTE: The ECM serial number can be found on the ECM sticker that also identifies the part number.

11. Click on the OK button.
12. Click on the Write Data button.

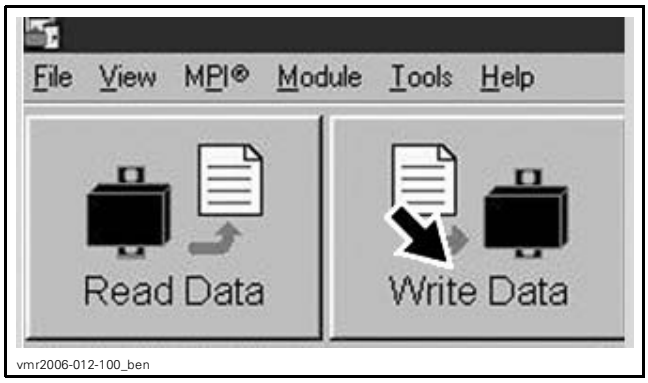


13. Perform the *CLOSED THROTTLE RESET (TPS)* procedure, refer to *THROTTLE POSITION SENSOR (TPS)* further in this subsection.
14. Program the tether cord cap (D.E.S.S. key(s)) into the new ECM, refer to *DIGITAL ENCODED SECURITY SYSTEM (D.E.S.S.)* subsection.
15. Set the gauge units of display. Refer to *LIGHTS, GAUGE AND ACCESSORIES* subsection.
16. Start the engine and ensure proper operation.
17. Reinstall any remaining removed parts.

# FUEL INJECTOR

## Fuel Injector Access

1. Refer to *BODY* subsection and remove both side body panels.
2. Refer to *AIR INTAKE SYSTEM* subsection and remove the following parts:
   – Air intake silencer and headlight/gauge module (as a unit)
   – Air intake hose from throttle body.

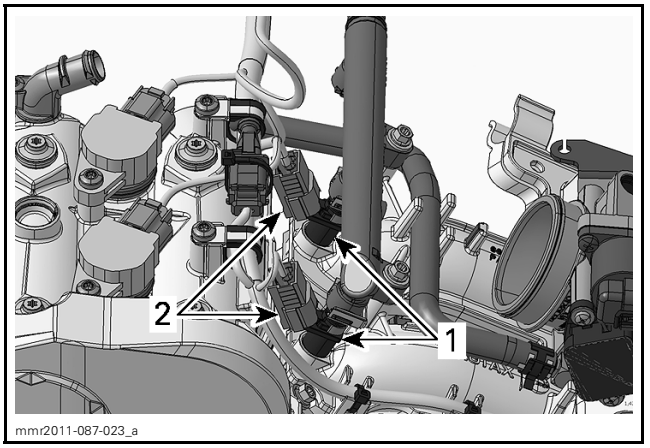


*TYPICAL*
1. *Fuel Injectors*
2. *Fuel Injector connectors*

3. If removing injectors, also disconnect the ECM connectors. Refer to *ECM CONNECTOR ACCESS* in this subsection.

## Fuel Injector Operation Test with B.U.D.S. (Dynamic)

1. Connect vehicle to B.U.D.S. software. Refer to *COMMUNICATION TOOLS AND B.U.D.S.*
2. Start engine.
3. In B.U.D.S., click the following:
   – Read Data button
   – Monitoring tab.
4. Using the B.U.D.S. software, shut down each engine cylinder one at a time by clicking on the button under the applicable cylinder.

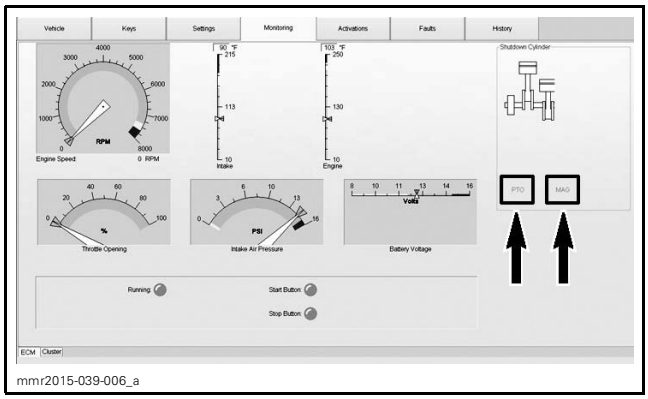


*MONITORING AND ECM TABS*
*Click on cylinder number to be tested*

If the engine RPM drops when clicking on a cylinder, the injector and the ignition of this cylinder are functioning normally.

If the engine RPM does not drop when clicking on a cylinder, this cylinder is not functioning properly. Check the following:

– Fuel injector operation. Refer to *FUEL INJECTOR OPERATION TEST WITH B.U.D.S. (STATIC)*.
– Spark plug and ignition coil. Refer to *IGNITION SYSTEM*.
– Engine condition.

## Fuel Injector Operation Test with B.U.D.S. (Static)

**NOTICE** **After fuel injector activation using B.U.D.S., always crank engine in drowned mode to ventilate engine and prevent a potential backfire due to fuel accumulation in the engine.**

1. Connect vehicle to B.U.D.S.. Refer to *COMMUNICATION TOOLS AND B.U.D.S.* subsection.
2. In B.U.D.S., click the **Read Data** button to read the new ECM.

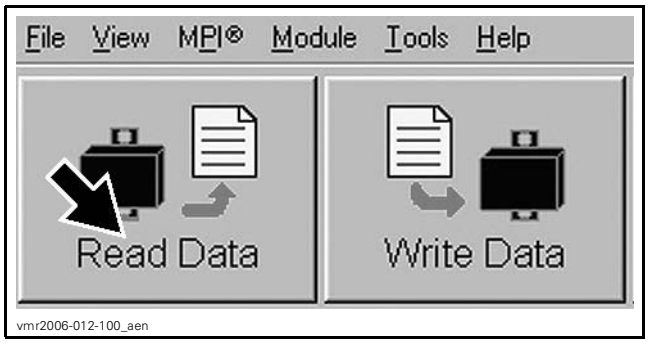


3. On the **Activation** page of B.U.D.S. software, energize the fuel injector to be tested.

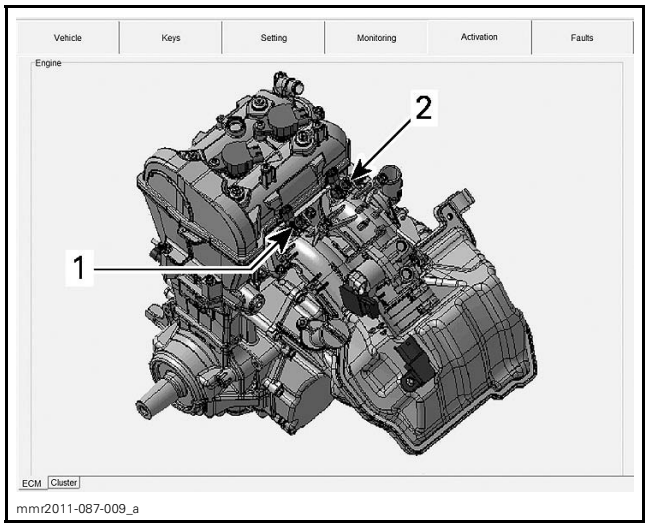


*INJECTOR ACTIVATION IN B.U.D.S.*
*1. Click on PTO injector to activate*
*2. Click on MAG injector to activate*

You should hear the injector functioning.

This will validate the injector mechanical and electrical operation.

If the injector does not function, carry out the *FUEL INJECTOR RESISTANCE TEST*.

## Fuel Injector Balance Test

**NOTICE** **After fuel injector activation using B.U.D.S., always crank engine in drowned mode to ventilate the engine of fuel.**

1. Install a fuel pressure gauge as described in *FUEL PUMP PRESSURE TEST* of *FUEL TANK AND FUEL PUMP* subsection.
2. Connect vehicle to B.U.D.S. Refer to *COMMUNICATION TOOLS AND B.U.D.S.* subsection.
3. In B.U.D.S., select the following:
   – **Read Data** button
   – **Activation** page tab.
4. In B.U.D.S., click on the **Fuel Pump** button to activate fuel pump.

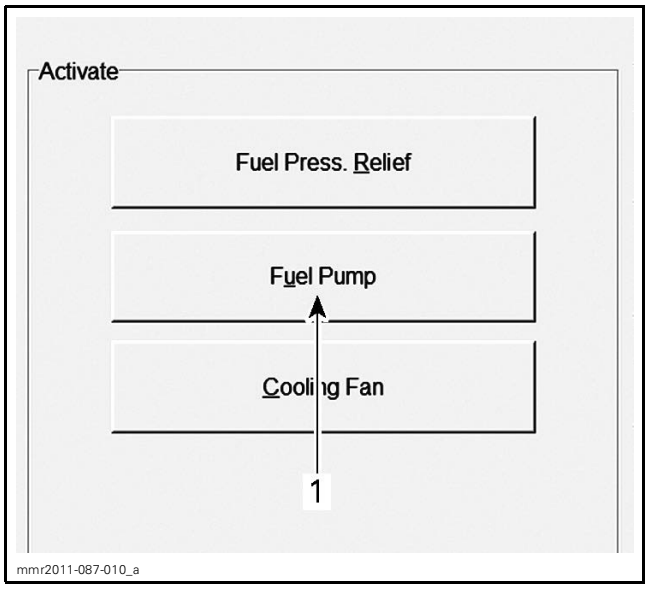


*1. Fuel Pump activation button*

5. Fuel pressure must be within specification. Refer to *FUEL TANK AND FUEL PUMP* subsection. Re-activate fuel pump as necessary.
6. In B.U.D.S., energize fuel injector **no. 1**.

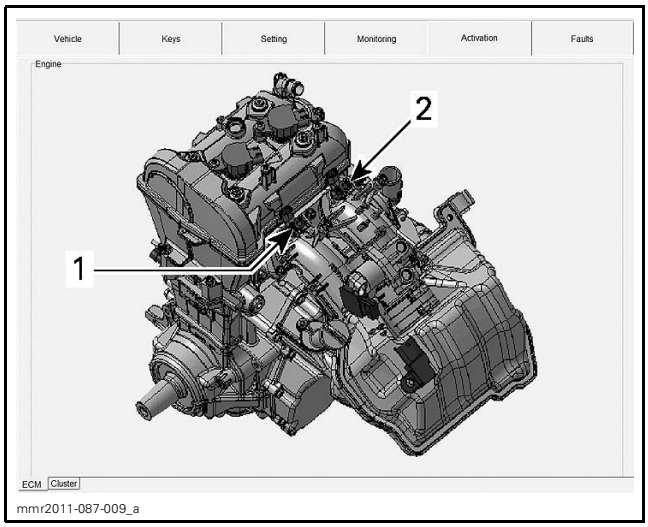


*INJECTOR ACTIVATION IN B.U.D.S.*
*1. Click on PTO injector to activate*
*2. Click on MAG injector to activate*

7. Record the fuel pressure drop for injector **no. 1**.
8. In B.U.D.S., click on the **Fuel Pump** button to activate fuel pump.
9. Repeat the procedure for fuel injector **no. 2** and record the pressure drop for each injector.
10. The maximum fuel pressure drop between injectors should not exceed the following specification:

| MAXIMUM FUEL PRESSURE DROP ALLOWED BETWEEN FUEL INJECTORS |
|---|
| 10 kPa (1.5 PSI) |

If the pressure drop between fuel injectors is greater than the specification, replace the injector with the least pressure drop, then repeat the test.

11. Using the valve on the fuel pressure gauge, release the pressure in the system (if so equipped).
12. Remove fuel pressure gauge and reinstall removed parts.
13. Set engine emergency shut off switch to OFF.
14. Crank engine in drowned mode (accelerator held all the way in) to ventilate the engine of the fuel that was injected during the test.

**⚠ WARNING**

**Always crank engine in drowned mode to ventilate all fuel that was injected during the test. Failure to do so may result in severe engine damage and injury.**

## Fuel Injector Leakage Test

### Test Setup

1. Ensure there is enough fuel in fuel tank.
2. Ensure fuel pressure from fuel pump is within specification. Refer to *FUEL TANK AND FUEL PUMP* subsection.

NOTE: Keep the pressure gauge installed for the leakage test.

3. Remove tether cord from engine cut-off switch.
4. Set engine emergency stop switch to STOP.

**⚠ WARNING**

**The engine emergency stop switch is set to STOP to prevent any spark in the engine compartment should the engine be cranked. Fuel vapors may ignite in presence of a spark creating a fire hazard.**

5. Disconnect the vehicle from B.U.D.S. by disconnecting the POWER INTERFACE (P/N 515 177 223) from the vehicle diagnostic connector.

515177223

6. Wait for vehicle electrical power to shut off; the multifunction gauge will turn off.
7. Remove fuel rail with injectors from engine however, **do not** disconnect fuel pump pressure hose from fuel rail. Refer to *FUEL INJECTORS* in this subsection.
8. Position fuel rail so that an appropriate container may be placed under the injectors to collect any fuel leakage.

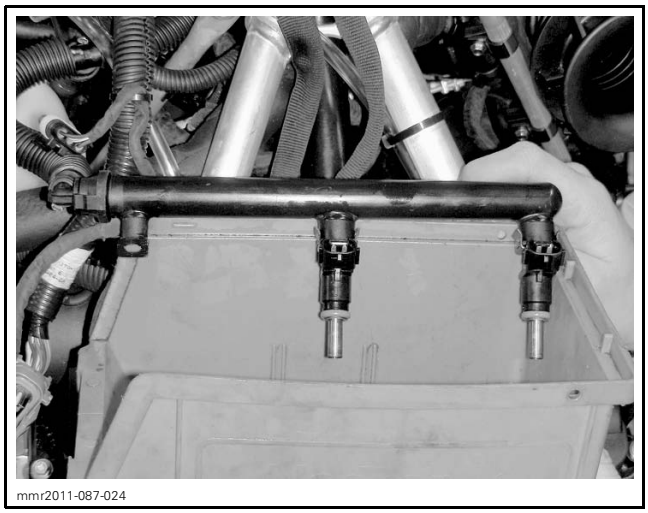
mmr2011-087-024

*INJECTOR LEAKAGE TEST SETUP*

9. Install tether cord on engine cut-off switch.
10. Connect vehicle to B.U.D.S. Refer to *COMMUNICATION TOOLS AND B.U.D.S.* subsection

### Leakage Test

1. In B.U.D.S., select the following:
   – **Activation** page tab
   – **ECM** page.
2. Click on the **Fuel Pump** button to activate fuel pump for a few seconds.

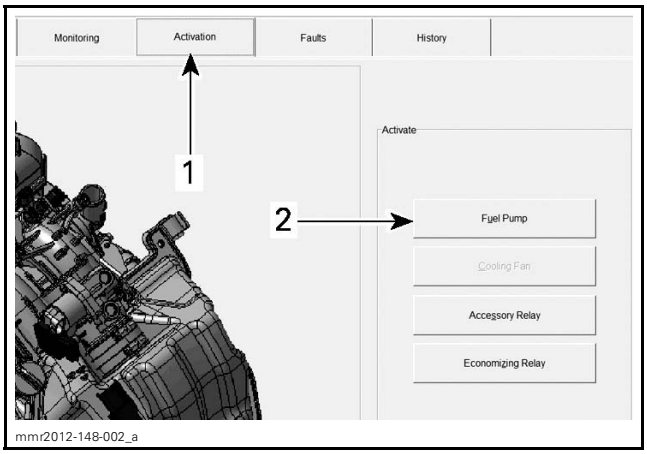

mmr2012-148-002_a

1. *ECM* **Activation** *page tab*
2. **Fuel Pump** *activation button*

3. Check for fuel leakage from the injector nozzles.
4. Monitor fuel pressure at fuel pressure gauge. If pressure drops below 372 kPa (54 PSI) during the test, re-activate fuel pump as necessary.

| FUEL INJECTOR LEAKAGE | |
|---|---|
| TEST DURATION | SPECIFICATION |
| 2 minutes | 1 drop per minute maximum |

If test is not within specification, replace the faulty fuel injector.

5. Properly reinstall fuel rail. Refer to *FUEL RAIL* in this subsection.
6. Reinstall remaining removed components.

**⚠ WARNING**

**Wipe up any spilled fuel.**

## Fuel Injector Resistance Test

1. Ensure vehicle electrical power is off, remove fuse F1.
2. Disconnect connector "A" from the ECM, refer to *ECM CONNECTOR ACCESS* in this subsection.
3. Remove cover from the front fuse box and locate fuse F5.
4. Check resistance value between fuse box and ECMA connector terminals as follows.

| REQUIRED TOOL | |
|---|---|
| FLUKE 115 MULTIMETER (P/N 529 035 868) | |

| INJECTOR | ECM | FUSE BOX | READING |
|---|---|---|---|
| CYLINDER | PIN | TERMINAL | Ω @ 20°C (68°F) |
| 1 | 1J | 5B | 12 ± 0.6 Ω |
| 2 | 1K | | |

If resistance value obtained is correct, carry out a *FUEL INJECTOR INPUT VOLTAGE TEST*.

If resistance value obtained is incorrect, repeat test at HIC connector located on front side of ECM support.

| INJECTOR | ECM | HIC | READING |
|---|---|---|---|
| CYLINDER | PIN | | Ω @ 20°C (68°F) |
| 1 | 1J | 1 | 12 ± 0.6 Ω |
| 2 | 1K | | |

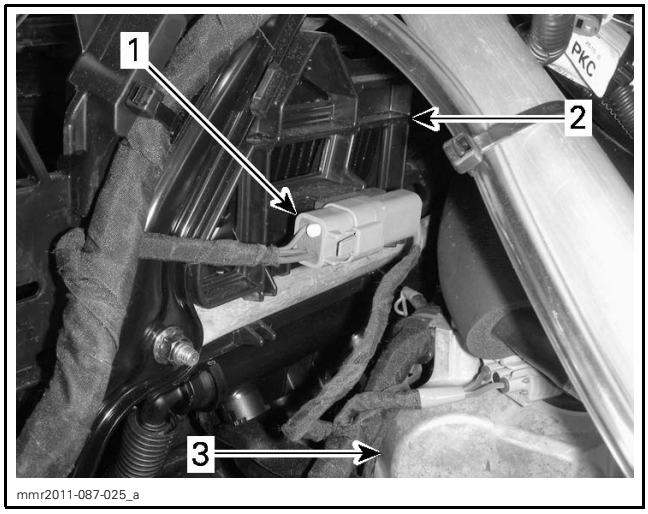


*HIC CONNECTOR LOCATION*
1. *HIC connector*
2. *ECM support*
3. *Engine valve cover*

If resistance value obtained is incorrect, remove injector connector and check resistance value between injector pins as follows. Refer to *FUEL INJECTOR ACCESS* in this subsection.

| INJECTOR | | READING |
|---|---|---|
| PIN | | Ω @ 20°C (68°F) |
| 1 | 2 | 12 ± 0.6 Ω |

If readings are out of specifications, replace injector.

## Fuel Injector Input Voltage Test

1. Ensure both ECM connectors are properly connected.
2. Ensure the HIC connector is properly connected.
3. Disconnect the fuel injector connector. Refer to *FUEL INJECTOR CONNECTOR ACCESS* in this subsection.

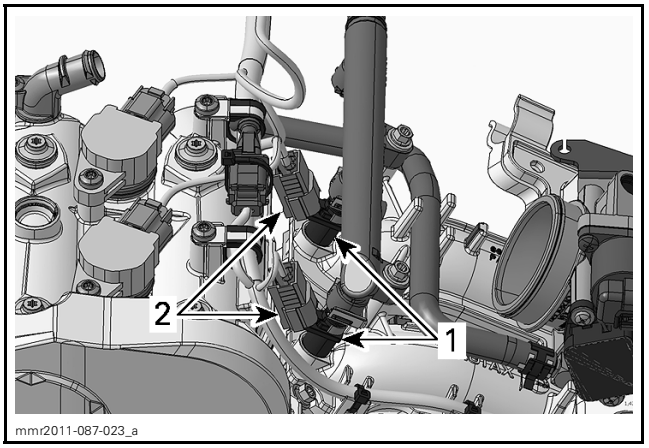


*TYPICAL*
1. *Fuel Injectors*
2. *Fuel Injector connectors*

NOTE: Press against tab underneath connector as illustrated to unlock it.

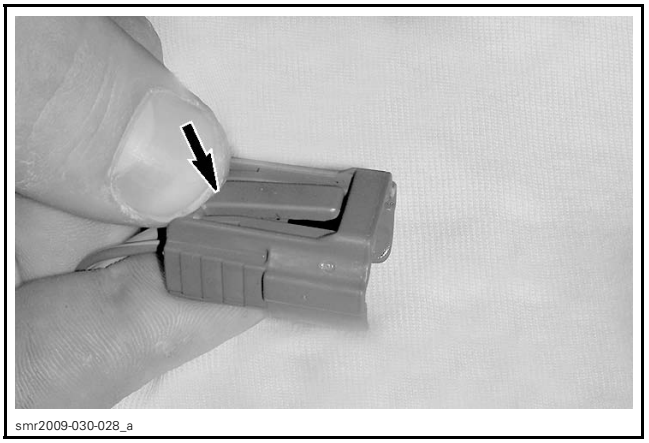


*PRESS HERE TO UNLOCK*

4. Ensure fuse F5 (HIC fuse) is properly installed.
5. Set engine emergency stop switch to STOP to prevent engine starting.
6. Install tether cord on engine cut-off switch.

NOTE: With tether cord installed on engine cut-off switch, vehicle electrical power will stay on for approximately 20 seconds.

7. Momentarily press the START/RER button to wake up the ECM.

NOTE: It is not necessary to activate the injector since it is continuously powered when the ECM is awake.

8. Use a multimeter and set it to Vdc. Read voltage.

| INJECTOR CYLINDER | INJECTOR WIRE | BATTERY TERMINAL | READING VOLTAGE |
|---|---|---|---|
| 1 | VIOLET/ GREEN | Battery Ground | Battery voltage |
| 2 | | | |

If injector input voltage is good, carry out the following:
– Circuit continuity test between injector and ECM, refer to *WIRING DIAGRAM* subsection.
– *FUEL INJECTOR SIGNAL TEST* further in this subsection.

If injector input voltage is not good, check the following:
– Fuse F5
– Circuit continuity between fuse F1 and injector. Refer to *POWER DISTRIBUTION* and *WIRING DIAGRAM* subsections.

## Fuel Injector Removal

1. Disconnect fuel pump electrical connector, refer to *FUEL TANK AND FUEL PUMP* subsection.
2. Start engine and let run until it runs out of fuel.
3. Disconnect the battery, refer to *CHARGING SYSTEM* subsection.

**⚠ WARNING**

**When removing or disconnecting the fuel injectors, always remove the tether cord from the engine cut-off switch and disconnect the battery.**

4. Remove parts required for access to the fuel rail and fuel injectors, refer to *FUEL INJECTOR ACCESS*.
5. Disconnect the fuel injector electrical connectors.
6. Disconnect the fuel pressure hose from the fuel rail.

| REQUIRED TOOL | |
|---|---|
| FUEL HOSE DISCONNECT TOOL (P/N 529 036 037) | |

lmr2006-008-010

NOTE: Wrap a rag around the hose end to catch any fuel leakage.

7. Remove the fuel rail mounting screws (2).

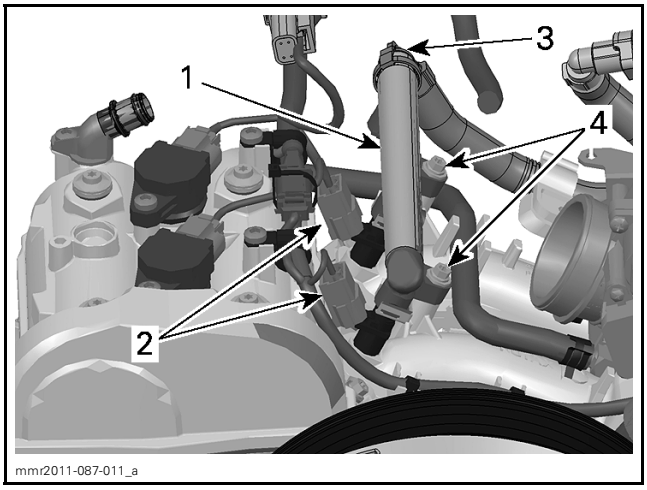

mmr2011-087-011_a

*TYPICAL*
1. *Fuel rail*
2. *Injector connectors*
3. *Fuel pressure hose disconnect*
4. *Fuel rail mounting screws*

8. Pull on fuel rail to remove the fuel rail and injectors from the engine.
9. Remove the fuel injector retaining clips (2) from the fuel rail.

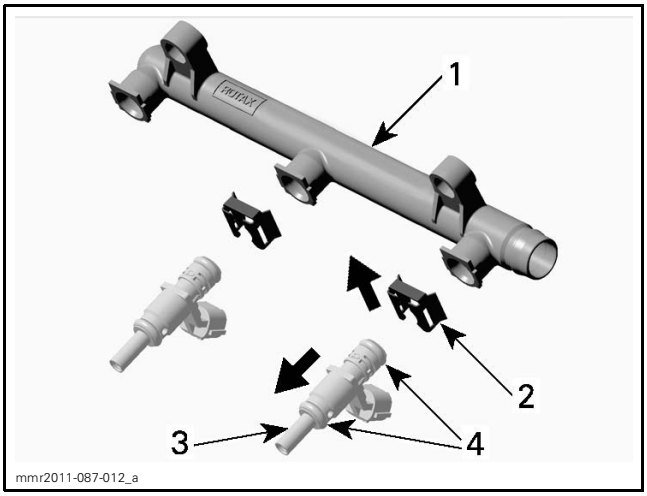


*TYPICAL - FUEL RAIL ASSEMBLY*
1. *Fuel rail*
2. *Fuel injector retaining clip*
3. *Injector*
4. *Injector O-rings*

10. Pull the fuel injector(s) out of the fuel rail.

## Fuel Injector Installation

For the installation, reverse the removal procedure however, pay attention to the following details.

**NOTICE** **If installing the removed injector(s), ensure injector O-rings are in good condition. Replace O-rings as required.**

1. Apply a thin film of engine oil to O-rings to ease insertion in rail.
2. Install fuel injector with your hand. Do not use any tool.

| FUEL INJECTOR INSTALLATION | | |
|---|---|---|
| O-RINGS | New | Lubricate with engine oil |

3. Ensure proper positioning of the intake manifold O-ring on injector as in following illustration.

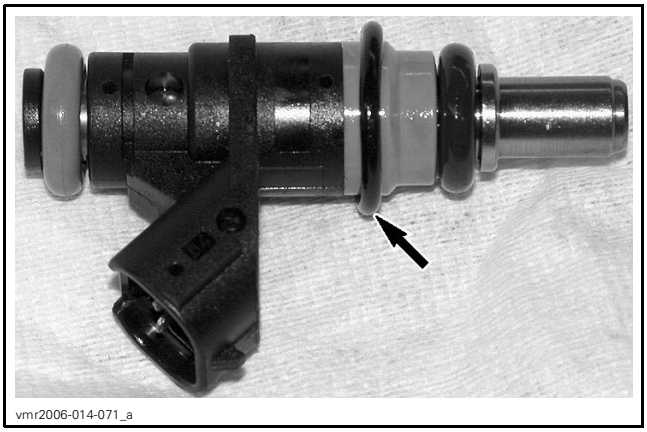


*TYPICAL - INTAKE MANIFOLD O-RING POSITION*

4. Carefully insert injector in air intake manifold paying attention to the manifold O-ring.

**NOTICE** **Gently push O-ring in evenly all around while inserting injector. O-ring must be completely inserted and not visible, before completing the insertion of the injector.**

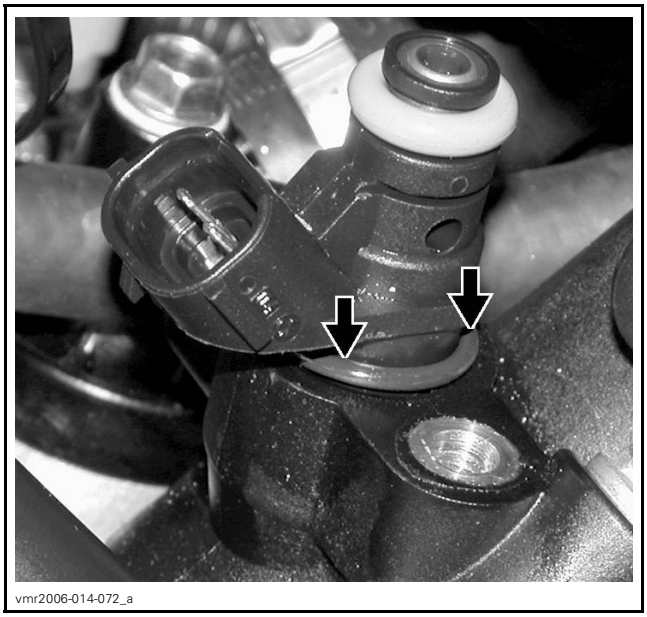


*TYPICAL*

5. Firmly push injector until it bottoms out.
6. Install fuel rail.

| FUEL RAIL RETAINING SCREW | |
|---|---|
| Tightening torque | 9 N•m ± 1 N•m (80 lbf•**in** ± 9 lbf•**in**) |

7. Apply engine oil on O-rings of fuel pressure hose fitting.

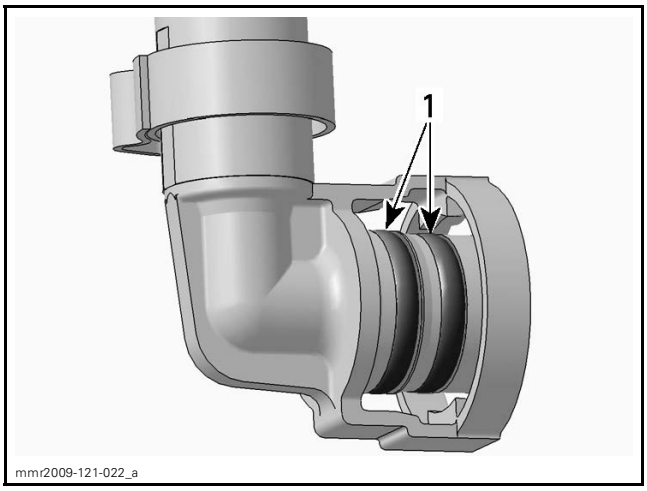


*FUEL PRESSURE HOSE FITTING*
1. *Apply oil on O-rings*

8. Connect fuel pressure hose to fuel rail.

IMPORTANT: Push fuel hose fitting on fuel rail until you hear a "click". Try pulling on fuel hose fitting to ensure it is properly locked.

Pressurize the fuel system and check for fuel leaks. Refer to *FUEL SYSTEM PRESSURIZATION* in *FUEL TANK AND FUEL PUMP* subsection.

**⚠ WARNING**

**Failure to pressurize the fuel system and checking for fuel leaks may result in severe injury or a life threatening situation should a leak occur.**

9. Reinstall all remaining removed parts.

# THROTTLE BODY (ETC (ELECTRONIC THROTTLE CONTROL))

## Throttle Body (ETC) Description

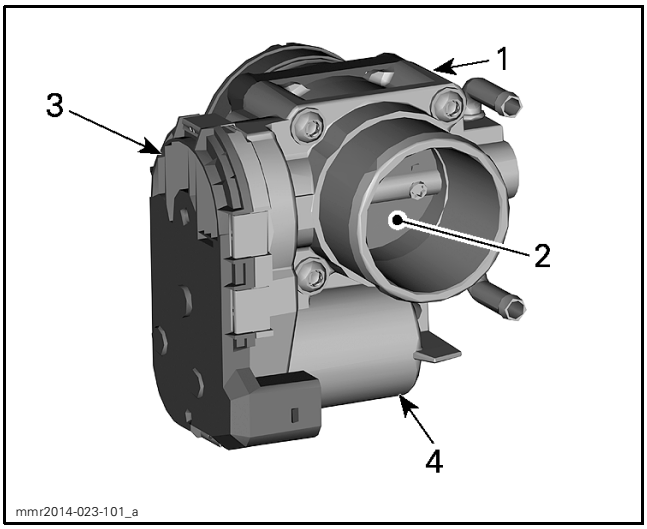


*1. Throttle body*
*2. Throttle plate*
*3. TPS (Throttle Position Sensor) (inside)*
*4. ETA (Electric Throttle Actuator) (electric motor inside)*

## Electric Throttle Actuator (ETA)

The electric throttle actuator (ETA) is a DC motor on the throttle body that regulates the throttle plate via a drive gear. It receives its control signal from the ECM. Pulse width modulation (PWM) is used to control the motor.

## Throttle Plate Operating Positions

Two torsional springs are connected to the throttle plate. A main spring and another one in a plunger mechanism.

When there is no power to the throttle actuator (ETA), the plunger mechanism maintains the throttle plate at a rest position. This also serves as the limp home position.

When the throttle plate is opened by the ETA as commanded by the ECM, it acts against the main spring. If the ETA failed, the return spring would bring the throttle plate back to the limp home position.

## Throttle Body (ETC) Faults and Effects

NOTE: Among other things, a weak or broken spring and a sticky throttle plate are validated by the throttle body diagnostic mode.

| FAULT | EFFECT |
|---|---|
| Partial failure of TAS sensor (one internal sensor only) | Limp home mode. Engine speed limited to idle. ECM will use the remaining TAS sensor. Fault code set and beeper activated to emit warning signals. Check engine light is turned ON. Driveability could be reset by releasing and reapplying the throttle. |
| Complete failure of TAS sensor (both internal sensors) | Limp home mode. Engine speed limited to 2500 RPM. Fault code set and beeper activated to emit warning signals. Check engine light is turned ON. |
| Any throttle body failure | Limp home mode. Engine speed limited to 2500 RPM. Engine speed can still be increased up to 3200 RPM using the throttle lever. Fault code set and beeper activated to emit warning signals. Check engine light is turned ON. |

NOTE: Refer to *DIAGNOSTIC AND FAULT CODES* and *INTELLIGENT THROTTLE CONTROL* (iTC) subsections for more informations.

## Throttle Body (ETC) Access

1. Refer to appropriate subsection to remove:
   – LH side panel
   – Drive belt guard
   – Air intake hose.

## Throttle Body (ETC) Lubrication

No lubrication is required.

## Electric Throttle Actuator (ETA) Test

### Electric Throttle Actuator (ETA) Test with B.U.D.S.

1. Connect vehicle to the latest B.U.D.S. version. Refer to *COMMUNICATION TOOLS AND B.U.D.S.* subsection.
2. Press the START/RER button to wake up the ECM.
3. Install the tether cord on the engine cut-off switch.
4. In B.U.D.S., select:
   - **Read Data** button
   - **Setting** page tab.

NOTE: Use the **Setting** page to confirm ETA movement. The Monitoring page will not read the actual ETA movement.

5. Slowly depress the throttle lever from the idle to WOT. The ETA should go from almost 10% to 100%.

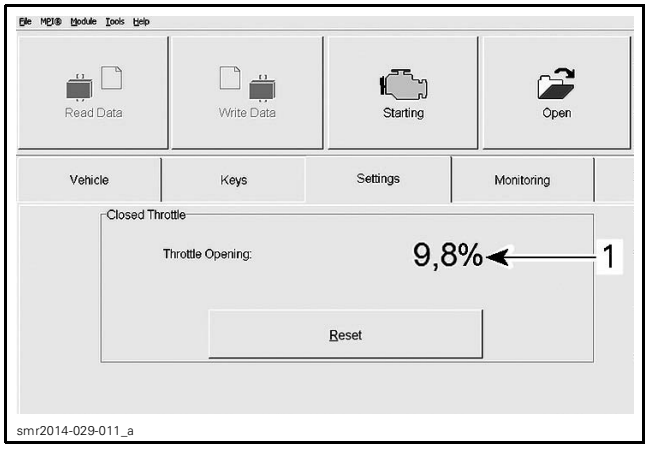


*1. ETA position*

If result is out of specification, carry out a *THROTTLE POSITION SENSOR INITIALIZATION*. Refer to *THROTTLE POSITION SENSOR (TPS)* in this subsection.

NOTE: The ETA is reset at the same time as the TPS.

After the reset, test ETA again.

If the result is still out of specification, check wire continuity between ECM and throttle body before assuming the ETA is at fault.

## Throttle Body (ETC) Inspection

1. Remove parts required to access throttle body, refer to *THROTTLE BODY (ETC) ACCESS*.
2. Carry out the following:
   - Inspect throttle body for cleanliness.
   - Ensure throttle plate opens fully and smoothly.
   - Check for corroded or damaged wiring or damaged ETC connectors.

### Throttle Body (ETC) Dynamic Tests

1. Remove the parts required to access the throttle body (ETC), refer to *THROTTLE BODY (ETC) REMOVAL.*
2. Remove the air inlet hose from the throttle body.
3. Observe the throttle plate with the engine stopped.

NOTE: The throttle plate should be in the rest position (slightly opened).

**⚠ WARNING**

**Keep your fingers out of the throttle plate area while the ECM turns on. The throttle actuator will cycle. This could cause serious finger injuries as throttle plate quickly moves.**

4. As you observe the throttle plate, have someone press the START/RER button to wake up the ECM.

NOTE: The throttle plate should cycle quickly from the rest position to a partially open position (approximately 15°), then back to the rest position.

5. Install the tether cord on the engine cut-off switch.

NOTE: The throttle plate should cycle again.

6. As you observe the throttle plate, have someone gradually and evenly pull in the throttle lever, then release it in the same way.

NOTE: The throttle plate should open then close according to throttle lever position however, the movement of the throttle plate may not be linear with the displacement of the throttle lever.

If any test failed, proceed with the *THROTTLE BODY (ETC) STATIC TESTS.*

Throttle Body (ETC) Static Tests

**⚠ WARNING**

**First ensure the ECM is off. Do not move the throttle plate using your fingers. Otherwise, should the START/RER button be pressed, the ECM would turn on and quickly cycle the throttle plate which could cause serious finger injury.**

1. Using a blunt tool, push in on the throttle plate and ensure it opens smoothly within the throttle body.

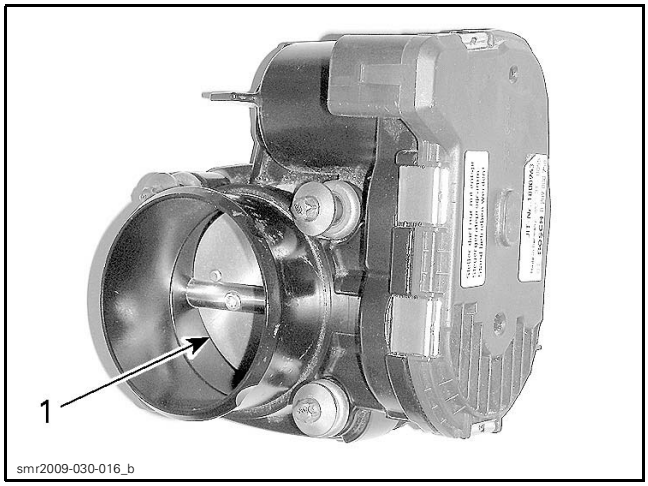


*1. Push here to open*

NOTE: The throttle plate must open fully and return freely to the rest position (slightly opened) when released.

2. Push throttle plate closed as indicated in following illustration. It must close completely and return freely to the rest position (slightly opened) when released.

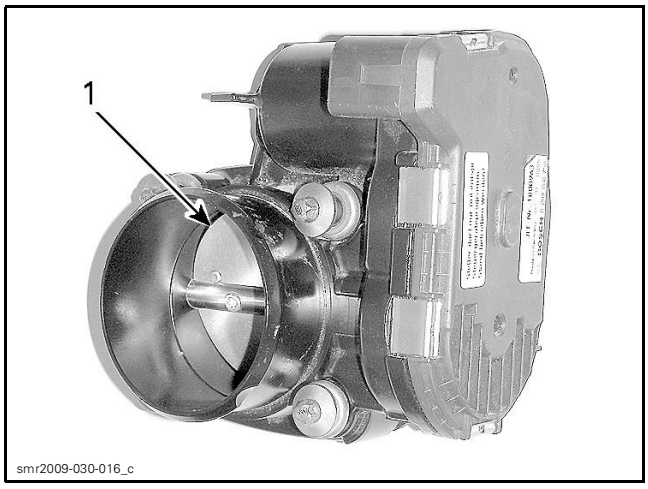


*1. Push here to close*

If the throttle plate does not move smoothly or does not return freely to the rest position, the problem is mechanical. Check for dirt accumulation on throttle plate shaft. It may also be an actuator or gear problem. Replace throttle body as necessary.

If throttle plate operates normally, the problem is electrical. Check electric throttle actuator (ETA) wiring continuity, throttle position sensor (TPS) and throttle accelerator sensor (TAS).

**⚠ WARNING**

**If the throttle plate does not return to its rest position properly after a proper cleaning, replace the throttle body.**

## Throttle Body (ETC) Cleaning

1. Remove throttle body from intake manifold without disconnecting heating hoses. Refer to *THROTTLE BODY (ETC) REMOVAL* further in this subsection.
2. Check throttle body cleanliness using a flashlight. Fully open throttle plate and verify:

– Throttle body bore
– Throttle plate edge.

Look for:

– Dirt
– Oily surfaces
– Carbon and dirt deposits on throttle plate and the surrounding bore.

3. Clean as necessary.
4. Use a throttle body cleaner such as GUNK INTAKE MEDIC or an equivalent.

***NOTICE*** **Only use an appropriate throttle body cleaner that will not damage O-rings and EFI sensors.**

**⚠ CAUTION Use the product in a well ventilated area. Refer to product manufacturer's warnings.**

5. To avoid getting dirt into engine, spray cleaner on a clean rag then rub rag against throttle plate and bore. A toothbrush may also be used.

**⚠ CAUTION Ensure tether cord is removed and battery cables are disconnected so that nobody can activate the electrical system, otherwise the ECM would turn on and the throttle actuator (ETA) would cycle. This could cause serious finger injury as the throttle plate moves quickly.**

6. Gently open throttle plate and hold fully open to clean all surfaces.
7. To remove residual dirt, spray cleaner on throttle plate and throttle bore.
8. Reinstall all removed parts.

### Throttle Body (ETC) Removal

**⚠ WARNING**

**When electrically disconnecting or removing the throttle body from the intake manifold, always remove the tether cord from the engine cut-off switch and disconnect the battery.**

1. Remove parts required to access throttle body, refer to *THROTTLE BODY (ETC) ACCESS*.
2. Remove fuel tank. Refer to *FUEL TANK AND FUEL PUMP* subsection.
3. Loosen gear clamp and remove throttle body from intake manifold.
4. Disconnect MAPTS and ETC connectors.
5. Disconnect coolant hoses from throttle body.

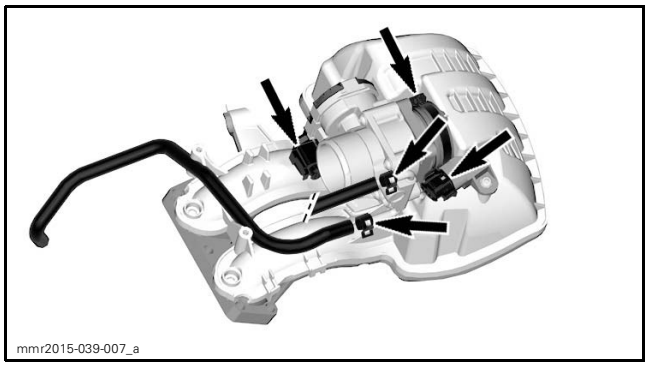
mmr2015-039-007_a

### Throttle Body (ETC) Installation

Installation of the throttle body is the reverse of the removal procedure. However, pay attention for the following details.

1. Install coolant hoses on throttle body; replace clamps as required.
2. Refill and bleed cooling system as required. Refer to *PERIODIC MAINTENANCE PROCEDURES* subsection.
3. Perform the *THROTTLE POSITION SENSOR INITIALIZATION* reset procedure. Refer to *THROTTLE POSITION SENSOR (TPS)* in this subsection.
4. Install all remaining removed parts, refer to applicable subsections.
5. Start engine and ensure proper idle and throttle control.

## THROTTLE POSITION SENSOR (TPS)

### TPS Description

NOTE: The TPS is part of the throttle body (ETC).

The throttle position sensor (TPS) is a double potentiometer that sends signals to the ECM that are proportional to the throttle plate angle.

NOTE: As a first troubleshooting step, always check for applicable fault codes using B.U.D.S. software.

### Throttle Position Sensor Initialization

NOTE: The TPS initialization procedure **must** be carried out whenever the throttle body (ETC) is replaced, unless an ECM first initialization reset is carried out.

This operation performs a reset of the TPS basic values in the ECM. This reset is very important as the TPS values are part of the basic parameters for all fuel mapping calculations and control of several settings such as for idle speed, LIMP HOME mode and maximum RPM of the engine.

***NOTICE*** **An improperly set TPS may lead to improper idle speed (too low or too high), poor engine performance, poor engine starting and engine stop on deceleration, fault codes and possible engine damage. Emission compliance may also be affected.**

1. Connect vehicle to the applicable B.U.D.S. software version, refer to *COMMUNICATION TOOLS AND B.U.D.S.* subsection.
2. In B.U.D.S., select the following:
   - **Read Data** button
   - **Setting** tab
   - **ECM** tab.

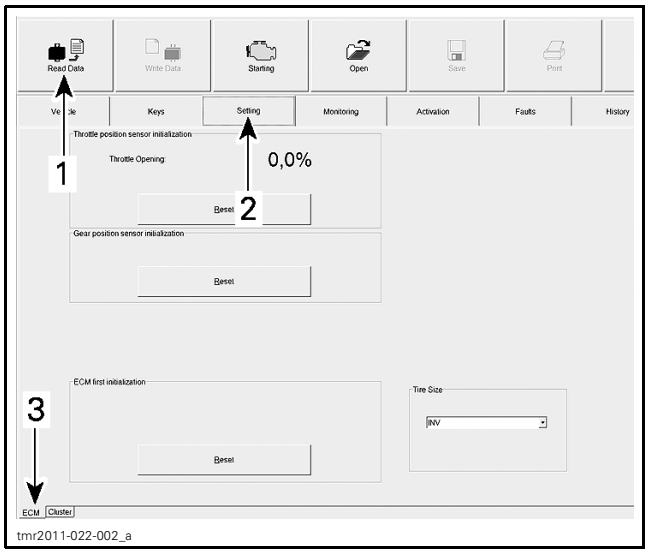


*1. Read Data button*
*2. Setting tab*
*3. ECM tab*

3. Ensure the throttle lever is fully released and at the idle position.
4. In the **Throttle position sensor initialization** field, click on the **Throttle Opening Reset** button.

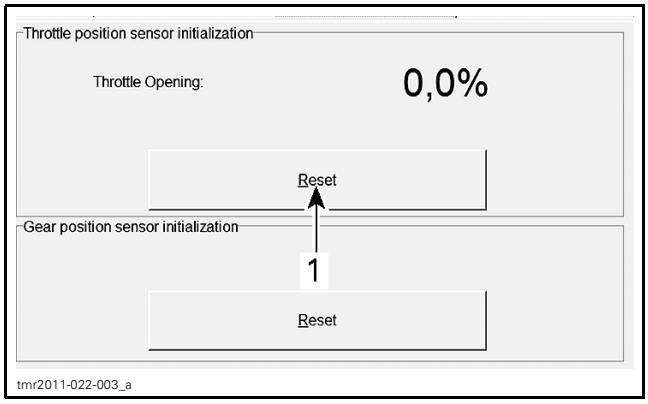


*THROTTLE POSITION SENSOR INITIALIZATION*
*1. Throttle Opening Reset button*

A message will be displayed if the operation is successful.

If an error occurred or the TPS is not within the allowed range while resetting, the ECM will generate a fault code and will not accept the setting.

5. If a fault message is displayed, follow the instructions in the message(s).
6. Check for fault codes.
7. If a fault code is generated,
   – Carry out the service actions.
   – Reset the fault.
   – Repeat the reset procedure.
8. Start engine and make sure it operates normally throughout its full engine RPM range.

## TPS Wear Test

1. With the engine turned off, slowly press on the throttle lever and pay attention for smooth operation without physical stops.
2. Activate the electrical system to wake up the ECM.
3. Connect vehicle to the applicable B.U.D.S. software version. Refer to *COMMUNICATION TOOLS AND B.U.D.S.* subsection.
4. In B.U.D.S., select the following:
   – **Monitoring** tab
   – **ECM** tab.
5. Slowly and regularly move the throttle lever.
6. Observe the Throttle Opening indication movement in B.U.D.S.

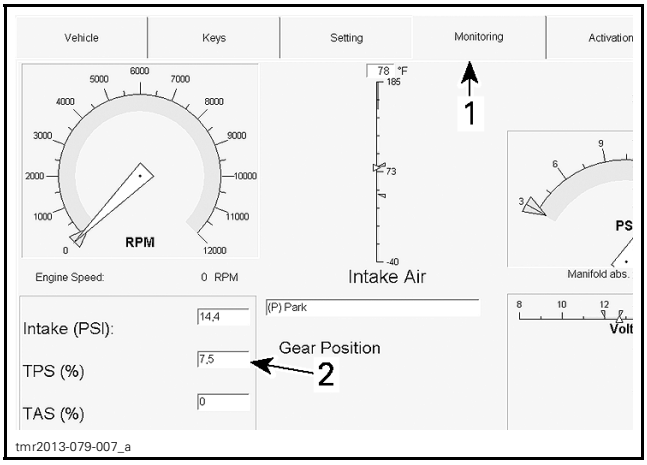


*1. Monitoring tab*
*2. TPS indication*

NOTE: The indication should move gradually and regularly as you move the throttle lever. If the TPS indication is erratic or suddenly drops off, it may indicate a worn TPS that needs to be replaced. An initial slight delay after the throttle lever is moved and before the indication starts to move is normal.

If the indication behavior is not as expected, proceed with the following steps.

7. Manually move the throttle plate in the throttle body using a blunt tool (without sharp tip).

**⚠ CAUTION Do not move throttle plate with your fingers. Otherwise, if ECM should turn off, it would quickly close the throttle plate which could cause finger injury.**

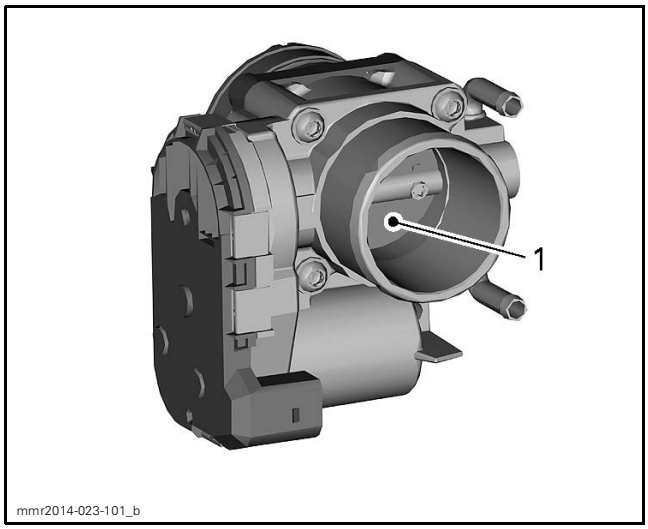


*1. Push here*

8. Check the indication movement again.
– If the indication moves as expected, check the throttle accelerator sensor (TAS). Refer to *THROTTLE ACCELERATOR SENSOR (TAS)* in this subsection.
– If the indication does not move as expected, perform the *TPS RESISTANCE TEST* in this subsection.

# CRANKSHAFT POSITION SENSOR (CPS)

## CPS TROUBLESHOOTING

When troubleshooting a CPS fault, take into account that a CPS fault can be triggered by bent or missing encoder wheel teeth.

Push START/RER button and crank engine. If engine does not start within 15 seconds check for fault codes using B.U.D.S.

## CPS and CPS Connector Location

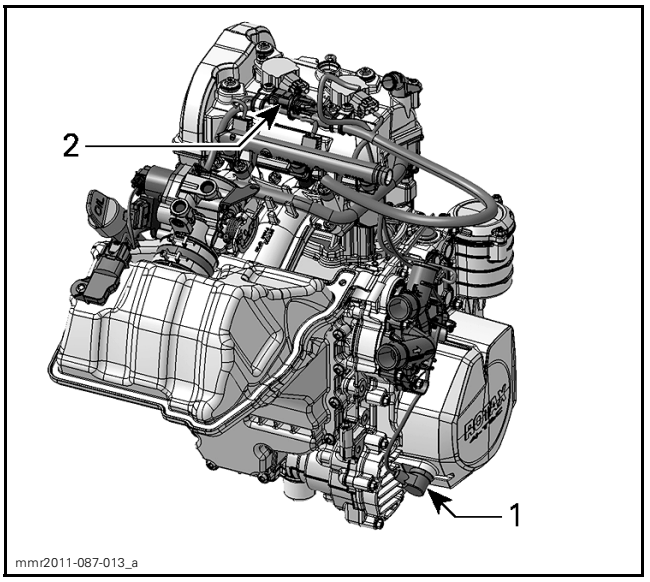


***TYPICAL - RH SIDE OF ENGINE***
*1. CPS location*
*2. CPS connector location*

## CPS Access

1. Remove both side body panels, refer to *BODY* subsection.
2. Remove air intake silencer and headlight/gauge module as a unit, refer to *AIR INTAKE SYSTEM* subsection.
3. Remove muffler, refer to *EXHAUST SYSTEM* subsection.

## CPS Resistance Test at ECM connector

1. Remove parts required to access ECM-A connector, refer to *ECM CONNECTOR ACCESS* in this subsection.
2. Disconnect ECM-A connector from the ECM and connect it to the ECM adapter.

| REQUIRED TOOL | |
|---|---|
| ECM ADAPTER TOOL (P/N 529 036 166) | |

3. Set multimeter to Ω.

| REQUIRED TOOL | |
|---|---|
| FLUKE 115 MULTIMETER (P/N 529 035 868) | |

4. Measure the resistance of the sensor as per following table.

| ECM ADAPTER | | READING |
|---|---|---|
| PIN | | Ω @ 20°C (68°F) |
| 1H | 2K | 775 - 950 Ω |

If resistance is as specified, test continuity of wiring between ECM-A and CPS connectors. Refer to *WIRING DIAGRAM* subsection.

If resistance value is not as specified, reconnect ECM-A connector to the ECM and refer to *CPS RESISTANCE TEST AT CPS CONNECTOR*.

## CPS Resistance Test at CPS Connector

1. Cut locking tie securing CPS connector to ECM support and disconnect CPS connector.

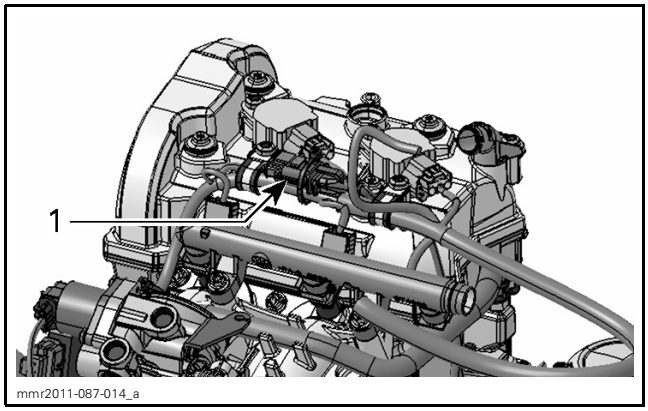


*TYPICAL - TOP OF ENGINE*
*1. CPS connector location*

2. Probe CPS connector terminals as per following table.

| CPS | | READING |
|---|---|---|
| PIN | | Ω @ 20°C (68°F) |
| 1 | 2 | 775 - 950 Ω |

If resistance is not within specifications, replace the CPS.

If resistance tests good, carry out a *CPS OUTPUT VOLTAGE TEST*.

## CPS Output Voltage Test

1. Remove fuse F5, refer to *POWER DISTRIBUTION* subsection.
2. Cut locking tie securing CPS connector to ECM support and disconnect the CPS connector.

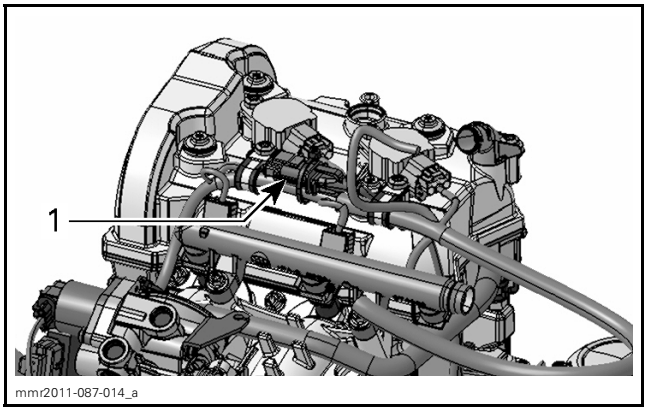


*TOP OF ENGINE LH SIDE*
*1. CPS connector location*

3. Probe CPS connector terminals while cranking engine as per following table.

| CPS | | READING |
|---|---|---|
| PIN | | VOLTAGE |
| 1 | 2 | 1 - 2 Vac min. |

If voltage is out of specification, inspect wiring/connectors. Replace CPS if wiring is good.

If voltage is within specification, the problem may be related to the ECM.

4. Reconnect CPS connector and install all removed parts.

## CPS Replacement

1. Remove parts required to access the CPS, refer to *CPS ACCESS* in this subsection.
2. Take note of factory CPS wire harness routing for reinstallation.
3. Cut harness locking ties and disconnect CPS connector.

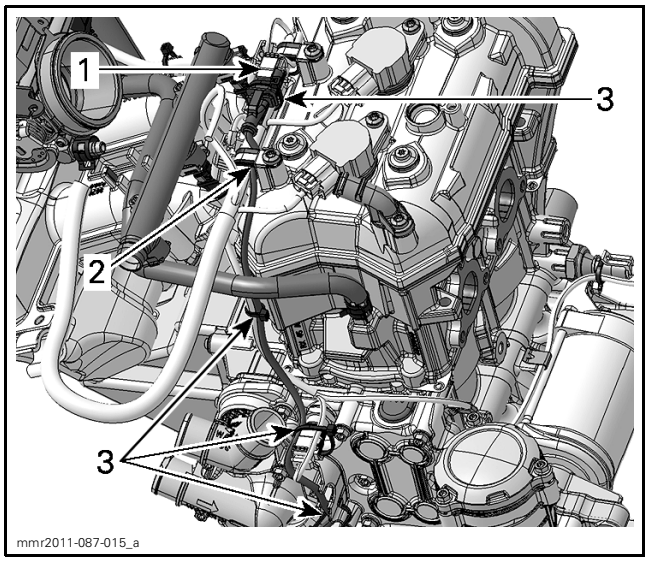


*TYPICAL*
1. *CPS connector*
2. *Retaining clamp*
3. *Locking ties (4)*

4. Remove CPS retaining screw and pull on CPS to remove it.

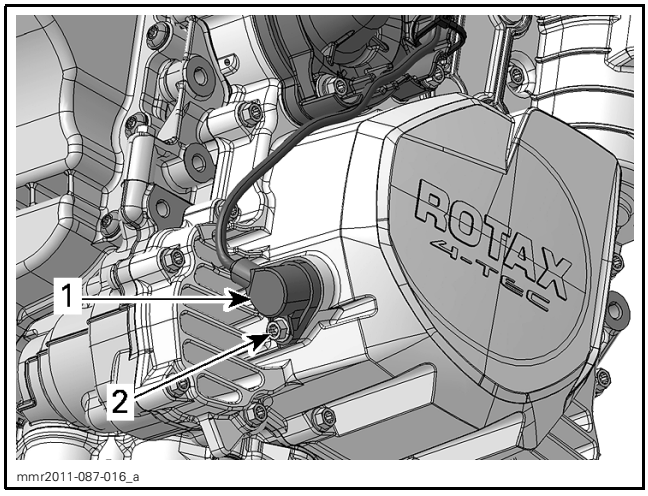


*TYPICAL*
1. *CPS*
2. *Retaining screw*

5. Install new CPS.

| CPS INSTALLATION | |
|---|---|
| O-RING | SERVICE PRODUCT |
| | APPLY ENGINE OIL ON O-RING |
| RETAINING SCREW | TORQUE |
| | 9 N•m ± 1 N•m (80 lbf•**in** ± 9 lbf•**in**) |

6. Route and secure CPS harness using harness clamp and locking ties as noted prior to removal.

# CAMSHAFT POSITION SENSOR (CAPS)

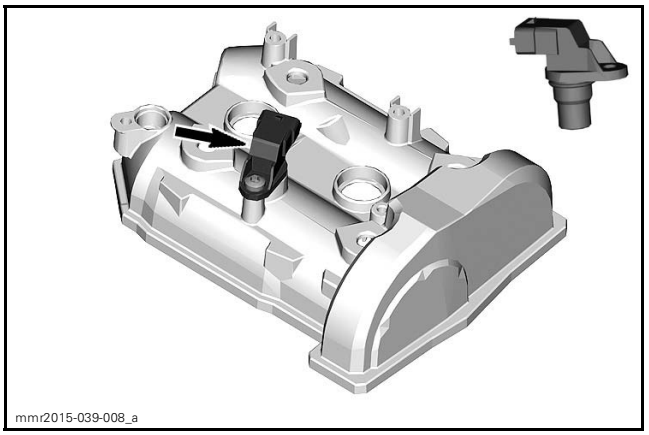


## CAPS Access

Refer to appropriate subsection and remove:
– Side Panels

## CAPS Voltage Test (Harness Side)

1. Remove the parts required to access the CAPS, refer to *CAPS ACCESS.*
2. Disconnect CAPS connector.
3. Press the START/RER button to wake up the ECM.
4. Install tether cord on engine cut-off switch.
5. Probe harness connector terminals as per following table.

| CAPS | | READING |
|---|---|---|
| PIN | | VOLTAGE |
| 3 | 1 | Battery Voltage |

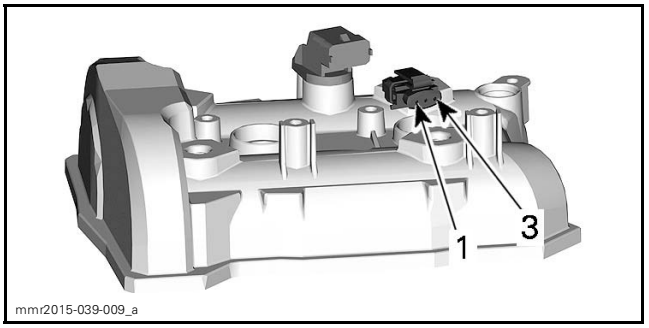


If battery voltage is read, proceed with *CAPS DYNAMIC TEST* further in this subsection.

If battery voltage is not read, probe circuit as per following table.

| CAPS | BATTERY | READING |
|---|---|---|
| PIN | TERMINAL | VOLTAGE |
| 3 | Battery Ground | Battery Voltage |

If voltage is read to battery ground, check continuity of ground circuit between CAPS pin 1 and ECM-A connector pin 4D. Repair or replace wiring and connectors.

If voltage is not read to battery ground, carry out a *CONTINUITY TEST OF CAPS POWER CIRCUIT*.

## Continuity Test of CAPS Power Circuit

1. Remove cover from fuse box. Refer to *POWER DISTRIBUTION*.
2. Remove fuse (F6).
3. Use the FLUKE 115 MULTIMETER (P/N 529 035 868) and select Ω.
4. Read resistance of the CAPS circuit as per following table.

| CAPS | FUSE BOX | READING |
|---|---|---|
| PIN | TERMINAL | Ω |
| 3 | B7 | Close to 0 Ω |

If continuity is good, wiring and connectors are functional.

If a high resistance or an open circuit is measured, refer to *WIRING DIAGRAM* and check the following:

– Continuity from CAPS connector pin 3 to engine connector pin 4
– Continuity from engine connector pin 1 to fuse box contact B7

Pay attention to connector pin contact and junction JT (GY/RD).

Repair or replace wiring and connectors as required.

5. Reinstall all removed parts.

## CAPS Dynamic Test

1. Remove the parts required to access the CAPS, refer to *CAPS ACCESS.*
2. Remove CAPS sensor from engine.
3. Back-probe connector and read voltage as follows.

NOTE: To safely probe wire terminals through the back of the connector, use the following tool or an equivalent.

| REQUIRED TOOL |
|---|
| FLUKE AUTOMOTIVE BACK PROBE PIN (P/N TP40) |

*FLUKE AUTOMOTIVE BACK PROBE PIN P/N TP40*

**NOTICE** **Do not use sharp end probes. They could damage the connector seal.**

Probes can be inserted at the end of the FLUKE SUREGRIP INSULATED TEST LEADS (P/N TL224).

4. Set engine emergency stop switch to STOP to prevent engine starting.
5. Install the tether cord cap on the engine cut-off switch.
6. Briefly press the START/RER button to wake up the ECM.
7. Read voltage as per following tables.

| CAPS | | CAPS CONDITION | READING |
|---|---|---|---|
| PIN | | SENSOR END | VOLTAGE |
| 3 | 2 | Free | Close to 0 Vdc |

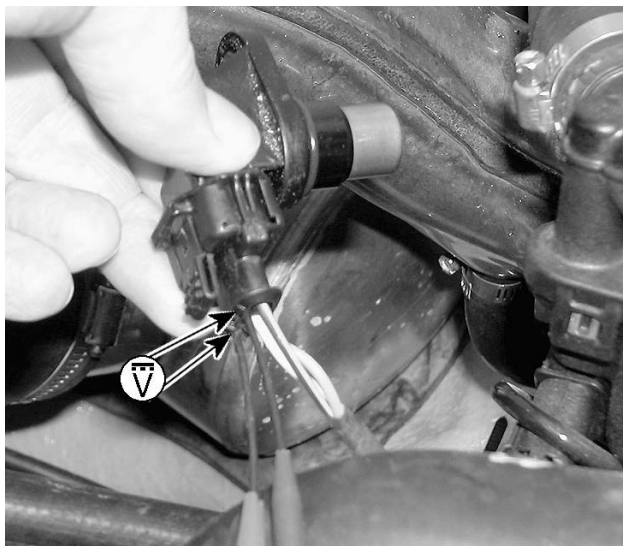
smr2007-021-010_a

*TYPICAL*

| CAPS | | CAPS CONDITION | READING |
|---|---|---|---|
| PIN | | SENSOR END | VOLTAGE |
| 3 | 2 | Metallic Object on Sensor | Battery Voltage |

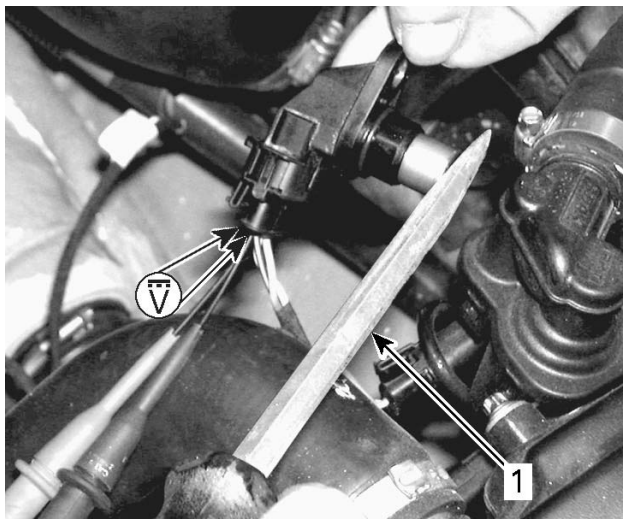

smr2007-021-009_c

*TYPICAL*
*1. Metallic object*

If voltage is as specified, repair or replace wiring and connectors between sensor and ECM.

If wiring is good, check ECM. Refer to *ENGINE CONTROL MODULE (ECM)*.

If battery voltage is not measured as specified, try a new CAPS.

## CAPS Replacement

1. Disconnect CAPS connector.
2. Unscrew the CAPS retaining screw.
3. Pull CAPS from engine.
4. Install the new CAPS.

***NOTICE*** **Be sure to install new O-ring on the new CAPS.**

| CAPS INSTALLATION | |
|---|---|
| O-RING | SERVICE PRODUCT |
| | APPLY ENGINE OIL ON O-RING |
| CONNECTOR | SERVICE PRODUCT |
| | DIELECTRIC GREASE (P/N 293 550 004) |
| RETAINING SCREW | TORQUE |
| | 9 N•m ± 1 N•m (80 lbf•**in** ± 9 lbf•**in**) |

# MANIFOLD ABSOLUTE PRESSURE AND TEMPERATURE SENSOR (MAPTS)

**NOTE:** This sensor is a multifunction device. It measures manifold absolute pressure and intake temperature for air flow calculations.

## MAPTS Access

To access the MAPTS, remove the LH side panel.

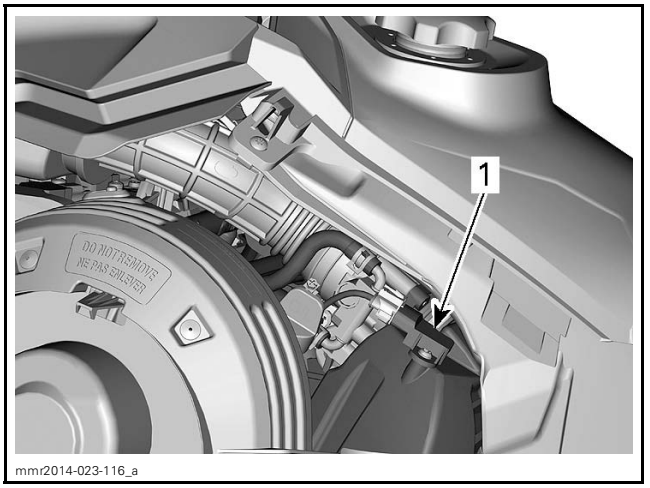

mmr2014-023-116_a

*MAPTS LOCATION*
*1. Manifold air pressure and temperature sensor (MAPTS)*

## MAPTS Pressure Function

Before the engine is started, when power is applied to the system, the sensor measures the ambient air atmospheric pressure. The ambient pressure is, at that moment, stored in the ECM.

Thereafter, once the engine is started, it measures the air pressure in the intake manifold at operating RPMs.

The sensor must be correctly installed on the intake manifold. Otherwise, the MAPTS could generate a fault code for an unexpected sensor range at idle when it reads the atmospheric pressure. If this is the case, remove sensor and check for oil or dirt on its end and if problem persists, check throttle plate condition/position and the wiring harness. Perform the following tests.

### MAPTS Quick Test (Pressure Function)

1. Connect vehicle to B.U.D.S. Refer to *COMMUNICATION TOOLS AND B.U.D.S.* subsection.
2. In B.U.D.S., select the following:
   - Read Data
   - Monitoring page tab
   - ECM page.

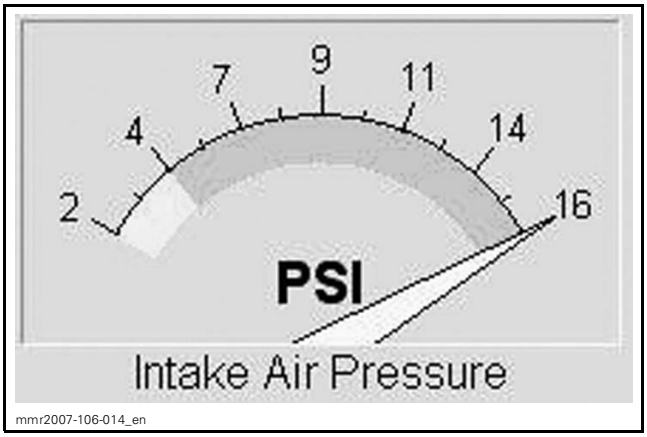


*TYPICAL - MAPTS PRESSURE READING IN B.U.D.S.*

3. Look for and take note of the MAPTS pressure reading while the engine is stopped.

NOTE: The indicated intake air pressure in B.U.D.S. must be within 3.4 kPa (.5 PSI) of local atmospheric pressure when the engine is stopped.

| MAPTS PRESSURE FUNCTION QUICK TEST | | | |
|---|---|---|---|
| RESULT | SERVICE ACTION | | |
| NO READING | Circuit Continuity Test of MAPTS Pressure Function | MAPTS Input Voltage Test | Repair or replace wiring |
| VALUE IS OUT OF RANGE | Replace MAPTS | | |

4. Perform the same test with a new MAPTS and compare both readings.

### MAPTS Input Voltage Test

1. Remove parts required to access the MAPTS, refer to *MAPTS ACCESS*.
2. Remove electrical connector from MAPTS.

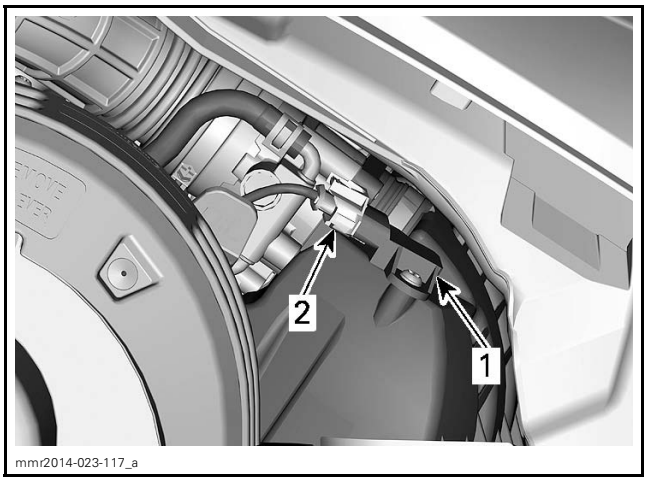


*1. MAPTS*
*2. MAPTS connector to remove*

3. Briefly push START/RER button.
4. Set multimeter to Vdc, measure for MAPTS input voltage as per following table.

| REQUIRED TOOL | |
|---|---|
| FLUKE 115 MULTIMETER (P/N 529 035 868) | |

| MAPTS | | READING |
|---|---|---|
| PIN | | VOLTAGE |
| 1 | 3 | 5 Vdc |

If voltage test is good, replace the MAPTS.

If voltage test is not good, carry out the *MAPTS CIRCUIT CONTINUITY TEST (PRESSURE FUNCTION)*.

### MAPTS Circuit Continuity Test (Pressure Function)

1. Remove parts required to access ECM connectors, refer to *ECM CONNECTOR ACCESS* in this subsection.
2. Disconnect the ECM-A connector from the ECM and connect it to the ECM adapter tool.

| REQUIRED TOOL | |
|---|---|
| ECM ADAPTER TOOL (P/N 529 036 166) | |

3. Set multimeter to Ω and check continuity of the following circuits.

| REQUIRED TOOL | |
|---|---|
| FLUKE 115 MULTIMETER (P/N 529 035 868) | |

| ECM ADAPTER | MAPTS | READING |
|---|---|---|
| PIN | | Ω |
| 4B | 3 | Close to 0 Ω |
| 4G | 4 | |
| 2H | 1 | |

If resistance is not within specification, repair or replace the wiring harness between ECM connector and the MAPTS. Refer to *WIRING DIAGRAM.*

## MAPTS Temperature Function

The MAPTS also monitors the temperature of the air in the intake manifold.

### MAPTS Quick Test (Temperature Function)

1. Connect vehicle to B.U.D.S. Refer to *COMMUNICATION TOOLS AND B.U.D.S.* subsection.
2. In B.U.D.S., select the following:
   - Read Data
   - Monitoring page tab
   - ECM page.
3. Look for the Intake Air temperature reading while the engine is stopped.

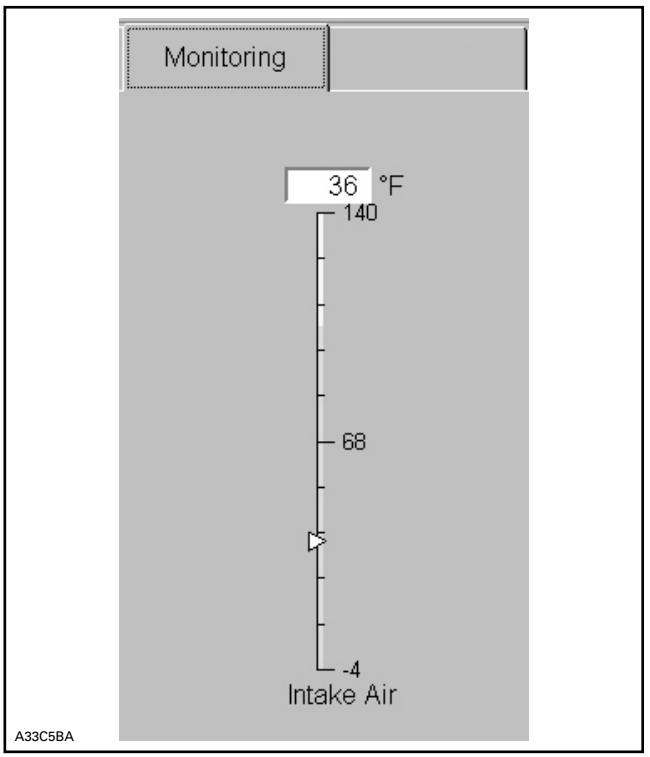


*TYPICAL - MONITORING PAGE TAB, ECM*

NOTE: If the complete vehicle is at room temperature, B.U.D.S. should display the ambient air temperature at the intake manifold.

4. Perform the same test with a new MAPTS and compare both readings.

If the engine's MAPTS temperature reading is significantly different than the new MAPTS, replace it.

NOTE: Both sensors must feel same ambient air temperature.

If there is no reading, carry out a *MAPTS RESISTANCE TEST (TEMPERATURE FUNCTION).*

### MAPTS Resistance Test (Temperature Function)

1. Disconnect the MAPTS connector.
2. Test MAPTS resistance at the sensor as per following tables.

| REQUIRED TOOL | |
|---|---|
| FLUKE 115 MULTIMETER (P/N 529 035 868) | |

| MAPTS | | READING |
|---|---|---|
| PIN | | Ω |
| 1 | 2 | Refer to MAPTS TEMPERATURE SENSOR TABLE |

| MAPTS TEMPERATURE SENSOR TABLE | | |
|---|---|---|
| TEMPERATURE | | Ω |
| °C | °F | MAPTS |
| - 40 | - 40 | 40528 to 56935 |
| - 10 | - 14 | 8103 to 10919 |
| 20 | 68 | 2193 to 2863 |
| 80 | 176 | 294 to 368 |
| 120 | 248 | 98 to 122 |

If resistance is not within specification, replace the MAPTS.

If resistance tests good, **reconnect** the MAPTS and proceed with the following steps.

3. Disconnect the ECM-A connector.
4. Install ECM-A connector on the ECM adapter tool.

| REQUIRED TOOL | |
|---|---|
| ECM ADAPTER TOOL (P/N 529 036 166) | |

5. Using a multimeter, recheck resistance value as per following table.

| ECM ADAPTER | | READING |
|---|---|---|
| PIN | | Ω |
| 2H | 3H | Refer to MAPTS TEMPERATURE SENSOR TABLE |

| MAPTS TEMPERATURE SENSOR TEST RESULTS | | | |
|---|---|---|---|
| RESULT | SERVICE ACTION | | |
| NO READING | Circuit Continuity Test of MAPTS Temperature Function | MAPTS Input Voltage Test | Repair or replace wiring |
| INCORRECT RESISTANCE VALUE | Check condition of connector pins, replace MAPTS | | |
| CORRECT RESISTANCE VALUE | Try a new ECM | | |

MAPTS Circuit Continuity Test (Temperature Function)

| ECM ADAPTER | MAPTS | READING |
|---|---|---|
| PIN | | Ω |
| 2H | 1 | Close to 0 Ω |
| 3H | 2 | |

Repair or replace wiring as required.

## MAPTS Replacement

1. Disconnect MAPTS connector and remove the MAPTS from the intake manifold.

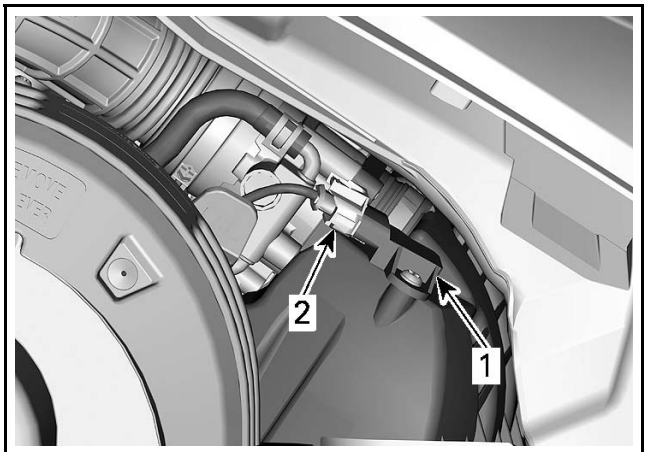


*1. MAPTS*
*2. MAPTS connector*

2. Install new MAPTS as per following table.

| MAPTS RETAINING SCREW | |
|---|---|
| Tightening torque | 4.5 N•m ± 0.5 N•m (40 lbf•**in** ± 4 lbf•**in**) |

# COOLANT TEMPERATURE SENSOR (CTS)

## Overheat Warning

The CTS will cause the engine overheat warning to come on when the coolant temperature is above 110°C (230°F).

## CTS Access

The CTS is located on the RH side of the engine, between the water pump and oil cooler.

To access the CTS, remove the RH side panel.

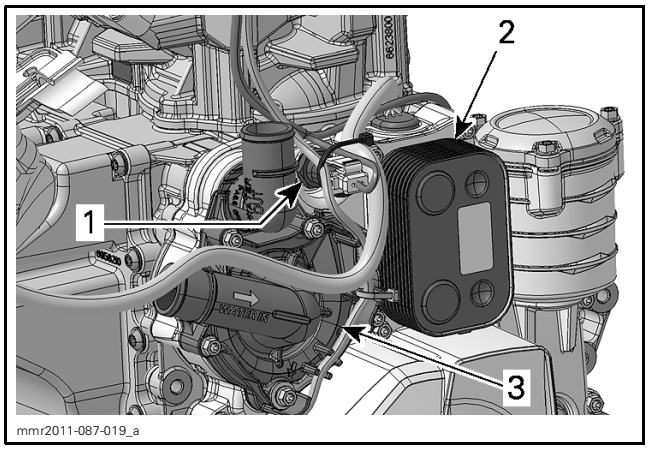


*TYPICAL*
*RH SIDE OF THE ENGINE*
1. *Coolant temperature sensor (CTS)*
2. *Oil cooler*
3. *Water pump*

## CTS Quick Test

1. Connect the vehicle B.U.D.S. Refer to *COMMUNICATION TOOLS AND B.U.D.S.* subsection.
2. In B.U.D.S., select the following:
   - **Read Data** button
   - **Monitoring** page tab
   - **ECM** page.
3. Look for the engine temperature indication.

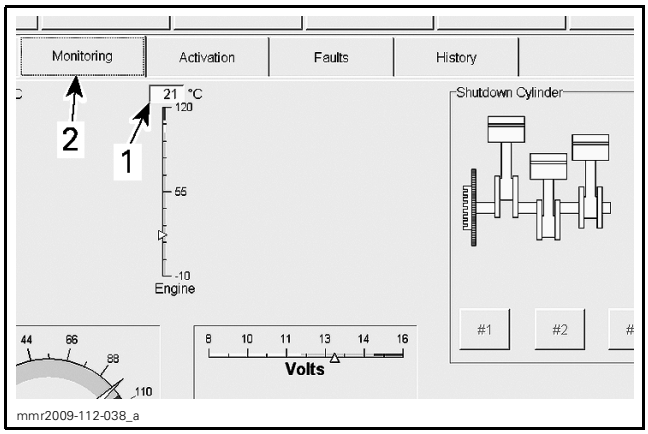


1. *Engine temperature*
2. *Monitoring tab*

The engine temperature gauge in B.U.D.S. should provide an indication of the actual engine coolant temperature. Otherwise, perform the *CTS RESISTANCE TEST*.

## CTS Resistance Test

1. Disconnect the CTS connector.
2. Test the resistance of the sensor as per following tables.

| CTS | | READING |
|---|---|---|
| PIN | | Refer to CTS TEMPERATURE SENSOR TABLE |
| 1 | 2 | |

| CTS TEMPERATURE SENSOR TABLE | | | |
|---|---|---|---|
| TEMPERATURE | | Ω | |
| °C | °F | LOW | HIGH |
| - 40 | - 40 | 38400 | 52600 |
| - 10 | 14 | 8200 | 10,600 |
| 0 | 32 | 5900 | 6900 |
| 20 | 68 | 2200 | 2800 |
| 80 | 176 | 295 | 350 |
| 120 | 248 | 105 | 120 |

NOTE: To test sensor at various temperatures, remove sensor and use a heat gun, ice and a thermometer.

If resistance is out of specification, replace the CTS.

If resistance test is good, proceed with the following steps.

3. Reconnect the CTS connector.
4. Remove parts required to access ECM connectors, refer to *ECM CONNECTOR ACCESS* in this subsection.
5. Disconnect the ECM-A connector.
6. Install ECM-A connector on adapter tool.

| REQUIRED TOOL | |
|---|---|
| ECM ADAPTER TOOL (P/N 529 036 166) | |

7. Recheck resistance from the ECM connector as per following table.

| REQUIRED TOOL | |
|---|---|
| FLUKE 115 MULTIMETER (P/N 529 035 868) | |

| ECM ADAPTER | | READING |
|---|---|---|
| PIN | | Refer to CTS TEMPERATURE SENSOR TABLE |
| 1A | 2J | |

If resistance value is correct, refer to *ECM REPLACEMENT*.

If resistance value is incorrect, repair the connectors or replace the wiring harness between ECM connector and the CTS.

## CTS Replacement

1. Drain coolant, refer to *PERIODIC MAINTENANCE PROCEDURES* subsection.
2. Cut locking ties of wiring harnesses and move wiring aside for access.

NOTE: Take note of wiring and locking tie position before removal.

3. Disconnect CTS connector.
4. Remove CTS from engine.
5. Install new CTS and torque as specified.

| CTS | |
|---|---|
| Tightening torque | 16 N•m ± 2 N•m (142 lbf•**in** ± 18 lbf•**in**) |

6. Reinstall remaining removed parts.

NOTE: Ensure to reinstall wiring harness as noted prior to removal.

7. Refill and bleed the cooling system, refer to *PERIODIC MAINTENANCE PROCEDURES* subsection.

# ELECTRONIC FUEL INJECTION (EFI)

## SERVICE TOOLS


| Description | Part Number | Page |
|---|---|---|
| ECM ADAPTER TOOL | 529 036 166 | 5 |
| FLUKE 115 MULTIMETER | 529 035 868 | 5 |
| FUEL HOSE DISCONNECT TOOL | 529 036 037 | 12 |
| SMALL HOSE PINCHER | 295 000 076 | 17 |


## SERVICE PRODUCTS


| Description | Part Number | Page |
|---|---|---|
| DIELECTRIC GREASE | 293 550 004 | 23 |
| LOCTITE 243 (BLUE) | 293 800 060 | 29 |
| LOCTITE 767 (ANTISEIZE LUBRICANT) | 293 800 070 | 31 |


## GENERAL

**⚠ WARNING**

When electrically disconnecting or removing the throttle body from the intake manifold, always remove the tether cord from the engine cut-off switch and disconnect the battery.

**⚠ WARNING**

Always disconnect battery prior to working on the fuel system. Always disconnect battery exactly in the specified order, BLACK (-) cable first. Electrical connections should be disconnected prior to disconnecting fuel lines.

**⚠ WARNING**

Fuel is flammable and explosive under certain conditions. Work in a well ventilated area. Do not smoke or allow open flames or sparks in the vicinity.

**⚠ WARNING**

Proceed with care and use appropriate safety equipment when working on the fuel system. Wipe off any fuel spillage in the engine compartment. Do not allow fuel to spill on hot engine parts and/or on electrical connectors.

Cover the fuel line connection with an absorbent shop rag before disconnecting them. Slowly disconnect the fuel hose to minimize spilling.

**⚠ WARNING**

Replace any damaged, leaking or deteriorated fuel lines or connections. After working on the fuel system, always pressurize the fuel system and check for fuel leaks. Refer to *FUEL SYSTEM PRESSURIZATION* in *FUEL TANK AND FUEL PUMP* subsection.

## SYSTEM DESCRIPTION

The electronic fuel injection system (EFI) is comprised of various sensors used for detecting ongoing operating conditions of the engine and vehicle, and includes all the components that perform the required adjustments to the engine.

### Electrical System

#### ECM (Electronic Control Module)

The ECM controls the engine operation and the vehicle power management. To control the engine, the ECM reads the inputs from the sensors

Midwest Manuals
If you bought this manual from any other seller please leave them NEGATIVE feedback and notify me at bestshopmanuals@gmail.com

which it compares to predetermined parameters stored in the ECM (fuel and ignition maps), makes computations, and activates the outputs accordingly (injectors, ignition coils etc.).

Refer to *ENGINE MANAGEMENT SYSTEM (EMS)* subsection for more information.

### EFI Sensors

To control the injection system, the engine management uses input signals from the following sensors:

- Camshaft position sensor (CAPS)
- Crankshaft position sensor (CPS)
- Manifold absolute pressure and temperature sensor (MAPTS)
-
- Throttle position sensor (TPS) which is integrated to the throttle body (Electronic Throttle Control (ETC))
- Throttle accelerator sensor (TAS)
- Coolant Temperature Sensor (CTS)
- Oil Pressure Sensor (OPS).

Refer to *ENGINE MANAGEMENT SYSTEM (EMS)* subsection for more information.

## Air Intake System

### Air Filter

Air flows through a mesh screen filter in the air intake silencer mounted over the engine. The mesh filter prevents snow from being drawn into the engine.

After it passes through the mesh filter, an air duct (intake adapter) is used to channel the air to the turbocharger.

The intercooler then cools the air before going to the throttle body.

Air is then drawn in through the throttle body, the air intake manifold and into the engine.

Manifold absolute pressure and temperature are measured in the intake manifold.

Refer to *AIR INTAKE SYSTEM*, *INTERCOOLER* and *TURBOCHARGER* subsections for more information.

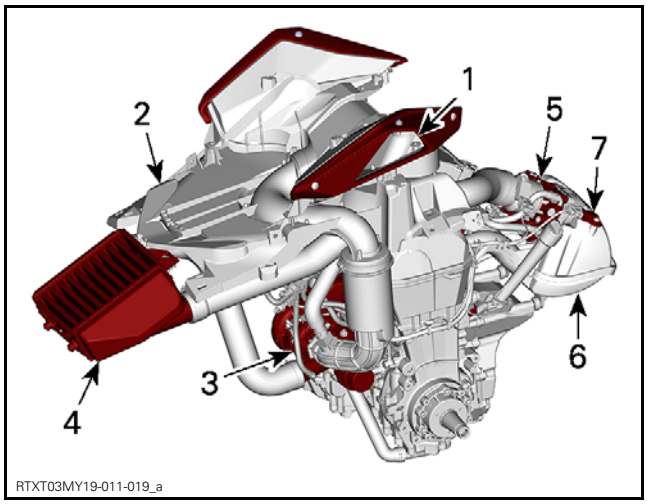


1. *Mesh screen filter*
2. *Air intake silencer*
3. *Turbocharger*
4. *Intercooler*
5. *Throttle body (Electronic Throttle Control (ETC))*
6. *Intake manifold*
7. *Manifold absolute pressure and temperature sensor (MAPTS)*

### Throttle Body ((ETC) Electronic Throttle Control)

Air for combustion is drawn in by the engine. The air flows through the throttle body (ETC) and is controlled by a throttle plate.

The Electronic Throttle Control (ETC) is a heated single 54 mm throttle body with integrated dual throttle position sensors (TPS) and electric throttle actuator (ETA) and is mounted on the intake manifold.

The ETA allows the ECM to electronically control the throttle plate opening which regulates the amount of air that enters the engine, and therefore engine speed.

There is no idle air control valve (IACV).

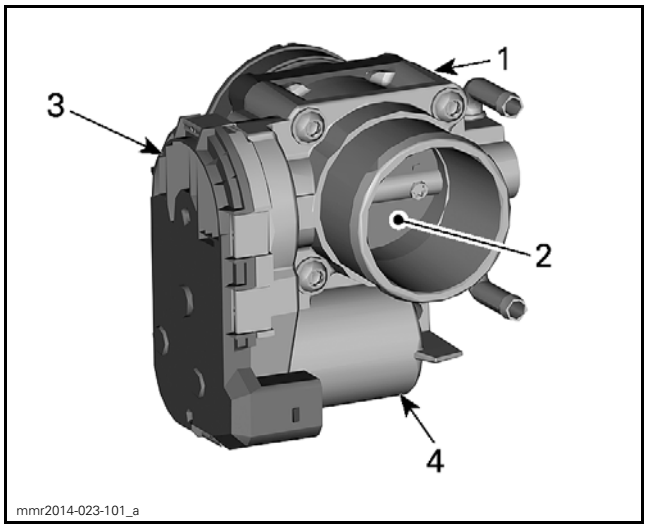


*ELECTRONIC THROTTLE CONTROL (ETC)*
1. *Throttle body (ETC)*
2. *Throttle plate*
3. *Dual Throttle Position Sensor (TPS)*
4. *Electric throttle actuator (ETA) (electric motor)*

Engine coolant flows through the throttle body (ETC) to prevent potential freezing of the throttle plate.

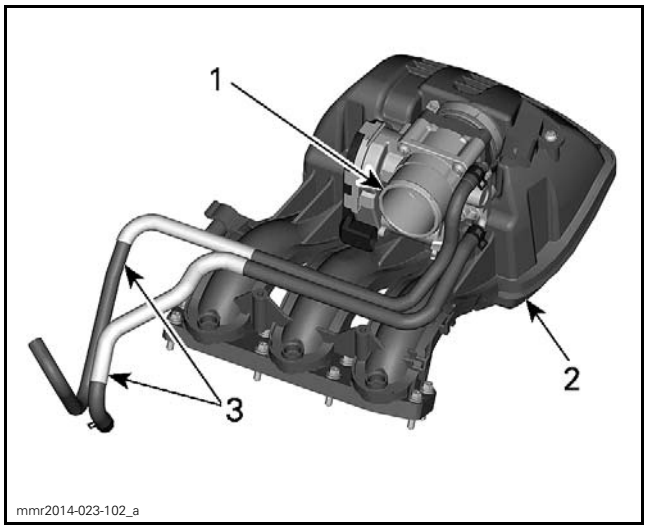


1. *Throttle body (ETC)*
2. *Intake manifold*
3. *Coolant-heated lines*

Refer to *INTELLIGENT THROTTLE CONTROL (iTC)* subsection for more information.

## Fuel System

### Fuel Rail

A fuel rail is mounted on the intake manifold. The fuel rail, which is used to secure the injectors to the manifold, also provides to the injectors the fuel pressure that it receives from the fuel pump.

The fuel pressure applied to the fuel rail is regulated by the fuel pressure regulator located in the fuel pump module.

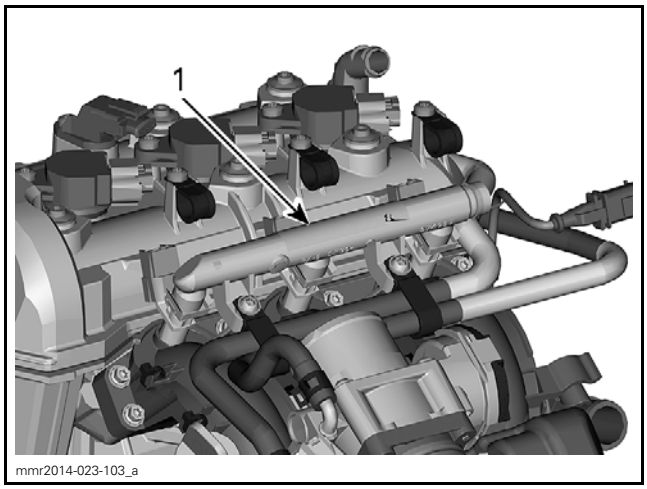


1. *Fuel rail*

### Fuel Injectors

Three fuel injectors are used to inject fuel into the intake ports of the cylinder head. One injector is used per cylinder.

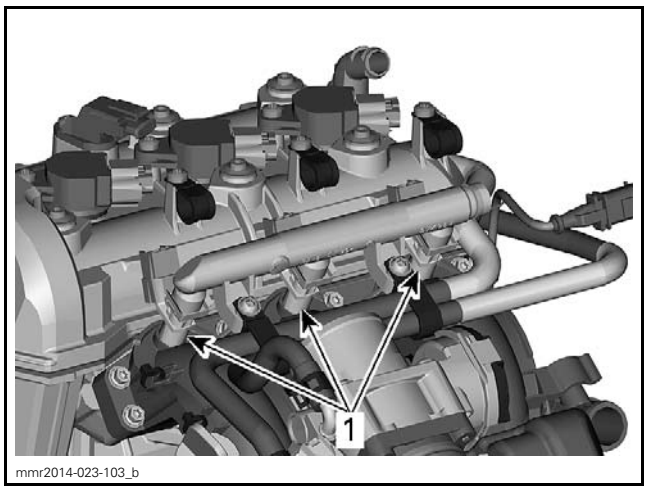


1. *Fuel injectors*

Fuel is injected in accordance with injection signals received from the ECM.

### Fuel Pump

An electric fuel pump with an integrated pressure regulator and fuel system filters is used. For more details on the fuel pump unit, refer to *FUEL TANK AND FUEL PUMP* subsection.

# ADJUSTMENT

## IDLE SPEED

Idle speed is not adjustable. The EMS (Engine Management System) controls the idle speed of the engine through the iTC system by controlling throttle plate opening using the ETA (electric throttle actuator).

The engine RPM may also be verified using the BRP diagnostic software (BUDS2).

In BUDS2, go to:
– **Measurements** page
– **ECM** button.

NOTE: The multifunction gauge and the BRP diagnostic software (BUDS2) use the same signal to provide the engine RPM indication.

# TROUBLESHOOTING

## DIAGNOSTIC TIPS

Engine problems are not necessarily related to the fuel injection system.

It is important to ensure that the engine and propulsion system, fuel delivery and electrical systems are functioning normally.

For diagnostics purposes, use the BRP diagnostic software (BUDS2).

After a problem has been solved, be sure to clear the fault(s) recorded in the ECM using the BRP diagnostic software.

**⚠ WARNING**

**Electrical actuators and electronic modules may be powered up as soon as the START/STOP button is depressed. Always disconnect the battery prior to disconnecting any electrical or electronic parts.**

Never use a battery charger to temporarily substitute the battery as it may cause the ECM to function erratically, or not at all.

Check related-circuit fuse solidity and condition with an ohmmeter. A visual inspection could lead to a false diagnosis.

### Poor Idling

If poor idling is experienced, check the following:
– Poor quality fuel or water in the fuel
– Fault codes using BUDS2
– Throttle body cleanliness
– Engine leaks or other mechanical problem.

### Electrical Related Problems

It is important to check the following in the electrical system:
– Battery voltage
– Fuses
– Ground connections
– Wiring and connectors.

Ensure that all electronic components are original BRP recommended components. Any modification to the wiring harness may lead to poor system operation or generate fault codes.

#### Electrical Connections

Pay particular attention to ensure that terminals and pins are not out of their connectors, corroded, or out of shape.

When probing terminals, pay attention not to deform the terminals as this could cause a loose or intermittent connection that would be difficult to troubleshoot.

NOTE: Do not apply dielectric grease or other lubricants on the ECM connectors.

# PROCEDURES

## ENGINE CONTROL MODULE (ECM)

As a first troubleshooting step, always check for applicable fault codes using the BRP diagnostic software (BUDS2).

### Locating the ECM

Refer to *WIRING HARNESS AND CONNECTORS* subsection.

### ECM Connector Identification

There are 2 connectors connected to the ECM:
– Engine harness connected to ECM-A
– Vehicle system control harness connected to ECM-B.

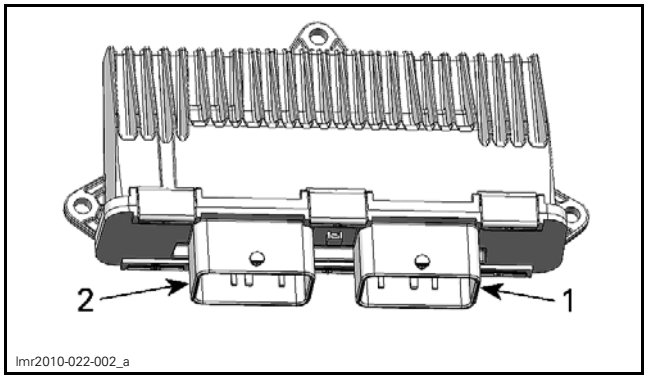


*ECM CONNECTOR IDENTIFICATION - COOLING FINS FACING OUT*
*1. Connector A*
*2. Connector B*

The ECM connectors have 48 pins.

NOTE: For connector information, cleaning and probing, refer to *WIRING HARNESS AND CONNECTORS* subsection.

## Quick Test to Validate ECM Operation

Briefly press START/STOP button.

This should wake up the ECM. The ECM will then activate relay 1 for approximately 12 seconds after which it will turn off all power. If the D.E.S.S. key is installed when the START/STOP button is pressed, the power will stay on for approximately 40 seconds.

| QUICK INDICATION THAT ECM IS POWERED (ASSUMING THE OBSERVED COMPONENT IS WORKING) |
|---|
| Multifunction gauge comes ON. |
| Fuel pump turns on for approx. 2 seconds (if key on D.E.S.S. post installed). |

If ECM does not turn on, check the following:

– Main fuse.
– Battery voltage. Refer to *CHARGING SYSTEM* subsection.
– Main relay RY1
– START/STOP switch. Refer to *STARTING SYSTEM* subsection.
– ECM power circuit wires and ground wires.

For testing of main fuse and main relay RY1, refer to *POWER DISTRIBUTION* subsection.

NOTE: When the main relay is not working, the ECM and the complete vehicle electrical system will not be powered.

## ECM Testing Tools

To test and probe the ECM connector terminals, the following tools are required. The ECM replacement will be required if connectors or terminals are damaged.

| REQUIRED TOOLS | |
|---|---|
| FLUKE 115 MULTIMETER (P/N 529 035 868) | |
| ECM ADAPTER TOOL (P/N 529 036 166) | |

## Testing the ECM Wake Up Circuit

1. Disconnect ECM-B connector and connect it to the ECM adapter tool.
2. Set the multimeter to Vdc.
3. While pressing the START/STOP button, read voltage as follows.

| ECM ADAPTER | BATTERY | READING |
|---|---|---|
| PIN | TERMINAL | VOLTAGE |
| B-D1 | Negative (Ground) | Battery Voltage |

If voltage is as per specification, refer to *TESTING THE ECM POWER SUPPLY*.

If voltage is out of specification:

– Test the START/STOP switch, refer to *STARTING SYSTEM* subsection.
– If the START/STOP switch tests good, test wiring and connectors from battery to ECM. Refer to *WIRING DIAGRAM*.

## Testing the ECM Power Supply

1. Disconnect ECM-B connector and connect it to the ECM adapter tool.
2. Install a jumper wire between B-H2 and B-M2 on the ECM adapter tool.
3. Turn the ignition switch to ON.
4. Set the multimeter to Vdc.
5. Check for voltage as follows.

| ECM ADAPTER | BATTERY | VOLTAGE |
|---|---|---|
| B-M4 | Negative post | Battery voltage |

If voltage is not measured, check the following:

– Main relay
– Wiring and connections, refer to the *WIRING DIAGRAM*.

## Testing the Continuity of ECM Ground Circuits

1. Connect ECM-B connector on the ECM adapter tool.
2. Set multimeter to Ω and probe adapter terminals as per following table.

| ECM ADAPTER | BATTERY | READING |
|---|---|---|
| PIN | TERMINAL | Ω |
| L1 | Negative (Ground) | Close to 0 Ω |
| M2 | | |
| M3 | | |

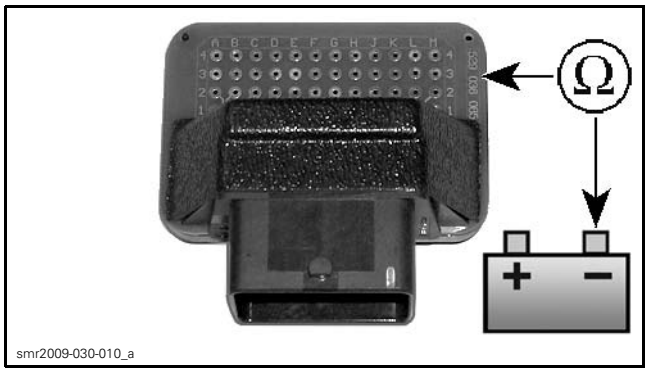


If any measurement is out of specification refer to *POWER DISTRIBUTION AND GROUNDS* subsection and check the following:
- Wiring and connections
- Engine ground
- Battery ground
- Frame ground.

## Removing the ECM

NOTE: If a new ECM is to be installed, first read the procedures in *REPLACING THE ECM* in this subsection.

1. Disconnect battery cables.

**NOTICE** Always disconnect the BLACK (–) battery cable first, then disconnect RED (+) cable.

2. Remove the upper body module. Refer to *BODY* subsection.
3. Disconnect both connectors.
4. Remove both screws retaining the ECM to the its support.
5. Remove the ECM from the vehicle.

## Installing the ECM

1. The installation is the reverse of the removal procedure. However, pay attention to the following.
2. Install and secure the ECM.

| TIGHTENING TORQUE | |
|---|---|
| ECM screw | 2.5 N•m ± 0.5 N•m (22 lbf•**in** ± 4 lbf•**in**) |

3. Reconnect ECM connectors.
4. Reinstall the upper body module.
5. Reconnect battery.

**NOTICE** Always reconnect the RED (+) battery cable first, then reconnect BLACK (–) cable.

If a new ECM is installed, refer to *REPLACING THE ECM* in this subsection.

## Replacing the ECM

Prior to replacing an ECM, ensure that all the recommendations in the general introduction of this subsection have been followed and all applicable testing procedures have been carried out.

If the ECM is replaced, data must be transferred into the new ECM.

## ECM Data Entry for ECM Replacement

Use one of the following 2 methods to collect the required information. The 1st being the easiest:

1. Use BUDS2 to obtain the data from a saved "*.buds2" file on your PC computer.
2. Collect the information from the vehicle and on the Knowledge Center.

Once the required information has been collected, refer to *ENTERING THE COLLECTED INFORMATION INTO THE ECM*.

### 1st Collecting Method: Obtaining the Data from a Saved .buds2 File

1. Start BUDS2.

NOTE: It is not necessary to perform any connection. The PC computer can be used alone.

2. In BUDS2, click on the **Open a BUDS2 file** button.

Make sure you are at: C:\Program Files(x86)\BRP\BUDS2\Files.

IMPORTANT: Be sure to use the file that specifically matches the vehicle you are servicing.

| NOTE: The file name structure is as follows: |
| --- |
| VIN_date read (yyyymmdd)_hour read (hhmmss).mpem |
| Example:<br><br>2BPSBK8C68V000168_20090206_111640.buds2<br><br>Therefore:<br><br>VIN: 2BPSBK8C68V000168<br>Date: 2009 02 06<br>Hour: 11h 16m 40s |

3. Select the **Summary** page then the **Vehicle** button and record (write down) the following information.
   1. Vehicle serial number
   2. Engine serial number
   3. Vehicle model number
   4. Customer name.

### 2nd Collecting Method: Collect the Information from the Vehicle and BOSSWeb

1. Record engine serial number.

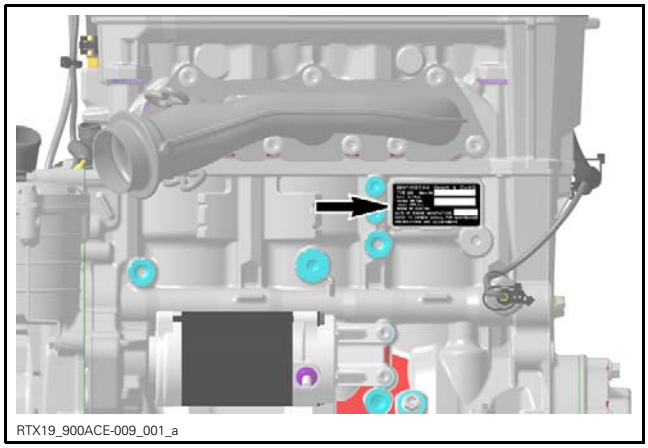

RTX19_900ACE-009_001_a

2. Record the following numbers from BOSSWeb. Look in **Sales** menu and choose **Unit history**.
   1. Vehicle serial number
   2. Vehicle model number
   3. Customer name.

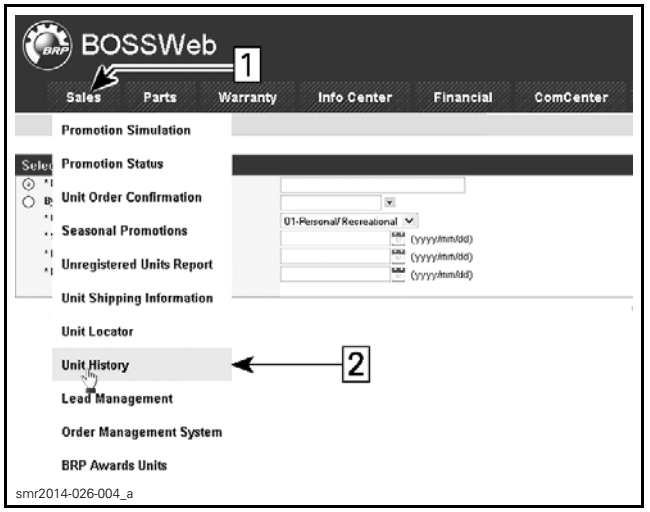


smr2014-026-004_a

*SERVICE, UNIT HISTORY*
1. *Click on* SALES *menu*
2. *Select* Unit History

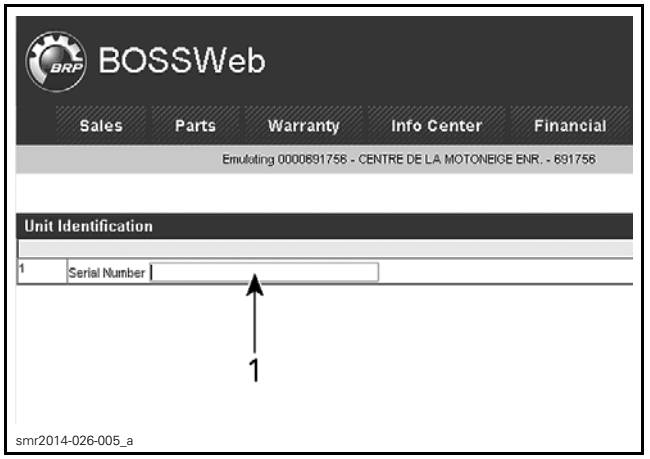


smr2014-026-005_a

1. *Vehicle Serial Number here*

3. Enter the recorded data in the new ECM as detailed in *ENTERING THE COLLECTED INFORMATION INTO THE ECM*.

### Entering the Collected Information Into the ECM

1. Connect the vehicle to the BRP diagnostic software (BUDS2).
2. In **BUDS2**, click the **Scan** button to read the new ECM.
3. Select:
   - **Summary** page
   - **Vehicle** button.
4. Write all of the following information you recorded previously.
   1. Vehicle serial number (VIN)
   2. Engine serial number
   3. Vehicle model number
   4. Customer name.

**NOTICE** . Enter only the appropriate product model number as obtained when gathering the information.

**NOTICE** Pay particular attention when typing the V.I.N. and model numbers. Once **Write Data** button is pressed, the data cannot be modified.

5. Perform the *THROTTLE POSITION SENSOR INITIALIZATION* procedure, refer to *ADJUSTMENTS* in this subsection.
6. Start the engine and ensure proper operation.
7. Reinstall any remaining removed parts.

# FUEL INJECTOR

## Fuel Injector Connector Location

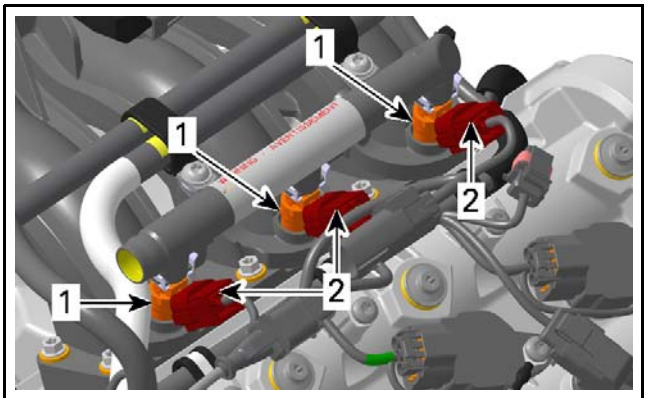


RTX19_900ACE-009_002_a

*1. Fuel Injectors*
*2. Fuel Injector connectors*

## Testing the Fuel Injector Operation Using BUDS2 (Dynamic)

NOTE: As a first troubleshooting step, always check for applicable fault codes using the BRP diagnostic software (BUDS2).

1. Connect the vehicle to the BRP diagnostic software (BUDS2).
2. Start engine.
3. In BUDS2, select the following:
   - **Functions** page
   - **ECM** button
   - **Activators** tab.
4. Select an injector.
5. Repeat for all injectors.

If the engine RPM drops momentarily when clicking on a cylinder, the injector on this cylinder is functioning normally.

If the engine RPM does not drop momentarily when clicking on a cylinder, this cylinder is not functioning properly. Check the following:

- Fuel injector operation. Refer to *TESTING THE FUEL INJECTOR BALANCE USING BUDS2*
- Spark plug and ignition coil. Refer to *IGNITION SYSTEM* subsection.
- Engine condition.

## Testing the Fuel Injector Balance Using BUDS2

**NOTICE** After fuel injector activation using BUDS2, always crank engine in drowned mode to ventilate the engine of fuel.

1. Install a fuel pressure gauge as described in *TESTING THE FUEL PUMP PRESSURE* of *FUEL TANK AND FUEL PUMP* subsection.
2. Connect the vehicle to the BRP diagnostic software (BUDS2).
3. Press the Start button to activate the ECM.
4. In BUDS2, select the following:
   - **Functions** page
   - **ECM** button
   - **Functions** tab
   - **IO Controls - Activate Fuel Pump**.
5. Click on the **ACTIVATE** button to activate fuel pump.
6. Fuel pressure must be within specification. Refer to *FUEL TANK AND FUEL PUMP* subsection. Re-activate fuel pump as necessary.
7. In BUDS2, energize fuel injector **no. 1**.
8. Record the fuel pressure drop for injector **no. 1**.
9. Re-activate fuel pump.
10. Repeat the procedure for fuel injector **no. 2** and **no. 3** and record the pressure drop for each injector.
11. The maximum fuel pressure drop between injectors should not exceed the following specification:

| MAXIMUM FUEL PRESSURE DROP ALLOWED BETWEEN FUEL INJECTORS |
|---|
| 10 kPa (1.5 PSI) |

If the pressure drop between fuel injectors is greater than the specification, replace the injector with the least pressure drop, then repeat the test.

12. Using the valve on the fuel pressure gauge, release the pressure in the system (if so equipped).

13. Remove fuel pressure gauge and reinstall removed parts.
14. Crank engine in drowned mode (accelerator held all the way in) to ventilate the engine of the fuel that was injected during the test.

**⚠ WARNING**

**Always crank engine in drowned mode to ventilate all fuel that was injected during the test. Failure to do so may result in severe engine damage and injury.**

## Testing the Fuel Injector Leakage

### Test Setup

1. Ensure there is enough fuel in fuel tank.
2. Ensure fuel pressure from fuel pump is within specification. Refer to *FUEL TANK AND FUEL PUMP* subsection.

NOTE: Keep the pressure gauge installed for the leakage test.

3. Connect the vehicle to the BRP diagnostic software (BUDS2).
4. In BUDS2, go to:
   - **Functions** page
   - **Vehicle** or **ECM** button
   - **Functions** tab
   - **Execute Fuel Pressure Relief**.
5. Remove fuel rail with injectors from engine. However, **do not** disconnect fuel pump pressure hose from fuel rail. Refer to *FUEL INJECTORS* in this subsection.
6. Position fuel rail so that an appropriate container may be placed under the injectors to collect any fuel leakage.

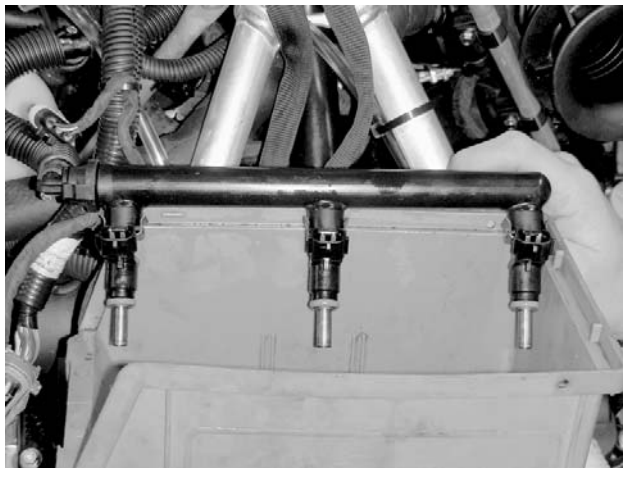

mmr2009-120-017

*INJECTOR LEAKAGE TEST SETUP*

7. Install key on D.E.S.S. post.

### Testing the Leakage

1. In BUDS2, go to:
   - **Functions** page
   - **Vehicle** or **ECM** button
   - **Functions** tab
   - **IO - Activate Fuel Pump**.
2. Check for fuel leakage from the injector nozzles.
3. Monitor fuel pressure at fuel pressure gauge. If pressure drops below 372 kPa (54 PSI) during the test, reactivate fuel pump as necessary.

| FUEL INJECTOR LEAKAGE | |
|---|---|
| TEST DURATION | SPECIFICATION |
| 2 minutes | 1 drop per minute maximum |

If test is not within specification, replace the faulty fuel injector.

4. Properly reinstall fuel rail. Refer to *FUEL RAIL* in this subsection.
5. Reinstall remaining removed components.

**⚠ WARNING**

**Wipe up any spilled fuel.**

## Testing the Fuel Injector Resistance

1. Ensure vehicle electrical power is off.
2. Disconnect connector "A" from the ECM, refer to *ECM CONNECTOR ACCESS* in this subsection.
3. Remove cover from the fuse box and locate fuse F5.
4. Check resistance value between fuse box and ECM connector terminals as follows.

NOTE: It is not necessary to remove the fuse. Refer to *POWER DISTRIBUTION* subsection for fuse box information.

| INJECTOR | ECM | FUSE BOX | READING |
|---|---|---|---|
| CYLINDER | PIN | TERMINAL | Ω @ 20°C (68°F) |
| 1 | B3 | A4 | 11.4 - 12.6 Ω |
| 2 | K1 | | |
| 3 | J1 | | |

If resistance value obtained is correct, carry out *TESTING THE FUEL INJECTOR INPUT VOLTAGE*.

If resistance value obtained is incorrect, repeat test at HIC connector located behind the ECM support Refer to *WIRING HARNESS AND CONNECTORS* subsection.

| INJECTOR | ECM | HIC | READING |
|---|---|---|---|
| CYLINDER | PIN | | Ω @ 20°C (68°F) |
| 1 | B3 | 2 | 11.4 - 12.6 Ω |
| 2 | K1 | | |
| 3 | J1 | | |

If resistance value obtained is incorrect, remove injector connector and check resistance value between injector pins as follows. Refer to *FUEL INJECTOR ACCESS* in this subsection.

| INJECTOR | | READING |
|---|---|---|
| PIN | | Ω @ 20°C (68°F) |
| 1 | 2 | 11.4 - 12.6 Ω |

If readings are out of specifications, replace injector.

## Testing the Fuel Injector Input Voltage

1. Ensure both ECM connectors are properly connected.
2. Ensure the HIC connector is properly connected.
3. Disconnect the fuel injector connector. Refer to *FUEL INJECTOR CONNECTOR ACCESS* in this subsection.

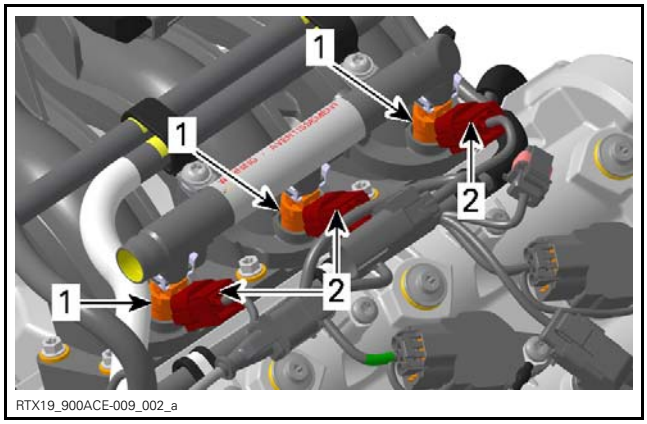

RTX19_900ACE-009_002_a

*1. Fuel Injectors*
*2. Fuel Injector connectors*

NOTE: Press against tab underneath connector as illustrated to unlock it.

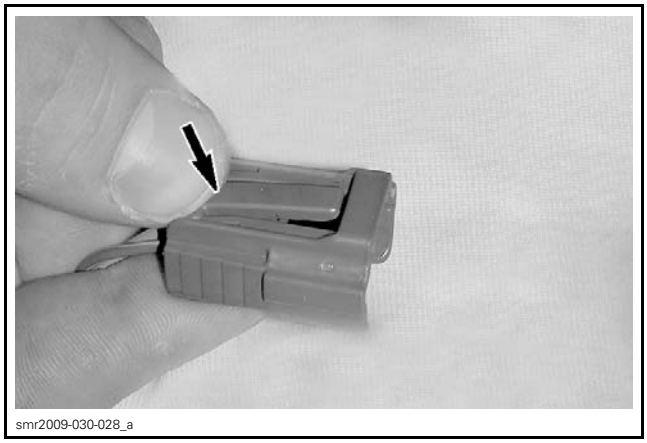
smr2009-030-028_a

*PRESS HERE TO UNLOCK*

4. Ensure fuse F5 is properly installed.
5. Install key on D.E.S.S post.
6. Momentarily press the START/STOP button to wake up the ECM without holding the brakes.

NOTE: It is not necessary to activate the injector since it is continuously powered when the ECM is awake.

7. Set the multimeter to Vdc. Read voltage.

| INJECTOR | INJECTOR | BATTERY | READING |
|---|---|---|---|
| CYLINDER | WIRE | TERMINAL | VOLTAGE |
| 1 | VIOLET/ BLUE | Battery Ground | Battery voltage |
| 2 | | | |
| 3 | | | |

If injector input voltage is good, carry out the following:

– Circuit continuity test between injector and ECM, refer to *WIRING DIAGRAM* subsection.
– Test the injector signal, go to: *TESTING THE FUEL INJECTOR SIGNAL* subsection

If injector input voltage is not good, check the following:

– Fuse F5
– Circuit continuity between fuse F5 and injector. Refer to *POWER DISTRIBUTION* and *WIRING DIAGRAM* subsections.

## Testing the Fuel Injector Signal

1. Set multimeter to Vdc.

NOTE: Make sure multimeter is in the **Auto Range** mode.

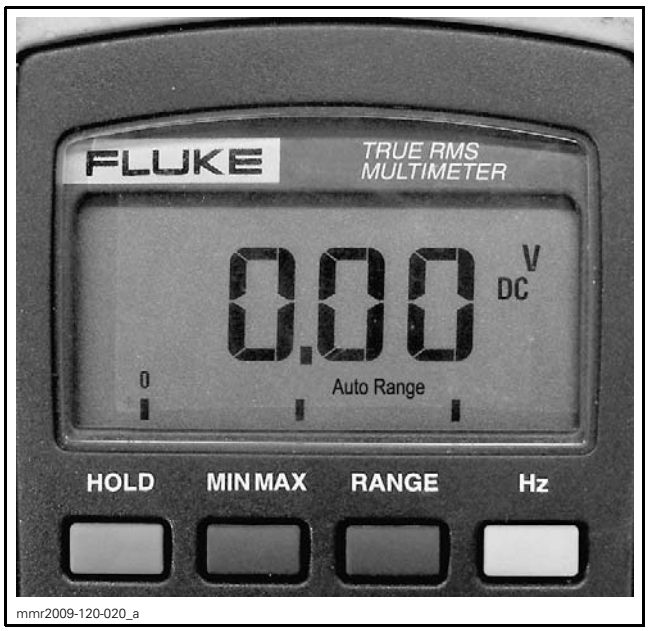

mmr2009-120-020_a

2. Press the **Hz** button so that the display shows Hz.

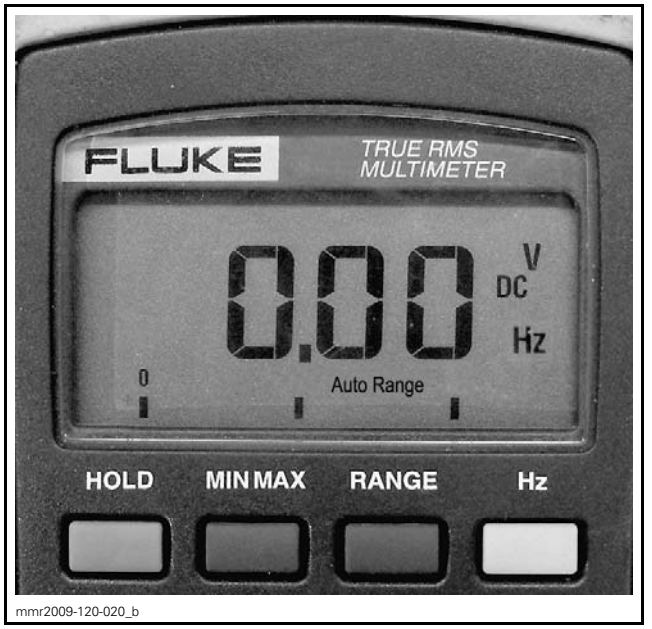

mmr2009-120-020_b

3. Connect the multimeter probes as indicated in the following table and using the BUDS2 software, activate each injector and read the frequency on the multimeter.

NOTE: The multimeter counts the pulses per seconds (Hertz) of current the ECM sends to the injector.

| INJECTOR | INJECTOR | BATTERY | READING |
|---|---|---|---|
| CYLINDER | WIRE | TERMINAL | FREQ. |
| 1 | BROWN/ RED | Battery Ground | 9 Hz |
| 2 | BROWN/ BLUE | | |
| 3 | BROWN/ GREY | | |

If reading is good, the control circuit is functional.

If there is no reading, check continuity of control circuit (ECM to injectors). Refer to *WIRING DIAGRAM* for circuit details.

## Removing the Fuel Injector

1. Connect the vehicle to the BRP diagnostic software (BUDS2).
2. In BUDS2, go to:
   – **Functions** page
   – **Vehicle** or **ECM** button
   – **Functions** tab
   – **Execute Fuel Pressure Relief**.
3. Disconnect the battery, refer to *CHARGING SYSTEM* subsection.

**⚠ WARNING**

**When removing or disconnecting the fuel injectors, always disconnect the battery.**

4. Remove parts required for access to the fuel rail and fuel injectors, refer to *FUEL INJECTOR ACCESS*.
5. Disconnect the fuel injector electrical connectors.
6. Disconnect the fuel pressure hose from the fuel rail.

| REQUIRED TOOL | |
|---|---|
| FUEL HOSE DISCONNECT TOOL (P/N 529 036 037) | |

lmr2006-008-010

NOTE: Wrap a rag around the hose end to catch any fuel leakage.

7. Remove the fuel rail mounting screws.

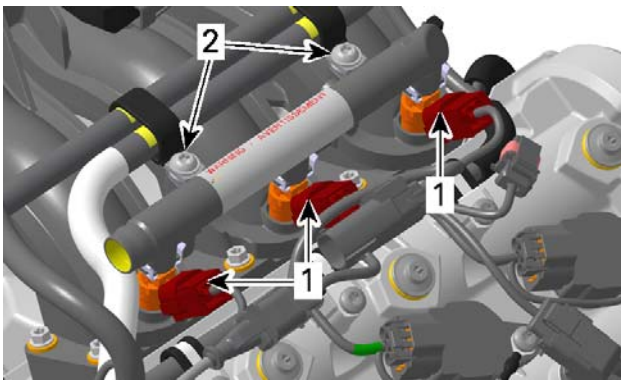


RTX19_900ACE-009_002_b

*1. Injector connectors*
*2. Fuel rail mounting screws*

8. Pull on fuel rail to remove the fuel rail and injectors from the engine.
9. Remove the fuel injector retaining clips from the fuel rail.

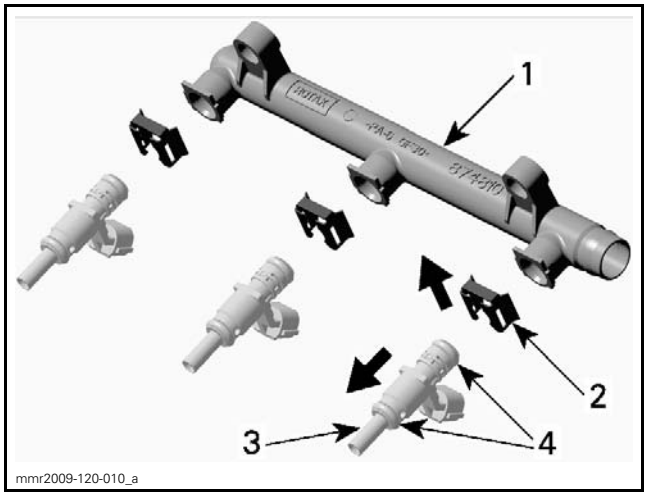


mmr2009-120-010_a

*TYPICAL - FUEL RAIL ASSEMBLY*
*1. Fuel rail*
*2. Fuel injector retaining clip*
*3. Injector*
*4. Injector O-rings*

10. Pull the fuel injector(s) out of the fuel rail.
11. Remove and discard injector O-rings.

## Identifying the Fuel Injector

For correct installation of the fuel rail it is important to identify the fuel injector type.

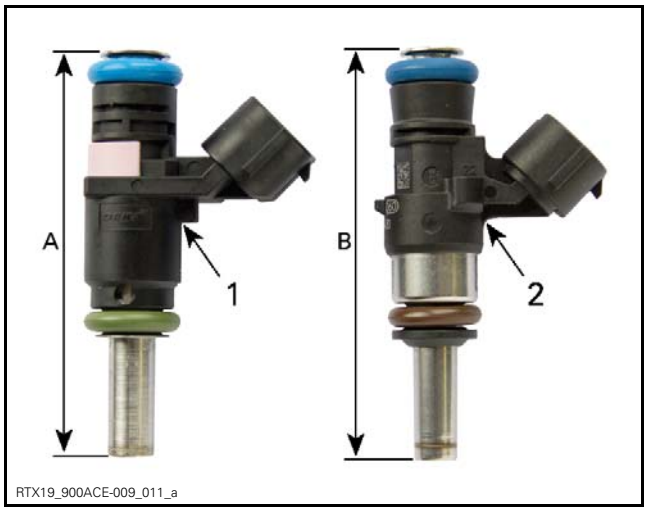


RTX19_900ACE-009_011_a

*1. Continental fuel injector*
*2. Bosch fuel injector*

*A. 61.9 mm ± 0.6 mm (2.437 in ± .024 in)*
*B. 63.3 mm ± 0.4 mm (2.492 in ± .016 in)*

## Installing the Fuel Injector

The installation is the reverse of the removal procedure. However, pay attention to the following.

1. Install NEW O-rings on fuel injector(s).

2. Apply a thin film of engine oil to O-rings to ease insertion in rail.

| SERVICE PRODUCT |
| --- |
| Engine oil |

3. Install fuel injector with your hand. Do not use any tool.
4. Firmly push injector until it bottoms out.
5. Install fuel rail.

NOTE: When installing the fuel rail, make sure to identify the fuel injector type. See *IDENTIFYING THE FUEL INJECTOR.*

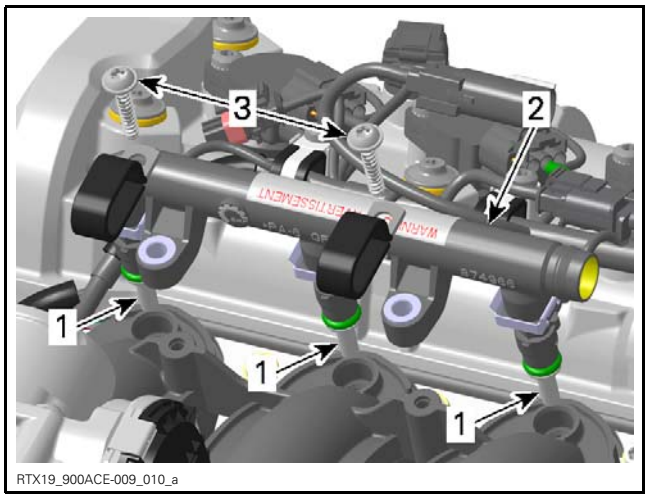


*BOSCH INJECTOR*
1. *Fuel injectors*
2. *Fuel rail*
3. *Fuel rail retaining screws*

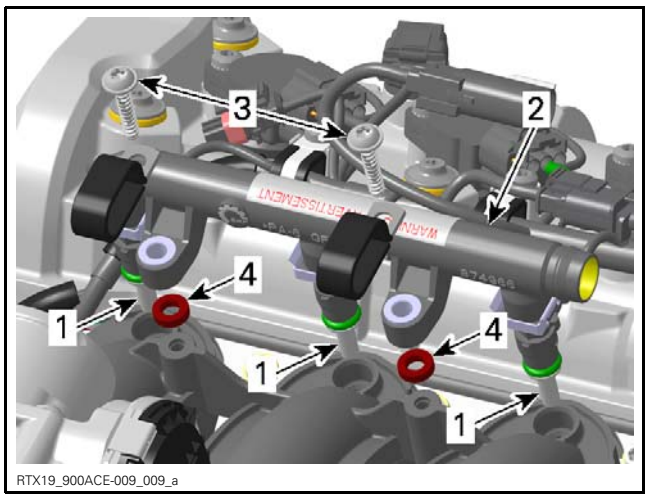


*CONTINENTAL INJECTOR*
1. *Fuel injectors*
2. *Fuel rail*
3. *Fuel rail retaining screws*
4. *Washers*

| TIGHTENING TORQUE | |
| --- | --- |
| Fuel rail retaining screw | 9 N•m ± 1 N•m (80 lbf•**in** ± 9 lbf•**in**) |

6. Apply engine oil on O-rings of fuel pressure hose fitting.

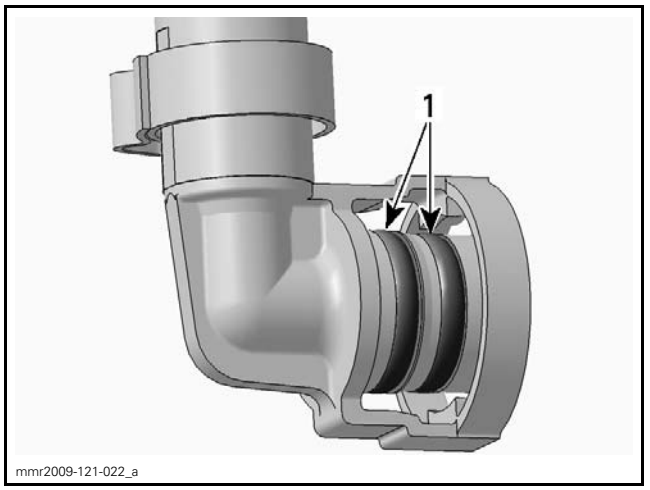


*FUEL PRESSURE HOSE FITTING*
1. *Apply oil on O-rings*

7. Connect fuel pressure hose to fuel rail.

IMPORTANT: Push fuel hose fitting on fuel rail until you hear a "click". Try pulling on fuel hose fitting to ensure it is properly locked.

Pressurize the fuel system and check for fuel leaks. Refer to *FUEL SYSTEM PRESSURIZATION* in *FUEL TANK AND FUEL PUMP* subsection.

**⚠ WARNING**

**Failure to pressurize the fuel system and checking for fuel leaks may result in severe injury or a life threatening situation should a leak occur.**

8. Reinstall all remaining removed parts.

# THROTTLE BODY (ELECTRONIC THROTTLE CONTROL (ETC))

## Throttle Body (ETC) Description

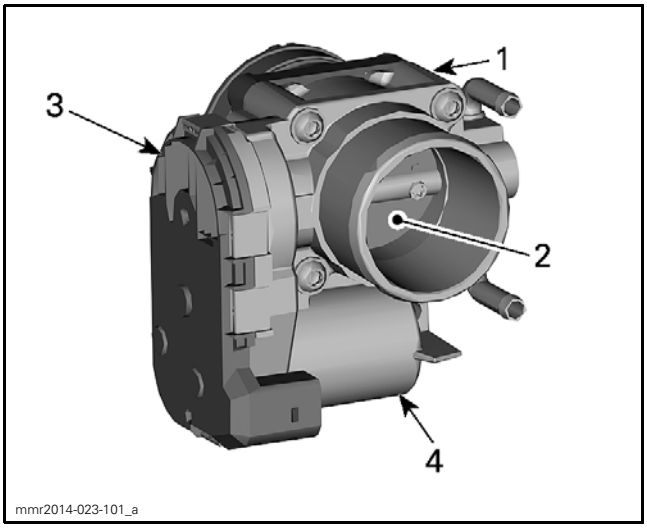


*1. Throttle body*
*2. Throttle plate*
*3. TPS (Throttle Position Sensor) (inside)*
*4. ETA (Electric Throttle Actuator) (electric motor inside)*

## Electric Throttle Actuator (ETA)

The electric throttle actuator (ETA) is a DC motor on the throttle body that regulates the throttle plate via a drive gear. It receives its control signal from the ECM. Pulse width modulation (PWM) is used to control the motor.

## Throttle Plate Operating Positions

Two torsional springs are connected to the throttle plate. A main spring and another one in a plunger mechanism.

When there is no power to the throttle actuator (ETA), the plunger mechanism maintains the throttle plate at a rest position. This also serves as the limp home position.

When the throttle plate is opened by the ETA as commanded by the ECM, it acts against the main spring. If the ETA failed, the return spring would bring the throttle plate back to the limp home position.

| ECM | ENGINE | THROTTLE BODY |
|---|---|---|
| OFF | Stopped | Throttle actuator: Off.<br>Throttle plate: Rest position, maintained opened at approximately 8° (1). This is also the limp home position. |
| ON | Not started | Throttle actuator: On.<br>Throttle plate: Moves from the rest position to approximately 15°. It then moves back to the rest position. This is the diagnostic mode where the rest position, actuator opening force to overcome the return springs and the motor return rate are monitored. If any of these parameters are out of range, a fault code is initiated. |
| ON | Not started. Very cold environment | Throttle actuator: On.<br>Throttle plate: Execute check for ice on throttle plate. If throttle plate does not reach the fully closed position, throttle plate is moving until closed position can be reached. |
| ON | Started. Normal operation at idle | Throttle actuator: On.<br>Throttle plate: Moves from the rest position to idle position (approximately 1-3°) according to ECM injection and ignition maps. Throttle plate is opened and closed as necessary to control the idle speed. |
| ON | Started. Normal operation at various RPM | Throttle actuator: On.<br>Throttle plate: Opens and closes according to ECM torque management priorities. |
| (1) Degree values are given from the fully closed position. | | |

## Throttle Body (ETC) Faults and Effects

NOTE: Among other things, a weak or broken spring and a sticky throttle plate are validated by the throttle body diagnostic mode.

| FAULT | EFFECT |
|---|---|
| Partial failure of TAS sensor (one internal sensor only) | Limp home mode. Engine speed limited to idle. ECM will use the remaining TAS sensor. Fault code set and beeper activated to emit warning signals. Check engine light is turned ON. Driveability could be reset by releasing and reapplying the throttle. |
| Complete failure of TAS sensor (both internal sensors) | Limp home mode. Engine speed limited to 2500 RPM. Fault code set and beeper activated to emit warning signals. Check engine light is turned ON. |
| Any throttle body failure | Limp home mode. Engine speed limited to 2500 RPM. Engine speed can still be increased up to 3200 RPM using the throttle lever. Fault code set and beeper activated to emit warning signals. Check engine light is turned ON. |

NOTE: Refer to *DIAGNOSTIC AND FAULT CODES* and *INTELLIGENT THROTTLE CONTROL* (iTC) subsections for more informations.

## Lubricating the Throttle Body (ETC)

No lubrication is required.

## Testing the Electric Throttle Actuator (ETA)

### Electric Throttle Actuator (ETA) Test with BUDS2

1. Connect the vehicle to the BRP diagnostic software (BUDS2).
2. Install key on D.E.S.S. post.
3. Press the START/STOP button without holding the brakes to wake up the ECM.
4. In BUDS2, go to:
   - **Measurements** page
   - **ECM** button
   - **Presets** and **ECM - BASIC** tabs
   - **Throttle Opening**.
5. Slowly depress the throttle to WOT. The ETA should go from almost 10% to 100%.

If result is out of specification, carry out a *THROTTLE POSITION SENSOR INITIALIZATION*. Refer to *THROTTLE POSITION SENSOR (TPS)* in this subsection.

NOTE: The ETA is reset at the same time as the TPS.

After the reset, test ETA again.

If the result is still out of specification, check wire continuity between ECM and throttle body before assuming the ETA is at fault.

## Inspecting the Throttle Body (ETC)

1. Remove parts required to access throttle body, refer to *THROTTLE BODY (ETC) ACCESS*.
2. Carry out the following:
   - Inspect throttle body for cleanliness.
   - Ensure throttle plate opens fully and smoothly.
   - Check for corroded or damaged wiring or damaged ETC connectors.

### Testing the Throttle Body (ETC) (Dynamic)

1. Remove the parts required to access the throttle body (ETC), refer to *REMOVING THE THROTTLE BODY (ETC).*
2. Remove the air inlet hose from the throttle body.
3. Observe the throttle plate with the engine stopped.

The throttle plate should be in the rest position (slightly opened).

**⚠ CAUTION Keep your fingers out of the throttle plate area while the ECM turns on. The throttle actuator will cycle. This could cause serious finger injuries as throttle plate quickly moves.**

4. As you observe the throttle plate, have someone press the START/STOP button to wake up the ECM.

The throttle plate should cycle quickly from the rest position to a partially open position (approximately 15°), then back to the rest position.

5. Install the tether cord on the D.E.S.S. post.

The throttle plate should cycle again.

6. As you observe the throttle plate, have someone gradually and evenly pull in the throttle lever, then release it in the same way.

The throttle plate should open then close according to throttle lever position however, the movement of the throttle plate may not be linear with the displacement of the throttle lever.

If any test failed, proceed with *TESTING THE THROTTLE BODY (ETC) (STATIC).*

### Testing the Throttle Body (ETC) (Static)

**⚠ CAUTION** First ensure the ECM is off. Do not move the throttle plate using your fingers. Otherwise, should the START/STOP button be pressed, the ECM would turn on and quickly cycle the throttle plate which could cause serious finger injury.

1. Using a blunt tool, push in on the throttle plate and ensure it opens smoothly within the throttle body.

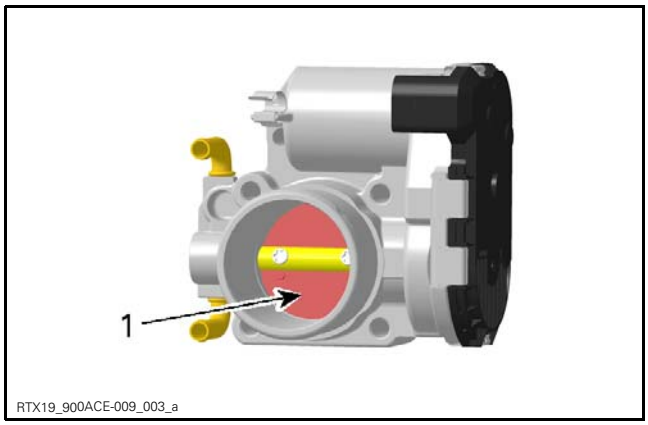


*1. Push here to open*

NOTE: The throttle plate must open fully and return freely to the rest position (slightly opened) when released.

2. Push throttle plate closed as indicated in following illustration. It must close completely and return freely to the rest position (slightly opened) when released.

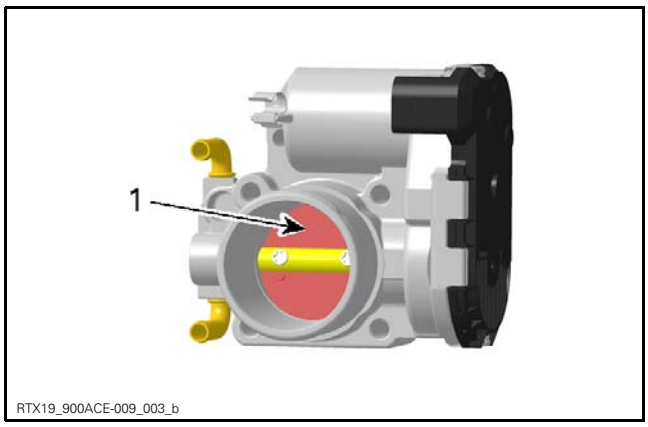


*1. Push here to close*

If the throttle plate does not move smoothly or does not return freely to the rest position, the problem is mechanical. Check for dirt accumulation on throttle plate shaft. It may also be an actuator or gear problem. Replace throttle body as necessary.

If throttle plate operates normally, the problem is electrical. Check electric throttle actuator (ETA) wiring continuity, throttle position sensor (TPS) and throttle accelerator sensor (TAS).

## Cleaning the Throttle Body (ETC)

1. Remove throttle body from intake manifold. Refer to *REMOVING THE THROTTLE BODY (ETC)* further in this subsection.
2. Check throttle body cleanliness using a flashlight. Fully open throttle plate and verify:
   – Throttle body bore
   – Throttle plate edge.

Look for:
– Dirt
– Oily surfaces
– Carbon and dirt deposits on throttle plate and the surrounding bore.

3. Clean as necessary.

**NOTICE** Only use an appropriate throttle body cleaner that will not damage O-rings and EFI sensors.

4. To avoid getting dirt into engine, spray cleaner on a clean rag then rub rag against throttle plate and bore. A toothbrush may also be used.
5. Gently open throttle plate and hold fully open to clean all surfaces.
6. To remove residual dirt, spray cleaner on throttle plate and throttle bore.
7. Reinstall all removed parts.

## Removing the Throttle Body (ETC)

**⚠ CAUTION** Ensure the key is removed from D.E.S.S. post and battery cables are disconnected so that nobody can activate the electrical system, otherwise the ECM would turn on and the throttle actuator (ETA) would cycle. This could cause serious finger injury as the throttle plate moves quickly.

1. Remove parts required to access throttle body, refer to *THROTTLE BODY (ETC) ACCESS*.
2. Loosen gear clamp and remove throttle body from intake manifold.

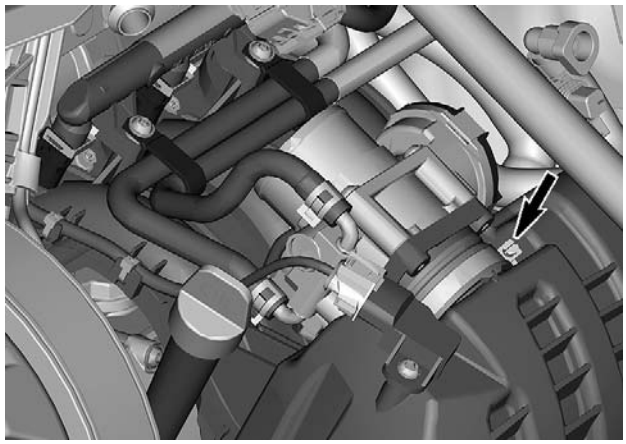
mmr2014-023-120_a

3. Disconnect MAPTS and ETC connectors.

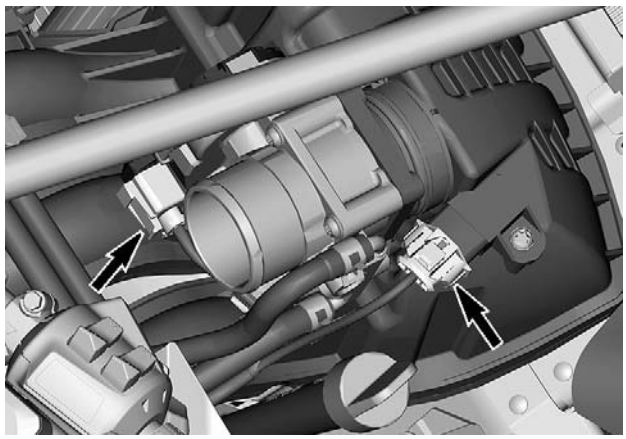
mmr2014-023-118_a

4. Pinch each coolant hoses connected to throttle body.

| REQUIRED TOOL | |
|---|---|
| SMALL HOSE PINCHER (P/N 295 000 076) | 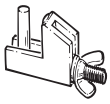 |

5. Disconnect coolant hoses from throttle body.

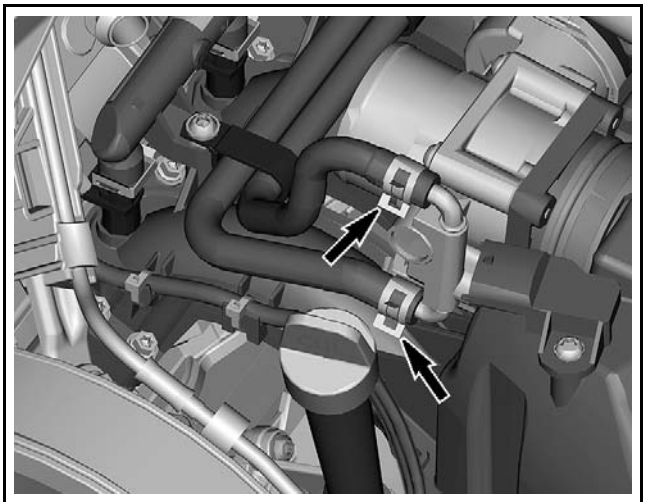
mmr2014-023-119_a

### Installing the Throttle Body (ETC)

The installation is the reverse of the removal procedure. However, pay attention for the following.

1. Refill and bleed cooling system. Refer to *COOLING SYSTEM* subsection.
2. Perform the *THROTTLE POSITION SENSOR INITIALIZATION* reset procedure. Refer to *THROTTLE POSITION SENSOR (TPS)* in this subsection.
3. Install all remaining removed parts, refer to applicable subsections.
4. Start engine and ensure proper idle and throttle control.

## THROTTLE POSITION SENSOR (TPS)

### TPS Description

The TPS is part of the throttle body (ETC).

The throttle position sensor (TPS) is a double potentiometer that sends signals to the ECM that are proportional to the throttle plate angle.

As a first troubleshooting step, always check for applicable fault codes using the BRP diagnostic software (BUDS2).

### Throttle Position Sensor Initialization

NOTE: The TPS initialization procedure **must** be carried out whenever the throttle body (ETC) is replaced.

This operation performs a reset of the TPS basic values in the ECM. This reset is very important as the TPS values are part of the basic parameters for all fuel mapping calculations and control of several settings such as for idle speed, LIMP HOME mode and maximum RPM of the engine.

**NOTICE** An improperly set TPS may lead to improper idle speed (too low or too high), poor engine performance, poor engine starting and engine stop on deceleration, fault codes and possible engine damage. Emission compliance may also be affected.

1. Install key on D.E.S.S. post.
2. Press the START/STOP button to wake up the ECM.
3. Ensure accelerator pedal is completely released.
4. Connect the vehicle to the BRP diagnostic software (BUDS2).
5. In BUDS2, select
   - Settings button
   - ECM page tab
   - Settings page
   - Initialization - Reset TPS.
6. In the Reset TPS box, click on the Reset button.

A message will be displayed if the operation is successful.

If an error occurred or the TPS is not within the allowed range while resetting, the ECM will generate a fault code and will not accept the setting.

7. Start engine and make sure it operates normally through its full engine RPM range.
8. Check for fault codes using BUDS2, If a fault code related to the throttle actuator appears, clear it, then carry out another Closed Throttle Reset procedure. To clear faults, refer to *DIAGNOSTIC AND FAULT CODES* subsection.

## Testing the TPS Resistance

1. Ensure the throttle body connector is properly connected.
2. Disconnect ECM connector A from the ECM and install it on the ECM adapter tool.
3. Set multimeter to Ω.
4. Probe circuit as per following table while using your hand to manually move throttle plate.

| ECM ADAPTER | | FULLY CLOSED THROTTLE PLATE (1) | | FULLY OPEN THROTTLE PLATE | |
|---|---|---|---|---|---|
| | | RESISTANCE (Ω) | | | |
| PIN | | MIN. | MAX. | MIN. | MAX. |
| A-A2 | A-K4 | 875 | 1625 | 875 | 1625 |
| A-A2 | A-K3 | 954 | 1934 | 228 | 585 |
| A-A2 | A-F3 | 254 | 634 | 980 | 1983 |
| A-K3 | A-K4 | 228 | 585 | 954 | 1934 |
| A-K3 | A-F3 | 1385 | 2315 | 1385 | 2315 |
| A-K4 | A-F3 | 980 | 1983 | 254 | 634 |

(1) To obtain the fully closed position, it is necessary to push against the throttle plate in the throttle body with your hand and hold it in this position for the measurement.

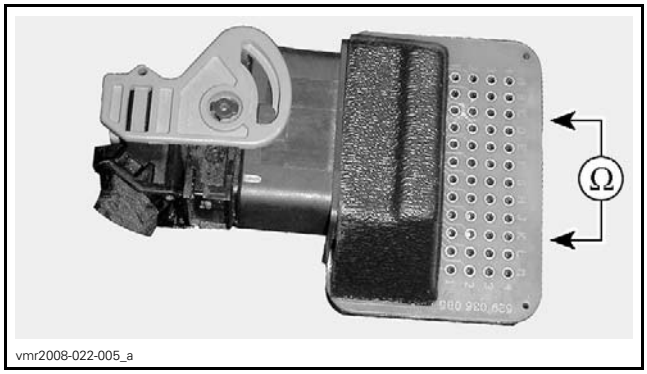

vmr2008-022-005_a

If any resistance value is incorrect, check wire continuity between ECM and throttle body before assuming the TPS is at fault. Refer to *WIRING DIAGRAM* subsection.

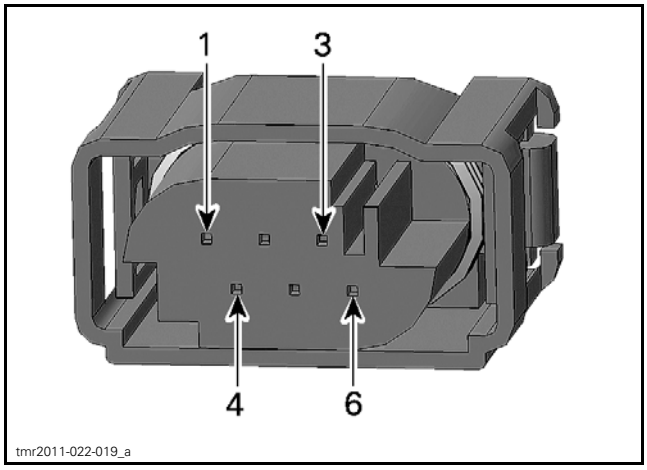

tmr2011-022-019_a

*THROTTLE BODY CONNECTOR PIN-OUT*

# CRANKSHAFT POSITION SENSOR (CPS)

## CPS TROUBLESHOOTING

When troubleshooting a CPS fault, take into account that a CPS fault can be triggered by bent or missing encoder wheel teeth.

Push START/STOP button and crank engine. If engine does not start within 15 seconds check for fault codes using the BRP diagnostic software (BUDS2).

### CPS and CPS Connector Location

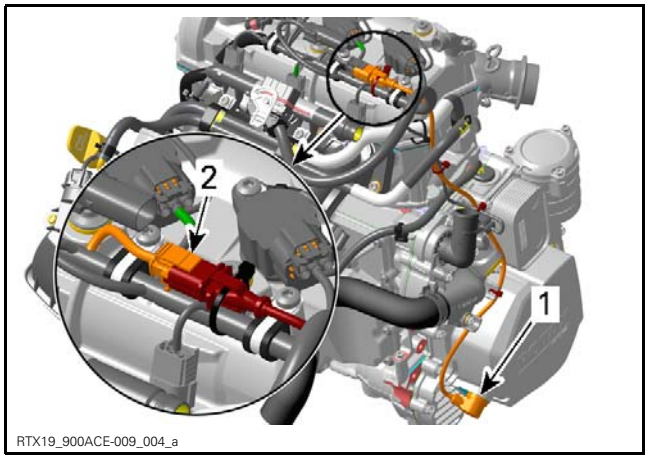


*1. CPS location*
*2. CPS connector location*

### Testing the CPS Resistance

1. Disconnect CPS connector.

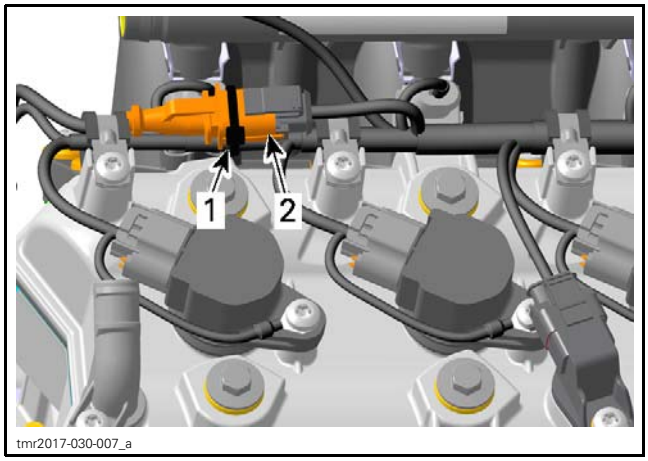


*1. Locking tie*
*2. CPS connector*

2. Probe CPS connector terminals as per following table.

| CPS | | READING |
|---|---|---|
| PIN | | Ω @ 20°C (68°F) |
| 1 | 2 | 775 - 950 Ω |

If resistance is not within specifications, replace the CPS.

If resistance tests good, **reconnect** the CPS connector.

1. Disconnect ECM-A connector from the ECM and connect it to the ECM adapter.
2. Recheck resistance as per table.

| ECM ADAPTER | | READING |
|---|---|---|
| PIN | | Ω @ 20°C (68°F) |
| H1 | K2 | 775 - 950 Ω |

If resistance is as specified, test continuity of wiring between ECM-A and CPS connectors. Refer to *WIRING DIAGRAM* subsection.

If resistance value is not as specified, reconnect ECM-A connector to the ECM and refer to *TESTING THE CPS OUTPUT VOLTAGE*.

### Testing the CPS Output Voltage

1. Remove fuse F5.
2. Cut locking tie and disconnect the CPS connector.

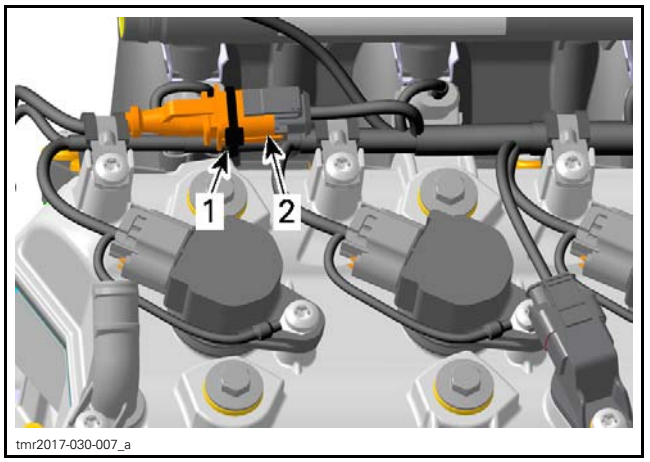


*1. Locking tie*
*2. CPS connector*

3. Probe CPS connector terminals while cranking engine as per following table.

| CPS | | READING |
|---|---|---|
| PIN | | VOLTAGE |
| 1 | 2 | 1 - 2 Vac min. |

If voltage is out of specification, inspect wiring and connectors. Replace CPS if wiring is good.

If voltage is within specification, the problem may be related to the ECM.

4. Reconnect CPS connector and install all removed parts.

### Replacing the CPS

1. Remove parts required to access the CPS.
2. Take note of factory CPS wire harness routing for reinstallation.
3. Cut harness locking ties and disconnect CPS connector.

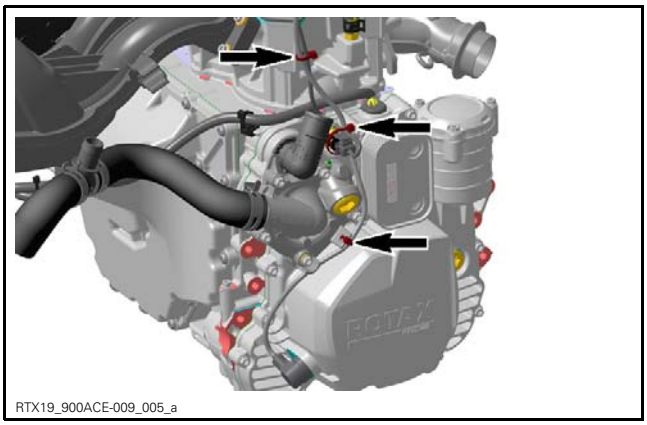
RTX19_900ACE-009_005_a

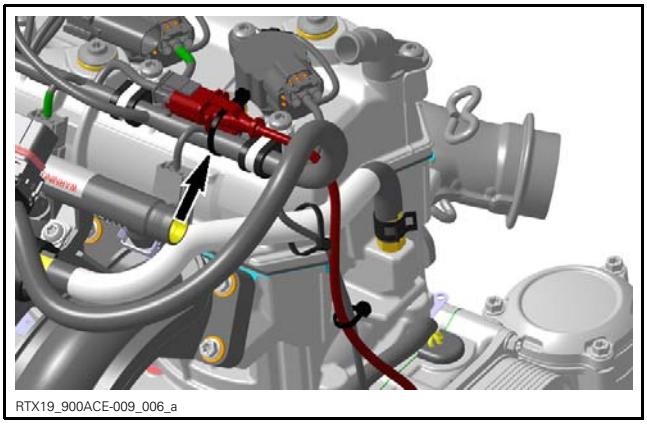
RTX19_900ACE-009_006_a

4. Remove CPS retaining screw and pull on CPS to remove it.

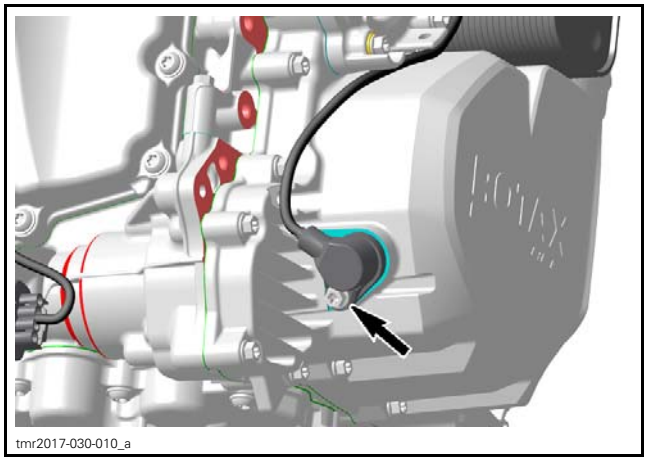
tmr2017-030-010_a

5. Install new CPS.

| TIGHTENING TORQUE | |
|---|---|
| O-ring | Apply engine oil on O-ring |
| CPS retaining screw | 9 N•m ± 1 N•m (80 lbf•**in** ± 9 lbf•**in**) |

6. Route and secure CPS harness using harness clamp and locking ties as noted prior to removal.

## CAMSHAFT POSITION SENSOR (CAPS)

### CAPS Location

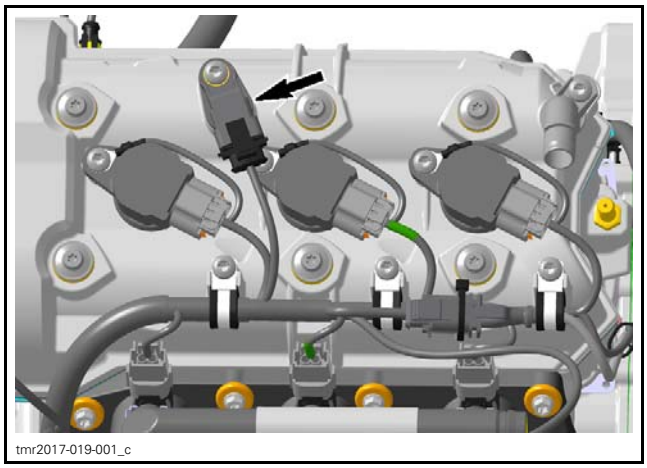
tmr2017-019-001_c

### Testing the CAPS Voltage (Harness Side)

1. Remove the parts required to access the CAPS.
2. Disconnect CAPS connector.

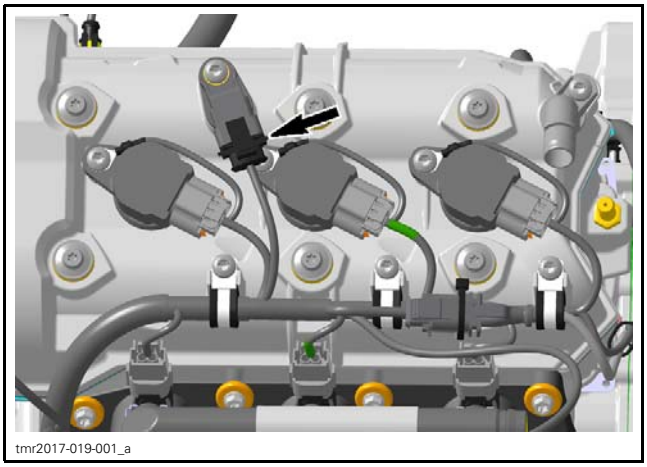
tmr2017-019-001_a

3. Install key on D.E.S.S. post.
4. Press the START/STOP button to wake up the ECM without holding the brakes.
5. Probe harness connector terminals as per following table.

| CAPS | | READING |
|---|---|---|
| PIN | | VOLTAGE |
| 3 | 1 | Battery Voltage |

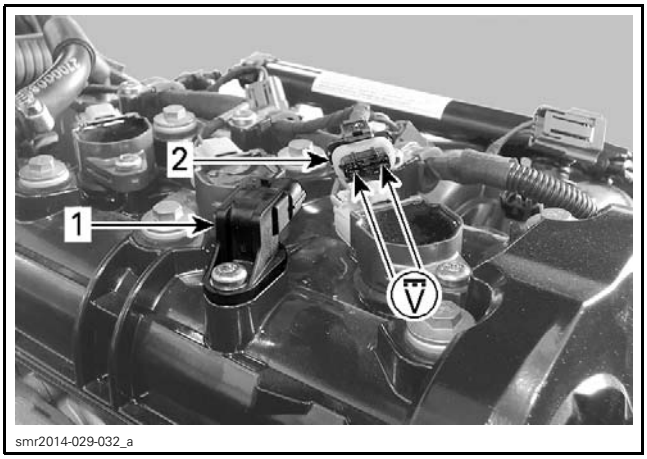

smr2014-029-032_a

*TYPICAL*
*1. CAPS*
*2. CAPS connector*

If battery voltage is read, proceed with *TESTING THE CAPS (DYNAMIC)* further in this subsection.

If battery voltage is not read, probe circuit as per following table.

| CAPS | BATTERY | READING |
|---|---|---|
| PIN | TERMINAL | VOLTAGE |
| 3 | Battery Ground | Battery Voltage |

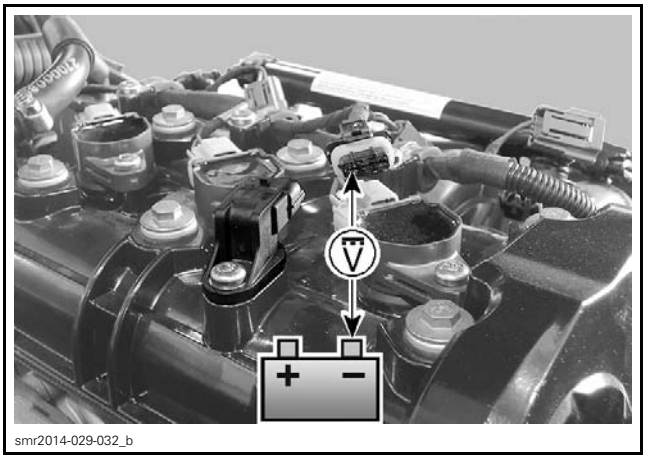

smr2014-029-032_b

*TYPICAL*

If voltage is read to battery ground, check continuity of ground circuit between CAPS pin 1 and ECM-A connector pin D4. Repair or replace wiring and connectors.

If voltage is not read to battery ground, carry out *TESTING THE CONTINUITY OF CAPS POWER CIRCUIT*.

## Testing the Continuity of CAPS Power Circuit

1. Remove the F5 fuse.
2. Set the multimeter to Ω.
3. Read resistance of the CAPS circuit as per following table.

| CAPS | FUSE BOX | READING |
|---|---|---|
| PIN | TERMINAL | Ω |
| 3 | D1 | Close to 0 Ω |

If continuity is good, wiring and connectors are functional.

If a high resistance or an open circuit is measured, refer to *WIRING DIAGRAM* and check the following:

– Continuity from CAPS connector pin 3 to HIC connector pin 4.
– Continuity from HIC connector pin 4 to fuse box contact D1.

Pay attention to connector pin contact and junction JT (VT/BU).

Repair or replace wiring and connectors as required.

4. Reinstall all removed parts.

## Testing the CAPS (Dynamic)

1. Remove the parts required to access the CAPS.
2. Remove CAPS sensor from engine.

3. Back-probe connector and read voltage as follows.

NOTE: To safely probe wire terminals through the back of the connector, use the following tool or an equivalent.

| REQUIRED TOOL | |
|---|---|
| Automotive back probe pin | |

**NOTICE** Do not use sharp end probes. They could damage the connector seal.

4. Briefly press the START/STOP button to wake up the ECM.
5. Install the tether cord cap on the D.E.S.S. post.
6. Read voltage as per following tables.

| CAPS | | CAPS CONDITION | READING |
|---|---|---|---|
| PIN | | SENSOR END | VOLTAGE |
| 3 | 2 | Free | Close to 0 Vdc |

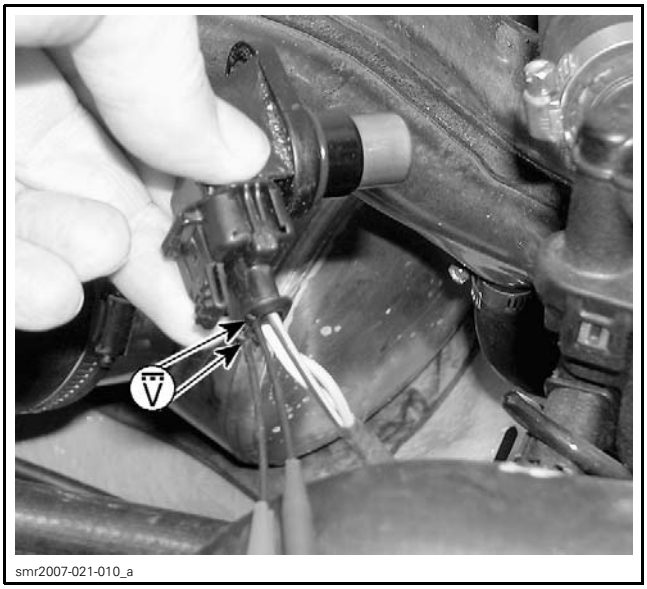

smr2007-021-010_a

*TYPICAL*

| CAPS | | CAPS CONDITION | READING |
|---|---|---|---|
| PIN | | SENSOR END | VOLTAGE |
| 3 | 2 | Metallic Object on Sensor | Battery Voltage |

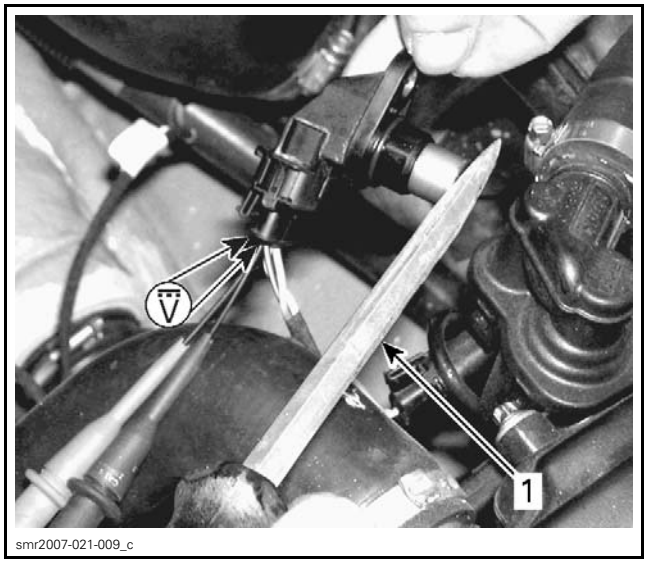


smr2007-021-009_c

*TYPICAL*
*1. Metallic object*

If voltage is as specified, repair or replace wiring and connectors between sensor and ECM.

If wiring is good, check ECM. Refer to *ENGINE CONTROL MODULE (ECM)*.

If battery voltage is not measured as specified, try a new CAPS.

## Replacing the CAPS

1. Disconnect CAPS connector.

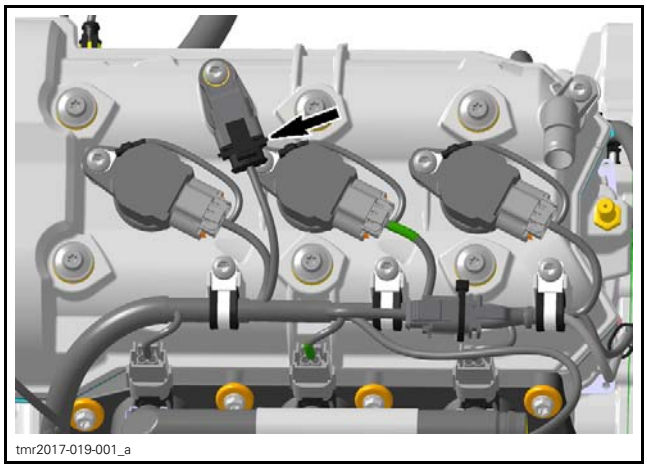

tmr2017-019-001_a

2. Unscrew the CAPS retaining screw.
3. Pull CAPS from engine.
4. Apply engine oil on the new sensor O-ring.

**NOTICE** Be sure to install new O-ring on the new CAPS.

5. Install the new CAPS.

| TIGHTENING TORQUE | |
|---|---|
| CAPS retaining screw | 9 N•m ± 1 N•m (80 lbf•**in** ± 9 lbf•**in**) |

6. Apply dielectric grease in the CAPS connectors.

| SERVICE PRODUCT |
|---|
| DIELECTRIC GREASE (P/N 293 550 004) |

# MANIFOLD ABSOLUTE PRESSURE AND TEMPERATURE SENSOR (MAPTS)

This sensor is a multifunction device. It measures manifold absolute pressure and intake temperature for air flow calculations.

## MAPTS Location

The MAPTS is located on the intake plenum.

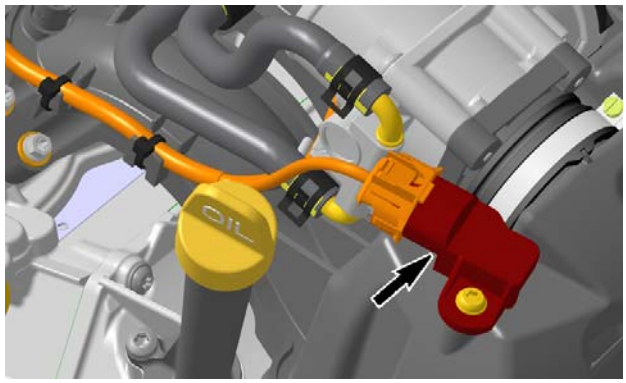


RTX19_900ACE-009_007_a

## MAPTS Pressure Function

Before the engine is started, when power is applied to the system, the sensor measures the ambient air atmospheric pressure. The ambient pressure is, at that moment, stored in the ECM. Thereafter, once the engine is started, it measures the air pressure in the intake manifold at operating RPMs.

The sensor must be correctly installed on the intake manifold. Otherwise, the MAPTS could generate a fault code for an unexpected sensor range at idle when it reads the atmospheric pressure. If this is the case, remove sensor and check for oil or dirt on its end and if problem persists, check throttle plate condition/position and the wiring harness. Perform the following tests.

### Testing the MAPTS (Pressure Function)

1. Connect vehicle to the .BRP diagnostic software (BUDS2)
2. In BUDS2, select the following:
   –
   – **Measurements** page
   – **ECM** button
   – **Custom** tab
   – **Manifold Pressure With Altitude Correction**.
3. Look for and take note of the MAPTS pressure reading while the engine is stopped.
4. Perform the same test with a new MAPTS and compare both readings.

Values have to be within ± 3.4 kPa (.5 PSI).

**NOTE:** 1 kPa = 10 hPa.

| **MAPTS PRESSURE FUNCTION QUICK TEST** | | | |
|---|---|---|---|
| RESULT | SERVICE ACTION | | |
| NO READING | Circuit Continuity Test of MAPTS Pressure Function | MAPTS Input Voltage Test | Repair or replace wiring |
| VALUE IS OUT OF RANGE | Replace MAPTS | | |

### Testing the MAPTS Input Voltage

1. Remove electrical connector from MAPTS.

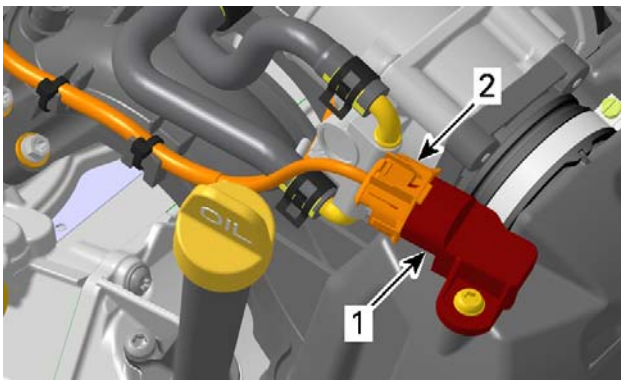


RTX19_900ACE-009_007_b

*1. MAPTS*
*2. MAPTS connector to remove*

2. Briefly push START/STOP button.
3. Set multimeter to Vdc, measure for MAPTS input voltage as per following table.

| **MAPTS** | | **READING** |
|---|---|---|
| PIN | | VOLTAGE |
| 1 | 3 | 5 Vdc |

If voltage test is good, replace the MAPTS.

If voltage test is not good, carry out *TESTING THE MAPTS CIRCUIT CONTINUITY (PRESSURE FUNCTION)*.

### Testing the MAPTS Circuit Continuity (Pressure Function)

1. Install ECM-A connector on ECM adapter tool.
2. Check continuity of the following circuits.

| ECM ADAPTER | MAPTS | READING |
|---|---|---|
| PIN | | Ω |
| B4 | 3 | Close to 0 Ω |
| G4 | 4 | |
| H2 | 1 | |

If resistance is not within specification, repair or replace the wiring harness between ECM connector and the MAPTS.

## MAPTS Temperature Function

The MAPTS also monitors the temperature of the air in the intake manifold.

### Quick Testing the MAPTS (Temperature Function)

1. Connect the vehicle to the BRP diagnostic software (BUDS2).
2. In BUDS2, select the following:
   - **Measurement** page
   - **ECM** button
   - **Custom** tab.
3. Look for **Intake Temperature** reading while the engine is stopped.
4. Perform the same test with a new MAPTS and compare both readings.

If the engine's MAPTS temperature reading is significantly different than the new MAPTS, replace it.

**NOTE:** Both sensors must feel same ambient air temperature.

If there is no reading, carry out *TESTING THE MAPTS RESISTANCE (TEMPERATURE FUNCTION)*.

### Testing the MAPTS Resistance (Temperature Function)

1. Disconnect the MAPTS connector.
2. Test MAPTS resistance at the sensor as per following tables.

| MAPTS | | READING |
|---|---|---|
| PIN | | RESISTANCE Ω |
| 1 | 2 | Refer to MAPTS TEMPERATURE SENSOR TABLE |

| MAPTS TEMPERATURE SENSOR TABLE | | |
|---|---|---|
| TEMPERATURE | | Ω |
| °C | °F | MAPTS |
| - 40 | - 40 | 40528 to 56935 |
| - 10 | - 14 | 8103 to 10919 |
| 20 | 68 | 2193 to 2863 |
| 80 | 176 | 294 to 368 |
| 120 | 248 | 98 to 122 |

If resistance is not within specification, replace the MAPTS.

If resistance tests good, **reconnect** the MAPTS and proceed with the following steps.

3. Install ECM-A connector on the ECM adapter tool.
4. Recheck resistance value as per following table.

| ECM ADAPTER | | READING |
|---|---|---|
| PIN | | RESISTANCE Ω |
| H2 | H3 | Refer to MAPTS TEMPERATURE SENSOR TABLE |

| MAPTS TEMPERATURE SENSOR TEST RESULTS | | | |
|---|---|---|---|
| RESULT | SERVICE ACTION | | |
| NO READING | Circuit Continuity Test of MAPTS Temperature Function | MAPTS Input Voltage Test | Repair or replace wiring |
| INCORRECT RESISTANCE VALUE | Check condition of connector pins, replace MAPTS | | |
| CORRECT RESISTANCE VALUE | Try a new ECM | | |

Testing the MAPTS Circuit Continuity (Temperature Function)

| ECM ADAPTER | MAPTS | READING |
|---|---|---|
| PIN | | Ω |
| H2 | 1 | Close to 0 Ω |
| H3 | 2 | |

Repair or replace wiring as required.

## Replacing the MAPTS

1. Disconnect MAPTS connector and remove the MAPTS from the intake manifold.

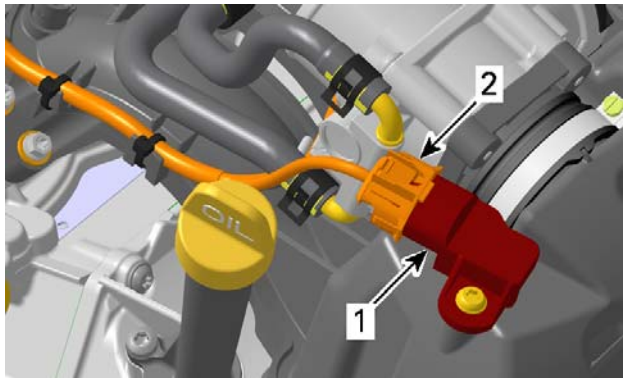

RTX19_900ACE-009_007_b

*1. MAPTS*
*2. MAPTS connector*

2. Install new MAPTS as per following table.

| TIGHTENING TORQUE | |
|---|---|
| MAPTS retaining screw | 4.5 N•m ± 0.5 N•m (40 lbf•**in** ± 4 lbf•**in**) |

# COOLANT TEMPERATURE SENSOR (CTS)

## Overheat Warning

The CTS will cause the engine overheat warning to come on when the coolant temperature is above 110°C (230°F).

## CTS Location

The CTS is located between the water pump and the oil cooler.

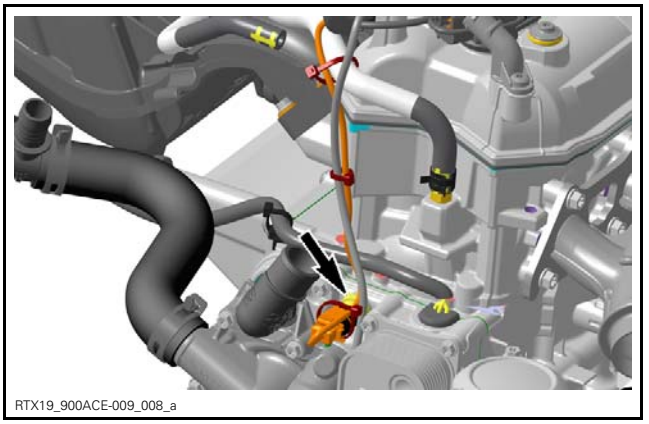
RTX19_900ACE-009_008_a

## Testing the CTS using BUDS2

1. Connect the vehicle to BUDS2. Refer to *COMMUNICATION TOOLS* subsection.
2. Select the following:
   - **Measurements** page
   - **ECM** button
   - **Presets** and **ECM** - BASIC tabs.
3. Look for the engine temperature indication.

The engine temperature gauge in BUDS2 should provide an indication of the actual engine coolant temperature. Otherwise, perform *TESTING THE CTS RESISTANCE*.

## Testing the CTS Resistance

1. Disconnect the CTS connector.
2. Test the resistance of the sensor as per following tables.

| CTS | | READING |
|---|---|---|
| PIN | | Refer to CTS TEMPERATURE SENSOR TABLE |
| 1 | 2 | |

| CTS TEMPERATURE SENSOR TABLE | | | |
|---|---|---|---|
| TEMPERATURE | | Ω | |
| °C | °F | LOW | HIGH |
| - 40 | - 40 | 38400 | 52600 |
| - 10 | 14 | 8200 | 10,600 |
| 0 | 32 | 5900 | 6900 |
| 20 | 68 | 2200 | 2800 |
| 80 | 176 | 295 | 350 |
| 120 | 248 | 105 | 120 |

NOTE: To test sensor at various temperatures, remove sensor and use a heat gun, ice and a thermometer.

If resistance is out of specification, replace the CTS.

If resistance test is good, proceed with the following steps.

3. Reconnect the CTS connector.
4. Install ECM-A connector on adapter tool.
5. Recheck resistance from the ECM connector as per following table.

| ECM ADAPTER | | READING |
|---|---|---|
| PIN | | Refer to CTS TEMPERATURE SENSOR TABLE |
| A1 | J2 | |

If resistance value is correct, refer to *REPLACING THE CTS*.

If resistance value is incorrect, repair the connectors or replace the wiring harness between ECM connector and the CTS.

## Replacing the CTS

1. Drain coolant, refer to *COOLING SYSTEM* subsection.
2. Cut locking ties of wiring harnesses and move wiring aside for access.

NOTE: Take note of wiring and locking tie position before removal.

3. Disconnect CTS connector.
4. Remove CTS from engine.
5. Install new CTS and torque as specified.

| TIGHTENING TORQUE | |
|---|---|
| CTS | 16 N•m ± 2 N•m (142 lbf•**in** ± 18 lbf•**in**) |

6. Reinstall remaining removed parts.

NOTE: Ensure to reinstall wiring harness as noted prior to removal.

7. Refill and bleed the cooling system, refer to *COOLING SYSTEM* subsection.

# BOOST PRESSURE SENSOR (BPS)

The BPS is a piezoresistive absolute pressure sensor. Refer to *TURBOCHARGER* subsection for more details.

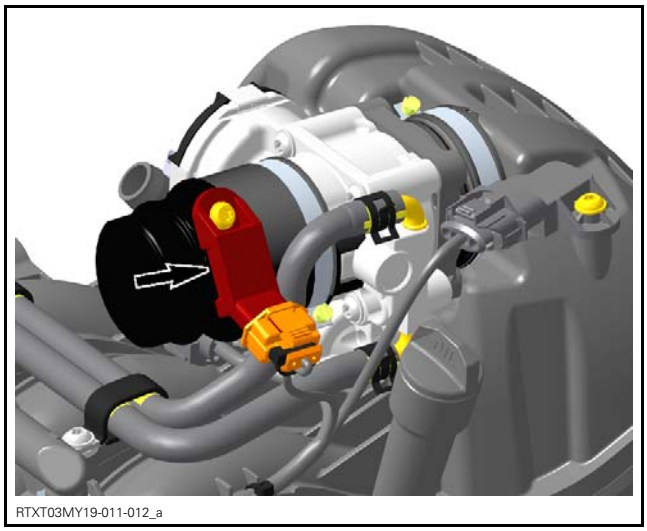


*BPS*

## BPS Location

The BPS is located on the air hose between the ETA and the intercooler.

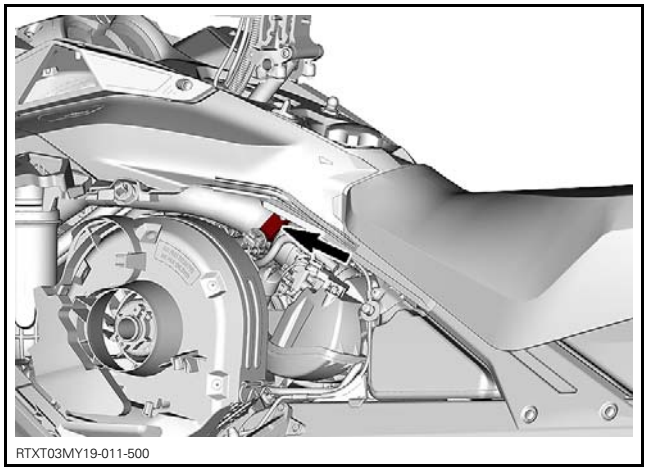


## BPS Troubleshooting

BPS pin 3 to ECMA - G3 is the signal wire.

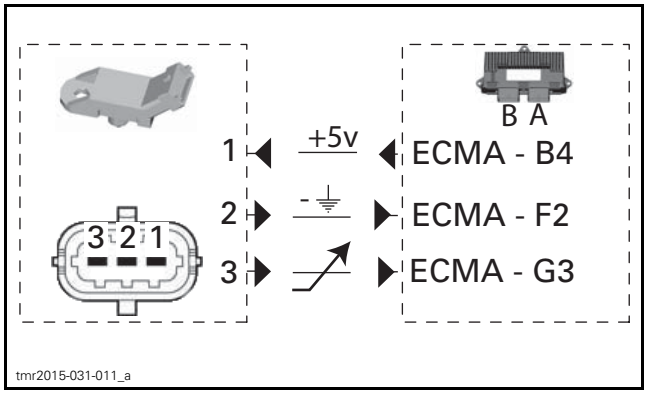


The BPS is powered at key on.

### Testing the BPS Voltage

1. Disconnect connector from BPS.
2. Turn ignition key on.
3. Read voltage as per following table.

| BPS CONNECTOR | VOLTAGE |
|---|---|
| Terminal 1 to battery ground | Approx. 5 V |
| Terminal 2 to battery ground | Approx. 0 V |
| Terminal 3 to battery ground | Approx. 0 V |

If voltage measured is as specified, replace the BPS.

If voltage measured is not as specified, refer to *TESTING THE CONTINUITY OF BPS WIRING HARNESS*.

### Testing the Continuity of BPS Wiring Harness

1. Disconnect ECM connector "A" from the ECM and connect it to the ECM adapter tool.
2. Test for circuit continuity as per following table.

| BPS CONNECTOR | ECM CONNECTOR | RESISTANCE |
|---|---|---|
| Pin 1 | B4 | Close to 0 Ω continuity |
| Pin 2 | F2 | |
| Pin 3 | G3 | |

3. If wiring harness is good, check ECM. Refer to *ENGINE CONTROL MODULE (ECM)* in this subsection.
4. If a high resistance or an open circuit is measured, repair or replace wiring and connectors between the ECM and the BPS.

## Replacing the BPS

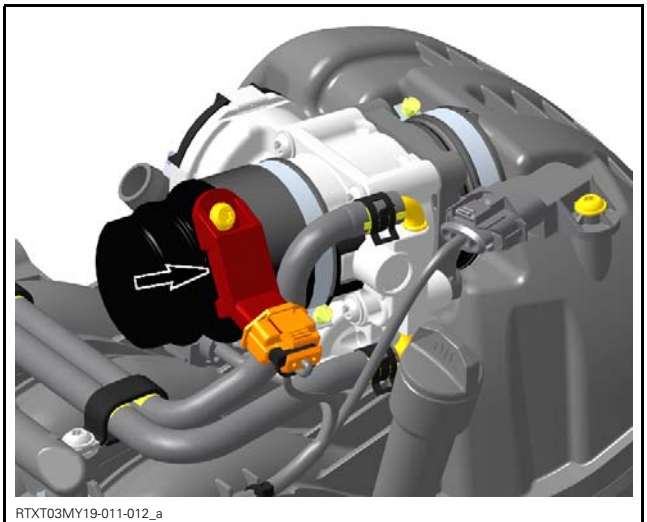

RTXT03MY19-011-012_a

| TIGHTENING TORQUE | |
|---|---|
| BPS retaining screw | 4.5 N•m ± 0.5 N•m (40 lbf•**in** ± 4 lbf•**in**) |

# BOOST CONTROL VALVE (BCV)

The BCV is a pulse width modulated solenoid. Refer to *TURBOCHARGER AND INTERCOOLER* subsection for more details.

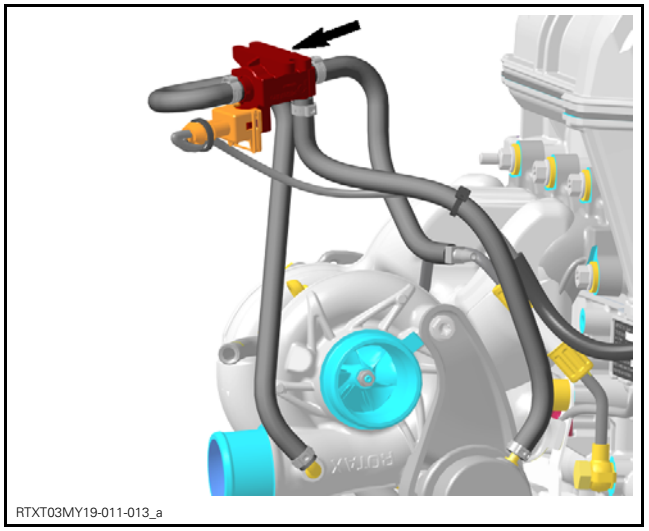

RTXT03MY19-011-013_a

*BCV*

## BCV Access

Remove the upper body module. Refer to *BODY* subsection.

## BCV Troubleshooting

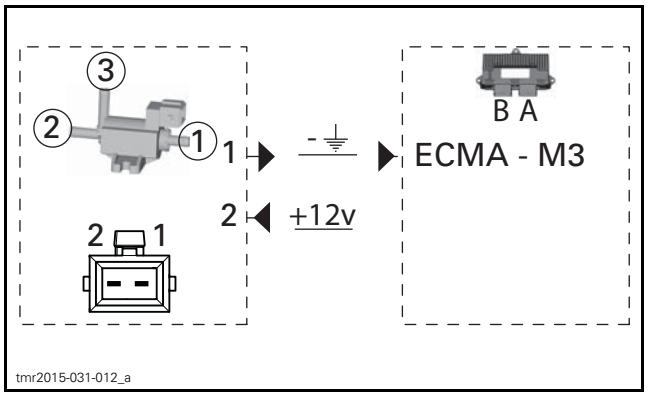


tmr2015-031-012_a

Replace BCV if it will not maintain pressure (leakage) or if flow is restricted.

### Leakage

Plug port **no. 3**.

Apply 80 kPa ± 0.5 kPa (11.6 PSI ± .07 PSI) of pressure to port **no. 2**.

The BCV should maintain pressure for a minimum of 10 seconds.

### Flow

Apply 12v to pin 2 and ground pin 1.

Air should flow freely from port **no. 2** to ports **no. 1** and **no. 3**.

## BCV Specifications

| SPECIFICATION | |
|---|---|
| BCV resistance | 23 ± 2 Ω |

## Replacing the BCV

Replace all Oetiker clamps.

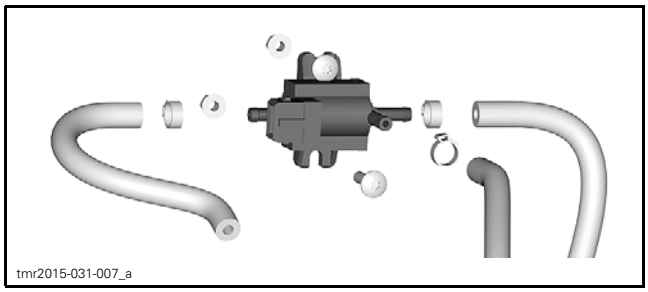


Ensure proper hose routing.

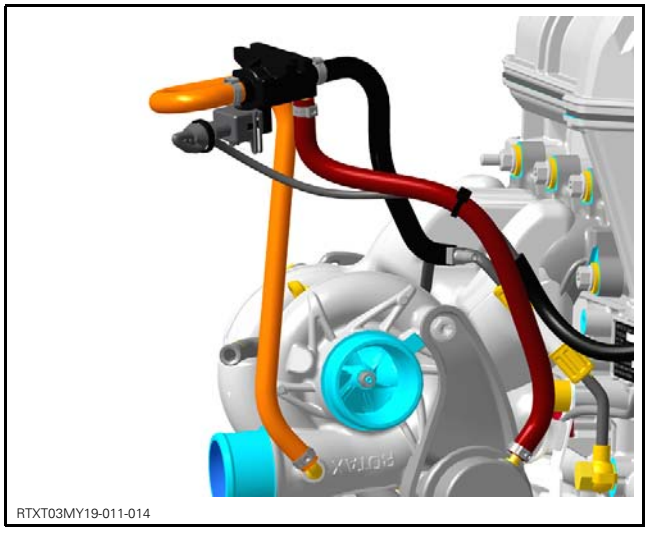


| TIGHTENING TORQUE | |
|---|---|
| BCV retaining screws | 1.1 N•m ± 0.1 N•m (10 lbf•**in** ± 1 lbf•**in**) |

# KNOCK SENSOR (KS)

This engine is equipped with one knock sensor (KS) that measures the amount of noise generated by the engine.

If an abnormally high amount of noise is measured, the ECM perceives this as a KNOCK condition and adjusts ignition timing by retarding it to correct the situation.

## Knock Sensor Location

The knock sensor (KS) is located on the cylinder block behind the turbocharger.

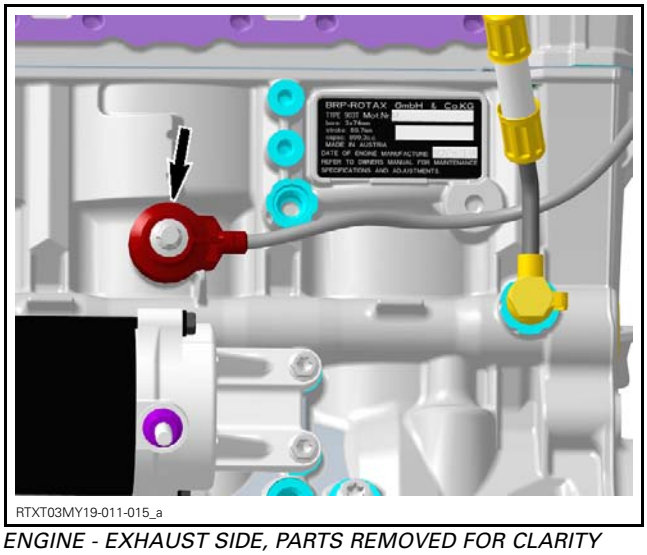


*ENGINE - EXHAUST SIDE, PARTS REMOVED FOR CLARITY*

## Knock Sensor Troubleshooting

Always use the BRP diagnostic software (BUDS2) to check for a knock sensor related fault code and carry out service actions.

Knock sensor problems may be related to, but not limited to any of the following items:

- Loose or improperly torqued knock sensor
- Dirty or corroded mounting surface
- Cracked knock sensor from over torquing
- Bad wiring and connections
- An induced knock (or vibration) due to a loose part external to the engine.

## Testing the Knock Sensor (KS)

### Testing KS Operation (Dynamic Test)

1. Using BUDS2 to check for a knock sensor fault. If an occurred fault is present, reset the fault.
2. Disconnect vehicle from BUDS2 and make vehicle ready for a test ride.
3. During test ride, perform several accelerations under load and ensure engine RPM exceeds 4000 RPM.
4. After test ride, reconnect vehicle to BUDS2 and look for a knock sensor fault code.

If no fault code occurs, the knock sensor is good.

If a fault occurs, do the following:

– Refer to *KNOCK SENSOR TROUBLESHOOTING* and check for any of the problems listed. Repair as required.
– Carry out a knock sensor resistance test.

### Testing the KS Resistance at the ECM

1. Disconnect ECM-A connector and install it on the ECM adapter tool.
2. Set multimeter to "Ω", measure the knock sensor circuit resistance as per following table.

| ECM ADAPTER | | | MEASUREMENT |
|---|---|---|---|
| SENSOR | PINS | | RESISTANCE Ω @ 20°C (68°F) |
| KS | C3 | G2 | 5 MΩ |

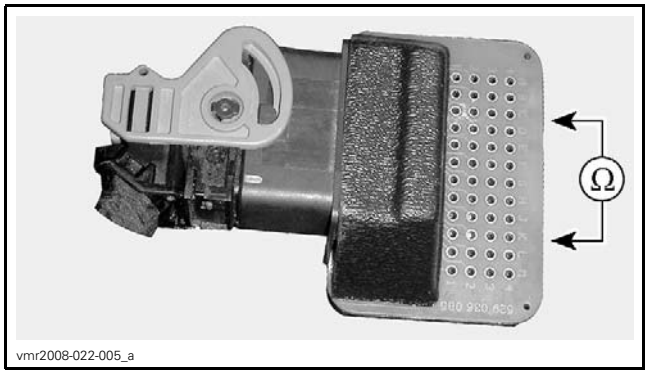

vmr2008-022-005_a

If knock sensor circuit resistance is as specified, wiring harness and sensor are good.

If resistance measured at ECM connector is not close to specification, refer to *TESTING THE KS RESISTANCE AT THE COMPONENT CONNECTOR*.

### Testing the KS Resistance at the Component Connector

1. Remove the required parts to access the knock sensor connector.
2. Disconnect the knock sensor connector.
3. Measure the resistance between both terminals on the knock sensor and compare the measurement with the preceding table.

If resistance is not as specified, replace knock sensor.

If resistance is good at the knock sensor, carry out a continuity check of the wiring between the knock sensor connector and ECM connector "A". Refer to applicable *WIRING DIAGRAM* for details.

**NOTE:** Although the knock sensor resistance is as specified, it may still be at fault as it may not be producing a signal within its design specification.

Repair or replace wiring and connectors between the ECM and knock sensor.

## Replacing the KS

1. Remove the upper body module. Refer to *BODY* subsection.
2. Remove the pulleys guard.
3. Cut locking tie and disconnect KS sensor connector. Refer to *KNOCK SENSOR ACCESS* in this subsection.

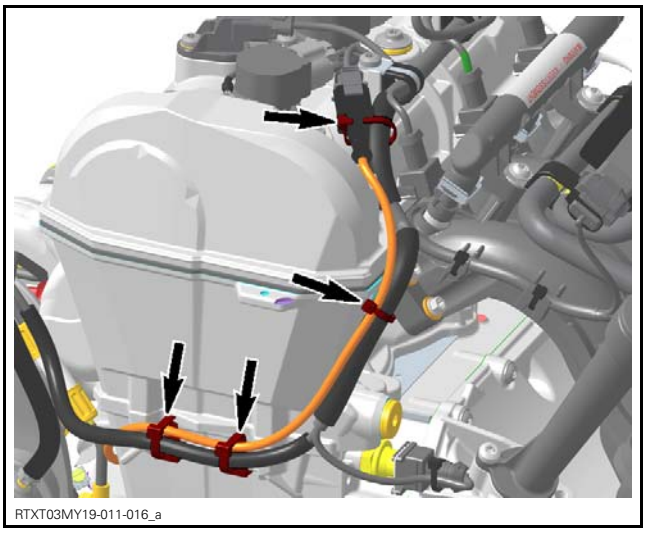
RTXT03MY19-011-016_a

4. Cut locking ties securing wiring harness and KS cable.
5. Remove turbocharger. Refer to *TURBOCHARGER* subsection.
6. Remove knock sensor mounting screw.
7. Clean:
   – Knock sensor contact surface on cylinder
   – Threaded hole.
8. Install new knock sensor and tighten as specified.

| TIGHTENING TORQUE | |
|---|---|
| Knock sensor screw | 24 N•m ± 3 N•m (18 lbf•ft ± 2 lbf•ft) + LOCTITE 243 (BLUE) (P/N 293 800 060) |

**NOTICE** **Improper torque may prevent sensor from functioning properly and lead to severe damage of internal engine components.**

9. Ensure knock sensor connector is clean and corrosion free before connecting it.
10. Install new locking ties as per factory specification.

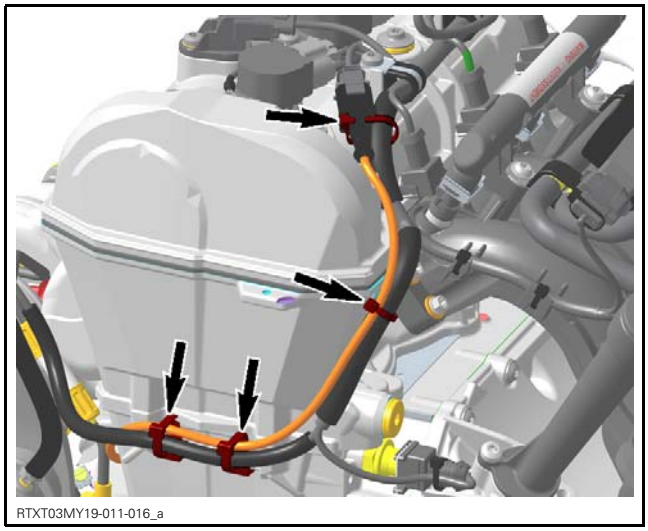
RTXT03MY19-011-016_a

*LOCKING TIES*

11. Reinstall all remaining removed parts.

# HEATED OXYGEN SENSOR ($HO_2S$)

## Oxygen Sensor Location

This vehicle is equipped with 1 heated oxygen sensors ($HO_2S$): located on the exhaust pipe, between the muffler and the turbo.

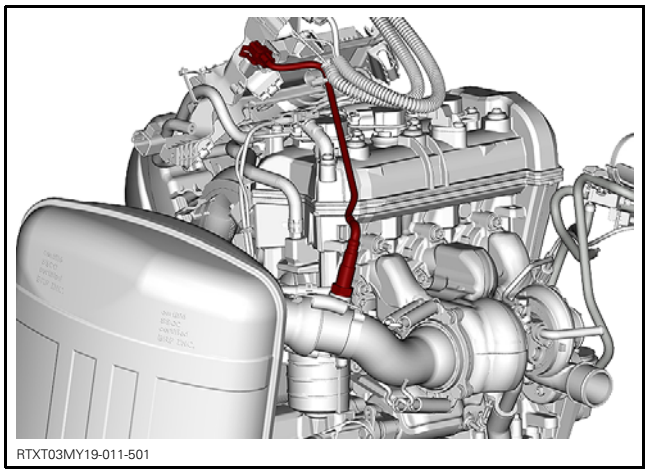
RTXT03MY19-011-501

## Oxygen Sensor and Connector Access

The oxygen sensor and its connector are accessible by removing the upper body module. Refer to *BODY* subsection..

## Oxygen Sensor General Precautions

Take the following precautions to avoid sensor malfunction:

– Do not use any product on sensor probe.
– Do not expose sensor to water, oil, windshield cleaner, anticorrosion oil, grease, terminal cleaner, etc.
– Do not drop or use an oxygen sensor that has been dropped.
– Do not use any compound on sensor threads unless labeled as compatible with oxygen sensor.
– Do not use impact wrench or conventional socket type wrench to install sensor.
– Do not allow sensor or wire to touch exhaust system or any other hot component.
– Do not route sensor wires to create tension in the wires. This could cause faults or sensor malfunction.

## Oxygen Sensor Troubleshooting

Always use the BRP diagnostic software (BUDS2) to check for fault codes. Carry out service actions.

Also check oxygen sensor voltage and refer to following table.

In BUDS2, go to:
– **Measurement** page
– **ECM** button
– **ECM - Fuel Trim** tab.

| **OXYGEN SENSOR VOLTAGE IN BUDS2** | |
|---|---|
| VOLTAGE READING | CONDITION |
| Varies 0.1 to 0.8 Volts | Normal oxygen sensor operation in closed loop |
| Constant 0.45 Volts | Oxygen sensor circuit open |
| Constant low voltage | Indicates fuel mixture too lean, possible oxygen sensor fault, possible fuel system fault, possible air leak |
| Constant high voltage | Indicates fuel mixture too rich, possible fuel system fault |

## Testing the Oxygen Sensor

### Testing for Oxygen Sensor Input Voltage

NOTE: This test validates the heater element circuit.

1. Ensure main power relay (R2) is installed and the F5 fuse is not burnt.
2. Disconnect the oxygen sensor connector.
3. Install key on D.E.S.S. post and press the START/STOP button.
4. Using a multimeter set to Vdc, read the input voltage provided to the sensor heater.

| OXYGEN SENSOR CONNECTOR (HARNESS SIDE) | | MEASUREMENT |
|---|---|---|
| PIN | | |
| C | Battery ground | Battery voltage |

If Input voltage is good, refer to *TESTING THE RESISTANCE OF THE OXYGEN SENSOR HEATER* and *TESTING FOR OXYGEN SENSOR CIRCUIT CONTINUITY*.

If input voltage is not good, test the continuity of the power circuit from fuse F18 in fuse box 1. Refer to the applicable *WIRING DIAGRAM* for details.

If input voltage wire continuity is at fault, repair or replace wiring or connector.

### Testing the Resistance of the Oxygen Sensor Heater

Test the resistance value of the oxygen sensor between the sensor pins as follows.

| OXYGEN SENSOR PIN | | RESISTANCE @ 20°C (68°F) |
|---|---|---|
| C | D | Approximately 7 - 11 Ω |

If reading is **not** within specification, replace the oxygen sensor.

### Testing for Oxygen Sensor Circuit Continuity

NOTE: This test validates the heater element circuit and the sensor circuits.

1. Remove main power relay (R2) in fuse box 1. Refer to *POWER DISTRIBUTION AND GROUNDS* subsection.
2. Disconnect ECM-B connector and install it on the ECM adapter tool.
3. Using a multimeter, test for continuity as per following table.

| OXYGEN SENSOR CIRCUIT CONTINUITY TEST | | |
|---|---|---|
| OXYGEN SENSOR PIN | ECM CONNECTOR "B" | RESISTANCE @ 20°C (68°F) |
| A | J1 | Close to 0 Ω |
| B | D2 | |
| D | L2 | |

If a resistance value is NOT as specified, repair or replace the wiring and connectors.

## Replacing the Oxygen Sensor

1. Remove main power relay. Refer to *POWER DISTRIBUTION AND GROUNDS* subsection.

**⚠ CAUTION** Exhaust system and oxygen sensor may be hot. To avoid possible injury, allow exhaust system components time to cool before proceeding.

2. Disconnect oxygen sensor connector.
3. Cut locking tie securing oxygen sensor harness.
4. Unscrew oxygen sensor from exhaust pipe.

***NOTICE*** Handle oxygen sensor with clean hands. Oxygen sensor probe must remain free of oil, grease, antiseize lubricant and any other foreign matter that could affect its operation.

If a new oxygen sensor is installed, its threads are already coated with an antiseize product. Sensor is ready for installation.

If the same oxygen sensor is installed, apply antiseize lubricant on its **first two threads**. If not available, always use a product that is oxygen sensor safe.

| SERVICE PRODUCT |
|---|
| LOCTITE 767 (ANTISEIZE LUBRICANT) (P/N 293 800 070) |

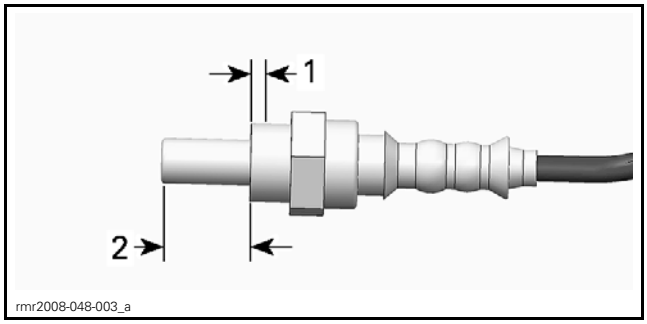


*TYPICAL*
*1. Apply antiseize lubricant first two threads*
*2. Must be free of any product*

***NOTICE*** Do not apply any antiseize lubricant to the sensor probe as it could affect its operation.

5. Screw sensor in exhaust pipe.

| TIGHTENING TORQUE | |
|---|---|
| Oxygen sensor | 55 N•m ± 5 N•m<br>(41 lbf•ft ± 4 lbf•ft) |

6. Connect the electrical connector.
7. Reinstall the main relay.

# FUEL TANK AND FUEL PUMP

## SERVICE TOOLS


| Description | Part Number | Page |
|---|---|---|
| FLUKE 115 MULTIMETER | 529 035 868 | 55 |
| FUEL HOSE ADAPTER | 529 036 023 | 45 |
| FUEL PUMP NUT TOOL | 529 036 214 | 51 |
| LEAK TEST KIT | 529 033 100 | 44 |
| OETIKER PLIERS | 295 000 070 | 47 |
| PRESSURE GAUGE | 529 035 709 | 45 |
| SMALL HOSE PINCHER | 295 000 076 | 44 |
| SUCTION PUMP | 529 035 880 | 47 |
| VACUUM/PRESSURE PUMP | 529 021 800 | 44–45 |


## SERVICE PRODUCTS


| Description | Part Number | Page |
|---|---|---|
| XPS BRAKES AND PARTS CLEANER (CAN) | 219 701 776 | 54 |
| XPS BRAKES AND PARTS CLEANER (USA) | 219 701 705 | 54 |

*550F*

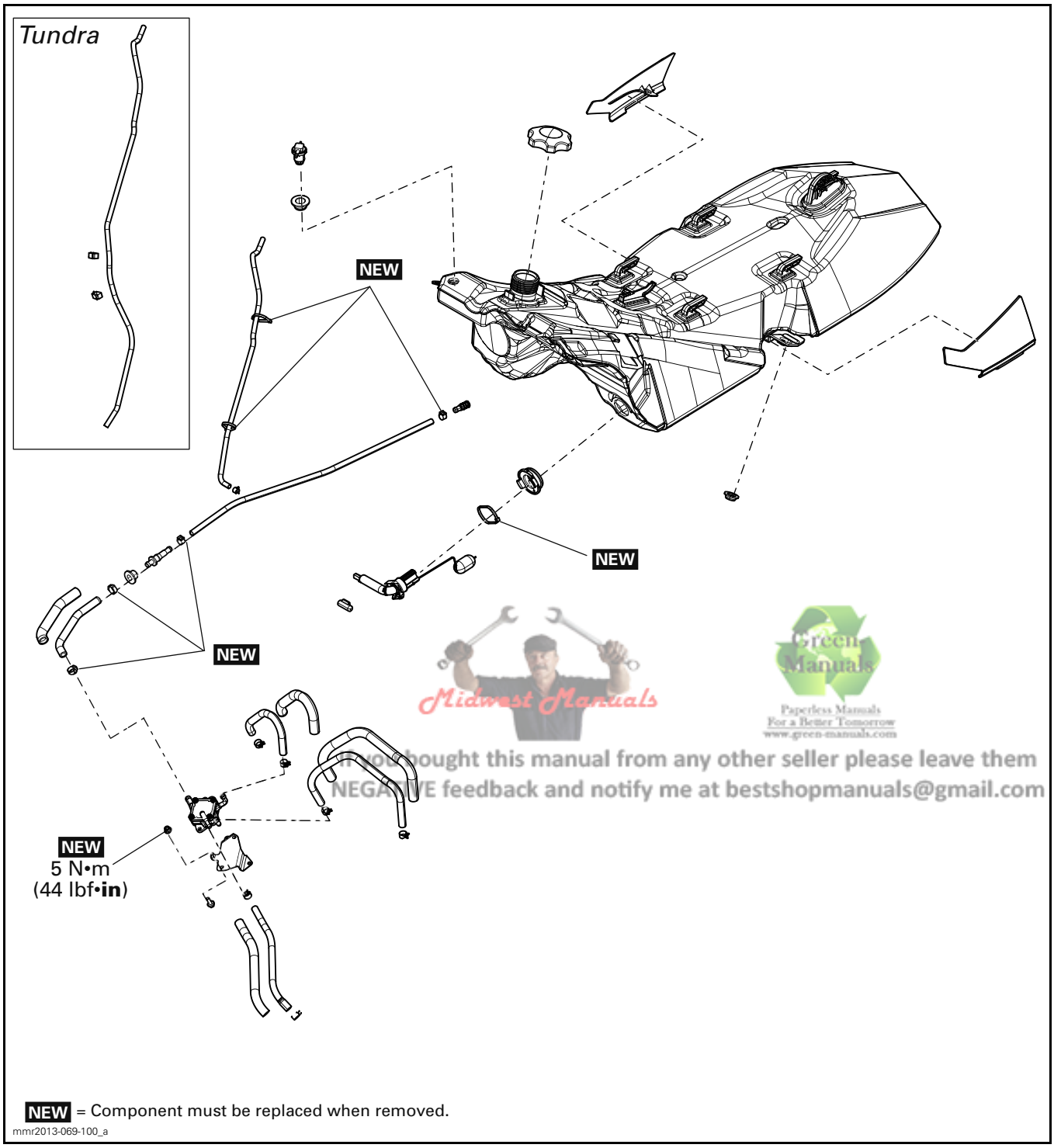


Midwest Manuals
Green Manuals
Paperless Manuals
For a Better Tomorrow
www.green-manuals.com
If you bought this manual from any other seller please leave them
NEGATIVE feedback and notify me at bestshopmanuals@gmail.com

**NEW** = Component must be replaced when removed.

mmr2013-069-100_a

*600 ACE*

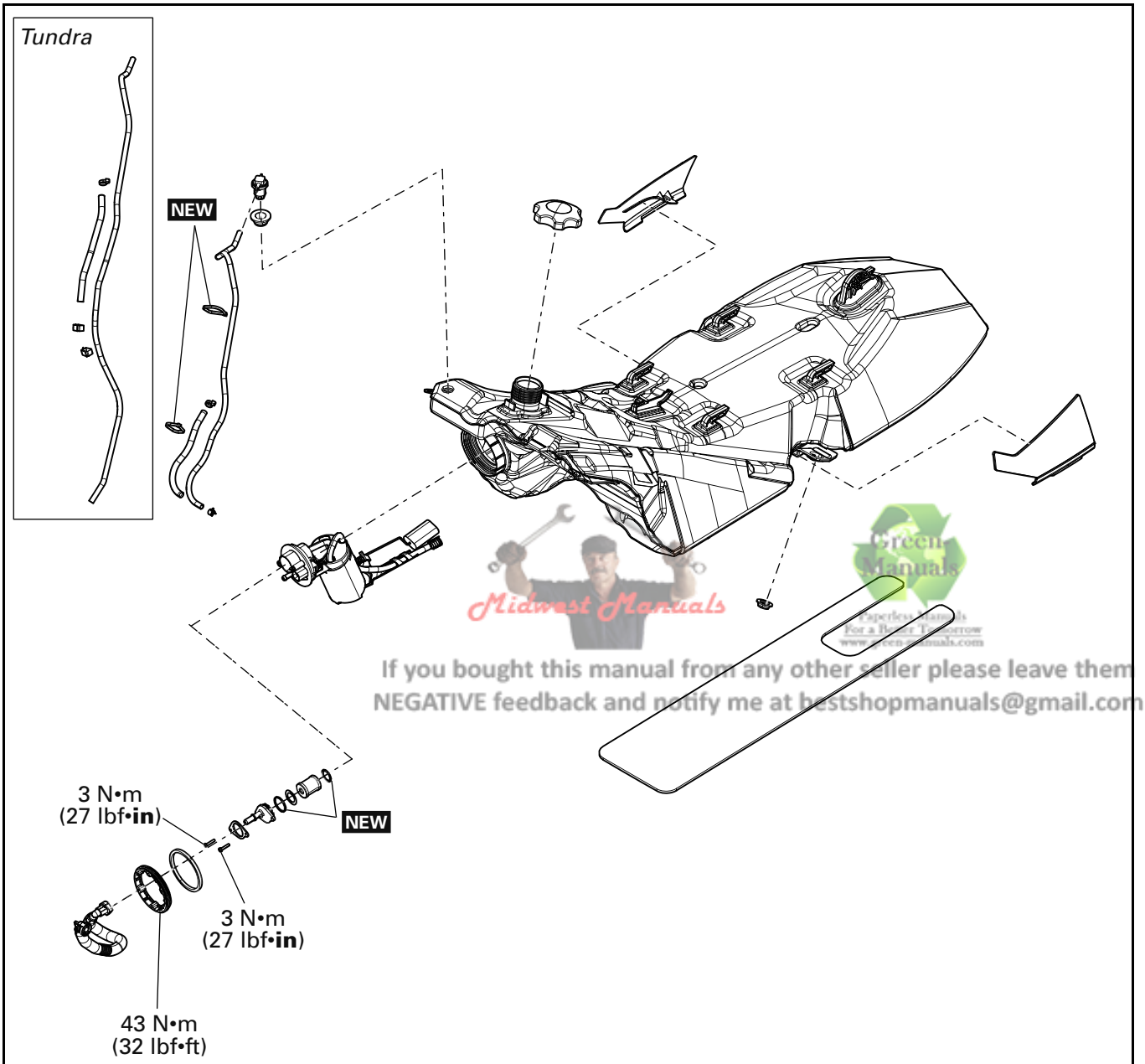


Midwest Manuals
Green Manuals
If you bought this manual from any other seller please leave them
NEGATIVE feedback and notify me at bestshopmanuals@gmail.com

**NEW** = Component must be replaced when removed.

mmr2013-069-101_a

*600 and 800R Power TEK*

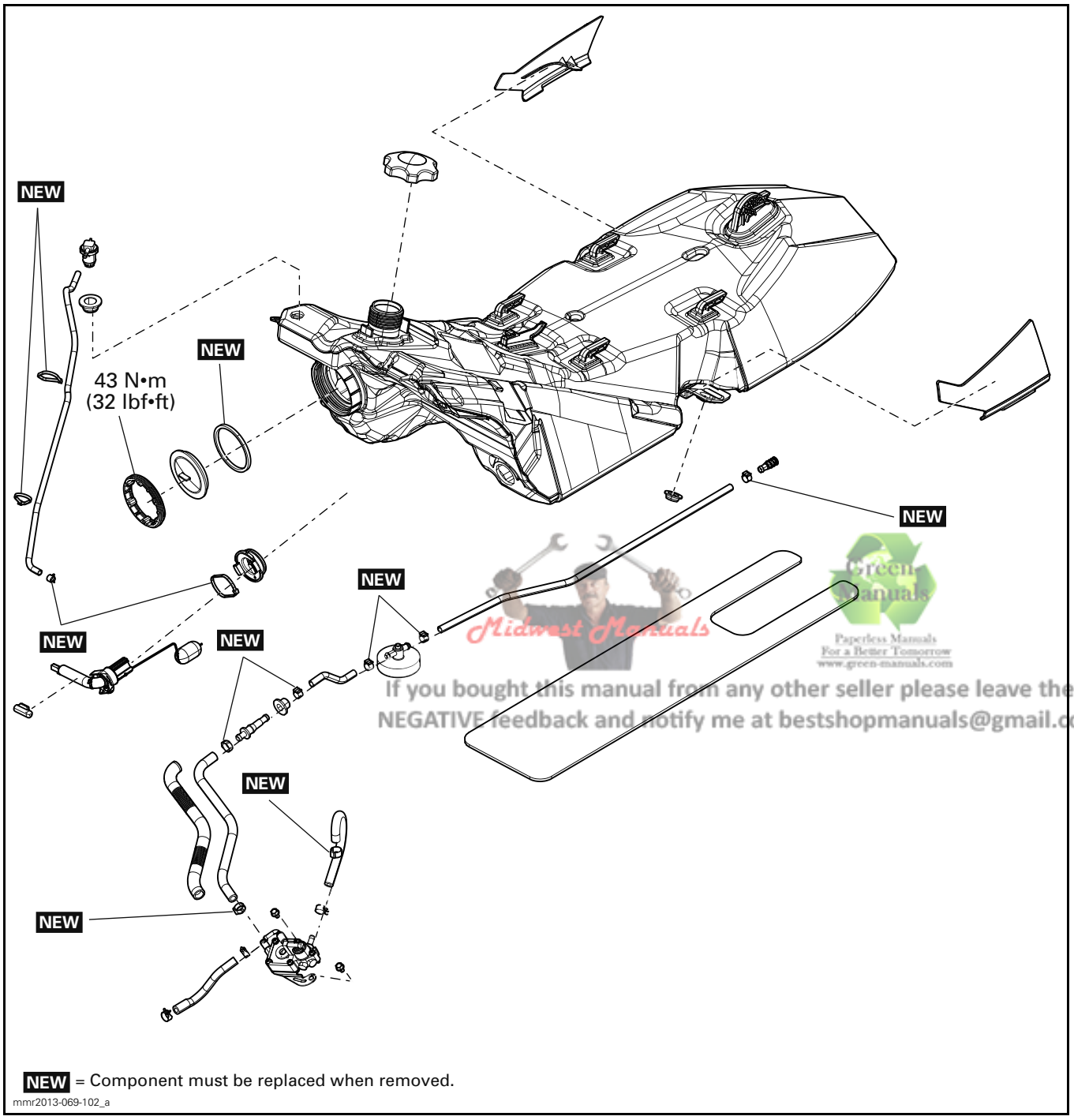


Midwest Manuals
Green Manuals
Paperless Manuals For a Better Tomorrow
www.green-manuals.com
If you bought this manual from any other seller please leave them NEGATIVE feedback and notify me at bestshopmanuals@gmail.com

*600HO E-TEC and 800R E-TEC*

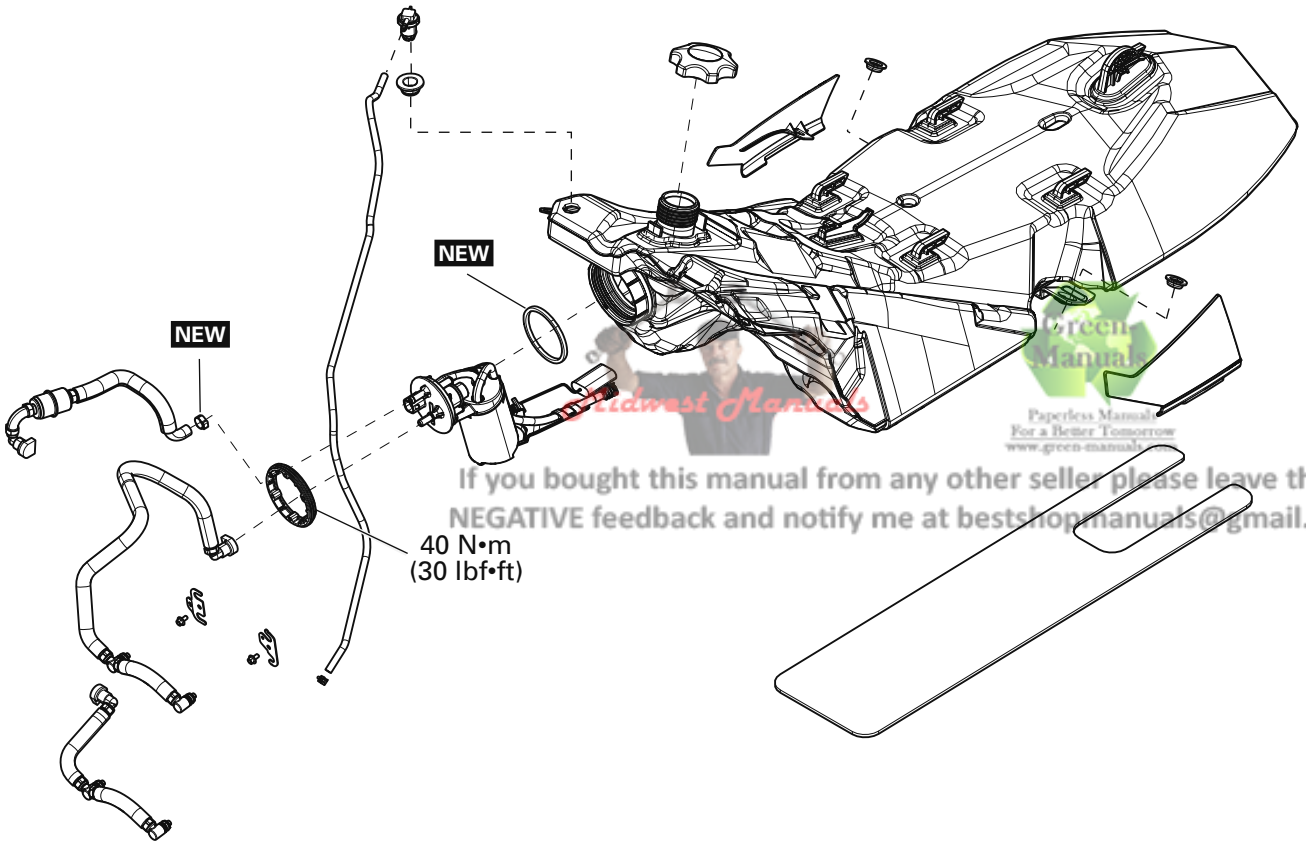


Midwest Manuals
Green Manuals
Paperless Manuals For a Better Tomorrow
www.green-manuals.com
If you bought this manual from any other seller please leave them NEGATIVE feedback and notify me at bestshopmanuals@gmail.com

**NEW** = Component must be replaced when removed.

mmr2013-026-001_b

*1200 4-TEC*

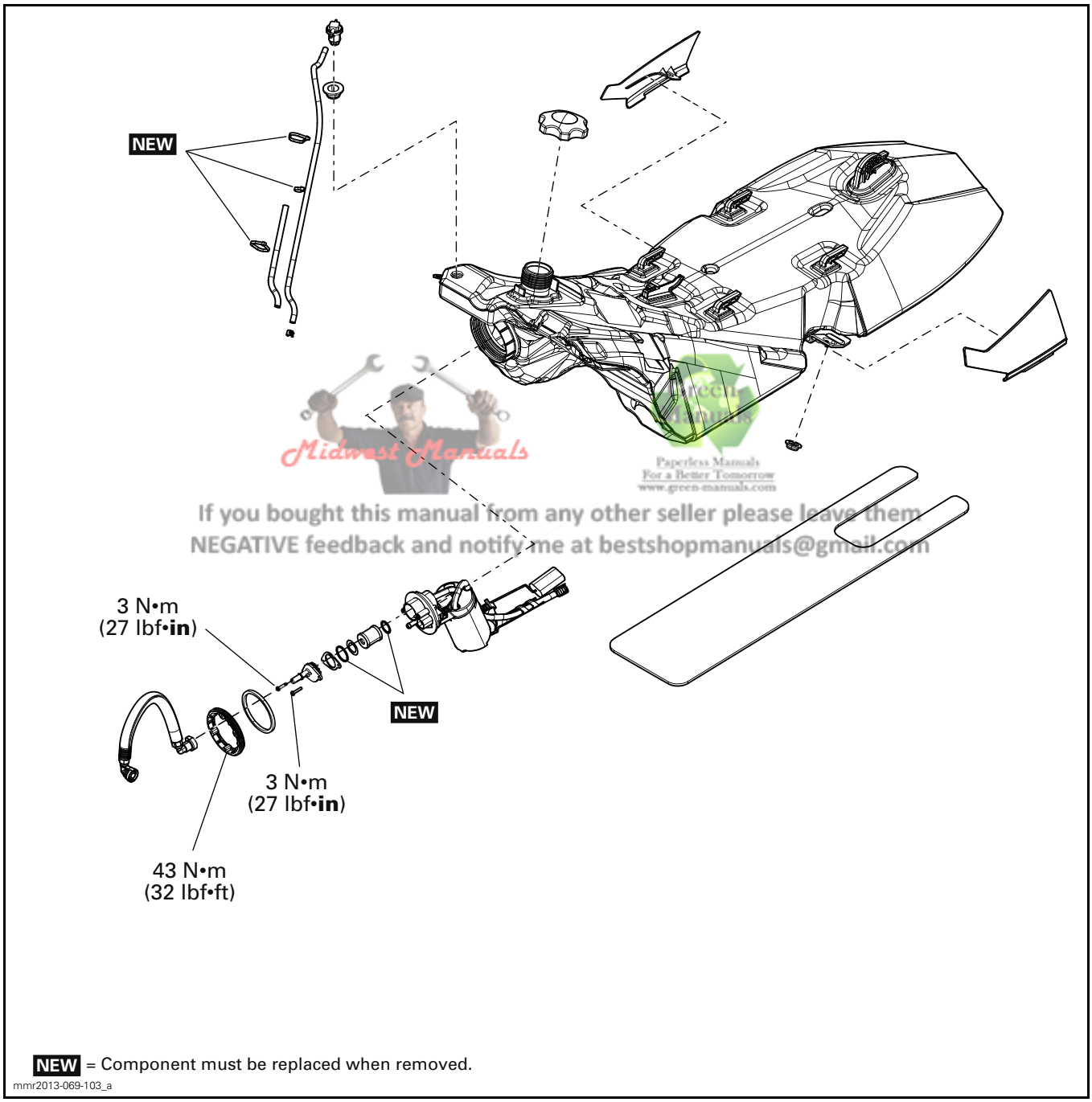


Midwest Manuals
Paperless Manuals
For a Better Tomorrow
www.green-manuals.com
If you bought this manual from any other seller please leave them
NEGATIVE feedback and notify me at bestshopmanuals@gmail.com

**NEW** = Component must be replaced when removed.

mmr2013-069-103_a

# GENERAL

NOTE: It is a good practice to check for fault codes using B.U.D.S. software as a first troubleshooting step. Refer to *DIAGNOSTIC AND FAULT CODES*.

**⚠ WARNING**

Always disconnect battery prior to working on the fuel system.

*E-TEC*

**⚠ WARNING**

Always disconnect the magneto connector prior to:
– Disconnecting any fuel hose.
– Removing a fuel injector.
– Removing a spark plug cable or spark plug.
Otherwise, if the engine is cranked, fuel vapors may ignite in presence of a spark creating a fire hazard.

**⚠ WARNING**

Proceed with care and use appropriate safety equipment when working on the fuel system. Wear safety glasses and work in a well ventilated area.

When disconnecting a fuel line, cover the connection with an absorbent shop rag and proceed slowly to minimize spilling.

**⚠ WARNING**

Do not allow fuel to spill on hot engine parts and/or on electrical connectors. Wipe off any fuel spillage in the engine compartment. Fuel is flammable and explosive under certain conditions.

**⚠ WARNING**

After working on the fuel system, always carry out a fuel system pressurization test to check for leaks.

# SYSTEM DESCRIPTION

## Electric Fuel Pump

An electric fuel pump is mounted in the upper RH front part of the fuel tank.

A 12 Vdc high pressure fuel pump with an integrated jet pump is used.

NOTE: Although the fuel pump is connected to the 55/60 Vdc system, the ECM modulates the voltage (Pulse Width Modulation) between 9 and 16 Vdc depending on the engine RPM. The fuel pump output will change as voltage changes.

As soon as the START/RER button is depressed, the electric fuel pump turns on for a few seconds to pressurize the fuel system in preparation for the engine start. When the engine runs, the fuel pump is ON continuously to provide a constant fuel pressure to the injectors.

To ensure a constant delivery of fuel to the engine for all riding conditions when the fuel level is low, a rear pickup and a fuel pump reservoir is used.

The fuel pump reservoir is actually the housing of the fuel pump module in which the fuel pump is located. A check valve at the bottom of the housing allows the fuel in the tank to enter the fuel pump reservoir.

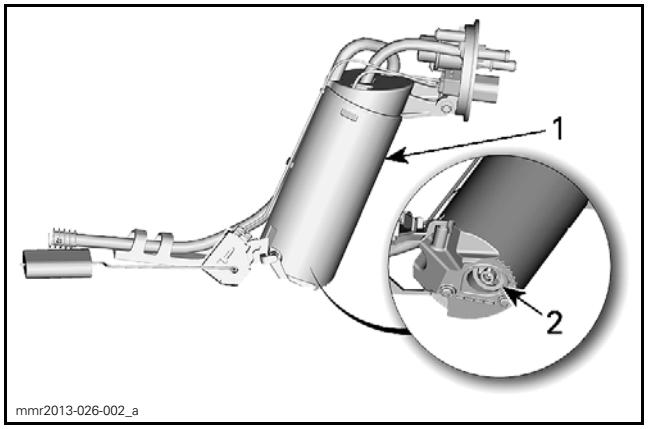


*TYPICAL*
*1. Fuel pump reservoir*
*2. Check valve*

When the fuel pump runs, it draws the fuel from the fuel pump reservoir and feeds it to the injection system. This causes fuel in the tank to be drawn into the fuel pump reservoir through its bottom inlet check valve.

At the same time, a portion of the fuel flow from the electric fuel pump flows through a jet pump that contains a venturi.

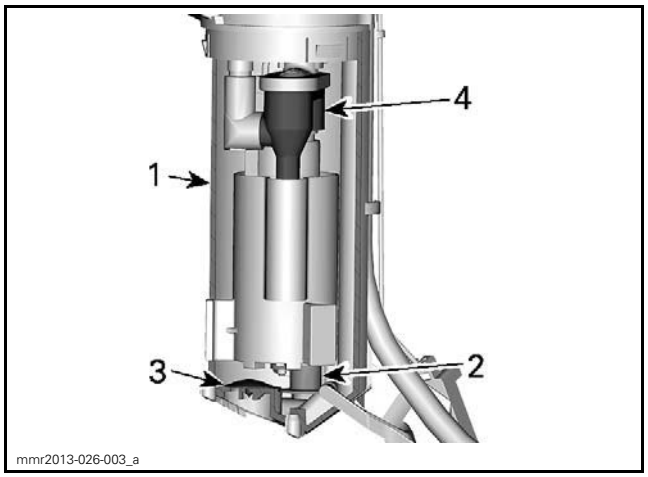


*TYPICAL - VIEW INSIDE FUEL PUMP RESERVOIR*
*1. Fuel pump reservoir*
*2. Bottom inlet*
*3. Check valve (open upwards)*
*4. Venturi*

As the fuel accelerates through the venturi, it generates a low pressure area at a connection to the remote pickup, which draws fuel into the fuel pump reservoir from the remote pickup.

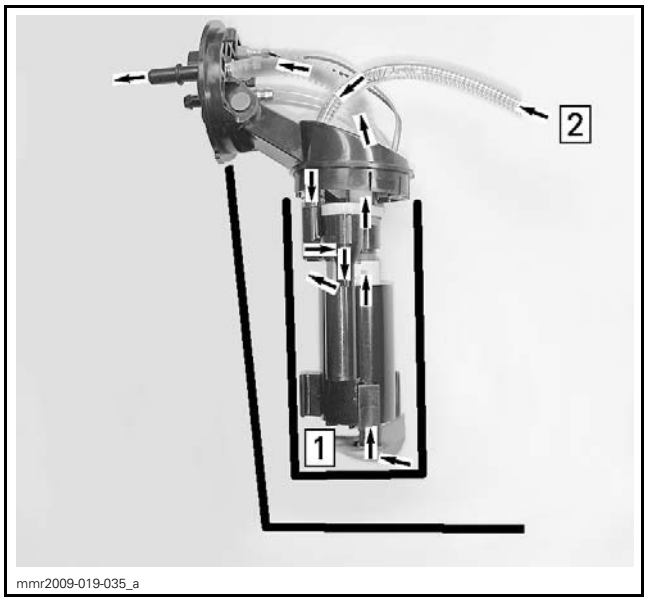


*TYPICAL*
*Step 1: Bottom inlet draws fuel from fuel pump reservoir*
*Step 2: Low pressure from venturi draws fuel from rear pickup into fuel pump reservoir*

When riding the vehicle on a level surface, fuel is drawn into the fuel pump reservoir through its check valve and through the remote pickup simultaneously, as long as there is enough fuel in the tank to cover the remote pickup.

When riding downhill with a low amount of fuel in the tank, the fuel moves towards the front of fuel tank. The check valve opens and fuel enters the fuel pump reservoir from the fuel tank through the check valve only as there is no fuel at the remote pickup.

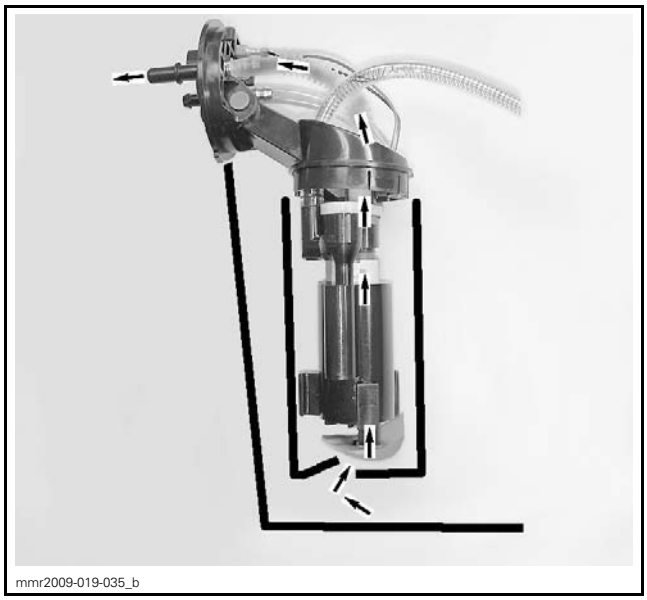


When riding uphill with a low amount of fuel in the tank, the fuel moves towards the rear of the fuel tank. The check valve closes and traps the fuel in the pump reservoir. The fuel pump continues to draw fuel from the fuel pump reservoir, which is now only fed by the jet pump using the rear pickup. This prevents air from being drawn into the fuel lines from the fuel tank.

The continuous fuel flow cools down the fuel pump, the injectors and the ECM. To cool these components, the fuel circulates as follows:

– Out of fuel pump
– Through the ECM
– To the injectors (around the voice coils)
– Through the pressure regulator
– Back to fuel tank.

NOTE: The hose loop between the MAG injector outlet and the ECM dampens the engine torque reaction movement.

## Fuel Pickup

Fuel enters the fuel pump reservoir from either a check valve at the bottom of the fuel pump reservoir, or from a remote pickup in the rear portion of the fuel tank.

The remote pickup uses a replaceable steel mesh strainer to filter out relatively large dirt particles and prevent clogging of the jet pump. The fuel entering the fuel pump reservoir through the check valve will be filtered by the fuel pump prefilter.

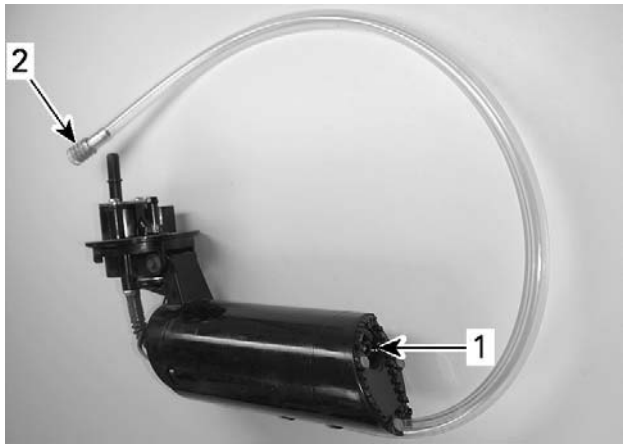

mmr2011-089-019_a

1. *Fuel pump reservoir check valve*
2. *Remote pickup with steel mesh strainer*

## Fuel Pressure Regulator

An integrated fuel pressure regulator is mounted on the fuel pump flange. It is basically a spring loaded valve that opens and closes the path of fuel returning to the tank, thus maintaining a constant fuel pressure in the system.

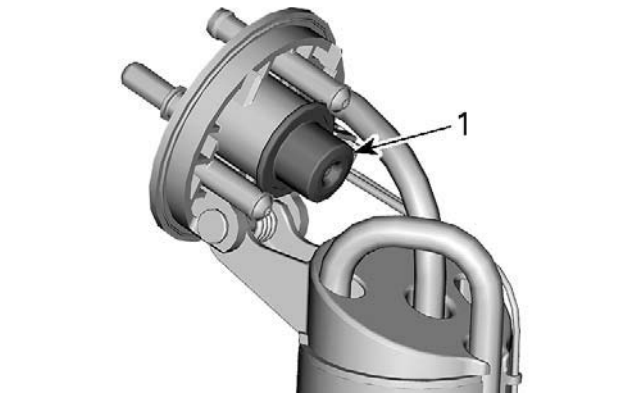

mmr2013-026-004_a

1. *Integrated fuel pressure regulator*

| FUEL PRESSURE |
| --- |
| Approximately 303 kPa (44 PSI) at 2000 RPM (will be lower at idle) |

## Fuel Tank Vent

The fuel tank is vented through a combination type check valve that allows ambient air pressure to enter fuel tank at all times.

As fuel is consumed by the engine, a negative pressure would occur in the fuel tank. This could eventually prevent the fuel pump from drawing enough fuel. The **negative pressure relieve function** of the valve allows the higher outside air pressure in.

If pressure builds up and exceeds 2.0 kPa to 4.8 kPa (.3 PSI to .7 PSI) in the fuel tank, the check valve opens and lets the excess pressure vent out of the tank.

## Fuel Filters

### Fuel Pump Pre-Filter

A fuel pump prefilter is used at the electric fuel pump inlet. It is a replaceable nylon mesh filter located within the fuel pump module housing (fuel pump reservoir).

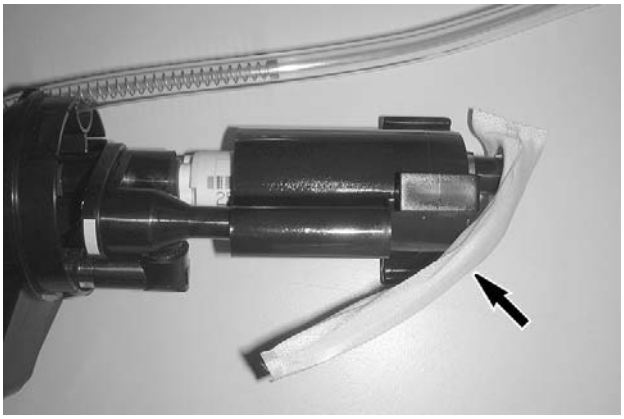
mmr2011-089-018_a

*FUEL PUMP PREFILTER (FUEL RESERVOIR REMOVED)*

The fuel pump prefilter protects the fuel pump and prevents clogging of the fuel passages within the fuel pump module.

### In-Line Fuel Filter

An in-line filter on the supply side is located at front of the fuel tank, above the oil tank.

It is a replaceable metallic canister type filter used to deliver dirt-free fuel to the injectors.

## Fuel Level Indication

A float type fuel level sensor varies its resistance with fuel level thus providing a signal to the multifunction gauge for fuel level indication.

# INSPECTION

## FUEL SYSTEM PRESSURIZATION AND LEAK TEST

Using B.U.D.S., active the fuel pump to apply a pressure in the fuel system. Check to detect any leak.

– Select **Activation** and **ECM** tabs.
– Click on the **Fuel Pump (CLick/Hold)** button in the **Activate** field.

*1. Press here to activate fuel pump*

**⚠ WARNING**

**After working on the fuel system, carry out a fuel system pressurization test to check for leaks. Failure to carry out a fuel system pressurization test could result in severe injury or a life threatening situation should a leak occur.**

## FUEL TANK LEAK TEST

1. Fill up fuel tank.
2. Open the left side panel to access the fuel vent tube.
3. Install a SMALL HOSE PINCHER (P/N 295 000 076) on the vent tube.

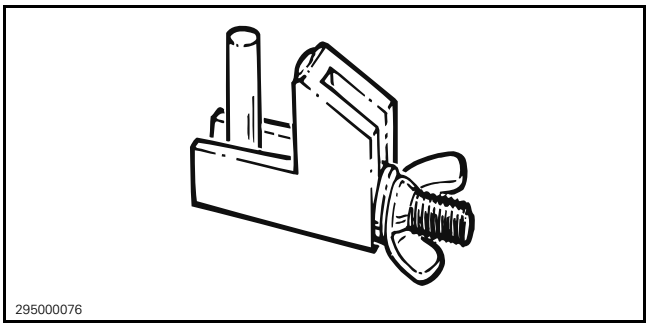

*TYPICAL - HOSE PINCHER ON FUEL VENT TUBE*

4. Install the appropriate test cap from the LEAK TEST KIT (P/N 529 033 100) on fuel tank inlet.

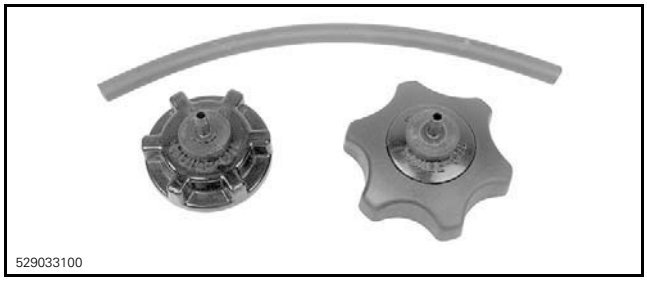


5. Install VACUUM/PRESSURE PUMP (P/N 529 021 800) on pressure test fuel cap.

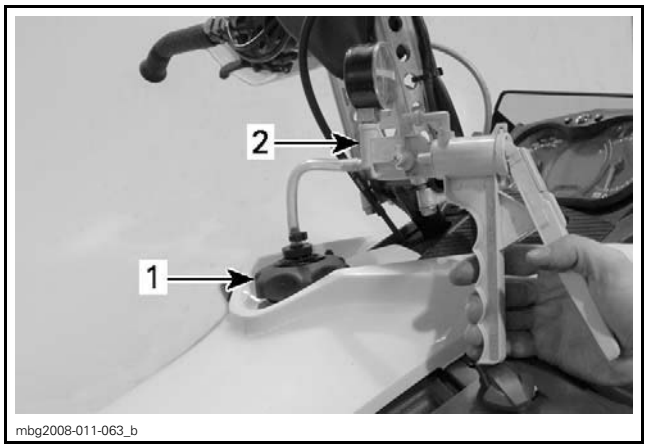


*TYPICAL*
*1. Pressure test fuel cap*
*2. Vacuum/pressure pump*

6. Set pump selector to pressure.
7. Pressurize fuel tank as follows.

| PRESSURE | TIME WITHOUT PRESSURE DROP |
|---|---|
| 21 kPa (3 PSI) | 3 minutes |

If pressure drops, locate fuel leak(s) and repair or replace leaking component(s).

To ease locating leak(s), spray soapy water on components; bubbles will indicate leak location(s).

### Fuel Tank Vent Valve Test

1. While the fuel tank is still pressurized as in the previous test, carry out the following:
2. Place a finger over the vent hose outlet.
3. When removing hose pincher, alternately touch and release vent hose outlet. You should feel pressurized air flowing out indicating the pressure relief valve function is working.
4. Release any remaining pressure in the fuel tank by slowly unscrewing fuel tank cap.
5. Remove the pressure test fuel cap.
6. Remove the fuel tank vent tube from its fitting on the lower left front body panel.
7. Install the VACUUM/PRESSURE PUMP (P/N 529 021 800) on the vent tube and apply air pressure through the vent valve. Air must flow freely towards the fuel tank neck.

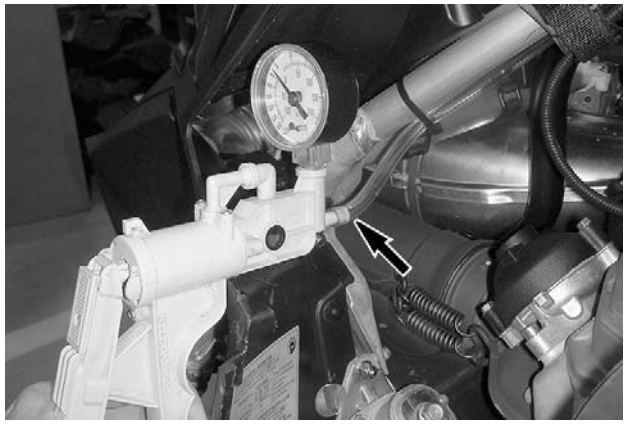
mmr2008-030-002_a

*TYPICAL - VACUUM/PRESSURE PUMP ON VENT TUBE*

NOTE: If fuel vent check valve does not function as indicated in test, replace vent valve.

8. Remove vacuum/pressure pump.
9. Install vent tube on its fitting.
10. Install normal fuel tank cap.

## FUEL PUMP PRESSURE TEST

The pressure test provides an indication of the available fuel pressure at the fuel pump outlet. It validates the pressure regulator and the fuel pump.

1. Ensure there is enough gas in fuel tank.
2. Install a rag under the ECM hose quick connect to catch fuel spillage.
3. Disconnect fuel pressure hose from ECM.

mmr2013-026-005_a

*TYPICAL*
*1. Disconnect here*

4. Install the FUEL HOSE ADAPTER (P/N 529 036 023) and the PRESSURE GAGE (P/N 529 035 709) between fuel pressure hose and ECM.

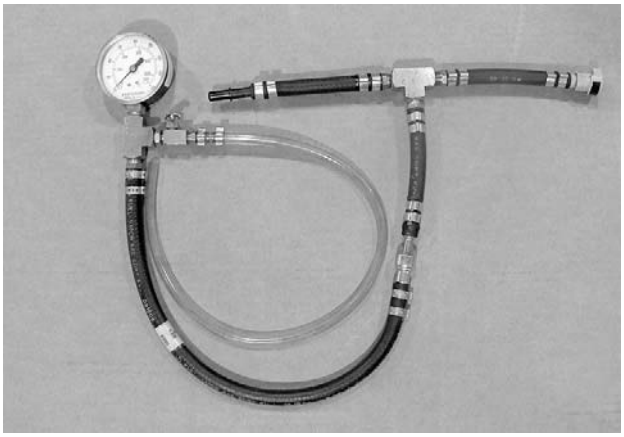
mmr2008-030-003

*PRESSURE GAUGE WITH FUEL HOSE ADAPTER*

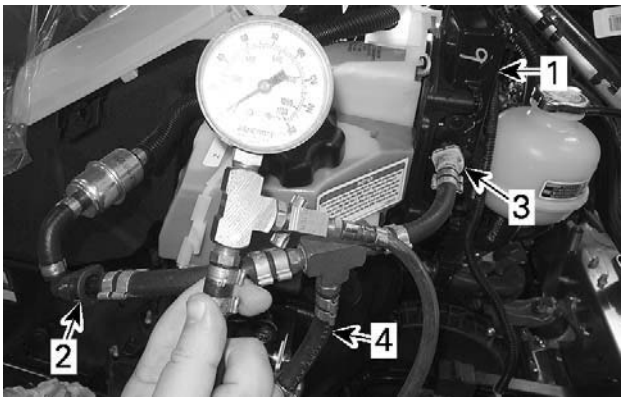

mmr2013-026-006_a

*1. ECM*
*2. Fuel pressure hose fitting*
*3. Fuel hose adapter to ECM fitting*
*4. Fuel hose adapter to pressure gauge*

**⚠ WARNING**

**When carrying out pressure test, ensure fuel is not leaking from test equipment onto hot exhaust system or electrical components. Ensure fuel hose do not come into contact with hot engine parts or hot exhaust system.**

5. Start engine.
6. Run engine above 2000 RPM and observe the fuel pressure.

| FUEL PRESSURE |
|---|
| 303 kPa (44 PSI) |

If pressure is lower than specified, momentarily block the return hose while monitoring the pressure gauge.

***NOTICE*** **Do not block the fuel return for more than 2 seconds.**

If pressure rises to reach or exceed specification with the fuel return blocked, replace fuel regulator.

If pressure does not rise with the fuel return blocked, refer to *PRESSURE BELOW SPECIFICATIONS* in the following table.

| FUEL PRESSURE TROUBLESHOOTING | |
|---|---|
| RESULT | POSSIBLE CAUSE |
| Pressure above specifications | Defective fuel regulator |
| Pressure below specifications | Clogged fuel filter |
| | Poor electrical connection |
| | Defective fuel regulator |
| | Defective fuel pump |
| | Leak in the fuel system circuit |

7. Stop engine.

Fuel pressure should remain stable.

8. If fuel pressure drops, check the following for leaks:
   – Tools
   – Hoses
   – Fuel injectors
   – Fuel pressure regulator
   – Fuel pump.
9. Bleed away any remaining fuel in the pressure gauge and fuel hose adapter using the bleed valve on the fuel hose adapter.

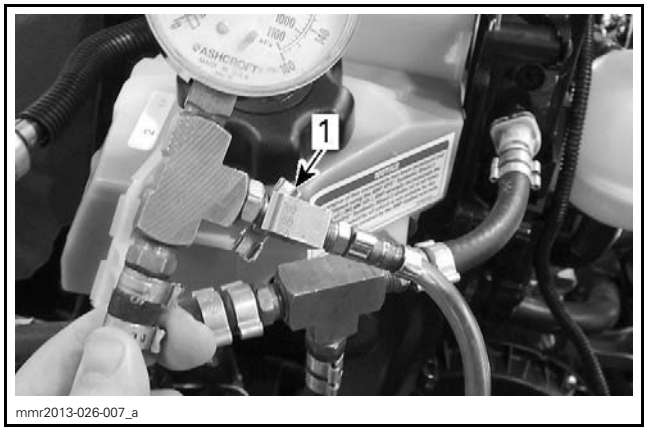


*1. Pressure gauge bleed valve*

10. Remove pressure gauge and fuel hose adapter.
11. Reinstall the fuel pressure hose on ECM and gently but firmly pull on hose to ensure quick disconnect fitting is properly locked and secure on the ECM.
12. Reinstall all remaining removed parts.

# PROCEDURES

## FUEL HOSE AND OETIKER CLAMPS

### Fuel Hose Replacement

When replacing fuel hoses, be sure to use hoses as available from BRP parts department. This will ensure continued proper and safe operation.

**⚠ WARNING**

**Use of fuel lines other than those recommended by BRP may compromise fuel system integrity.**

**⚠ WARNING**

- Never use a hose pincher on high pressure hoses.
- Never change the routing of a fuel hose.
- Always reinstall the corrugated protective tubing on fuel hoses.
- Secure fuel hoses using the appropriate locking tie or fastener to prevent contact with sharp edges or hot, rotating and moving parts.
- After connecting a hose or a quick connect fitting, pull on the hose near the fitting to make sure it is securely locked.
- Always validate fuel system tightness by performing a *FUEL SYSTEM PRESSURIZATION AND LEAK TEST*.

## Oetiker Clamp Replacement

To secure or cut Oetiker clamps on fuel lines, use OETIKER PLIERS (P/N 295 000 070).

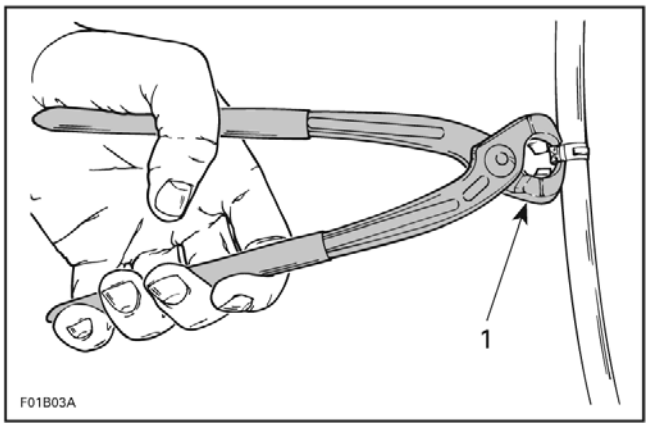


*1. Cutting clamp*

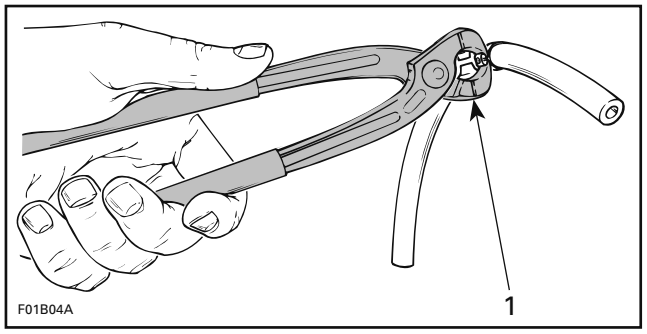


*1. Securing clamp*

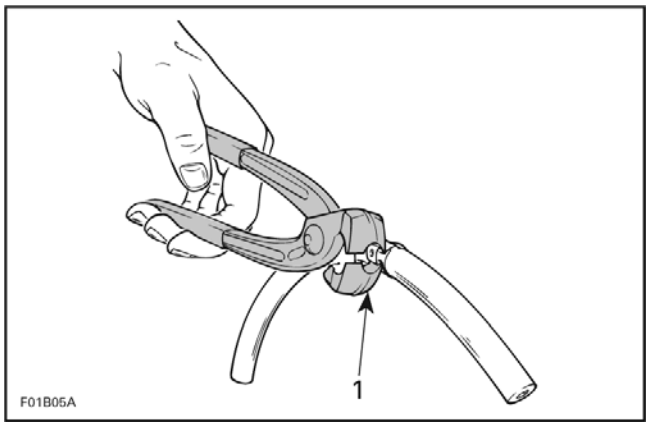


*1. Securing clamp in limited access*

**⚠ WARNING**

Whenever removing a hose in the fuel system, always use new Oetiker clamps at assembly.

# FUEL TANK

## Fuel Tank Removal

1. Remove the following items, refer to *BODY* section:
   - Seat
   - Upper body module
   - Console.
2. Drain fuel tank as much as possible using the SUCTION PUMP (P/N 529 035 880).

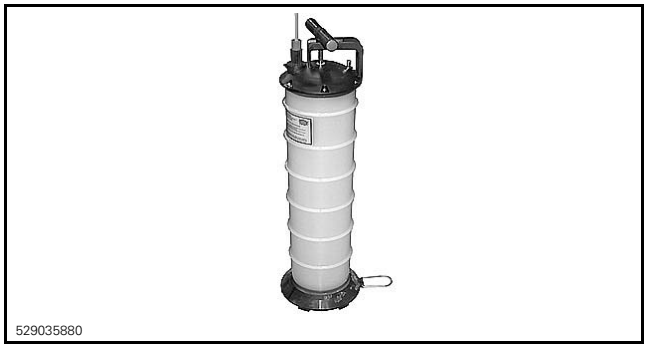


3. Remove the aft mounting bolt from the rear frame member forward mount, and the top mounting bolts from upper column support as indicated on the illustration. Discard the elastic nuts.

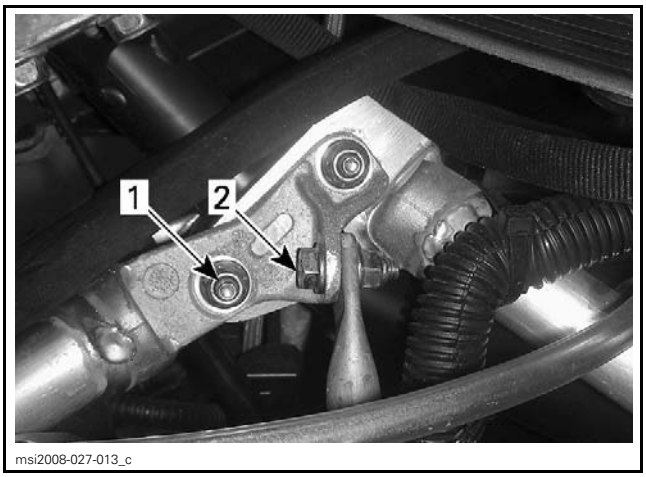

msi2008-027-013_c

*RIGHT SIDE SHOWN*
1. *At mounting bolt on rear frame member forward mount*
2. *RH top mounting bolt on upper column support*

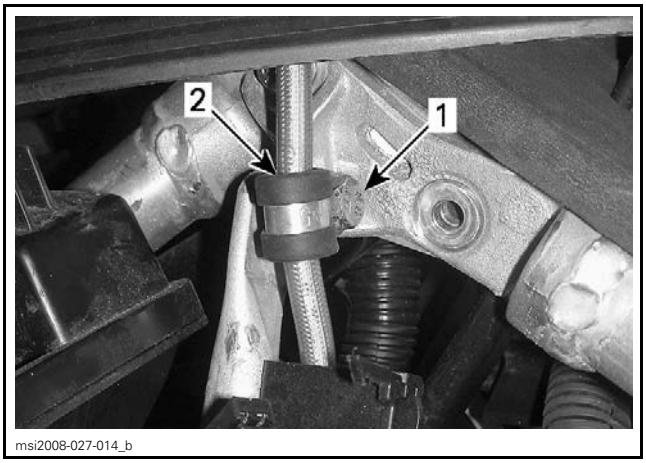

msi2008-027-014_b

*LEFT SIDE SHOWN*
1. *Top mounting bolt on LH upper column support*
2. *Brake hose retaining clamp*

4. Release the torque applied to the mounting bolt on the front frame member, but do not remove bolt and elastic nut.

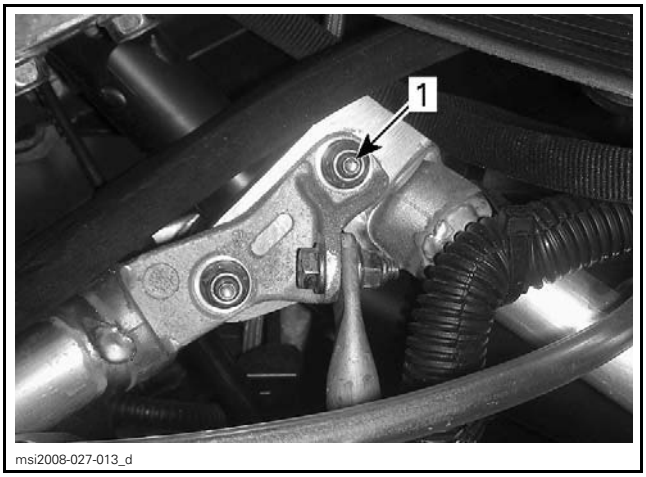

msi2008-027-013_d

1. *Mounting bolt, front frame member*

5. Remove trim panels covering the aft end of the rear frame members by pulling upwards, then pulling out (one each side).

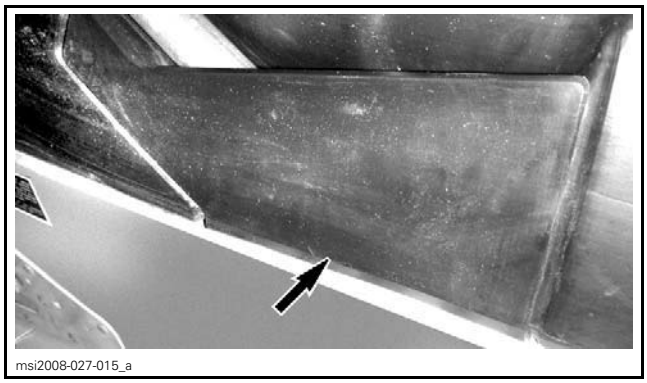
msi2008-027-015_a

6. Remove elastic nut and shoulder bushing retaining the rear frame members (one each side) to the tunnel (discard nuts, keep shoulder bushings).

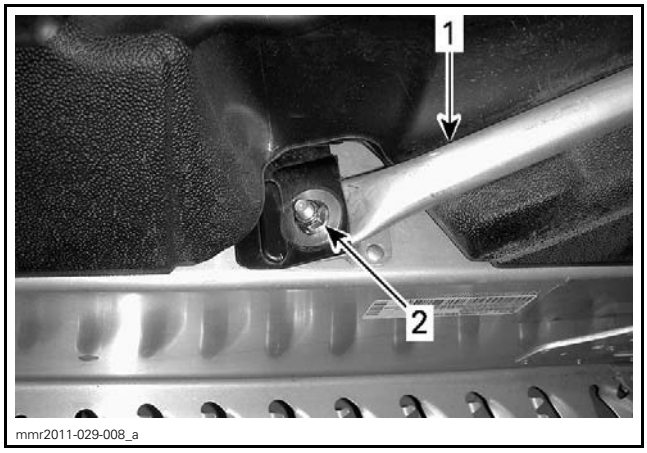

mmr2011-029-008_a

1. *Frame member*
2. *Elastic nut*

7. Disconnect the fuel tank vent tube at the check valve.

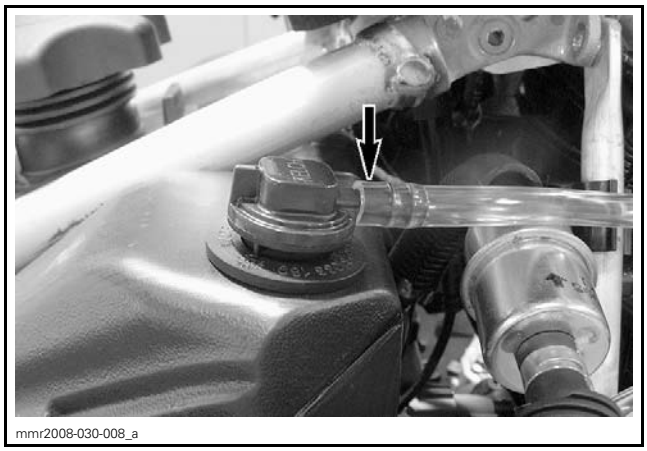
mmr2008-030-008_a

*TYPICAL - DISCONNECT FUEL VENT TUBE*

8. Disconnect the magneto connector.

**⚠ WARNING**

**The magneto connector must be disconnected to prevent any spark in the engine compartment and to remove power from the fuel pump. Otherwise, if engine is cranked, fuel vapors may ignite in presence of a spark creating a fire hazard.**

9. Install a rag around the ECM hose quick connect to catch fuel spillage.
10. Disconnect fuel pressure hose from ECM.

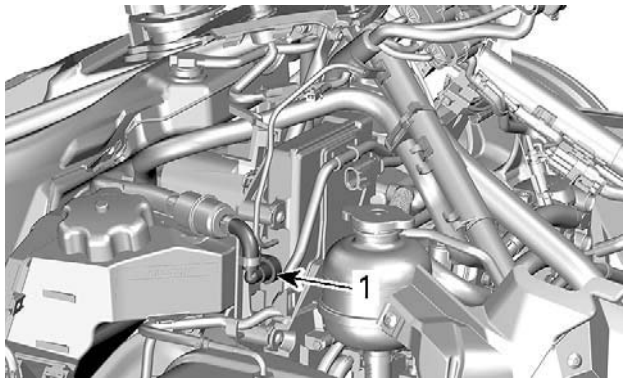


*TYPICAL*
*1. Fuel pressure hose fitting at ECM*

11. Move the fuel tank backwards until it contacts the studs.

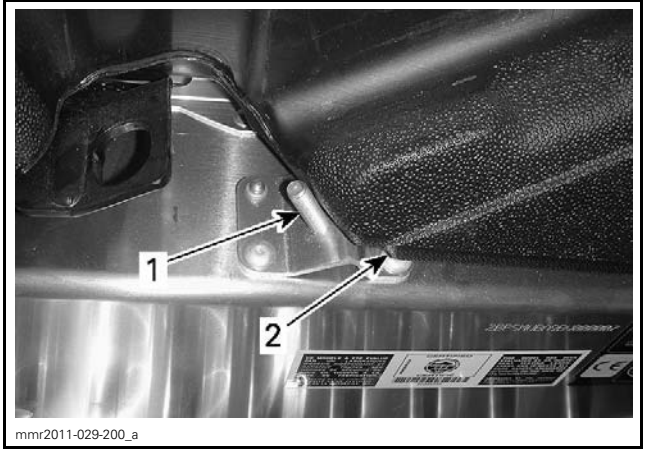


*1. Stud*
*2. Fuel tank*

12. Disconnect fuel pump electrical connector.

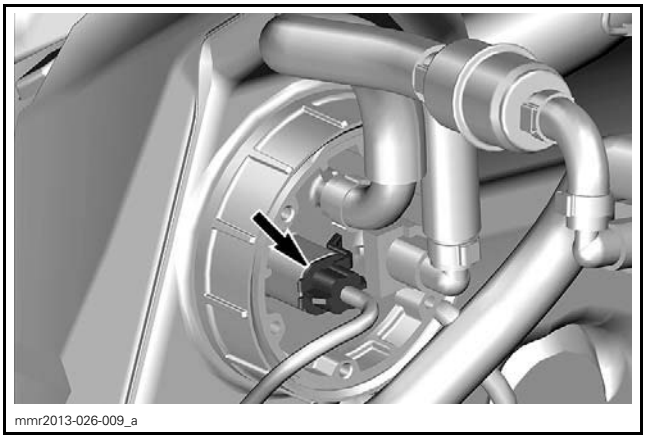


*FUEL PUMP CONNECTOR TO DISCONNECT*

13. Carefully disconnect fuel return hose from fuel pump.

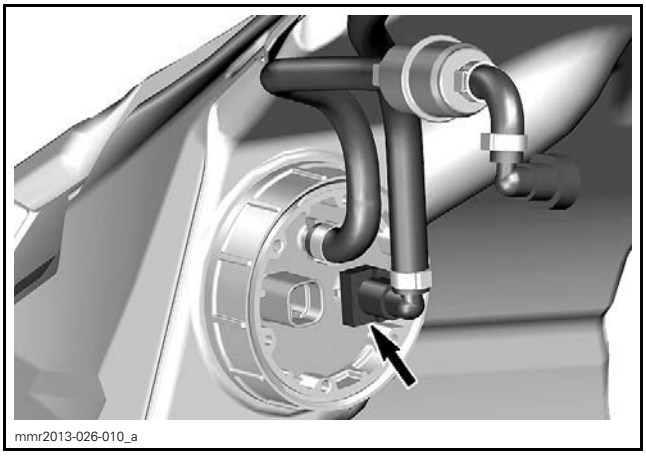


*FUEL SUPPLY HOSE TO DISCONNECT*

NOTE: Place a container under the return hose end to recover the fuel remaining in the system.

14. Carefully and slowly lift the aft end of the fuel tank from the side frame mounting studs and remove it from vehicle.

## Fuel Tank Installation

Installation is the reverse of the removal procedure however, pay attention to the following.

Connect return hose to fuel pump. Pull on hose to ensure it is properly locked and secure.

When installing vent hose, ensure it is not kinked or pinched.

Secure the rear frame member using new elastic nuts and previously removed shoulder bushings.

| TIGHTENING TORQUE | |
|---|---|
| Rear frame member retaining nuts | 31 N•m (23 lbf•ft) |

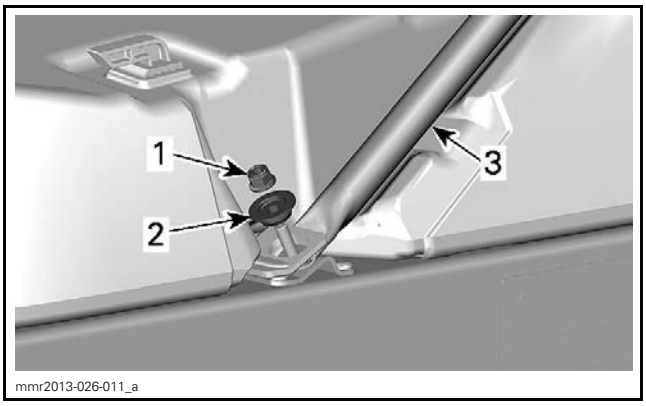


*1. New elastic nut*
*2. Previously removed shoulder bushing*
*3. Rear member frame*

Secure all frame members at the top of pyramid using new elastic nuts.

| TIGHTENING TORQUE | |
|---|---|
| Frame member upper bolts | 14 N•m (124 lbf•**in**) |

Validate fuel system tightness by performing a *FUEL SYSTEM PRESSURIZATION AND LEAK TEST*. Refer to *INSPECTION* at the beginning of this subsection.

Reinstall all other removed parts and refill the fuel tank.

# FUEL PUMP

## Fuel Pressure Release

1. Connect vehicle to the latest applicable B.U.D.S. software, refer to the *COMMUNICATION TOOLS AND B.U.D.S.* subsection.
2. Select the **Activation** and **ECM** tabs.
3. Click on the **Fuel Press. Relief** button in the **Activate** field.

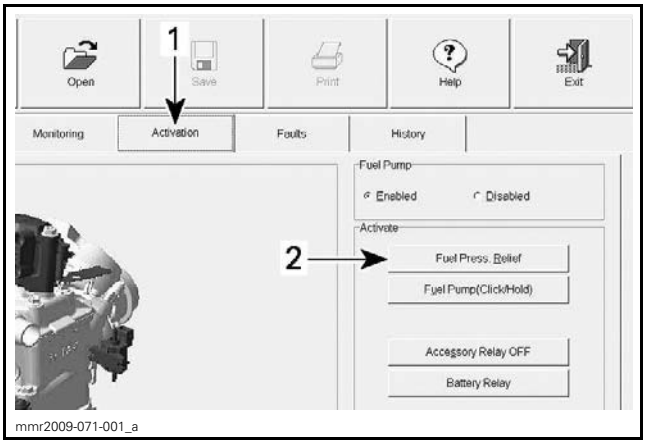


*RELEASING FUEL SYSTEM PRESSURE IN B.U.D.S.*
*1. Activation tab*
*2. Fuel Press. Relief button on ECM page*

## Electric Fuel Pump Test with B.U.D.S.

NOTE: Activating the fuel pump as described in this procedure can be used for purging air from the fuel system whenever a fuel hose has been disconnected and reconnected. The pump should be activated for 15 seconds to ensure proper purging of the system.

1. Connect vehicle to the latest B.U.D.S. software, refer to *COMMUNICATION TOOLS AND B.U.D.S.* subsection.
2. Select the **Activation** and **ECM** tabs.
3. Click on the **Fuel Pump (Click/Hold)** button in the **Activate** field.

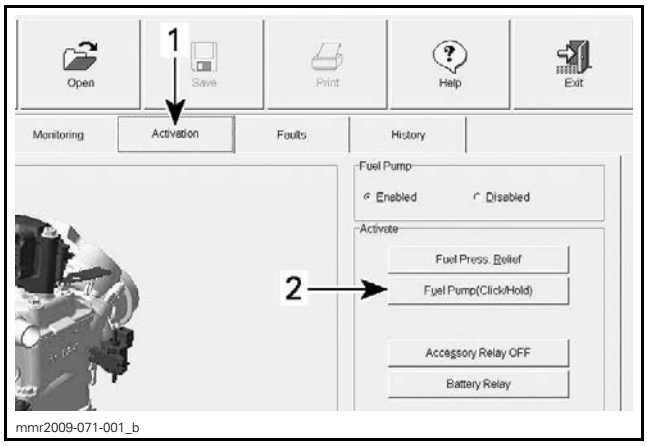


*1. Activation tab*
*2. Fuel Pump (Click/Hold) button*

4. Listen for fuel pump operation.

NOTE: The fuel pump should run as long as you hold the **Fuel Pump (Click/Hold)** button in B.U.D.S.

If you do not hear the pump come ON, select the **Faults** tab in B.U.D.S. and check for fault codes.

If there is no fault code, connect a known good fuel pump to the vehicle harness (in parallel) and repeat the test.

NOTE: No voltage test can be done when the fuel pump is disconnected.

If the second fuel pump functions when connected to the vehicle harness, then replace the fuel pump installed in the vehicle.

## Electric Fuel Pump Pressure Test

Refer to *INSPECTION* in this subsection.

## Electric Fuel Pump Removal

1. Release the fuel pressure in the system. Refer to *ELECTRIC FUEL PUMP (E-TEC)* in this subsection.
2. Disconnect magneto connector.

**⚠ WARNING**

**The magneto connector must be disconnected to prevent any spark in the engine compartment and to remove power from the fuel pump. Otherwise, if engine is cranked, fuel vapors may ignite in presence of a spark creating a fire hazard.**

Follow procedures for removing fuel tank and move fuel tank back for access to fuel pump. Refer to *FUEL TANK REMOVAL* in this subsection.

3. Disconnect fuel pump as described in the *FUEL TANK REMOVAL* procedure in this section.
4. Remove fuel pump spanner nut.

| REQUIRED TOOL |
|---|
| FUEL PUMP NUT TOOL (P/N 529 036 214) |

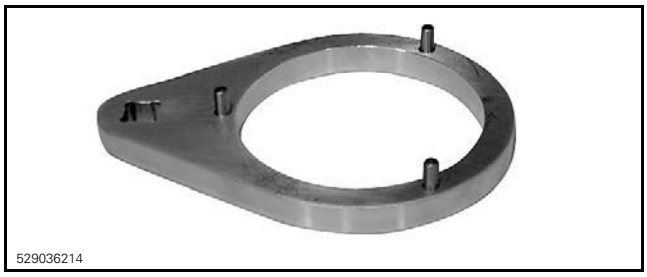


5. Remove fuel pump assembly from fuel tank.

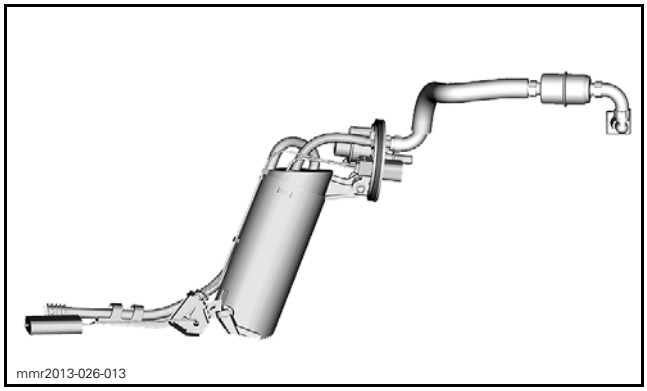


*TYPICAL — ELECTRIC FUEL PUMP ASSEMBLY*

6. Remove and discard fuel pump gasket.

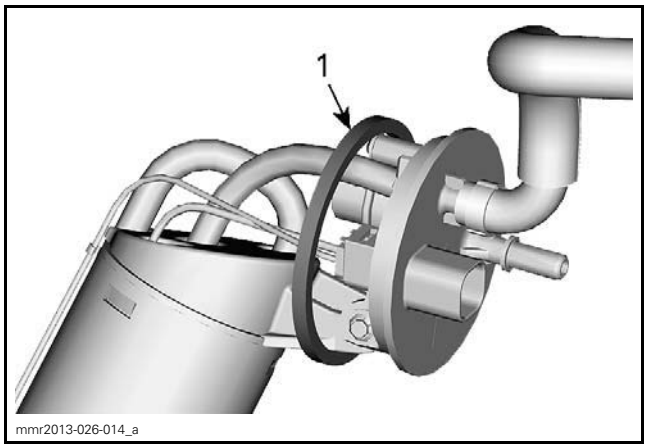


*1. Fuel pump gasket*

## Electric Fuel Pump Installation

For installation, reverse the removal procedure however, pay attention to the following.

1. Make sure the rear pick-up is inserted all the way to the rear of fuel tank and does not interfere with the fuel level sensor float.
2. Install a NEW gasket on the fuel pump prior to installing the pump in the tank.

NOTE: The gasket must be installed on the fuel tank side so it is located between the pump and the fuel tank.

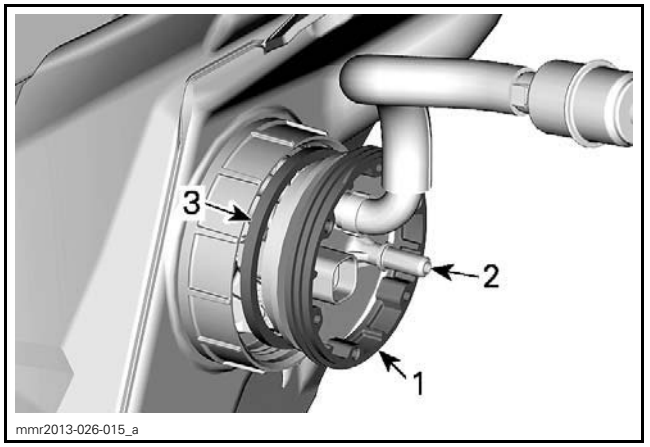


*TYPICAL - FUEL PUMP INSTALLATION*
*1. Fuel pump spanner nut*
*2. Fuel pump face plate*
*3. Fuel pump gasket*

3. Install a torque wrench perpendicularly (90°) to FUEL PUMP NUT TOOL (P/N 529 036 214).

| TIGHTENING TORQUE | |
|---|---|
| Fuel pump spanner nut | 40 N•m (30 lbf•ft) |

4. To reconnect fuel pump and install fuel tank, refer to the *FUEL TANK INSTALLATION* procedure in this subsection.

5. Carry out a *FUEL TANK LEAK TEST* and a *FUEL SYSTEM PRESSURIZATION AND LEAK TEST* as detailed in this subsection.

**⚠ WARNING**

**After working on the fuel system, carry out a fuel system pressurization test to check for leaks. Failure to carry out a fuel system leak test could result in severe injury or a life threatening situation should a leak occur.**

# FUEL PUMP INLET FILTER

## Fuel Pump Inlet Filter Replacement

1. Remove fuel pump assembly from fuel tank. Refer to procedure in this subsection.
2. Pull rear pickup hose to make room.

*1. Rear pickup hose*

3. Unlock sump tank by carefully inserting a small screwdriver between the tab and the sump tank.

**NOTICE** **Be careful not to damage tabs while pushing them.**

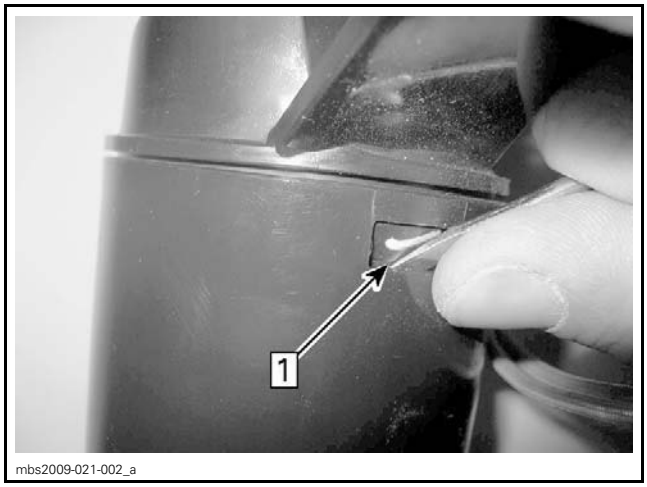


*Step 1: Insert screwdriver between tab and sump tank*

4. Completely remove sump tank from pump by pulling it carefully.

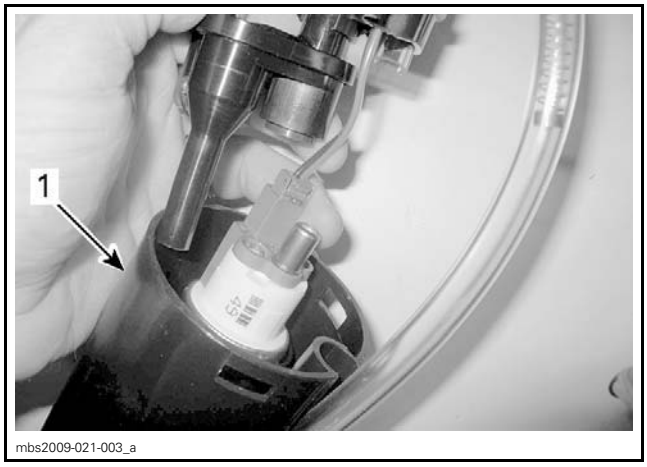


*1. Sump tank*

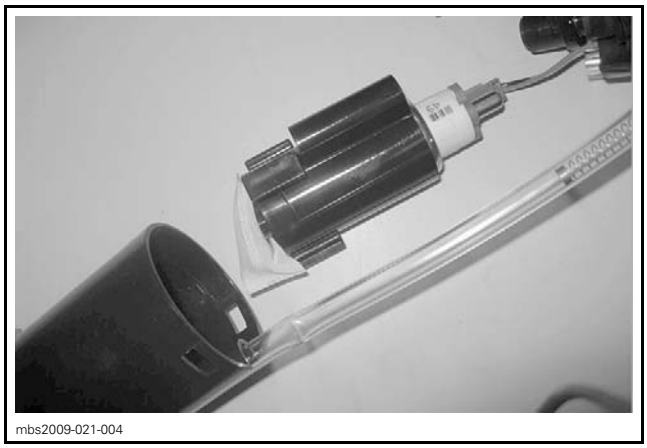


*FUEL PUMP REMOVED*

5. Remove inlet fuel pump filter using a small screwdriver.

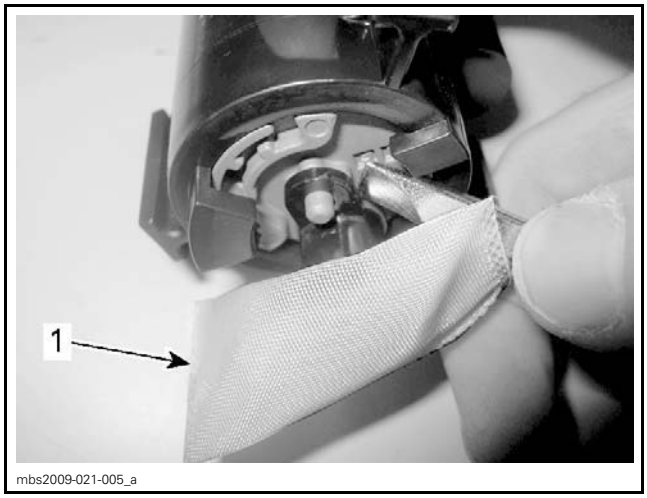


*1. Inlet fuel pump filter*

6. Discard inlet fuel pump filter and steel ring.

7. Install NEW steel ring on NEW inlet filter.

NOTE: Steel ring can be installed on both sides. If steel ring is loose during installation, it will tighten when plastic will contact fuel, the plastic will swell.

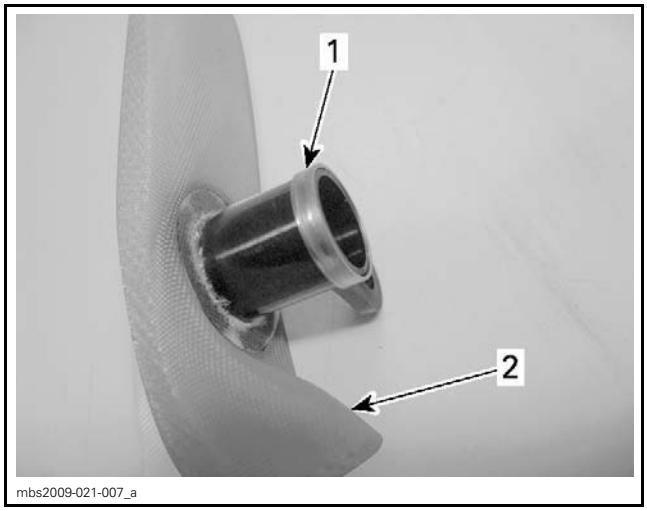


*1. Steel ring*
*2. Inlet filter*

8. Insert inlet filter into fuel pump by pressing it downward.

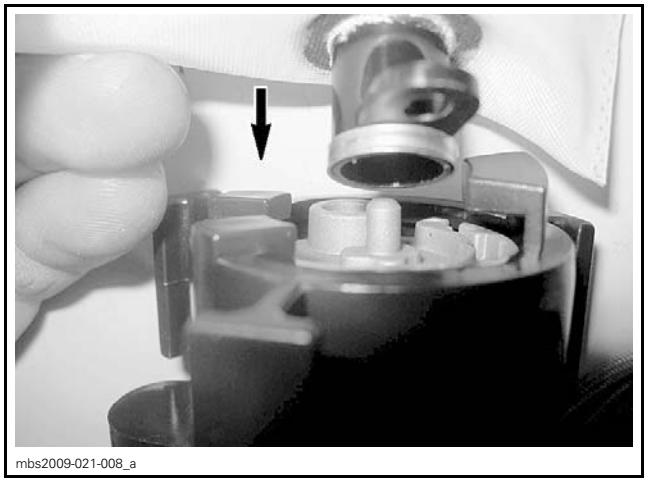


9. Ensure that the filter hole is properly positioned into the pin.

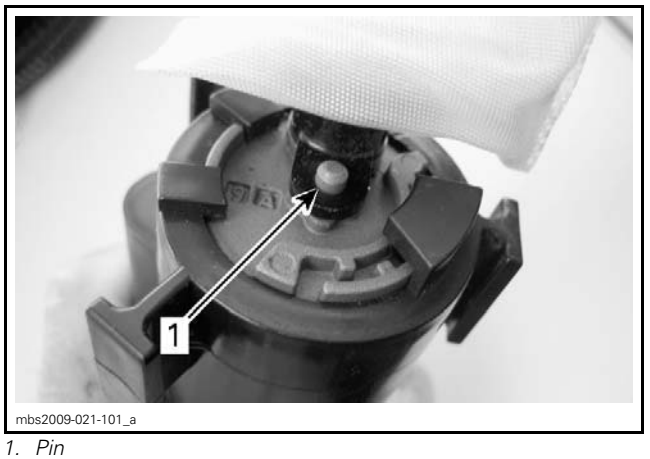


*1. Pin*

10. Align jet pump outlet into its opening.

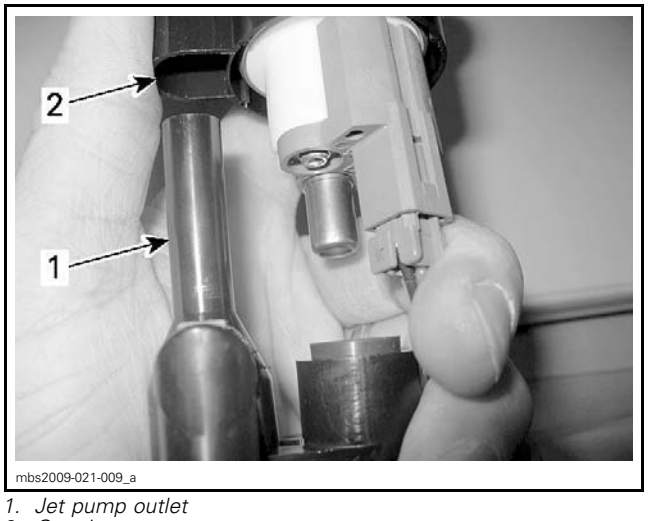


*1. Jet pump outlet*
*2. Opening*

11. Install motor into jet pump.

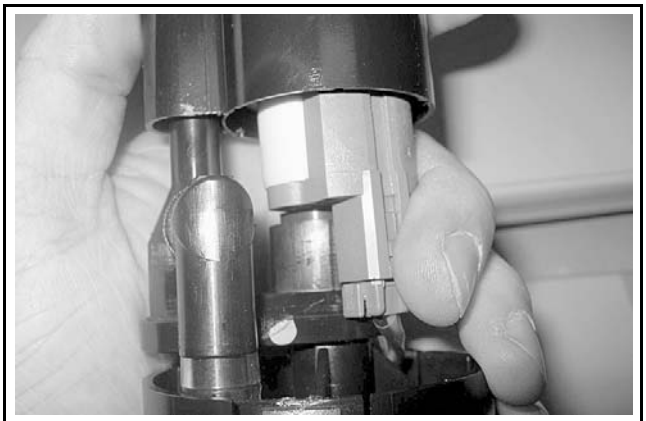
mbs2009-021-010

12. Install sump tank carefully and ensure that all parts are properly positioned.

mbs2009-021-011

13. Ensure that sump tank tabs are properly locked.
14. Position rear pickup hose by pulling it downward.

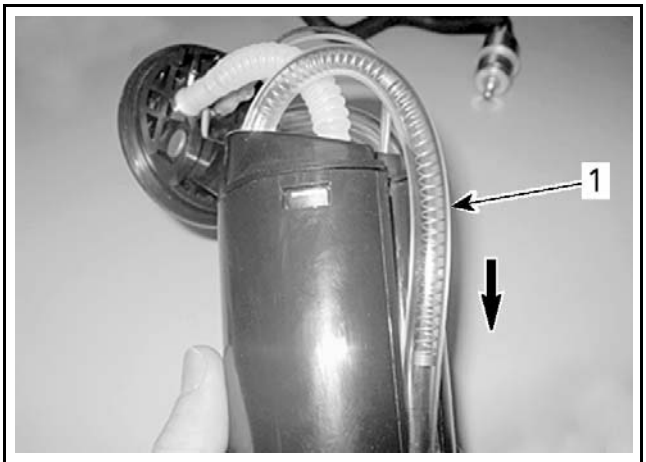

mbs2009-021-012_a

*1. Rear pickup hose*

15. Reinstall fuel pump from fuel tank. Refer to procedure in this subsection.

# STEEL MESH FILTER

## Steel Mesh Filter Location

The steel mesh fuel filter is located on the remote pickup of the fuel pump module.

## Steel Mesh Filter Cleaning

1. Remove fuel pump module from fuel tank, refer to *FUEL PUMP REMOVAL* in this subsection.
2. Clean steel mesh filter on fuel pump remote pickup using low pressure filtered air and XPS BRAKES AND PARTS CLEANER (USA) (P/N 219 701 705) or XPS BRAKES AND PARTS CLEANER (CAN) (P/N 219 701 776).

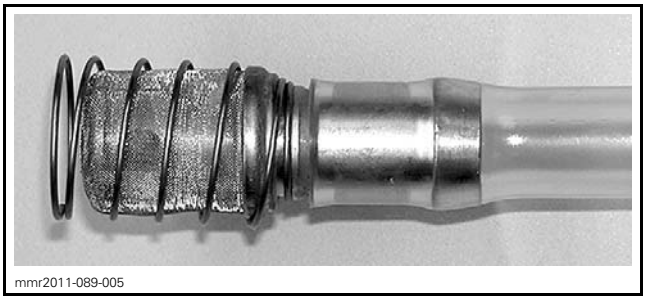
mmr2011-089-005

***STEEL MESH FILTER, FUEL PUMP REMOTE PICK-UP***

3. Install and reconnect fuel pump module (pressure hose and electrical connector), refer to *FUEL PUMP INSTALLATION* in this subsection.
4. Carry out a *FUEL TANK LEAK TEST* and a *FUEL SYSTEM PRESSURIZATION AND LEAK TEST* as detailed in this subsection.
5. Install remaining parts in the reverse order of removal, refer to *FUEL TANK INSTALLATION* in this subsection.

# FUEL PRESSURE REGULATOR

## Fuel Pressure Regulator Replacement

Remove fuel pump from fuel tank. Refer to *ELECTRIC FUEL PUMP REMOVAL* in this subsection.

Remove screws securing fuel pressure regulator on fuel pump.

Discard fuel pressure regulator with its O-rings.

Install new O-rings on the new fuel pressure regulator.

Install the regulator on fuel pump and secure it using previously removed screws.

| TIGHTENING TORQUE | |
|---|---|
| Fuel pressure regulator screws | Hand-tight |

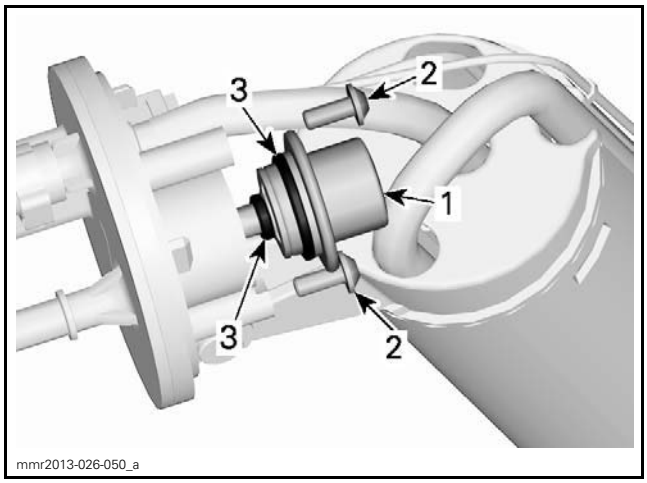


*1. Fuel pressure regulator*
*2. Retaining screws*
*3. New O-rings*

# FUEL LEVEL SENSOR

NOTE: Verify the gauge functions related to the fuel level sensor before testing the sensor. Refer to *GAUGE* in *LIGHTS, GAUGE AND ACCESSORIES* subsection.

## Fuel Level Sensor Test with B.U.D.S.

1. Connect vehicle to the latest applicable B.U.D.S. version.
2. Select the **Monitoring** and **Cluster** tabs.
3. Monitor the fuel level sensor resistance under **Fuel Level** and compare to the table below.

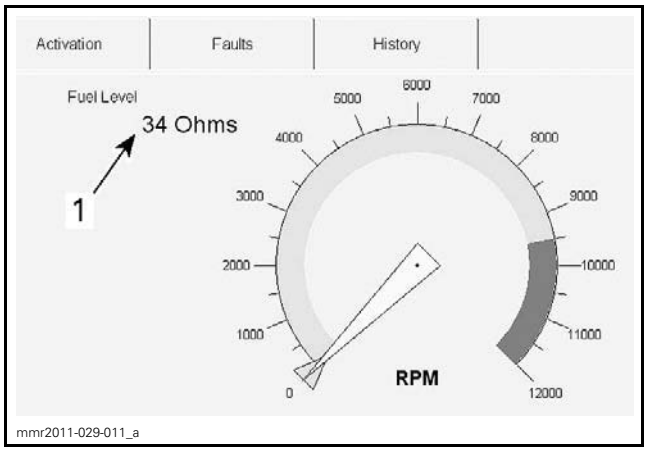


*1. Fuel level sensor resistance*

| FUEL LEVEL SENSOR RESISTANCE TABLE | |
|---|---|
| Full level resistance value | 7 Ω ± 3 Ω |
| Empty level resistance value | 95 Ω ± 5 Ω |

If resistance is within specifications, the fuel level sensor, wiring and fuse are ok.

If resistance is not within specifications, carry out the *FUEL LEVEL SENSOR RESISTANCE TEST*.

## Fuel Level Sensor Resistance Test

1. Move fuel tank back to obtain access to the fuel pump connector. Refer to *FUEL TANK REMOVAL* in this subsection.
2. Disconnect fuel level pump.
3. Connect the FLUKE 115 MULTIMETER (P/N 529 035 868) between the two pins in the sensor connector and set it to Ω.
4. Test resistance of sensor as follows.

| FUEL LEVEL SENSOR RESISTANCE TABLE | |
|---|---|
| Full level resistance value | 7 Ω ± 3 Ω |
| Empty level resistance value | 95 Ω ± 5 Ω |

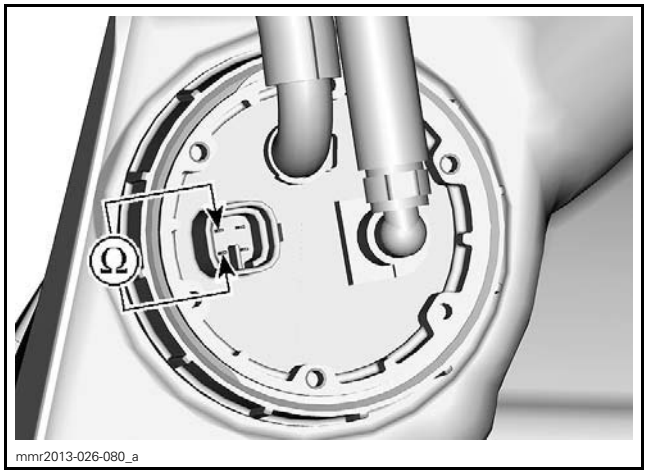


NOTE: Lift the rear of fuel tank to change fuel level.

If resistance is within specifications, check the wiring between the pump connector and gauge.

If resistance is not within specifications, replace fuel level sensor.

## Fuel Level Sensor Replacement

Push locking tab and slide out.

mmr2013-069-001_a

*1. Locking tab to push*

Disconnect the fuel level sensor connector from the pump module.

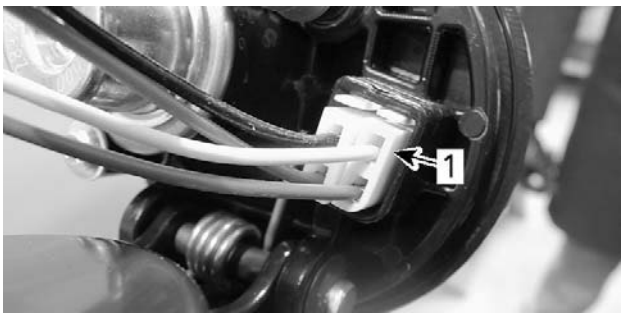

mmr2013-026-081_a

*1. Fuel level sensor connector (Yellow connector)*

Remove the fuel level sensor.

mmr2013-026-083

Reinstall the new one by reversing the procedure.

# FUEL TANK AND FUEL PUMP

## SERVICE TOOLS

| Description | Part Number | Page |
|---|---|---|
| LEAK TEST KIT | 529 033 100 | 7 |
| OETIKER PLIER | 295 000 070 | 6, 9 |
| PRESSURE GAUGE | 529 036 395 | 8 |
| SMALL HOSE PINCHER | 295 000 076 | 7 |
| VACUUM/PRESSURE PUMP | 529 021 800 | 7 |

## SERVICE PRODUCTS

| Description | Part Number | Page |
|---|---|---|
| CLUTCH AND PULLEY FLANGE CLEANER PRO S1 | 779244 | 6 |

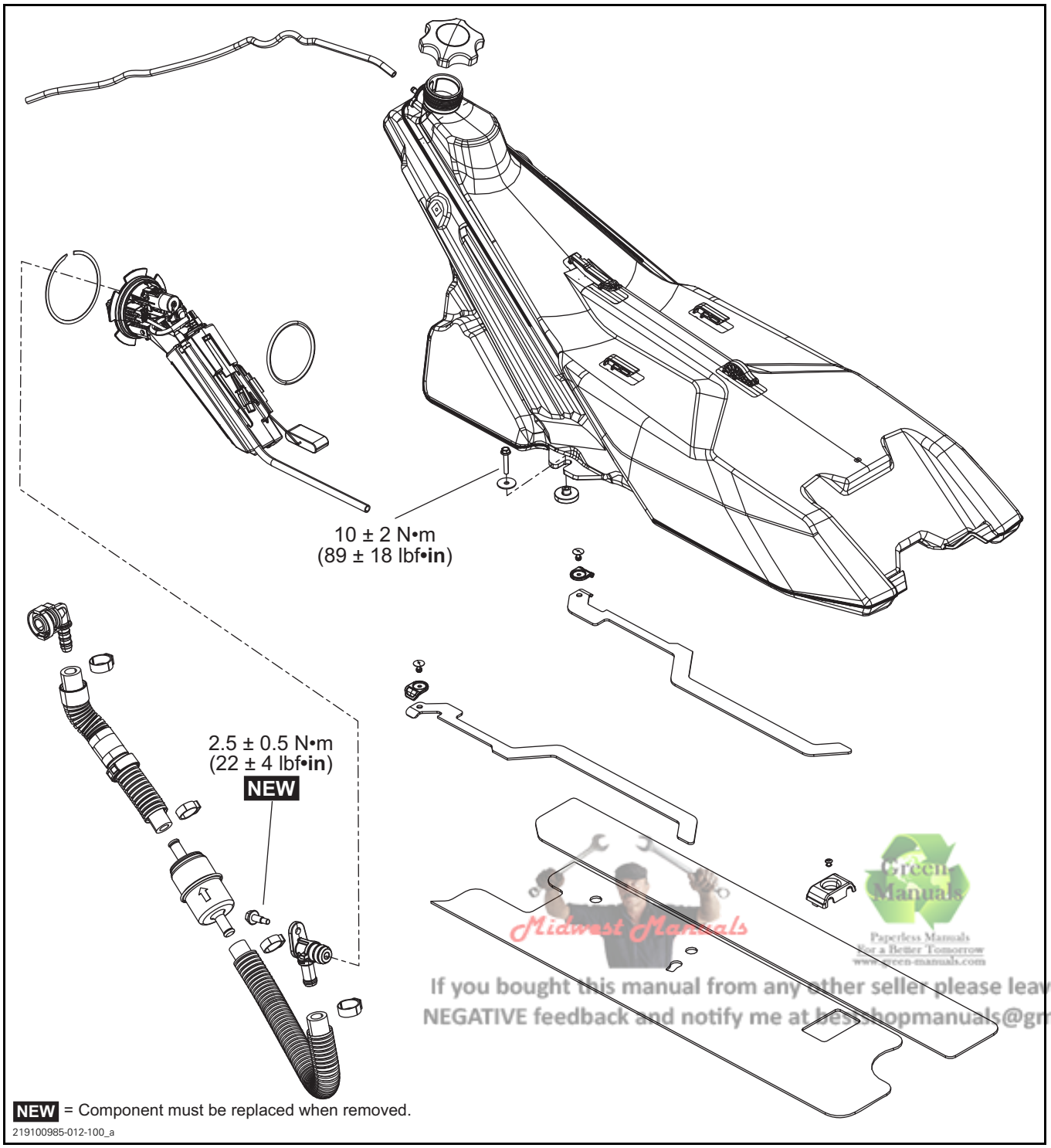


Midwest Manuals
Green Manuals
Paperless Manuals For a Better Tomorrow
www.green-manuals.com
If you bought this manual from any other seller please leave them NEGATIVE feedback and notify me at bestshopmanuals@gmail.com

# GENERAL

NOTE: It is a good practice to check for fault codes using the BRP diagnostic software BUDS2 as a first troubleshooting step. Refer to *DIAGNOSTIC AND FAULT CODES*.

**⚠ WARNING**

Always disconnect the magneto connector prior to:

– Disconnecting any fuel hose.

– Removing a fuel injector.

– Removing a spark plug cable or spark plug.

Otherwise, if the engine is cranked, fuel vapors may ignite in presence of a spark creating a fire hazard.

When disconnecting a fuel line, cover the connection with an absorbent shop rag and proceed slowly to minimize spilling.

**⚠ WARNING**

Do not allow fuel to spill on hot engine parts and/or on electrical connectors. Wipe off any fuel spillage in the engine compartment. Fuel is flammable and explosive under certain conditions.

**⚠ WARNING**

After working on the fuel system, always carry out a fuel system pressurization test to check for leaks.

**⚠ WARNING**

Never remove the eyelet connectors from the fuel pressure regulator and the fuel hose connector. A bad connection may create a static electricity discharge causing a fire hazard.

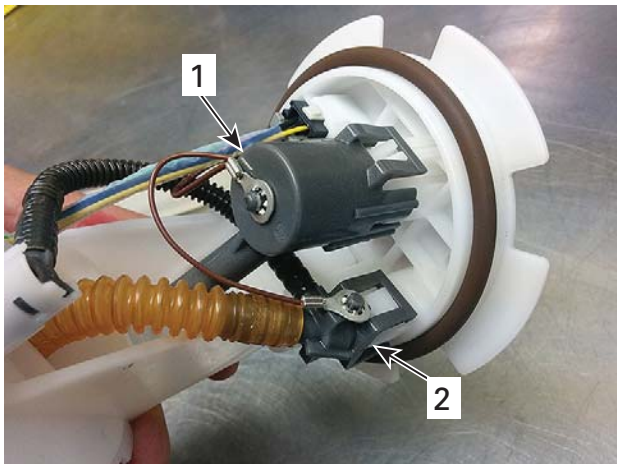


tmr2017-027-306_a

*1. Fuel pressure regulator*
*2. Fuel hose connector*

# SYSTEM DESCRIPTION

## Electric Fuel Pump

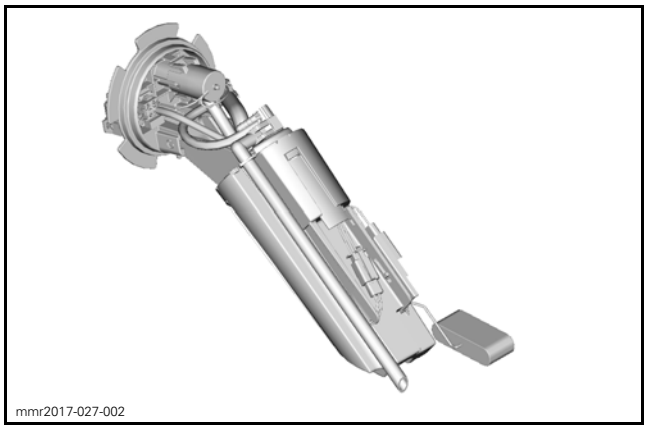

mmr2017-027-002

An electric fuel pump is mounted in the front center portion of the fuel tank.

A 12 Vdc high pressure fuel pump with an integrated jet pump is used.

As soon as the engine is cranking, the electric fuel pump turns on in preparation for the engine start. When the engine runs, the fuel pump is ON continuously to provide a constant fuel pressure to the injectors.

To ensure a constant delivery of fuel to the engine for all riding conditions when the fuel level is low, a rear pickup and a fuel pump reservoir is used.

The fuel pump reservoir is actually the housing of the fuel pump module in which the fuel pump is located. A check valve at the bottom of the housing allows the fuel in the tank to enter the fuel pump reservoir.

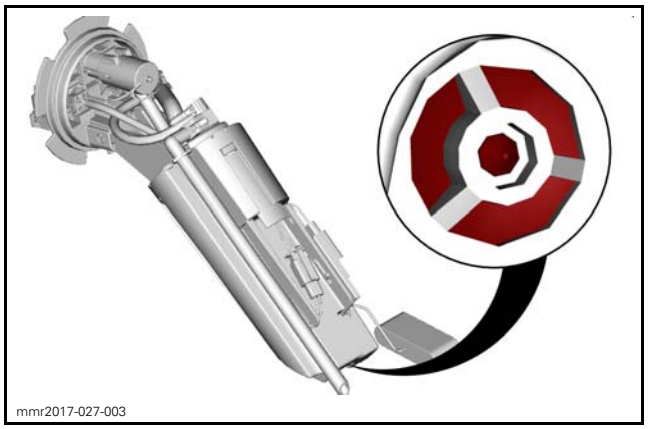


When the fuel pump runs, it draws the fuel from the fuel pump reservoir and feeds it to the injection system. This causes fuel in the tank to enter the fuel pump reservoir, by gravity, through its bottom inlet check valve.

At the same time, a portion of the fuel flow from the electric fuel pump flows through a jet pump that contains a venturi.

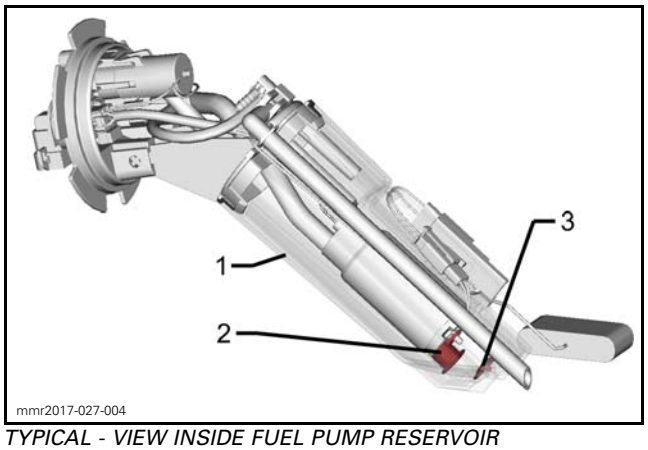


*TYPICAL - VIEW INSIDE FUEL PUMP RESERVOIR*
1. *Fuel pump reservoir*
2. *Bottom inlet*
3. *Check valve (open upwards)*

As the fuel accelerates through the venturi, it generates a low pressure area at a connection to the remote pickup, which draws fuel into the fuel pump reservoir from the remote pickup.

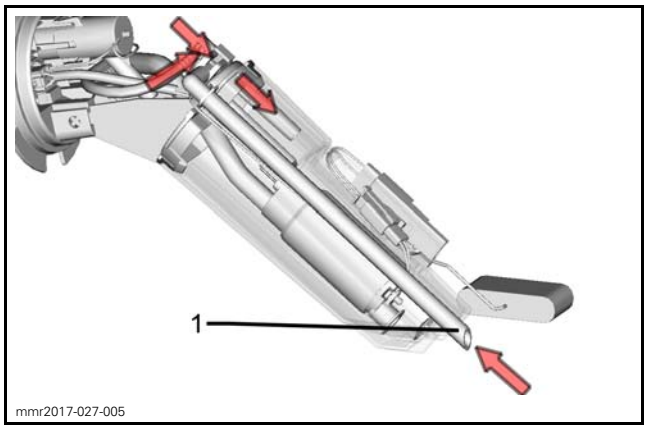


1. *Remote pickup*

When riding the vehicle on a level surface, fuel enters into the fuel pump reservoir through its check valve and through the remote pickup simultaneously, as long as there is enough fuel in the tank to cover the remote pickup.

When riding downhill with a low amount of fuel in the tank, the fuel moves towards the front of fuel tank. The fuel enters the fuel pump reservoir through the check valve only as there is no fuel at the remote pickup.

When riding uphill with a low amount of fuel in the tank, the fuel moves towards the rear of the fuel tank. The check valve closes and traps the fuel in the pump reservoir. The fuel pump continues to draw fuel from the fuel pump reservoir, which is now only fed by the jet pump using the remote pickup. This prevents air from being drawn into the fuel lines from the fuel tank.

The continuous fuel flow cools down the fuel pump.

## Fuel Pickup

Fuel enters the fuel pump reservoir from either a check valve at the bottom of the fuel pump reservoir, or from a remote pickup in the rear portion of the fuel tank.

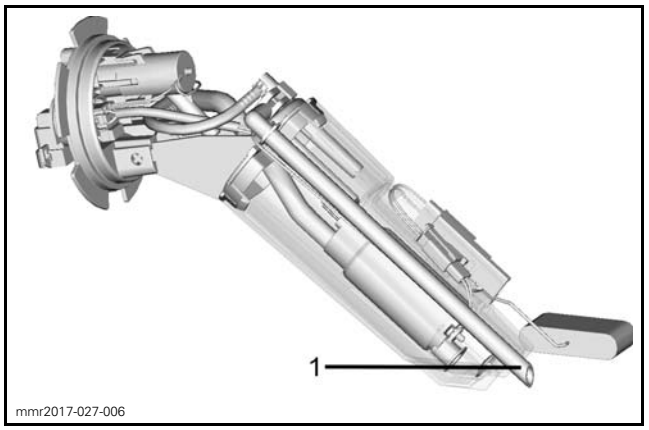


1. *Remote pickup*

## Fuel Pressure Regulator

An integrated fuel pressure regulator is mounted on the fuel pump flange. It is basically a spring loaded valve that opens and closes the path of fuel returning to the tank, thus maintaining a constant fuel pressure in the system.

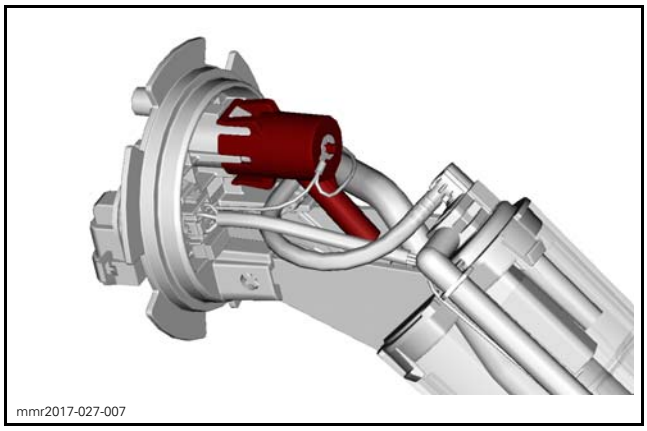

mmr2017-027-007

| FUEL PRESSURE |
| --- |
| Approximately 400 kPa ± 10 kPa (58 PSI ± 1 PSI) at 2000 RPM (will be lower at idle) |

Fuel pressure should drop less than 35 kPa (5 PSI) when engine stops running.

If a leak is present, pressure will continue to drop within the first minute after engine stops running.

## Fuel Tank Vent

The fuel tank is vented through a combination type check valve that allows ambient air pressure to enter fuel tank at all times.

As fuel is consumed by the engine, a negative pressure would occur in the fuel tank. This could eventually prevent the fuel pump from drawing enough fuel. The **negative pressure relieve function** of the valve allows the higher outside air pressure in.

If pressure builds up and exceeds 7.58 kPa (1.1 PSI) in the fuel tank, the check valve opens and lets the excess pressure vent out of the tank.

## Fuel Filters

### Fuel Pump Pre-Filter

A fuel pump pre-filter is used at the electric fuel pump inlet. It is a replaceable nylon mesh filter located within the fuel pump module housing (fuel pump reservoir).

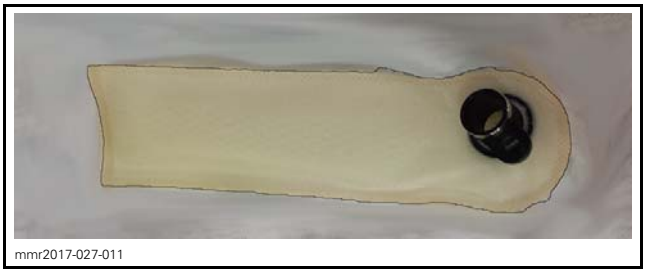

mmr2017-027-011

The fuel pump pre-filter protects the fuel pump and prevents clogging of the fuel passages within the fuel pump module.

### In-Line Fuel Filter

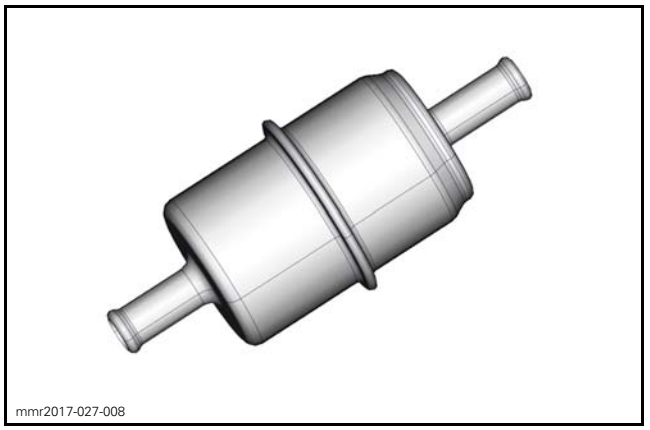

mmr2017-027-008

An in-line filter on the supply side is located between the fuel pump and the ECM.

It is a replaceable metallic canister type filter used to deliver dirt-free fuel to the injectors.

## Fuel Level Indication

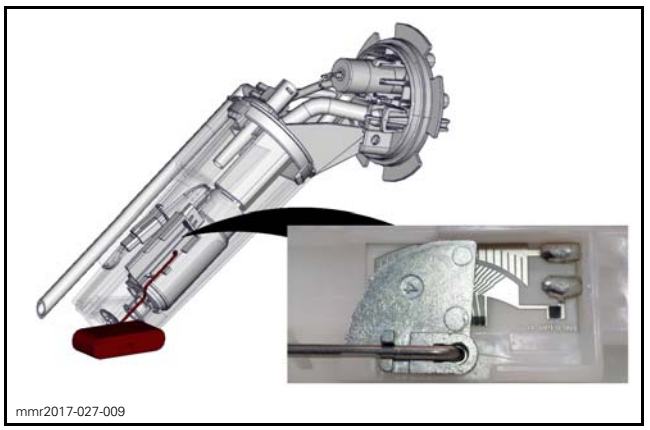

mmr2017-027-009

A float type fuel level sensor varies its resistance with fuel level thus providing a signal to the multifunction gauge for fuel level indication.

# MAINTENANCE

## INSPECTING THE FUEL LINES AND CONNECTIONS

Visually inspect fuel lines and connections for cracks or leaks.

## REPLACING THE IN-LINE FUEL FILTER

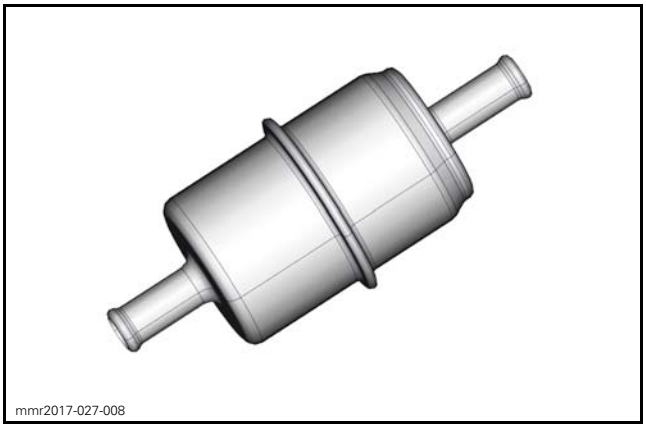

mmr2017-027-008

### Removing the In-line Fuel Filter

**⚠ WARNING**

**Work in a well ventilated area. Wipe up all spilled fuel.**

1. Release fuel pressure in the system. Refer to procedure in this subsection.
2. Remove the upper body module. Refer to *BODY* subsection.
3. Disconnect magneto connector.

**⚠ WARNING**

**The magneto connector must be disconnected to prevent any spark in the engine compartment and to remove power from the fuel pump. Otherwise, if the engine is cranked, fuel vapors may ignite in presence of a spark creating a fire hazard.**

4. Place a rag between fuel filter and oil injection tank.
5. Cut both Oetiker clamps securing the fuel filter.
6. Remove fuel filter from vehicle.

Dispose fuel filter as per your local environmental regulations.

### Installing the In-Line Fuel Filter

The installation is the reverse of the removal procedure. However, pay attention to the following.

Insert new Oetiker clamps on both hoses.

Install the new filter. Make sure printed arrow pointed towards the fuel rail.

Secure the fuel filter with new Oetiker clamps.

| REQUIRED TOOL | |
|---|---|
| OETIKER PLIER<br>(P/N 295 000 070) | |

**⚠ WARNING**

**Ensure hose clamp is tight and that hose cannot turn on the fitting.**

When installation is complete, carry out a fuel system leak test. Refer to procedure in this subsection.

**⚠ WARNING**

**After working on the fuel system, carry out a fuel system pressurization test to check for leaks. Failure to carry out a fuel system leak test could result in severe injury or a life threatening situation should a leak occur.**

Reinstall all removed parts.

## INSPECTING AND CLEANING THE THROTTLE BODY

Clean throttle plates and throttle body bores.

| SERVICE PRODUCT |
|---|
| CLUTCH AND PULLEY FLANGE CLEANER PRO S1 (P/N 779244) |

# INSPECTION

## TESTING FUEL SYSTEM FOR LEAKS

Activate the fuel pump from the **Functions** page in BUDS2.

Check for fuel leaks.

**⚠ WARNING**

After working on the fuel system, carry out a fuel system pressurization test to check for leaks. Failure to carry out a fuel system pressurization test could result in severe injury or a life threatening situation should a leak occur.

# FUEL TANK LEAK TEST

| REQUIRED TOOL | |
|---|---|
| SMALL HOSE PINCHER (P/N 295 000 076) | |
| LEAK TEST KIT (P/N 529 033 100) | |
| VACUUM/PRESSURE PUMP (P/N 529 021 800) | |

1. Fill up fuel tank.
2. Open the left side panel to access the fuel vent tube.
3. Install a small hose pincher on the vent tube.

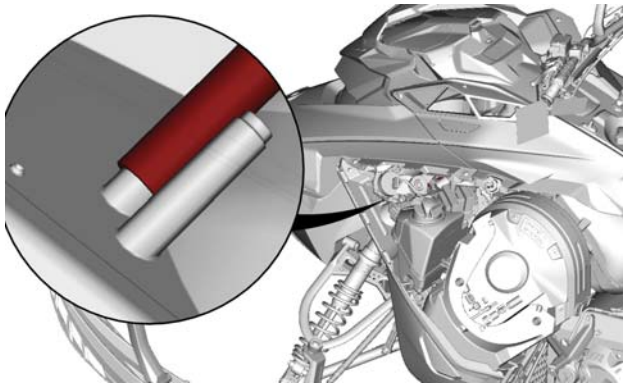

mmr2017-027-010

4. Install the appropriate test cap from the leak test kit on fuel tank inlet.
5. Install the vacuum/pressure pump on pressure test fuel cap.

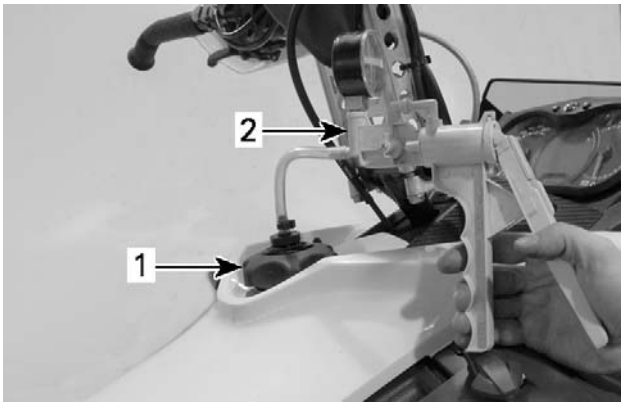


mbg2008-011-063_b

*TYPICAL*
*1. Pressure test fuel cap*
*2. Vacuum/pressure pump*

6. Set pump selector to pressure.
7. Pressurize fuel tank as follows.

| PRESSURE | TIME WITHOUT PRESSURE DROP |
|---|---|
| 21 kPa (3 PSI) | 3 minutes |

If pressure drops, locate fuel leak(s) and repair or replace leaking component(s).

To ease locating leak(s), spray soapy water on components; bubbles will indicate leak location(s).

## Fuel Tank Vent Valve Test

1. While the fuel tank is still pressurized as in the previous test, carry out the following:
2. Place a finger over the vent hose outlet.
3. When removing hose pincher, alternately touch and release vent hose outlet. You should feel pressurized air flowing out indicating the pressure relief valve function is working.
4. Release any remaining pressure in the fuel tank by slowly unscrewing fuel tank cap.
5. Remove the pressure test fuel cap.
6. Remove the fuel tank vent tube from its fitting on the lower left front body panel.
7. Install the vacuum/pressure pump on the vent tube and apply air pressure through the vent valve. Air must flow freely towards the fuel tank neck.

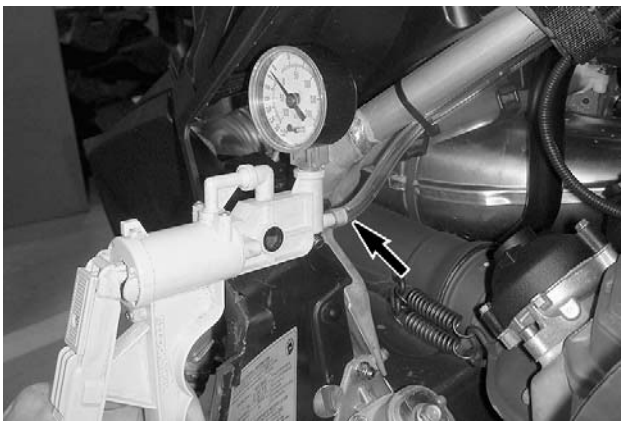
mmr2008-030-002_a

*TYPICAL - VACUUM/PRESSURE PUMP ON VENT TUBE*

NOTE: If fuel vent check valve does not function as indicated in test, replace vent valve.

8. Remove vacuum/pressure pump.
9. Install vent tube on its fitting.
10. Install normal fuel tank cap.

## TESTING FUEL PRESSURE

| REQUIRED TOOLS | |
|---|---|
| PRESSURE GAUGE (P/N 529 036 395) | |

Open right hand side panel.

The pressure test provides an indication of the available fuel pressure at the fuel pump outlet. It validates the pressure regulator and the fuel pump.

1. Ensure there is enough gas in fuel tank.
2. Install a rag under the fuel rail quick connect to catch fuel spillage.
3. Disconnect fuel pressure hose from fuel rail.

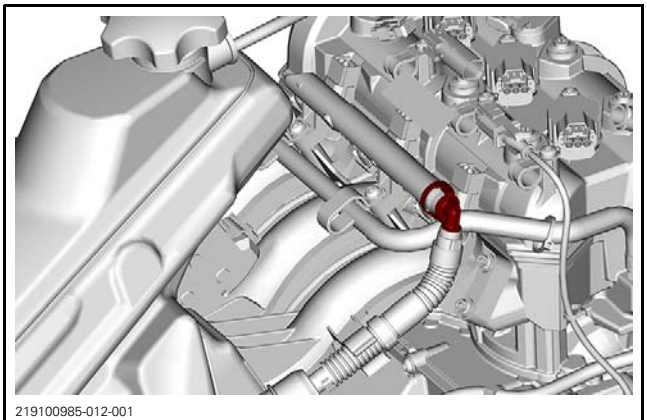
219100985-012-001

4. Install the pressure gauge between fuel pressure hose and fuel rail.

**⚠ WARNING**

**When carrying out pressure test, ensure fuel is not leaking from test equipment onto hot exhaust system or electrical components. Ensure fuel hose do not come into contact with hot engine parts or hot exhaust system.**

5. Start engine.
6. Run engine above 2000 RPM and observe the fuel pressure.

| FUEL PRESSURE |
|---|
| 400 kPa ± 10 kPa (58 PSI ± 1 PSI) |

| FUEL PRESSURE TROUBLESHOOTING | |
|---|---|
| RESULT | POSSIBLE CAUSE |
| Pressure above specifications | Defective fuel regulator |
| Pressure below specifications | Clogged fuel filter |
| | Poor electrical connection |
| | Defective fuel regulator |
| | Defective fuel pump |
| | Leak in the fuel system circuit |

7. Stop engine.

Fuel pressure should remain stable.

8. If fuel pressure drops, check the following for leaks:
   - Tools
   - Hoses
   - Fuel injectors
   - Fuel pressure regulator
   - Fuel pump.
9. Bleed away any remaining fuel in the pressure gauge and fuel hose adapter using the bleed valve on the fuel hose adapter.
10. Remove pressure gauge and fuel hose adapter.
11. Reinstall the fuel pressure hose on ECM and gently but firmly pull on hose to ensure quick disconnect fitting is properly locked and secure on the ECM.
12. Reinstall all remaining removed parts.

# PROCEDURES

## FUEL HOSE AND OETIKER CLAMPS

### Replacing Fuel Hoses

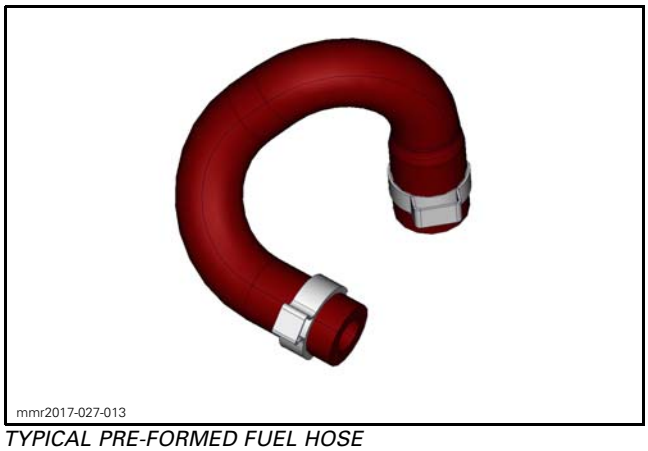


*TYPICAL PRE-FORMED FUEL HOSE*

When replacing fuel hoses, be sure to use hoses as available from BRP parts department. This will ensure continued proper and safe operation.

**⚠ WARNING**

Use of fuel lines other than those recommended by BRP may compromise fuel system integrity.

**⚠ WARNING**

- Never use a hose pincher on high pressure hoses.
- Never change the routing of a fuel hose.
- Always reinstall the corrugated protective tubing on fuel hoses.
- Secure fuel hoses using the appropriate locking tie or fastener to prevent contact with sharp edges or hot, rotating and moving parts.
- After connecting a hose or a quick connect fitting, pull on the hose near the fitting to make sure it is securely locked.
- Always validate fuel system tightness by performing a *FUEL SYSTEM PRESSURIZATION AND LEAK TEST*.

### Replacing Oetiker Clamps

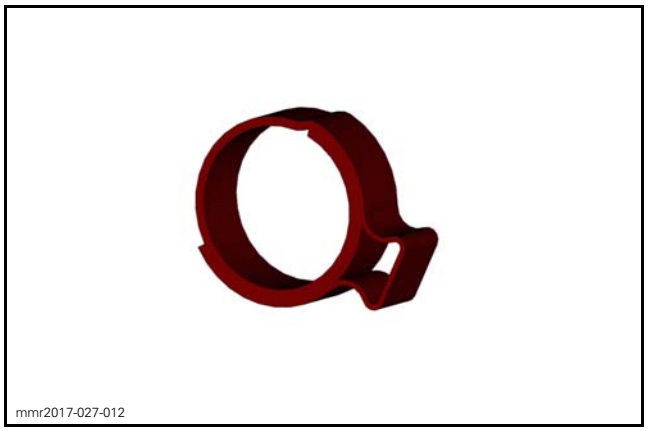


| REQUIRED TOOL | |
|---|---|
| OETIKER PLIER<br>(P/N 295 000 070) | |

**⚠ WARNING**

Whenever removing a hose in the fuel system, always use new Oetiker clamps at assembly.

## FUEL TANK

### Removing the Fuel Tank

1. Remove rear console. Refer to *BODY* subsection.

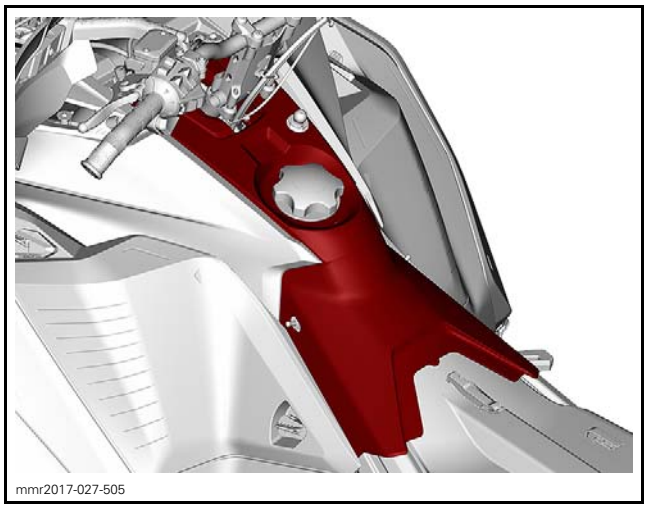


2. Remove the battery.

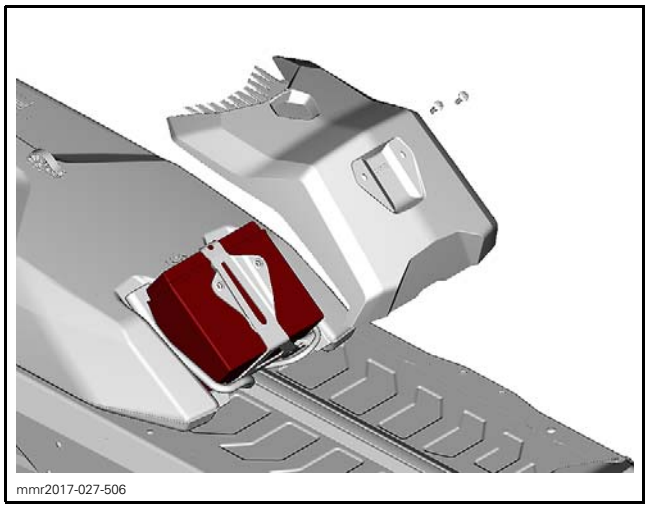
mmr2017-027-506

3. Remove rear frame members. Refer to *FRAME* subsection.

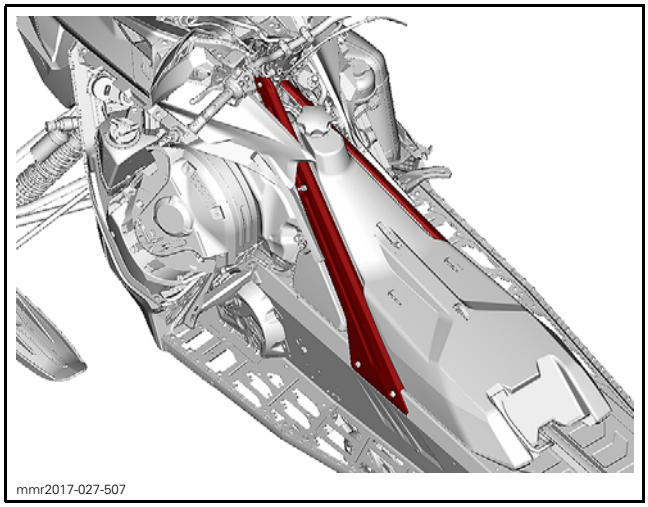
mmr2017-027-507

4. Remove and discard fuel tank retaining screws.

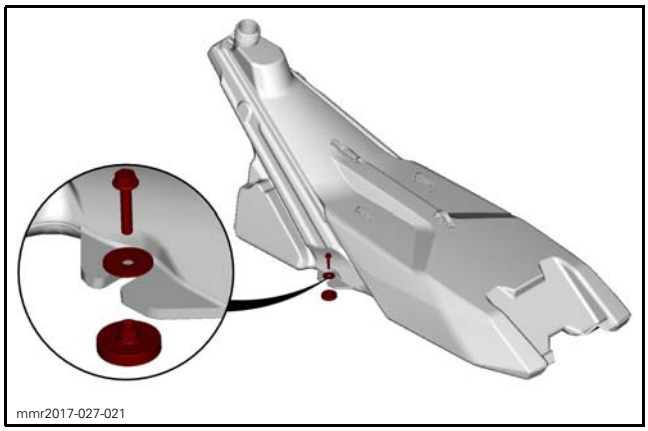
mmr2017-027-021

5. Disconnect fuel tank vent.

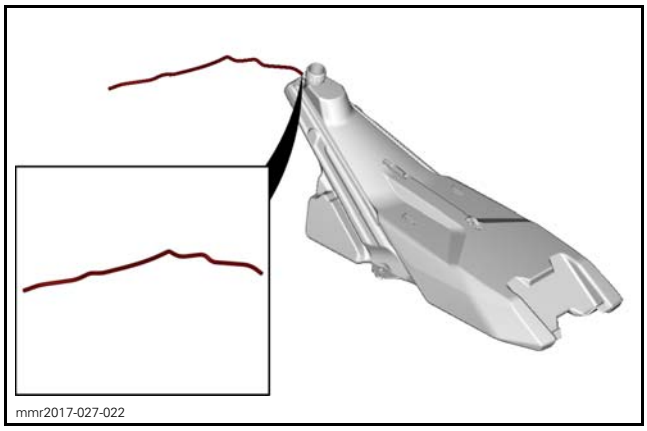
mmr2017-027-022

6. Remove fuel pump electrical connector.

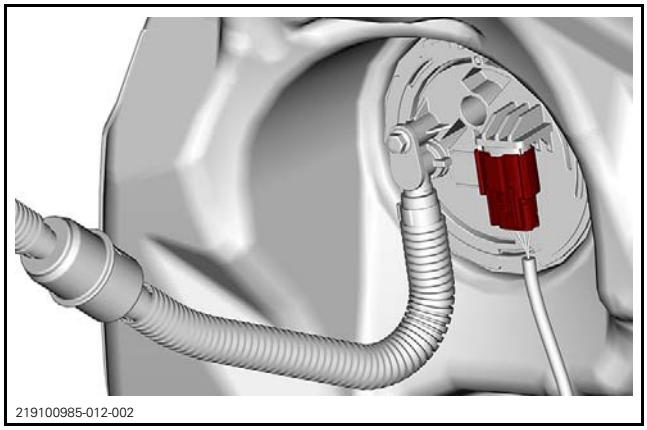
219100985-012-002

7. Disconnect fuel hose from fuel rail.
8. Remove fuel tank.

### Installing the Fuel Tank

The installation is the reverse of the removal procedure. However, pay attention to the following.

Refer to appropriate subsections to properly reinstall all removed components.

Pressurize and test fuel system for leaks.

## FUEL PUMP

### Relieving Fuel Pressure

1. Connect vehicle to BUDS2, refer to the *COMMUNICATION TOOLS AND B.U.D.S.* subsection.
2. From the **Functions** page, relieve fuel pressure.

## Activating the Fuel Pump with BUDS2

NOTE: Activating the fuel pump as described in this procedure can be used for purging air from the fuel system whenever a fuel hose has been disconnected and reconnected. The pump should be activated for 15 seconds to ensure proper purging of the system.

1. Connect vehicle to BUDS2 software, refer to *COMMUNICATION TOOLS AND B.U.D.S.* subsection.
2. From the **Functions** page, activate the fuel pump.
3. Listen for fuel pump operation.

If you do not hear the pump come ON, select the **Faults** tab in BUDS2 and check for fault codes.

If there is no fault code, connect a known good fuel pump to the vehicle harness (in parallel) and repeat the test.

NOTE: No voltage test can be done when the fuel pump is disconnected.

If the second fuel pump functions when connected to the vehicle harness, then replace the fuel pump installed in the vehicle.

## Removing the Fuel Pump

1. Remove the fuel tank.
2. Remove fuel pump assembly snap ring from fuel tank.

mmr2017-027-026

3. Remove and discard fuel pump gasket.

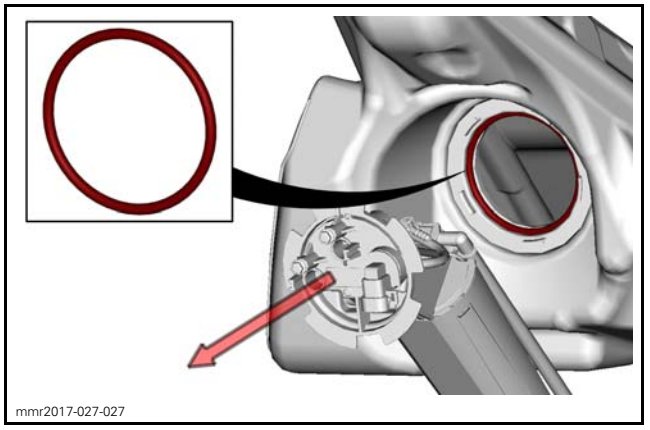

mmr2017-027-027

4. Visually inspect for broken or damaged ground wires, if any issue are found, the module should be replaced.

## Installing the Fuel Pump

The installation is the reverse of the removal procedure. However, pay attention to the following.

Make sure the remote pick-up is inserted all the way to the rear of fuel tank and does not interfere with the fuel level sensor float.

Install a **NEW** gasket on the fuel pump prior to installing the pump in the tank.

Ensure the fuel pump snap ring is fully engaged with the gap on top. Refer to image in removal procedure.

NOTE: The gasket must be installed on the fuel tank side so it is located between the pump and the fuel tank.

Install fuel tank.

**⚠ WARNING**

**After working on the fuel system, carry out a fuel system pressurization test to check for leaks. Failure to carry out a fuel system leak test could result in severe injury or a life threatening situation should a leak occur.**

# FUEL PUMP INLET FILTER

## Replacing the Fuel Pump Inlet Filter

1. Remove fuel pump assembly from fuel tank. Refer to procedure in this subsection.
2. Free the wires of the fuel level sensor of the fuel pump reservoir.

***NOTICE*** **Do not pull / push on wires or metal terminals that connect the grounding wires to the plastic parts. Keep hands and tools away from this area.**

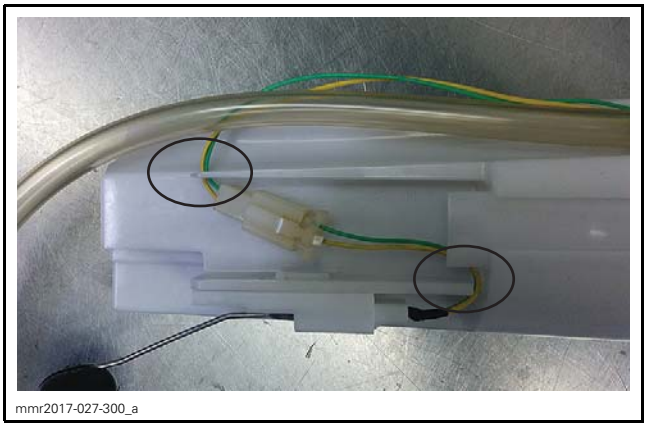
mmr2017-027-300_a

3. Unlock fuel pump reservoir by carefully inserting a small screwdriver between the tab and the fuel pump reservoir.

**NOTICE** Do not push directly on tabs or twist the screwdriver.

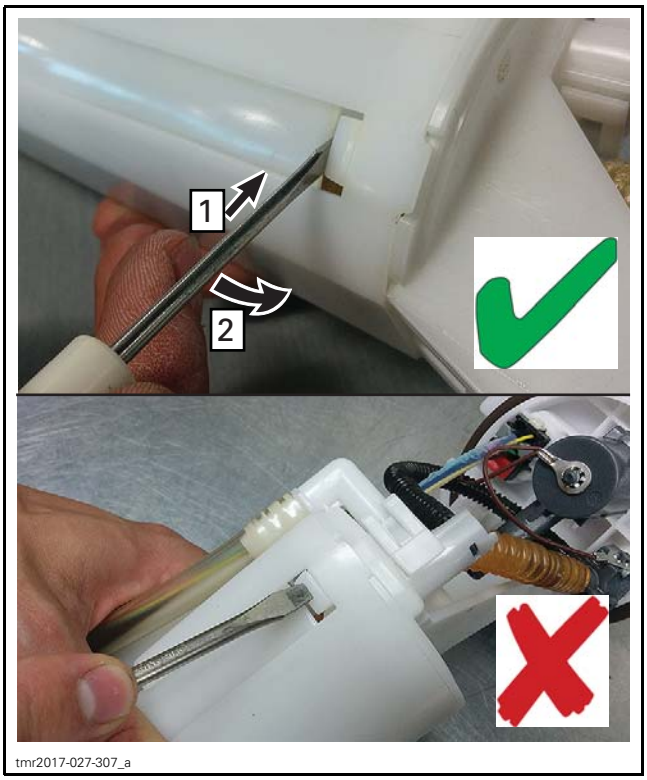

tmr2017-027-307_a

4. Completely remove fuel pump reservoir by pulling it carefully.

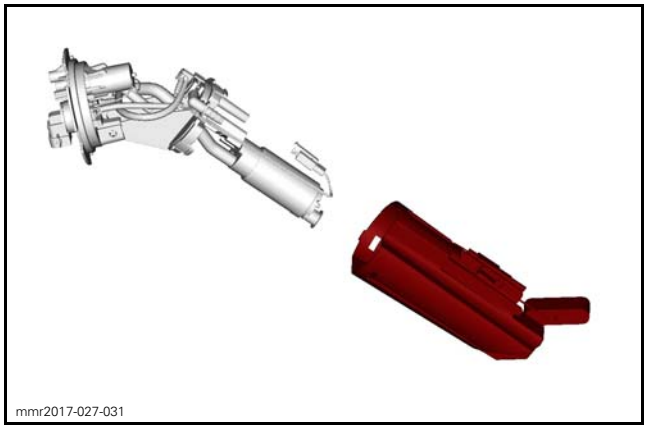
mmr2017-027-031

**NOTICE** To avoid damaging wires, Pull the reservoir carefully and do not let reservoir hang by wires.

5. Remove inlet fuel pump filter by pulling on it. If the filter is hard to remove, pry the filter gently using a small screwdriver.

**NOTICE** Be careful to avoid scratching the outside diameter of the pump inlet fitting where the filter fits.

mmr2017-027-302_a

6. Discard inlet fuel pump filter and steel ring.
7. Install new fuel pump inlet filter.
   - 7.1 Insert inlet filter onto fuel pump by pressing it downward.
   - 7.2 Push the filter on until the fitting bottoms out on the pump inlet face, there should be no gap.

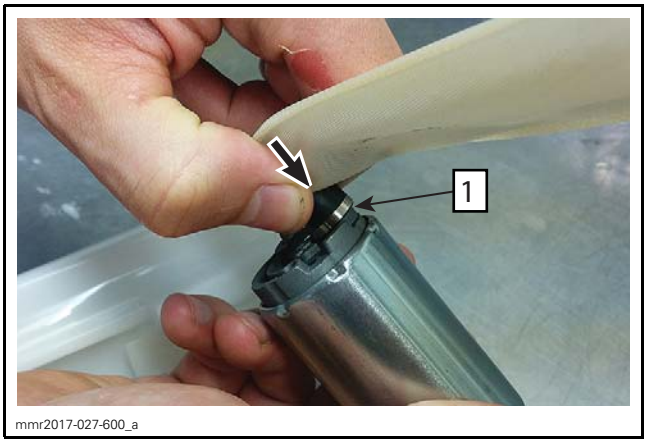


*1. No gap here*

7.3 Ensure that the filter hole is properly positioned into the pin.

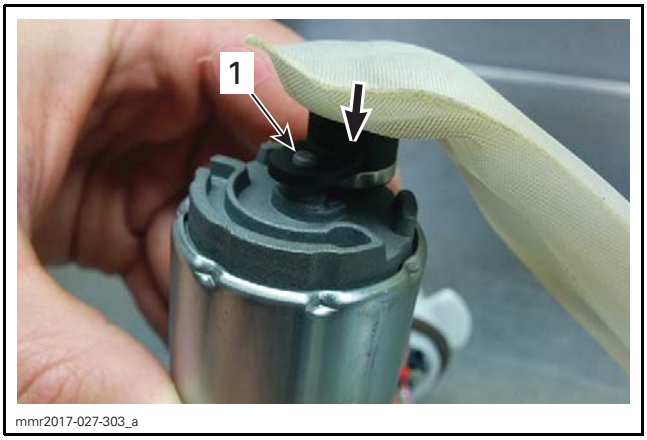


*1. Pin*

8. Install fuel pump reservoir carefully and ensure that all parts are properly positioned.

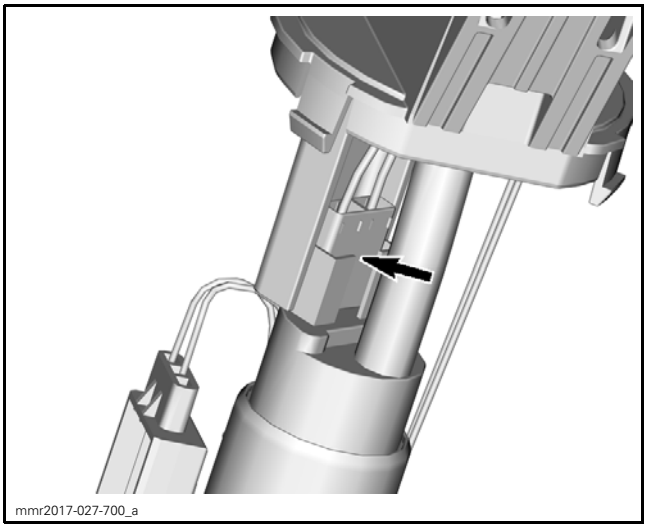


*ELECTRICAL CONNECTOR MUST BE IN THIS POSITION*

NOTE: Make sure the pump motor is positioned between the molded ribs in the reservoir.

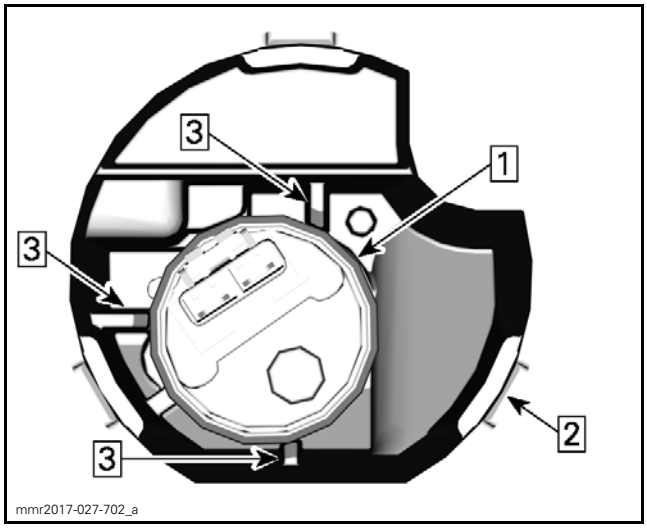


*1. Fuel pump motor*
*2. Reservoir*
*3. Ribs*

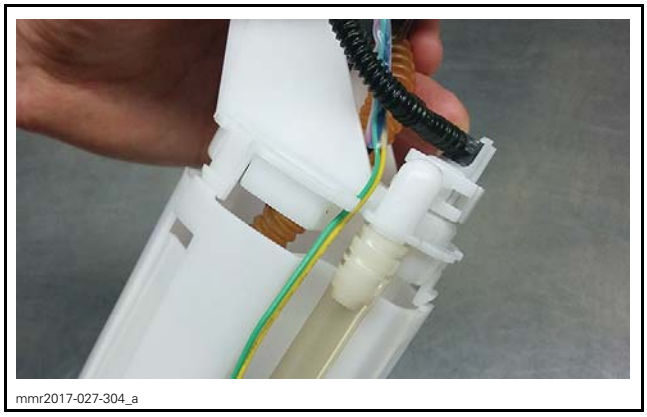


9. Ensure that fuel tank reservoir tabs are properly locked.
10. Route the fuel level sensor wires properly.

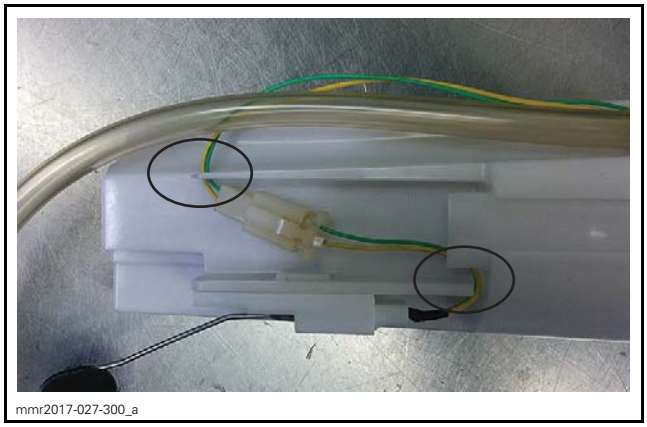


11. Reinstall fuel pump in fuel tank. Refer to procedure in this subsection.

# FUEL LEVEL SENSOR

NOTE: Verify the gauge functions related to the fuel level sensor before testing the sensor. Refer to *GAUGE* subsection.

## Measuring Fuel Level Sensor Resistance with BUDS2

1. Connect vehicle to BUDS2.
2. Select the **Measurements** page.
3. Monitor the fuel level sensor resistance under **Fuel Level** and compare to the table below.

| FUEL LEVEL SENSOR RESISTANCE TABLE | |
|---|---|
| Full level resistance value | 9 Ω ± 2 Ω |
| Empty level resistance value | 95 Ω ± 5 Ω |

If resistance is within specifications, the fuel level sensor, and wiring are ok.

If resistance is not within specifications, measure resistance at the fuel pump connector **(FP)**. Refer to *TESTING FUEL LEVEL SENSOR RESISTANCE*

## Testing Fuel Level Sensor Resistance

1. Remove fuel pump from fuel tank, refer to *FUEL PUMP* in this subsection.
2. Ensure the fuel level sensor is properly connected in the fuel pump module.
3. Measure the resistance at the fuel pump connector **(FP)**.

| FUEL LEVEL SENSOR BENCH TEST | | |
|---|---|---|
| PROBE | FLOAT POSITION | RESISTANCE |
| FP- B to FP-D | Empty | 95 Ω ± 5 Ω |
| | Full | 9 Ω ± 2 Ω |

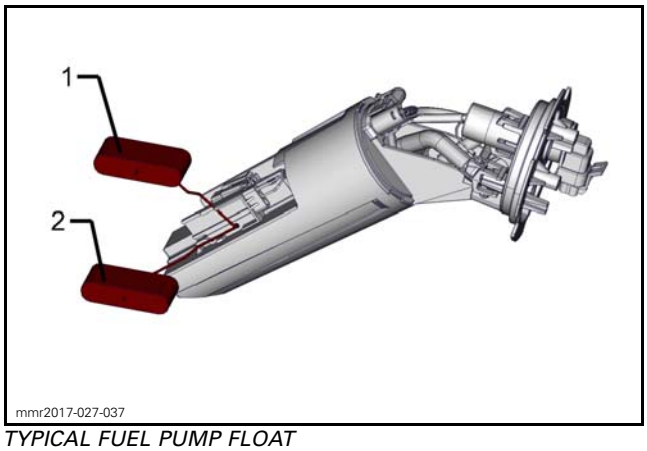


*TYPICAL FUEL PUMP FLOAT*
*1. Full position*
*2. Empty position*

4. When fuel level sensor travels from full to empty or vice-versa, there should be a constant linearity to the resistance readings. Any spike or drop of resistance indicates a "flat spot" in the fuel level sensor circuitry.

If fuel level sensor fails bench test, replace the fuel level sensor.

## Replacing the Fuel Level Sensor

1. Remove the fuel pump.

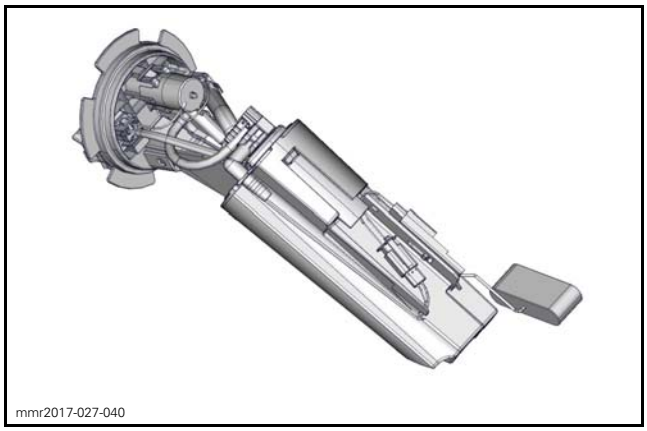


2. Disconnect fuel level sensor connector.

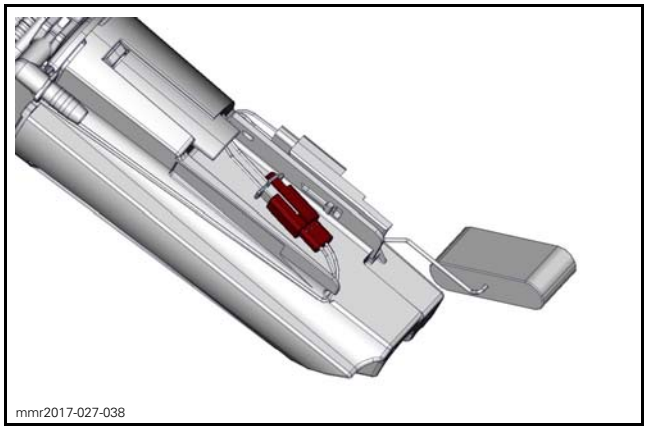

3. Slide the potentiometer out of the fuel pump reservoir.

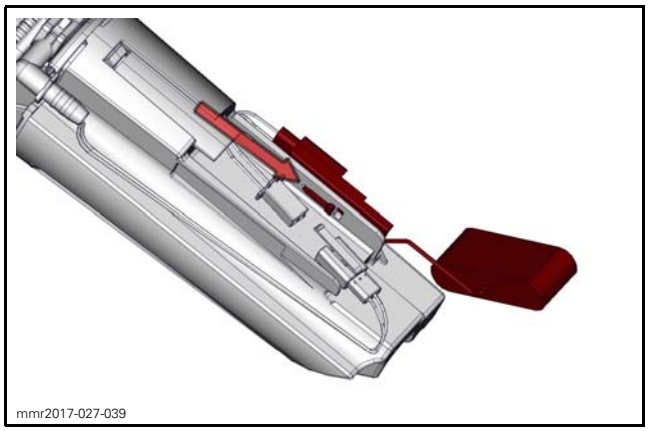
mmr2017-027-039

4. Remove fuel level sensor.
5. Replace the fuel level sensor with a new one and reverse steps.

# POWER DISTRIBUTION AND GROUNDS (ACE)

## SERVICE TOOLS


| Description | Part Number | Page |
|---|---|---|
| FLUKE 115 MULTIMETER | 529 035 868 | 4 |


## GENERAL

### POWER DISTRIBUTION DIAGRAM

Refer to the *WIRING DIAGRAM*.

Power distribution is shown in red on the color wiring diagram. Refer to *KNOWLEDGE CENTER*.

NOTE: Refer to *WIRING DIAGRAM INFORMATION* subsection for how to properly interpret the *WIRING DIAGRAM*.

# OVERVIEW

All the electrical system is powered by DC current supplied by a 12 V battery. The battery charge is maintained by the charging system.

Electrical system is protected by fuses located in a fuse box.

## Automatic Power Cut-Off

The ECM features an automatic power cut-off that will completely turn off the ECM (after engine was running) and thus cutting all power to components. All the vehicle electrical loads will be turned off (except the clock in the multifunction gauge). This feature prevents the battery from discharging if the tether cord cap is left on engine cut-off switch when the engine is not running.

NOTE: If a power cable is connected to the communication connector power cut-off will not occur.

The cut-off time is as follows.

| ACTION | POWER CUT-OFF TIME |
|---|---|
| Removing tether cord cap | Approximately 15 seconds |
| Setting emergency engine stop switch to STOP (tether cord cap connected) | Approximately 20 seconds |

NOTE: The ECM will remain off until the START/RER button is pressed.

# FUSES

## Fuse Box Location

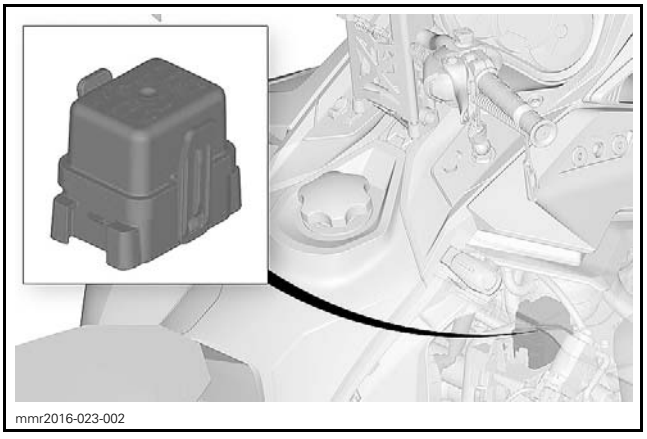

mmr2016-023-002

## Fuse Box

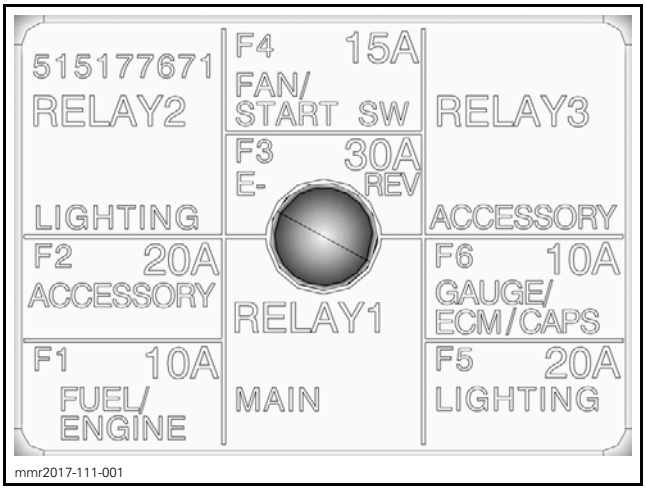


mmr2017-111-001

| | | |
|---|---|---|
| F1 | Fuel / Engine | 10 A |
| F2 | Accessory | 20 A |
| F3 | E-REV (if equipped) | 30 A |
| F4 | Fan / Start SW | 15 A |
| F5 | Lighting | 20 A |
| F6 | Gauge / ECM / CAPS | 10 A |

| | |
|---|---|
| R1 | Main |
| R2 | Lighting |
| R3 | Accessory |

| RELAY STATE (ON) | RELAY STATE (OFF) |
|---|---|
| R1 - Main Relay | |
| When START/RER button is pressed When engine is running | Refer to *AUTOMATIC POWER CUT OFF* in this subsection |
| R2 - Lighting Relay | |
| When engine reaches 800 RPM | Refer to *AUTOMATIC POWER CUT OFF* in this subsection **OR** If engine is turned off |
| R3 - Accessory Relay | |
| When engine reaches 1000 RPM | If engine drops below 950 RPM |

The following actions will be taken by the ECM to preserve electrical power for the most important functions.

| CONDITION | ECM CORRECTIVE ACTION |
|---|---|
| If battery voltage is lower than 12 V for 10 seconds | Relay 3 is disabled. |
| If battery voltage is lower than 11.5 V | Idle speed is increased. |
| If battery voltage is lower than 11 V | Low battery pilot lamp turns on. |

Fuse box contacts are identified as seen from underneath the fuse box with letters to identify rows and numbers to identify columns. The combined letter and number identify the coordinate of a contact that is used in the wiring diagram and procedures.

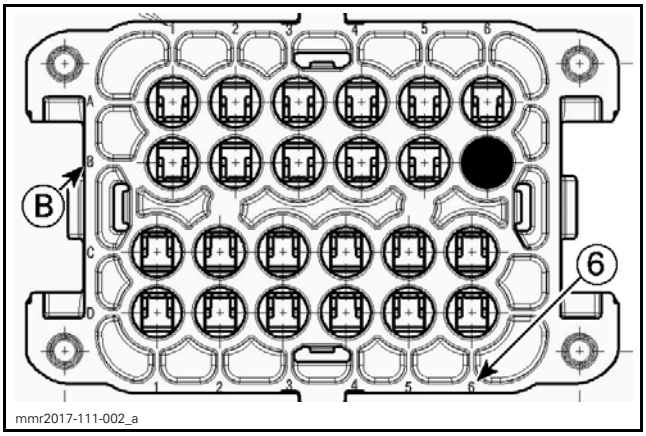


*BLACK DOT= CONTACT B-6*

**NOTICE** Do not apply any lubricant or sealant product to the terminal contacts in fuse box.

# GROUNDS

## Chassis Ground Locations

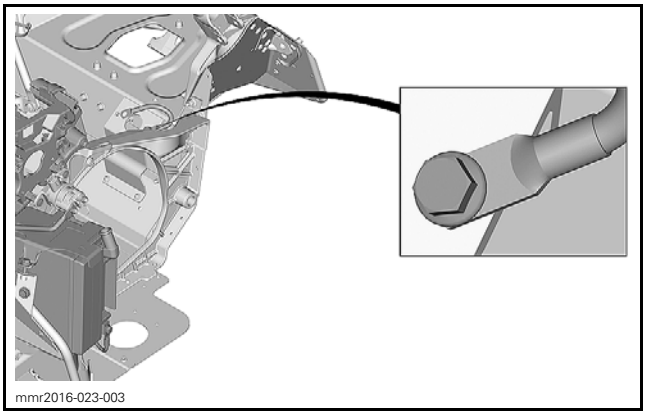


| TIGHTENING TORQUE | |
|---|---|
| Chassis Ground | 10 N•m ± 2 N•m (89 lbf•**in** ± 18 lbf•**in**) |

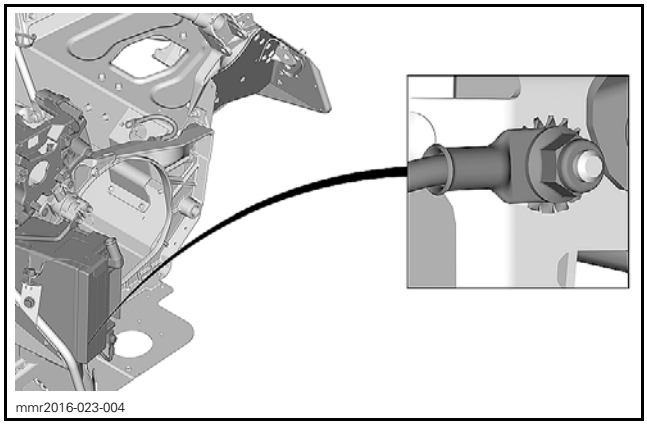


| TIGHTENING TORQUE | |
|---|---|
| Chassis Ground | 7.5 N•m ± 1 N•m (66 lbf•**in** ± 9 lbf•**in**) |

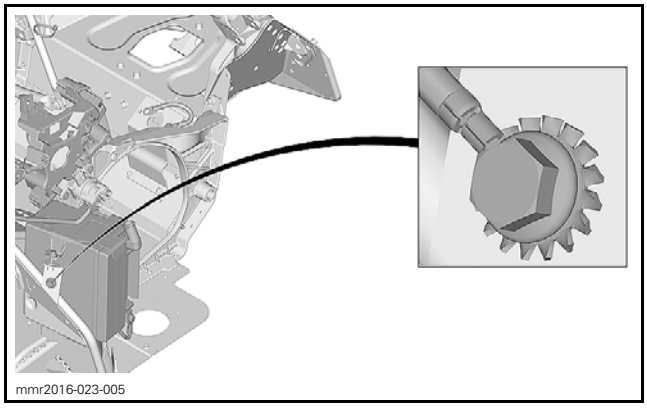


| TIGHTENING TORQUE | |
|---|---|
| Chassis Ground | 7 N•m ± 1 N•m (62 lbf•**in** ± 9 lbf•**in**) |

## Engine Ground Location

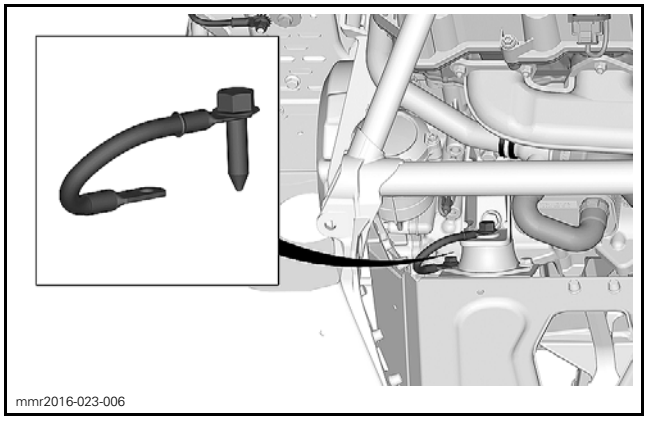

| TIGHTENING TORQUE | |
|---|---|
| Engine Ground | 31.5 N•m ± 3.5 N•m (23 lbf•ft ± 3 lbf•ft) |

# PROCEDURES

## FUSE INSPECTION

| REQUIRED TOOL |
|---|
| FLUKE 115 MULTIMETER (P/N 529 035 868) |

1. Set multimeter to Ω.
2. Probe fuse as follows.

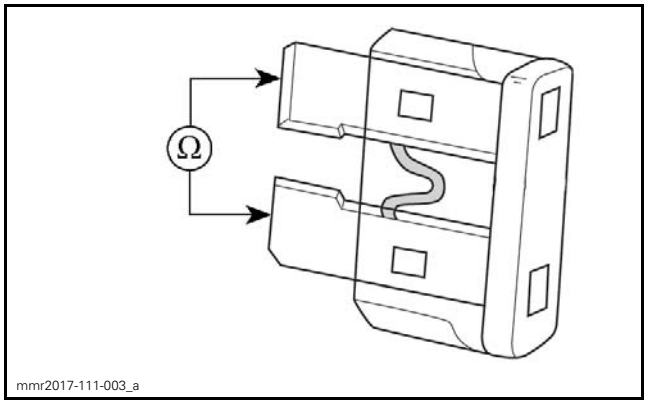

mmr2017-111-003_a

| RESISTANCE | FUSE STATUS |
|---|---|
| 0.5 Ω max. (continuity) | Good |
| Open circuit (OL) | Replace |

**⚠ WARNING**

**Do not use a higher rated fuse as this can cause severe damage to electric components and/or a fire. If fuse has burnt out, the cause of the malfunction should be determined and corrected before restarting.**

## RELAY CONTINUITY TEST

1. Remove relay.
2. Set multimeter to Ω.
3. Probe relay as follows.

| TERMINAL | | RESISTANCE |
|---|---|---|
| 30 | 87 | Open circuit (OL) |

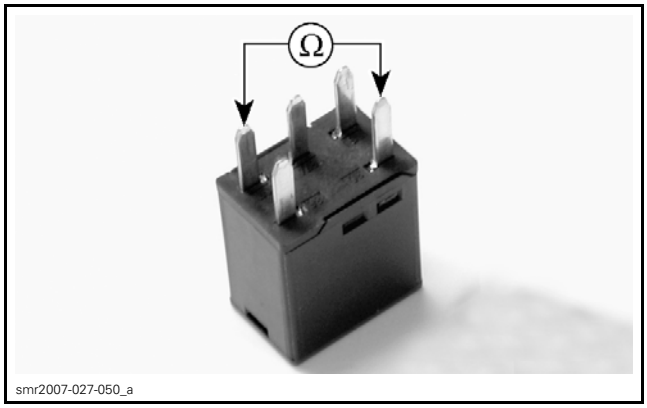

smr2007-027-050_a

4. Connect battery as shown and probe relay again as follows.

| TERMINAL | | RESISTANCE |
|---|---|---|
| 30 | 87 | 0.5 Ω max. (continuity) |

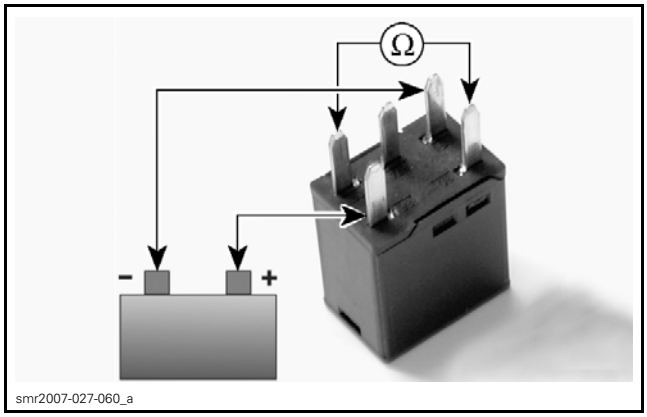

smr2007-027-060_a

If relay failed any test, replace it.

# POWER DISTRIBUTION AND GROUNDS

## GENERAL

### OVERVIEW

The battery is the primary source of power for the electrical system, it is recharged by the magneto.

Some components are permanently connected to the battery (unswitched) while some require a relay or switch to be closed (switched).

At high RPM if the magneto power is greater than the loads, the rectifier/regulator will regulate power as necessary.

The system uses an external voltage regulator/rectifier.

### FUSE HOLDER (FA)

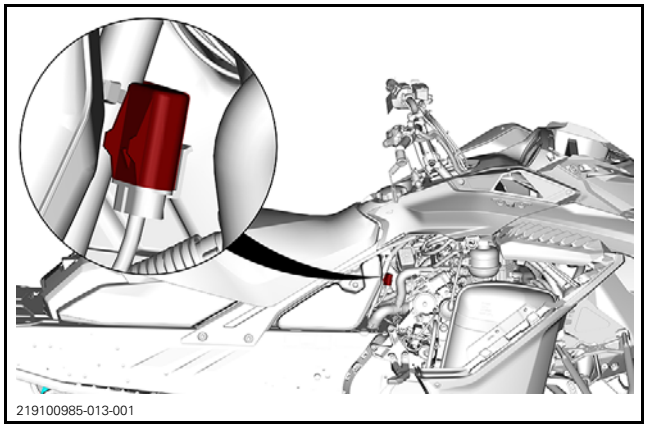

219100985-013-001

### FUSE BOX (FB1)

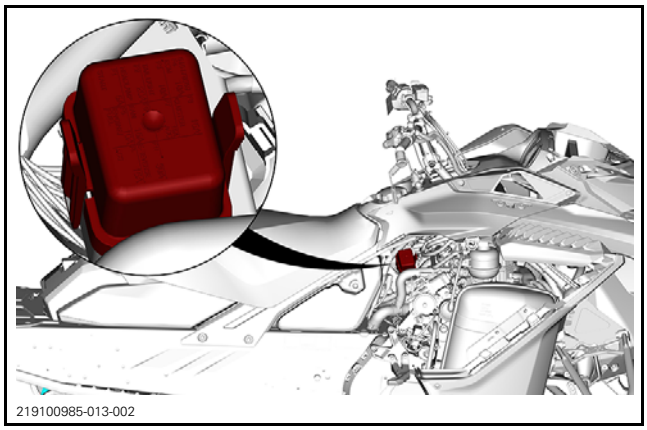

219100985-013-002

### RELAY BOX (FB2)

*With Electric Reverse and Air Controlled Suspension*

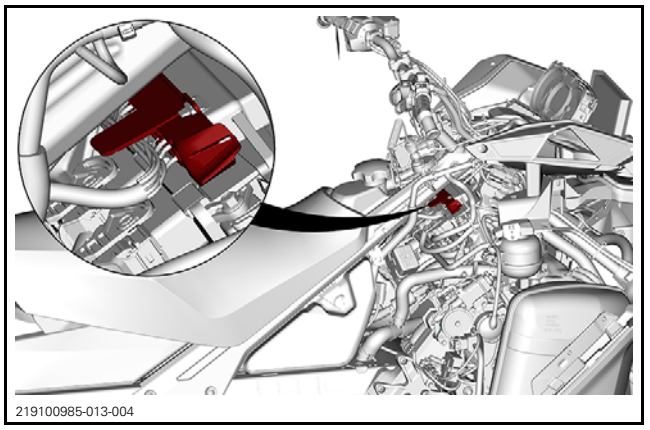

219100985-013-004

### GROUND LOCATIONS

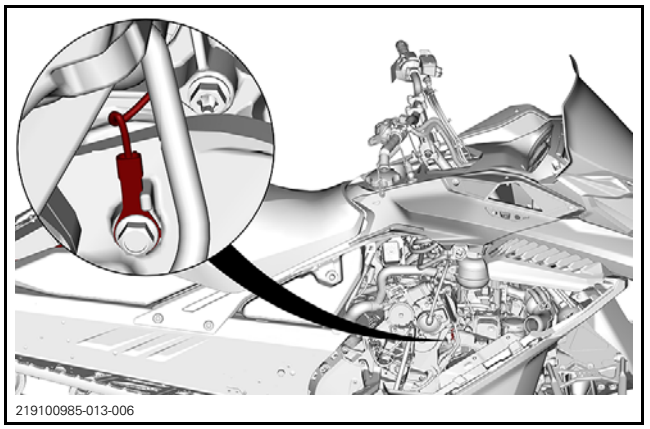

219100985-013-006

*CHASSIS GROUND*

| TIGHTENING TORQUE | |
|---|---|
| Chassis ground terminal | 8 N•m ± 0.5 N•m (71 lbf•**in** ± 4 lbf•**in**) |

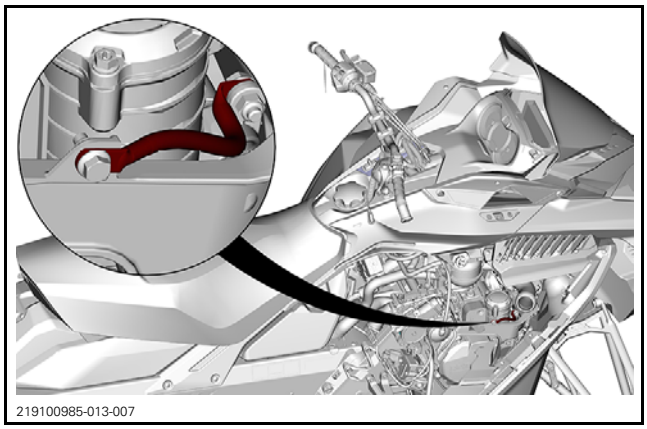


*ENGINE GROUND*

| TIGHTENING TORQUE | |
|---|---|
| Engine ground terminal | 10 N•m ± 2 N•m (89 lbf•**in** ± 18 lbf•**in**) |

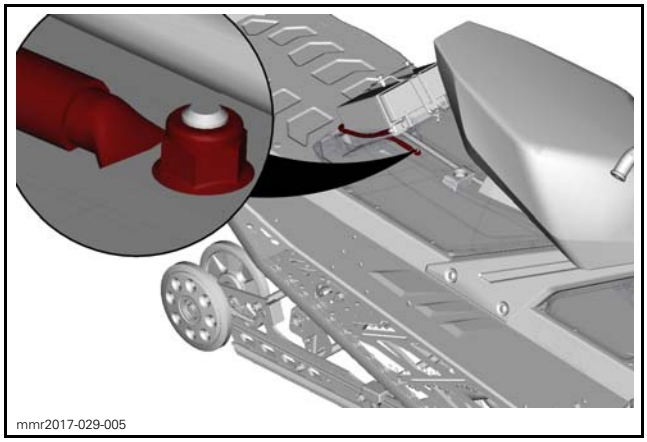


*BATTERY GROUND*

| TIGHTENING TORQUE | |
|---|---|
| M6 shoulder nut | 10 N•m ± 2 N•m (89 lbf•**in** ± 18 lbf•**in**) |

# WIRING HARNESS AND CONNECTORS (ACE)

## CHASSIS HARNESS

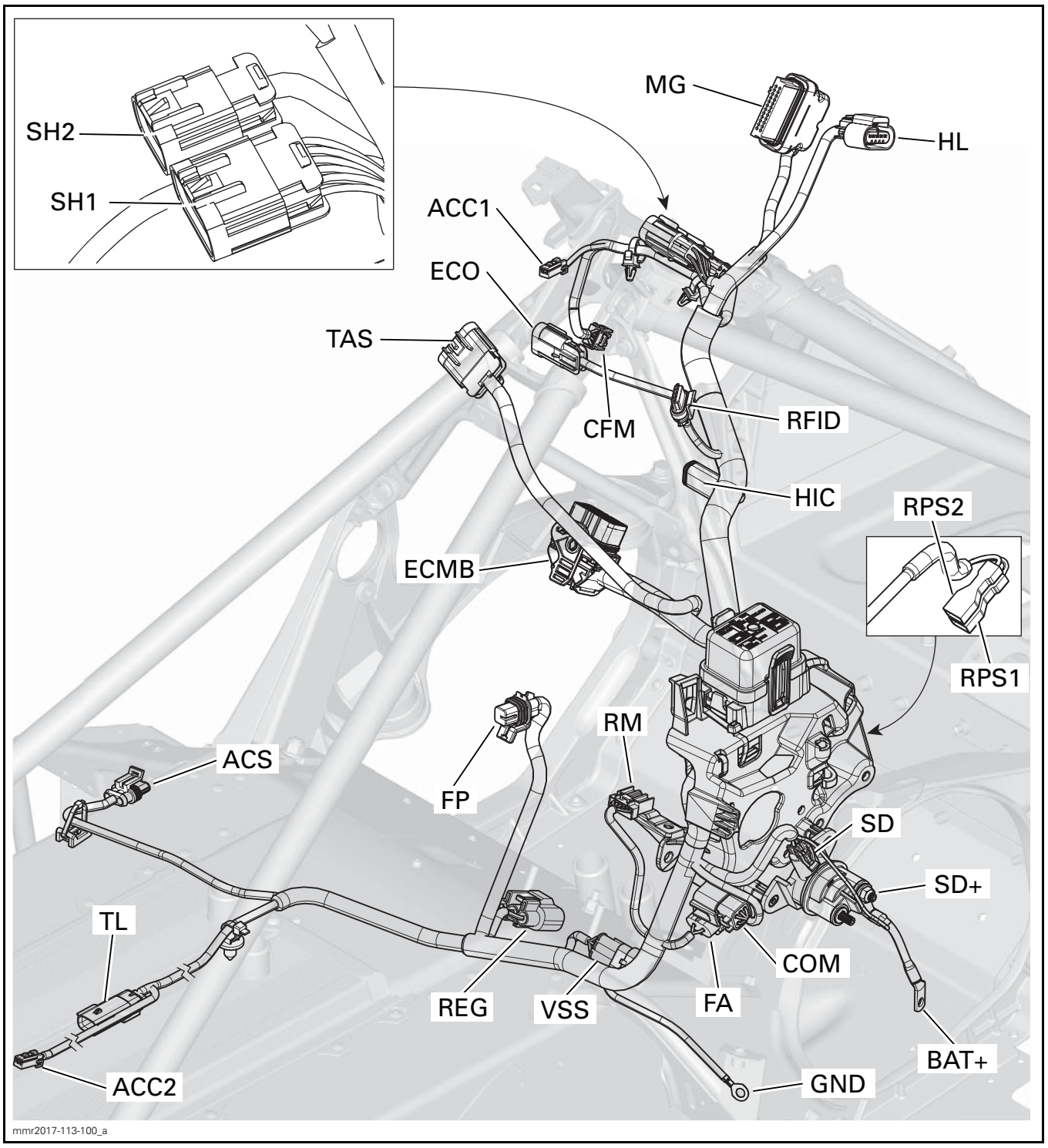


mmr2017-113-100_a

# ENGINE HARNESS

*900 ACE Engine*

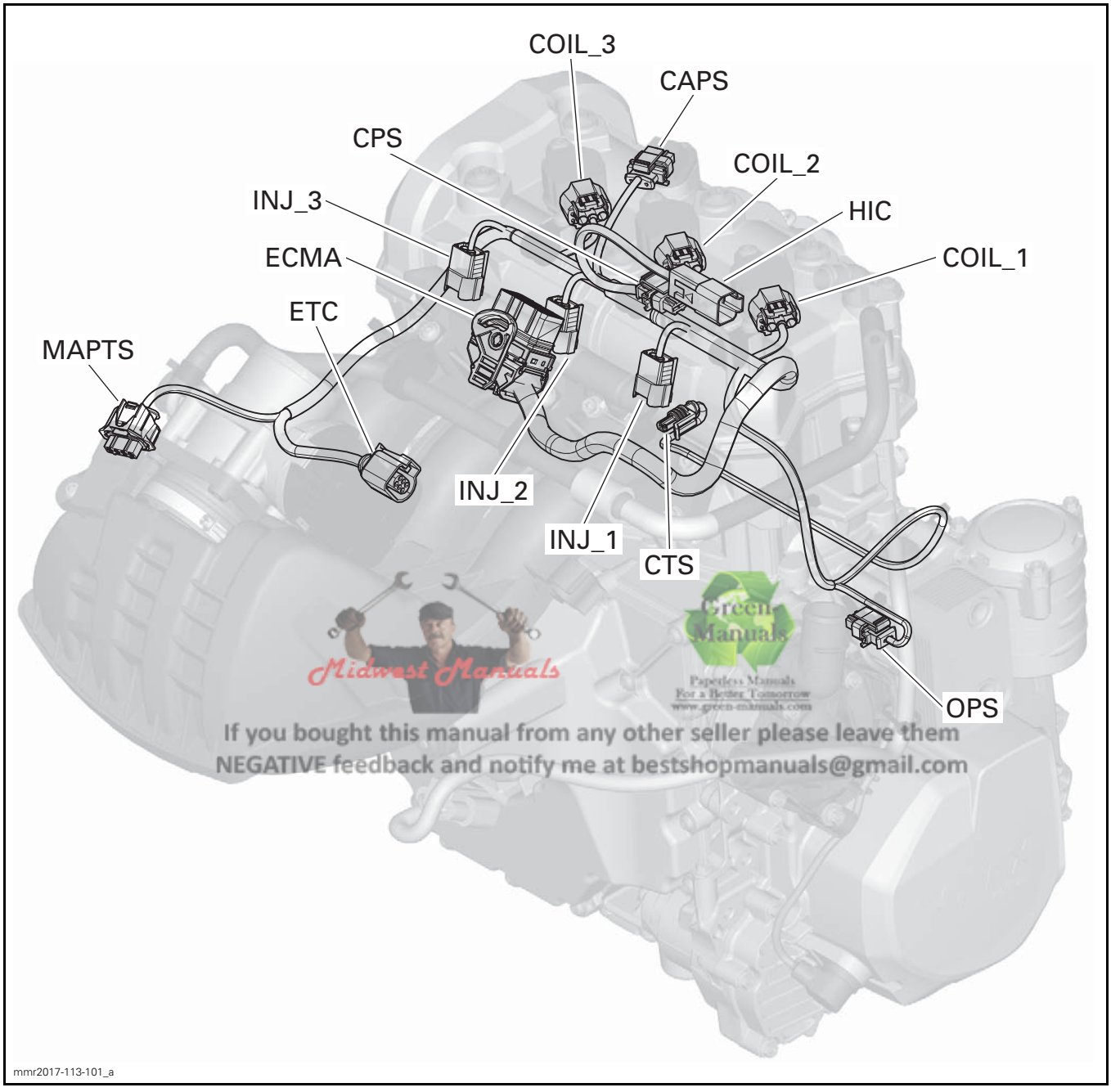


Midwest Manuals
Green Manuals
Paperless Manuals For a Better Tomorrow www.green-manuals.com
If you bought this manual from any other seller please leave them NEGATIVE feedback and notify me at bestshopmanuals@gmail.com

*600 ACE Engine*

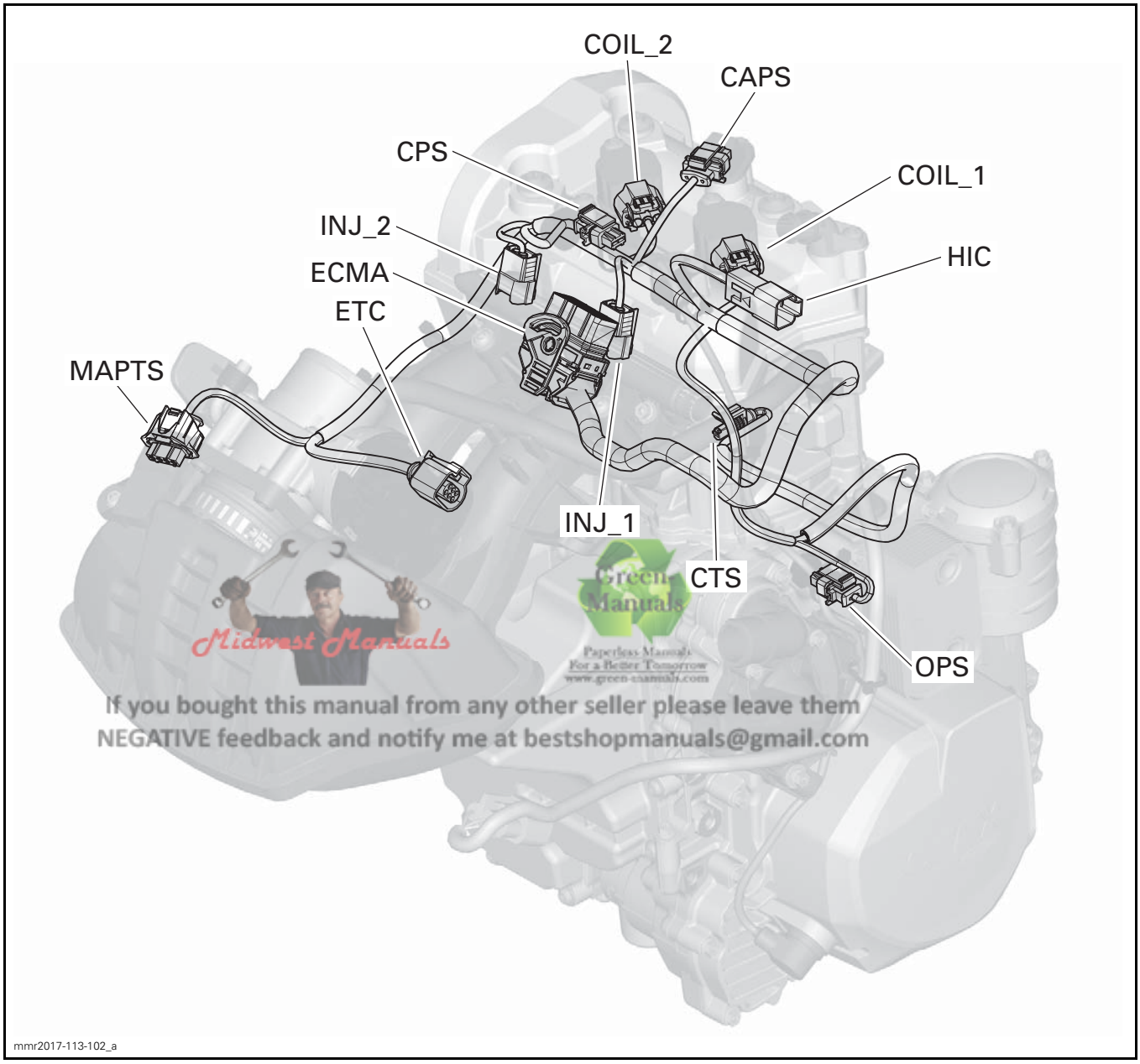


Midwest Manuals
Green Manuals
Paperless Manuals For a Better Tomorrow www.green-manuals.com
If you bought this manual from any other seller please leave them NEGATIVE feedback and notify me at bestshopmanuals@gmail.com

# STEERING HARNESSES

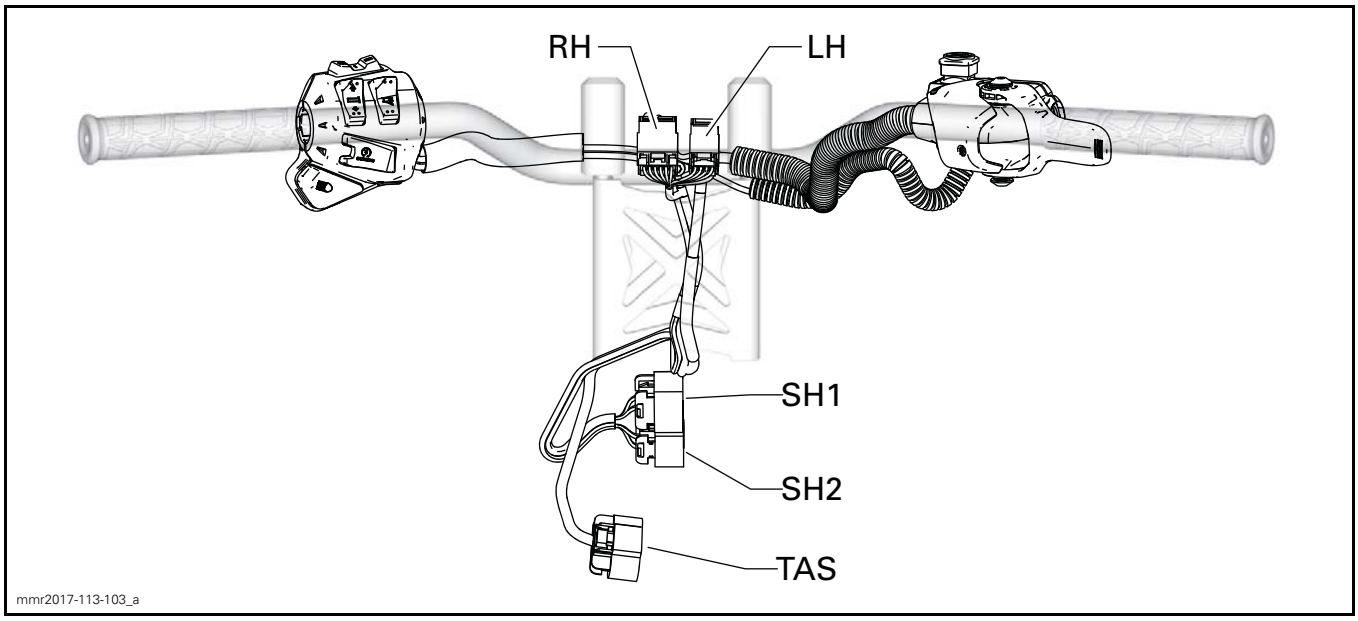

## SPLICE LOCATIONS

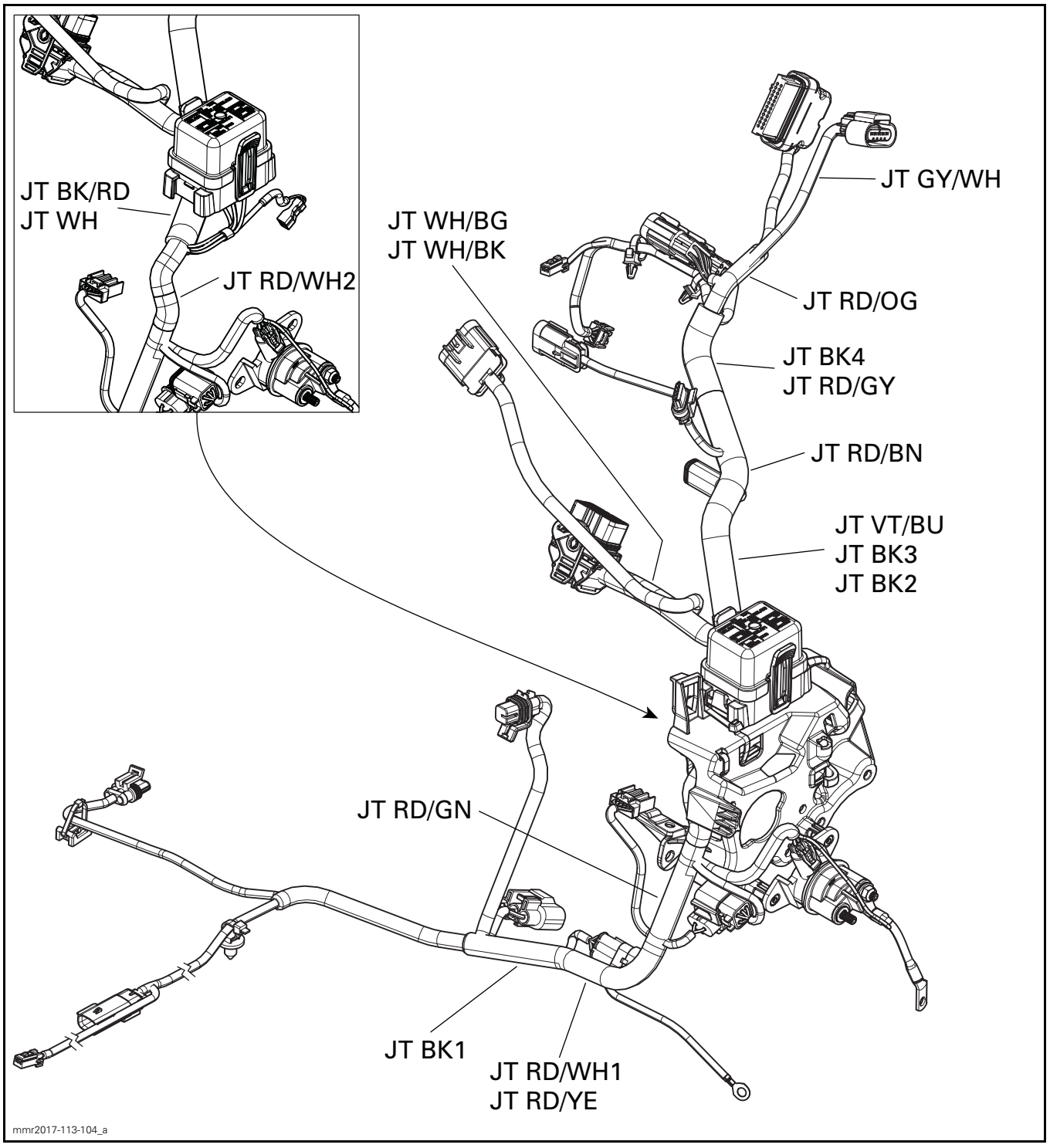

# PROCEDURES

## SPLICES REPAIR PROCEDURE

To repair a splice, we recommend the use of a tin solder meeting the followings requirements or an equivalent.

| TIN SOLDER REQUIREMENTS |
|---|
| SN 60 |
| PB 40 |
| DIA 0.062 |
| FLUX RA 2% |

### CASE 1: Wire Detached from Splice

1. Locate splice. Refer to splices location diagrams.
2. Remove wires from protector tube.
3. Locate the shrink tube protecting the defective splice.

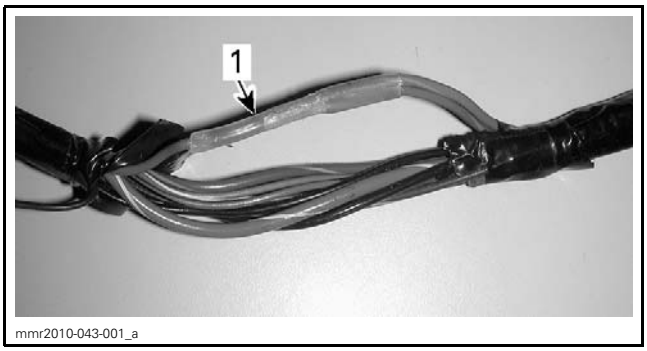

mmr2010-043-001_a

*1. Shrink tube*

4. Remove the shrink tube.
   4.1 Slightly heat the shrink tube using a heat gun.

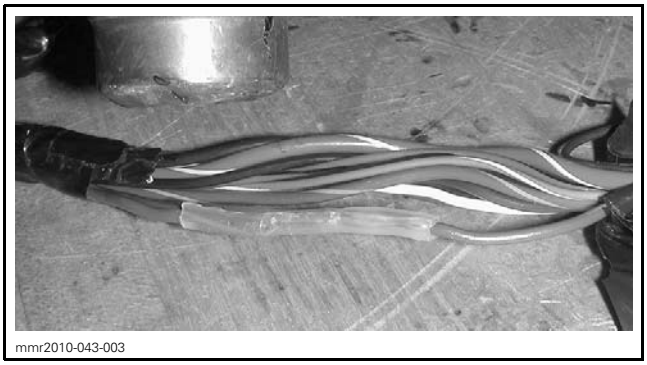
mmr2010-043-003

   4.2 Using a blade, cut the shrink tube.

**NOTICE** **Be careful with the blade to avoid cutting wires insulation.**

mmr2010-043-002

   4.3 Remove the shrink tube with long nose pliers.

5. Locate detached wire from splice.

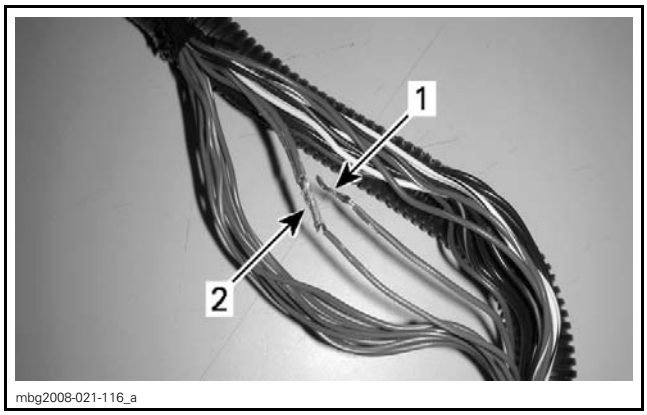

mbg2008-021-116_a

*1. Detached wire*
*2. Splice*

6. Twist detached wire around splice.

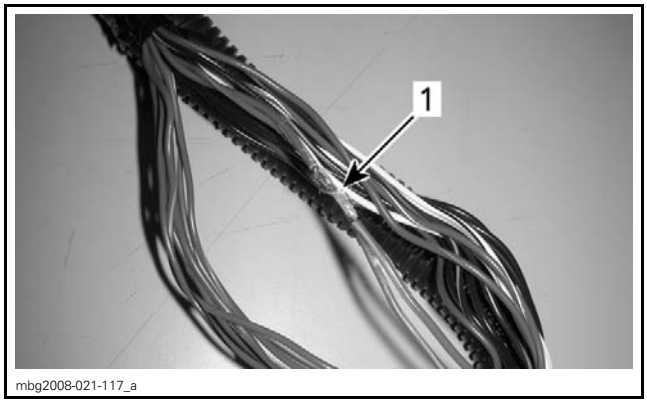

mbg2008-021-117_a

*1. Twisted wire*

7. Perform a tin solder on twisted wire.
8. Apply electrical tape to cover splice.

**NOTE:** Make sure tape overlaps on wire insulation, approximately 13 mm (1/2 in) each side.

9. Reinstall wires into protector tube.

### CASE 2: Wire Broken from Splice

1. Locate splice. Refer to splices location diagrams.
2. Remove wires from protector tube.

3. Locate the shrink tube protecting the defective splice.

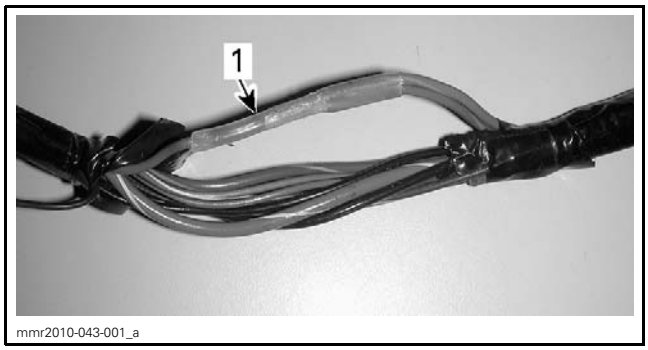


*1. Shrink tube*

4. Remove the shrink tube.

4.1 Using a blade, cut the shrink tube.

**NOTICE** Be careful with the blade to avoid cutting wires insulation.

4.2 Slightly heat the shrink tube using a heat gun.

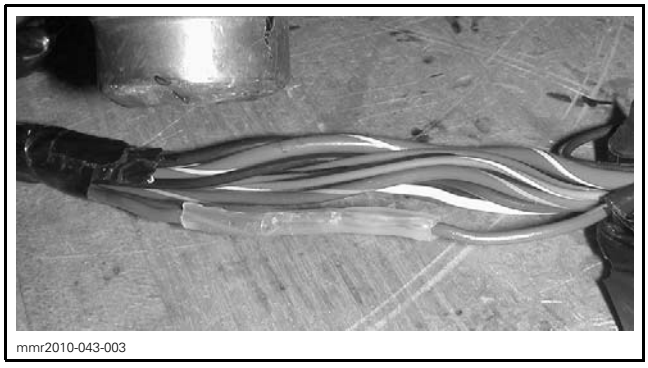


4.3 Remove the shrink tube with long nose pliers.

5. Locate broken wire from splice.

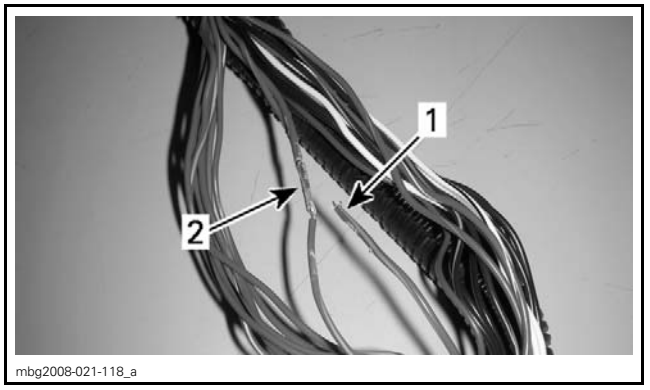


*1. Broken wire*
*2. Splice*

6. Strip wire insulation at the end of broken wire.

7. Strip wire insulation below the splice.

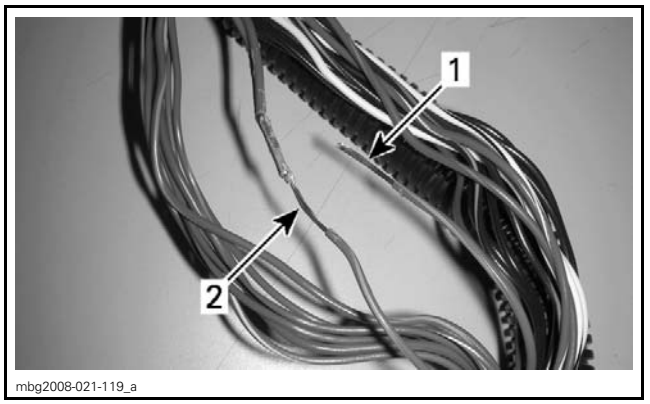


*1. Broken wire stripped*
*2. Splice wire stripped*

8. Twist wire around stripped wire.

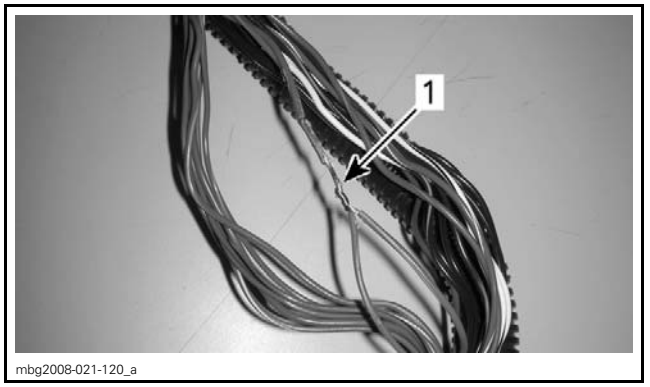


*1. Twisted wire*

9. Perform a tin solder on twisted wire.

10. Apply electrical tape to cover splice.

NOTE: Make sure tape overlaps on wire insulation, approximately 13 mm (1/2 in) each side.

11. Reinstall wires into protector tube.

NOTE: Always perform a solder on a bigger wire (lower gage).

# WIRING HARNESS AND CONNECTORS

## SERVICE TOOLS


| Description | Part Number | Page |
|---|---|---|
| ECM ADAPTER TOOL | 529 036 166 | 9 |
| ECM TERMINAL REMOVER 2.25 | 529 036 175 | 9 |
| ECM TERMINAL REMOVER 3.36 | 529 036 174 | 9 |


## SERVICE TOOLS – OTHER SUPPLIER


| Description | Part Number | Page |
|---|---|---|
| DELPHI TERMINAL EXTRACTOR | 12094429 | 11–12 |
| FCI TERMINAL EXTRACTOR TOOL | 54241678 | 10–11 |
| MOLEX 150 TERMINAL EXTRACTOR TOOL | 63813 - 1500 | 10–11 |

# MAIN HARNESS

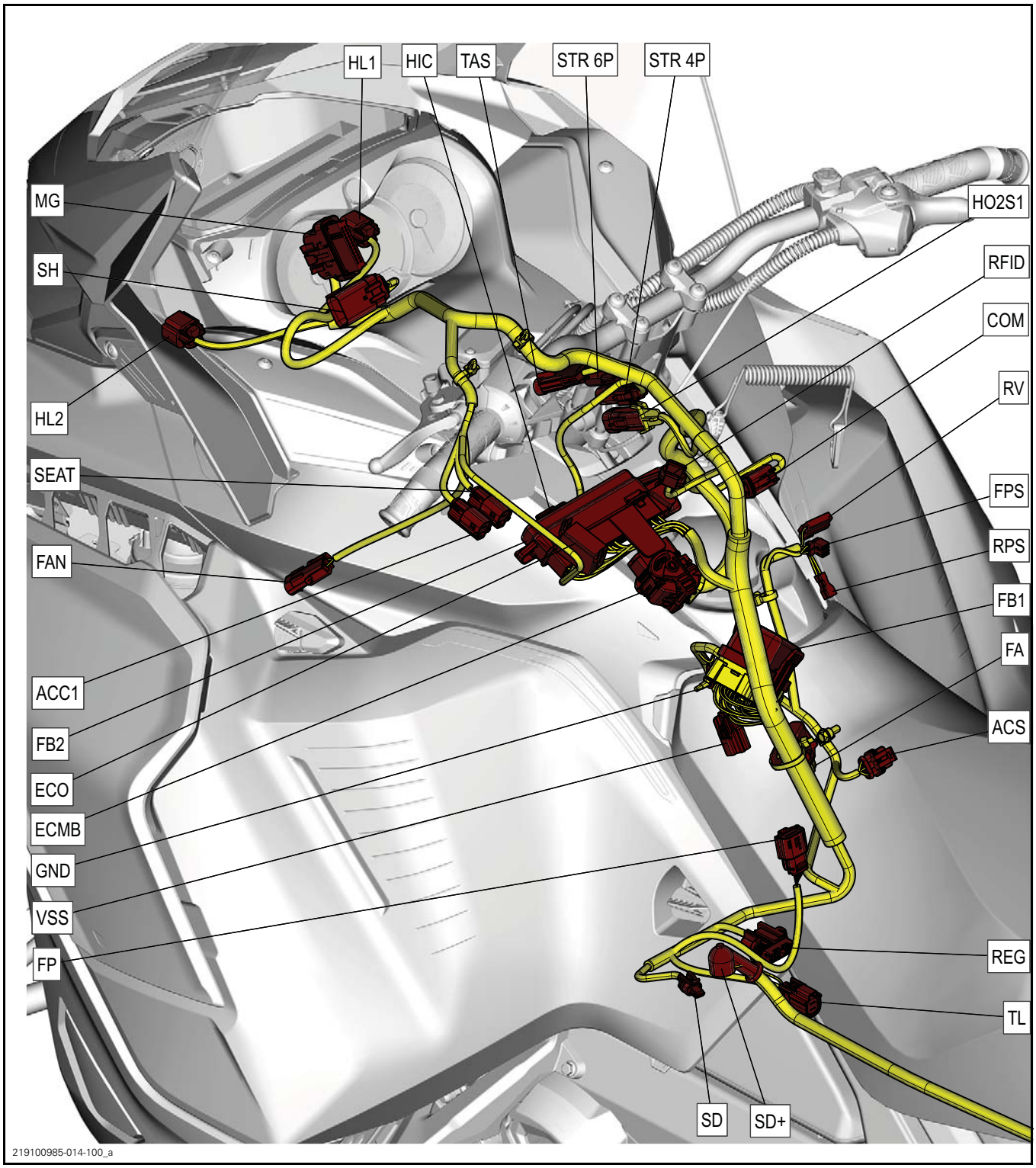

# SECONDARY HARNESS - VISOR AND SEAT

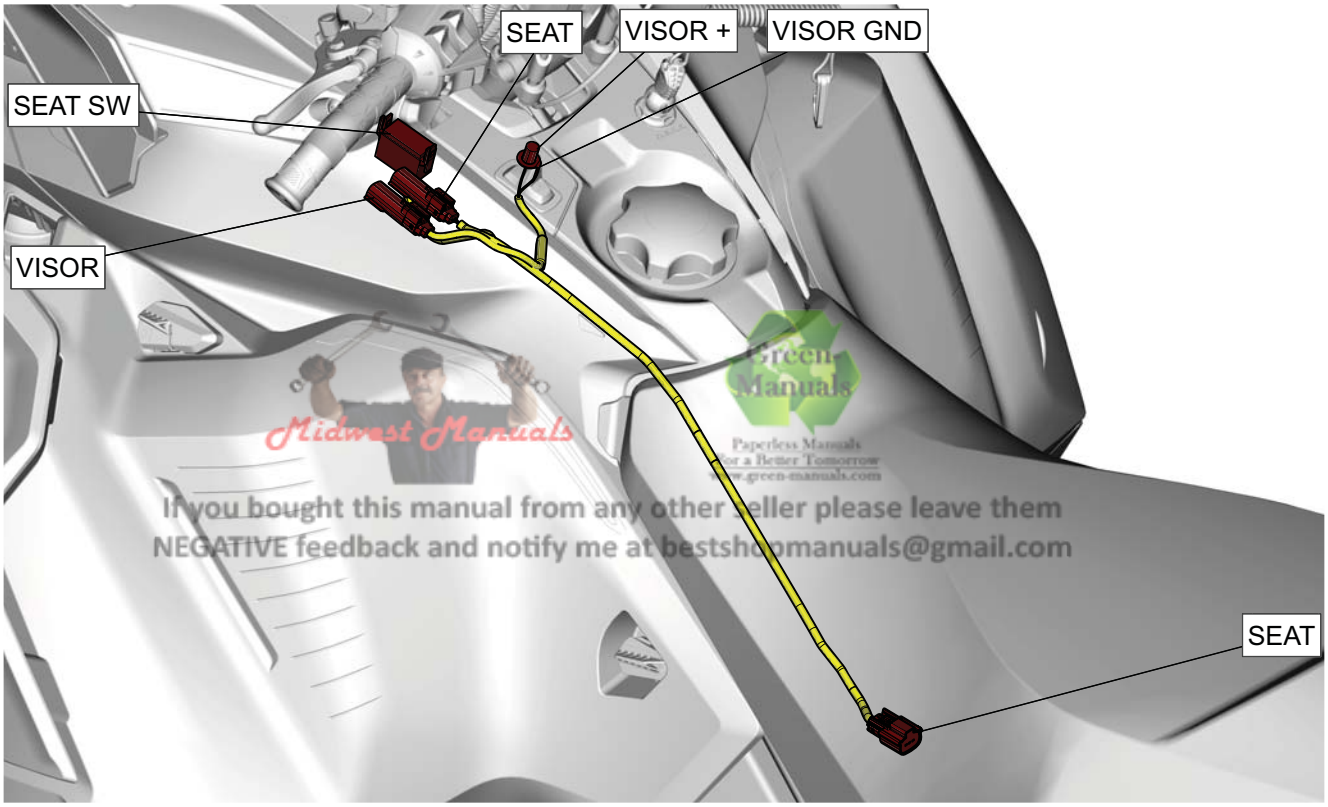


Midwest Manuals
Green Manuals
Paperless Manuals for a Better Tomorrow
www.green-manuals.com
If you bought this manual from any other seller please leave them NEGATIVE feedback and notify me at bestshopmanuals@gmail.com

# SECONDARY HARNESS - TAILLIGHT AND BATTERY

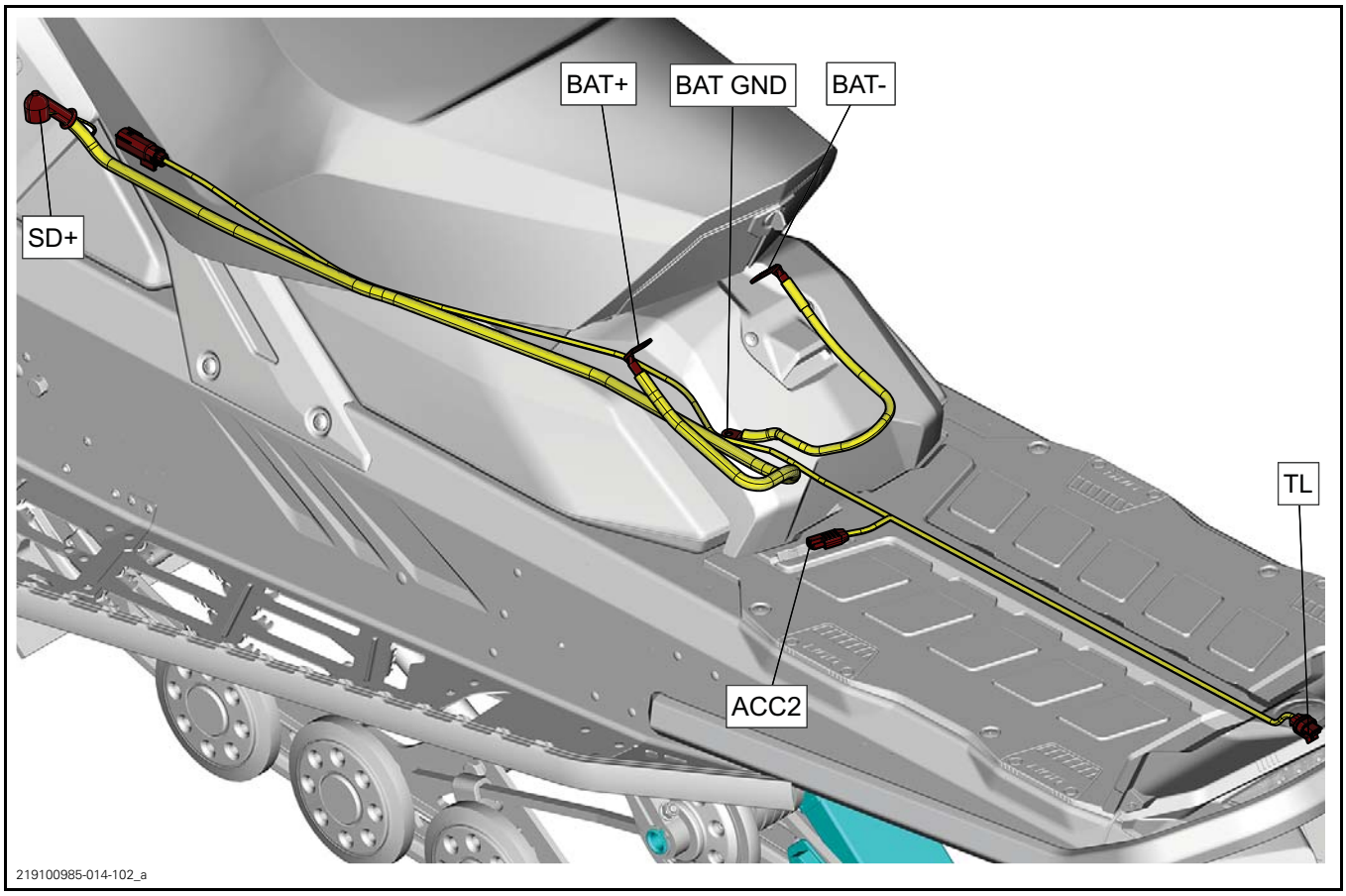

# GENERAL

## ACRONYMS

| ACRONYM | DESCRIPTION | ACRONYM | DESCRIPTION |
|---|---|---|---|
| ACC | Accessory | HO2S1 | Oxygen Sensor |
| BAT+ | Battery + | MG | Multifunction Gauge |
| BAT- | Battery - | REG | Voltage Regulator |
| BAT GND | Battery ground | RFID | Radio Frequency Identification |
| COM | Communication | RPS | Reverse Position Switch |
| ECMB | ECM connector B (Chassis) | RV | Electric Reverse Motor |
| ECO | Riding mode switch | SD | Starter Solenoid |
| FA | Main fuse | SEAT SW | Heated seat switch |
| FB | Fusebox | SH | Switch Housing |
| FP | Fuel Pump | STR | Steering Connector |
| FPS | Forward Position Switch | TAS | Throttle Actuator Sensor |
| GND | Ground | TL | Tail Light |
| HIC | Harness interconnect | VSS | Vehicle Speed Sensor |
| HL | HeadLamp | | |

# PROCEDURES

**⚠ WARNING**

When disassembling any connector for repair or replacement on the vehicle, always disconnect the battery to ensure all electrical power is removed and prevent any possibility of a short circuit. Refer to *CHARGING SYSTEM* subsection.

## DIAGNOSTIC CONNECTOR (DEUTSCH)

### Disassembling and Reassembling the Connector

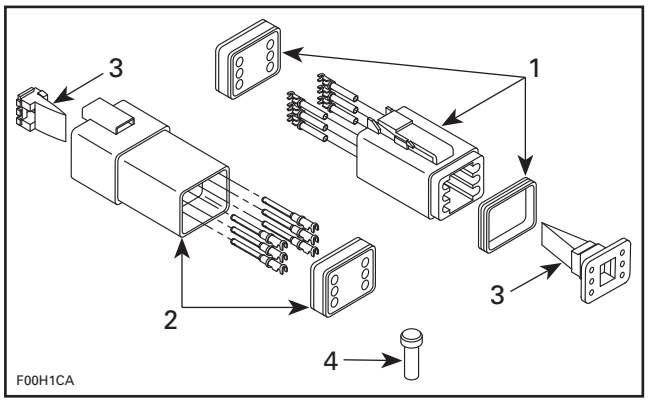


*TYPICAL - DEUTSCH CONNECTOR*
1. *Male connector*
2. *Female connector*
3. *Secondary lock*
4. *Sealing cap*

***NOTICE*** Do not apply dielectric grease on terminal inside connector.

To remove terminals from connector, proceed as follows:

1. Using long nose pliers, pull out the plastic lock from between the terminals.

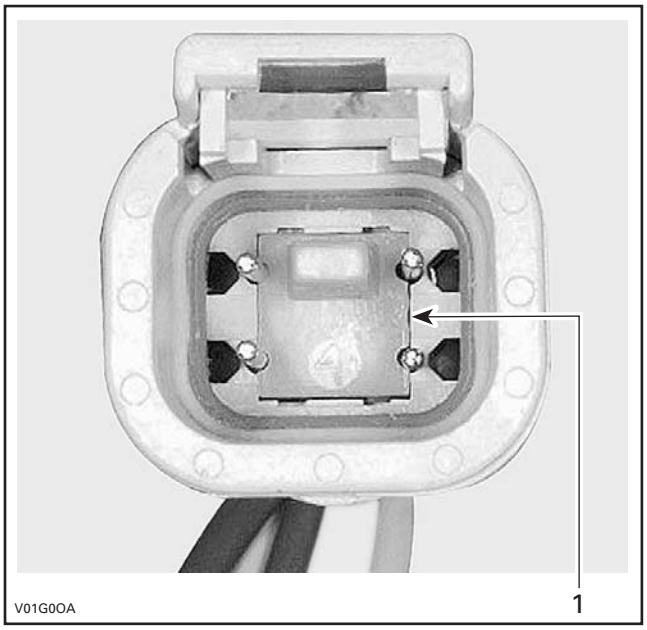


*TYPICAL - FEMALE CONNECTOR*
1. *Female lock*

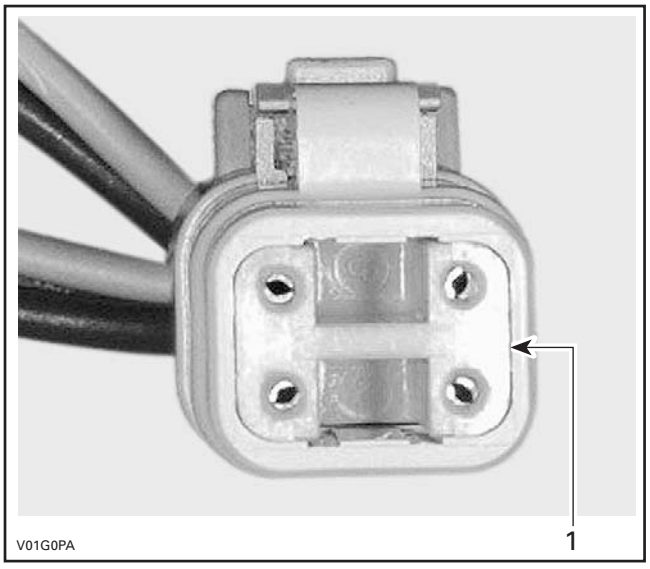


*TYPICAL - MALE CONNECTOR*
1. *Male lock*

NOTE: Before pin extraction, push wire forward to relieve pressure on retaining tab.

2. Insert a 4.8 mm (.189 in) wide screwdriver blade inside the front of the terminal cavity.
3. Pry the retaining tab away from the terminal while gently pulling the wire and terminal out of the back of the connector.

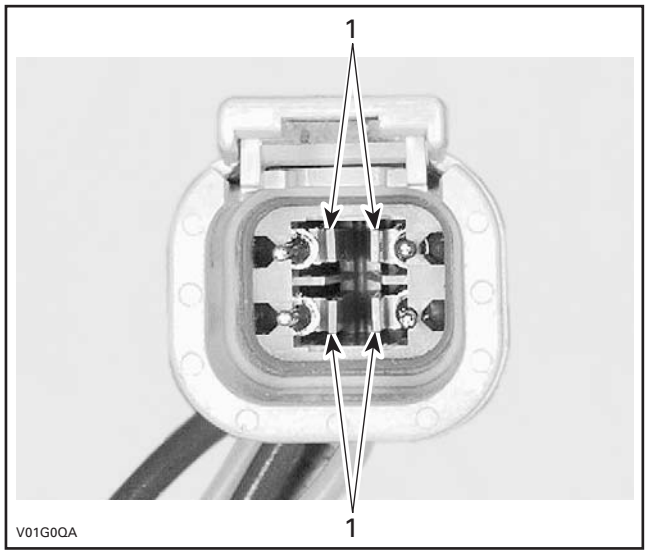


*TYPICAL - FEMALE CONNECTOR*
*1. Retaining tabs*

To install:

1. For insertion of a terminal, ensure the plastic lock is removed.
2. Insert terminal through the back of the connector in the appropriate position, and push it in as far as it will go. You should feel or hear the terminal lock engage.
3. Pull back on the terminal wire to ensure the retention fingers are holding the terminal.
4. After all required terminals have been inserted, the lock must be installed.

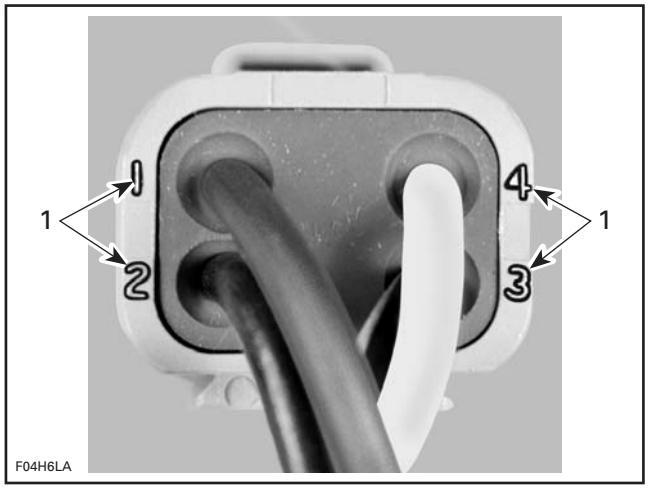


*TYPICAL - CONNECTOR PIN-OUT*
*1. Terminal position identification numbers*

# ECM CONNECTOR (MOLEX)

There are 2 connectors on the ECM.

The engine wiring harness connector is connected to ECM connector "A". The vehicle wiring harness connector is connected to ECM connector "B".

Each ECM connector has 48 pins. However, connectors "A" and "B" are not interchangeable due to their specific keyways.

## Removing the Connector

1. To access the ECM, refer to *ELECTRONIC FUEL INJECTION (EFI)* subsection.
2. Press **and hold** the locking tab on the connector to be disconnected.

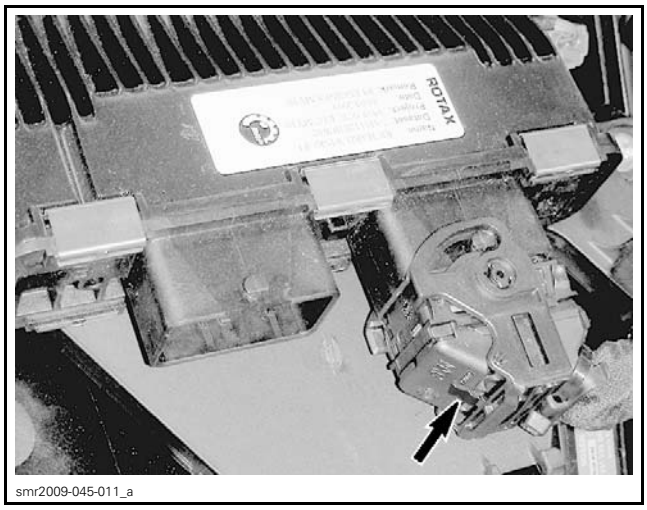


*LOCKING TAB TO PRESS AND HOLD*

3. As you hold the locking tab, rotate the connector locking cam until it stops.

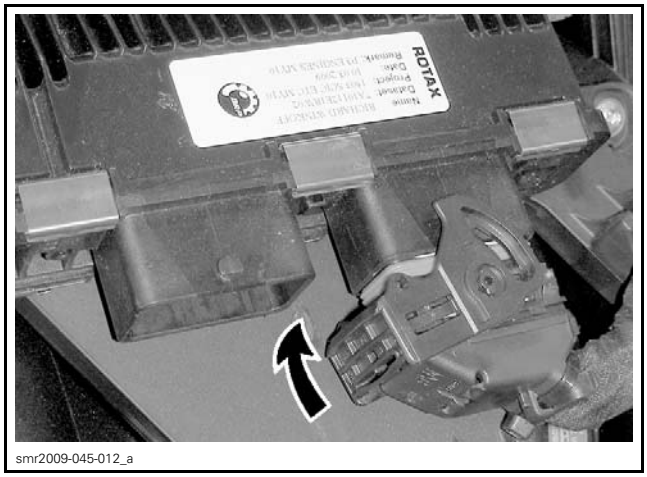


*CONNECTOR LOCKING CAM ROTATION TO RELEASE*

4. Pull connector off ECM.

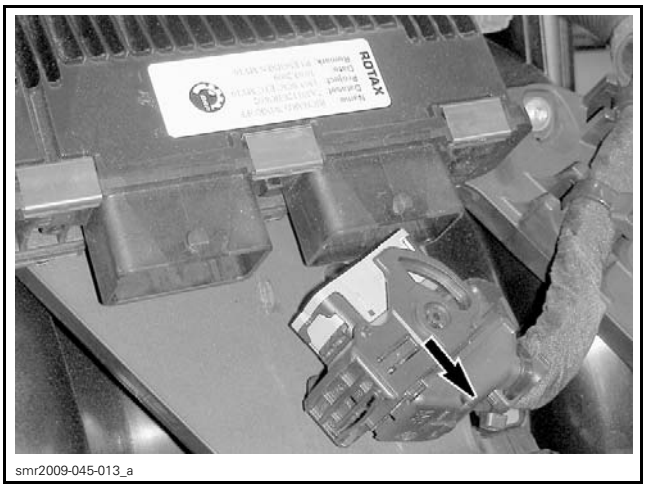

smr2009-045-013_a

## Installing the Connector

1. Fully open connector locking cam.

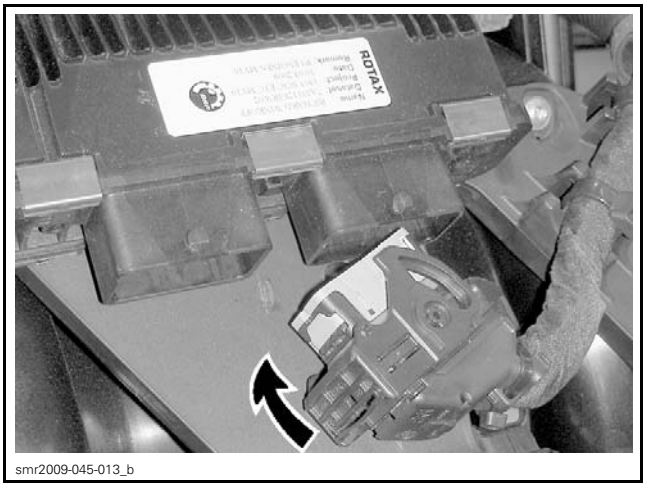

smr2009-045-013_b

*CONNECTOR LOCKING CAM IN RELEASE POSITION*

2. Insert connector on ECM.
3. As you push the connector onto the ECM, rotate the connector locking cam until it snaps locked.

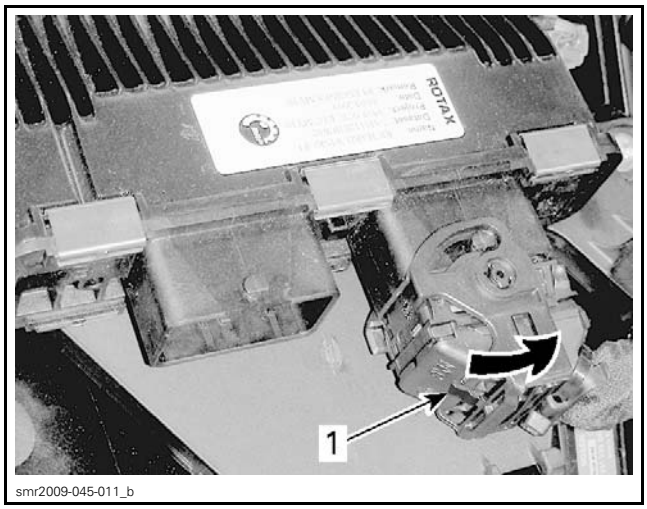

smr2009-045-011_b

*1. Locked here*

4. Ensure the locking tab is fully out.

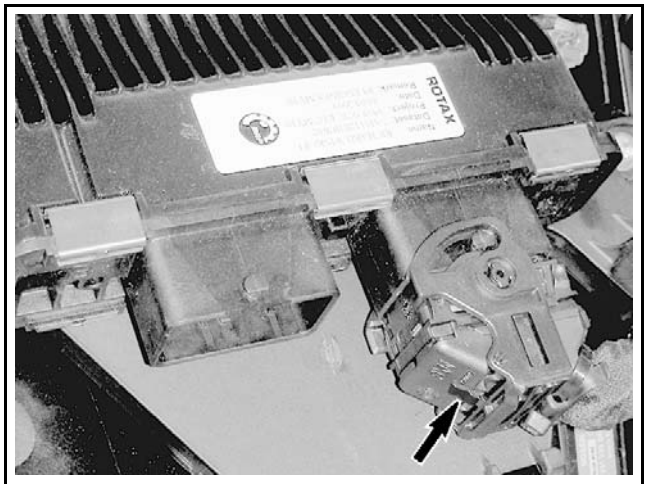

smr2009-045-011_a

*LOCKING TAB FULLY OUT*

## Inspecting the Connector

Before replacing an ECM, always check electrical connections.

1. Ensure connector locking mechanism is functioning properly.
2. Ensure all wire terminals (pins) are properly locked in the connector.
3. Ensure they are very tight, make good contact with the pins in the ECM.
4. Ensure the pins in the harness connector and the ECM connector are clean, shiny and corrosion-free.

NOTE: A "defective ECM module" could possibly be repaired simply by disconnecting and reconnecting it.

**NOTICE** Do not apply any lubricant product to the pins of the ECM connector.

## Probing the Connector

The most recommended and safest method to probe the MOLEX (ECM) connector terminals is to use the ECM adapter tool. This tool will prevent deforming or enlarging of the terminals, which would lead to bad ECM terminal contact creating intermittent or permanent problems.

| REQUIRED TOOL | |
|---|---|
| ECM ADAPTER TOOL (P/N 529 036 166) | |

1. Disconnect the ECM connector to be probed, and reconnect it on the ECM adapter.
2. Probe wire terminals of the circuit to be tested directly in the adapter holes.

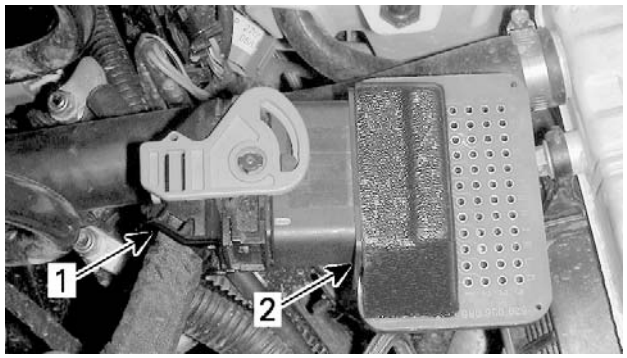


vmr2008-139-016_a

*TYPICAL*
*1. ECM connector*
*2. ECM adapter*

**NOTICE** Never probe directly on the ECM harness connector. This could change the shape or enlarge the terminals and create intermittent or permanent contact problems.

## Removing the Connector Terminal (Harness Connector)

To remove a signal terminal from the ECM harness connector, use the ECM terminal remover 2.25.

To remove a power terminal, use the ECM terminal remover 3.36.

| REQUIRED TOOL | |
|---|---|
| ECM TERMINAL REMOVER 2.25 (P/N 529 036 175) | |
| ECM TERMINAL REMOVER 3.36 (P/N 529 036 174) | |

1. Remove rear protector from connector.
2. Pull out the connector lock.

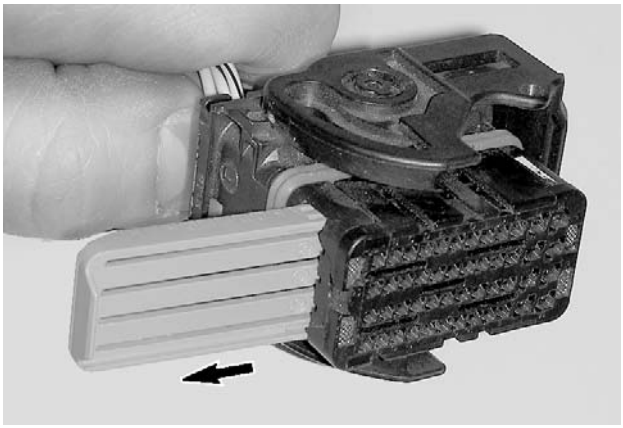

smr2009-045-025_a

3. Insert tool to unlock terminal.

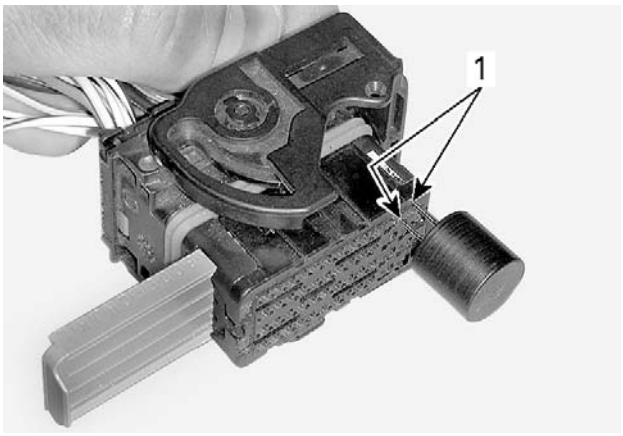


smr2009-045-026_a

*1. Unlock here*

4. Gently pull on the wire to extract the terminal out the back of the connector.

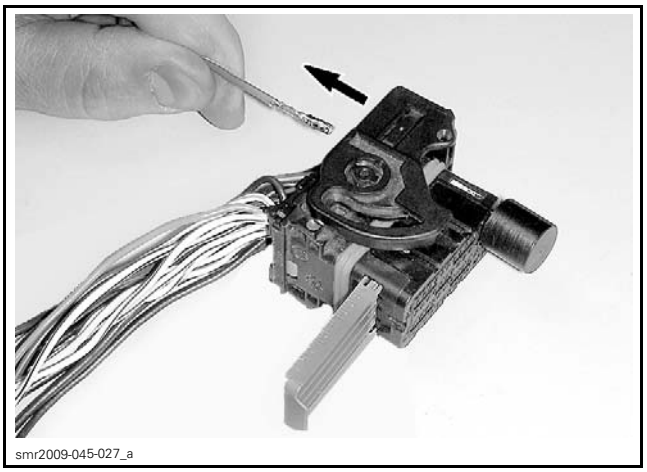
smr2009-045-027_a

**NOTICE** Before installing wire terminals in the connector, ensure all terminals are properly crimped on wires. After installation of wire terminals in the connectors, ensure they are properly locked by gently pulling on them as if to extract them.

# MOLEX CONNECTORS (EXCEPT ECM)

## Probing the Connector

1. Disconnect the steering connector in the vehicle and connect it to the Diagnostic Harness (P/N 284560054).
2. Probe the applicable circuit using the test connector on the diagnostic harness.

**NOTICE** Attempting to probe the connector without using the diagnostic connector may damage the connector pins, or even cause a short circuit if testing an energized circuit.

## Extracting the Socket (Female Connector)

1. Insert a small flat screwdriver in the pry holes of the socket locator, on the socket side of the connector.

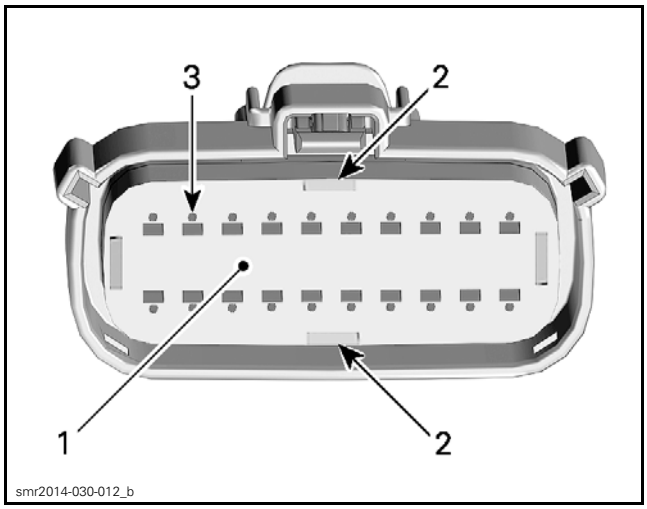

smr2014-030-012_b

*1. Socket locator*
*2. Pry holes*
*3. Holes for inserting terminal extractor tool*

2. Carefully pull out the socket locator out to the detente position (approximately 5 mm).

NOTE: Do not remove the socket locator from the connector housing.

3. Insert the extractor tool in the small hole adjacent to the socket.

NOTE: Push the extractor tool in only as far as required to release the lock from the socket. The tool should slide along the socket and be inserted between the socket and the lock.

| REQUIRED TOOL | |
|---|---|
| FCI TERMINAL EXTRACTOR TOOL (P/N 54241678) or, | |
| MOLEX 150 TERMINAL EXTRACTOR TOOL (P/N 63813 - 1500) | |

4. Gently pull on the wire to extract the socket out the back of the connector.

## Extracting the Pin (Male Connector)

1. Using a pair of thin long nose pliers, pull the pin locator out to the detente position (approximately 5 mm). This will allow unlocking of the pins.

**NOTICE** Do not attempt to remove the pin locator or damage will occur. Be careful not to bend the pins when using the pliers.

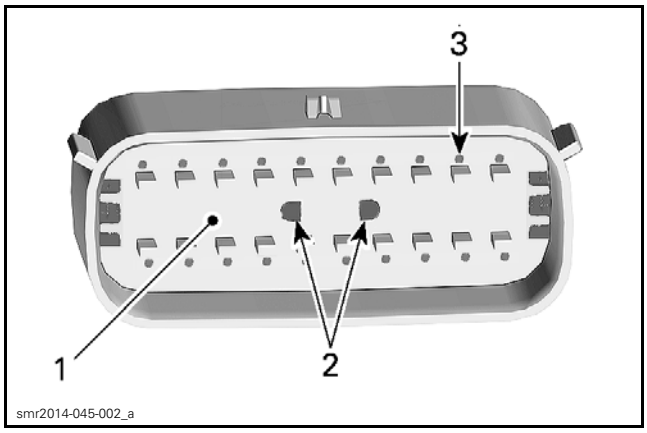


*1. Pin locator*
*2. Insert long nose pliers here*
*3. Holes for inserting terminal extractor tool*

2. Insert the extractor tool in the small hole adjacent to the pin.

NOTE: Push the extractor tool in only as far as required to release the lock from the pin. The tool should slide along the pin and be inserted between the pin and the lock.

| REQUIRED TOOL | |
|---|---|
| FCI TERMINAL EXTRACTOR TOOL (P/N 54241678) or, | |
| MOLEX 150 TERMINAL EXTRACTOR TOOL (P/N 63813 - 1500) | |

3. Gently pull on the wire to extract the pin out the back of the connector.

## Inserting the Pin

1. Ensure the terminal (pin) is properly crimped onto the wire.
2. Ensure the pin locator (the white plastic insert in the connector) is out in the detente position.
3. Insert the pin in through the back of the connector.

NOTE: When inserting the pin, insert the stepped portion facing the notch in the connector pin hole.

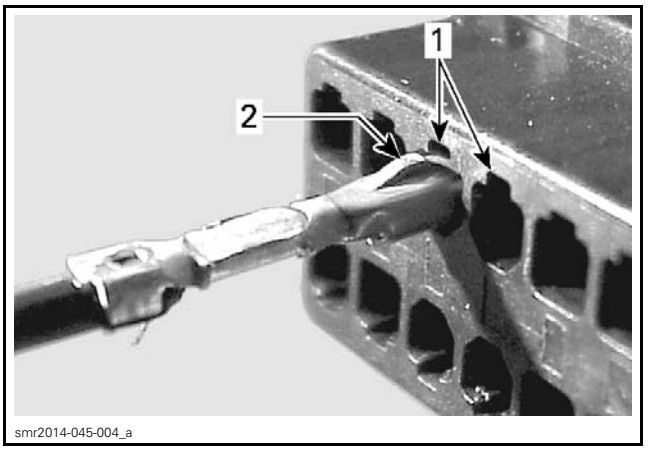


*TYPICAL - PIN INSERTION*
*1. Notch*
*2. Stepped portion towards notch*

4. Push the pin in until the pin lock engages the pin.
5. Gently pull on the pin to ensure it is properly locked.
6. Repeat previous steps for each pin to be inserted.
7. Push the pin locator into the connector to the locked position.

# DELPHI/PACKARD CONNECTORS

## Removing the Connector Terminal

To remove a terminal (pin) from the connector, use a special tool such as the Delphi terminal extractor.

| REQUIRED TOOL | |
|---|---|
| DELPHI TERMINAL EXTRACTOR (P/N 12094429) | |

NOTE: Grinding the tool end to a taper is required.

1. Carefully insert the tool in the space provided to release the pin lock.
2. Push the pin out the front of the connector by pushing on the wire.

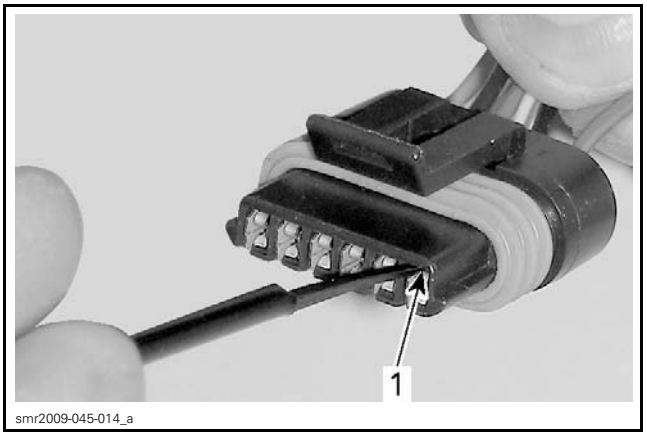

smr2009-045-014_a

*1. Unlock terminal here*

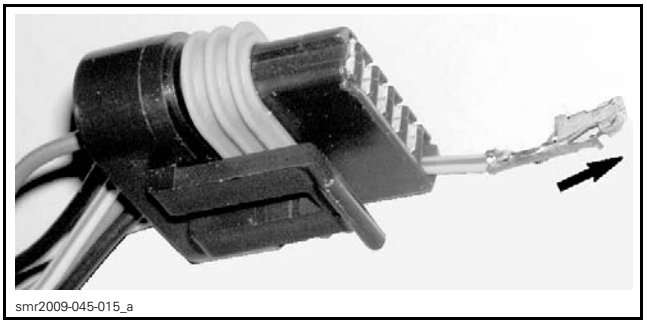
smr2009-045-015_a

**NOTICE** Before installing terminals in the connectors, ensure all terminals are properly crimped on the wires. After installation of the wire terminals in the connectors, ensure they are properly locked by gently pushing on them as if to extract them.

# DELPHI CONNECTORS

## Removing the Terminal

1. To remove a terminal from connector, first remove the locking cap.

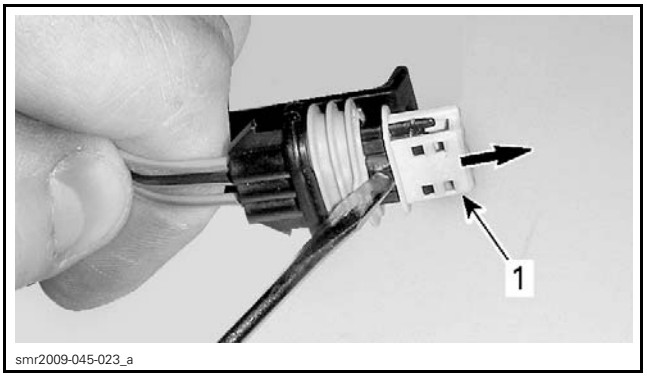

smr2009-045-023_a

*1. Pry out locking cap*

2. Carefully insert the Delphi terminal extractor in the space provided to release the pin lock.

| REQUIRED TOOL |
| --- |
| DELPHI TERMINAL EXTRACTOR (P/N 12094429) |

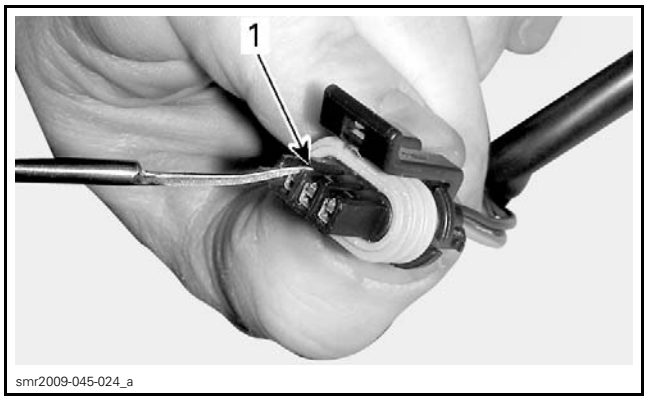

smr2009-045-024_a

*1. Unlock here*

3. Gently pull on the wire to extract the pin out the back of the connector.

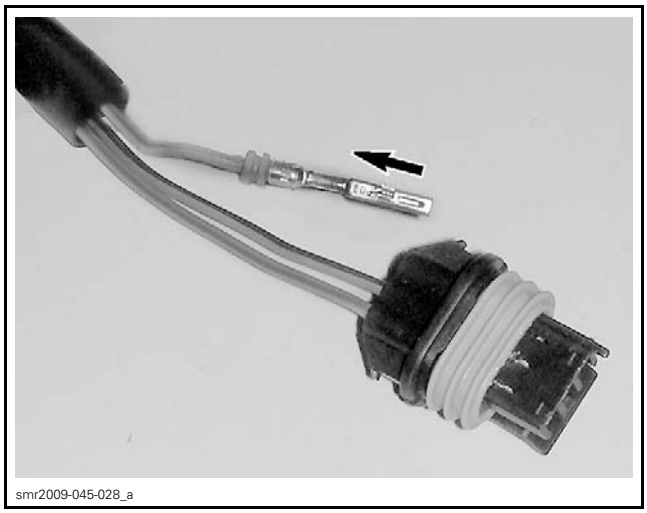
smr2009-045-028_a

**NOTICE** Before installing terminals in the connectors, ensure all terminals are properly crimped on the wires. After installation of the wire terminals in the connectors, ensure they are properly locked by gently pushing on them as if to extract them.

# BATTERY CABLES

## Crimping the Battery Cable

Carefully strip the wire approximately to 10 mm (3/8 in) in length, using a wire stripping tool or sharp blade/knife.

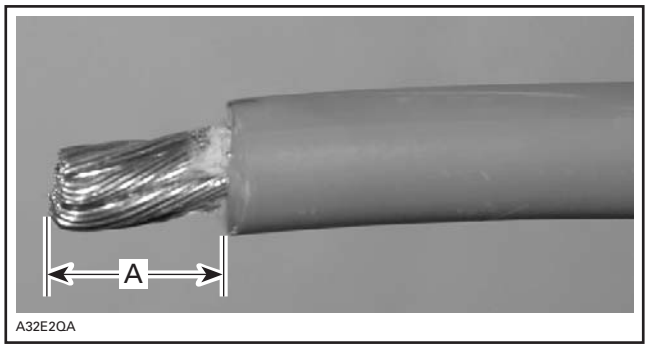


*A. 10 mm (3/8 in)*

NOTE: Make sure not to cut wire strands while stripping the wire.

Install the appropriate terminal on the wire according to the requirement. Refer to appropriate *PARTS CATALOG*.

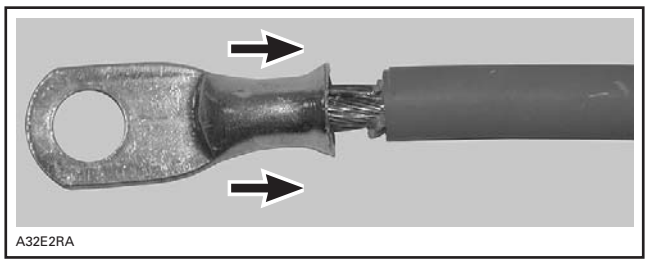


*INSTALLATION OF TERMINAL*

NOTE: Different wires require different crimping pliers settings, so make sure to follow the instruction supplied with the tool.

Crimp the terminal on the wire.

*CRIMPING OF WIRE*

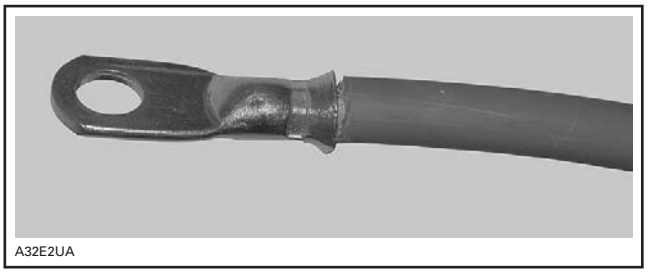


*PROPERLY CRIMPED WIRE*

To verify if the wire is properly crimped, apply some pulling force on wire and the terminal at the same time from both directions.

**NOTICE** **Never weld the wire to the terminal. Welding can change the property of the wire and it can become brittle and break.**

Install the protective heat shrink rubber tube on the terminal. Heat the heat shrink rubber tube using the heat gun so that it grasps the wire and the terminal.

**NOTICE** **Make sure that the protective heat shrink rubber tube has been properly installed and no part of wire is exposed.**

# SPLICES REPAIR PROCEDURE

## CASE 1: Wire Detached from Splice

**NOTICE** **Repairs described in this section should never be performed on harness sections that can be exposed to water.**

1. Locate splice. Refer to splices location diagrams.
2. Remove wires from protector tube.
3. Locate the shrink tube protecting the defective splice.

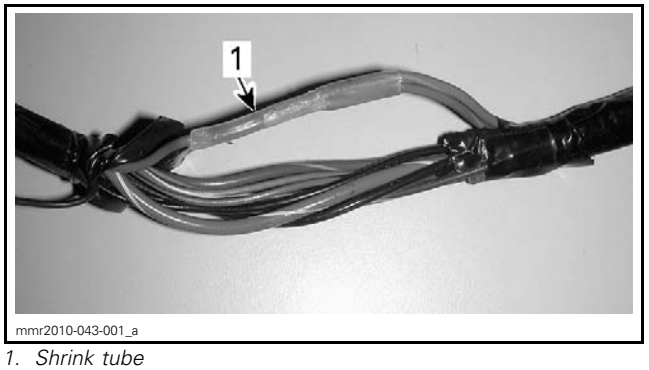


*1. Shrink tube*

4. Remove the shrink tube.
   4.1 Using a blade, cut the shrink tube.

mmr2010-043-002

**NOTICE** Be careful with the blade to avoid cutting wires insulation.

4.2 Slightly heat the shrink tube using a heat gun.

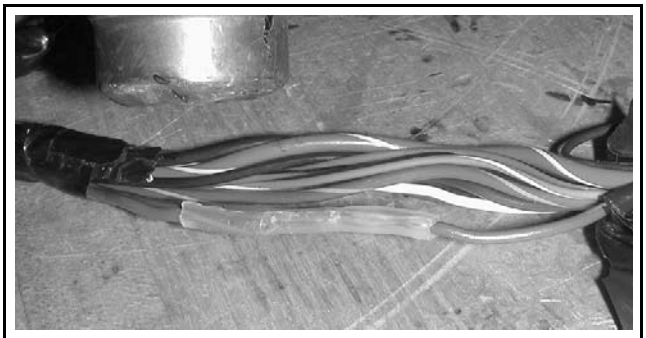
mmr2010-043-003

4.3 Remove the shrink tube with long nose pliers.

5. Locate detached wire from splice.

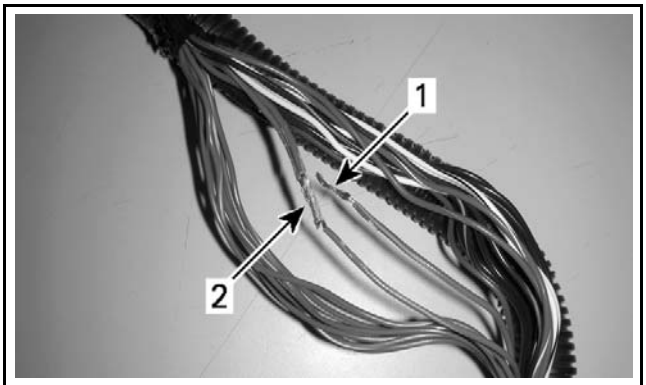

mbg2008-021-116_a

*1. Detached wire*
*2. Splice*

6. Twist detached wire around splice.

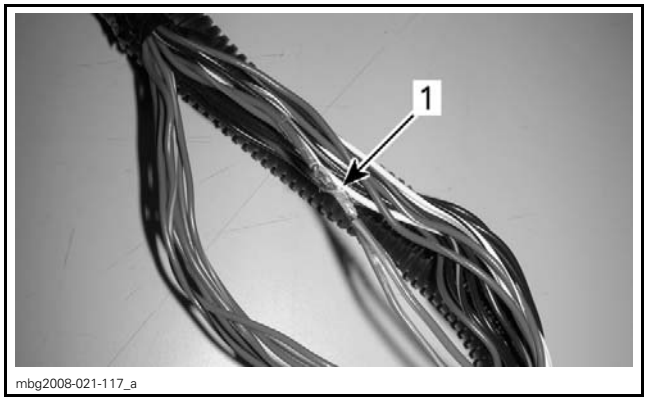

mbg2008-021-117_a

*1. Twisted wire*

7. Perform a tin solder on twisted wire.
8. Apply electrical tape to cover splice.

NOTE: Make sure tape overlaps on wire insulation, approximately 13 mm (1/2 in) each side.

9. Reinstall wires into protector tube.

## CASE 2: Wire Broken from Splice

**NOTICE** Repairs described in this section should never be performed on harness sections that can be exposed to water.

1. Locate splice. Refer to splices location diagrams.
2. Remove wires from protector tube.
3. Locate the shrink tube protecting the defective splice.

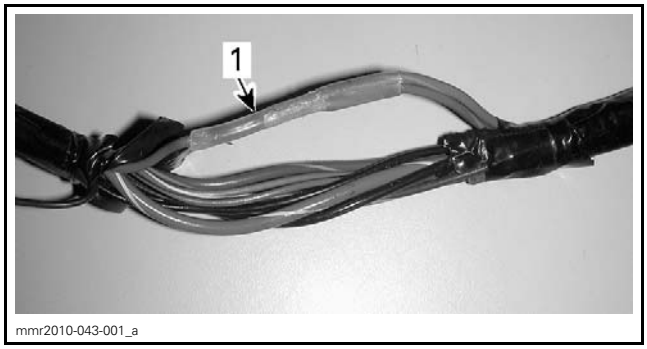

mmr2010-043-001_a

*1. Shrink tube*

4. Remove the shrink tube.
   4.1 Using a blade, cut the shrink tube.

mmr2010-043-002

**NOTICE** Be careful with the blade to avoid cutting wires insulation.

4.2 Slightly heat the shrink tube using a heat gun.

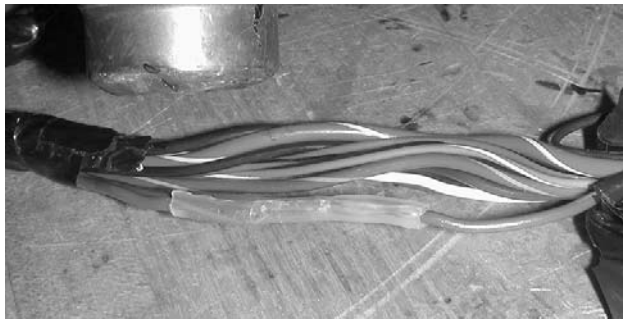
mmr2010-043-003

4.3 Remove the shrink tube with long nose pliers.

5. Locate broken wire from splice.

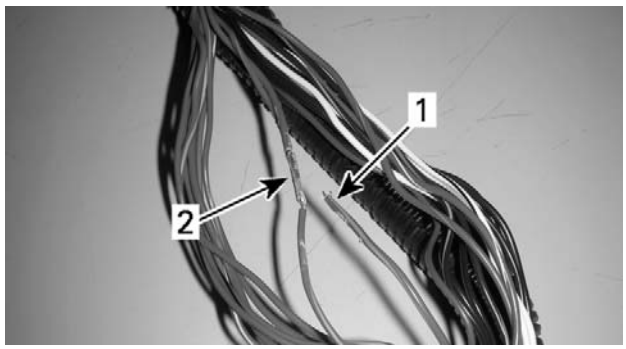

mbg2008-021-118_a

*1. Broken wire*
*2. Splice*

6. Strip wire insulation at the end of broken wire.

7. Strip wire insulation below the splice.

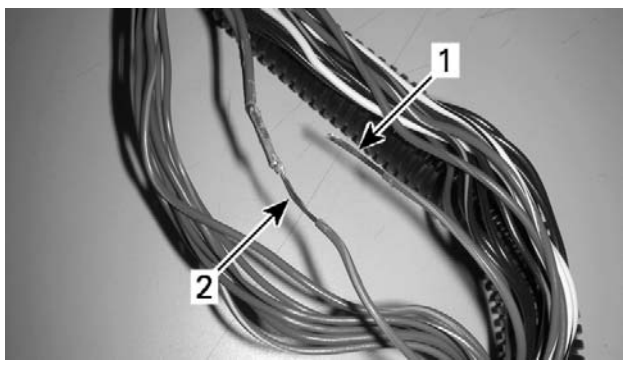

mbg2008-021-119_a

*1. Broken wire stripped*
*2. Splice wire stripped*

8. Twist wire around stripped wire.

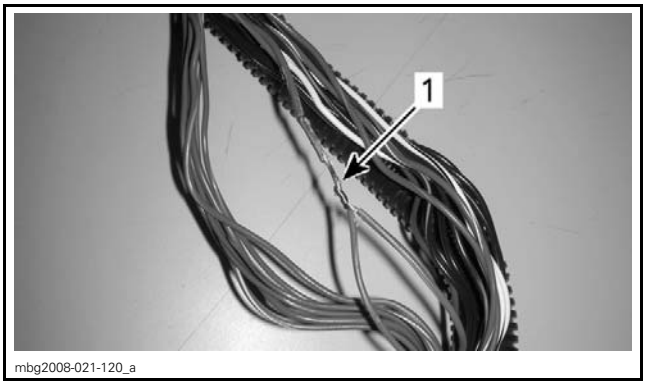

mbg2008-021-120_a

*1. Twisted wire*

9. Perform a tin solder on twisted wire.

10. Apply electrical tape to cover splice.

NOTE: Make sure tape overlaps on wire insulation, approximately 13 mm (1/2 in) each side.

11. Reinstall wires into protector tube.

NOTE: Always perform a solder on a bigger wire (lower gage).

# IGNITION SYSTEM (600 ACE ITC)

## SERVICE TOOLS

| Description | Part Number | Page |
|---|---|---|
| ECM ADAPTER TOOL | 529 036 166 | 379, 381 |
| FLUKE 115 MULTIMETER | 529 035 868 | 378, 380 |

## GENERAL

Cables and locking ties removed during a procedure must be reinstalled as per factory standards.

**NOTICE** Never force a multimeter probe into an electrical terminal.

## SYSTEM DESCRIPTION

The ignition system is a digital inductive type (IDI) system.

Ignition system parameters such as ignition timing, spark duration, and firing order, are controlled by the ECM in order to meet engine operational requirements.

Direct ignition coils (stick coils) are used for each cylinder.

When a ground signal is provided by the ECM to an ignition coil primary winding, a high voltage is induced in the ignition coil secondary winding that is used to produce a spark at the spark plug electrode.

Cylinder 1 is on the PTO side of the engine.

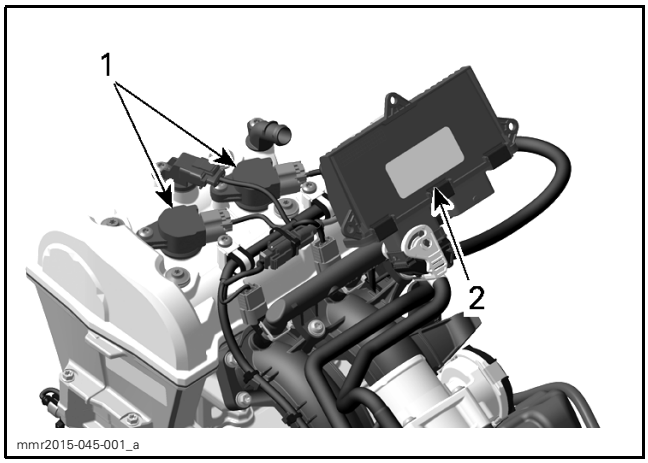


*600 ACE ENGINE*
1. *Ignition coils*
2. *ECM*

### Ignition Timing

Ignition timing is not adjustable.

The ECM is programmed with data (ignition mappings), used along with data received from a variety of sensors to establish optimum ignition timing under all engine operating conditions.

The firing of each spark plug is independent of the other(s).

## TROUBLESHOOTING

## IGNITION SYSTEM TESTING

The ECM controls the ignition system.

If a fault is detected by the ECM, the check engine light will turn on.

A check engine message will be displayed in the gauge digital display and a beep code will be emitted. Refer to *DIAGNOSTIC AND FAULT CODES* subsection for details.

The ECM can detect a problem on the primary winding or circuit of the ignition coils.

The secondary winding of the ignition coils is not monitored by the ECM.

Other sensors in relation with the ignition system are also monitored by the ECM.

### Ignition System Testing Sequence

Check for fault codes using B.U.D.S. software as a first troubleshooting step. Refer to *DIAGNOSTIC AND FAULT CODES* subsection.

Check the following fuse(s):

| IGNITION/INJECTOR FUSE (HIC) |
|---|
| Fuse 5 |

If a fuse is burnt, test for a short circuit or faulty component on that fuse circuit before replacing the fuse. Refer to *POWER DISTRIBUTION AND GROUNDS* subsection.

Check ignition spark, refer to *IGNITION COIL QUICK TEST USING B.U.D.S.* in this subsection.

# PROCEDURES

## IGNITION COILS

### Ignition Coil Quick Test using B.U.D.S.

This test confirms the working condition of the ignition circuit and ignition coil for the cylinder tested.

1. Remove ignition coil, refer to *IGNITION COIL REMOVAL* in this subsection.
2. Install a spark tester on the ignition coil.
3. Connect to the latest applicable B.U.D.S. version, refer to *COMMUNICATION TOOLS AND B.U.D.S.* subsection.
4. In B.U.D.S., select;
   - Read Data
   - Activationpage tab
5. Energize the ignition coil by selecting it on the engine illustration.

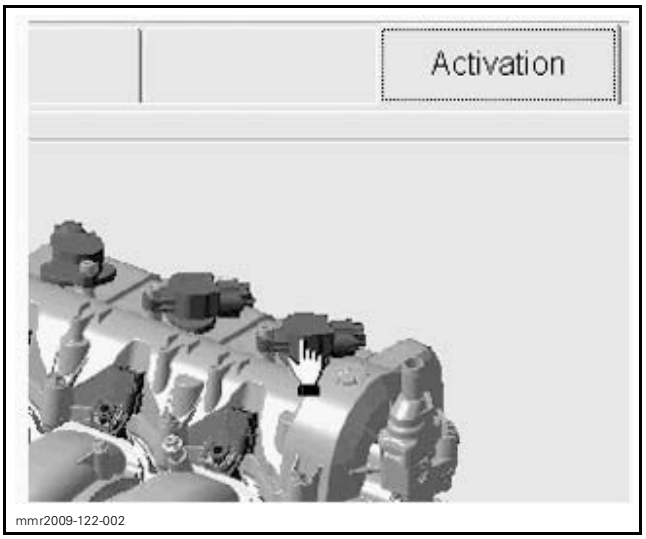


*TYPICAL — IGNITION COIL ACTIVATION*

If there is no spark, carry out the following tests.

### Ignition Coil Input Voltage Test

1. Disconnect the ignition coil connector.
2. Install tether cord cap on engine cut-off switch.
3. Set emergency engine stop switch to RUN.
4. Briefly press on START/RER switch to wake up ECM.
5. Measure voltage as per following table.

| REQUIRED TOOL | |
|---|---|
| FLUKE 115 MULTIMETER (P/N 529 035 868) | |

NOTE: Test is valid only if ECM is active (gauge will be on).

| IGNITION COIL INPUT VOLTAGE TEST | | |
|---|---|---|
| TEST PROBES | | VOLTAGE |
| PTO coil VIOLET/BLUE wire | Battery ground | Battery voltage |
| MAG coil VIOLET/GREEN wire | | |

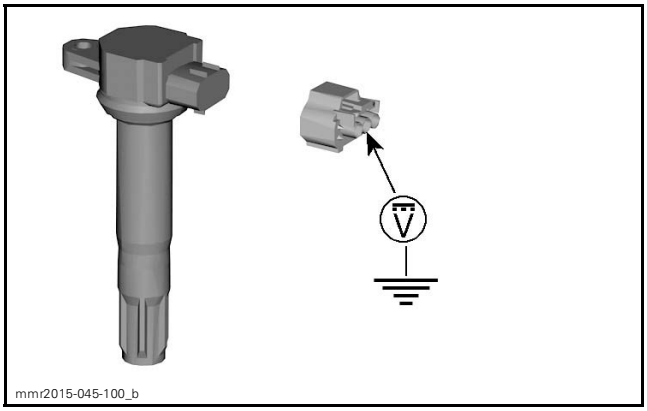


*TYPICAL — IGNITION COIL INPUT VOLTAGE TEST*

| TEST RESULT | SERVICE ACTION |
|---|---|
| Battery voltage **is** read | Refer to *IGNITION COIL CIRCUIT CONTINUITY TEST* |
| Battery voltage **NOT** read | Refer to *IGNITION COIL CIRCUIT CONTINUITY TEST* |

6. Remove tether cord cap from engine cut-off switch.

### Ignition Coil Circuit Continuity Test

#### Power Input Wire (Ignition Coil)

1. Ensure that tether cord cap is removed from engine cut-off switch.
2. Ensure emergency engine stop switch is set to STOP.

3. Locate the applicable ignition/injector fuse (F5) in the fuse box. Refer to *POWER DISTRIBUTION AND GROUNDS* subsection.
4. Disconnect ignition coil connector.
5. Remove applicable fuse.
6. Test for continuity of circuit as per following table.

NOTE: Probe the metallic part on top of the fuse.

| POWER INPUT WIRE CONTINUITY TEST (IGNITION COIL) FUSE BOX | | | |
|---|---|---|---|
| **IGNITION COIL** | **IGNITION COIL CONNECTOR WIRE** | **FUSE BOX CONTACT** | **RESISTANCE** |
| PTO | VIOLET/ BLUE | 5B (fuse 5) | Close to 0 Ω (continuity) |
| MAG | VIOLET/ GREEN | | |

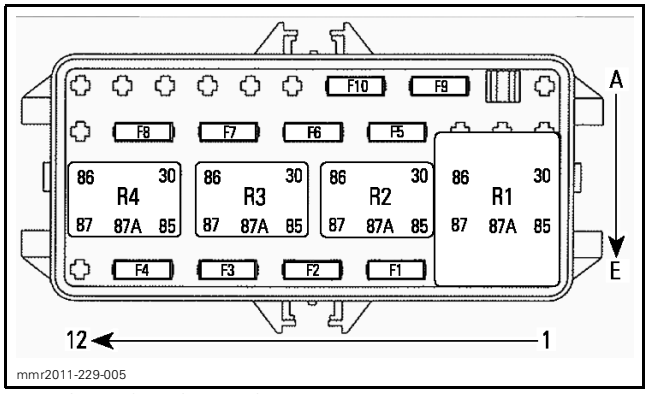


*600 ACE FUSE BOX PINOUT*

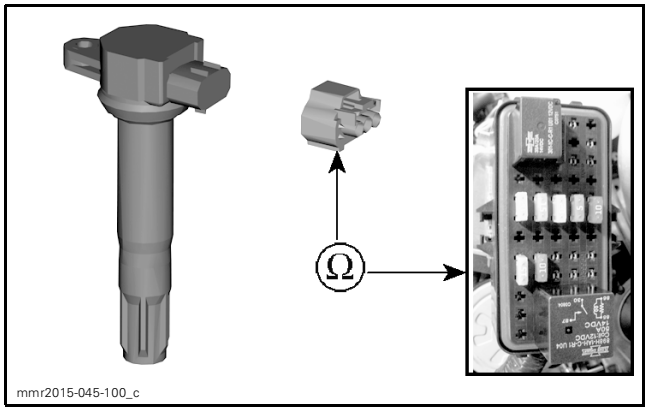


*TYPICAL — POWER INPUT WIRE CONTINUITY TEST (IGNITION COIL)*

If continuity is not measured as specified, test the engine and vehicle harnesses.

### Ground Signal Wire (Ignition Coil)

1. Disconnect ECM connector A. Refer to *ELECTRONIC FUEL INJECTION* subsection.
2. Disconnect ignition coil connector.
3. Test for continuity of ignition coil ground signal circuit as per following table.

| REQUIRED TOOL | |
|---|---|
| ECM ADAPTER TOOL (P/N 529 036 166) | |

| GROUND SIGNAL WIRE CONTINUITY TEST (IGNITION COIL) | | | |
|---|---|---|---|
| **IGNITION COIL** | **IGNITION COIL CONNECTOR WIRE** | **ECM PIN** | **RESISTANCE** |
| PTO | BROWN/ BLACK | M1 | Close to 0 Ω (continuity) |
| MAG | BROWN/ ORANGE | M2 | |

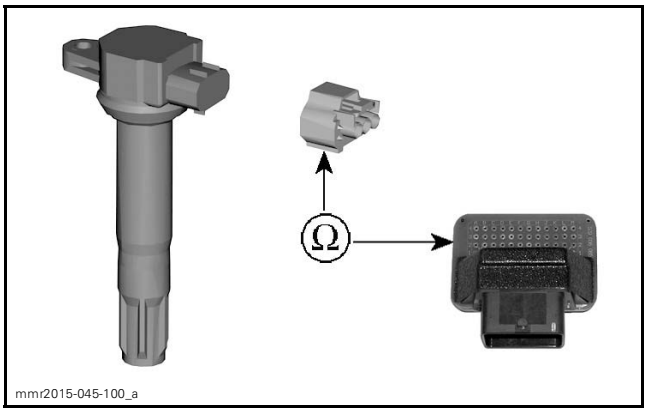


*TYPICAL — IGNITION COIL GROUND SIGNAL WIRE CONTINUITY TEST*

If continuity is not measured as specified, repair the connector or replace the engine wiring harness.

## Ignition Coil Resistance Test

An ignition coil with a good resistance measurement can still be faulty. Current leakage can occur at high voltage levels which is not detectable with an ohmmeter. Replacing the ignition coil may be necessary as a test.

### Primary Winding

1. Remove ignition coil. Refer to *IGNITION COIL REMOVAL* in this subsection.
2. Set the multimeter to Ω and measure primary winding resistance as specified.

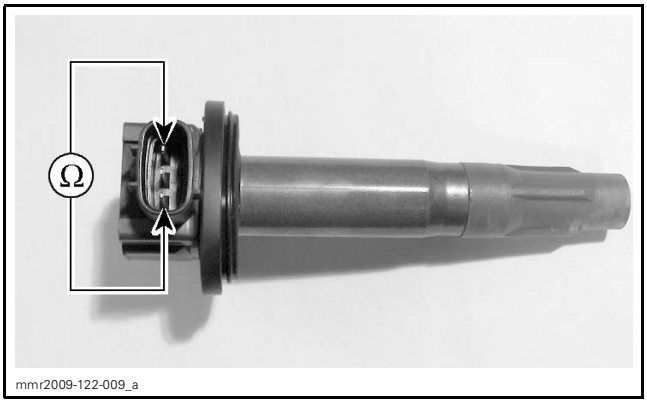

mmr2009-122-009_a

| CIRCUIT | PIN | RESISTANCE @ 20°C (68°F) |
|---|---|---|
| Primary | 1 and 3 | 0.8 - 0.97 Ω |

If resistance is not within specification, replace ignition coil.

### Secondary Winding

The secondary winding on this type of ignition coil cannot be tested.

## Ignition Coil Removal

1. Disconnect ignition coil connector.
2. Remove ignition coil retaining screw.

***NOTICE*** **Do not pry on ignition coil with a tool.**

3. Remove ignition coil from spark plug by rotating coil side to side as you pull up.

NOTE: For cylinder 2, turn steering column to ease ignition coil removal.

## Ignition Coil Installation

1. Align the retaining screw hole of the ignition coil with the threaded hole on the valve cover.
2. Install the ignition coil on the spark plug and push it all the way down until it rests on the valve cover.
3. Install the retaining screw an tighten to specification.

| IGNITION COIL RETAINING SCREW | |
|---|---|
| Tightening torque | 9 N•m ± 1 N•m (80 lbf•**in** ± 9 lbf•**in**) |

4. Connect ignition coil connector.

# SPARK PLUGS

## Spark Plug Application

| ENGINE | SPARK PLUG |
|---|---|
| 600 ACE | MR7BI8 |

# EMERGENCY ENGINE STOP SWITCH

## Emergency Engine Stop Switch Operation

The emergency engine stop switch provides a ground signal to the ECM when STOP is selected.

The ground signal is applied to the ECM connector as per following table.

| MODEL | ECM PIN |
|---|---|
| 600 ACE | B-4C |

## Emergency Engine Stop Switch Continuity Test

Remove gauge.

Check switch continuity as per following table.

| REQUIRED TOOL | |
|---|---|
| FLUKE 115 MULTIMETER (P/N 529 035 868) | |

| **EMERGENCY ENGINE STOP SWITCH CONTINUITY TEST** | | | |
|---|---|---|---|
| **SWITCH POSITION** | **TEST PROBES** | | **RESISTANCE** |
| RUN | BK wire | YE/BK wire | Infinite (OL) |
| STOP | | | Close to 0 Ω |

If readings are not as specified in table, check wiring and connections going to switch. If good, replace switch.

# ENGINE CUT-OFF SWITCH

## Engine Cut-Off Switch Continuity Test

Disconnect engine cut-off switch connector.

Carry out the following continuity tests.

| REQUIRED TOOL | |
|---|---|
| FLUKE 115 MULTIMETER (P/N 529 035 868) | |

### Tether Cord Cap Removed from Engine Cut-Off Switch

Set multimeter to Ω.

Connect test probes to engine cut-off switch and its connector as per tables and measure resistance.

| ENGINE CUT-OFF SWITCH | | |
|---|---|---|
| PROBE WIRES | | RESISTANCE Ω @ 20°C (68°F) |
| GREEN/BLACK | WHITE/BLACK | Open circuit |

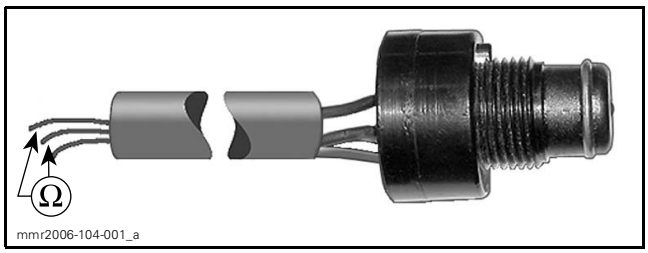


*TYPICAL*

| ENGINE CUT-OFF SWITCH | | |
|---|---|---|
| PROBE | | RESISTANCE Ω @ 20°C (68°F) |
| WHITE/ GRAY | Switch center contact | Close to 0 Ω |

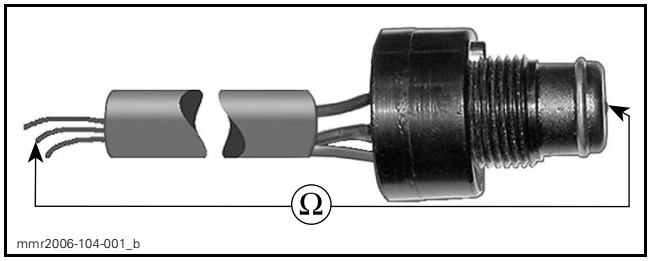


*TYPICAL*

| ENGINE CUT-OFF SWITCH | | |
|---|---|---|
| PROBE | | RESISTANCE Ω @ 20°C (68°F) |
| GREEN/BLACK | Switch ring | Close to 0 Ω |

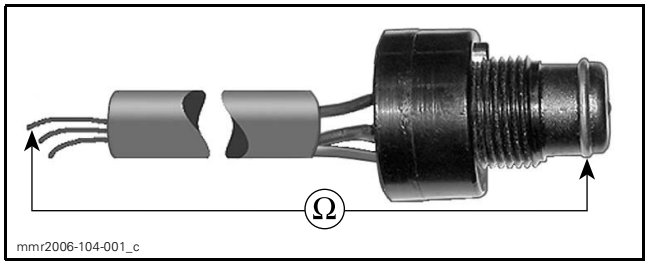


*TYPICAL*

### Tether Cord Cap on Engine Cut-Off Switch

Connect test probes to engine cut-off switch connector as per table and measure resistance.

| ENGINE CUT-OFF SWITCH | | |
|---|---|---|
| PROBE WIRES | | RESISTANCE Ω @ 20°C (68°F) |
| GREEN/BLACK | WHITE/BLACK | Close to 0 Ω |

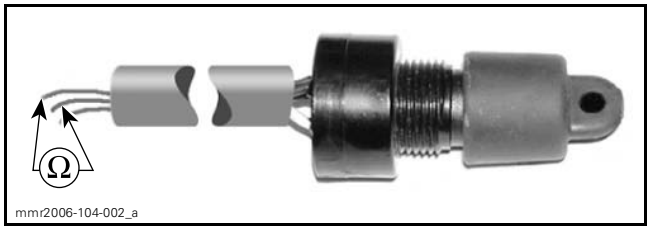


*TYPICAL*

If any resistance test fails, replace engine cut-off switch.

## Engine Cut-Off Switch Vehicle Harness Continuity Test

Disconnect engine cut-off switch connector.

Disconnect ECM connector B. Refer to *ELECTRONIC FUEL INJECTION* subsection.

Check wire continuity between engine cut-off switch connector of main wiring harness and ECM as follows.

| TOOL | TOOL VIEW |
|---|---|
| ECM ADAPTER TOOL (P/N 529 036 166) | |

| ENGINE CUT-OFF SWITCH CONNECTOR (MAIN WIRING HARNESS SIDE) | ECM ADAPTER | RESISTANCE Ω @ 20°C (68°F) |
|---|---|---|
| WIRE | PIN | |
| WHITE/GRAY (3) | B-2B | Close to 0 Ω |
| WHITE/BLACK (1) | B-4E | |
| GREEN/BLACK (2) | B-2F | |

If any continuity test failed, repair or replace wiring connectors/terminals.

If the problem persists and all tests have been performed, check the ECM. Refer to *(ENGINE CONTROL MODULE ECM)* in the *ELECTRONIC FUEL INJECTION (EFI)* subsection.

# IGNITION SYSTEM

## SERVICE TOOLS


| Description | Part Number | Page |
|---|---|---|
| D.E.S.S. POST REMOVER | 529 035 943 | 3 |
| FLUKE 115 MULTIMETER | 529 035 868 | 1 |


## GENERAL

The following tool is required to test most of the electrical parts.

| REQUIRED TOOL | |
|---|---|
| FLUKE 115 MULTIMETER (P/N 529 035 868) | |

**⚠ WARNING**

**Torque wrench tightening specifications must be strictly adhered to.**
**Locking devices when removed (e.g.: locking tabs, elastic stop nuts, self-locking fasteners, cotter pins, etc.) must be replaced.**

Hoses, cables or locking ties removed during a procedure must be reinstalled as per factory standards.

**⚠ WARNING**

**Never check for engine ignition spark from an open coil and/or spark plug as spark may cause potential fuel vapors to ignite. Always use an approved spark tester.**

## SYSTEM DESCRIPTION

The ignition system is a digital inductive type (IDI) system.

Ignition system parameters such as ignition timing, spark duration, and firing order, as well as many other engine related functions are controlled by the engine management system (EMS) in order to meet engine operational requirements. The EMS can detect many abnormalities including a short circuit in the primary winding of the ignition coils as well as its associated circuits.

Three direct ignition coils receive power from the fuse F5.

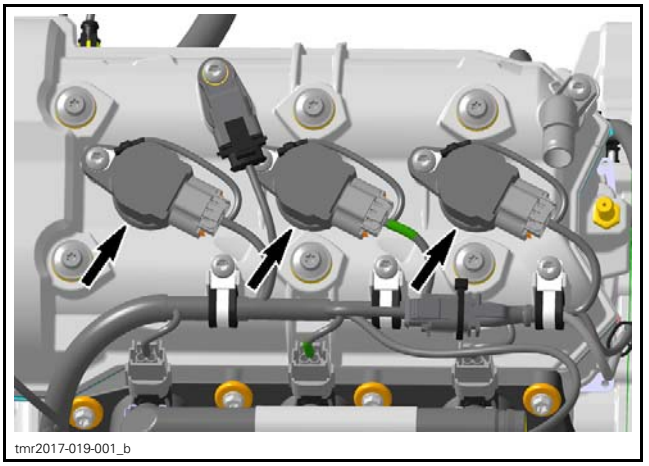

tmr2017-019-001_b

*IGNITION COILS*

When a ground signal is provided by the ECM to an ignition coil primary winding, a high voltage is induced in the coil secondary winding that is used to produce a spark at the spark plug electrode.

Cylinder 1 is located on the PTO side of the engine. Each cylinder is identified by a number on cylinder block housing.

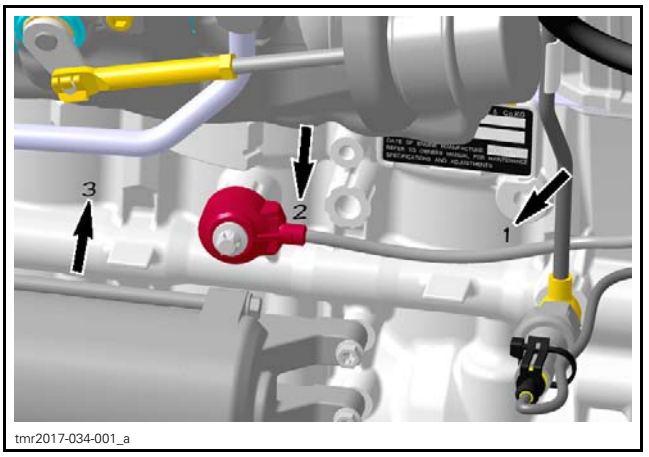


tmr2017-034-001_a

*CYLINDER BLOCK - EXHAUST SIDE*

### Ignition Timing

Ignition timing is not adjustable.

The ECM is programmed with data (ignition mappings) that it uses to establish optimum ignition timing under all engine operating conditions.

It receives signals from a variety of sensors that it compares with the ignition mappings and uses it to control the ignition spark timing, duration and firing order.

The firing of each spark plug is independent of the others.

### Engine RPM Limiter

The ECM will limit the maximum engine speed by cutting off ignition spark and fuel at a predetermined engine RPM.

| | |
|---|---|
| ENGINE SPEED LIMITER SETTING | 8300 RPM |

### Knock Sensor

A knock sensor is mounted on the cylinder block below the exhaust manifold. It detects specific vibrations that would typically be generated by engine detonation.

If detonation occurs, the knock sensor detects it and the ECM goes into a specific operating mode whereby it temporarily retards the ignition advance until detonation stops.

The ECM is able to identify in which cylinder the knocking occurs and modifies the ignition advance on that cylinder only.

Refer to the *ELECTRONIC FUEL INJECTION (EFI)* subsection for testing and replacement procedures.

# TROUBLESHOOTING

It is good practice to check for fault codes using the BUDS2 as a first troubleshooting step. Refer to *DIAGNOSTIC AND FAULT CODES* subsection.

Refer to *POWER DISTRIBUTION AND GROUNDS* for fuses and relay information.

Always refer to the *WIRING DIAGRAM* when troubleshooting an electrical circuit.

## IGNITION SYSTEM TESTING

The ECM controls the ignition system.

If a fault is detected by the ECM, the check engine light will turn on.

The ECM can detect a problem on the primary winding or circuit of the ignition coils.

The secondary winding of the ignition coils is not monitored by the ECM.

Other sensors in relation with the ignition system are also monitored by the ECM.

### Testing Ignition System

Check for fault codes using BUDS2 software as a first troubleshooting step. Refer to *DIAGNOSTIC SYSTEM AND FAULT CODES* subsection.

Ensure fuse F5 and relay are powered and in good condition.

If a fuse is burnt, test for a short circuit or faulty component on that fuse circuit before replacing the fuse.

Check ignition spark, refer to *TESTING THE IGNITION COIL WITH BUDS2.* in this subsection.

## DIAGNOSTIC GUIDELINES

The following is provided to help in diagnosing the probable cause of a problem. It is a guideline and should not be assumed to list all possible causes.

### ENGINE WILL NOT STOP WHEN REMOVING KEY FROM D.E.S.S. POST

1. Defective D.E.S.S. post
   - *Check D.E.S.S. post. Replace if necessary.*

### ENGINE WILL NOT START (ENGINE TURNS OVER)

1. Fouled or defective spark plug
   - *Check spark plug condition. Replace if necessary.*
2. Defective CPS
   - *Test CPS, refer to ELECTRONIC FUEL INJECTION (EFI) subsection.*
3. Defective trigger wheel
   - *Check. Refer to MAGNETO AND STARTER subsection.*
4. Defective ignition circuit
   - *Check fuses, ignition coils, wiring and connectors.*

### ENGINE HARD TO START

1. Faulty, fouled or worn out spark plug
   - *Check spark plug condition. Replace if necessary.*
2. Drowned engine
   - *Check engine temperature value using B.U.D.S.2 measurements page. If the temperature read is lower than the ambient temperature, CTS sensor may be defective or have a bad connection. Therefore, the ECM would erroneously set the engine in cold start mode and it could flood the spark plugs.*

### ENGINE MISFIRES, RUNS IRREGULARLY

1. Fouled, defective, worn spark plugs
   - *Check spark plug condition. Replace if necessary.*
2. Damaged trigger wheel/loose CPS
   - *Check. Refer to MAGNETO AND STARTER subsection.*
3. Defective ignition circuit
   - *Check fuses, ignition coils, wiring and connectors.*
4. Poor engine grounds
   - *Check ground condition, refer to POWER DISTRIBUTION AND GROUNDS subsection.*

### ENGINE CONTINUALLY BACKFIRES

1. Fouled, defective spark plugs
   - *Check spark plug condition. Replace if necessary.*
2. Damaged trigger wheel/defective or loose CPS
   - *Check, refer to MAGNETO AND STARTER and ELECTRONIC FUEL INJECTION (EFI) subsections.*

### ENGINE DETONATION OR PINGING

1. Faulty or disconnected knock sensor
   - *Check, refer to ELECTRONIC FUEL INJECTION (EFI) subsection.*

### ENGINE LACKS ACCELERATION OR POWER

1. Weak spark
   - *Check spark plugs, coils, wiring and connections.*

# PROCEDURES

## D.E.S.S. POST

### Testing Continuity of D.E.S.S. post

Refer to *RADIO FREQUENCY DIGITALLY ENCODED SECURITY SYSTEM (RF D.E.S.S.)* subsection.

### Replacing the D.E.S.S. post

| REQUIRED TOOL | |
|---|---|
| D.E.S.S. POST REMOVER (P/N 529 035 943) | |

## START/STOP BUTTON

### Start/stop Button Wire Identification

| FUNCTION | PIN |
|---|---|
| 12 volt input from F1 | 1 |
| 12 volt output to ECM-B pin D1 | 2 |

### Start/Stop Button Test with BUDS2

Connect to BUDS2 software. Refer to *COMMUNICATION TOOLS AND B.U.D.S.* subsection.

Select the **Measurements** and **ECM** tabs.

Press the vehicle's start button and look at the **Start Button** LED.

It should turn on, indicating the start signal reaches the ECM.

If it does not turn on, check the start button and wiring.

### Start/Stop Button Resistance Test

Disconnect start/stop button connector.

Using a multimeter, measure resistance as per the following table.

| POSITION | START BUTTON CONNECTOR PIN | | RESISTANCE |
|---|---|---|---|
| Switch released | 1 | 2 | Infinite (OL) |
| Switch depressed and held | | | 0.6 Ω max. |

Replace start/stop button if defective.

# IGNITION COILS AND SPARK PLUGS

## SERVICE TOOLS

| Description | Part Number | Page |
|---|---|---|
| ECM ADAPTER TOOL | 529 036 166 | 1 |
| FLUKE 115 MULTIMETER | 529 035 868 | 1 |

## GENERAL

**⚠ WARNING**

**Torque wrench tightening specifications must be strictly adhered to.**
**Locking devices when removed (e.g.: locking tabs, elastic stop nuts, self-locking fasteners, cotter pins, etc.) must be replaced.**

Hoses, cables or locking ties removed during a procedure must be reinstalled as per factory standards.

**⚠ WARNING**

**Never check for engine ignition spark from an open coil and/or spark plug as spark may cause potential fuel vapors to ignite. Always use an approved spark tester.**

The following tools are required to test most of the electrical parts.

| REQUIRED TOOL | |
|---|---|
| FLUKE 115 MULTIMETER (P/N 529 035 868) | |
| ECM ADAPTER TOOL (P/N 529 036 166) | |

## PROCEDURES

### IGNITION COILS

#### Ignition Coil Access

1. Disconnect the stator connector. Refer to *STATOR CONNECTOR ACCESS* in the *MAGNETO AND STARTER* subsection.
2. Remove the upper body module. Refer to *BODY* subsection.

#### Testing the Ignition Coil using BUDS2

1. Connect the vehicle to the BRP diagnostic software (BUDS2). Refer to *COMMUNICATION TOOLS* subsection.
2. In BUDS2, select:
   - **Functions** page
   - **ECM** button
   - **Activators** tab.
3. Energize the ignition coil to be tested.

You should hear the spark occurring. If in doubt, use a sealed **vapor proof** spark tester or an inductive spark tester as available from tool suppliers, to prevent a spark from occurring.

If there is no ignition at one or more coils, carry out *TESTING THE IGNITION COIL INPUT VOLTAGE*.

If spark is weak, try a new spark plug. If spark is still weak, try a new ignition coil.

NOTE: The voltage required to produce a spark in the combustion chamber is higher when the engine is running.

#### Testing the Ignition Coil Input Voltage

Make sure the fuel pump fuse and the relay are good before testing.

1. Disconnect the applicable ignition coil connector.
2. Install key on D.E.S.S. post.
3. Set emergency engine stop switch to RUN.
4. Briefly press on START/RER switch to wake up ECM.
5. Set the multimeter to Vdc.
6. Measure voltage.

***NOTICE*** **Test is valid only if ECM is active (gauge will be on).**

| TEST PROBES | | VOLTAGE |
|---|---|---|
| Ignition coil connector Pin 1 (ignition coil no. 1) | Battery ground | Battery voltage |
| Ignition coil connector Pin 1 (ignition coil no. 2) | | |
| Ignition coil connector Pin 1 (ignition coil no. 3) | | |

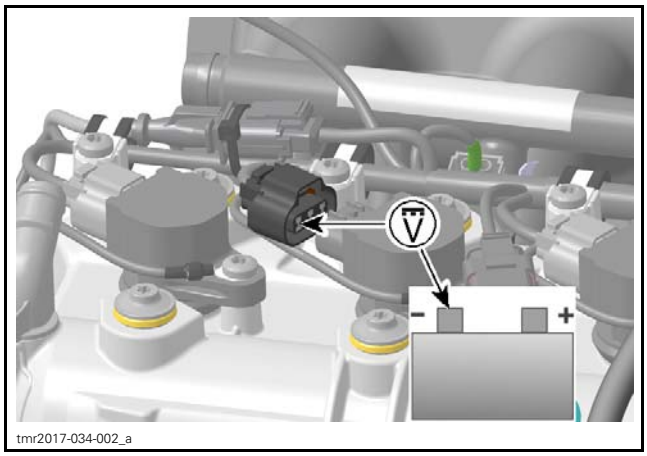

tmr2017-034-002_a

*IGNITION COIL INPUT VOLTAGE TEST*

If test succeeds, carry out a *TESTING THE IGNITION COIL RESISTANCE*.

If test fails, carry out a *TESTING THE IGNITION COIL POWER CIRCUIT CONTINUITY*.

## Testing the Ignition Coil Power Circuit Continuity

1. Remove key from D.E.S.S. post.
2. Ensure emergency engine stop switch is set to STOP.
3. Locate and remove the fuel pump fuse.
4. Set the multimeter to Ω.
5. Read resistance of the desired ignition coil circuit.

### *Without Electro-Mechanical Reverse*

| IGNITION COIL | PIN | FUSE BOX | MEASUREMENT |
|---|---|---|---|
| 1 | 1 | Terminal B4 | Close to 0 Ω |
| 2 | | | |
| 3 | | | |

### *With Electro-Mechanical Reverse*

| IGNITION COIL | PIN | FUSE BOX | MEASUREMENT |
|---|---|---|---|
| 1 | 1 | Terminal A3 | Close to 0 Ω |
| 2 | | | |
| 3 | | | |

If test fails at any ignition coil, test the following items separately and repair/replace wiring or terminals from fuse box to the applicable ignition coil. Refer to *WIRING DIAGRAM* for details.

– Wiring from fuse box to engine connector
– Wiring from engine connector to ignition coil.

## Testing the Ignition Coil Control Circuit Continuity

1. Connect the ECM connector A to the ECM adapter tool.
2. Disconnect ignition coil connector.
3. Test for continuity of circuit as per following table.

| IGNITION COIL | PIN | ECM ADAPTER | RESISTANCE |
|---|---|---|---|
| Cylinder 1 | 3 | M4 | Close to 0 Ω (continuity) |
| Cylinder 2 | | M2 | |
| Cylinder 3 | | M1 | |

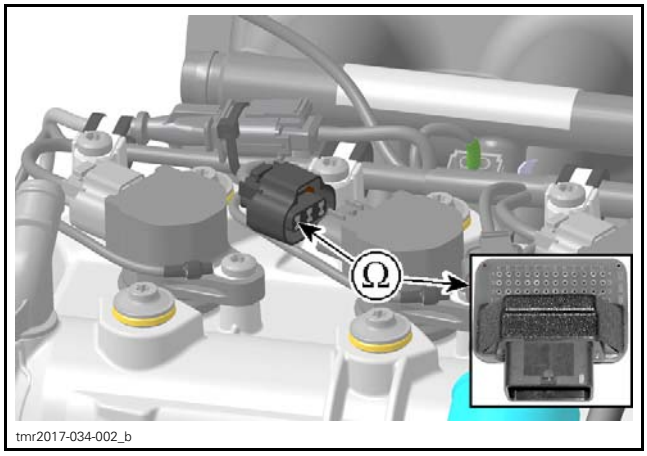

tmr2017-034-002_b

*IGNITION COIL CONTROL CIRCUIT TEST*

If test fails, repair the connector or replace the engine wiring harness.

## Testing the Ignition Coil Resistance

An ignition coil with a good resistance measurement can still be faulty. Current leakage can occur at high voltage levels which is not detectable with an ohmmeter. Replacing the ignition coil may be necessary as a test.

1. Remove ignition coil. Refer to *REMOVING THE IGNITION COIL* in this subsection.
2. Perform a visual inspection of the ignition coils. Check for corrosion, bent pins, loose or burnt contacts, and cracked or torn insulator.
3. Using a multimeter, test the resistance of primary winding.

*PRIMARY WINDING*

| CIRCUIT | TERMINAL | RESISTANCE @ 20°C (68°F) |
|---|---|---|
| Primary winding | 1 and 2 | 0.79 - 0.97 Ω |

**NOTICE** **The secondary winding on this type of ignition coil cannot be tested.**

If test fails, replace ignition coil.

If test succeeds, carry out *TESTING THE IGNITION COIL CONTROL CIRCUIT CONTINUITY*.

## Removing the Ignition Coil

1. Unplug CAPS (camshaft position sensor).

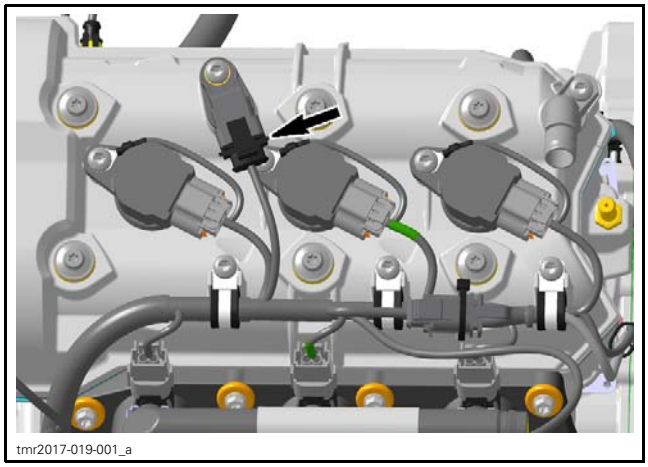


2. Remove:
   - Ignition coil retaining screws.
   - Ground connector.
3. Disconnect ignition coil connectors.

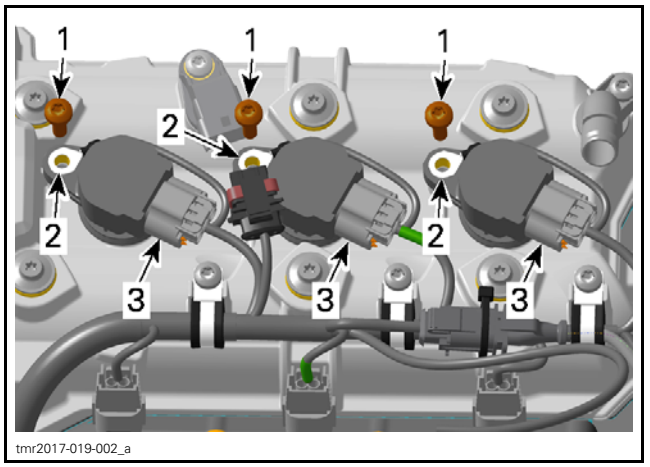


1. *Retaining screws*
2. *Ground connectors*
3. *Ignition coil connectors*

**NOTICE** **Do not pry on ignition coil with a tool.**

4. Remove ignition coils with gaskets from spark plug by rotating coil side to side as you pull up.

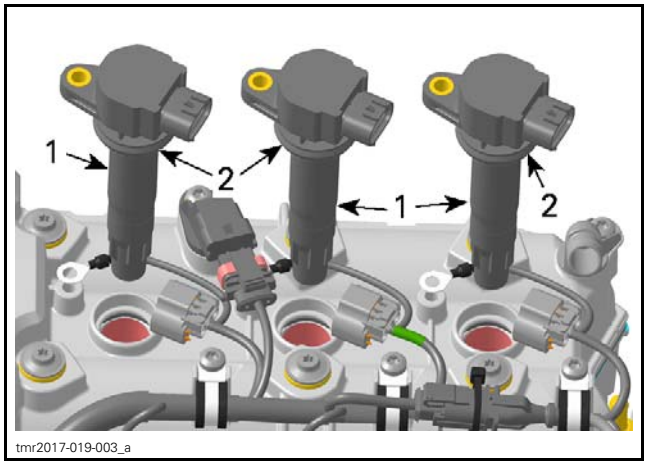


1. *Ignition coils*
2. *Gaskets*

## Installing the Ignition Coil

Install the ignition coil on the spark plug.

Align the retaining screw hole of the ignition coil with the threaded hole on the valve cover.

Push the ignition coil all the way down until it rests on the valve cover.

Install and tighten retaining screw.

| TIGHTENING TORQUE | |
|---|---|
| Ignition coil retaining screw | 9 N•m ± 1 N•m (80 lbf•**in** ± 9 lbf•**in**) |

Connect ignition coil connectors.

Reinstall all removed or disconnected components.

# SPARK PLUGS

## Removing the Spark Plugs

1. Remove ignition coils.
2. Using a spark plug socket, release the torque applied to the spark plug.

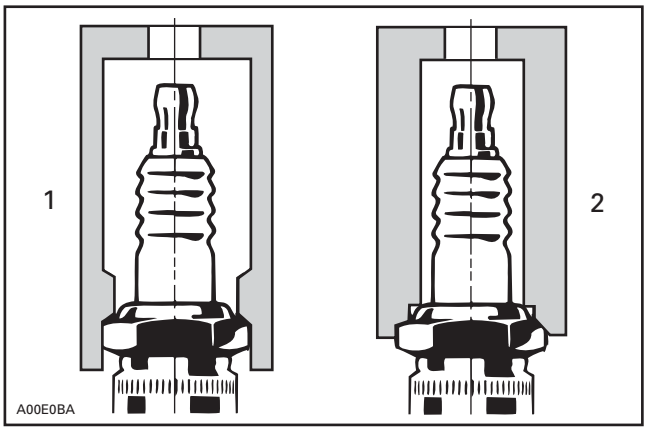


*1. Approved socket*
*2. Improper socket*

3. Clean the spark plug area with pressurized air.
4. Unscrew spark plug.
5. Use the ignition coil to take spark plug out of spark plug hole.

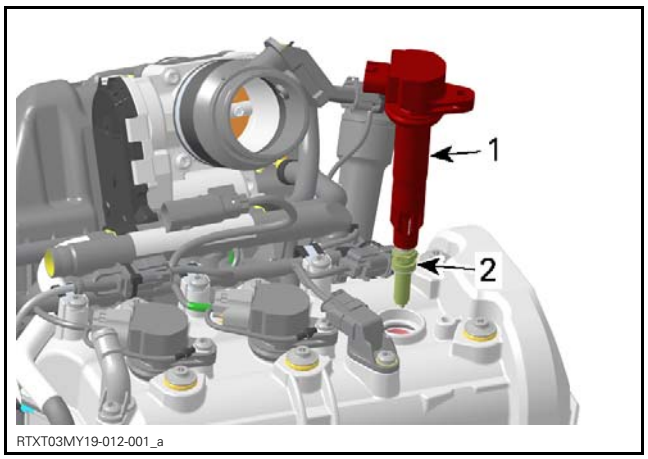


*1. Ignition coil*
*2. Spark plug*

## Troubleshooting a Fouled Spark Plug

Fouling of the spark plug is indicated by irregular running or misfiring of the engine, decreased engine speed due to misfiring, reduced performance, and increased fuel consumption.

Other possible causes are: use of an incorrect or bad fuel, defective ignition system, incorrect spark plug gap, loss of compression, or lubricating oil entering the combustion chamber.

The plug face of a fouled spark plug has either a wet or dry black carbon deposit. Such coatings form a conductive connection between the center electrode and the ground electrode.

## Spark Plug Analysis

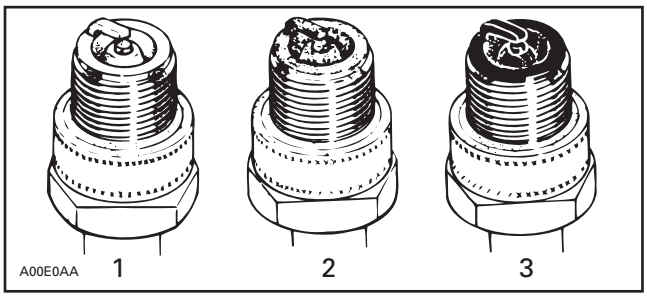


*TYPICAL*
*1. Overheated (light gray, white)*
*2. Normal (light brown, brown)*
*3. Fouled (black, wet or dry, dark deposits, gray, melted coating)*

The plug face reveals the condition of the engine, operating condition, method of driving and fuel mixture. For this reason it is advisable to inspect the spark plug at prescribed intervals, examining the plug face (i.e. the part of the plug projecting into the combustion chamber).

## Installing the Spark Plug

Prior to installation make sure that contact surfaces of the cylinder head and spark plug are free of grime.

1. Using a wire feeler gauge, set electrode gap as specified in *TECHNICAL SPECIFICATIONS*.
2. Hand screw spark plug into cylinder head, then tighten with a torque wrench and an appropriate socket.

| TIGHTENING TORQUE | |
|---|---|
| Spark plug | 13 N•m ± 1 N•m (115 lbf•**in** ± 9 lbf•**in**) |

3. Install ignition coil.

# CHARGING SYSTEM (ACE)

## SERVICE TOOLS – OTHER SUPPLIER


| Description | Part Number | Page |
|---|---|---|
| EXTECH INDUCTIVE AMMETER | 380941 | 3 |
| NAPA ULTRA PRO BATTERY LOAD TESTER | 95260 | 2–4 |


## GENERAL

### SYSTEM DESCRIPTION

The purpose of the charging system is to keep the battery at a full state of charge.

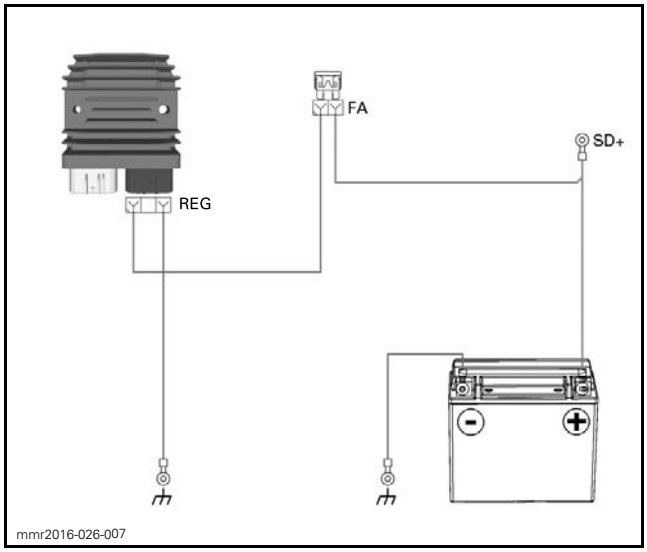

mmr2016-026-007

### Magneto

The magneto is the primary source of electrical energy. It transforms a magnetic field into electric current (AC).

The alternating current is regulated and transformed into direct current (DC) by the voltage regulator, and normally powers all of the vehicle's systems and accessories.

The magneto has a 3 phase delta wound stator.

To test magneto, refer to *MAGNETO AND STARTER* subsection.

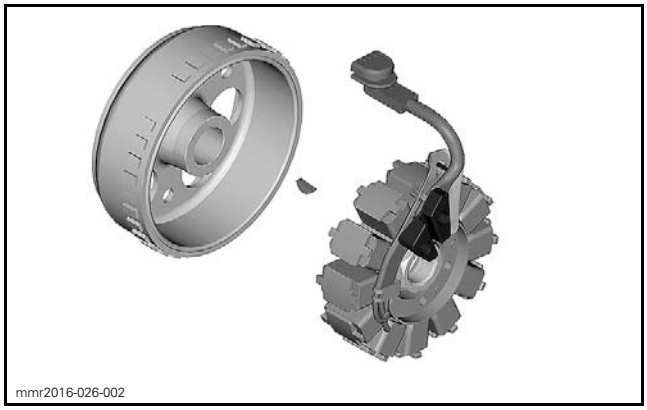
mmr2016-026-002

### Voltage Regulator

The regulator receives AC current from the magneto and transforms it into direct current (DC).

The voltage regulator limits voltage to prevent any damage to electrical components.

| CONDITION | VOLTAGE Vdc |
|---|---|
| Idle | Minimum 12.5 |
| Fast idle | Target 14.5 |
| All | Maximum 15 |

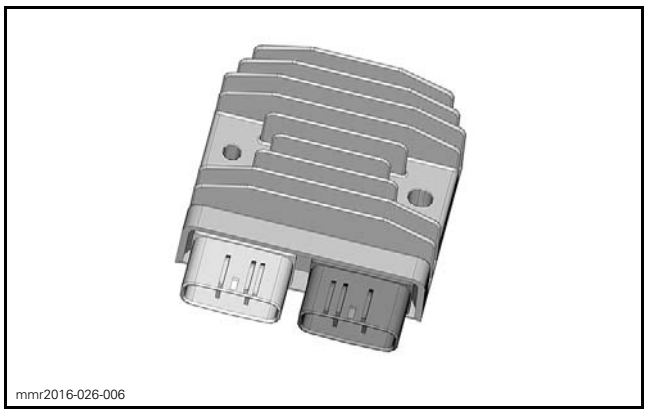
mmr2016-026-006

## Battery

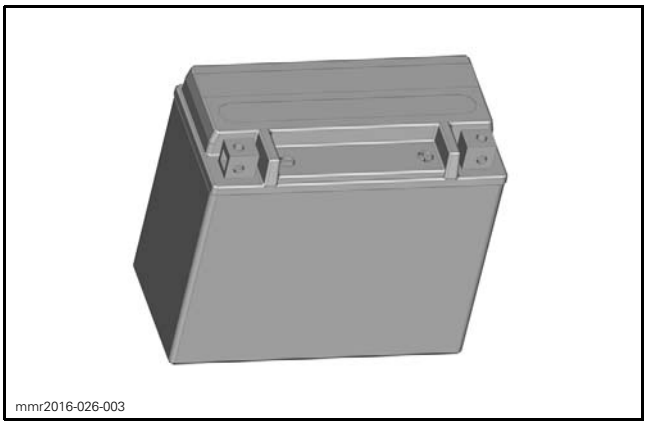
mmr2016-026-003

The battery supplies DC power to every electrical and electronic system in the vehicle as well as all accessories. At low engine RPM operation and high current load conditions, it supplements the magneto's output as required, and helps to maintain a steady system voltage.

# TROUBLESHOOTING

It is good practice to check for fault codes using the BUDS2 software as a first troubleshooting step. Refer to *DIAGNOSTIC SYSTEM AND FAULT CODES* subsection.

### BATTERY REGULARLY DISCHARGED OR WEAK

1. Loose or corroded battery cable connections.
   - *Tighten or repair battery cable connections.*
2. Worn or defective battery.
   - *Charge and test battery.*
3. Defective magneto stator.
   - *Test stator, refer to MAGNETO AND STARTER SYSTEM subsection.*
4. Defective regulator/rectifier.
   - *Test system voltage.*
5. Damaged magneto rotor or Woodruff key.
   - *Replace magneto rotor or Woodruff key, refer to MAGNETO AND STARTER SYSTEM subsection.*

# PROCEDURES

Ensure battery is fully charged.

Refer to *WIRING HARNESS AND CONNECTORS* subsection for harness layout and connector locations on vehicle.

Refer to appropriate *WIRING DIAGRAM* for additional information.

The magneto is covered in *MAGNETO AND STARTER* subsection.

**⚠ WARNING**

**Ensure vehicle cannot move when performing charging system tests with the engine running.**

## BATTERY LOAD TEST

1. Connect a battery load tester such as the NAPA ULTRA PRO BATTERY LOAD TESTER (P/N 95260).
2. Ensure proper test conditions.

| TEST CONDITIONS | |
|---|---|
| Initial battery voltage‡ | Above 12.5 Vdc |
| Engine | OFF |
| Load | 3 times the amp-hour (AH) rating |
| Time | 15 seconds |
| ‡ Required for accurate testing | |

| SPECIFICATION | |
|---|---|
| Battery | Above 9.6 Vdc |

If battery voltage drops below specification during test, replace battery and perform a *CHARGING SYSTEM LOAD TEST*.

## CHARGING SYSTEM LOAD TEST

NOTE: Ammeter location is important. Only clamp over positive wire near regulator.

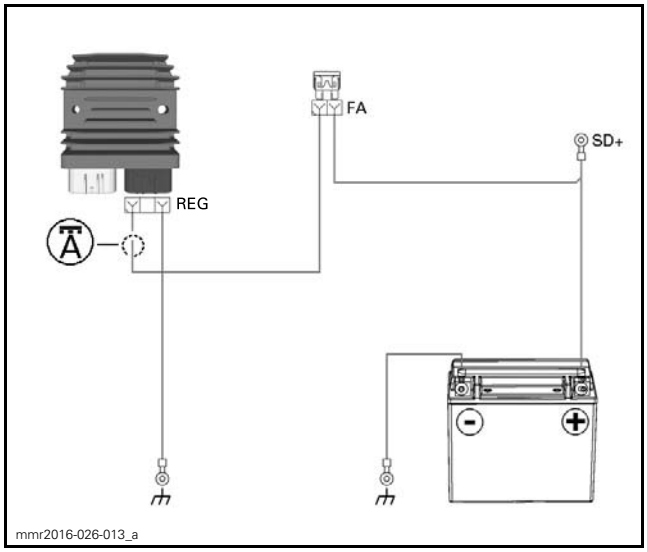

mmr2016-026-013_a

1. Connect a battery load tester such as the NAPA ULTRA PRO BATTERY LOAD TESTER (P/N 95260).

2. Start vehicle and read voltage on tester.

| SPECIFICATION | |
|---|---|
| Voltage | 12.5 - 15 Vdc |

If voltage is **above** specification, replace regulator and continue *CHARGING SYSTEM LOAD TEST*.

3. Connect an AC/DC clamp ammeter such as EXTECH INDUCTIVE AMMETER (P/N 380941) around REG-1 wire.
4. Ensure proper test conditions.

| TEST CONDITIONS | |
|---|---|
| Battery voltage at idle‡ | Above 12.6 Vdc |
| Engine | Increase to 4000 RPM |
| Load | As required to decrease battery voltage to 12 Vdc |
| ‡ Required for accurate testing | |

5. Read amperage on ammeter.

| MAGNETO | SPECIFICATION |
|---|---|
| 500 W | 41 ± 5 Amps |

NOTE: With a fully charged battery and no electrical loads, specification is less than 7A.

If amperage or voltage is not within specification, verify magneto and wires. Refer to *MAGNETO AND STARTER* subsection. Replace:

– Voltage regulator if magneto test is within specifications.
– Magneto if magneto test is not within specifications.

# VOLTAGE REGULATOR (REG)

## Voltage Regulator Location

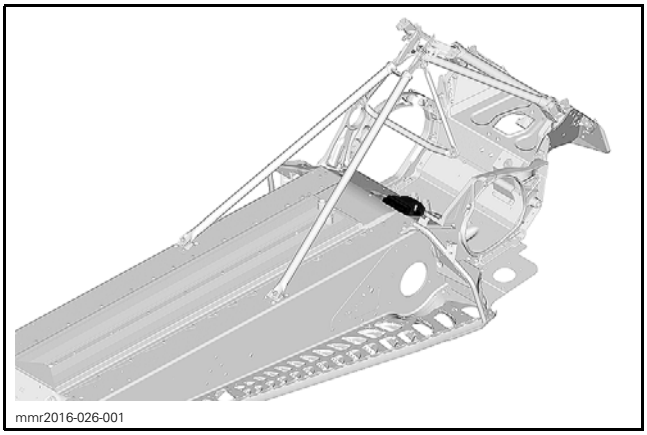
mmr2016-026-001

## Voltage Regulator Continuity Test

Due to internal circuitry, there is no static test available.

## Voltage Regulator Power Test

1. Check voltage at REG-1.

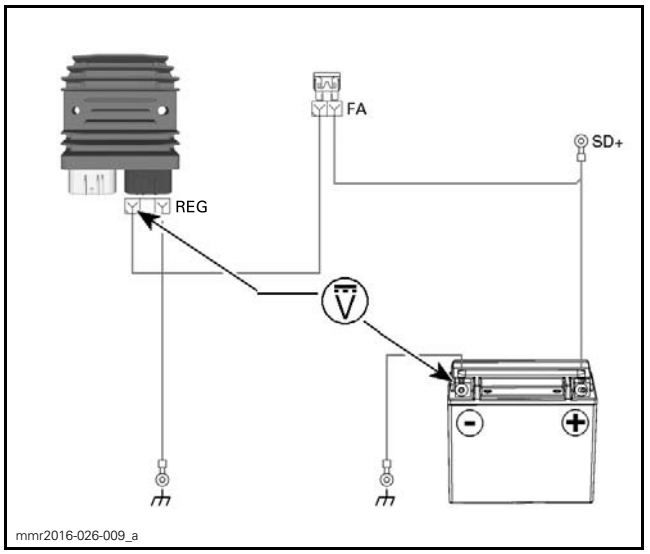

mmr2016-026-009_a

| TEST CONDITIONS | |
|---|---|
| REG-1 | Hot at all times |

| BACKPROBE | PROBE | SPECIFICATION |
|---|---|---|
| REG-1 | BAT (-) | Battery voltage |

2. Connect a battery load tester such as the NAPA ULTRA PRO BATTERY LOAD TESTER (P/N 95260).
3. Start vehicle.
4. Ensure proper test conditions.

| TEST CONDITIONS | |
|---|---|
| Battery voltage at idle‡ | Above 12.6 Vdc |
| Engine | Increase to 4000 RPM |
| Load | As required to decrease battery voltage to 12 Vdc |
| ‡ Required for accurate testing | |

5. Measure voltage drop.

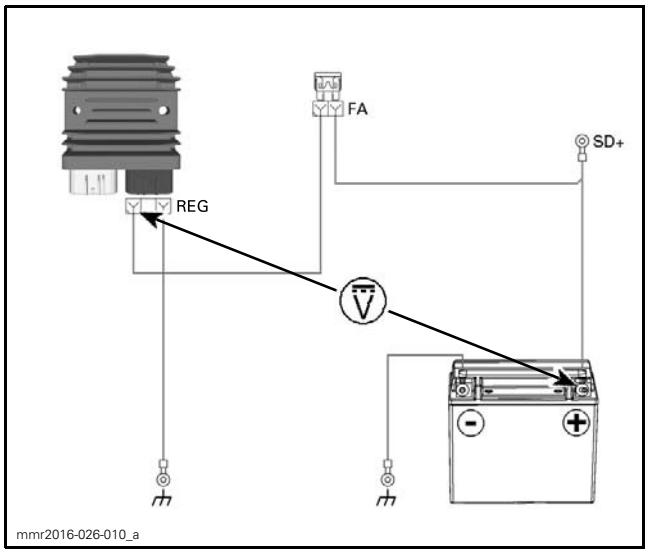


| BACKPROBE | PROBE | SPECIFICATION |
|---|---|---|
| REG-1 | BAT1 (+) | Under 0.2 Vdc |

If voltage drop is above specification, locate and repair damaged connector/wire.

### Voltage Regulator Ground Test

1. Check ground at REG-3.

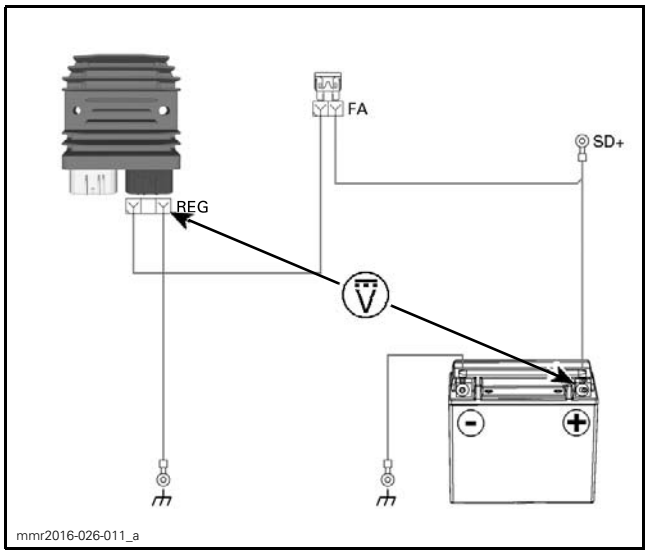


| TEST CONDITIONS | |
|---|---|
| REG-3 | Permanent ground |

| BACKPROBE | PROBE | SPECIFICATION |
|---|---|---|
| REG-3 | BAT (+) | Battery voltage |

2. Connect a battery load tester such as the NAPA ULTRA PRO BATTERY LOAD TESTER (P/N 95260).
3. Start vehicle.
4. Ensure proper test conditions.

| TEST CONDITIONS | |
|---|---|
| Battery voltage at idle‡ | Above 12.6 Vdc |
| Engine | Increase to 4000 RPM |
| Load | As required to decrease battery voltage to 12 Vdc |
| ‡ Required for accurate testing | |

5. Measure voltage drop.

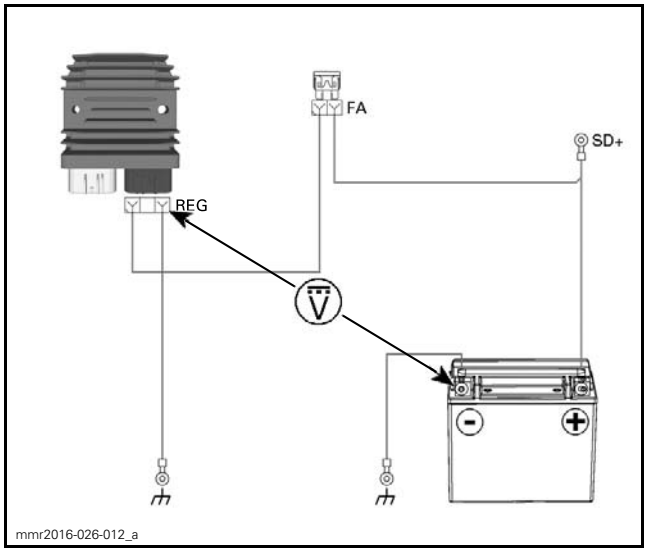


| BACKPROBE | PROBE | SPECIFICATION |
|---|---|---|
| REG-3 | BAT (-) | Under 0.4 Vdc |

If voltage drop is above specification, locate and repair damaged connector/wire.

## BATTERY

### Battery Information

These vehicles are equipped with a VRLA battery (Valve Regulated Lead Acid). It is a maintenance-free type battery.

Refer to *BATTERY ACTIVATION, CHARGING, AND MAINTENANCE* bulletin for activation, charging, and maintenance procedures.

## Battery Removal

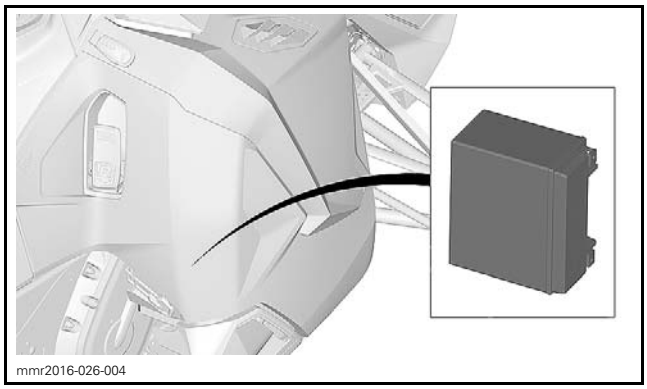
mmr2016-026-004

*TYPICAL*

1. Open RH side panel.
2. Disconnect BLACK (-) cable first, then the RED (+) cable.

**NOTICE** Always respect this order for removal; disconnect BLACK (-) cable first.

3. Remove battery holder.

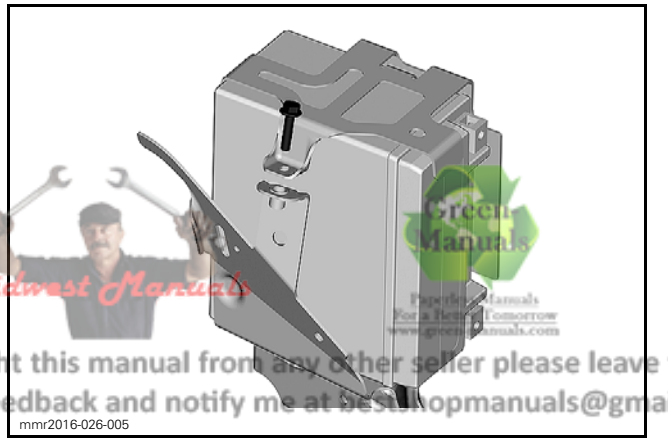
mmr2016-026-005

Midwest Manuals
Green Manuals
If you bought this manual from any other seller please leave them NEGATIVE feedback and notify me at bestshopmanuals@gmail.com

4. Remove battery.

## Battery Installation

**NOTICE** Always connect RED (+) cable first then BLACK (-) cable.

Installation is the reverse of removal procedure, however pay attention to the following.

| TIGHTENING TORQUE | |
|---|---|
| Battery holder screw | 7 N•m ± 1 N•m (62 lbf•**in** ± 9 lbf•**in**) |

# CHARGING SYSTEM

## GENERAL

### SYSTEM DESCRIPTION

The purpose of the charging system is to keep the battery at a full state of charge.

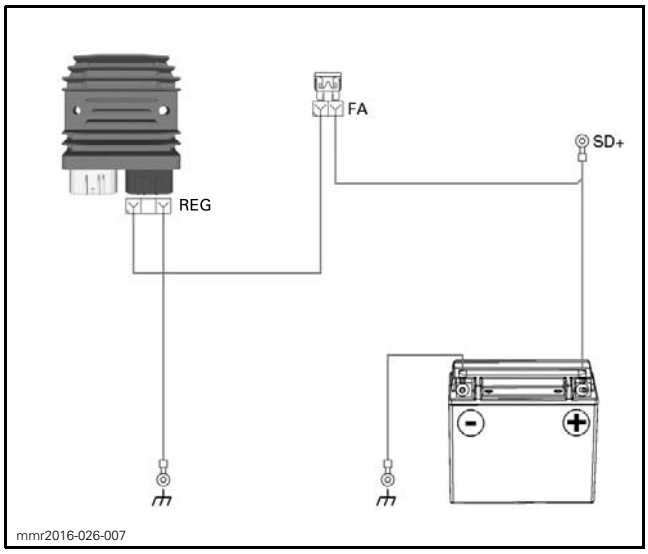

mmr2016-026-007

### Magneto

The magneto is the primary source of electrical energy. It transforms a magnetic field into electric current (AC).

The alternating current is regulated and transformed into direct current (DC) by the voltage regulator, and normally powers all of the vehicle's systems and accessories.

The magneto has a 3 phase delta wound stator.

To test magneto, refer to *MAGNETO AND STARTER* subsection.

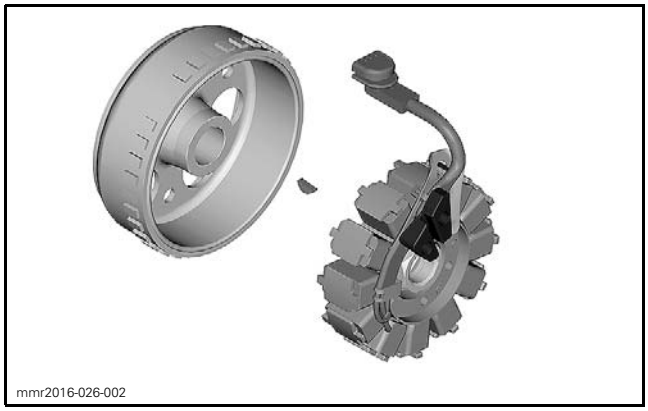
mmr2016-026-002

### Voltage Regulator

The regulator receives AC current from the magneto and transforms it into direct current (DC).

The voltage regulator limits voltage to prevent any damage to electrical components.

| CONDITION | VOLTAGE Vdc |
|---|---|
| Idle | Minimum 12.5 |
| Fast idle | Target 14.5 |
| All | Maximum 15 |

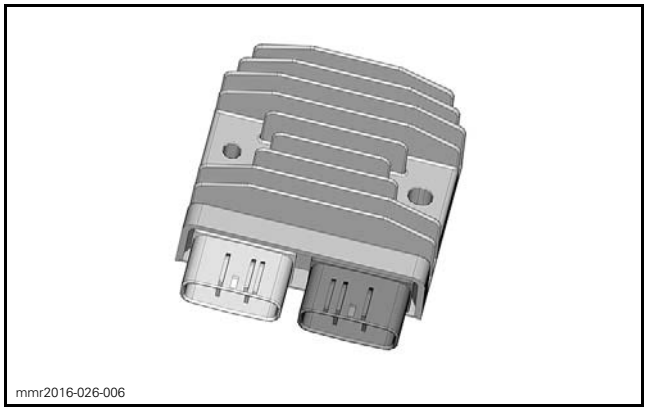
mmr2016-026-006

### Battery

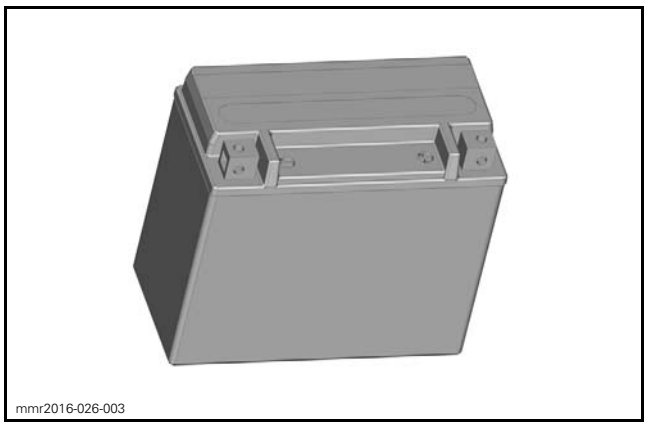
mmr2016-026-003

The battery supplies DC power to every electrical and electronic system in the vehicle as well as all accessories. At low engine RPM operation and high current load conditions, it supplements the magneto's output as required, and helps to maintain a steady system voltage.

# TROUBLESHOOTING

It is good practice to check for fault codes using the BUDS2 software as a first troubleshooting step. Refer to *DIAGNOSTIC SYSTEM AND FAULT CODES* subsection.

## BATTERY REGULARLY DISCHARGED OR WEAK

1. Loose or corroded battery cable connections.
   - *Tighten or repair battery cable connections.*
2. Worn or defective battery.
   - *Charge and test battery.*
3. Defective magneto stator.
   - *Test stator, refer to MAGNETO AND STARTER SYSTEM subsection.*
4. Defective regulator/rectifier.
   - *Test system voltage.*
5. Damaged magneto rotor or Woodruff key.
   - *Replace magneto rotor or Woodruff key, refer to MAGNETO AND STARTER SYSTEM subsection.*

# PROCEDURES

Ensure battery is fully charged.

Refer to *WIRING HARNESS AND CONNECTORS* subsection for harness layout and connector locations on vehicle.

Refer to appropriate *WIRING DIAGRAM* for additional information.

The magneto is covered in *MAGNETO AND STARTER* subsection.

**⚠ WARNING**

**Ensure vehicle cannot move when performing charging system tests with the engine running.**

## BATTERY LOAD TEST

1. Connect a battery load tester.
2. Ensure proper test conditions.

| TEST CONDITIONS | |
|---|---|
| Initial battery voltage‡ | Above 12.5 Vdc |
| Engine | OFF |
| Load | 3 times the amp-hour (AH) rating |
| Time | 15 seconds |
| ‡ Required for accurate testing | |

| SPECIFICATION | |
|---|---|
| Battery | Above 9.6 Vdc |

If battery voltage drops below specification during test, replace battery and perform a *CHARGING SYSTEM LOAD TEST*.

## CHARGING SYSTEM LOAD TEST

NOTE: Ammeter location is important. Only clamp over positive wire near regulator.

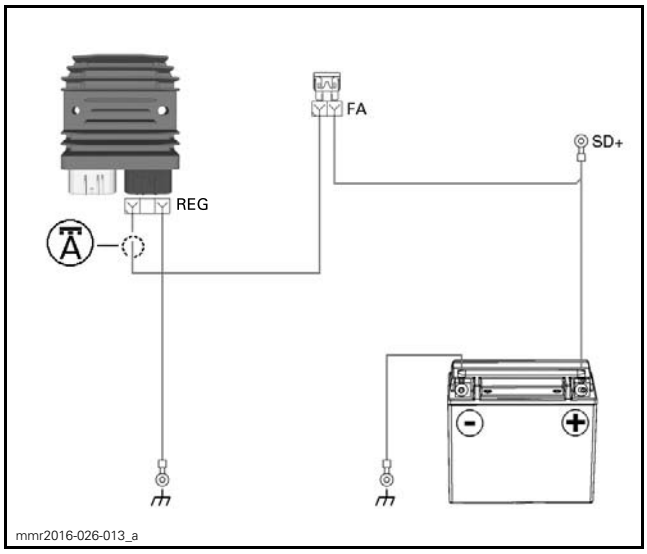


1. Connect a battery load tester.
2. Start vehicle and read voltage on tester.

| SPECIFICATION | |
|---|---|
| Voltage | 12.5 - 15 Vdc |

If voltage is **above** specification, replace regulator and continue with next steps.

3. Connect an AC/DC clamp ammeter around REG-1 wire.
4. Ensure proper test conditions.

| TEST CONDITIONS | |
|---|---|
| Battery voltage at idle‡ | Above 12.6 Vdc |
| Engine | Increase to 4000 RPM |
| Load | As required to decrease battery voltage to 12 Vdc |
| ‡ Required for accurate testing | |

5. Read amperage on ammeter.

| MAGNETO | SPECIFICATION |
|---|---|
| 500 W | 41 ± 5 Amps |

NOTE: With a fully charged battery and no electrical loads, specification is less than 7A.

If amperage or voltage is not within specification, verify magneto and wires. Refer to *MAGNETO AND STARTER* subsection. Replace:

– Voltage regulator if magneto test is within specifications.
– Magneto if magneto test is not within specifications.

# VOLTAGE REGULATOR (REG)

## Voltage Regulator Location

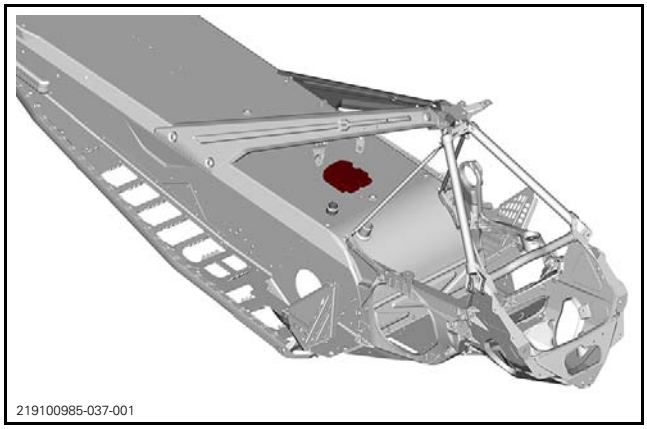


## Testing the Voltage Regulator Continuity

Due to internal circuitry, there is no static test available.

## Testing the Voltage Regulator Power

1. Check voltage at REG-1.

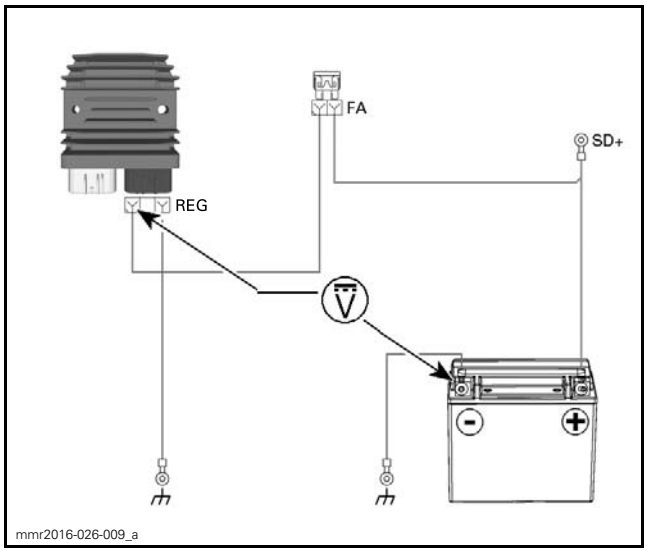


| TEST CONDITIONS | |
|---|---|
| REG-1 | Hot at all times |

| BACKPROBE | PROBE | SPECIFICATION |
|---|---|---|
| REG-1 | BAT (-) | Battery voltage |

2. Connect a battery load tester.
3. Start vehicle.
4. Ensure proper test conditions.

| TEST CONDITIONS | |
|---|---|
| Battery voltage at idle‡ | Above 12.6 Vdc |
| Engine | Increase to 4000 RPM |
| Load | As required to decrease battery voltage to 12 Vdc |
| ‡ Required for accurate testing | |

5. Measure voltage drop.

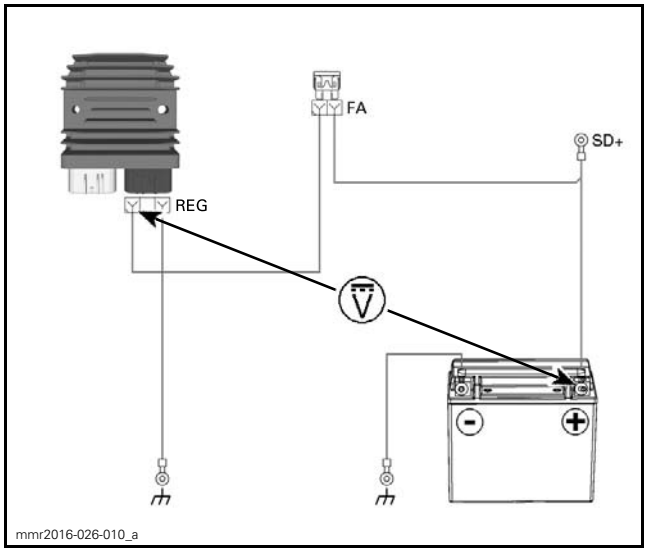

| BACKPROBE | PROBE | SPECIFICATION |
|---|---|---|
| REG-1 | BAT1 (+) | Under 0.2 Vdc |

If voltage drop is above specification, locate and repair damaged connector/wire.

### Testing the Voltage Regulator Ground

1. Check ground at REG-3.

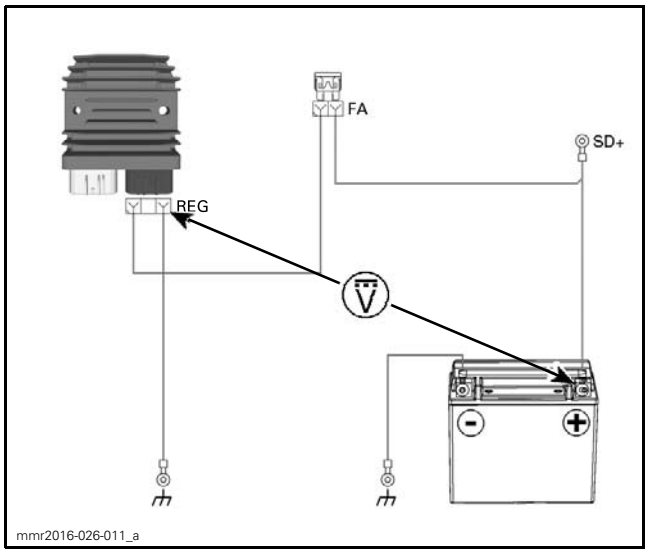


| TEST CONDITIONS | |
|---|---|
| REG-3 | Permanent ground |

| BACKPROBE | PROBE | SPECIFICATION |
|---|---|---|
| REG-3 | BAT (+) | Battery voltage |

2. Connect a battery load tester.
3. Start vehicle.
4. Ensure proper test conditions.

| TEST CONDITIONS | |
|---|---|
| Battery voltage at idle‡ | Above 12.6 Vdc |
| Engine | Increase to 4000 RPM |
| Load | As required to decrease battery voltage to 12 Vdc |
| ‡ Required for accurate testing | |

5. Measure voltage drop.

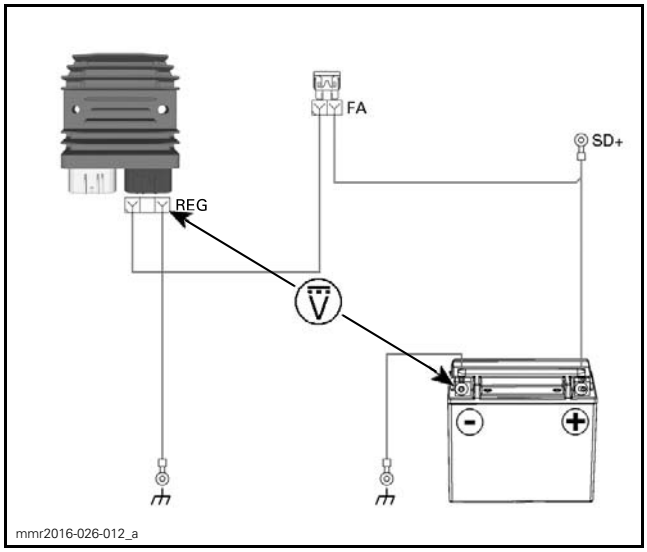


| BACKPROBE | PROBE | SPECIFICATION |
|---|---|---|
| REG-3 | BAT (-) | Under 0.4 Vdc |

If voltage drop is above specification, locate and repair damaged connector/wire.

## BATTERY

### Battery Information

These vehicles are equipped with a VRLA battery (Valve Regulated Lead Acid). It is a maintenance-free type battery.

Refer to *BATTERY ACTIVATION, CHARGING, AND MAINTENANCE* article for procedures.

### Removing the Battery

1. Remove seat.
2. Remove battery cover.

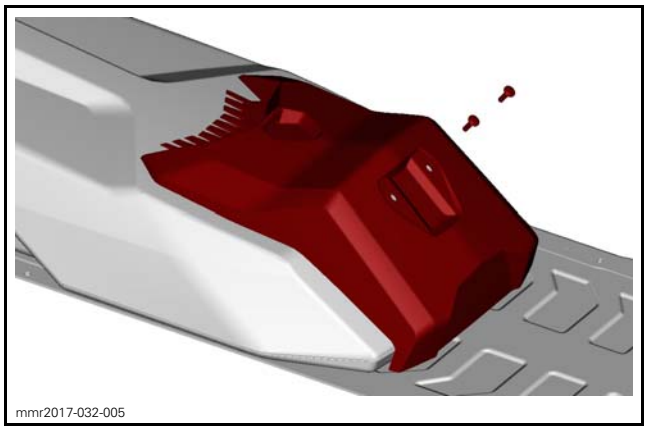


3. Disconnect negative before positive terminal.

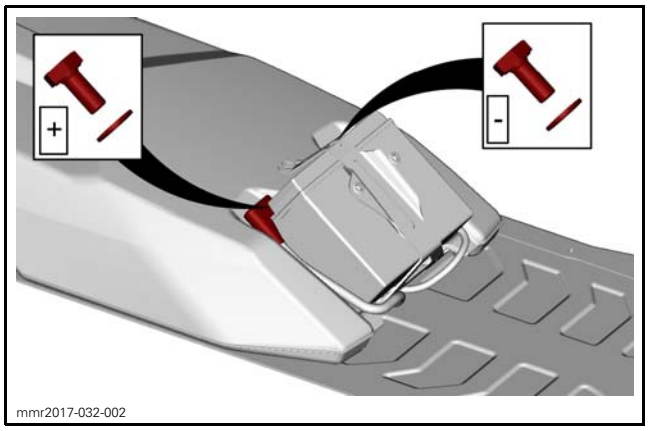

mmr2017-032-002

4. Remove battery hold down bracket.

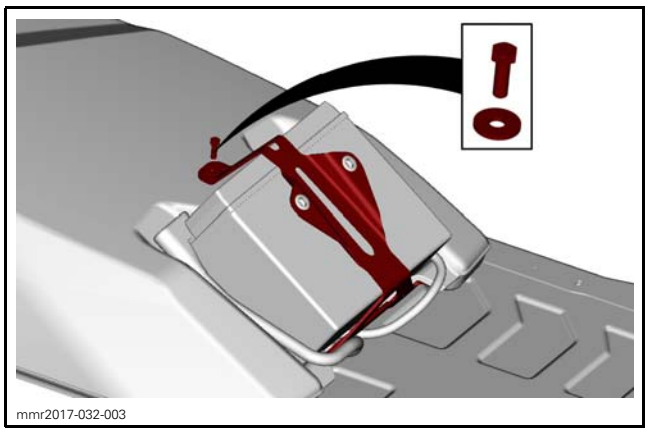
mmr2017-032-003

5. Remove battery.

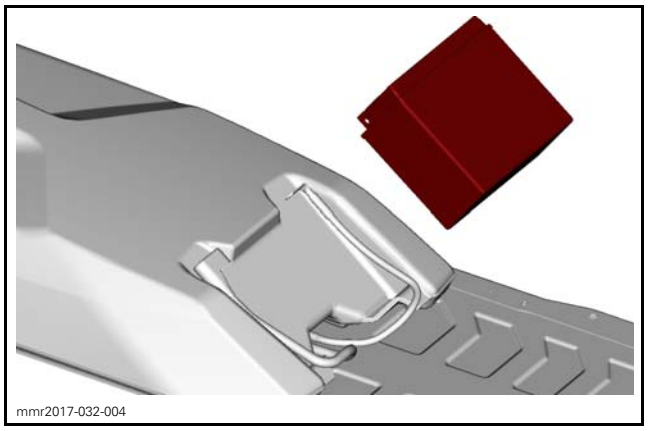
mmr2017-032-004

## Installing the Battery

***NOTICE*** **Always connect RED (+) cable first then BLACK (-) cable.**

The installation is the reverse of the removal procedure. However, pay attention to the following.

| TIGHTENING TORQUE | |
|---|---|
| Battery terminals (positive and negative) | 10 N•m ± 2 N•m (89 lbf•**in** ± 18 lbf•**in**) |
| Battery hold down bracket | 5 N•m ± 0.5 N•m (44 lbf•**in** ± 4 lbf•**in**) |
| Battery cover retaining screws | 7 N•m ± 1 N•m (62 lbf•**in** ± 9 lbf•**in**) |

# STARTING SYSTEM

## SERVICE TOOLS

| Description | Part Number | Page |
|---|---|---|
| POWER INTERFACE | 515 177 223 | 121 |
| T-HARNESS | 529 035 869 | 121 |

Wiring diagrams are found in the *WIRING DIAGRAM BOOKLET*.

For electrical tests, use the POWER INTERFACE (P/N 515 177 223) instead of the T-HARNESS (P/N 529 035 869).

# GENERAL

## STARTING SYSTEM BASICS

### Conditions for Engine Cranking

– Emergency engine stop switch set to RUN
– Tether cord cap installed
– START/RER button depressed.

### Starting System Operation

1. The START/RER switch:
   1.1 Supplies starter solenoid
   1.2 Sends a 12-volt signal to the ECM
2. ECM grounds starter solenoid pin B.
3. Starter solenoid contacts close and supply the starter motor with battery power.

In case of starter malfunction, first ensure the problem is not related to an engine mechanical component.

# TROUBLESHOOTING

## TROUBLESHOOTING TIPS

It is good practice to check for fault codes using B.U.D.S. as a first troubleshooting step. Refer to *COMMUNICATION TOOLS AND B.U.D.S.* subsection.

Refer to *POWER DISTRIBUTION AND GROUNDS* for relay information.

Always refer to the *WIRING DIAGRAM* when troubleshooting an electrical circuit.

**NOTICE** Never force a multimeter probe into an electrical terminal.

# PROCEDURES

## FUSES

### Fuse Inspection

Fuses are located behind the RH side panel above battery.

Check Start/RER (FB) fuse condition and replace as necessary.

NOTE: When a burnt fuse is found, always identify the cause before replacing it.

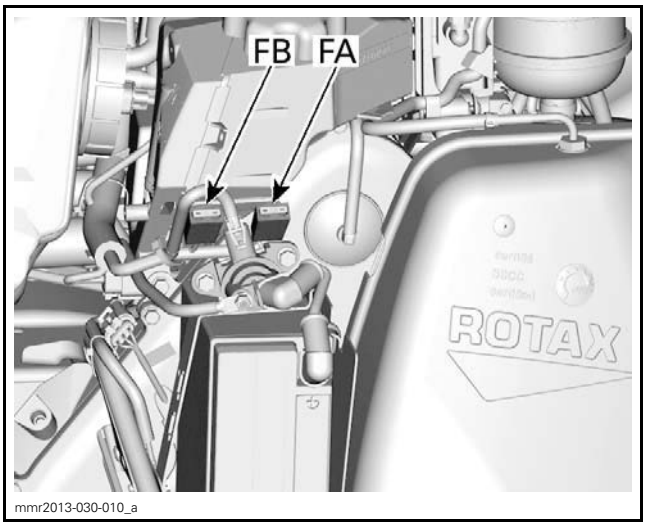


1. *FA: Battery charging fuse*
2. *FB: START/RER fuse*

## ELECTRIC STARTER

### Starter Operation Test

1. Apply parking brake.
2. Disconnect injector connectors to prevent engine from starting.
3. Crank engine.
4. The starter should rotate powerfully and regularly.
5. If it does not, try the following:
   5.1 Set emergency engine stop switch to STOP.

5.2 Remove tether cord cap from the engine cut-off switch.

5.3 Manually rotate the engine using the drive pulley.

5.4 If the engine cannot be rotated, check engine.

**⚠ WARNING**

**When manually rotating engine, the emergency engine stop switch MUST BE set to STOP and tether cord cap MUST NOT be installed or severe injury may occur.**

5.5 If the engine can be rotated, carry out a *STARTER INPUT VOLTAGE TEST*.

## Starter Input Voltage Test

1. Set multimeter to Vdc.
2. Disconnect injector connectors to prevent engine from starting.
3. Measure voltage as per table while cranking engine.

NOTE: Battery voltage will drop and fluctuate with starter cranking load.

| STARTER INPUT VOLTAGE TEST | | |
|---|---|---|
| TEST PROBES | | RESULT (WHILE PRESSING START/RER BUTTON) |
| Starter terminal | Battery negative post | Battery voltage |

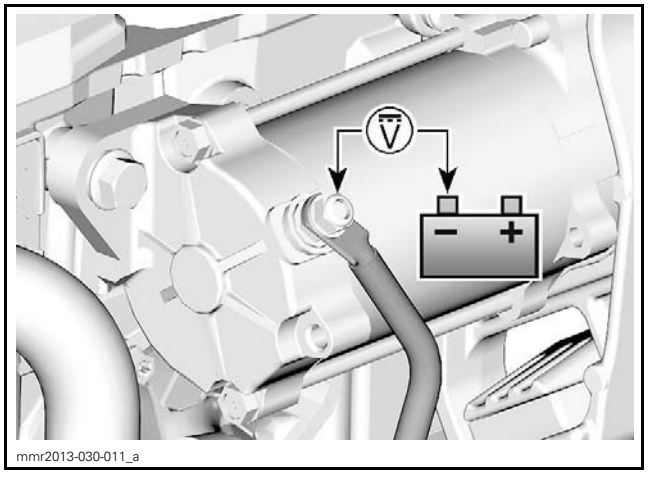

mmr2013-030-011_a

| TEST RESULTS | |
|---|---|
| READING | WHAT TO DO |
| No voltage | Check Start/RER switch using B.U.D.S. |
| Voltage is low | Carry out a *STARTER CABLE VOLTAGE DROP TEST*. |
| Voltage is good | Carry out a *GROUND CIRCUIT VOLTAGE DROP TEST*. |

## Starter Cable Voltage Drop Test

This test confirms if there is parasitic resistance in the cable, solenoid or connections.

1. Set multimeter to Vdc.
2. Connect multimeter probes to the starter terminal and battery positive post.
3. Disconnect injector connectors to prevent engine from starting.
4. Measure voltage drop as follows while cranking engine.

| STARTER CABLE VOLTAGE DROP TEST | | |
|---|---|---|
| PROBES | | RESULT (WHILE STARTING) |
| Battery positive post | Starter terminal | 1 Vdc maximum |

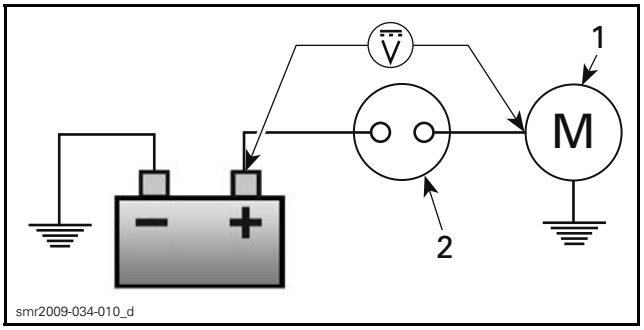

smr2009-034-010_d

*1. Starter*
*2. Solenoid*

5. If voltage exceeds the specification, test voltage drop between the following points using the same method to determine what part of the circuit is at fault:

5.1 Battery positive post and starter solenoid post (cable from battery).

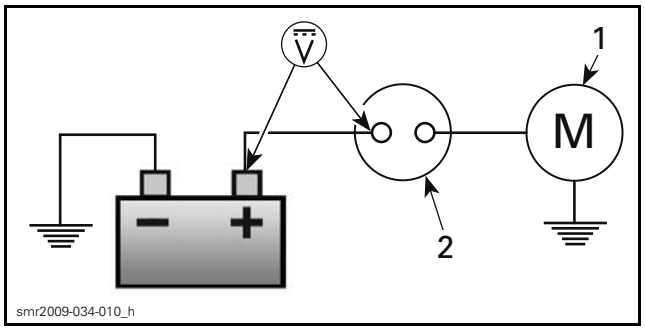


*1. Starter*
*2. Solenoid*

5.2 Both starter solenoid posts.

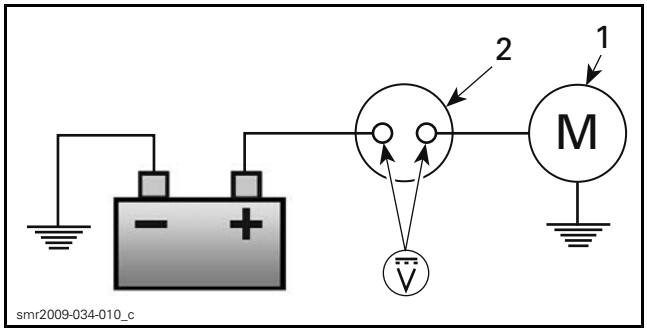


5.3 Starter solenoid post (to starter) and starter terminal.

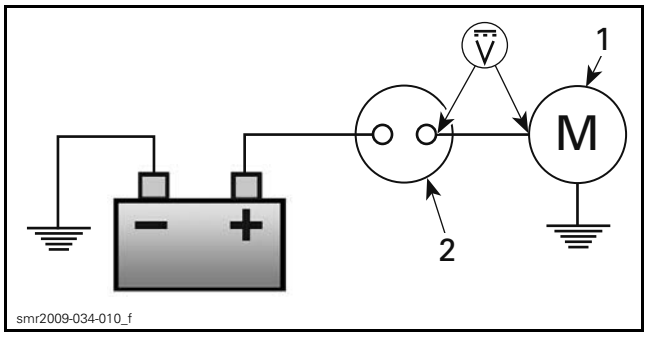


*1. Starter*
*2. Solenoid*

5.4 Replace cable(s) or solenoid if necessary.

## Starter Ground Circuit Voltage Drop Test

This test confirms if there is parasitic resistance in the ground cables or connections.

1. Set multimeter to Vdc.
2. Connect multimeter probes to the starter housing and battery negative post.
3. Disconnect injector connectors to prevent engine from starting.
4. Measure voltage drop as follows while cranking engine.

| STARTER GROUND CIRCUIT VOLTAGE DROP TEST | | |
|---|---|---|
| PROBES | | RESULT (WHILE STARTING) |
| Starter housing | Battery negative post | 0.8 Vdc maximum |

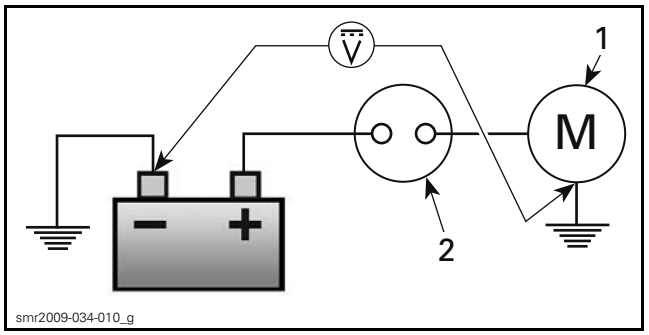


*1. Starter*
*2. Solenoid*

If voltage exceeds the specification, check ground cables and connections:

– from battery to chassis
– from engine support to chassis

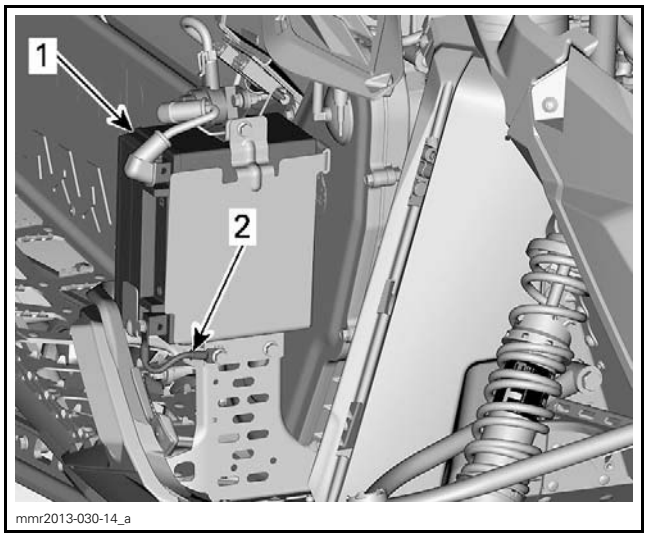


*RH SIDE, VIEWED FROM FRONT*
*1. Battery*
*2. Battery ground*

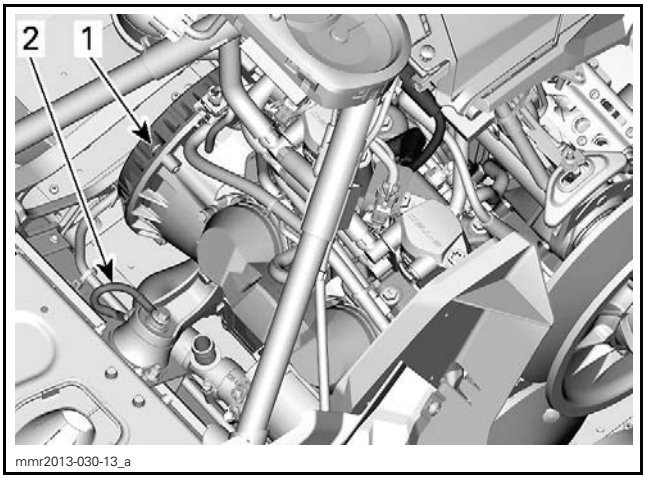


*LH SIDE, VIEWED FROM FRONT*
1. *Rewind starter*
2. *Engine ground*

If voltage is as per specification, test starter.

# START/RER SWITCH

## Start/RER Switch Test with B.U.D.S.

1. Connect the vehicle diagnostic connector to a computer with the appropriate version of the B.U.D.S. software. Refer to *COMMUNICATION TOOLS AND B.U.D.S.* subsection.
2. Select the **Read Data** button.
3. Select the **Monitoring** and **ECM** tabs.
4. Set emergency engine stop switch to RUN and install tether cord cap on engine cut-off switch.
5. Press the start/RER button and look at the **Start/RER Button** indicator.

1. *Should turn ON*

| TEST RESULTS | |
|---|---|
| START/RER BUTTON INDICATOR IN B.U.D.S. | WHAT TO DO |
| Comes ON while start/RER button is pressed in | The starting system input side is functioning normally (start button, ECM, wiring and connections). Make sure engine stop switch tests good (see *IGNITION SYSTEM* subsection), then proceed with *STARTER SOLENOID TESTS*. |
| Does not come ON while start/RER button is pressed in | Check for an open circuit or defective start/RER switch. Refer to *WIRING DIAGRAM*. |

# STARTER SOLENOID

## Starter Solenoid Input Voltage Test

1. Disconnect connector from solenoid and test voltage as follows.
2. Set emergency engine stop switch to RUN and install tether cord cap on engine cut-off switch.
3. Read voltage while start/RER button is pressed in.

| STARTER SOLENOID INPUT VOLTAGE TEST | | |
|---|---|---|
| TEST PROBES | | RESULT (WHILE PRESSING START/RER BUTTON) |
| Terminal "A" (RD/GN) | Battery negative post | Battery voltage |

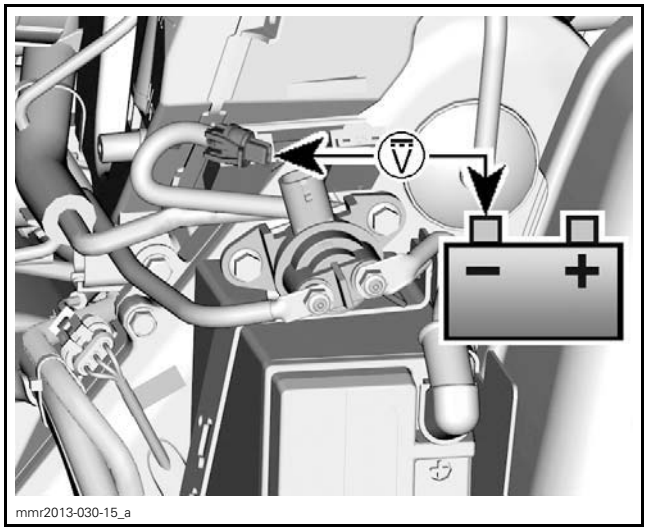

If there is no voltage, check for an open circuit.

If voltage is as specified, carry out a *STARTER SOLENOID CONTROL CIRCUIT TEST*.

## Starter Solenoid Control Circuit Test

1. Disconnect connector from solenoid.
2. Use a 12 Vdc test light and probe as per table.

IMPORTANT: Using a voltmeter could lead to false results.

3. Observe test light while start button is pressed in.

| STARTER SOLENOID CONTROL CIRCUIT TEST | | |
|---|---|---|
| TEST PROBES | | RESULT (WHILE PRESSING START/RER BUTTON) |
| Terminal "B" (OR/BK) | Battery positive terminal | Test light should be bright |

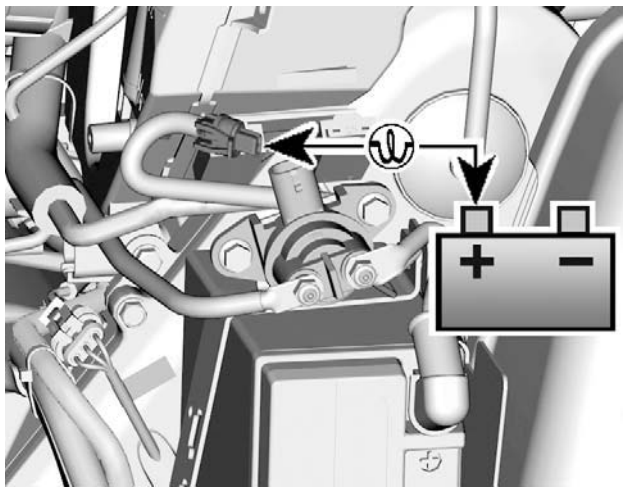

mmr2013-030-15_b

If test light does not turn on or is dimmed while cranking, check for an open circuit.

If test light is bright, the solenoid gets a proper ground signal. Carry out a *STARTER SOLENOID STATIC TEST: CONTINUITY*.

## Starter Solenoid Static Test: Continuity

Disconnect battery.

Disconnect connector from solenoid.

With a multimeter, measure the primary winding resistance as follows.

| SOLENOID WINDING CONTINUITY TEST | | |
|---|---|---|
| SOLENOID TERMINALS | | MEASUREMENT |
| | | RESISTANCE @ 20°C (68°F) |
| A | B | Approximately 5 Ω |

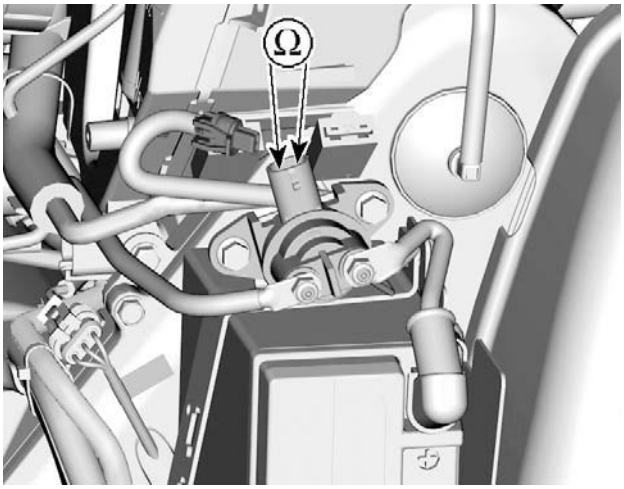

mmr2013-030-15_c

Test for a stuck solenoid plunger as follows.

| SOLENOID CONTACTS CONTINUITY TEST | | |
|---|---|---|
| SOLENOID CONNECTOR | | MEASUREMENT |
| Battery terminal | Starter terminal | Open circuit |

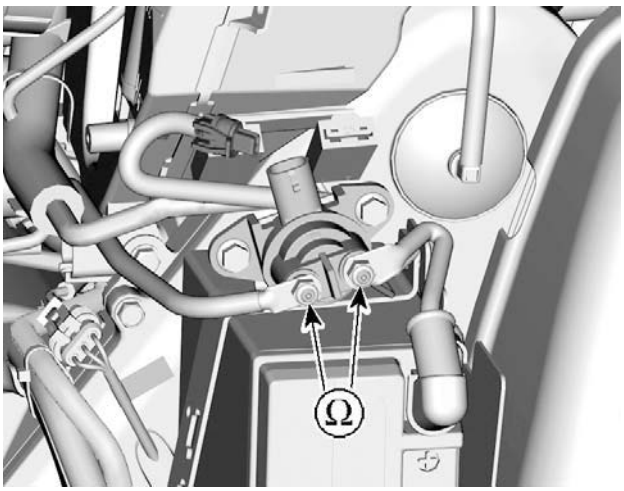

mmr2013-030-15_d

If any measurement is out of specification, replace solenoid.

Reconnect battery and starter solenoid terminals.

# STARTING SYSTEM

## SERVICE TOOLS

| Description | Part Number | Page |
|---|---|---|
| ECM ADAPTER TOOL | 529 036 166 | 2 |
| FLUKE 115 MULTIMETER | 529 035 868 | 2 |

## SERVICE PRODUCTS

| Description | Part Number | Page |
|---|---|---|
| DIELECTRIC GREASE (F) | 619 600 021 | 5 |
| DIELECTRIC GREASE | 293 550 004 | 5 |

# GENERAL

## BASIC STARTING SYSTEM OPERATION

When the START button is pressed, 12 Vdc is applied to the ECM. The ECM activates the main relay which provides 12 volts to one end of the coil of the starter solenoid. If the engine cranking conditions are met, the ECM completes the starter solenoid control circuit by providing a ground.

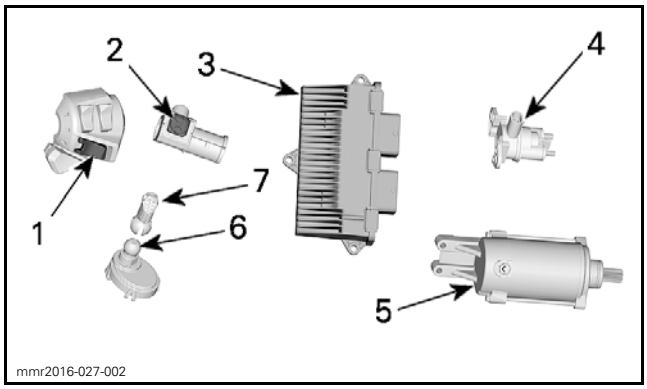


*1. Start button*
*2. Emergency engine stop switch*
*3. ECM*
*4. Starter solenoid*
*5. Starter*
*6. D.E.S.S. post*
*7. D.E.S.S. key*

### Engine Cranking Conditions

The following conditions must be met to allow engine cranking:

1. Emergency engine stop switch set to RUN.
2. D.E.S.S. key on the D.E.S.S. post.
3. START button pressed and held.

### Starting System Logic

If the START button is activated while the throttle lever is depressed more than 60%, the engine will crank but will not start (engine drowned mode).

If the START button is held after engine has started, the ECM automatically stops the starter if engine speed reaches at least 1400 RPM.

# TROUBLESHOOTING

## DIAGNOSTIC TIPS

NOTE: It is a good practice to check for fault codes using BUDS2 as a first troubleshooting step. Refer to *DIAGNOSTIC SYSTEM AND FAULT CODES* subsection.

Starting system failures are not necessarily related to the starter but may be due to one the following:

- Starter solenoid fuse and start fuse. Refer to *WIRING DIAGRAM*.
- Battery, refer to *CHARGING SYSTEM*
- START/RER button
- Starter solenoid
- Emergency engine stop switch
- ECM
- Wiring/connections.

Check these components before removing the starter.

NOTE: This subsection assumes the problem is related to an electrical component of the starting system. If the starting system tests good, ensure engine is in good condition. Refer to applicable subsection.

# DIAGNOSTIC GUIDELINES

## NOTHING HAPPENS WHEN START/RER BUTTON IS PRESSED

1. Battery not connected
   - *Connect battery.*
2. Burnt fuse
   - *Check fuses*
3. Defective relay or related circuits
   - *Test relay and circuits.*
4. Defective START/RER switch
   - *Test START/RER switch, wiring and connections.*

## ENGINE DOES NOT CRANK

1. Discharged battery
   - *Recharge and test. Refer to CHARGING SYSTEM subsection.*
2. Battery connections
   - *Check/clean/tighten.*
3. Poor/bad or corroded ground contacts (engine, battery ground cable, starter etc.)
   - *Check/clean/repair, refer to POWER DISTRIBUTION AND GROUNDS subsection.*
4. Starter solenoid
   - *Test solenoid, wiring and connections.*
5. Damaged starter or ground cables
   - *Carry out SOLENOID DYNAMIC TEST.*
6. No ground provided by ECM to starter solenoid
   - *Refer to TESTING THE START/RER SWITCH CONTROL CIRCUIT CONTINUITY in this subsection.*
7. Engine cannot be rotated (possibly seized)
   - *Refer to ENGINE subsection.*

## ENGINE CRANKS SLOWLY

1. Loose, corroded or dirty battery cable connections
   - *Check/clean/tighten.*
2. Discharged/weak battery
   - *Recharge and test. Refer to CHARGING SYSTEM subsection.*
3. Low voltage from starter solenoid
   - *Carry out a SOLENOID DYNAMIC TEST.*
4. Damaged starter or ground cables
   - *Carry out SOLENOID DYNAMIC TEST.*

## STARTER TURNS, BUT STARTER DRIVE DOES NOT MESH WITH RING GEAR

1. Worn starter drive gear/starter gear/ring gear
   - *Replace worn parts. Refer to MAGNETO AND STARTER subsection.*
2. Defective drive
   - *Replace starter drive. Refer to MAGNETO AND STARTER subsection.*

## STARTER KEEPS RUNNING

1. Sticking solenoid contacts
   - *Replace solenoid.*
2. Sticking or defective starter drive
   - *Lubricate or replace. Refer to MAGNETO AND STARTER.*

# PROCEDURES

| REQUIRED TOOLS | |
|---|---|
| ECM ADAPTER TOOL (P/N 529 036 166) | |
| FLUKE 115 MULTIMETER (P/N 529 035 868) | |

**⚠ WARNING**

Ensure vehicle cannot move when performing starting system tests.

# START/RER SWITCH

## Testing the START/RER Switch Circuit Continuity

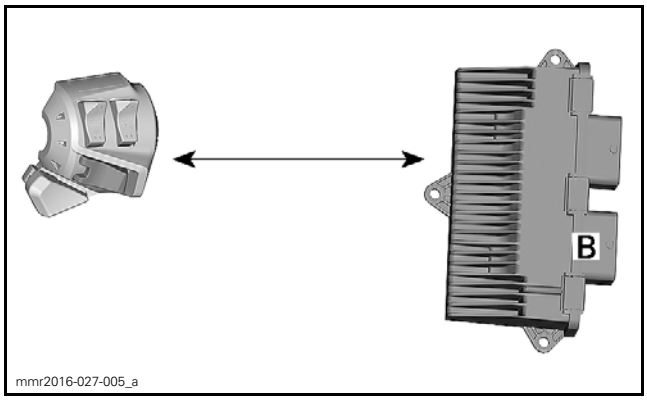


In BUDS2, verify the **Monitor** page and **ECM** tab to see if the button is working.

1. Remove start button fuse.

Disconnect connector "B" from the ECM, refer to *WIRING HARNESS AND CONNECTOR* subsection.

Install the ECM adapter on ECM harness connector "B".

Press and hold the START/RER button and test for continuity of the switch circuit as per following table.

| CONTINUITY TEST OF START/RER SWITCH CIRCUIT (BUTTON PRESSED AND HELD) | | |
|---|---|---|
| FUSE BOX | ECM CONNECTOR B | RESISTANCE |
| Pin D3 | ECMB-D1 | Close to 0 Ω (continuity) |

2. If the reading is as specified, the START/RER switch and its wiring are good.
3. If a high resistance or an open circuit is measured, carry out *TESTING THE START/RER SWITCH CONTINUITY*.

### Testing the START/RER Switch Circuit Continuity

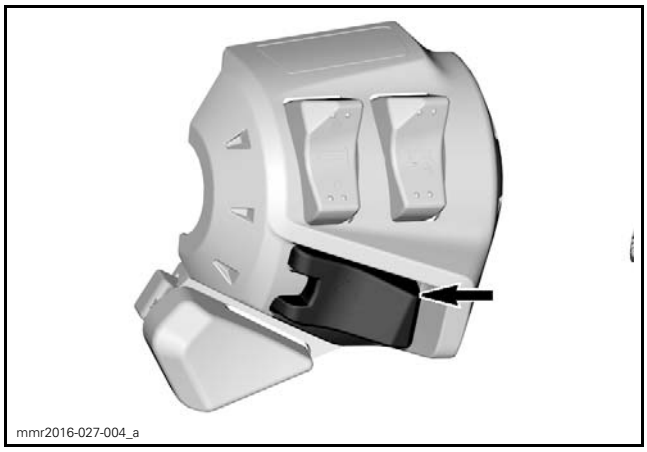


1. Disconnect the steering connector SH1. Refer to *WIRING HARNESS AND CONNECTORS* subsection.
2. Measure resistance through switch as per following table.

| START/RER SWITCH CIRCUIT CONTINUITY TEST | | |
|---|---|---|
| SWITCH POSITION | SH1 | RESISTANCE |
| Released | Pins B and C | Close to 0 Ω |
| Pressed and held | Pins H and C | Close to 0 Ω |

If the switch does not test as specified, replace the START/RER switch.

If the switch tests as specified, check for an open circuit in harness.

## STARTER SOLENOID

### Starter Solenoid Location

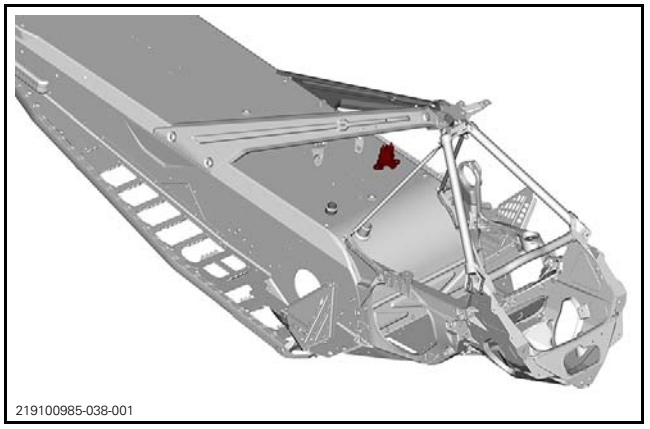


### Testing the Solenoid Input Voltage (Solenoid Coil)

1. Disconnect solenoid connector.

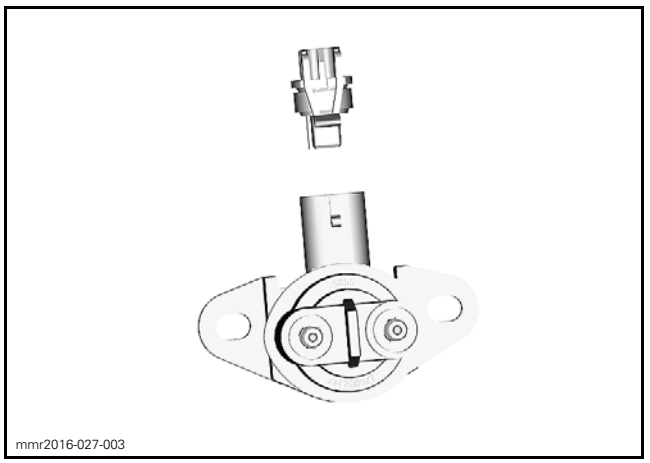


2. Set the multimeter to Vdc.
3. Install D.E.S.S. key on post.
4. Press the START/RER button to activate ECM.
5. Measure voltage.

| SOLENOID INPUT VOLTAGE TEST (SOLENOID COIL) | | |
|---|---|---|
| TEST PROBES | | VOLTAGE READING |
| Pin B | Battery ground | Battery voltage |

If test succeeded, carry out a *TESTING THE SOLENOID CONTROL CIRCUIT CONTINUITY*.

If test failed, carry out a *TESTING THE START/RER SWITCH CIRCUIT CONTINUITY*.

## Testing the Solenoid Control Circuit Continuity

1. Set the multimeter to Ω.
2. Disconnect connector "B" from ECM, refer to *WIRING HARNESS AND CONNECTORS* subsection.
3. Install the ECM adaptor tool on ECM harness connector.
4. Test continuity of wiring from solenoid to ECM as per following table.

| SOLENOID CONTROL CIRCUIT TEST | | |
|---|---|---|
| SOLENOID CONNECTOR | ECM CONNECTOR B | RESISTANCE |
| Pin A | ECMB-L4 | Close to 0 Ω (continuity) |

If test failed, repair or replace wiring/connectors.

If test succeeded, carry out a *TESTING THE SOLENOID COIL RESISTANCE*.

## Testing the Solenoid Coil Resistance

1. Set multimeter to Ω.
2. Disconnect solenoid connector.
3. Measure solenoid coil resistance as per following table.

| SOLENOID COIL RESISTANCE TEST | | |
|---|---|---|
| SOLENOID CONNECTOR | | RESISTANCE |
| Pin A | Pin B | 4.5 to 5.5 Ω |

If test fails, replace solenoid.

## Solenoid Dynamic Test

1. Depress the throttle lever to place the ECM in engine drowned mode. Hold throttle lever in place using a rubber band.
2. Set multimeter to Vdc.
3. Crank engine.
4. As engine is cranking, measure the voltage as per following tables.

| SOLENOID DYNAMIC TEST (ENGINE CRANKING) | | |
|---|---|---|
| TEST PROBES | | VOLTAGE (DC) |
| Solenoid battery post | Battery ground | Battery voltage |

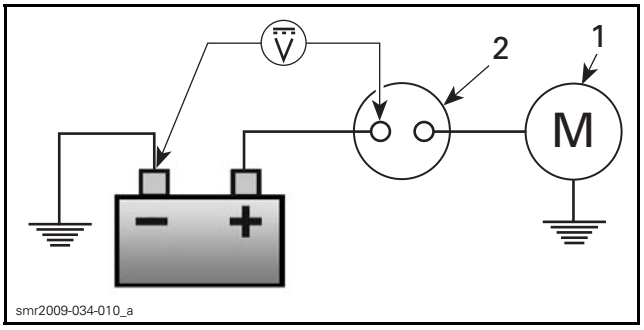


*1. Starter motor*
*2. Starter solenoid*

5. If test failed, check battery positive cable (from battery to solenoid).
6. If test succeeded, continue with next step.

| SOLENOID DYNAMIC TEST (ENGINE CRANKING) | | |
|---|---|---|
| TEST PROBES | | VOLTAGE (DC) |
| Solenoid starter post | Battery ground | Battery voltage |

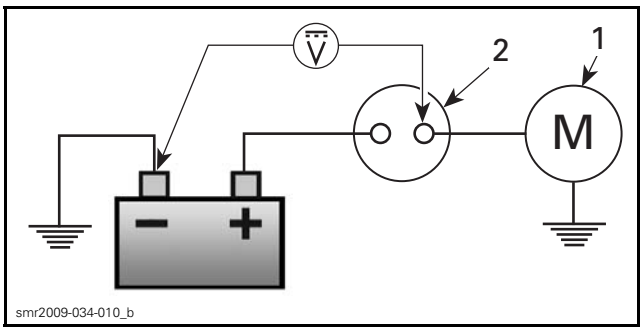


*1. Starter motor*
*2. Starter solenoid*

7. If test failed, carry out a *TESTING THE SOLENOID INPUT VOLTAGE (SOLENOID COIL)*.
8. If test succeeded, continue with next step.

| SOLENOID DYNAMIC TEST (ENGINE CRANKING) | | |
|---|---|---|
| TEST PROBES | | VOLTAGE (DC) |
| Solenoid battery post | Solenoid starter post | 0.2 Vdc max. |

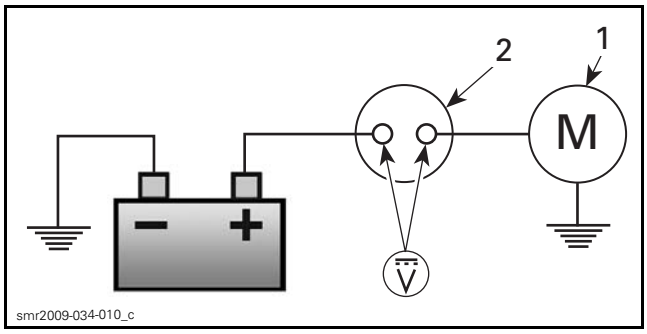


*1. Starter motor*
*2. Starter solenoid*

If test failed, replace solenoid.

If all solenoid dynamic tests are as specified, replace starter.

9. Remove rubber band from throttle lever.

10. Reinstall removed parts.

## Removing the Solenoid

1. Disconnect battery. Refer to *CHARGING SYSTEM* subsection.

**⚠ WARNING**

**Always disconnect the BLACK (-) battery cable first and reconnect last.**

2. Open LH side panel

3. Disconnect solenoid cables.

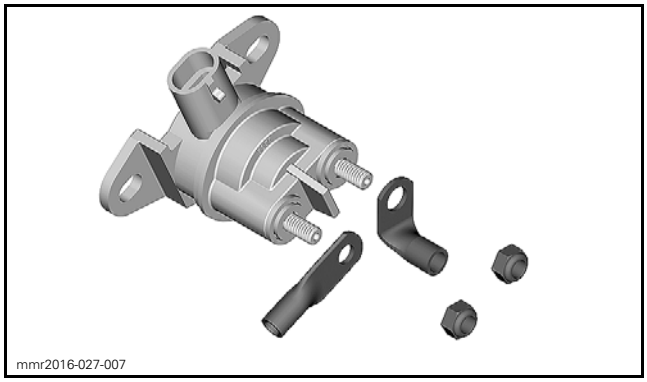


4. Disconnect starter solenoid connector.

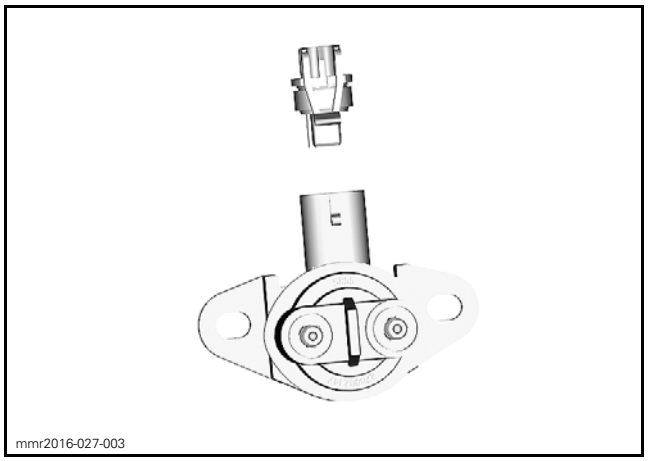


5. Pivot to remove the solenoid.

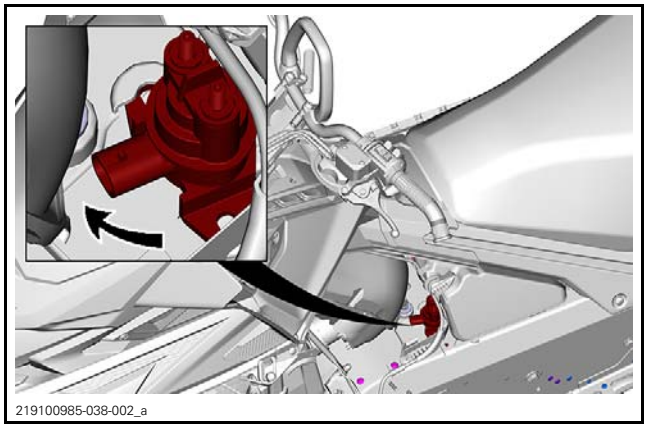


## Installing the Solenoid

The installation is the reverse of the removal procedure. However, pay attention to the following.

Apply dielectric grease under and over each connections and make sure each nut are well covered.

| COUNTRY | SERVICE PRODUCT |
|---|---|
| Scandinavia | DIELECTRIC GREASE (F) (P/N 619 600 021) |
| All other countries | DIELECTRIC GREASE (P/N 293 550 004) |

| TIGHTENING TORQUE | |
|---|---|
| Solenoid cable retaining nuts | 4 N•m ± 0.5 N•m (35 lbf•**in** ± 4 lbf•**in**) |

1. Close or slide protective caps.

2. Reconnect battery and test starter solenoid operation.

# STARTER

For starter information refer to *MAGNETO AND STARTER* subsection.

# RF DIGITALLY ENCODED SECURITY SYSTEM (RF D.E.S.S.)

## SERVICE TOOLS


| Description | Part Number | Page |
|---|---|---|
| POWER INTERFACE | 515 177 223 | 2 |


# GENERAL

## SYSTEM DESCRIPTION

The following components are specially designed for this system: ECM, D.E.S.S. key (inside tether cord cap) and engine cut-off switch.

This system allows the engine to reach pulley engagement speed only if a D.E.S.S. key is installed on engine cut-off switch and the key is recognized as valid by the ECM.

The D.E.S.S. key contains a magnet and a RFID chip.

– The magnet closes the hall effect switch inside the engine cut-off switch.
– The RFID chip contains a unique digital code. It is the equivalent of the tooth-pattern cut on a conventional ignition key.

Up to 8 D.E.S.S. keys may be programmed in the ECM memory using the B.U.D.S. The keys can also be erased individually.

NOTE: If desired, a D.E.S.S. key can be used on another vehicle equipped with the D.E.S.S. system. It only needs to be programmed for that vehicle.

### D.E.S.S. Beeper Codes

When starting the engine with a D.E.S.S. key on the engine cut-off switch, the key is identified by the ECM and D.E.S.S. signals will be issued according to the key recognition. See table.

| D.E.S.S. SIGNAL | | DESCRIPTION | COMMENT |
|---|---|---|---|
| BEEPER | DISPLAYED MESSAGE | | |
| 2 shorts beeps | Compact digital gauge: "Good Key" Other gauges: DESS tell-tale light will flash | Valid key read | Working D.E.S.S. key. |
| Short beeps repeating slowly | CHECK KEY | Unable to read key | – Reinstall key<br>– RPM limited to 2500<br>– Check D.E.S.S. status in B.U.D.S.<br>– No voltage at RFID connector pin D |
| Shorts beeps repeating rapidly | BAD KEY | Invalid key or key not programmed | – Use the proper key for this vehicle or have the key programmed.<br>– Vehicle can not be driven. |

# PROCEDURES

## D.E.S.S. KEY

### D.E.S.S. Key Programming

Use BUDS2.

Refer to the **B.U.D.S. directory** on *KNOWLEDGE CENTER* for all BUDS related information, including:

– Current version download link
– User manual (programming keys, reading fault codes, writing data to modules etc.)
– Installation instructions
– Navigation through menus
– BRP BUDS chart

Search keyword: "BUDS".

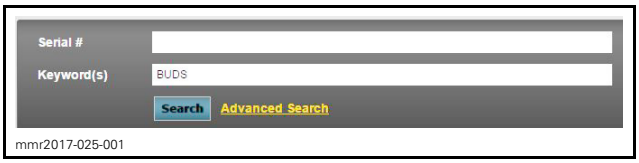

mmr2017-025-001

## D.E.S.S. / ENGINE CUT-OFF OPERATION

Connect BUDS2, refer to *COMMUNICATION TOOLS AND BUDS*.

Navigate to the **keys** page.

Read key. Consult the sections below to troubleshoot a key problem.

### Normal Operation (Good Key)

Refer to *WIRING DIAGRAM*.

| RFID CONNECTOR PIN | SPECIFICATIONS with POWER INTERFACE (P/N 515 177 223) installed |
|---|---|
| A | ECM ground |
| B | 12 - 15 Vdc |
| C | 5 Vdc |
| D | 12 Vdc |

### Key Not Read

Possible causes:

– Damaged RFID chip
– No voltage at RFID-D connector
– No voltage at RFID-C connector

Condition can be duplicated with a magnet on the D.E.S.S. post.

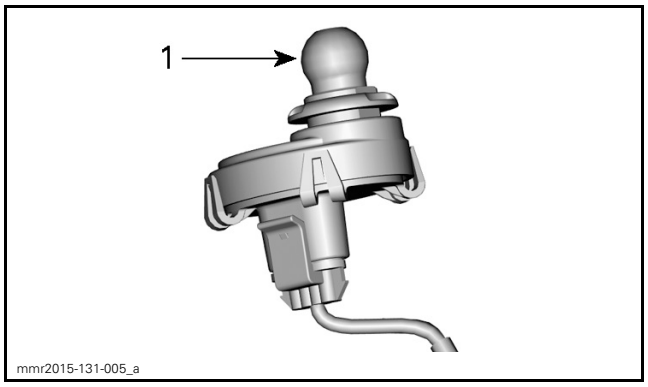

mmr2015-131-005_a

*1. D.E.S.S. post*

### Key Not Present

Possible causes:

– No key installed
– No voltage at RFID-B connector
– No ground at RFID-A connector

Condition can be duplicated by unplugging the RFID connector.

### Invalid Key

Possible causes:

– Key not programmed to ECM

## BEEPER

The beeper is integrated in the multifunction gauge and cannot be replaced alone.

If the beeper does not sound when starting the engine, check the beeper operation. Refer to *GAUGE* subsection.

# LIGHTS

## SERVICE TOOLS

| Description | Part Number | Page |
|---|---|---|
| 12 V BATTERY SUPPLY CABLE | 529 035 997 | 1 |
| POWER INTERFACE | 515 177 223 | 1 |

## GENERAL

NOTE: It is a good practice to check for fault codes using BUDS2 software as a first troubleshooting step. Refer to *DIAGNOSTIC AND FAULT CODES* subsection.

**⚠ CAUTION** The battery charging fuse should always be removed before carrying out any maintenance on the vehicle to prevent any unexpected electrical activation. Removal of this fuse isolates the battery from the vehicle electrical system, except for the starter relay input terminal.

**⚠ WARNING**

Torque wrench tightening specifications must be strictly adhered to. Locking devices must be replaced with new ones when removed (e.g.: locking tabs, elastic stop nuts, self-locking fasteners, cotter pins, etc.).

## SYSTEM TESTING

For models without a battery, connect the following tools in order to provide electrical power to the vehicle.

| REQUIRED TOOLS |
|---|
| – POWER INTERFACE (P/N 515 177 223)<br>– 12 V BATTERY SUPPLY CABLE (P/N 529 035 997)<br>– 12-volt battery |

## TROUBLESHOOTING

## LIGHTING SYSTEM TESTING

If a light does not come ON, carry out the following:

– Obtain access to the bulb and make sure it is not burnt.
– Test for input voltage to the bulb.
– Test for continuity of the ground circuit.
– Test the applicable control switch (brake switch, headlight switch).

## PROCEDURES

## HEADLIGHTS

### Headlight Bulb Removal

1. Open the front storage compartment by pulling the tab.

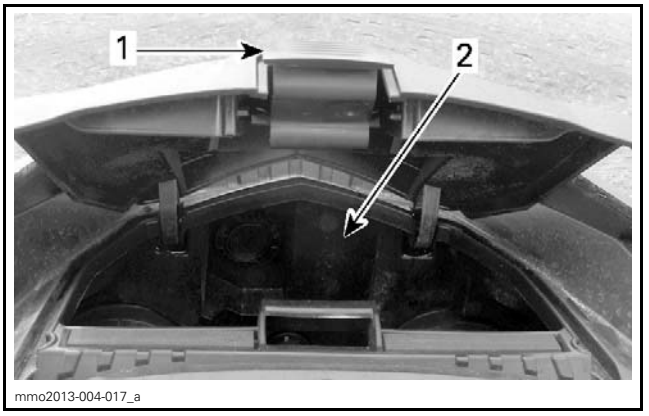

mmo2013-004-017_a

*1. Tab*
*2. Storage compartment*

2. Remove the applicable rubber boot.

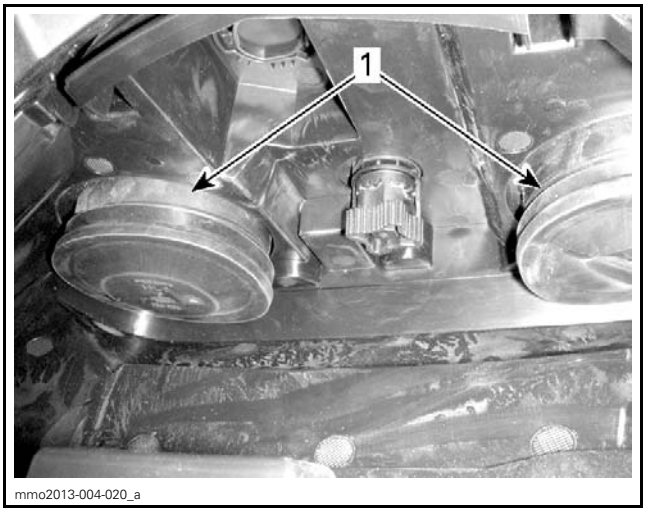

mmo2013-004-020_a

*1. Rubber boots*

3. Disconnect electrical connector.

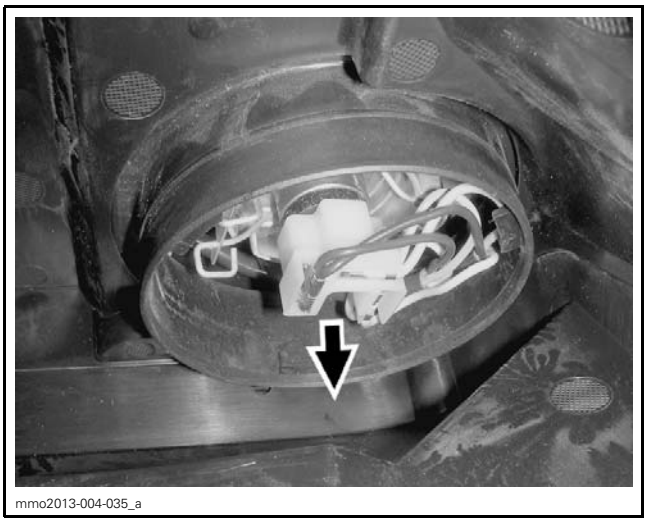
mmo2013-004-035_a

*ELECTRICAL CONNECTOR*

4. Press and pull both sides of the retaining clip at the same time to release it from bulb support.

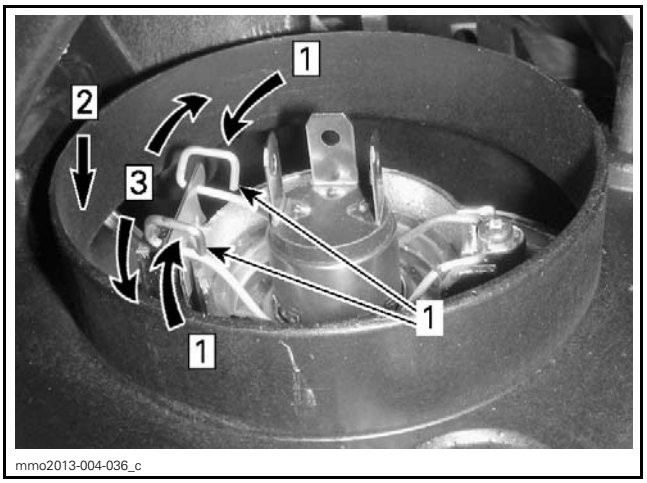

mmo2013-004-036_c

*Step 1: Push both sides*
*Step 2: Push down to release*
*Step 3: Release both sides*

*1. Retaining clip*

## Headlight Bulb Installation

**NOTICE** **Never touch glass portion of a halogen bulb with bare fingers, it shortens its operating life. If glass is touched, clean it with isopropyl alcohol which will not leave a film on the bulb.**

1. Insert bulb in headlight.

NOTE: Widest alignment tab on bulb should be at top of headlight.

2. Insert top of bulb holder (spring clip) as you squeeze the two sides inwards. Release bulb holder so that it locks in the grooves on either side of headlight.

3. Connect electrical connector.

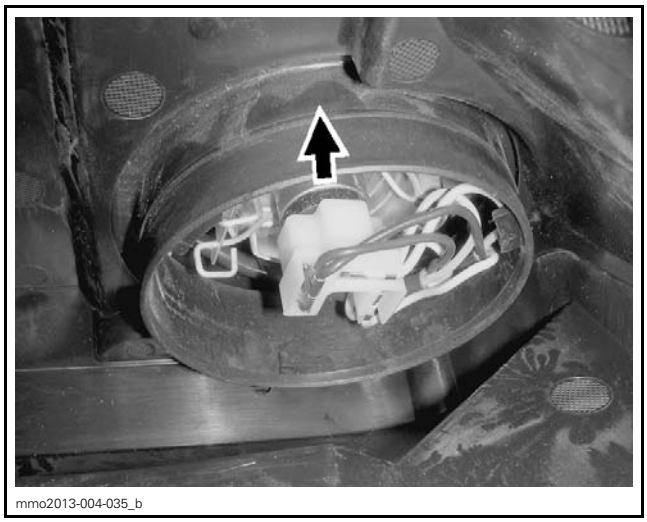
mmo2013-004-035_b

*ELECTRICAL CONNECTOR*

4. Install rubber boot cover. Ensure cover is properly inserted in groove provided in the headlight, and around the base of the bulb.

NOTE: Make sure to properly reinstall both rubber boots to ensure that no humidity gets inside the headlamp. Humidity can create fog inside the headlamp.

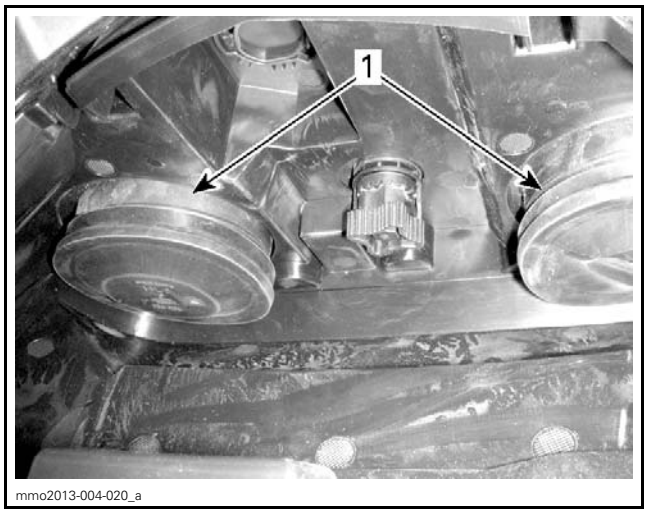

mmo2013-004-020_a

*1. Rubber boots*

5. Always test light operation after bulb replacement.

## Headlight Input Voltage Test

If a headlight does not function, proceed as follows.

1. Disconnect headlight connector(s).
2. Provide electrical power to the headlights for testing.
3. Read voltage at headlight connector as follows.

| SWITCH POSITION | WIRE COLOR (HEADLIGHT CONNECTOR) | | VOLTAGE |
|---|---|---|---|
| LO beam | HL-B | HL-A | Battery voltage (Vdc) |
| HI beam | HL-C | HL-A | |

If voltage is inadequate, carry out the following to find the source of the problem:

– Test headlights dimmer switch. Refer to *HEADLIGHT DIMMER SWITCH CONTINUITY TESTING* in this subsection.
– Test wiring harness and connectors.
– Test primary 12 Vdc system. Refer to *CHARGING SYSTEM*.

## Headlight Dimmer Switch Test with BUDS2.

1. Using the BUDS2 software, select the **Monitoring** tab.
2. On the bottom of the page, choose the **Cluster** tab.
3. Set vehicle dimmer switch to High Beam and look for applicable indicator light in the **Switch inputs** field to turn green.

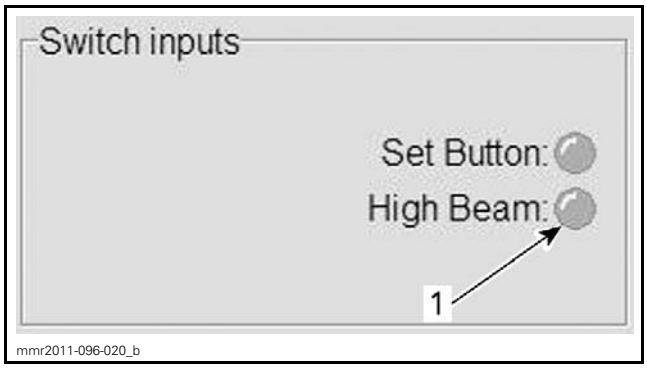


*TYPICAL*
*1. Indicator light*

If the indicator light come ON in BUDS2, the dimmer switch is functioning correctly.

## Headlight Dimmer Switch Continuity Test

1. Disconnect the SH1 connector (12 positions).

Refer to *WIRING HARNESS AND CONNECTORS* for connector location.

2. Test switch circuits on SH1 connector (12 positions) on harness side as per table.

| HEADLIGHT DIMMER SWITCH CONTINUITY TEST | | | |
|---|---|---|---|
| SWITCH POSITION | SH1 | | RESISTANCE |
| HIGH | SH1-M | SH1-G | Close to 0 Ω |
| | SH1-F | | Infinite (OL) |
| LOW | SH1-F | | Infinite (OL) |
| | SH1-M | | Close to 0 Ω |

If tests were good, switch is functioning properly.

If any test failed, check wiring and connections going to switch.

If test of wiring and connections was good, replace switch.

## Headlight Beam Aiming

Beam aiming is correct when center of high beam is 25 mm (1 in) below the headlight horizontal center line, scribed on a test surface, 381 cm (12 ft 6 in) away.

1. Place the vehicle on a flat surface perpendicular to test surface (wall or screen) and 381 cm (12 ft 6 in) away from it.
2. Ask rider to sit on vehicle seat, or apply equivalent weight on the vehicle.
3. Select **high** beam.
4. Measure headlight center distance from ground. Scribe a line at this height on test surface (wall or screen). Light beam center should be 25 mm (1 in) below scribed line.

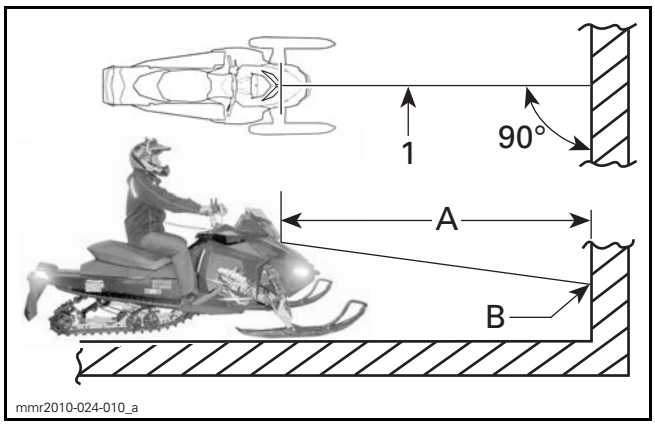


*TYPICAL*
*1. Headlight center line*
*A. 381 cm (12 ft 6 in)*
*B. 25 mm (1 in) below center line*

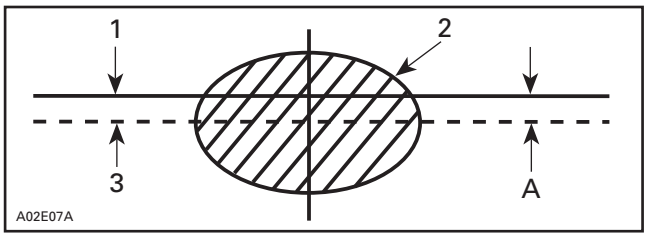


*1. Headlight horizontal*
*2. Light beam (high beam) (projected on the wall)*
*3. Light beam center*
*A. 25 mm (1 in)*

### Beam Aiming Adjustment

Open the front storage compartment.

Turn knob clockwise to lower the beam height.

Turn knob counterclockwise to raise the beam height.

NOTE: Avoid reaching extreme adjustments as the headlight assembly might move out of position.

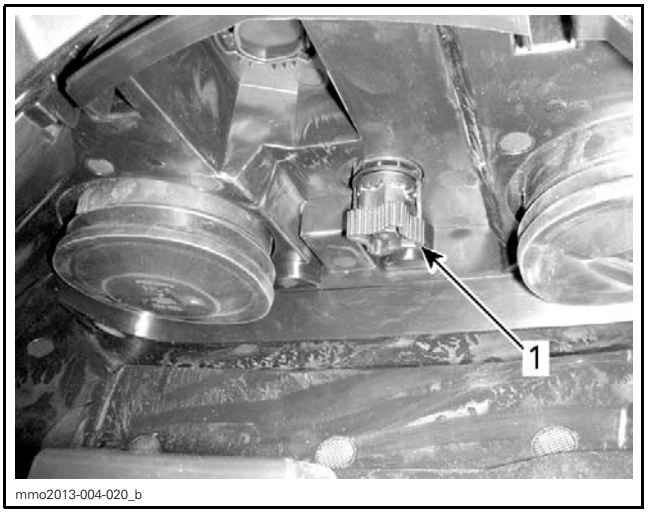


*TYPICAL*
*1. Knob*

# TAILLIGHT

## Taillight Replacement

Remove both retaining bolts securing rear taillight to frame.

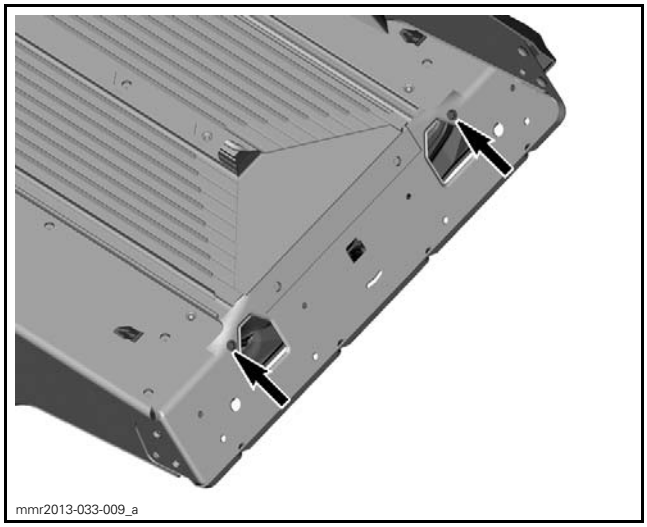


*RETAINING BOLTS LOCATION - VIEWED FROM UNDER*

Pull rear taillight support out of location and disconnect taillight connector.

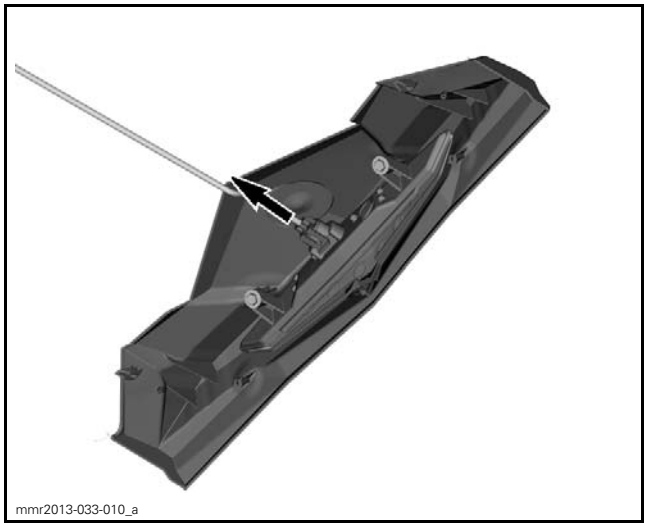


*TAILLIGHT CONNECTOR DISCONNECTION*

Remove both retaining screws securing taillight to taillight support.

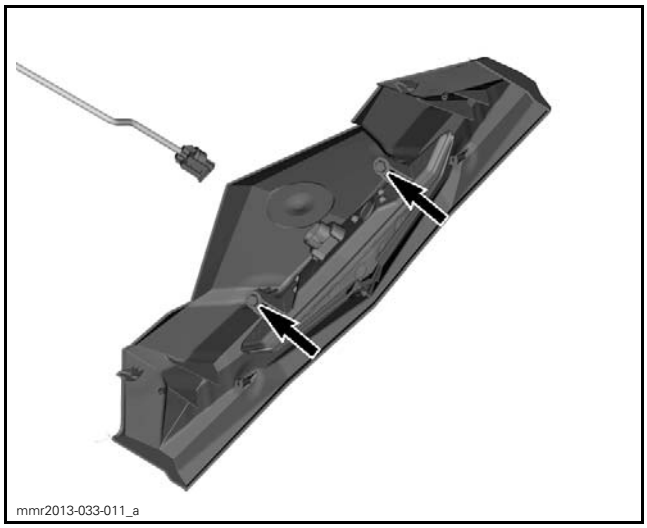


*RETAINING BOLTS SECURING TAILLIGHT TO TAILLIGHT SUPPORT*

Replace taillight.

Installation is the reverse of removal. However pay attention to the following.

| TIGHTENING TORQUE | |
|---|---|
| Taillight retaining screw | 0.8 N•m ± 0.2 N•m (7 lbf•**in** ± 2 lbf•**in**) |

# LIGHTS

## SERVICE TOOLS


| Description | Part Number | Page |
|---|---|---|
| 12 V BATTERY SUPPLY CABLE | 529 035 997 | 1 |
| POWER INTERFACE | 515 177 223 | 1 |


## GENERAL

Refer to *WIRING HARNESS AND CONNECTORS* for electrical connector locations.

**⚠ WARNING**

**Torque wrench tightening specifications must be strictly adhered to. Locking devices must be replaced with new ones when removed (e.g.: locking tabs, elastic stop nuts, self-locking fasteners, cotter pins, etc.).**

## SYSTEM TESTING

All vehicle lights are powered from the primary 12 Vdc circuit. This circuit is powered from and controlled by the ECM when the engine reaches 800 RPM. Refer to *POWER DISTRIBUTION AND GROUNDS* subsection for more information on how power is distributed to various systems.

For models without a battery, connect the following tools in order to provide electrical power to the vehicle.

| REQUIRED TOOLS |
|---|
| – POWER INTERFACE (P/N 515 177 223)<br>– 12 V BATTERY SUPPLY CABLE (P/N 529 035 997)<br>– 12-volt battery |

## PROCEDURES

## HEADLIGHTS

### Removing Headlight Bulb

1. Remove gauge and trim. Refer to *BODY* subsection.
2. Remove front glove box. Refer to *BODY* subsection.
3. Unplug electrical connector.

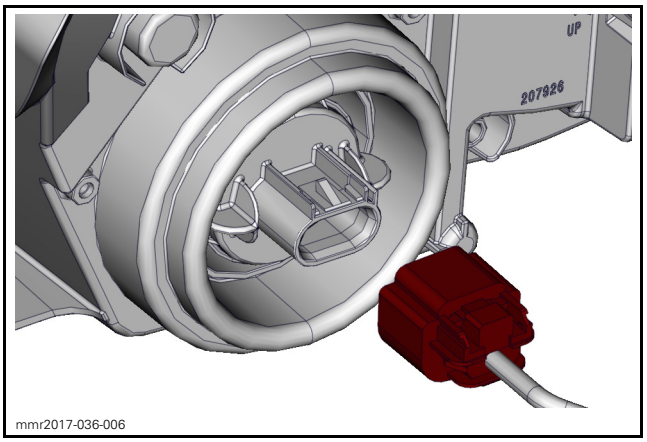

mmr2017-036-006

4. Turn bulb socket to unlock and remove bulb.

NOTE: Ensure bulb seal stays in place.

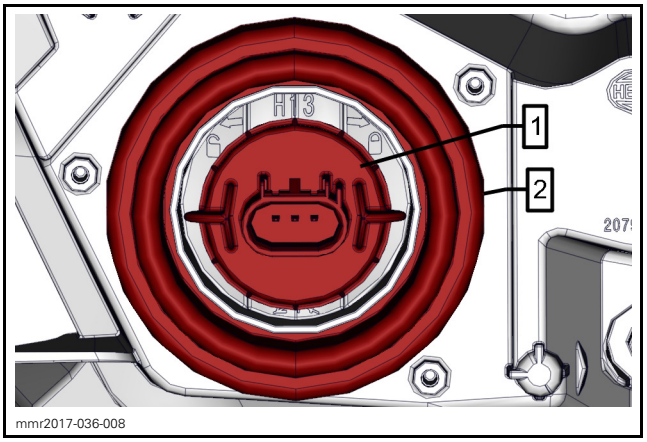

mmr2017-036-008

*1. Bulb socket*
*2. Bulb seal*

### Installing Headlight Bulb

***NOTICE*** **Never touch glass portion of a halogen bulb with bare fingers, it shortens its operating life. If glass is touched, clean it with isopropyl alcohol which will not leave a film on the bulb.**

Reverse removal procedure.

### Measuring Headlight Input Voltage

1. Disconnect headlight connector(s).
2. Provide electrical power to the headlights for testing.

3. Read voltage at headlight connector as follows.

| SWITCH POSITION | WIRE COLOR (HEADLIGHT CONNECTOR) | | VOLTAGE |
|---|---|---|---|
| LO beam | GY/OG | BK | Battery voltage (Vdc) |
| HI beam | GY/WH | BK | |

If voltage is inadequate, carry out the following to find the source of the problem:
- Test headlights dimmer switch.
- Test wiring harness and connectors.
- Test primary 12 Vdc system. Refer to *CHARGING SYSTEM*.

## Testing Headlight Dimmer with BUDS2

The headlight dimmer switch status can be monitored using BUDS2.

## Testing Headlight Dimmer Switch Continuity

1. Disconnect the applicable connector depending on gauge, refer to following tables.
2. Test switch circuits on applicable connector on switch side as per table.

| MODELS WITH COMPACT DIGITAL GAUGE | | | |
|---|---|---|---|
| SWITCH POSITION | DIMMER PINS | | SPECIFICATION |
| HIGH | 2 | 4 | Close to 0 Ω |
| | 2 | 1 | Infinite (OL) |
| LOW | 2 | 4 | Infinite (OL) |
| | 2 | 1 | Close to 0 Ω |

| MODELS WITH ANALOG/DIGITAL GAUGE | | | |
|---|---|---|---|
| SWITCH POSITION | SH PINS | | SPECIFICATION |
| HIGH | 12 | 7 | Close to 0 Ω |
| | 6 | 7 | Infinite (OL) |
| LOW | 12 | 7 | Infinite (OL) |
| | 6 | 7 | Close to 0 Ω |

If tests were good, switch is functioning properly.

If any test failed, check wiring and connections going to switch.

If test of wiring and connections was good, replace switch.

## Aiming Headlight Beam

Beam aiming is correct when center of high beam is 25 mm (1 in) below the headlight horizontal center line, scribed on a test surface, 381 cm (12 ft 6 in) away.

1. Place the vehicle on a flat surface perpendicular to test surface (wall or screen) and 381 cm (12 ft 6 in) away from it.
2. Ask rider to sit on vehicle seat, or apply equivalent weight on the vehicle.
3. Select **high** beam.
4. Measure headlight center distance from ground. Scribe a line at this height on test surface (wall or screen). Light beam center should be 25 mm (1 in) below scribed line.

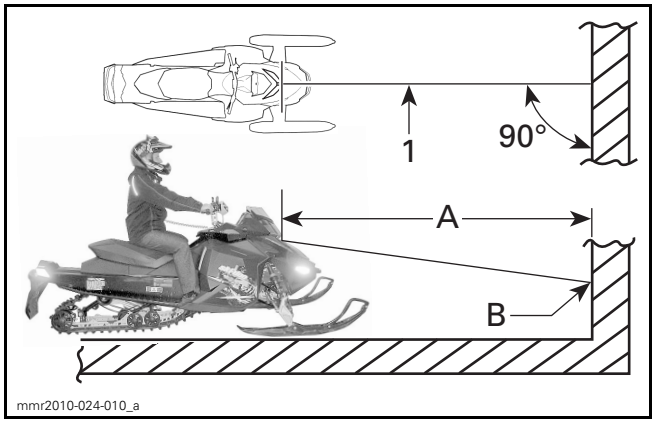


*TYPICAL*
*1. Headlight center line*
*A. 381 cm (12 ft 6 in)*
*B. 25 mm (1 in) below center line*

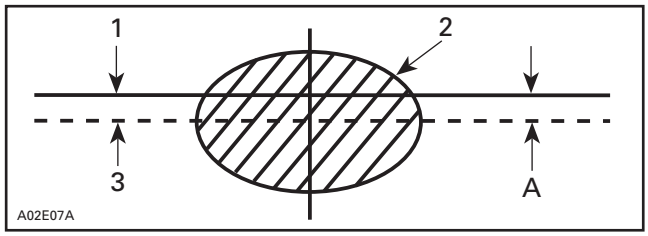


*1. Headlight horizontal*
*2. Light beam (high beam) (projected on the wall)*
*3. Light beam center*
*A. 25 mm (1 in)*

### Adjusting Beam

Open the front storage compartment.

Turn knob to adjust the beam height.

NOTE: Avoid reaching extreme adjustments as the headlight assembly might move out of position.

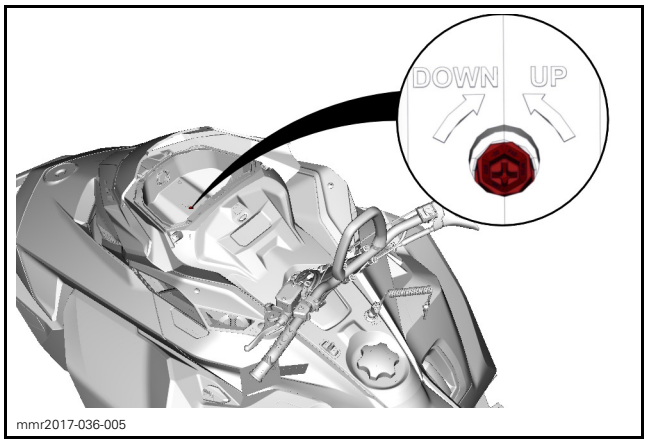

mmr2017-036-005

# TAILLIGHT / BRAKE LIGHT

## Replacing Taillight

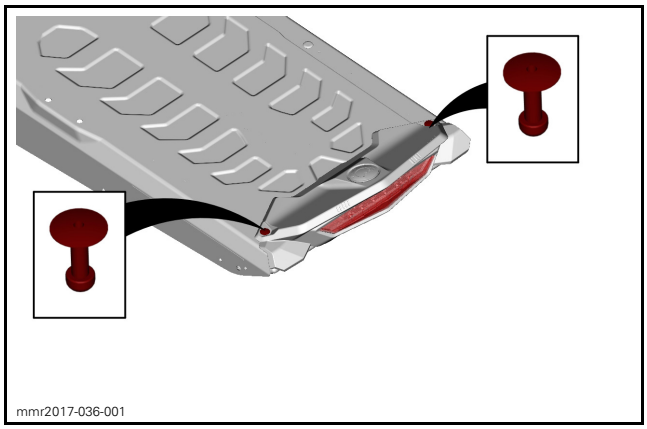
mmr2017-036-001

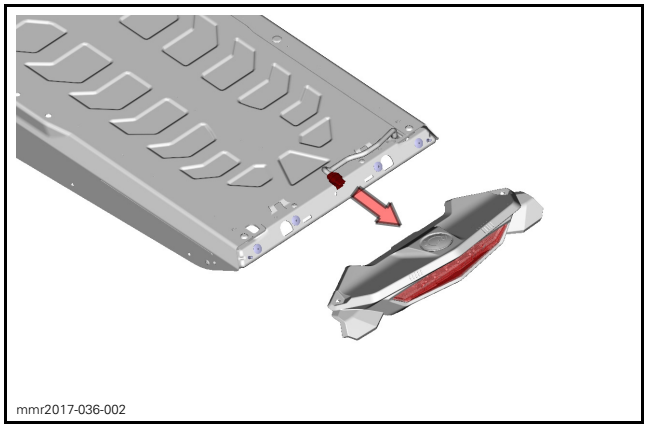
mmr2017-036-002

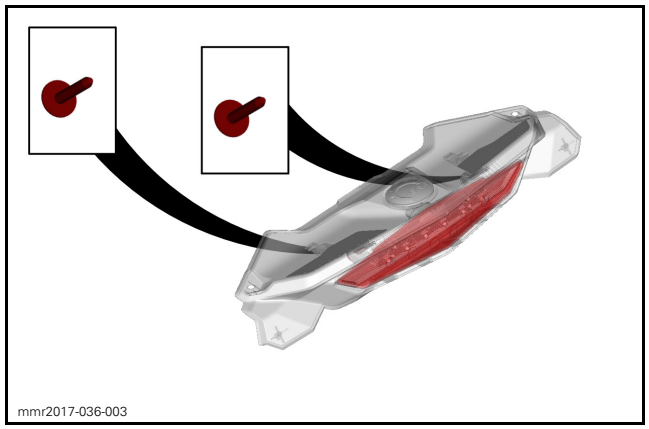
mmr2017-036-003

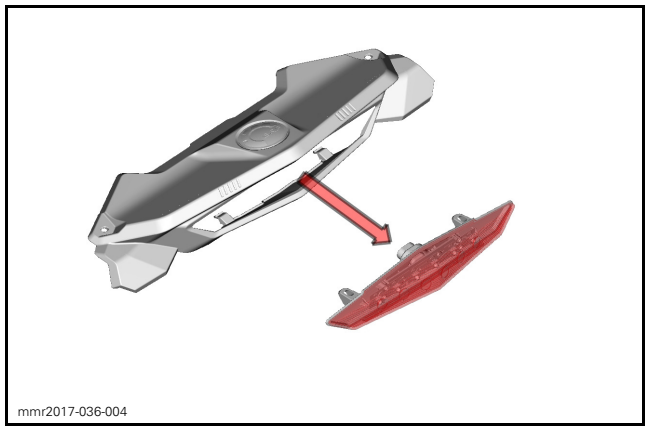
mmr2017-036-004

Replace taillight.

Installation is the reverse of removal. However pay attention to the following.

| TIGHTENING TORQUE | |
|---|---|
| Taillight retaining screw | 0.4 N•m (4 lbf•**in**) |

# GAUGE

## SERVICE TOOLS

| Description | Part Number | Page |
|---|---|---|
| 12 V BATTERY SUPPLY CABLE | 529 035 997 | 1 |
| POWER INTERFACE | 515 177 223 | 1 |

## GENERAL

NOTE: It is a good practice to check for fault codes using B.U.D.S. software as a first troubleshooting step. Refer to *DIAGNOSTIC AND FAULT CODES* subsection.

**⚠ CAUTION** The battery charging fuse should always be removed before carrying out any maintenance on the vehicle to prevent any unexpected electrical activation. Removal of this fuse isolates the battery from the vehicle electrical system, except for the starter relay input terminal.

**⚠ WARNING**

Torque wrench tightening specifications must be strictly adhered to. Locking devices must be replaced with new ones when removed (e.g.: locking tabs, elastic stop nuts, self-locking fasteners, cotter pins, etc.).

## SYSTEM TESTING

For models without a battery, connect the following tools in order to provide electrical power to the vehicle.

| REQUIRED TOOLS |
|---|
| – POWER INTERFACE (P/N 515 177 223)<br>– 12 V BATTERY SUPPLY CABLE (P/N 529 035 997)<br>– 12-volt battery |

## SYSTEM DESCRIPTION

Two different type gauges which provide all indications in a single unit are used. An **analog/digital gauge (standard gauge)** and a **multifunction analog/digital gauge (premium gauge)**.

The gauges are used to control 9 heating intensity settings for the heated hand grips and the heated throttle lever.

The premium gauge provides more functions and display features.

Both units can be set to indicate in metric or imperial units.

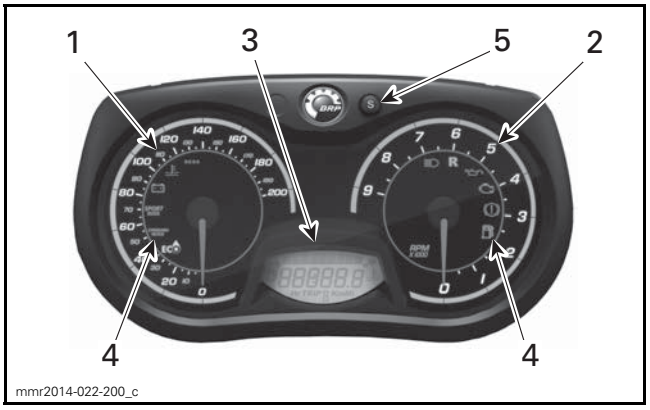


*ANALOG/DIGITAL GAUGE (STANDARD)*
1. *Speedometer*
2. *Tachometer (RPM)*
3. *Gauge Digital Display*
4. *Gauge Pilot Lamps*
5. *Gauge SET "S" button*

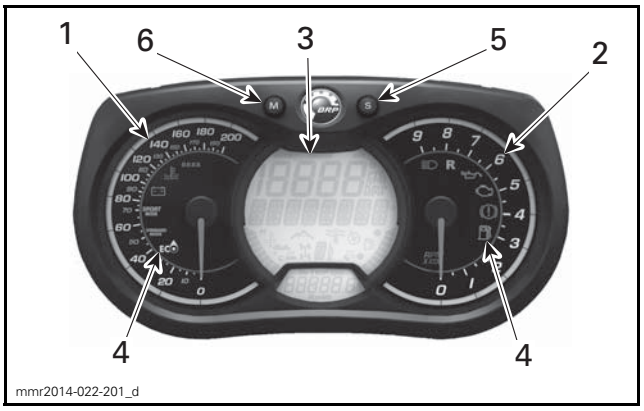


*MULTIFUNCTION ANALOG/DIGITAL GAUGE (PREMIUM)*
1. *Speedometer*
2. *Tachometer (RPM)*
3. *Gauge Multifunction Digital Display*
4. *Gauge Pilot Lamps*
5. *Gauge MODE "M" button*
6. *Gauge SET "S" button*

### Mode and Set Buttons

#### *Analog/Digital Gauge*

The standard gauge is equipped with a **SET** button only at the top of the indicator.

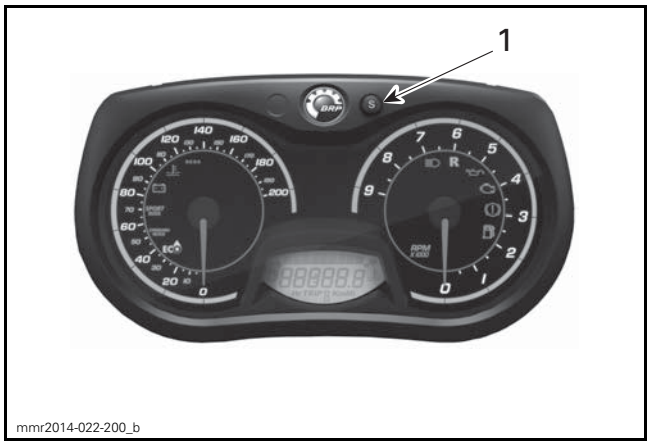


*1. SET button*

### *Multifunction Analog/Digital Gauge (Premium)*

The premium gauge is equipped with **MODE** and **SET** buttons at the top of the indicator.

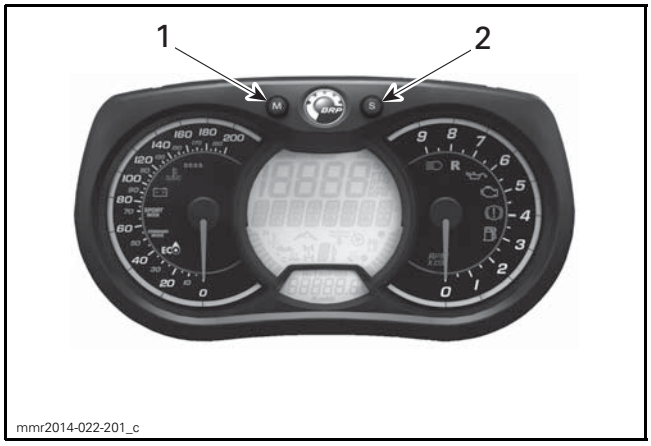


*PREMIUM GAUGE*
*1. MODE button*
*2. SET button*

These buttons allow you to toggle through the different functions and settings of the indicator.

All vehicles that are factory equipped with the premium gauge also come with a remote **M/S** button on the LH multifunction switch. It can be used instead of the buttons on the gauge simply by pressing the "**M**" for **MODE** and "**S**" for **SET**.

# PROCEDURES

## GAUGE

### Gauge Self Test Function

On **ECM wake-up**, the gauge will perform a self-test. All indications should come ON and gauge pointers will cycle once. You will have a few seconds to ensure the indications (**LEDs** and **LCDs**) are functioning correctly.

**NOTE:** This test only validates the gauge operation of the **LEDs**, **LCDs** in the gauge digital display and the pointers. It does not test the actual circuit functions related to each indication.

If the self test does not take place, proceed with the *GAUGE POWER INPUT TEST*.

### Gauge Setup

#### Clock Activation (Premium Gauge)

The gauge has an internal clock that can display the time of day in the lower digital display (when selected).

This clock requires power from the vehicle battery to maintain the proper time of day.

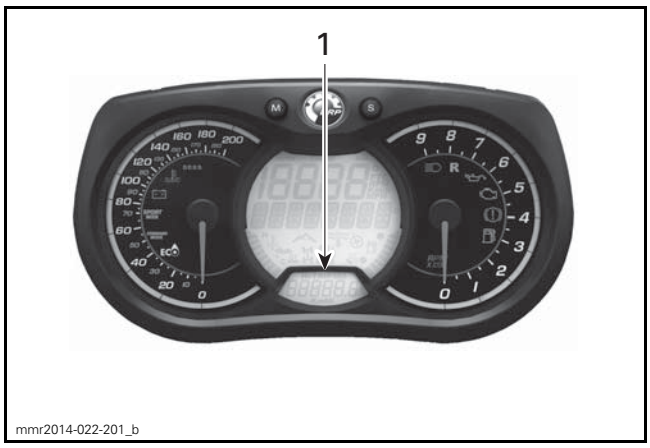


*1. Clock displayed*

1. Provide electrical power to the gauge.
2. In BUDS2, select the **Settings** tab.
3. Activate the clock (models with battery).

#### Changing Gauge Units of Measurement

The gauges are factory preset to indicate in metric units and can be changed using the BUDS2 software.

To change the gauge units of measurement in BUDS2:

1. Provide electrical power to the gauge.
2. In BUDS2, select the **Settings** tab.
3. Select **Imperial** or **Metric** in the **Cluster Units** field.

**NOTE:** Speedometer, odometer and trip meter will have their units (kilometer or miles) changed simultaneously.

### Speedometer and Tachometer Pointer Adjustment

1. Make connections to use BUDS2. Refer to *COMMUNICATION TOOLS AND B.U.D.S.* in the appropriate shop manual.
2. In BUDS2, select the **Settings** tab.
3. Ensure to be facing gauge to prevent parallax error.
4. Click on **Clockwise** or **Counterclockwise** button to align gauge pointer with the zero (0).

NOTE: Because of the fine tuning of the pointer, the button must be pressed several times before perceiving pointer movement.

## Displaying "P" Codes (Premium Gauge Only)

1. To activate **P CODE** mode, push and hold the "M" button for 2 seconds.
2. As you hold the "**M**" button, quickly turn ON and OFF the high beams a few times. The gauge will enter **P CODE** mode.
3. While in **P CODE** mode, use the "**M**" or "**S**" button to scroll over available failure codes.
4. Push and hold the "**M**" button to exit **P CODE** mode.

A **NO ACTIVE P CODE** message is displayed if there are no **P CODES** in memory.

## Gauge Test With BUDS2

The *GAUGE SELF TEST* can be duplicated using BUDS2.

1. Connect vehicle to BUDS2. Refer to *COMMUNICATION TOOLS AND B.U.D.S.* subsection.
2. In BUDS2,choose the **Functions** tab.
3. Select **WOW Test**.

## Gauge Power Input Test (Main 12 Vdc)

If the gauge does not come on when the start button is pressed, carry out the following test.

1. Remove multifunction gauge.
2. Disconnect the gauge connector.
3. Set multimeter to Vdc.
4. Start engine.
5. Measure voltage as per following table.

| GAUGE CONNECTOR (MG) | | VOLTAGE |
|---|---|---|
| MG-8 | MG-11 | Approximately battery voltage |

6. If gauge main power input test was as specified, carry out the gauge *GROUND CIRCUIT CONTINUITY TEST*.
7. If no voltage was read, test wiring continuity. Refer to *WIRING DIAGRAM* for details.

## Gauge Ground Circuit Continuity Test

1. Set multimeter to Ω selection.
2. Measure for continuity of gauge ground wire as per following table.

| GAUGE CONNECTOR (MG) | RESISTANCE |
|---|---|
| MG-11 | Close to 0 Ω |

If ground test failed, check vehicle ground. Refer to *POWER DISTRIBUTION AND GROUNDS* subsection.

If gauge power input test and ground circuit continuity tests are good, replace gauge.

## Clock 12 Vdc Input Test (Premium Gauge)

If the clock function in the premium gauge does not hold the proper time of day when the engine is not running, carry out the following test.

NOTE: The clock receives 12 Vdc from the battery through the 15 A START fuse in order to maintain correct time when the engine is not running.

1. Remove multifunction gauge.
2. Disconnect the gauge connector.
3. Set multimeter to Vdc.
4. Measure voltage as per following table.

| GAUGE CONNECTOR (MG) | | VOLTAGE |
|---|---|---|
| MG-8 | MG-11 | Approximately battery voltage |

5. If there is no voltage read, test input wire continuity. Refer to *WIRING DIAGRAM* for circuit details.

## Gauge Beeper Test

To test beeper, perform the following test with BUDS2.

1. Connect vehicle to BUDS2. Refer to *COMMUNICATION TOOLS AND B.U.D.S.*
2. In BUDS2, choose the **Functions** tab.
3. Select **Cluster Buzzer Test**.

You should hear a few beeps.

– If you do not hear the beeper, replace gauge.

## Gauge Button Test with BUDS2

Using the BUDS2 software, select the **Measurements** tab.

### *Standard Gauge*

Press on the gauge "**S**" button and look for applicable indicator light in the **Switch inputs** field to turn green.

### *Premium Gauge*

Alternately press on the gauge "**M**" and "**S**" buttons and look for applicable indicator light in the **Switch inputs** field to turn green.

### *All Gauges*

If the indicator light(s) come ON in BUDS2, the gauge button(s) is(are) functioning correctly.

If the indicator light(s) do not come ON, check button(s). If they are in good condition, replace gauge.

## Gauge Speedometer Function Test

First ensure the gauge pointer is not stuck. Refer to *GAUGE TEST WITH BUDS2* in this subsection.

1. Unplug speed sensor connector.

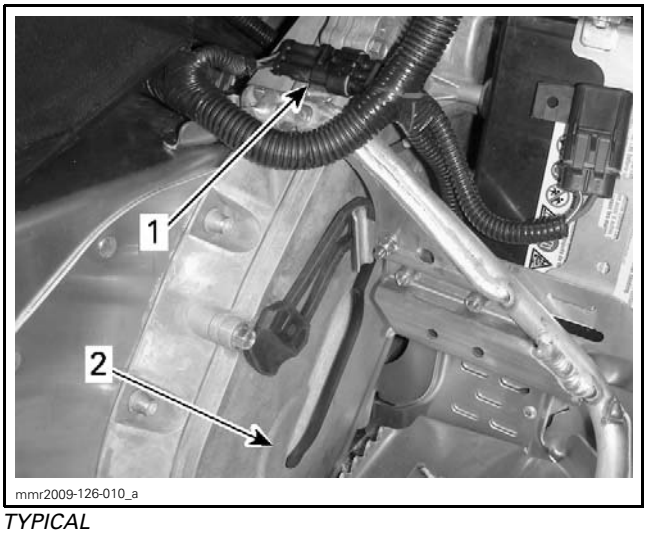


*TYPICAL*
*1. Speed sensor connector*
*2. Speed sensor (inside cover)*

2. Provide electrical power to the gauge for testing.
3. Set multimeter to Vdc.
4. Probe connector on vehicle harness side as per table.

| GAUGE VOLTAGE TEST | | |
|---|---|---|
| SPEED SENSOR CONNECTOR (VSS) (MAIN HARNESS SIDE) | | VOLTAGE |
| VSS-1 | VSS-2 | Close to battery voltage |
| VSS-3 | VSS-2 | Close to battery voltage |

If test succeeded, gauge is good, proceed with *SPEED SENSOR SIGNAL TEST* in the *CHAINCASE* subsection.

If test failed, check wiring harness going to gauge. If wiring harness is good, replace gauge.

## Gauge Fuel Level Function Test

1. Unplug fuel pump connector.
2. Provide electrical power to the gauge for testing.
3. Set multimeter to Vdc.
4. Probe connector on vehicle harness side as per table.

| GAUGE VOLTAGE TEST | | |
|---|---|---|
| FUEL LEVEL SENSOR CONNECTOR (FP) (MAIN HARNESS SIDE) | | VOLTAGE |
| FP-B | FP-D | Approximately 5 V |

If test succeeded, gauge is good, proceed with *FUEL LEVEL SENSOR TEST* in *FUEL TANK AND FUEL PUMP* subsection.

If test failed, check wiring harness going to gauge. If wiring harness is good, replace gauge.

## Gauge Removal

1. Open storage compartment.

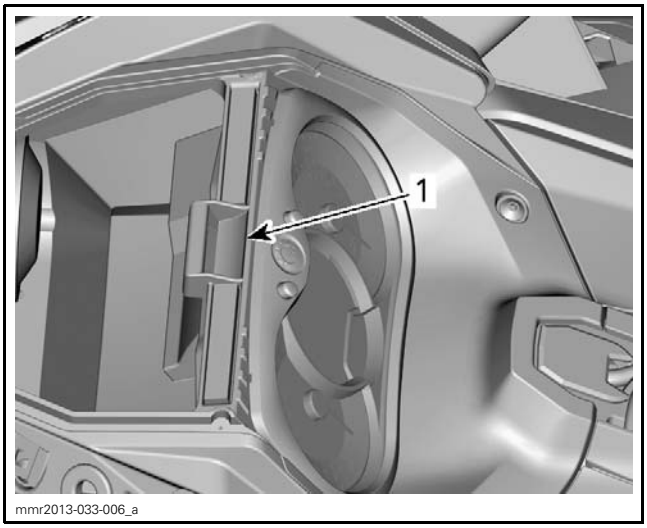


*1. Storage compartment*

2. Insert a small screwdriver in one of the rectangular slots at top of gauge.
3. As you gently press down on the screwdriver to release multifunction gauge locking tab, pull out and hold gauge in position.
4. Insert screwdriver in second hole and press to release other tab.

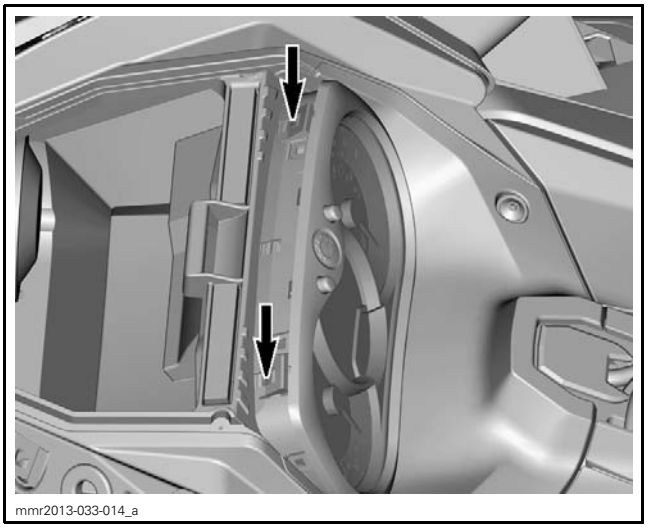


*RETAINING TABS TO PRESS ON*

5. Gently pull multifunction gauge from gauge support.

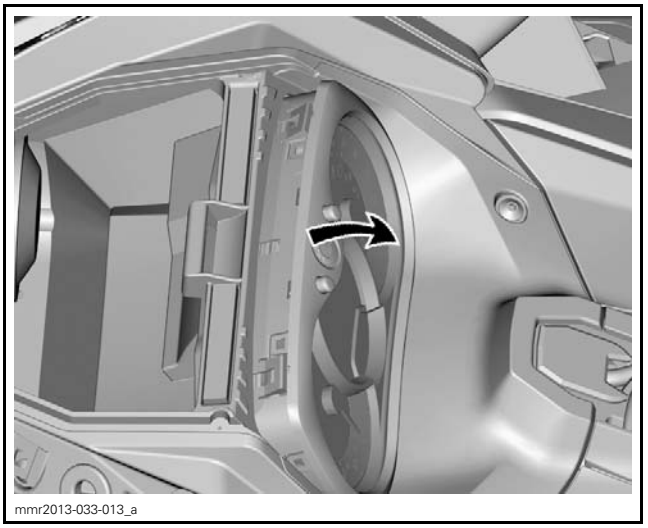


*TYPICAL*

6. Press on connector locking tab and pull connector off gauge.
7. Store gauge in a secure area to prevent it from being damaged.

## Gauge Installation

1. Carefully align and install gauge connector, pressing it in until connector lock engages.
2. Insert bottom of gauge in gauge holder.
3. Press top of gauge in holder until you feel locking tabs engage in holder.
4. Start vehicle engine and test gauge functions.

NOTE: If a new gauge is installed, refer to *GAUGE TO ECM MATCHING*.

## Gauge to ECM Matching

NOTE: If the gauge is replaced, the VIN (Vehicle Identification Number) and the vehicle model number must be entered in the gauge memory so they match those stored in the ECM.

If the numbers stored in the gauge do not match those stored in the ECM, the engine will crank but won't start

1. Connect BUDS2 and read data.
2. Answer 'YES' to the warning messages that pop-up.
3. Match the VIN and model numbers from the ECM.

To complete the gauge configuration, confirm visually the number of teeth on the drive sprocket.

When gauge is matched, configure gauge options as per customer preferences. Refer to *GAUGE SETUP*.

# REMOTE MODE AND SET BUTTONS (PREMIUM GAUGE)

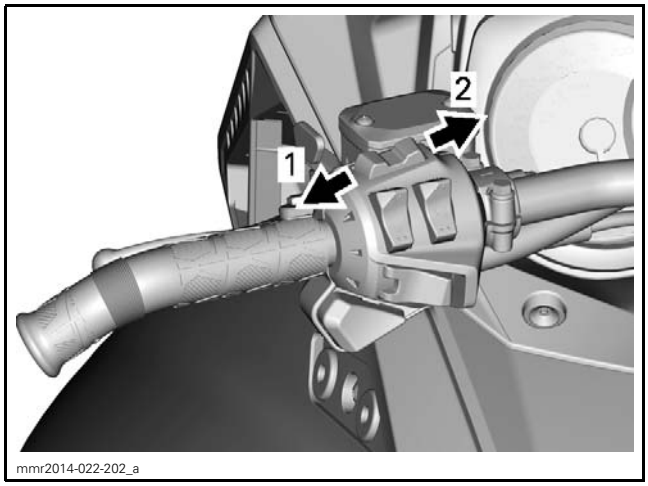


*MULTIFUNCTION SWITCH*
1. *MODE function*
2. *SET function*

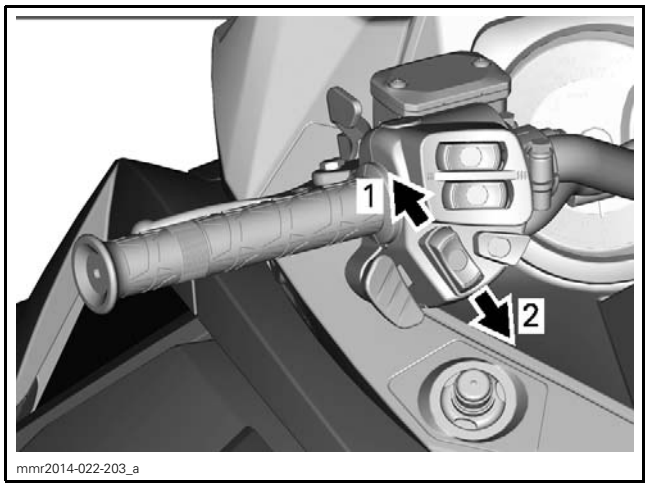


*MULTIFUNCTION SWITCH*
1. *MODE function*
2. *SET function*

## Remote M/S Button Test with BUDS2

1. Connect vehicle to BUDS2. Refer to the *COMMUNICATION TOOLS AND B.U.D.S.* subsection.
2. Using the BUDS2 software, select the **Measurements** tab.
3. Alternately press on the remote "**M**" and "**S**" buttons and look for the applicable indicator light.

**NOTE:** Indicator lights should not be GREEN when no button is pressed.

If the indicator lights come ON in BUDS2, the remote **M/S** button is functioning correctly and the gauge receives the signals from the switches.

If the indicator lights do not come ON, verify the switch is not damaged internally, then carry out the *REMOTE M/S BUTTON CONTINUITY TEST* procedure in this subsection.

## Remote M/S Button Continuity Test

1. If using the remote **M/S** button does not affect the indication, try using the buttons on the gauge. If they function, the remote **M/S** button circuit may be open.
2. Remove the gauge.
3. Disconnect the SH2 connector (8 pin).

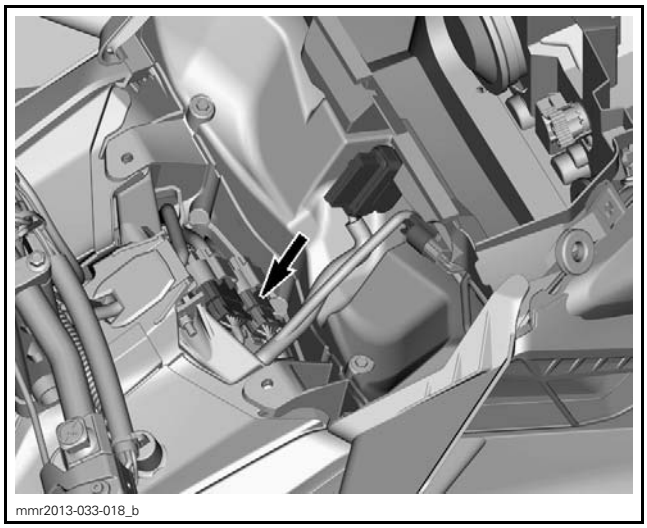


*TYPICAL - SH2 CONNECTOR (8 PIN)*

4. Using a multimeter set to Ω, carry out the following continuity test.

| REMOTE M/S BUTTON TEST | | | |
|---|---|---|---|
| SWITCH SELECTION | SH2 | | RESISTANCE |
| Centered | SH2- B | SH2- A | Infinite Ω |
| | SH2-G | | |
| M | SH2-B | SH2-A | Close to 0 Ω |
| S | SH2-G | | |

If you do not obtain the values as specified, repair or replace switch, wiring and connections.

# GAUGE (ANALOG/DIGITAL)

## SERVICE TOOLS

| Description | Part Number | Page |
|---|---|---|
| 12 V BATTERY SUPPLY CABLE | 529 035 997 | 2 |
| POWER INTERFACE | 515 177 223 | 2 |

## GENERAL

NOTE: It is a good practice to check for fault codes using BUDS2 software as a first troubleshooting step. Refer to *DIAGNOSTIC AND FAULT CODES* subsection.

**⚠ WARNING**

Torque wrench tightening specifications must be strictly adhered to. Locking devices must be replaced with new ones when removed (e.g.: locking tabs, elastic stop nuts, self-locking fasteners, cotter pins, etc.).

## ANALOG/DIGITAL GAUGE DESCRIPTION

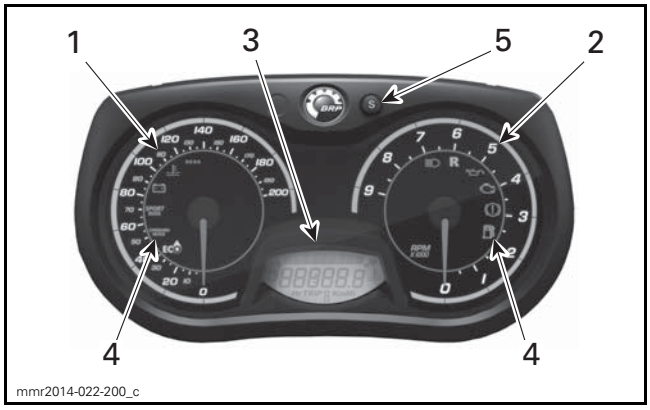


*ANALOG/DIGITAL GAUGE (STANDARD)*
1. *Analog speedometer*
2. *Analog tachometer (RPM)*
3. *Digital Display*
4. *Pilot Lamps*
5. *SET (S) button*

## MULTIFUNCTION ANALOG/DIGITAL GAUGE DESCRIPTION

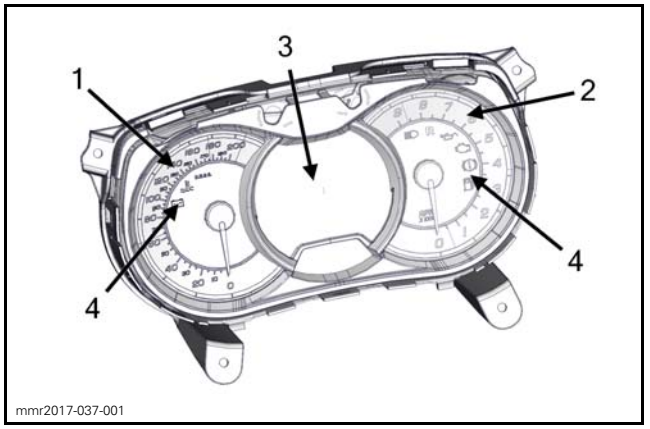


*MULTIFUNCTION ANALOG/DIGITAL GAUGE (PREMIUM)*
1. *Analog speedometer*
2. *Analog tachometer (RPM)*
3. *Multifunction Digital Display*
4. *Pilot Lamps*

### Mode and Set Buttons

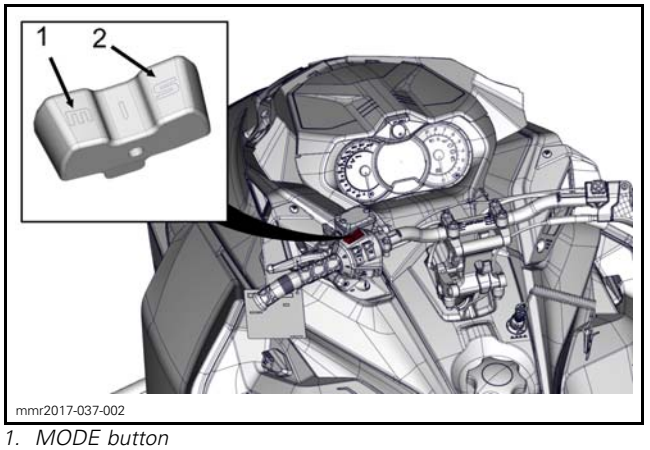


1. *MODE button*
2. *SET button*

The mode and set buttons allow you to toggle through the different gauge functions and settings.

## INDICATOR LAMPS

| INDICATOR LAMP(S) | STATE | DESCRIPTION |
|---|---|---|
| All indicator lamps | On | All indicator lamps are activated during *WOW TEST* |
| | Steady on | Brake applied while running. |
| | Blinking slowly | Reverse engaged. |
| | On | Headlights in the HIGH beam position. |
| | On | Charging system fault |
| | Blink 4 times then steady on | Engine management system fault |
| | Blink 4 times then steady on | Engine overheat |
| | Blinking | Major engine overheat |
| | On | Engine temperature displayed |
| | On | Heated grip temperature displayed |
| | On | Heated throttle lever temperature displayed |
| | On | Fuel level displayed |
| | On (amber indicator lamp) | Low fuel |
| | On | Low engine oil level |
| D.E.S.S. | Blink 2 times | Good key |
| | Blinking slowly | Not able to read the key |
| | Blinking rapidly | Wrong key read / key not programmed to vehicle |

# PROCEDURES

## POWERING THE GAUGE

Connect the following **and** place the emergency engine stop switch ON (up) to provide electrical power to the gauge.

| REQUIRED TOOLS |
|---|
| – POWER INTERFACE (P/N 515 177 223)<br>– 12 V BATTERY SUPPLY CABLE (P/N 529 035 997) (Shot and manual start models)<br>– 12-volt battery (Shot and manual start models) |

## REMOVING AND INSTALLING THE GAUGE

### Removing the Gauge

1. Remove glove box.
2. Remove gauge trim.

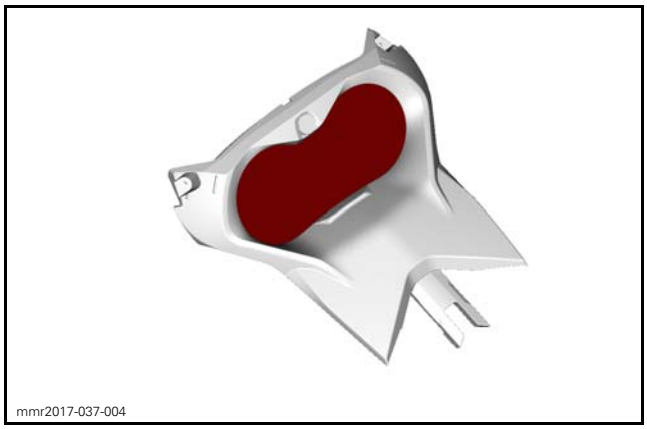
mmr2017-037-004

3. Unplug gauge connector.

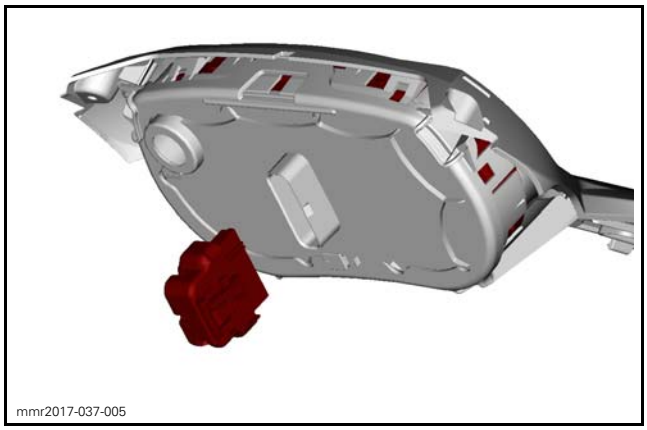
mmr2017-037-005

4. Remove retaining screws.

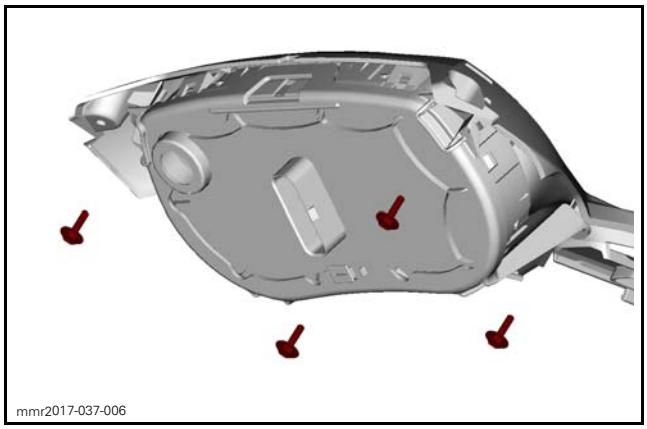
mmr2017-037-006

5. Remove gauge.

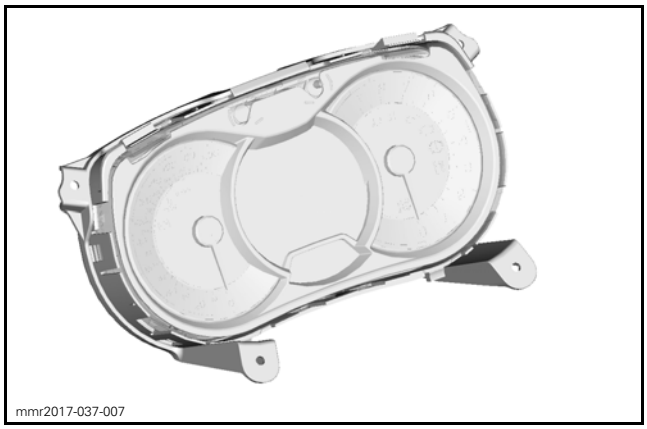
mmr2017-037-007

### Installing the Gauge

Reverse removal procedure. However, pay attention to the following.

If a new gauge **analog/digital gauge** is installed, refer to *CONFIGURING THE GAUGE* in this subsection.

| TIGHTENING TORQUE | |
|---|---|
| Gauge retaining screws | 1 N•m ± 0.2 N•m (9 lbf•**in** ± 2 lbf•**in**) |

## DISPLAYING "P" CODES (MULTIFUNCTION ANALOG/DIGITAL GAUGE ONLY)

NOTE: For models without multifunction analog/digital gauge, use the BRP diagnostic software (BUDS2) to read codes.

1. To activate **P CODE** mode, push and hold the "M" button for 2 seconds.
2. As you hold the "**M**" button, quickly turn ON and OFF the high beams a few times. The gauge will enter **P CODE** mode.
3. While in **P CODE** mode, use the "**M**" or "**S**" button to scroll over available failure codes.
4. Push and hold the "**M**" button to exit **P CODE** mode.

A **NO ACTIVE P CODE** message is displayed if there are no **P CODES** in memory.

## CONFIGURING THE GAUGE

### Gauge Setup

For any of the following setups:

– Power-up the gauge, refer to *POWERING THE GAUGE* in this subsection
– Connect vehicle to the BRP diagnostic software (BUDS2).

### Heating Elements Switch Type (Analog/Digital Gauge Only)

If the gauge is replaced by a new one, it must be set correctly according to the type of switches installed on the vehicle. This is required for proper heating elements operation (heated throttle lever and heated grips).

If the heating elements switches are in a multifunction switch on the handlebar, the heating elements are controlled separately.

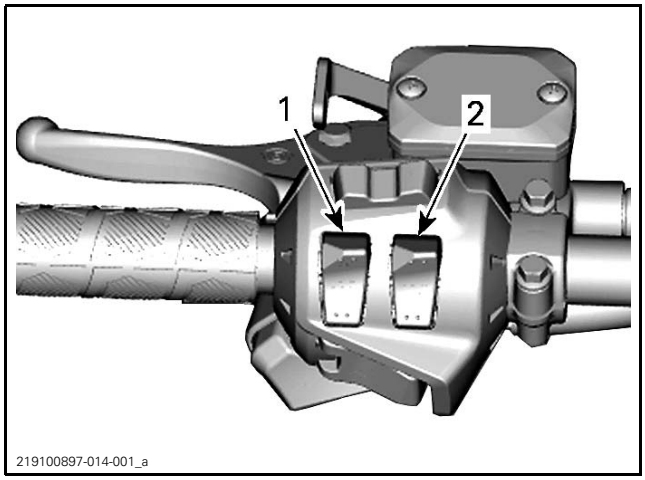


*1. Heated grips switch*
*2. Heated throttle lever switch*

If there is a single switch on the console, the heating elements are controlled simultaneously.

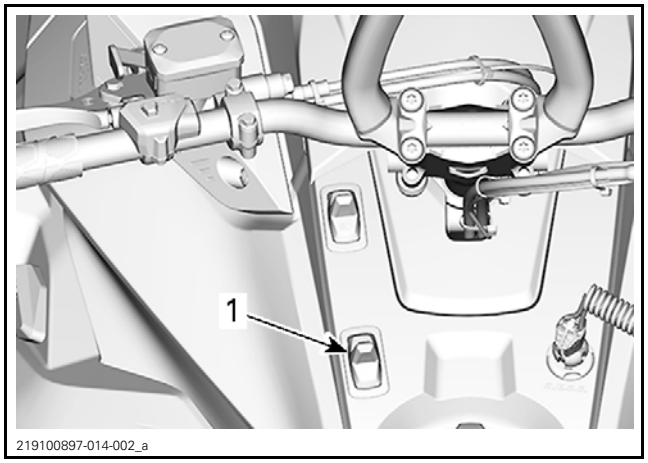


*1. Heated grips AND heated throttle lever switch*

To set the gauge accordingly, select the following in BUDS2:
– **Settings** page
– **Cluster** button
– **Configuration** tab

### Configuring the Usual Displays

The gauge is factory preset in imperial units and in English.

The following can be configured or adjusted:
– Units of measurement
– Language
– Analog speedometer pointer "0" position
– Analog tachometer pointer "0" position
– Clock (if equipped).

To proceed to changes, select the following in BUDS2:
– **Settings** page
– **Cluster** button
– **Configuration** tab

**NOTE:** Because of the fine tuning of the pointer, the button must be pressed several times before perceiving pointer movement.

## TESTING THE GAUGE

### Gauge Self Test

Gauge self test only runs if the gauge has been off for more than 30 seconds.

On **ECM wake-up**, the gauge will perform a self-test. All indications should come ON and gauge pointers will cycle once. You will have a few seconds to ensure the indications (**LEDs** and **LCDs**) are functioning correctly.

**NOTE:** This test only validates the gauge operation of the **LEDs**, **LCDs** in the gauge digital display and the pointers. It does not test the actual circuit functions related to each indication.

If the self test does not take place, test gauge input power.

### Testing Gauge Using the BRP Diagnostic Software (BUDS2)

The *GAUGE SELF TEST* can be initiated using BUDS2

Power-up the gauge, refer to *POWERING THE GAUGE* in this subsection.

Connect vehicle to BUDS2.

In BUDS2, select:
– **Function** page
– **Cluster** button
– **Routines** tab
– **Execute Cluster WOW Test**.

## Testing Gauge Power (Main 12 Vdc)

If the gauge does not come on when the engine is started, carry out the following test.

1. Remove multifunction gauge.
2. Disconnect the gauge connector.
3. Set multimeter to Vdc.
4. Power-up the gauge, refer to *POWERING THE GAUGE* in this subsection.
5. Measure voltage with the chassis ground as per following table.

| GAUGE CONNECTOR | VOLTAGE |
|---|---|
| Pin 8 | Approximately 14.5 Vdc |

6. If gauge main power input test was as specified, test the gauge ground circuit.
7. If no voltage was read, test wiring continuity. Refer to *WIRING DIAGRAM* for details.

## Testing Gauge Ground

1. Set multimeter to Ω selection.
2. Measure for continuity of gauge ground wire to chassis ground as per following table.

| GAUGE CONNECTOR | RESISTANCE |
|---|---|
| Pin 11 | Close to 0 Ω |

If ground test failed, check vehicle ground. Refer to *POWER DISTRIBUTION* subsection.

If gauge power input test and ground circuit continuity tests are good, replace gauge.

## Testing Clock 12 Vdc Input (Electric Start Models)

If the clock function (if equipped), does not hold the proper time of day when the engine is not running, carry out the following test.

1. Remove multifunction gauge.
2. Disconnect the gauge connector.
3. Set multimeter to Vdc.
4. Measure voltage as per following table.

| GAUGE CONNECTOR | VOLTAGE |
|---|---|
| Pin 9 | Battery voltage |

5. If there is no voltage read, test input wire continuity. Refer to *WIRING DIAGRAM* for circuit details.

## Testing the Beeper Using the BRP Diagnostic Software (BUDS2)

Power-up the gauge, refer to *POWERING THE GAUGE* in this subsection.

Connect vehicle to BUDS2.

In BUDS2, select:
- **Function** page
- **Cluster** button
- **Routines** tab
- **Execute Cluster Buzzer Test**.

## Testing Mode and Set Buttons (If Equipped) Using the BRP Diagnostic Software (BUDS2)

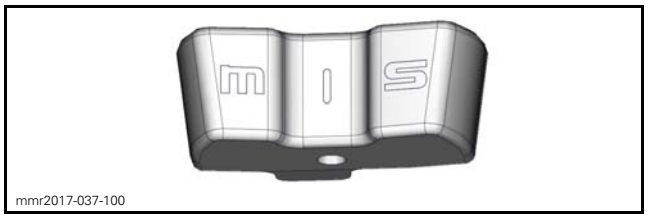

mmr2017-037-100

Power-up the gauge, refer to *POWERING THE GAUGE* in this subsection.

Connect vehicle to BUDS2.

In BUDS2, select:
- **Measurements** page
- **Cluster** button
- **Cluster Basics** tab
- **Mode Switch** or **Set Switch**.

If BUDS2 doesn't read the button input, check the button and wiring continuity, refer to *WIRING DIAGRAM*.

If button and wiring are good, replace the gauge.

# ACCESSORIES

## SERVICE TOOLS


| Description | Part Number | Page |
|---|---|---|
| 12 V BATTERY SUPPLY CABLE | 529 035 997 | 1 |
| FLUKE 115 MULTIMETER | 529 035 868 | 4 |
| POWER INTERFACE | 515 177 223 | 1 |


## SERVICE TOOLS – OTHER SUPPLIER


| Description | Part Number | Page |
|---|---|---|
| MULTILOCK - TERMINAL EXTRACTION TOOL | 755430-2 | 7 |


## GENERAL

NOTE: It is a good practice to check for fault codes using BUDS2 software as a first troubleshooting step. Refer to *DIAGNOSTIC AND FAULT CODES* subsection.

**⚠ CAUTION** The battery charging fuse should always be removed before carrying out any maintenance on the vehicle to prevent any unexpected electrical activation. Removal of this fuse isolates the battery from the vehicle electrical system, except for the starter relay input terminal.

**⚠ WARNING**

Torque wrench tightening specifications must be strictly adhered to. Locking devices must be replaced with new ones when removed (e.g.: locking tabs, elastic stop nuts, self-locking fasteners, cotter pins, etc.).

## SYSTEM TESTING

For models without a battery, connect the following tools in order to provide electrical power to the vehicle.

| REQUIRED TOOLS |
|---|
| – POWER INTERFACE (P/N 515 177 223)<br>– 12 V BATTERY SUPPLY CABLE (P/N 529 035 997)<br>– 12-volt battery |

| HEATER POWER AVAILABLE AT ENGINE IDLE | | |
|---|---|---|
| | ENGINES | |
| MODEL YEAR | ACE AND 4-TEC | E-TEC |
| 2012 and under | NA | NA |
| 2013 and up | NA | 0% - 50% |

Optional accessories may have reduced functionality when idling.

## SYSTEM DESCRIPTION

### Heated Throttle Lever

The throttle lever heat is controlled through the gauge.

A three position switch on the LH multifunction switch allows selection of 9 heat levels, which are displayed in the indicator.

NOTE: The heating intensity is displayed via the digital display with the activation of the throttle lever switch. When released, display will return to fuel tank level.

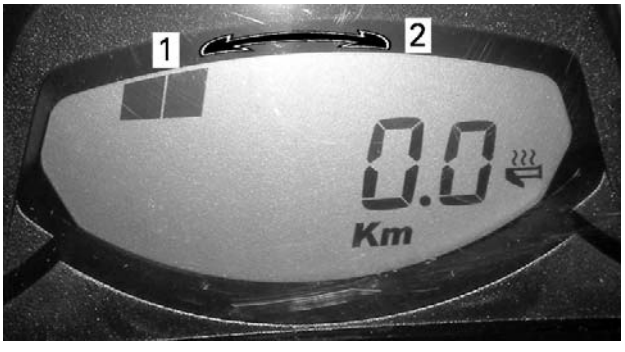


mmo2013-004-040_a

*VARIABLE HEATING INTENSITY DISPLAY - STANDARD GAUGE*
1. *Less heat*
2. *More heat*

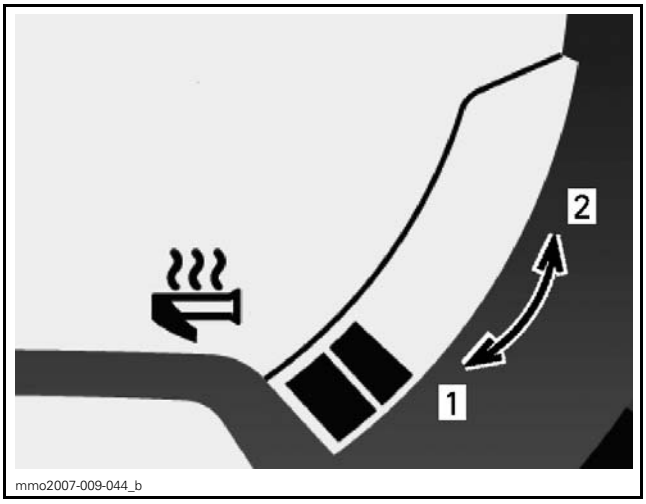

mmo2007-009-044_b

*THROTTLE LEVER HEAT INDICATOR - PREMIUM GAUGE*
1. *Decrease heat*
2. *Increase heat*

The switch selection sends a signal to the premium gauge to increase or decrease heat.

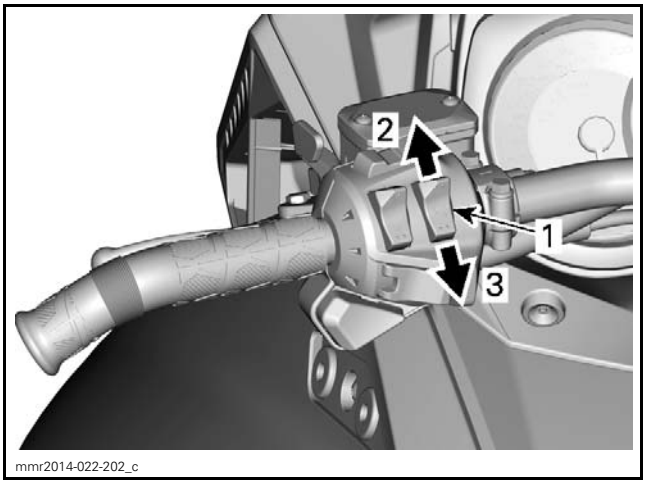

mmr2014-022-202_c

1. *Heated throttle lever switch*
2. *Increase*
3. *Decrease*

The gauge then applies the appropriate amount of current to the heater according to the selection.

To turn OFF the heaters, select heat down until there is no more indication on the bar graph.

When released, the switch springs back to the center neutral position.

## Heated Handlebar Grips

The grip heat is controlled through the gauge.

A three position switch on the LH multifunction switch allows selection of 9 heat levels, which are displayed in the indicator.

NOTE: The heating intensity is displayed via the digital display with the activation of the heated grips switch. When released, display will return to fuel tank level.

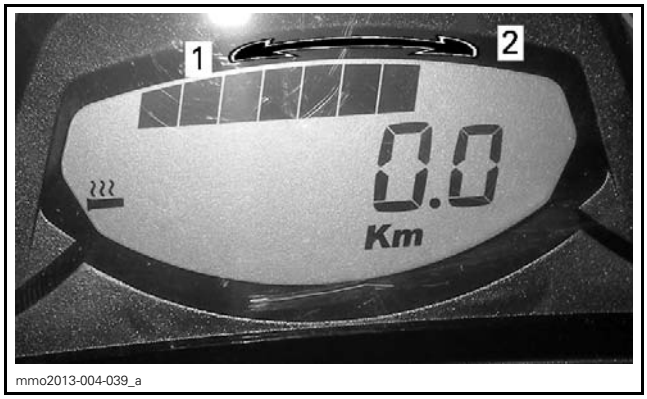

mmo2013-004-039_a

*HEATING INTENSITY DISPLAY - STANDARD GAUGE*
1. *Less heat*
2. *More heat*

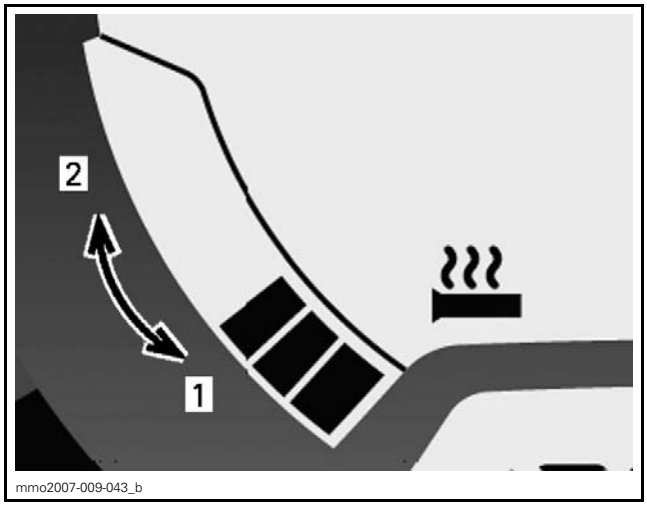

mmo2007-009-043_b

*HEATING INTENSITY DISPLAY - PREMIUM GAUGE*
1. *Decrease heat*
2. *Increase heat*

The switch selection sends a signal to the premium gauge to increase or decrease heat.

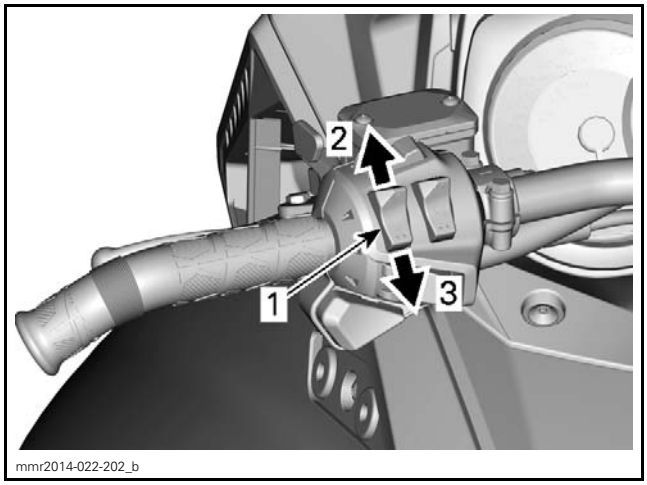

mmr2014-022-202_b

1. *Heated grips switch*
2. *Increase*
3. *Decrease*

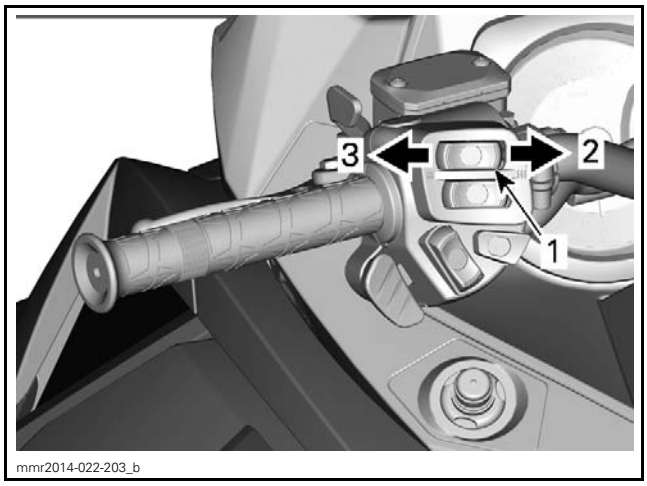


1. *Heated grips switch*
2. *Increase*
3. *Decrease*

The gauge then applies the appropriate amount of current to the heater according to the selection.

To turn OFF the heaters, select heat down until there is no more indication on the bar graph.

When released, the switch springs back to the center neutral position.

### Front Heated Seat Circuit

The front seat harness receives power from the accessory (ACC) connector on the main vehicle harness.

The front heated seat harness includes:
– a connector to connect additional accessories
– an outlet to the heated visor plug
– a three position switch
– heating elements for the heated seat
– a connector to the heated seat
– a blocking diode

The heated seat has two heating elements. When the switch is set to low, power flows through one heating element. When the switch is set to high, power flows through both heating elements.

NOTE: When the heated seat switch is set to low, a blocking diode in the heated seat harness blocks power from reaching the second heating element.

### Rear Heated Seat and Grips Circuit

The rear seat harness receives power from the accessory (ACC) connector on the main vehicle harness.

The rear seat harness includes
– an outlet to the heated visor plug
– an outlet to the heated boot plug
– heating elements for the right heated grip
– heating elements for the left heated grip
– heating elements for the heated seat
– a three position heated grip switch
– a three position heated seat switch
– a connector to the heated seat
– a connector to each heated grip
– a blocking diode

The heated seat has two heating elements. When the switch is set to low, power flows through one heating element. When the switch is set to high, power flows through both heating elements.

NOTE: When the heated seat switch is set to low, a blocking diode in the heated seat harness blocks power from reaching the second heating element.

The heated grips have two separate heating elements in each grip. When the switch is set to low, power flows through the low heating element. When the switch is set to high, power flows through the high heating element.

## TROUBLESHOOTING (HEATED SEATS AND PASSENGER HEATED GRIPS)

### LOW SETTING DOES NOT WORK, ALWAYS HEATING ON HIGH

1. Shorted blocking diode
   - *Check blocking diode in heated seat harness*

### HIGH SETTING DOES NOT WORK, ALWAYS HEATING ON LOW

1. Open blocking diode
   - *Check blocking diode in heated seat harness*

### HEATED SEAT DOES NOT HEAT

1. No power to seat
2. No ground to seat
3. Open in heating element(s)
   - *Check system fuse (if applicable). Refer to WIRING DIAGRAM*
   - *Check power and ground at heated seat connector*
   - *Check resistance of heated seat elements*

# PROCEDURES

## HEATED THROTTLE LEVER

### Testing the Throttle Lever Heat Switch with BUDS2

1. Provide electrical power to the gauge for testing.
2. Using the BUDS2 software, select the **Measurements** tab.
3. Press on the vehicle thumb lever heat switch to alternately increase or decrease heat.
4. In BUDS2, look for a status variation.

If test is good, proceed with *GAUGE HEATER OUTPUT TEST WITH BUDS2* in this subsection.

If test failed, proceed with *THROTTLE LEVER HEAT SWITCH TEST* in this subsection.

### Testing the Gauge Heater Power Output with BUDS2

1. Provide electrical power to the gauge for testing.
2. Using the BUDS2 software, select the **Functions** tab.
3. Activate the throttle lever heater.
4. Look for a status change and touch throttle lever to confirm it heats up.
5. If test is good, the gauge output to throttle lever heater is good. Proceed with *THROTTLE LEVER HEATING ELEMENT TEST* in this subsection.
6. If the test failed, replace the gauge.

NOTE: When finished testing, ensure to deactivate the throttle lever heater in BUDS2.

### Testing the Throttle Lever Heat Switch

1. Remove the gauge.
2. Disconnect the SH2 connector (8 pin).

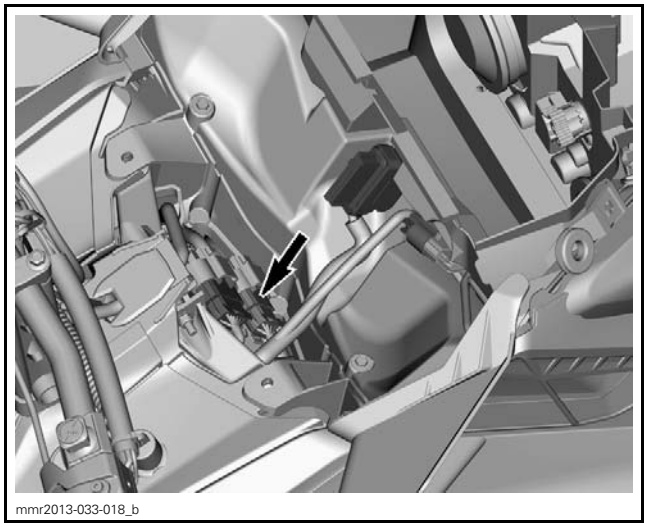


*TYPICAL - SH2 CONNECTOR (8 PIN)*

| REQUIRED TOOL |
|---|
| FLUKE 115 MULTIMETER (P/N 529 035 868) |

3. Using a multimeter, select the Ω position.
4. Test throttle lever heat switch and circuits as per table.

| THROTTLE LEVER HEAT SWITCH TEST | | | |
|---|---|---|---|
| SWITCH SELECTION | SH2 | | RESISTANCE |
| UP | SH2-D | SH2-A | Close to 0 Ω |
| | SH2-C | SH2-A | Infinite (OL) |
| DOWN | SH2-D | SH2-A | Infinite (OL) |
| | SH2-C | SH2-A | Close to 0 Ω |

If continuity test is as per specification, proceed with *THROTTLE LEVER HEATING ELEMENT TEST* in this subsection.

If continuity test is out of specification, check switch circuit as per wiring diagram. If good, replace switch.

### Testing the Throttle Lever Heating Element

1. Disconnect the RH steering connector (6 pin) located under the steering cover.
2. Carry out a resistance check of the heating elements as follows.

| THROTTLE LEVER HEATING ELEMENT TEST | | |
|---|---|---|
| HEATER WIRE | | RESISTANCE (APPROXIMATELY) @ 20°C (68°F) |
| RH-2 | RH-4 | 2.5 Ω |

3. If readings are out of specifications, replace throttle lever.
4. If heating element readings are within specifications, check wiring and connections.
5. Reconnect connectors.

# HEATED HANDLEBAR GRIPS

## Testing the Handlebar Heated Grip Switch with BUDS2

1. Provide electrical power to the gauge for testing.
2. Using the BUDS2 software, select the **Measurements** tab.
3. Press on the vehicle handle grip heat switch to alternately increase or decrease heat.
4. In BUDS2, look for status change.

If test is good, proceed with *GAUGE HEATER OUTPUT TEST WITH BUDS2* in this subsection.

If test failed, proceed with *HANDLEBAR GRIP HEAT SWITCH TEST* in this subsection.

## Testing the Gauge Heater Power Output with BUDS2

1. Provide electrical power to the gauge for testing.
2. Using the BUDS2 software, select the **Functions** tab.
3. Activate the handle grip heater.
4. In BUDS2, look for a status change.
5. If test is good, the gauge heater to handlebar grip heater is good. Proceed with *HANDLEBAR GRIP HEATING ELEMENT TEST* in this subsection.
6. If the test failed, replace the gauge.

NOTE: When finished testing, ensure to deactivate the handle grip heater in BUDS2.

## Testing the Handlebar Heated Grip Switch

Remove the gauge.

Disconnect the SH2 connector (8 pin).

Refer to *WIRING HARNESS AND CONNECTORS* for connector location.

Disconnect both LH (4 pin) and RH (6 pin) connectors under the steering cover.

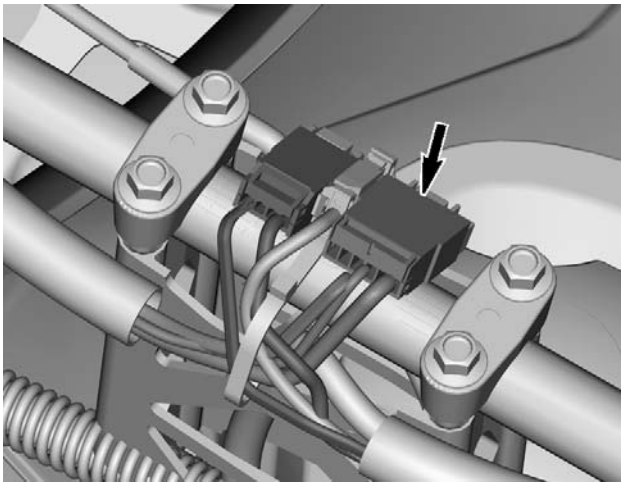
mmr2013-033-017_b

*TYPICAL RH STEERING CONNECTOR (6 PIN)*

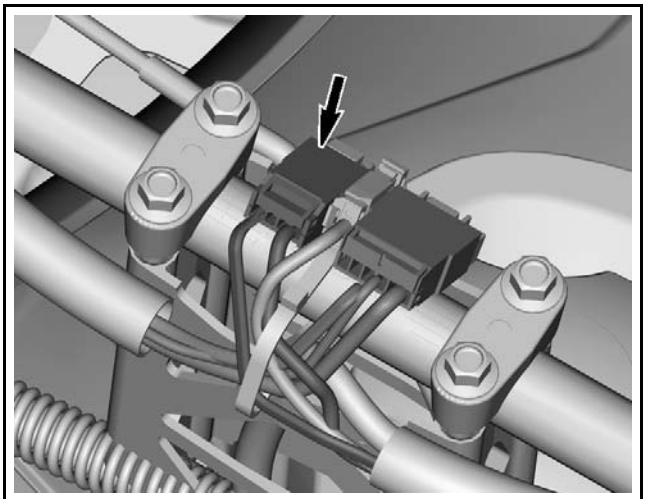
mmr2013-033-017_a

*TYPICAL — LH STEERING CONNECTOR (4 PIN)*

To test the RH heater circuit, probe the RH steering connector (4 pin).

To test the LH heater circuit, probe the LH steering connector (6 pin).

Test handlebar grips switch and circuits as per table.

| HANDLEBAR HEATED GRIP SWITCH TEST RH HEATER | | | |
|---|---|---|---|
| SWITCH SELECTION | SH2 | RH | RESISTANCE |
| UP | SH2-F | RH-1 | Close to 0 Ω |
| | | RH-4 | Infinite (OL) |
| DOWN | SH2-E | RH-4 | Infinite (OL) |
| | | RH-1 | Close to 0 Ω |

| HANDLEBAR HEATED GRIP SWITCH TEST LH HEATER | | | |
|---|---|---|---|
| SWITCH SELECTION | SH2 | LH | RESISTANCE |
| UP | SH2-F | LH-2 | Close to 0 Ω |
| | | LH-1 | Infinite (OL) |
| DOWN | SH2-E | LH-1 | Infinite (OL) |
| | | LH-2 | Close to 0 Ω |

If continuity test is as per specification, proceed with *HANDLEBAR GRIP HEATING ELEMENT TEST* in this subsection.

If continuity test is out of specification, check switch circuit. If good, replace switch.

## Testing the Handlebar Grip Heating Element

If you cannot feel the temperature increase of a hand grip heating element, carry out the following steps.

1. Disconnect the two steering connectors located under the steering cover.

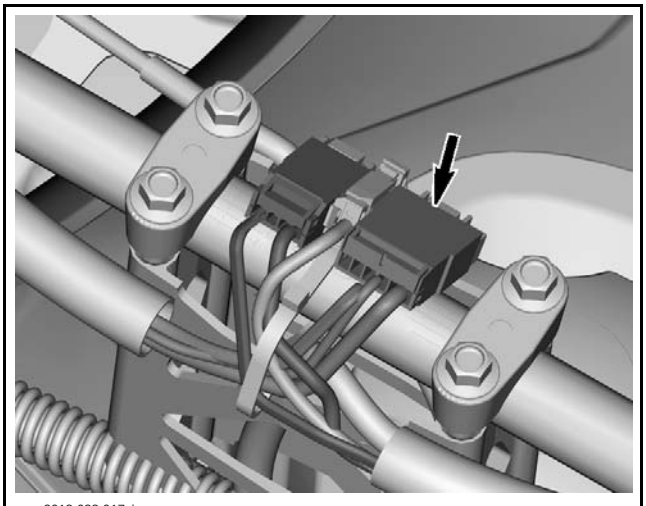

mmr2013-033-017_b

*TYPICAL RH STEERING CONNECTOR (6 PIN)*

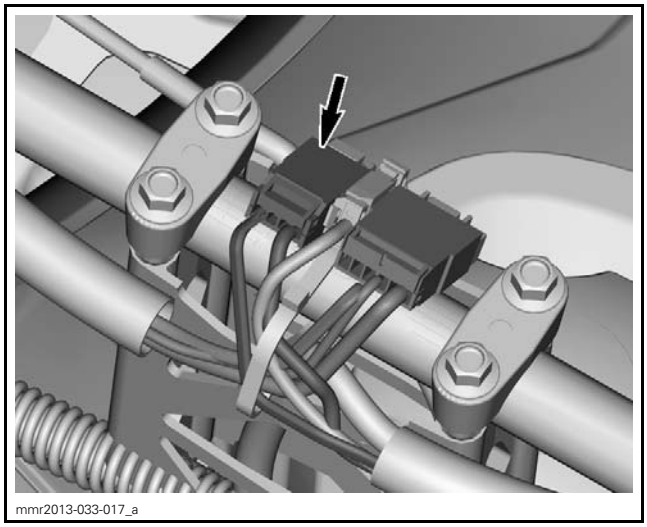

mmr2013-033-017_a

*TYPICAL — LH STEERING CONNECTOR (4 PIN)*

2. Test heating elements on either side as per following specifications.

| HANDLEBAR GRIP HEATING ELEMENT TEST | | |
|---|---|---|
| HEATER WIRE | | RESISTANCE @ 20°C (68°F) |
| LH-1 | LH-2 | 5.3 to 6.6 Ω |
| RH-1 | RH-4 | |

3. If readings are out of specifications, replace applicable handle grip heating element.
4. If heating element readings are within specifications, check wiring and connections.
5. Reconnect connectors.

## Removing the Heater Element

**NOTICE** **Heater wire routing may vary significantly due to different type handlebars and vehicles. Its highly important to take note of exact positioning of grip heaters, locking ties, and wire routing before removing them from the handlebars. Failure to properly route wires may lead to equipment damage or failure.**

1. Remove the following items as applicable, refer to *STEERING SYSTEM* subsection for details.
   - Steering cover
   - Rubber hand grip
   - Multifunction switch cover.
2. Disconnect the RH (6 pin) or LH (4 pin) steering connectors under the steering cover (as applicable).

mbg2008-009-005

*TYPICAL — STEERING CONNECTORS*

3. Open the cover on the back of the connector housing using a small screwdriver or a suitable tool.

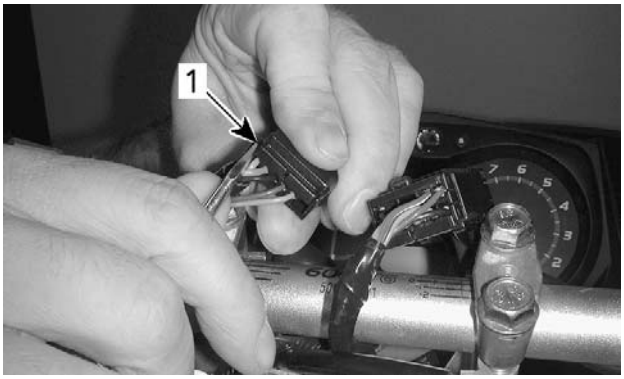

mbg2008-009-006_b

*TYPICAL*
*1. Connector housing cover locks (one each side)*

| REQUIRED TOOL |
| --- |
| MULTILOCK - TERMINAL EXTRACTION TOOL (P/N 755430-2) |

4. Using a terminal extraction tool, unlock the heater wire terminals and push them out of the connector housing.

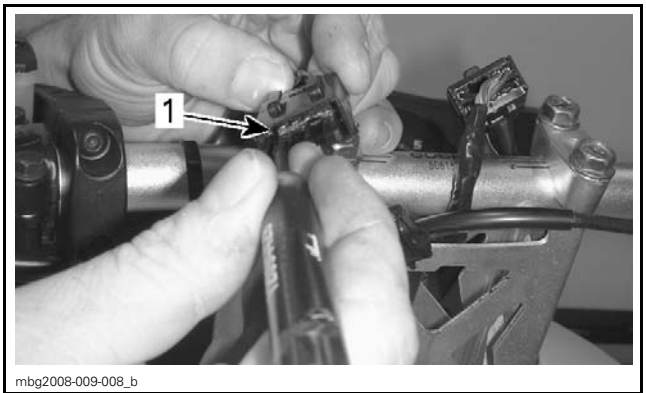

mbg2008-009-008_b

*TYPICAL — UNLOCKING CONNECTOR PIN (FRONT SIDE)*
*1. Pin removal tool inserted above pin*

NOTE: Terminals are unlocked and pushed out from the front (pin side) of the connector housing.

**NOTICE** **Be sure to take note of exact positioning of grip heaters, locking ties, and wire routing before removing them from the handlebars.**

5. Cut locking ties securing heater wires to handlebars.
6. Pull wires from harness protective sheath, multifunction switch housing or throttle lever housing.
7. Cut and remove black electrical tape from heater element and remove heater from cork insulator.

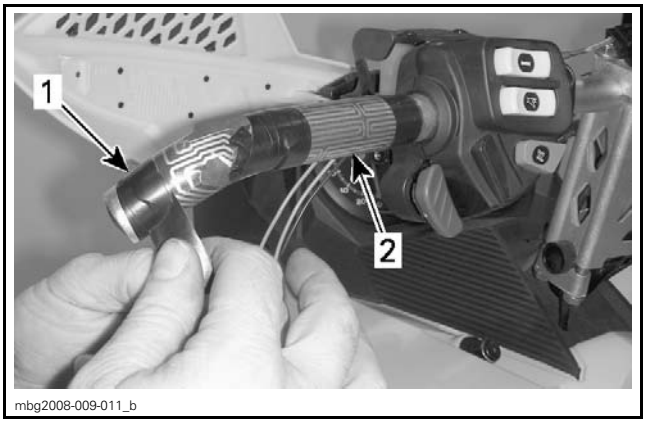

mbg2008-009-011_b

*TYPICAL — LH HEATER*
*1. Electrical tape (4 places)*
*2. Heater element*

8. If damaged, remove cork insulator from handlebar and clean all adhesive residue from the handlebar.

## Installing the Heater Element

1. Measure 159 mm (6.25 in) from the end of the handlebar, and across the top of the bend in the bar. Trace a reference line with a marker at that point on the handlebar.

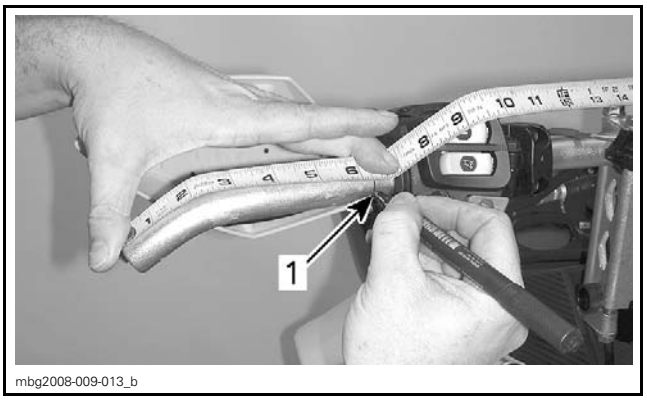


*TYPICAL — MEASURING FOR HEATER POSITION*
*1. Trace reference line*

2. Align the edge of the cork insulator with the reference line centered with the handlebar folding axis as illustrated.

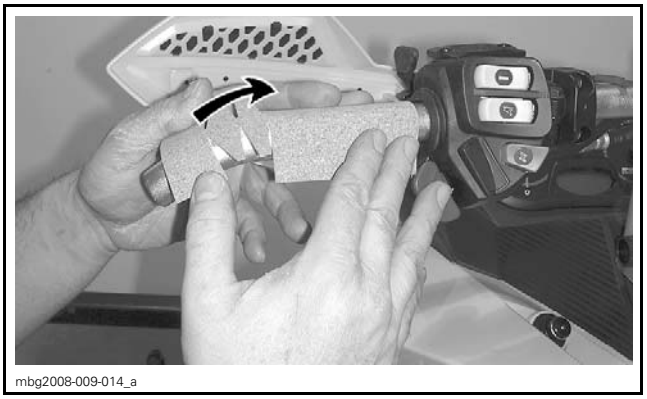


*TYPICAL — CORK INSULATOR ALIGNMENT*

3. Apply firm pressure to cork insulator to assure proper adherence to handlebar.
4. Align the film heater element with the cork insulator and center of handlebar folding axis as illustrated.

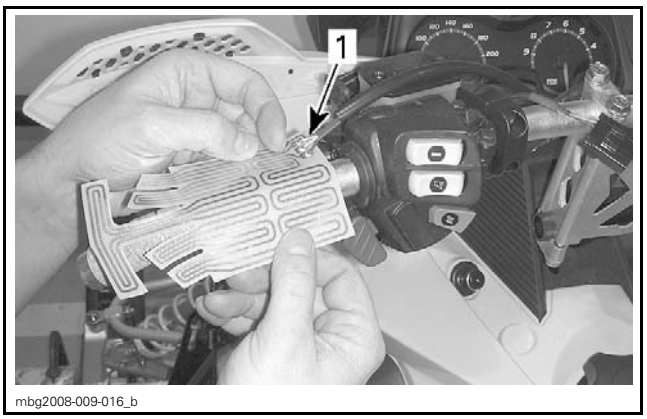


*TYPICAL — HEATER ALIGNMENT*
*1. Heater wire position (LH front, RH rear)*

5. Apply firm pressure to heater to assure proper adherence to cork insulator.

NOTE: The same heater element is used for both the LH and RH sides. Therefore, the electrical wiring will be in front of the handlebar on the LH side, and behind the handlebar (towards driver) on the RH side.

6. Apply two turns of black electrical tape at each of the four locations illustrated so that it covers the edges of the heater element and prevents snagging and damage to the element during rubber grip installation.

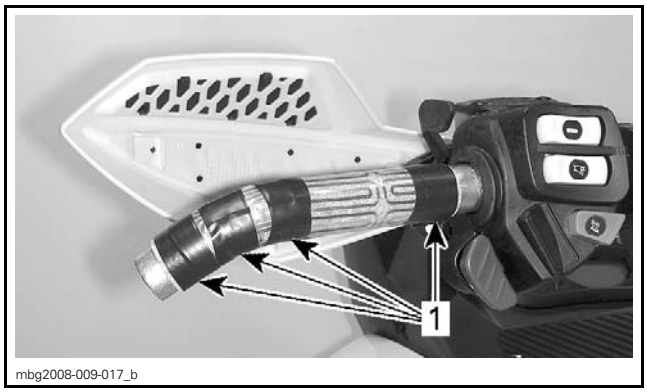


*TYPICAL*
*1. Electrical tape application (4x)*

NOTE: It is highly important to apply tape so that it fully secures the electrical wire connections. This will ease installation of the rubber hand grip and prevent undue stress to the connections.

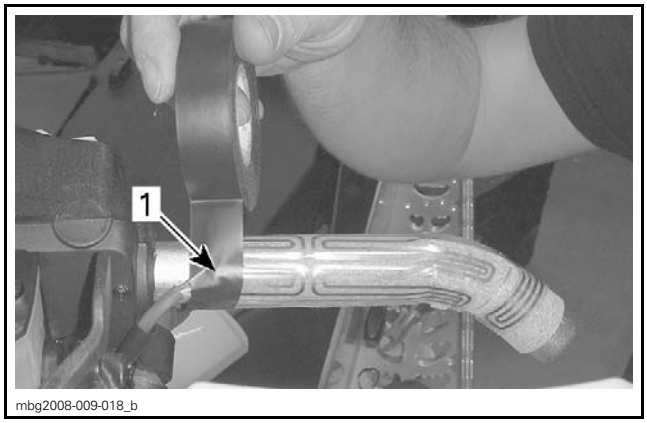


*TYPICAL — IMPORTANT*
*1. Tape application over wire connections*

7. Install rubber hand grip, refer to *STEERING SYSTEM* subsection for detail.
8. Route wiring as noted during the removal procedure.
9. Insert wire connectors in steering connector housing, refer to *WIRING DIAGRAM* for wire color and pin number locations.

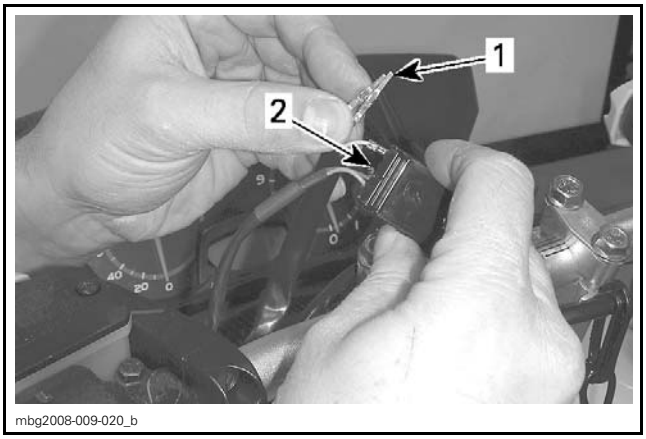


*TYPICAL*
1. *Heater wire terminals*
2. *Insertion through back of connector*

10. Install locking ties to secure the heater wire tightly against the handlebar.

**⚠ WARNING**

**To ensure RH heater wires does not prevent smooth operation of throttle lever, it must be passed straight through the housing without any slack, and secured with a locking tie immediately after the lever housing.**

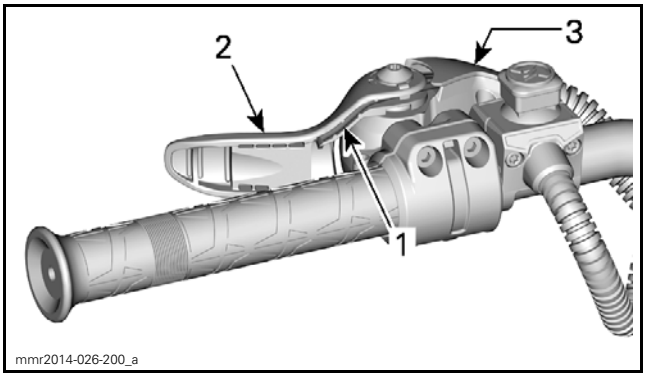


*TYPICAL*
1. *Heater wire straight through throttle lever housing*
2. *Throttle lever*
3. *Lever housing*

***NOTICE*** **Ensure LH heater wires are properly routed through multifunction switch housing to prevent them from being pinched when installing housing cover. Pinched or damaged wires may result in a short circuit.**

11. Provide electrical power to the heaters for testing.
12. Using the hand grip heat switch, turn on the hand grip heaters and ensure they are functioning correctly.

# HEATED SEATS AND PASSENGER HEATED GRIPS

## Testing Heated Seats

Unplug connector and measure resistance as per following table.

| HEATED SEAT CONNECTOR - PROBE | | RESISTANCE (APPROXIMATELY) @ 20°C (68°F) |
|---|---|---|
| YE wire | BK wire | 32 Ω |
| RD wire | BK wire | 17.5 Ω |

If resistance is not as specified, replace heated seat.

If resistance is as specified, continue testing.

Start and idle engine.

NOTE: On some models, you may need to increase RPM to above 2000 RPM in order to power this secondary 12v circuit.

Measure voltage at the heated seat connector as indicated in following table.

| HEATED SEAT SWITCH POSITION | HEATED SEAT CONNECTOR - PROBE | | VOLTAGE (APPROXIMATELY) |
|---|---|---|---|
| High | YE wire | BK wire | 12Vdc |
| | RD wire | | |
| Low | YE wire | | 12Vdc |
| | RD wire | | 0Vdc |

If voltage is not as indicated, test switch and/or wires from element to switch. Refer to *WIRING DIAGRAM*.

## Testing Passenger Heated Grips (Left or Right)

Unplug connector and measure resistance as per following table.

| PROBE | | RESISTANCE (APPROXIMATELY) @ 20°C (68°F) |
|---|---|---|
| OG wire | BK wire | 9.5 Ω |
| OG/VT wire | BK wire | 19 Ω |

If resistance is not as specified, replace heated grip.

If resistance is as specified, continue testing.

Start and idle engine.

NOTE: On some models, you may need to increase RPM to above 2000 RPM in order to power this secondary 12v circuit.

Measure voltage at the heated grip connector as indicated in following table.

| HEATED GRIP SWITCH POSITION | PROBE | | VOLTAGE (APPROXIMATELY) |
|---|---|---|---|
| High | OG wire | BK wire | 12Vdc |
| | OG/VT wire | | 0Vdc |
| Low | OG wire | | 0Vdc |
| | OG/VT wire | | 12Vdc |

If voltage is not as indicated, test switch and/or wires from element to switch. Refer to *WIRING DIAGRAM*.

## Testing Heated Seat and Grip Switches

Measure switch resistance as per following table.

| SWITCH POSITION | PROBE | | RESISTANCE |
|---|---|---|---|
| High | Pin B | Pin C | Close to 0 Ω |
| Off | Pin B | Pin C | O.L. |
| | | Pin A | O.L. |
| Low | Pin B | Pin A | Close to 0 Ω |

If resistance is not as specified, replace switch.

If resistance is as specified, continue testing.

Start and idle engine.

NOTE: On some models, you may need to increase RPM to above 2000 RPM in order to power this secondary 12v circuit.

Measure voltage at the switch connector as indicated in following table.

| SWITCH POSITION | PROBE | | VOLTAGE (APPROXIMATELY) |
|---|---|---|---|
| Any | Pin B | Chassis ground | 12Vdc |

If voltage is not as indicated, test power distribution circuit to switch. Refer to *WIRING DIAGRAM*.

# ACCESSORIES

## GENERAL

On multifunction analog/digital gauge, heated grips and heated throttle lever output are OFF when idling.

NOTE: It is a good practice to check for fault codes using BUDS2 software as a first troubleshooting step. Refer to *DIAGNOSTIC AND FAULT CODES* subsection.

**⚠ WARNING**

**Torque wrench tightening specifications must be strictly adhered to. Locking devices must be replaced with new ones when removed (e.g.: locking tabs, elastic stop nuts, self-locking fasteners, cotter pins, etc.).**

## SYSTEM TESTING

Connect vehicle to BUDS2 in order to provide electrical power to the vehicle. Refer to *COMMUNICATION TOOL AND B.U.D.S.*

## SYSTEM DESCRIPTION (HEATED THROTTLE LEVER)

Power to the heated throttle lever is controlled through the gauge.

A three position switch allows the selection various heat levels, which are displayed in the gauge.

The switch selection sends a signal to the gauge to increase or decrease heat.

mmr2017-038-002

*HEATER SWITCH*

The gauge then applies the appropriate amount of current to the heater according to the selection.

To turn OFF the heaters, select heat down until there is no more indication on the bar graph.

When released, the 3 position switch springs back to the center neutral position.

## SYSTEM DESCRIPTION (HEATED HANDLEBAR GRIPS)

The grip heat is controlled through the gauge.

A three position switch allows the selection of various heat levels, which are displayed in the gauge.

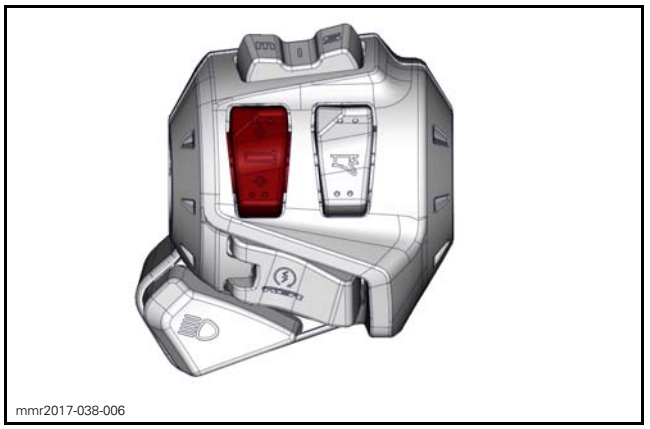

mmr2017-038-006

*HEATER SWITCH - MODELS WITH MULTIFUNCTION SWITCH*

NOTE: The heating intensity is displayed via the gauge with the activation of the heated grips switch.

The gauge then applies the appropriate amount of current to the heater according to the selection.

To turn OFF the heaters, select heat down until there is no more indication on the bar graph.

When released, the switch springs back to the center neutral position.

Midwest Manuals
Green Manuals
Paperless Manuals For a Better Tomorrow www.green-manuals.com
If you bought this manual from any other seller please leave them NEGATIVE feedback and notify me at bestshopmanuals@gmail.com

# PROCEDURES

## HEATED THROTTLE LEVER

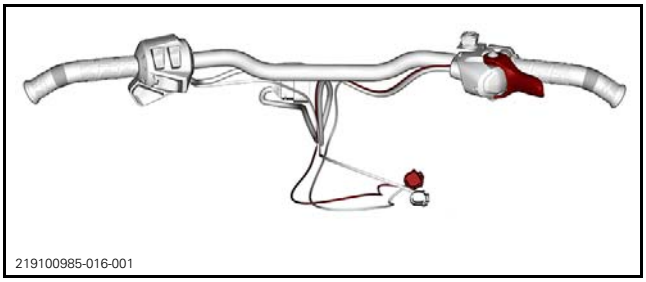


### Testing Heated Throttle Lever Switch with BUDS2

Heating elements are permanently connected to ground. Positive voltages are supplied by gauges.

1. Provide electrical power to the gauge for testing.
2. Using BUDS2, select the **Measurements** page.
3. Alternately increase or decrease heat using heated throttle lever switch.
4. Look for the applicable value to change to confirm the gauge receives the signal.

If test is good, refer to *TESTING GAUGE HEATED THROTTLE LEVER POWER OUTPUT* in this subsection.

If test failed, refer to *TESTING THROTTLE LEVER HEAT SWITCH* in this subsection.

### Testing Gauge Heated Throttle Lever Power Output

1. Provide electrical power to the gauge for testing.
2. Using BUDS2, select the **Functions** page..
3. In BUDS2, turn on the heated throttle grip.
4. Touch throttle lever to confirm it heats up.
5. Backprobe gauge **no. MG** connector as per following table.

| MODELS WITH ANALOG/DIGITAL GAUGE | |
|---|---|
| TERMINAL | SPECIFICATION |
| MG-4 | 12 Vdc |

6. If test is good, the gauge output to throttle lever heater is good. Proceed with *TESTING THROTTLE LEVER HEATING ELEMENT* in this subsection.
7. If the test failed, replace the gauge.

### Testing Throttle Lever Heating Element

Refer to *WIRING HARNESS AND CONNECTORS* subsection for connector location.

| STR 6P CONNECTOR | | RESISTANCE @ 20°C (68°F) |
|---|---|---|
| STR 6P-5 | STR 6P-2 | 1.73 - 4.22 Ω |

1. If readings are out of specifications, replace throttle lever.
2. If heating element readings are within specifications, check wiring and connections to gauge.
3. Reconnect connectors.

## HEATED HANDLEBAR GRIPS

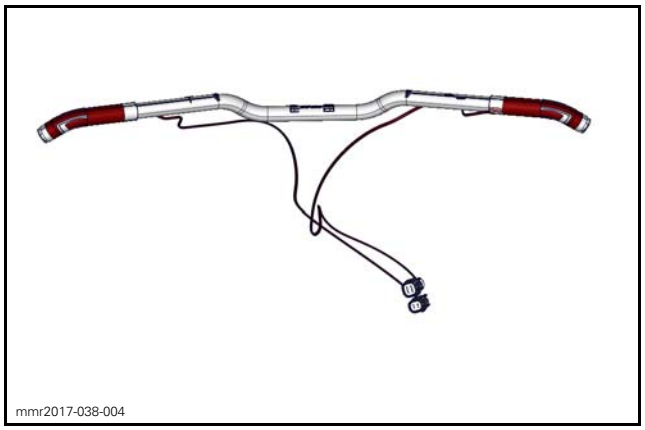


### Testing Handlebar Heated Grip Switch with BUDS2

Heating elements are permanently connected to ground. Positive voltages are supplied by gauges.

1. Provide electrical power to the gauge for testing.
2. Using the BUDS2, navigate to the **Measurements** page.
3. Press on the vehicle handle grip heat switch to alternately increase or decrease heat.
4. In BUDS2, look for the applicable to change.

If test is good, proceed with *TESTING GAUGE HEATER GRIPS POWER OUTPUT WITH BUDS2* in this subsection.

If test failed, proceed with *TESTING HANDLEBAR GRIP HEAT SWITCH* in this subsection.

### Testing Gauge Heater Grips Power Output with BUDS2

1. Provide electrical power to the gauge for testing.

2. Using the BUDS2, navigate to the **Functions** page.
3. In BUDS2, turn the heated grips on.

| MODELS WITH ANALOG/DIGITAL GAUGE | |
|---|---|
| TERMINAL | SPECIFICATION |
| MG-5 | 12 Vdc |

4. If test is good, the gauge heater to handlebar grip heater is good. Proceed with *TESTING HANDLEBAR GRIP HEATING ELEMENT* in this subsection.
5. If the test failed, replace the gauge.

## Testing Handlebar Grip Heating Element

If you cannot feel the temperature increase of a hand grip heating element, carry out the following steps.

1. Disconnect heated grip connector.
2. Test heating elements on either side as per following specifications.

Refer to *WIRING HARNESS AND CONNECTORS* subsection for connector location.

| RIGHT HEATED GRIP | | RESISTANCE @ 20°C (68°F) |
|---|---|---|
| STR 6P-4 | STR 6P-1 | 5.3 - 6.6 Ω |

| LEFT HEATED GRIP | | RESISTANCE @ 20°C (68°F) |
|---|---|---|
| STR 4P-3 | STR 4P-1 | 5.3 - 6.6 Ω |

3. If readings are out of specifications, replace applicable handle grip heating element.
4. If heating element readings are within specifications, check wiring and connections.
5. Reconnect connectors.

## Removing Heater Element

**NOTICE** **Heater wire routing may vary significantly due to different type handlebars and vehicles. Its highly important to take note of exact positioning of grip heaters, locking ties, and wire routing before removing them from the handlebars. Failure to properly route wires may lead to equipment damage or failure.**

1. Disconnect the connector, Refer to *WIRING DIAGRAM AND CONNECTORS* subsection for connector location.
   1.1 STR 4P for left hand handlebar heater
   1.2 STR 6P for right hand handlebar heater

Use procedures for *MOLEX* connectors in the *WIRING DIAGRAM AND CONNECTORS* subsection.

2. Cut locking ties securing heater wires to handlebars.
3. Pull wires from harness protective sheath, multifunction switch housing or throttle lever housing.
4. Cut and remove black electrical tape from heater element and remove heater from cork insulator.
5. If damaged, remove cork insulator from handlebar and clean all adhesive residue from the handlebar.

## Installing Heated Grips Heater Element

1. Measure 159 mm (6.25 in) from the end of the handlebar, and across the top of the bend in the bar. Trace a reference line with a marker at that point on the handlebar.

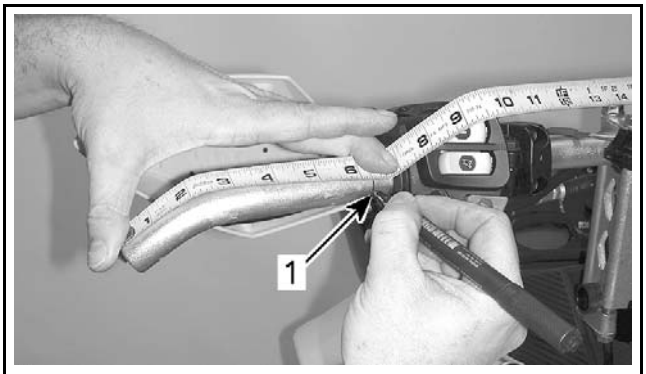


*TYPICAL — MEASURING FOR HEATER POSITION*
*1. Trace reference line*

2. Align the edge of the cork insulator with the reference line centered with the handlebar folding axis as illustrated.

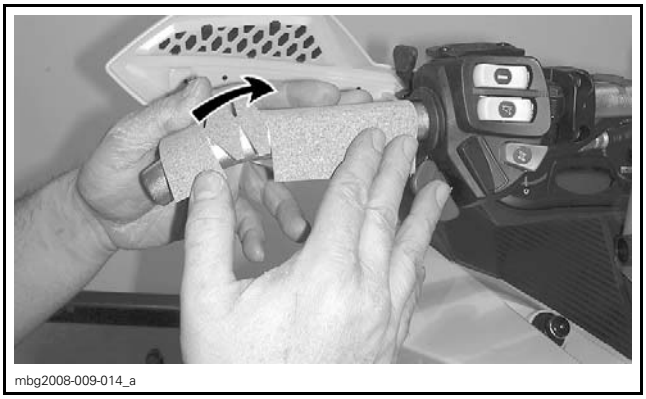


*TYPICAL — CORK INSULATOR ALIGNMENT*

3. Apply firm pressure to cork insulator to assure proper adherence to handlebar.
4. Align the film heater element with the cork insulator and center of handlebar folding axis as illustrated.

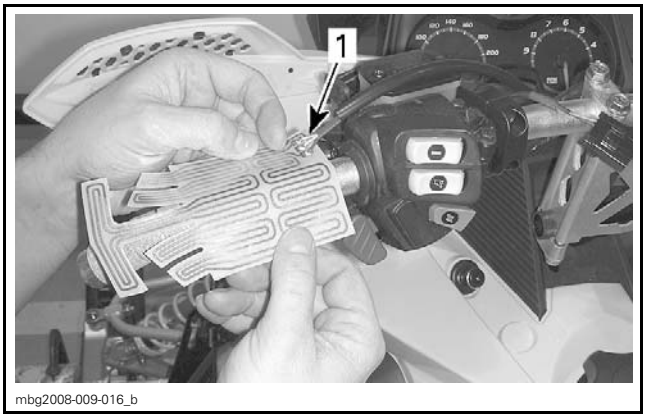


*TYPICAL — HEATER ALIGNMENT*
*1. Heater wire position (LH front, RH rear)*

5. Apply firm pressure to heater to assure proper adherence to cork insulator.

NOTE: The same heater element is used for both the LH and RH sides. Therefore, the electrical wiring will be in front of the handlebar on the LH side, and behind the handlebar (towards driver) on the RH side.

6. Apply two turns of black electrical tape at each of the four locations illustrated so that it covers the edges of the heater element and prevents snagging and damage to the element during rubber grip installation.

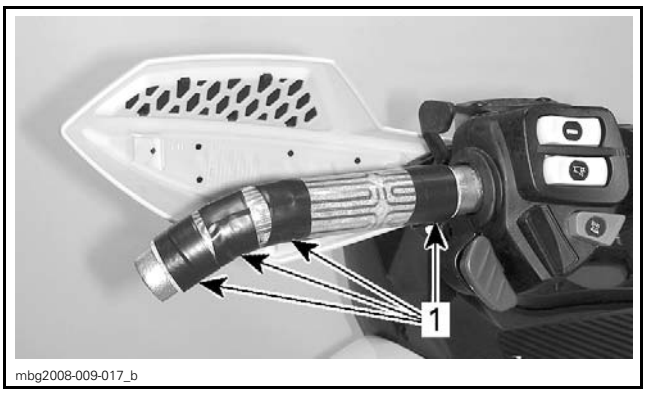


*TYPICAL*
*1. Electrical tape application (4x)*

NOTE: It is highly important to apply tape so that it fully secures the electrical wire connections. This will ease installation of the rubber hand grip and prevent undue stress to the connections.

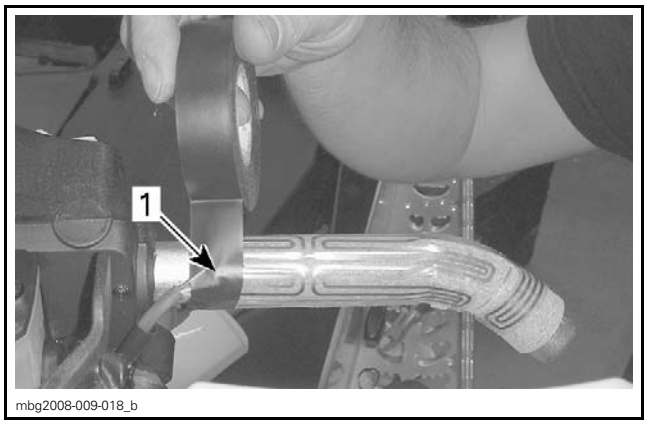


*TYPICAL — IMPORTANT*
*1. Tape application over wire connections*

7. Install rubber hand grip, refer to *STEERING SYSTEM* subsection for detail.
8. Route wiring as noted during the removal procedure.
9. Insert wire in housing, refer to *WIRING DIAGRAM* for wire color and pin number locations.

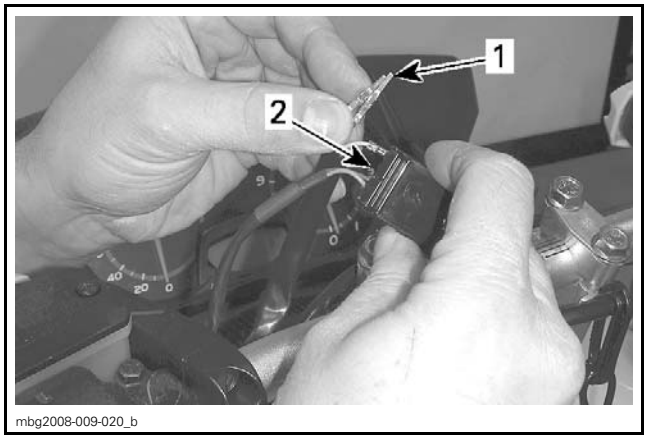


*TYPICAL*
*1. Heater wire terminals*
*2. Insertion through back of connector*

10. Install locking ties to secure the heater wire as it was routed originally.

**⚠ WARNING**

**To ensure RH heater wires does not prevent smooth operation of throttle lever, it must be passed straight through the emergency engine cut-off switch housing and routed in the corrugated sheave.**

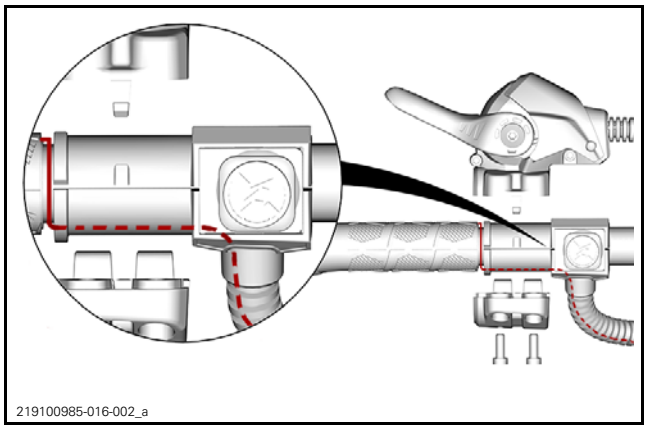


**NOTICE** Ensure LH heater wires are properly routed through multifunction switch housing to prevent them from being pinched when installing housing cover. Pinched or damaged wires may result in a short circuit.

11. Provide electrical power to the heaters for testing.
12. Using the hand grip heat switch, turn on the hand grip heaters and ensure they are functioning correctly.

## TESTING THROTTLE LEVER HEAT SWITCH

NOTE: On models with the compact digital gauge, there is only one switch that controls both the heated grips and heated throttle lever.

1. Using a multimeter, select the Ω position.
2. Test throttle lever heat switch and circuits as per table.

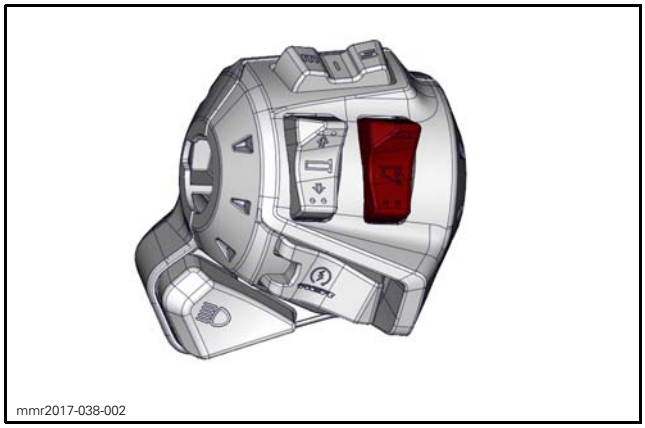


| THROTTLE LEVER HEAT SWITCH TEST | | | |
|---|---|---|---|
| SWITCH SELECTION | TERMINAL | | RESITANCE |
| UP | SH-1 | SH-9 | Close to 0 Ω |
| | SH-1 | SH-3 | Infinite (OL) |
| DOWN | SH-1 | SH-9 | Infinite (OL) |
| | SH-1 | SH-3 | Close to 0 Ω |

If continuity test is as per specification, check wiring to gauge connector.

If continuity test is out of specification, check switch circuit as per wiring diagram. If good, replace switch.

## TESTING HANDLEBAR HEATED GRIP SWITCH

NOTE: On models with the compact digital gauge, there is only one switch that controls both the heated grips and heated throttle lever.

1. Test throttle lever heat switch and circuits as per table.

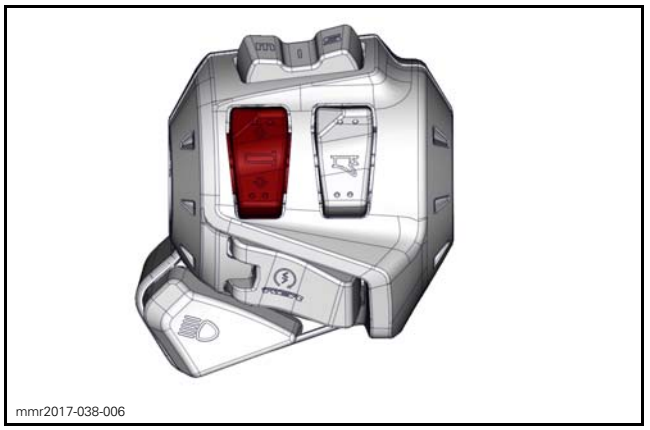


| HEATED GRIP HEAT SWITCH TEST | | | |
|---|---|---|---|
| SWITCH SELECTION | TERMINAL | | RESISTANCE |
| UP | SH-1 | SH-10 | Close to 0 Ω |
| | SH-1 | SH-4 | Infinite (OL) |
| DOWN | SH-1 | SH-10 | Infinite (OL) |
| | SH-1 | SH-4 | Close to 0 Ω |

If continuity test is as per specification, check wiring to gauge connector.

If continuity test is out of specification, check switch circuit as per wiring diagram. If good, replace switch.

# HEATED SEATS AND PASSENGER HEATED GRIPS

## Testing Heated Seats

Unplug connector and measure resistance as per following table.

*Single Seat*

| HEATED SEAT CONNECTOR - PROBE | | RESISTANCE (APPROXIMATELY) @ 20°C (68°F) |
|---|---|---|
| YE wire | BK wire | 32 Ω |
| RD wire | | 17.5 Ω |

*Double Seat*

| HEATED SEAT CONNECTOR - PROBE | | RESISTANCE (APPROXIMATELY) @ 20°C (68°F) |
|---|---|---|
| YE wire | BK wire | 11 Ω |
| RD wire | | 11 Ω |

If resistance is not as specified, replace heated seat.

If resistance is as specified, continue testing.

Start and idle engine.

NOTE: On some models, you may need to increase RPM to above 2000 RPM in order to power this secondary 12v circuit.

Measure voltage at the heated seat connector as indicated in following table.

| HEATED SEAT SWITCH POSITION | HEATED SEAT CONNECTOR - PROBE | | VOLTAGE (APPROXIMATELY) |
|---|---|---|---|
| High (single seat) Front + rear (double seat) | YE wire | BK wire | 12Vdc |
| | RD wire | | |
| Low (single seat) Rear only (double seat) | YE wire | | 12Vdc |
| | RD wire | | 0Vdc |

If voltage is not as indicated, test switch and/or wires from element to switch. Refer to *WIRING DIAGRAM*.

## Testing Passenger Heated Grips (Left or Right)

Unplug connector and measure resistance as per following table.

| PROBE | | RESISTANCE (APPROXIMATELY) @ 20°C (68°F) |
|---|---|---|
| OG wire | BK wire | 9.5 Ω |
| OG/VT wire | BK wire | 19 Ω |

If resistance is not as specified, replace heated grip.

If resistance is as specified, continue testing.

Start and idle engine.

NOTE: On some models, you may need to increase RPM to above 2000 RPM in order to power this secondary 12v circuit.

Measure voltage at the heated grip connector as indicated in following table.

| HEATED GRIP SWITCH POSITION | PROBE | | VOLTAGE (APPROXIMATELY) |
|---|---|---|---|
| High | OG wire | BK wire | 12Vdc |
| | OG/VT wire | | 0Vdc |
| Low | OG wire | | 0Vdc |
| | OG/VT wire | | 12Vdc |

If voltage is not as indicated, test switch and/or wires from element to switch. Refer to *WIRING DIAGRAM*.

## Testing Heated Seat and Grip Switches

Measure switch resistance as per following table.

| SWITCH POSITION | PROBE | | RESISTANCE |
|---|---|---|---|
| High | Pin 6 | Pin 8 | Close to 0 Ω |
| Off | Pin 6 | Pin 8 | O.L. |
| | | Pin 5 | O.L. |
| Low | Pin 6 | Pin 5 | Close to 0 Ω |

If resistance is not as specified, replace switch.

If resistance is as specified, continue testing.

Start and idle engine.

NOTE: On some models, you may need to increase RPM to above 2000 RPM in order to power this secondary 12v circuit.

Measure voltage at the switch connector as indicated in following table.

| SWITCH POSITION | PROBE | | VOLTAGE (APPROXIMATELY) |
|---|---|---|---|
| Any | Pin 6 | Chassis ground | 12Vdc |

If voltage is not as indicated, test power distribution circuit to switch. Refer to *WIRING DIAGRAM*.

# DRIVE BELT

## SERVICE TOOLS

| Description | Part Number | Page |
|---|---|---|
| TENSIOMETER | 414 348 200 | 297 |

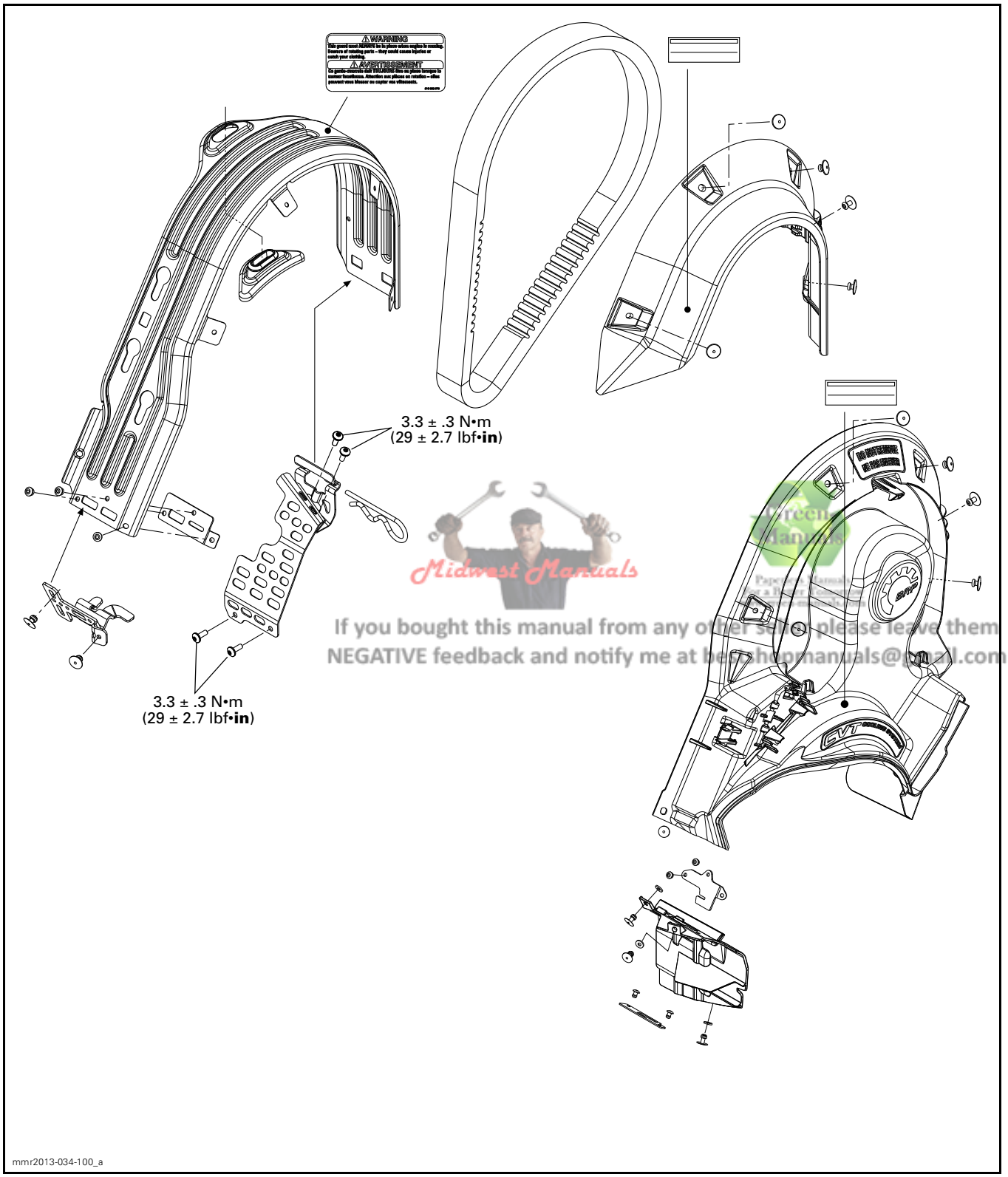


Midwest Manuals
If you bought this manual from any other site, please leave them
NEGATIVE feedback and notify me at

# GENERAL

## DRIVE BELT APPLICATION

Always use the drive belt specified in the BRP *PARTS CATALOG* as applicable to vehicle and engine model.

# TROUBLESHOOTING

### VEHICLE CREEPS FORWARD AT IDLE

1. Improper drive belt height (too high)
   - *Refer to DRIVE BELT HEIGHT ADJUSTMENT procedure in this subsection.*

### ENGINE STALLS WHEN ENGAGING RER

1. Improper drive belt height (too high)
   - *Refer to DRIVE BELT HEIGHT ADJUSTMENT procedure in this subsection.*

# PROCEDURES

## DRIVE BELT GUARD

NOTE: Belt guard is purposely made slightly oversize to maintain tension on its pins and retainers preventing undue noise and vibration.

### Drive Belt Guard Removal

1. Remove LH side panel.
2. Remove retaining pin.

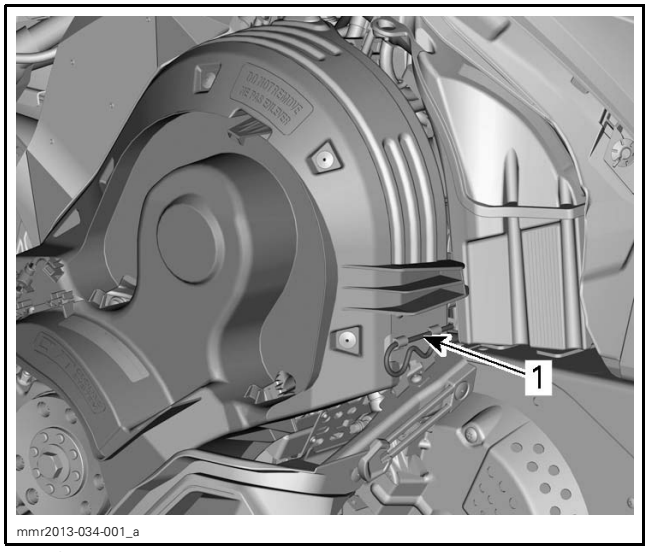


*TYPICAL*
*1. Retaining pin*

3. Lift rear portion of guard then release from front tabs.

### Drive Belt Guard Installation

1. Insert belt guard tab in front support slot.

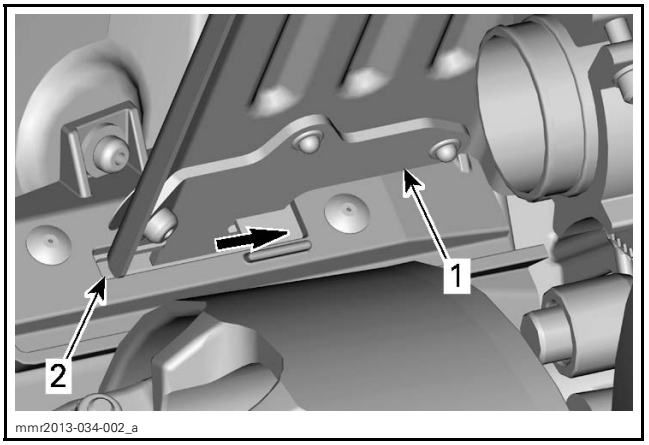


*1. Belt guard tab*
*2. Front support slot*

2. Push drive belt guard toward engine then toward front of vehicle.

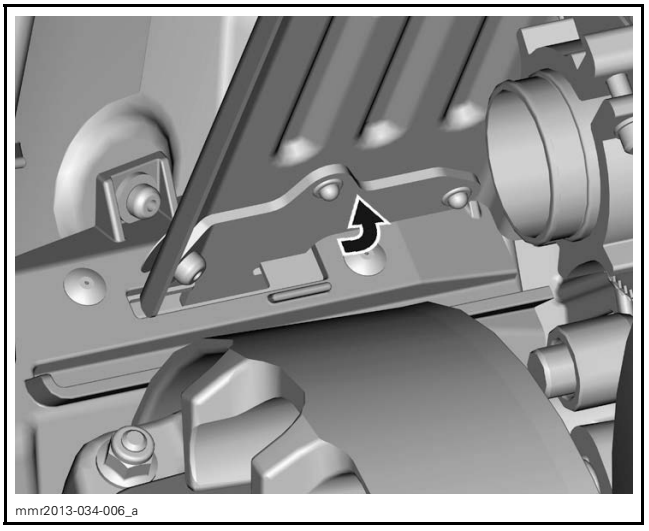


3. Position the grommet over the retaining rod. It may be necessary to slightly lift the console to make room.

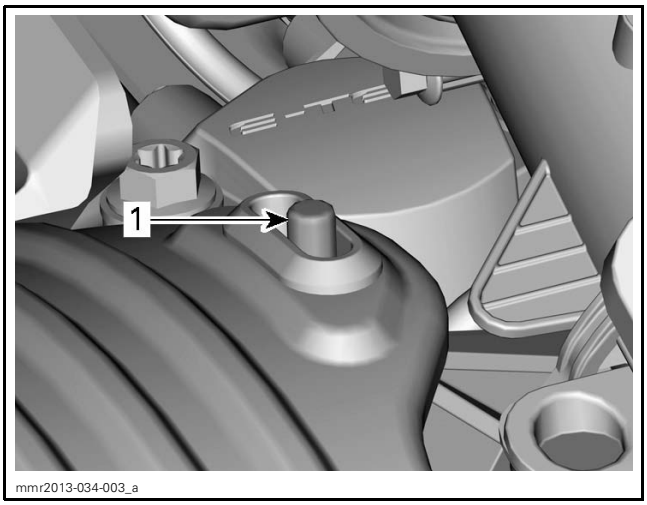


*1. Retaining rod*

4. Position rear portion of the drive belt guard over the retainer and secure it using the retaining pin.

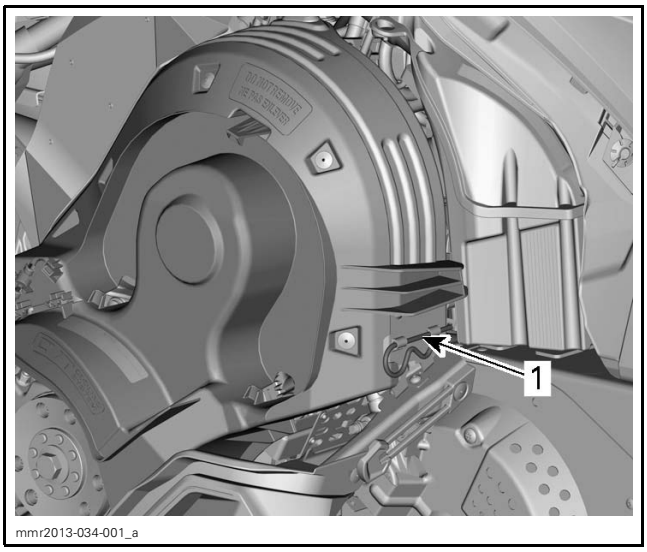


*1. Retaining pin*

# DRIVE BELT GUARD SUPPORT

## Drive Belt Guard Support Removal

1. Remove the drive belt guard.
2. Remove screws securing the support to vehicle.

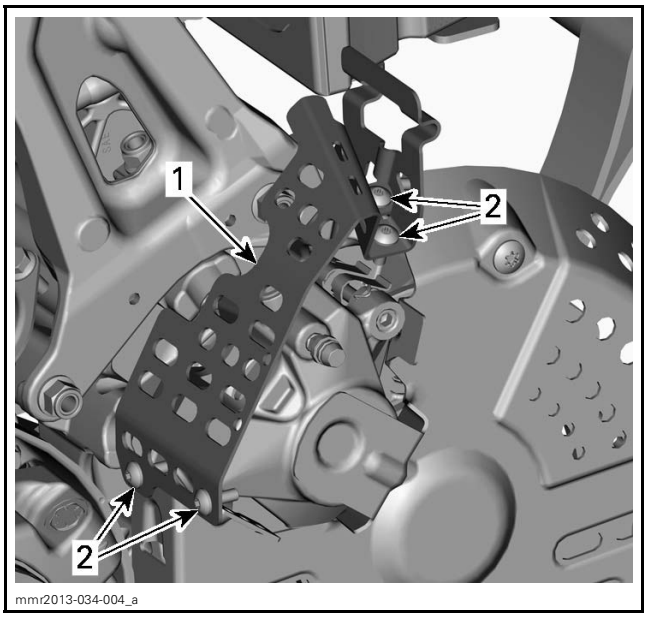


*TYPICAL*
*1. Drive belt guard support*
*2. Screws*

## Drive Belt Guard Support Installation

The installation is the reverse of the removal procedure. However pay attention to the following.

Tighten screws to 3.5 N•m (31 lbf•**in**).

# DRIVE BELT

## Drive Belt Removal

1. Remove tether cord cap from engine cut-off switch.
2. Remove LH side panel.
3. Remove drive belt guard, refer to *DRIVE BELT GUARD REMOVAL*.
4. Insert the driven pulley expander provided in the tool kit in the threaded hole on the adjuster hub as illustrated.

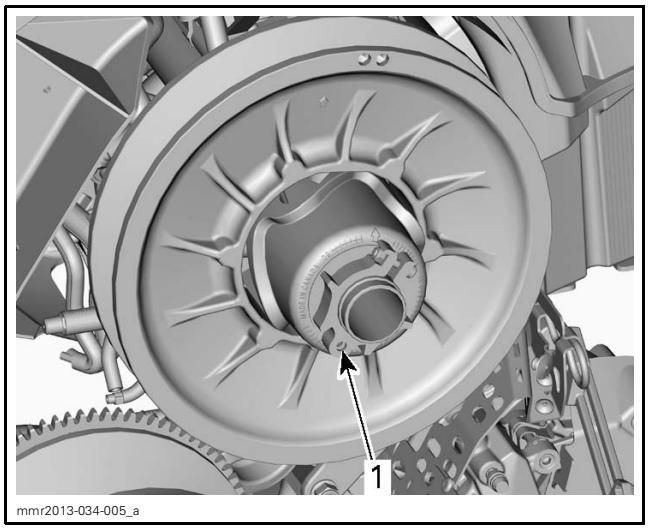


*1. PULLEY expander to be installed here - on Adjuster hub*

5. Open the driven pulley by screwing the tool in.
6. Remove the belt by slipping it over the top of the driven pulley, then out of the drive pulley.

## Drive Belt Inspection

Inspect belt for:
– Cracks
– Fraying
– Abnormal wear (uneven wear, wear on one side, missing cogs, torn fabric).

If abnormal wear is noted, the probable cause could be:
– Pulley misalignment
– Excessive RPM with frozen track
– Fast starts without warm-up period
– Scratched or rusty sheave
– Oil on belt
– Distorted spare belt.

Check drive belt width. Replace the drive belt if its width is under minimum recommended specification.

| DRIVE BELT | |
|---|---|
| NEW | WEAR LIMIT |
| 38.3 mm (1.508 in) | 35.9 mm (1.413 in) |

## Drive Belt Installation

1. If necessary, open the driven pulley, refer to *DRIVE BELT REMOVAL*.
2. Insert drive belt in the drive pulley, then pull it over the driven pulley.

**NOTICE** Do not force or use tools to pry the belt into place, as this could cut or break the cords in the belt.

NOTE: The maximum drive belt life span is obtained when the belt is installed with the arrows on the belt pointing in the direction of rotation.

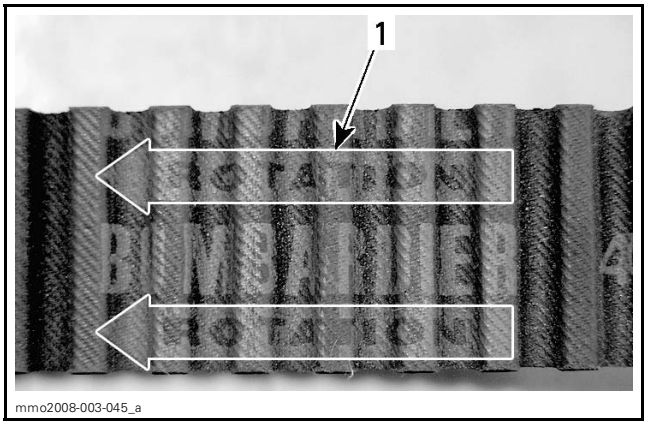


*TYPICAL*
*1. To be pointed in the direction of rotation*

3. Unscrew and remove the driven pulley expander from the driven pulley.
4. Rotate the driven pulley several times to properly set the belt between the sheaves.
5. Adjust drive belt height. Refer to *DRIVE BELT HEIGHT ADJUSTMENT* procedure.
6. Install drive belt guard, refer to *DRIVE BELT GUARD INSTALLATION*.
7. Install LH side panel.

## Drive Belt Height Adjustment

1. Remove tether cord cap from engine cutout switch.
2. Remove LH side panel.
3. Remove drive belt guard, refer to *DRIVE BELT GUARD REMOVAL*.
4. Loosen the clamping screw.

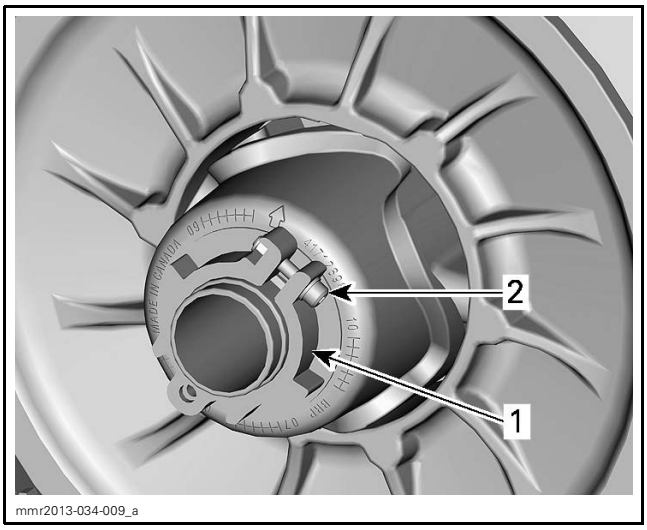

mmr2013-034-009_a

*TYPICAL*
1. *Adjustment ring*
2. *Clamping screw*

5. Using the suspension adjustment tool provided in the tool kit, turn the adjustment ring 1/4 turn at a time then rotate the driven pulley to properly set the belt between the pulley sheaves.

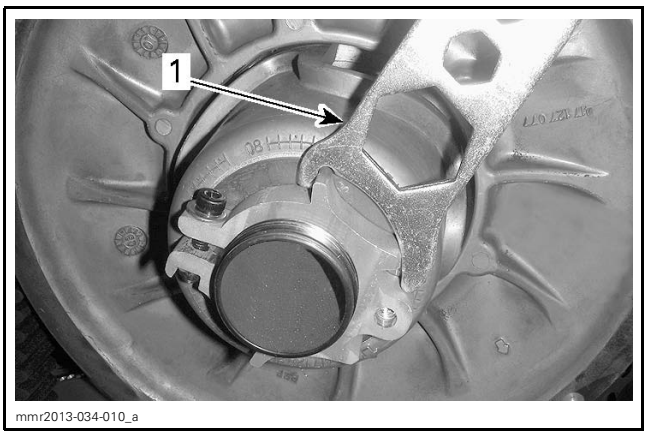

mmr2013-034-010_a

*TYPICAL*
1. *Suspension adjustment tool*

NOTE: The adjustment ring has left hand treads.

Repeat step 5 until the lowest portion of the cogs on the external surface of drive belt is even with the driven pulley edge.

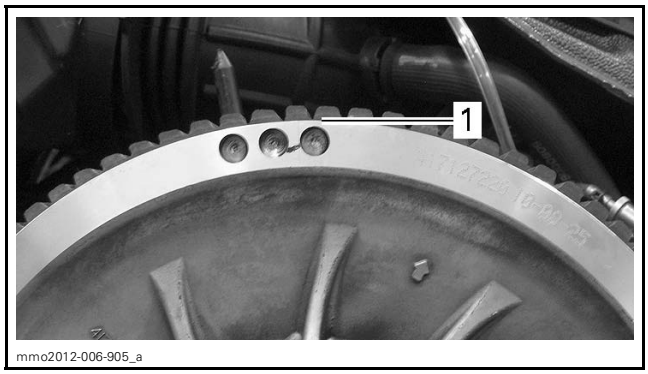

mmo2012-006-905_a

*TYPICAL - PRELIMINARY SETTING*
1. *Lowest portion of cogs even with external surface of drive belt*

NOTE: Turning the adjustment ring counterclockwise lowers the belt in the pulley. Turning the ring clockwise raises the belt in the pulley.

6. Tighten the adjustment ring clamping screw.

| TORQUE | |
|---|---|
| Adjustment ring clamping screw | 5.5 N•m ± 0.5 N•m (49 lbf•**in** ± 4 lbf•**in**) |

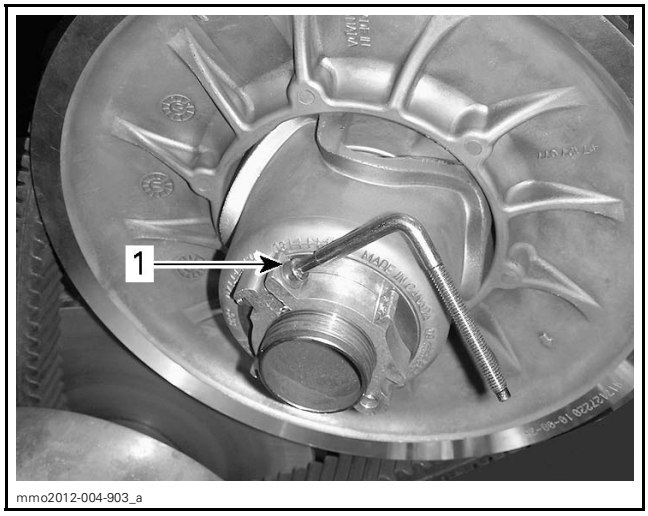

mmo2012-004-903_a

*TYPICAL*
1. *Clamping screw*

7. Install belt guard, refer to *DRIVE BELT GUARD INSTALLATION*.
8. Install LH side panel.
9. Start engine and check if vehicle creeps.
   - 9.1 If vehicle does not creep, adjustment is complete.
   - 9.2 If vehicle creeps, check the drive belt deflection.

### Reverse Activation

Reverse may not activate or may be harder to activate if the belt is positioned too high in the driven pulley. If reverse activation does not work properly, ensure the drive belt is properly adjusted.

Adjust the drive belt lower in the driven pulley if needed.

## Drive Belt Deflection Verification

1. Make sure drive belt height is adjusted (preliminary setting).
2. Position a reference rule on drive belt.
3. Use the TENSIOMETER (P/N 414 348 200) as explained below.
4. Set deflection as per following table using bottom O-ring.

| DRIVE BELT DEFLECTION | |
|---|---|
| DRIVE BELT DEFLECTION SETTING | 32 mm ± 5 mm (1.26 in ± .2 in) |

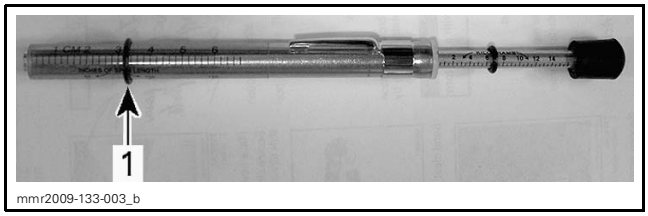


*DEFLECTION SETTING*
*1. Bottom O-ring*

5. Place upper O-ring to 0 kgf (0 lbf).

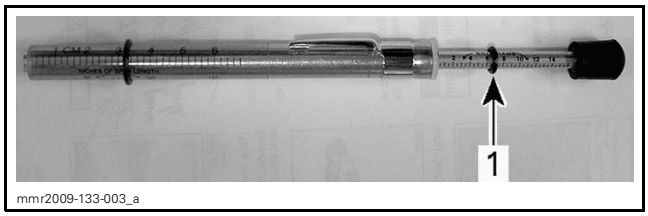


*LOAD READING*
*1. Upper O-ring*

6. Apply pressure until bottom O-ring (deflection) is flush with edge of rule.

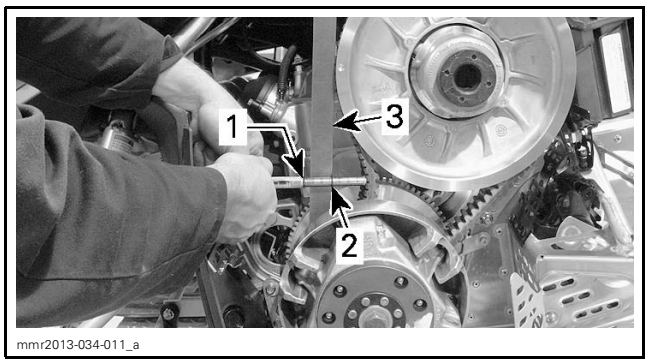


*TYPICAL*
*1. Upper O-ring — load*
*2. Bottom O-ring — deflection*
*3. Reference rule*

7. Read drive belt load. Compare result with the following table.

| DRIVE BELT DEFLECTION | |
|---|---|
| DRIVE BELT LOAD READING | 11.30 kgf (25 lbf) |

8. If drive belt is within specification, drive belt is properly adjusted.
9. If drive belt is out of specification, try the following:
   – Lower drive belt height from initial setting.
   – Try another drive belt.
10. If proper load still cannot be obtained, check the following:
   – Inspect engine supports.
   – Inspect countershaft and bearing.
   – Inspect chassis for damages.

# DRIVE BELT

## SERVICE TOOLS

| Description | Part Number | Page |
|---|---|---|
| TENSIOMETER | 414 348 200 | 5 |

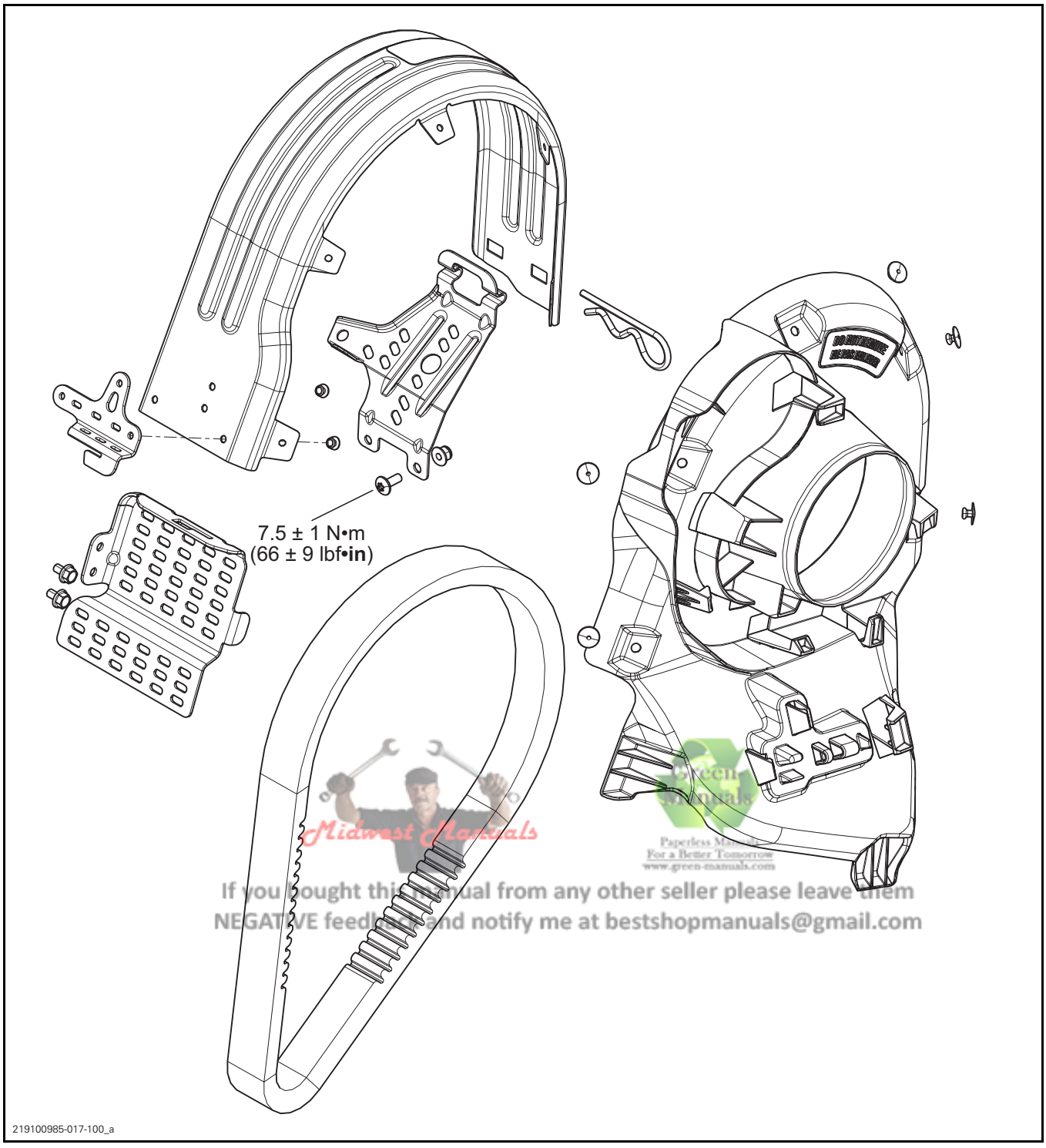


Midwest Manuals
Green Manuals
Paperless Manuals For a Better Tomorrow
www.green-manuals.com
If you bought this manual from any other seller please leave them NEGATIVE feedback and notify me at bestshopmanuals@gmail.com

# GENERAL

## DRIVE BELT APPLICATION

Always use the drive belt specified in the BRP *PARTS CATALOG* as applicable to vehicle and engine model.

# TROUBLESHOOTING

### VEHICLE CREEPS FORWARD AT IDLE

1. Improper drive belt height (too high)
   - *Refer to ADJUSTING THE DRIVE BELT HEIGHT procedure in this subsection.*

### ENGINE STALLS WHEN ENGAGING RER

1. Improper drive belt height (too high)
   - *Refer to ADJUSTING THE DRIVE BELT HEIGHT procedure in this subsection.*

# PROCEDURES

## DRIVE BELT GUARD

NOTE: Belt guard is purposely made slightly oversize to maintain tension on its pins and retainers preventing undue noise and vibration.

### Removing the Drive Belt Guard

1. Remove LH side panel.
2. Remove retaining pin.

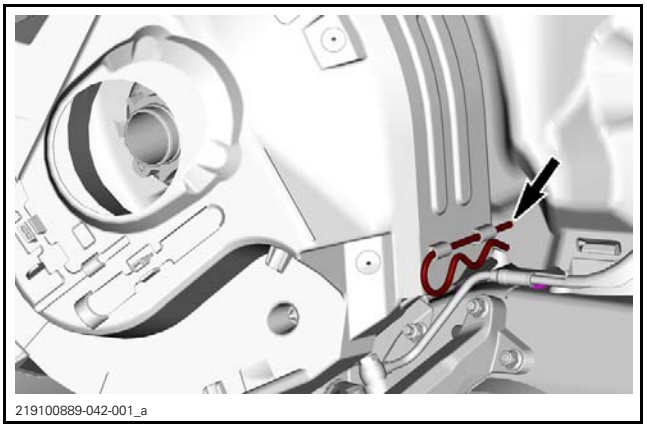
219100889-042-001_a

3. Lift rear portion of guard then release from front tabs.

### Installing the Drive Belt Guard

1. Insert belt guard tab in front support slot.

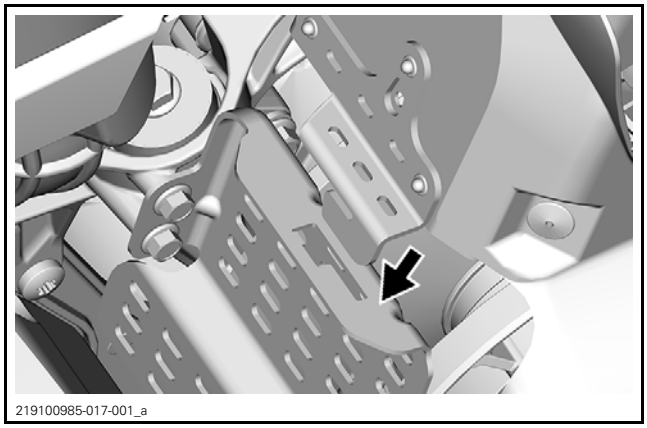
219100985-017-001_a

2. Push drive belt guard toward engine then toward front of vehicle.

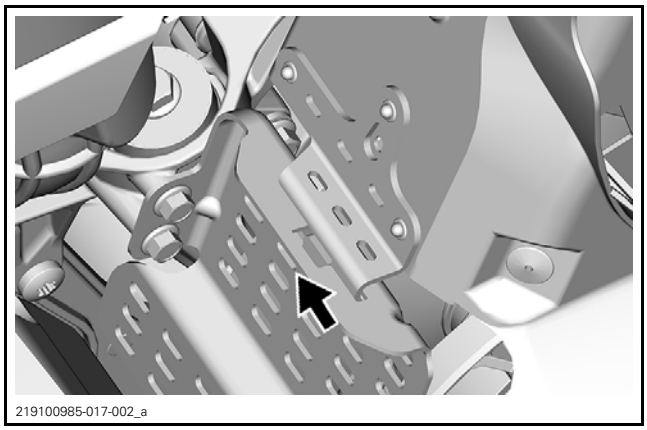
219100985-017-002_a

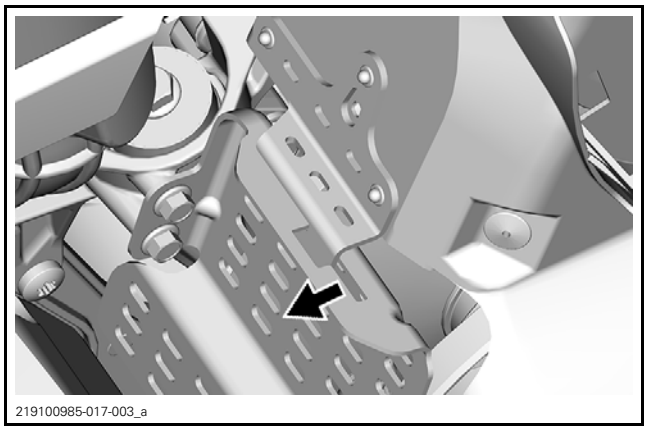
219100985-017-003_a

3. Position rear portion of the drive belt guard over the retainer and secure it using the retaining pin.

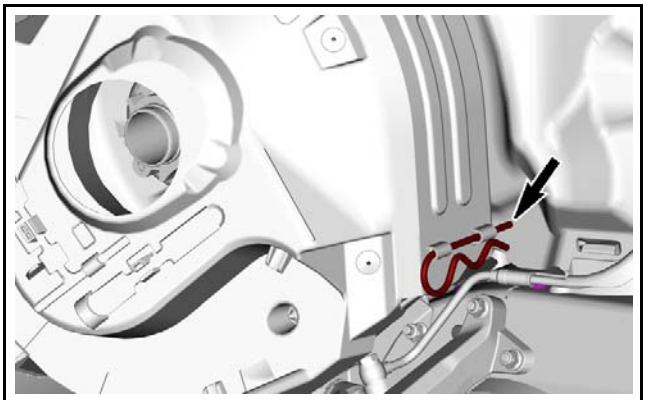
219100889-042-001_a

# DRIVE BELT GUARD SUPPORT

## Removing the Drive Belt Guard Support

1. Remove the drive belt guard.
2. Remove screws securing the support to vehicle.

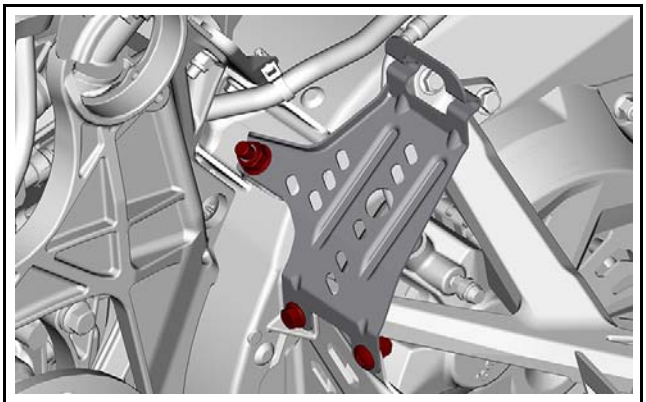
219100985-017-004

## Installing the Drive Belt Guard Support

The installation is the reverse of the removal procedure. However pay attention to the following.

| TIGHTENING TORQUE | |
|---|---|
| M6 Torx screw | 7.5 N•m ± 1 N•m (66 lbf•**in** ± 9 lbf•**in**) |
| M6 Hexagonal flange Screw | 10 N•m ± 2 N•m (89 lbf•**in** ± 18 lbf•**in**) |
| M8 Hexagonal flange nut | 23.5 N•m ± 3.5 N•m (17 lbf•ft ± 3 lbf•ft) |

# DRIVE BELT

## Removing the Drive Belt

1. Remove tether cord cap from engine cut-off switch.
2. Remove LH side panel.
3. Remove drive belt guard, refer to *REMOVING THE DRIVE BELT GUARD*.
4. Insert the driven pulley expander provided in the tool kit in the threaded hole on the adjuster hub as illustrated.

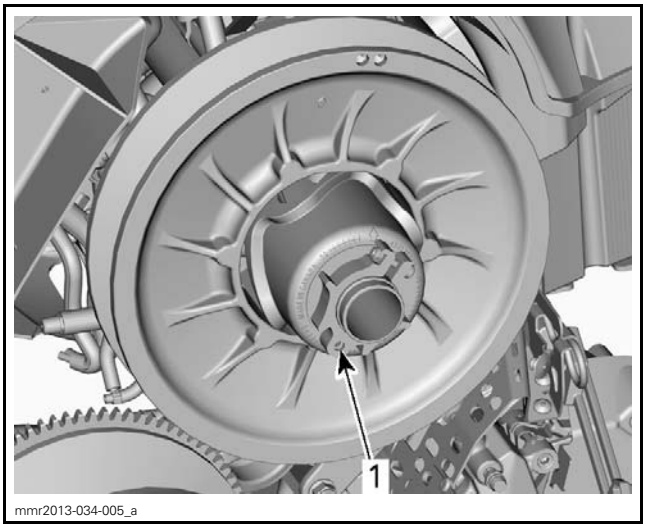

mmr2013-034-005_a

*1. PULLEY expander to be installed here - on Adjuster hub*

5. Open the driven pulley by screwing the tool in.
6. Remove the belt by slipping it over the top of the driven pulley, then out of the drive pulley.

## Inspecting the Drive Belt

Inspect belt for:

– Cracks
– Fraying
– Abnormal wear (uneven wear, wear on one side, missing cogs, torn fabric).

If abnormal wear is noted, the probable cause could be:

– Pulley misalignment
– Excessive RPM with frozen track
– Fast starts without warm-up period
– Scratched or rusty sheave
– Oil on belt
– Distorted spare belt.

Check drive belt width. Replace the drive belt if its width is under minimum recommended specification.

| DRIVE BELT WIDTH | |
|---|---|
| NEW | WEAR LIMIT |
| 38.3 mm (1.508 in) | 35.9 mm (1.413 in) |

## Installing the Drive Belt

1. If necessary, open the driven pulley, refer to *REMOVING THE DRIVE BELT*.
2. Insert drive belt in the drive pulley, then pull it over the driven pulley.

**NOTICE** Do not force or use tools to pry the belt into place, as this could cut or break the cords in the belt.

NOTE: The maximum drive belt life span is obtained when the belt is installed with the arrows on the belt pointing in the direction of rotation.

mmr2017-039-004

3. Unscrew and remove the driven pulley expander from the driven pulley.
4. Rotate the driven pulley several times to properly set the belt between the sheaves.
5. Adjust drive belt height. Refer to *ADJUSTING THE DRIVE BELT HEIGHT* procedure.
6. Install drive belt guard, refer to *INSTALLING THE DRIVE BELT GUARD*.
7. Install LH side panel.

## Adjusting the Drive Belt Height

1. Remove tether cord cap from engine cutout switch.
2. Remove LH side panel.
3. Remove drive belt guard, refer to *REMOVING THE DRIVE BELT GUARD*.
4. Loosen the clamping screw.

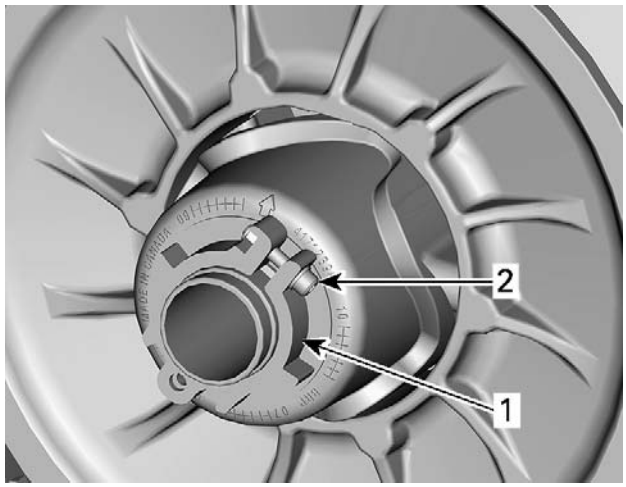

mmr2013-034-009_a

*1. Adjustment ring*
*2. Clamping screw*

5. Using the suspension adjustment tool provided in the tool kit, turn the adjustment ring 1/4 turn at a time then rotate the driven pulley to properly set the belt between the pulley sheaves.

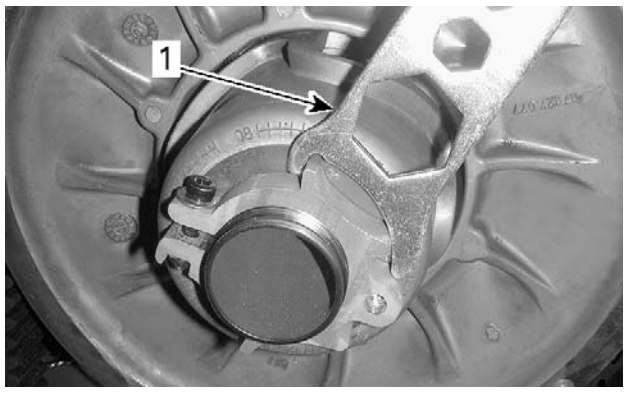

mmr2013-034-010_a

*1. Suspension adjustment tool*

NOTE: The adjustment ring has left hand treads.

Repeat step 5 until the lowest portion of the cogs on the external surface of drive belt is even with the driven pulley edge.

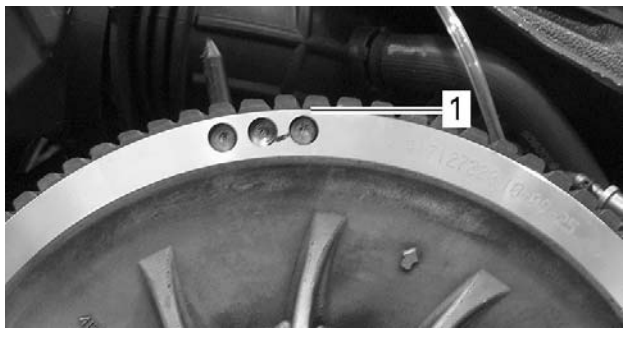

mmo2012-006-905_a

*PRELIMINARY SETTING*
*1. Lowest portion of cogs even with external surface of drive belt*

NOTE: Turning the adjustment ring counterclockwise lowers the belt in the pulley. Turning the ring clockwise raises the belt in the pulley.

6. Tighten the adjustment ring clamping screw.

| TIGHTENING TORQUE | |
|---|---|
| Adjustment ring clamping screw | 5.5 N•m ± 0.5 N•m (49 lbf•**in** ± 4 lbf•**in**) |

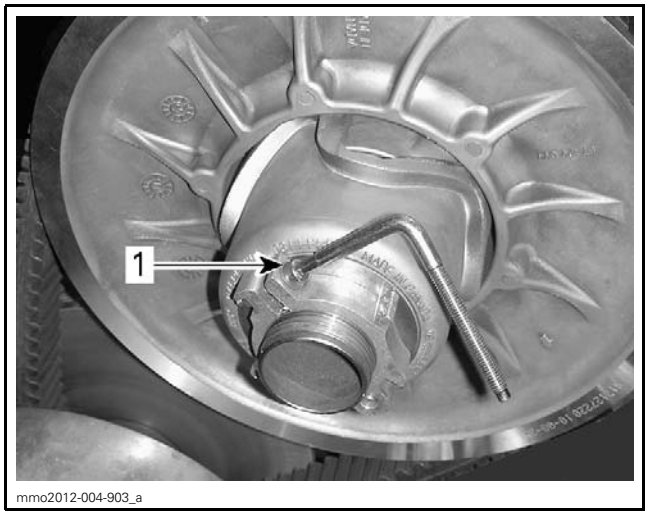


*1. Clamping screw*

7. Install belt guard, refer to *INSTALLING THE DRIVE BELT GUARD*.
8. Install LH side panel.
9. Start engine and check if vehicle creeps.
   - 9.1 If vehicle does not creep, adjustment is complete.
   - 9.2 If vehicle creeps, check the drive belt deflection.

### Reverse Activation

Reverse may not activate or may be harder to activate if the belt is positioned too high in the driven pulley. If reverse activation does not work properly, ensure the drive belt is properly adjusted.

Adjust the drive belt lower in the driven pulley if needed.

## Verifying the Drive Belt Deflection

| REQUIRED TOOL | |
|---|---|
| TENSIOMETER (P/N 414 348 200) | |

1. Make sure drive belt height is adjusted (preliminary setting).
2. Position a reference rule on drive belt.
3. Use the tensiometer as explained below.
4. Set deflection as per following table using bottom O-ring.

| DRIVE BELT DEFLECTION | |
|---|---|
| DRIVE BELT DEFLECTION SETTING | 32 mm ± 5 mm (1.26 in ± .2 in) |

*DEFLECTION SETTING*
*1. Bottom O-ring*

5. Place upper O-ring to 0 kgf (0 lbf).

*LOAD READING*
*1. Upper O-ring*

6. Apply pressure until bottom O-ring (deflection) is flush with edge of rule.

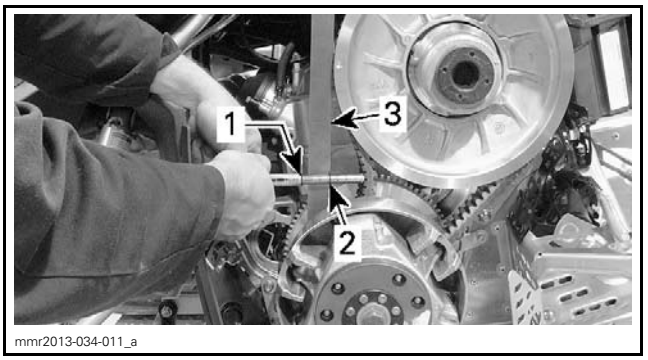


*TYPICAL*
*1. Upper O-ring — load*
*2. Bottom O-ring — deflection*
*3. Reference rule*

7. Read drive belt load. Compare result with the following table.

| DRIVE BELT DEFLECTION | |
|---|---|
| DRIVE BELT LOAD READING | 11.30 kgf (25 lbf) |

8. If deflection is within specification, drive belt is properly adjusted.

9. If deflection is out of specification, try the following:
   – Lower drive belt height from initial setting.
   – Try another drive belt.
10. If proper load still cannot be obtained, check the following:
   – Inspect engine supports.
   – Inspect countershaft and bearing.
   – Inspect chassis for damages.

# DRIVE PULLEY (eDRIVE II LC)

## SERVICE TOOLS

| Description | Part Number | Page |
|---|---|---|
| CLUTCH HOLDER | 529 036 235 | 2, 10 |
| DRIVE PULLEY PULLER | 529 000 064 | 2 |
| PULLEY SPRING COMPRESSOR TOOL | 529 036 012 | 4 |

## SERVICE PRODUCTS

| Description | Part Number | Page |
|---|---|---|
| CLUTCH AND PULLEY FLANGE CLEANER PRO S1 | 779244 | 5 |

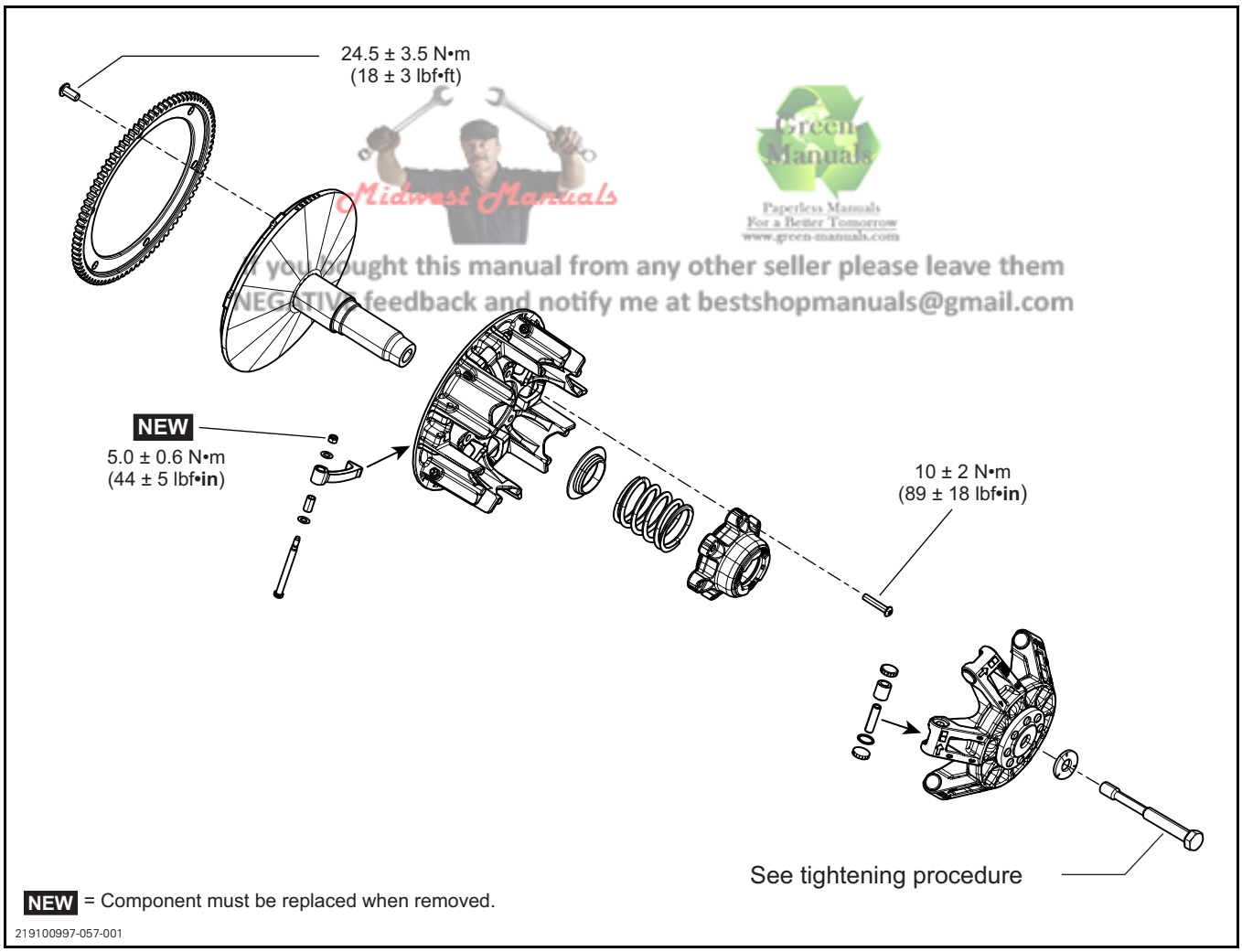


Midwest Manuals
Green Manuals
Paperless Manuals
For a Better Tomorrow
www.green-manuals.com
If you bought this manual from any other seller please leave them
NEGATIVE feedback and notify me at bestshopmanuals@gmail.com

# GENERAL

This drive pulley is lubrication free. Never lubricate any components.

Some drive pulley calibration components (spring, ramps) can be changed to adapt to different altitudes. Refer to appropriate Service Bulletin.

**⚠ WARNING**

**Any drive pulley repairs must be performed by an authorized Ski-Doo dealer. Subcomponent installation and assembly tolerances require strict adherence to procedures detailed.**

**⚠ WARNING**

**The clutch assembly is a precisely balanced unit. Never replace parts with used parts from another clutch assembly.**

# TROUBLESHOOTING

## ERRATIC DRIVE PULLEY PERFORMANCE

1. Damaged slider shoe O-ring.
   - *Install new O-rings, refer to DRIVE PULLEY ASSEMBLY.*
2. Missing slider shoe O-ring.
   - *Install new O-rings, refer to DRIVE PULLEY ASSEMBLY.*
3. Excessive wear on slider shoes.
   - *Inspect slider shoes, refer to DRIVE PULLEY INSPECTION.*

# PROCEDURES

## DRIVE PULLEY

### Drive Pulley Removal

1. Remove drive belt. Refer to *DRIVE BELT* subsection.
2. Remove the drive pulley from engine as follows.

   2.1 Hold the drive pulley.

| REQUIRED TOOL | |
|---|---|
| CLUTCH HOLDER (P/N 529 036 235) | |

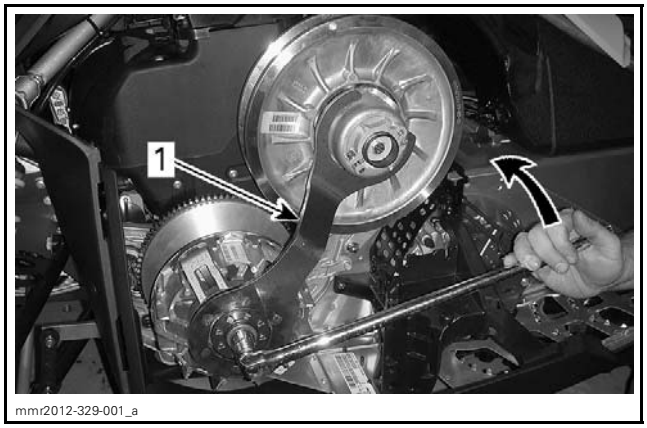


mmr2012-329-001_a

*1. Clutch holder*

   2.2 Remove the drive pulley screw.

**NOTICE** **Never use any type of impact wrench for drive pulley removal.**

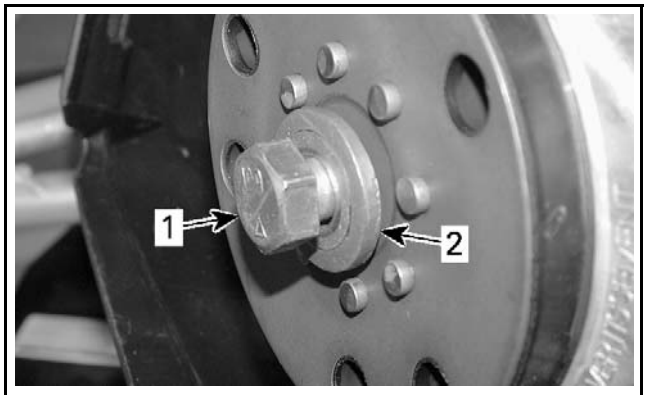


mmr2008-041-103_a

*TYPICAL*
*1. Drive pulley retaining screw*
*2. Conical spring washer*

   2.3 Remove the drive pulley from crankshaft.

| REQUIRED TOOL | |
|---|---|
| DRIVE PULLEY PULLER (P/N 529 000 064) | |

**NOTICE** **Always use the specified tool to avoid damaging crankshaft.**

### Drive Pulley Disassembly

#### Fixed Sheave Removal

Separate fixed sheave from sliding sheave as follows:

– Screw puller into fixed sheave shaft (about 13 mm (1/2 in).
– Hold drive pulley in your hand by the sliding sheave as illustrated.
– Tap on puller head to disengage fixed sheave.

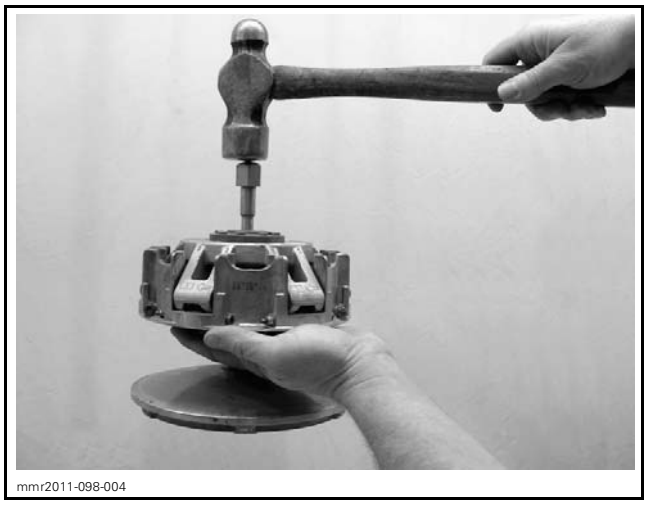


NOTE: If necessary, use a heat gun to slightly heat the governor cup to ease disassembly.

**NOTICE** Never use any type of torch to heat governor cup.

### Governor Cup Removal

Carefully pull up on governor cup until the slider shoes are at their highest position in the guides.

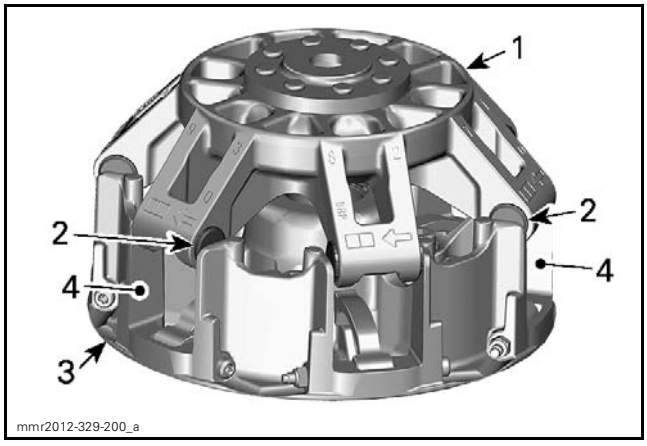


*1. Governor cup*
*2. Slider shoes*
*3. Sliding sheave*
*4. Guides*

### Slider Shoes and Roller Removal

1. Remove slider shoes from governor cup using a flat screwdriver.

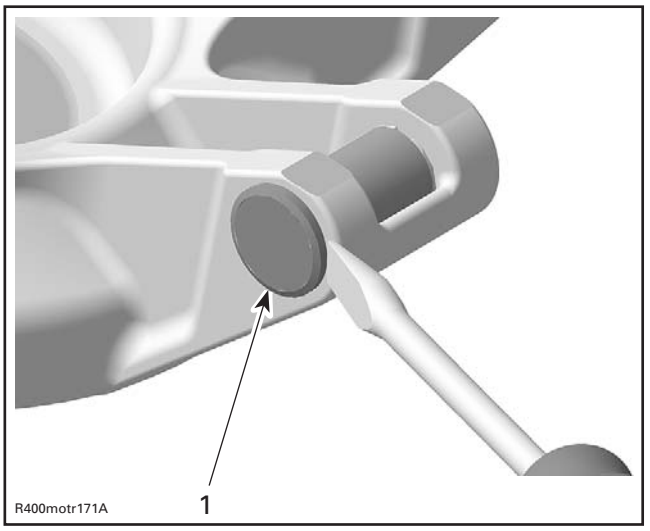


*1. Slider shoe*

2. Remove O-ring from slider shoes.

NOTE: The O-rings are positioned on the slider shoes identified by an O on the governor cup. (total of 3 slider shoes with O-rings).

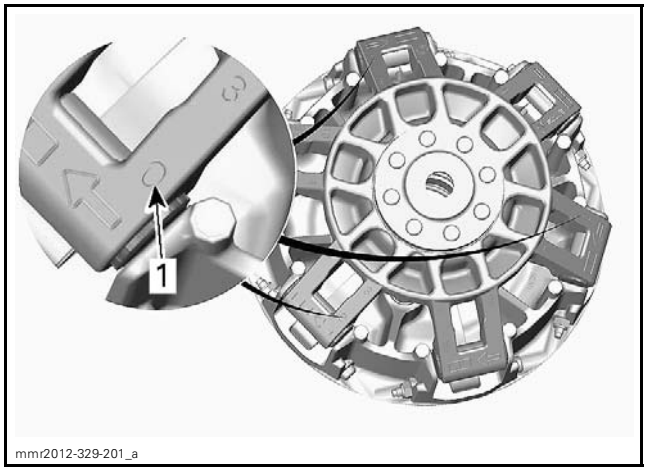


*O-RING POSITION*
*1. O on governor cup*

3. Place governor cup **on** a vice using protection plates.
4. Remove bearing sleeve using a punch by pushing it towards the opposite direction of the arrow.

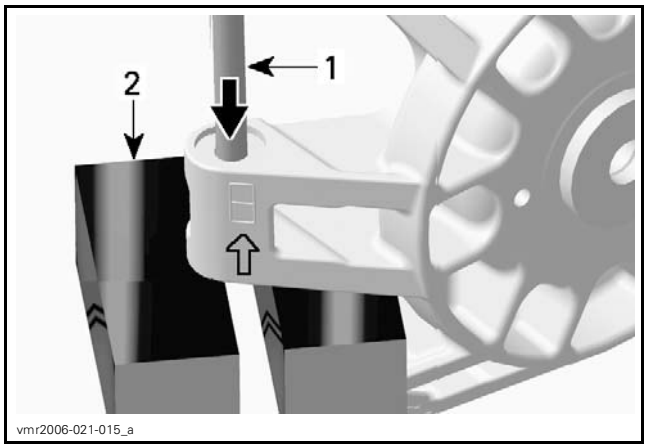


1. *Punch*
2. *Vice*

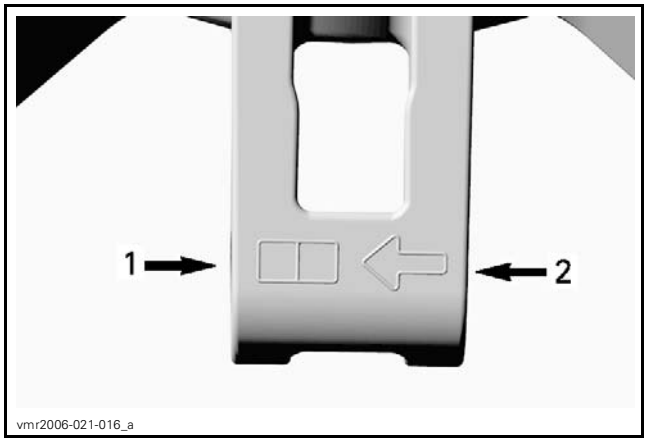


1. *Removal direction*
2. *Assembly direction*

***NOTICE*** Do not clamp governor cup **in** the vice to avoid damaging it.

### Centrifugal Lever Removal

1. Unscrew lock nut and remove centrifugal lever pivot bolt.
2. Remove centrifugal lever and both thrust washers.

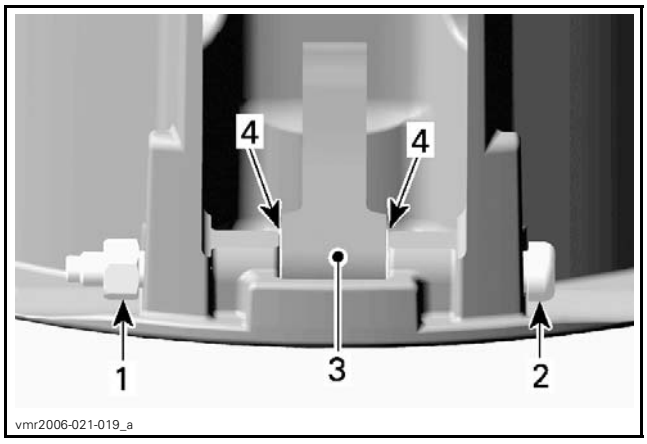


1. *Lock nut*
2. *Centrifugal lever pivot bolt*
3. *Centrifugal lever*
4. *Thrust washers*

### Spring Cover Removal

**⚠ WARNING**

**The spring cover is under high clutch spring preload. Never attempt to remove the spring cover without the recommended tool.**

| REQUIRED TOOL | |
|---|---|
| PULLEY SPRING COMPRESSOR TOOL (P/N 529 036 012) | |

1. Install tool in a vice with the sliding sheave between the washers.

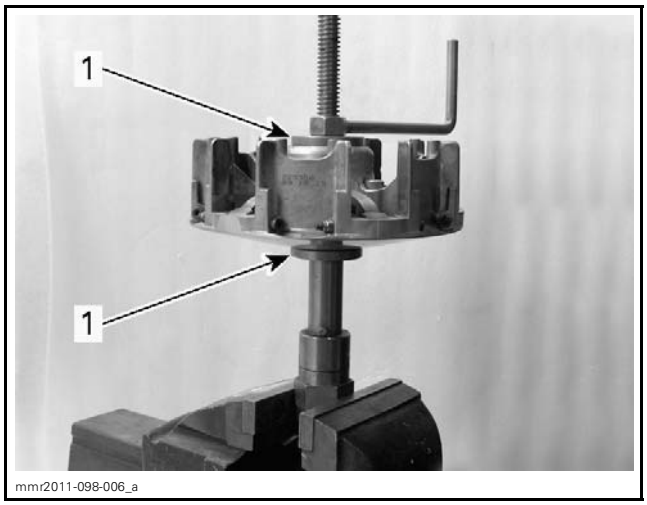


1. *Washers*

2. Remove retaining screws from spring cover.

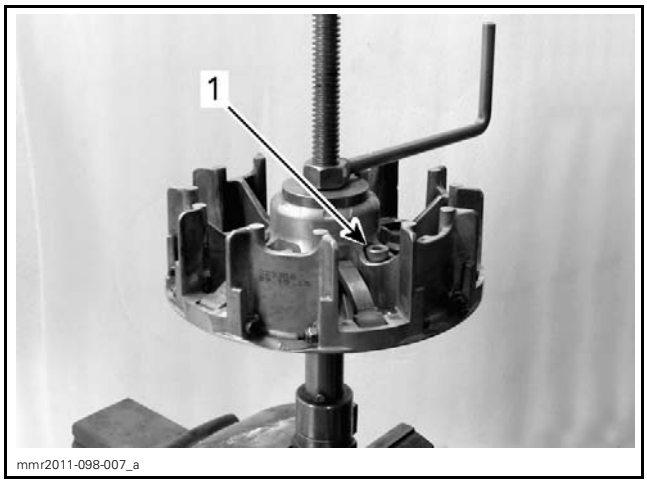


*1. Retaining screw*

3. Unscrew tool to disengage spring cover from sliding sheave.

## Drive Pulley Cleaning

**NOTICE** **Always use the specified cleaning solvent and abrasive type to avoid damaging components.**

Clean pulley faces and shaft using fine steel wool and dry cloth.

Clean the following components using a paper towel with CLUTCH AND PULLEY FLANGE CLEANER PRO S1 (P/N 779244).

- Crankshaft tapered end
- Crankshaft threads
- Fixed sheave shaft
- Inside the fixed sheave taper
- Drive pulley screw threads.

**NOTICE** **Avoid contact between cleaner and crankshaft seal.**

If additional cleaning is required on tapered surfaces, use a medium or coarse steel wool or a no. 600 sand paper.

Reclean tapered surfaces with paper towel and CLUTCH AND PULLEY FLANGE CLEANER PRO S1 (P/N 779244).

**NOTICE** **Tapered surfaces must be free of any foreign particles.**

## Drive Pulley Inspection

NOTE: Unless otherwise noted, during inspection, replace any component found defective or out of specifications.

### Fixed Sheave Inspection

Check fixed sheave shaft and surface for scratches or other damage.

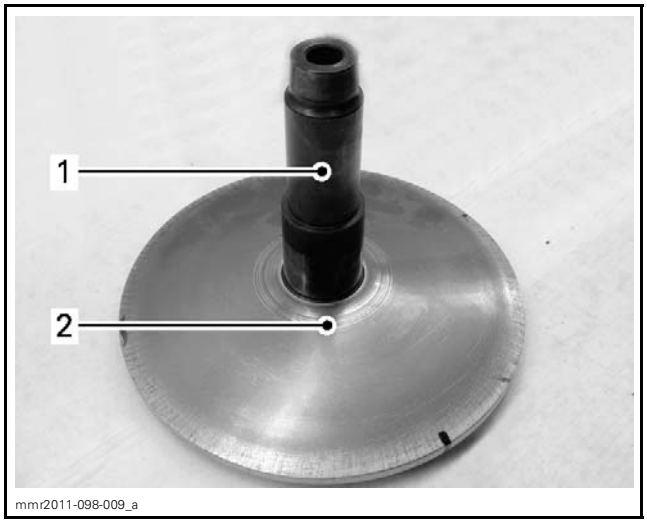


*1. Fixed sheave shaft*
*2. Fixed sheave surface*

### Governor Cup Inspection

Check governor cup for cracks or other visible damage.

### Slider Shoes and Roller Inspection

Check if O-rings of slider shoes are cracked, cut or crushed.

Check slider shoes for visible wear.

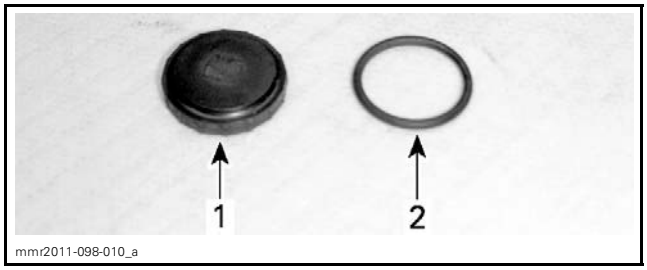


*1. Slider shoe*
*2. O-ring*

Measure the thickness of the slider shoes.

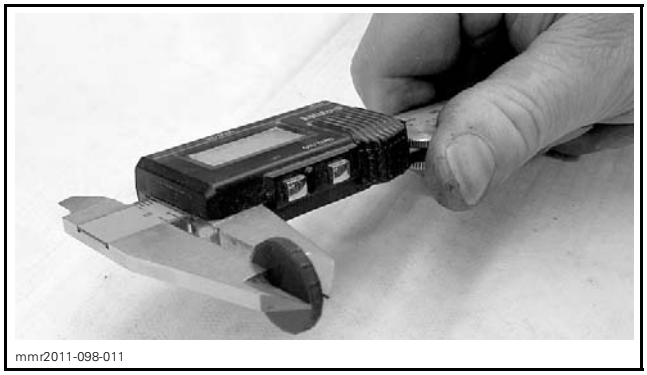

NOTE: Take measurement at the center of slider shoe.

| SLIDER SHOE SERVICE LIMIT | |
|---|---|
| With O-ring | 3.70 mm (.146 in) |
| Without O-ring | 3.80 mm (.15 in) |

Check each roller for roundness of external diameter.

Check if rollers move freely.

***NOTICE*** **Whenever replacing rollers and slider shoes, always replace all rollers and slider shoes at the same time.**

### Centrifugal Lever Inspection

Check contact surfaces of centrifugal lever for visible wear.

If major wear is visible, replace the following:
- Centrifugal levers
- Thrust washers
- Centrifugal lever pivot bolts
- Centrifugal lever pivot lock nuts.

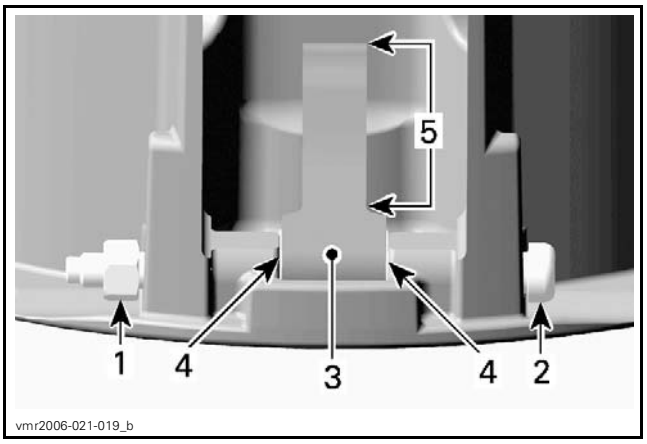


*1. Lock nut*
*2. Centrifugal lever pivot bolt*
*3. Centrifugal lever*
*4. Thrust washers*
*5. Contact surface to the roller*

**⚠ WARNING**

**Whenever replacing centrifugal levers, always replace all levers at the same time. Otherwise, drive pulley imbalance will occur.**

Measure diameter of centrifugal lever pivot bolt.

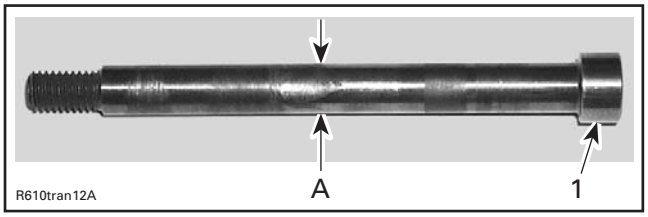


*1. Centrifugal lever pivot bolt*
*A. Measure diameter here*

| CENTRIFUGAL LEVER PIVOT BOLT | |
|---|---|
| **SPECIFICATION** | **DIAMETER** |
| NOMINAL | 6.063 mm to 6.091 mm (.239 in to .24 in) |
| SERVICE LIMIT | 6.00 mm (.236 in) |

Measure diameter of centrifugal lever bushing.

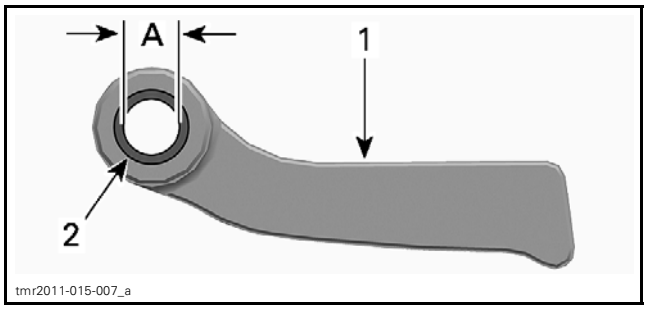


*1. Centrifugal lever*
*2. Bushing*
*A. Bushing inner diameter*

| CENTRIFUGAL LEVER BUSHING | |
|---|---|
| **SPECIFICATION** | **INNER DIAMETER** |
| NOMINAL | 6.00 mm to 6.12 mm (.236 in to .241 in) |
| SERVICE LIMIT | 6.200 mm (.244 in) |

### Spring Cover Inspection

Check spring cover for cracks or wear.

Check coating of spring cover bushing for wear.

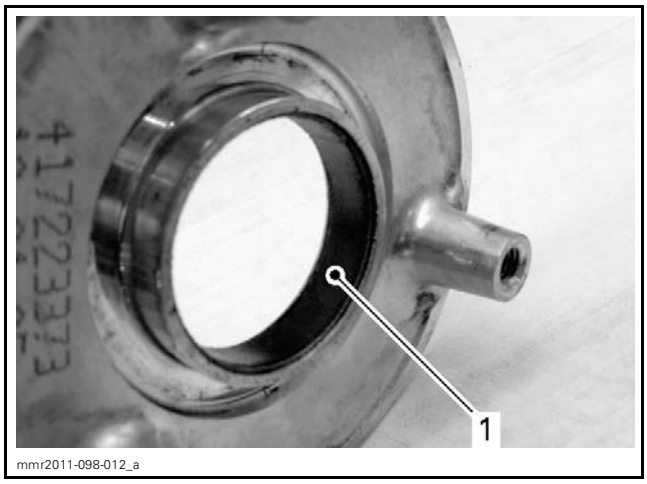


*1. Coating of spring cover bushing*

Using a bore gauge, measure the inner diameter of spring cover bushing.

NOTE: Measuring point must be at least 6 mm (1/4 in) from bushing edge.

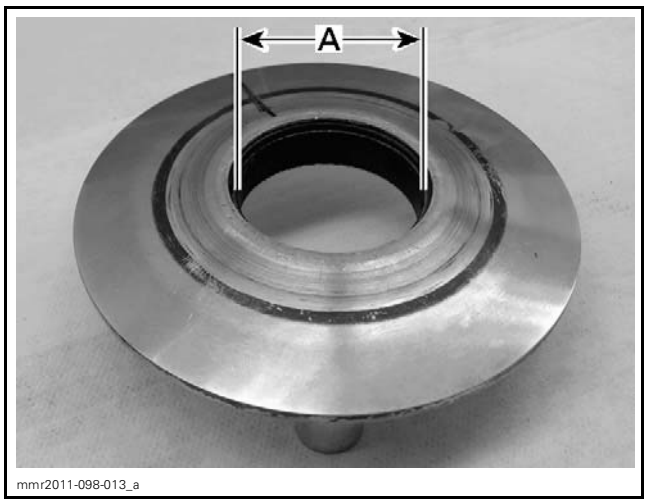


*A. Inner diameter of spring cover bushing*

| SPRING COVER BUSHING | |
|---|---|
| **SPECIFICATION** | **INNER DIAMETER** |
| SERVICE LIMIT | 38.37 mm (1.511 in) |

If bushing is out of specification, replace spring cover.

### Spring Inspection

Check spring free length.

| SPRING FREE LENGTH | |
|---|---|
| COLOR CODE | FREE LENGTH |
| RED/WHITE | 115.0 mm (4.528 in) |

### Sliding Sheave Inspection

Check sliding sheave for cracks or other damage.

Check sliding contact surface for excessive wear.

Measure centrifugal lever pivot bolt bores.

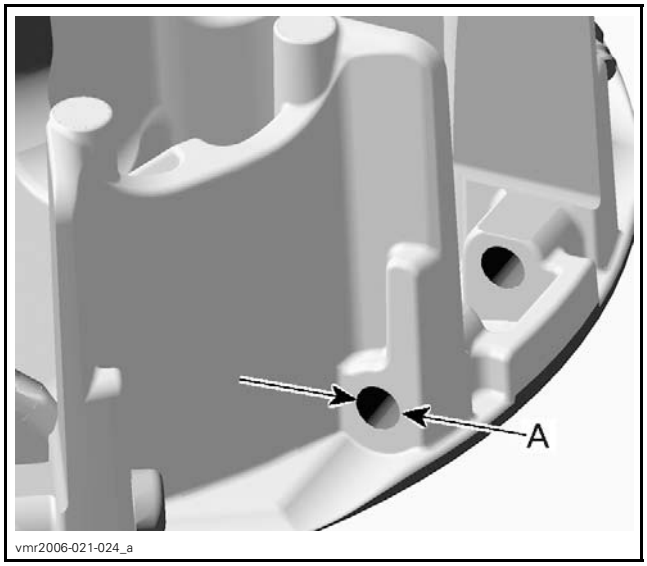


*A. Centrifugal lever pivot bolt bore diameter*

| CENTRIFUGAL LEVER PIVOT BOLT | |
|---|---|
| **SPECIFICATION** | **BORE DIAMETER** |
| NOMINAL | 6.113 mm to 6.171 mm (.241 in to .243 in) |
| SERVICE LIMIT | 6.300 mm (.248 in) |

Check coating of sliding sheave bushing for wear.

Measure bushing diameter of sliding sheave.

NOTE: Use a dial bore gauge to measure bushing diameter. Measuring point must be at least 5 mm (1/4 in) from bushing edge.

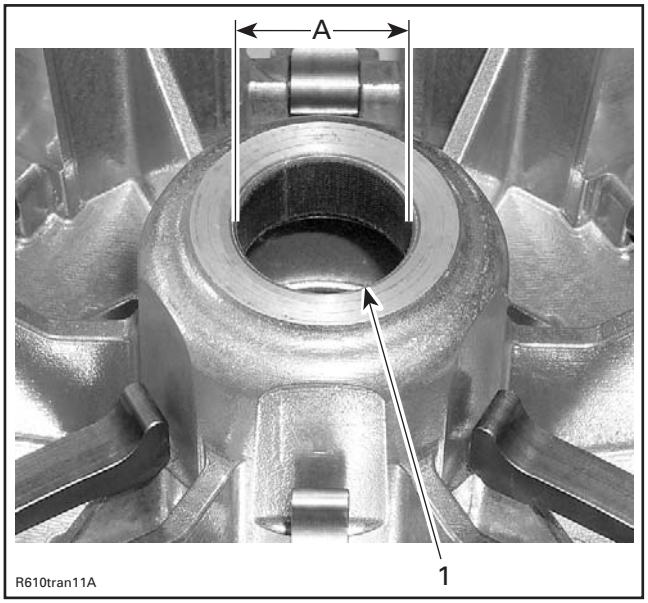


*TYPICAL*
*1. Sliding sheave bushing*
*A. Inner diameter of bushing*

| SLIDING SHEAVE BUSHING | |
|---|---|
| **SPECIFICATION** | **INNER DIAMETER** |
| NOMINAL | 32.01 mm to 32.13 mm (1.26 in to 1.265 in) |
| SERVICE LIMIT | 33.22 mm (1.308 in) |

If bushing is out of specification, replace sliding sheave.

## Drive Pulley Assembly

### Spring Cover Installation

The installation is the reverse of removal procedure, however pay attention to the following.

Tighten spring cover retaining screws to specification.

| TIGHTENING TORQUE | |
|---|---|
| Spring cover retaining screws | 10 N•m ± 2 N•m (89 lbf•**in** ± 18 lbf•**in**) |

### Centrifugal Lever Installation

The installation is the reverse of removal procedure, however pay attention to the following.

Install centrifugal levers with both thrust washers.

**NOTICE** **Centrifugal levers must move easily after installation.**

Tighten centrifugal lever pivot nuts to specification.

| TIGHTENING TORQUE | |
|---|---|
| Centrifugal lever pivot nut | 5 N•m ± 0.6 N•m (44 lbf•**in** ± 5 lbf•**in**) |

### Slider Shoes and Roller Installation

The installation is the reverse of removal procedure, however pay attention to the following.

Ensure that rollers move easily after installation.

Install bearing sleeve by pushing it towards the same direction as the arrow.

Ensure the bearing sleeve is aligned with the contact surface of the slider shoes (no protrusion).

**NOTICE** **Do not clamp governor cup in the vice to avoid to damaging it.**

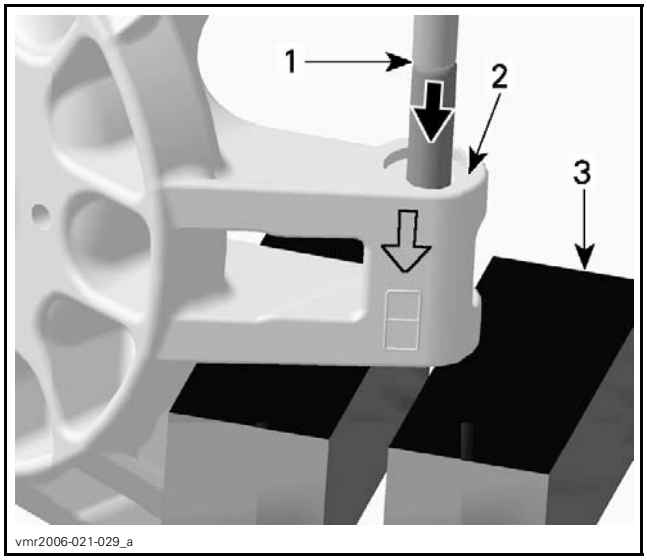


*1. Top edge of bearing sleeve*
*2. Contact surface of slider shoes*
*3. Vice*

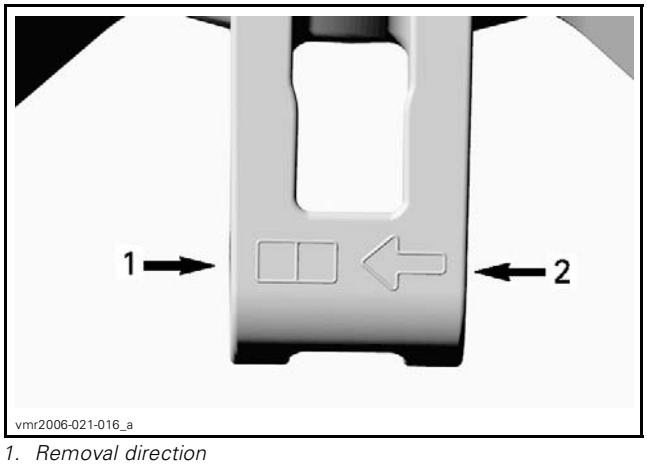


*1. Removal direction*
*2. Assembly direction*

Carefully mark governor cup box using a punch.

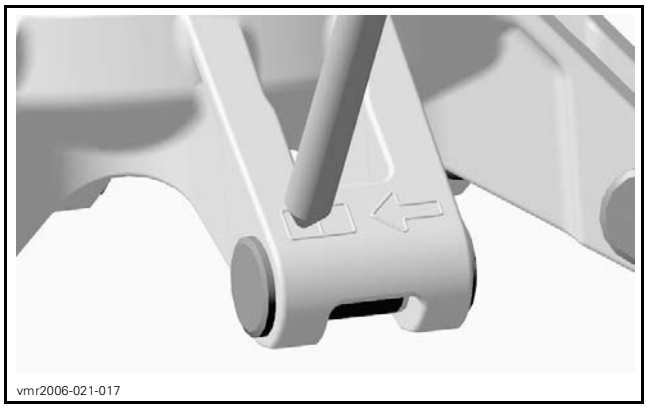
vmr2006-021-017

NOTE: Never install a governor cup with two marks.

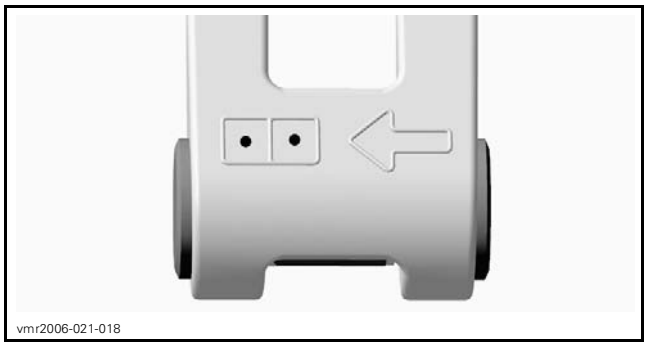
vmr2006-021-018

Install O-rings on slider shoes identified by an O on the governor cup. (total of 3 slider shoes with O-rings).

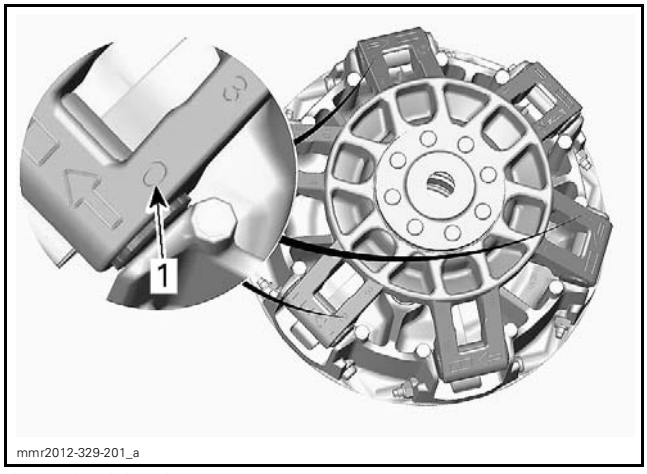

mmr2012-329-201_a

*O-RING POSITION*
*1. O on governor cup*

### Governor Cup Installation

The installation is the reverse of removal procedure.

### Fixed Sheave Assembly

The installation is the reverse of removal procedure, however pay attention to the following.

Align fixed sheave, sliding sheave and governor cup together using the index marks (index marks have been traced at the factory).

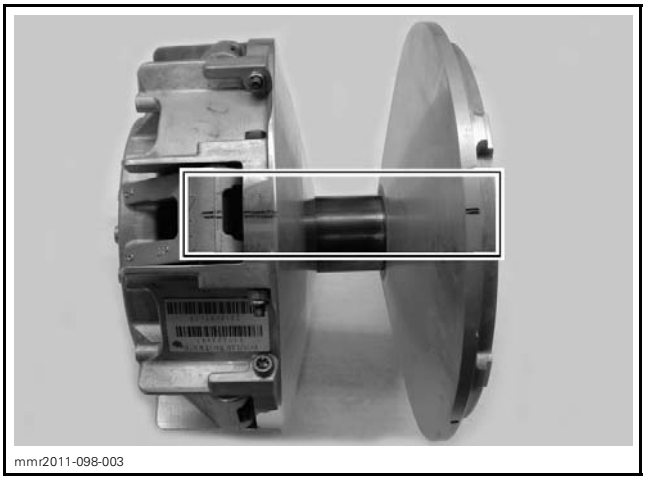
mmr2011-098-003

## Drive Pulley Installation

For installation, reverse the removal procedure. However, pay attention to the following.

Clean mounting surfaces as described in *DRIVE PULLEY CLEANING* above.

**NOTICE** **Do not apply antiseize or any lubricant on crankshaft and drive pulley tapers.**

Install NEW conical spring washer with its concave side towards drive pulley.

Install drive pulley screw with a NEW conical spring washer.

NOTE: Spring washer concave side must be towards drive pulley.

**NOTICE** **Always use BRP genuine parts for conical spring washer and screw.**

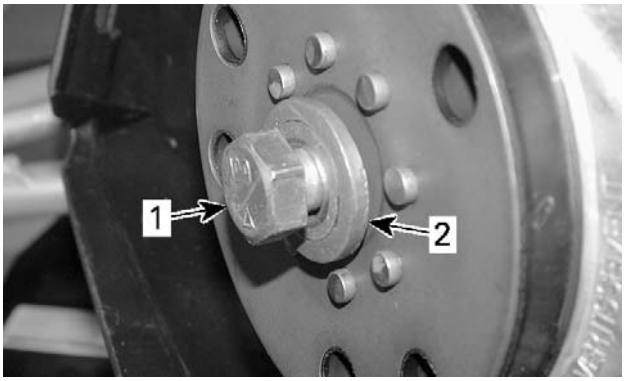


*TYPICAL*
1. *Drive pulley screw*
2. *Conical spring washer*

1. Tighten drive pulley retaining screw to specification.

***NOTICE*** Never use any type of impact wrench for drive pulley installation.

| REQUIRED TOOL |
| --- |
| CLUTCH HOLDER (P/N 529 036 235) |

| DRIVE PULLEY FIRST TORQUE |
| --- |
| 120 N•m (89 lbf•ft) |

2. Lift rear of vehicle and support it safely.

**⚠ WARNING**

**Ensure the track is free of particles which could be thrown out while track is rotating. Keep hands, tools, feet and clothing clear of track. Ensure nobody is standing near the vehicle.**

3. Start engine.
4. Release parking brake.
5. Accelerate vehicle at low speed (maximum 32 km/h (20 MPH)).
6. Apply brake.
7. Repeat the above sequence 5 times.
8. Stop engine.
9. Lower vehicle back on ground.
10. Retighten drive pulley retaining screw to specification.

| REQUIRED TOOL |
| --- |
| CLUTCH HOLDER (P/N 529 036 235) |

| DRIVE PULLEY FINAL TORQUE |
| --- |
| 120 N•m (89 lbf•ft) |

**⚠ WARNING**

**After 10 hours of operation, the torque of the drive pulley retaining screw must be checked.**

# pDRIVE PULLEY

## SERVICE TOOLS

| Description | Part Number | Page |
|---|---|---|
| CIRCLIP INSTALLER/REMOVER | 529 036 375 | 3 |
| CLUTCH HOLDER | 529 036 369 | 2, 12 |
| DRIVE PULLEY OPENING TOOL | 529 036 378 | 3 |
| DRIVE PULLEY SUPPORT | 529 036 371 | 3 |
| GREASE INJECTOR | 529 036 376 | 9 |
| PDRIVE PULLER | 529 036 370 | 2–3 |
| PULLEY SPRING COMPRESSOR TOOL | 529 036 373 | 3 |
| REMOVING AXLE TOOL | 529 036 372 | 3 |

## SERVICE PRODUCTS

| Description | Part Number | Page |
|---|---|---|
| CLUTCH AND PULLEY FLANGE CLEANER PRO S1 | 779244 | 8 |
| ISOFLEX GREASE TOPAS NB 52 | 293 550 021 | 9 |

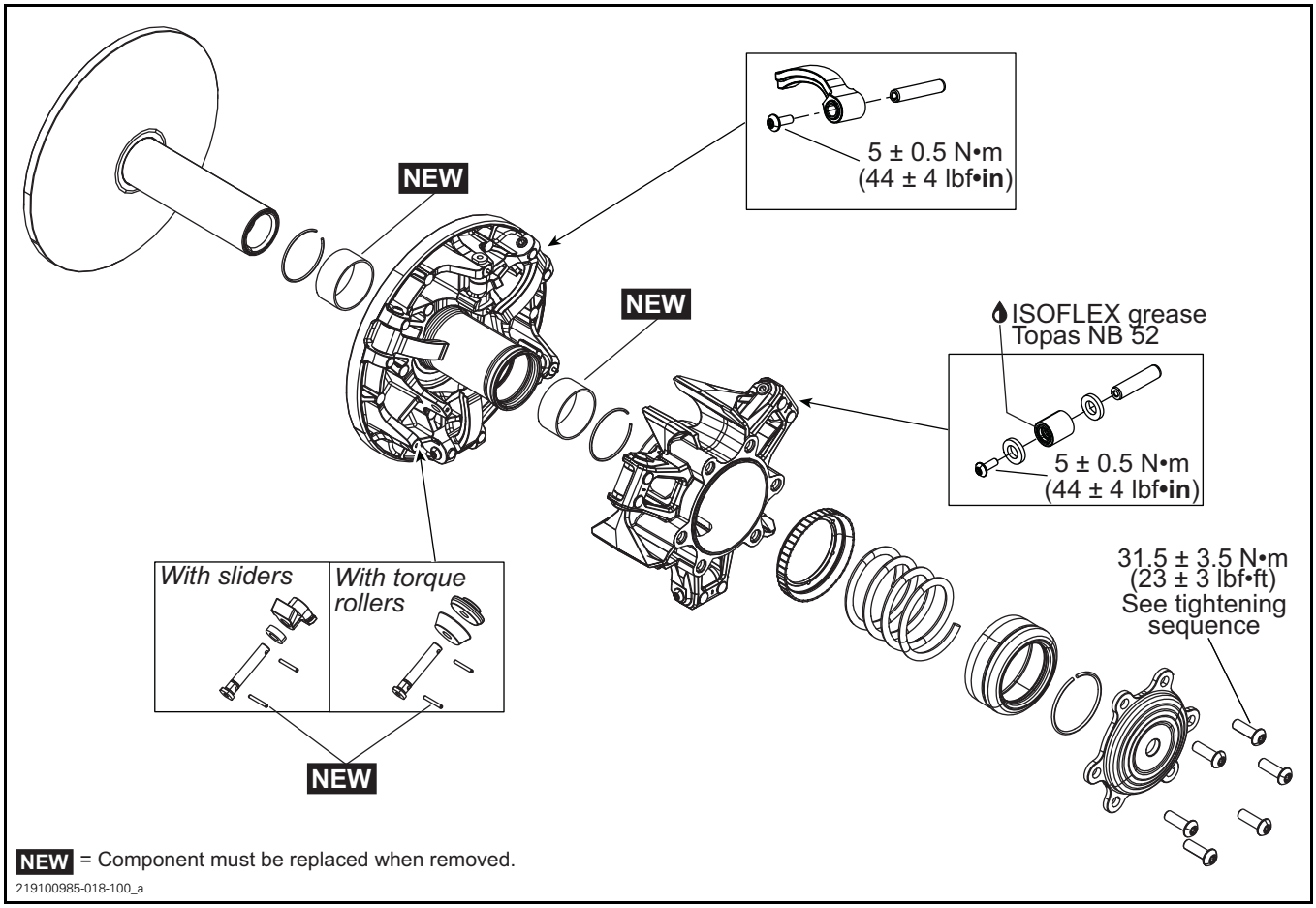

# GENERAL

The pDrive pulleys are lubrication-free drive pulleys. Only the needle bearings inside the rollers need to be lubricated when replaced.

Always refer to appropriate *PARTS CATALOG* for replacement parts.

**NOTICE** Never use any type of impact wrench for drive pulley removal and installation. The use of impact wrench could damage the drive pulley and modify the calibration.

Some drive pulley components (like the spring and ramps) can be changed to improve vehicle performance in high altitude regions. A Service Bulletin provides information about calibration according to altitude.

**NOTICE** Such modifications should only be performed by experienced mechanics since they can greatly affect vehicle performance. Verify spring specifications before installation. Do not only refer to the spring color code.

**⚠ WARNING**

Any drive pulley repairs must be performed by an authorized Ski-Doo dealer. Subcomponent installation and assembly tolerances require strict adherence to procedures detailed.

During assembly/installation, use torque values as in the exploded view.

Clean threads before applying a threadlocker. Refer to *SELF-LOCKING FASTENERS* and *LOCTITE APPLICATION* at the beginning of this manual for complete procedure.

**⚠ WARNING**

Torque wrench tightening specifications must be strictly adhered to.
Locking devices must be replaced with new ones when removed (e.g.: locking tabs, elastic stop nuts, cotter pins, etc.).

# PROCEDURES

## DRIVE PULLEY

### Removing the Drive Pulley

| REQUIRED TOOLS | |
|---|---|
| CLUTCH HOLDER (P/N 529 036 369) | |
| PDRIVE PULLER (P/N 529 036 370) | |

1. Remove drive belt. Refer to *DRIVE BELT* subsection.
2. Remove the drive pulley screw access cap from the LH hull.

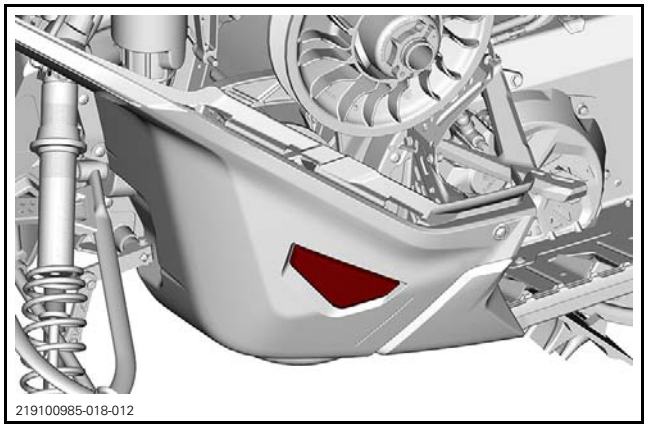

219100985-018-012

3. Remove the drive pulley bolt.
   - 3.1 Secure the drive pulley with the clutch holder.
   - 3.2 Using a breaker bar, remove the drive pulley bolt and its conical spring washer.

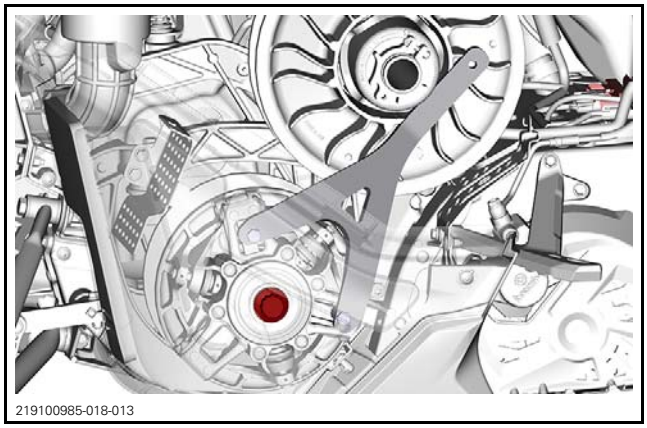

219100985-018-013

4. Remove the drive pulley from engine.
   - 4.1 Make sure the clutches holder is properly installed.

4.2 Screw the pDrive puller in place of the drive pulley bolt.

4.3 Tighten the pDrive puller until pulley is disengaged from the crankshaft end.

**NOTICE** These pulleys have metric threads. Do not use a puller with ANS (American National Standard) or IS (International Standard) type threads. Always tighten puller by hand to ensure that the drive pulley has the same type of threads (metric vs ANS or IS) prior to fully tightening.

## Disassembling the Drive Pulley

| REQUIRED TOOLS | |
|---|---|
| PDRIVE PULLER (P/N 529 036 370) | |
| DRIVE PULLEY SUPPORT (P/N 529 036 371) | |
| PULLEY SPRING COMPRESSOR TOOL (P/N 529 036 373) | |
| CIRCLIP INSTALLER/REMOVER (P/N 529 036 375) | |
| REMOVING AXLE TOOL (P/N 529 036 372) | |
| DRIVE PULLEY OPENING TOOL (P/N 529 036 378) | |

### Separating Fixed and Sliding Sheaves

To separate fixed sheave from sliding sheave, screw puller into fixed sheave shaft about 13 mm (1/2 in).

Raise drive pulley and hold it by the sliding sheave while knocking on puller head to disengage fixed sheave.

**NOTICE** NEVER tap on spider.

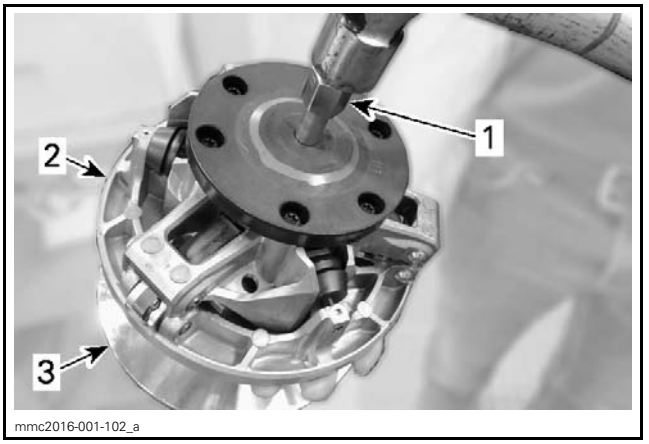


*1. Puller screwed 13 mm (1/2 in) in fixed sheave*
*2. Sliding sheave*
*3. Fixed sheave*

NOTE: No component marking is required before disassembly. This drive pulley features factory apposed index marks as references.

**NOTICE** Never use any type of torch to heat spider.

### Removing the Damper

1. Secure the drive pulley support in a vice.
2. Install the drive pulley over the support.

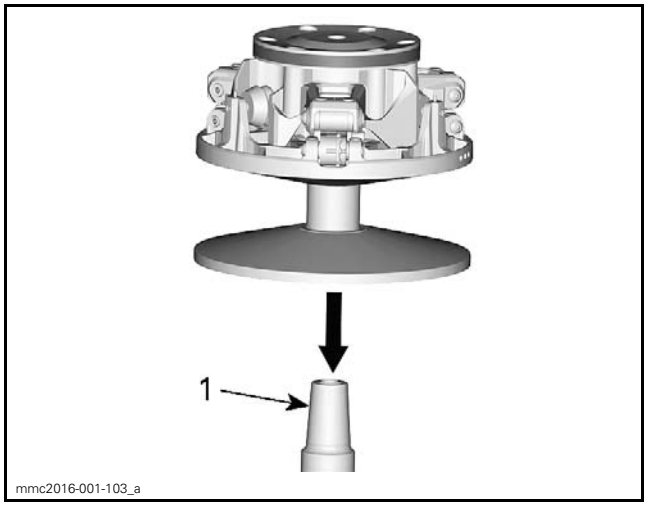


*1. Drive pulley support*

3. Remove the damper.

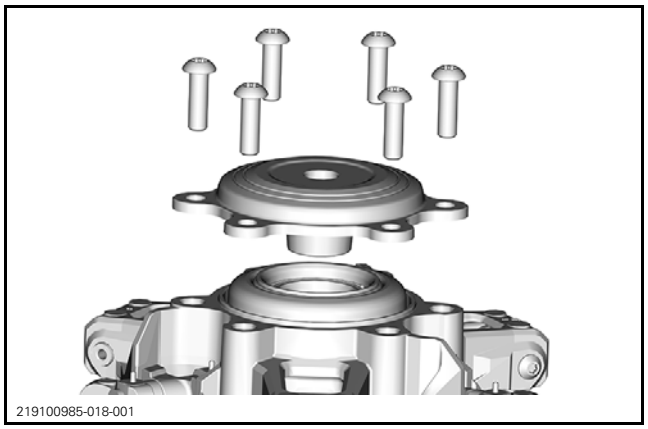
219100985-018-001

## Removing the Spring

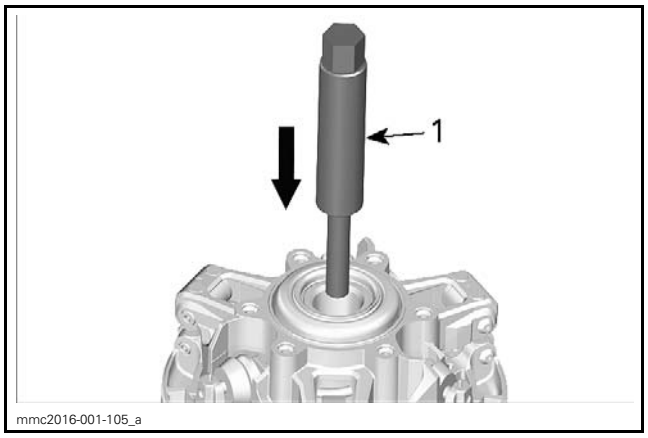

mmc2016-001-105_a

*1. Threaded shaft of the pulley spring compressor*

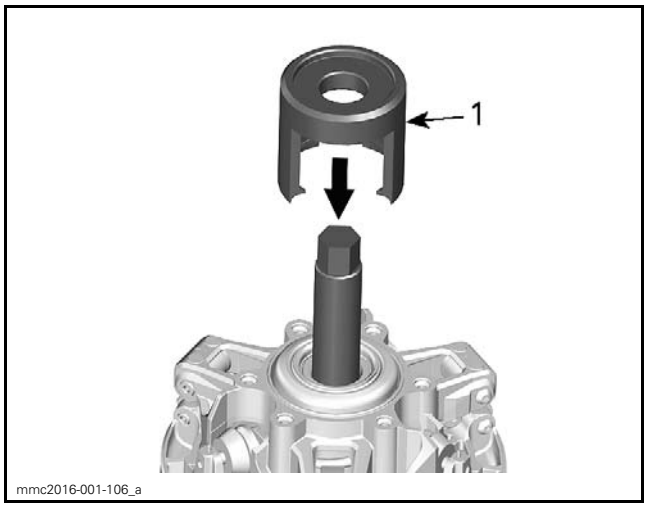

mmc2016-001-106_a

*1. Circlip installer/remover*

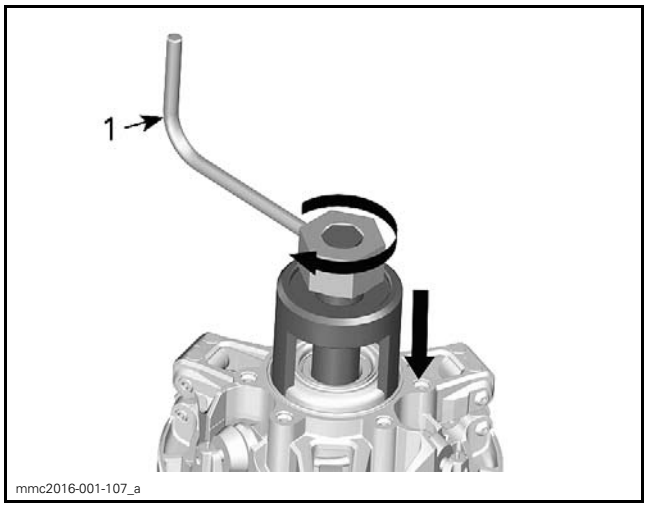

mmc2016-001-107_a

*1. Handle of the pulley spring compressor*

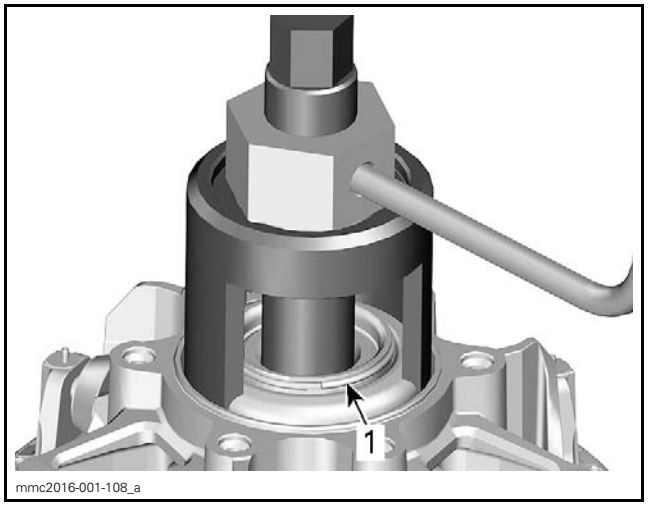

mmc2016-001-108_a

*1. Remove the circlip*

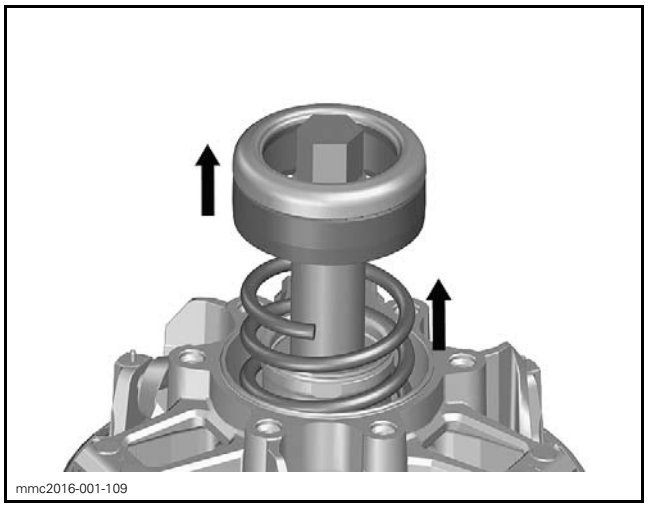
mmc2016-001-109

## Removing the Spider

1. Remove the threaded shaft.

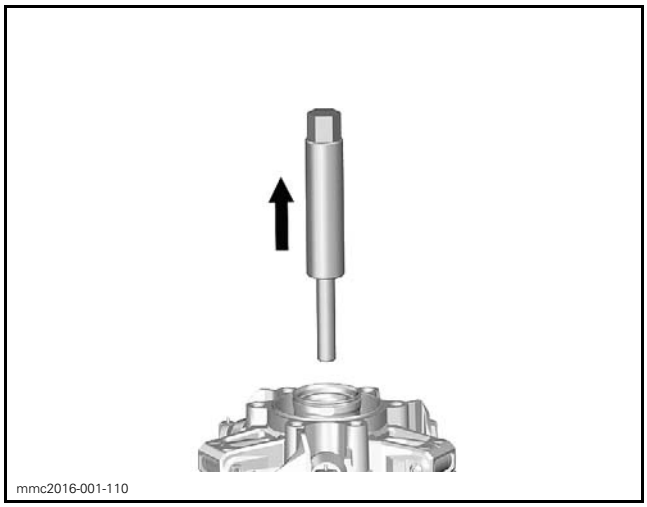
mmc2016-001-110

**NOTICE** Remove the threaded shaft to avoid damaging the bushings inside the spider.

2. Remove the spider.

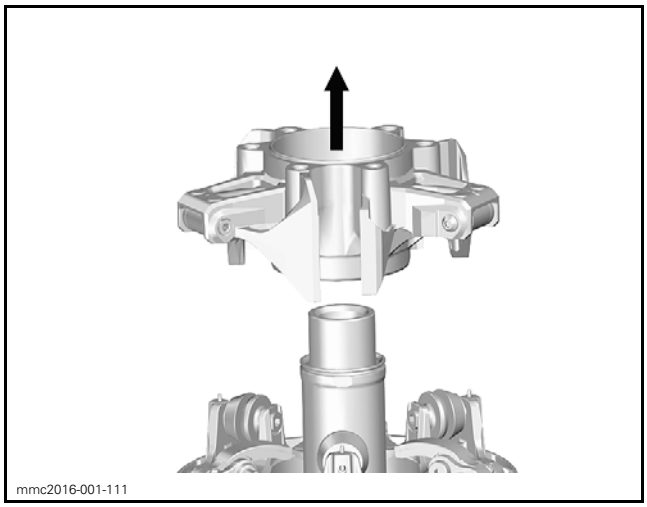
mmc2016-001-111

### Removing the Roller

1. Remove axle retaining screw.

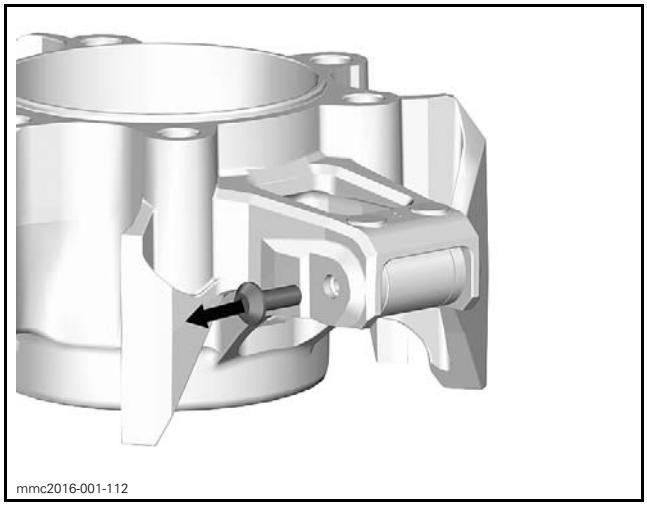
mmc2016-001-112

2. Remove the axle.

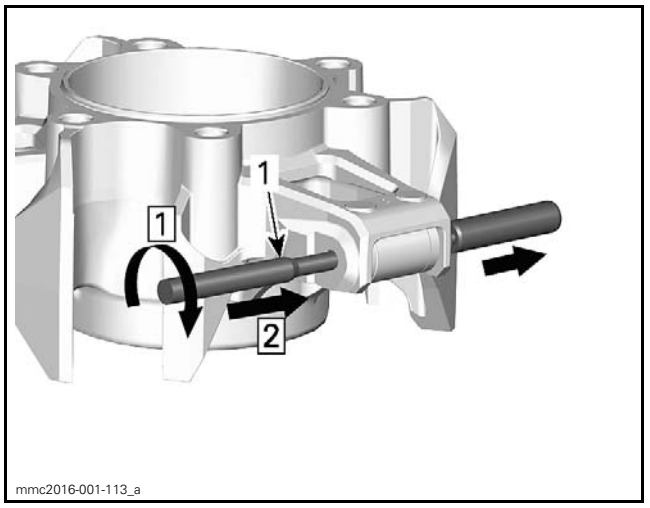

mmc2016-001-113_a

*1. Removing axle tool*

*Step 1: Screw the tool into the axle*
*Step 2: Push axle to the right side*

3. Remove the roller and its thrust washers.

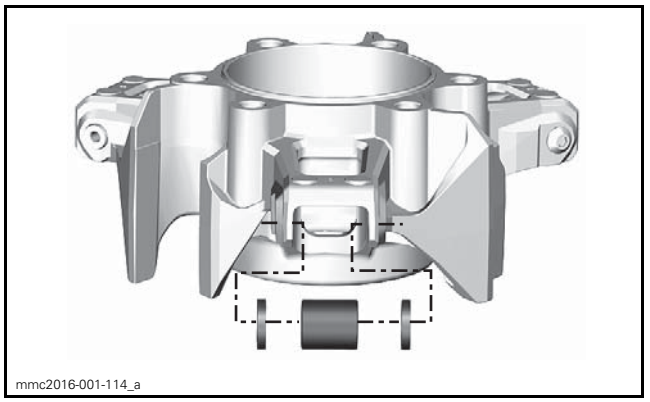
mmc2016-001-114_a

### Removing the Ramp (without Spider)

1. Remove axle retaining screw.

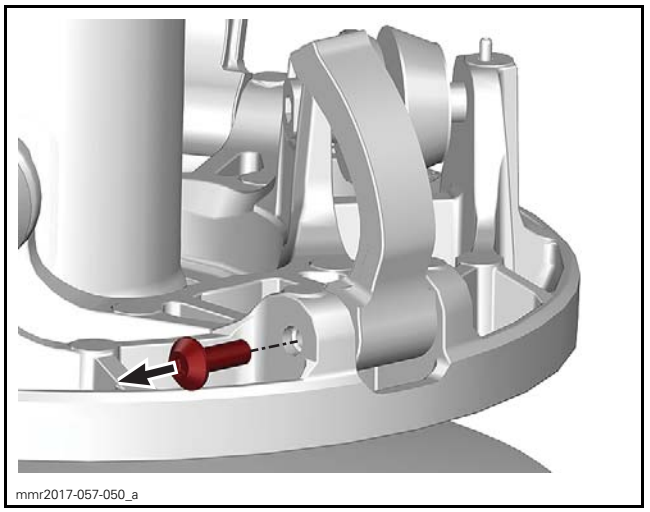
mmr2017-057-050_a

2. Remove the axle.

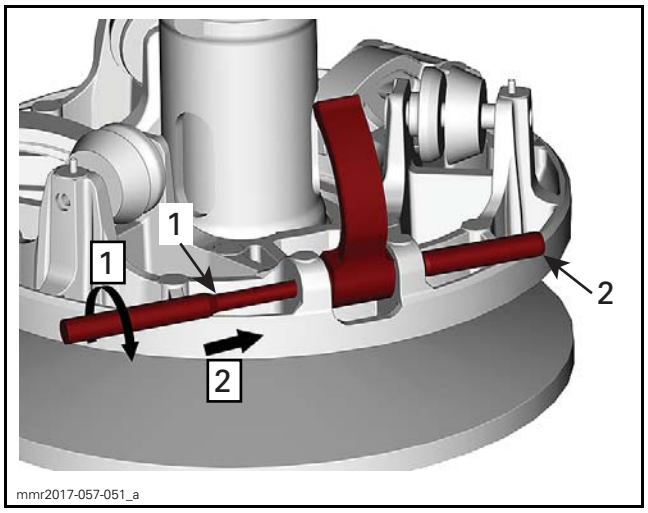


*1. Removing axle tool*
*2. Axle*

*Step 1: Screw the tool into the axle*
*Step 2: Push axle to the right side*

3. Remove ramp assembly.

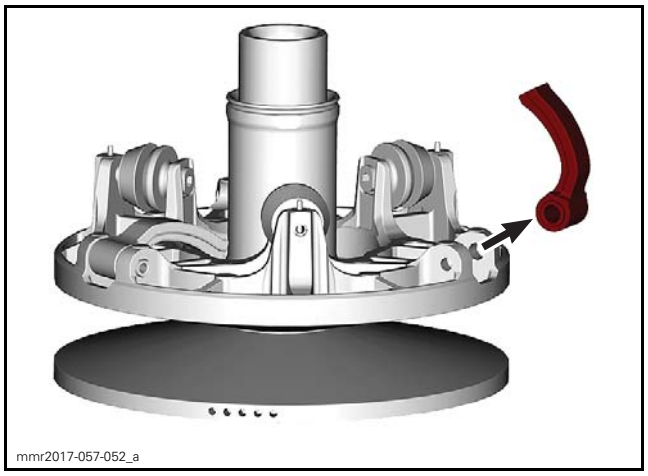


### Removing the Ramp (Spider Installed)

1. Lower the sliding sheave.
   1.1 Secure the drive pulley support in a vice.
   1.2 Install the drive pulley over the support.
   1.3 Install the drive pulley opening tool.

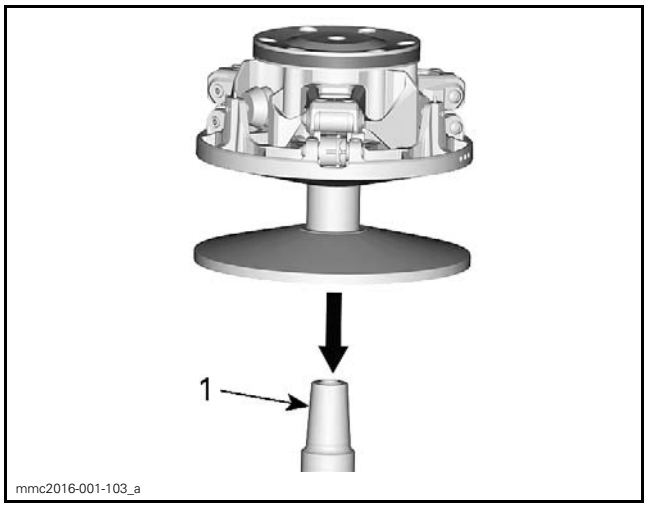


*1. Drive pulley support*

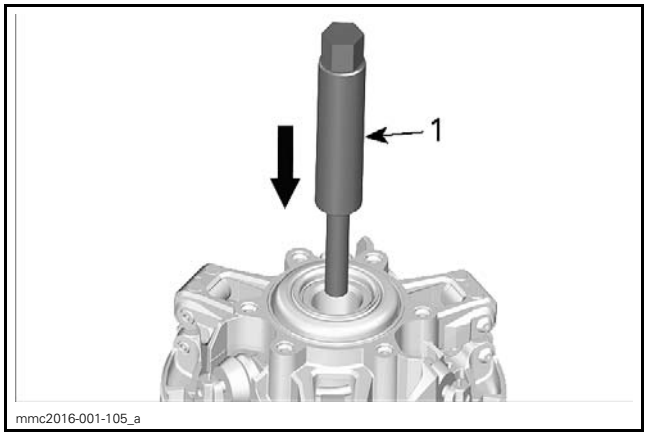


*1. Threaded shaft of the pulley spring compressor*

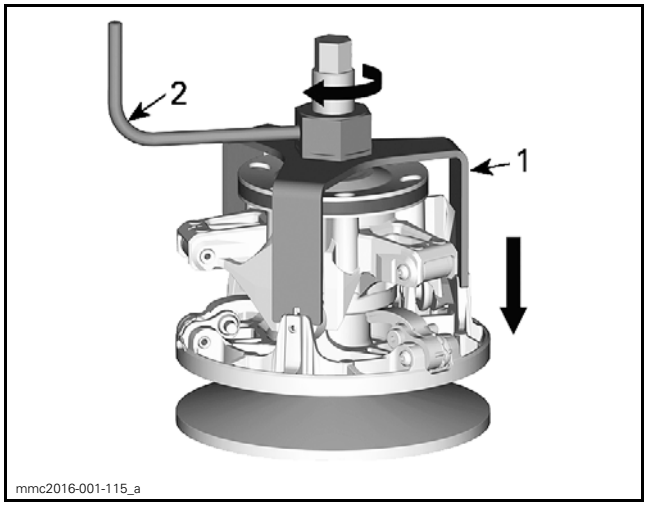


*1. Drive pulley opening tool*
*2. Handle of the pulley spring compressor*

2. Remove axle retaining screw.

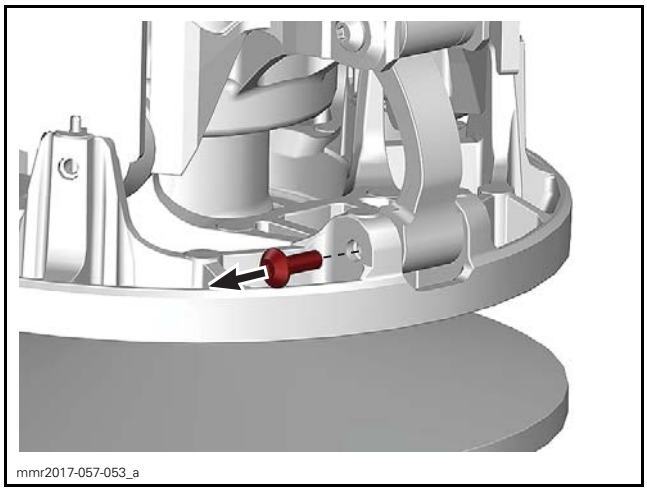
mmr2017-057-053_a

3. Remove the axle.

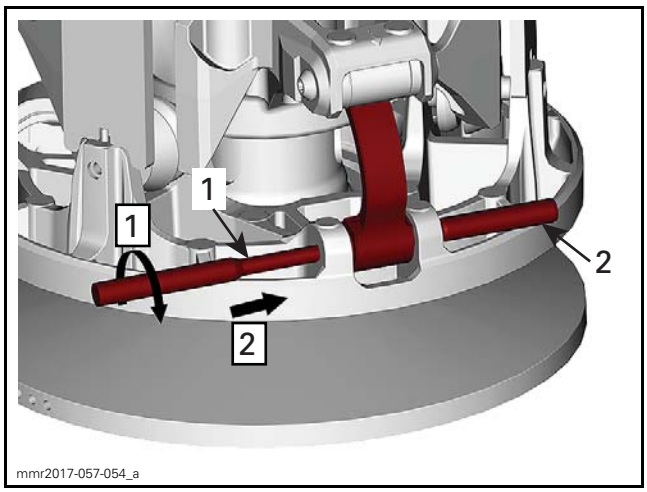

mmr2017-057-054_a

*1. Removing axle tool*
*2. Axle*

*Step 1: Screw the tool into the axle*
*Step 2: Push axle to the right side*

4. Remove ramp assembly.

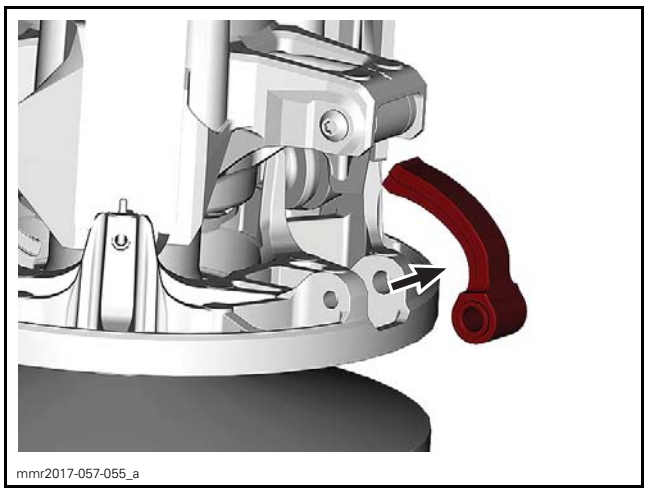
mmr2017-057-055_a

## Removing the Torque Sliders (if equipped)

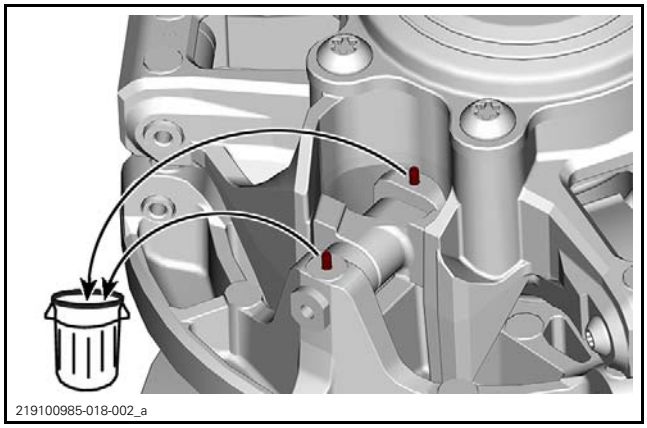
219100985-018-002_a

| REQUIRED TOOL |
| --- |
| Blind hole puller |
| M5 x 0.8 adaptor |

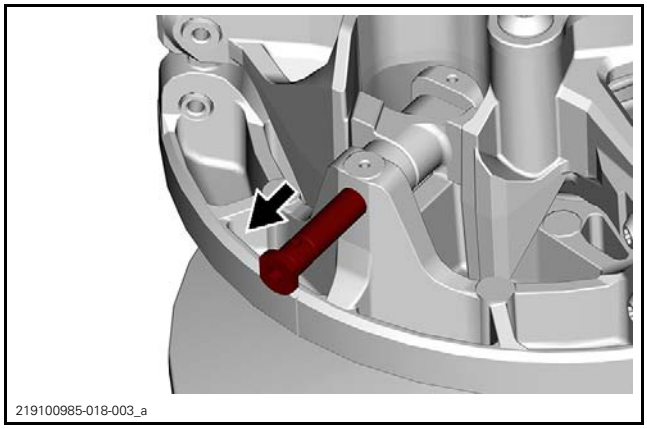
219100985-018-003_a

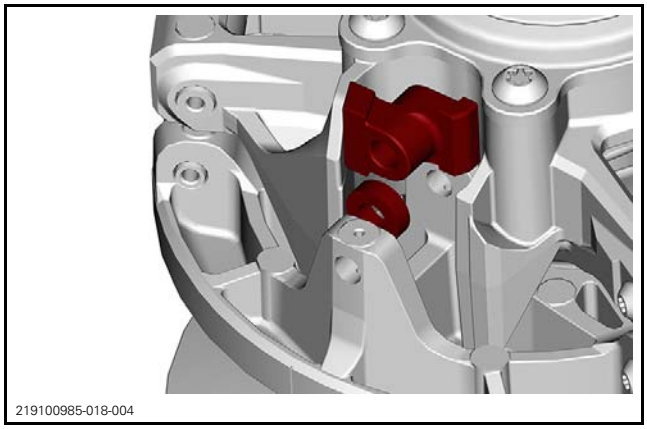
219100985-018-004

## Removing the Torque Rollers (if equipped)

Refer to *REMOVING THE TORQUE SLIDERS* procedure.

### Replacing the Sliding Sheave Bushing

In case of worn out bushing, it is advisable to replace whole sliding sheave assembly as replacing just the bushing may reduce drive pulley performance.

## Cleaning the Drive Pulley

NOTE: Parts must be at room temperature before cleaning.

Clean pulley sheaves and shaft with fine steel wool and dry cloth.

Using a paper towel and cleaner, clean the following components.

– Crankshaft tapered end
– Taper inside fixed sheave of drive pulley
– Crankshaft threads
– Retaining screw threads.

| SERVICE PRODUCT |
| --- |
| CLUTCH AND PULLEY FLANGE CLEANER PRO S1 (P/N 779244) |

**NOTICE** Avoid contact between cleaner and crankshaft seal because damage may occur.

Remove all hardened oil deposits that are baked on crankshaft and pulley tapered surfaces with coarse or medium steel wool and/or sand paper no. 600.

**NOTICE** Do not use any other type of abrasive.

Reclean mounting surfaces with paper towel and cleaning solvent.

Wipe off the mounting surfaces with a clean, dry paper towel.

**NOTICE** Mounting surfaces must be free of any oil, cleaner or towel residue.

## Assembling the Drive Pulley

### Sliders

Position sliders as illustrated.

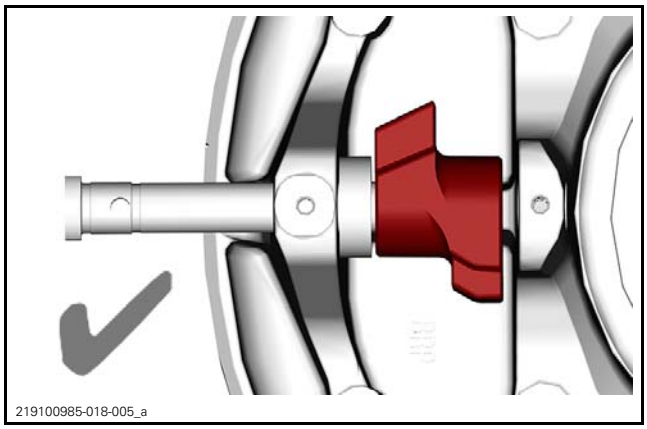


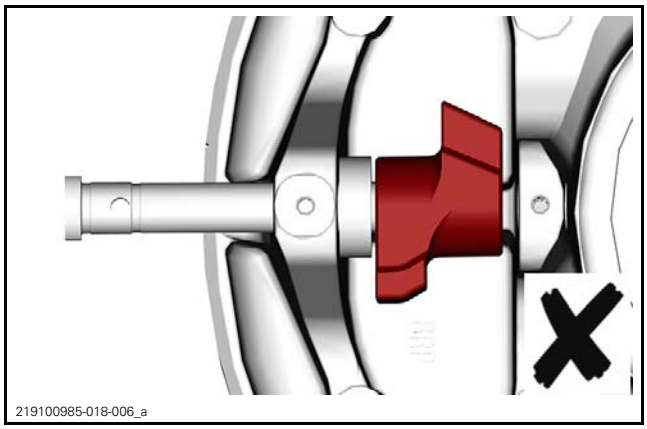


Position the flat sides of the axle head vertically.

Use a C vise clamp to push the axle back in place.

Install a new spring pin.

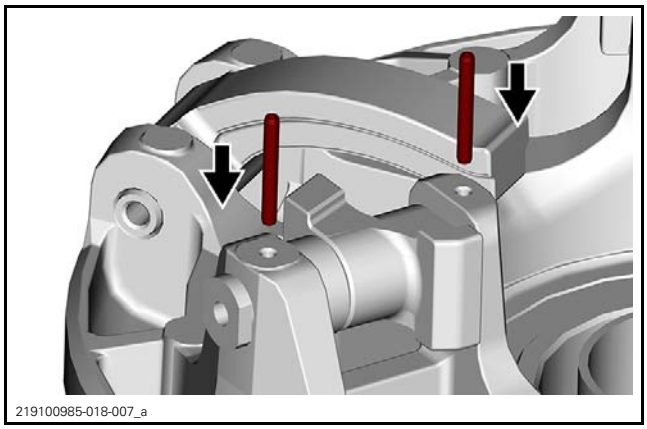


### Torque Rollers

Position sliders as illustrated.

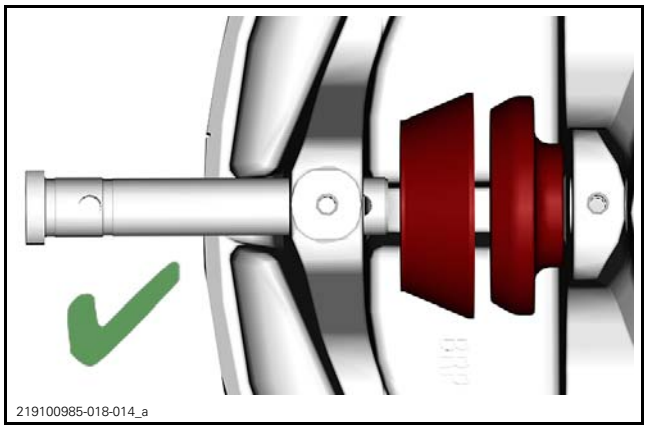


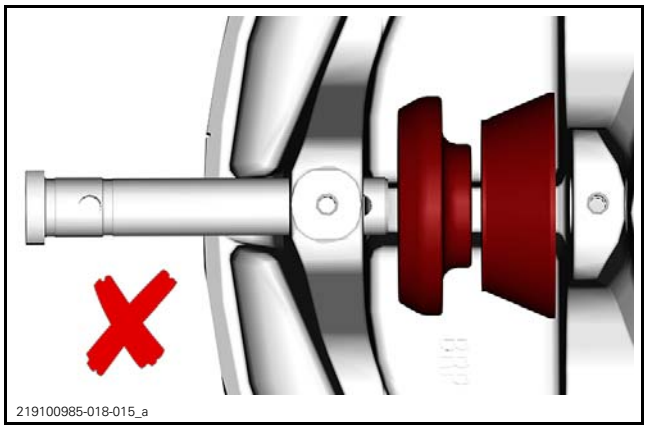


Position the flat sides of the axle head vertically.

Use a C vise clamp to push the axle back in place.

Install a new spring pin.

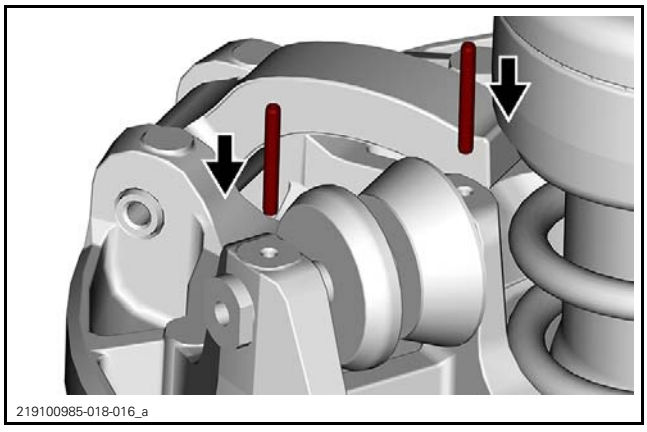


### Ramp

Install the ramp on the sliding sheave.

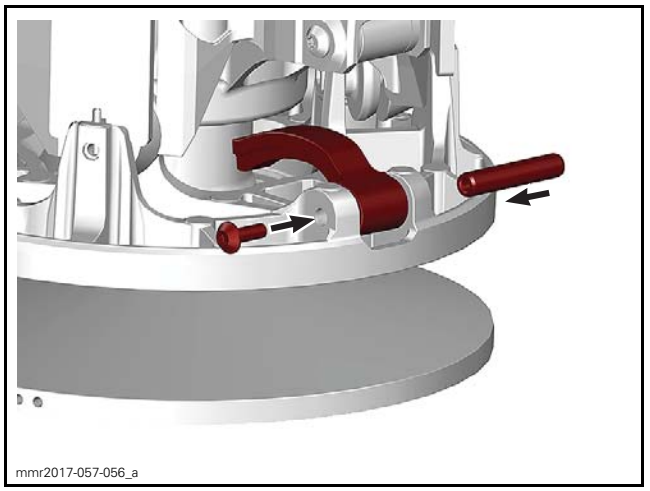


| TIGHTENING TORQUE | |
|---|---|
| Axle screw | 5 N•m ± 0.5 N•m (44 lbf•**in** ± 4 lbf•**in**) |

### Roller

Lubricate the roller bearing.

| REQUIRED SERVICE PRODUCT |
|---|
| ISOFLEX GREASE TOPAS NB 52 (P/N 293 550 021) |

| REQUIRED TOOL | |
|---|---|
| GREASE INJECTOR (P/N 529 036 376) | |

**NOTE:** A threaded end is required on the grease gun for using the grease injector.

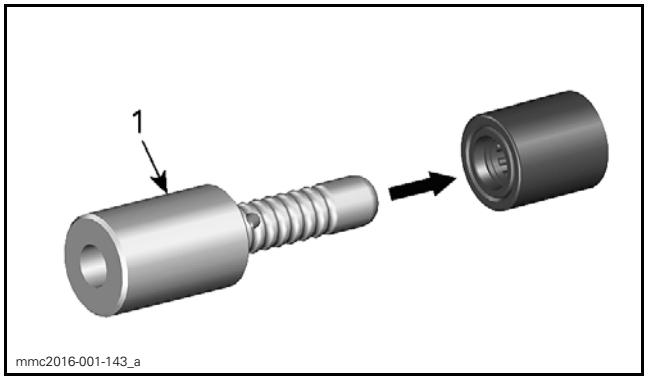


*1. Grease injector*

Install roller.

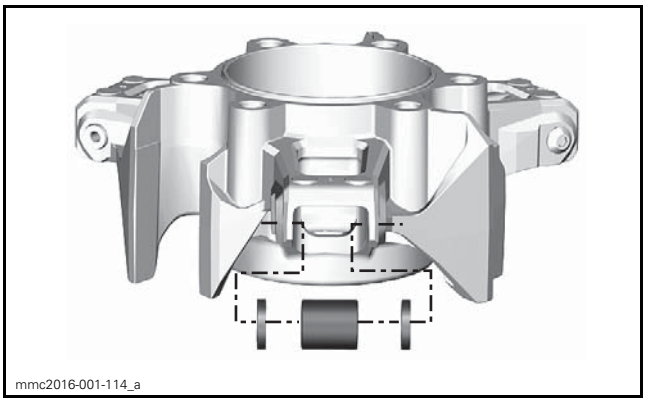
mmc2016-001-114_a

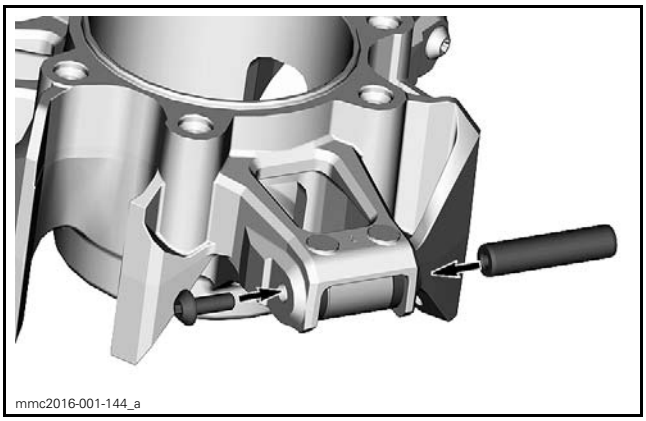
mmc2016-001-144_a

| TIGHTENING TORQUE | |
|---|---|
| Roller axle screw | 5 N•m ± 0.5 N•m (44 lbf•**in** ± 4 lbf•**in**) |

## Spider

Install the spider on the sliding sheave by aligning the indexing marks.

– Spider - the arrow on the arms #1, just above the roller.
– Sliding sheave - the dot on the external side of the sheave.

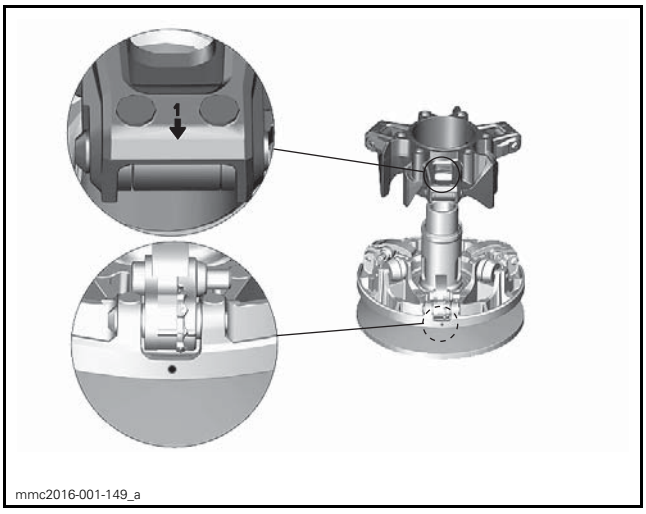

mmc2016-001-149_a

*TYPICAL*

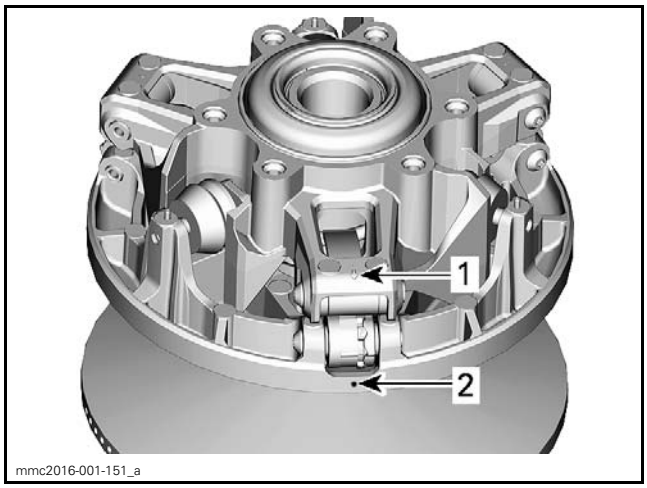

mmc2016-001-151_a

*TYPICAL - FINAL POSITION*
*1. Arrow - spider arm*
*2. Dot - sliding sheave*

### *With Sliders*

***NOTICE*** During installation of the spider, make sure to correctly position all three sliders with spider legs and ensure that ramps are positioned inside the openings of the spider.

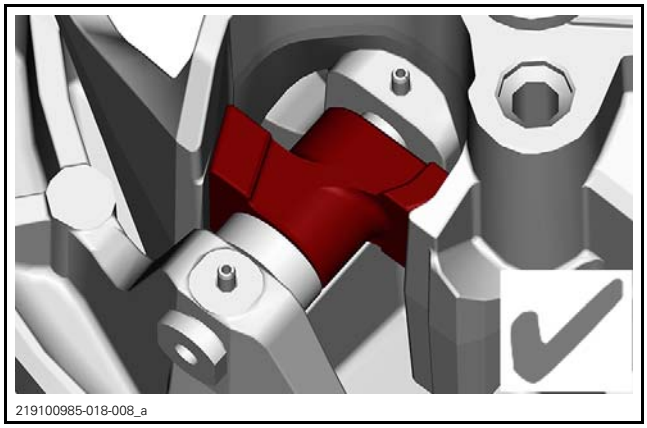
219100985-018-008_a

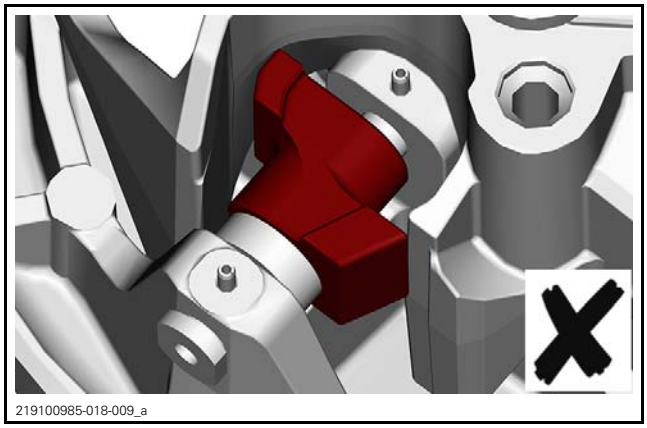
219100985-018-009_a

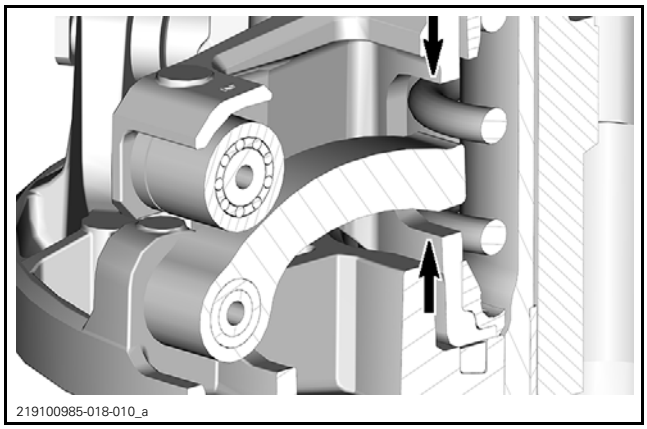


*RAMP POSITIONING*

### *With Torque Rollers*

**NOTICE** During installation of the spider, make sure to position the three spurs of spider legs between torque rollers and ensure that ramps are positioned inside the openings of the spider.

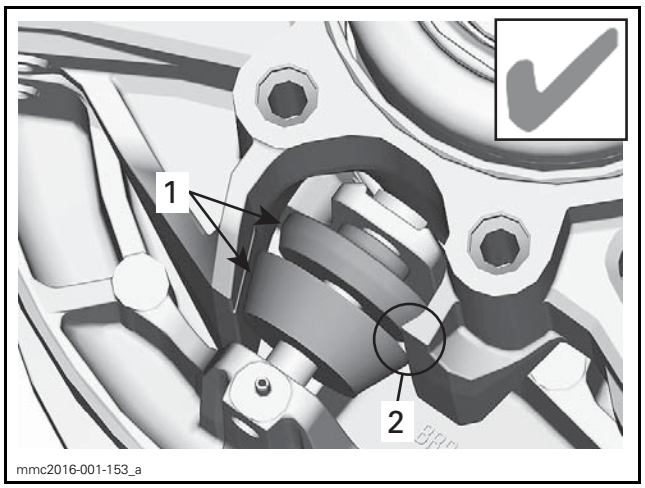


*ROLLER - GOOD INSTALLATION*
1. *Torque rollers*
2. *Spur of the spider leg*

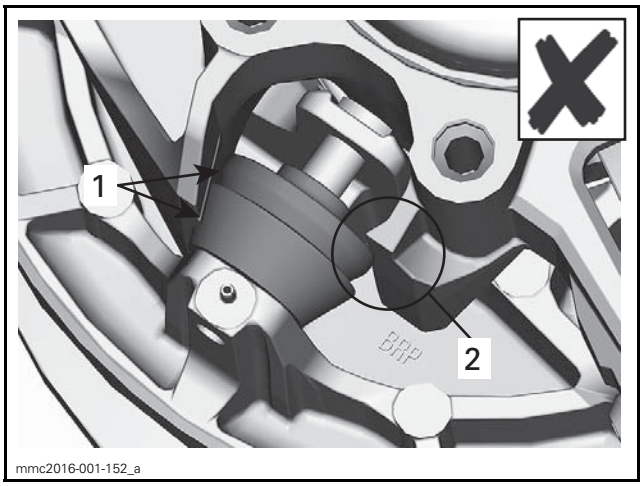


*ROLLER - WRONG INSTALLATION*
1. *Torque rollers*
2. *Spur of the spider leg*

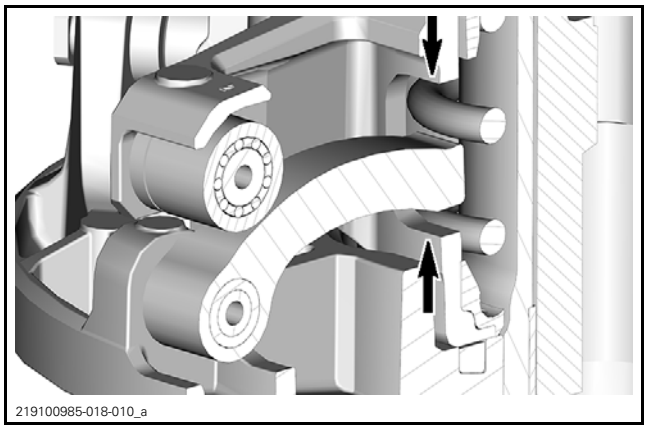


*RAMP POSITIONING*

### Damper

Install the damper using the following sequence.

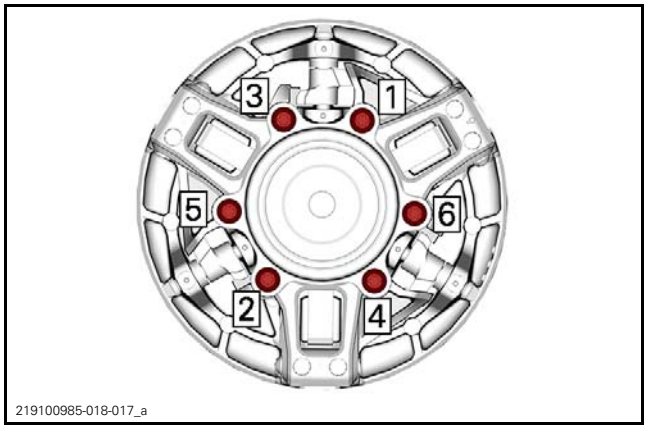


| TIGHTENING TORQUE | |
|---|---|
| Damper screws | 31.5 N•m ± 3.5 N•m (23 lbf•ft ± 3 lbf•ft) |

### Sliding Sheave and Fixed Sheave Assembly

Index sliding sheave with fixed sheave by aligning index marks.

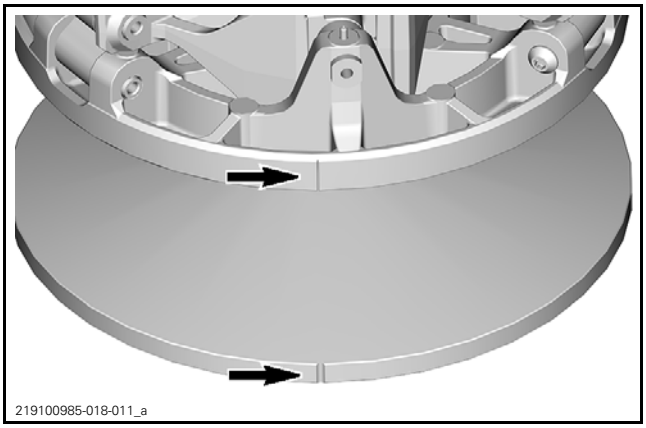


## Drive Pulley Installation

| REQUIRED TOOLS | |
|---|---|
| CLUTCH HOLDER (P/N 529 036 369) | |

1. Clean mounting surfaces as described in *DRIVE PULLEY CLEANING* above.

**NOTICE** Do not apply antiseize or any lubricant on crankshaft and drive pulley tapers.

2. Install drive pulley on crankshaft end.

NOTE: The drive pulley can be installed in one position only. Drive pulley and crankshaft are indexed.

3. Install a NEW conical spring washer with its concave side towards drive pulley.
4. Install drive pulley bolt.

**NOTICE** Always use BRP genuine parts for conical spring washer and bolt.

5. Secure the drive pulley with the clutch holder.
6. Using a torque wrench, tighten the drive pulley bolt. Refer to *TIGHTENING THE DRIVE PULLEY* for the completed procedure.

### Tightening the Drive Pulley

Tighten the drive pulley bolt.

| TIGHTENING TORQUE | | |
|---|---|---|
| Drive pulley bolt | First torque | 120 N•m ± 5 N•m (89 lbf•ft ± 4 lbf•ft) |

Before starting engine, perform drive pulley adjustment. Refer to *ADJUSTMENT*, at the beginning of this subsection.

Install drive belt and guard.

Raise the rear of the vehicle and support it with a mechanical stand.

**⚠ WARNING**

**Ensure that the track is free of particles which could be thrown out while track is rotating. Keep hands, tools, feet and clothing clear of track. Ensure nobody is standing near the vehicle.**

Accelerate the vehicle at low speed (maximum 32 km/h (20 MPH) and apply the brake, repeat 5 times.

Tighten the drive pulley bolt again.

| TIGHTENING TORQUE | | |
|---|---|---|
| Drive pulley bolt | Final torque | 120 N•m ± 5 N•m (89 lbf•ft ± 4 lbf•ft) |

**⚠ WARNING**

**After 10 hours of operation the transmission system of the vehicle must be inspected to ensure drive pulley bolt is still properly torqued.**

# DRIVEN PULLEY AND COUNTERSHAFT

## SERVICE TOOLS


| Description | Part Number | Page |
|---|---|---|
| ALIGNMENT BAR | 529 036 157 | 4 |
| DRIVEN PULLEY SPRING COMPRESSOR | 529 036 182 | 7 |
| ENGINE LIFTING TOOL | 529 036 217 | 14 |
| PRELOAD TESTER | 529 036 164 | 5 |


## SERVICE TOOLS – OTHER SUPPLIER


| Description | Part Number | Page |
|---|---|---|
| ROTOR CLIP® APPLICATOR | A-150 | 10 |


## SERVICE PRODUCTS


| Description | Part Number | Page |
|---|---|---|
| LOCTITE 243 (BLUE) | 293 800 060 | 11 |
| LOCTITE 609 | 413 703 100 | 13 |
| LOCTITE 767 (ANTISEIZE LUBRICANT) | 293 800 070 | 10, 12 |
| PULLEY FLANGE CLEANER | 413 711 809 | 13 |

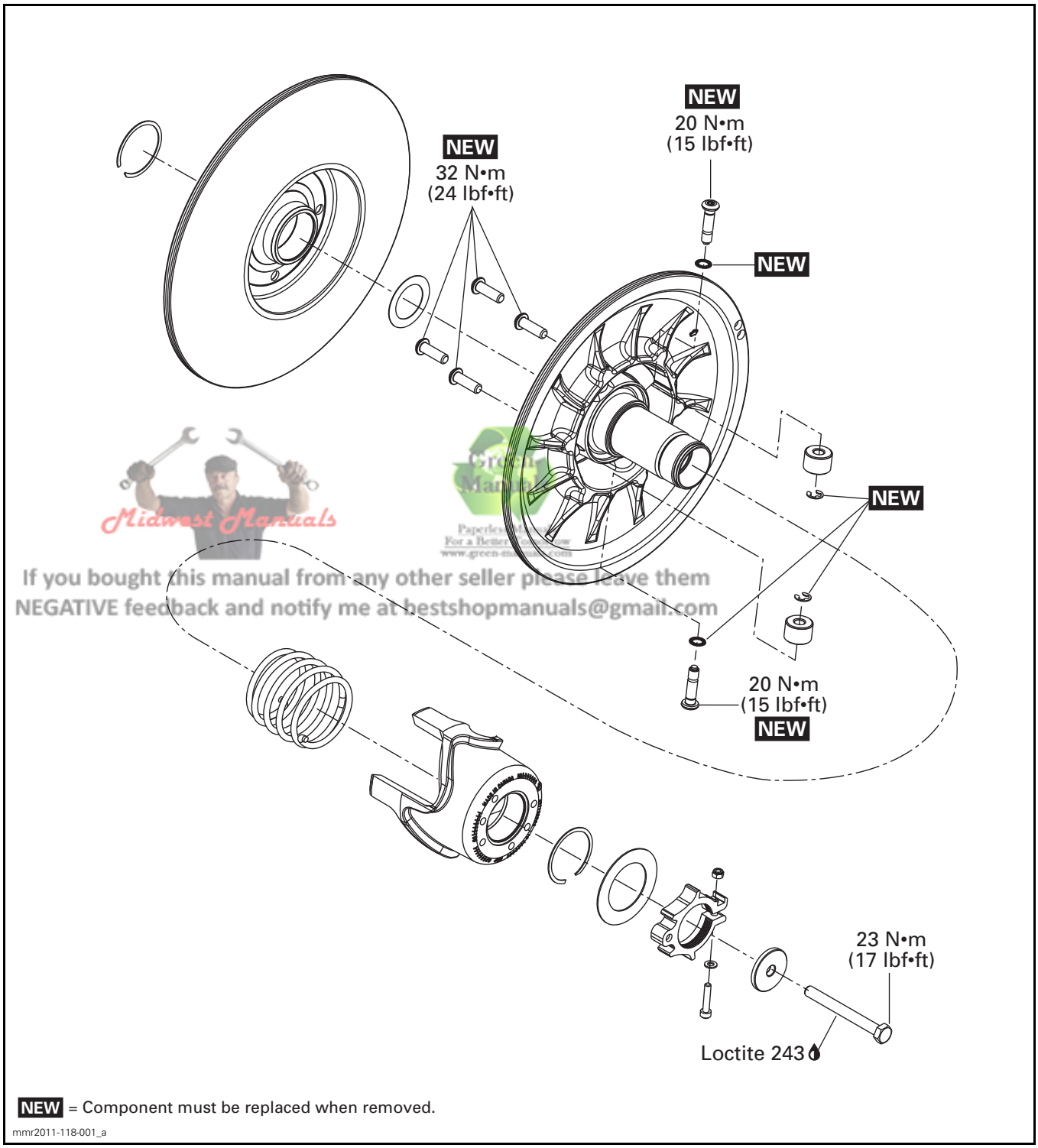


Midwest Manuals
If you bought this manual from any other seller please leave them NEGATIVE feedback and notify me at bestshopmanuals@gmail.com

**NEW** = Component must be replaced when removed.

mmr2011-118-001_a

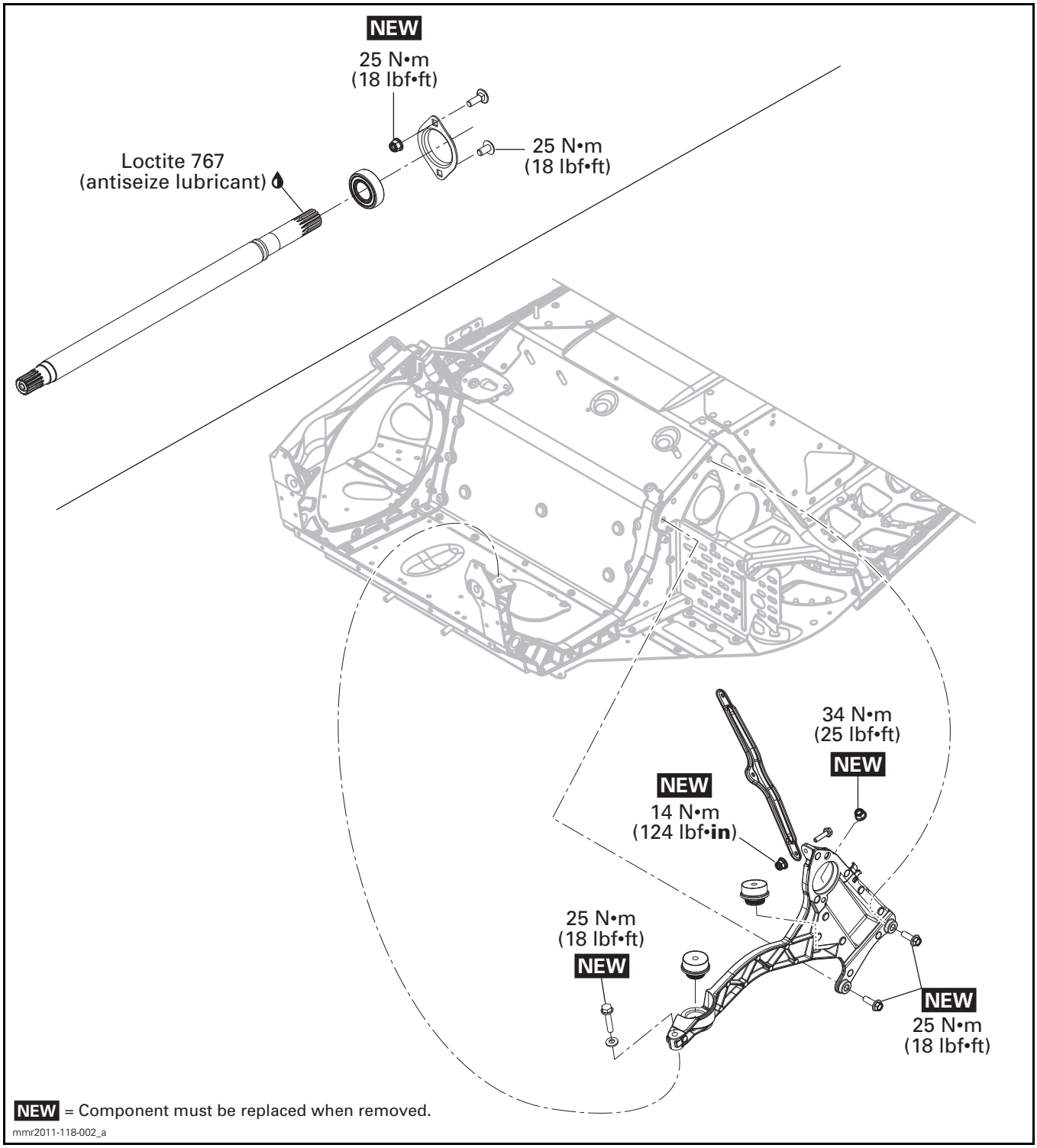
NEW
25 N•m
(18 lbf•ft)
25 N•m
(18 lbf•ft)
Loctite 767
(antiseize lubricant)
34 N•m
(25 lbf•ft)
NEW
NEW
14 N•m
(124 lbf•in)
25 N•m
(18 lbf•ft)
NEW
NEW
25 N•m
(18 lbf•ft)
NEW = Component must be replaced when removed.
mmr2011-118-002_a

# GENERAL

During assembly/installation, use the torque values and the service products as in the exploded views.

Clean threads before applying a threadlocker. Refer to *SELF-LOCKING FASTENERS* and *LOCTITE APPLICATION* at the beginning of this manual for complete procedure.

**⚠ WARNING**

**Torque wrench tightening specifications must be strictly adhered to.**
**Locking devices when removed (e.g.: locking tabs, elastic stop nuts, cotter pins, etc.) must be replaced.**

**⚠ WARNING**

**Never start engine when the pulley guard is removed.**

***NOTICE*** **Hoses, cables and locking ties removed during a procedure must be reinstalled as per factory standards.**

# ADJUSTMENT

## DRIVEN PULLEY ALIGNMENT

1. Remove drive belt, refer to *DRIVE BELT* subsection.
2. Completely open driven pulley.
3. Insert ALIGNMENT BAR (P/N 529 036 157) between the pulley sheaves. The half moon recess must match the drive pulley fixed sheave shaft.

4. Close the driven pulley on the alignment bar. Make sure it stays against the pulley bottom.

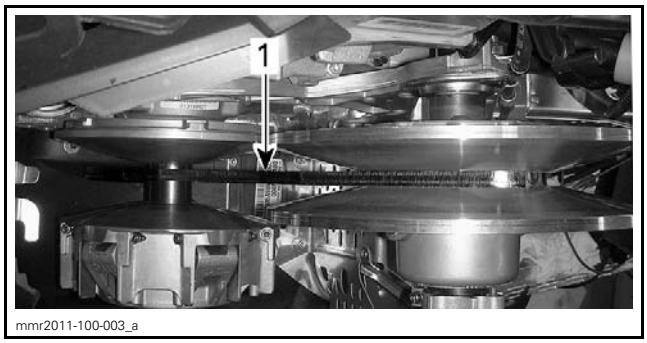


*1. Alignment bar*

5. Locate the measurement points on the alignment bar.

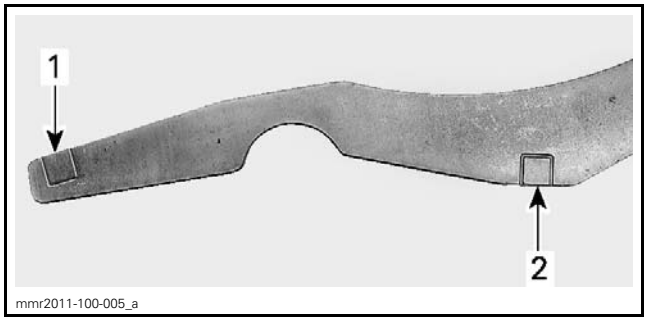


*1. Front measurement point*
*2. Aft measurement point*

6. Measure "X" distance as per the following illustration.

NOTE: Always measure "X" distance from the farther alignment bar side to the fixed sheave inner edge (including alignment bar thickness).

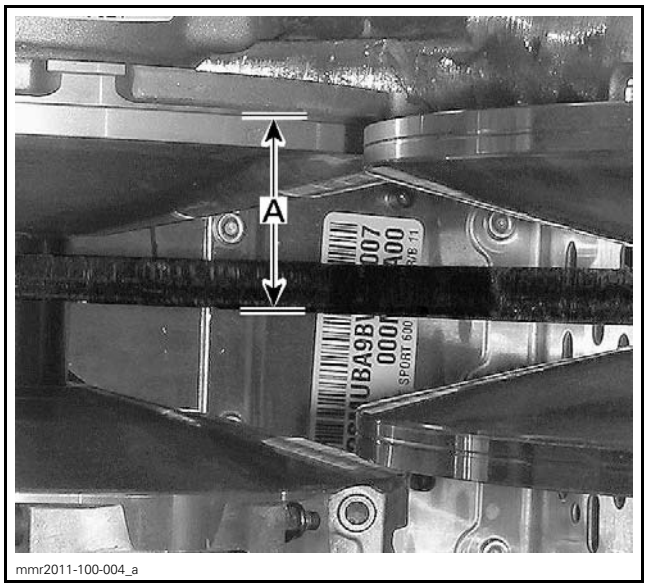


*A. "X" distance*

7. Compare the result to the specification.

| "X" DISTANCE SPECIFICATION | |
|---|---|
| Minimum | 36.7 mm (1.445 in) |
| Maximum | 37.7 mm (1.484 in) |

8. If an alignment is necessary:
   8.1 Remove driven pulley, see *DRIVEN PULLEY REMOVAL* in this subsection.
   8.2 Add or remove shim(s) to obtain the specified alignment.

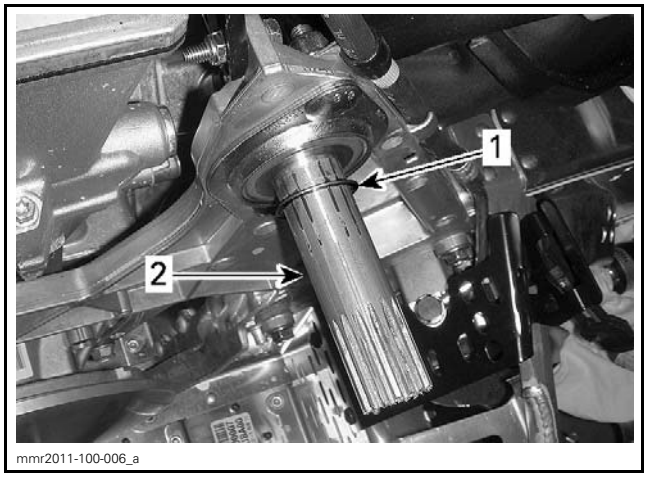


*1. Shim*
*2. Countershaft*

   8.3 Refer to the following table to use the proper shim thickness.

| SHIM THICKNESS P/N | |
|---|---|
| 504 112 000 | 0.42 mm ± 0.05 mm (.017 in ± .002 in) |
| 417 300 265 | 1.02 mm ± 0.10 mm (.04 in ± .004 in) |

**NOTICE** Total shim thickness must not exceed 3 mm (.118 in).

9. Install drive belt, refer to *DRIVE BELT INSTALLATION* in *DRIVE BELT* subsection.

# PROCEDURES

## DRIVEN PULLEY

### Driven Pulley Spring Preload Verification

1. Remove driven pulley, see procedure in this subsection.
2. Loosen 2 cam screws without removing them.

NOTE: Heat the cam screws to ease loosening.

**NOTICE** If screws are completely removed, they must be replaced.

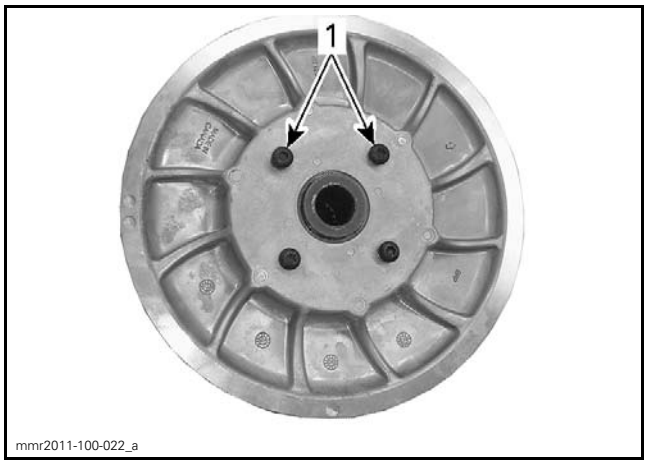


*1. Screws to be loosened*

3. Install the specified service tool.

| SERVICE TOOL |
|---|
| PRELOAD TESTER (P/N 529 036 164) |

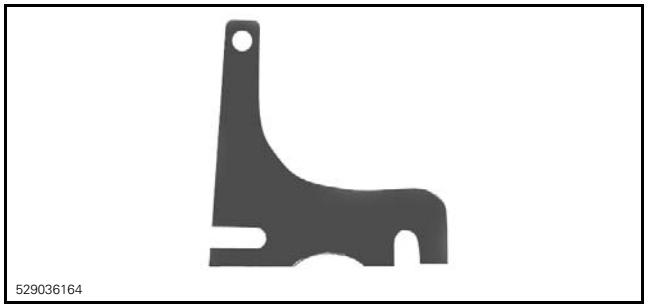


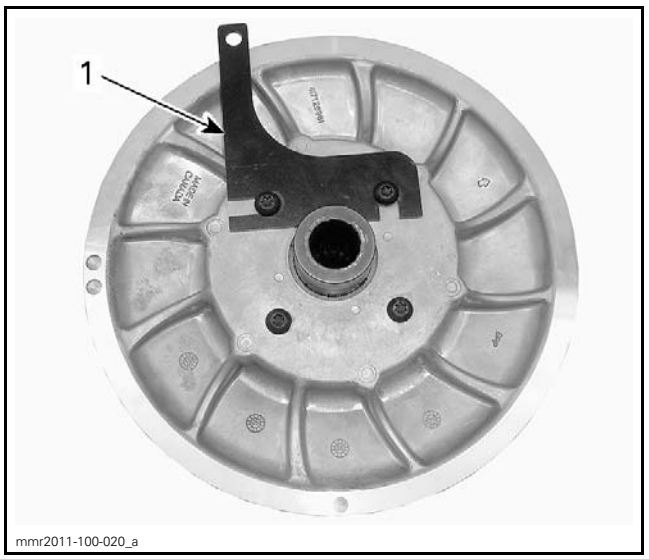


*1. Preload tester*

4. Install driven pulley.
5. Hook a fish scale to the preload tester.

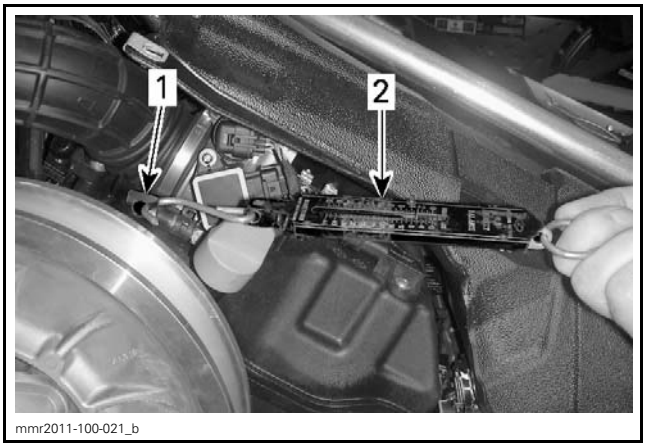

mmr2011-100-021_b

*1. Preload tester*
*2. Fish scale*

6. Pull the preload tester using the fish scale, then read the torsion force as follows:
   6.1 Take a 1st measurement when sliding sheave begins to turn.
   6.2 Hold fish scale in this position.
   6.3 Slowly release tension and take a 2nd measurement when sliding sheave begins to return.

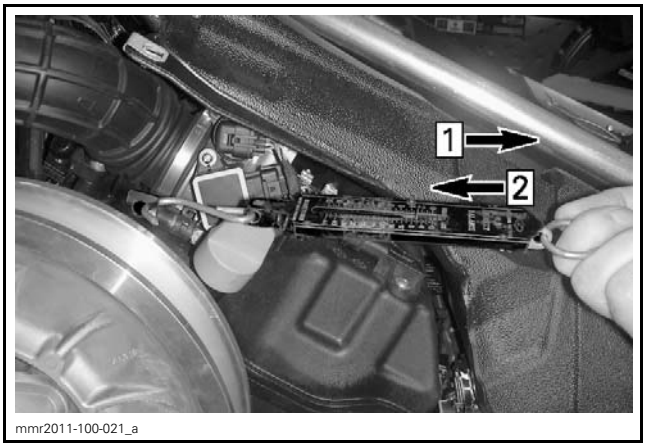

mmr2011-100-021_a

*Step 1: 1st measurement*
*Step 2: 2nd measurement*

7. Calculate the average of the two readings.

$$\frac{1^{ST}\ \text{MEASUREMENT (WHEN OPENING)} + 2^{ND}\ \text{MEASUREMENT (WHEN CLOSING)}}{2} = \text{SPRING PRELOAD}$$

Example:

$$\frac{6.8\ \text{KG (15 LB) (WHEN OPENING)} + 6.4\ \text{KG (14 LB) (WHEN CLOSING)}}{2} = 6.6\ \text{KG (15 LB) ACTUAL SPRING PRELOAD}$$

8. Compare the result to the specifications.

| SPRING PRELOAD SPECIFICATION | |
|---|---|
| Minimum | 7.0 kg (15 lb) |
| Maximum | 7.5 kg (17 lb) |

If spring preload is out of specification, move the spring hook in another cam hole to increase or decrease preload.

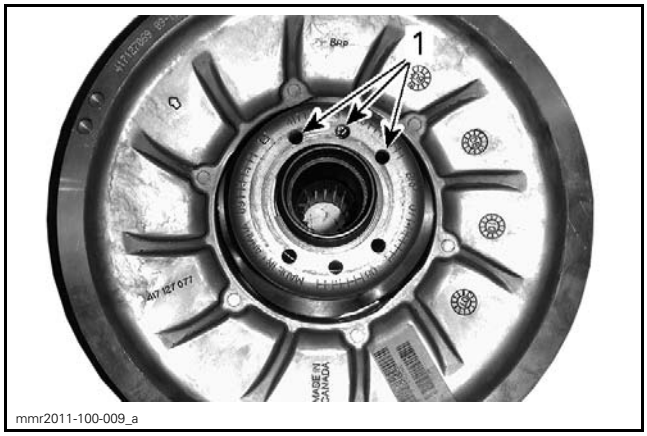

mmr2011-100-009_a

*1. Spring holes*

If correct spring preload is unattainable, use the fixed sheave holes.

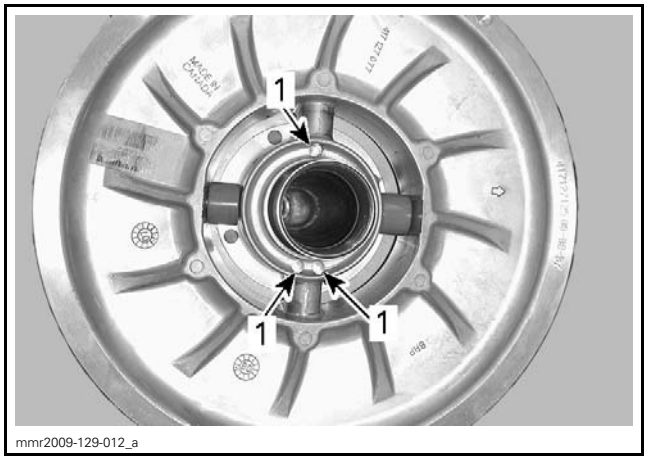

mmr2009-129-012_a

*TYPICAL*
*1. Fixed sheave holes*

## Driven Pulley Removal

1. Apply parking brake.
2. Remove drive belt, refer to *DRIVE BELT* subsection.
3. Remove driven pulley retaining screw and shouldered washer.

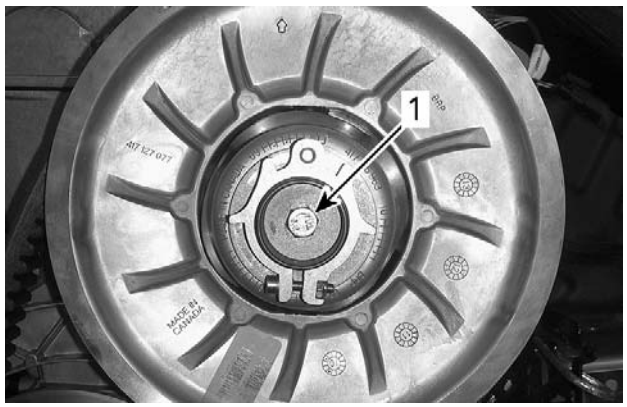

mmr2011-100-007_a

*1. Driven pulley retaining screw*

4. Remove driven pulley from countershaft.

## Driven Pulley Disassembly

### Cam and Spring

1. Loosen the adjuster ring clamping screw.

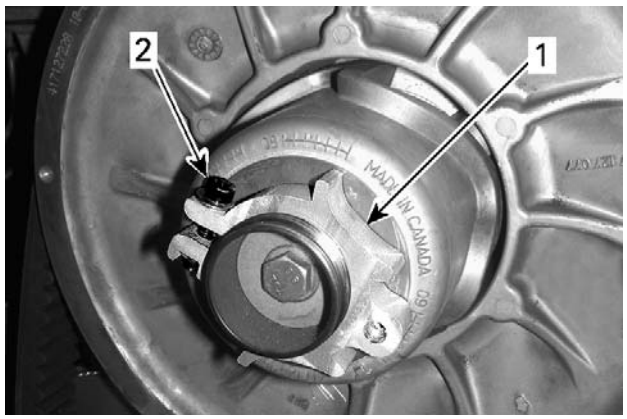

mmo2011-003-010_a

*1. Adjuster hub*
*2. Clamping screw*

2. Unscrew the adjuster hub **clockwise**, using the suspension adjustment tool.

mmo2011-003-011_a

*1. Suspension adjustment tool*

NOTE: When reaching the end of the threads, slightly spread the adjuster ring to remove it from the pulley.

3. Install the threaded adapter of the DRIVEN PULLEY SPRING COMPRESSOR (P/N 529 036 182) on the driven pulley.

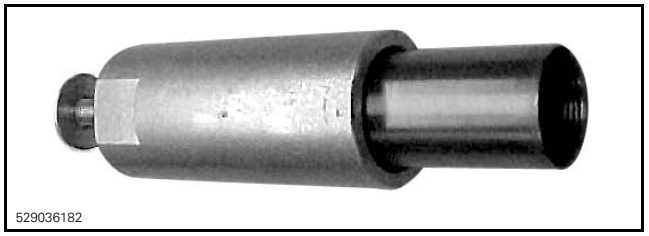
529036182

*THREADED ADAPTER*

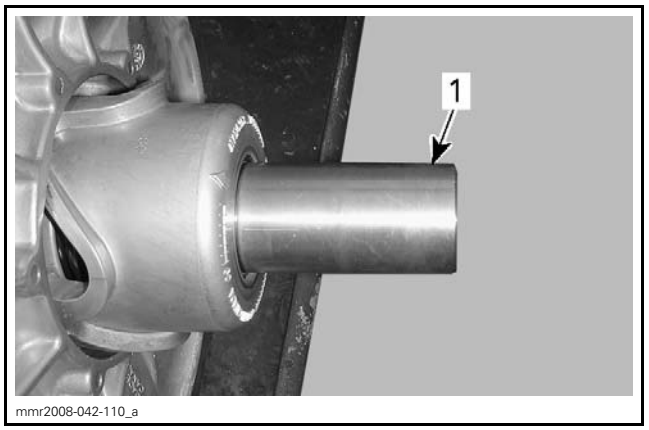

mmr2008-042-110_a

*1. Threaded adapter*

4. Install the external sleeve over the threaded adapter and secure sleeve with the tool screw.

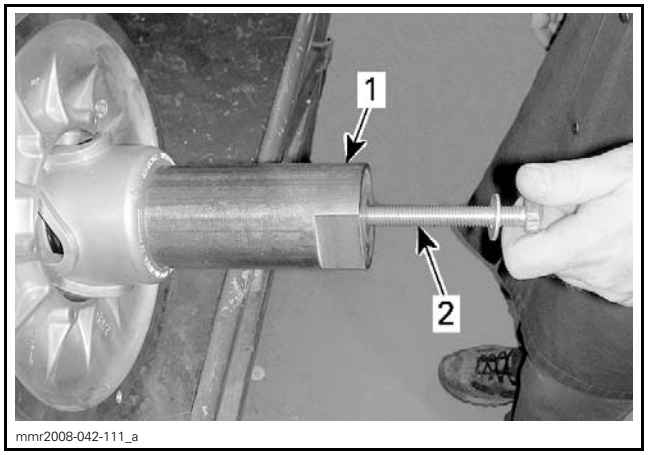

mmr2008-042-111_a

*1. External sleeve*
*2. Driven pulley spring compressor screw*

5. Tighten the tool screw to compress the cam.
6. Install the tool in a vice.

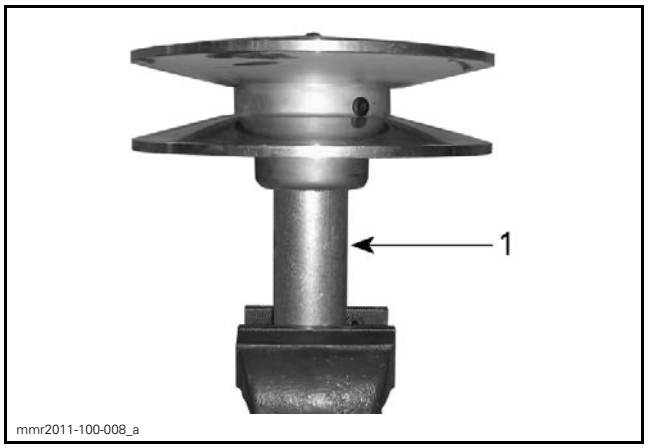


*1. Driven pulley spring compressor*

7. Note in which hole the spring hook is inserted in the cam.

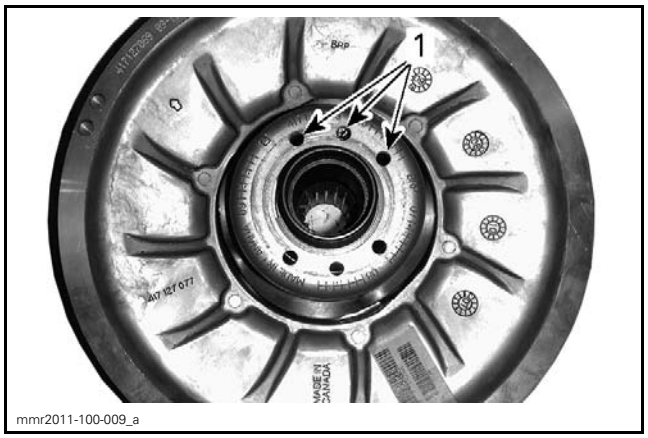


*1. Spring holes*

8. Using a heat gun, heat cam screws to break the thread locker.

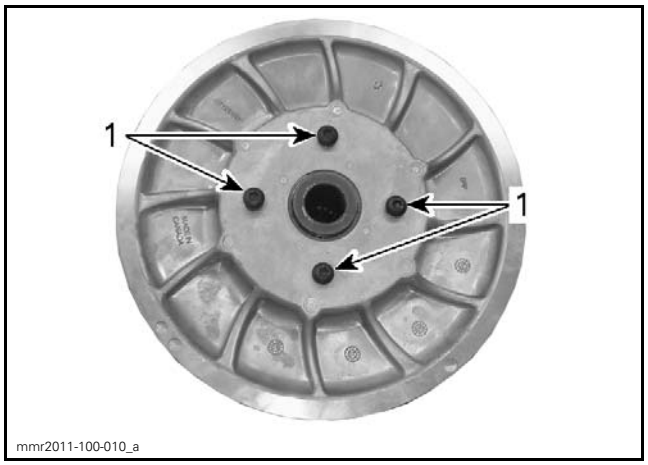


*1. Heat cam screws*

9. Remove and discard cam screws.
10. Remove the sliding sheave.
11. Unscrew the tool screw completely.
12. Note in which hole the spring hook is inserted to the fixed sheave.
13. Remove cam and spring.
14. Remove the tool threaded adapter.

### Driven Pulley Rollers

1. Remove and discard the E-clips.

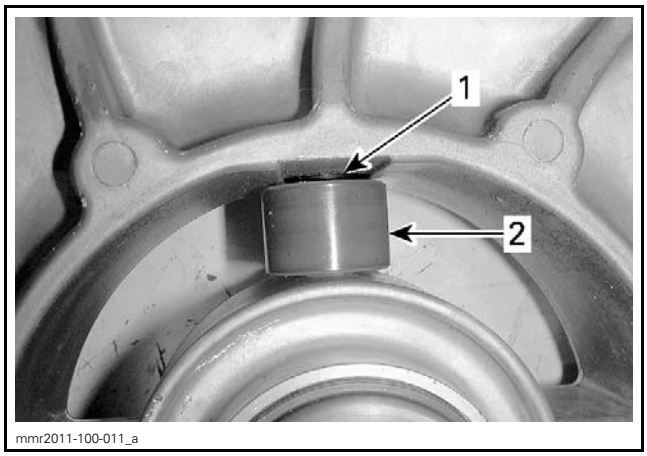


*1. E-clip*
*2. Roller*

2. Remove and **discard** pivot screws.

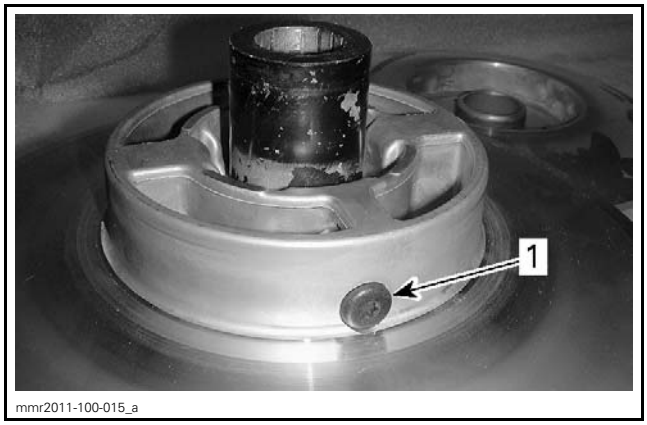


*1. Pivot screw*

3. Remove rollers.

## Driven Pulley Inspection

### Cam

1. Verify contact surfaces of cam for visible damage. Ensure circlip properly locks the inner bushing. Replace part if necessary.
2. Using a dial bore gauge, measure the inner diameter of cam bushing. Measuring point must be at least 5 mm (1/4 in) from bushing edge.

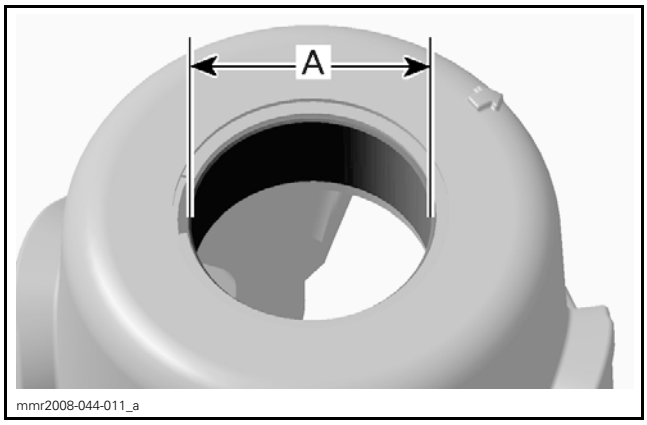


*A. Inner diameter of cam bushing*

| BUSHING | SERVICE LIMIT |
|---|---|
| Cam bushing | 41.5 mm (1.634 in) |

3. Replace the cam if the inner diameter of bushing is out of specification.

### Sliding Sheave

1. Inspect pulley sheave for marks or scratches.
2. Ensure circlip properly locks the inner bushing. Replace part if necessary.
3. Using a dial bore gauge, measure the inner diameter of sliding sheave bushing. Measuring point must be at least 5 mm (1/4 in) from bushing edge.

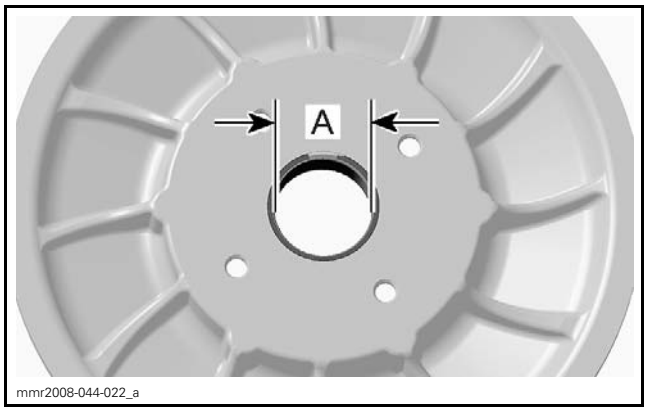


*A. Inner diameter of sliding sheave bushing*

| BUSHING | SERVICE LIMIT |
|---|---|
| Sliding sheave bushing | 41.5 mm (1.634 in) |

4. Replace the sliding sheave if the inner diameter of bushing is out of specification.

### Fixed Sheave

Replace fixed sheave and countershaft if one of the following problem is detected:

– Marks or scratches on pulley sheave
– Bent, twisted or otherwise damaged countershaft
– Defective splines and threads at the end of countershaft.

### Driven Pulley Rollers

1. Check the rollers for flat spots, cracks or other visible damage. Replace if necessary (as a set).
2. Measure inner and outer diameter of rollers.

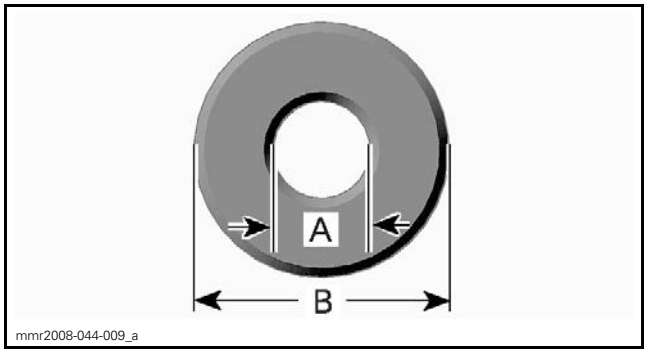


*A. Inner diameter*
*B. Outer diameter*

| ROLLER DIAMETER | SERVICE LIMIT |
|---|---|
| Inner diameter | 8.5 mm (.335 in) |
| Outer diameter | 21.5 mm (.846 in) |

3. Measure the roller thickness.

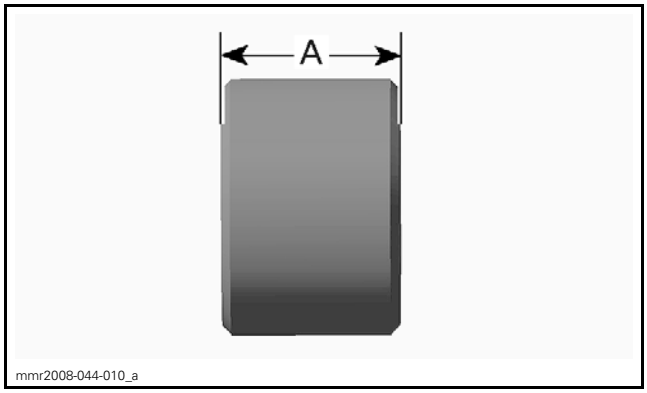


*A. Thickness of roller*

| ROLLER THICKNESS | |
|---|---|
| SERVICE LIMIT | 14.75 mm (.581 in) |

4. If a roller is out of specifications, replace both rollers at the same time.

## Driven Pulley Assembly

### Driven Pulley Rollers

1. Using a screw tap, clean pivot screw threaded holes into fixed sheave.

2. Install rollers into fixed sheave using NEW pivot screws with ribbed lock washers.

**NOTICE** Always use NEW pivot screws with pre-applied threadlocker.

3. Tighten pivot screws to the specified torque.

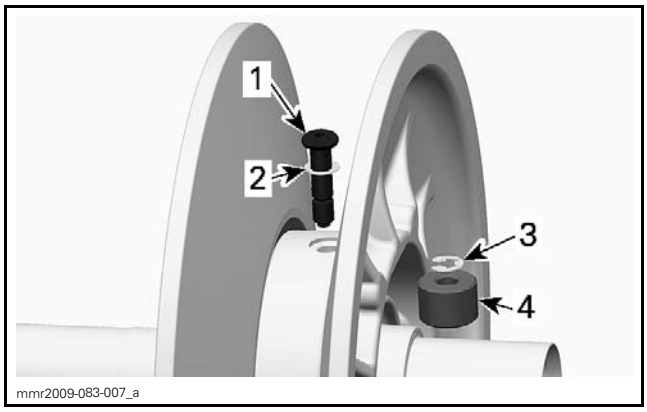

mmr2009-083-007_a

*TYPICAL*
1. *Pivot screw*
2. *Ribbed lock washer*
3. *E-clip*
4. *Roller*

| PIVOT SCREWS TIGHTENING TORQUE |
|---|
| 20 N•m (15 lbf•ft) |

4. Using a ROTOR CLIP® APPLICATOR (P/N A-150), install NEW E-clips to lock pivot screws.

NOTE: To purchase an applicator, contact Rotor Clip Company at **www.rotorclip.com**.

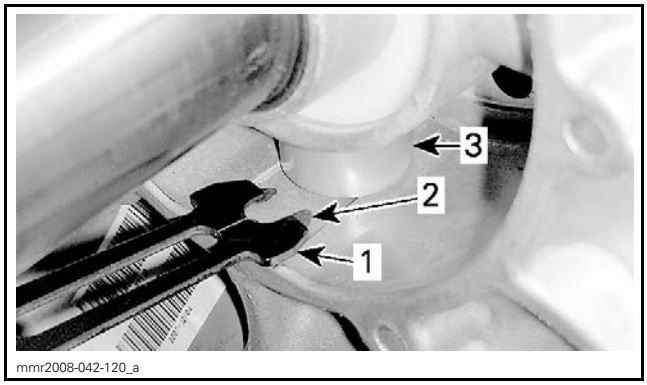

mmr2008-042-120_a

1. *E-clip applicator*
2. *E-clip*
3. *Roller*

### Cam and Spring

1. Install the spring compressor threaded adapter on the fixed sheave.
2. Slide the cam over the tool threaded adapter.
3. Turn cam against the spring and align its arrow with the arrow on the fixed sheave.

NOTE: At the end of cam installation, the arrow on the cam should have moved clockwise (approximately 30°).

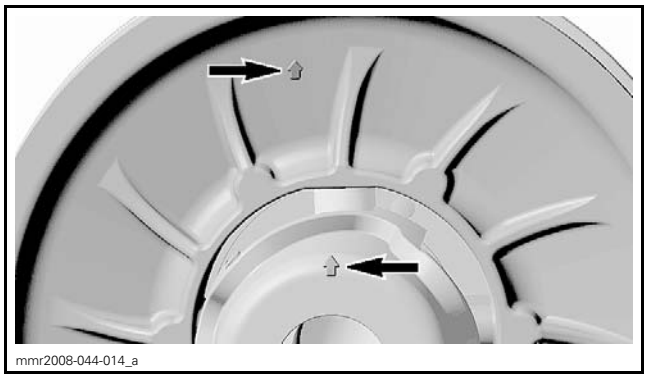
mmr2008-044-014_a

4. Compress spring until cam mounting holes exceed the fixed sheave.

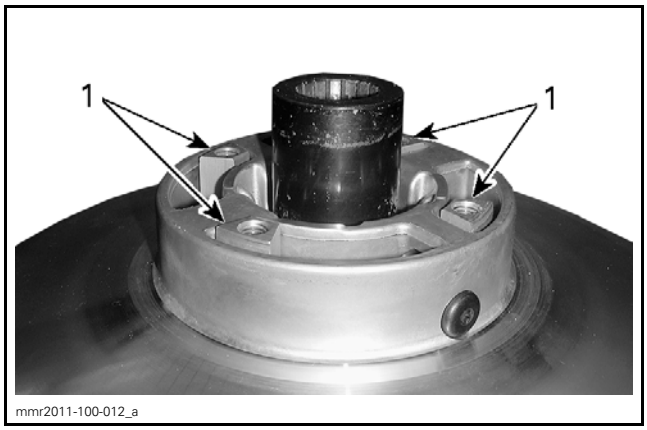

mmr2011-100-012_a

1. *Cam mounting holes*

5. Install the sliding sheave on the cam using 4 NEW screws.
6. Tighten cam screws to the specified torque.

| CAM SCREWS TIGHTENING TORQUE |
|---|
| 32 N•m (24 lbf•ft) |

7. Remove the tool.

## Driven Pulley Installation

The installation is the reverse of removal procedure, however pay attention to the following.

Apply LOCTITE 767 (ANTISEIZE LUBRICANT) (P/N 293 800 070) on countershaft splines.

Rotor Clip® is a trademark of Rotor Clip Company, Inc.

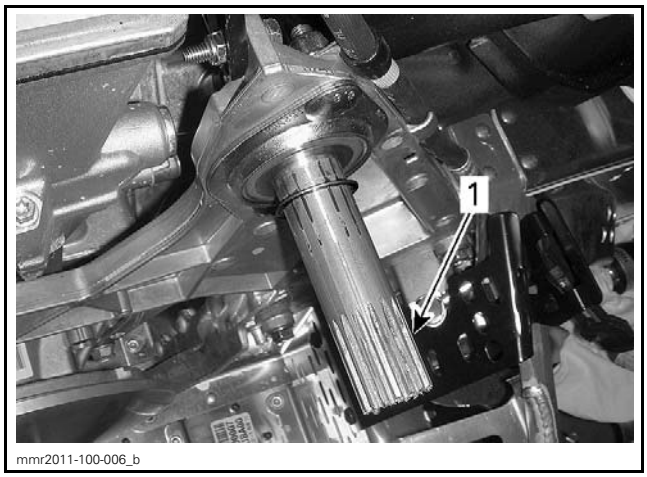


*1. Apply antiseize lubricant here*

Check pulley alignment, refer to *DRIVEN PULLEY ALIGNMENT* in this subsection.

Install driven pulley shouldered washer as per illustration.

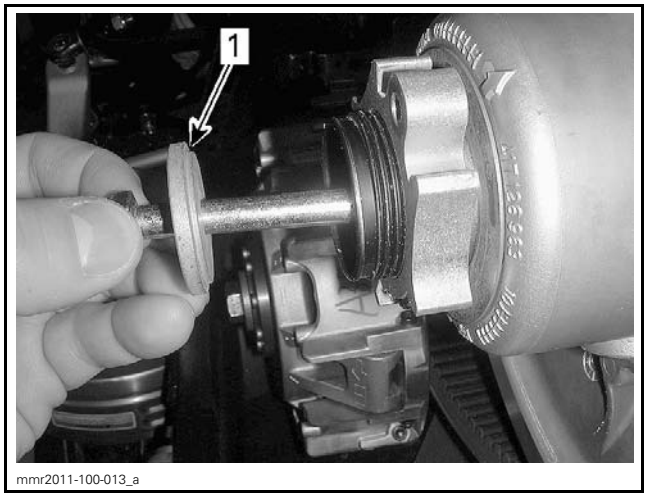


*1. Shouldered washer*

Apply LOCTITE 243 (BLUE) (P/N 293 800 060) on driven pulley retaining screw threads.

Tighten driven pulley retaining screw to the specified torque.

| DRIVEN PULLEY RETAINING SCREW TIGHTENING TORQUE |
|---|
| 23 N•m (17 lbf•ft) |

**NOTICE** **Driven pulley alignment must always be checked whenever pulleys have been removed, disassembled or replaced.**

# COUNTERSHAFT

## Countershaft Removal

1. Remove side panels, refer to *BODY* subsection.
2. Remove driven pulley, see *DRIVEN PULLEY REMOVAL* in this subsection.
3. Remove muffler. Refer to *EXHAUST SYSTEM* subsection.
4. Remove countershaft bearing flange as follows:
   4.1 Remove retaining fasteners.

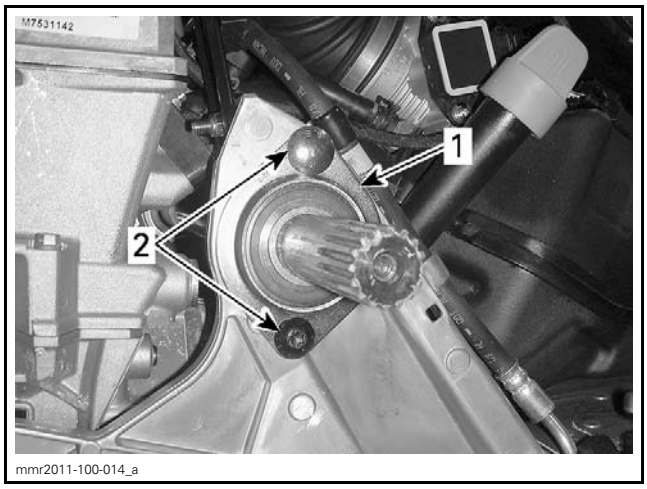


*1. Countershaft bearing flange*
*2. Retaining fasteners*

   4.2 Be careful not to loose the brake hose retainer.
   4.3 Remove countershaft bearing flange from support.
5. Remove fill plug on the top of chaincase.

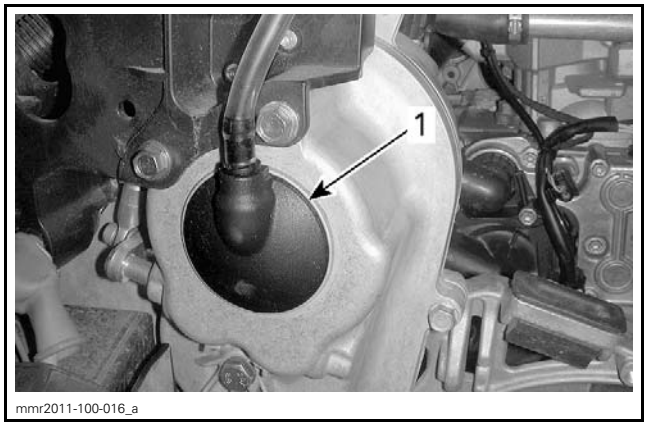


*1. Fill plug*

6. Release drive chain tension by unscrewing tensioner adjustment screw.

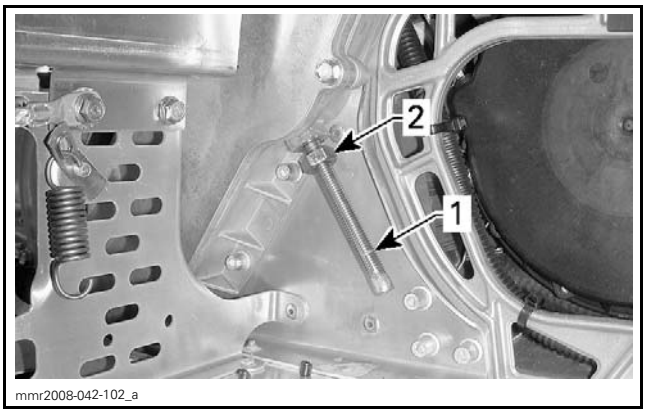

mmr2008-042-102_a

*TYPICAL*
1. *Tensioner adjustment screw*
2. *Lock nut*

NOTE: Do not remove tensioner adjustment screw completely.

7. Remove the upper gear screw.

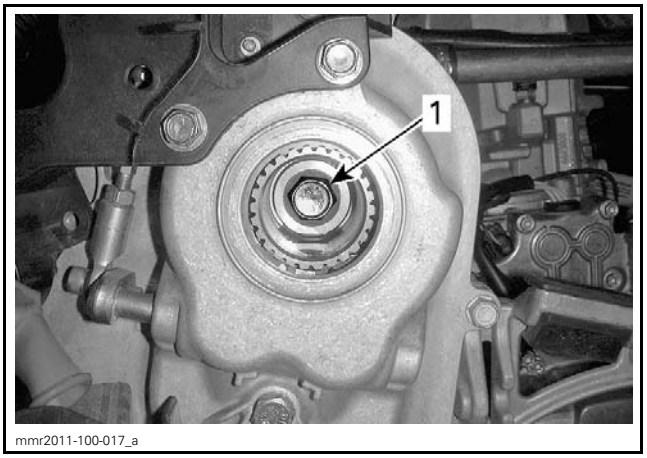

mmr2011-100-017_a

1. *Upper gear screw*

8. Thread M10 x 1.5 x 80 mm screw through the gear and in the countershaft.
9. Unscrew the countershaft from the M10 screw. Leave the M10 screw in the chaincase in order to hold the gear in place.

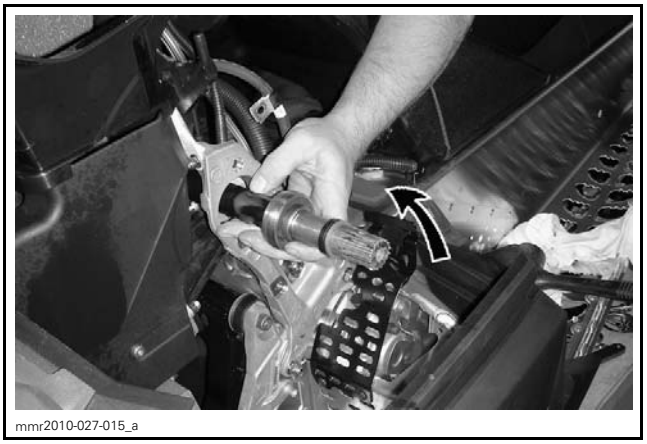
mmr2010-027-015_a

10. Remove countershaft from the vehicle.

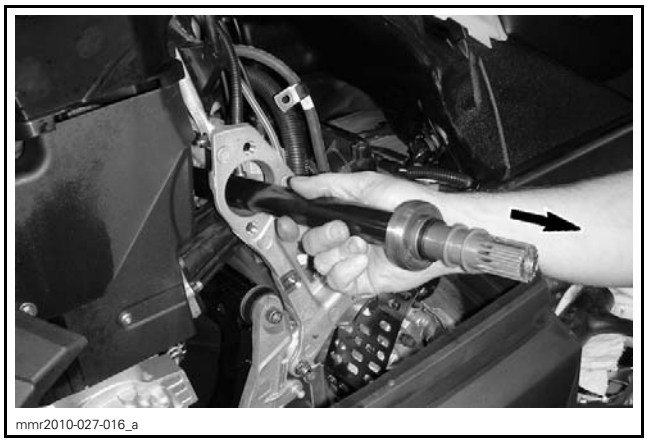
mmr2010-027-016_a

*TYPICAL*

## Countershaft Inspection

Replace countershaft if one of the following problem is detected:

– Bent, twisted or otherwise damaged countershaft.
– Defective splines and threads at the end of countershaft.

## Countershaft Installation

The installation is the reverse of removal procedure, however pay attention to the following.

Remove any rust on bearing shoulder of countershaft bearing support using sand paper (600-grit or 1000-grit) or steel wool.

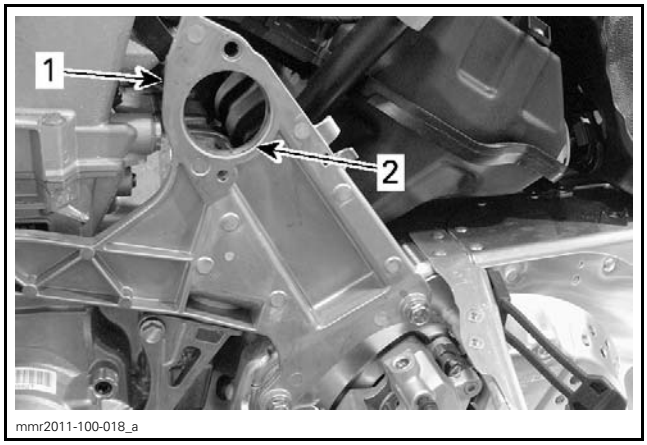

mmr2011-100-018_a

1. *Bearing shoulder*
2. *Countershaft bearing support*

Apply a thin layer of LOCTITE 767 (ANTISEIZE LUBRICANT) (P/N 293 800 070) on bearing shoulder.

Screw the countershaft on the M10 screw left in the chaincase earlier.

Using the M10 screw as a puller, insert the countershaft splines into the upper gear splines.

Ensure countershaft bearing is installed properly into the countershaft bearing support.

Tighten upper gear screw to the specified torque.

Secure the brake hose using the upper flange retaining bolt.

Tighten countershaft bearing flange bolts to the specified torque.

| COUNTERSHAFT FASTENERS TIGHTENING TORQUE | |
|---|---|
| Upper gear screw | 48 N•m (35 lbf•ft) |
| Bearing flange fasteners | 25 N•m (18 lbf•ft) |

# COUNTERSHAFT BEARING

## Countershaft Bearing Removal

1. Proceed with *COUNTERSHAFT REMOVAL*, see procedure in this subsection.
2. Install an appropriate puller on the countershaft bearing.

mmr2010-027-018

*TYPICAL*

3. Tighten puller to extract the bearing.
4. Discard the bearing.

## Countershaft Bearing Installation

1. Clean residues on countershaft bearing area using PULLEY FLANGE CLEANER (P/N 413 711 809).

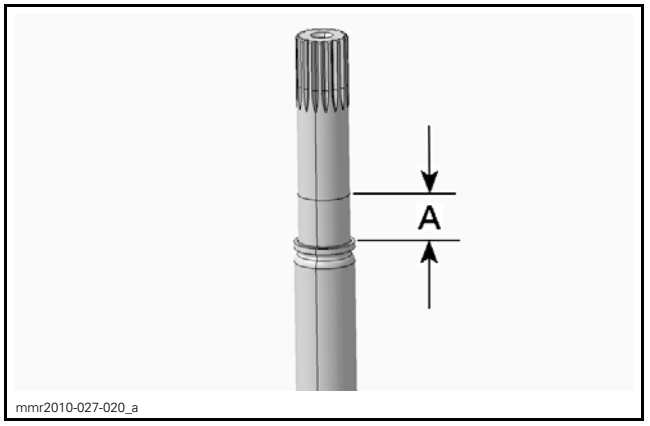


mmr2010-027-020_a

*A. Countershaft bearing area*

2. Apply LOCTITE 609 (P/N 413 703 100) on countershaft bearing area.
3. Install a NEW bearing on countershaft using a press and a pipe with the proper diameter.

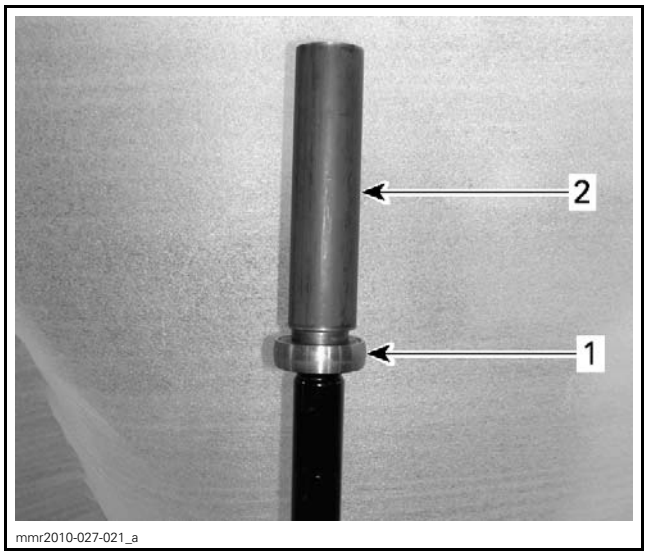


mmr2010-027-021_a

*1. New bearing*
*2. Pipe with the proper diameter*

4. Press bearing until it is properly seated on countershaft flange.

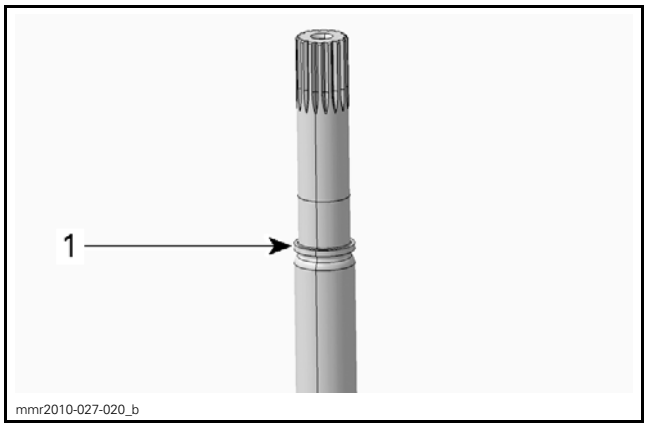


mmr2010-027-020_b

*1. Countershaft flange*

5. Clean the surplus of Loctite with a rag to avoid having Loctite on sliding sheave bushing.

**NOTICE** Always use a press, never tap on countershaft bearing installer with an hammer to avoid damaging bearing and countershaft. Always apply force on the inner race of the bearing.

# COUNTERSHAFT BEARING SUPPORT

## Countershaft Bearing Support Removal

1. Remove countershaft, see *COUNTERSHAFT REMOVAL* in this subsection.
2. Remove the bolt attaching the upper frame member to the countershaft bearing support.

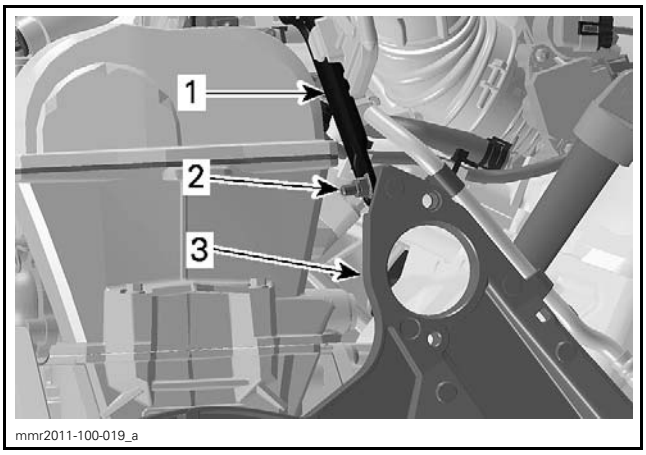


*1. Upper frame member*
*2. Bolt*
*3. Countershaft bearing support*

3. Install the ENGINE LIFTING TOOL (P/N 529 036 217) in order to support the LH side of the engine. Refer to *ENGINE REMOVAL AND INSTALLATION (600 ACE)*.

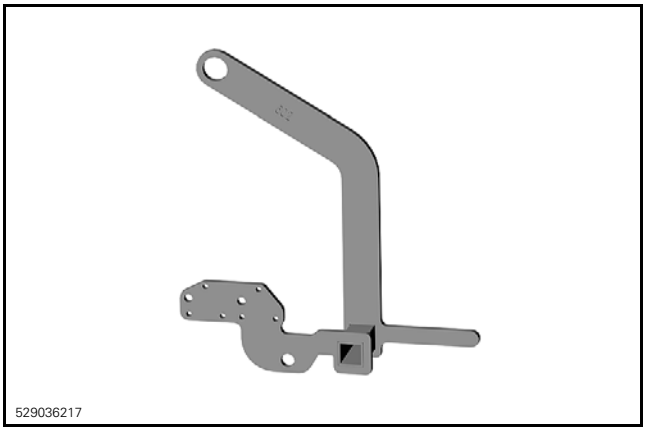


4. Remove the bolts securing the engine to the LH rubber mounts.
5. Remove the countershaft bearing support retaining fasteners.

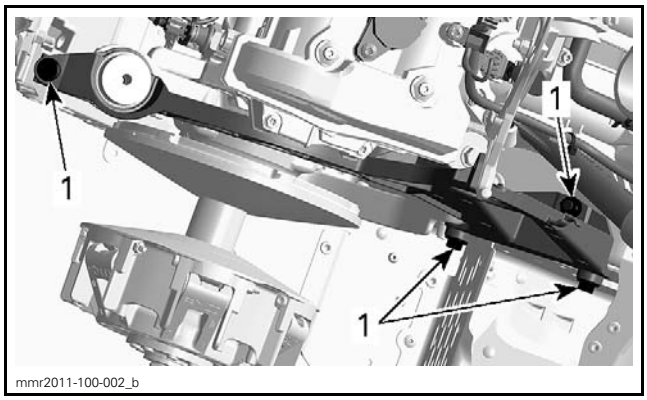


*1. Countershaft bearing support retaining fasteners*

6. Remove the countershaft bearing support.

## Countershaft Bearing Support Installation

1. Thread the fasteners retaining the bearing support to the chassis and both engine rubber mounts screws without tightening yet.
2. Tighten the retaining fasteners to the specified torque following the illustrated sequence.

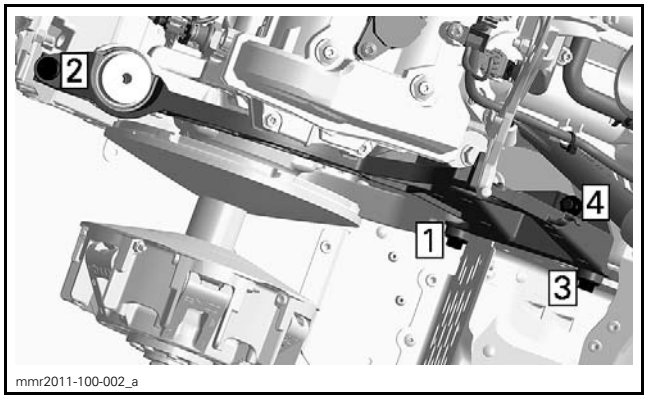


*BEARING SUPPORT TIGHTENING SEQUENCE*

| COUNTERSHAFT BEARING SUPPORT FASTENERS TIGHTENING TORQUE | |
|---|---|
| Bearing support to side of tunnel screws | 25 N•m (18 lbf•ft) |
| Front of bearing support retaining screw | 25 N•m (18 lbf•ft) |
| Bearing support to top of tunnel nut | 34 N•m (25 lbf•ft) |

3. Tighten the rear engine rubber mount screw to the specified torque.

| REAR RUBBER MOUNT SCREW TIGHTENING TORQUE |
| --- |
| 25 N•m (18 lbf•ft) |

4. Tighten the front engine rubber mount screw to the specified torque.

| FRONT RUBBER MOUNT BOLT TIGHTENING TORQUE |
| --- |
| 25 N•m (18 lbf•ft) |

5. Install the upper frame member to the bearing support and tighten bolt to the specified torque.

| BEARING SUPPORT TO UPPER FRAME MEMBER BOLT TIGHTENING TORQUE |
| --- |
| 14 N•m (124 lbf•**in**) |

6. Install all other removed parts.

# DRIVEN PULLEY AND COUNTERSHAFT

## SERVICE TOOLS

| Description | Part Number | Page |
|---|---|---|
| BEARING PULLER DRIVEN SUPPORT | 529 036 485 | 3 |
| COUNTERSHAFT ADAPTER | 529 036 424 | 9 |
| COUNTERSHAFT BEARING INSTALLER | 529 036 066 | 9 |
| COUNTERSHAFT BEARING REMOVER | 529 036 065 | 9 |
| COUNTERSHAFT SUPPORT | 529 036 067 | 9 |
| DRIVEN PULLEY SPRING COMPRESSOR | 529 036 182 | 3 |

## SERVICE PRODUCTS

| Description | Part Number | Page |
|---|---|---|
| CLUTCH AND PULLEY FLANGE CLEANER PRO S1 | 779244 | 2, 6, 9 |
| LOCTITE 243 (BLUE) | 293 800 060 | 6 |
| LOCTITE 609 | 413 703 100 | 9 |
| LOCTITE 7649 (PRIMER) | 293 800 041 | 9 |
| LOCTITE 767 (ANTISEIZE LUBRICANT) | 293 800 070 | 8 |

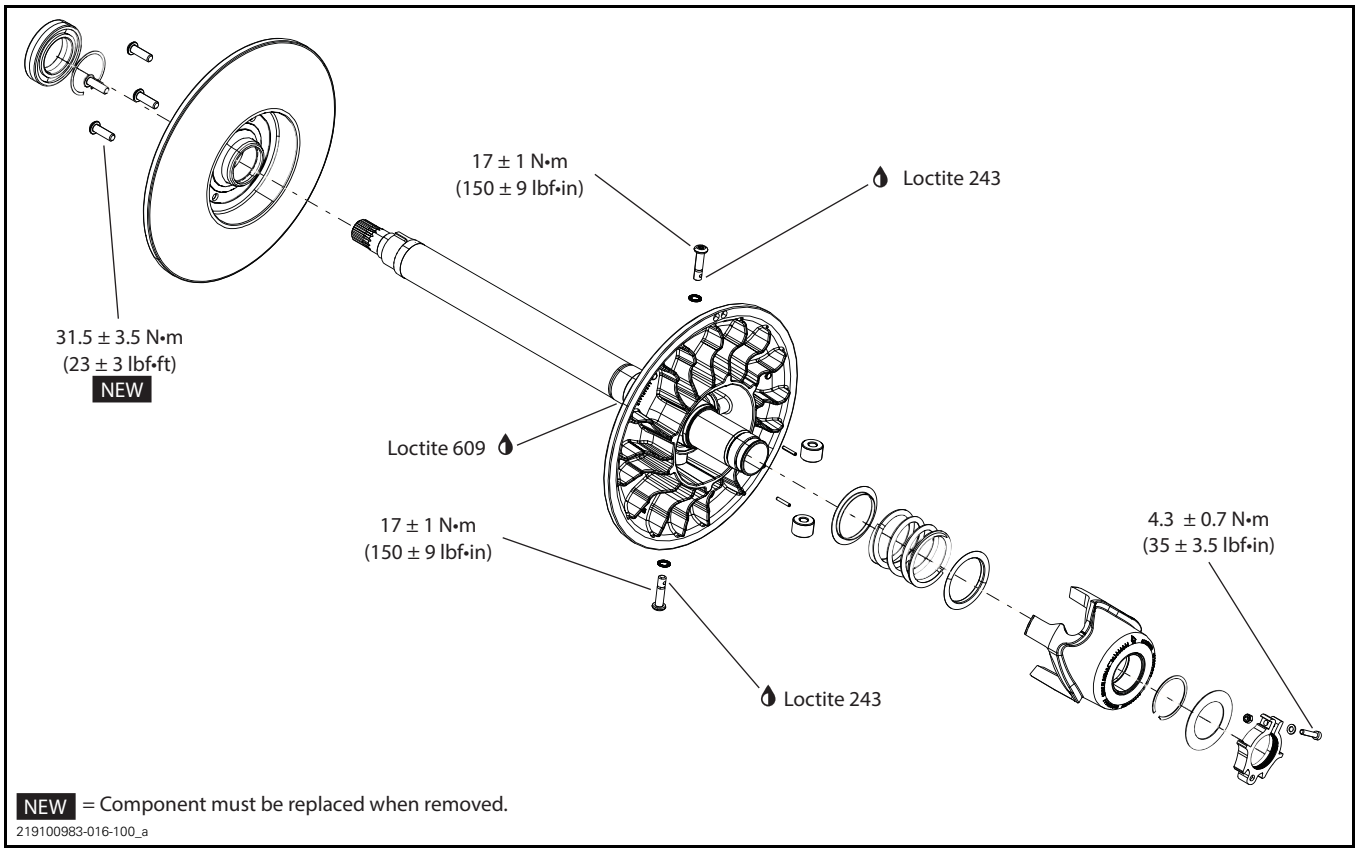

# GENERAL

During assembly or installation, use the torque values and the service products as in the exploded views.

Clean threads before applying a threadlocker. Refer to *SELF-LOCKING FASTENERS* and *LOCTITE APPLICATION* at the beginning of this manual for complete procedure.

**⚠ WARNING**

**Torque wrench tightening specifications must be strictly adhered to.**
**Locking devices (e.g.: locking tabs, elastic stop nuts, cotter pins, etc.) must be replaced with new ones.**

**⚠ WARNING**

**Never start engine when the pulley guard is removed.**

# MAINTENANCE

## INSPECTING AND CLEANING THE DRIVEN PULLEY

Inspect pulley sheave for dirt, marks or scratches.

Test sliding sheave operation.

Use cleaner and a clean rag to clean pulley sheaves as necessary.

| SERVICE PRODUCT |
| --- |
| CLUTCH AND PULLEY FLANGE CLEANER PRO S1 (P/N 779244) |

# PROCEDURES

## DRIVEN PULLEY

### Removing the Driven Pulley

NOTE: The driven pulley is removed with the countershaft.

1. Remove the muffler. Refer to *EXHAUST SYSTEM* subsection.
2. Remove the filling plug on the chaincase cover.

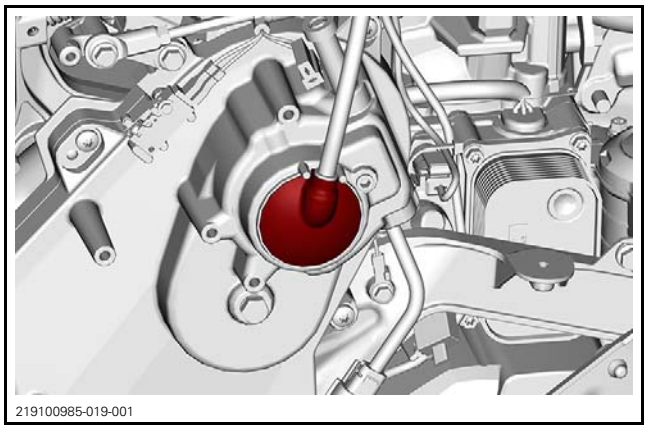
219100985-019-001

3. Release drive chain tension by unscrewing tensioner adjustment screw.

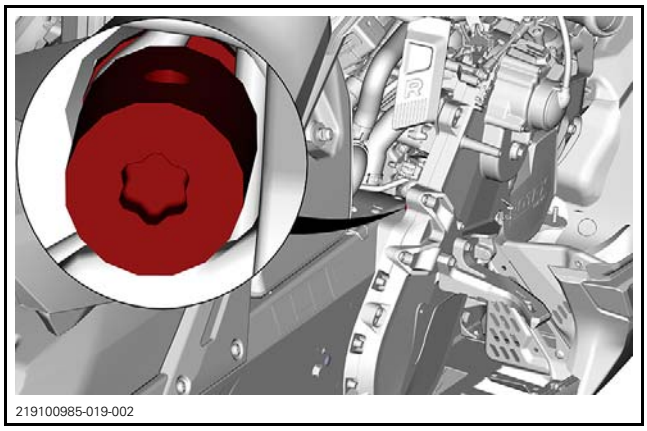
219100985-019-002

4. Remove the upper gear screw and the cap.

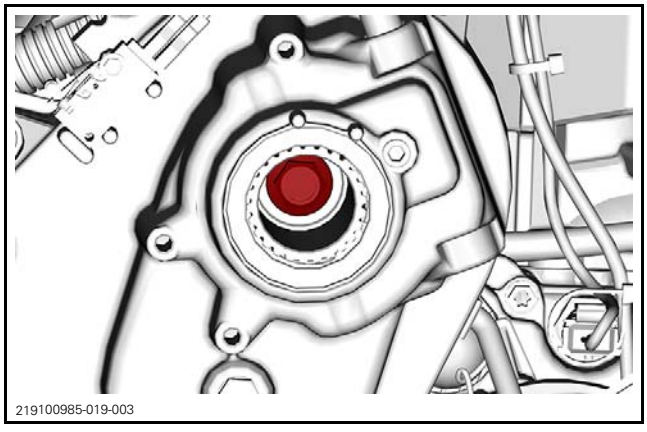
219100985-019-003

5. Thread a M10 x 1.5 x 80 mm screw through the cap, the gear and in the countershaft.
6. Remove the drive belt. Refer to *DRIVE BELT* subsection.
7. Behind driven pulley, remove nut securing the countershaft bearing flange.

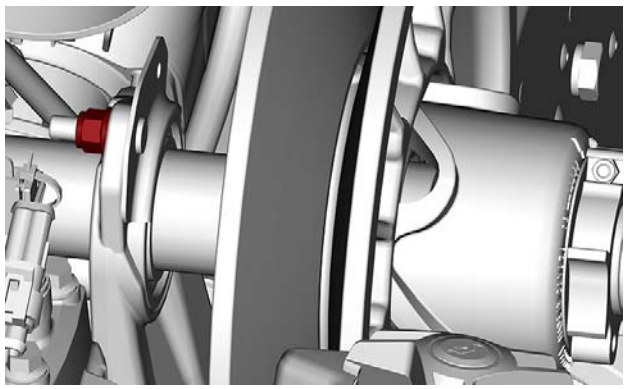
mmr2017-041-004

8. Pull out bearing flange.
9. Use the bearing puller to extract the bearing from the support.

| REQUIRED TOOL | |
|---|---|
| BEARING PULLER DRIVEN SUPPORT (P/N 529 036 485) | |

10. Pull the driven pulley to disengage countershaft from upper gear.

**NOTE:** If necessary, tap the M10 screw with a plastic hammer.

11. Unscrew countershaft from the M10 screw. Leave the M10 screw in the chaincase in order to hold the gear in place.

## Driven Pulley Disassembly

### Removing Cam and Spring

1. Loosen the clamping screw.

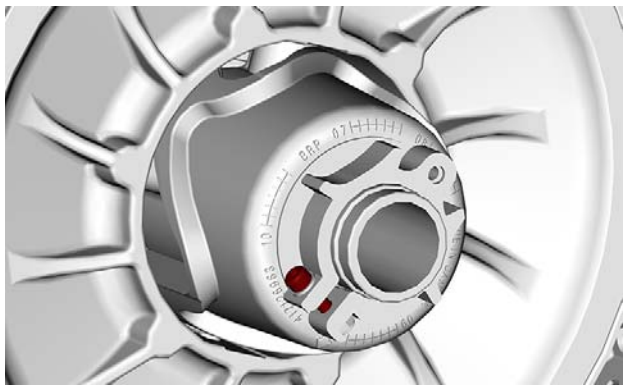
mmr2017-041-005

2. Unscrew the adjuster hub **clockwise** using the suspension adjustment tool provided in the vehicle tool kit.

**NOTE:** The adjuster hub has LH treads.

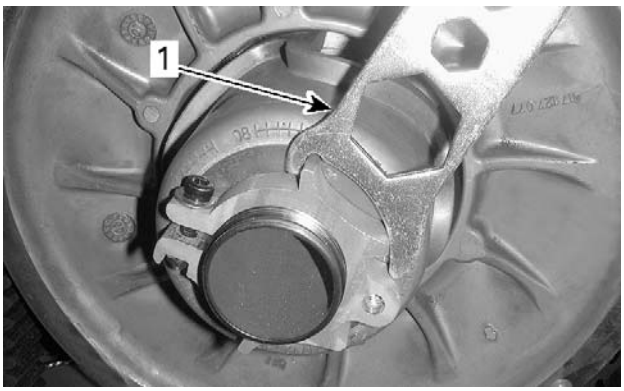

mmr2013-034-010_a

*1. Suspension adjustment tool shown*

| REQUIRED TOOL | |
|---|---|
| DRIVEN PULLEY SPRING COMPRESSOR (P/N 529 036 182) | |

3. Install the threaded adapter of the spring compressor on the countershaft.

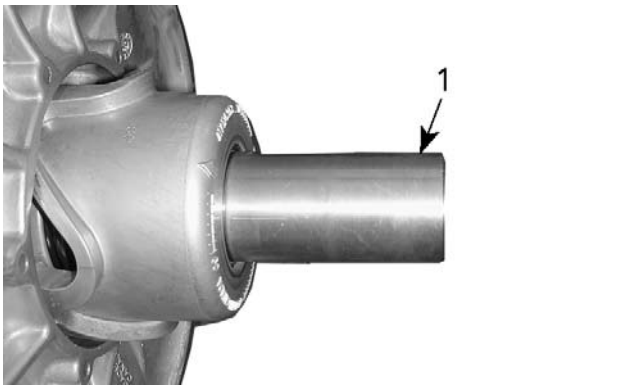

mmr2008-042-110_a

*1. Threaded adapter*

4. Install the external sleeve over the threaded adapter and secure sleeve with the tool screw.

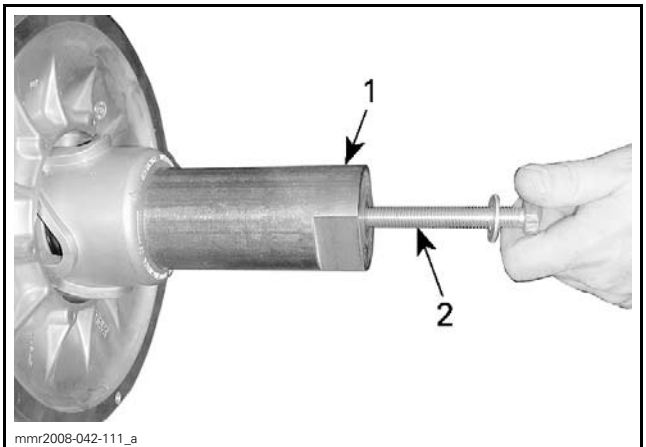

mmr2008-042-111_a

*1. External sleeve*
*2. Driven pulley spring compressor screw*

5. Tighten the tool screw to compress the cam.
6. Install the tool in a vice.

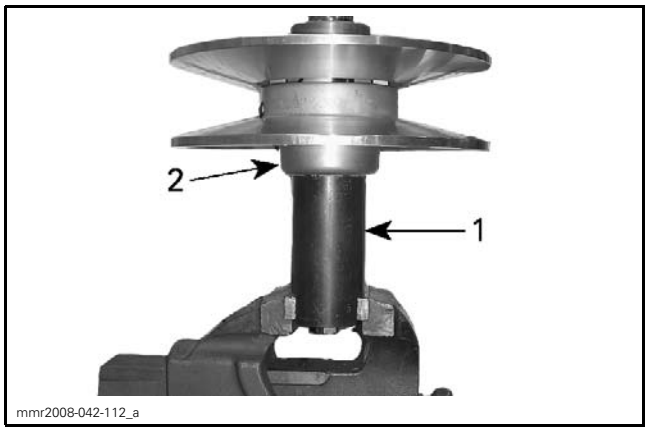


1. *Driven pulley spring compressor*
2. *Driven pulley*

7. Using a heat gun, heat cam screws to break the thread locker.

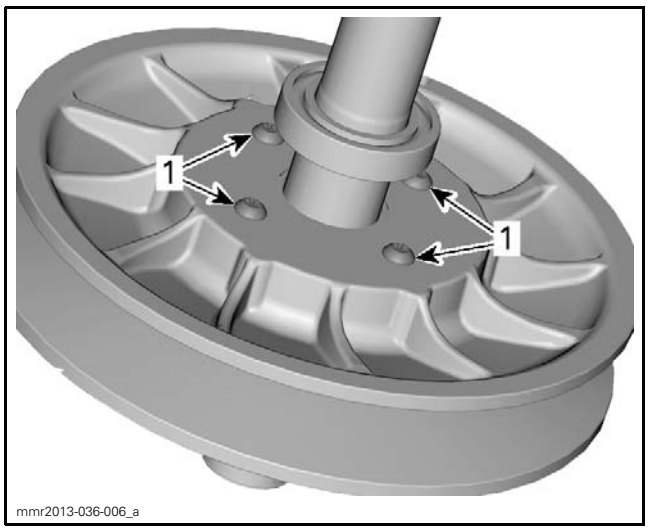


1. *Heat cam screws*

8. Remove and discard cam screws.
9. Unscrew the tool screw completely.
10. Remove cam, spring stoppers and spring.

### Removing the Sliding Sheave

1. Remove the cam and spring. Refer to procedure in this subsection.
2. Remove the countershaft bearing. Refer to procedure in this subsection.
3. Remove sliding sheave.

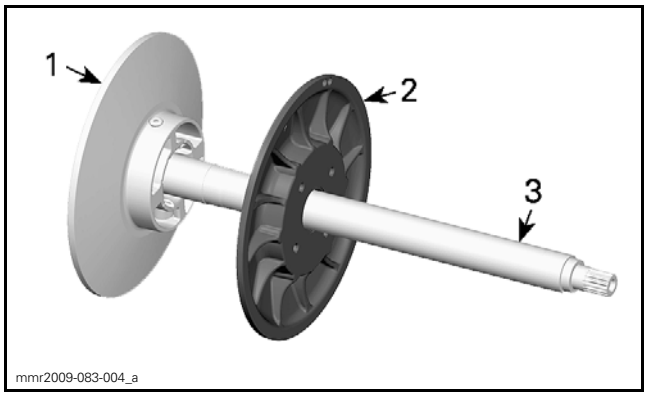


1. *Fixed sheave*
2. *Sliding sheave*
3. *Countershaft*

### Removing the Fixed Sheave

The fixed sheave and countershaft are sold as an assembly. They are not available separately.

### Removing the Driven Pulley Rollers

1. Move sliding and fixed sheaves apart.
2. Remove spring pins used to lock pivot screws.
   - 2.1 Use tap wrench to start removing spring pin.
   - 2.2 Once spring pin is accessible to pliers, pull pin out using pliers.

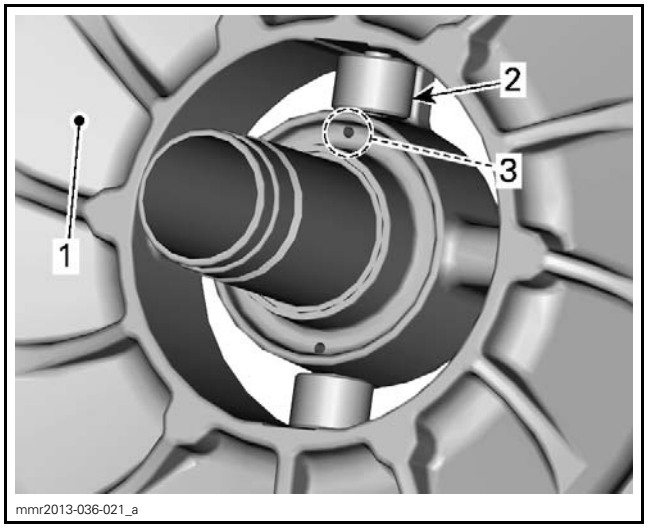


1. *Fixed sheave outer face*
2. *Roller*
3. *Spring pin location*

3. Identify pivot screws location before removal.
4. Remove pivot screw and ribbed lock washer; **keep both for reuse**.

***NOTICE*** **Make sure not to damage or lose pivot screws. If screws need to be replaced, replace fixed sheave assembly.**

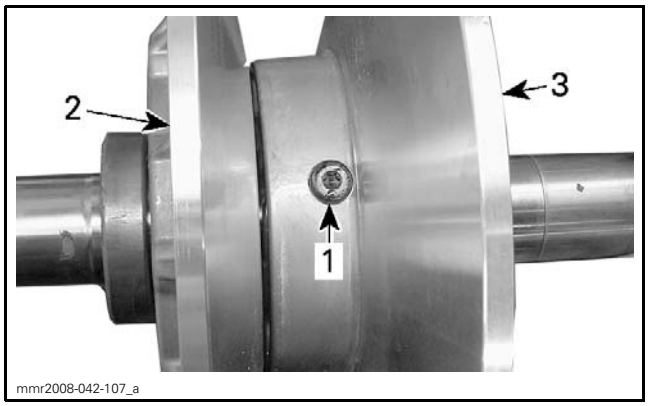


*1. Pivot screw*
*2. Sliding sheave*
*3. Fixed sheave*

*PIVOT SCREW REMOVAL*

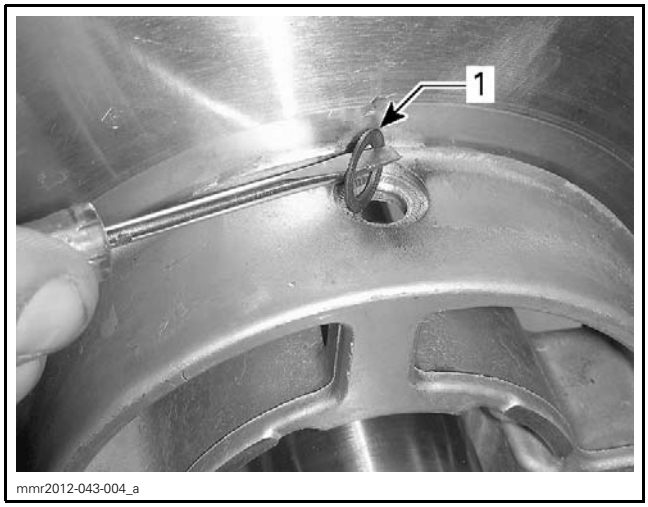


*1. Ribbed lock washer*

5. Remove roller.
6. Proceed with removal of other roller.

IMPORTANT: For proper fit, each pivot screw must be reinstalled where originally mounted in the fixed sheave.

## Inspecting the Driven Pulley

### Inspecting Cam and Spring

1. Verify contact surfaces of cam for visible damages. Ensure circlip properly locks the inner bushing. Replace part if necessary.
2. Using a dial bore gauge, measure the inner diameter of cam bushing. Measuring point must be at least 5 mm (1/4 in) from bushing edge.

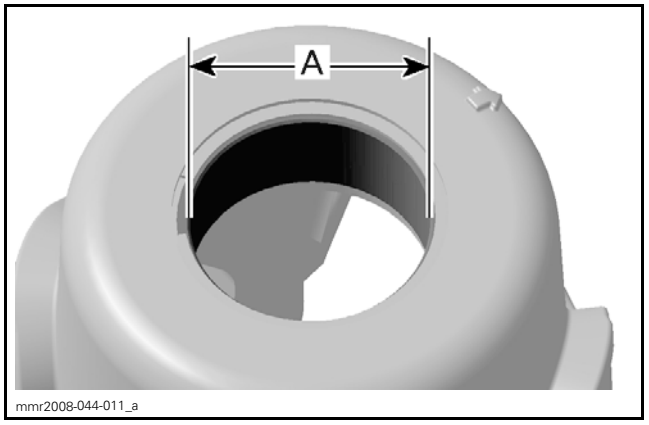


*A. Inner diameter of cam bushing*

| CAM BUSHING | SERVICE LIMIT |
|---|---|
| Inner diameter | 41.5 mm (1.634 in) |

3. Replace the cam if the inner diameter of bushing is out of specification.

### Inspecting the Sliding Sheave

1. Inspect pulley sheave for marks or scratches.
2. Ensure circlip properly locks the inner bushing. Replace part if necessary.
3. Using a dial bore gauge, measure the inner diameter of sliding sheave bushing. Measuring point must be at least 5 mm (1/4 in) from bushing edge.

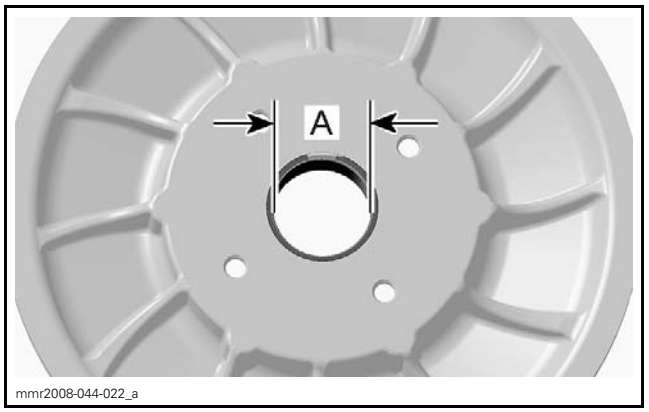


*A. Inner diameter of sliding sheave bushing*

| SLIDING SHEAVE BUSHING | SERVICE LIMIT |
|---|---|
| Inner diameter | 41.5 mm (1.634 in) |

4. Replace the sliding sheave if the inner diameter of bushing is out of specification.

### Inspecting the Fixed Sheave

Replace fixed sheave and countershaft if one of the following problem is detected:

– Marks or scratches on pulley sheave
– Bent, twisted or otherwise damaged countershaft
– Defective splines and threads at the end of countershaft.

### Inspecting the Driven Pulley Roller

1. Check the rollers for flat spots, cracks or other visible damages. Replace if necessary (as a set).
2. Measure inner and outer diameter of rollers.

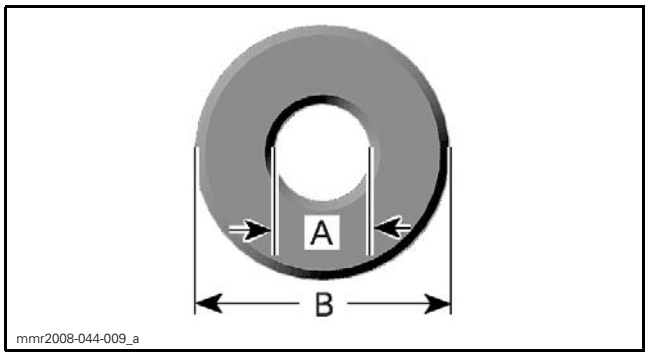


*A. Inner diameter*
*B. Outer diameter*

| DRIVEN PULLEY ROLLER | SERVICE LIMIT |
|---|---|
| Inner diameter | 8.5 mm (.335 in) |
| Outer diameter | 21.5 mm (.846 in) |

3. Measure the roller thickness.

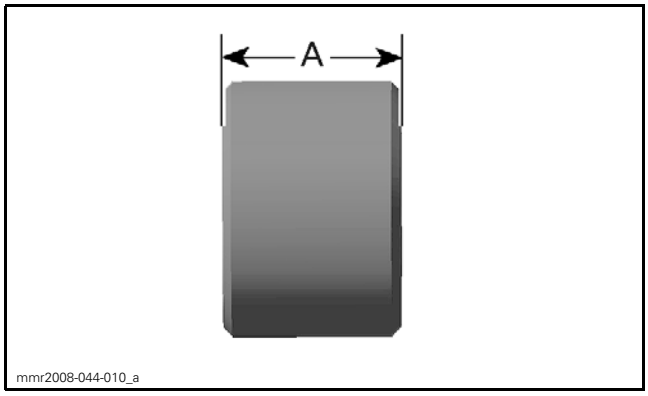


*A. Thickness of roller*

| DRIVEN PULLEY ROLLER | SERVICE LIMIT |
|---|---|
| Thickness | 14.75 mm (.581 in) |

4. If a roller is out of specifications, replace both rollers at the same time.

## Cleaning the Driven Pulley

Use cleaner and a clean rag to clean pulley sheaves.

| SERVICE PRODUCT |
|---|
| the CLUTCH AND PULLEY FLANGE CLEANER PRO S1 (P/N 779244) |

### Cleaning Cam and Spring

During break-in period, anti-friction coating from bushing moves to cam or countershaft surface. It is normal to see gray anti-friction coating deposit on cam or countershaft. Do not remove this deposit.

When a dust deposit has to be removed from the cam or the countershaft, use dry cloth to avoid removing transferred anti-friction coating.

## Driven Pulley Assembly

### Installing the Driven Pulley Roller

NOTE: Exceptionally, do NOT clean threaded hole to avoid changing the screw position when torqued.

1. Using a hand wire brush, clean pivot screw threads.

IMPORTANT: Do not use a thread die to clean pivot screw of threadlocker as this may alter the screw threads.

NOTE: Pivot screw and ribbed lock washer must be reused if in good condition. If damaged, replace fixed sheave assembly.

2. Apply the following threadlocker to the pivot screw threads.

| SERVICE PRODUCT |
|---|
| LOCTITE 243 (BLUE) (P/N 293 800 060) |

3. Insert roller in fixed sheave, thread in pivot screw with ribbed lock washer.

NOTE: The ribbed locked washer must be installed with the concave side towards the fixed sheave.

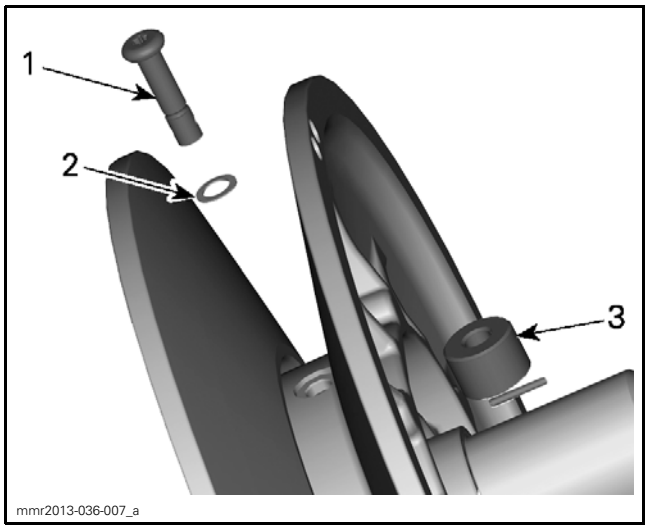


*1. Pivot screw*
*2. Ribbed lock washer (concave side towards fixed sheave)*
*3. Roller*

IMPORTANT: For proper fit, each pivot screw must be reinstalled where originally mounted in the fixed sheave.

4. Torque pivot screw as specified.

| TIGHTENING TORQUE | |
|---|---|
| Pivot screws | 17 N•m ± 1 N•m (150 lbf•**in** ± 9 lbf•**in**) |

NOTE: Spring pin hole in the fixed sheave and pivot screw must perfectly line up when torque is applied.

***NOTICE*** **If not properly aligned, spring pin will not insert in pivot screw hole and spring pin threads in fixed sheave will be damaged.**

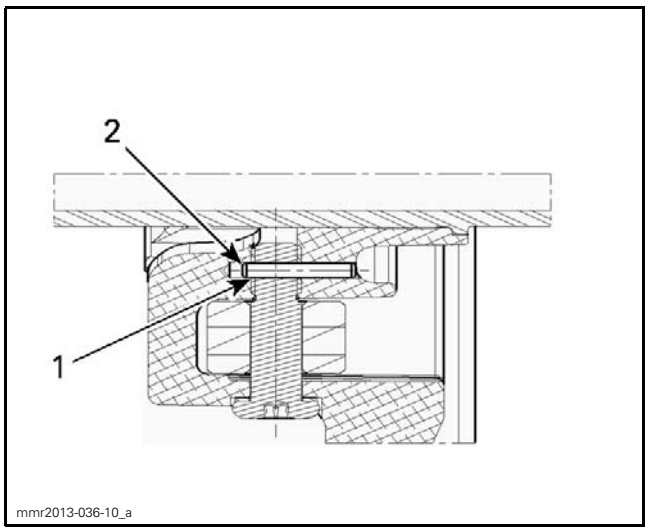


*1. Hole in pivot screw*
*2. Spring pin*

5. Install spring pin.

### Installing Cam and Spring

1. Install a spring stopper, the spring, the other spring stopper and the cam.

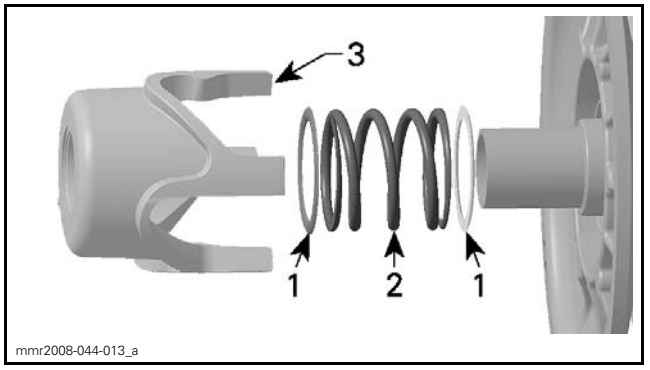


*1. Spring stopper*
*2. Spring*
*3. Cam*

2. Align the arrow on the cam with the arrow on the fixed sheave.

NOTE: On completion of cam installation, the arrow on the cam should have moved clockwise (approximately 30°).

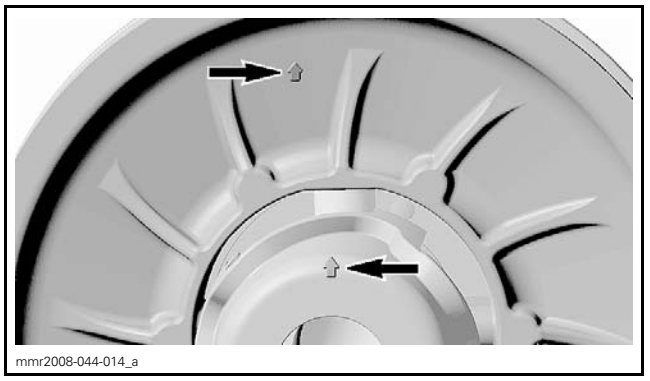


3. Install the driven pulley spring compressor sleeve and tighten the tool screw until the cam is completely pressed against the sliding sheave.
4. From the back of the sliding sheave, install 4 new cam screws.
5. Torque cam screws as specified.

| TIGHTENING TORQUE | |
|---|---|
| Cam screw | 31.5 N•m ± 3.5 N•m (23 lbf•ft ± 3 lbf•ft) |

6. Remove the tool.

### Installing the Sliding Sheave

The assembly of sliding sheave is the reverse of the disassembly. However, pay attention to the following.

When installing sliding sheave, make sure to align its arrow with the arrow on cam.

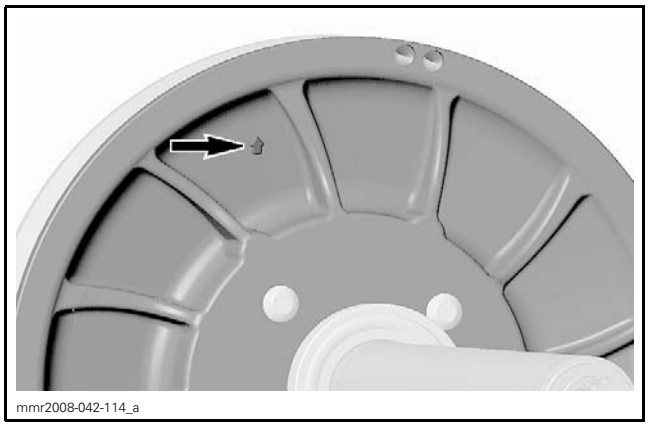
mmr2008-042-114_a

*SLIDING SHEAVE ARROW*

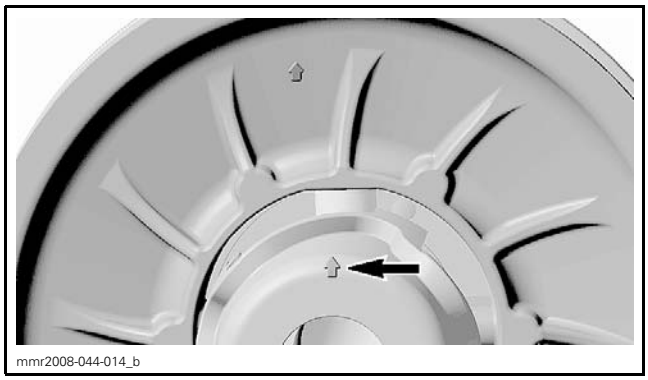
mmr2008-044-014_b

*CAM ARROW*

## Installing the Driven Pulley

1. Using sand paper (600-grit or 1000-grit) or steel wool, remove any rust on bearing shoulder of countershaft bearing support.

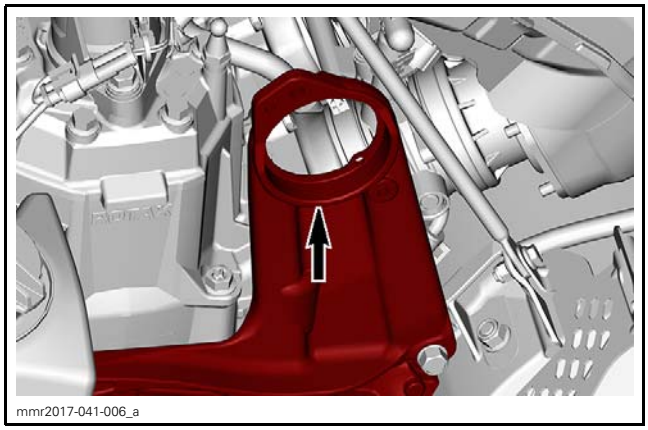
mmr2017-041-006_a

*BEARING SUPPORT SHOULDER*

2. Apply a thin layer of antiseize lubricant on bearing shoulder.

| SERVICE PRODUCT |
|---|
| LOCTITE 767 (ANTISEIZE LUBRICANT) (P/N 293 800 070) |

3. Insert countershaft through countershaft bearing support.
4. Fasten the M10 screw to the end of countershaft.
5. Align countershaft splines with upper gear splines.
6. Using the M10 screw as a puller, engage countershaft splines in upper gear splines. Ensure countershaft bearing is installed properly in countershaft bearing support.
7. Remove the M10 screw.
8. Install the upper gear screw and the cap.
9. Tighten upper gear screw to specification.

| TIGHTENING TORQUE | |
|---|---|
| Upper gear screw | 48 N•m ± 6 N•m (35 lbf•ft ± 4 lbf•ft) |

10. Install chaincase filler plug.
11. Install the bearing flange. Tighten nut to specification.

| TIGHTENING TORQUE | |
|---|---|
| Bearing flange nut | 15.5 N•m ± 1.5 N•m (137 lbf•**in** ± 13 lbf•**in**) |

12. Install the adjuster hub onto the countershaft end and temporarily tighten.
13. Install and adjust drive belt. Refer to *DRIVE BELT* subsection.
14. Install all other removed parts.

# COUNTERSHAFT

The countershaft and the fixed sheave are sold as an assembly. They are not available separately.

## Removing and Installing the Countershaft

Refer to *DRIVEN PULLEY* in this subsection.

# COUNTERSHAFT BEARING

## Removing the Countershaft Bearing

Remove the driven pulley. Refer to procedure in this subsection.

Install the bearing remover on countershaft.

| REQUIRED TOOL | |
|---|---|
| COUNTERSHAFT BEARING REMOVER (P/N 529 036 065) | |
| COUNTERSHAFT ADAPTER (P/N 529 036 424) | |

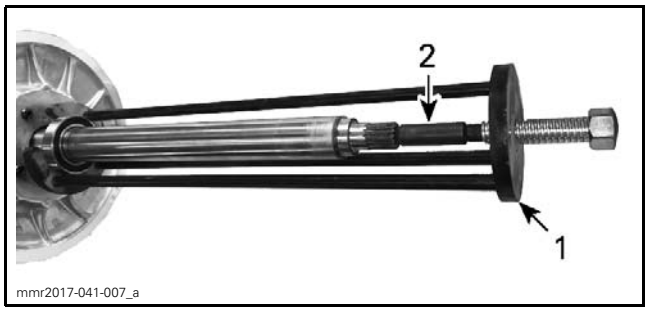


*1. Countershaft adapter*
*2. Countershaft bearing remover*

Tighten the screw at the end of tool to extract the bearing. Discard bearing.

## Installing the Countershaft Bearing

1. Remove the adjuster hub from the cam.
2. Insert the countershaft support in the countershaft.

| REQUIRED TOOL |
|---|
| COUNTERSHAFT SUPPORT (P/N 529 036 067) |

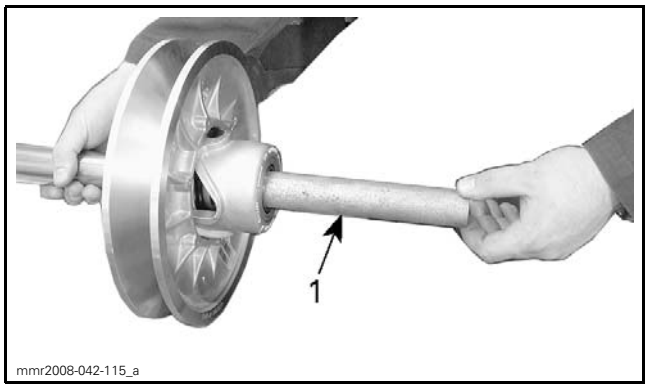


*1. Countershaft support*

**NOTICE** The countershaft support is mandatory to avoid damaging the countershaft threaded end and the cam during bearing installation.

3. Clean residues on countershaft bearing surface.

| SERVICE PRODUCT |
|---|
| CLUTCH AND PULLEY FLANGE CLEANER PRO S1 (P/N 779244) |

4. Check countershaft bearing surface for wear.
5. Apply curing speed activator on countershaft bearing surface and let dry 5 minutes.

| SERVICE PRODUCT |
|---|
| LOCTITE 7649 (PRIMER) (P/N 293 800 041) |

6. Apply rapid curing adhesive on primer.

| SERVICE PRODUCT |
|---|
| LOCTITE 609 (P/N 413 703 100) |

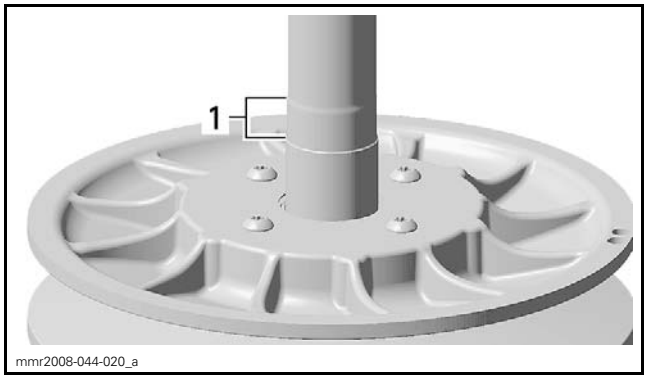


*1. Apply Loctite 7649 (Primer) before Loctite 609 in this region*

7. Using a press and the bearing installer, install the new bearing on countershaft.

| REQUIRED TOOL |
|---|
| COUNTERSHAFT BEARING INSTALLER (P/N 529 036 066) |

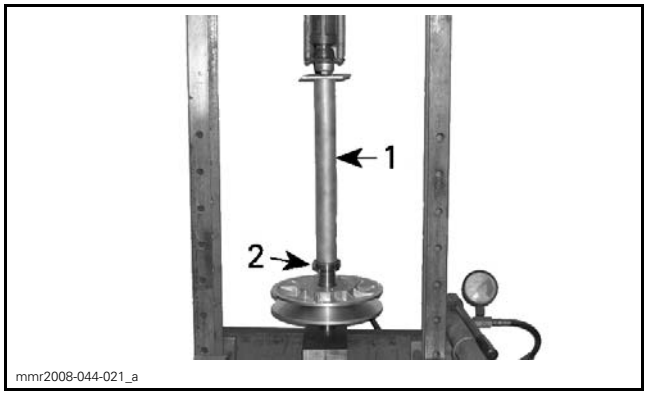


*1. Countershaft bearing installer*
*2. New bearing*

**NOTICE** Use a press only, never tap on countershaft bearing installer with an hammer to avoid damaging bearing and countershaft.

8. Clean the surplus Loctite with a rag to avoid having Loctite on sliding sheave bushing.

## COUNTERSHAFT BEARING SUPPORT

For countershaft bearing support removal and installation, refer to *COUNTERSHAFT BEARING SUPPORT* in *FRAME*.

# BRAKE

## SERVICE TOOLS


| Description | Part Number | Page |
|---|---|---|
| CALIPER PULLER | 529 036 145 | 330 |
| PROTECTIVE CAP | 529 036 150 | 330 |


## SERVICE PRODUCTS


| Description | Part Number | Page |
|---|---|---|
| LOCTITE 767 (ANTISEIZE LUBRICANT) | 293 800 070 | 330 |
| XPS SYNTHETIC GREASE | 293 550 010 | 333 |

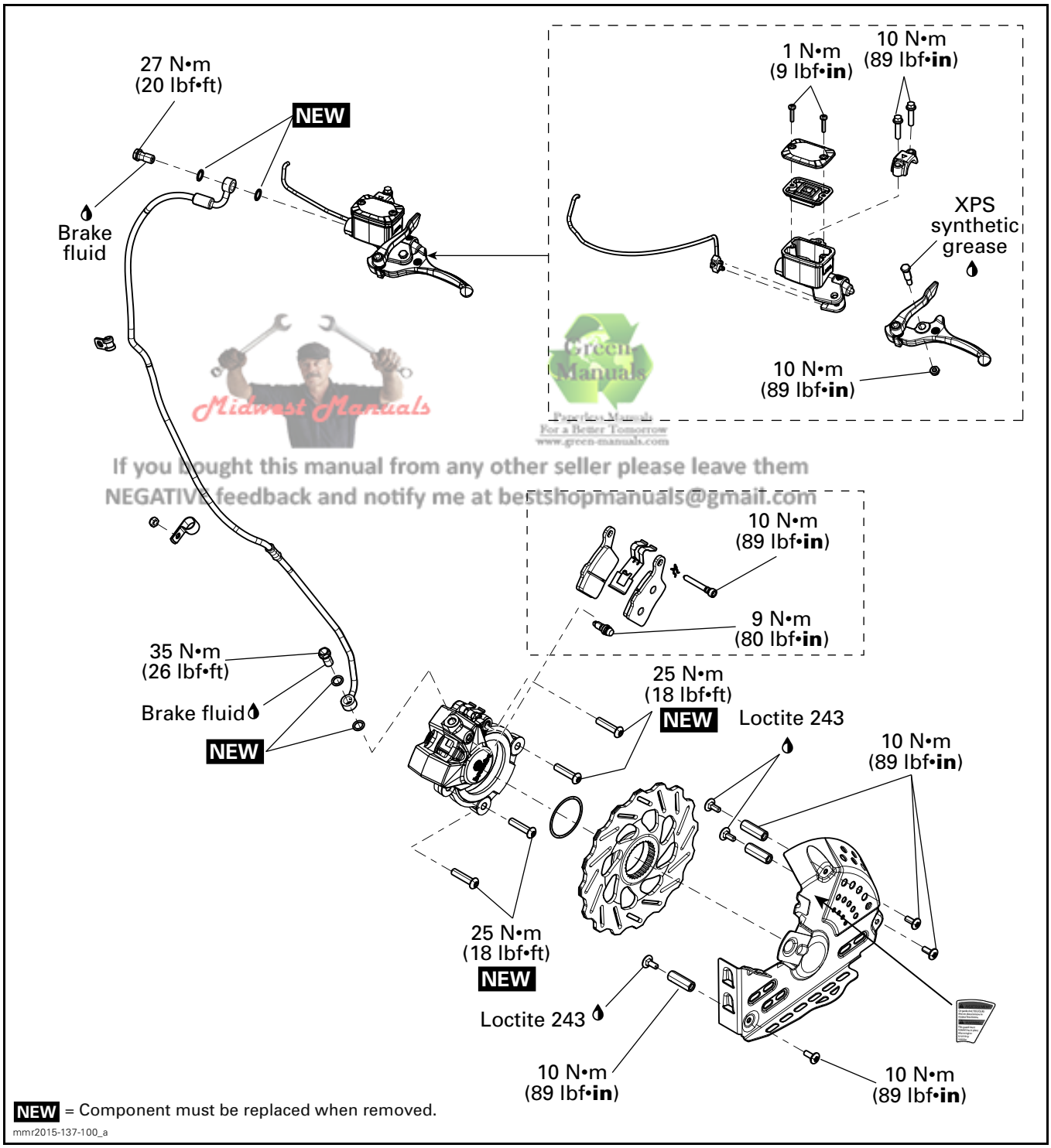


Midwest Manuals
Green Manuals
For a Better Tomorrow
www.green-manuals.com
If you bought this manual from any other seller please leave them
NEGATIVE feedback and notify me at bestshopmanuals@gmail.com

# GENERAL

During assembly/installation, use torque values and service products as in the exploded view.

Clean threads before applying a threadlocker. Refer to *SELF-LOCKING FASTENERS* and *LOCTITE APPLICATION* at the beginning of this manual for complete procedure.

**⚠ WARNING**

Torque wrench tightening specifications must be strictly adhered to.
Locking devices must be replaced with new ones when removed (e.g.: locking tabs, elastic stop nuts, cotter pins, etc.).

Hoses or cables removed or disconnected must be installed and routed as per factory specifications.

***NOTICE*** Locking ties removed must be replaced as per factory specifications.

**⚠ WARNING**

Never apply any product to brake fittings, The use of thread sealant or Teflon tape could cause brake system failure.

**⚠ WARNING**

A contaminated brake disc or pad reduces braking efficiency. Discard contaminated pads and clean contaminated disc with a high quality brake degreasing agent.

***NOTICE*** Avoid spilling brake fluid on plastic, rubber or painted parts. Protect these parts with a rag when servicing the brake system.

***NOTICE*** Wipe up any brake fluid spillage.

***NOTICE*** To avoid serious damage to the brake system, use only DOT 4 brake fluid from a sealed container. Do not use brake fluid taken from an old or already opened containers, or mix different fluids for topping up the system.

***NOTICE*** Sealing washers must be discarded and replaced with NEW ones every time a Banjo fitting is unscrewed.

Dispose of brake fluid as per your local environmental regulation.

# PROCEDURES

## BRAKE PADS

### Brake Pad Inspection

1. Measure brake pad lining thickness.

| SERVICE LIMIT | |
|---|---|
| Brake pad thickness | 1 mm (1/32 in) |

***NOTICE*** Brake pads must always be replaced in pairs.

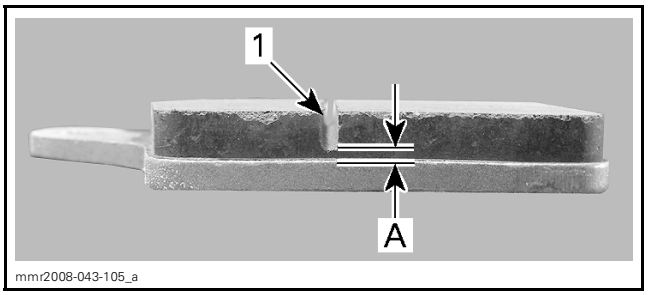


*1. Groove on pad lining*
*A. Brake pad minimum thickness 1 mm (1/32 in)*

2. Also inspect the brake disc, refer to *BRAKE DISC INSPECTION* in this subsection.

### Brake Pad Replacement

#### Brake Pad Removal

1. Place the vehicle on a level surface.
2. Cover the plastic parts under and near master cylinder in the event that brake fluid would be spilled.
3. Remove reservoir cover with its diaphragm seal.

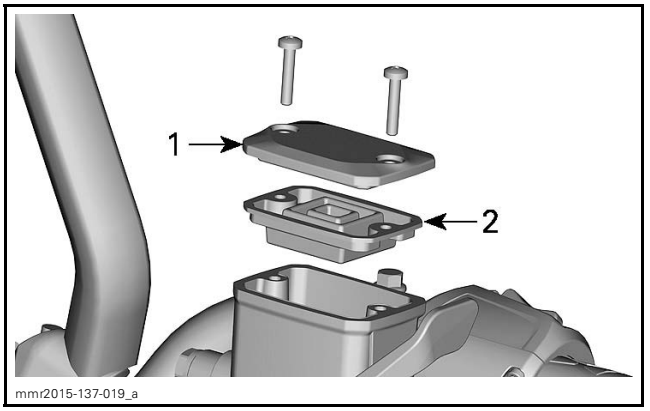


*1. Reservoir cover*
*2. Diaphragm*

4. Remove the disc brake protective cover.

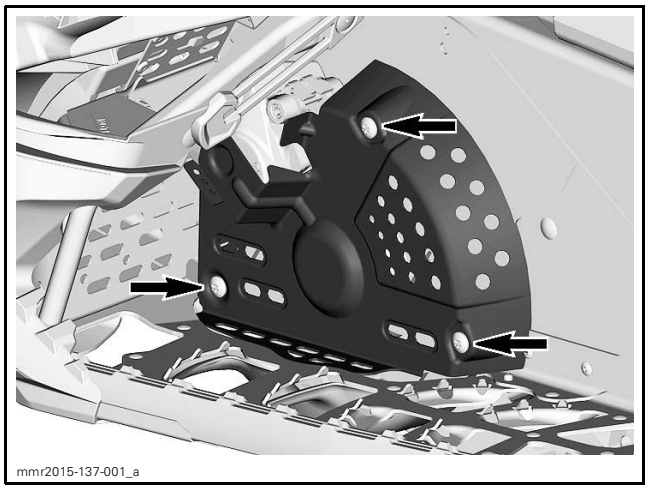
mmr2015-137-001_a

5. Remove the clip securing brake pad pin.
6. Unscrew and remove the brake pad pin.

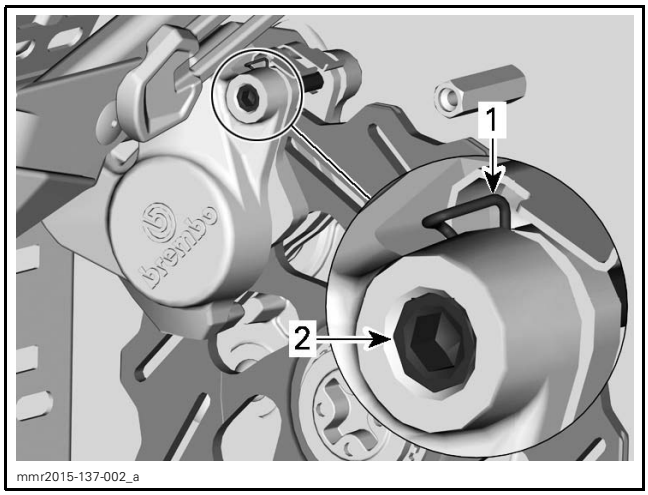

mmr2015-137-002_a

*1. Clip*
*2. Brake pad pin*

7. Using a flat screwdriver, depress caliper pistons into their bores.

***NOTICE*** **Pay attention to avoid scratching brake disc.**

8. Remove the circlip securing brake disc to drive axle.

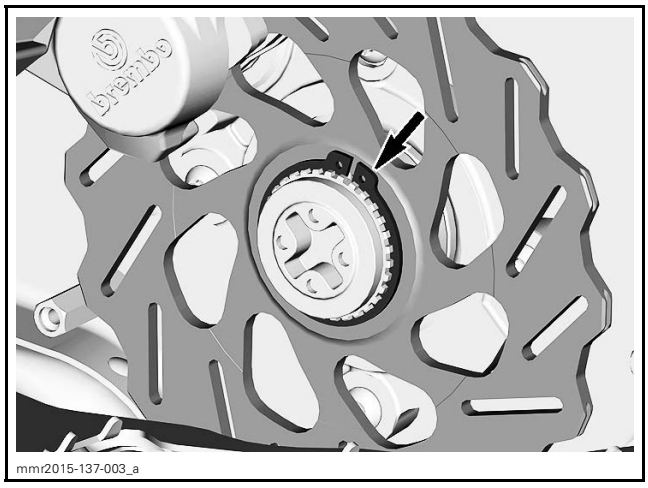
mmr2015-137-003_a

9. Remove brake pads.
   9.1 Remove the external pad first.

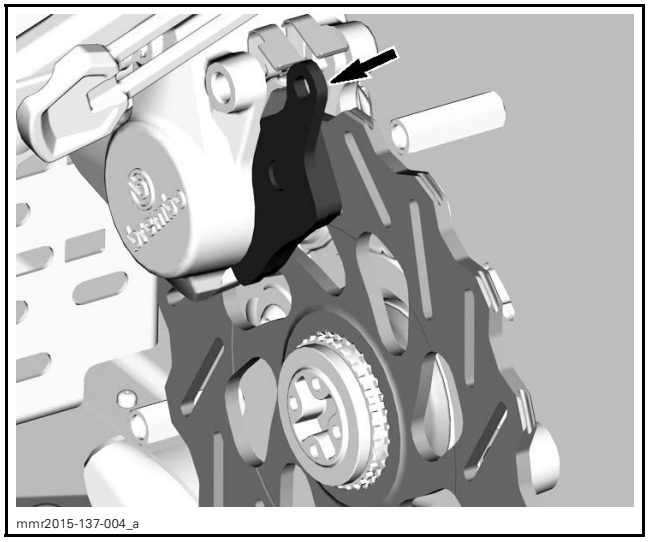
mmr2015-137-004_a

   9.2 Pull the brake disc outward and remove the internal pad.

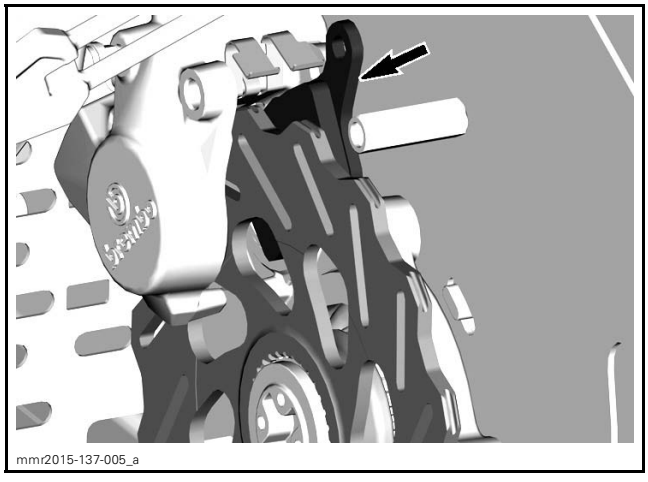
mmr2015-137-005_a

### Brake Pad Installation

The installation is the reverse of the removal. However, pay attention to the following.

1. Install NEW brake pads with tabs facing upward.
2. Install brake pad pin and tighten to specification.

| TIGHTENING TORQUE | |
|---|---|
| Brake pad pin | 10 N•m (89 lbf•**in**) |

3. Install spring clip on brake pad pin. If the clip seems loose, replace it with a new one.

NOTE: Make sure anti-rattle spring ends on brake pads tabs are correctly installed as per following pictures.

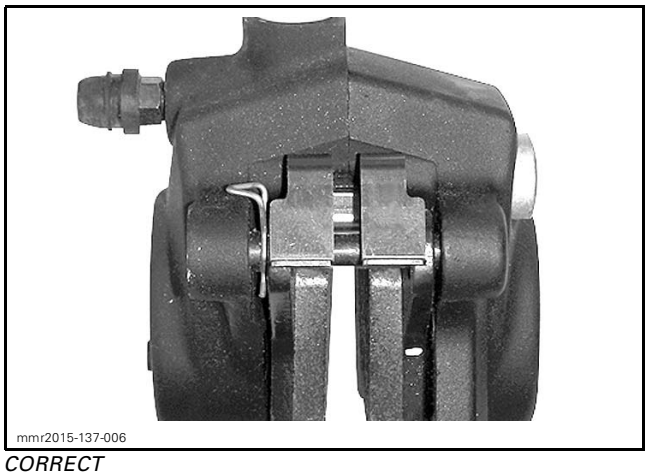


*CORRECT*

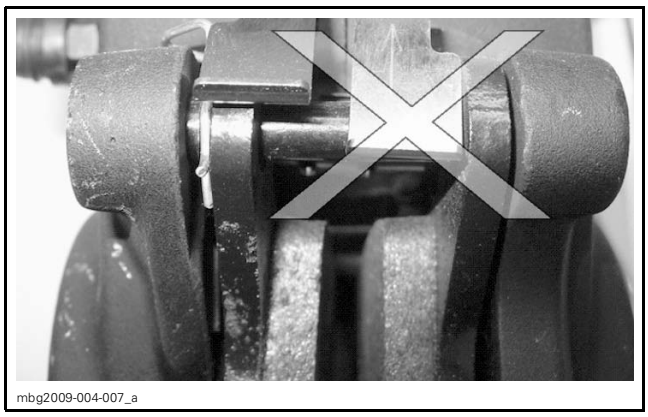


*INCORRECT (ON RIGHT SIDE)*

4. Operate the brake lever several times to bring the brake pads into contact with the disc brake.
5. Check brake fluid level in master cylinder and refill if necessary.
6. Ride the vehicle a few minutes to make sure the repair is successful.

# CALIPER

## Caliper Removal

1. Open the RH side panel.
2. Refer to *CHAINCASE* subsection and carry the following steps.
   - 2.1 Remove chaincase cover.
   - 2.2 Loosen drive chain.
   - 2.3 Remove lower sprocket.
3. Open LH side panel.
4. Remove drive belt guard support. Refer to *DRIVE BELT* subsection.

NOTE: If the caliper is not replaced, omit steps 5 and 6 concerning the brake system draining and brake hose removal.

5. Drain the brake system, refer to *BRAKE FLUID* in *MAINTENANCE* subsection.
6. Remove the Banjo fitting and discard the sealing washers.

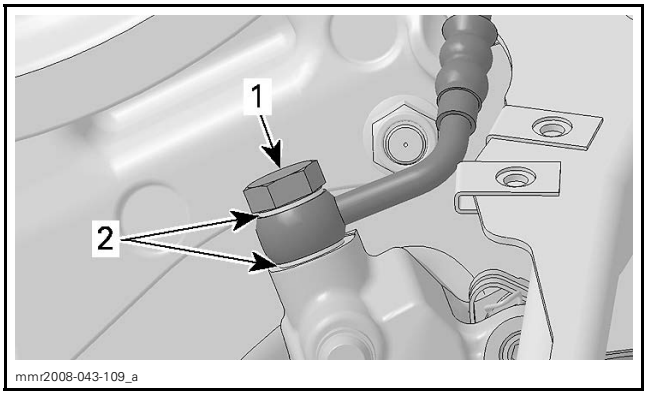


*1. Banjo fitting*
*2. Sealing washers*

7. Remove the *BRAKE PADS*, see procedure in this subsection.
8. Lift the rear of vehicle and release track tension completely.
9. Turn track to align brake disc slots with caliper bracket screws.
10. Remove caliper screws (4) behind brake disc.

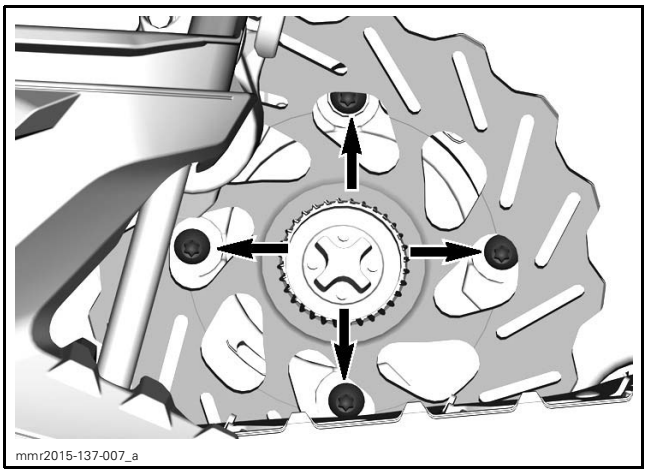
mmr2015-137-007_a

11. Pull the assembly (brake disc, caliper, bearing and drive axle) from LH side in order to make room for the caliper puller.

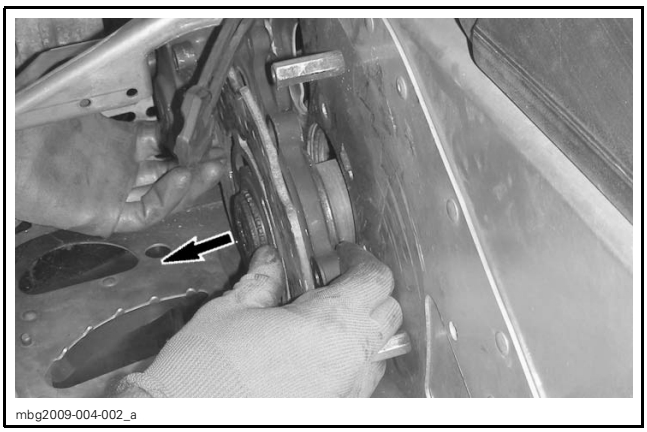
mbg2009-004-002_a

*TYPICAL*

12. Install the CALIPER PULLER (P/N 529 036 145) on the brake caliper through brake disc slots.

NOTE: Make sure puller tabs are correctly engaged on caliper.

529036145

13. Install the PROTECTIVE CAP (P/N 529 036 150) between caliper puller bolt and plastic cap in drive axle end.

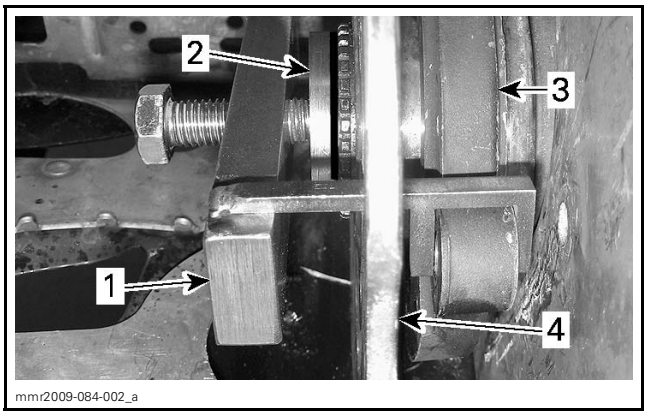

mmr2009-084-002_a

*TYPICAL*
*1. Caliper puller*
*2. Protective cap*
*3. Caliper bracket*
*4. Brake disc*

14. Tighten caliper puller bolt to separate caliper from drive axle bearing.

**NOTICE** **Never use an impact tool to operate caliper puller. The caliper or the puller could break.**

15. When brake disc is out of splines, remove it.
16. Remove caliper.

**NOTICE** **Do not let caliper hang by the hose and do not stretch or twist the hose.**

## Caliper Inspection

1. Check caliper pistons for:
   – Proper operation
   – Rust
   – Scratches
   – Leaks.
2. Check caliper bracket for:
   – Cracks
   – Rust on bearing shoulder (clean with a steel wood).
3. Replace caliper if required.

## Caliper Installation

1. Using your fingers or a small piece of wood, push both pistons into their bores.
2. Clean brake caliper bearing shoulder with fine steel wool.
3. Apply LOCTITE 767 (ANTISEIZE LUBRICANT) (P/N 293 800 070) on drive axle splines and on bearing shoulder of caliper bracket.

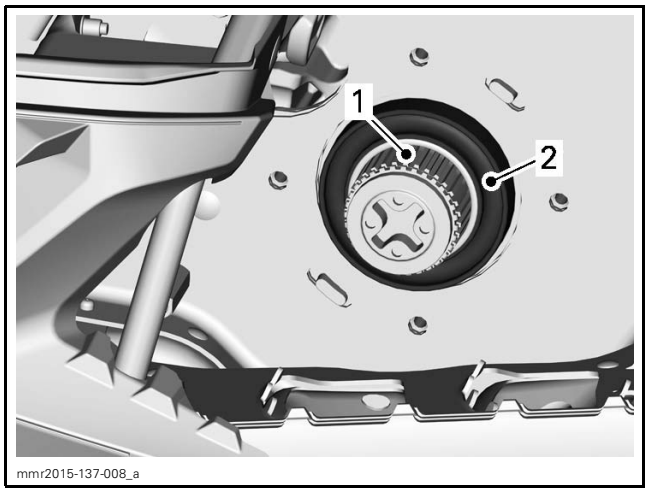


*1. Drive axle splines*
*2. Drive axle bearing*

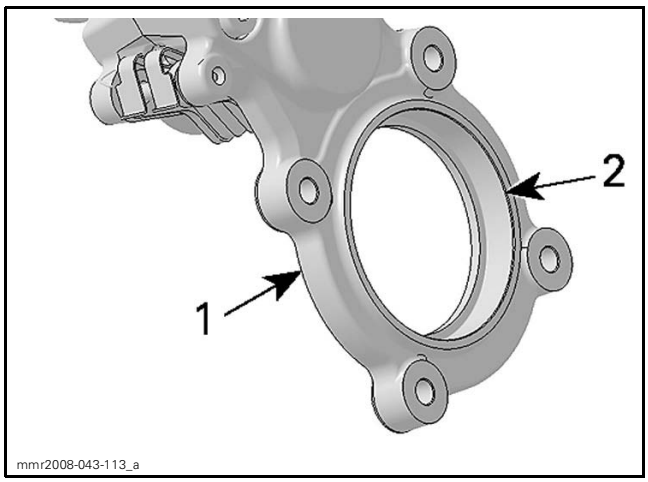


*1. Caliper bracket*
*2. Bearing shoulder*

4. Insert brake disc in the caliper. The brake disc collar must be inserted in the caliper bracket.

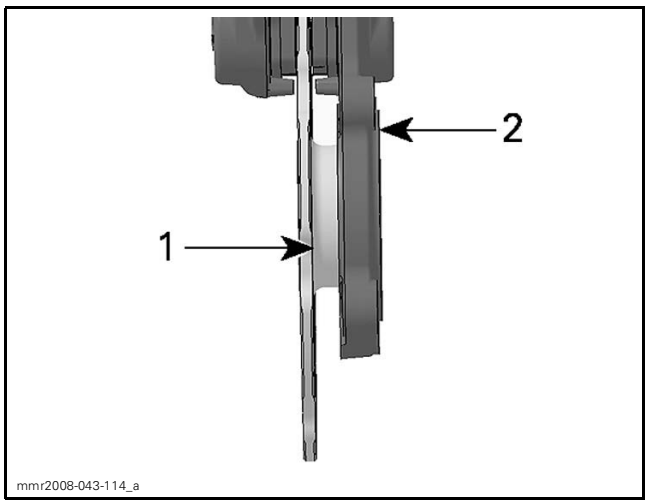


*1. Brake disc collar*
*2. Caliper bracket*

5. Ensure bearing flange is properly locked in the frame. Tabs must be properly inserted in frame slots.

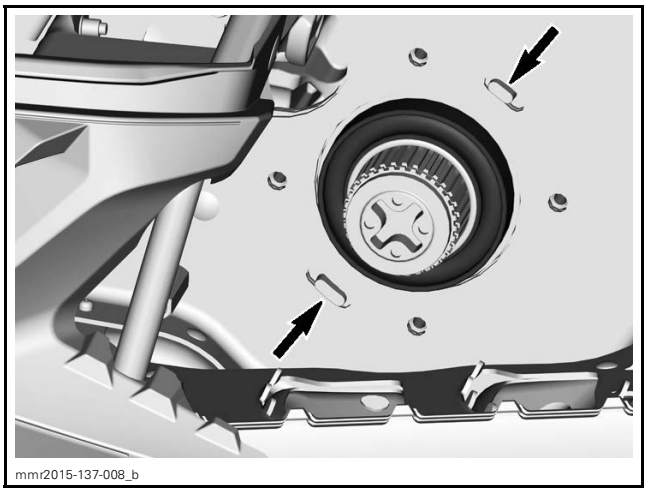


*VIEW FROM OUTSIDE FRAME*

6. Align brake disc splines with drive axle splines and push brake disc onto drive axle.
7. Push the caliper bracket over the drive axle bearing.

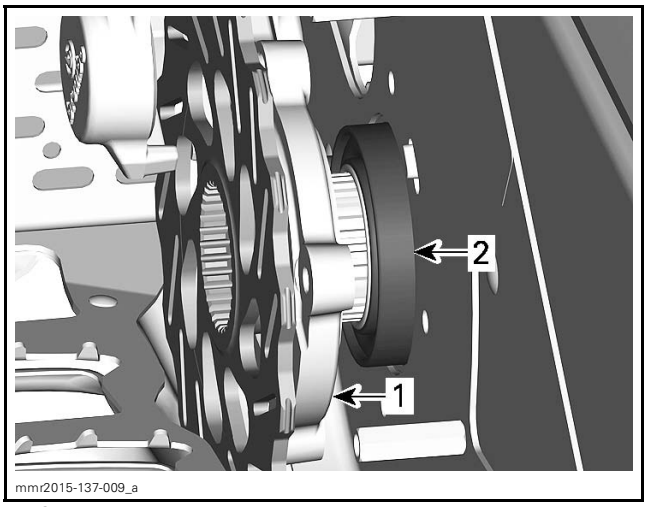


*1. Caliper bracket*
*2. Drive axle bearing*

8. Align caliper bracket holes with bearing flange holes and install caliper screws.

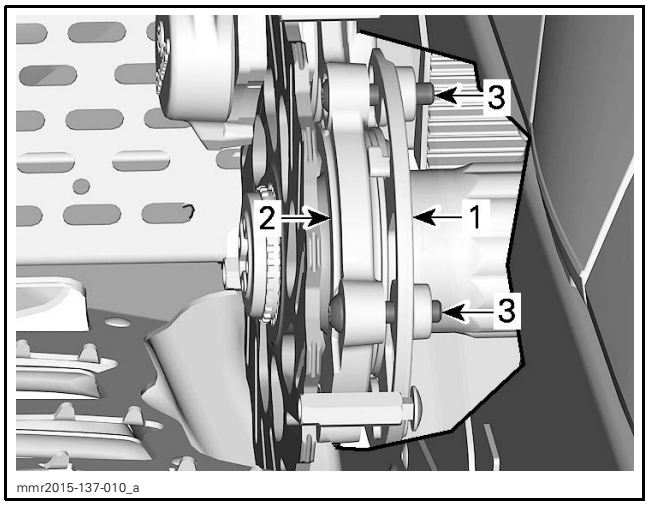


*1. Bearing flange (inside frame)*
*2. Caliper bracket*
*3. Caliper screws*

9. HAND TIGHTEN each caliper bracket screw evenly in a criss-cross pattern until bracket is correctly positioned against frame.

**NOTICE** Never use an air tool to tighten caliper screws. The caliper bracket could crack.

10. Install *BRAKE PADS*, see procedure in this subsection.
11. Install brake disc circlip.
12. Torque brake caliper screws to specification.

| TIGHTENING TORQUE | |
|---|---|
| Caliper screws | 25 N•m (18 lbf•ft) |

13. Apply brake fluid on Banjo fitting threads.
14. Install the Banjo fitting with two NEW sealing washers.
15. Torque Banjo fitting to specification.

| TIGHTENING TORQUE | |
|---|---|
| Caliper screws | 35 N•m (26 lbf•ft) |

16. Fill and bleed the brake system. Refer to *BRAKE FLUID* in *PERIODIC MAINTENANCE PROCEDURES* subsection.
17. Install all other removed parts.
18. Check the operation of the brake carefully before riding the snowmobile.

# BRAKE DISC

## Brake Disc Inspection (Not Removed)

1. Remove the disc brake protective cover.
2. Check for scoring, cracking or bending, replace as required.
3. Measure brake disc thickness. If the brake disc is out of specification, replace it with a new one.

**NOTICE** Brake disc should never be machined.

| BRAKE DISC SPECIFICATION | |
|---|---|
| Minimum thickness | 4.5 mm (.177 in) |

## Brake Disc Inspection (Removed)

1. Check brake disc splines and drive axle splines for wear or other damages. Replace defective parts.

## Brake Disc Removal and Installation

Follow procedures for caliper removal and installation.

# MASTER CYLINDER

## Master Cylinder Removal

NOTE: If the master cylinder is not replaced, omit the steps concerning brake system draining and brake hose removal.

1. Drain brake system, refer to *BRAKE FLUID* in *PERIODIC MAINTENANCE PROCEDURES* subsection.
2. Remove the Banjo fitting and discard the sealing washers.

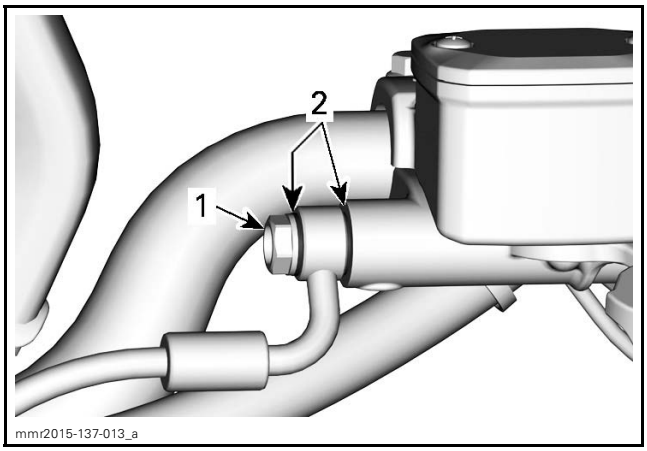


*1. Banjo fitting*
*2. Sealing washers*

3. Remove screws and clamp securing master cylinder to handlebar.

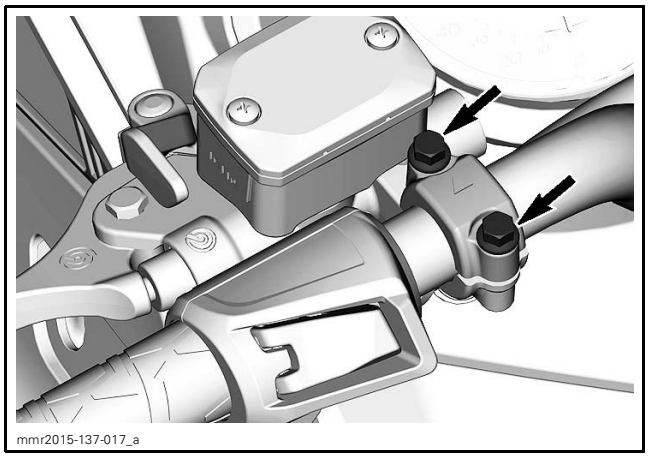
mmr2015-137-017_a

4. Remove master cylinder.

**NOTICE** Do not let master cylinder hang by the hose and do not stretch or twist the hose.

### Master Cylinder Inspection

1. Discard all remaining fluid inside master cylinder reservoir.
2. Check if the reservoir cap seal is brittle, hard or damaged. Replace as necessary.
3. If the reservoir is damaged or leaking, replace master cylinder.
4. Check if brake lever is bent, cracked or otherwise damaged. Replace brake lever if required.

### Master Cylinder Installation

1. Place the master cylinder on the handlebar.
2. Install master cylinder retaining clamp with its arrow pointing toward the front of vehicle.

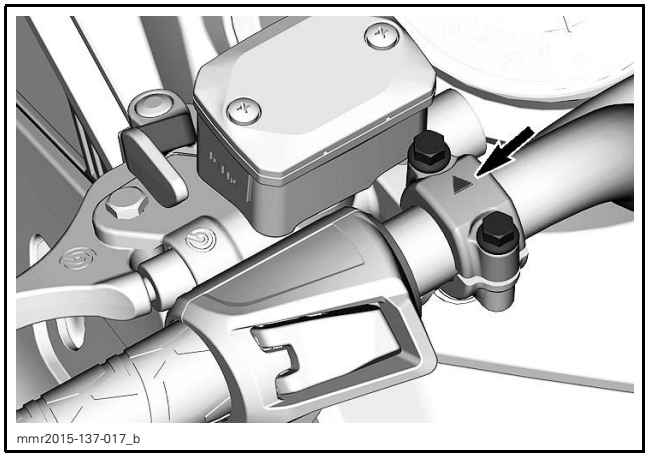
mmr2015-137-017_b

3. Install master cylinder clamp screws and tighten loosely.
4. With the handlebar in the straight ahead position, place the reservoir parallel to the ground.
5. Torque master cylinder clamp screws to specification.

| TIGHTENING TORQUE | |
|---|---|
| Master cylinder clamp screws | 10 N•m (89 lbf•**in**) |

6. Install the Banjo fitting with two **NEW** sealing washers.
7. Torque Banjo fitting to specification.

| TIGHTENING TORQUE | |
|---|---|
| Banjo fitting | 27 N•m (20 lbf•ft) |

8. Fill and bleed the brake system. Refer to *BRAKE FLUID* in *PERIODIC MAINTENANCE PROCEDURES* subsection.
9. Install brake light switch.
10. Install steering cover.

## BRAKE LEVER

### Brake Lever Lubrication

After using brake cleaner in the brake lever area or after adding brake oil in reservoir, check brake lever pivot lubrication. Add XPS SYNTHETIC GREASE (P/N 293 550 010) on brake lever pivot as necessary.

### Brake Lever Replacement

Lubricate brake lever pivot using XPS SYNTHETIC GREASE (P/N 293 550 010).

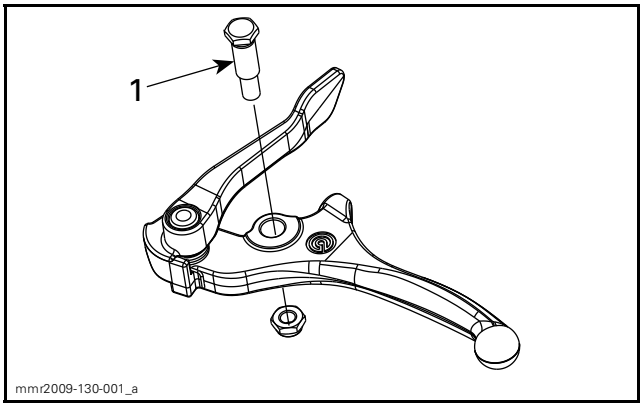

mmr2009-130-001_a

*TYPICAL*
*1. Lubricate brake lever pivot*

Torque pivot nut of brake lever to specification.

| TIGHTENING TORQUE | |
|---|---|
| Brake lever pivot nut | 6 N•m (53 lbf•**in**) |

# BRAKE LIGHT SWITCH

## Brake Light Switch Resistance Test

1. Remove steering cover and disconnect the RH steering connector.

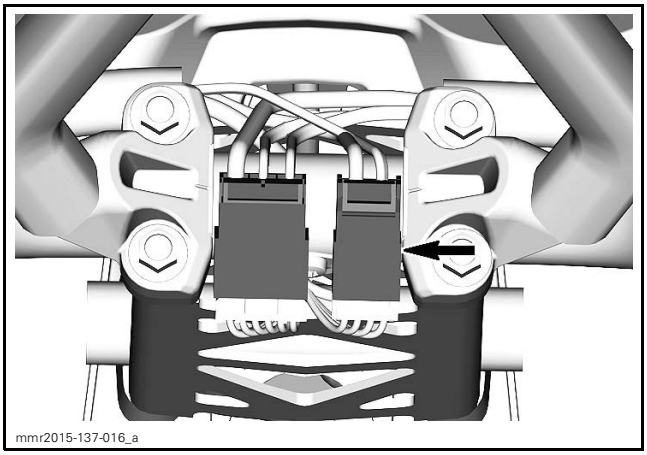
mmr2015-137-016_a

2. Validate switch operation with an ohmmeter as follows.

| LH HANDLEBAR CONNECTOR (4-PIN) | | |
|---|---|---|
| SWITCH | WIRE | RESISTANCE |
| Released | Pin 3 and pin 4 | Infinite (OL) |
| Squeezed and held | | Close to 0 Ω |

If readings do not correspond to the above specifications, replace switch.

If readings correspond to the above specifications, check fuse, wiring and connectors going to switch. Repair or replace defective part(s).

## Brake Light Switch Removal

1. Slip a small screwdriver between brake light switch and master cylinder housing and separate them.

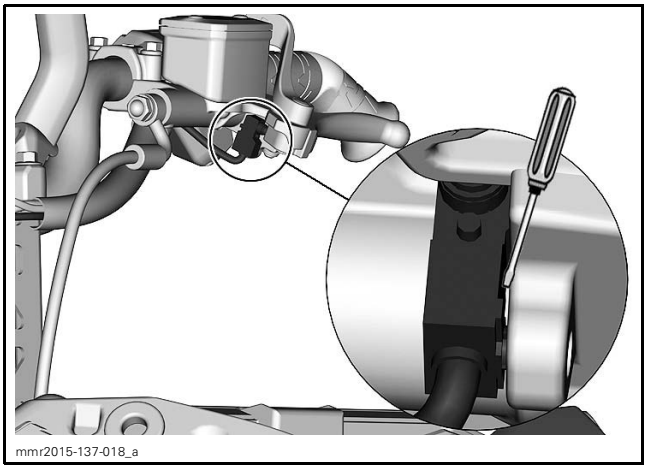
mmr2015-137-018_a

2. Cut all locking ties securing switch wires.

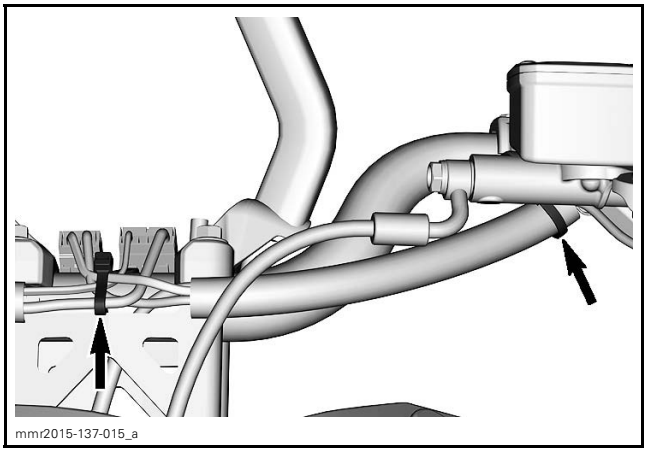
mmr2015-137-015_a

3. Remove the steering cover and unplug both connectors.

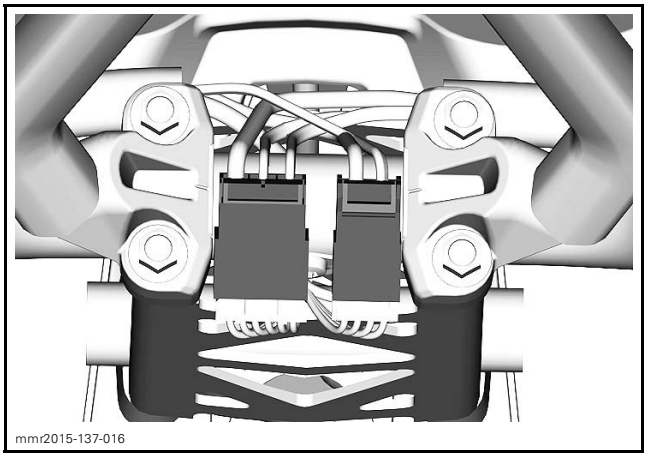
mmr2015-137-016

4. Remove switch wires from connector.

**NOTE:** Check wires location for reinstallation.

## Brake Light Switch Installation

The installation is the reverse of the removal procedure. However, pay attention to the following.

Plug switch wires into connector as per following tables.

| LH HANDLEBAR CONNECTOR (4-PIN) | |
|---|---|
| WIRE | CONNECTOR |
| GRAY | Pin 4 |
| BROWN | Pin 3 |

Check if switch is working properly.

Install new locking ties.

# BRAKE

## SERVICE TOOLS

| Description | Part Number | Page |
|---|---|---|
| CALIPER PULLER | 529 036 145 | 6 |
| PROTECTIVE CAP | 529 036 150 | 6 |

## SERVICE PRODUCTS

| Description | Part Number | Page |
|---|---|---|
| LOCTITE 767 (ANTISEIZE LUBRICANT) | 293 800 070 | 6 |
| SYNTHETIC GREASE | 779162 | 9 |

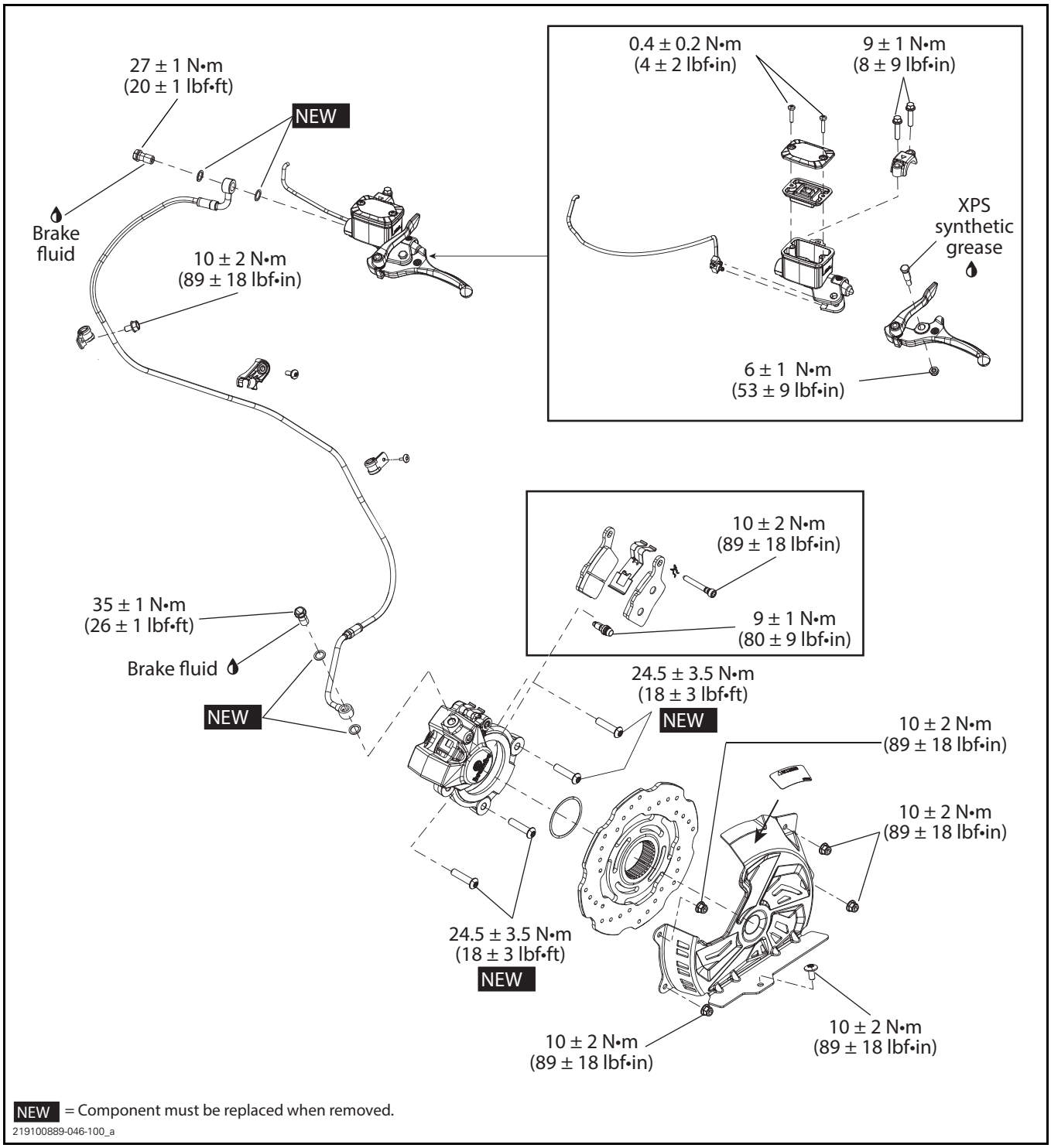


NEW = Component must be replaced when removed.

219100889-046-100_a

# GENERAL

During assembly/installation, use torque values and service products as in the exploded view.

Clean threads before applying a threadlocker. Refer to *SELF-LOCKING FASTENERS* and *LOCTITE APPLICATION* at the beginning of this manual for complete procedure.

**⚠ WARNING**

Torque wrench tightening specifications must be strictly adhered to.
Locking devices must be replaced with new ones when removed (e.g.: locking tabs, elastic stop nuts, cotter pins, etc.).

Hoses or cables removed or disconnected must be installed and routed as per factory specifications.

***NOTICE*** Locking ties removed must be replaced as per factory specifications.

**⚠ WARNING**

Never apply any product to brake fittings, The use of thread sealant or Teflon tape could cause brake system failure.

**⚠ WARNING**

A contaminated brake disc or pad reduces braking efficiency. Discard contaminated pads and clean contaminated disc with a high quality brake degreasing agent.

***NOTICE*** Avoid spilling brake fluid on plastic, rubber or painted parts. Protect these parts with a rag when servicing the brake system.

***NOTICE*** Wipe up any brake fluid spillage.

***NOTICE*** To avoid serious damage to the brake system, use only DOT 4 brake fluid from a sealed container. Do not use brake fluid taken from an old or already opened containers, or mix different fluids for topping up the system.

***NOTICE*** Sealing washers must be discarded and replaced with NEW ones every time a Banjo fitting is unscrewed.

Dispose of brake fluid as per your local environmental regulation.

# PROCEDURES

## BRAKE PADS

### Inspecting the Brake Pads

1. Measure brake pad lining thickness.

| SERVICE LIMIT | |
|---|---|
| Brake pad thickness A | 1 mm (1/32 in) |

***NOTICE*** Brake pads must always be replaced in pairs.

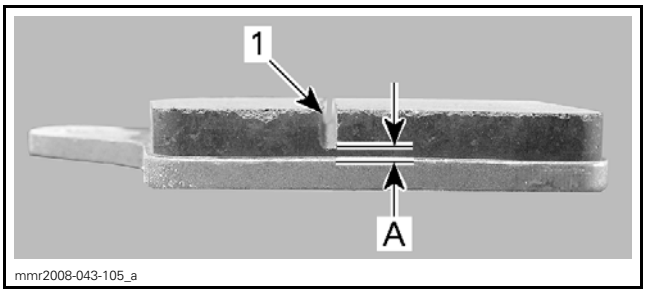


*1. Groove on pad lining*

2. Also inspect the brake disc, refer to *INSPECTING THE BRAKE DISC* in this subsection.

### Replacing the Brake Pads

#### Removing the Brake Pads

1. Place the vehicle on a level surface.
2. Cover the plastic parts under and near master cylinder in the event that brake fluid would be spilled.
3. Remove reservoir cover with its diaphragm seal.

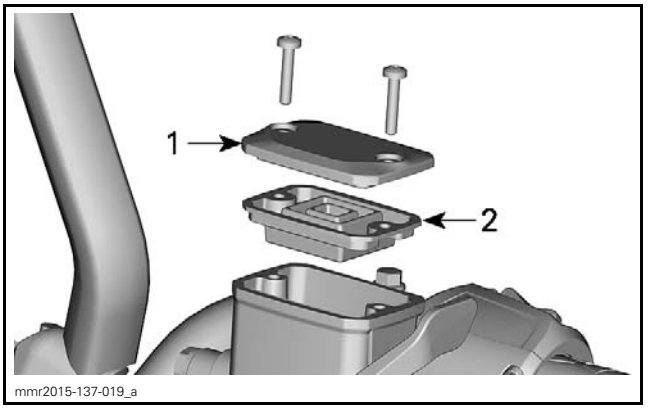


*1. Reservoir cover*
*2. Diaphragm*

4. Open the LH side panel.
5. Remove the LH toe hook.

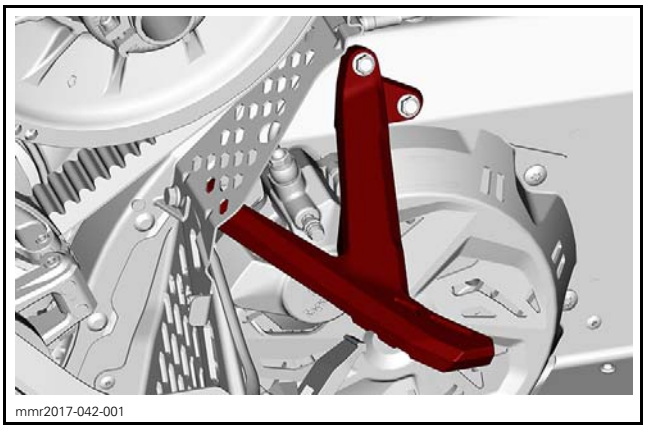
mmr2017-042-001

6. Remove the disc brake protective cover.

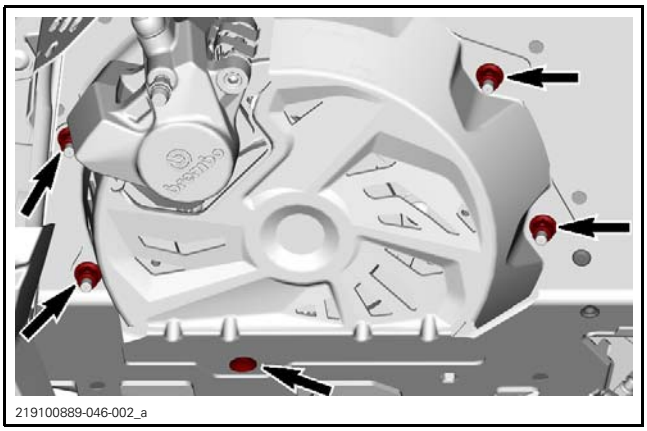
219100889-046-002_a

*5 HOLES MOUNT*

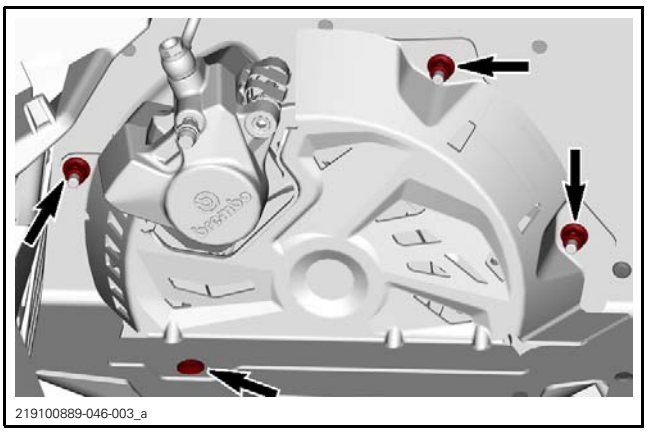
219100889-046-003_a

*4 HOLES MOUNT*

7. Remove the clip securing brake pad pin.
8. Unscrew and remove the brake pad pin.

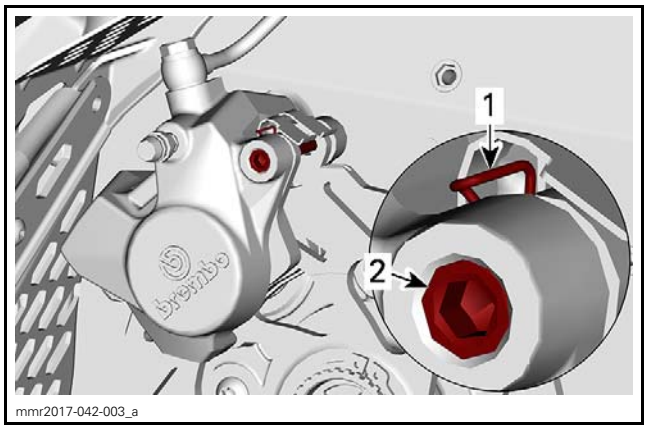

mmr2017-042-003_a

*1. Clip*
*2. Brake pad pin*

9. Using a flat screwdriver, depress caliper pistons into their bores. Pay attention for pistons to go back in straight. Insert screwdriver alternatively backwards and forwards and move pistons by small steps.

**NOTICE** **Pay attention to avoid scratching brake disc.**

10. Remove brake pads.

10.1 Remove the external pad first.

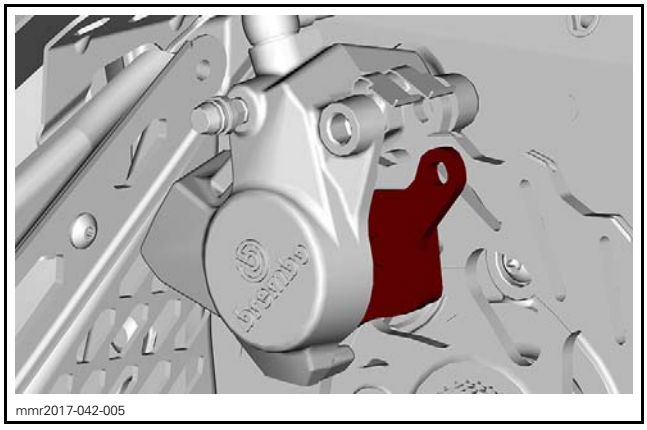
mmr2017-042-005

10.2 Pull the brake disc outward and remove the internal pad.

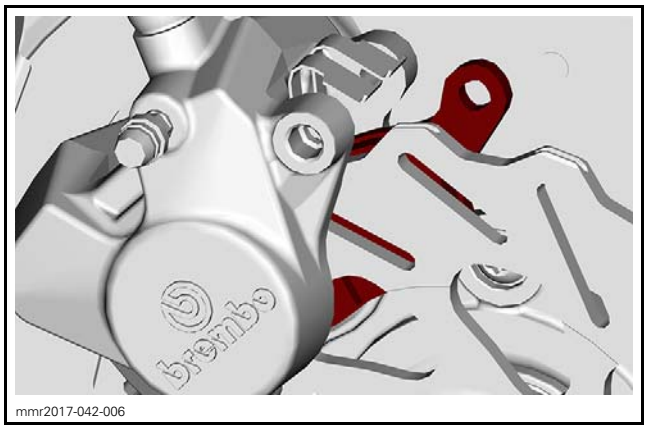
mmr2017-042-006

### Installing the Brake Pads

The installation is the reverse of the removal. However, pay attention to the following.

1. Install new brake pads with tabs facing upward.
2. Install brake pad pin and tighten to specification.

| TIGHTENING TORQUE | |
|---|---|
| Brake pad pin | 10 N•m ± 2 N•m (89 lbf•**in** ± 18 lbf•**in**) |

3. Install spring clip on brake pad pin. If the clip seems loose, replace it with a new one.

NOTE: Make sure anti-rattle spring ends on brake pads tabs are correctly installed as per following pictures.

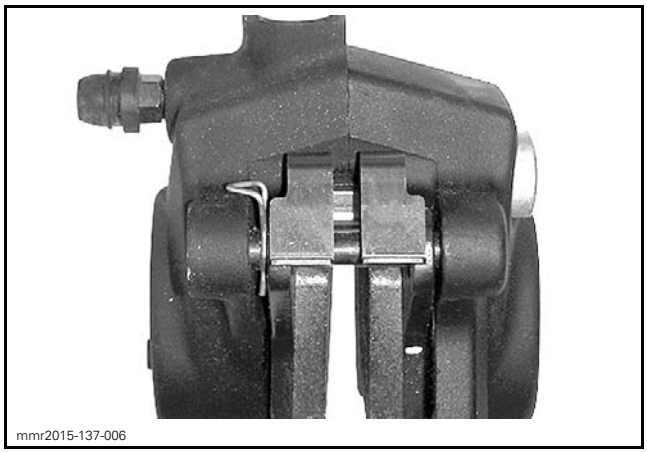


*CORRECT*

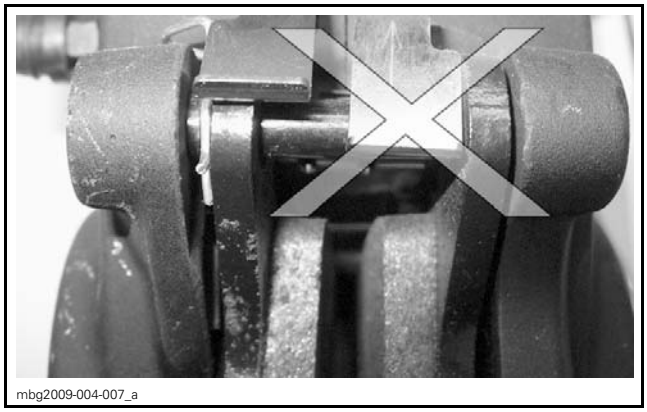


*INCORRECT (RIGHT SIDE SPRING CLIP)*

4. Operate the brake lever several times to bring the brake pads into contact with the disc brake.
5. Check brake fluid level in master cylinder and refill if necessary.
6. Reinstall the diaphragm and the cover.
7. Ride the vehicle a few minutes to make sure the repair is successful.

## CALIPER

### Removing the Caliper

1. Open the RH side panel.
2. Refer to *CHAINCASE* subsection and carry the following steps.
   - 2.1 Remove chaincase cover.
   - 2.2 Loosen drive chain.
   - 2.3 Remove lower sprocket.
3. Open LH side panel.
4. Remove drive belt guard support. Refer to *DRIVE BELT* subsection.
5. Remove the LH toe hook.

NOTE: If the caliper is not replaced, omit steps 5 and 6 concerning the brake system draining and brake hose removal.

6. Remove the brake pads, Refer to procedure in this subsection.
7. Lift the rear of vehicle and release track tension completely.
8. Turn track to align brake disc slots with caliper bracket screws.
9. Remove caliper screws (4) behind brake disc.

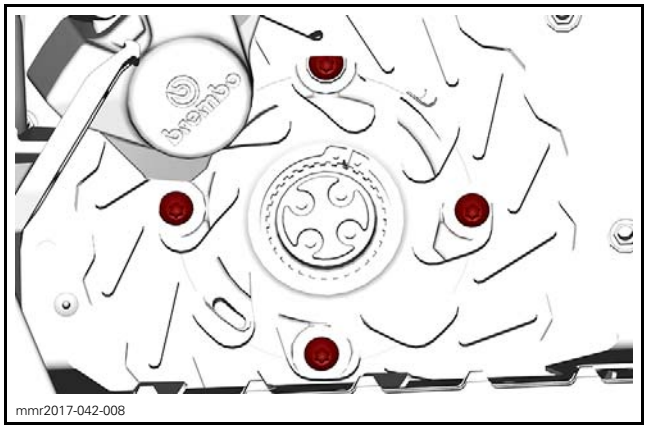


10. Pull the assembly (brake disc, caliper, bearing, and drive axle) from LH side in order to make room for the caliper puller.

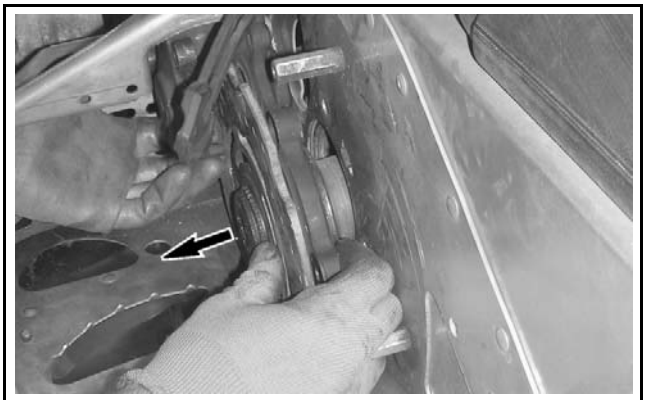
mbg2009-004-002_a

*TYPICAL*

| REQUIRED TOOL | |
|---|---|
| CALIPER PULLER (P/N 529 036 145) | |
| PROTECTIVE CAP (P/N 529 036 150) | |

11. Install the caliper puller on the brake caliper through brake disc slots.

NOTE: Make sure puller tabs are correctly engaged on caliper.

12. Install the protective cap between caliper puller bolt and plastic cap in drive axle end.

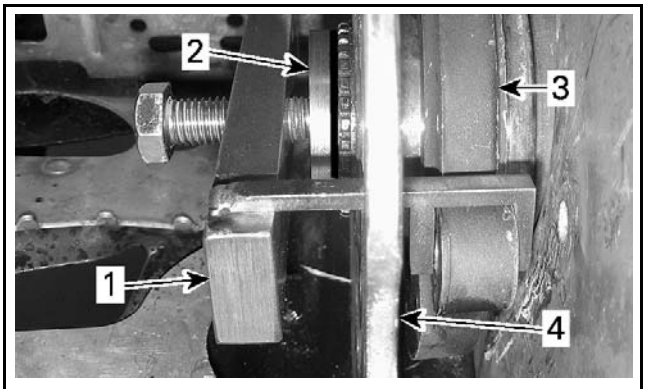

mmr2009-084-002_a

*TYPICAL*
1. *Caliper puller*
2. *Protective cap*
3. *Caliper bracket*
4. *Brake disc*

13. Tighten caliper puller bolt to separate caliper from drive axle bearing.

**NOTICE** Never use an impact tool to operate caliper puller. The caliper or the puller could break.

14. When brake disc is out of splines, remove it.

15. Remove caliper.

**NOTICE** Do not let caliper hang by the hose and do not stretch or twist the hose.

## Inspecting the Caliper

1. Check caliper pistons for:
   - Proper operation
   - Rust
   - Scratches
   - Leaks.
2. Check caliper bracket for:
   - Cracks
   - Rust on bearing shoulder (clean with a steel wood).
3. Replace caliper if required.

## Installing the Caliper

1. Using your fingers or a small piece of wood, push both pistons into their bores.
2. Clean brake caliper bearing shoulder with fine steel wool.
3. Apply LOCTITE 767 (ANTISEIZE LUBRICANT) (P/N 293 800 070) on drive axle splines and on bearing shoulder of caliper bracket.

mmr2017-042-009

*DRIVE AXLE SPLINES*

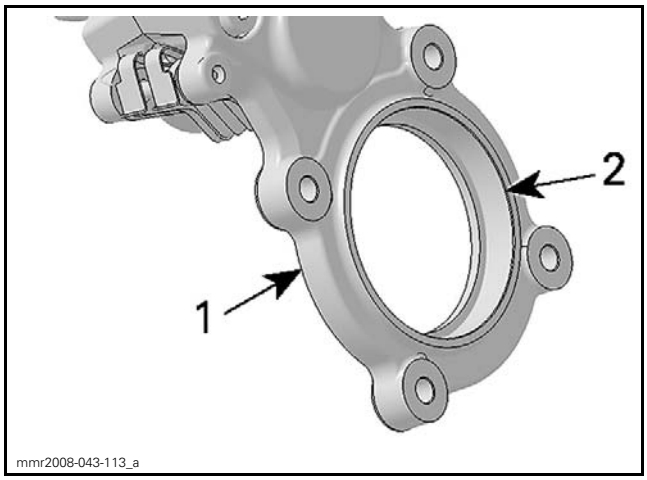


*1. Caliper bracket*
*2. Bearing shoulder*

4. Insert brake disc in the caliper. The brake disc collar must be inserted in the caliper bracket.

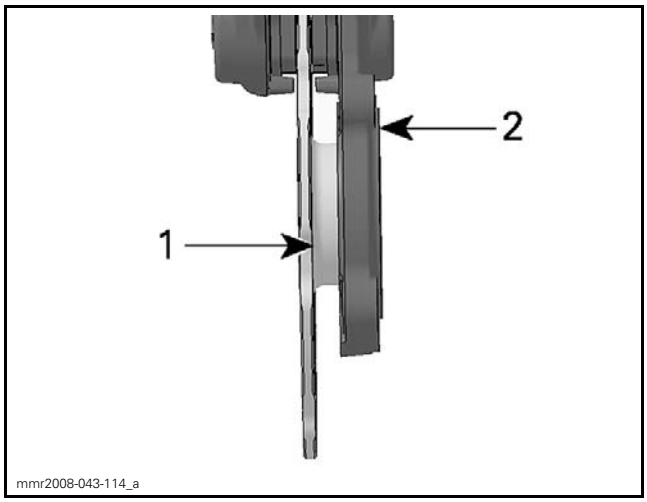


*1. Brake disc collar*
*2. Caliper bracket*

5. Ensure bearing flange is properly locked in the frame. Tabs must be properly inserted in frame slots.

*VIEW FROM OUTSIDE FRAME*

6. Align brake disc splines with drive axle splines and push brake disc onto drive axle.
7. Push the caliper bracket over the drive axle bearing.

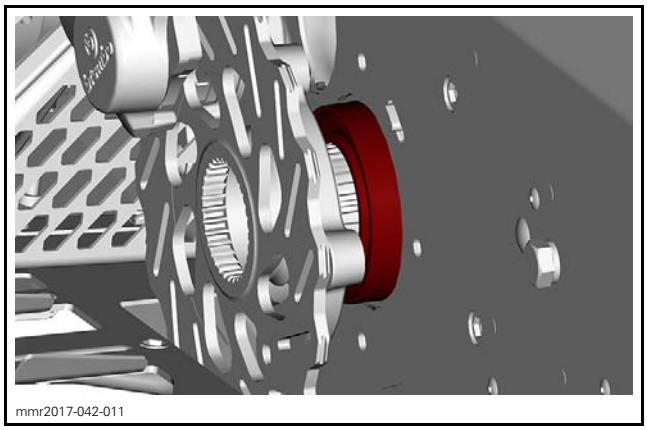


8. Align caliper bracket holes with bearing flange holes and install caliper screws.

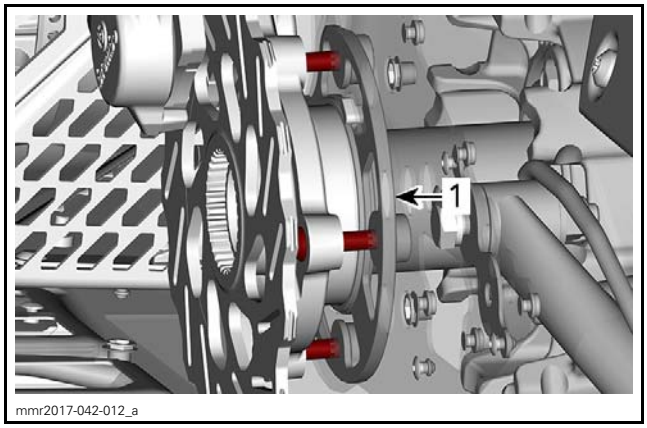


*TYPICAL - TUNNEL IS TRANSPARENT FOR CLARITY*
*1. Bearing flange (inside frame)*

9. HAND TIGHTEN each caliper bracket screw evenly in a criss-cross pattern until bracket is correctly positioned against frame.

**NOTICE** **Never use an air tool to tighten caliper screws. The caliper bracket could crack.**

10. Install the brake pads. Refer to procedure in this subsection.
11. Install the brake disc circlip.
12. Tighten the brake caliper screws to specification.

| TIGHTENING TORQUE | |
|---|---|
| Caliper screws | 24.5 N•m ± 3.5 N•m (18 lbf•ft ± 3 lbf•ft) |

13. Apply brake fluid on Banjo fitting threads.
14. Install the Banjo fitting with two new sealing washers.
15. Tighten Banjo fitting to specification.

| TIGHTENING TORQUE | |
|---|---|
| Banjo fitting | 35 N•m ± 1 N•m (26 lbf•ft ± 1 lbf•ft) |

16. Fill and bleed the brake system. Refer to *PERIODIC MAINTENANCE PROCEDURES* subsection.
17. Install all other removed parts.
18. Check the operation of the brake carefully before riding the snowmobile.

# BRAKE DISC

## Inspecting the Brake Disc (Not Removed)

1. Remove the disc brake protective cover.
2. Check for scoring, cracking or bending, replace as required.
3. Measure brake disc thickness. If the brake disc is out of specification, replace it with a new one.

**NOTICE** **Brake disc should never be machined.**

| BRAKE DISC SPECIFICATION | |
|---|---|
| Minimum thickness | 4.5 mm (.177 in) |

## Inspecting the Brake Disc (Removed)

1. Check brake disc splines and drive axle splines for wear or other damages. Replace defective parts.

## Removing and Installing the Brake Disc

Follow procedures for caliper removal and installation.

# MASTER CYLINDER

## Removing the Master Cylinder

NOTE: If the master cylinder is not replaced, omit the steps concerning brake system draining and brake hose removal.

1. Drain brake system, Refer to *PERIODIC MAINTENANCE PROCEDURES* subsection.
2. Remove the Banjo fitting and discard the sealing washers.

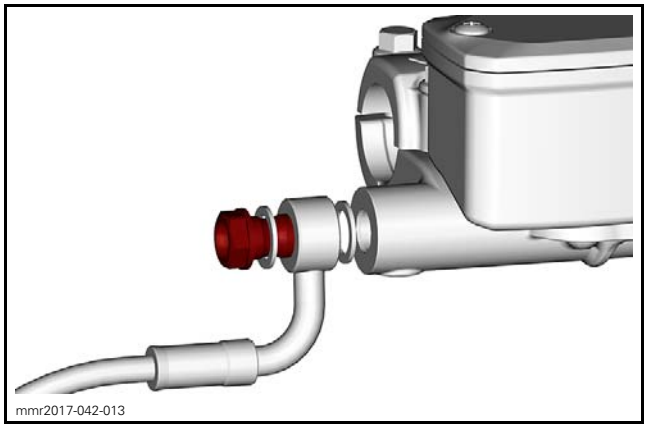
mmr2017-042-013

3. Remove screws and clamp securing master cylinder to handlebar.

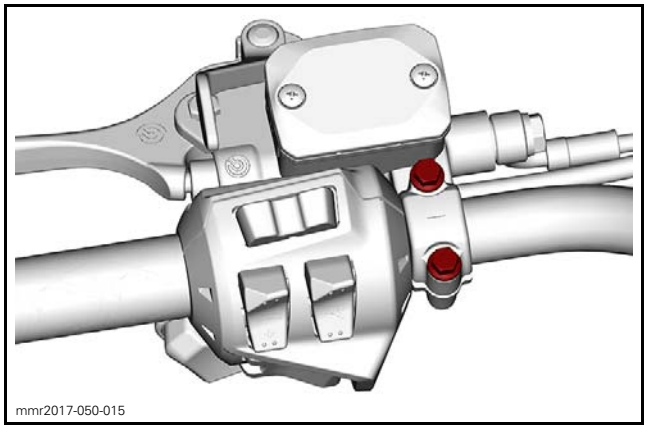
mmr2017-050-015

4. Remove master cylinder.

**NOTICE** **Do not let master cylinder hang by the hose and do not stretch or twist the hose.**

## Inspecting the Master Cylinder

1. Discard all remaining fluid inside master cylinder reservoir.
2. Check if the reservoir cap seal is brittle, hard or damaged. Replace as necessary.
3. If the reservoir is damaged or leaking, replace master cylinder.

4. Check if brake lever is bent, cracked or otherwise damaged. Replace brake lever if required.

### Installing the Master Cylinder

1. Place the master cylinder on the handlebar.
2. Install master cylinder retaining clamp with its arrow pointing toward the front of vehicle.

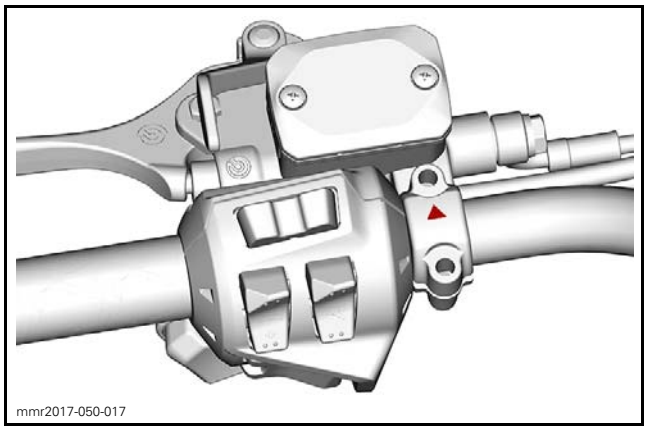


3. Install master cylinder clamp screws and tighten loosely.
4. With the handlebar in the straight ahead position, place the reservoir parallel to the ground.
5. Tighten master cylinder clamp screws to specification.

| TIGHTENING TORQUE | |
|---|---|
| Master cylinder clamp screws | 9 N•m ± 1 N•m (80 lbf•**in** ± 9 lbf•**in**) |

6. Install the Banjo fitting with two new sealing washers.
7. Tighten Banjo fitting to specification.

| TIGHTENING TORQUE | |
|---|---|
| Banjo fitting | 27 N•m ± 1 N•m (20 lbf•ft ± 1 lbf•ft) |

8. Fill and bleed the brake system. Refer to *PERIODIC MAINTENANCE PROCEDURES* subsection.
9. Install brake light switch.
10. Install steering cover.

## BRAKE LEVER

### Lubricating the Brake Lever

After using brake cleaner in the brake lever area or after adding brake oil in reservoir, check brake lever pivot lubrication. Add SYNTHETIC GREASE (P/N 779162) on brake lever pivot as necessary.

### Replacing the Brake Lever

Lubricate brake lever pivot using SYNTHETIC GREASE (P/N 779162).

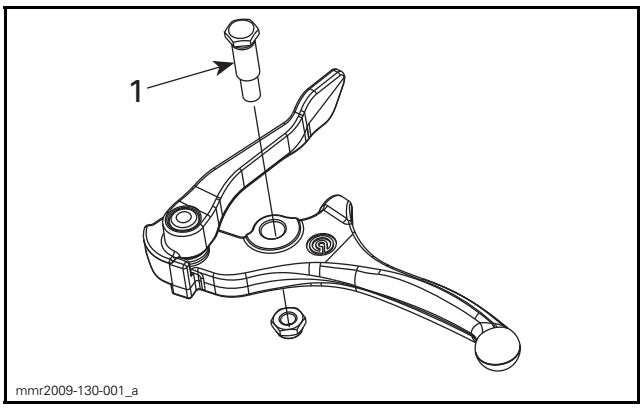


*TYPICAL*
*1. Lubricate brake lever pivot*

Tighten the pivot nut of brake lever to specification.

| TIGHTENING TORQUE | |
|---|---|
| Brake lever pivot nut | 6 N•m ± 1 N•m (53 lbf•**in** ± 9 lbf•**in**) |

## BRAKE LIGHT SWITCH

### Testing the Brake Light Switch Resistance

1. Remove the upper body module. Refer to *BODY* subsection.
2. Disconnect the brake light switch connector located on the ECM.

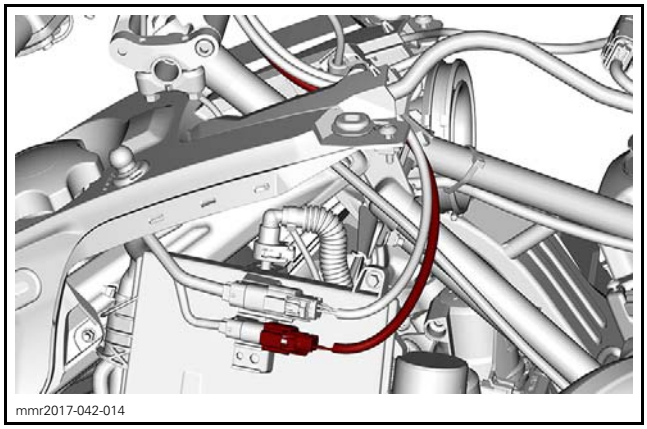


3. Validate switch operation with an ohmmeter as follows.

| LH HANDLEBAR CONNECTOR (4-PIN) | | |
|---|---|---|
| SWITCH | WIRE | RESISTANCE |
| Released | Pin 2 and pin 4 | Infinite (OL) |
| Squeezed and held | | Close to 0 Ω |

If readings do not correspond to the above specifications, replace switch.

If readings correspond to the above specifications, check fuse, wiring and connectors going to switch. Repair or replace defective part(s).

## Removing the Brake Light Switch

1. Remove the upper body module. Refer to *BODY* subsection.
2. Disconnect the brake light switch connector located on the ECM.

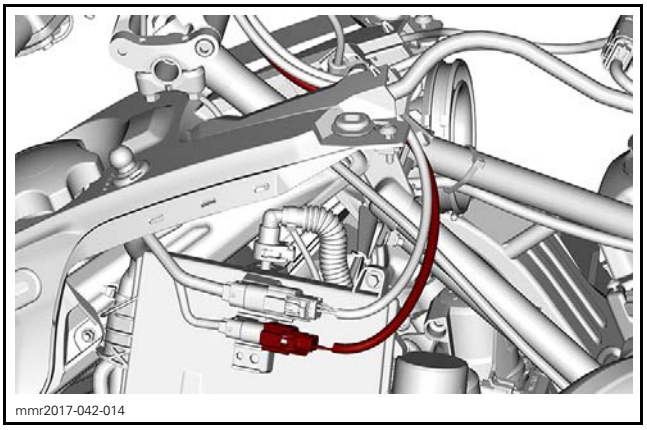
mmr2017-042-014

3. Slip a small screwdriver between brake light switch and master cylinder housing and separate them.

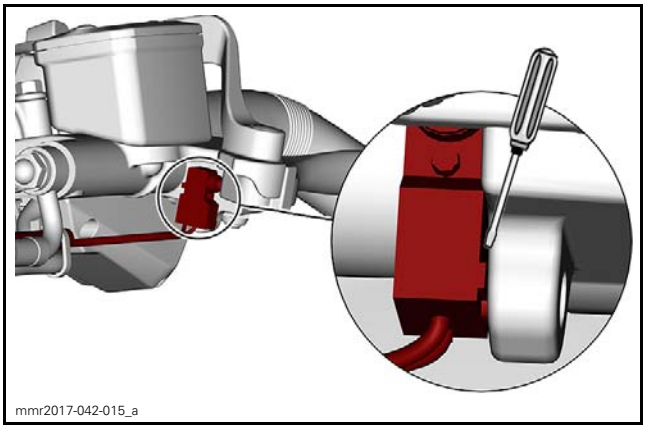
mmr2017-042-015_a

4. Cut all locking ties securing switch wires.

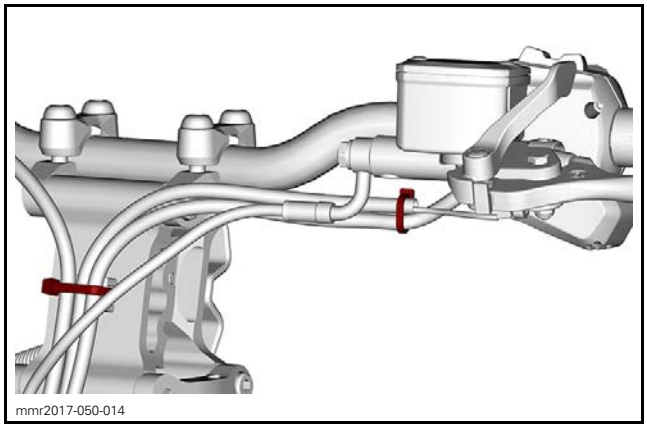
mmr2017-050-014

*TYPICAL*

5. Remove switch wires from connector. Refer to *WIRING HARNESS AND CONNECTORS*.

NOTE: Check wires location for reinstallation.

## Installing the Brake Light Switch

The installation is the reverse of the removal procedure. However, pay attention to the following.

Plug switch wires into connector as per following tables.

| LH HANDLEBAR CONNECTOR (4-PIN) | |
|---|---|
| WIRE | CONNECTOR |
| GRAY | Pin 4 |
| BROWN | Pin 2 |

Check if switch is working properly.

Install new locking ties.

# BRAKE HOSE

## Replacing the Brake Hose

1. Remove the console. Refer to *BODY* subsection.
2. Drain the brake system, refer to *PERIODIC MAINTENANCE PROCEDURES* subsection.
3. Remove Banjo fittings at both ends of hose. Refer to *REMOVING THE MASTER CYLINDER* and *REMOVING THE CALIPER*.
4. Remove fasteners that secure the hose clamps to the frame.

**NOTICE** **Take care not to overdrill the lower clamp rivet. The fuel tank could be damaged.**

The installation is the reverse of the removal procedure. However, pay attention to the following.

Install new sealing washer.

| TIGHTENING TORQUE | |
|---|---|
| Middle clamp nut | 2.3 N•m ± 0.2 N•m (20 lbf•**in** ± 2 lbf•**in**) |
| Caliper Banjo fitting | 35 N•m ± 1 N•m (26 lbf•ft ± 1 lbf•ft) |
| Master cylinder Banjo fitting | 27 N•m ± 1 N•m (20 lbf•ft ± 1 lbf•ft) |

# CHAINCASE (4-STROKE ENGINES

## SERVICE TOOLS


| Description | Part Number | Page |
|---|---|---|
| BEARING PULLER/PUSHER | 529 036 111 | 6 |
| BEARING PULLER/PUSHER | 529 036 112 | 6 |


## SERVICE TOOLS – OTHER SUPPLIER


| Description | Part Number | Page |
|---|---|---|
| SNAP-ON SEAL PULLER | YA105 | 7 |

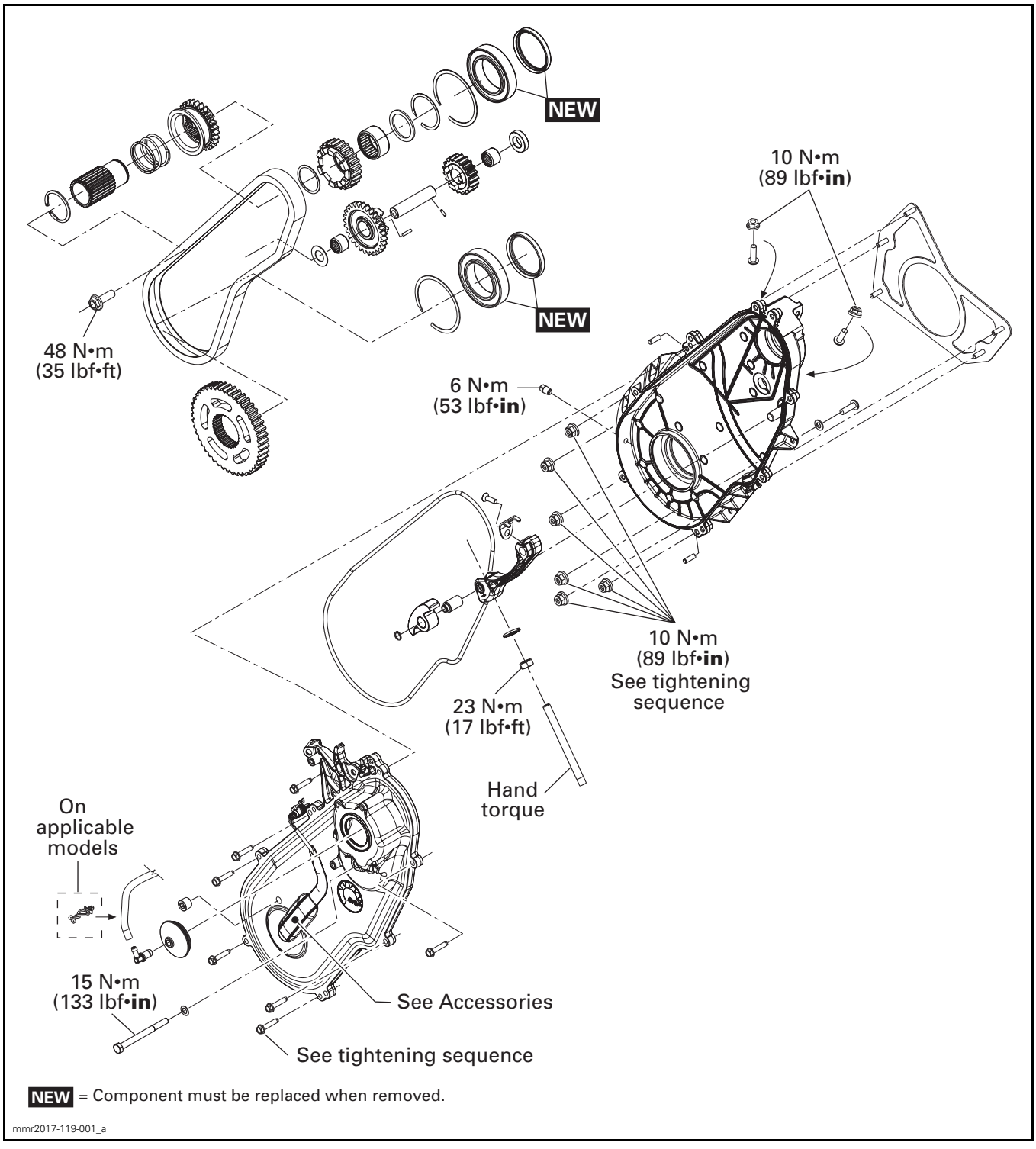


**NEW** = Component must be replaced when removed.

mmr2017-119-001_a

# GENERAL

During assembly/installation, use the torque values and service products as in the exploded view.

Clean threads before applying a threadlocker. Refer to *SELF-LOCKING FASTENERS* and *LOCTITE APPLICATION* at the beginning of this manual for complete procedure.

**⚠ WARNING**

**Torque wrench tightening specifications must be strictly adhered to.**
**Locking devices when removed (e.g.: locking tabs, elastic stop nuts, cotter pin, etc.) must be replaced with new ones.**

***NOTICE*** **Hoses, cables and locking ties removed during a procedure must be reinstalled as per factory standards.**

# PROCEDURES

## CHAINCASE

### Chaincase Cover Removal

#### *With Mechanical Reverse*

Remove the support attached to chaincase. Refer to *MECHANICAL REVERSE* subsection.

#### *With Electronic Reverse*

Remove the electronic shift unit. Refer to *ELECTRONIC REVERSE* subsection.

#### *With Mechanical or Electronic Reverse*

1. Apply parking brake.
2. Remove muffler. Refer to *EXHAUST SYSTEM* subsection.
3. Remove battery. Refer to *CHARGING SYSTEM* subsection.
4. Remove battery rack.
5. Disconnect speed sensor connector.

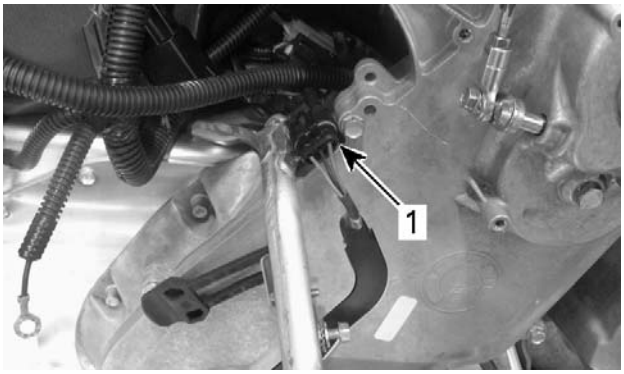


mmr2009-131-023_a

*TYPICAL*
*1. Speed sensor connector*

6. Remove reverse gear retaining screw.

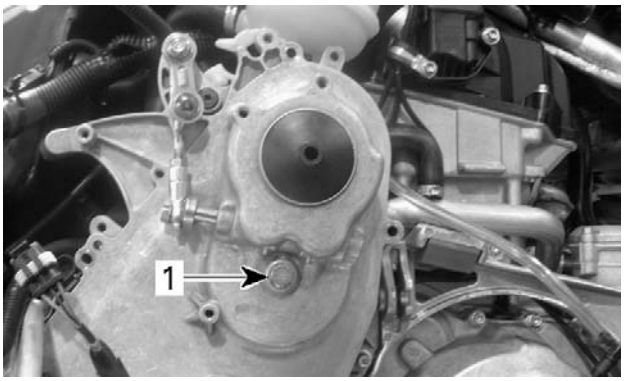


mmr2009-131-025_a

*TYPICAL*
*1. Reverse gear retaining screw*

7. Remove lower retaining screw from shifter link rod.

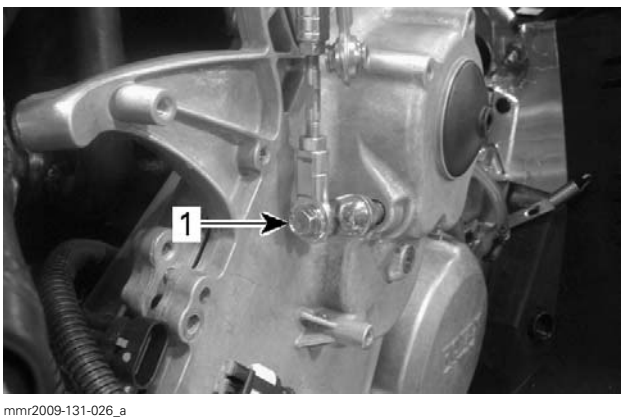


mmr2009-131-026_a

*TYPICAL*
*1. Shifter link rod lower retaining screw*

8. On applicable models, remove RH side panel strap from frame.

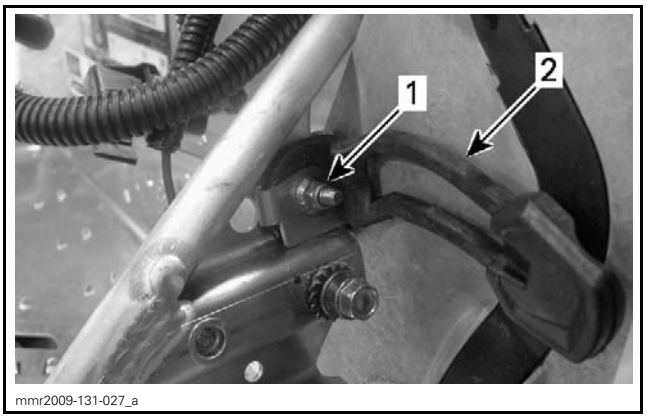


*1200 4-TEC SHOWN*
1. *Retaining nut*
2. *Side panel strap*

9. Place a container under vehicle in line with chaincase drain plug to catch chaincase oil.

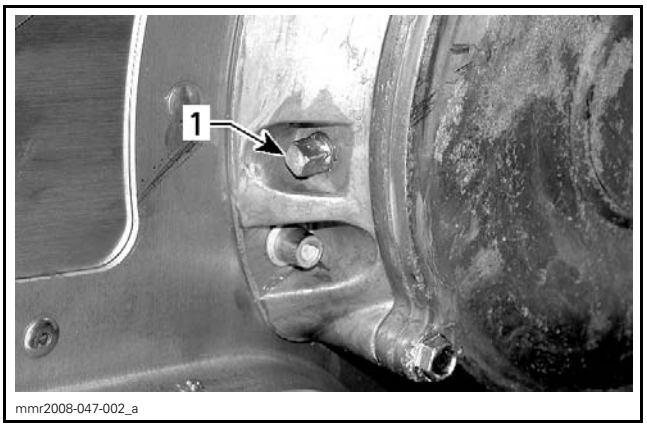


1. *Magnetic check plug*

10. Unscrew and remove chaincase cover screws.

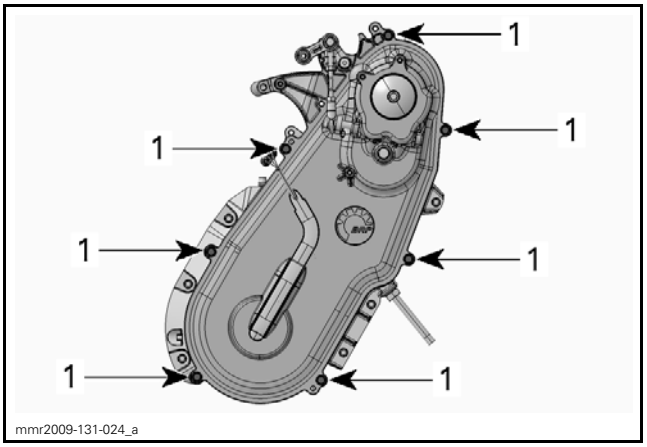


1. *Chaincase cover screws*

11. Pull the bottom of chaincase cover to drain the remaining oil.
12. Wait a moment then remove the cover completely.

## Chaincase Disassembly

1. Apply parking brake.
2. Remove chaincase cover. Refer to *CHAINCASE COVER REMOVAL* in this subsection.

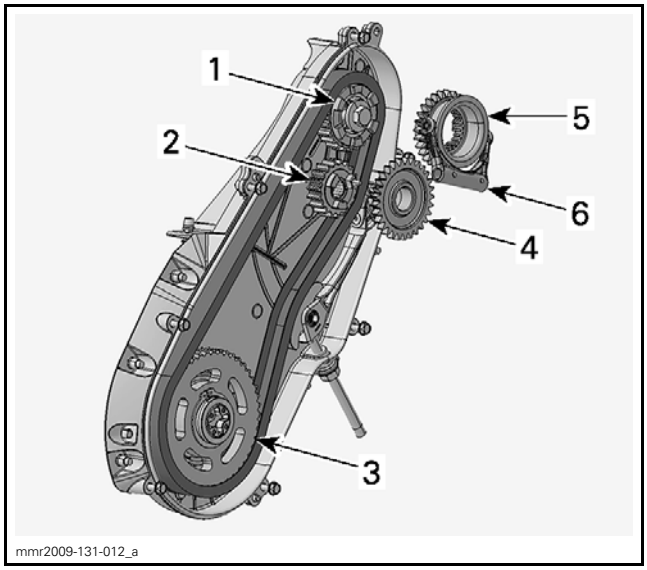


1. *Upper sprocket*
2. *Reverse sprocket*
3. *Lower sprocket*
4. *Reverse gear*
5. *Sliding gear*
6. *Shift fork*

### Shift Fork (in Chaincase Cover)

1. Remove spring pins using a punch as shown.

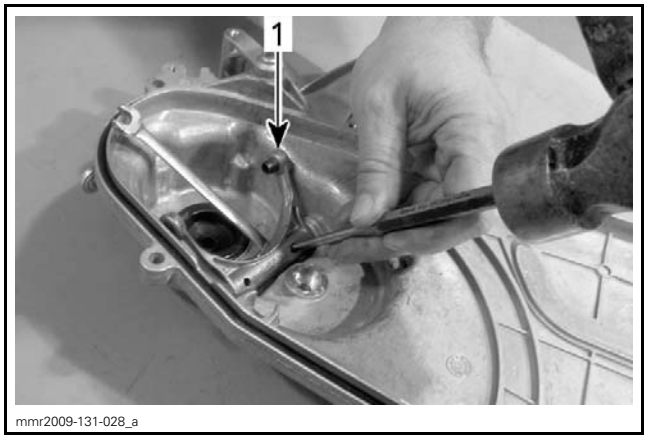


1. *Shift fork*

2. Pull out shift rod from chaincase cover.
3. Remove shift fork.

### Gears and Sprockets

NOTE: Do not remove tension on drive chain for the moment.

1. Remove upper screw that hold sliding gear assembly.

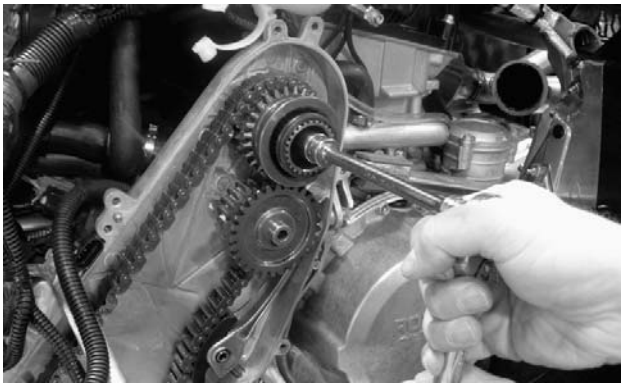
mmr2009-131-030

*UPPER SCREW REMOVAL*

2. Remove chain tensioner from chaincase.
3. Remove sliding gear assembly, reverse sprocket and reverse gear simultaneously.

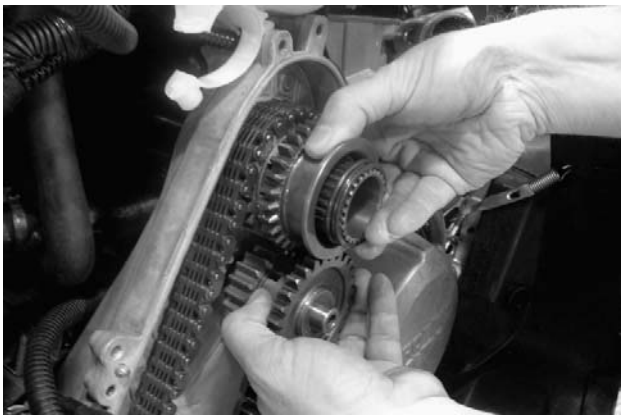
mmr2009-131-031

## Sliding Gear Disassembly

**NOTICE** **Do not use the press to compress the sliding gear while disassembling. Use the press ONLY as a guide to ensure that the spring tension will be released safely.**

1. Install sliding gear assembly on a press.
2. Position a 25 mm (1 in) deep socket on the upper sprocket side.
3. Adjust press rod on the socket, do not apply pressure on the assembly.

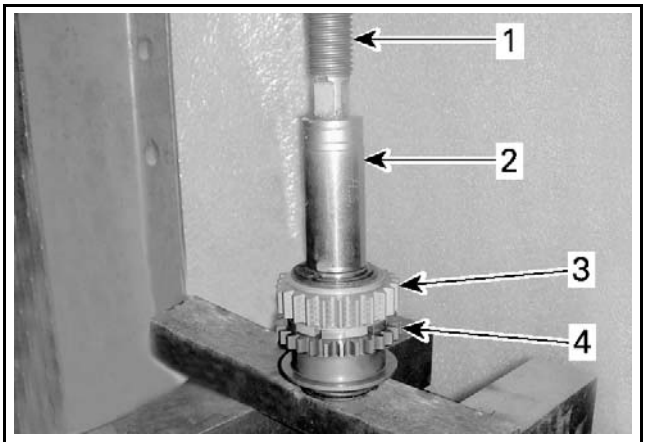

mmr2009-131-032_a

1. *Press rod*
2. *Deep socket*
3. *Upper sprocket*
4. *Sliding gear*

4. Firmly retain upper sprocket with one hand.
5. Remove circlip from coupling shaft.

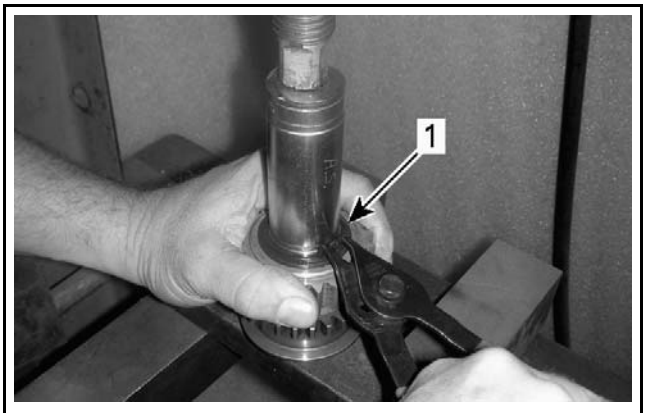

mmr2009-131-033_a

1. *Circlip*

6. Carefully release spring tension.

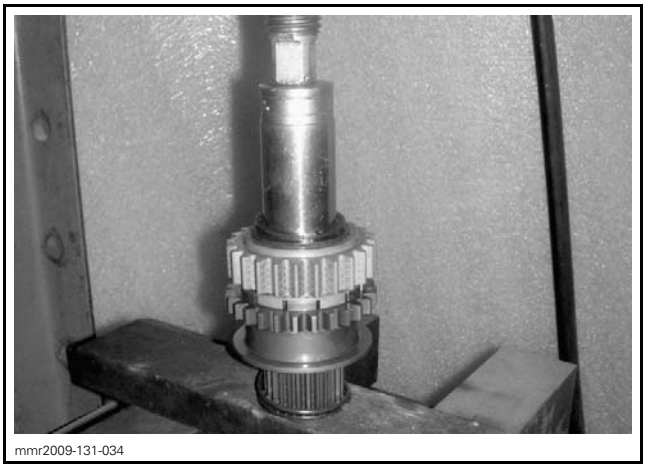
mmr2009-131-034

7. Remove upper sprocket and sliding gear from press.

### Chain and Lower Sprocket

1. Remove the lower sprocket circlip.

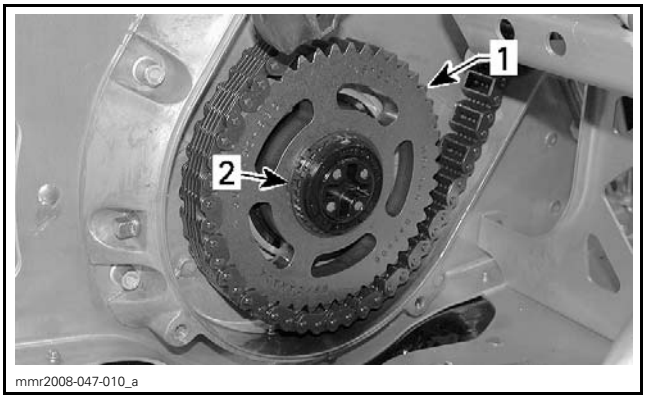

mmr2008-047-010_a

*1. Lower sprocket*
*2. Circlip*

2. Remove lower sprocket and drive chain simultaneously.

### Chain Tensioner

1. Unscrew lock nut from tensioner adjustment screw.
2. Remove tensioner adjustment screw from tensioner arm.
3. Remove tensioner arm from chaincase.

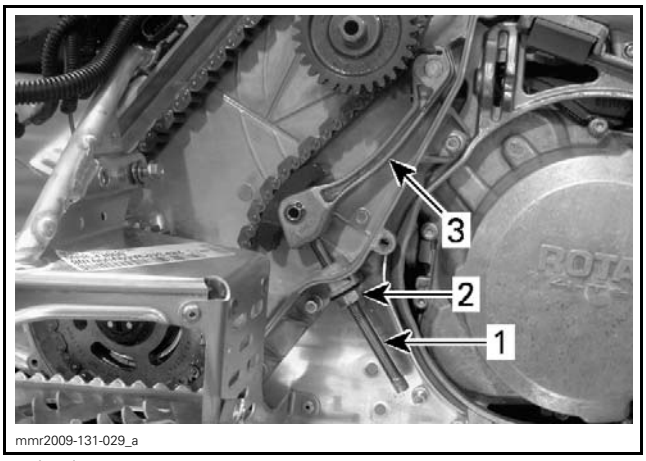

mmr2009-131-029_a

*1. Lock nut*
*2. Tensioner adjustment screw*
*3. Tensioner arm*

### Chaincase Bearings

NOTE: This procedure can be applied either for the countershaft bearing or the drive shaft bearing.

1. Remove the countershaft or the drive axle, depending which bearing is replaced. Refer to *DRIVE SYSTEM AND BRAKE* section.
2. Remove the snap ring securing bearing into chaincase.

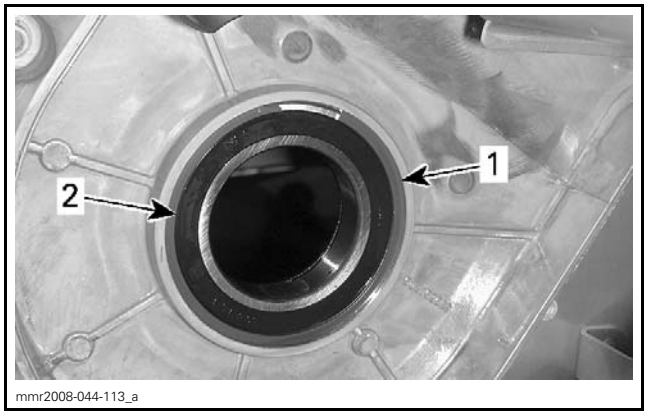

mmr2008-044-113_a

*DRIVE AXLE BEARING SHOWN*
*1. Snap ring*
*2. Bearing*

3. Install the appropriate bearing extractor:

| REQUIRED TOOLS | |
|---|---|
| BEARING PULLER/PUSHER (P/N 529 036 111) **for countershaft** | |
| BEARING PULLER/PUSHER (P/N 529 036 112) **for drive axle** | |

4. Install the extractor/installer tool behind the bearing.

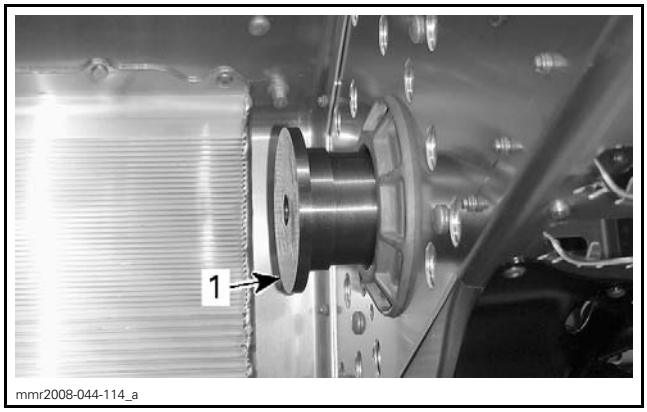

mmr2008-044-114_a

*1. Extractor/installer tool*

5. Install the extractor cup over bearing.
6. Tighten the extractor/installer tool screw to remove the bearing.

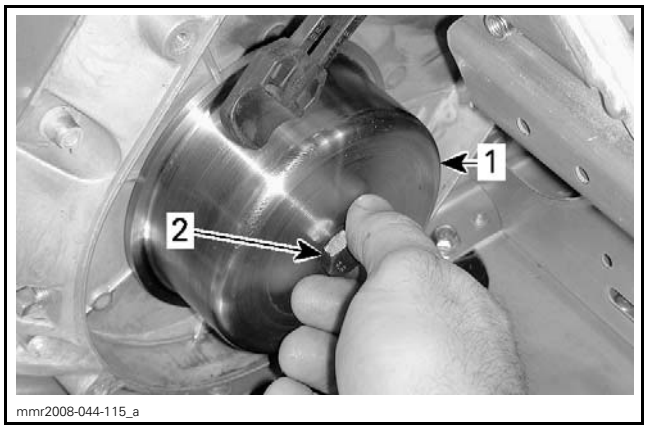

mmr2008-044-115_a

1. *Extractor cup*
2. *Tighten to remove bearing*

7. Using a seal puller such as the SNAP-ON SEAL PULLER (P/N YA105), remove and discard the oil seal.

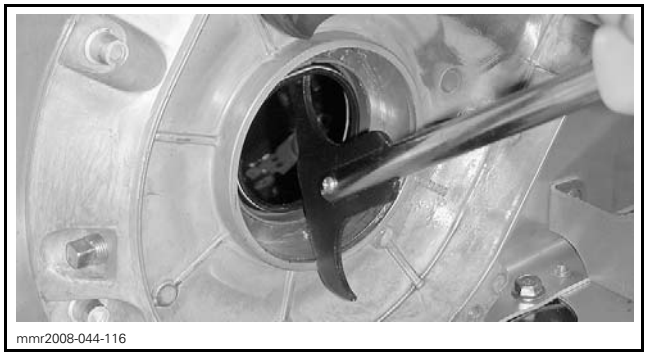
mmr2008-044-116

## Chaincase Removal

1. Disassemble chaincase. Refer to *CHAINCASE DISASSEMBLY* in this subsection.
2. Remove drive axle. Refer to *DRIVE SYSTEM AND BRAKE* subsection.
3. Remove countershaft. Refer to *DRIVE SYSTEM AND BRAKE* subsection.
4. Using a small angle grinder, remove the following rivet heads.

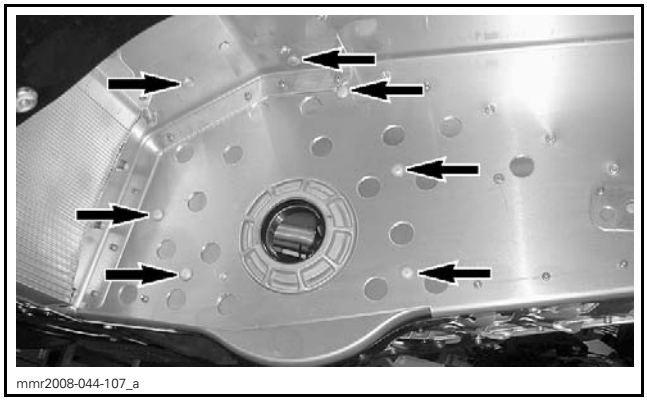
mmr2008-044-107_a

5. Using a 1/4 in drill bit, remove rivet located on right side of chaincase.

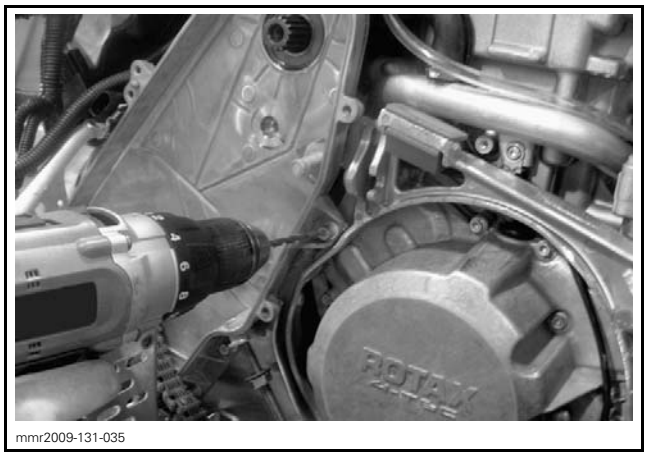

mmr2009-131-035

6. Unscrew bolt behind the top of chaincase.

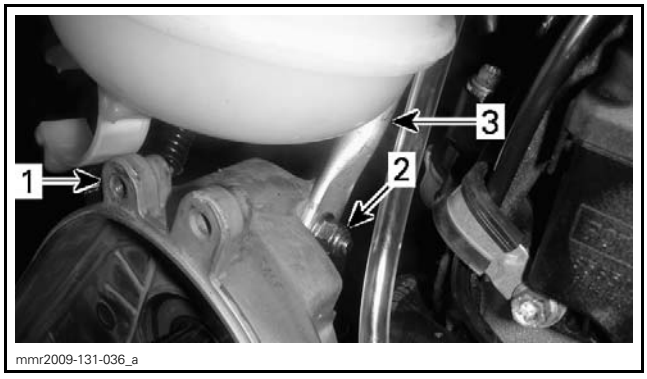

mmr2009-131-036_a

1. *Chaincase*
2. *Retaining bolt*
3. *RH side frame member*

7. Using 2 large pry bars inserted between chaincase and frame, pry chaincase out of vehicle.

## Chaincase Inspection

### Chaincase Cover

Inspect cover for cracks or other damages, replace if necessary.

Inspect cover front and rear stopper for crack, replace if necessary.

Inspect O-ring inside cover is brittle, hard or damaged, replace if necessary.

### Shift Fork, Lever and Link Rod

Inspect shift fork for straightness, replace if necessary.

Inspect shift fork wear or other damages, replace if necessary.

Inspect shift lever for straightness and for rotation movement, replace if necessary.

Inspect link rod for straightness and other damages, replace if necessary.

### Spring

Measure spring free length, replace if out of specification.

| TUNDRA 600 ACE | |
|---|---|
| SPRING FREE LENGTH | |
| Service limit | 50 mm ± 1 mm (1.969 in ± .039 in) |

| ALL OTHER 600 ACE/900ACE/1200 4-TEC | |
|---|---|
| SPRING FREE LENGTH | |
| Service limit | 48 mm ± 1 mm (1.89 in ± .039 in) |

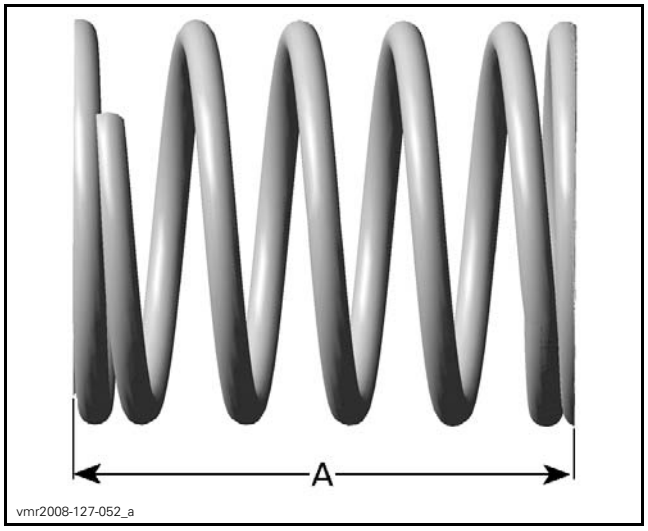


*TYPICAL*
*A. Free length*

### Chain, Gears and Sprockets

Inspect the chain, gears and sprockets for:
- Wear
- Cracks
- Damages teeth
- Missing links.

If a problem is detected:
- Replace drive chain and sprockets as an assembly.
- Replace upper sprocket and sliding gear as an assembly.
- Replace reverse sprocket and reverse gear as an assembly.

### Chain Tensioner

Inspect chain tensioner sliders for wear or other damages, replace if necessary.

Inspect threads of tensioner adjustment screw for damages or wear, replace if necessary.

Inspect rubber washer condition, replace if necessary.

### Bearings

Inspect all bearings for smooth operation:
- If rough or excessive play is detected, replace bearing.

## Chaincase Installation

To install the chaincase, have the following parts in hands:

| PARTS TO INSTALL CHAINCASE | | |
|---|---|---|
| QTY | FASTENERS | P/N |
| 1 | Mounting plate | 518 325 816 |
| 3 | M6 x 20 hexagonal flanged bolt | 207 662 034 |
| 8 | M6 elastic flanged nut | 233 261 434 |

1. Install mounting plate.

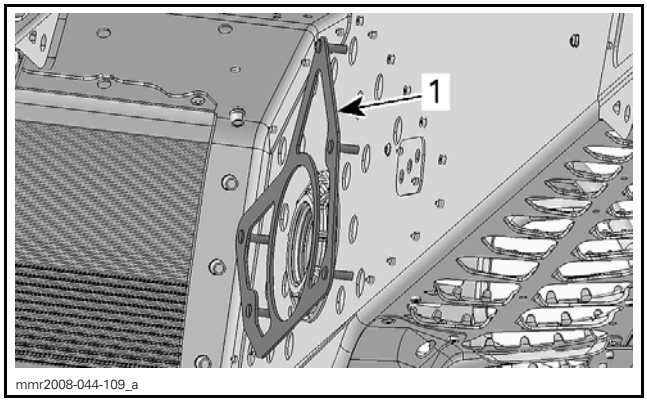


*UNDERNEATH FRAME*
*1. Mounting plate*

2. Install chaincase.
3. Install 5 elastic flanged nuts to secure chaincase.

NOTE: Unless otherwise noted, bolts and nuts holding the chaincase must be installed loosely FIRST.

4. Install 2 flanged bolts and secure with elastic flanged nuts.

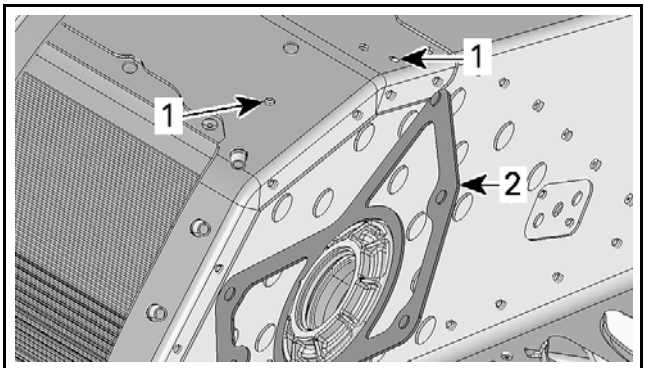

mmr2008-044-110_a

*1. Install bolt here*
*2. Mounting plate*

5. Install a flange bolt to secure chaincase to RH side member.

mmr2008-047-015

*NUT LOCATED OUTSIDE*

6. Install bolt behind the top of chaincase.
7. Tighten all nuts to specification as per the following sequence.

| TIGHTENING TORQUE | |
|---|---|
| Chaincase retaining nuts | 10 N•m (89 lbf•**in**) |

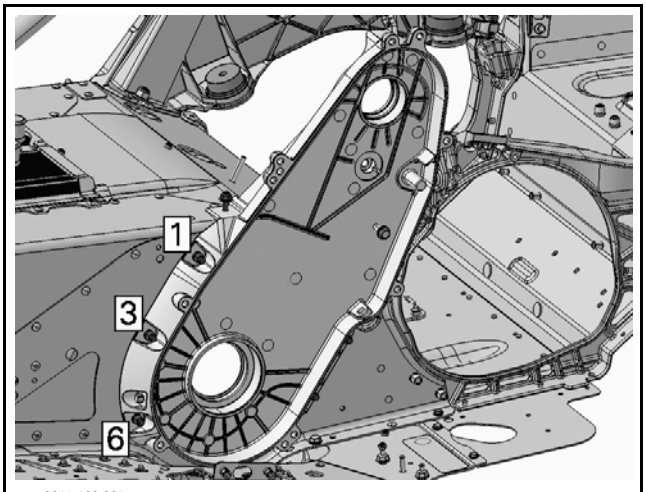

mmr2011-103-001_a

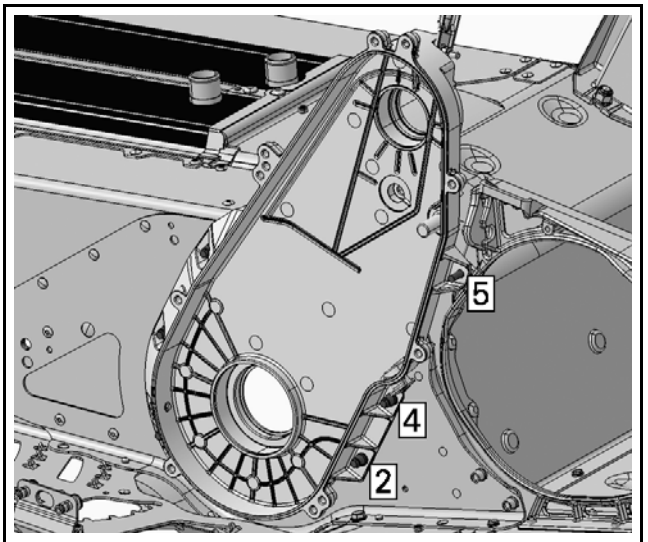

mmr2011-103-002_a

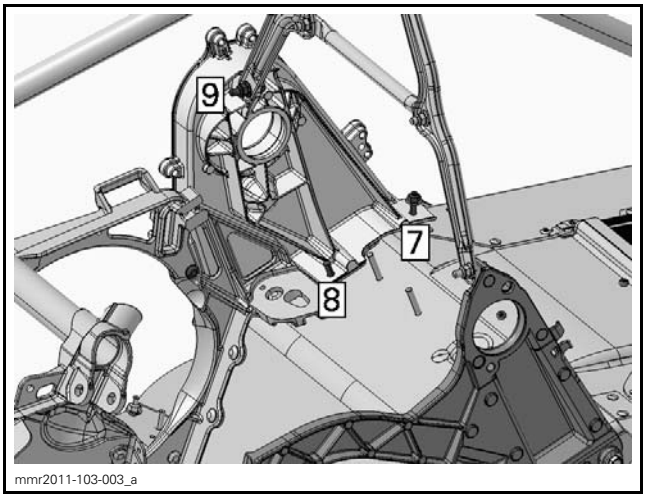

mmr2011-103-003_a

8. Install countershaft. Refer to *DRIVE SYSTEM AND BRAKE* subsection.
9. Install drive axle. Refer to *DRIVE SYSTEM AND BRAKE* subsection.
10. Assemble chaincase. Refer to *CHAINCASE ASSEMBLY* in this subsection.

## Chaincase Assembly

### Chaincase Bearings

NOTE: This procedure can be applied either for the countershaft bearing or the drive shaft bearing.

1. Install the NEW oil seal on the extractor/installer tool. Position the lips toward bearing.

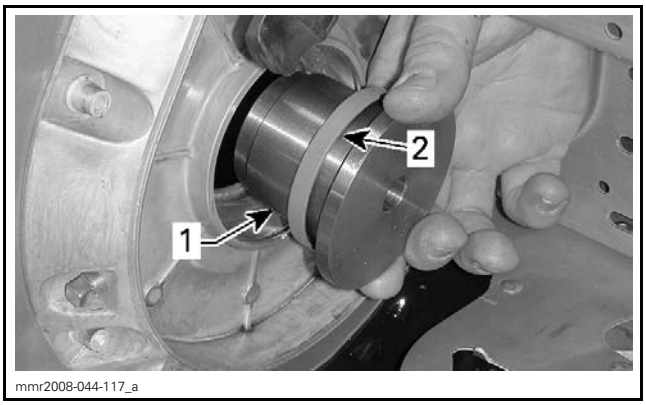

mmr2008-044-117_a

*1. Extractor/installer tool*
*2. Oil seal lips on this side*

2. Install extractor cup inside frame.

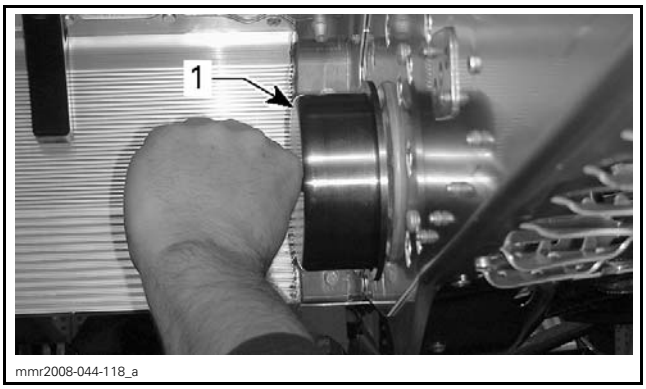

mmr2008-044-118_a

*1. Extractor cup*

3. Tighten extractor/installer tool screw to install the oil seal.
4. Install large washer and extractor/installer tool screw inside frame.

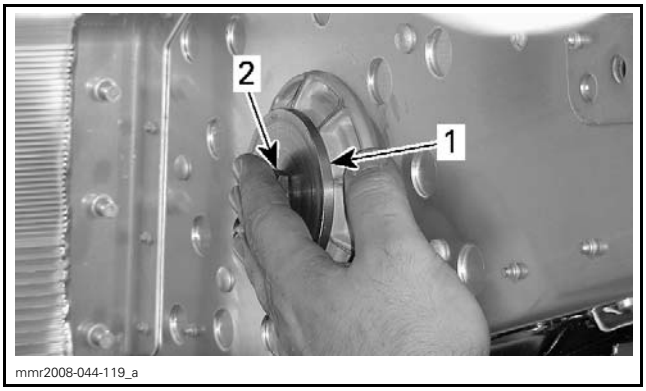

mmr2008-044-119_a

*1. Large washer*
*2. Extractor/installer tool screw*

5. In chaincase, install NEW bearing and extractor/installer tool.

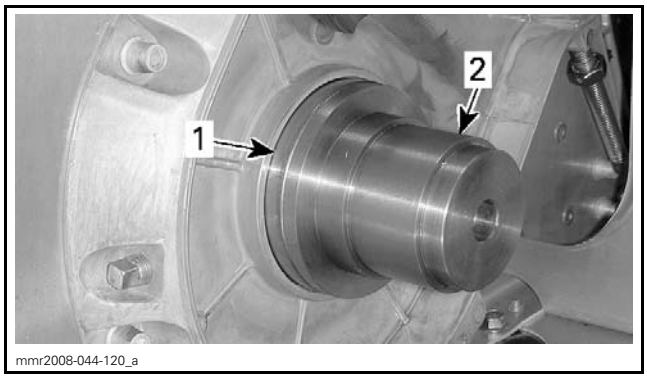

mmr2008-044-120_a

*1. Bearing*
*2. Extractor/installer tool*

6. Tighten extractor/installer tool screw to install the bearing.
7. Remove tool.

### Chain Tensioner

The installation procedure is the reverse of removal.

### Chain and Lower Sprocket

The installation procedure is the reverse of removal, however pay attention to the following.

Install sprocket with its inscription outward.

### Sliding Gear

**NOTICE** **Do not use the press to compress the sliding gear while assembling. Use the press ONLY as a guide to ensure that the spring tension will be applied safely.**

The installation procedure is the reverse of removal, however pay attention to the following.

Install coupling shaft circlip on the splines side.

Install upper sprocket circlip on a press.

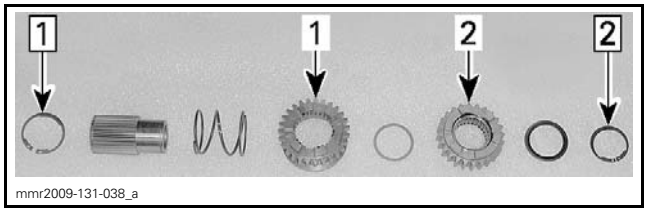

mmr2009-131-038_a

*Step 1: Install splines circlip*
*Step 2: Install upper sprocket circlip on a press*

*1. Sliding gear*
*2. Upper sprocket*

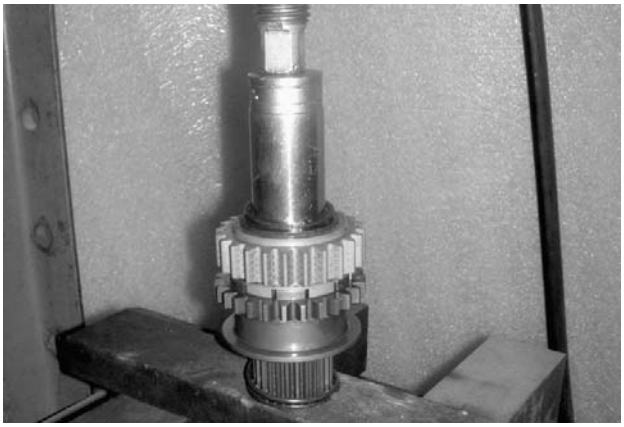
mmr2009-131-034

### Gears and Sprockets

The installation procedure is the reverse of removal, however pay attention to the following.

Assemble reverse sprocket and reverse gear as per the following illustration.

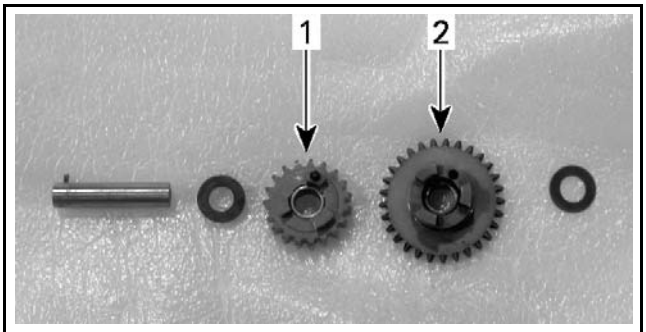

mmr2009-131-039_a

1. *Reverse sprocket*
2. *Reverse gear*

Install sliding gear assembly, reverse sprocket and reverse gear simultaneously.

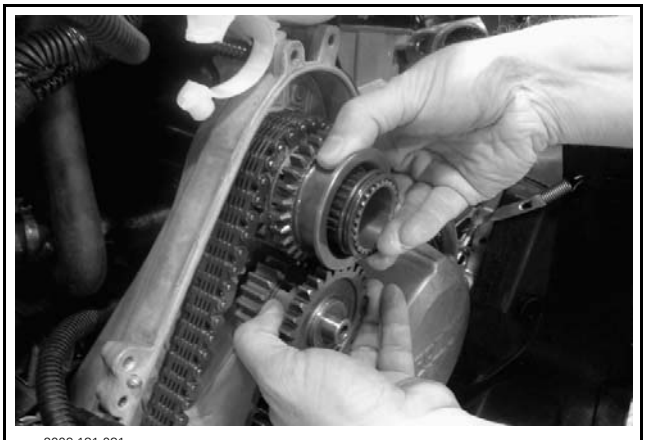
mmr2009-131-031

Install upper screw that hold sliding gear assembly. (do not tighten for the moment).

Adjust tension on the drive chain. Refer to *DRIVE CHAIN ADJUSTMENT* in this subsection.

Apply parking brake.

Torque upper screw to specifications.

| TIGHTENING TORQUE | |
|---|---|
| Upper screw (securing the sliding gear) | 48 N•m (35 lbf•ft) |

### Shift Fork (in Chaincase Cover)

The installation procedure is the reverse of removal, however pay attention to the following.

Position shift fork lever toward the inside.

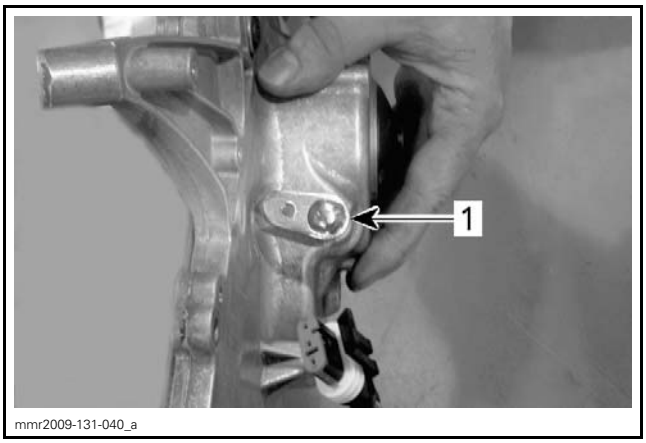

mmr2009-131-040_a

1. *Shift fork lever*

Install spring pins into both holes.

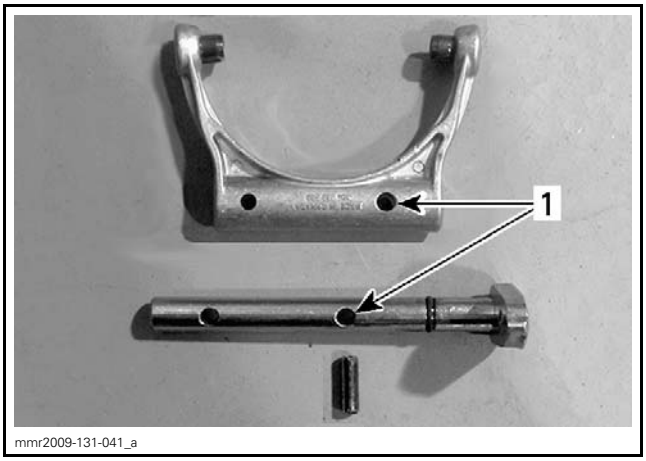

mmr2009-131-041_a

*TYPICAL*
1. *Large hole*

Ensure that seal is properly seated on the chaincase cover.

### Chaincase Cover

Install chaincase cover. Refer to *CHAINCASE COVER* in this subsection.

## Chaincase Cover Installation

The installation procedure is the reverse of removal, however pay attention to the following.

Ensure cover O-ring is positioned correctly in its groove.

Ensure that link rod is positioned with the double reference marks upwards.

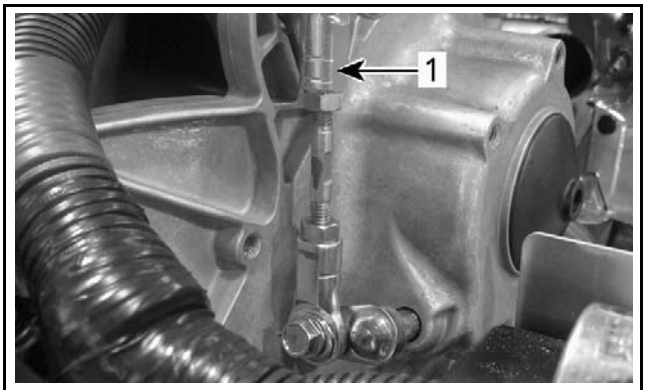


*1. Double reference marks*

Torque chaincase cover screws in accordance with the following sequence.

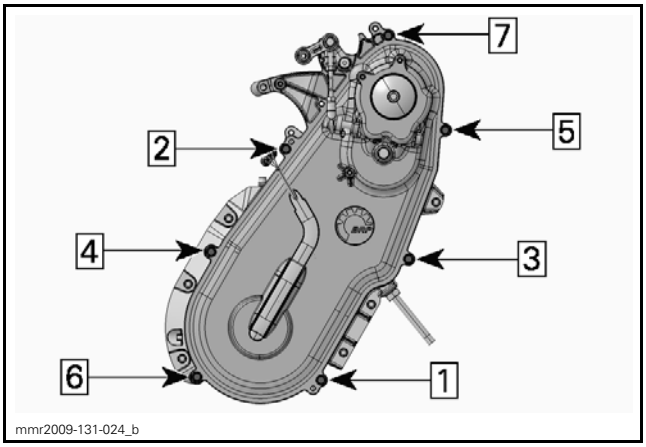


| TIGHTENING TORQUE | |
|---|---|
| CHAINCASE COVER SCREWS | |
| Same chaincase | 10 N•m (89 lbf•**in**) |
| NEW chaincase | 15 N•m (133 lbf•**in**) |

Torque reverse gear retaining screw as per specification.

| TIGHTENING TORQUE | |
|---|---|
| Reverse gear screw | 15 N•m (133 lbf•**in**) |

Install the shift lever and adjust the shift linkage. Refer to *MECHANICAL REVERSE* or *ELECTRONIC REVERSE* depending on the type of vehicle.

Install battery and battery rack. Refer to *CHARGING SYSTEM* subsection.

Install muffler. Refer to *EXHAUST SYSTEM* subsection.

Refill chaincase. Refer to *CHAINCASE OIL* in *PERIODIC MAINTENANCE PROCEDURES* subsection.

# CHAINCASE AND REVERSE

## SERVICE TOOLS

| Description | Part Number | Page |
|---|---|---|
| BEARING PULLER/PUSHER | 529 036 111 | 17 |
| BEARING PULLER/PUSHER | 529 036 112 | 17 |
| ECM ADAPTER TOOL | 529 036 166 | 5 |
| FLUKE 115 MULTIMETER | 529 035 868 | 5 |

## SERVICE PRODUCTS

| Description | Part Number | Page |
|---|---|---|
| LOCTITE 5900 | 293 800 066 | 24 |
| SYNTHETIC CHAINCASE OIL | 779156 | 6 |
| SYNTHETIC GREASE | 779162 | 9 |

Midwest Manuals
Green Manuals
Paperless Manuals For a Better Tomorrow www.green-manuals.com
If you bought this manual from any other seller please leave them NEGATIVE feedback and notify me at bestshopmanuals@gmail.com

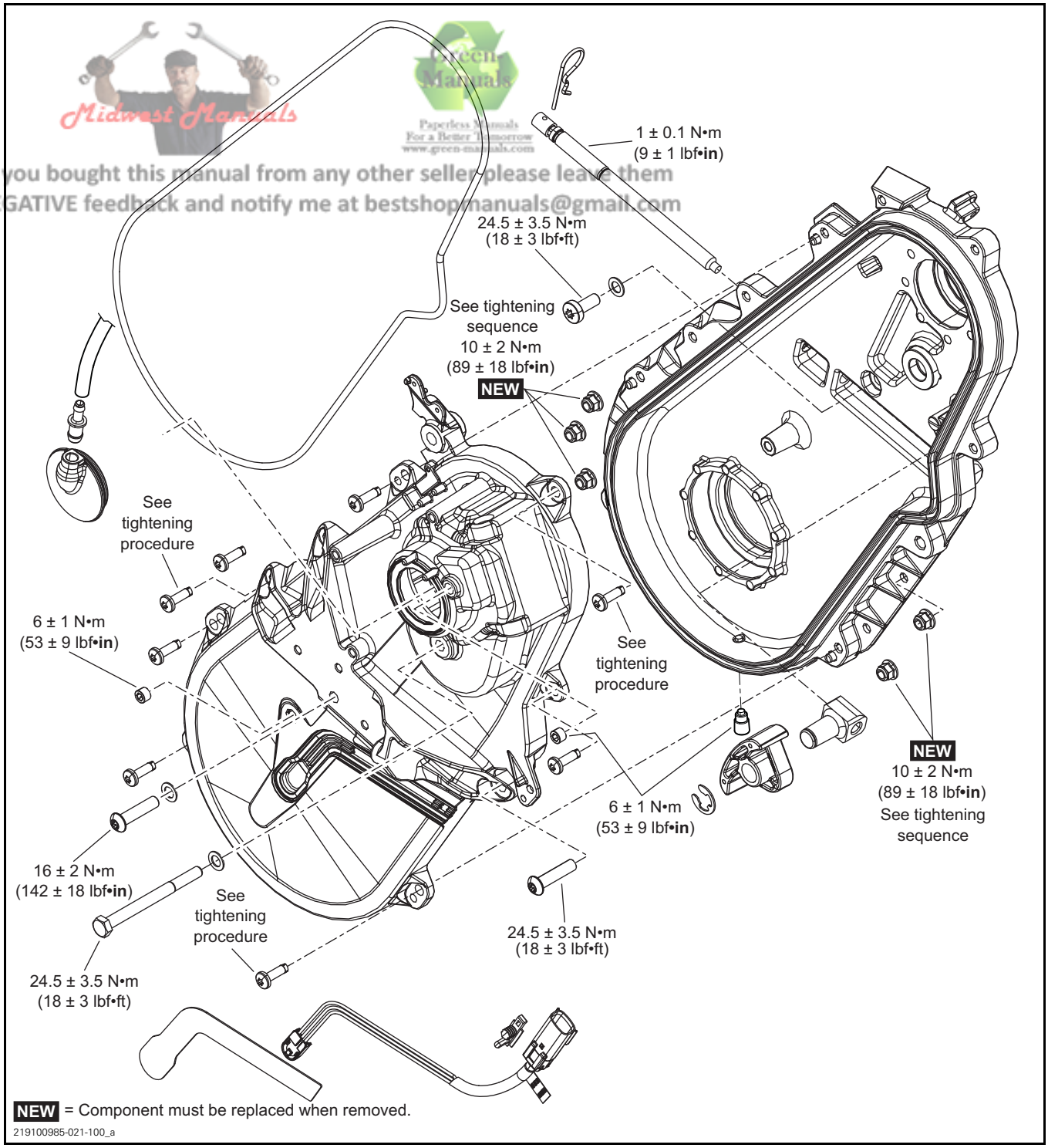

Midwest Manuals
If you bought this manual from any other seller please leave them NEGATIVE feedback and notify me at bestshopmanuals@gmail.com

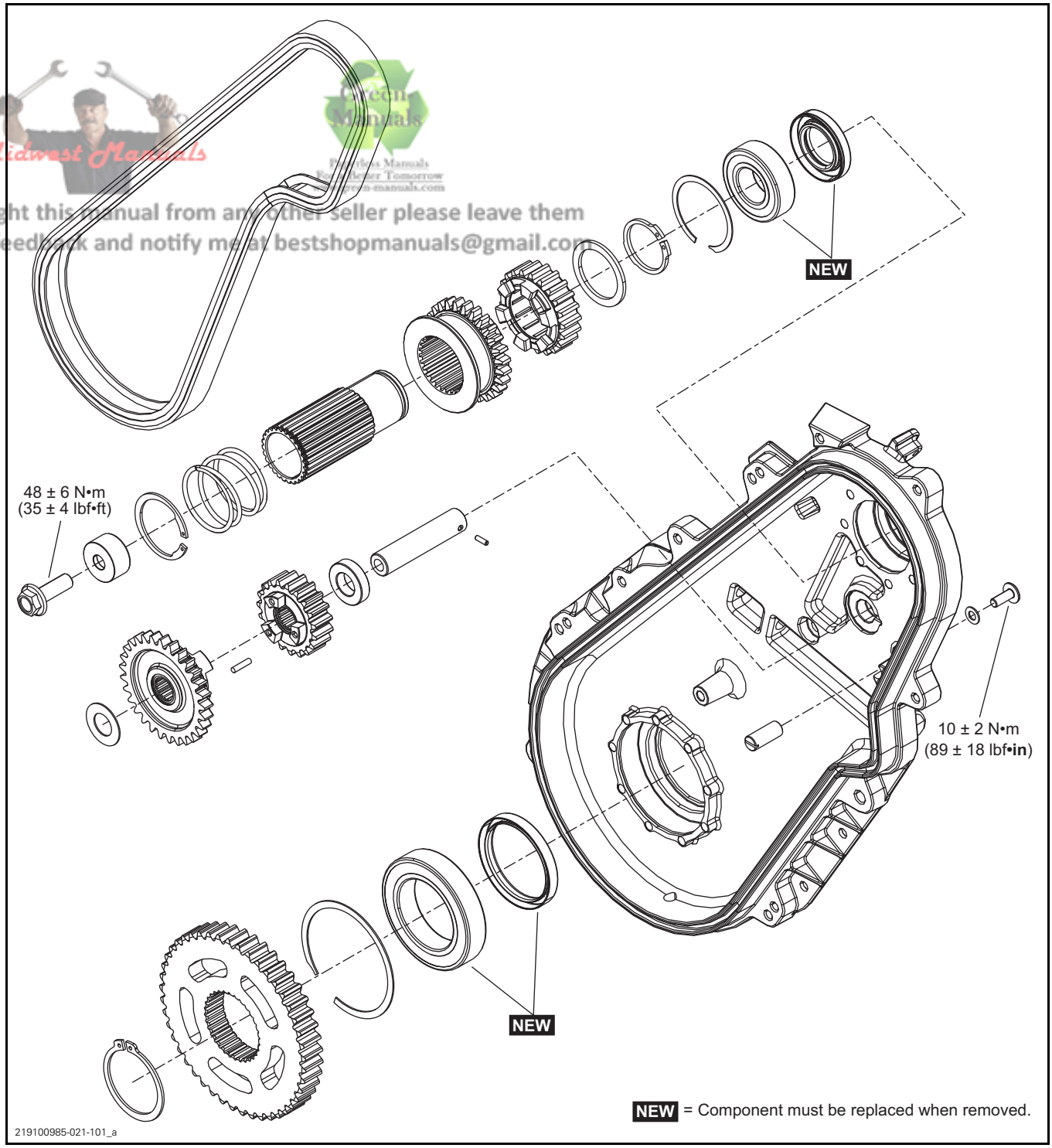

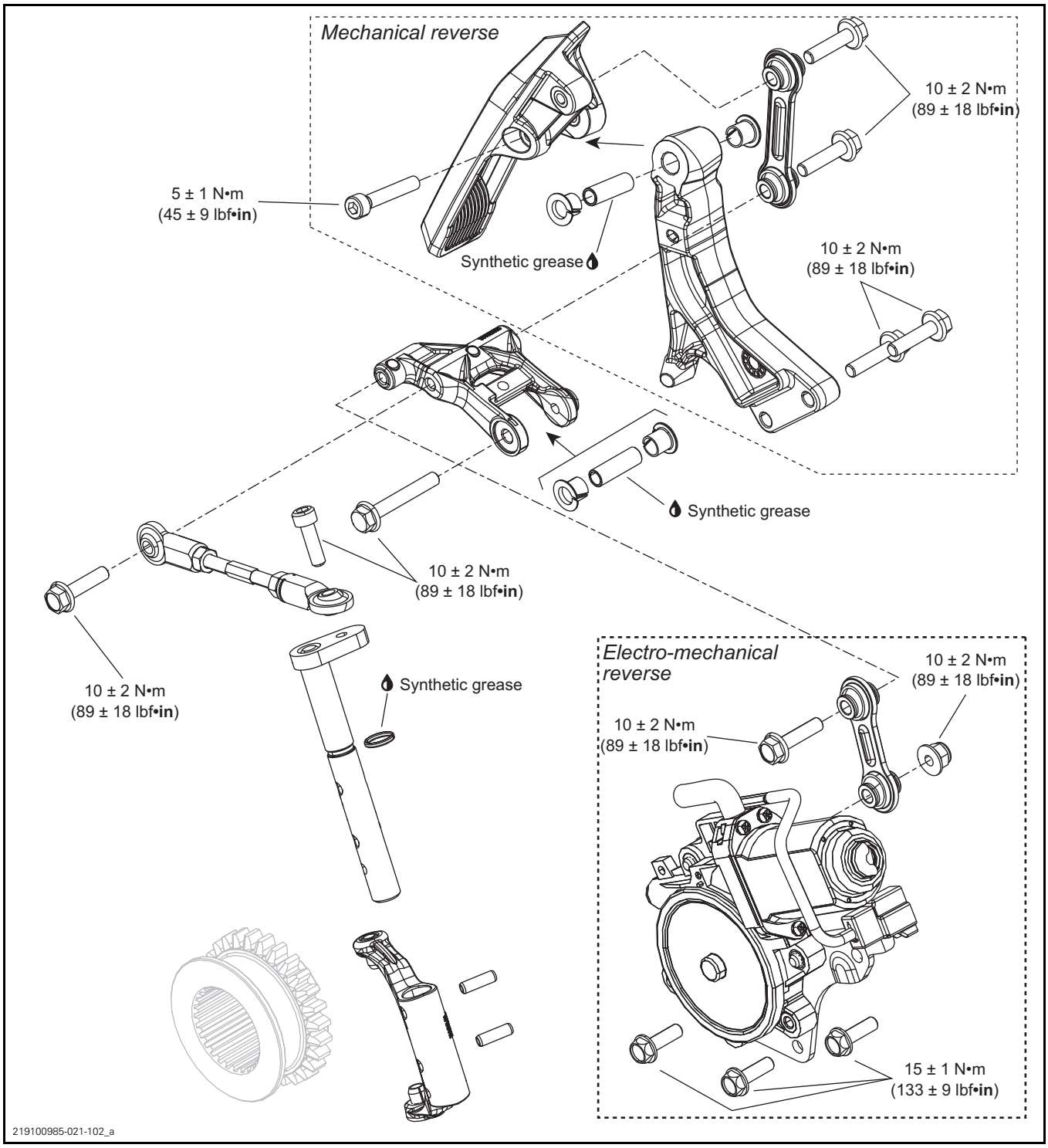
Mechanical reverse
10 ± 2 N•m
(89 ± 18 lbf•in)
5 ± 1 N•m
(45 ± 9 lbf•in)
Synthetic grease
10 ± 2 N•m
(89 ± 18 lbf•in)
Synthetic grease
10 ± 2 N•m
(89 ± 18 lbf•in)
10 ± 2 N•m
(89 ± 18 lbf•in)
Synthetic grease
Electro-mechanical reverse
10 ± 2 N•m
(89 ± 18 lbf•in)
10 ± 2 N•m
(89 ± 18 lbf•in)
15 ± 1 N•m
(133 ± 9 lbf•in)
219100985-021-102_a

# GENERAL

The following tools are required to test most of the electrical parts.

| REQUIRED TOOLS | |
|---|---|
| FLUKE 115 MULTIMETER (P/N 529 035 868) | |
| ECM ADAPTER TOOL (P/N 529 036 166) | |

During assembly or installation, use the torque values and service products as in the exploded view.

Clean threads before applying a threadlocker. Refer to *SELF-LOCKING FASTENERS* and *LOCTITE APPLICATION* at the beginning of this manual for complete procedure.

**⚠ WARNING**

**Torque wrench tightening specifications must be strictly adhered to.**
**Locking devices when removed (e.g.: locking tabs, elastic stop nuts, cotter pin, etc.) must be replaced with new ones.**

***NOTICE*** **Hoses, cables and locking ties removed during a procedure must be reinstalled as per factory standards.**

## SYSTEM DESCRIPTION

### Mechanical Reverse

This reverse system integrated in the chaincase is controlled mechanically by link rods. When reverse handle is engaged, the shift fork moves sliding gear and switches its power to the reverse sprocket. This reverse sprocket turns backwards and transmits its power to the lower sprocket. When the mechanism is engaged forward, it works like a normal chaincase with the upper sprocket giving its power to the lower sprocket.

### Electro-Mechanical Reverse

This system works mechanically the same way as the mechanical reverse, except that the sliding gear is controlled electrically by the ECM and the electrical actuator. When the START/RER button is pressed, the ECM transmits its signal through either the reverse or forward relay to the electric motor. The ECM will not engage the reverse if the engine RPM is above 2200 or the vehicle speed is above 1 km/h.

# ADJUSTMENT

## SHIFTER LINK ROD ADJUSTMENT

***NOTICE*** **It is of the uppermost importance for the adjustment reliability to follow entirely this procedure.**

*Electro-Mechanical Reverse*

1. Remove link screw from the shifter lever.

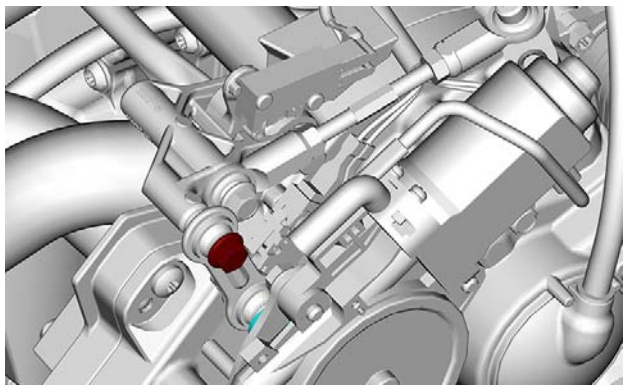

219100985-021-005

*Mechanical and Electro-Mechanical Reverse*

1. Lift rear of vehicle and support it off the ground.
2. Rotate driven pulley a few turns to ensure reverse mechanism is properly engaged.
3. Verify gap between shifter lever and chaincase front stopper using a feeler gauge. Refer to the following table.

| SHIFT LINKAGE ADJUSTMENT | |
|---|---|
| Gap **no. A** | 0.4 mm to 0.6 mm (.016 in to .024 in) |

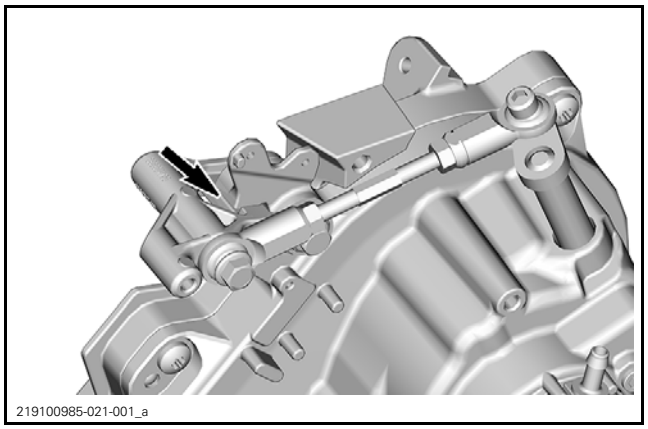


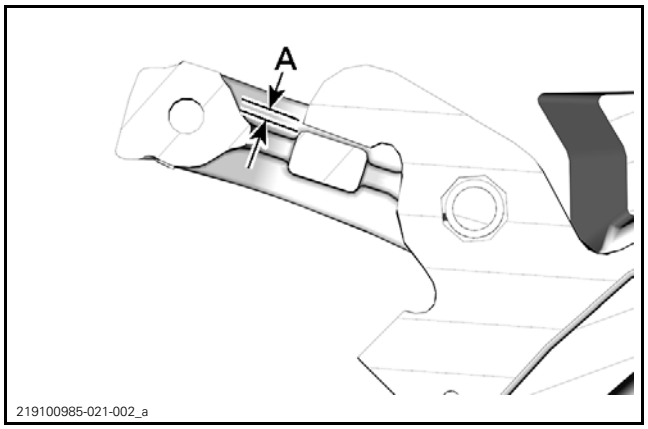


*A. Gap = 0.4 mm to 0.6 mm (.016 in to .024 in)*

4. If gap is out of specification, adjust shifter link rod as follows.

   4.1 Loosen link rod lock nuts.

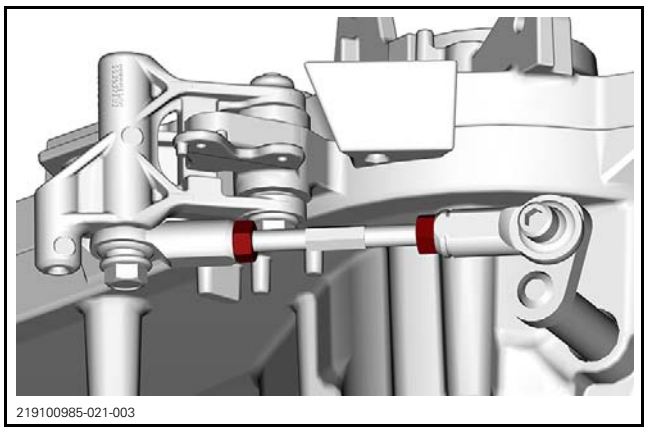


   4.2 Turn link rod accordingly.

   NOTE: Turn the link rod clockwise to reduce the gap and counterclockwise to increase the gap.

   4.3 Tighten link rod lock nuts.

5. Engage and release reverse mechanism 10 times using reverse handle or shifter lever.
6. Rotate driven pulley a few turns to ensure reverse mechanism is properly engaged.
7. Verify again adjustment gap. Readjust if necessary.

# MAINTENANCE

## CHAINCASE OIL

### Recommended Chaincase Oil

| RECOMMENDED SERVICE PRODUCT |
|---|
| SYNTHETIC CHAINCASE OIL (P/N 779156) |

**NOTICE** **Use only the recommended type oil when servicing. Do not mix synthetic oil with other types of oil.**

### Verifying the Chaincase Oil Level

1. Place vehicle on a level surface.
2. Remove the check plug beside the speed sensor on the chaincase cover. Oil level must be equal with the lower edge.

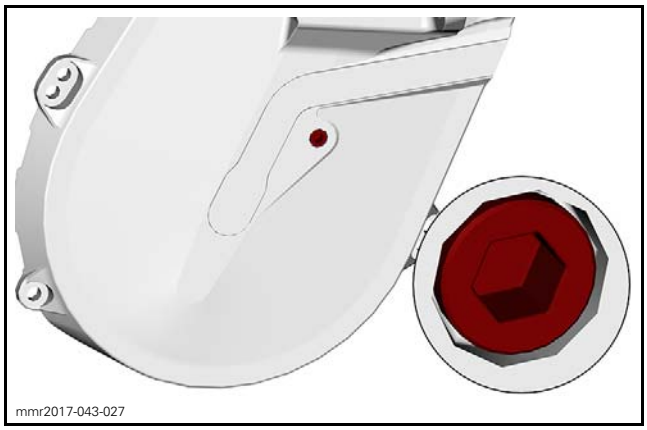


3. Remove metal particles from magnetic check plug.

NOTE: It is normal to find metallic particles stuck to magnetic check plug. If bigger pieces of metal are found, remove the chaincase cover and inspect the chaincase parts.

4. To add oil, remove the filler cap on top of chaincase cover.

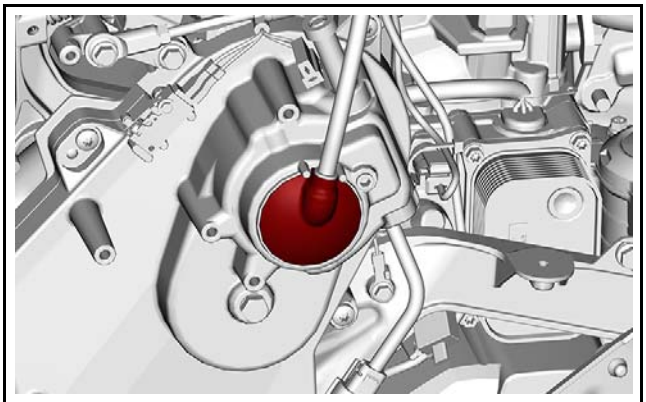
219100985-019-001

5. Pour recommended oil in chaincase by the filler hole until oil comes out by the magnetic check plug hole.
6. Reinstall magnetic check plug and torque to specification.

| TIGHTENING TORQUE | |
|---|---|
| Magnetic check plug | 6 N•m ± 1 N•m (53 lbf•**in** ± 9 lbf•**in**) |

## Replacing the Chaincase Oil

1. Place vehicle on a level surface.
2. Place a container under vehicle in line with chaincase to catch chaincase oil.
3. Remove the filler plug.

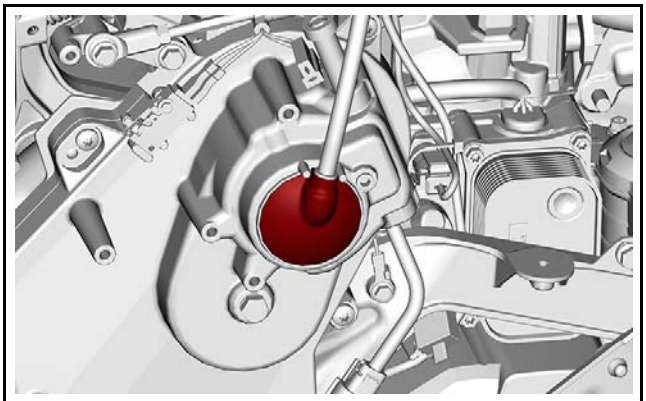
219100985-019-001

4. Remove the drain plug on the bottom of the chaincase.

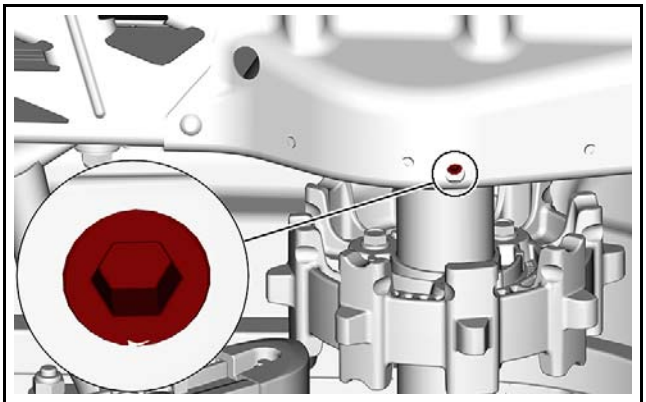
mmr2017-043-024_a

5. Reinstall the drain plug.

| TIGHTENING TORQUE | |
|---|---|
| Drain plug | 6 N•m ± 1 N•m (53 lbf•**in** ± 9 lbf•**in**) |

6. Remove the magnetic check plug.
7. Pour approximately 550 ml (19 U.S. oz) of recommended oil in chaincase through the filler hole until oil comes out by the magnetic check plug hole.
8. Clean the magnetic check plug. Refer to *CHAINCASE OIL LEVEL VERIFICATION*, see procedure in this subsection.

# DRIVE CHAIN

## Adjusting the Drive Chain

1. Remove the hair pin from behind the chaincase.

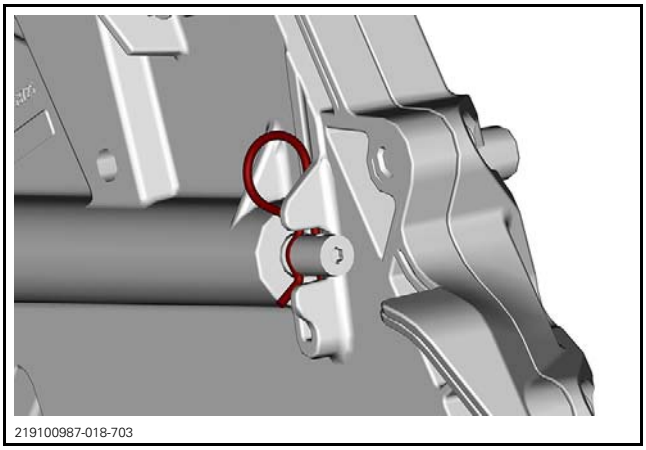
219100987-018-703

2. Tighten tensioner adjustment screw **BY HAND**.

NOTE: Turn adjustment screw until resistance is strong enough that it can not be turned by hand.

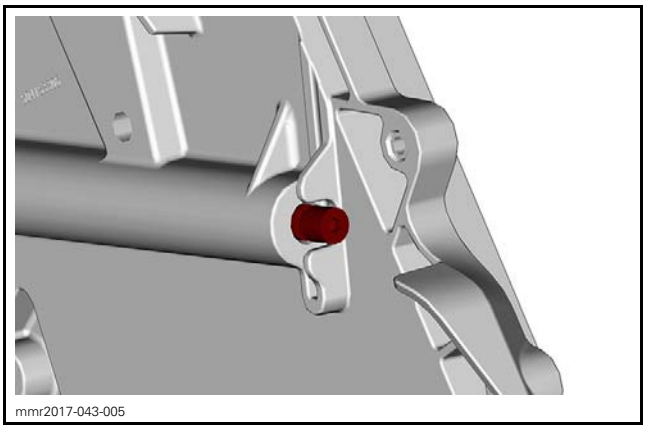
mmr2017-043-005

3. Reinstall the hair pin.

# TROUBLESHOOTING

## DIAGNOSTIC TIPS (ELECTRO-MECHANICAL REVERSE)

### BUDS2 Configuration

If the electro-mechanical reverse is not working, make sure the required option is selected in BUDS2. Otherwise, the electro-mechanical reverse will not work and no fault code will be set.

### Fault Code P0736

The fault code P0736 can appear for different reasons that are not necessarily a failure of the electro-mechanical reverse. It can appear for the following reason:

– Reverse gears are not aligned in chaincase to engage properly.

If fault code appears:

1. Clear the fault using BUDS2
2. Lift rear of vehicle and support it off the ground
3. Rotate driven pulley a few turns to move gears in chaincase
4. Retry changing gears.

If fault code appears again:

– Check drive belt height (refer to *DRIVE BELT* subsection)
– Check shift linkage adjustment. Refer to procedure in this subsection.

If fault code persist:

– Refer to *TESTING SEQUENCE* below.

## TESTING SEQUENCE (ELECTRO-MECHANICAL REVERSE)

### Reverse Does Not Engage

First, make sure the following settings are as per specifications:

– Drive belt height
– Shift linkage adjustment.

If BUDS2 is properly configured, drive belt and shift linkage are properly adjusted, follow this testing sequence to diagnose problem:

1. Check reverse position switch (RVPS) continuity.
2. Check actuator fuse.
3. Check actuator connector.
4. Check relays continuity.
5. Check actuator operation.
6. Check input voltage to actuator.
7. Check input voltage to relays.
8. Check relay grounds.
9. Check relay ground signals.
10. Check ECM ground continuity.

Refer to the appropriate topic to see the complete testing procedures.

# PROCEDURES

## SHIFT LEVER

### Removing the Shift Lever

1. Remove the following screws.

*Mechanical Reverse*

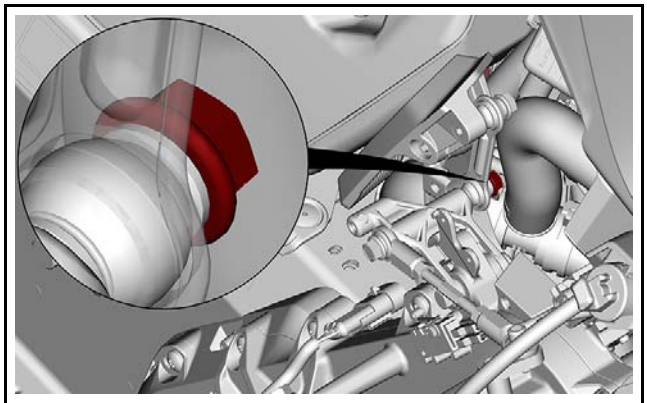
219100985-021-004

*Electro-Mechanical Reverse*

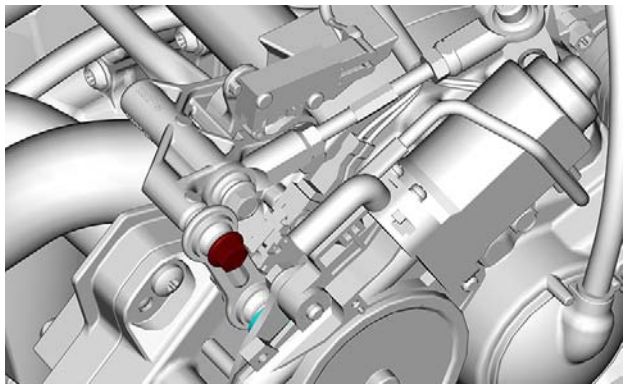

219100985-021-005

*All Reverse*

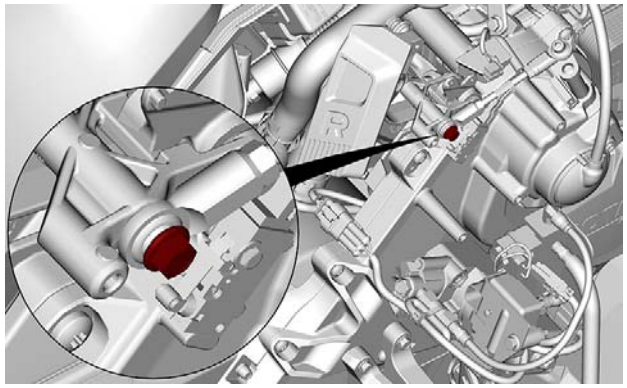

219100985-021-006

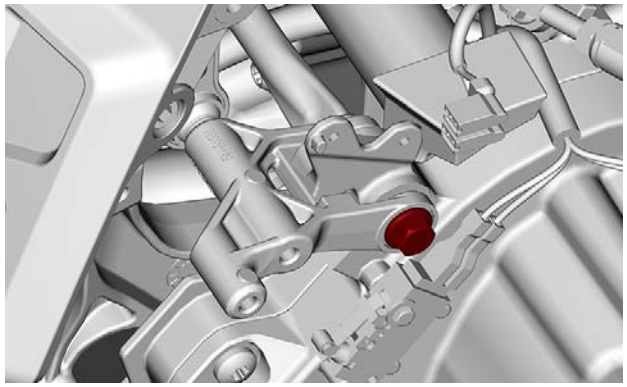

219100985-021-007

## Installing the Shift Lever

The installation is the reverse of the removal procedure. However, pay attention to the following.

Lubricate shift lever pivots and moving parts.

| SERVICE PRODUCT |
| --- |
| SYNTHETIC GREASE (P/N 779162) |

Refer to exploded view for appropriate tightening torque.

# ELECTRO-MECHANICAL REVERSE

## Removing the Actuator

**⚠ WARNING**

**Battery BLACK (–) cable must always be disconnected first and connected last.**

1. Disconnect BLACK negative cable from battery.

*Models with ACS*

2. Disconnect compressor connector.
3. Remove ACS compressor module support screws.

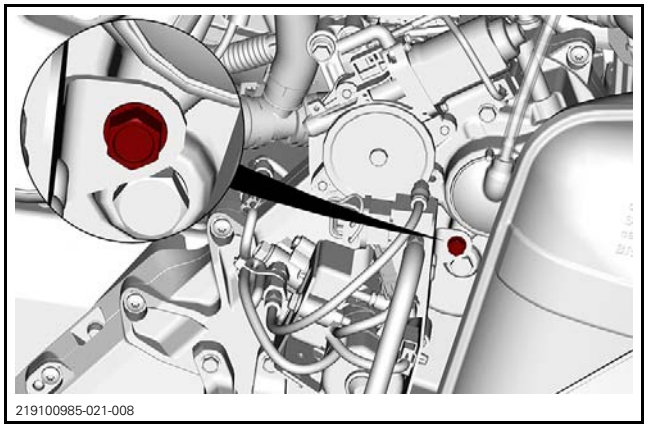

219100985-021-008

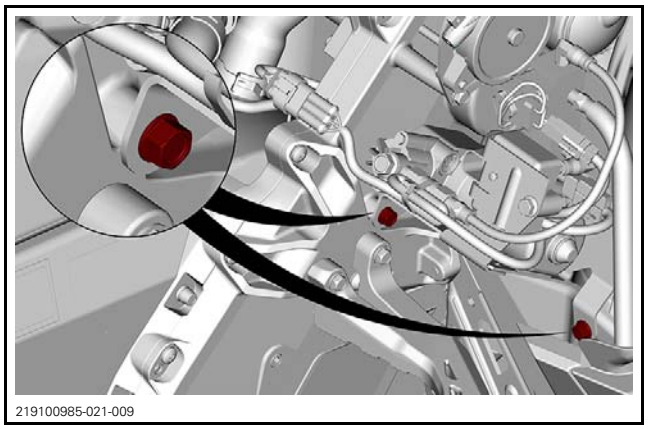

219100985-021-009

4. Move the ACS assembly aside.

*All Models*

5. Disconnect actuator connector.

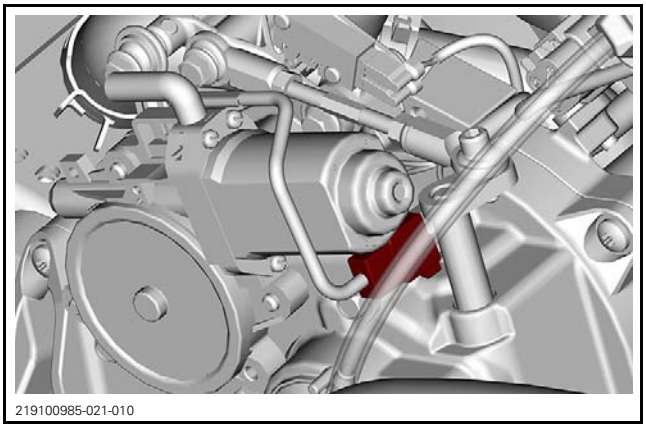
219100985-021-010

6. Remove actuator link nut.

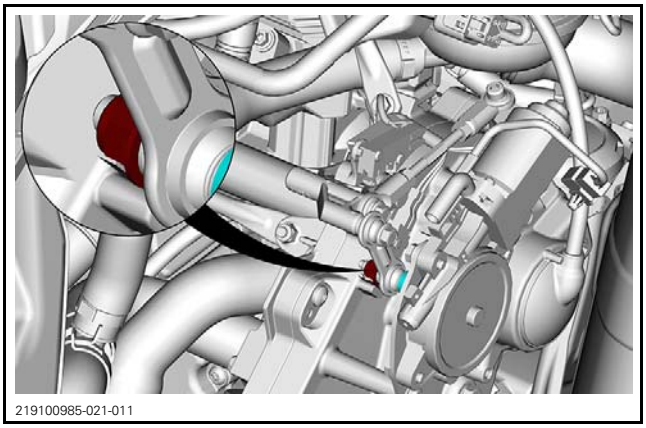
219100985-021-011

7. Remove actuator support screws.

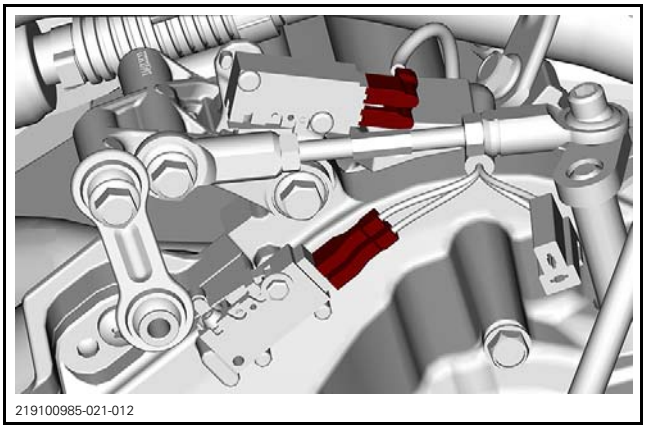
219100985-021-012

8. Remove the actuator from vehicle.

## Inspecting the Actuator

Inspect actuator connector for corrosion, clean if necessary.

Inspect RVPS switches for correct spring tension when pressed and released, replace if necessary.

Inspect actuator coupling shaft for straightness, replace if necessary.

Inspect actuator stopper in support for straightness.

## Installing the Actuator

The installation is the reverse of the removal procedure. However, pay attention to the following.

Lubricate shifter pivots and moving parts.

Tighten coupling shaft nut to specification.

| TIGHTENING TORQUE | |
|---|---|
| Actuator coupling shaft nut | 7 N•m ± 0.5 N•m (62 lbf•**in** ± 4 lbf•**in**) |

## Testing the Actuator Operation

**NOTICE** **Do not power motor directly with the battery for a long period. Apply voltage quickly to ensure that the motor will not overheat at the end of its stroke.**

1. Remove actuator coupling shaft nut.

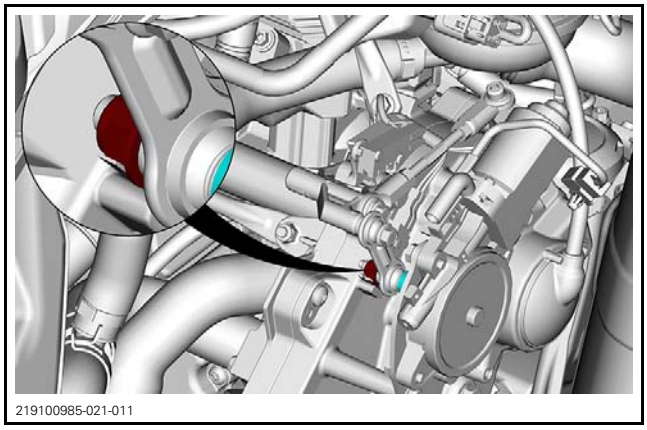
219100985-021-011

2. Disconnect actuator connector.

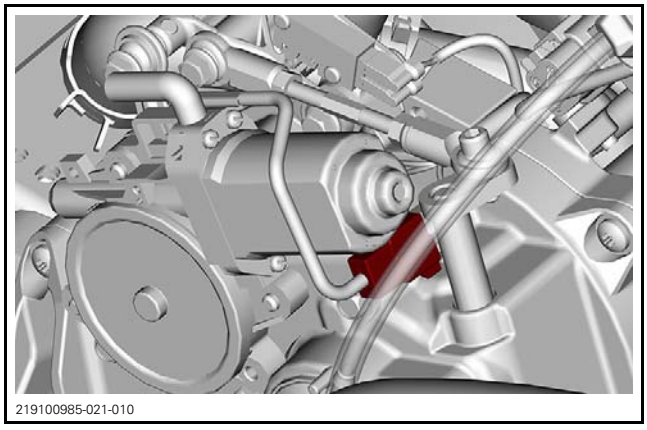
219100985-021-010

3. Connect actuator connector pin 2 (BLACK wire) to a 20 A suitable fuse jumper and then directly to the positive battery post.

4. Connect actuator connector pin 1 (RED wire) directly to the negative battery post.

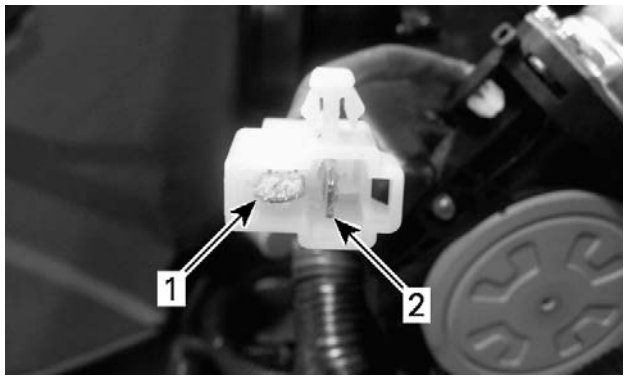

mmr2009-131-051_a

*1. Pin 1 (RED wire)*
*2. Pin 2 (BLUE wire)*

5. Verify if actuator works properly.
6. Invert battery polarities and verify if actuator works properly in the opposite direction.

## Testing the Actuator Input Voltage

1. Set the multimeter to Vdc.
2. Disconnect actuator connector.

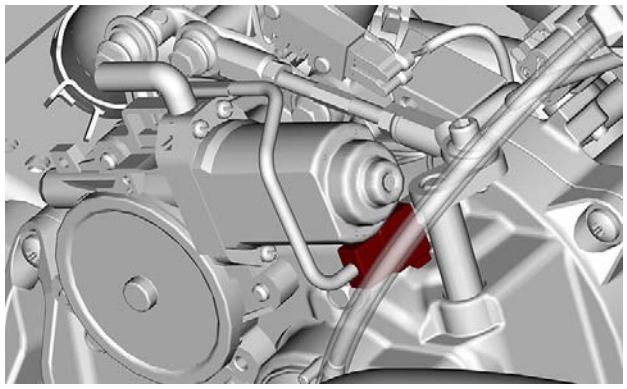
219100985-021-010

3. Start engine.
4. Press on START/RER button while engine run at idle.
5. Measure voltage between harness connector terminals as per the following table.

| TEST PROBES | MEASUREMENT |
|---|---|
| Pin 1 | Battery voltage (~12 Vdc) |
| Pin 2 | |

If measure is not as per specification, test:
– The battery voltage
– The actuator relay and fuse
– The actuator circuit continuity.

Refer to electrical diagram for more information.

## Testing the Relay Continuity

1. Remove relays.
2. Set the multimeter to Ω.
3. Measure resistance as per the following table.

| TEST PROBES | RESISTANCE |
|---|---|
| Terminal 30 | Open (OL) |
| Terminal 87 | |

4. Measure resistance as per the following table.

| TEST PROBES | RESISTANCE |
|---|---|
| Terminal 30 | Close to 0 Ω |
| Terminal 87a | |

5. Apply 12 volts on terminals 85 and 86.
6. Measure resistance again as per the following table.

| TEST PROBES | RESISTANCE |
|---|---|
| Terminal 30 | Close to 0 Ω |
| Terminal 87 | |

7. Apply 12 volts on terminals 85 and 86.
8. Measure resistance again as per the following table.

| TEST PROBES | RESISTANCE |
|---|---|
| Terminal 30 | Open (OL) |
| Terminal 87a | |

If results are not as per the above tables, replace relay.

## Testing the Relay Input Voltage

1. Set the multimeter to Vdc.
2. Start engine.
3. Measure voltage as per the following tables.

| FORWARD AND REVERSE RELAYS | |
|---|---|
| TEST PROBES | VOLTAGE |
| Pin 86 | Battery voltage (~12 Vdc) |
| Battery negative (-) post | |

| FORWARD AND REVERSE RELAYS | |
|---|---|
| TEST PROBES | VOLTAGE |
| Pin 87 | Battery voltage (~12 Vdc) |
| Battery negative (-) post | |

If voltage is not as specified, repair open circuit in wiring. Refer to *WIRING DIAGRAM*.

## Testing the Relay Ground

1. Set the multimeter to Vdc.
2. Start engine.
3. Measure voltage as per the following table.

| FORWARD AND REVERSE RELAYS | |
|---|---|
| TEST PROBES | VOLTAGE |
| Pin 87a | Battery voltage (~12 Vdc) |
| Battery positive (+) post | |

If voltage is not as specified, repair open circuit in wiring. Refer to *WIRING DIAGRAM*.

## Testing the Relay Ground Signal

### Forward Relay

For this test, electronic reverse must be set in reverse position.

NOTE: The measured voltage will be transmitted during a short period of time.

1. Set the multimeter to Vdc.
2. Start engine and let it run at idle.
3. Press on START/RER button while measuring voltage as per the following table.

| FORWARD RELAY | |
|---|---|
| TEST PROBES | VOLTAGE |
| Pin 85 | Battery voltage (~12 Vdc) |
| Battery positive (+) post | |

If voltage is not as specified, repair open circuit in wiring. Refer to *WIRING DIAGRAM*.

### Reverse Relay

For this test, electronic reverse must be set in forward position.

NOTE: The measured voltage will be transmitted during a short period of time.

1. Set the multimeter to Vdc.
2. Start engine and let it run at idle.
3. Press on START/RER button while measuring voltage as per the following table.

| REVERSE RELAY | |
|---|---|
| TEST PROBES | VOLTAGE |
| Pin 85 | Battery voltage (~12 Vdc) |
| Battery positive (+) post | |

If voltage is not as specified, repair open circuit in wiring. Refer to *WIRING DIAGRAM*.

## Testing the ECM Ground Continuity

### Forward Relay

1. Disconnect ECM connector "A".
2. Install connector "A" on the ECM adapter tool.
3. Set the multimeter to Ω.
4. Measure resistance as per the following table.

| FORWARD RELAY | |
|---|---|
| TEST PROBES | RESISTANCE |
| ECM pin A-13 | Close to 0 Ω |
| Relay pin 85 | |

### Reverse Relay

1. Disconnect ECM connector "B".
2. Install connector "B" on the ECM adapter tool.
3. Set the multimeter to Ω.
4. Measure resistance as per the following table.

| REVERSE RELAY | |
|---|---|
| TEST PROBES | RESISTANCE |
| ECM pin B-33 | Close to 0 Ω |
| Relay pin 85 | |

# REVERSE MECANISM POSITION SWITCHES

## Testing the Switches Continuity

1. Disconnect Reverse Position Switch (RVPS) and Forward Position Switch (FWPS) connectors.

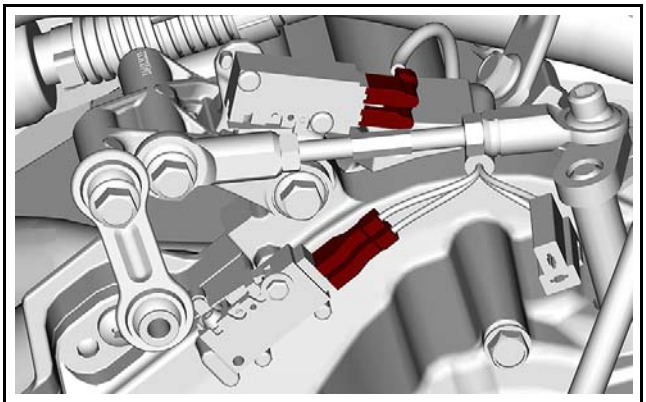
219100985-021-012

2. Set the multimeter to Ω.
3. Release RVPS.
4. Measure resistance as per the following table.

| TEST PROBES | RESISTANCE |
|---|---|
| Pin 1 | Open (OL) |
| Pin 2 | |

5. Press RVPS.
6. Measure resistance again as per the following table.

| TEST PROBES | RESISTANCE |
|---|---|
| Pin 1 | Close to 0 Ω |
| Pin 2 | |

If results are not as per the above tables, replace RVPS.

Repeat the test for the FWPS.

### Replacing the Reverse Mecanism Position Switch

1. Remove switch connectors.

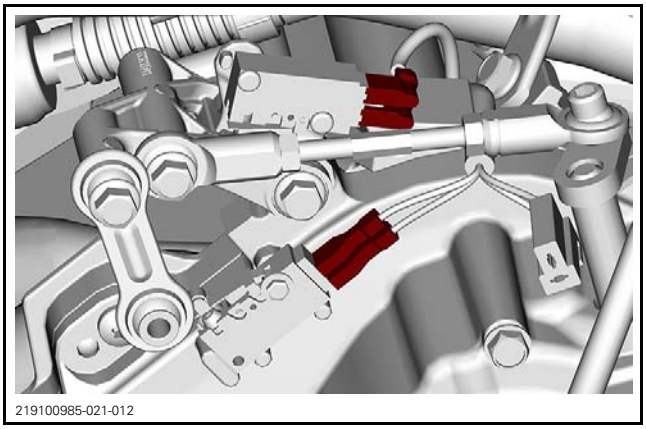
219100985-021-012

2. Remove switch fasteners.

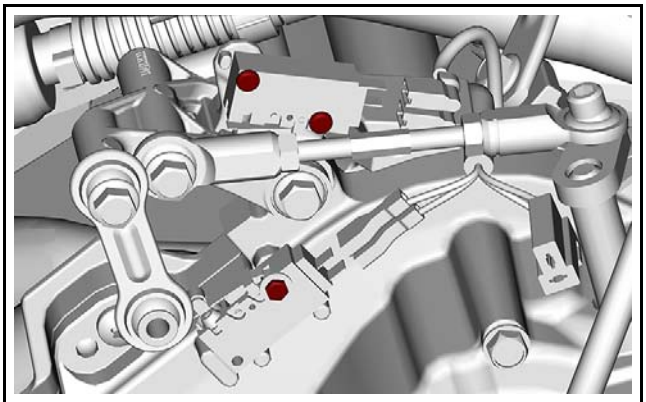
219100985-021-013

## CHAINCASE

### Removing the Chaincase Cover

*Models with ACS*

1. Disconnect compressor connector.
2. Remove ACS compressor module support screws.

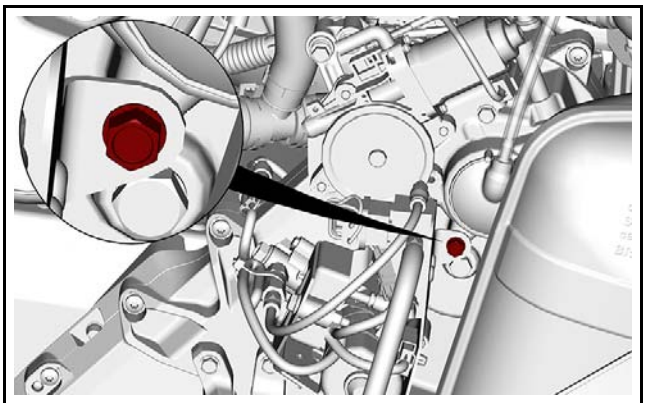
219100985-021-008

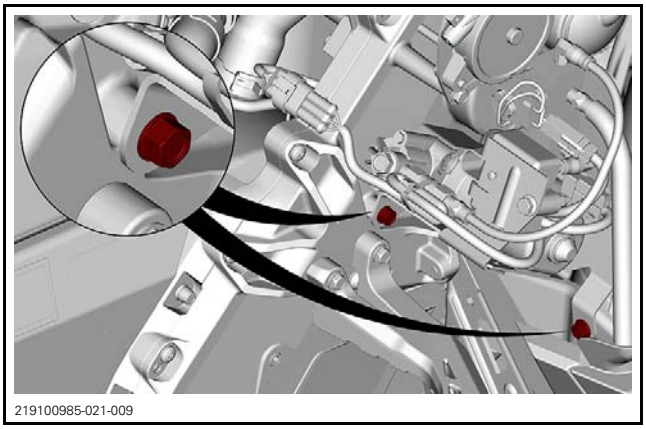
219100985-021-009

3. Move the ACS assembly aside.

*Models with Mechanical Reverse*

4. Remove the lower reverse handle link screw.

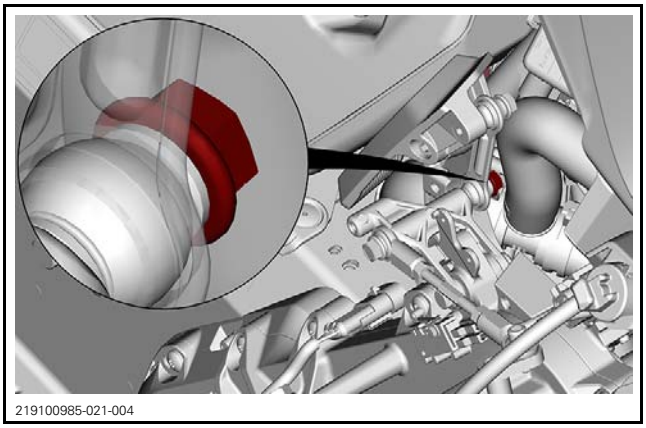
219100985-021-004

5. Disconnect the RVPS.

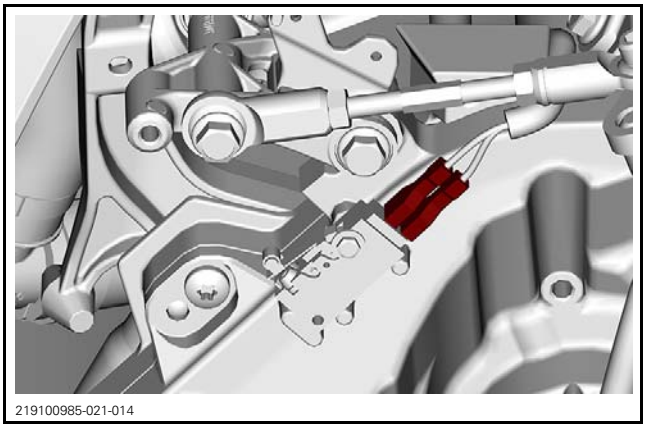
219100985-021-014

### *Models with Electro-Mechanical Reverse*

1. Remove actuator. Refer to *REMOVING THE ACTUATOR* in this subsection.
2. Disconnect the RVPS.

### *All Models*

1. Apply parking brake.
2. Remove muffler. Refer to *EXHAUST SYSTEM* subsection.
3. Drain the chaincase oil. Refer to procedure in this subsection.
4. Disconnect speed sensor connector.

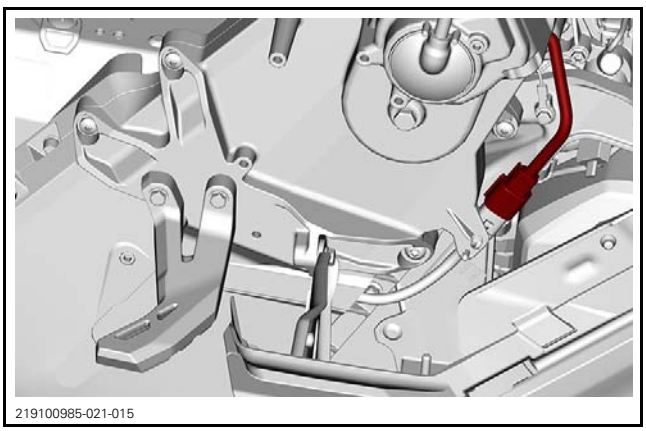
219100985-021-015

5. Remove reverse gear retaining screw.

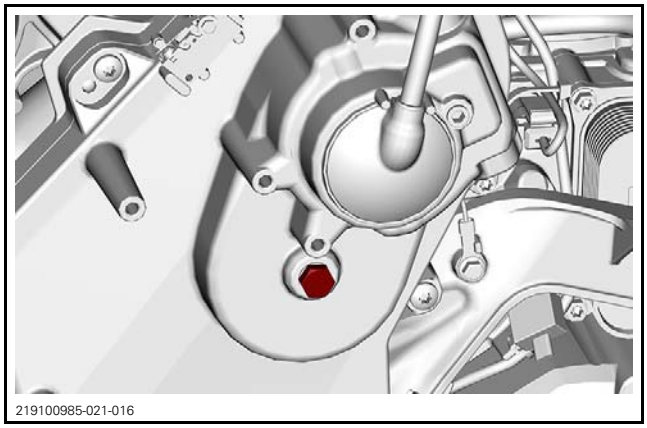
219100985-021-016

6. Remove lower retaining screw from shifter link rod.

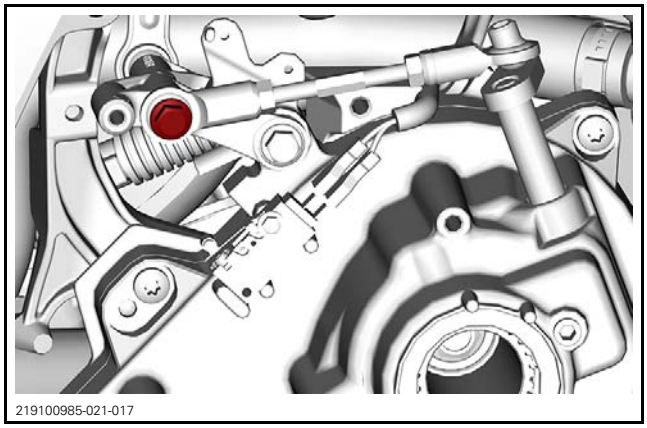
219100985-021-017

7. Remove the RH side toe hook and the screw securing the cover to the footrest.

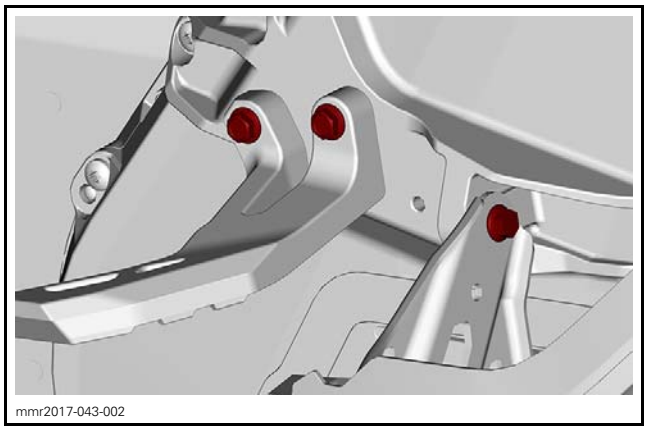
mmr2017-043-002

8. Unscrew and remove chaincase cover screws.

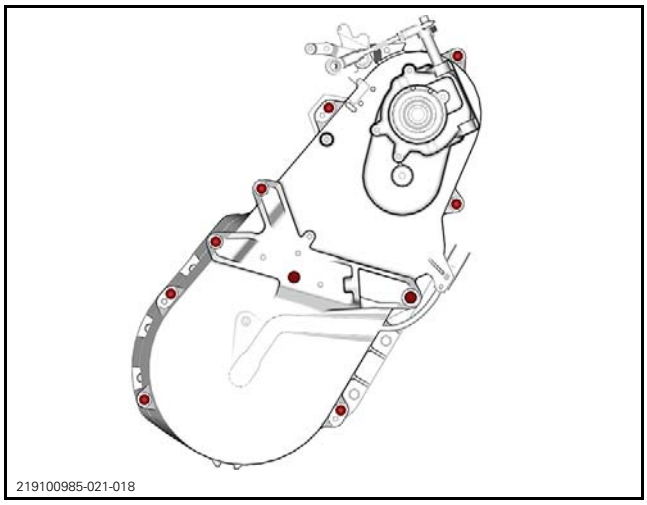


9. Pull the bottom of chaincase cover to drain oil.

## Chaincase Disassembly

1. Apply parking brake.
2. Remove chaincase cover. Refer to *REMOVING THE CHAINCASE COVER* in this subsection.

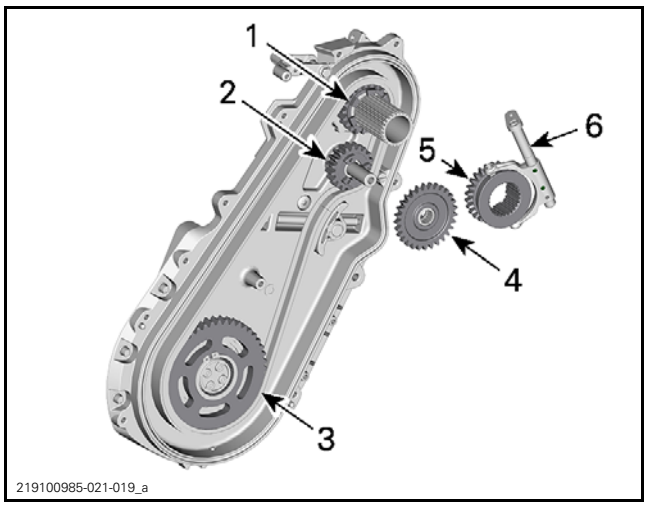


*1. Upper sprocket*
*2. Reverse sprocket*
*3. Lower sprocket*
*4. Reverse gear*
*5. Sliding gear*
*6. Shift fork*

### Shift Fork (in Chaincase Cover)

1. Remove spring pins using a punch as shown.

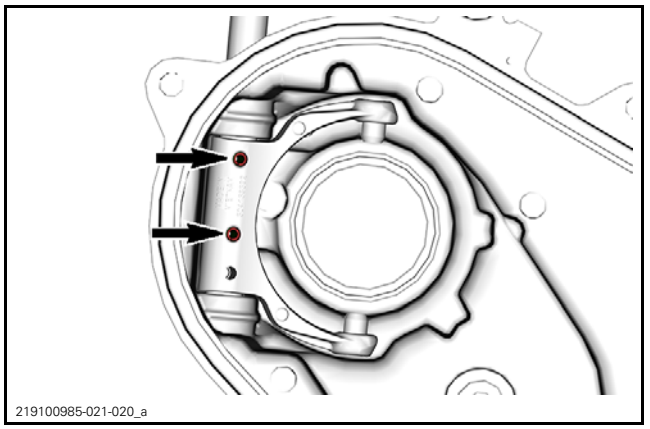


2. Pull out shift rod from chaincase cover.
3. Remove shift fork.

### Gears and Sprockets

Do not remove tension on drive chain for the moment.

1. Remove upper screw that hold sliding gear assembly.

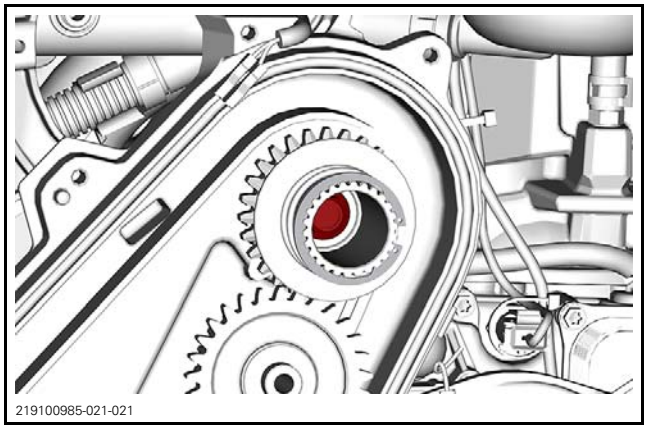


2. Remove chain tensioner from chaincase.
3. Remove sliding gear assembly, reverse sprocket and reverse gear simultaneously.

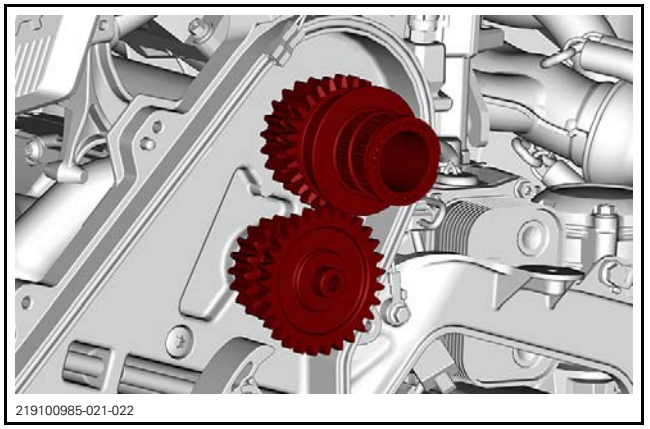

### Sliding Gear Disassembly

**NOTICE** Do not use the press to compress the sliding gear while disassembling. Use the press ONLY as a guide to ensure that the spring tension will be released safely.

1. Install sliding gear assembly on a press.
2. Position a 25 mm (1 in) deep socket on the upper sprocket side.
3. Adjust press rod on the socket, do not apply pressure on the assembly.

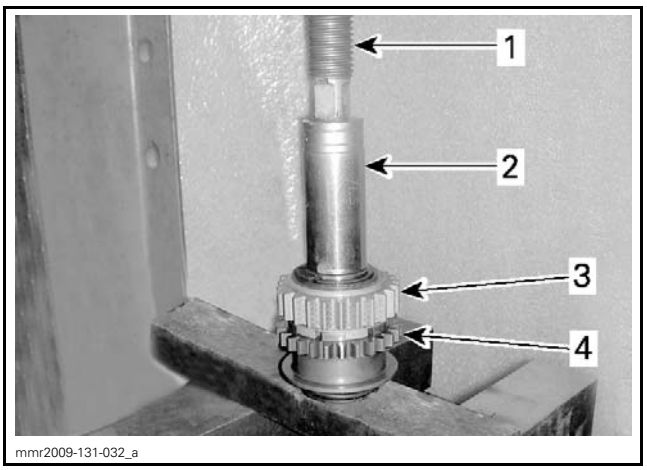

mmr2009-131-032_a

*1. Press rod*
*2. Deep socket (25 mm (1 in))*
*3. Upper sprocket*
*4. Sliding gear*

4. Firmly retain upper sprocket with one hand.
5. Remove circlip from coupling shaft.

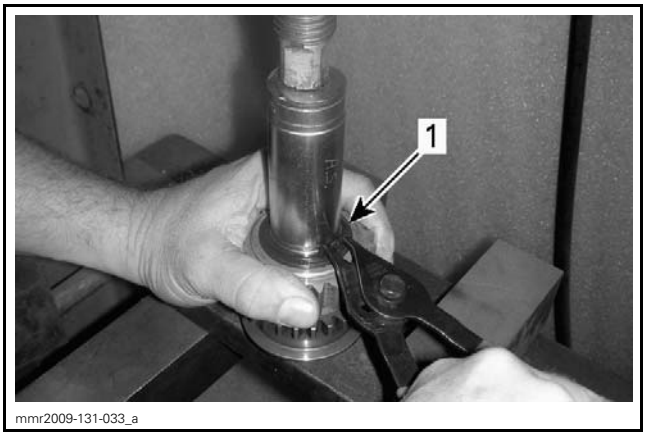

mmr2009-131-033_a

*1. Circlip*

6. Carefully release spring tension.

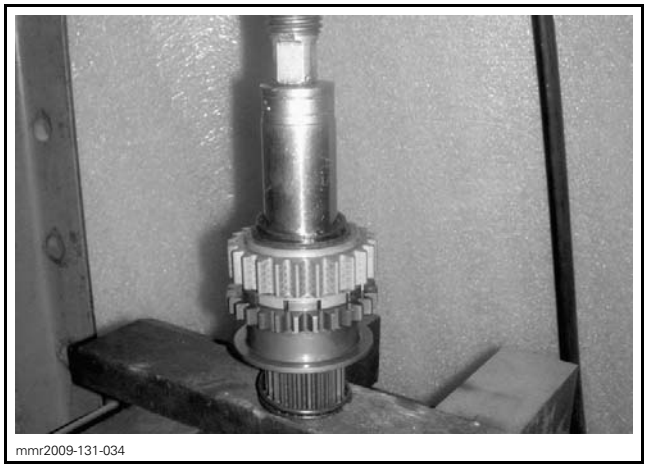
mmr2009-131-034

7. Remove upper sprocket and sliding gear from press.

### Chain and Lower Sprocket

1. Remove the lower sprocket circlip.

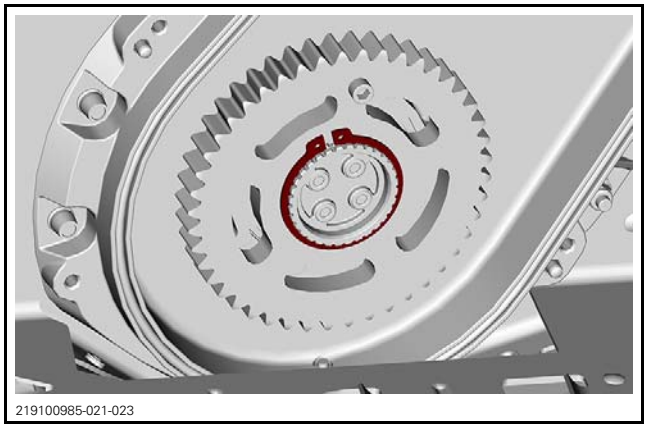
219100985-021-023

2. Remove lower sprocket and drive chain simultaneously.

### Chain Tensioner

1. Remove the hair pin from behind the chaincase.

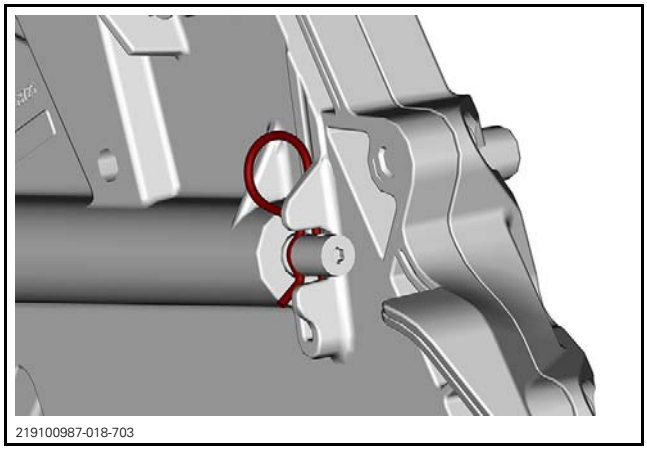
219100987-018-703

2. Remove the tensioner adjustment screw.

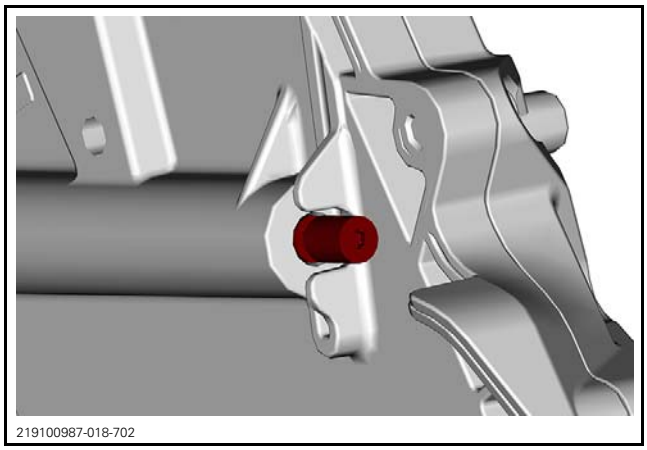
219100987-018-702

3. Remove tensioner.

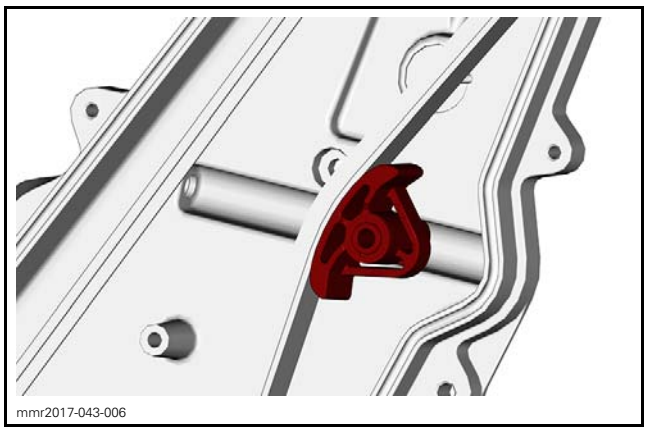
mmr2017-043-006

NOTE: The following steps are required only if the tensioner or the slider is defective.

4. Remove the circlip securing the slider to tensioner.

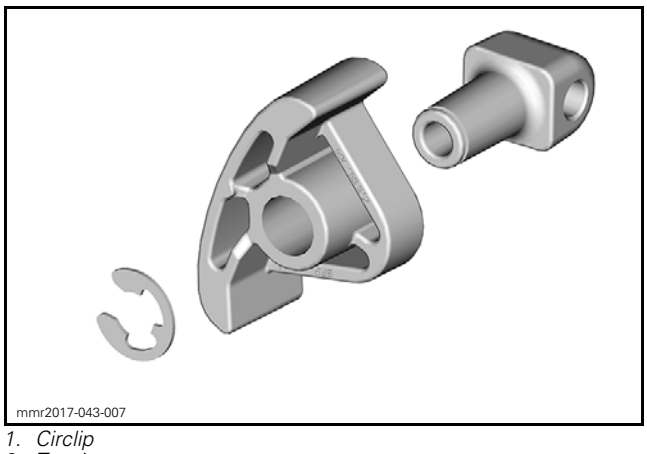
mmr2017-043-007

1. *Circlip*
2. *Tensioner*
3. *Slider*

## Chaincase Bearings

NOTE: This procedure can be applied either for the countershaft bearing or the drive shaft bearing.

1. Remove the countershaft or the drive axle, depending which bearing is replaced. Refer to *DRIVE SYSTEM AND BRAKE* section.
2. Remove the snap ring securing bearing into chaincase.

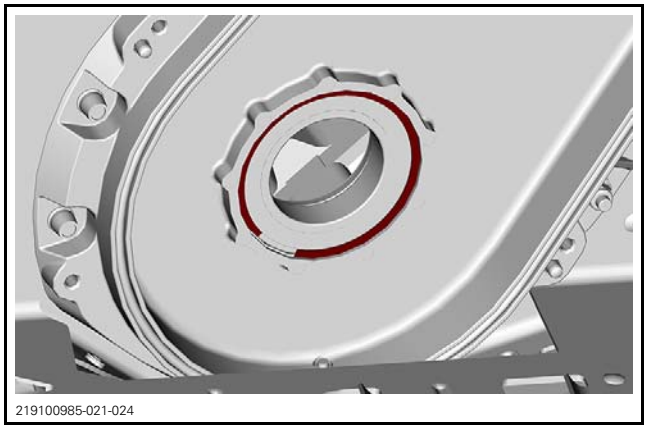
219100985-021-024

3. Install the appropriate bearing extractor:

| REQUIRED TOOL | |
|---|---|
| Countershaft bearing | |
| BEARING PULLER/PUSHER (P/N 529 036 111) | |
| Drive axle bearing | |
| BEARING PULLER/PUSHER (P/N 529 036 112) | |

4. Install the extractor/installer tool behind the bearing.

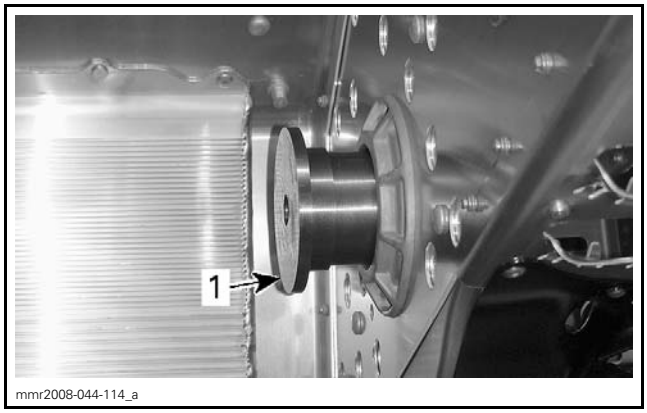

mmr2008-044-114_a

1. *Extractor/installer tool*

5. Install the extractor cup over bearing.

6. Tighten the extractor/installer tool screw to remove the bearing.

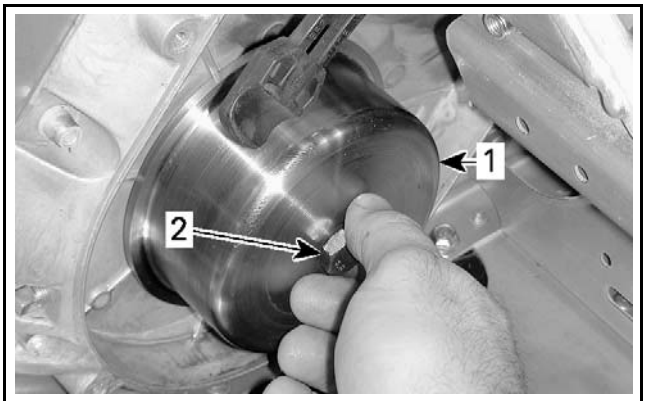

mmr2008-044-115_a

*1. Extractor cup*
*2. Tighten to remove bearing*

7. Using a seal puller, remove and discard the oil seal.

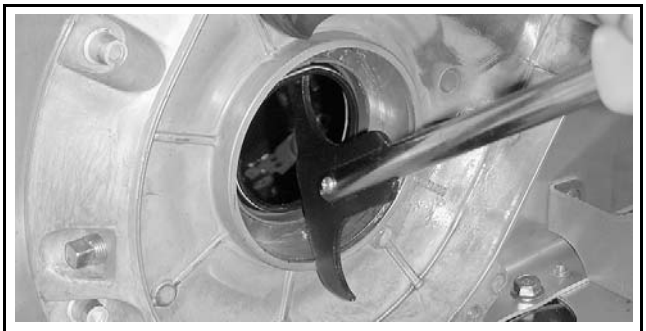
mmr2008-044-116

## Removing the Chaincase

IMPORTANT:Ensure you have a new mounting plate on hand along with the 5 attachment nuts before removing the chaincase assembly. Refer to the appropriate *ELECTRONIC PARTS CATALOG* that fits your model to determine required part number.

1. Disassemble chaincase. Refer to *CHAINCASE DISASSEMBLY* in this subsection.
2. Remove drive axle and countershaft. Refer to *DRIVE SYSTEM AND BRAKE* section.
3. Remove the Huck rivets. Refer to *FRAME* subsection for proper removal procedure.

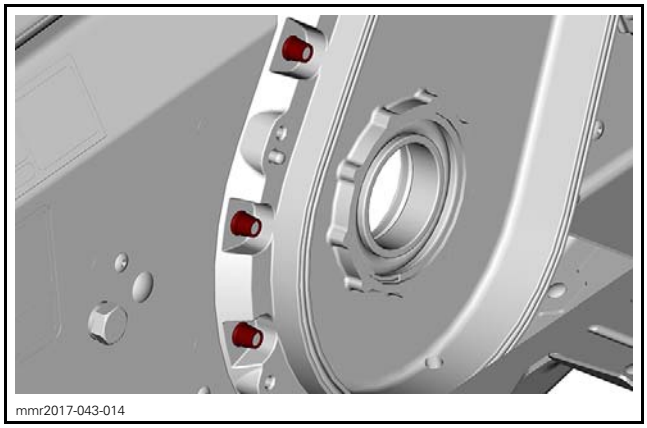
mmr2017-043-014

4. Remove nuts beside the footrest.

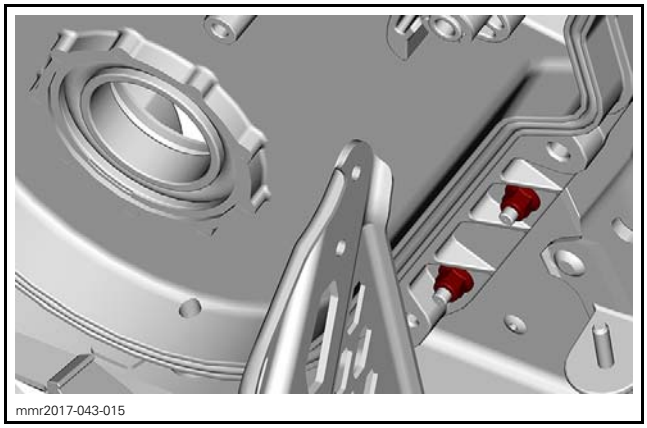
mmr2017-043-015

5. Remove the screw above the tensioner.

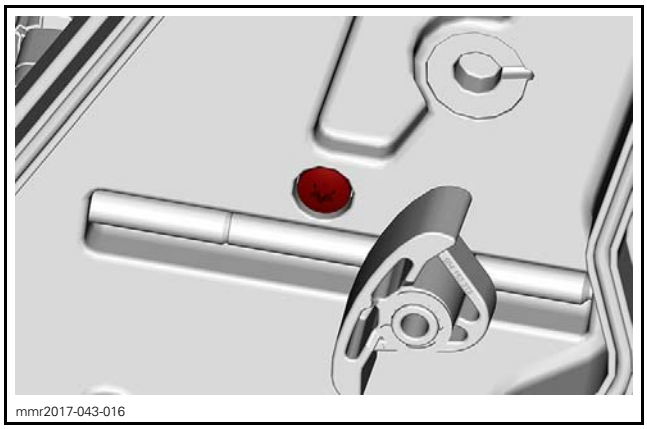
mmr2017-043-016

6. Remove bolts behind the top of chaincase.

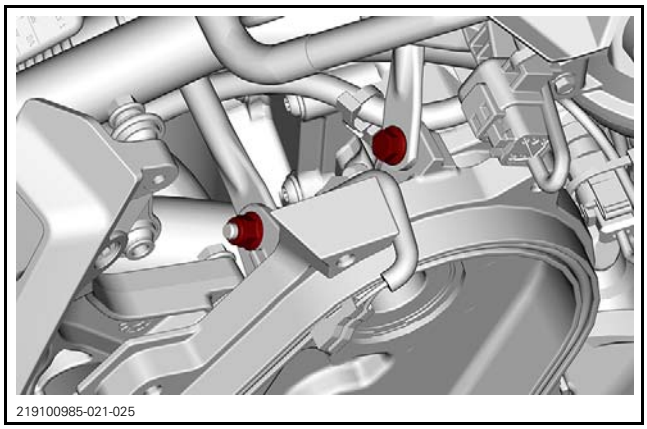


7. Using 2 large pry bars inserted between chaincase and frame, pry chaincase out of vehicle.

## Chaincase Inspection

### Chaincase Cover

Inspect cover for cracks or other damages, replace if necessary.

Inspect cover front and rear stopper for crack, replace if necessary.

Inspect O-ring inside cover is brittle, hard or damaged, replace if necessary.

### Shift Fork, Lever and Link Rod

Inspect shift fork for straightness, replace if necessary.

Inspect shift fork wear or other damages, replace if necessary.

Inspect shift lever for straightness and for rotation movement, replace if necessary.

Inspect link rod for straightness and other damages, replace if necessary.

### Spring

Measure spring free length, replace if out of specification.

| SPRING FREE LENGTH | |
|---|---|
| SERVICE LIMIT | 48 mm ± 1 mm<br>(1.89 in ± .04 in) |

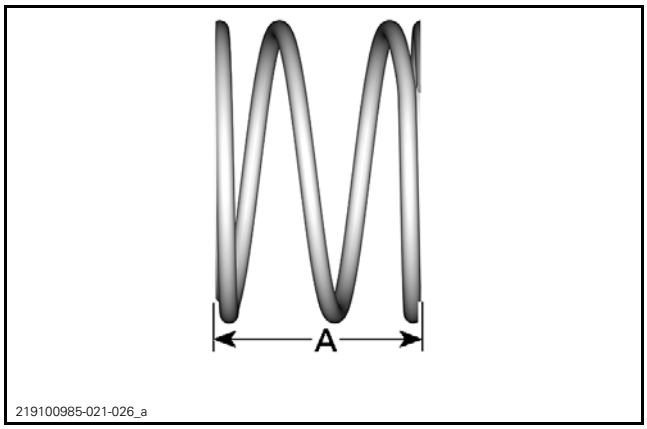


*A. Free length*

### Chain, Gears and Sprockets

Inspect the chain, gears and sprockets for:
- Wear
- Cracks
- Damages teeth
- Missing links.

If a problem is detected:
- Replace drive chain and sprockets as an assembly.
- Replace upper sprocket and sliding gear as an assembly.
- Replace reverse sprocket and reverse gear as an assembly.

Check the drive chain deflection.

If the deflection is greater than 38 mm (1-1/2 in) without the chain tensioner, replace the drive chain.

### Chain Tensioner

Check chain tensioner slider for wear or other damages. A longitudinal groove in the slider indicate a broken chain link. Replace if necessary.

Check threads of tensioner adjustment screw for damages or wear.

Check straightness of adjustment screw. Replace screw if necessary.Check chaincase for damages.

### Bearings

Inspect all bearings for smooth operation:
- If rough or excessive play is detected, replace bearing.

## Installing the Chaincase Housing

The installation is the reverse of the removal procedure. However, pay attention to the following.

Remove the clinch studs from the frame.

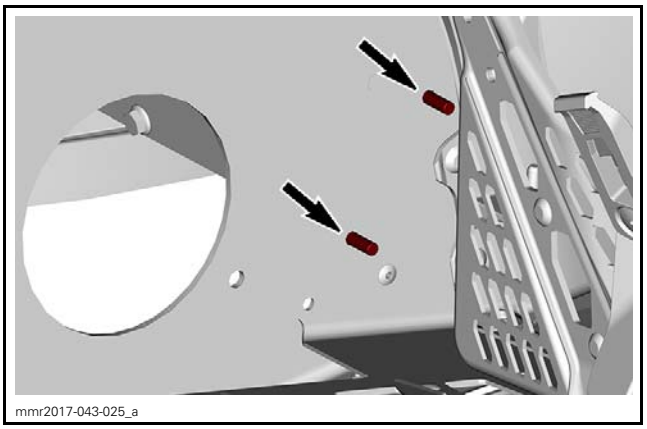
mmr2017-043-025_a

Use a suitable box to support the frame around the stud head and hit the stud from the outside with a hammer.

Install the new mounting plate underneath the frame.

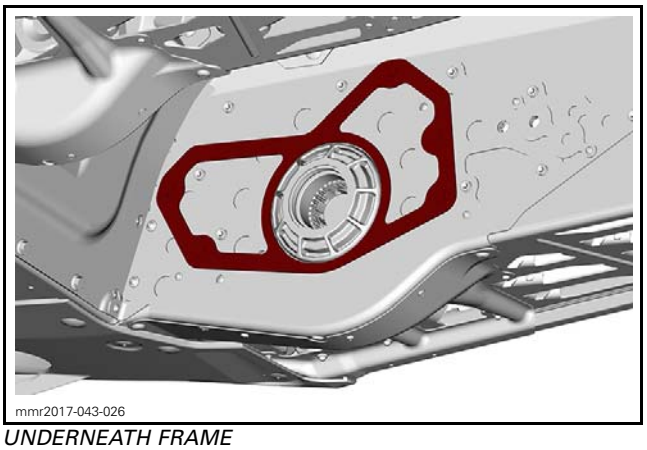
mmr2017-043-026

*UNDERNEATH FRAME*

Install 5 elastic flanged nuts to secure chaincase on mounting plate.

Tighten fasteners as per the following sequence.

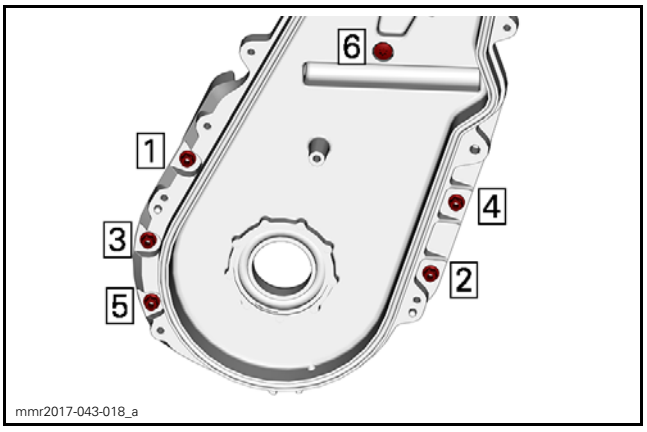

mmr2017-043-018_a

Proceed with drive chain adjustment. Refer to procedure in this subsection.

Refill chaincase with recommended oil. Refer to procedure in this subsection.

## Chaincase Assembly

### Chaincase Bearings

NOTE: This procedure can be applied either for the countershaft bearing or the drive shaft bearing.

1. Install the NEW oil seal on the extractor/installer tool. Position the lips toward bearing.

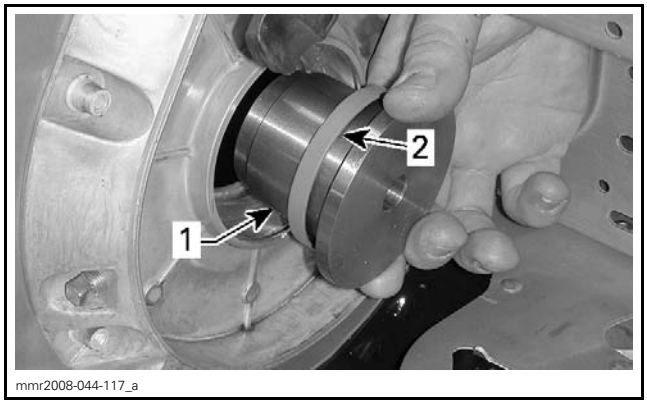

mmr2008-044-117_a

1. *Extractor/installer tool*
2. *Oil seal lips on this side*

2. Install extractor cup inside frame.

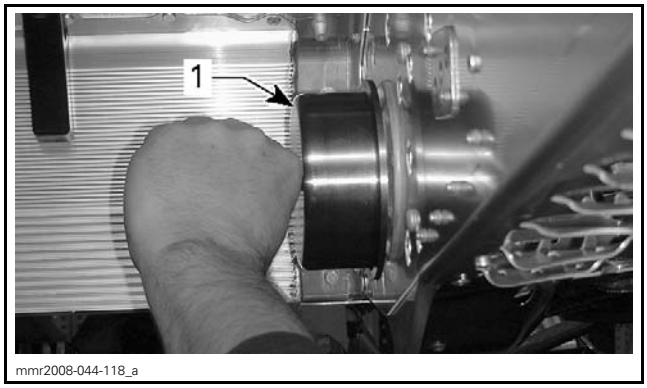

mmr2008-044-118_a

1. *Extractor cup*

3. Tighten extractor/installer tool screw to install the oil seal.
4. Install large washer and extractor/installer tool screw inside frame.

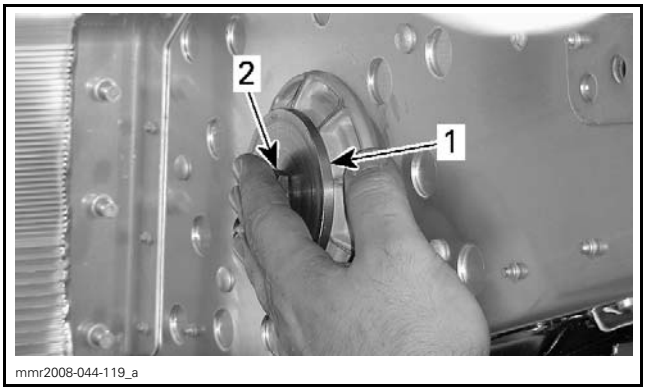


*1. Large washer*
*2. Extractor/installer tool screw*

5. In chaincase, install a NEW bearing and extractor/installer tool.

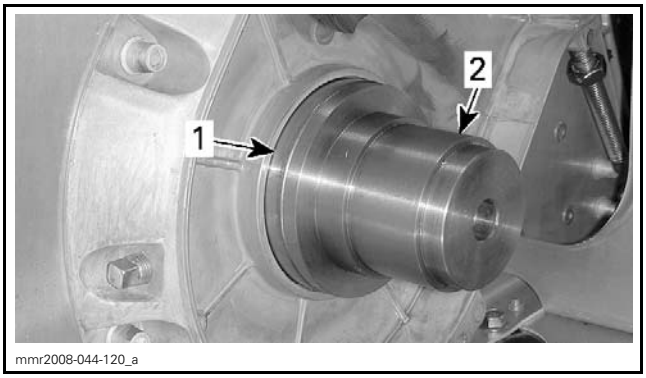


*1. Bearing*
*2. Extractor/installer tool*

6. Tighten extractor/installer tool screw to install the bearing.
7. Remove tool.

### Chain Tensioner

The installation procedure is the reverse of the removal.

### Chain and Lower Sprocket

The installation is the reverse of the removal procedure. However, pay attention to the following.

Install sprocket with its inscription outward.

### Sliding Gear

**NOTICE** **Do not use the press to compress the sliding gear while assembling. Use the press ONLY as a guide to ensure that the spring tension will be applied safely.**

The installation is the reverse of the removal procedure. However, pay attention to the following.

Install coupling shaft circlip on the splines side.

Install upper sprocket circlip on a press.

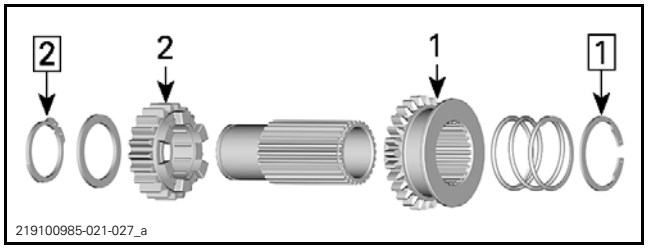


*Step 1: Install splines circlip*
*Step 2: Install upper sprocket circlip on a press*

*1. Sliding gear*
*2. Upper sprocket*

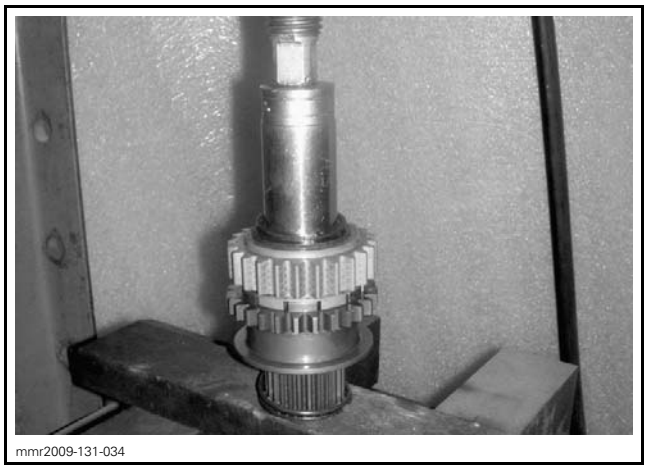


### Gears and Sprockets

The installation is the reverse of the removal procedure. However, pay attention to the following.

Assemble reverse sprocket and reverse gear as per the following illustration.

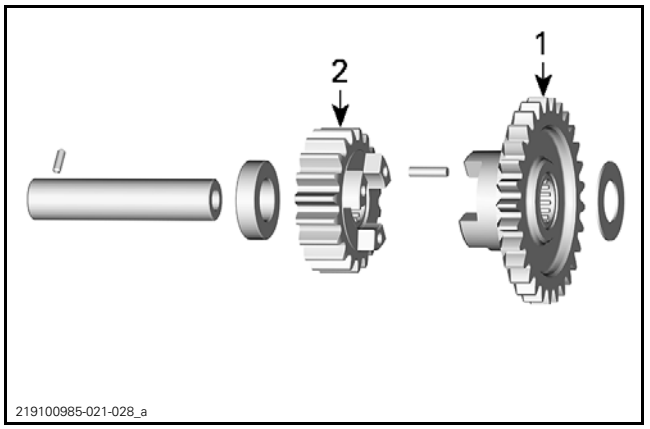


*1. Reverse sprocket*
*2. Reverse gear*

Install sliding gear assembly, reverse sprocket and reverse gear simultaneously.

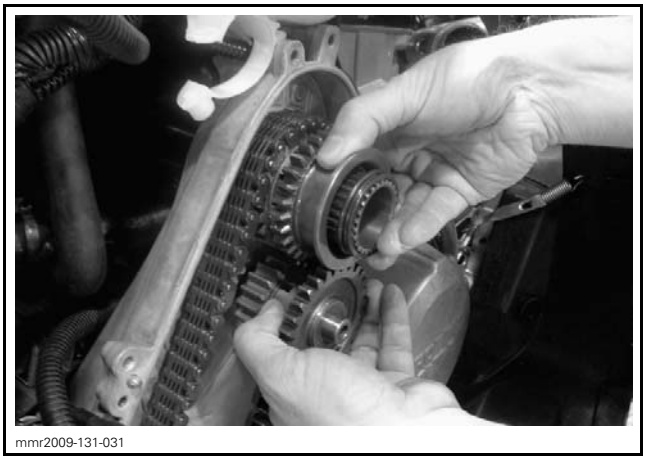
mmr2009-131-031

Install upper screw that hold sliding gear assembly. (do not tighten for the moment).

Adjust tension on the drive chain. Refer to *DRIVE CHAIN ADJUSTMENT* in this subsection.

Apply parking brake.

Tighten upper gear screw to specification.

| TIGHTENING TORQUE | |
|---|---|
| Upper gear screw | 48 N•m ± 6 N•m (35 lbf•ft ± 4 lbf•ft) |

### Shift Fork (in Chaincase Cover)

The installation is the reverse of the removal procedure However, pay attention to the following.

Ensure that seal is properly seated on the shift fork lever.

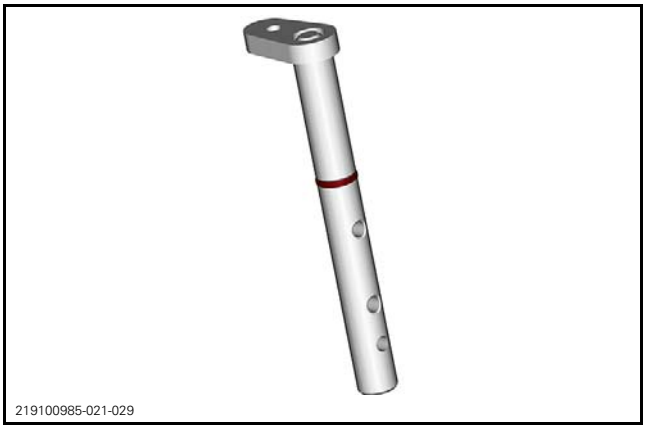
219100985-021-029

Position shift fork lever toward the inside.

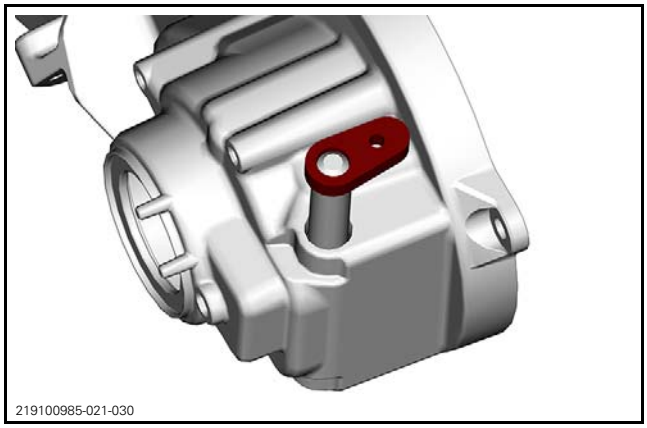
219100985-021-030

Install spring pins into both holes.

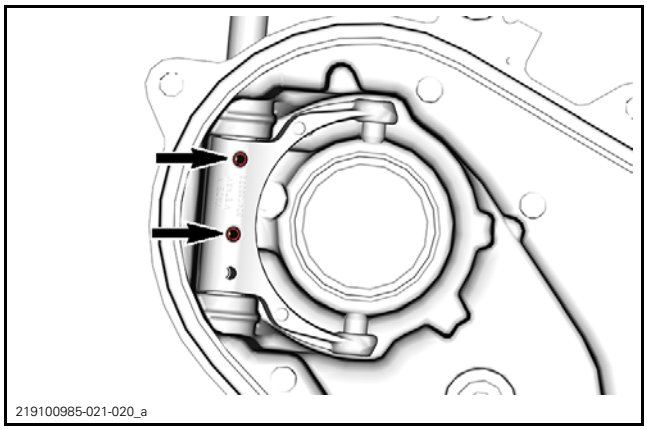
219100985-021-020_a

### Chaincase Cover

Install chaincase cover. Refer to *CHAINCASE COVER* in this subsection.

## Installing the Chaincase Cover

The installation is the reverse of the removal procedure However, pay attention to the following.

Ensure cover O-ring is positioned correctly in its groove.

Ensure that link rod is positioned with the reference mark upwards.

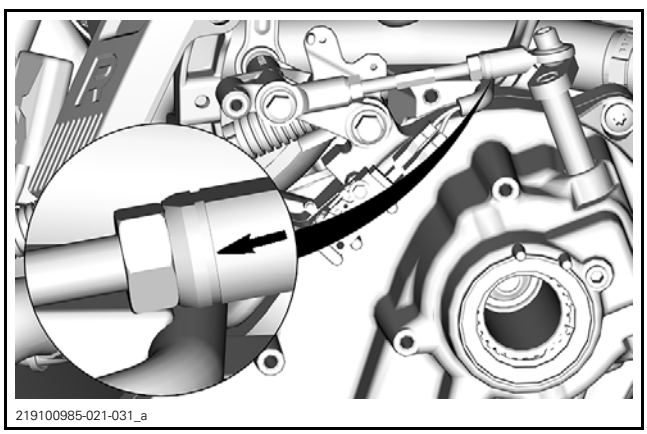
219100985-021-031_a

*Screw 11 is present on long chaincase only.*

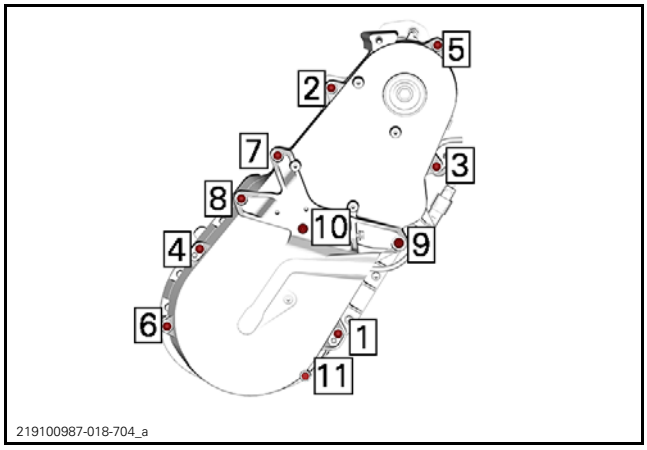


*TYPICAL*

| TIGHTENING TORQUE | | |
|---|---|---|
| Screws 1 to 8 and 11 (long chaincase) | Same chaincase | 10 N•m ± 2 N•m (89 lbf•**in** ± 18 lbf•**in**) |
| | New chaincase | 15 N•m ± 1 N•m (133 lbf•**in** ± 9 lbf•**in**) |
| Screw 9 | | 24.5 N•m ± 3.5 N•m (18 lbf•ft ± 3 lbf•ft) |
| Screw 10 | | 16 N•m ± 2 N•m (142 lbf•**in** ± 18 lbf•**in**) |
| Reverse gear screw | | 24.5 N•m ± 3.5 N•m (18 lbf•ft ± 3 lbf•ft) |

Adjust shift linkage, refer to *SHIFT LINKAGE (MECHANICAL AND ELECTRONIC REVERSE)* in this subsection.

Refill chaincase. Refer to *REPLACING THE CHAINCASE OIL* in this subsection.

# SPEED SENSOR (VSS)

The speed sensor is a hall effect sensor.

## Speed Sensor Location

The speed sensor is mounted in the chaincase cover.

## Testing the Speed Sensor Signal

1. Ensure speed sensor is properly connected.
2. Wake up ECM.
3. Back-probe VSS connector as per table and test for proper specification.

**NOTICE** **Be careful not to damage connector seals when back probing.**

| SPEED SENSOR (VSS) CONNECTOR | SPECIFICATION |
|---|---|
| Pin 2 | Ground |
| Pin 3 | 5 Vdc reference voltage |

If test failed, check wiring harness going to ECM.

4. Lift and support rear of vehicle.
5. Back-probe VSS connector as per table and test for proper specification.
6. Rotate track/driven pulley.

| SPEED SENSOR SIGNAL TEST | | | |
|---|---|---|---|
| ROTATE DRIVEN PULLEY | SPEED SENSOR CONNECTOR (SENSOR SIDE) | | VOLTAGE |
| | Pin 1 | Pin 2 | Alternate 7 Vdc and 0 Vdc |

If reference voltage and ground are available at sensor, but no signal, replace sensor.

NOTE: During chaincase disassembly, ensure magnets are intact on shaft.

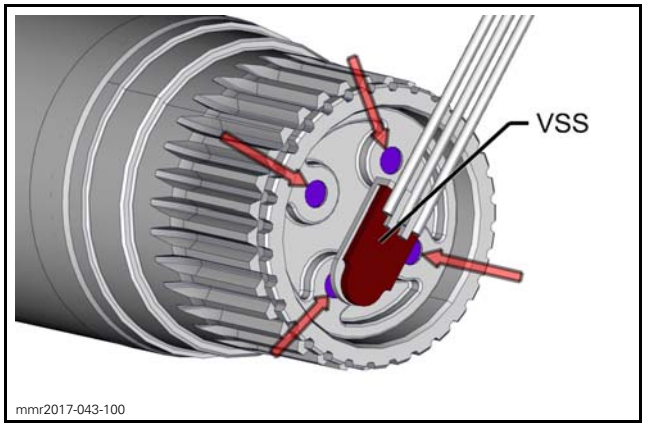


Measure the distance between magnetic cap and end of shaft. It must be as specified.

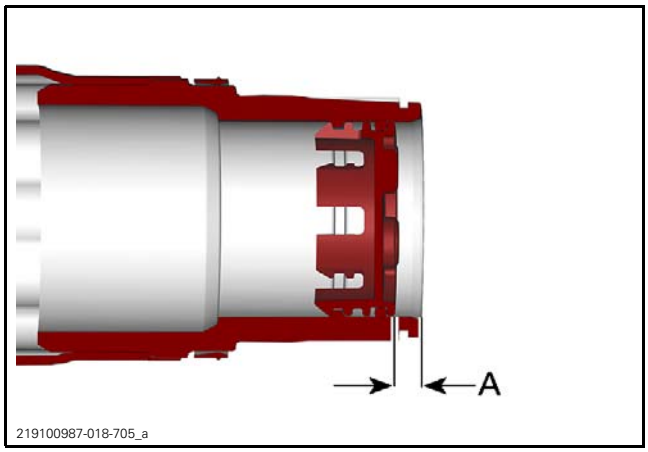


*A. Distance to measure*

| DISTANCE SPECIFICATION | |
|---|---|
| no. A Measured between magnetic cap and shaft end | 5 mm (.2 in) |

## Replacing the Speed Sensor

The sensor can be replaced with the chaincase cover as an assembly. In such a case, refer to *CHAINCASE* subsection.

To replace sensor only, proceed as follows.

### Removing the Speed Sensor

1. Remove chaincase cover. Refer to procedure in this subsection.
2. Heat the upper end of the speed sensor protective plate with a heat gun.

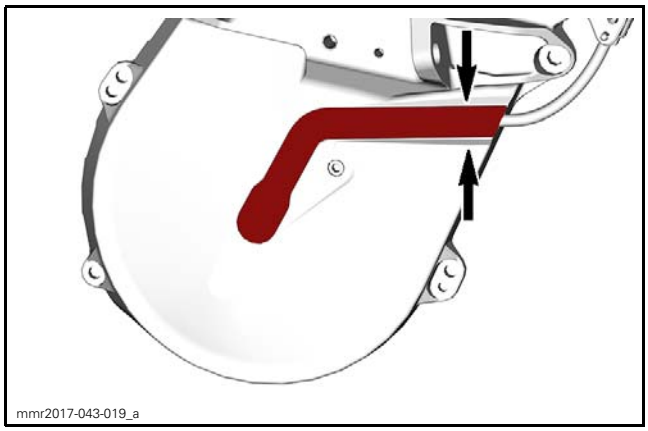


3. Use a flat screwdriver to pry out the end of the protective plate from chaincase cover.

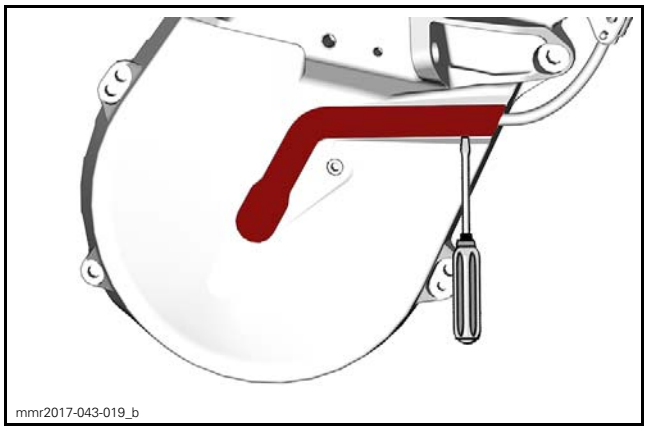


**NOTICE** **Use care when prying out the plate not to damage the chaincase cover.**

4. Heat the next section of the plate.
5. Pry out the heated section using the flat screwdriver.
6. Repeat steps 4 and 5 until the protective plate is completely removed.
7. Remove the speed sensor.
8. Use the flat screwdriver to remove the remaining sealant from the chaincase cover.

**NOTICE** **Do not apply excessive pressure when removing the remaining sealant not to damage the chaincase cover.**

9. Rub the sealant using a scouring pad.

### Installing the Speed Sensor

Make sure surface is clean and free of grease.

The assembly must be watertight.

| PRODUCT REQUIRED |
|---|
| LOCTITE 5900 (P/N 293 800 066) |

1. Apply 3 beads of sealant in the chaincase cover as per the following illustration.

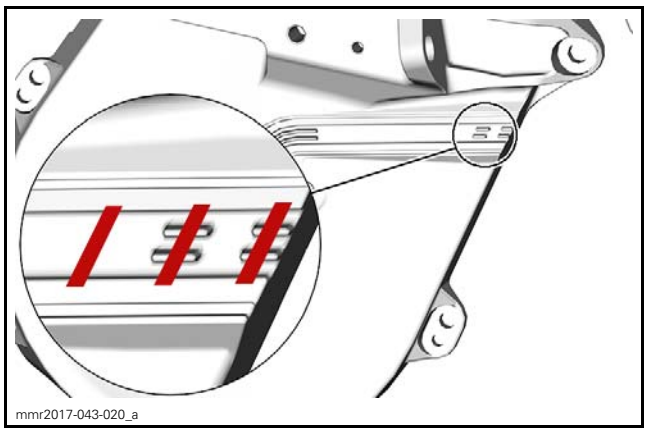

2. Install the speed sensor in the chaincase cover.

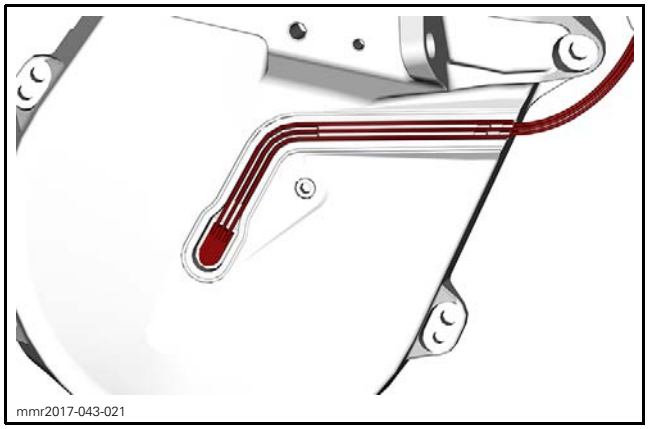


3. Apply sealant all around the protective plate bed on the chaincase cover.

Follow the pattern shown on the next picture.

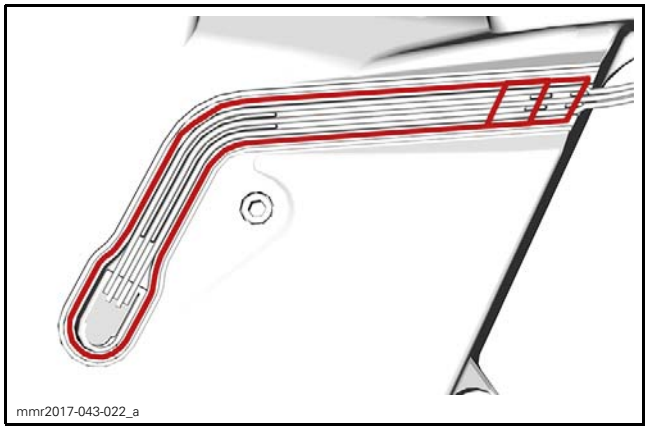


4. Place the protective plate in position and firmly push in order to evacuate all the surplus sealant. Keep pressure for at least 1 minute.
5. Wipe off all the sealant surplus.
6. Once cleaned up, inspect all the circumference for sealant lacks.

NOTE: Sealant must be visible all around.

7. Place some adhesive tape on the protective plate to maintain a pressure for at least 24 hours.

NOTE: Wait for at least 1 hour before exposing vehicle to cold temperature.

8. Reinstall chaincase cover. Refer to procedure in this subsection.

# DRIVE AXLE

## SERVICE TOOLS – OTHER SUPPLIER

| Description | Part Number | Page |
|---|---|---|
| SNAP-ON 3-JAW PULLER | CG273 | 347 |

## SERVICE PRODUCTS

| Description | Part Number | Page |
|---|---|---|
| SUSPENSION GREASE | 293 550 033 | 348 |

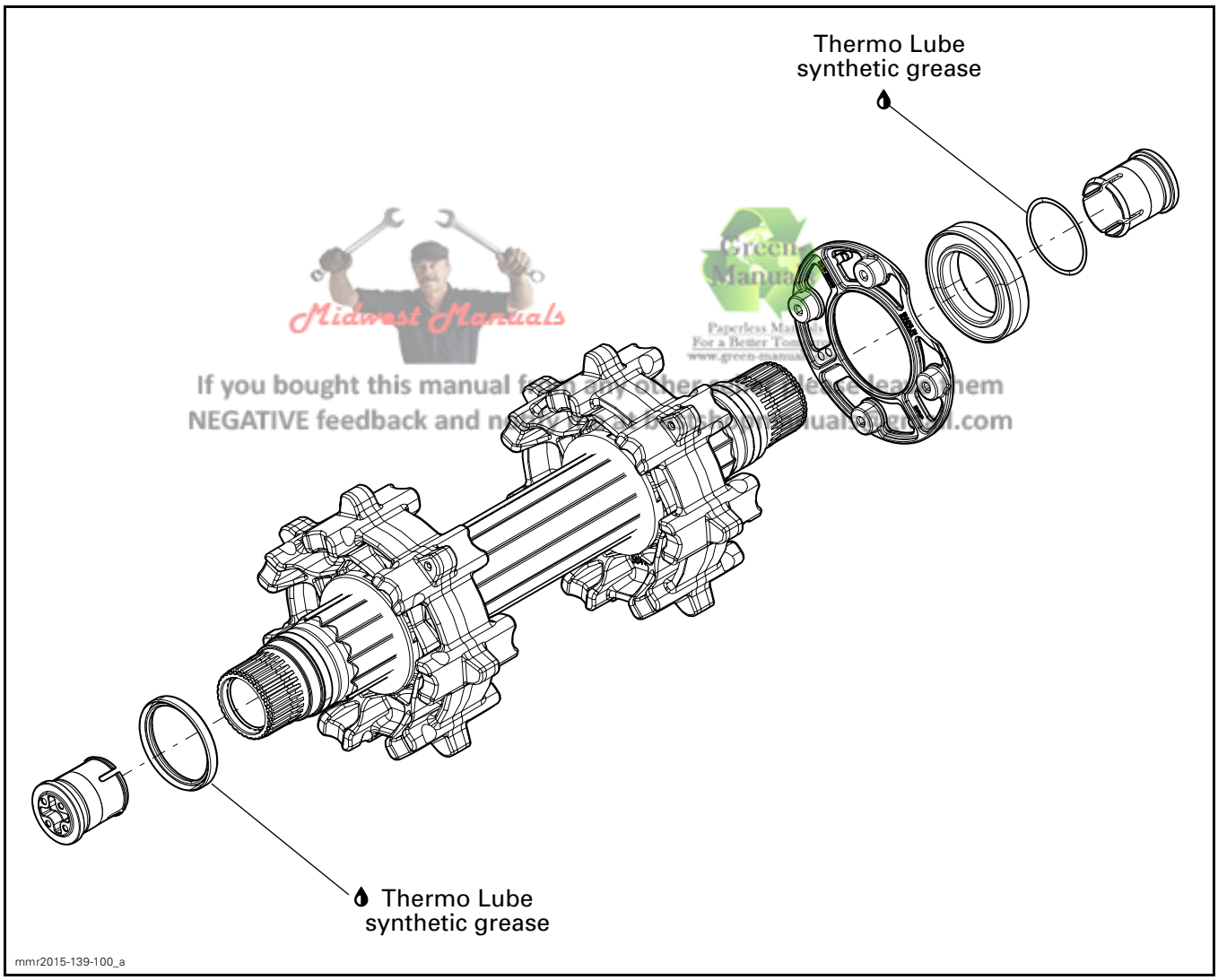


Midwest Manuals
If you bought this manual from any other site please leave them
NEGATIVE feedback and n .com

# GENERAL

During assembly/installation, use torque values and service products as in the exploded view.

Clean threads before applying a threadlocker. Refer to *SELF-LOCKING FASTENERS* and *LOCTITE APPLICATION* at the beginning of this manual for complete procedure.

**⚠ WARNING**

**Torque wrench tightening specifications must be strictly adhered to.**
**Locking devices must be replaced with new ones when removed (e.g.: locking tabs, elastic stop nuts, cotter pins, etc.).**

# PROCEDURES

## DRIVE AXLE

### Drive Axle Removal

1. Remove the rear suspension. Refer to *REAR SUSPENSION* subsection.
2. Remove the chaincase cover. Refer to *CHAINCASE* subsection.
3. Release tension from drive chain by unscrewing the tensioner adjustment screw.

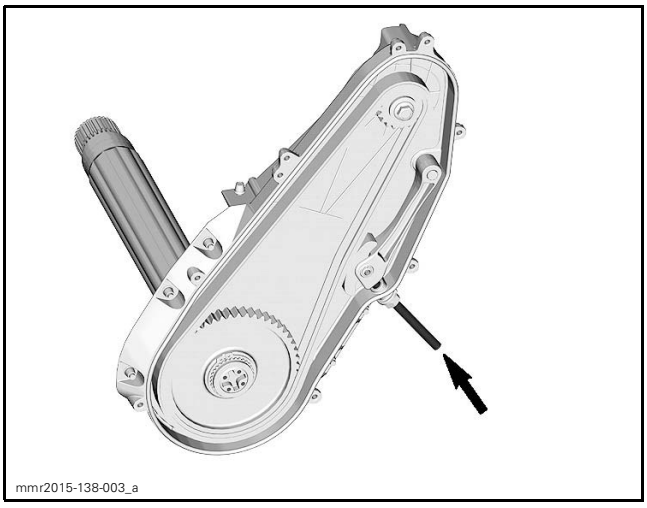
mmr2015-138-003_a

4. Remove the lower sprocket circlip.

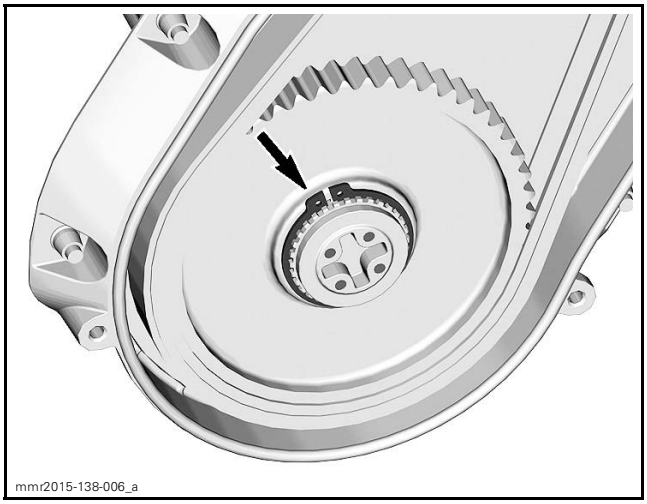
mmr2015-138-006_a

5. Remove lower gear and drive chain.
6. Remove the caliper. Refer to *BRAKE* subsection.
7. From underneath of vehicle, turn the LH bearing flange counterclockwise to unlock it from frame.

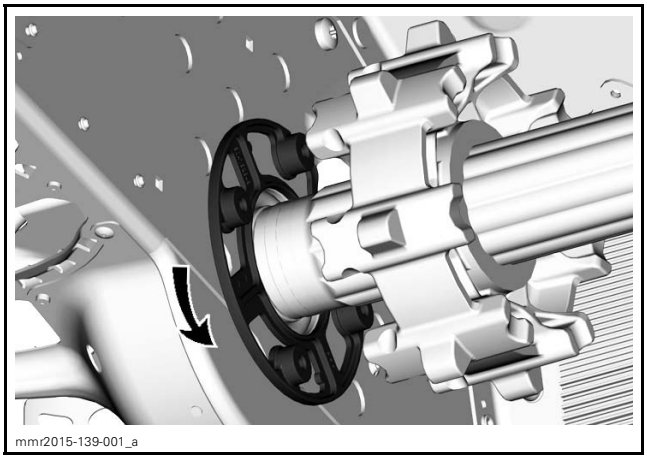
mmr2015-139-001_a

8. Release drive axle sprockets from track and at the same time, push the drive axle toward the LEFT side.
9. Move the drive axle towards the right side to remove it from vehicle.

### Drive Axle Inspection

Check if bearing turns smoothly and freely. Replace bearing if necessary.

Check if bearing seals are damaged. Replace bearing seals if necessary.

Check if the bearing flange is cracked, bent or otherwise damaged. Replace if required.

Replace drive axle if one of the following situations is detected:

– Cracked, worn or damaged drive axle

– Worn or damaged drive axle splines
– Worn or damaged sprockets
– Worn bearing journal.

## Drive Axle Bearing Removal

1. Remove O-ring.

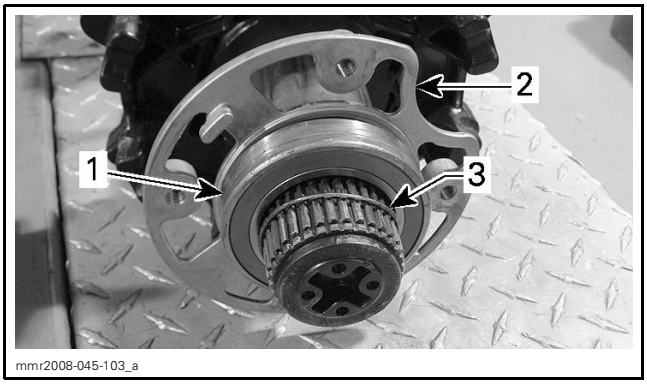


*1. Drive axle bearing*
*2. Bearing flange*
*3. O-ring*

2. Using a 3-jaw puller such as the SNAP-ON 3-JAW PULLER (P/N CG273), remove the drive axle bearing.

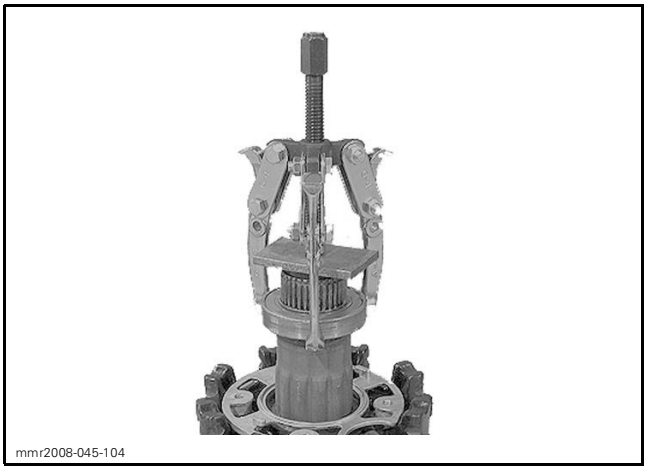


3. Remove the bearing flange.

## Drive Axle Bearing Installation

1. Install bearing flange on drive axle.

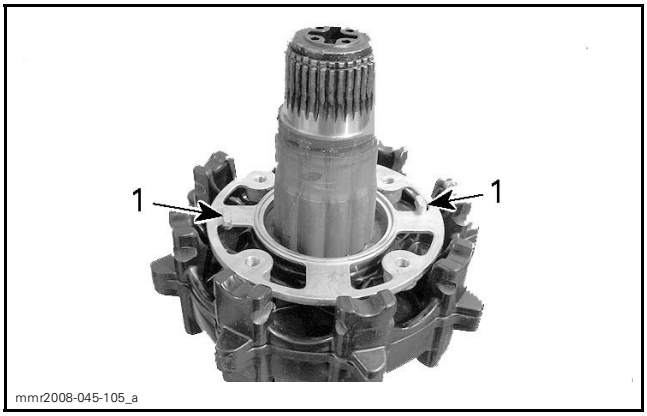


*1. Locking tabs outwards*

2. Using a press and a suitable pipe, push the bearing onto drive axel.

**NOTICE** **Always push the bearing by inner race.**

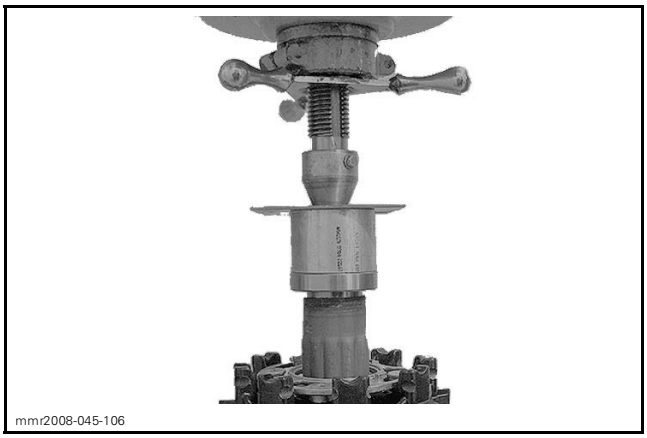


## Drive Axle Installation

The installation is the reverse of the removal procedure. However, pay attention to the following.

1. Insert drive axle and lock the bearing flange on frame.

NOTE: Ensure bearing flange is properly locked. Tabs must be properly inserted in frame slots.

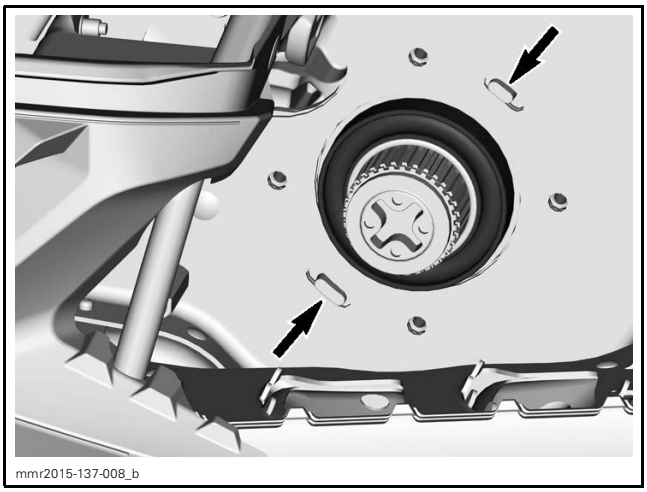


*VIEW FROM OUTSIDE FRAME*
*1. Bearing flange locking tabs*

2. Install the caliper and the disc brake. Refer to *BRAKE* subsection for the specific procedure.
3. Install all other removed parts. Refer to appropriate subsections.

# MAGNETIC CAPS

## Magnetic Cap Removal

1. For the LH cap, remove brake disc protective cover. Refer to *BRAKE* subsection.
2. For the RH cap, remove the chaincase cover. Refer to *CHAINCASE* subsection.
3. Using two screwdrivers or pliers, pry or pull the magnetic cap out of drive axle end.
4. Discard the magnetic cap.

## Magnetic Cap Installation

1. Apply SUSPENSION GREASE (P/N 293 550 033) on O-ring.
2. Insert **NEW** magnetic cap in drive axle.
3. Install all other removed parts.

# DRIVE AXLE

## SERVICE PRODUCTS

| Description | Part Number | Page |
|---|---|---|
| SYNTHETIC SUSPENSION GREASE | 779163 | 3 |

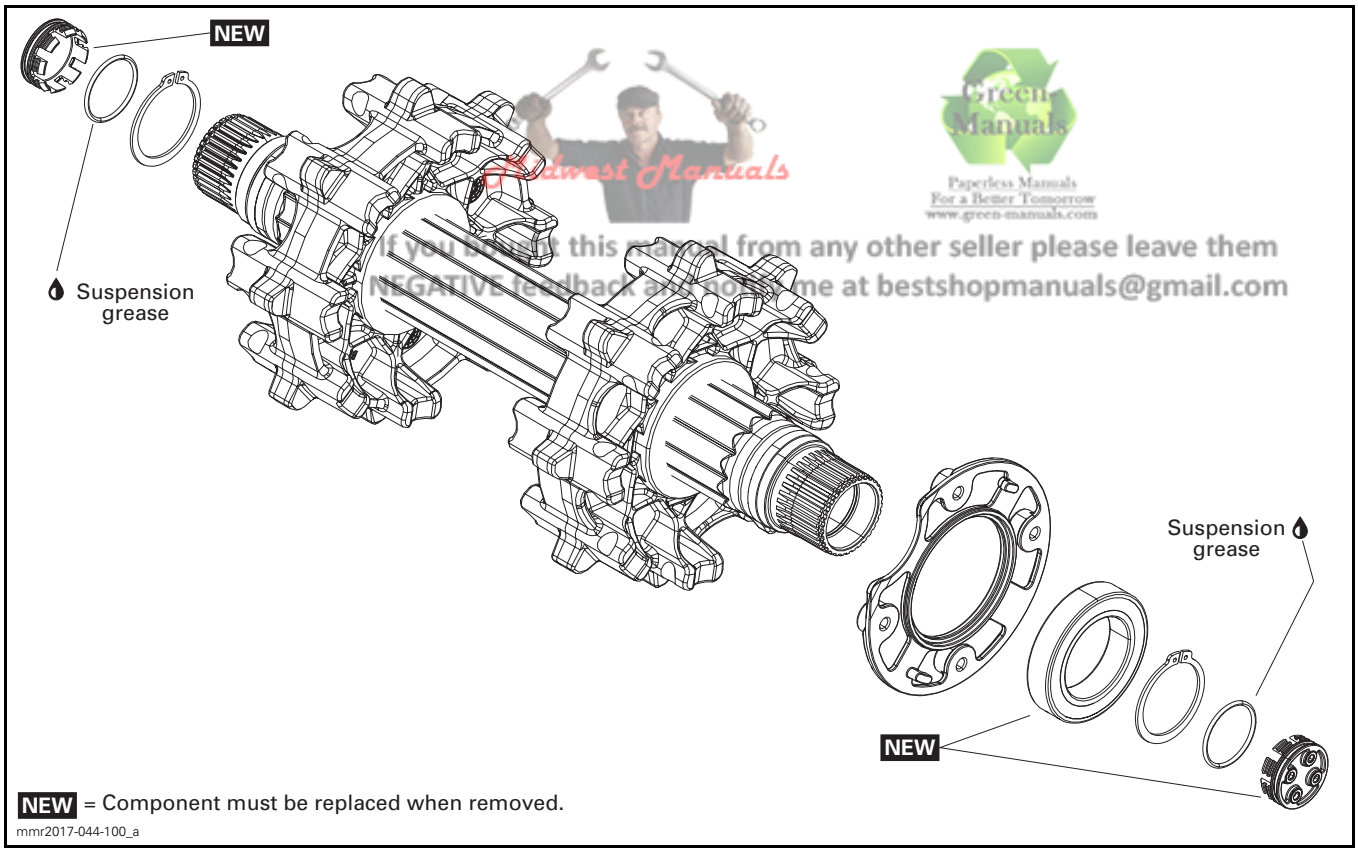


**NEW** = Component must be replaced when removed.

mmr2017-044-100_a

Midwest Manuals
Green Manuals
Paperless Manuals For a Better Tomorrow www.green-manuals.com
If you bought this manual from any other seller please leave them NEGATIVE feedback and notify me at bestshopmanuals@gmail.com

# GENERAL

During assembly or installation, use torque values and service products as in the exploded view.

Clean threads before applying a threadlocker. Refer to *SELF-LOCKING FASTENERS* and *LOCTITE APPLICATION* at the beginning of this manual for complete procedure.

**⚠ WARNING**

**Torque wrench tightening specifications must be strictly adhered to.**
**Locking devices must be replaced with new ones when removed (e.g.: locking tabs, elastic stop nuts, cotter pins, etc.).**

# PROCEDURES

## DRIVE AXLE

### Removing the Drive Axle

1. Remove the rear suspension. Refer to *REAR SUSPENSION* subsection.
2. Remove the chaincase cover. Refer to *CHAINCASE* subsection.
3. Release tension from drive chain by unscrewing the tensioner adjustment screw.

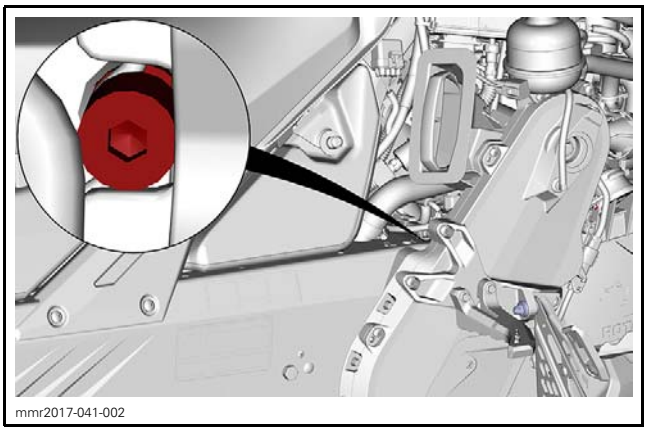

mmr2017-041-002

4. Remove the lower sprocket circlip.

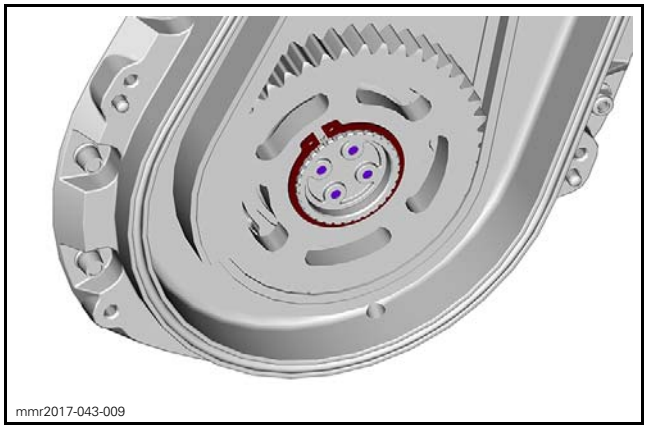

mmr2017-043-009

5. Remove lower gear and drive chain.
6. Remove the caliper. Refer to *BRAKE* subsection.
7. From underneath of vehicle, turn the LH bearing flange counterclockwise to unlock it from frame.

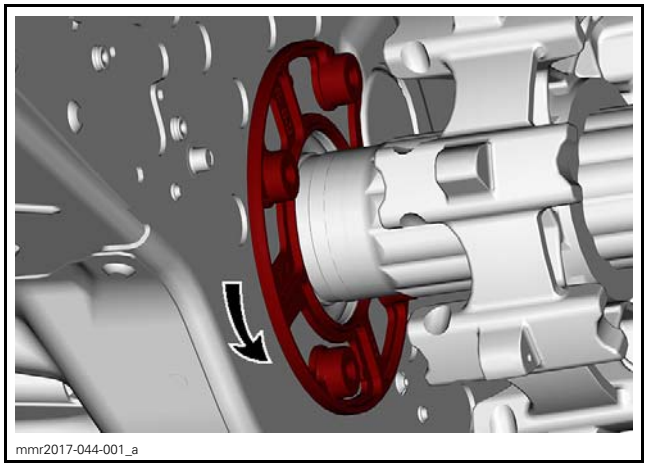

mmr2017-044-001_a

8. Release drive axle sprockets from track and at the same time, push the drive axle towards left side until it comes out of the chaincase.
9. Move the drive axle towards the right side to remove it from vehicle.

### Inspecting the Drive Axle

Check if bearing turns smoothly and freely. Replace bearing if necessary.

Check if bearing seals are damaged. Replace bearing if necessary.

Check if the bearing flange is cracked, bent or otherwise damaged. Replace if required.

Replace drive axle if one of the following situations is detected:

– Cracked, worn or damaged drive axle
– Worn or damaged drive axle splines

– Worn or damaged sprockets
– Worn bearing journal.

### Removing the Drive Axle Bearing

1. Use a 3-jaw puller to remove the drive axle bearing.

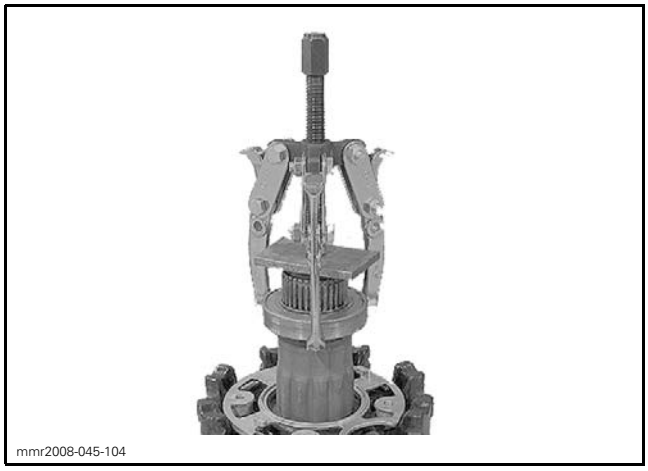
mmr2008-045-104

2. Remove the bearing flange.

### Installing the Drive Axle Bearing

1. Install bearing flange on drive axle with locking tabs outwards.

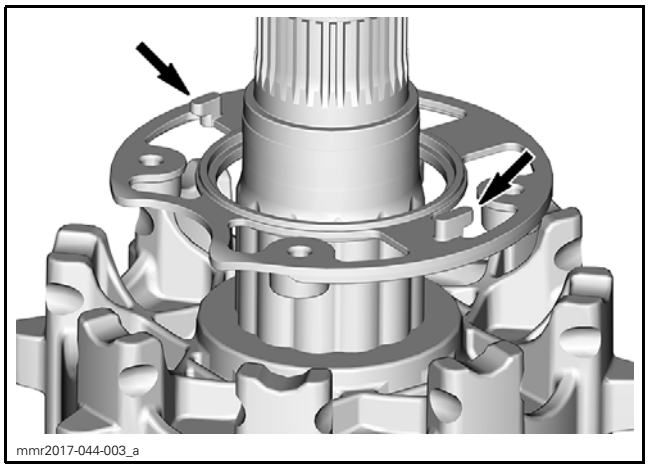
mmr2017-044-003_a

2. Using a press and a suitable pipe, push the bearing onto drive axel.

**NOTICE** **Always push the bearing by inner race.**

### Installing the Drive Axle

The installation is the reverse of the removal procedure. However, pay attention to the following.

Insert drive axle and lock the bearing flange on frame.

NOTE: Ensure bearing flange is properly locked. Tabs must be properly inserted in frame slots.

mmr2017-042-010

*VIEW FROM OUTSIDE FRAME*

Install the caliper and the disc brake. Refer to *BRAKE* subsection for the specific procedure.

Install all other removed parts. Refer to appropriate subsections.

## MAGNETIC CAPS

### Removing the Magnetic Cap

1. For the LH cap, remove brake disc protective cover. Refer to *BRAKE* subsection.
2. For the RH cap, remove the chaincase cover. Refer to *CHAINCASE* subsection.
3. By screwing a large screw in the middle of the cap, pry or pull the magnetic cap out of drive axle end.
4. To remove the other cap, push through axle with a long metal bar or wood stick.
5. Discard the magnetic cap.

### Installing the Magnetic Cap

1. Apply grease on O-ring.

| SERVICE PRODUCT |
| --- |
| SYNTHETIC SUSPENSION GREASE (P/N 779163) |

2. Insert new magnetic cap in drive axle, Push until caps is secure into groove.

NOTE: Cap should have outside contour face 5 mm (.197 in) inwards.

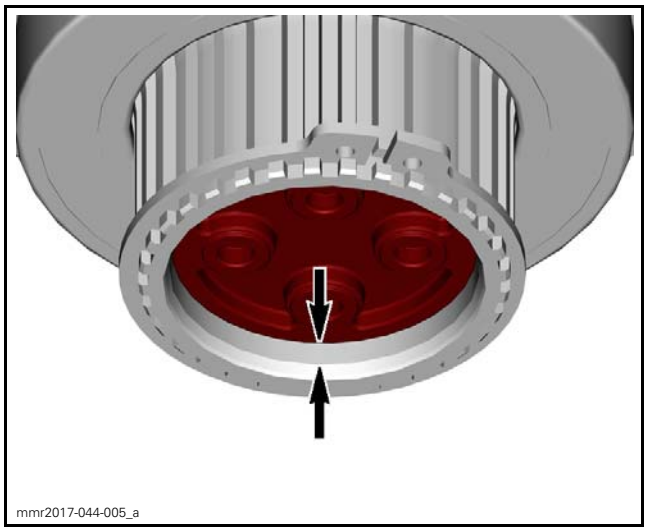


*5 MM (.197IN) INWARDS*

3. Install all other removed parts.

# TRACK

## SERVICE TOOLS


| Description | Part Number | Page |
|---|---|---|
| TENSIOMETER | 414 348 200 | 1 |
| TRACK CLEAT INSTALLER | 529 036 044 | 3 |


## MAINTENANCE

### INSPECTING THE TRACK

Visually inspect track for:
- Cuts and abnormal wear
- Broken rods
- Broken or missing track cleats
- Perforations in the track
- Tears in the track (particularly around traction product holes)
- Lugs that are broken or torn off, exposing portion of rods
- Delamination of the rubber
- Missing track guide(s).

If track is damaged or rods are broken, replace track. For damaged or missing cleats, replace by new ones.

**⚠ WARNING**

**Do not operate a snowmobile with a cut, torn or damaged track.**

### ADJUSTING AND ALIGNING THE TRACK

Track tension and alignment are interrelated. Do not adjust one without checking the other. Track tension procedure must be carried out prior to track alignment.

#### Verifying the Track Tension

1. Lift rear of vehicle and support it off the ground.
2. Allow rear suspension to fully extend.
3. Use a tensiometer.

| REQUIRED TOOL | |
|---|---|
| TENSIOMETER (P/N 414 348 200) | |

4. Set deflection to 3.2 cm (1.26 in) using bottom O-ring.

*DEFLECTION SETTING*
*1. Bottom O-ring*

5. Place upper O-ring to 0 kgf (0 lbf).
6. Position the tensiometer on track, halfway between runner ends.
7. Push the tensiometer downwards until bottom O-ring (deflection) is aligned with the bottom of slider shoe.

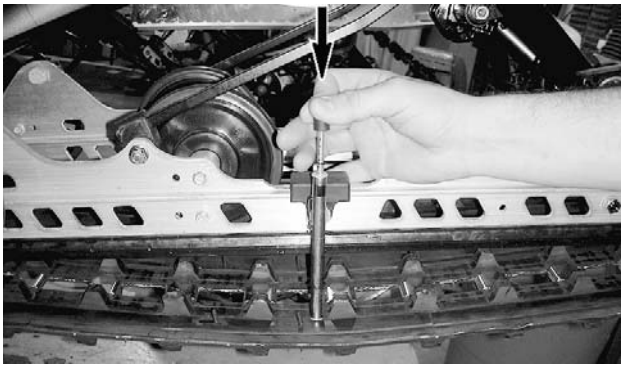


*TYPICAL*

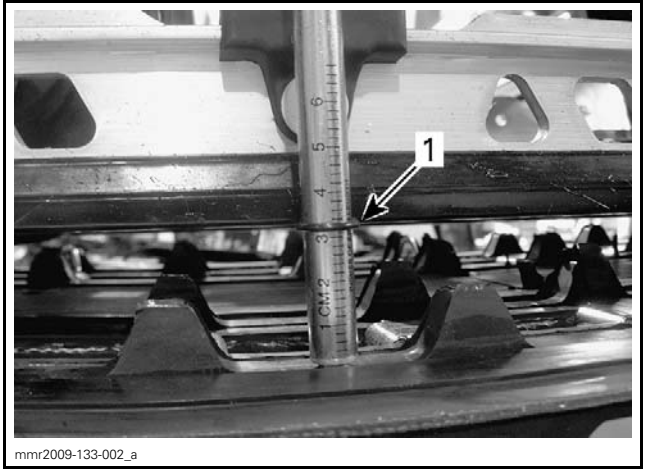


*1. Deflection O-ring aligned with slider shoe*

8. Read load recorded by the upper O-ring on the tensiometer.

*LOAD READING*
*1. Upper O-ring*

Load reading must be as per the following table.

| TRACK ADJUSTMENT SPECIFICATION | |
|---|---|
| Track deflection setting | 3.2 cm (1.26 in) |
| Track load reading | 6.0 kgf to 8.5 kgf (13 lbf to 19 lbf) |

9. If load reading is not in accordance with the specification, adjust track tension. Refer to *ADJUSTING THE TRACK TENSION*.

**NOTICE** Too much tension will result in power loss and excessive stresses on suspension components.

## Adjusting the Track Tension

1. Lift rear of vehicle and support it off the ground.
2. Loosen rear axle
   2.1 Loosen nut on 2 wheel idler system
   2.2 Loosen screw on 3 or 4 wheel idler system
3. Tighten or loosen both adjustment screws to increase or decrease track tension.

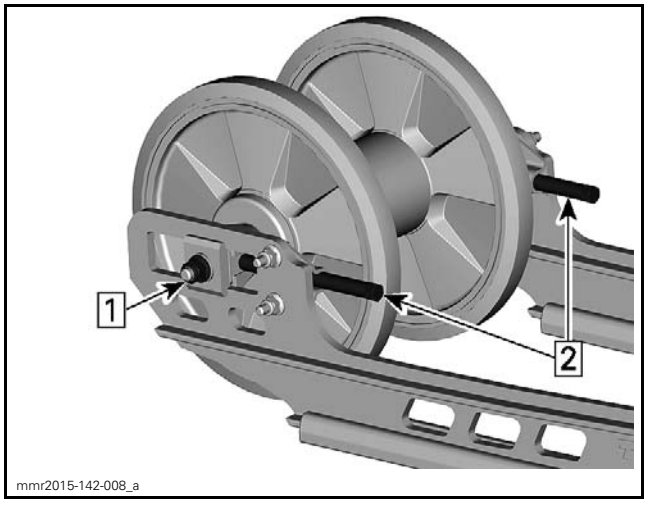


*TYPICAL - 2 IDLER WHEELS MODELS*
*Step 1: Loosen axle nut*
*Step 2: Tighten or loosen adjustment screws*

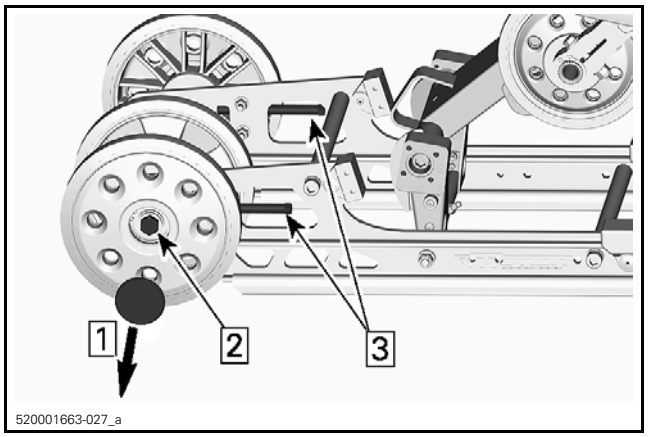


*TYPICAL - 3 OR 4 IDLER WHEELS MODELS*
*Step 1: Remove caps*
*Step 2: Loosen one the axle screw*
*Step 3: Tighten or loosen adjustment screws*

4. Verify track tension, refer to *VERIFYING THE TRACK TENSION*.
5. Ensure track is properly aligned, refer to *ALIGNING THE TRACK*.

## Aligning the Track

**⚠ WARNING**

**Before checking track alignment, ensure that the track is free of all particles which could be thrown out while track is rotating. Keep hands, tools, feet and clothing clear of track. Ensure no one is standing in close proximity to the vehicle. Never rotate at high speed.**

1. Lift rear of vehicle and support it off the ground.
2. Start engine and accelerate slightly so that track barely turns. This must be done in a short period of time (10 seconds).
3. Check that the track is well centered; equal distance on both sides between edges of track guides and slider shoes.

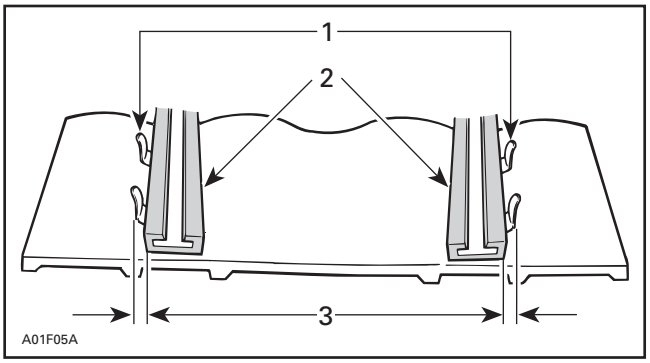


*1. Guides*
*2. Slider shoes*
*3. Equal distance*

4. To correct track alignment:
   4.1 Stop engine.
   4.2 Loosen rear wheel nut.
   4.3 Tighten adjustment screw on side where the slider shoe is the farthest from the track insert guides.

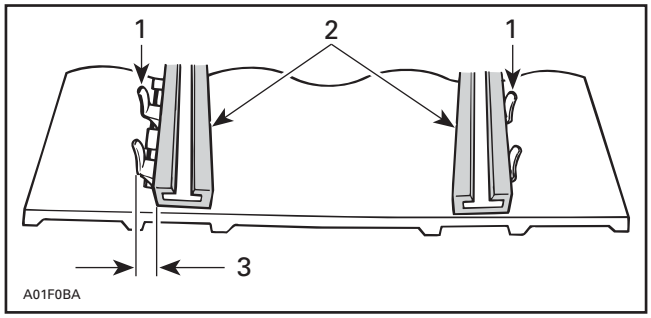


*1. Guides*
*2. Slider shoes*
*3. Tighten on this side*

5. Restart engine.
6. Rotate track slowly and recheck alignment.
7. If satisfactory track alignment is achieved tighten idler wheels axle nut to specification:

| TIGHTENING TORQUE | |
|---|---|
| Rear idler wheel retaining screws **(3 and 4 idler wheels system)** | 48 N•m ± 6 N•m (35 lbf•ft ± 4 lbf•ft) |
| Rear idler wheel retaining nut and screw **(2 idler wheels system)** | 24.5 N•m ± 3.5 N•m (18 lbf•ft ± 3 lbf•ft) |

# PROCEDURES

## TRACK

### Replacing a Track Cleat

Raise rear of vehicle off the ground.

Lift snow guard.

Rotate track to expose a cleat to be replaced.

Remove cleat from track using plastic hammer and a big screwdriver.

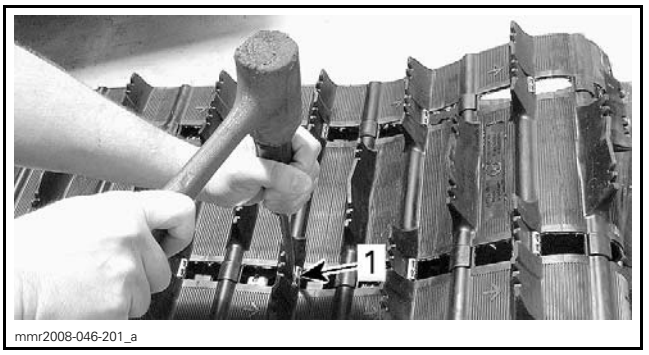


*TYPICAL*
*1. Cleat*

Place new cleat in position on the track.

Secure cleat with the cleat installer.

| REQUIRED TOOL | |
|---|---|
| TRACK CLEAT INSTALLER (P/N 529 036 044) | |

Bend cleat and push tabs into rubber.

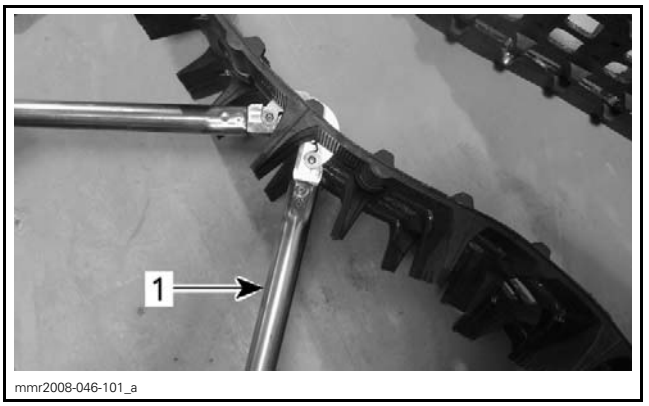


*TYPICAL*
*1. Narrow-cleat installer*

Reopen narrow-cleat installer.

Position cleat tabs on open end of tool.

Squeeze tabs until they are indented in rubber.

### Removing the Track

Remove rear suspension from vehicle. Refer to *REAR SUSPENSION*.

Remove drive axle. Refer to *DRIVE AXLE* subsection.

Remove track.

### Installing the Track

Reverse the removal procedure.

NOTE: When installing the track, respect rotation direction indicated by an arrow on track thread.

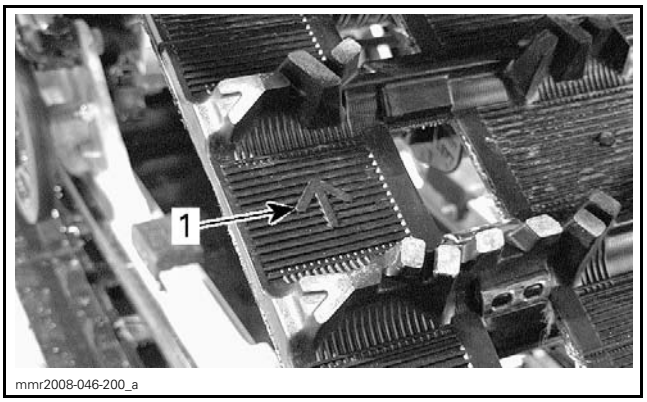


*1. Arrow pointing forwards*

## Adjusting and aligning the Track

Refer to *MAINTENANCE* in this subsection.

# SUSPENSION ADJUSTMENT

## GENERAL

**NOTICE** Whenever adjusting rear suspension, check track tension and adjust if necessary.

## ADJUSTMENT

Choice of suspension adjustments vary with vehicle load, personal preference, riding speed and terrain condition.

The best way to set up the suspension, is to start from factory settings, then customize each adjustment one at a time.

Front and rear adjustments are interrelated. It may be necessary to readjust the rear shock absorbers after adjusting front shock absorbers for instance.

Test run the vehicle under the same conditions; trail, speed, load, etc. Change one adjustment and retest. Proceed methodically until you are satisfied.

Following are guidelines to fine-tune suspension.

### STOPPER STRAP

Stopper strap length has an effect on the amount of weight the center spring has to carry especially during acceleration, therefore on the front end uplift.

Stopper strap length also has an effect on center spring travel.

| ACTION | RESULT |
|---|---|
| Increasing stopper strap length | Lighter ski pressure under acceleration |
| | More center spring travel |
| | More bump absorption capability |
| Decreasing stopper strap length | Heavier ski pressure under acceleration |
| | Less center spring travel |
| | Less bump absorption capability |

NOTE: Stopper strap could be set to position 1, 2, 3, 4 and 5. Below are illustrations for position 1, 2, 3. Smaller numbers correspond to a longer strap setting.

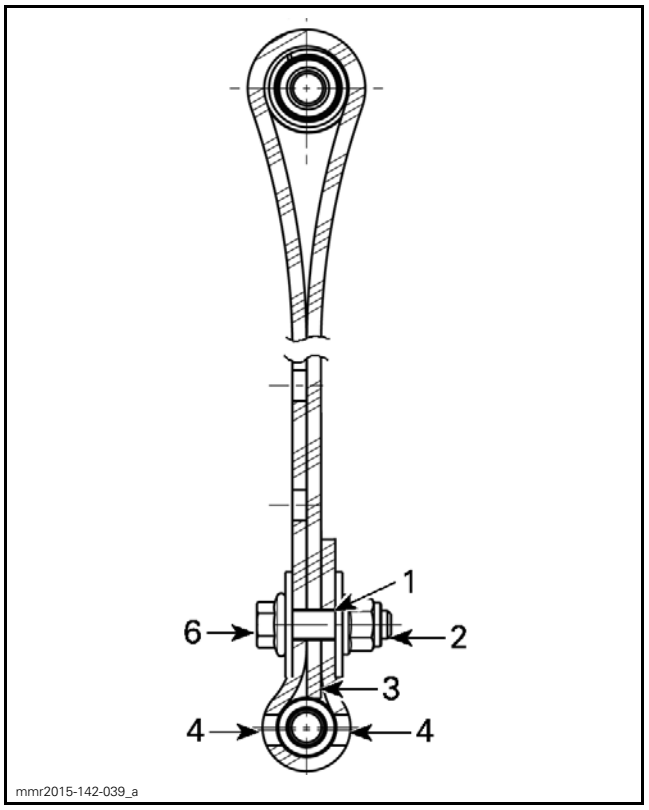


*STOPPER STRAP POSITION 1 (1ST HOLE, LONGEST)*
1. *1st hole from end*
2. *Towards rear*
3. *Tip of strap touching strap axis*
4. *Two holes left open between screw head and nut*
5. *Towards front*

Midwest Manuals
If you bought this manual from any other seller please leave them NEGATIVE feedback and notify me at bestshopmanuals@gmail.com
Green Manuals
Paperless Manuals For a Better Tomorrow www.green-manuals.com

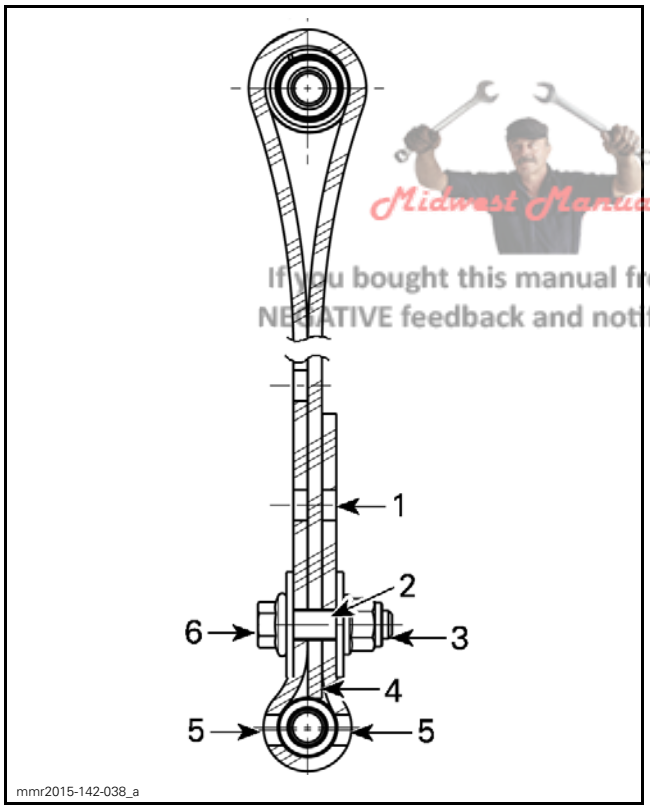


*STOPPER STRAP POSITION 2 (2ND HOLE)*
1. *Free hole*
2. *2nd hole from end*
3. *Towards rear*
4. *Tip of strap touching strap axis*
5. *Two holes left open between screw head and nut*
6. *Towards front*

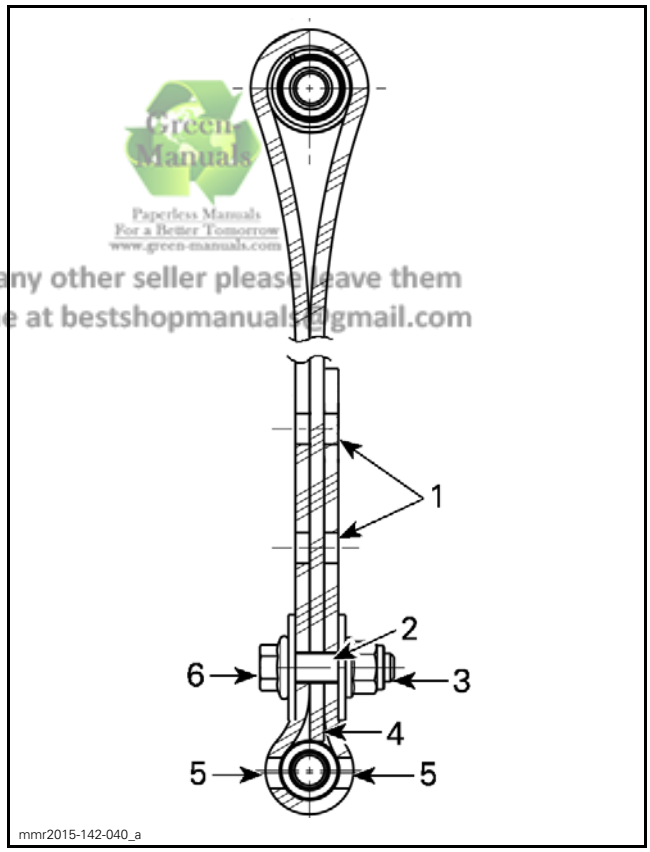


*STOPPER STRAP POSITION 3 (3RD HOLE)*
1. *Free holes*
2. *3rd hole from end*
3. *Towards rear*
4. *Tip of strap touching strap axis*
5. *Two holes left open between screw head and nut*
6. *Towards front*

NOTE: Always install stopper strap bolt as close as possible to the lower shaft.

When operating the snowmobile in deep snow or hill climbing, it may be necessary to vary stopper strap length and/or riding position, to change the angle at which the track rides on the snow. Operator's familiarity with the various adjustments as well as snow conditions will dictate the most efficient combination.

Generally, a longer stopper strap setting gives better performance on a flat landscape and a shorter setting will improve handling in steep hill climbing and deep snow conditions.

| STOPPER STRAP SETTING | |
|---|---|
| POSITION | USE |
| 1 | Not used |
| 2 | Boon docking:<br>– Better boon docking manoeuvrability<br>– Better bump absorption<br>– Better deep snow starts (forward and reverse) |

| STOPPER STRAP SETTING | |
|---|---|
| POSITION | USE |
| 3 | Factory setting: Best overall setting (General use) |
| 4 | Hill climb:<br>– Better track attack angle for hill climbing |
| 5 | Steep hill climb:<br>– Better track attack angle for hill climbing<br>– Less transfer<br>– Lower ride height |

# SPRING PRELOAD

## Front Springs

Front springs preload has an effect on:
– front suspension firmness
– The steering behavior.

| ACTION | RESULT |
|---|---|
| Increasing preload | Firmer front suspension |
| | Higher front end |
| | More precise steering |
| | More bump absorption capability |
| Decreasing preload | Softer front suspension |
| | Lower front end |
| | Lighter steering |
| | Less bump absorption capability |

**⚠ WARNING**

**Adjust both springs to the same preload. Uneven adjustment can cause poor handling and loss of stability, and/or control, and increase the risk of an accident.**

### *Cam Type Adjuster*

Using the suspension adjustment tool (included in the vehicle tool kit), turn the cam to increase or decrease spring preload.

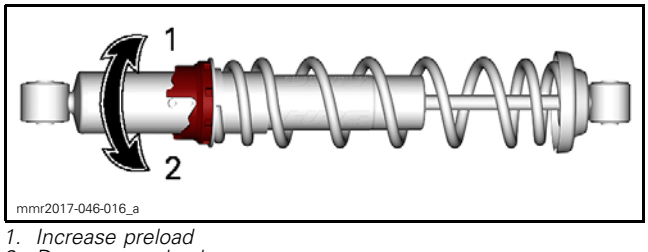


*1. Increase preload*
*2. Decrease preload*

### *Ring Type Adjuster*

Grab and turn the spring to increase or decrease spring preload.

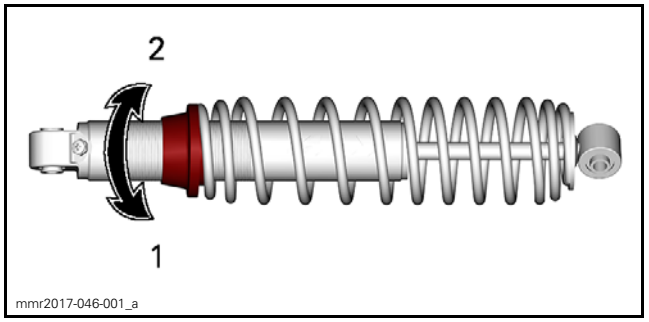


*1. Increase preload*
*2. Decrease preload*

## Center Spring

Center spring preload has an effect on steering effort, handling and bump absorption.

Also, since center spring preload adjustment puts more or less pressure on the front of the track, it has an effect on the performance in deep snow.

| ACTION | RESULT |
|---|---|
| Increasing preload | Lighter steering |
| | More bump absorption capability |
| | Better deep snow starts |
| | Better deep snow performance and handling |
| Decreasing preload | Heavier steering |
| | Less bump absorption capability |
| | Better trail handling |

### *Cam Type Adjuster*

Using the suspension adjustment tool (included in the vehicle tool kit), turn the cam to increase or decrease spring preload.

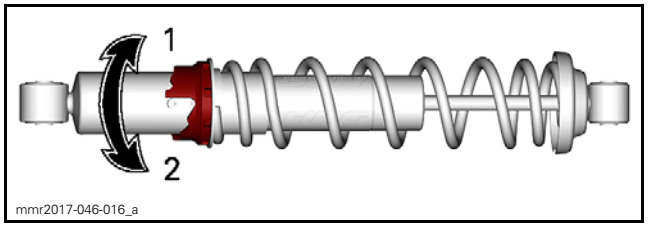


*1. Increase preload*
*2. Decrease preload*

### *Ring Type Adjuster*

Grab and turn the spring to increase or decrease spring preload.

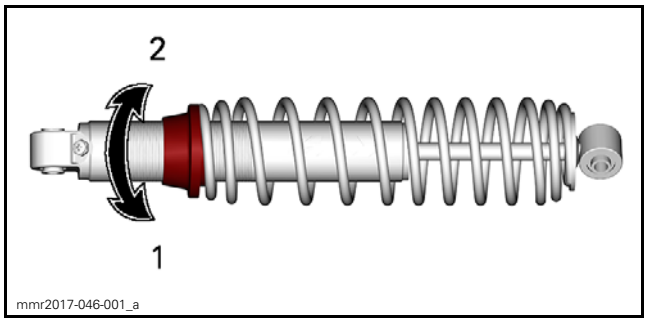


*1. Increase preload*
*2. Decrease preload*

## Rear Springs

Rear spring preload has an effect on comfort, ride height and load compensation.

Also, adjusting rear spring preload shifts more or less weight to the snowmobile front end. As a result, more or less weight is applied to the skis. This has an effect on performance in deep snow, steering effort and handling.

Slight suspension bottoming occurring under the worst riding conditions indicates a good choice of spring preload.

| ACTION | RESULT |
|---|---|
| Increasing preload | Firmer rear suspension |
| | Higher rear end |
| | More bump absorption capability |
| | Heavier steering |
| Decreasing preload | Softer rear suspension |
| | Lower rear end |
| | Less bump absorption capability |
| | Lighter steering |
| | Better deep snow performance and handling |

Refer to the following to determine if preload is correct.

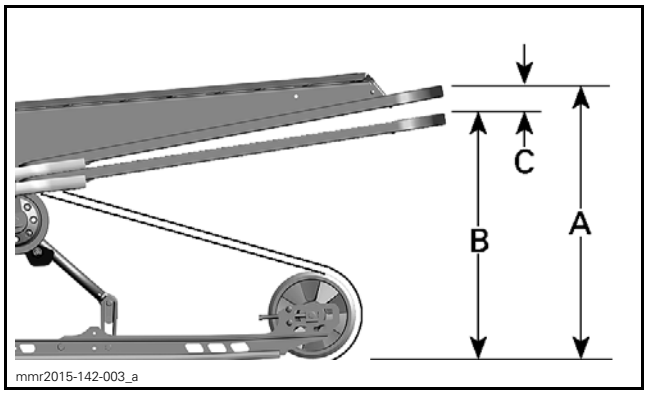


*PROPER ADJUSTMENT*
*A. Suspension fully extended*
*B. Suspension has collapsed with operator, passenger and load added*
*C. Distance between dimension "A" and "B", see table below*

| SC-5 / SC-5M / rMOTION | |
|---|---|
| "C" | WHAT TO DO |
| 50 mm to 75 mm (2 in to 3 in) | No adjustment required |
| More than 75 mm (3 in) | Adjusted too soft. Increase preload |
| Less than 50 mm (2 in) | Adjusted too firm. Decrease preload |

| SC-5U / cMOTION / tMOTION | |
|---|---|
| "C" | WHAT TO DO |
| 65 mm to 100 mm (2.5 in to 4 in) | No adjustment required |
| More than 100 mm (4 in) | Adjusted too soft. Increase preload |
| Less than 65 mm (2.5 in) | Adjusted too firm. Decrease preload |

If the specification is unattainable with the original springs, refer to the applicable *SPRING CHART* bulletin for other available springs.

**NOTICE** **To increase spring preload, always turn the left side adjustment cam in a clockwise direction, and the right side cam in a counterclockwise direction.**

**⚠ CAUTION** **Never set preload cams directly from position 5 to 1 or directly from position 1 to 5.**

The adjustment cams have 5 different settings, 1 being the softest.

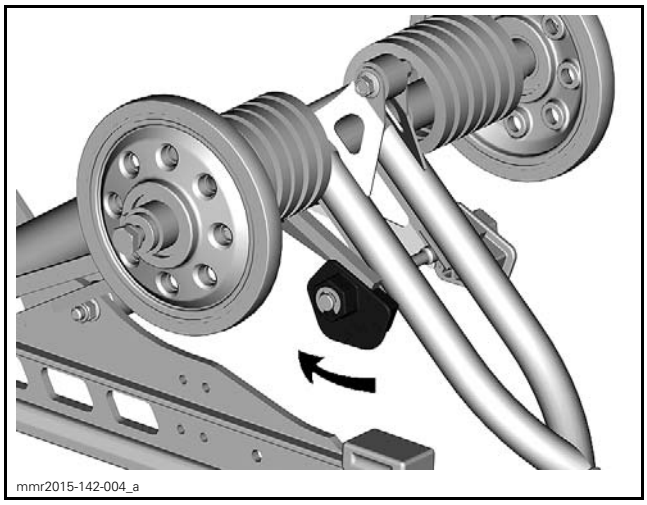


*TYPICAL - EXCEPT QUICK ADJUST SYSTEM*

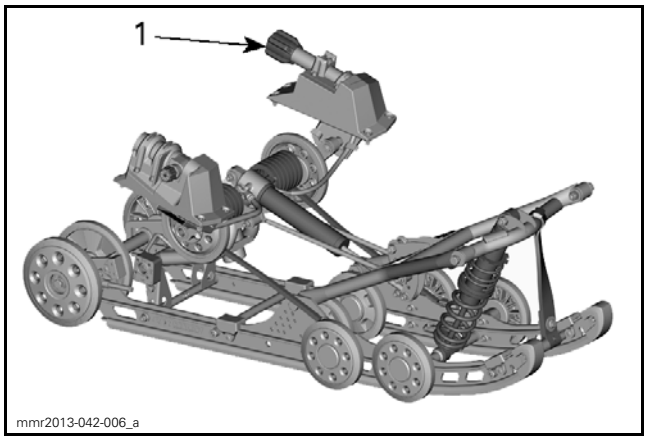


*rMOTION WITH QUICK ADJUST SYSTEM*
*1. LH side knob to adjust spring preload*

## Dampers

### Compression Damping (KYB PRO Series)

NOTE: Both low and high speed compression damping are adjusted simultaneously.

Low speed compression damping controls how the shock absorber reacts to a low suspension velocity (slow compression strokes, in most cases when riding at lower speeds).

High speed compression damping controls how the shock absorber reacts to a high suspension velocity (quick compression strokes, in most cases when riding at higher speeds).

| ACTION | RESULT |
|---|---|
| Increasing compression damping force | Firmer compression damping |
| Decreasing compression damping force | Softer compression damping |

To adjust, turn compression damping adjustment knob clockwise to increase compression damping force and counterclockwise to decrease compression damping force.

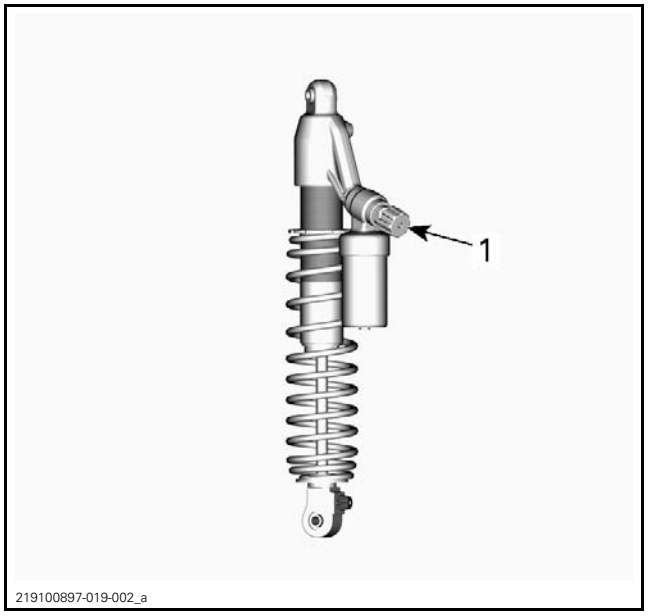


*TYPICAL - EXCEPT QUICK ADJUST SYSTEM*
*1. Compression damping adjustment knob*

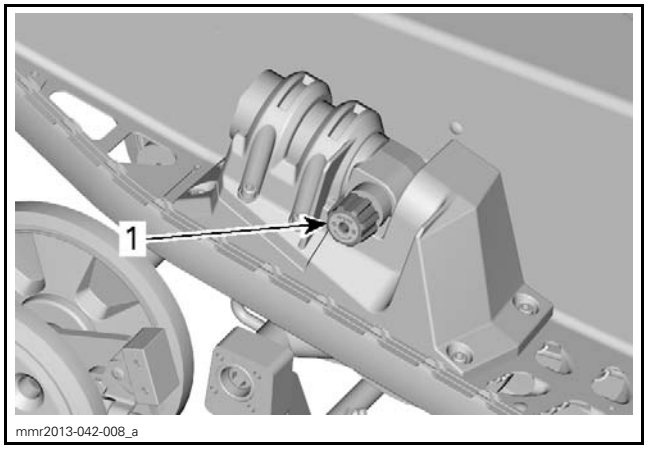


*rMOTION WITH QUICK ADJUST SYSTEM*
*1. Knob to adjust low/high speed compression damping*

### Rebound Damping (KYB PRO Series)

Rebound damping controls how the shock absorber restrains the extension stroke.

| ACTION | RESULT |
|---|---|
| Increasing rebound damping force | Firmer rebound damping (slower extension speed) |
| Decreasing rebound damping force | Softer rebound damping (faster extension speed) |

NOTE: In repetitive shorts small bumps (ripple), it is recommended to use a lower rebound damping setting.

To adjust, turn rebound adjustment knob clockwise to increase rebound damping force and counterclockwise to decrease rebound damping force.

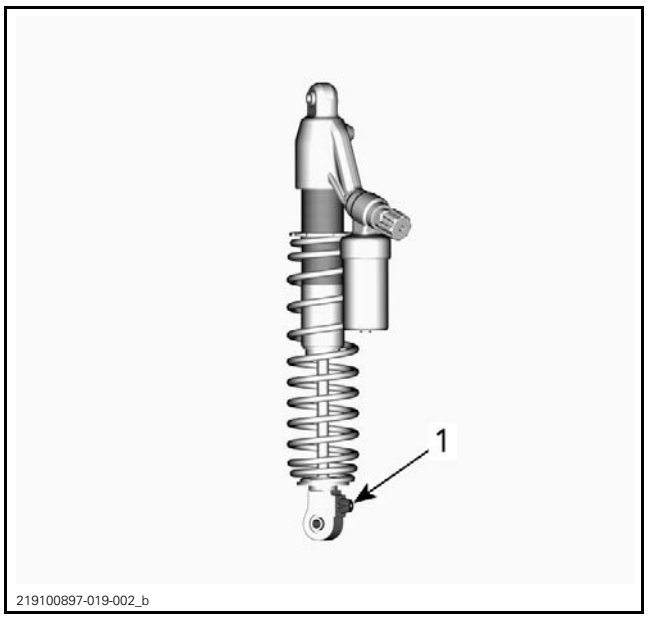


*TYPICAL - EXCEPT QUICK ADJUST SYSTEM*
1. *Rebound damping adjustment knob*

### Rear Shock Mounting Position

Two rear shock mounting positions are available: high performance and sport.

Factory setting is set to lowest mounting position (high performance) which will suit most operators riding preferences. The sport mounting hole adjustment allows for another range of softer settings, but all other rear suspension adjustments should be performed before changing the rear shock mounting position.

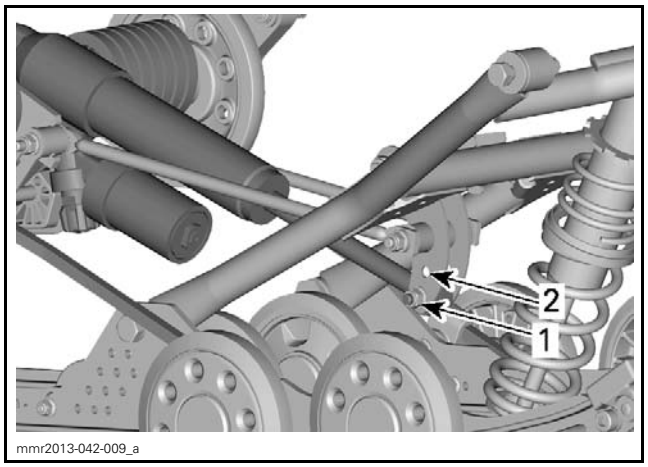


*REAR SHOCK MOUNTING POSITION*
1. *High performance position*
2. *Sport position*

## Coupling Blocks

Coupling blocks adjustment has an effect on vehicle handling during acceleration only.

NOTE: A high coupling block setting will reduce both comfort and transfer under acceleration.

To adjust, push on release button under cam and turn coupling block to the desired setting.

**⚠ WARNING**

**Both blocks must be set at the same position. Otherwise vehicle behavior may be unpredictable and suspension may become warped.**

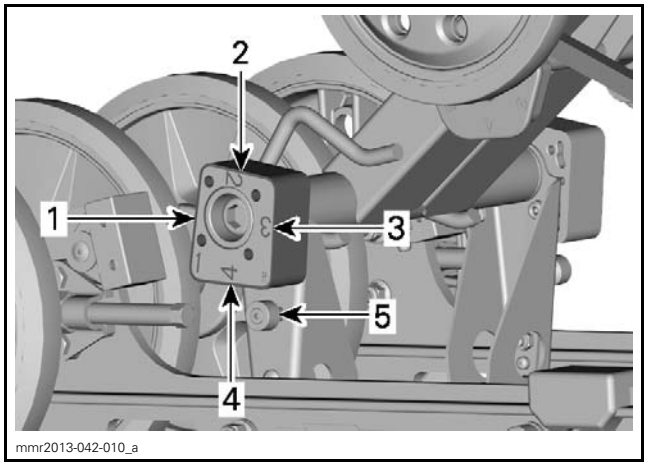


*COUPLING BLOCK — RIGHT SIDE VIEW*
*("R" — RIGHT EMBOSSED ON BLOCK)*
1. *Position 1 (minimum)*
2. *Position 2*
3. *Position 3*
4. *Position 4 (maximum)*
5. *Release button*

### Coupling Blocks Setting

| POSITION | USE |
|---|---|
| 1 | More ski lift during acceleration - and best comfort |
| 2 | Intermediate setting |
| 3 | Intermediate setting |
| 4 | Less ski lift during acceleration - and some comfort loss |

# FRONT SUSPENSION

## SERVICE TOOLS


| Description | Part Number | Page |
|---|---|---|
| BALL JOINT EXTRACTOR | 529 035 827 | 355 |
| BALL JOINT INSTALLER | 529 035 975 | 358 |
| BALL JOINT REMOVER SUPPORT | 529 036 121 | 358 |
| SPRING COMPRESSOR | 529 036 184 | 354 |
| SUSPENSION ARM SUPPORT | 529 035 637 | 356 |

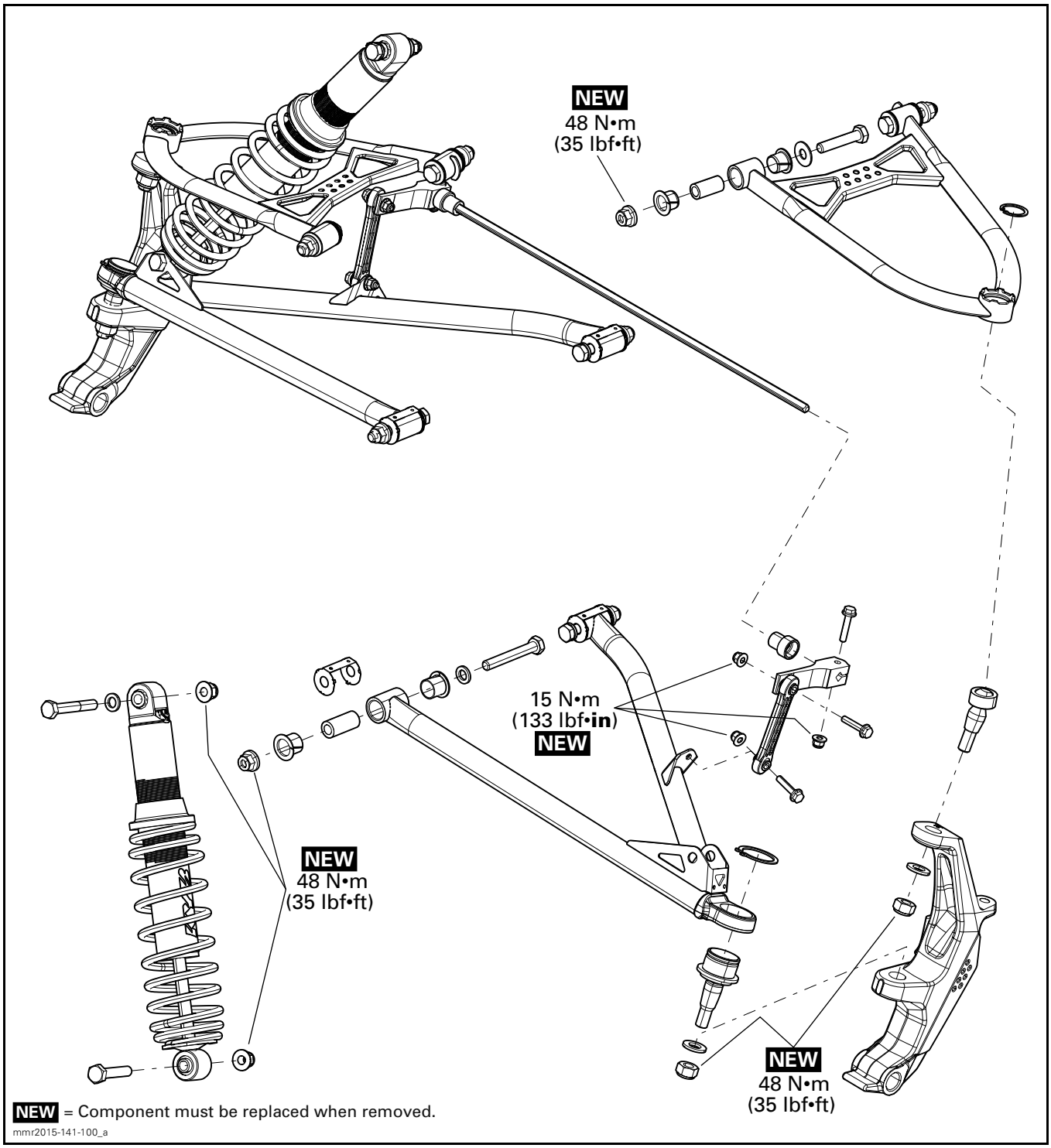
NEW
48 N•m
(35 lbf•ft)
15 N•m
(133 lbf•in)
NEW
NEW
48 N•m
(35 lbf•ft)
NEW
48 N•m
(35 lbf•ft)
NEW = Component must be replaced when removed.
mmr2015-141-100_a

# GENERAL

The procedure explained below is the same for the RH and LH sides unless otherwise noted.

During assembly/installation, use torque values and service products as in the exploded view.

Clean threads before applying a threadlocker. Refer to *SELF-LOCKING FASTENERS* and *LOCTITE APPLICATION* at the beginning of this manual for complete procedure.

**⚠ WARNING**

**Torque wrench tightening specifications must be strictly adhered to.**
**Locking devices (e.g.: locking tabs, elastic stop nuts, cotter pins, etc.) must be replaced with new ones.**

Check for loose, bent, worn out, rusted or otherwise damaged components. Replace the faulty components.

# ADJUSTMENT

## SPRINGS

Front spring preload has an effect on front suspension firmness.

Front spring preload also has an effect on the steering behavior.

| ACTION | RESULT |
|---|---|
| Increasing preload | Firmer front suspension |
| | Higher front end |
| | More precise steering |
| | More bump absorption capability |
| Decreasing preload | Softer front suspension |
| | Lower front end |
| | Lighter steering |
| | Less bump absorption capability |

**⚠ WARNING**

**Adjust both springs to the same preload. Uneven adjustment can cause poor handling and loss of stability, and/or control, and increase the risk of an accident.**

### Spring Preload Adjustment

#### Ring Type Adjustment

Grab and turn the spring to increase or decrease spring preload.

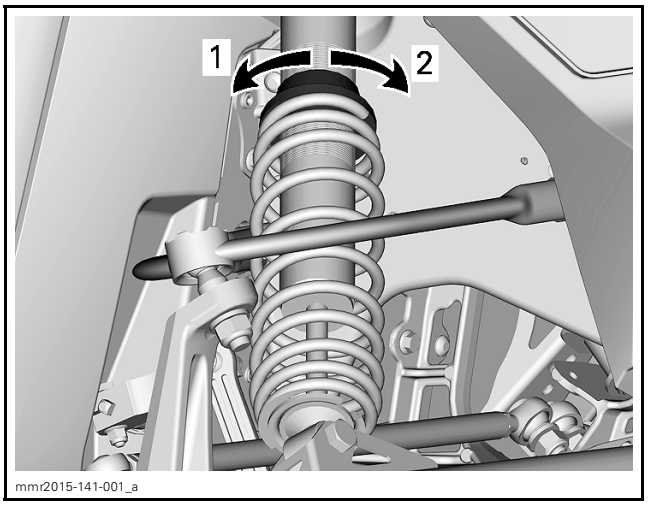


mmr2015-141-001_a

1. *Increase preload*
2. *Decrease preload*

# PROCEDURES

## SHOCK ABSORBER

### Shock Absorber Removal

Refer to *BODY* section to remove the following:
- Upper body module
- Side panel(s)
- Bottom pan cover.

Lift the front of vehicle until skis are off the ground.

Remove the shock absorber upper bolt.

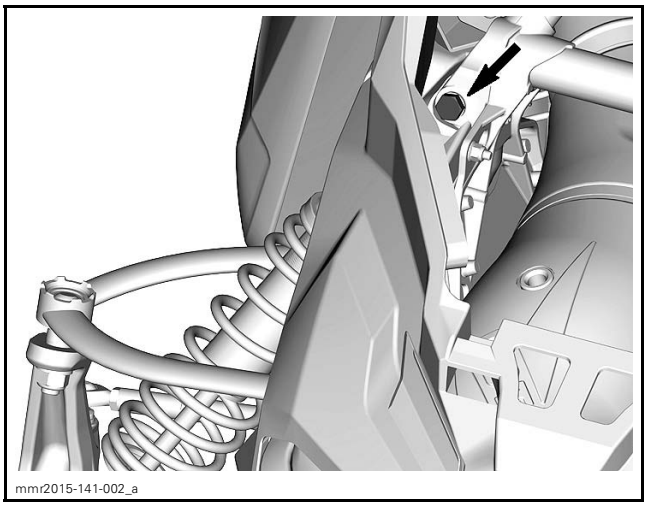

mmr2015-141-002_a

Remove the shock absorber lower bolt.

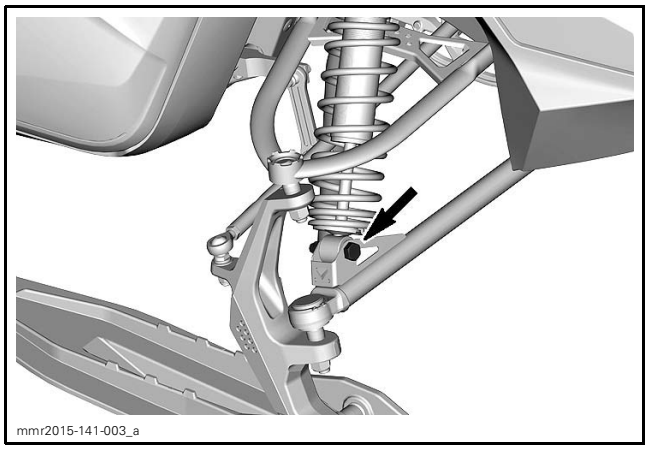
mmr2015-141-003_a

Remove the shock absorber.

### Shock Absorber Inspection

Refer to *REAR SUSPENSION (RMOTION)* subsection.

### Shock Absorber Installation

For installation, reverse the removal procedure, however, pay attention to the following.

Install shock absorber with body up and valve towards outside.

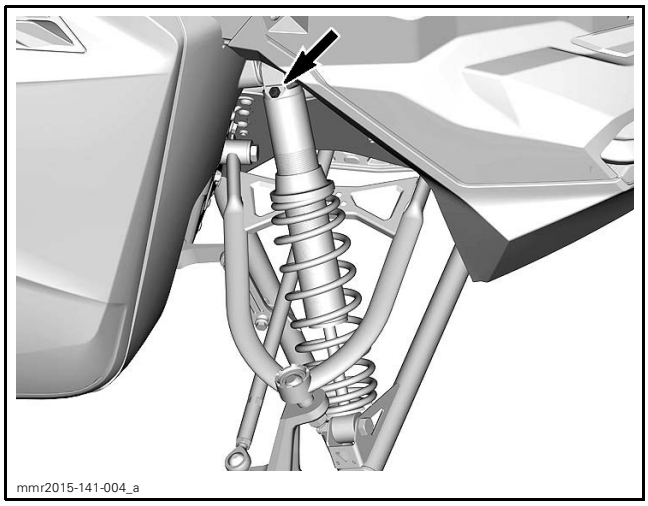
mmr2015-141-004_a

## SPRING

### Spring Removal

1. Secure the SPRING COMPRESSOR (P/N 529 036 184) in a vise.

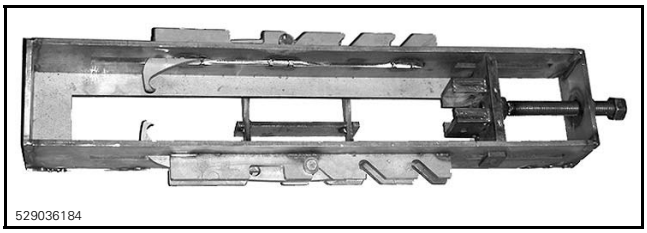
529036184

*SPRING COMPRESSOR*

2. Position the shock absorber in the tool and install the spring compressor hooks.

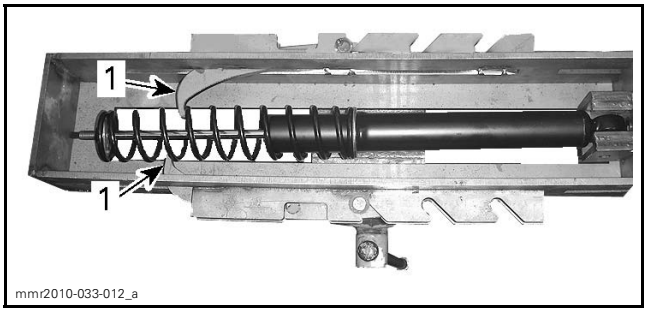

mmr2010-033-012_a

*TYPICAL*
*1. Spring compressor hooks*

3. Tighten the spring compressor tool screw until the spring is sufficiently compressed to remove spring stopper.
4. Release the spring compressor tool screw.
5. Remove spring from shock absorber.

### Spring Inspection

Inspect spring for apparent damage.

When the adjustment is at the lowest preload, ensure that adjustment cam and spring stopper are not loose. They must be under spring pressure. Otherwise, the spring stopper might fall off.

### Spring Installation

For installation, reverse the removal procedure.

## UPPER SUSPENSION ARM

### Upper Suspension Arm Inspection

1. Check suspension arm for distortion or damage. Replace if necessary.
2. Lift the front of vehicle until skis are off the ground.
3. Move suspension arm from side to side.
4. Lower vehicle to the ground.
5. Move suspension up and down.
6. There should be no noticeable looseness. Replace bushings and/or sleeves if necessary.

NOTE: A play of 2 mm (.079 in) is acceptable when the suspension arm is moved forward and backward.

7. Check sleeves inside suspension arm attachments for wear or damage.

### Upper Suspension Arm Removal

1. Lift the front of vehicle until skis are off the ground.
2. Remove muffler and tuned pipe. Refer to *EXHAUST SYSTEM* section.
3. Remove shock absorber upper bolt. See procedure in *SHOCK ABSORBER REMOVAL* in this section.
4. Remove the upper suspension arm bolts.

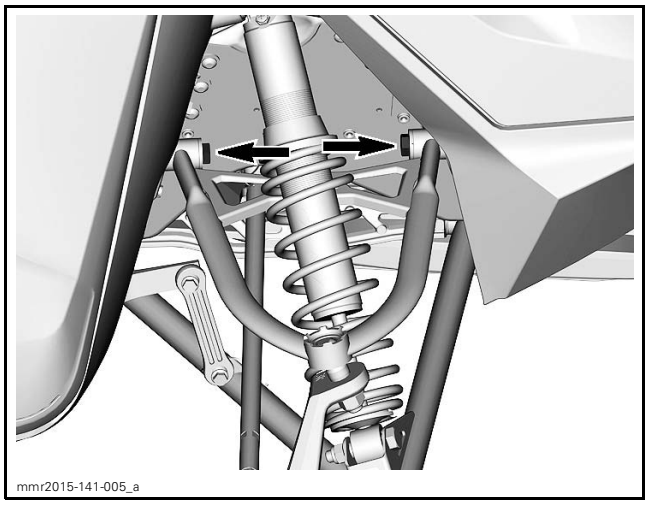
mmr2015-141-005_a

5. Detach ball joint from ski leg as follows.
   5.1 Remove nut securing ball joint to ski leg.

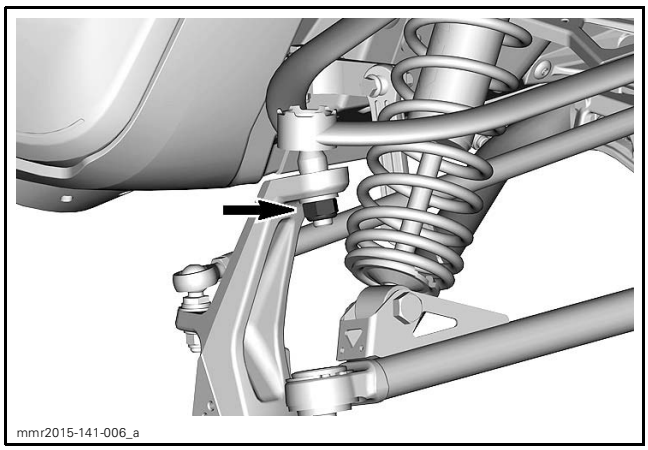
mmr2015-141-006_a

   5.2 Install the BALL JOINT EXTRACTOR (P/N 529 035 827) and detach ball joint from ski leg.

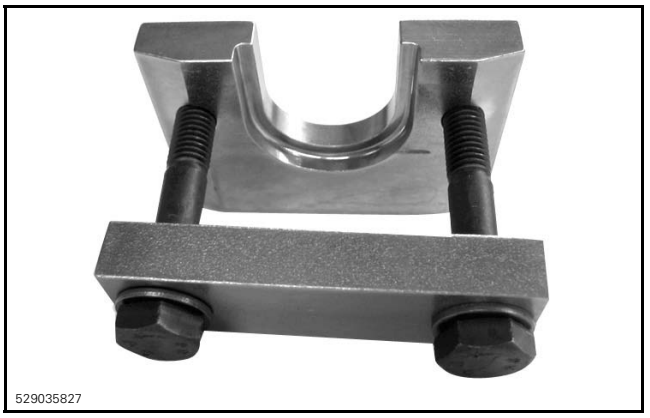
529035827

6. Remove upper suspension arm.

### Upper Suspension Arm Installation

The installation is the reverse of the removal procedure. However, pay attention to the following.

Ensure suspension arm ball joint socket is parallel to ski leg tab.

NOTE: Interchanging right and left ball joint sockets would result in them not being parallel.

## UPPER BALL JOINT

### Upper Ball Joint Inspection

Check both upper ball joints for damage, pitting, looseness and roughness. If so, replace with a new one.

### Upper Ball Joint Removal

1. Remove the *UPPER SUSPENSION ARM*, see procedure in this subsection.
2. Remove circlip securing ball joint to suspension arm.

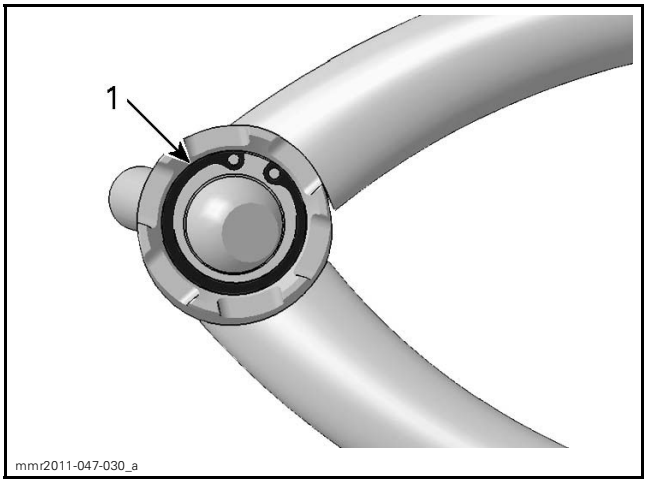

mmr2011-047-030_a

*1. Circlip*

3. Press ball joint out of the suspension arm.

| REQUIRED TOOLS |
| --- |
| Shop press |
| SUSPENSION ARM SUPPORT (P/N 529 035 637) |
| Suitable socket |

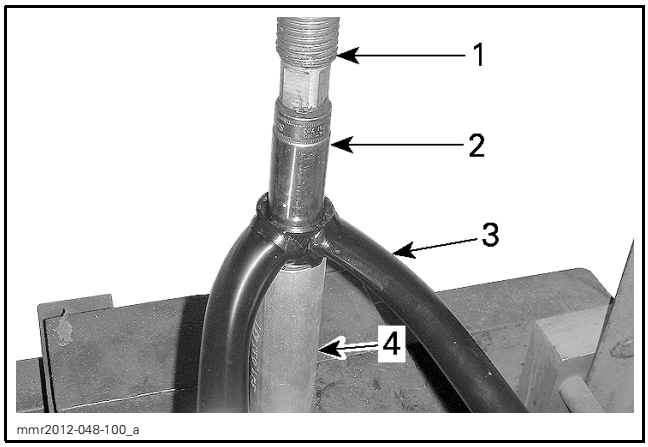


*TYPICAL*
1. *Press rod*
2. *Socket*
3. *Suspension arm*
4. *Suspension arm support (P/N 529 035 637)*

## Upper Ball Joint Installation

The installation is the reverse of the removal procedure. However, pay attention to the following.

1. Press ball joint into the suspension arm.

| REQUIRED TOOLS |
| --- |
| Shop press |
| SUSPENSION ARM SUPPORT (P/N 529 035 637) 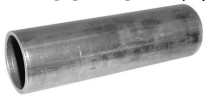 |
| Suitable socket |

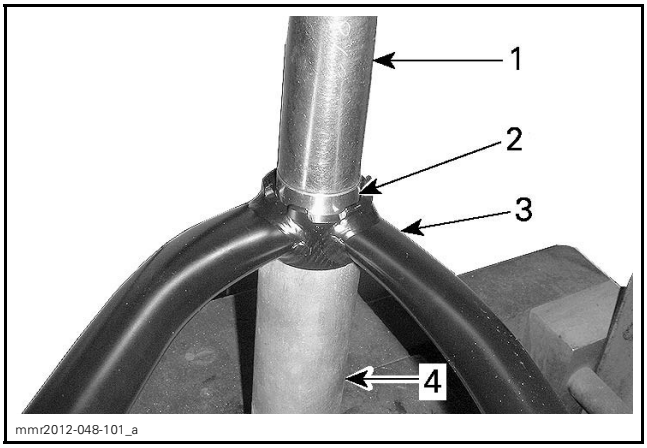


*TYPICAL*
1. *Socket*
2. *Ball joint*
3. *Suspension arm*
4. *Suspension arm support (P/N 529 035 637)*

2. Reinstall the circlip. If it seems loose, replace it with a new one.

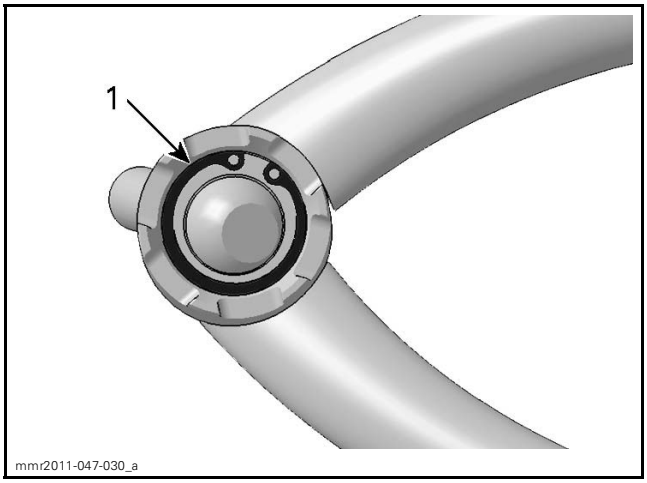


*1. Circlip*

# LOWER SUSPENSION ARM

## Lower Suspension Arm Inspection

1. Check suspension arm for distortion or damage. Replace if necessary.
2. Lift the front of vehicle until skis are off the ground.
3. Detach shock absorber and stabilizer bar link from lower suspension arm.
4. Move suspension arm from side to side.
5. Lower vehicle to the ground.
6. Move suspension up and down.
7. There should be no noticeable loose. Replace bushings and/or sleeves if necessary.

NOTE: A play of 2 mm (.079 in) is acceptable when the suspension arm is moved forward and backward.

8. Check sleeves inside suspension arm attachments for wear or damage.

## Lower Suspension Arm Removal

1. Lift the front of vehicle until skis are off the ground.
2. Remove shock absorber lower bolt.

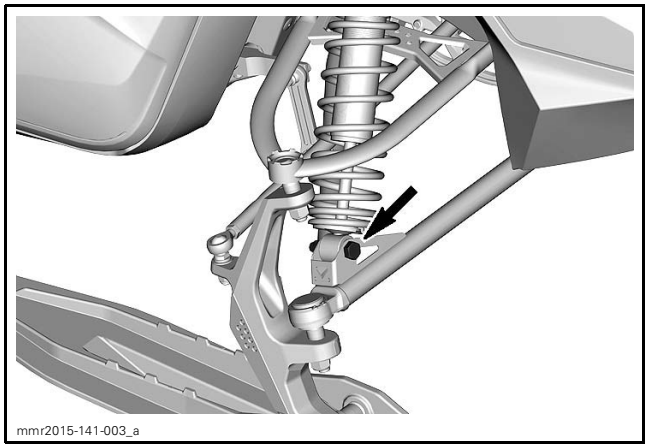
mmr2015-141-003_a

3. Detach stabilizer bar link from lower suspension arm. Refer to *STABILIZER BAR* further in this section.
4. Remove lower ball joint nut.

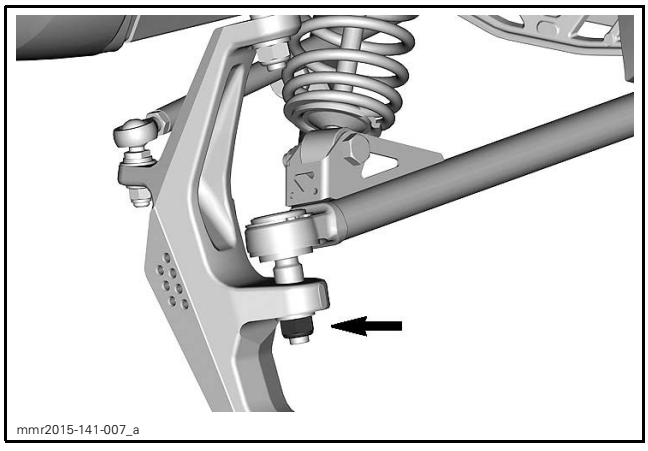
mmr2015-141-007_a

5. Using a suitable ball joint remover, detach lower ball joint from ski leg.

NOTE: If no tool is available, turn ball joint nut until it is flush with the end of ball joint then, tap on nut with a hammer to release ball joint.

6. Remove suspension arm screws.

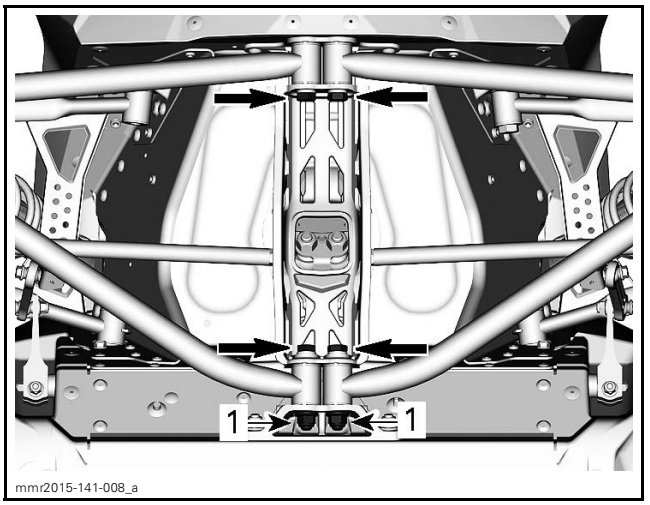

mmr2015-141-008_a

*UNDERNEATH FRONT OF VEHICLE*

NOTE: To hold rear nuts, grind a 15 mm opened wrench as shown.

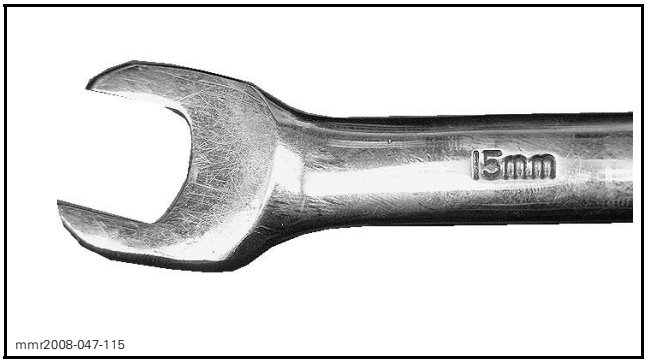

mmr2008-047-115

7. Remove lower suspension arm from vehicle.

## Lower Suspension Arm Installation

The installation is the reverse of the removal procedure. However, pay attention to the following.

1. Install a wear plate over bushings.
2. Position the wear plate on top.
3. Fold all tabs against bushings.

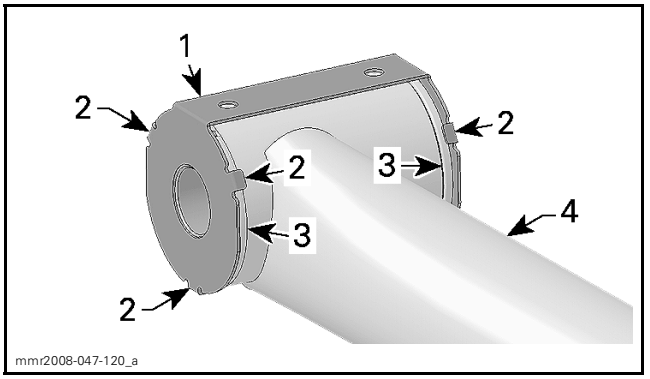

mmr2008-047-120_a

1. *Wear plate*
2. *Wear plate tabs*
3. *Bushings*
4. *Lower suspension arm*

Install all other removed parts.

# LOWER BALL JOINT

## Lower Ball Joint Inspection

Inspect ball joint end for damage. Ensure it's moving freely, a 0.3 mm (.012 in) axial play is acceptable. Replace ball joints as required.

## Lower Ball Joint Removal

1. Remove the *LOWER SUSPENSION ARM*, see procedure in this section.
2. Remove circlip securing ball joint to suspension arm.

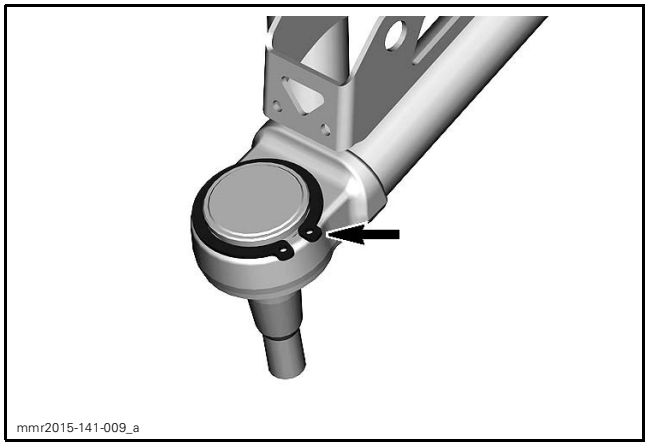


3. Using a press and the BALL JOINT REMOVER SUPPORT (P/N 529 036 121), press ball joint out of the lower suspension arm.

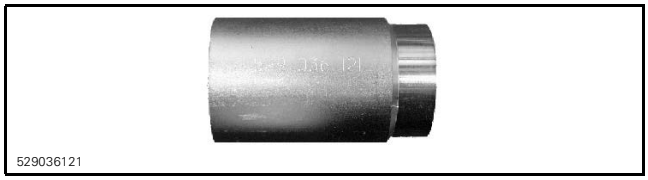


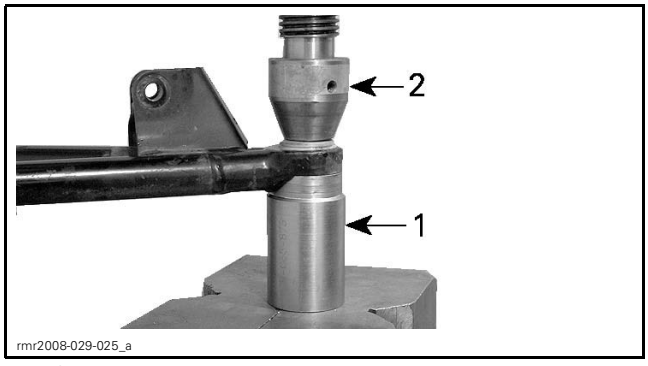


*TYPICAL*
1. *Ball joint remover*
2. *Press*

## Lower Ball Joint Installation

1. Using a press, the BALL JOINT REMOVER SUPPORT (P/N 529 036 121) and the BALL JOINT INSTALLER (P/N 529 035 975), press ball joint into the suspension arm end.

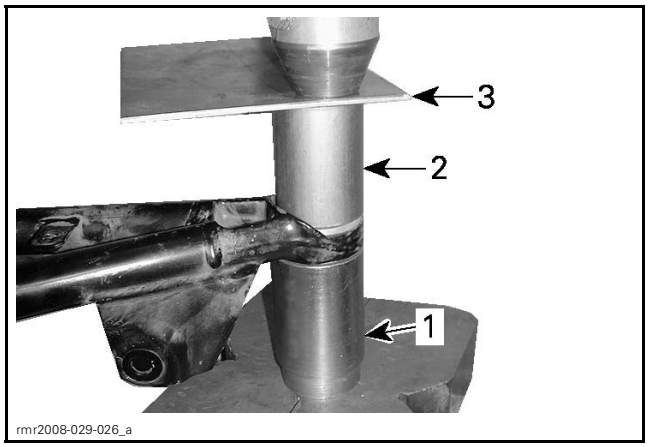


*TYPICAL*
1. *Ball joint remover support*
2. *Ball joint installer*
3. *Steel plate*

2. Reinstall the circlip. If the circlip seems loose, replace it with a new one.
3. Install the *LOWER SUSPENSION ARM* on vehicle, see procedure in this section.

# SKI LEG

## Ski Leg Removal

1. Remove ski from ski leg.
2. Detach tie-rod end from ski leg.

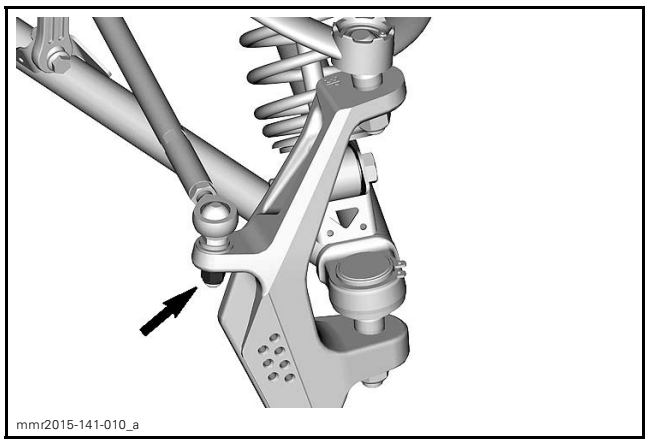


3. Remove upper and lower ball joints from ski leg. Refer to *UPPER BALL JOINT* and *LOWER BALL JOINT* in this section.

### Ski Leg Installation

The installation is the reverse of the removal procedure.

## STABILIZER BAR

### Stabilizer Bar Removal

1. Remove the RH side panel. Refer to *BODY* section.
2. Remove the muffler. Refer to *EXHAUST SYSTEM* section.
3. Remove the cap at the bottom of the RH side bottom pan.

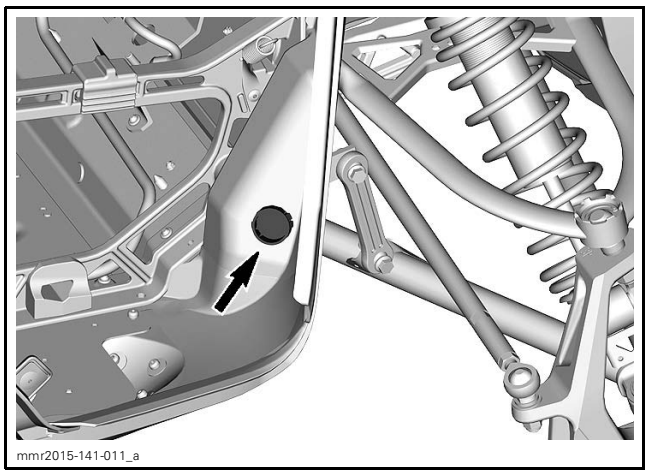
mmr2015-141-011_a

4. Remove bolts securing stabilizer links to lower suspension arms.

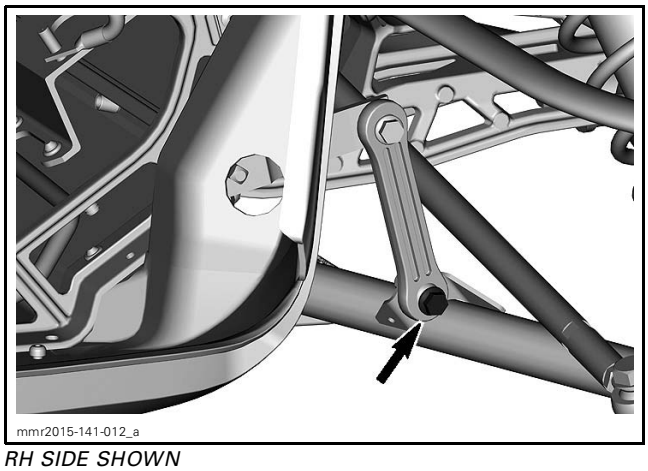
mmr2015-141-012_a

*RH SIDE SHOWN*

5. Remove stabilizer lever bolts.

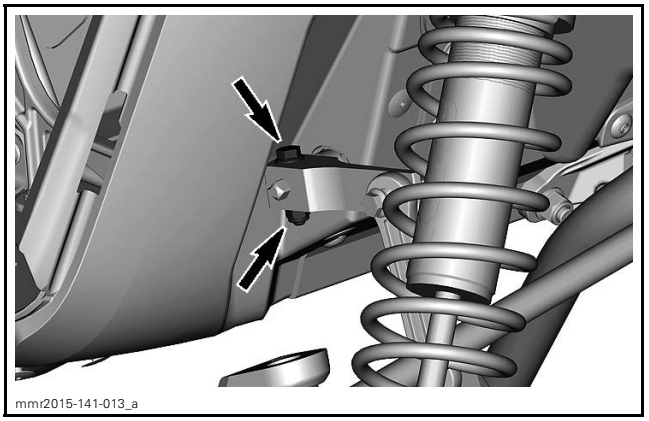
mmr2015-141-013_a

*RH SIDE SHOWN*

6. Remove stabilizer levers from stabilizer bar.
7. Slide stabilizer bar out of vehicle.

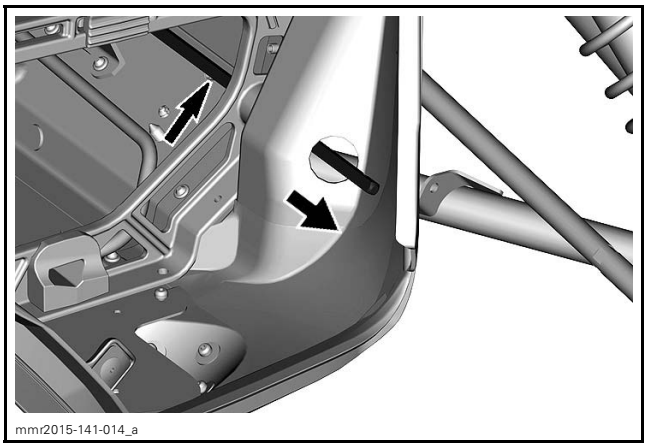
mmr2015-141-014_a

*RH SIDE REMOVAL*

### Stabilizer Bar Installation

The installation is the reverse of the removal procedure.

# FRONT SUSPENSION

## SERVICE TOOLS

| Description | Part Number | Page |
|---|---|---|
| BALL JOINT EXTRACTOR | 529 035 827 | 5 |
| BALL JOINT INSTALLER SUPPORT | 529 036 398 | 8 |
| BALL JOINT INSTALLER | 529 036 399 | 8 |
| BALL JOINT REMOVER SUPPORT | 529 036 400 | 8 |
| SPRING COMPRESSOR | 529 036 184 | 4 |
| SUSPENSION ARM SUPPORT | 529 035 637 | 6 |

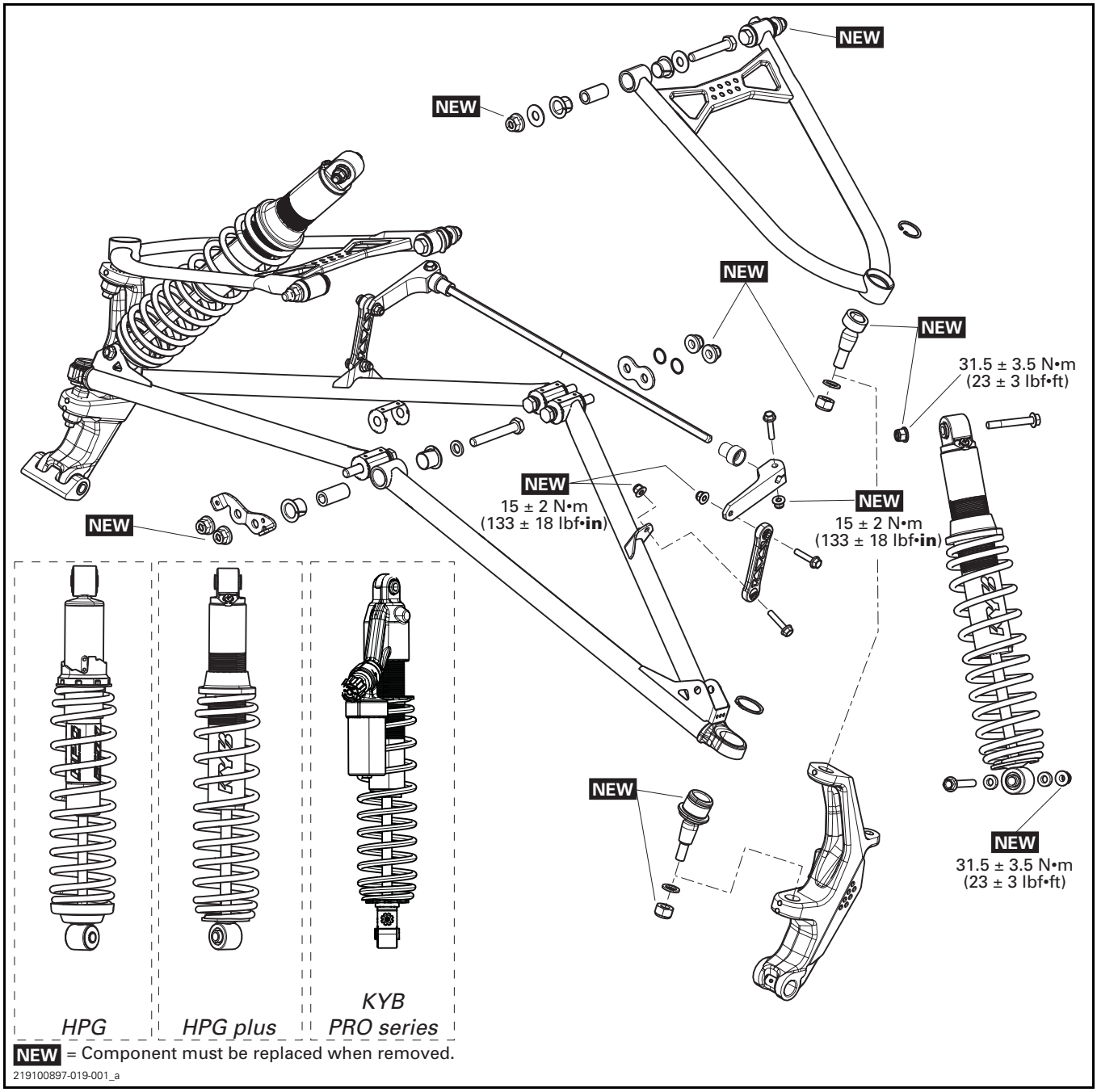

# GENERAL

The procedure explained below is the same for the RH and LH sides unless otherwise noted.

During assembly/installation, use torque values and service products as in the exploded view.

Clean threads before applying a threadlocker. Refer to *SELF-LOCKING FASTENERS* and *LOCTITE APPLICATION* at the beginning of this manual for complete procedure.

**⚠ WARNING**

**Torque wrench tightening specifications must be strictly adhered to.**
**Locking devices (e.g.: locking tabs, elastic stop nuts, cotter pins, etc.) must be replaced with new ones.**

Check for loose, bent, worn out, rusted or otherwise damaged components. Replace the faulty components.

# ADJUSTMENT

## SPRINGS

Front spring preload has an effect on front suspension firmness.

Front spring preload also has an effect on the steering behavior.

| ACTION | RESULT |
|---|---|
| Increasing preload | Firmer front suspension |
| | Higher front end |
| | More precise steering |
| | More bump absorption capability |
| Decreasing preload | Softer front suspension |
| | Lower front end |
| | Lighter steering |
| | Less bump absorption capability |

**⚠ WARNING**

**Adjust both springs to the same preload. Uneven adjustment can cause poor handling and loss of stability, and/or control, and increase the risk of an accident.**

### Spring Preload Adjustment

#### Cam Type Adjustment

Using the suspension adjustment tool (included in the vehicle tool kit), turn the cam to increase or decrease spring preload.

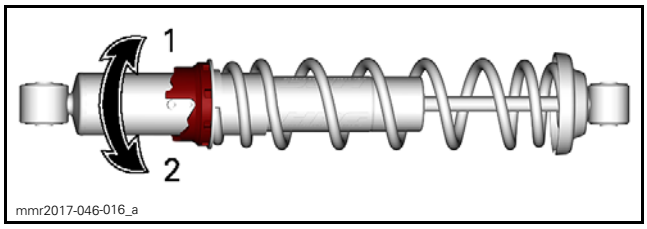


*1. Increase preload*
*2. Decrease preload*

#### Ring Type Adjustment

Grab and turn the spring to increase or decrease spring preload.

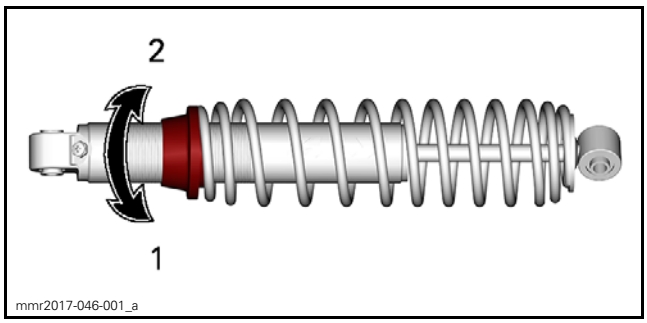


*1. Increase preload*
*2. Decrease preload*

## DAMPERS

### Compression Damping (KYB PRO Series)

NOTE: Both low and high speed compression damping are adjusted simultaneously.

Low speed compression damping controls how the shock absorber reacts to a low suspension velocity (slow compression strokes, in most cases when riding at lower speeds).

High speed compression damping controls how the shock absorber reacts to a high suspension velocity (quick compression strokes, in most cases when riding at higher speeds).

| ACTION | RESULT |
|---|---|
| Increasing compression damping force | Firmer compression damping |
| Decreasing compression damping force | Softer compression damping |

To adjust, turn compression damping adjustment knob clockwise to increase compression damping force and counterclockwise to decrease compression damping force.

*1. Compression damping adjustment knob*

Midwest Manuals
Green Manuals
Paperless Manuals For a Better Tomorrow www.green-manuals.com
If you bought this manual from any other seller please leave them NEGATIVE feedback and notify me at bestshopmanuals@gmail.com

### Rebound Damping (KYB PRO Series)

Rebound damping controls how the shock absorber restrains the extension stroke.

| ACTION | RESULT |
|---|---|
| Increasing rebound damping force | Firmer rebound damping (slower extension speed) |
| Decreasing rebound damping force | Softer rebound damping (faster extension speed) |

NOTE: In repetitive shorts small bumps (ripple), it is recommended to use a lower rebound damping setting.

To adjust, turn rebound adjustment knob clockwise to increase rebound damping force and counterclockwise to decrease rebound damping force.

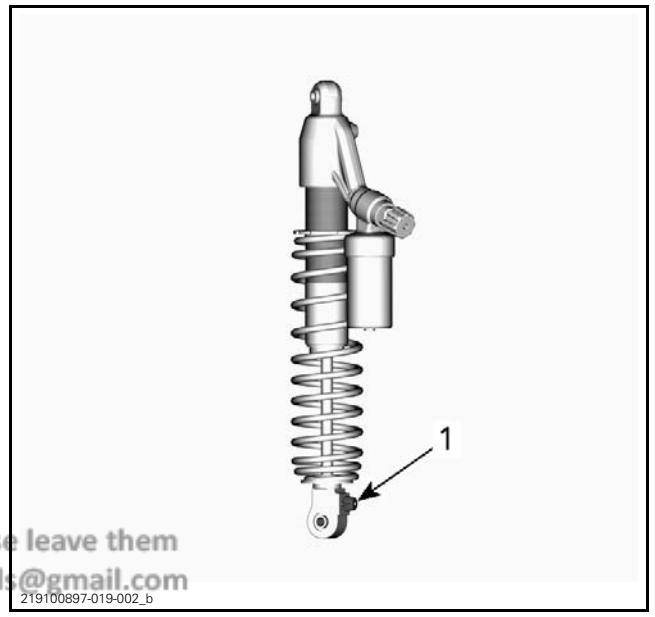


*1. Rebound damping adjustment knob*

# PROCEDURES

## SHOCK ABSORBER

### Removing the Shock Absorber

1. Remove the side panel. Refer to *BODY* subsection.
2. Lift the front of vehicle until skis are off the ground.
3. Remove the shock absorber upper bolt.

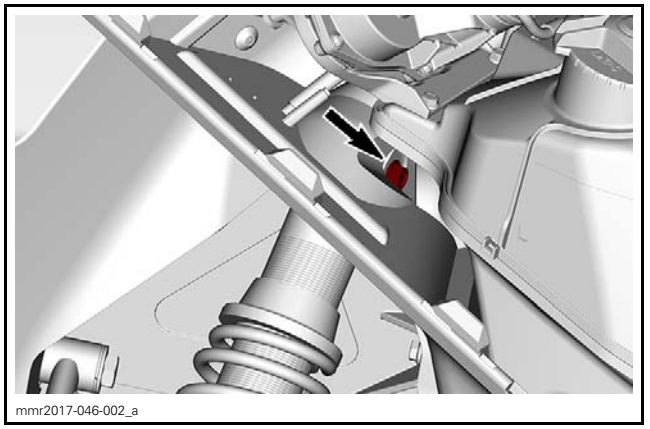


4. Remove the shock absorber lower bolt, nut, and spacers.

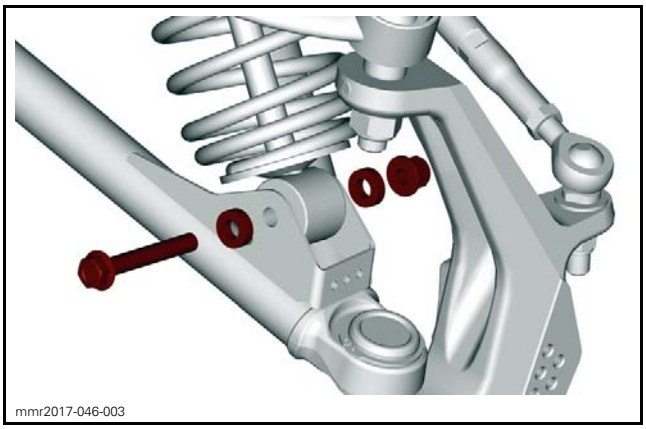
mmr2017-046-003

5. Remove the shock absorber.

## Inspecting the Shock Absorber

Refer to *REAR SUSPENSION (RMOTION)* subsection.

## Installing the Shock Absorber

For installation, reverse the removal procedure, however, pay attention to the following.

Install upper bolt first while shock absorber lower mount is not engaged into the bracket.

Install shock absorber with body up and valve (if equipped) towards outside.

Make sure to install both of the lower spacers.

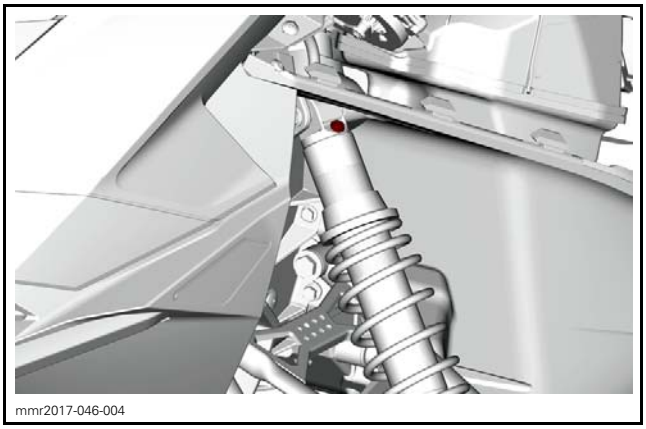
mmr2017-046-004

| TIGHTENING TORQUE | |
|---|---|
| Front shock absorber retaining nuts | 31.5 N•m ± 3.5 N•m |

# SPRING

## Removing the Spring

1. Secure the SPRING COMPRESSOR (P/N 529 036 184) in a vise.

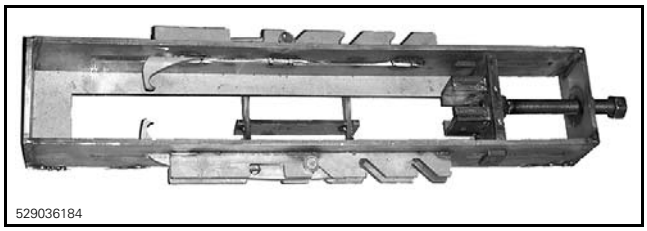
529036184

*SPRING COMPRESSOR*

2. Position the shock absorber in the tool and install the spring compressor hooks.

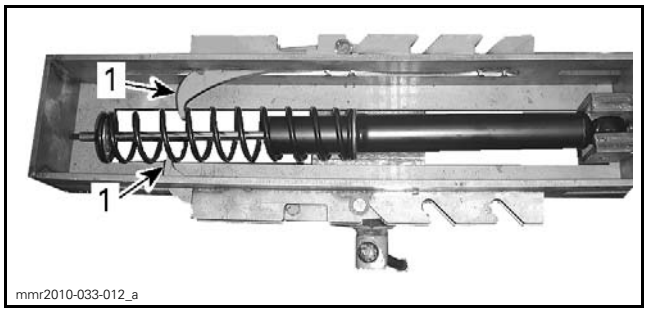

mmr2010-033-012_a

*TYPICAL*
*1. Spring compressor hooks*

3. Tighten the spring compressor tool screw until the spring is sufficiently compressed to remove spring stopper.
4. Release the spring compressor tool screw.
5. Remove spring from shock absorber.

## Inspecting the Spring

Inspect spring for apparent damage, any defect such as scratches or rust can affect the spring durability.

When the adjustment is at the lowest preload, ensure that adjustment cam and spring stopper are not loose. They must be under spring pressure. Otherwise, the spring stopper might fall off.

## Installing the Spring

For installation, reverse the removal procedure.

# UPPER SUSPENSION ARM

## Inspecting the Upper Suspension Arm

1. Check suspension arm for distortion or damage. Replace if necessary.
2. Lift the front of vehicle until skis are off the ground.
3. Move suspension arm from side to side.
4. Lower vehicle to the ground.
5. Move suspension up and down.
6. There should be no noticeable looseness. Replace bushings and/or sleeves if necessary.

NOTE: A play of 2 mm is acceptable when the suspension arm is moved forward and backward.

7. Check sleeves inside suspension arm attachments for wear or damage.

## Removing the Upper Suspension Arm

1. Lift the front of vehicle until skis are off the ground.
2. Remove muffler and tuned pipe. Refer to *EXHAUST SYSTEM* subsection.
3. Remove shock absorber. See procedure in *REMOVING THE SHOCK ABSORBER* in this subsection.
4. Remove the upper suspension arm bolts.

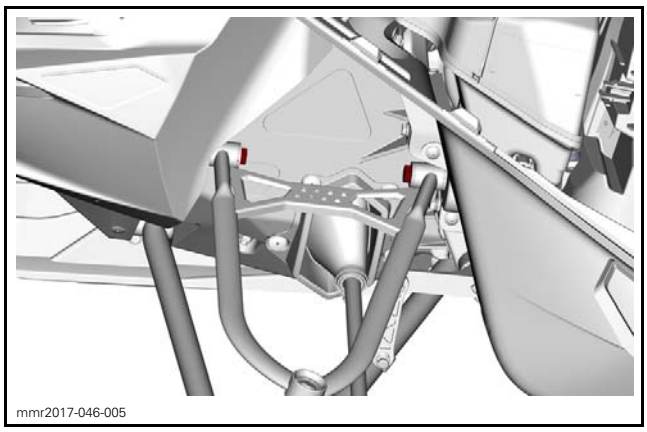
mmr2017-046-005

5. Detach ball joint from ski leg as follows.
   5.1 Remove nut securing ball joint to ski leg.

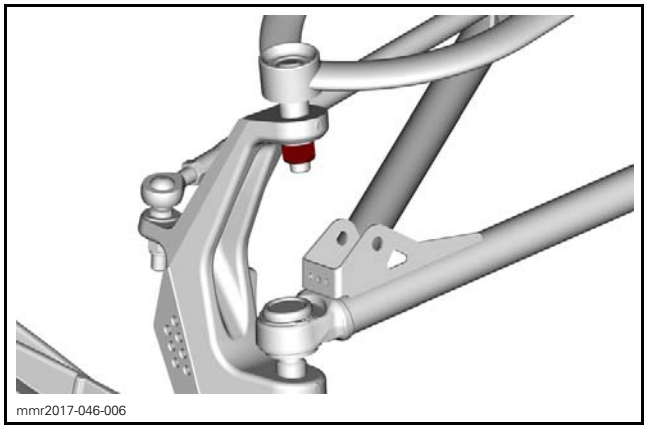
mmr2017-046-006

   5.2 Use the extractor to detach ball joint from ski leg.

| REQUIRED TOOL | |
|---|---|
| BALL JOINT EXTRACTOR (P/N 529 035 827) | |

6. Remove upper suspension arm.

## Installing the Upper Suspension Arm

The installation is the reverse of the removal procedure. However, pay attention to the following.

**NOTICE** **Make sure not to invert LH and RH arm.**

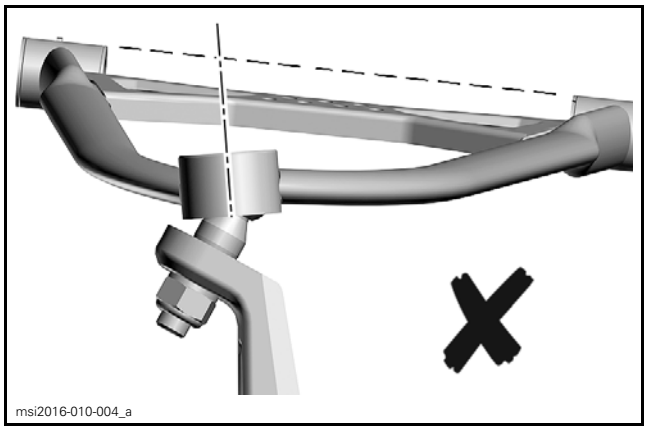
msi2016-010-004_a

*RH UPPER ARM INSTALLED ON LH SIDE*

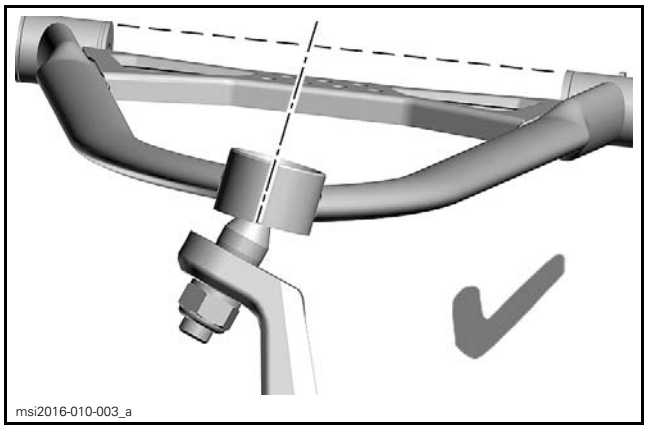
msi2016-010-003_a

*LH UPPER ARM INSTALLED ON LH SIDE*

# UPPER BALL JOINT

## Inspecting the Upper Ball Joint

Check both upper ball joints for damage, pitting, looseness and roughness. If so, replace with a new one.

## Removing the Upper Ball Joint

1. Remove the *UPPER SUSPENSION ARM*, see procedure in this subsection.
2. Remove circlip securing ball joint to suspension arm.

3. Press ball joint out of the suspension arm.

| REQUIRED TOOLS | |
|---|---|
| Shop press | |
| SUSPENSION ARM SUPPORT (P/N 529 035 637) | |
| Suitable socket | |

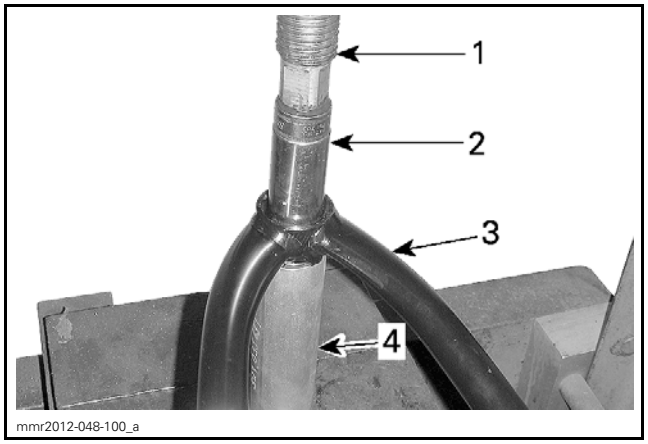


*TYPICAL*
*1. Press rod*
*2. Socket*
*3. Suspension arm*
*4. Suspension arm support*

## Installing the Upper Ball Joint

The installation is the reverse of the removal procedure. However, pay attention to the following.

1. Press ball joint into the suspension arm.

| REQUIRED TOOLS | |
|---|---|
| Shop press | |
| SUSPENSION ARM SUPPORT (P/N 529 035 637) | |
| Suitable socket | |

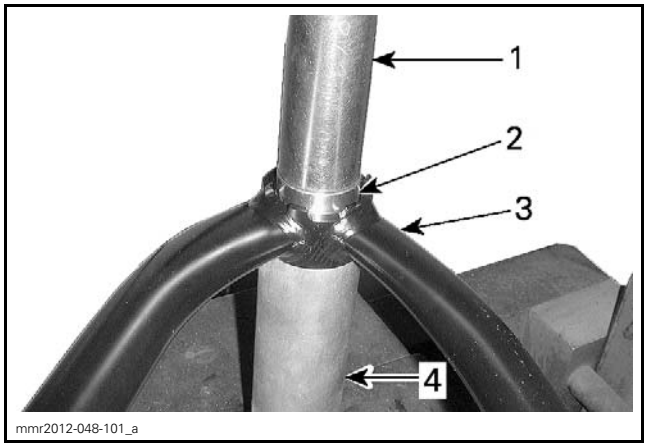


*TYPICAL*
*1. Socket*
*2. Ball joint*
*3. Suspension arm*
*4. Suspension arm support (P/N 529 035 637)*

2. Reinstall the circlip. If it seems loose, replace it with a new one.

# LOWER SUSPENSION ARM

## Inspecting the Lower Suspension Arm

1. Check suspension arm for distortion or damage. Replace if necessary.
2. Lift the front of vehicle until skis are off the ground.
3. Detach shock absorber and stabilizer bar link from lower suspension arm.
4. Move suspension arm from side to side.
5. Lower vehicle to the ground.
6. Move suspension up and down.
7. There should be no noticeable loose. Replace bushings and/or sleeves if necessary.

NOTE: A play of 2 mm is acceptable when the suspension arm is moved forward and backward.

8. Check sleeves inside suspension arm attachments for wear or damage.

## Removing the Lower Suspension Arm

1. Lift the front of vehicle until skis are off the ground.

2. Remove the tune pipe. Refer to *EXHAUST SYSTEM* subsection.
3. Remove shock absorber lower bolt.
4. Detach stabilizer bar link from lower suspension arm. Refer to *STABILIZER BAR* further in this subsection.
5. Remove lower ball joint nut.

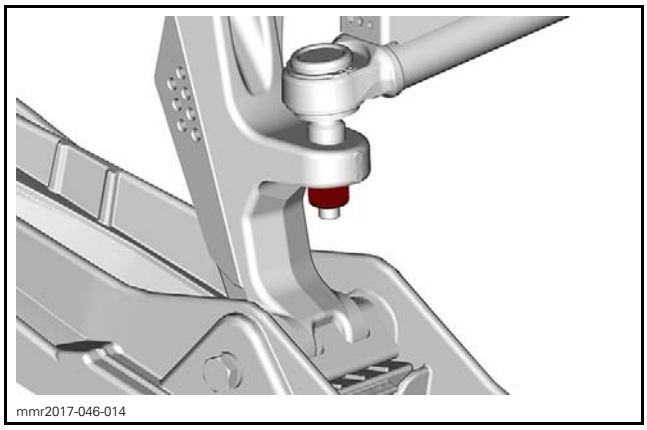
mmr2017-046-014

6. Using a suitable ball joint remover, detach lower ball joint from ski leg.
7. Remove suspension arm screws from inside the vehicle.

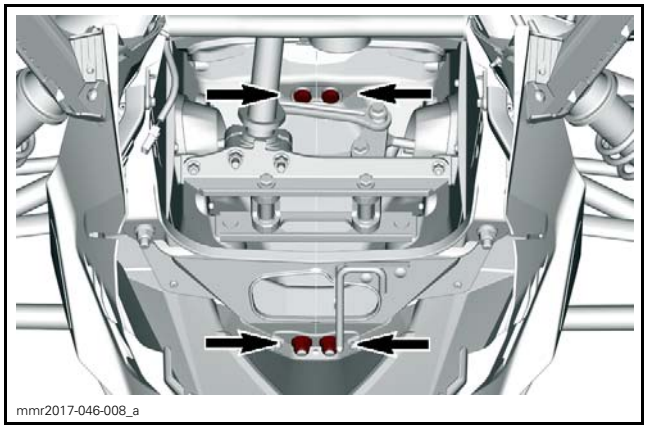
mmr2017-046-008_a

8. Remove lower suspension arm from vehicle.

### Installing the Lower Suspension Arm

The installation is the reverse of the removal procedure. However, pay attention to the following.

1. Install a wear plate over bushings.
2. Position the wear plate on top.
3. Fold all tabs against bushings.

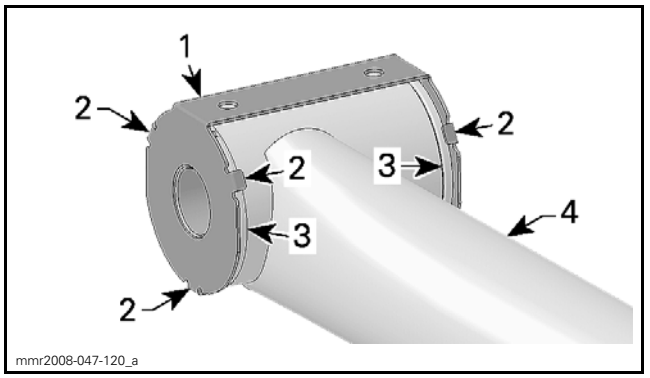

mmr2008-047-120_a

*1. Wear plate*
*2. Wear plate tabs*
*3. Bushings*
*4. Lower suspension arm*

Install all other removed parts.

## LOWER BALL JOINT

NOTE: The MX Z / Renegade lower ball joint is different from the Summit / Freeride lower ball joint.

### Inspecting the Lower Ball Joint

Inspect ball joint end for damage. Ensure it's moving freely, a 0.3 mm axial play is acceptable. Replace ball joints as required.

### Removing the Lower Ball Joint

1. Remove the *LOWER SUSPENSION ARM*, see procedure in this subsection.
2. Remove circlip securing ball joint to suspension arm.

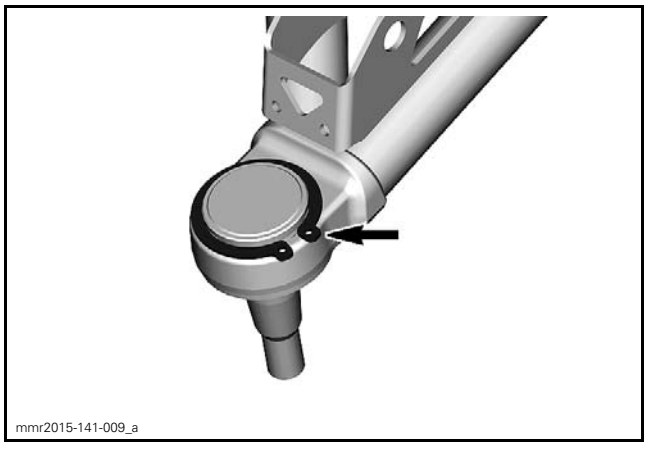
mmr2015-141-009_a

3. Use a shop press and the specified tools to press the ball joint out of the lower suspension arm.

| REQUIRED TOOLS | |
|---|---|
| BALL JOINT REMOVER SUPPORT (P/N 529 036 400) | |
| Suitable box | |

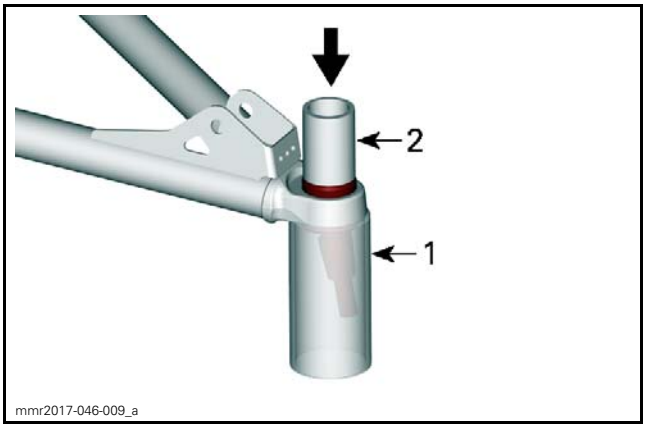


1. *Ball joint remover support*
2. *Suitable box*

## Installing the Lower Ball Joint

1. Use a press and the specified tools to press the ball joint into the suspension arm end.

| REQUIRED TOOLS | |
|---|---|
| BALL JOINT INSTALLER SUPPORT (P/N 529 036 398) | |
| BALL JOINT INSTALLER (P/N 529 036 399) | |

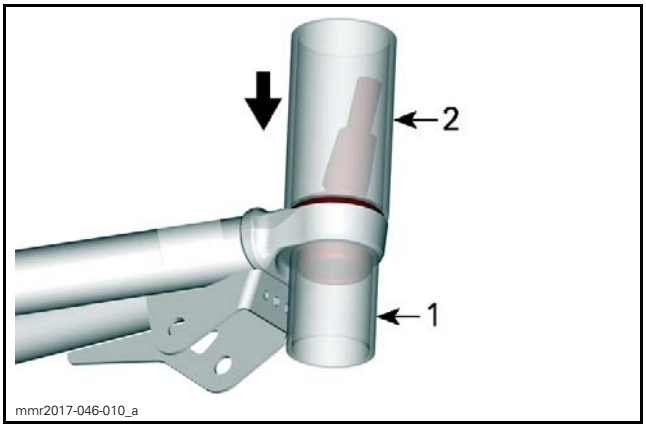


1. *Ball joint installer support*
2. *Ball joint installer*

2. Reinstall the circlip. If the circlip seems loose, replace it with a new one.
3. Install the *LOWER SUSPENSION ARM* on vehicle, see procedure in this subsection.

# SKI LEG

## Removing the Ski Leg

1. Remove ski from ski leg.
2. Detach tie-rod end from ski leg.

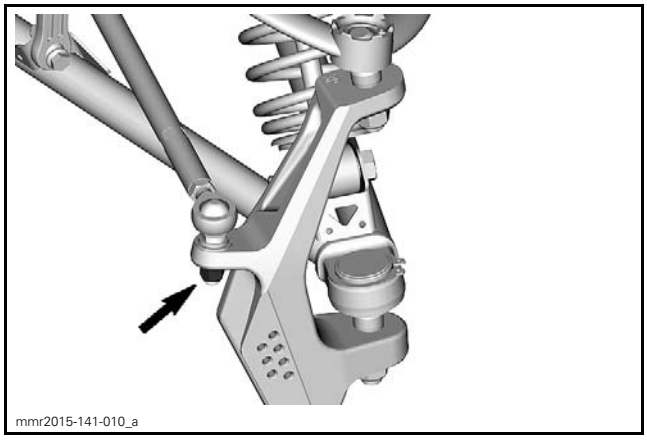


3. Remove upper and lower ball joints from ski leg. Refer to *UPPER BALL JOINT* and *LOWER BALL JOINT* in this subsection.

## Installing the Ski Leg

The installation is the reverse of the removal procedure.

# STABILIZER BAR

## Removing the Stabilizer Bar

1. Remove bolts and nuts securing stabilizer links to lower suspension arms.

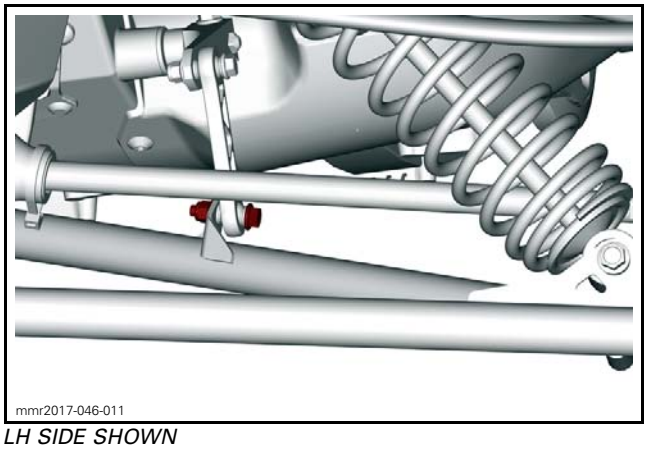


*LH SIDE SHOWN*

2. Remove stabilizer lever bolts and nuts.

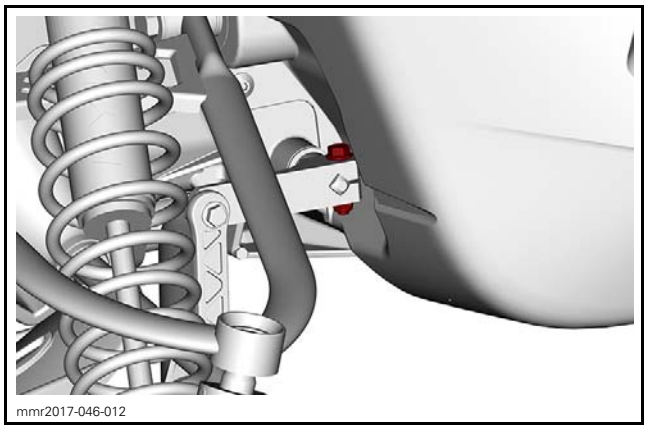


*LH SIDE SHOWN*

3. Remove stabilizer levers and plastic bushings from stabilizer bar.
4. Slide stabilizer bar out of vehicle from the LH side.

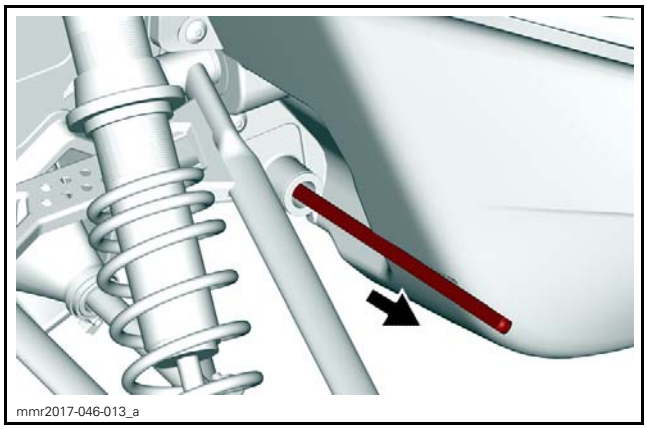


## Installing the Stabilizer Bar

The installation is the reverse of the removal procedure. However, pay attention to the following.

Ensure to install the flat side outwards.

Install the screw with the head upwards.

| TIGHTENING TORQUE | |
|---|---|
| Stabilizer bar link nut | 19 N•m ± 2 N•m |

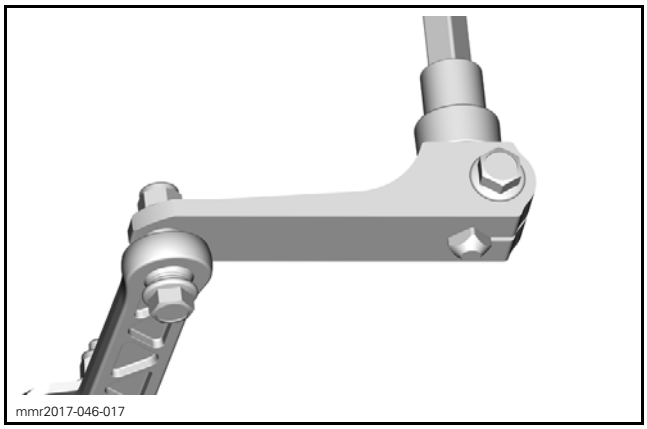


*FLAT SIDE FACING OUTWARDS*

# REAR SUSPENSION (SC-5M)

## SERVICE PRODUCTS

| Description | Part Number | Page |
|---|---|---|
| LOCTITE 243 (BLUE) | 293 800 060 | 11 |
| SYNTHETIC SUSPENSION GREASE | 779163 | 6 |

# RAILS AND IDLERS WHEELS

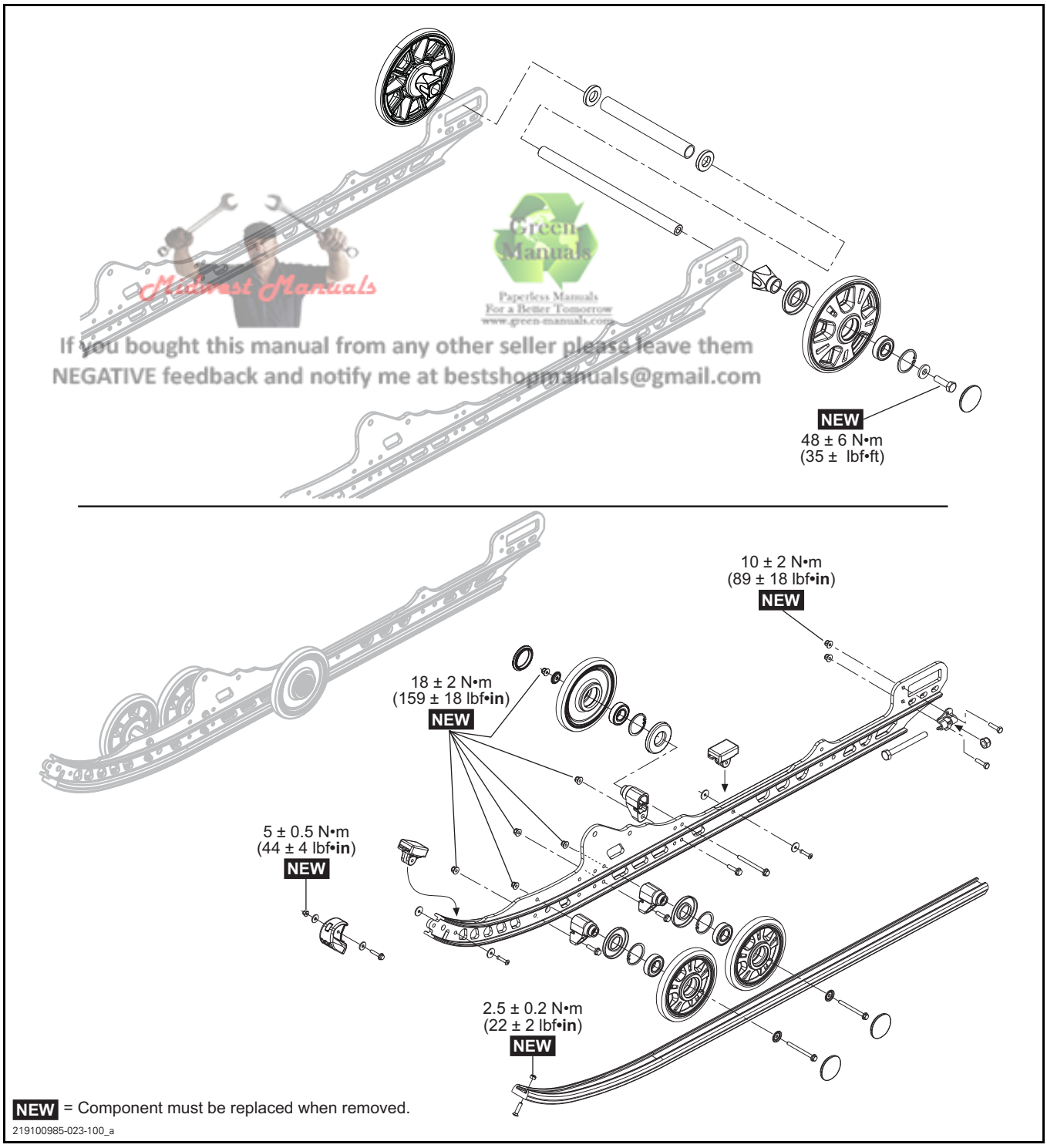


Midwest Manuals
Green Manuals
Paperless Manuals
For a Better Tomorrow
www.green-manuals.com
If you bought this manual from any other seller please leave them
NEGATIVE feedback and notify me at bestshopmanuals@gmail.com

# FRONT ARM

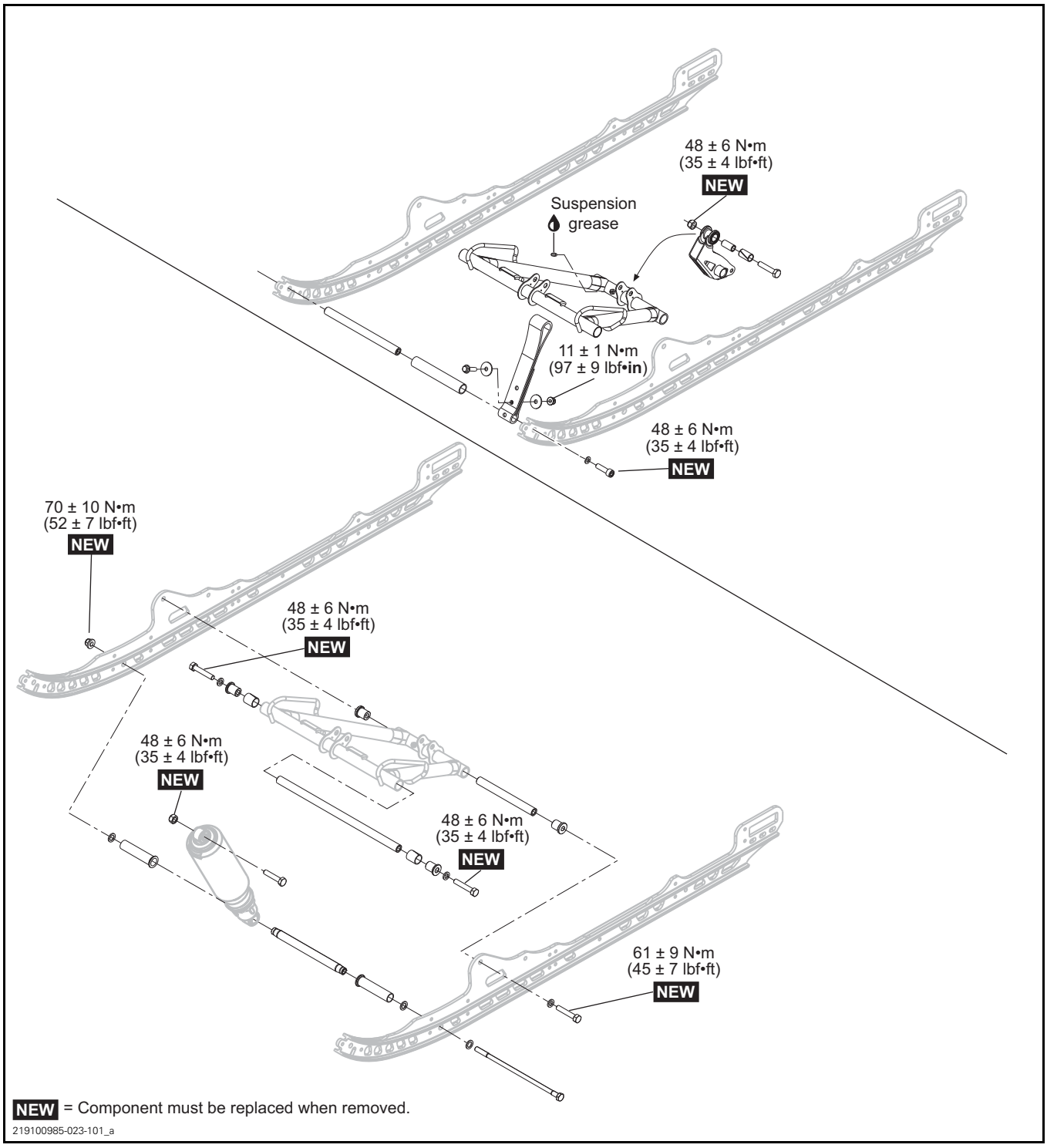
48 ± 6 N•m
(35 ± 4 lbf•ft)
NEW
Suspension
grease
11 ± 1 N•m
(97 ± 9 lbf•in)
48 ± 6 N•m
(35 ± 4 lbf•ft)
NEW
70 ± 10 N•m
(52 ± 7 lbf•ft)
NEW
48 ± 6 N•m
(35 ± 4 lbf•ft)
NEW
48 ± 6 N•m
(35 ± 4 lbf•ft)
NEW
48 ± 6 N•m
(35 ± 4 lbf•ft)
NEW
61 ± 9 N•m
(45 ± 7 lbf•ft)
NEW
NEW = Component must be replaced when removed.
219100985-023-101_a

# REAR ARM

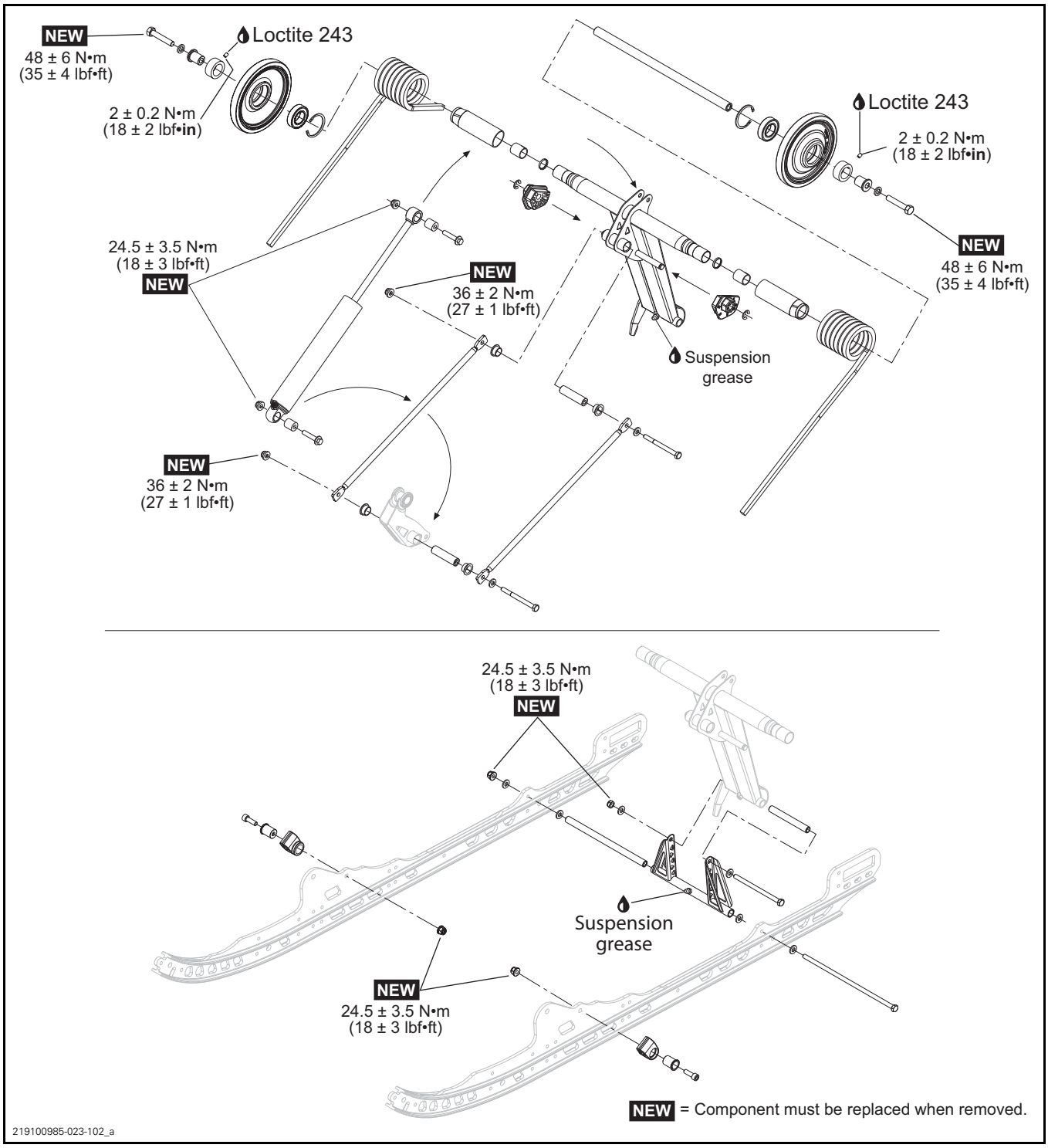
NEW
48 ± 6 N•m
(35 ± 4 lbf•ft)
Loctite 243
2 ± 0.2 N•m
(18 ± 2 lbf•in)
Loctite 243
2 ± 0.2 N•m
(18 ± 2 lbf•in)
NEW
48 ± 6 N•m
(35 ± 4 lbf•ft)
24.5 ± 3.5 N•m
(18 ± 3 lbf•ft)
NEW
NEW
36 ± 2 N•m
(27 ± 1 lbf•ft)
Suspension
grease
NEW
36 ± 2 N•m
(27 ± 1 lbf•ft)
24.5 ± 3.5 N•m
(18 ± 3 lbf•ft)
NEW
Suspension
grease
NEW
24.5 ± 3.5 N•m
(18 ± 3 lbf•ft)
NEW = Component must be replaced when removed.
219100985-023-102_a

# SHOCK ABSORBERS

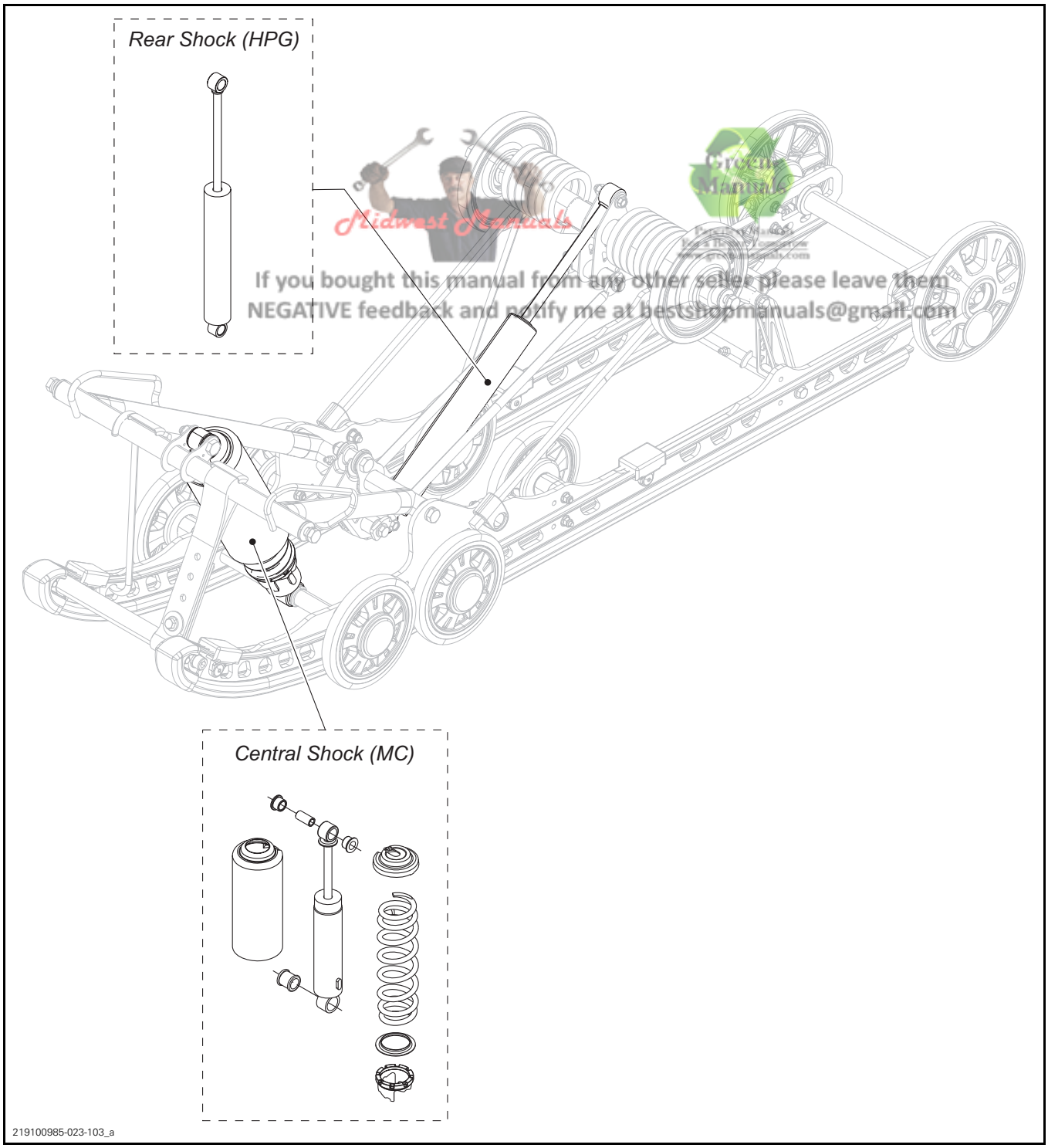


If you bought this manual from any other seller please leave them NEGATIVE feedback and notify me at bestshopmanuals@gmail.com

# GENERAL

During assembly/installation, use torque values and service products as in the exploded views.

Clean threads before applying a threadlocker. Refer to *SELF-LOCKING FASTENERS* and *LOCTITE APPLICATION* at the beginning of this manual for complete procedure.

**⚠ WARNING**

**Torque wrench tightening specifications must be strictly adhered to.**
**Locking devices when removed (e.g.: locking tabs, cotter pins, etc.) must replaced.**

***NOTICE*** **Hoses, cables and locking ties removed during a procedure must be reinstalled as per factory standards.**

# ADJUSTMENT

For suspension adjustment, refer to *SUSPENSION ADJUSTMENT* subsection.

# MAINTENANCE

## INSPECTING THE REAR SUSPENSION MECHANISM AND STOPPER STRAP

1. Inspect rear suspension components for wear, deterioration or damage, replace defective parts if necessary.
2. Inspect stopper strap(s) for wear or cracks.
3. Check bolt and nut securing strap(s) for tightness. If loose, inspect strap holes for deformation. Replace strap if necessary.

## INSPECTING THE SLIDER SHOES

Slider shoes are worn out and must be replaced when remaining material exceeding the 2 molding lines is as specified.

| MINIMUM SLIDER SHOE THICKNESS |
|---|
| 1 mm (.04 in)<br>material remaining exceeding the<br>2 molding lines |

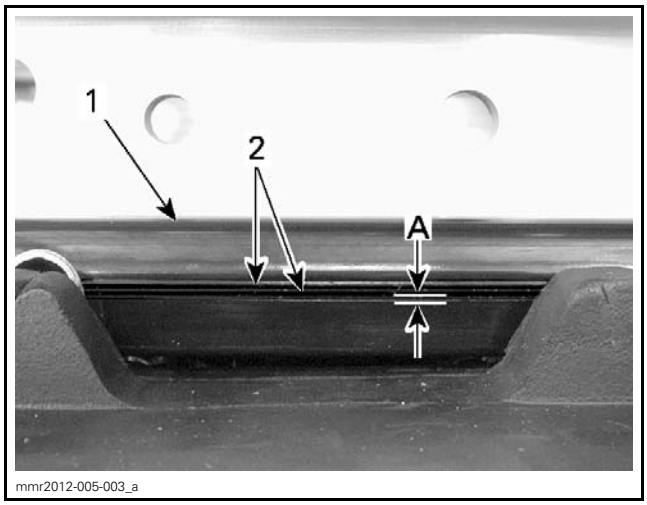


*1. Slider shoe*
*2. Molding lines*
*A. Minimum thickness: 1 mm (.04 in)*

***NOTICE*** **Slider shoes must always be replaced in pairs.**

## LUBRICATING THE REAR SUSPENSION

Lubricate the following suspension pivots at grease fittings.

| SERVICE PRODUCT |
|---|
| SYNTHETIC SUSPENSION GREASE (P/N 779163) |

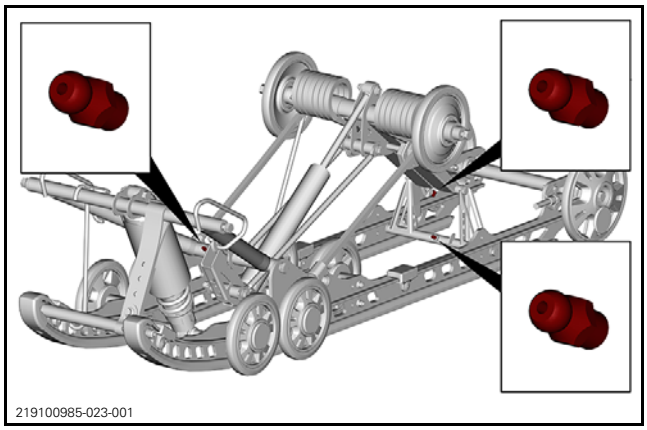


# PROCEDURES

NOTE: Parts can be replaced without removing the rear suspension, unless otherwise specified.

## SUSPENSION ASSEMBLY

### Removing Suspension Assembly

1. Lift rear of vehicle and support it off the ground.
2. Completely loosen track tension.

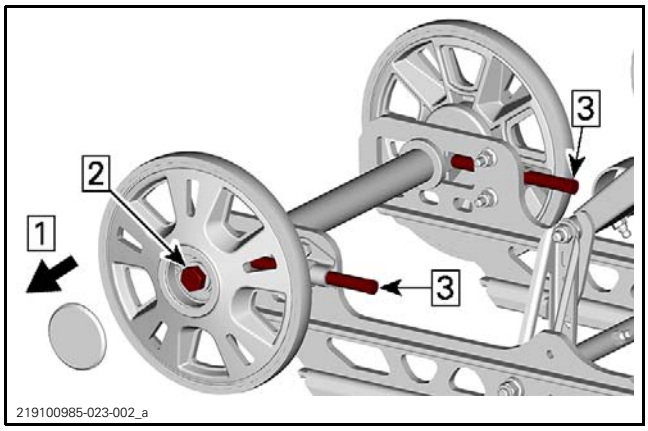


*Step 1: Remove caps*
*Step 2: Loosen one of the axle screws*
*Step 3: Loosen adjustment screws*

3. Remove and discard rear arm bolts from chassis. Use the following procedure to remove bolts easily.

   3.1 Remove one of the bolts securing the rear arm to frame.

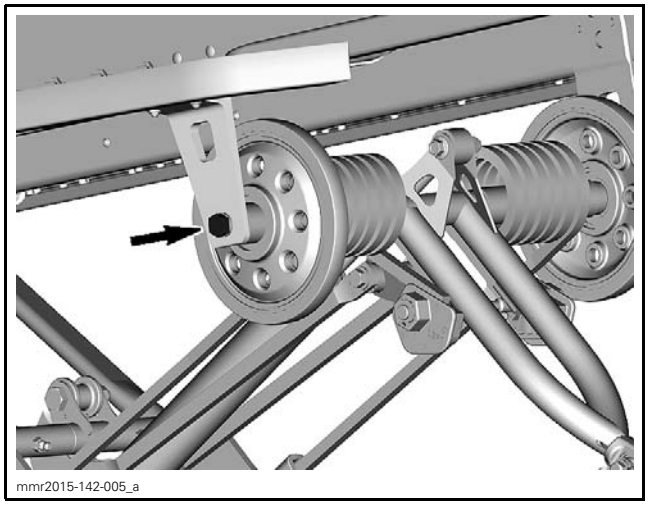


   3.2 Replace this bolt with a longer one and a nut.

   3.3 Screw in by approximately 7 turns.

   3.4 Hold the bolt and tighten locking nut.

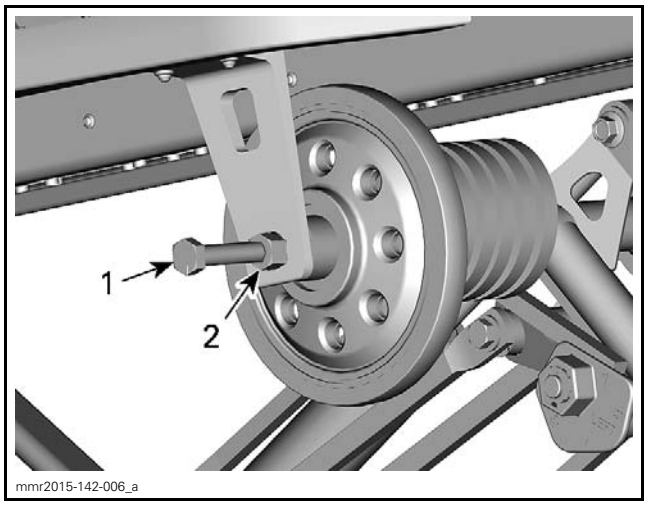


*1. Long bolt*
*2. Locking nut*

   3.5 Remove the bolt on the other side then unlock nut and remove the long bolt.

4. Remove bolts retaining front arm to tunnel the same way rear arm bolts have been removed.

NOTE: Discard the front arm bolts.

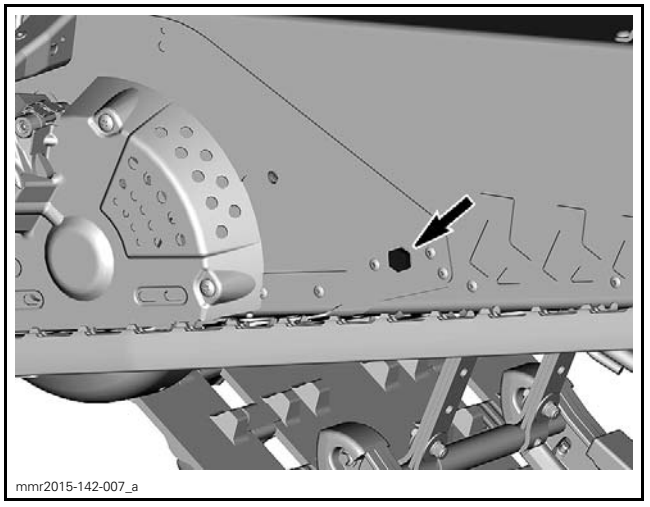


5. Lift rear of vehicle until front arm as enough clearance to pass underneath tunnel.
6. Remove suspension.

## Installing Suspension Assembly

The installation is the reverse of the removal procedure. However, pay attention to the following.

Inspect track thoroughly before reinstalling suspension. Refer to *TRACK* subsection.

Install suspension into track with front end first.

Install new front and rear arm bolts.

Tighten bolts to specification.

| TIGHTENING TORQUE | |
|---|---|
| Front and rear arm upper bolts | 48 N•m ± 6 N•m (35 lbf•ft ± 4 lbf•ft) |

Adjust track tension, refer to *TRACK* subsection.

# REAR AXLE

## Removing the Rear Axle

1. Lift rear of vehicle and support it off the ground.
2. Completely loosen track tension.

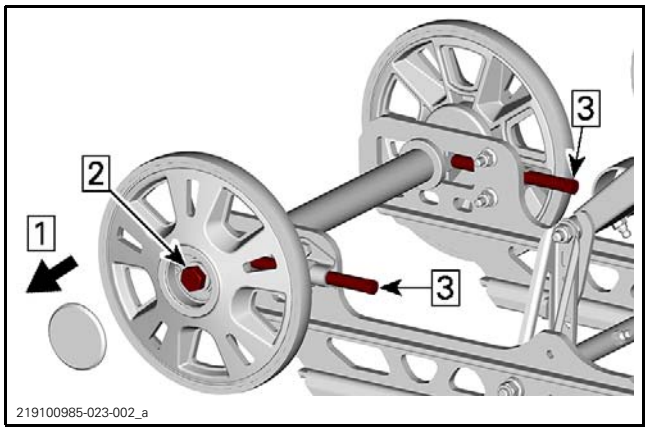


*Step 1: Remove caps*
*Step 2: Loosen one of the axle screws*
*Step 3: Loosen adjustment screws*

3. Remove both rear axle screws.
4. Remove rear idler wheels, seals and wheel spacers.

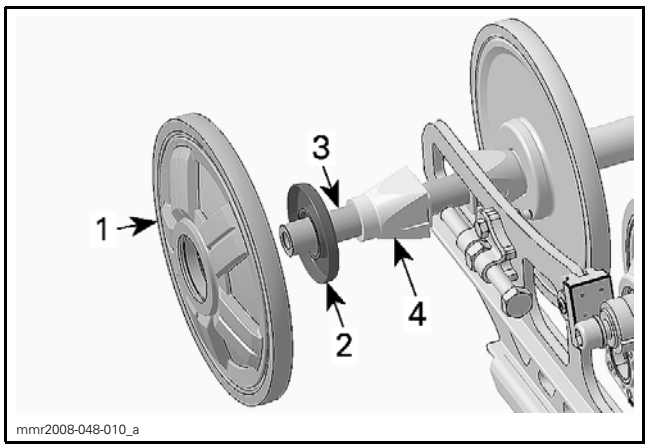


*TYPICAL - RH SIDE SHOWN*
*1. Rear idler wheel*
*2. Seal*
*3. Rear axle*
*4. Wheel spacer*

5. Pull out the rear axle.
6. Remove spacer and washers.

## Installing the Rear Axle

The installation is the reverse of the removal procedure. However, pay attention to the following.

Make sure to position all parts correctly.

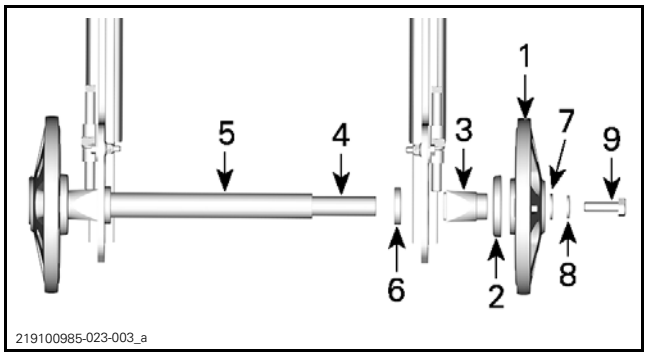


*1. Idler wheels*
*2. Seals*
*3. Wheel spacers*
*4. Rear axle*
*5. Rear axle spacer*
*6. Washer*
*7. Washer*
*8. Conical washer*
*9. Screw*

Position wheel spacers with a flat side up and a groove in front of tensioner screw.

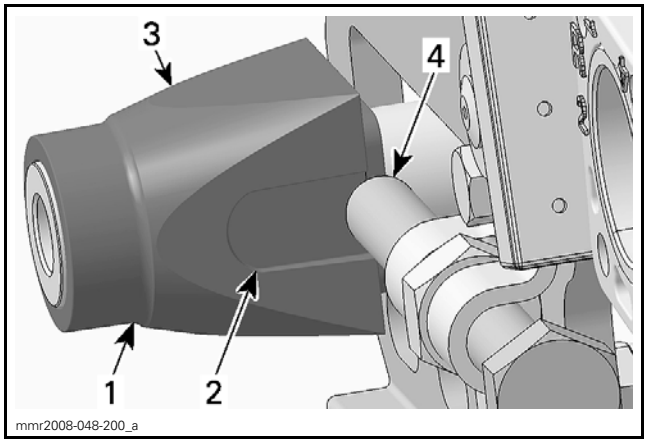


*1. Wheel spacer*
*2. Groove*
*3. Flat side*
*4. Tensioner screw*

When tightening rear axle, make sure each wheel spacer protuberance is engaged into runner slot.

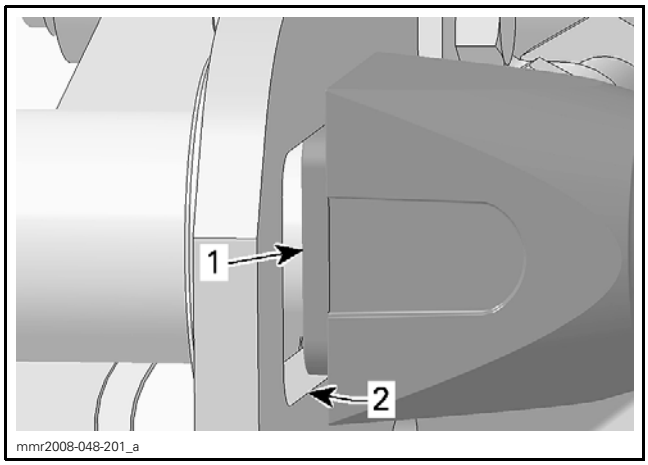


*1. Wheel spacer protuberance*
*2. Runner slot*

Adjust track tension. Refer to *TRACK* subsection.

# SHOCK ABSORBERS

## Removing the Rear Shock Absorber

NOTE: If necessary, to ease shock removal, unfasten stopper strap to release shock pressure.

1. Lift rear of vehicle and support it off the ground.
2. Remove bolts and nuts from shock.

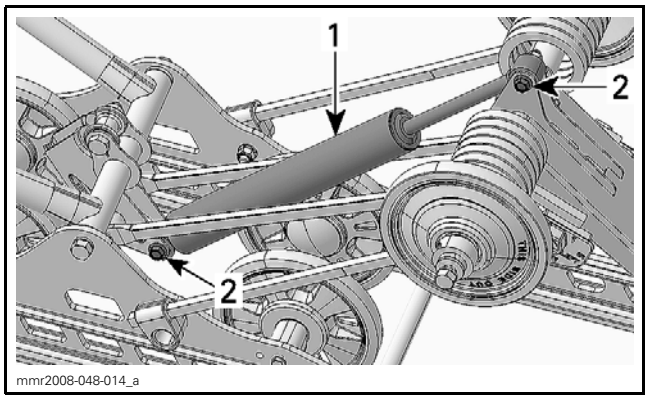


*TYPICAL*
*1. Rear shock absorber*
*2. Remove bolts and nuts*

3. Remove rear shock absorber from vehicle.

## Removing the Center Shock Absorber

1. Lift the rear of vehicle and support it off the ground.
2. Unfasten stopper strap.

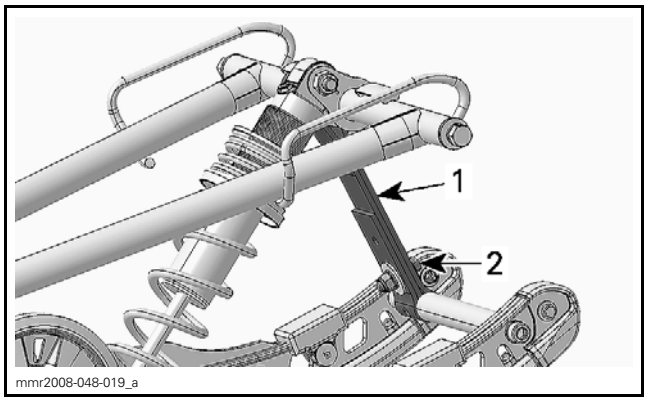


*TYPICAL*
*1. Stopper strap*
*2. Stopper strap bolt*

3. Remove upper and lower shock absorber bolts and nuts.

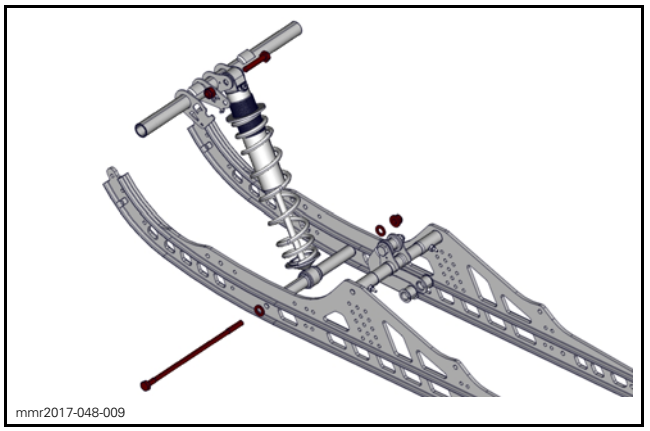


4. Remove center shock absorber from vehicle.
5. Remove bushings and shock shaft from shock absorber.

## Shock Absorber Inspection

Refer to *REAR SUSPENSION (rMOTION)* subsection for complete procedures.

## Installing the Rear Shock Absorber

The installation is the reverse of the removal procedure. However, pay attention to the following.

Make sure upper and lower shock absorber bushings are properly installed.

Install **NEW** shock absorber retaining nuts and tighten to specification.

| TIGHTENING TORQUE | |
|---|---|
| Rear shock absorber nuts and bolts | 24.5 N•m ± 3.5 N•m (18 lbf•ft ± 3 lbf•ft) |

## Installating the Center Shock Absorber

The installation is the reverse of the removal procedure. However, pay attention to the following.

Position the adjustment cam downwards.

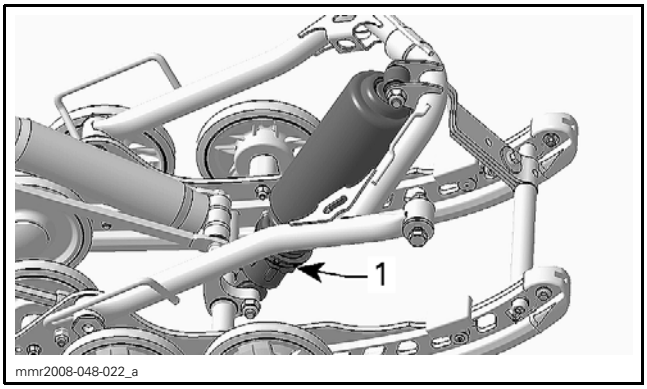


*1. Adjustment cam*

Install shock absorber upper nut and bolt and tighten to specification.

| TIGHTENING TORQUE | |
|---|---|
| Center shock absorber upper nut and bolt | 48 N•m ± 6 N•m (35 lbf•ft ± 4 lbf•ft) |

Position washers in proper position.

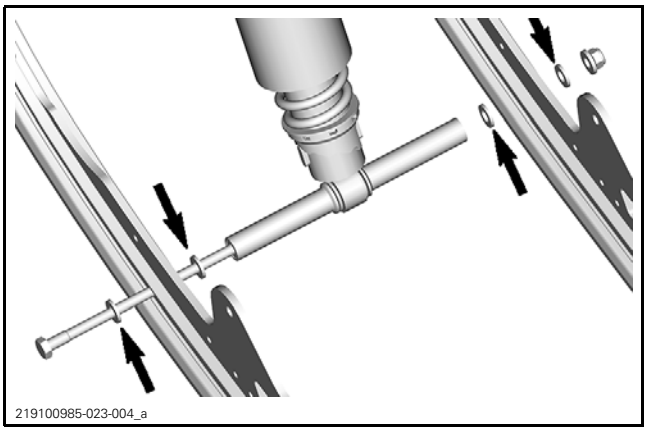


| TIGHTENING TORQUE | |
|---|---|
| Center shock absorber lower nut and bolt | 70 N•m ± 10 N•m (52 lbf•ft ± 7 lbf•ft) |

# REAR SPRINGS

## Removing the Rear Spring

1. Lift rear of vehicle and support it off the ground.
2. Completely loosen track tension.

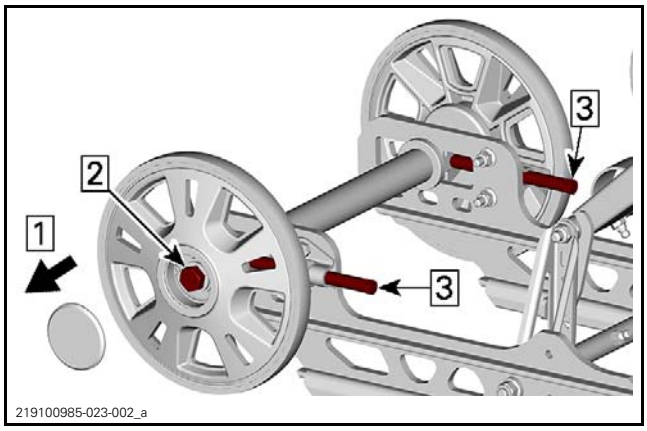


*Step 1: Remove caps*
*Step 2: Loosen one of the axle screws*
*Step 3: Loosen adjustment screws*

3. Decrease springs preload by turning cams accordingly.

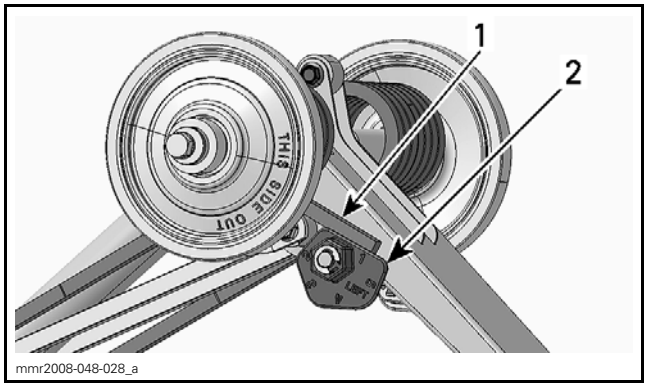


*LH SIDE SHOWN*
*1. Rear spring*
*2. Cam*

4. Firmly hold the spring support and unscrew its retaining bolt (one on each side).

**⚠ WARNING**

**Firmly hold the spring support, they are spring loaded.**

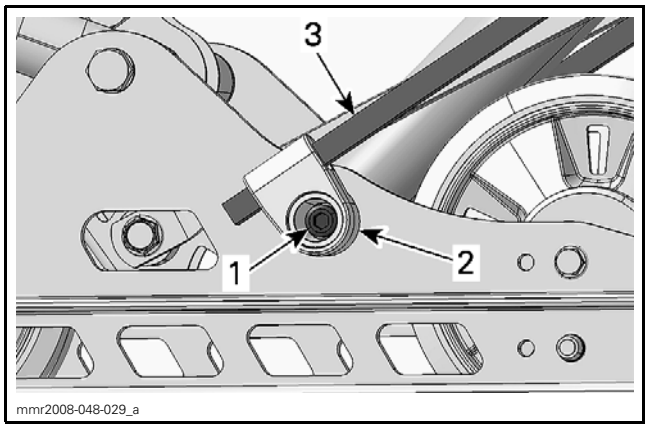


1. *Spring support bolt*
2. *Spring support*
3. *Spring*

5. Remove screws and washers from rear arm top axle. Refer to *REMOVING SUSPENSION ASSEMBLY* for procedure to remove the bolts.

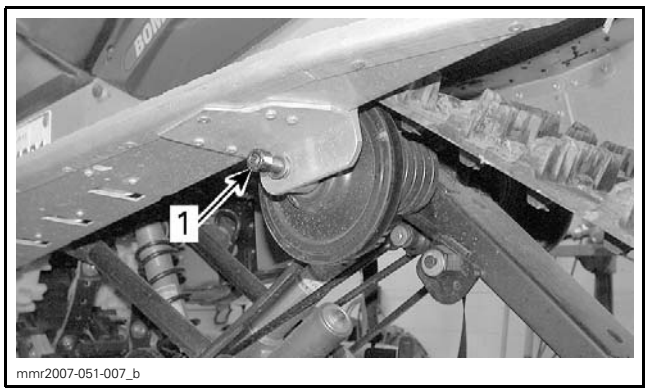


*TYPICAL*
1. *Screw*

6. Loosen set screw from locking rings.
7. Remove locking rings.
8. Remove upper idler wheels.
9. Remove springs.

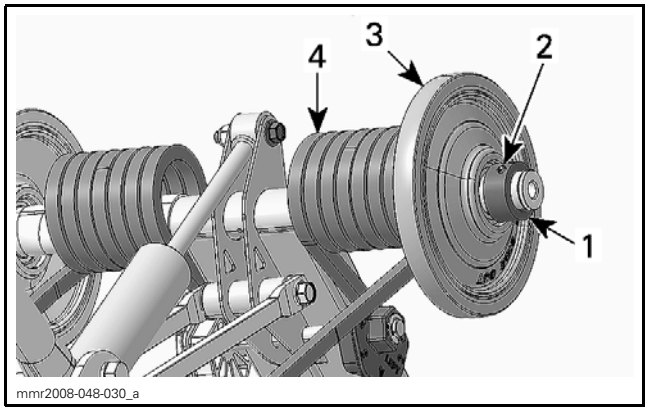


*LH SIDE SHOWN*
1. *Locking ring*
2. *Set screw*
3. *Upper idler wheel*
4. *Rear spring*

## Installing the Rear Spring

The installation is the reverse of the removal procedure. However, pay attention to the following.

Respect THIS SIDE OUT inscription on top idler wheels.

Make sure that spring end is in cam adjuster.

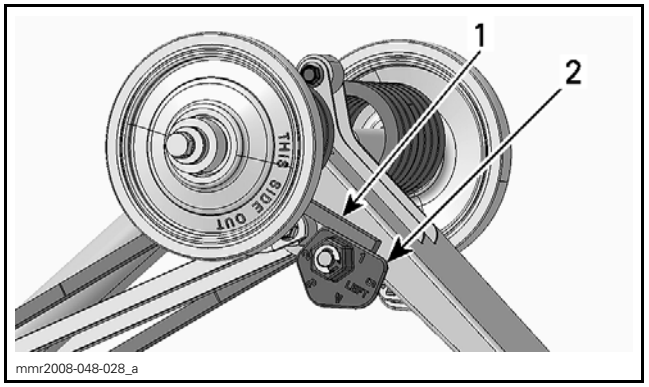


*LH SIDE SHOWN*
1. *Spring end*
2. *Cam*

Install spring supports upwards.

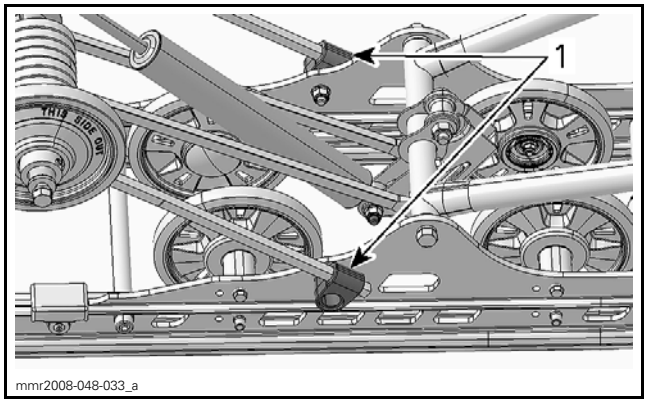


*TYPICAL - RH SIDE SHOWN*
1. *Spring supports upwards*

Apply threadlocker on set screw of the locking rings.

| SERVICE PRODUCT |
|---|
| LOCTITE 243 (BLUE) (P/N 293 800 060) |

Tighten screws on rear arm top axle to specification.

| TIGHTENING TORQUE | |
|---|---|
| Rear arm top axle screws | 48 N•m ± 6 N•m (35 lbf•ft ± 4 lbf•ft) |

# SLIDER SHOES

## Removing the Slider Shoe

1. Lift rear of vehicle and support it off the ground.
2. Completely loosen track tension.

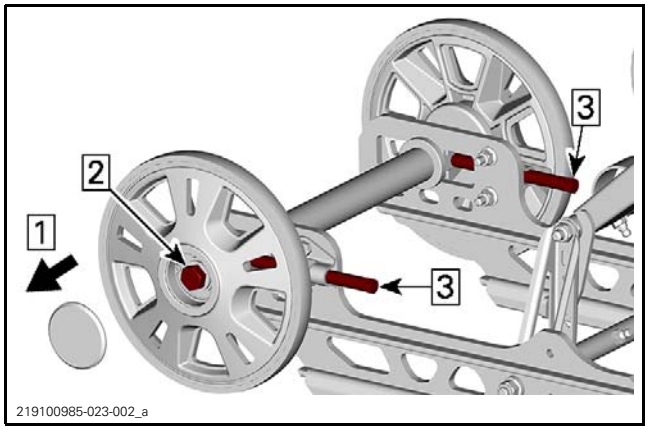


*Step 1: Remove caps*
*Step 2: Loosen one of the axle screws*
*Step 3: Loosen adjustment screws*

3. Remove nut and screw of each runner.

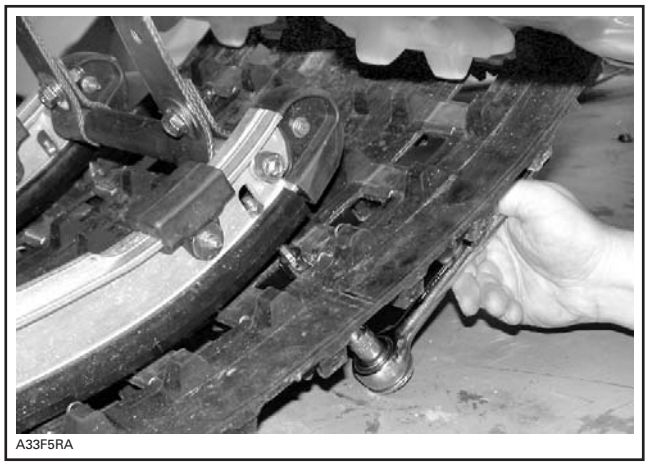


*REMOVE NUT AND SCREW OF EACH RUNNER*

4. At the rear of vehicle, align a track window with slider shoe.

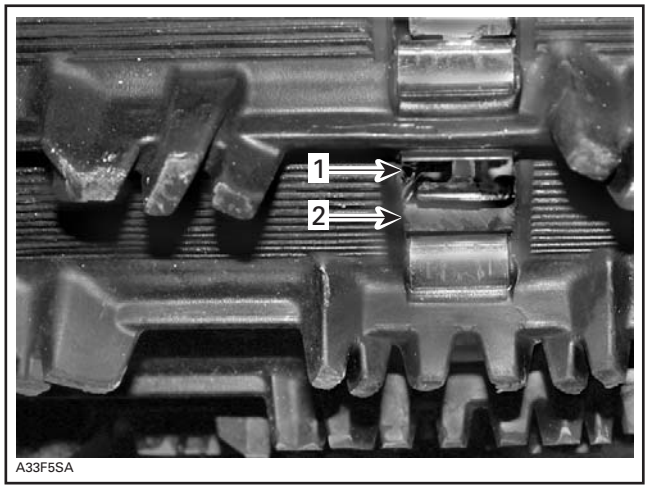


*TYPICAL*
*1. Track window*
*2. Slider shoe*

5. Using a pry bar or a screwdriver, push slider shoe rearward until it comes in contact with track.

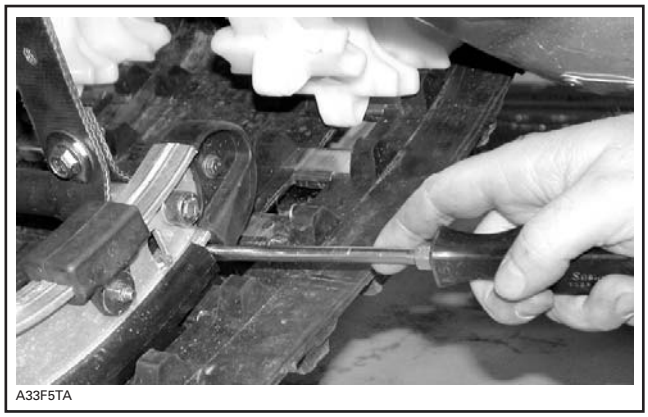


*PUSH ON SLIDER SHOE*

6. Using locking pliers, pull slider shoe through track window to remove.

NOTE: If necessary, lubricate track window to facilitate slider shoe removal.

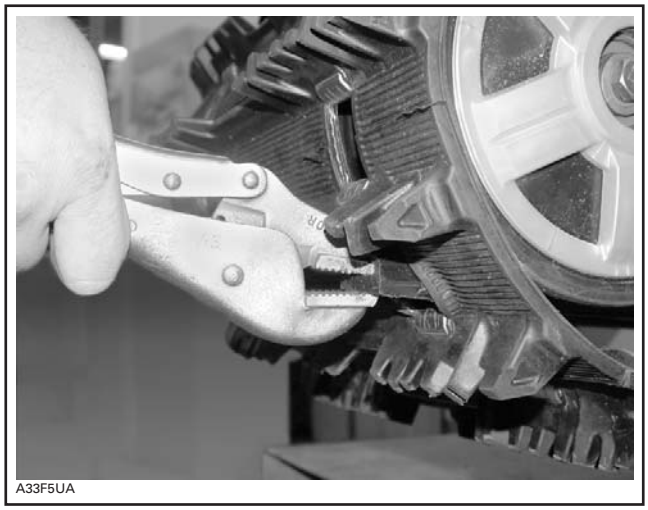


*PULL ON SLIDER SHOE TO REMOVE*

### Installing the Slider Shoe

The installation is the reverse of the removal procedure. However, pay attention to the following.

Make sure to insert slider shoe end with hole first.

## FRONT ARM

### Removing the Front Arm

1. Proceed with *REMOVING THE SUSPENSION ASSEMBLY*. Refer to procedure in this subsection.
2. Remove the bolt securing rocker to front arm.

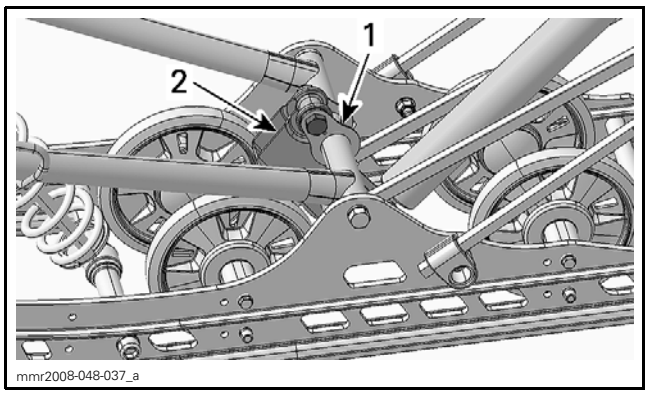


*1. Front arm*
*2. Rocker*

3. Unscrew and remove the front arm lower bolts and washers.

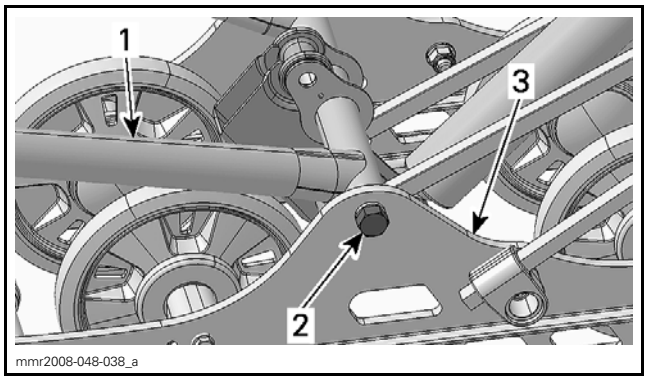


*1. Front arm*
*2. Lower bolt*
*3. LH runner*

4. Remove the shock absorber upper bolt.

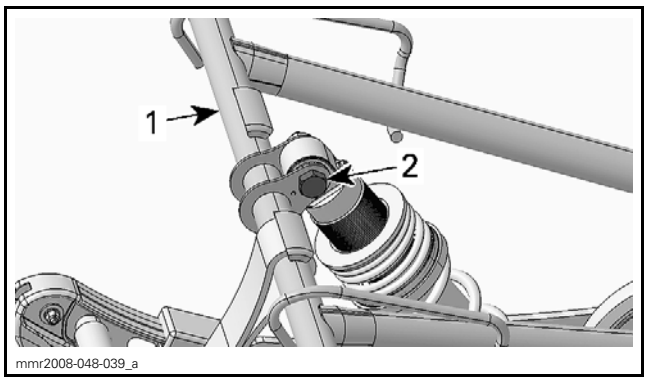


*1. Front arm*
*2. Shock absorber upper bolt*

5. Unfasten stopper strap.

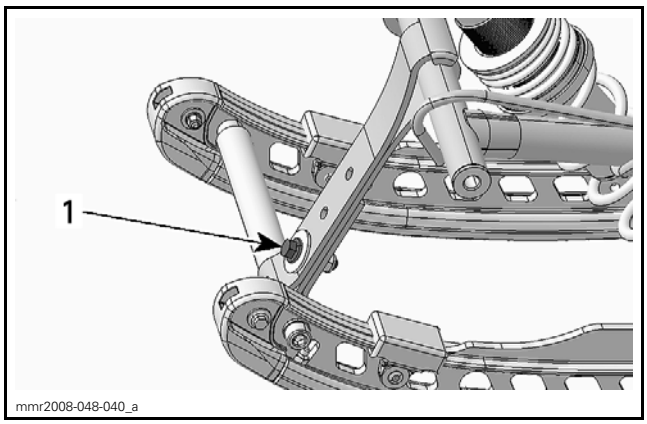


*1. Stopper strap bolt*

6. Remove front arm from suspension assembly.

### Installing the Front Arm

The installation is the reverse of the removal procedure. However, pay attention to the following.

Refer to exploded view for new fasteners to install and tightening torques.

Lubricate front arm pivot. Refer to *MAINTENANCE*.

# REAR ARM

## Removing the Rear Arm

1. Lift rear of vehicle and support it off the ground.
2. Proceed with *REAR SPRING REMOVAL*. Refer to procedure in this subsection.
3. Remove the rear shock absorber upper bolt and nut.

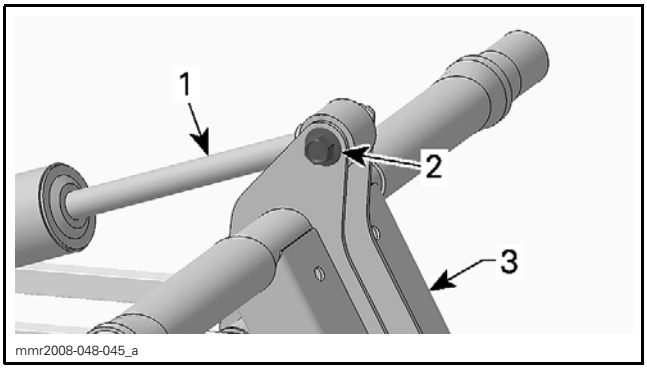


*1. Rear shock absorber*
*2. Shock absorber bolt*
*3. Rear arm*

4. Remove throttle rods from rear arm.

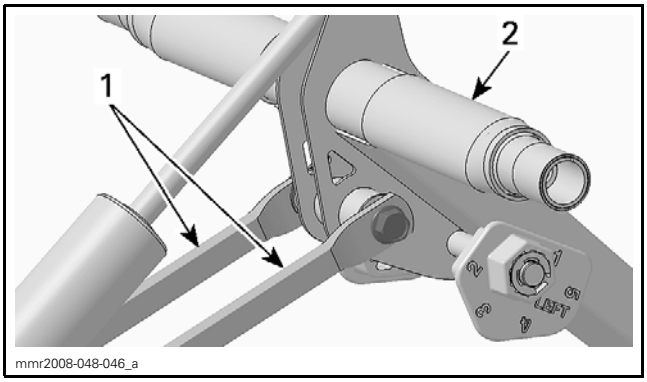


*1. Throttle rods*
*2. Rear arm*

5. Remove bolt, washers and nut holding rear arm to pivot arm.

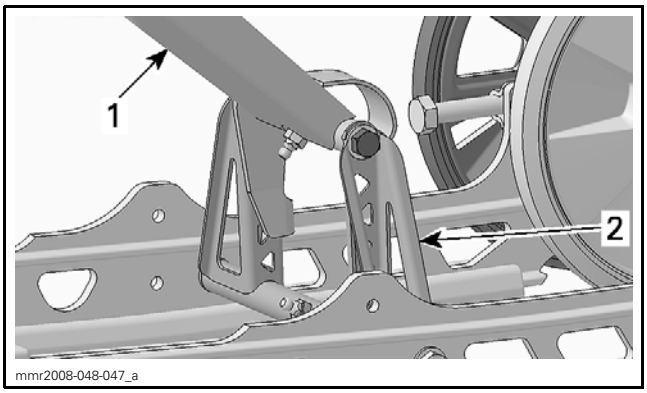


*1. Rear arm*
*2. Pivot arm*

6. Remove rear arm from vehicle.
7. Remove adjustment cams from rear arm.

## Installing the Rear Arm

The installation is the reverse of the removal procedure. However, pay attention to the following.

Place rear arm grease fitting towards the front of the vehicle.

Make sure rear arm stroke limiter is placed at rear.

Assemble rear arm fasteners as per following illustrations.

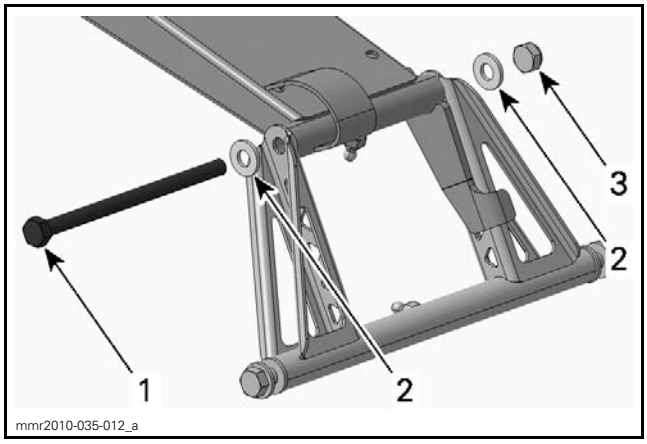


*SOME PARTS REMOVED FOR CLARITY PURPOSE*
*1. Rear arm lower bolt*
*2. Washers*
*3. Rear arm lower nut*

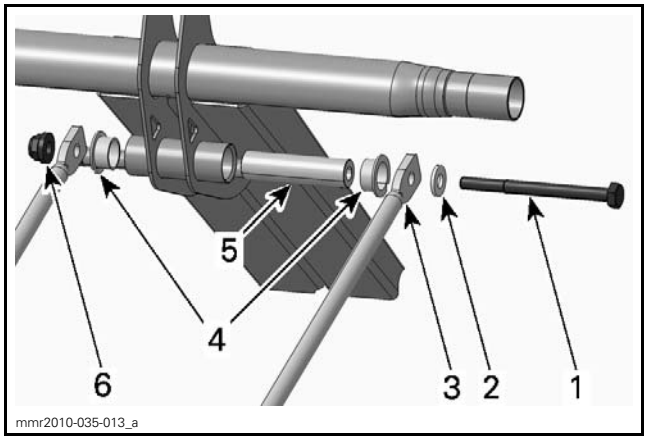


*SOME PARTS REMOVED FOR CLARITY PURPOSE*
*1. Throttle rod upper bolt*
*2. Washer*
*3. Throttle rod*
*4. Bushings*
*5. Axle*
*6. Throttle rod upper nut*

Refer to exploded view for new fasteners to install and tightening torques.

Lubricate rear arm pivot. Refer to *MAINTENANCE*.

# PIVOT ARM

## Removing the Pivot Arm

1. Lift rear of vehicle and support it off the ground.
2. Completely loosen track tension.

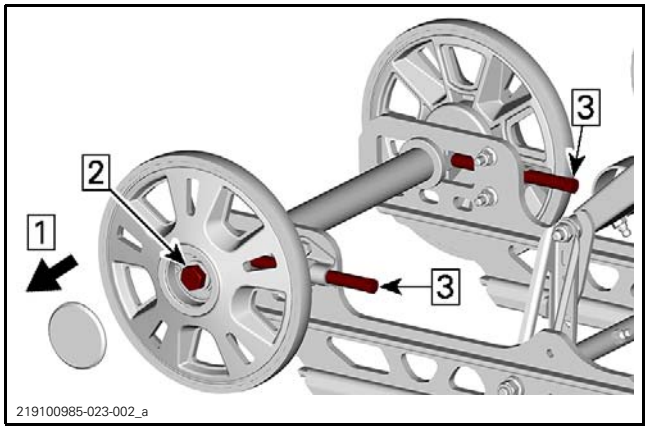


*Step 1: Remove caps*
*Step 2: Loosen one of the axle screws*
*Step 3: Loosen adjustment screws*

3. Remove bolt and washers retaining rear arm to pivot arm.

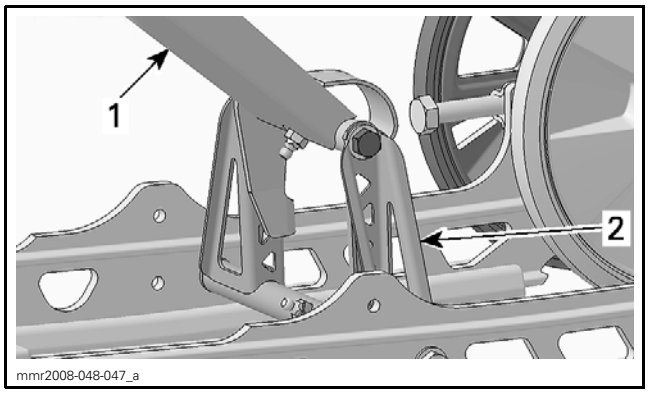


*1. Rear arm*
*2. Pivot arm*

4. Remove bolt and washers retaining pivot arm to runners.

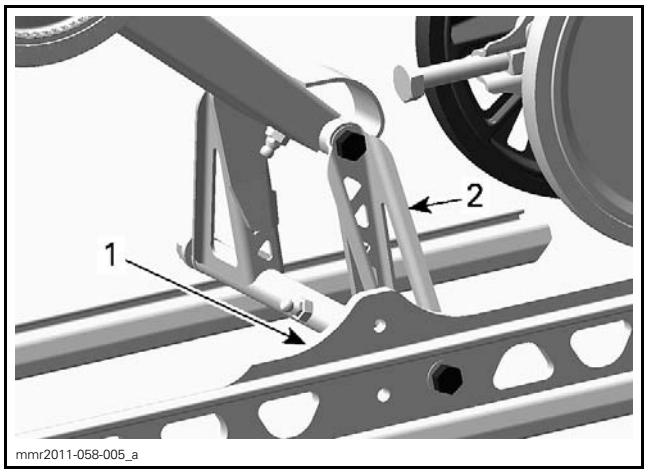


*1. Runner*
*2. Pivot arm*

5. Carefully remove pivot arm from rear arm.

## Installing the Pivot Arm

The installation is the reverse of the removal procedure. However, pay attention to the following.

Assemble pivot arm fastener as per following illustrations.

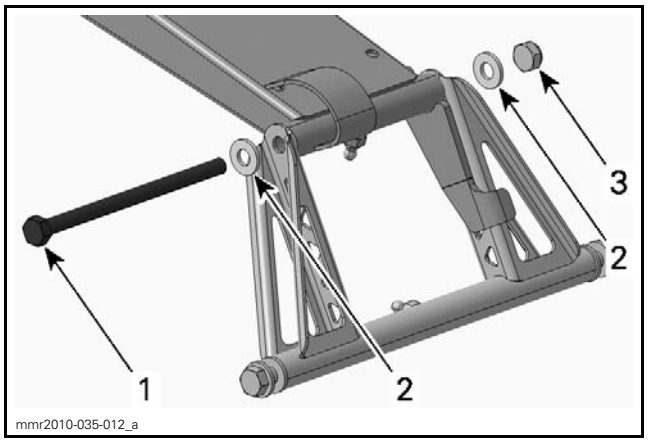


***SOME PARTS REMOVED FOR CLARITY PURPOSE***
*1. Rear arm lower bolt*
*2. Washers*
*3. Rear arm lower nut*

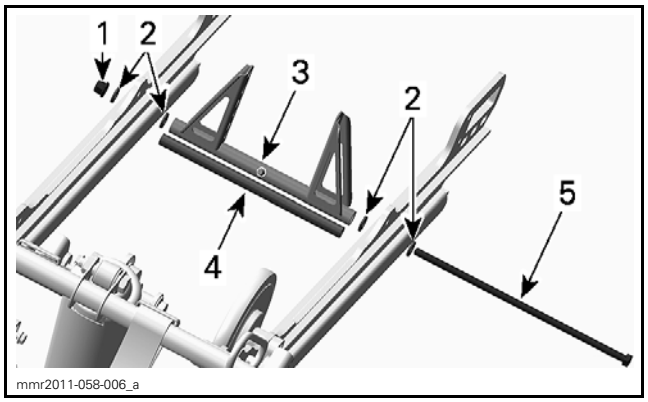


*PARTS REMOVED FOR CLARITY PURPOSE*
1. *Pivot arm lower nut*
2. *Washers*
3. *Pivot arm*
4. *Axle*
5. *Pivot arm lower screw*

Refer to exploded view for new fasteners to install and tightening torques.

Lubricate pivot arm. Refer to *MAINTENANCE*.

# IDLER WHEELS AND SUPPORTS

## Idler Wheels Removal and Installation

Refer to the exploded views at the beginning of this subsection for parts layout and fasteners tightening torque.

# STOPPER STRAP

Refer to the exploded views at the beginning of this subsection for parts layout and fasteners tightening torque.

# REAR SUSPENSION (rMOTION)

## SERVICE TOOLS


| Description | Part Number | Page |
|---|---|---|
| RMOTION MASTER CYLINDER KEY | 529 036 254 | 13–14 |
| RMOTION SOCKET | 529 036 255 | 14 |
| RMOTION SUSPENSION TOOL | 529 036 234 | 8, 22 |
| SHOCK ABSORBER SUPPORTS | 529 036 186 | 20 |


## SERVICE PRODUCTS


| Description | Part Number | Page |
|---|---|---|
| LOCTITE 243 (BLUE) | 293 800 060 | 12 |
| SYNTHETIC SUSPENSION GREASE | 779163 | 7 |

# RAILS

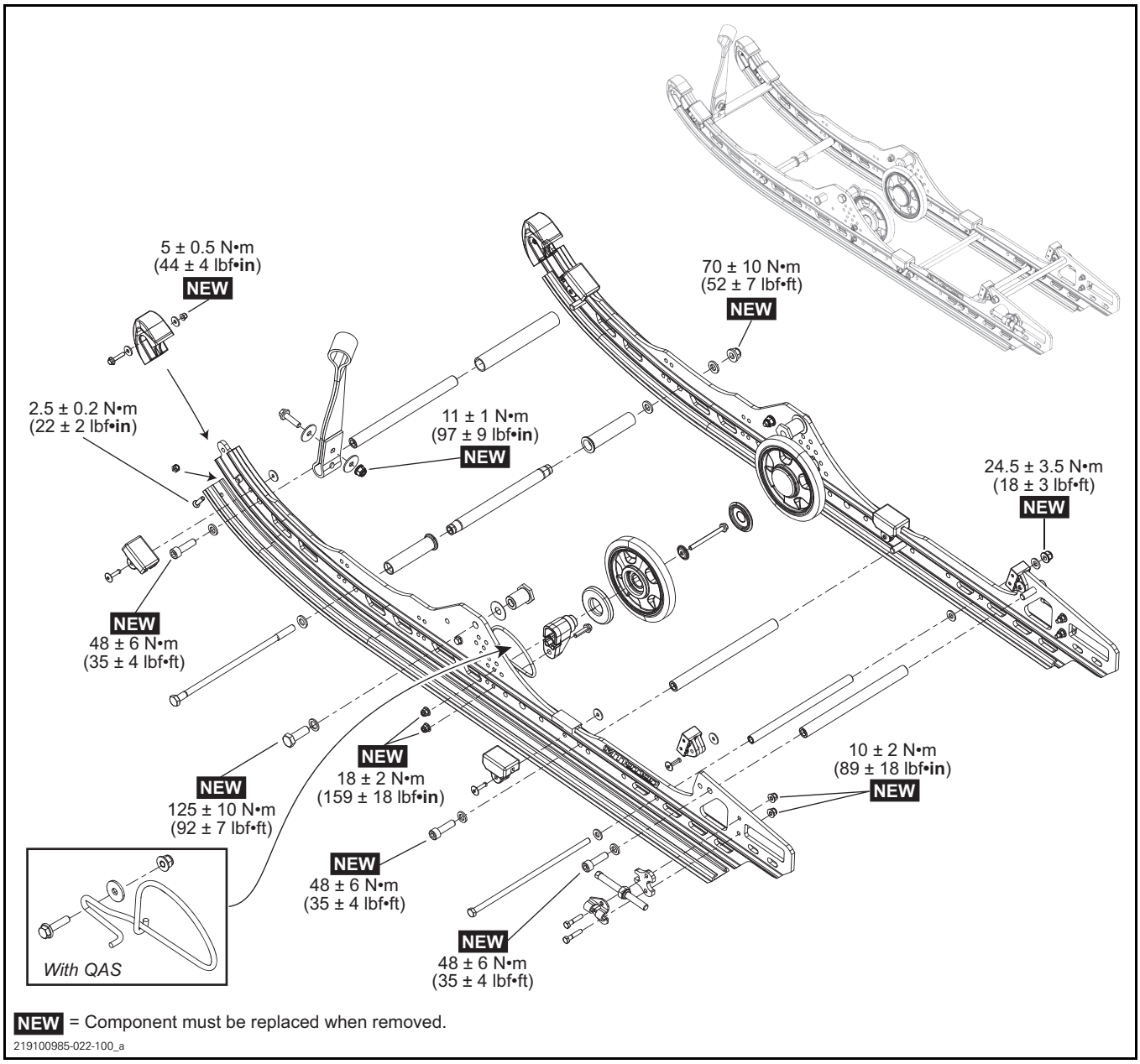


**NEW** = Component must be replaced when removed.

219100985-022-100_a

# WHEELS (3 IDLER WHEELS LAYOUT)

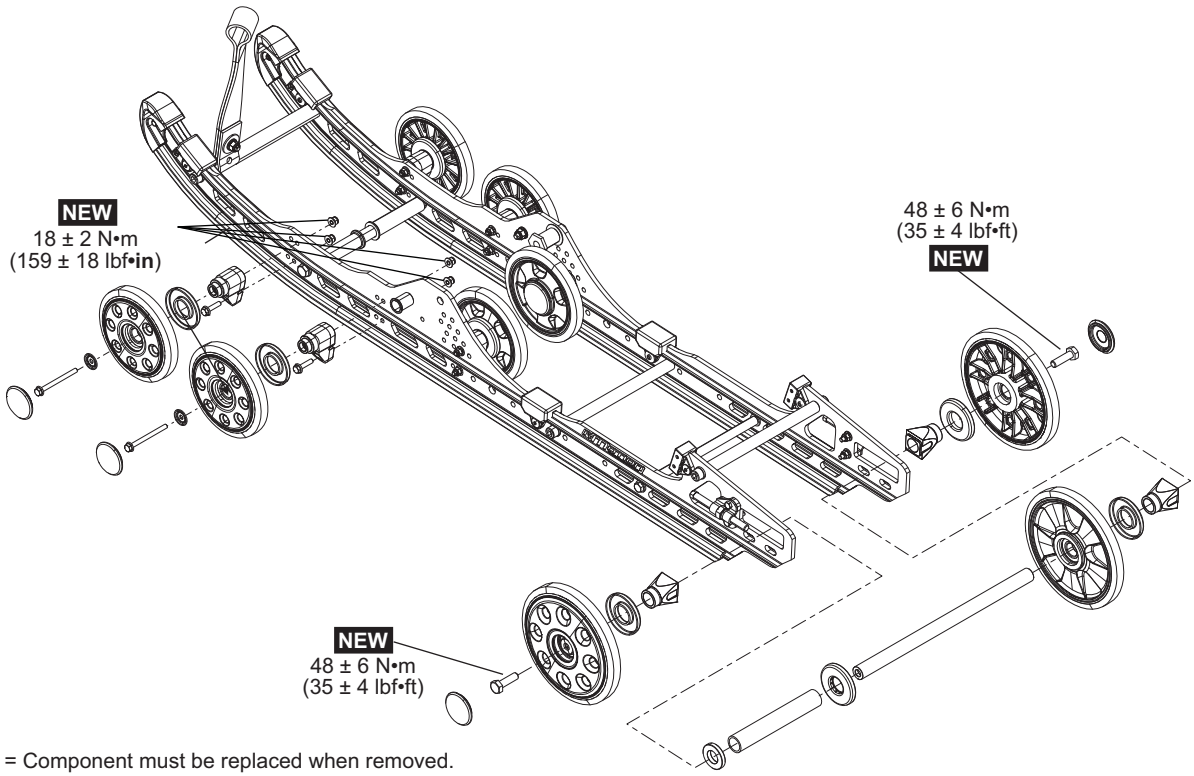


**NEW** = Component must be replaced when removed.

219100985-022-101_a

# FRONT ARM

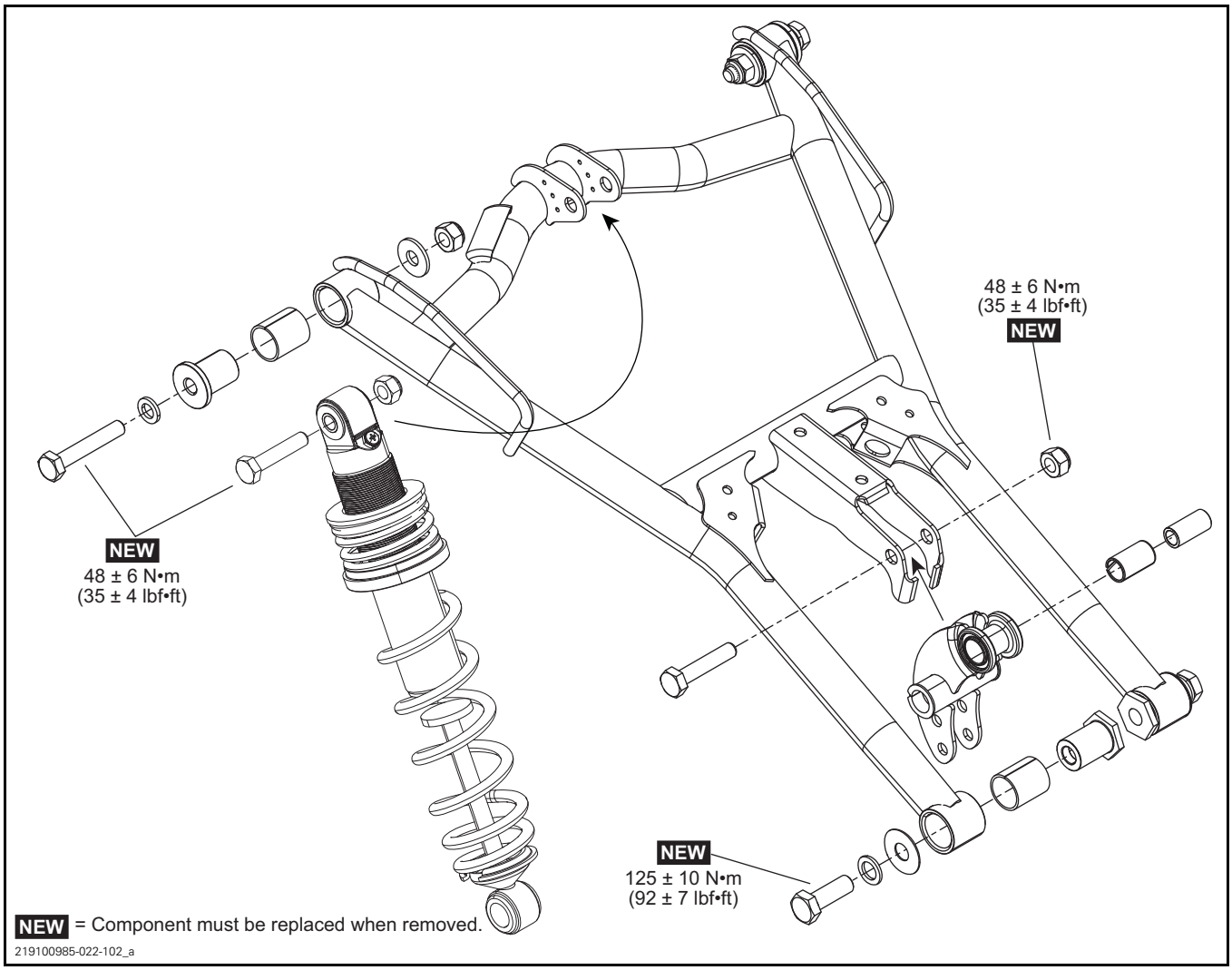
48 ± 6 N•m
(35 ± 4 lbf•ft)
NEW
NEW
48 ± 6 N•m
(35 ± 4 lbf•ft)
NEW
125 ± 10 N•m
(92 ± 7 lbf•ft)
NEW = Component must be replaced when removed.
219100985-022-102_a

# REAR ARM (MODELS WITHOUT ADJUSTABLE REAR SHOCK)

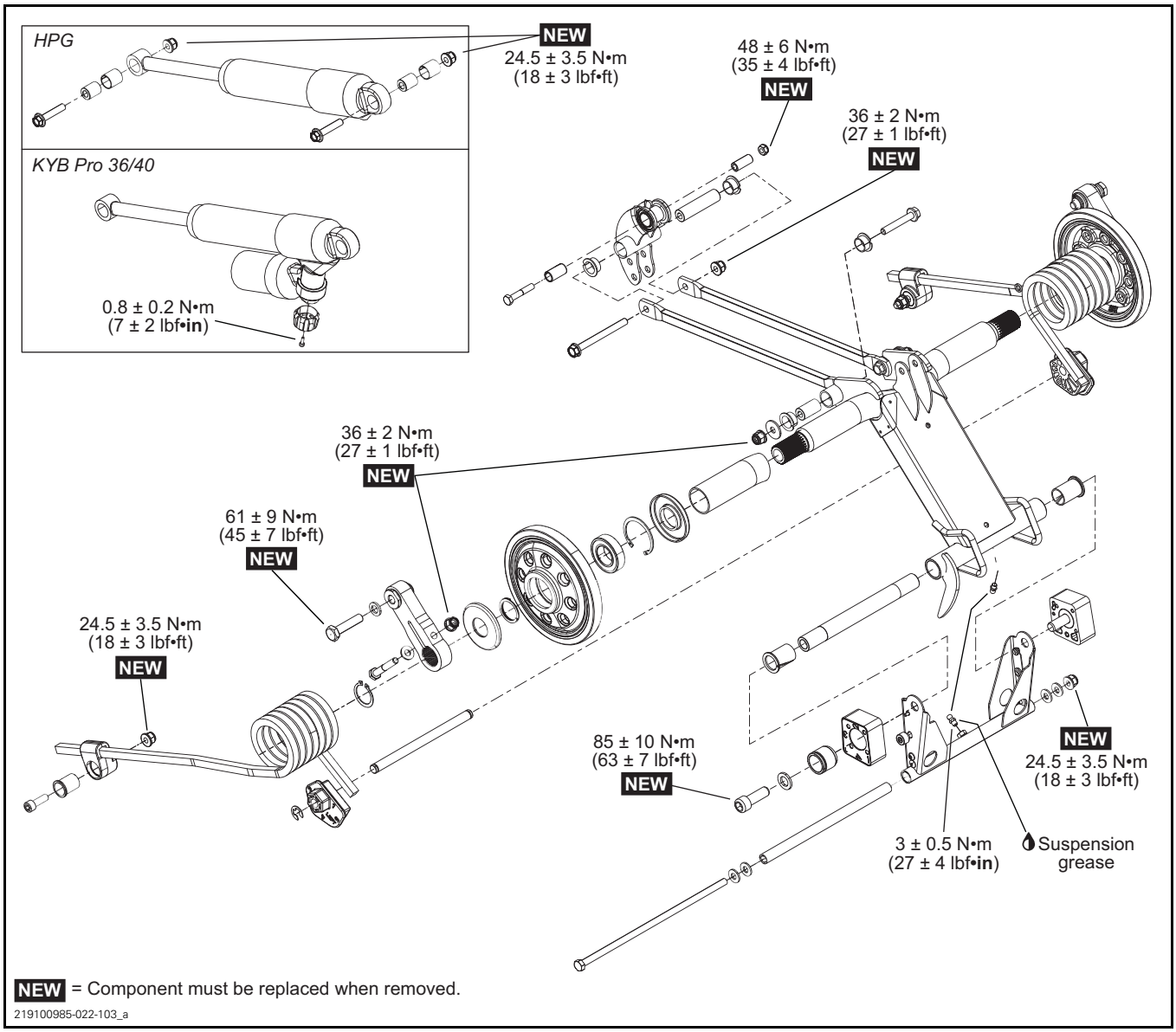

# REAR ARM (MODELS WITH QUICK ADJUST SYSTEM)

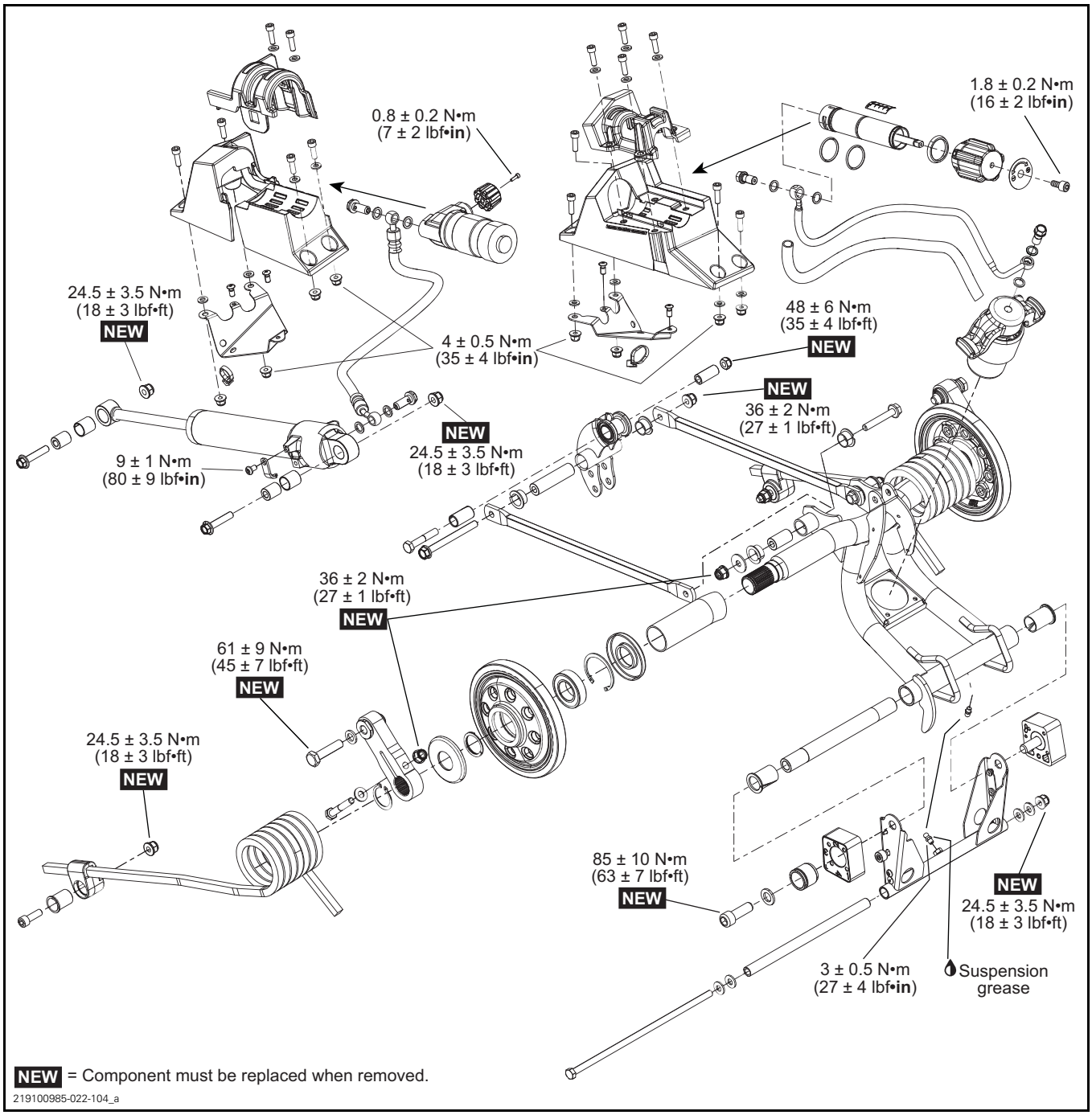

# GENERAL

During assembly/installation, use torque values and service products as in the exploded views.

Clean threads before applying a threadlocker. Refer to *SELF-LOCKING FASTENERS* and *LOCTITE APPLICATION* at the beginning of this manual for complete procedure.

**⚠ WARNING**

**Torque wrench tightening specifications must be strictly adhered to.**
**Locking devices when removed (e.g.: locking tabs, cotter pins, etc.) must be replaced.**

***NOTICE*** **Hoses, cables and locking ties removed during a procedure must be reinstalled as per factory standards.**

# ADJUSTMENT

For suspension adjustment, refer to *SUSPENSION ADJUSTMENT* subsection.

# MAINTENANCE

## INSPECTING THE REAR SUSPENSION MECHANISM AND STOPPER STRAP

1. Inspect rear suspension components for wear, deterioration or damage, replace defective parts if necessary.
2. Inspect stopper strap(s) for wear or cracks.
3. Check bolt and nut securing strap(s) for tightness. If loose, inspect strap holes for deformation. Replace strap if necessary.

## INSPECTING THE SLIDER SHOES

Slider shoes are worn out and must be replaced when remaining material exceeding the 2 molding lines is as specified.

| MINIMUM SLIDER SHOE THICKNESS |
|---|
| 1 mm (.04 in)<br>material remaining exceeding the<br>2 molding lines |

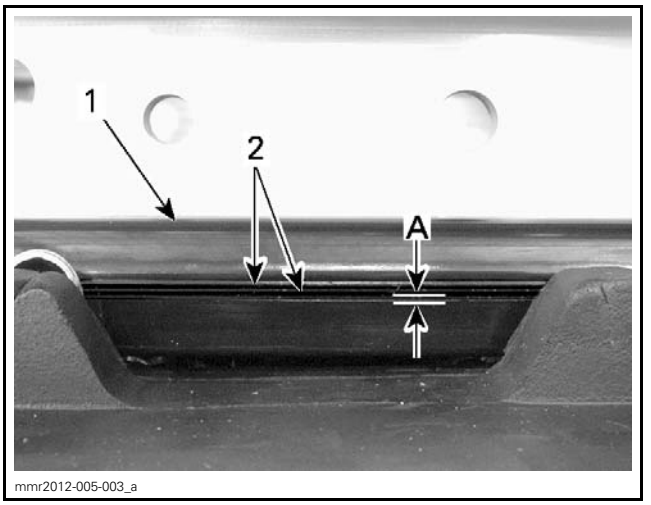

mmr2012-005-003_a

*1. Slider shoe*
*2. Molding lines*
*A. Minimum thickness: 1 mm (.04 in)*

***NOTICE*** **Slider shoes must always be replaced in pairs.**

## LUBRICATING THE REAR SUSPENSION

Lubricate the following suspension pivots at grease fittings.

| SERVICE PRODUCT |
|---|
| SYNTHETIC SUSPENSION GREASE (P/N 779163) |

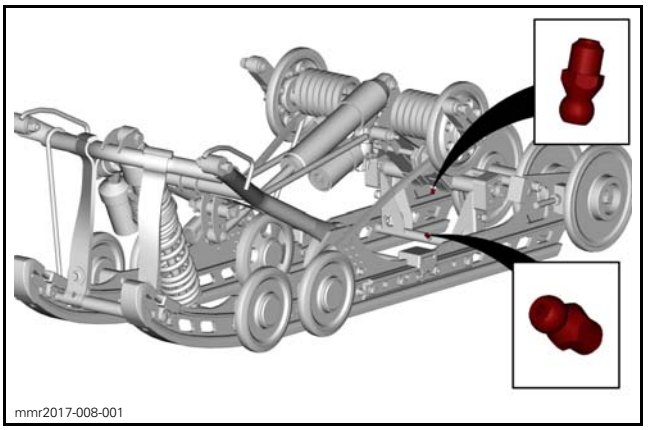
mmr2017-008-001

*TYPICAL*

# PROCEDURES

NOTE: Parts can be replaced without suspension removal, unless otherwise noted.

# SUSPENSION ASSEMBLY

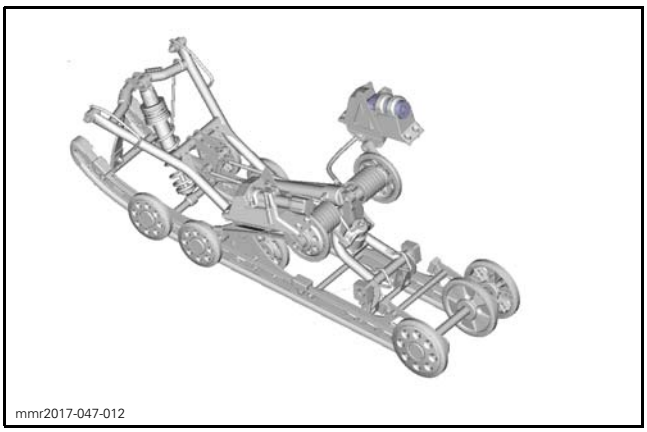
mmr2017-047-012

## Removing Suspension Assembly

1. Lift rear of vehicle and support it off the ground.
2. Completely loosen track tension by unscrewing both adjustment screws.

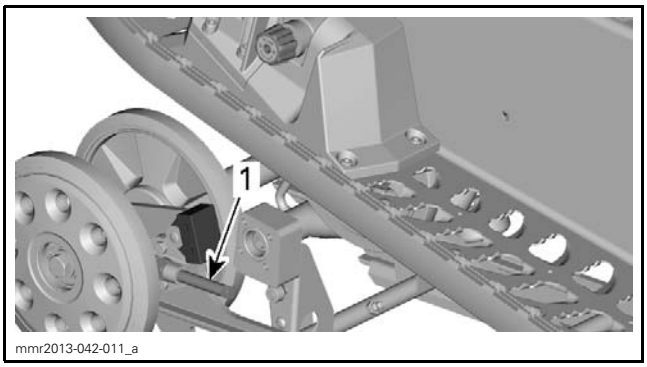

mmr2013-042-011_a

*1. Adjustment screw*

### *rMotion with Quick Adjust System*

3. Remove quick adjuster control modules, refer to:
   - *SHOCK DAMPING QUICK ADJUSTER SYSTEM*
   - *SPRING PRELOAD QUICK ADJUSTER SYSTEM*.

### *All Models*

4. Lower the rear of vehicle just enough to support suspension.
5. Remove rear arm connecting rods retaining screws.

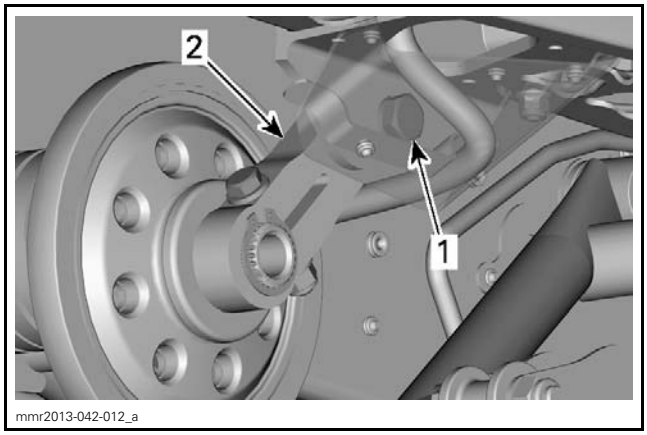

mmr2013-042-012_a

*1. Retaining screw*
*2. Connecting rod*

| REQUIRED TOOL | |
|---|---|
| RMOTION SUSPENSION TOOL (P/N 529 036 234) | |

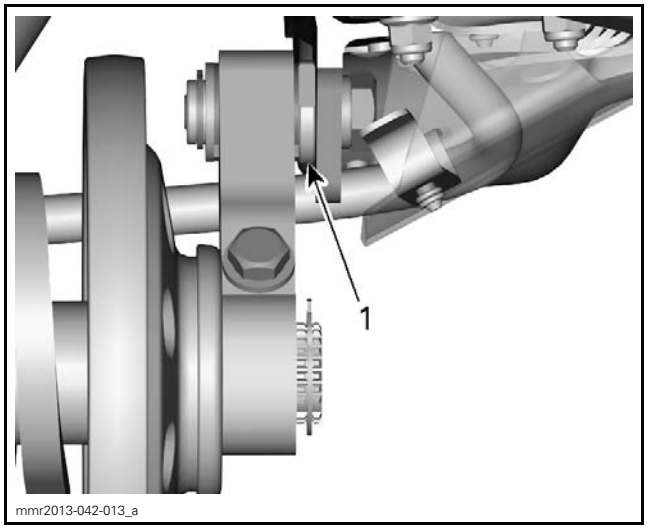

mmr2013-042-013_a

*1. rMotion suspension tool to be installed here*

6. Remove front arm retaining bolts.

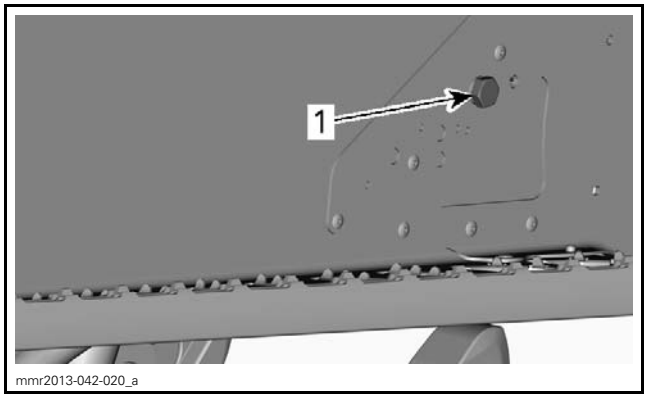

mmr2013-042-020_a

*TYPICAL*
*1. Front arm bolt*
*2. Chaincase*

7. Lift rear of vehicle until front arm as enough clearance to pass underneath tunnel.

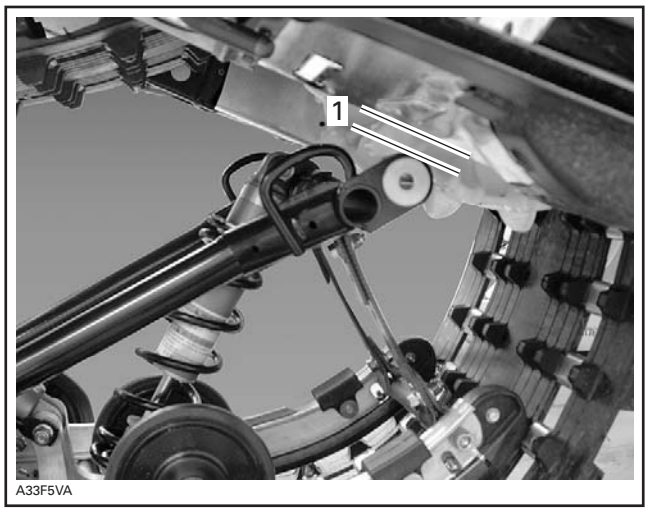


*TYPICAL*
*1. Enough clearance*

8. Remove suspension assembly from vehicle.

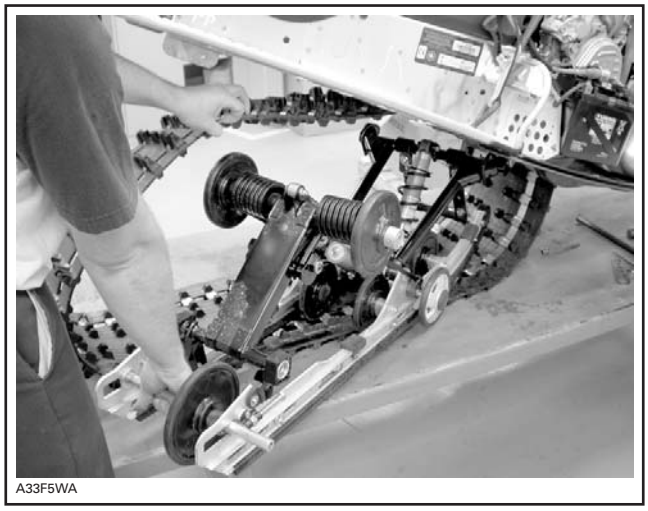


*TYPICAL — REMOVE SUSPENSION*

## Installing Suspension Assembly

Installation is the reverse of removal procedure. Pay attention to the following.

Install suspension into track with front portion first.

Tighten new screws to specification.

| UPPER SUSPENSION ARM FASTENERS TIGHTENING TORQUE | |
|---|---|
| Front arm bolts | 48 N•m ± 6 N•m (35 lbf•ft ± 4 lbf•ft) |
| Rear arm connecting rod screws | 61 N•m ± 9 N•m (45 lbf•ft ± 7 lbf•ft) |

Adjust track tension. Refer to *TRACK* subsection.

### *rMotion with Quick Adjust System*

Install quick adjuster control modules, refer to:
– *SHOCK DAMPING QUICK ADJUSTER SYSTEM*
– *SPRING PRELOAD QUICK ADJUSTER SYSTEM*.

# SHOCK DAMPING QUICK ADJUSTER SYSTEM

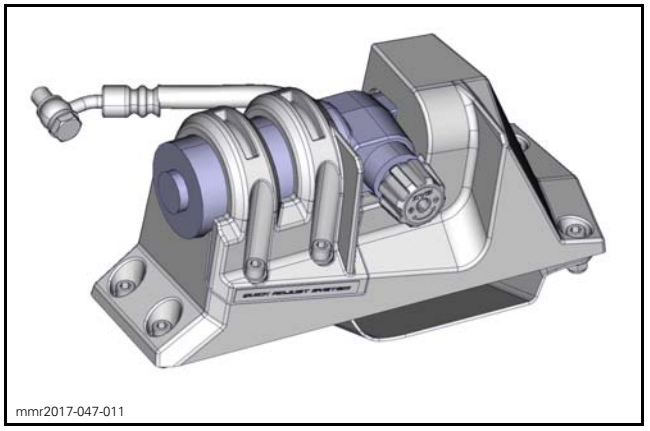


## Removing Shock Damping Quick Adjuster Control Module

1. Remove the following parts:
   – Knob
   – Retaining clamp
   – Support.

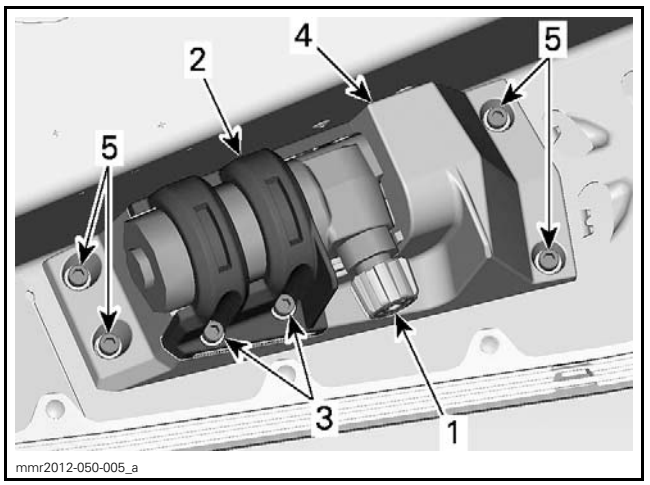


*CONTROL MODULE*
*1. Knob screw*
*2. Clamp*
*3. Clamp screws*
*4. Support*
*5. Support screws*

2. Remove front fasteners from hose guard.

3. Remove hose from its retainer tab and rotate hose guard outwards around rear rivet.

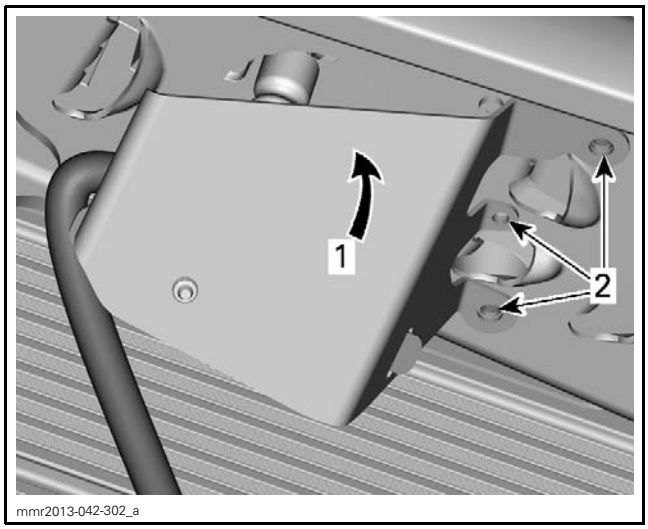

mmr2013-042-302_a

*1. Pivot outwards*
*2. Front fasteners*

4. Remove shock remote reservoir as follows:
   – Rotate.
   – Pass through tunnel opening.

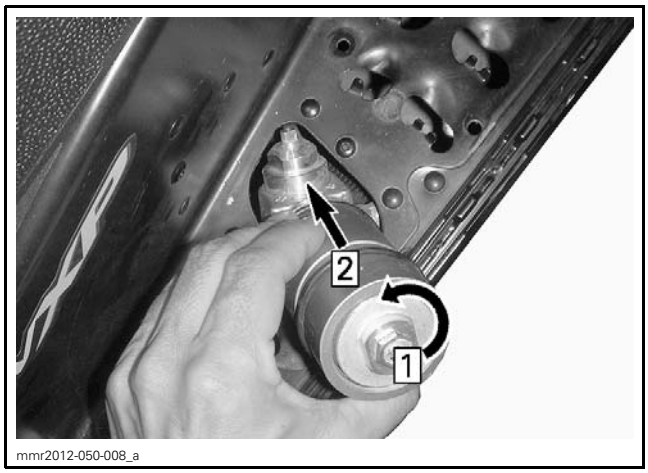

mmr2012-050-008_a

*Step 1: Rotate*
*Step 2: Pass through tunnel opening*

## Installing Shock Damping Quick Adjuster Control Module

1. Align the hose guard front holes with the support front holes.

NOTE: No rivet needed at front of hose guard.

2. Install parts as follows:

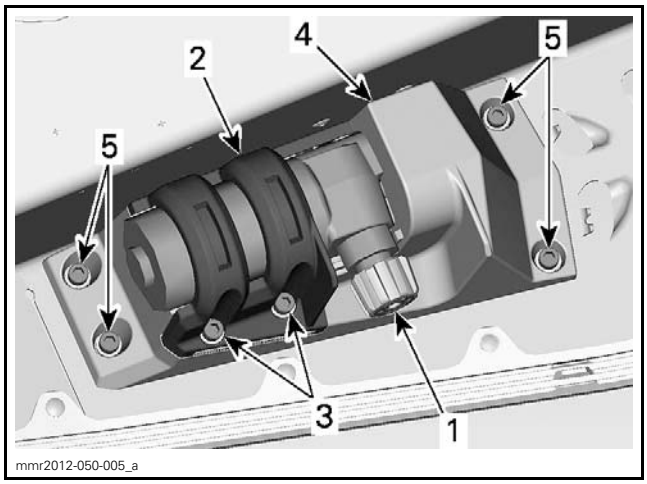

mmr2012-050-005_a

*CONTROL MODULE*
*1. Knob screw*
*2. Clamp*
*3. Clamp screws*
*4. Support*
*5. Support screws*

| TIGHTENING TORQUE | |
|---|---|
| Support screws | 5 N•m ± 1 N•m (44 lbf•**in** ± 9 lbf•**in**) |
| Clamp screws | 2.5 N•m ± 0.5 N•m (22 lbf•**in** ± 4 lbf•**in**) |
| Knob screw | 0.4 N•m ± 0.1 N•m (4 lbf•**in** ± 1 lbf•**in**) |

3. Secure rear shock hose to hose guard bracket.

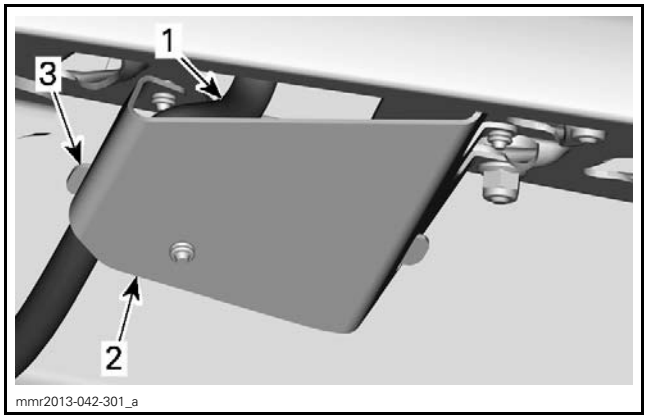

mmr2013-042-301_a

*1. Hose*
*2. Hose guard*
*3. Hose guard bracket*

# SPRING PRELOAD QUICK ADJUSTER SYSTEM

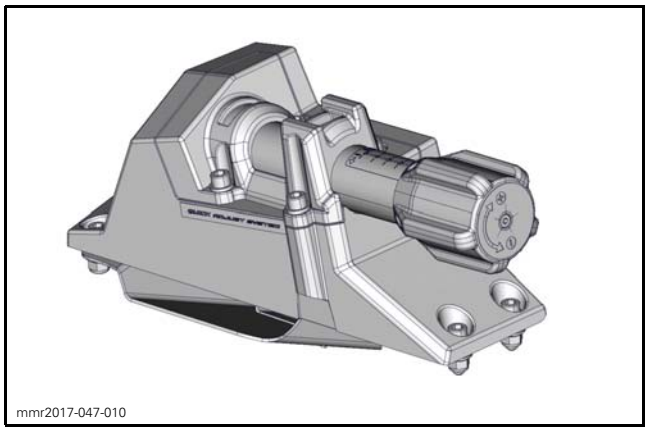
mmr2017-047-010

## Removing Spring Preload Quick Adjuster Control Module

This procedure removes only the control module from the tunnel, without disconnecting the hose and will not necessitate bleeding the system.

1. Remove the following parts:
   - Knob
   - Retaining clamp
   - Support.

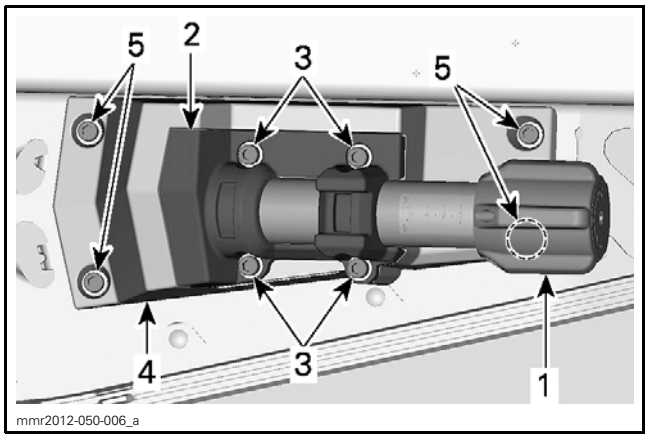

mmr2012-050-006_a

*SPRING PRELOAD QUICK ADJUSTER CONTROL MODULE*
1. *Knob*
2. *Clamp*
3. *Clamp screws*
4. *Support*
5. *Support screws*

2. Remove front fasteners from hose guard.
3. Remove hose from its retainer tab and rotate hose guard outwards around rear rivet.

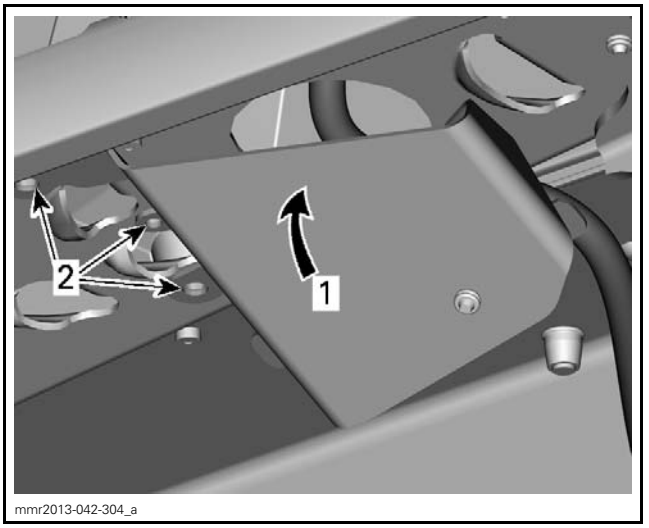

mmr2013-042-304_a

1. *Pivot outwards*
2. *Front fasteners*

4. Pass control cylinder through the opening in the tunnel.

## Installing Spring Preload Quick Adjuster Control Module

1. Align the hose guard front holes with the support front holes.
2. Install parts as follows:

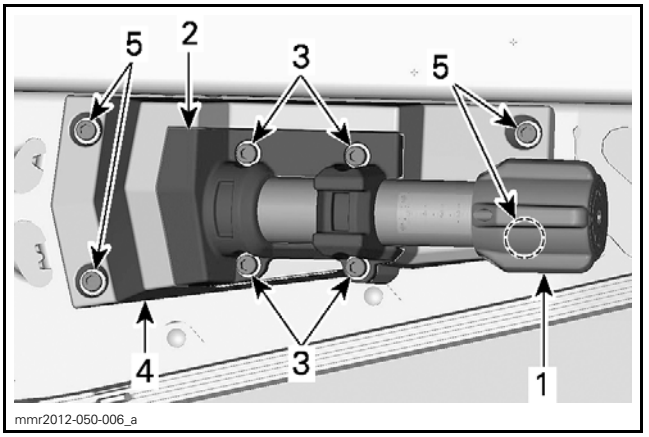

mmr2012-050-006_a

*SPRING PRELOAD QUICK ADJUSTER CONTROL MODULE*
1. *Knob*
2. *Clamp*
3. *Clamp screws*
4. *Support*
5. *Support screws*

| TIGHTENING TORQUE | |
|---|---|
| Support screws | 5 N•m ± 1 N•m (44 lbf•**in** ± 9 lbf•**in**) |
| Clamp screws | 2.5 N•m ± 0.5 N•m (22 lbf•**in** ± 4 lbf•**in**) |
| Knob screw | 1.5 N•m ± 0.5 N•m (13 lbf•**in** ± 4 lbf•**in**) + LOCTITE 243 (BLUE) (P/N 293 800 060) |

3. Secure rear shock hose to hose guard bracket.

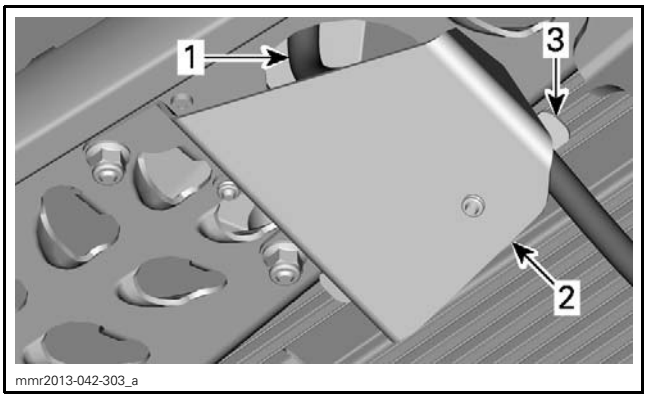

mmr2013-042-303_a

*1. Hose*
*2. Hose guard*
*3. Hose guard bracket*

## Removing Spring Preload Quick Adjuster System

This procedure removes the following parts as an assembly and does not necessitate bleeding the system:

– Control module
– Hose
– Actuator.

1. Support the rear of vehicle just enough to remove load on the rear suspension.
2. Remove control module, refer to *SPRING PRELOAD QUICK ADJUSTER SYSTEM*.
3. Remove idler wheels to access spring support screws.

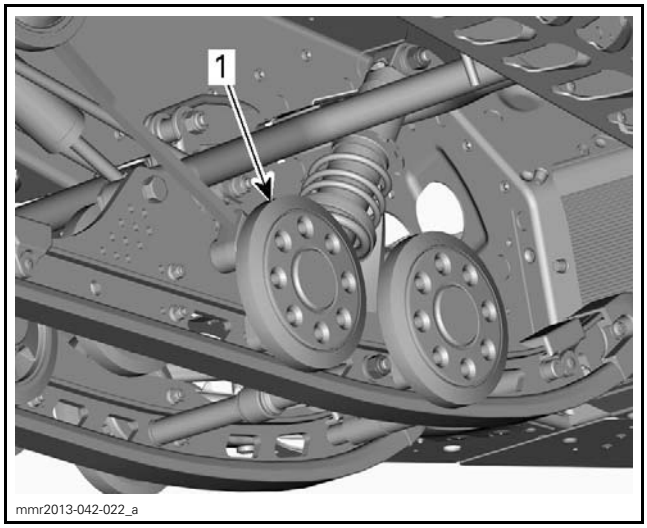

mmr2013-042-022_a

*1. Idler wheel to be removed (on each side)*

4. Firmly hold the spring supports and remove spring support bolts.

**⚠ CAUTION** Spring support are spring loaded.

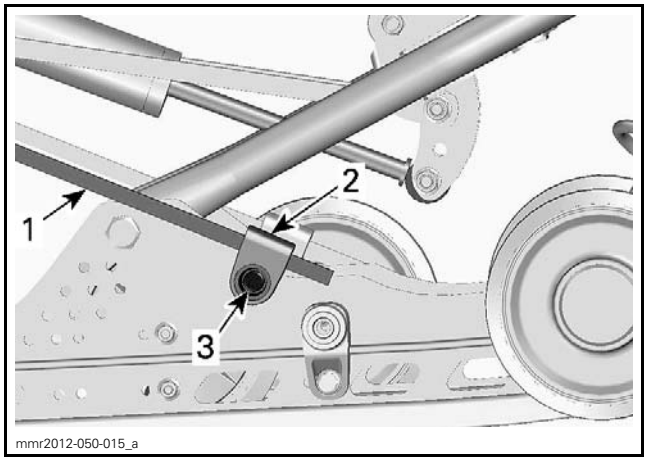

mmr2012-050-015_a

*1. Spring*
*2. Spring support*
*3. Spring support bolt*

5. Move spring supports with spring ends over the idler wheel supports and let them sit on the track.

NOTE: If the springs are still loaded, completely loosen track tension in order to make room to unload springs.

6. Move the other end of the springs off the spring adjuster actuator.
7. Remove hose retainer from shock assembly.

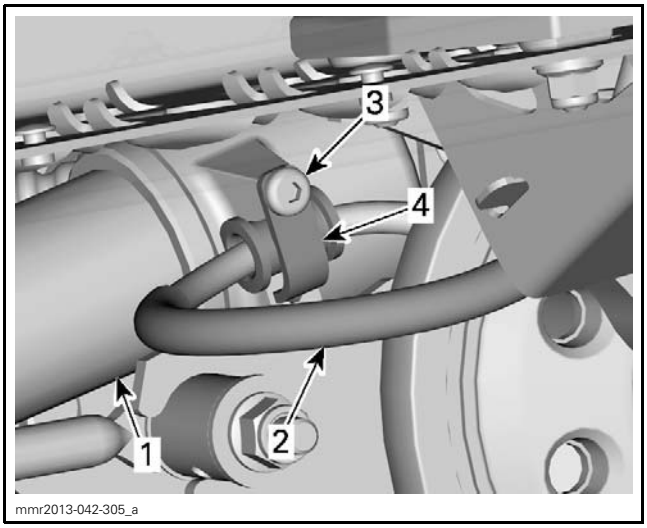


1. *Shock*
2. *Hose*
3. *Retaining screw*
4. *Hose retainer*

8. Remove actuator from rear arm.
9. Remove spring adjuster assembly.

## Disassembling Spring Preload Quick Adjuster System

NOTE: System bleeding is required whenever the hose is disconnected.

**NOTICE** Thoroughly clean parts before disassembly. Work on a clean surface.

1. Set controller to the minimum preload.
2. Remove the banjo bolt(s) retaining the hose.
3. Drain fluid.

## Replacing Spring Preload Quick Adjuster System Seals

NOTE: System bleeding is required whenever the hose is disconnected.

**NOTICE** Thoroughly clean parts before disassembly. Work on a clean surface.

1. Remove quick adjuster assembly from vehicle. Refer to *REMOVING THE SPRING PRELOAD QUICK ADJUSTER CONTROL MODULE*.

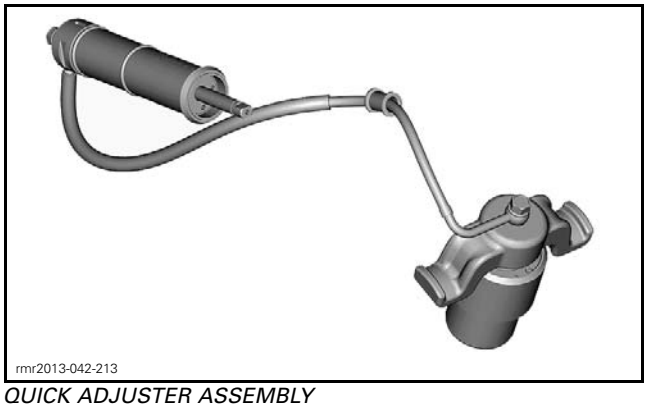


*QUICK ADJUSTER ASSEMBLY*

| REQUIRED TOOL | |
|---|---|
| RMOTION MASTER CYLINDER KEY (P/N 529 036 254) | |

2. Use retainer tool to hold cylinder while removing banjo bolt.

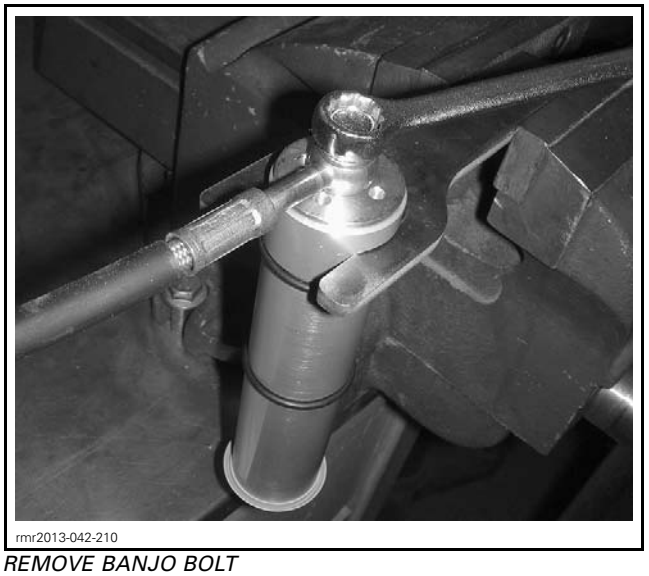


*REMOVE BANJO BOLT*

3. Remove banjo bolt, washers and hose from cylinder.

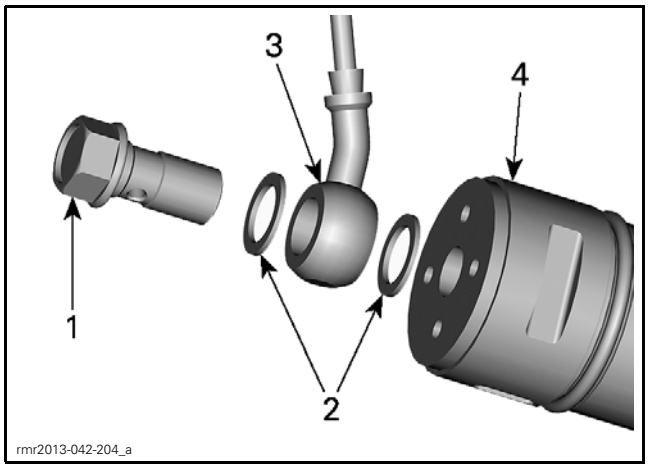


*1. Banjo bolt*
*2. Washer*
*3. Hose fitting*
*4. Cylinder body*

| REQUIRED TOOL | |
|---|---|
| RMOTION MASTER CYLINDER KEY (P/N 529 036 254) | |
| RMOTION SOCKET (P/N 529 036 255) | |

4. Hold cylinder body with tool and unscrew end cap using the rMotion socket.

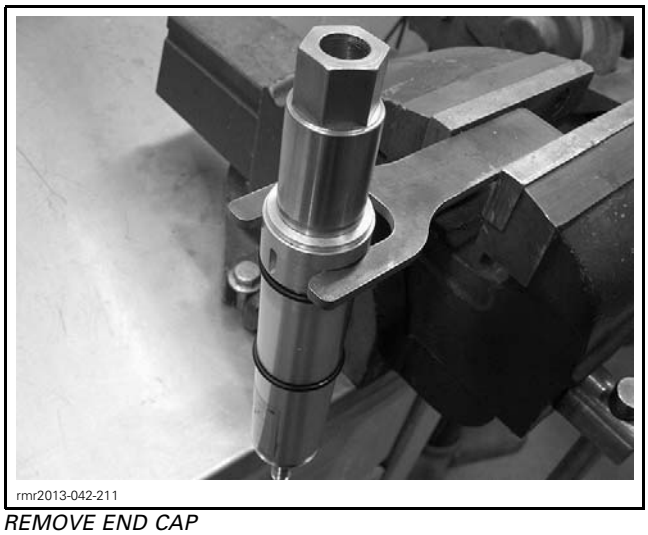


*REMOVE END CAP*

5. Remove end cap.

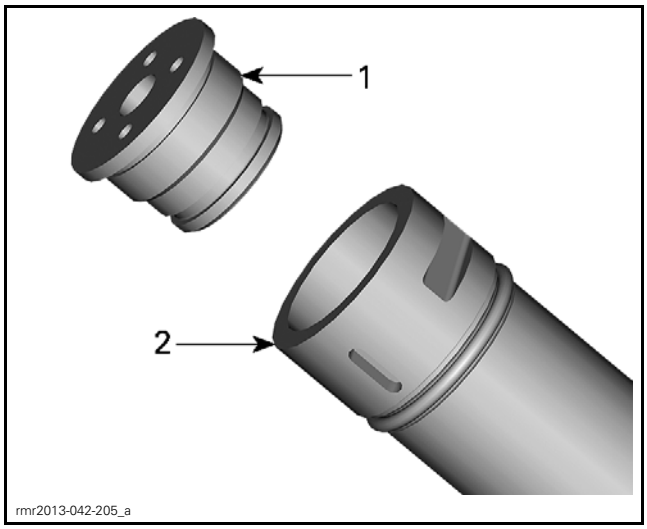


*1. End cap*
*2. Cylinder body*

6. At other end of cylinder, unscrew piston rod using same tools.

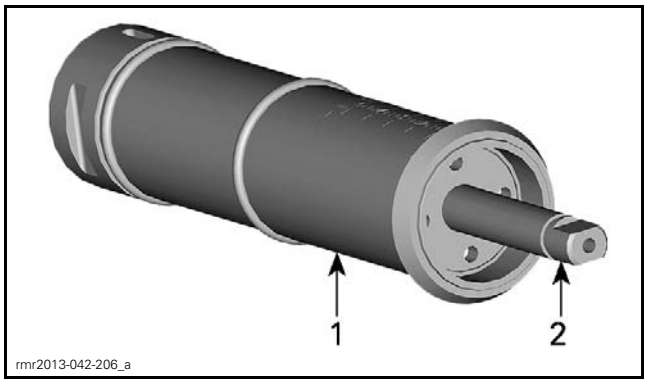


*1. Cylinder body*
*2. Piston rod*

7. Remove piston rod.

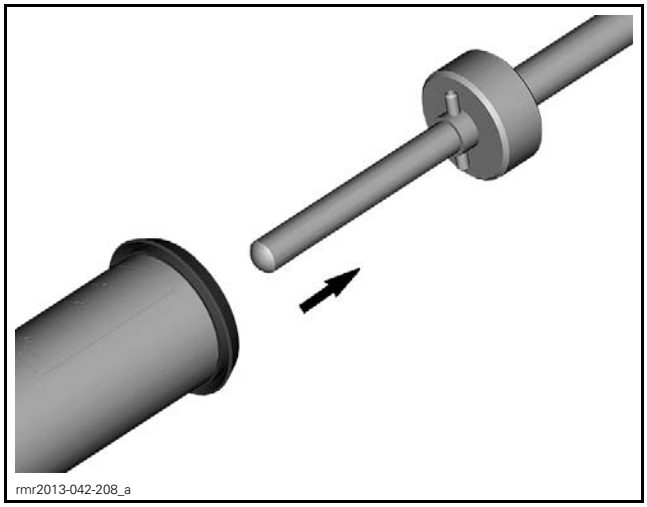


*REMOVE PISTON ROD*

8. Replace external seals if worn out or damaged.

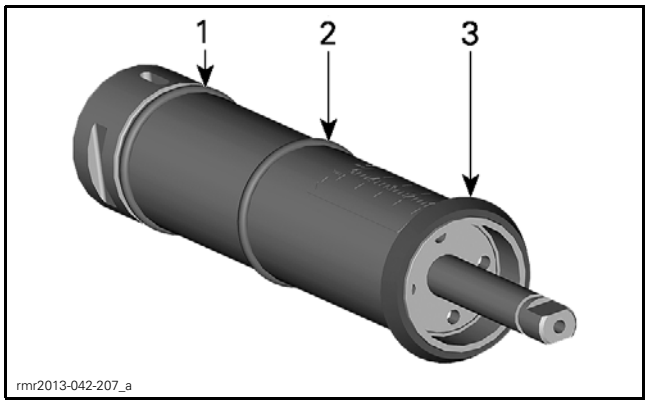


*1. Cylinder Body front seal*
*2. Cylinder body rear seal*
*3. Knob seal*

9. Installation is the reverse of removal.

## Bleeding and Reassembling Spring Preload Quick Adjuster System

NOTE: Actuator, control module and hose have to be separated from each other before carrying out bleeding procedure.

1. Fully extend the actuator by hand.
2. Add fluid in the actuator, see table.

| ACTUATOR FILLING | |
|---|---|
| FLUID TYPE | QUANTITY |
| ATF Dexron III | Approximately 40 ml (1.35 U.S. oz) |

3. Maintain actuator with threaded hole upwards and:
   - 3.1 Compress the actuator by precisely 15 mm (19/32 in).
   - 3.2 Fill until fluid reaches the top of the threads.
   - 3.3 Install hose with new sealing washers as shown.

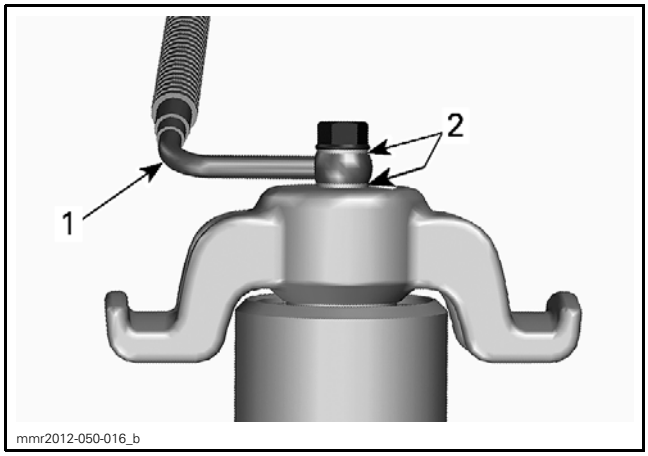


*1. Hose*
*2. Sealing washers*

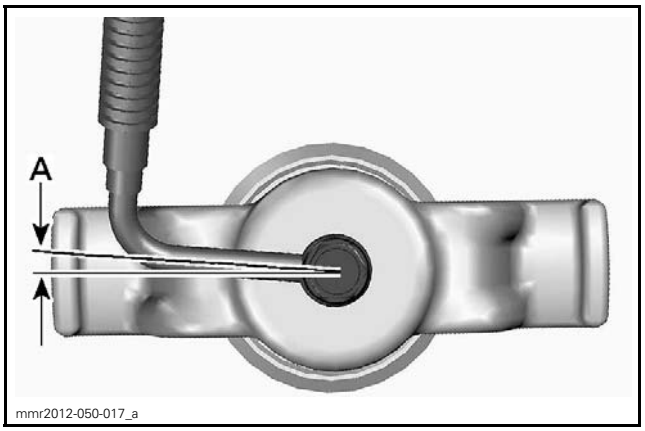


*A. 5°*

| TIGHTENING TORQUE | |
|---|---|
| Banjo bolt | 24.5 N•m ± 3.5 N•m (18 lbf•ft ± 3 lbf•ft) |

4. With the hose open end up, compress the actuator by precisely 8 mm (5/16 in).

NOTE: Fluid should reach the open end of the hose.

5. Unscrew the control cylinder adjustment rod until it stops.
6. Using a small diameter punch through the M10 threaded hole, push the control cylinder piston all the way back.
7. With the threaded hole up, fill control cylinder until fluid reaches the top of the threads.
8. Install the hose on the control cylinder as shown.

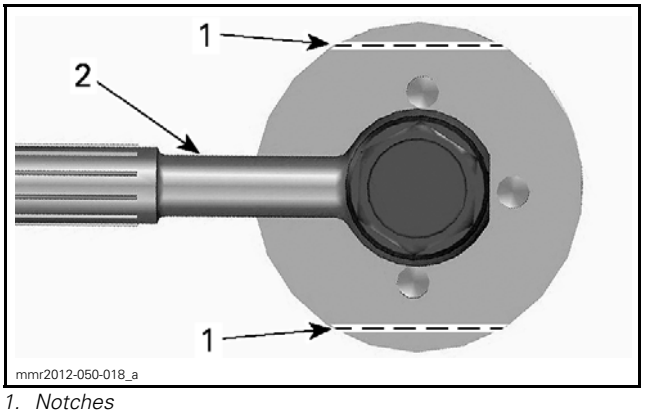


*1. Notches*
*2. Hose*

NOTE: The hose must on be the opposite side of the decal on the control cylinder.

| TIGHTENING TORQUE | |
|---|---|
| Banjo bolt | 24.5 N•m ± 3.5 N•m (18 lbf•ft ± 3 lbf•ft) |

9. Verify system operation. The actuator full stroke should be 22 mm (7/8 in).

## Installing Spring Preload Quick Adjuster System

Installation is the reverse of removal procedure, however, pay attention to the following:

Set the preload to the minimum using the control cylinder adjustment rod first.

# REAR AXLE

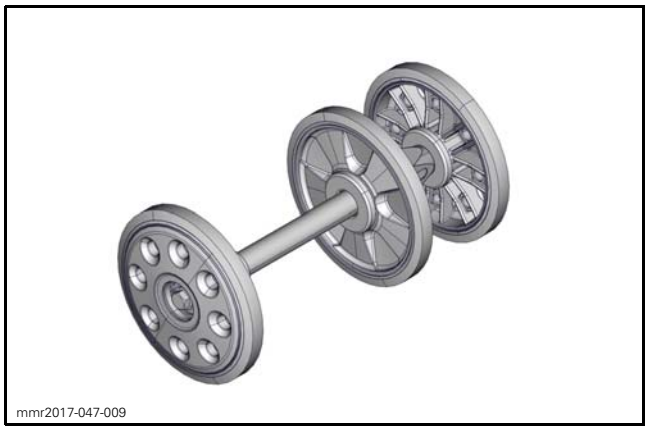
mmr2017-047-009

## Removing Rear Axle

1. Lift rear of vehicle and support it off the ground.
2. Remove rear idler wheel caps.

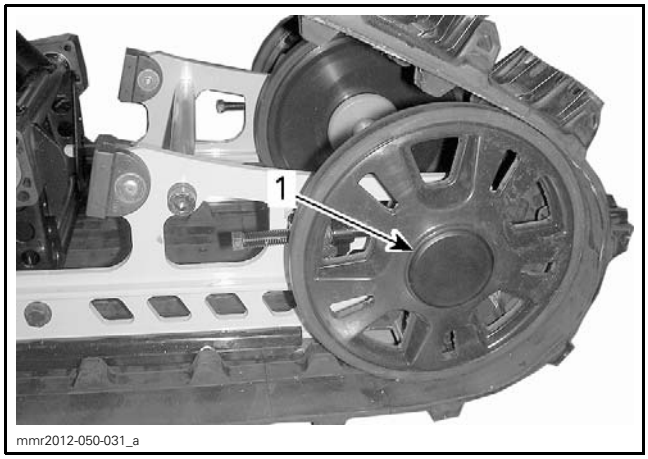

mmr2012-050-031_a

*1. RH rear idler wheel cap*

3. Loosen rear axle screws (one each side).

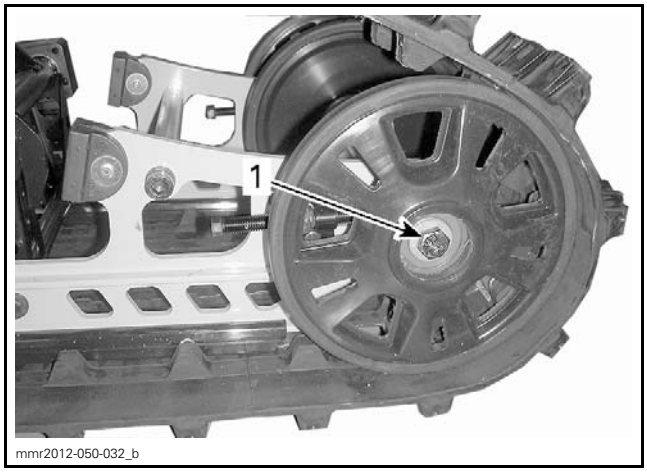

mmr2012-050-032_b

*1. RH rear axle screw*

4. Completely loosen track tension by unscrewing both adjustment screws.

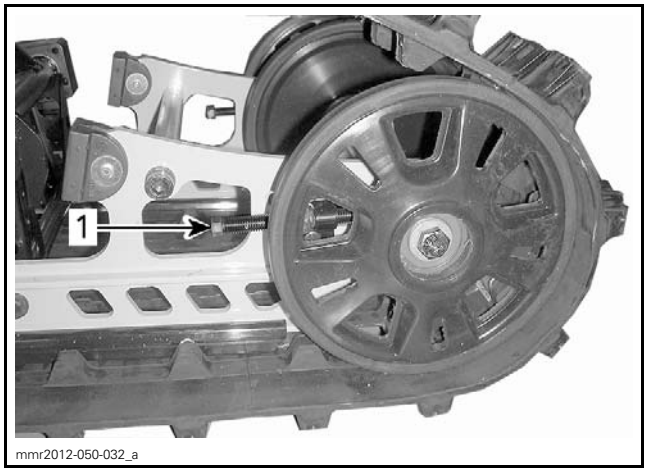

mmr2012-050-032_a

*1. RH adjustment screw*

5. Remove both rear axle screws.
6. Remove rear idler wheels, seals and wheel spacers.

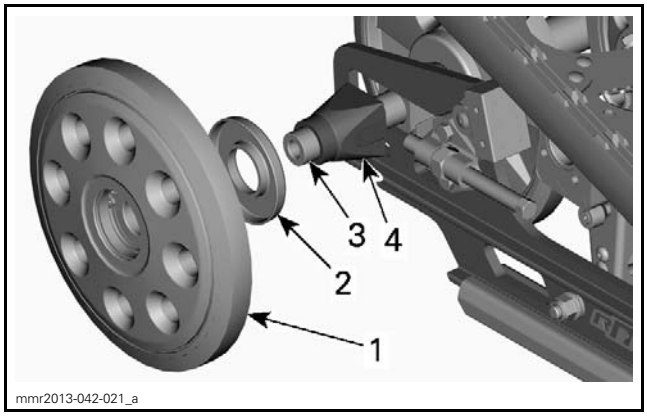

mmr2013-042-021_a

*TYPICAL - RH SIDE SHOWN*
*1. Rear idler wheel*
*2. Seal*
*3. Rear axle*
*4. Wheel spacer*

7. Pull out the rear axle.

## Installing Rear Axle

The installation is the reverse of the removal procedure. However, pay attention to the following.

Make sure to position all parts correctly.

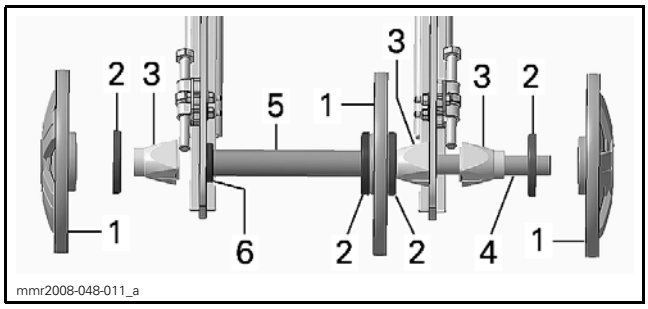


*TYPICAL - 3 IDLER WHEELS LAYOUT*
1. *Idler wheels*
2. *Seals*
3. *Wheel spacers*
4. *Rear axle*
5. *Rear axle spacer*
6. *Washer*

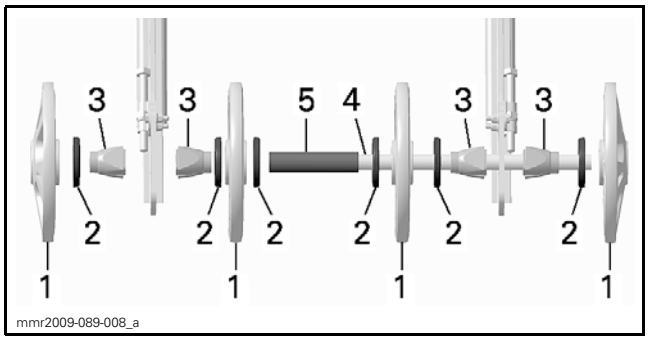


*TYPICAL - 4 IDLER WHEELS LAYOUT*
1. *Idler wheels*
2. *Seals*
3. *Wheel spacers*
4. *Rear axle*
5. *Rear axle spacer*

Position wheel spacers with a flat side up and a groove facing tensioner screw.

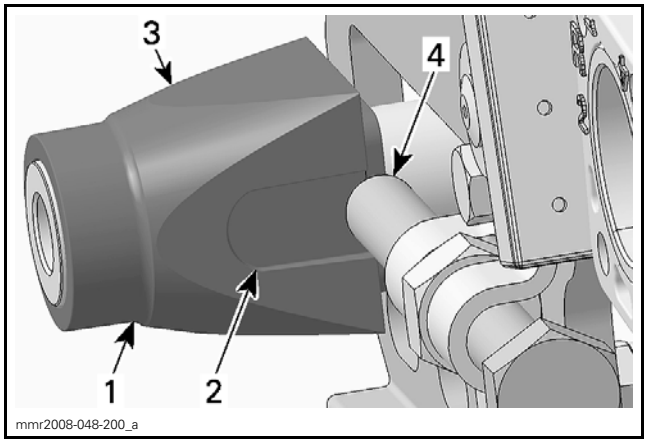


*TYPICAL*
1. *Wheel spacer*
2. *Groove*
3. *Flat side*
4. *Tensioner screw*

When tightening rear axle, make sure each wheel spacer protuberance is engaged into rail slot.

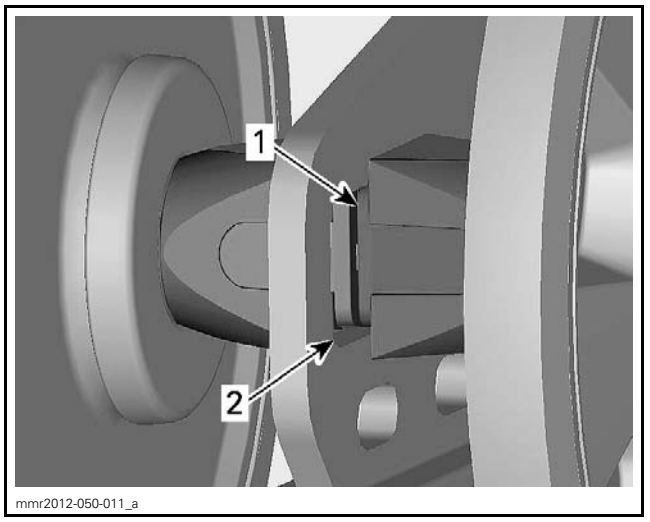


1. *Wheel spacer protuberance*
2. *Rail slot*

Adjust track tension. Refer to *TRACK* subsection.

# SHOCK ABSORBERS

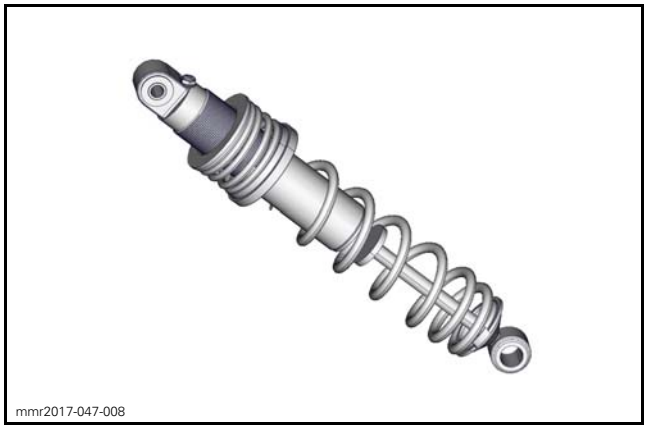

## Removing Rear Shock Absorber

1. Lift rear of vehicle and support it off the ground.

### *rMotion with Quick Adjust System*

2. Carry out *REMOVING THE SHOCK DAMPING QUICK ADJUSTER CONTROL MODULE*, Refer to procedure in this subsection.

### *All Models*

3. Remove the upper bolt.

NOTE: It may be necessary to lower the vehicle and slightly compress suspension to remove load.

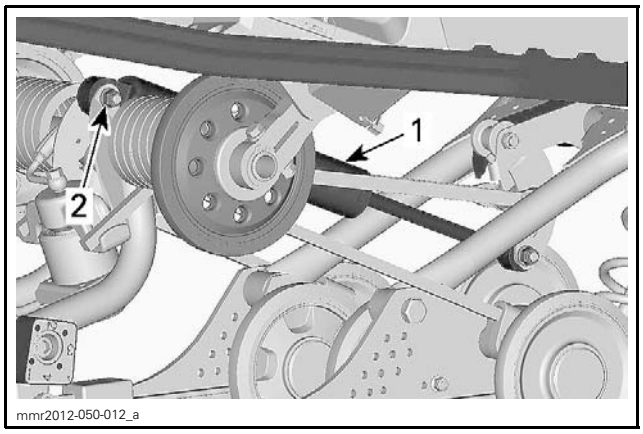


*TYPICAL*
1. *Rear shock absorber*
2. *Upper bolt*

4. Remove the lower bolt.

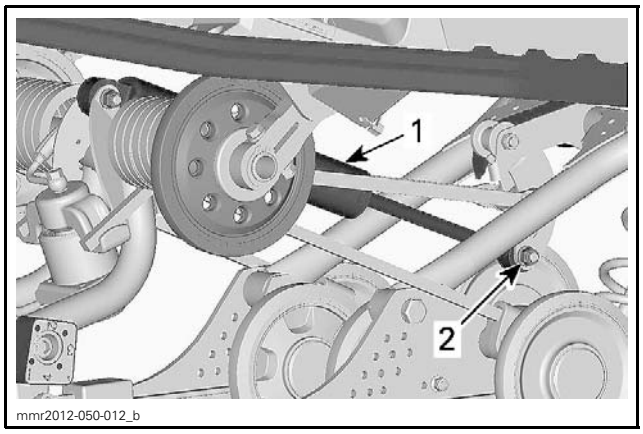


*TYPICAL*
1. *Rear shock absorber*
2. *Lower bolt*

5. Remove rear shock absorber from the vehicle.

## Installing Rear Shock Absorber

Installation is reverse of removal procedure. However, pay attention to the following.

| REAR SHOCK ABSORBER POSITIONING | |
|---|---|
| rMotion quick with adjust system | Body up hose on RH side |
| rMotion quick without adjust system | Body up reservoir downwards |

Install new shock absorber retaining nuts and tighten to specified torque.

| TIGHTENING TORQUE | |
|---|---|
| Shock absorber retaining bolts | 24.5 N•m ± 3.5 N•m (18 lbf•ft ± 3 lbf•ft) |

### *rMotion with Quick Adjust System*

Carry out *INSTALLING THE SHOCK DAMPING QUICK ADJUSTER CONTROL MODULE*.

## Removing Center Shock Absorber

1. Lift the rear of vehicle and support it off the ground.
2. Unfasten stopper strap.

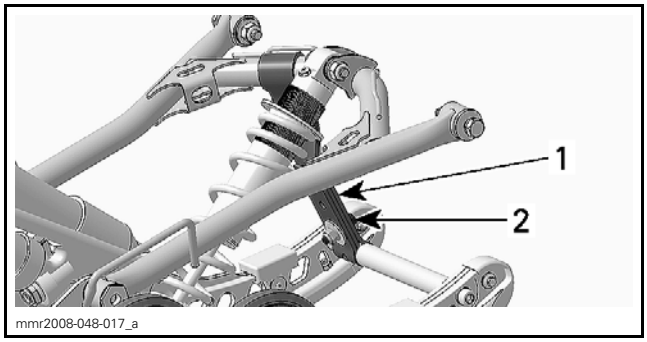


*TYPICAL*
1. *Stopper strap*
2. *Stopper strap bolt*

3. Remove idler wheels to access lower retaining bolt.
4. Remove shock retaining bolts.

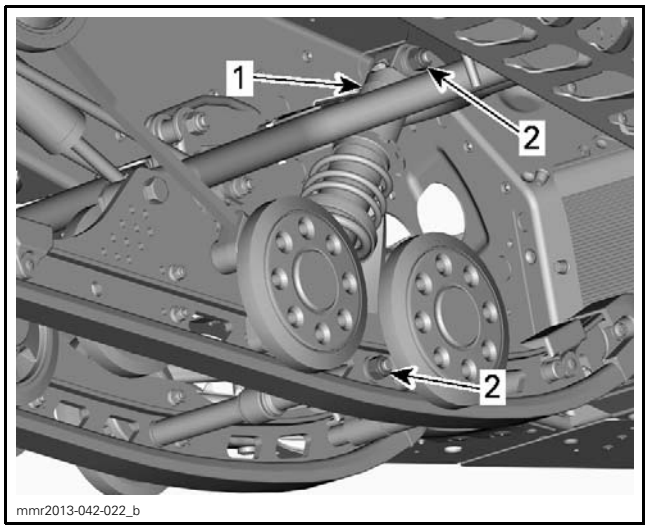


*TYPICAL*
1. *Center shock absorber*
2. *Retaining bolts*

5. Remove shock absorber from vehicle.

## Inspecting Shock Absorber

NOTE: All types of shock absorbers are covered in this topic, refer to *TECHNICAL SPECIFICATIONS* to identify the shock absorber relating to the vehicle model.

NOTE: Unless otherwise noted, shock absorber must be at normal room temperature (21°C ± 2°C (70°F ± 36°F)) during inspection.

### *MC Hydraulic Shock*

1. Perform a visual inspection of the shock:
   - The shock must be exempt of any dent or scratch, especially on the rod.
   - Small dent on the shock body may not affect any performance or reliability of this shock.
   - Any defect on the rod, as small as it is, can lead to seal failure and oil leak.
   - If such defect (on rod) is detected, the shock must be replaced, and this will not be cover under warranty.
2. Secure the shock body end in a vise, clamping on eyelet, with its rod upward.

**NOTICE** **Do not clamp directly on shock body.**

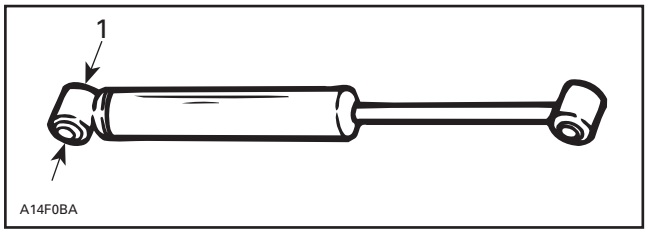


*1. Shock body eyelet*

3. Examine shock for leaks. Extend and compress the piston at least 5 complete strokes with its rod upward.
4. Check that shock moves smoothly and with uniform resistance over its entire stroke.

NOTE: For the first 5 complete strokes, it could be normal to note uneven resistance.

5. Check the following conditions that will denote a defective shock:
   - A skip or a hang back when reversing stroke at mid travel.
   - Seizing or binding condition except at extreme end of either stroke.
   - Oil leakage.
   - A gurgling noise, after completing one full compression and extension strokes.
6. If suspecting a shock is freezing, place shock in a freezer (temperature below 0°C (32°F)) for 4 hours.
7. Push down on rod and note its resistance. If shock is frozen it will be much more difficult to compress than one in normal condition.
8. If any faults are present, replace shock.

### *All HPG™ Shock (Including KYB PRO Series)*

1. Perform a visual inspection of the shock:
   - The shock must be exempt of any dent or scratch, especially on the rod.
   - Any defect on the rod, as small as it is, can lead to seal failure and oil leak.
   - If such defect is detected, the shock must be replaced and this will not be covered under warranty.
2. Completely push down shock rod into the body and check result as per table.

| HPG SHOCK | RESULT |
|---|---|
| All except 551 mm (21-11/16 in) rear shock | The rod should completely get in the shock body |
| 551 mm (21-11/16 in) rear shock | The stroke must be at least 138 mm (5-7/16 in) |

NOTE: For the **HPG Variable Rate Shock**, it should be stiff for approximately the first 25 mm (1 in), then softer for about 50 mm (2 in), and stiffer again. This stiff/soft/stiff phenomenon shows the normal operation of VR shock.

3. Release shock from completely collapsed position and check result as per table.

| HPG SHOCK EXCEPT VARIABLE RATE |
|---|
| – The shock should extend unassisted.<br>– The rod must come out at a steady speed. |

| HPG VARIABLE RATE SHOCK |
|---|
| – The shock should extend unassisted.<br>– Rod must come out slowly first, than faster and finally slow again for the last 25 mm (1 in). |

4. Proceed with *TESTING SHOCK ABSORBER COMPRESSION*. See procedure in this subsection.
5. If any faults are present, replace shock.

## Testing Shock Absorber Compression

1. Ensure shock absorber is at normal room temperature (21°C ± 2°C (69.8°F ± 35.6°F).
2. Remove spring from shock absorber (if applicable).
3. Place a bench cale on a suitable drill press.

| REQUIRED TOOL | |
|---|---|
| SHOCK ABSORBER SUPPORTS (P/N 529 036 186) | |

4. Install the shock absorber support onto drill press.
5. Set bench scale units to **kg**.

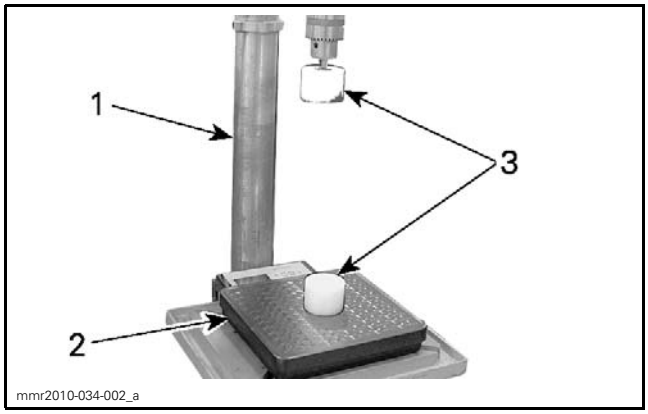

mmr2010-034-002_a

*1. Drill press*
*2. Bench scale*
*3. Shock absorber supports*

6. Press **TARE** to reset digits (must indicate zero).

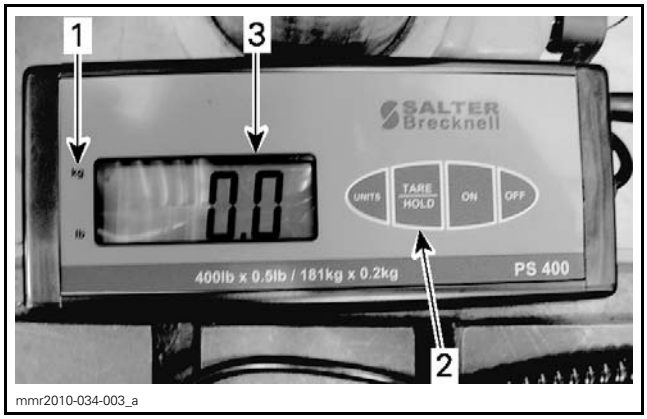

mmr2010-034-003_a

*1. Units indicator lamp*
*2. TARE button*
*3. Digits*

7. Install shock absorber into support with shock body upwards.
8. Adjust drill press table height in order to set the upper shock support flush with the shock body end.
9. Ensure shock absorber is aligned with drill press axis.

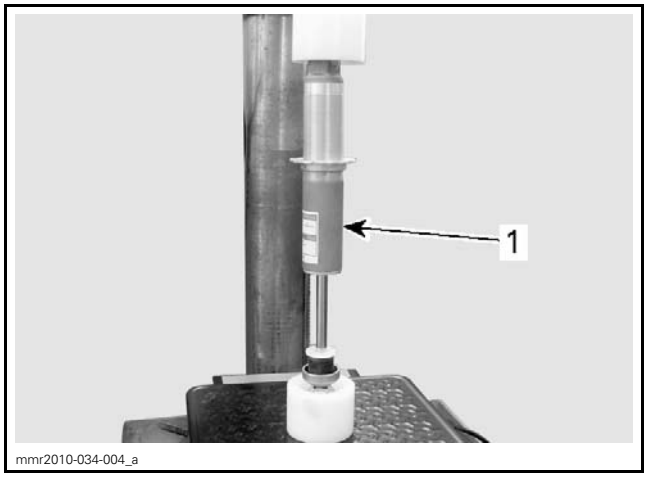

mmr2010-034-004_a

*1. Shock body upwards*

10. Set the drill press displacement to 10 mm (.394 in) using locking nut.

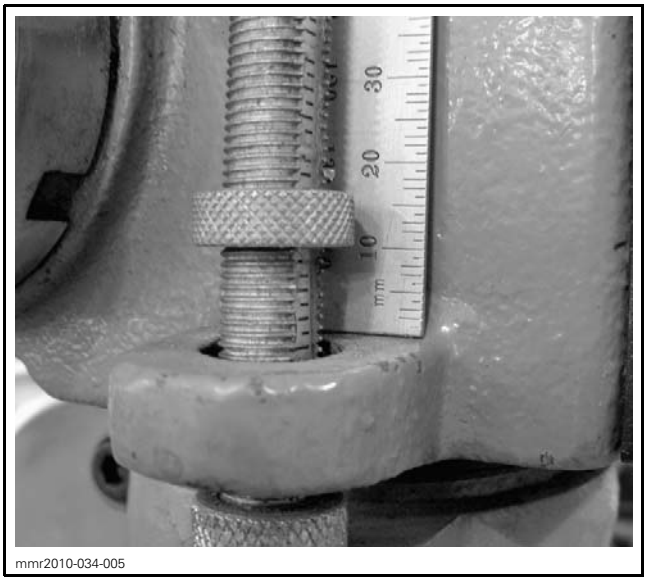

mmr2010-034-005

11. Compress shock absorber by 10 mm (.394 in) and hold it in position.
12. Read load recorded on the bench scale.

mmr2010-034-006

13. Load reading must be as per the following table.

| MODEL | ROD DIAMETER | SERVICE RANGE |
|---|---|---|
| Every HPG (Plus/Plus R) | 12.5 mm (1/2 in) | 24 kgf ± 4 kgf (53 lbf ± 9 lbf) |
| All KYB PRO Series | 16 mm (5/8 in) | 39 kgf ± 5 kgf (86 lbf ± 11 lbf) |

## Installing Center Shock Absorbers

The installation is the reverse of the removal procedure. However, pay attention to the following.

| CENTER SHOCK ABSORBER POSITIONING | |
|---|---|
| HPG Plus | Body up<br>Valve upwards |
| KYB PRO | Body up<br>Reservoir on the RH side |

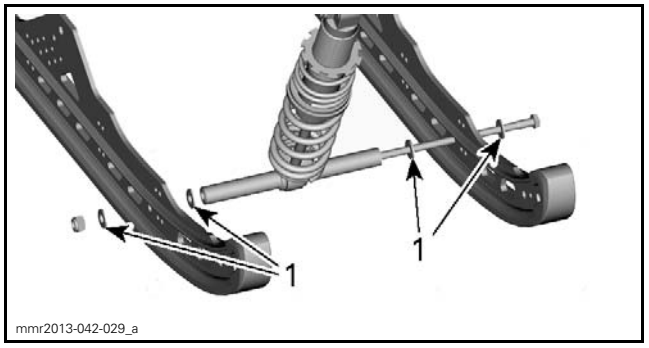

mmr2013-042-029_a

*BOTTOM OF SHOCK ABSORBER*
*1. Washers location*

# REAR SPRINGS

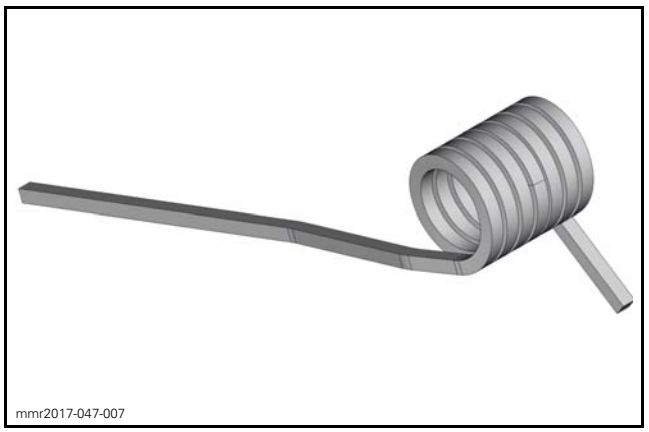
mmr2017-047-007

## Removing Rear Springs

1. Support the rear of vehicle just enough to remove load on the rear suspension.
2. Set rear spring preload to the minimum.

### *rMotion with Quick Adjust System*

3. Remove quick adjuster control modules, refer to:
   – *SHOCK DAMPING QUICK ADJUSTER SYSTEM*
   – *SPRING PRELOAD QUICK ADJUSTER SYSTEM*.

### *All Models*

4. Remove rear arm connecting rod retaining screws.

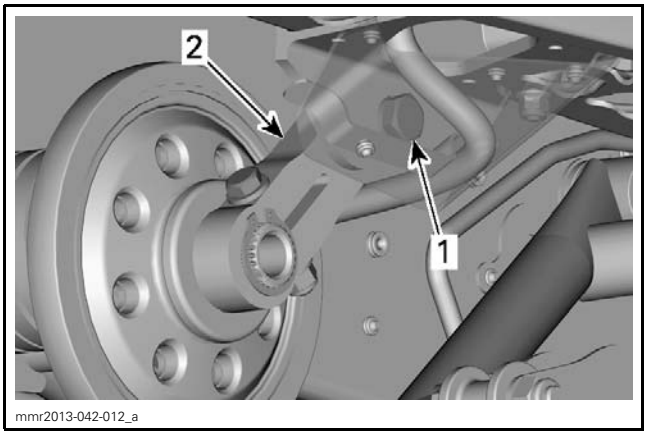


1. *Connecting rod retaining screw*
2. *Connecting rod*

| REQUIRED TOOL | |
|---|---|
| RMOTION SUSPENSION TOOL (P/N 529 036 234) | |

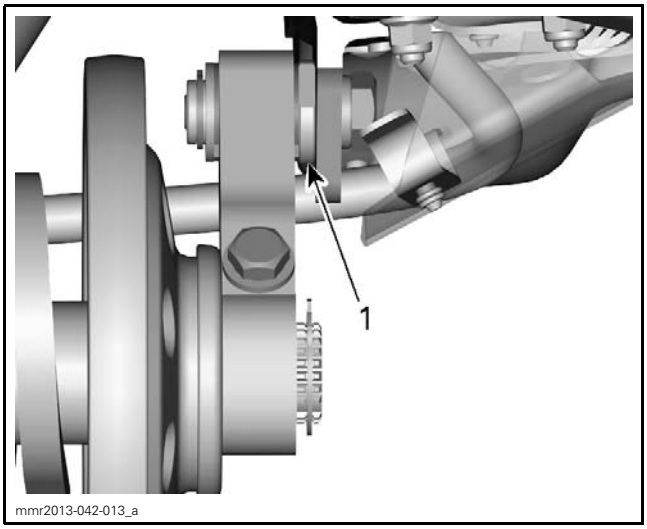


1. *rMotion suspension tool to be installed here*

5. Remove idler wheels to have access to spring support screws.

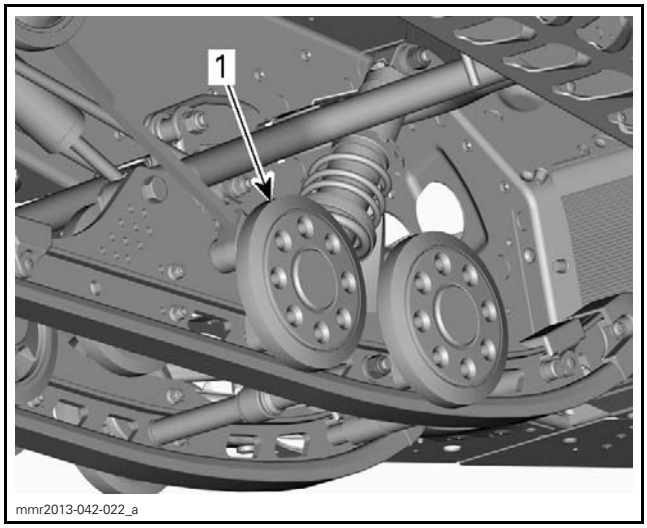


1. *Idler wheel to be removed (on each side)*

6. Firmly hold the spring supports and remove spring support bolts.

**⚠ CAUTION** Spring support are spring loaded.

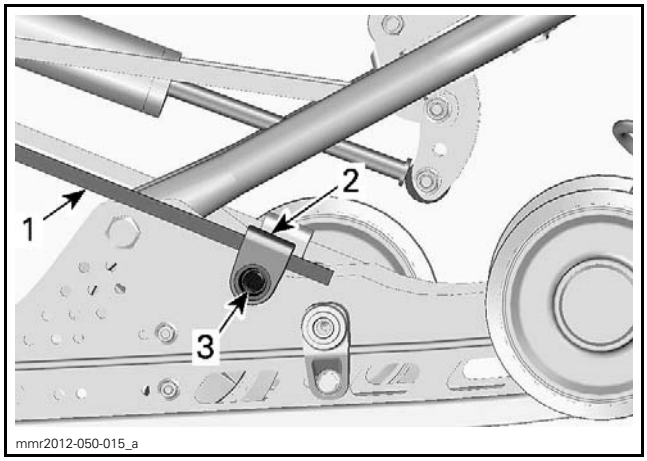


1. *Spring*
2. *Spring support*
3. *Spring support bolt*

7. Move spring supports with spring ends over the idler wheel supports and let them sits on the track.

NOTE: If the springs are still loaded, completely loosen track tension in order to make room to unload springs.

8. Raise and support the rear of vehicle just enough to clear the rear arm connecting rods.

***NOTICE*** **rMotion with Quick Adjust system: Avoid stretching the hoses.**

9. Remove connecting rods from the rear arm.
   - 9.1 Loosen bolt.
   - 9.2 Remove circlip.

9.3 Pull connecting rod off the rear arm.

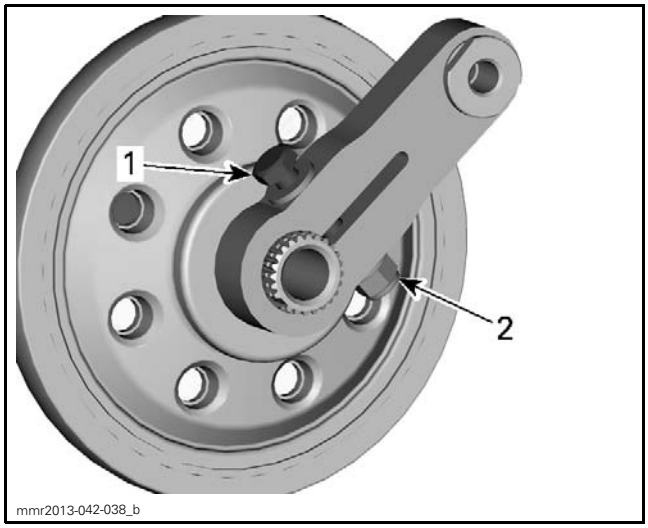


*1. Retaining screw*
*2. Bolt*

10. Remove upper idler wheels and hardware.

11. Remove rear spring from suspension.

## Installing Rear Springs

Installation is reverse of removal procedure. However, pay attention to the following.

Make sure that spring end is in cam adjuster or actuator spring support.

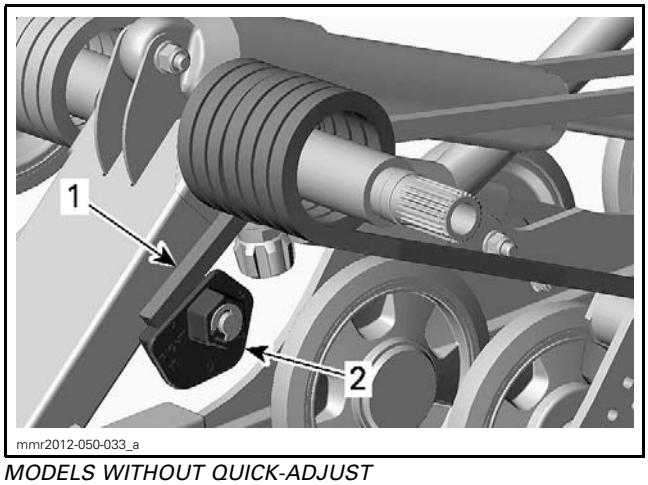


*MODELS WITHOUT QUICK-ADJUST*
*1. Rear spring*
*2. Cams*

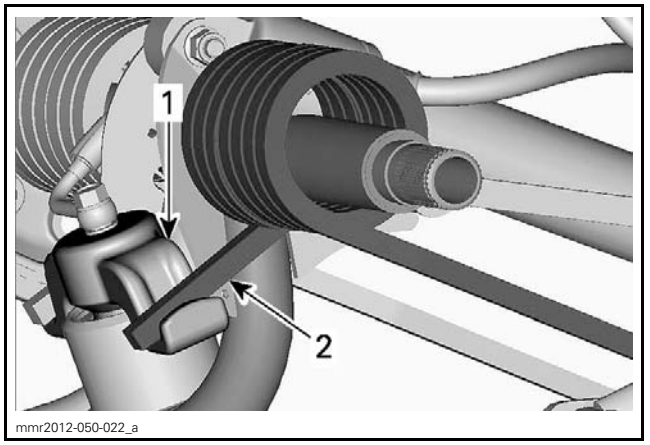


*QUICK-ADJUST MODELS*
*1. Actuator spring support*
*2. Rear spring*

Install spring supports upwards.

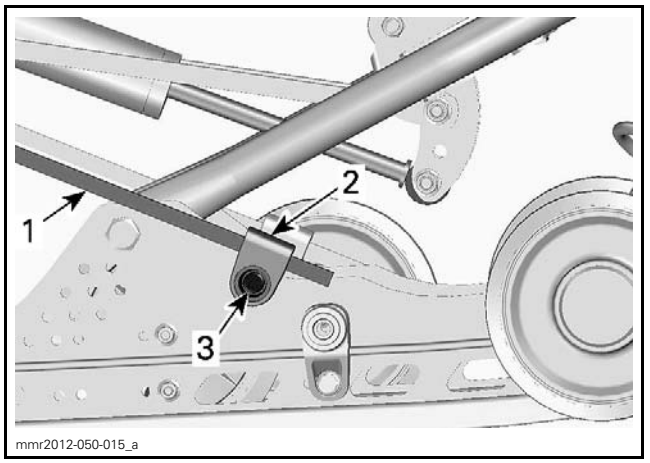


*1. Spring*
*2. Spring support*
*3. Spring support bolt*

Install rear arm connecting rod inserts with the shoulder outwards.

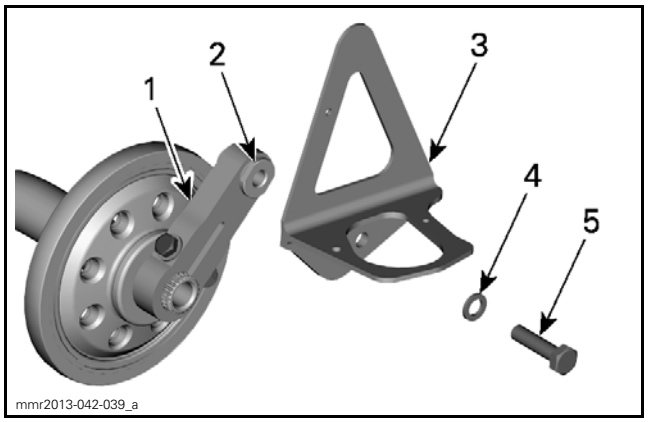


*1. Connecting rod*
*2. Insert with the shoulder outwards*
*3. Support*
*4. Washer*
*5. Retaining screw*

*rMotion with Quick Adjust System*

Install quick adjuster control modules, refer to:
- *SHOCK DAMPING QUICK ADJUSTER SYSTEM*
- *SPRING PRELOAD QUICK ADJUSTER SYSTEM*.

# SLIDER SHOES

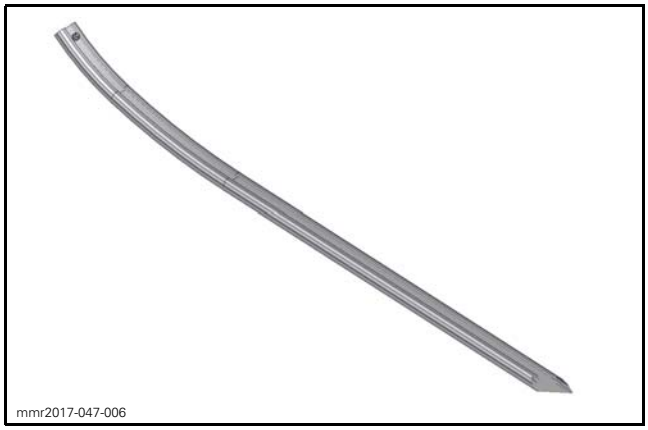
mmr2017-047-006

## Removing Slider Shoes

1. Lift rear of vehicle and support it off the ground.
2. Completely loosen track tension by unscrewing both adjustment screws.

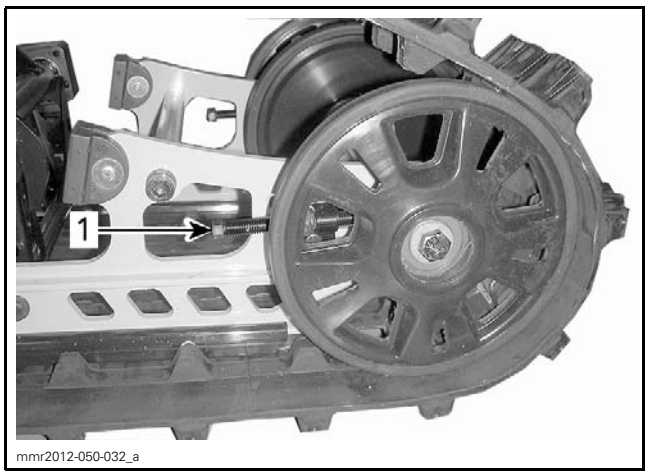

mmr2012-050-032_a

*1. RH adjustment screw*

3. Remove nut and screw of each runner.

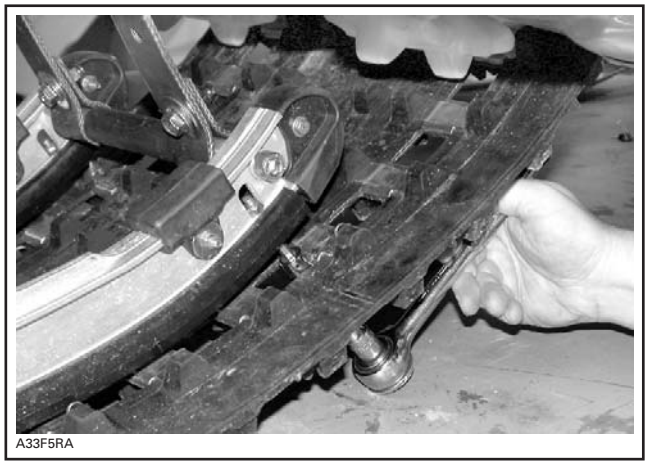
A33F5RA

*TYPICAL - REMOVE NUT AND SCREW OF EACH RUNNER*

4. At the rear of vehicle, align a track window with slider shoe.

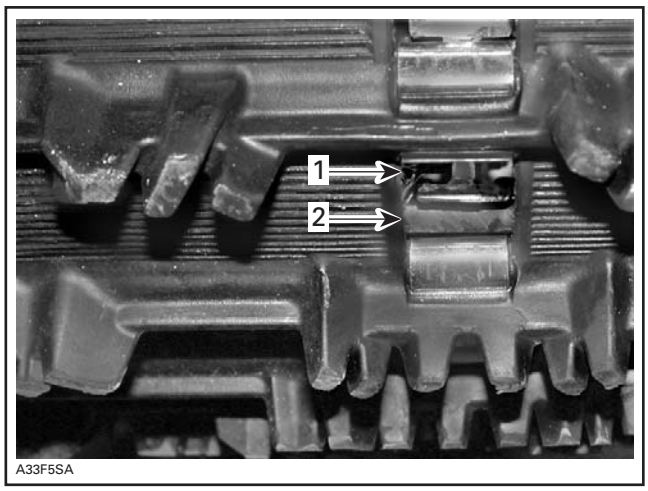

A33F5SA

*TYPICAL*
*1. Track window*
*2. Slider shoe*

5. Lubricate widow edges.
6. Using a pry bar or a screwdriver, push slider shoe rearward until it comes in contact with track.

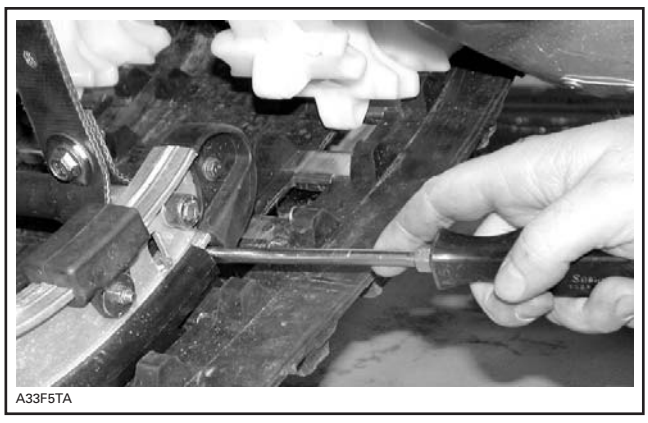
A33F5TA

*TYPICAL - PUSH ON SLIDER SHOE*

7. Using locking pliers, pull slider shoe through track window to remove.

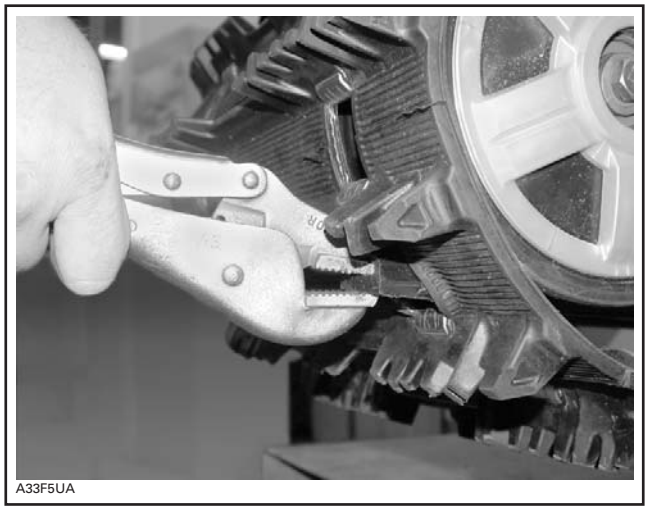


*TYPICAL - PULL ON SLIDER SHOE TO REMOVE*

### Installing Slider Shoes

Installation is reverse of removal procedure. However, pay attention to the following.

Make sure to insert slider shoe end with hole first.

## FRONT ARM

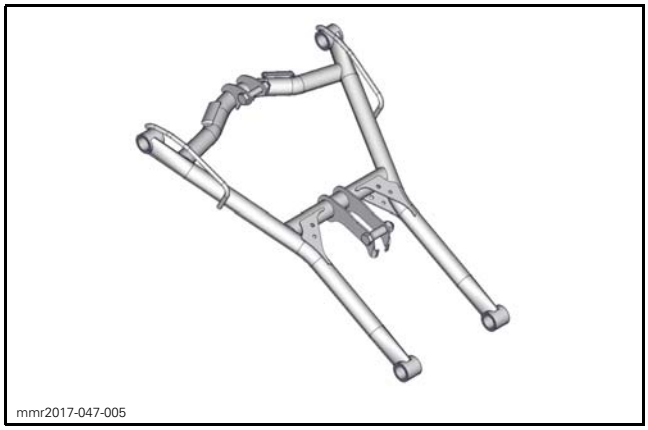


### Removing Front Arm

1. Proceed with *REMOVING THE SUSPENSION ASSEMBLY*. Refer to procedure in this subsection.
2. Unfasten stopper strap.
3. Remove the following fasteners:
   - Center shock to front arm
   - Front arm to rocker
   - Front arm to rail.

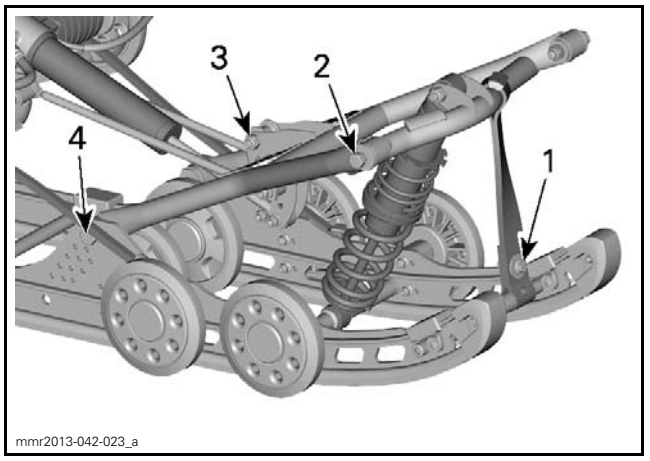


*TYPICAL*
1. *Stopper strap bolt*
2. *Center shock to front arm bolt*
3. *Front arm to rocker bolt*
4. *Front arm to rail screw*

4. Remove front arm from suspension assembly.

### Installing Front Arm

Installation is reverse of removal procedure. However, pay attention to the following.

Install front arm to rail fasteners as shown.

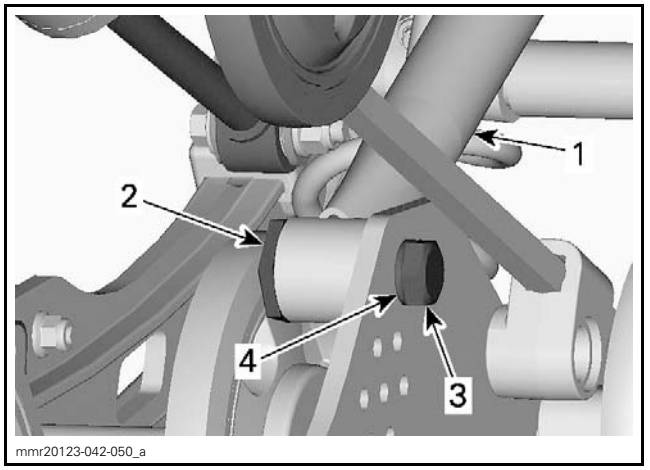


1. *Front arm*
2. *Insert (shoulder inward)*
3. *Front arm to rail screw*
4. *Washer*

Install stopper strap on the LH side of the vehicle.

**NOTICE** **Incorrect stopper strap installation would cause suspension parts interference.**

# REAR ARM

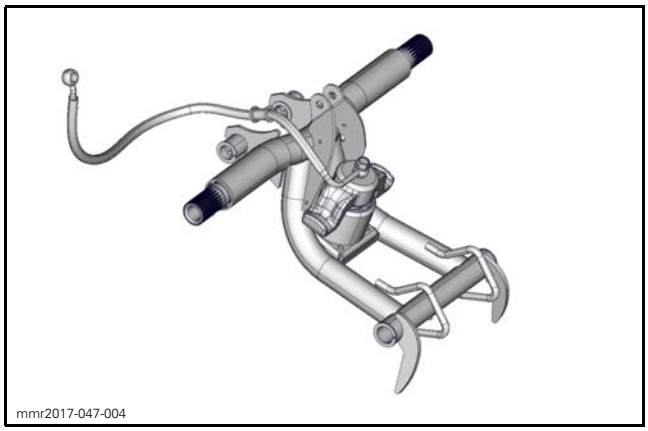


*WITH QAS*

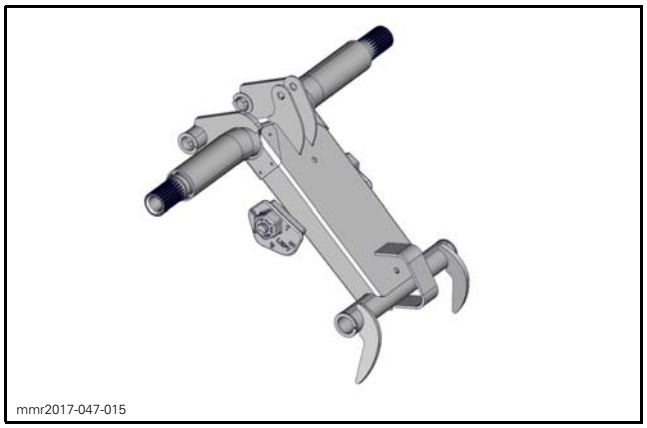


*WITHOUT QAS*

## Removing Rear Arm

1. Remove rear springs, refer to *REMOVING REAR SPRINGS* in this subsection.

NOTE: On Quick Adjust models, set the spring preload actuator aside.

2. Remove the following fasteners:
   - Rear shock to rear arm
   - Rear arm to throttle rods
   - Coupling blocks retaining screws.

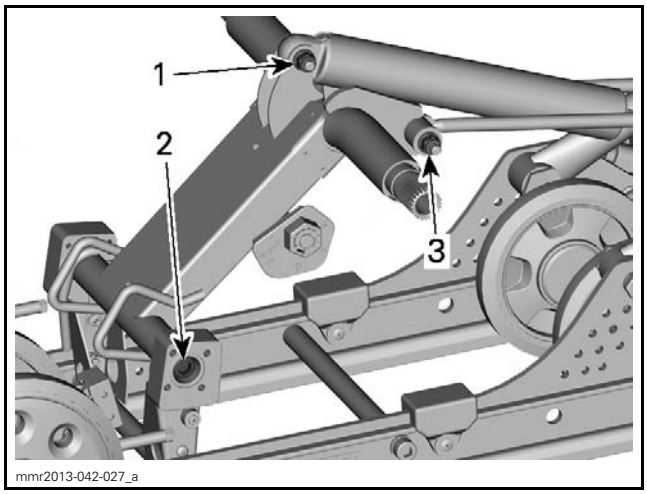


*MODELS WITHOUT QUICK ADJUST SYSTEM*
1. *Rear shock to rear arm bolt*
2. *Coupling blocks retaining screw*
3. *Rear arm to throttle rods bolt*

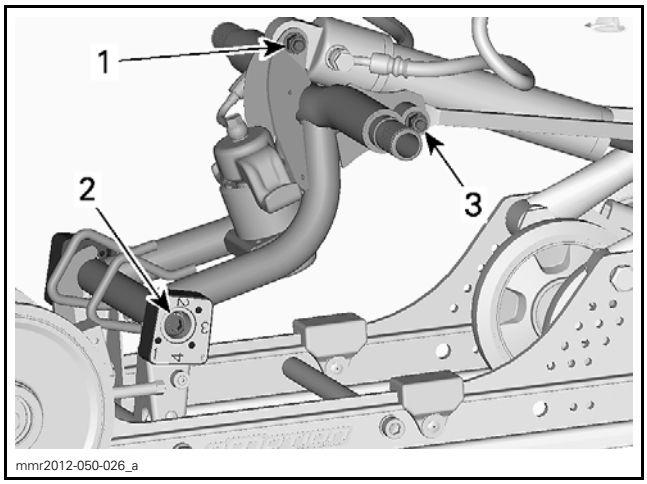


*QUICK ADJUST SYSTEM*
1. *Rear shock to rear arm bolt*
2. *Coupling blocks retaining screw*
3. *Rear arm to throttle rods bolt*

3. Remove rear arm from the vehicle.

## Installing Rear Arm

Installation is the reverse of removal procedure. However, pay attention to the following.

### *rMotion Without Quick Adjust System*

Place rear arm grease fitting towards the front of the vehicle.

### *All Models*

Install coupling block with new socket screws.

Install upper idler wheels as shown.

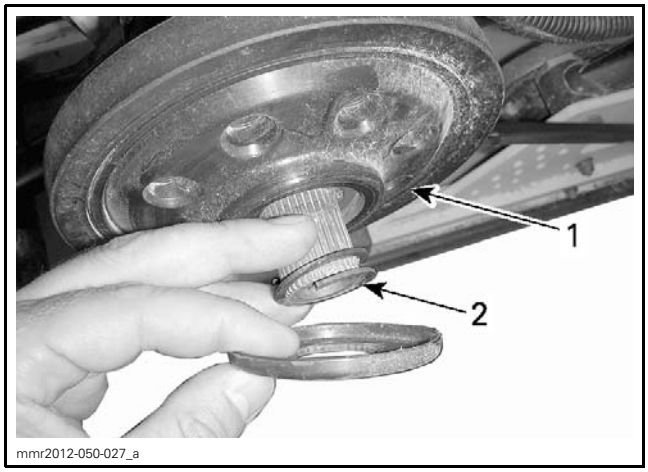


1. *Convex side out*
2. *Spring between wheel and plastic cover*

Install rear arm connecting rod inserts with the shoulder outwards.

Install circlip.

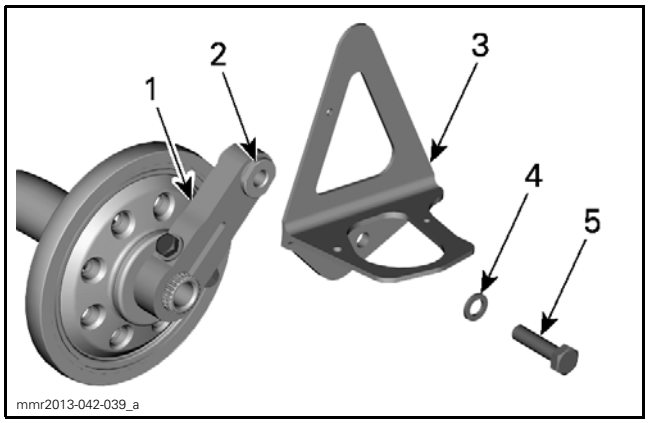


1. *Connecting rod*
2. *Shoulder outwards*
3. *Support*
4. *Washer*
5. *Retaining screw*

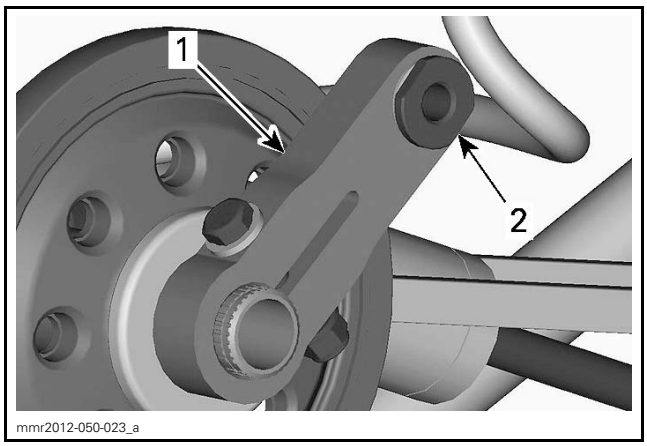


1. *Connecting rod*
2. *Shoulder outwards*

Install new connecting rod retaining screws.

Lubricate rear arm pivot. Refer to *MAINTENANCE* in this subsection.

# PIVOT ARM

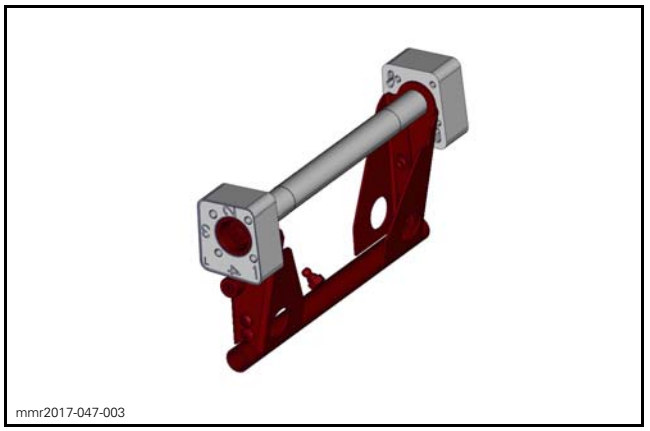


## Removing Pivot Arm

1. Lift rear of vehicle and support it off the ground.
2. Completely loosen track tension by unscrewing both adjustment screws.
3. Set the rear springs preload to the minimum.
4. Remove rear spring supports.
5. Remove the following fasteners:
   - Coupling blocks retaining screws
   - Pivot arm to rails bolt.

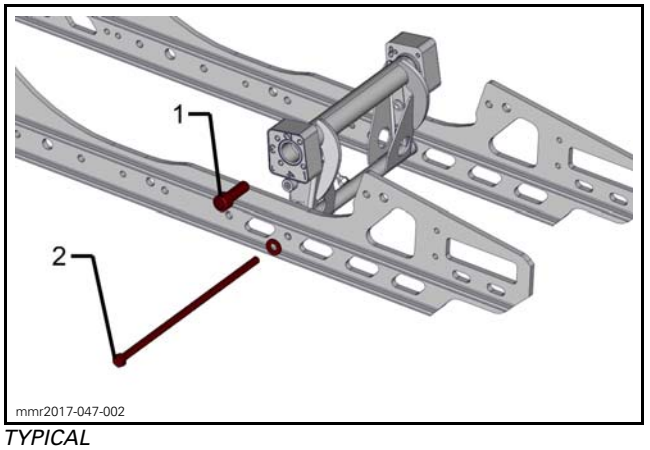


*TYPICAL*
1. *Coupling block screw*
2. *Pivot arm to rails bolt*

6. Carefully remove pivot arm from rear arm.

## Installing Pivot Arm

The installation is the reverse of the removal procedure. However, pay attention to the following.

Install new coupling block screws.

Install pivot arm with the grease fitting towards front of the vehicle.

Lubricate pivot arm. Refer to *MAINTENANCE* in this subsection.

# COUPLING BLOCKS

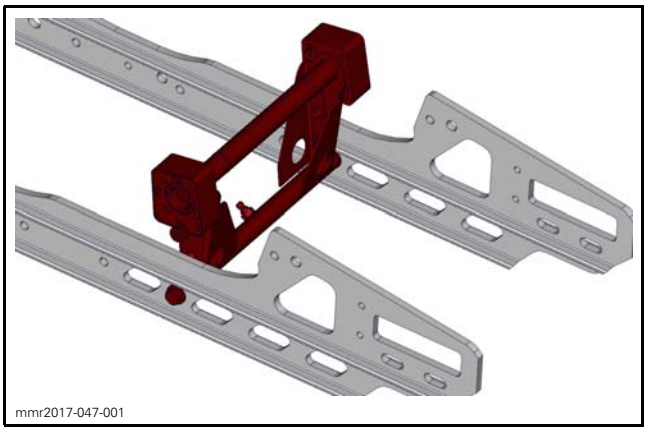
mmr2017-047-001

## Replacing Coupling Blocks

LH and RH coupling blocks are different. There is a molded "R" (RH side) or "L" (LH side) on the back face of the coupling blocks.

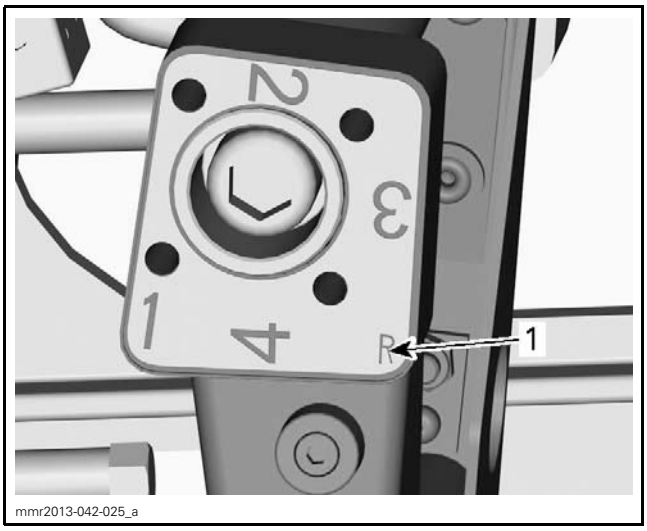

mmr2013-042-025_a

*1. Side identification*

Install new coupling block screws.

Set the coupling blocks to the same position on both sides.

| MODELS | FACTORY BLOCK POSITION |
|---|---|
| All models | 1 |

Fit riveted pin through coupling block.

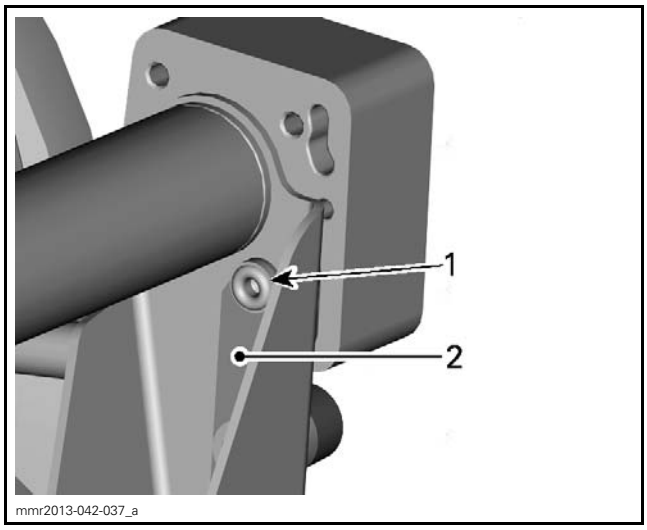

mmr2013-042-037_a

*TYPICAL*
*1. Riveted pin*
*2. Spring pin*

# IDLER WHEELS AND SUPPORTS

## Replacing Idler Wheels

Refer to the exploded views at the beginning of this subsection for parts layout and fasteners tightening torque.

# STOPPER STRAP

Refer to the exploded views at the beginning of this subsection for parts layout and fasteners tightening torque.

**NOTICE** **Incorrect stopper strap installation would cause suspension parts interference.**

# AIR CONTROLLED SUSPENSION (ACS) SYSTEM

## SERVICE TOOLS


| Description | Part Number | Page |
|---|---|---|
| ENGINE LEAK DOWN TEST KIT | 529 035 661 | 7 |
| FLUKE 115 MULTIMETER | 529 035 868 | 6, 9 |


## SERVICE PRODUCTS


| Description | Part Number | Page |
|---|---|---|
| LOCTITE 592 (PIPE SEALANT) | 293 800 018 | 8, 12 |

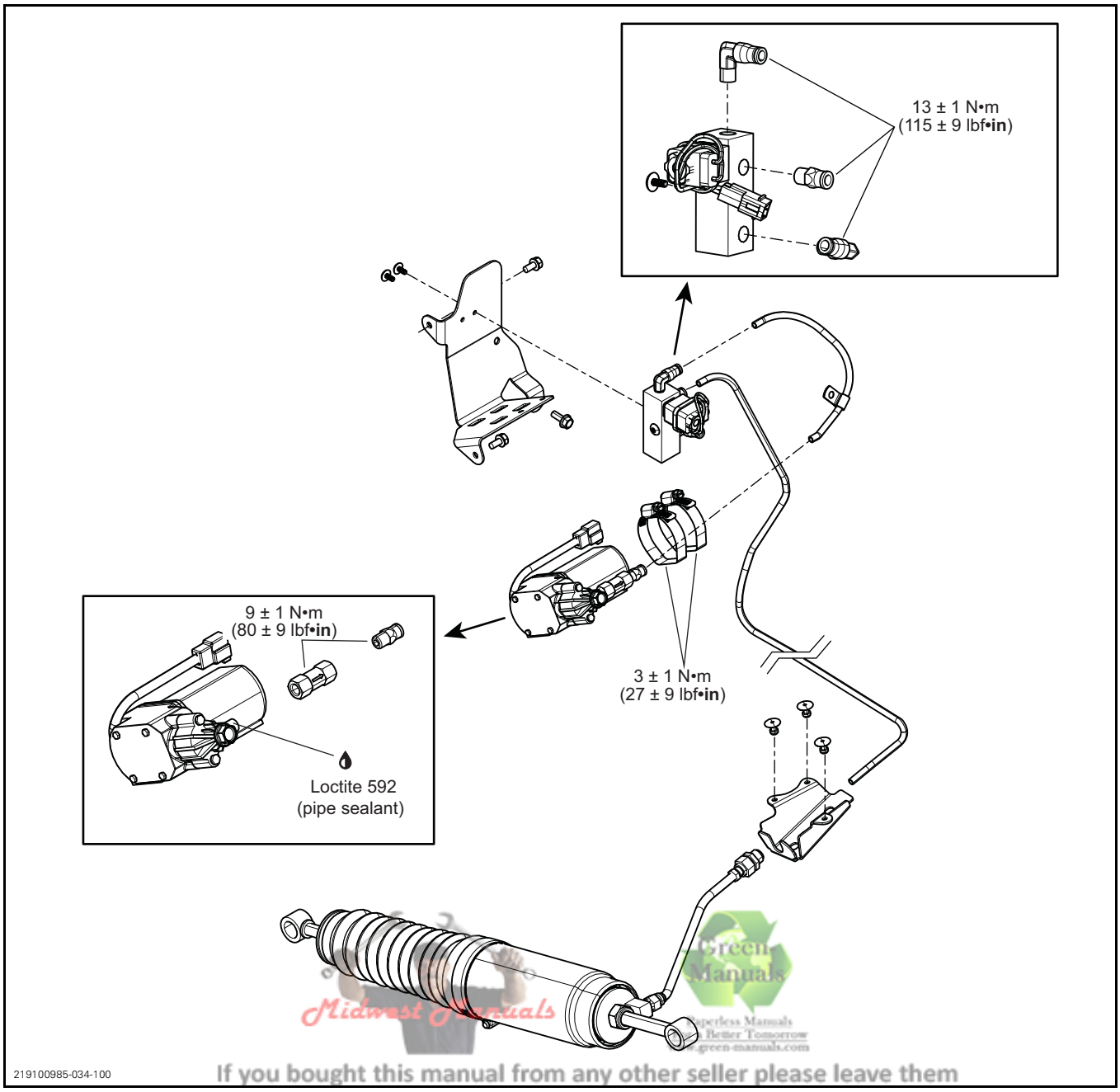


If you bought this manual from any other seller please leave them
NEGATIVE feedback and notify me at bestshopmanuals@gmail.com

# GENERAL

During assembly and installation, use torque values and service products as in the exploded views.

Clean threads before applying a threadlocker. Refer to *SELF-LOCKING FASTENERS* and *LOCTITE APPLICATION* at the beginning of this manual for complete procedure.

**⚠ WARNING**

**Torque wrench tightening specifications must be strictly adhered to.**
**Locking devices when removed (e.g.: locking tabs, cotter pins, etc.) must be replaced.**

**⚠ WARNING**

**The ACS suspension system may be under high pressure (up to 8.6 bar (125 PSI)). Release air pressure before working on the system. Refer to *ACS SYSTEM AIR PRESSURE RELEASE* in this subsection.**

## SYSTEM DESCRIPTION (FEATURES)

The air controlled suspension (ACS) system adjusts the comfort and ride height by setting the air pressure in the rear shock absorber. The operator can choose the desired pressure setting, by using the heated throttle lever switch, whenever the engine is running.

The air pressure setting is controlled by the suspension control module (SCM). The SCM is equipped with a pressure transducer to keep air pressure constant in the system. Depending on the rider desired setting, the SCM will increase pressure using the ACS compressor or release pressure using the solenoid valve.

The multifunction gauge informs the SCM of the requested setting and gets a feedback of the actual setting.

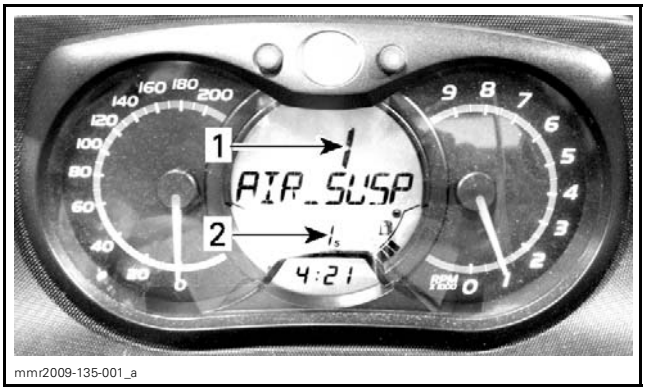


mmr2009-135-001_a

1. *Requested setting (set point)*
2. *Actual setting (pressure transducer reading)*

The following table shows the air pressure maintained in the rear shock absorber depending on the setting.

| SUSPENSION SETTING (SHOWN IN MULTIFUNCTION GAUGE) | AIR SUSPENSION PRESSURE |
|---|---|
| 1 | 1.4 bar (20 PSI) |
| 2 | 3.1 bar (45 PSI) |
| 3 | 5.2 bar (75 PSI) |
| 4 | 6.6 bar (96 PSI) |
| 5 | 8.6 bar (125 PSI) |

## SYSTEM DESCRIPTION (COMPONENTS)

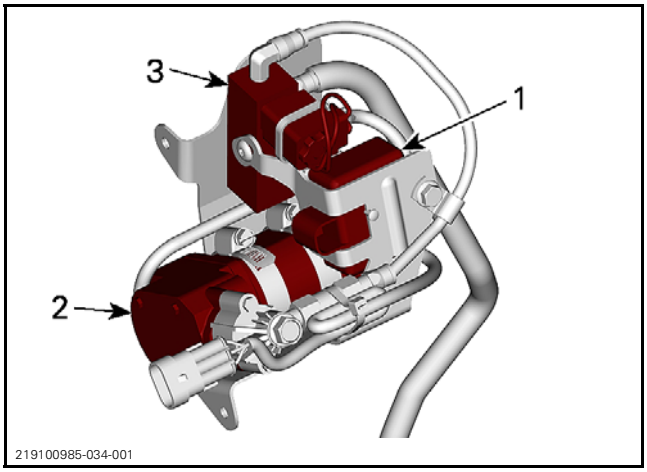


219100985-034-001

*TYPICAL SYSTEM*
1. *Suspension control module (SCM)*
2. *ACS compressor*
3. *ACS manifold assembly (Solenoid valve built in)*

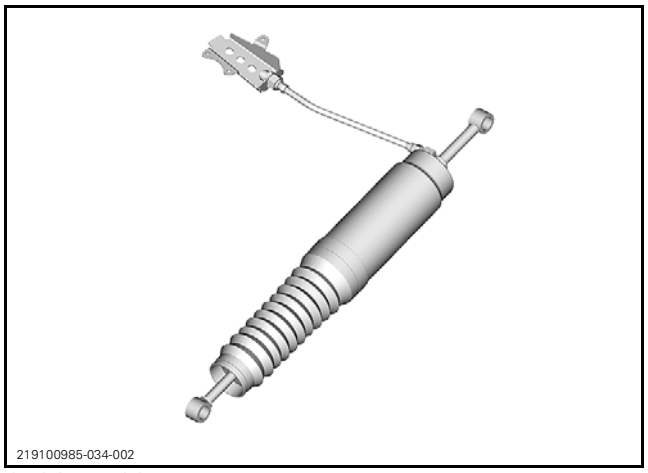


*SHOCK ABSORBER*

## ACS WIRING DIAGRAM

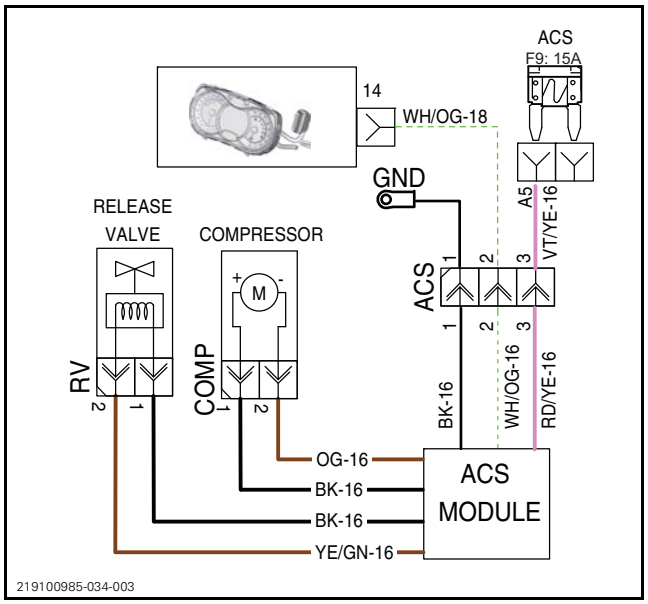


*ACS module*
*Release valve (ACS manifold)*
*Compressor*

# TROUBLESHOOTING

## DIAGNOSTIC TIPS

### Error Code (E) Displayed in Gauge

The error code **E** can appear on the multifunction gauge for different reasons. This does not necessarily mean a failure of the ACS system.

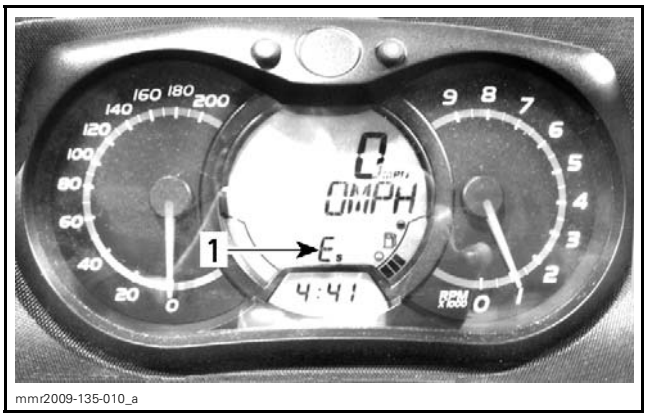


*1. Error code (E)*

If the error code appears on the multifunction gauge, it indicates a disparity between the requested and the actual suspension settings. The system should react to correct this situation and the error code will disappear.

If the error code remains active for a long period, it may indicate a major leak in the system. In this case, the SCM will automatically shut down the ACS compressor to prevent it from overheating.

If there is a major leak in the system, check hoses and fittings first, refer to *HOSE LEAK TEST* procedure to properly locate and repair the problem.

If no leak is detected from hoses or fittings, inspect the ACS compressor check valve, refer to *ACS COMPRESSOR CHECK VALVE LEAK TEST.*

### Error Code (E) Displayed and Suspension Setting Can Not Be Adjusted

If no leak is found, it is probably an electrical problem. In this case, an electrical failure of the ACS compressor or the solenoid valve will result the impossibility to change the actual suspension setting.

After multiple attempts to change suspension setting, the SCM will activate an error code **E**. Refer to *TESTING SEQUENCE* for further troubleshooting procedure.

## TESTING SEQUENCE

### SUSPENSION SETTING CANNOT BE CHANGED.

1. **Faulty SCM or wiring (refer to *SCM* for testing).**
   - *Test SCM signal wire continuity.*
   - *Test SCM input voltage.*
   - *Test SCM ground.*

### ACS SYSTEM CAN ONLY DECREASE PRESSURE.

1. Faulty ACS compressor or wiring (refer to *ACS COMPRESSOR* for testing).
   - *Test ACS compressor operation.*
   - *Test ACS compressor input voltage.*

### ACS SYSTEM CAN ONLY INCREASE PRESSURE.

1. Faulty ACS solenoid valve or wiring (refer to *ACS SOLENOID VALVE* for testing).
   - *Test ACS solenoid valve operation.*
   - *Test ACS solenoid valve input voltage.*

### REQUESTED SETTING DISPLAY DOES NOT CHANGE IN GAUGE.

1. Faulty heated throttle lever switch.
   - *Test heated throttle lever switch, refer to HEATED THROTTLE LEVER in the LIGHTS GAUGE AND ACCESSORIES subsection.*

# PROCEDURES

This subsection covers ACS components only. For all other suspension components, refer to *REAR SUSPENSION (SC-5M or SC-5U)*.

## ACS SHOCK ABSORBER

### Removing the Rear Shock Absorber

Release air pressure, refer to *ACS SYSTEM AIR PRESSURE RELEASE* in this subsection.

1. Disconnect ACS hose from shock absorber. Refer to *ACS HOSE REMOVAL AND INSTALLATION IN QUICK FITTING*.

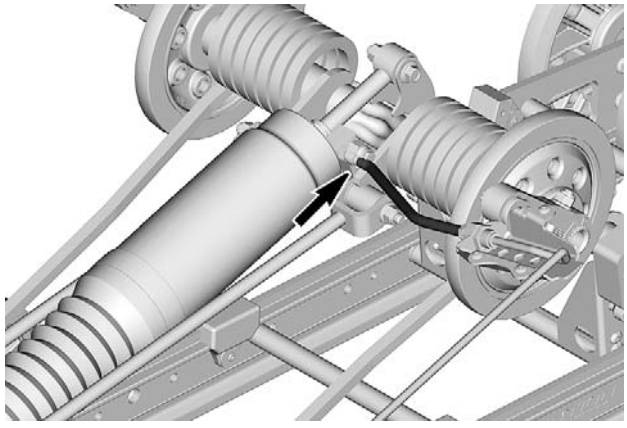
mmr2016-040-006_a

NOTE: To ease shock absorber removal, it may be necessary to unfasten stopper strap to release shock absorber pressure.

1. Lift rear of vehicle and support it off the ground.
2. Remove bolts and nuts from the shock absorber.
3. Remove rear shock absorber.

### Installing the Rear Shock Absorber

The installation is the reverse of the removal procedure.

## AIR CONTROLLED SUSPENSION) (ACS) COMPRESSOR

The ACS compressor is located on the RH side of the vehicle, beside the muffler.

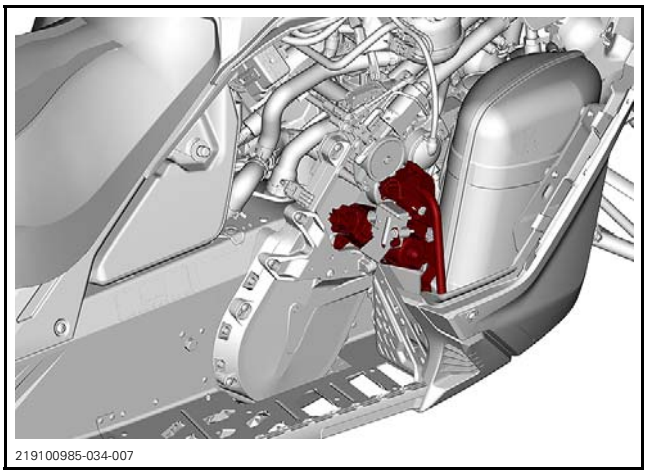
219100985-034-007

### ACS Compressor Wire Identification

| FUNCTION | PIN |
|---|---|
| Ground (from SCM) | 1 |
| Positive (from SCM) | 2 |

### ACS System Air Pressure Release

1. Apply parking brake.
2. Start engine.
3. Press MODE (M) button one time (AIR_SUSP will appear).
4. Set suspension mode to **1** (lowest pressure) using the heated throttle lever switch.

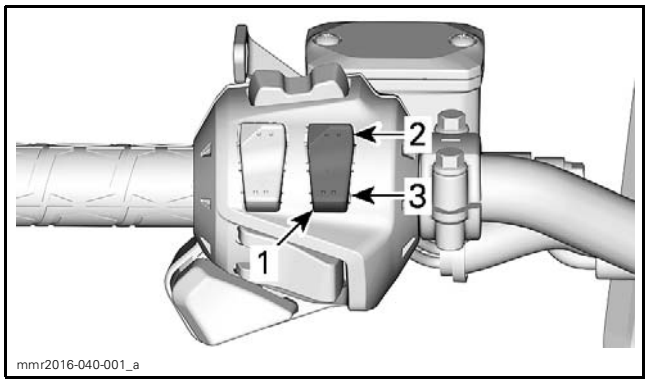


*1. Heated throttle lever switch*
*2. Increase pressure*
*3. Decrease pressure*

5. Wait until the actual setting shows 1 (lower display).

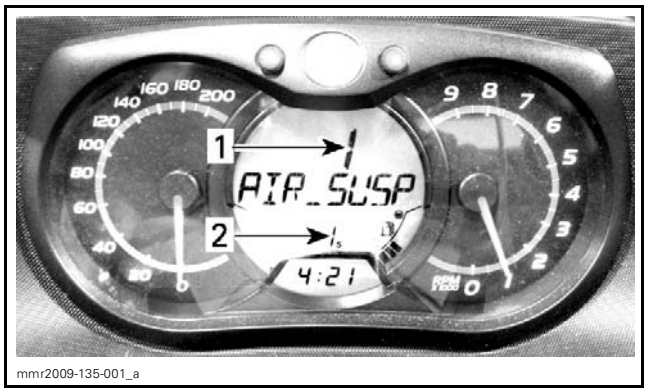


*1. Requested setting (set point)*
*2. Actual setting (pressure transducer reading)*

NOTE: Make sure to let the system expel the air. If the actual setting (lower display) never shows **1**, the system will still be pressurized. In this case, apply 12 Vdc on pin 2 of ACS solenoid valve connector in order to activate it and let the pressure drop.

6. Stop engine.

## Testing the ACS Compressor Operation

**NOTICE** Do not power the ACS compressor directly with the battery for more than 10 seconds. Apply voltage quickly to ensure that the ACS compressor will not over pressurize the ACS system. Respect a 1 minute cool down between tests.

1. Release air pressure, refer to *ACS SYSTEM AIR PRESSURE RELEASE* in this subsection.
2. Disconnect ACS compressor connector.

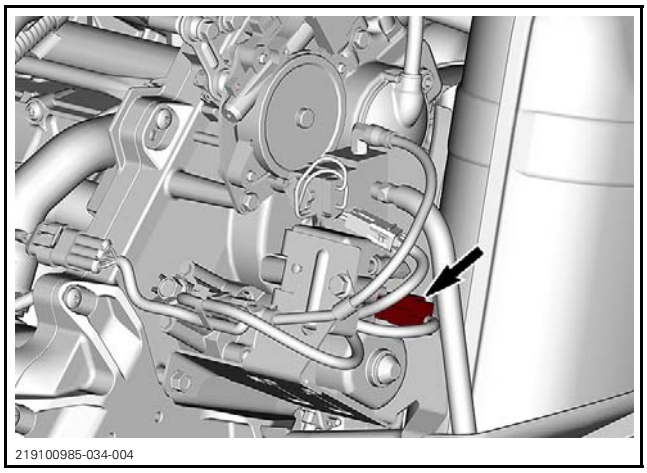


**NOTICE** Be careful not to power the SCM by the ACS compressor connector to avoid to damage SCM.

3. Connect ACS compressor connector pin 2 to a 15 A fuse jumper and then directly to the positive battery post.
4. Connect ACS compressor connector pin 1 directly to the negative battery post.
5. Verify if ACS compressor works properly.
   – If it works - Check wires, connectors and fuse.
   – If it does not work - replace the compressor.

## Testing the ACS Compressor Input Voltage

| REQUIRED TOOL | |
|---|---|
| FLUKE 115 MULTIMETER (P/N 529 035 868) | |

1. Release air pressure, refer to *ACS SYSTEM AIR PRESSURE RELEASE* in this subsection.
2. Set the multimeter to Vdc.
3. Disconnect ACS compressor connector.

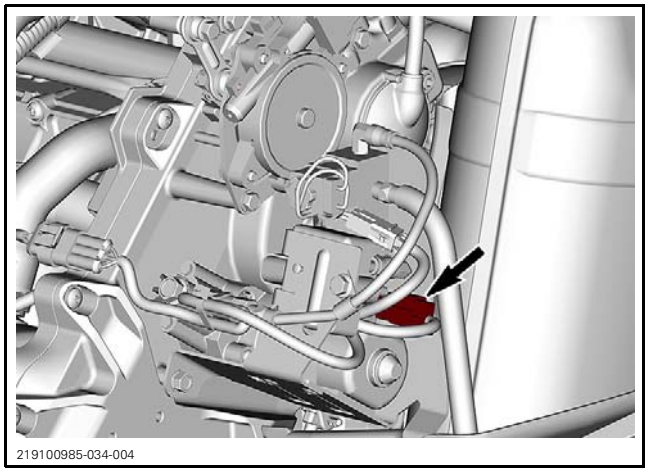
219100985-034-004

4. Apply parking brake.
5. Start engine.
6. Probe ACS compressor connector (vehicle harness side).
7. Press MODE (M) button one time (AIR_SUSP will appear).
8. Set suspension mode to 2 using the heated throttle lever switch.
9. Measure voltage between ACS compressor connector terminals as per the following table.

| TEST PROBES (VEHICLE HARNESS SIDE) | VOLTAGE |
|---|---|
| ACS compressor connector Pin 2 | Battery voltage |
| ACS compressor connector Pin 1 | |

If voltage is not as specified, test ground and input voltage circuits separately.

## Check Valve Leak Test (ACS Compressor)

| REQUIRED TOOL | |
|---|---|
| ENGINE LEAK DOWN TEST KIT (P/N 529 035 661) | |

1. Release air pressure, refer to *ACS SYSTEM AIR PRESSURE RELEASE* in this subsection.
2. Disconnect inlet hose from ACS manifold. Refer to *ACS HOSE REMOVAL AND INSTALLATION IN QUICK FITTING*.

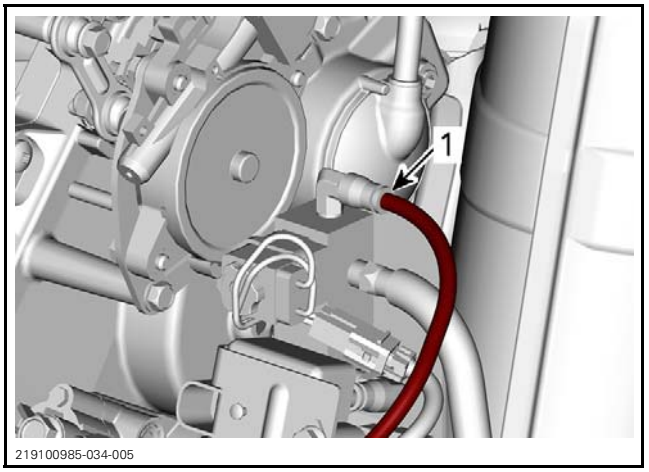

219100985-034-005

*1. Disconnect here*

3. Connect workshop air supply into engine leak down test kit.

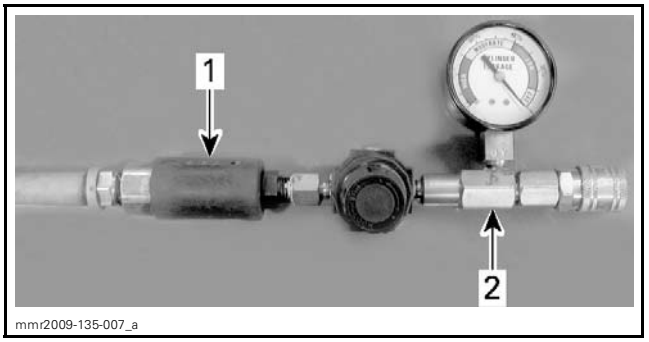

mmr2009-135-007_a

*1. Workshop air supply*
*2. Engine leak down test kit*

4. Adjust engine leak down test kit reading to 0 using knob.

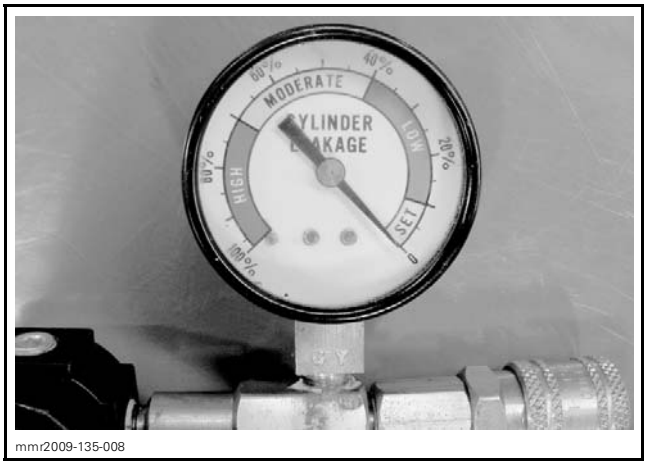

mmr2009-135-008

5. Connect a suitable adapter between the manifold hose end and engine leak down test kit output hose.
6. Refer to the following table for check valve leak.

| LEAK PERCENTAGE | CHECK VALVE |
|---|---|
| Below 10% | Good (do not replace) |
| Above 10% | Faulty (replace it) |

## Check Valve Replacement (ACS Compressor)

At check valve installation, pay attention to the following.

Apply pipe sealant on threads of the compressor.

| SERVICE PRODUCT |
|---|
| LOCTITE 592 (PIPE SEALANT) (P/N 293 800 018) |

Install check valve with its arrow towards hose.

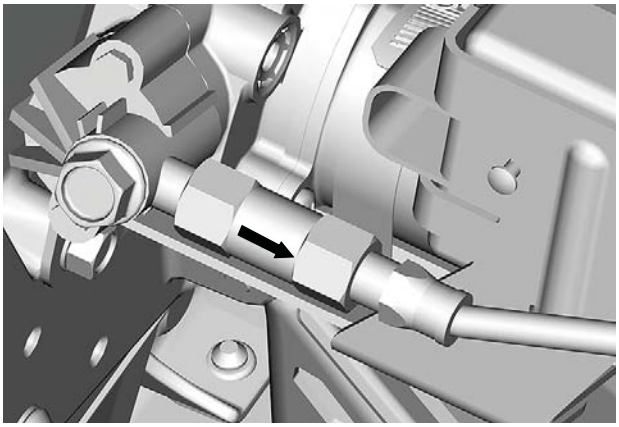

219100985-034-006

| TIGHTENING TORQUE | |
|---|---|
| Check valve (to compressor) | 9 N•m ± 1 N•m (80 lbf•**in** ± 9 lbf•**in**) |
| Quick fitting (to check valve) | |

## Removing the ACS Compressor

1. Release air pressure, refer to *ACS SYSTEM AIR PRESSURE RELEASE* in this subsection.
2. Disconnect ACS compressor connector.

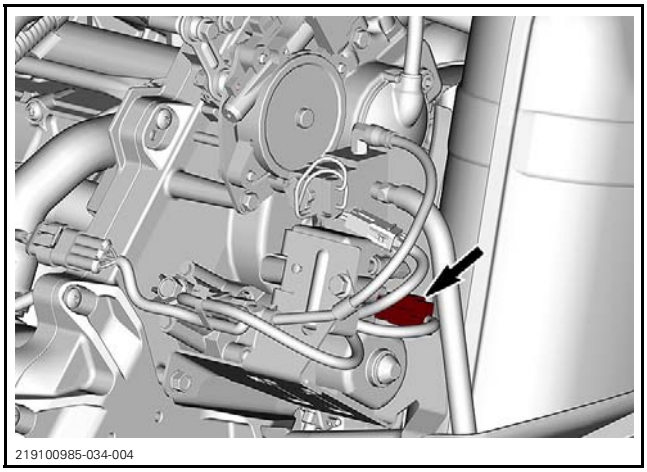

219100985-034-004

3. Remove SCM retaining screw.

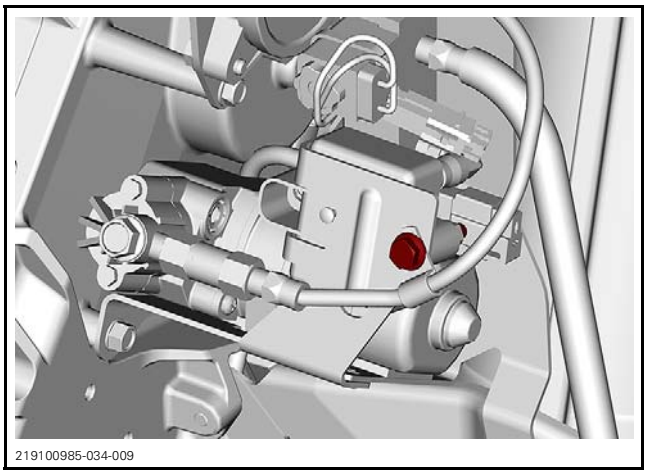

219100985-034-009

4. Disconnect hose from ACS compressor. Refer to *ACS HOSE REMOVAL AND INSTALLATION IN QUICK FITTING*.

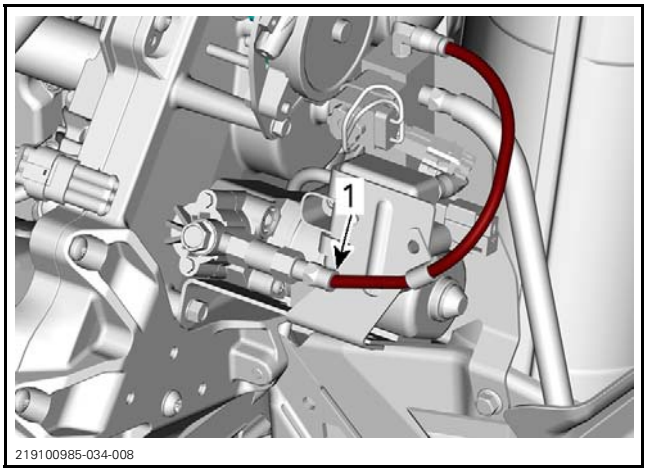


219100985-034-008

*1. Disconnect here*

5. Remove ACS compressor gear clamps.

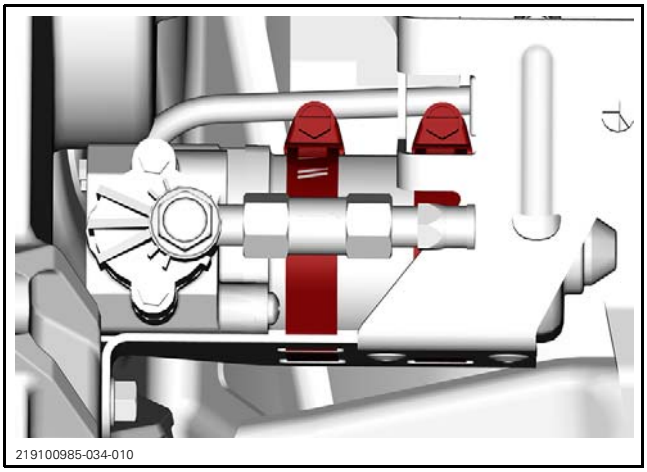
219100985-034-010

## Installing the ACS Compressor

The installation is the reverse of the removal procedure.

# SCM (SUSPENSION CONTROL MODULE)

## SCM Wire Identification

| FUNCTION | PIN |
|---|---|
| Positive (from fuse 12) | 3 |
| Signal (communication with gauge) | 2 |
| Ground (to rectifier/regulator) | 1 |

## Testing the SCM Signal Wire Continuity

| REQUIRED TOOL |
|---|
| FLUKE 115 MULTIMETER (P/N 529 035 868) |

1. Disconnect multifunction gauge connector. Refer to *LIGHTS, GAUGE AND ACCESSORIES* subsection.
2. Disconnect SCM connector as described in *REMOVING THE SCM* in this subsection.
3. Set the multimeter to Ω.
4. Measure resistance as per the following table.

| TEST PROBES (VEHICLE HARNESS SIDE) | RESISTANCE |
|---|---|
| Gauge connector pin 14 | Close to 0 Ω |
| SCM connector pin 2 | |

## Testing the SCM Input Voltage

| REQUIRED TOOL |
|---|
| FLUKE 115 MULTIMETER (P/N 529 035 868) |

1. Disconnect SCM connector as described in *REMOVING THE SCM* in this subsection.
2. Set the multimeter to Vdc.
3. Apply parking brake.
4. Start engine.
5. Measure voltage as per the following table.

| TEST PROBES | VOLTAGE |
|---|---|
| SCM connector (vehicle harness side) Pin 3 | Battery voltage |
| Battery negative (-) post | |

If no voltage is as specified, carry out *TESTING THE SCM GROUND*.

## Testing the SCM Ground

| REQUIRED TOOL |
|---|
| FLUKE 115 MULTIMETER (P/N 529 035 868) |

1. Disconnect SCM connector as described in *REMOVING THE SCM* in this subsection.
2. Set the multimeter to Vdc.
3. Measure voltage as per the following table.

| TEST PROBES | VOLTAGE |
|---|---|
| SCM connector (vehicle harness side) Pin 1 | Battery voltage |
| Battery positive (+) post | |

## Removing the SCM

1. Release air pressure, refer to *ACS SYSTEM AIR PRESSURE RELEASE* in this subsection.
2. Cut locking tie securing the SCM wire to the check valve.

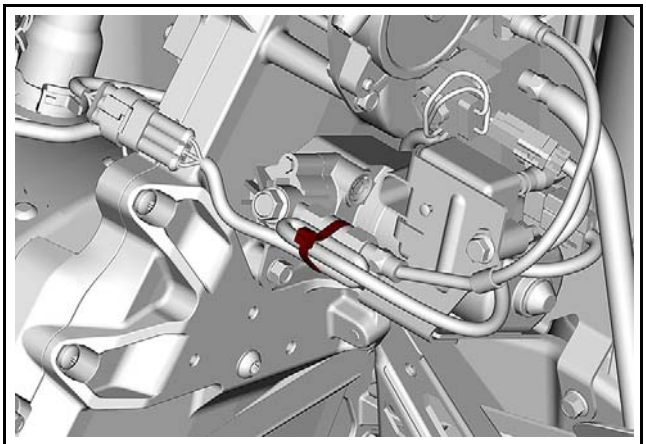
219100985-034-012

3. Disconnect compressor, manifold solenoid and SCM connectors.

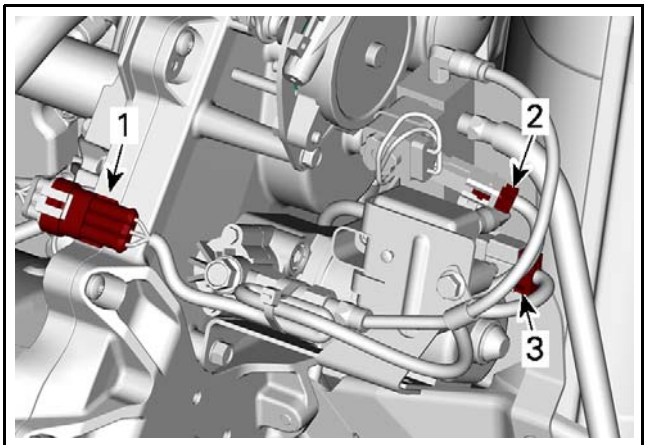

219100985-034-011

*1. SCM connector*
*2. ACS manifold connector*
*3. ACS compressor connector*

4. Remove SCM retaining screw.

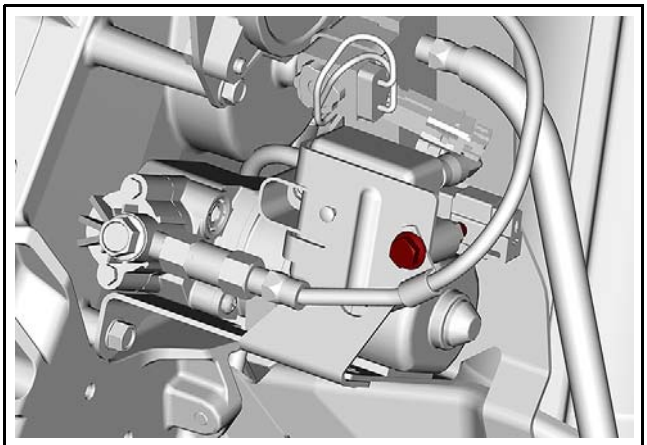
219100985-034-009

5. Disconnect hose from ACS manifold.

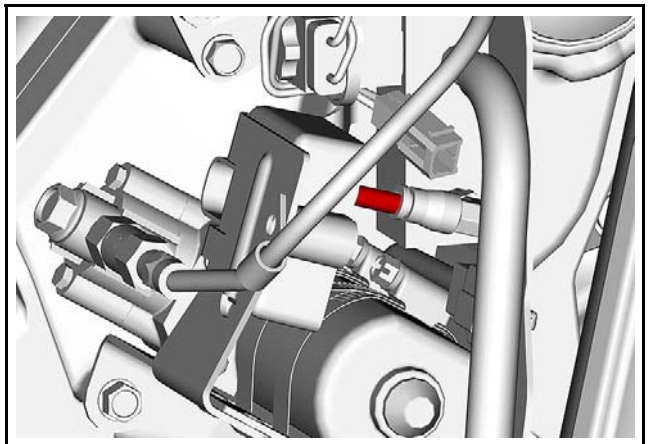
219100985-034-013

6. Remove SCM.

### Installing the SCM

The installation is the reverse of the removal procedure. However, pay attention to the following.

Tighten SCM retaining nut to specification.

| TIGHTENING TORQUE | |
|---|---|
| SCM retaining nut | 2.5 N•m ± 0.5 N•m (22 lbf•**in** ± 4 lbf•**in**) |

## ACS SOLENOID VALVE

### ACS Solenoid Valve Wire Identification

| FUNCTION | PIN |
|---|---|
| Ground (from SCM) | 1 |
| Positive (from SCM) | 2 |

### Testing the ACS Solenoid Valve Operation

***NOTICE*** **Do not power the solenoid valve directly with the battery for a long period. Apply voltage quickly to ensure that the valve will not completely empty the ACS system.**

1. Apply parking brake.
2. Start engine.
3. Press MODE (M) button one time (AIR_SUSP will appear).
4. Set suspension mode to **2** using the heated throttle lever switch.
5. Wait until the actual setting shows 2 (lower display).

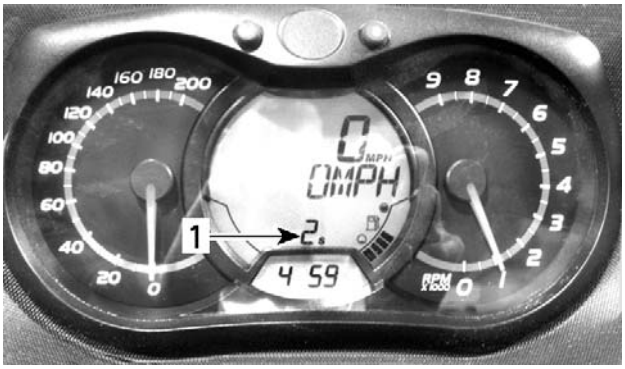

mmr2009-135-016_a

*1. Actual setting (pressure transducer reading)*

NOTE: Make sure to let the system adjust the air pressure.

6. Stop engine.
7. Open LH side panel.
8. Disconnect solenoid valve connector.

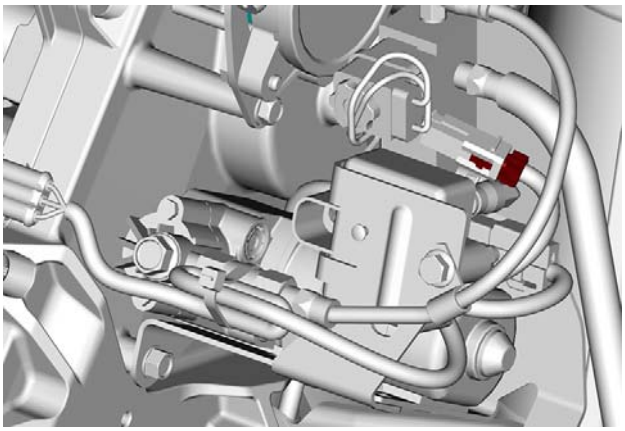
219100985-034-014

**NOTICE** Be careful not to power the SCM by the ACS compressor connector to avoid to damage SCM.

9. Connect solenoid valve connector pin 2 to a 20 A fuse jumper and then directly to the positive battery post.
10. Connect solenoid valve connector pin 1 directly to the negative battery post.
11. Verify that air exits from solenoid valve area to confirm solenoid operation.

## Test the ACS Solenoid Valve Input Voltage

1. Apply parking brake.
2. Start engine.
3. Press MODE (M) button one time (AIR_SUSP will appear).
4. Set suspension mode to **2** using the heated throttle lever switch.
5. Wait until the actual setting shows 2 (lower display).

mmr2009-135-016_a

*1. Actual setting (pressure transducer reading)*

NOTE: Make sure to let the system adjust the air pressure.

6. Set the multimeter to Vdc.
7. Open LH side panel.
8. Back probe solenoid connector (without disconnecting).

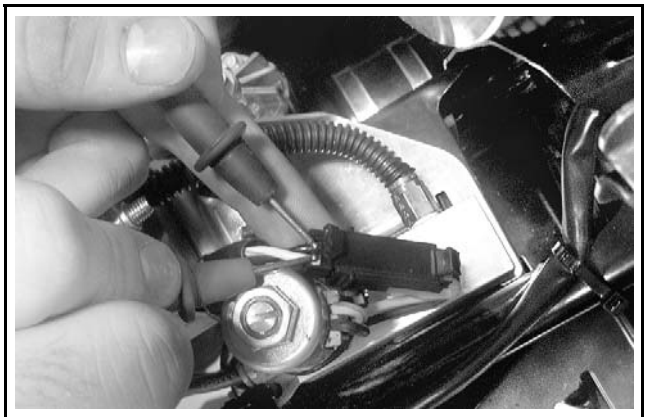
mmr2009-135-019

*TYPICAL — REV-XU SHOWN*

9. Press MODE (M) button one time (AIR_SUSP will appear).
10. Set suspension mode to 1 using the heated throttle lever switch.
11. Measure voltage between solenoid connector terminals as per the following table.

| TEST PROBES | VOLTAGE |
|---|---|
| Solenoid connector Pin 2 | Battery voltage |
| Solenoid connector Pin 1 | |

If voltage is not as specified, test ground and input voltage circuits separately.

### Removing the ACS Solenoid Valve

ACS solenoid valve is part of the ACS manifold. Refer to *REMOVING THE ASC MANIFOLD*.

## ACS MANIFOLD

### Removing the ACS Manifold

1. Release air pressure, refer to *ACS SYSTEM AIR PRESSURE RELEASE* in this subsection
2. Remove LH side panel.
3. Disconnect ACS manifold connector.

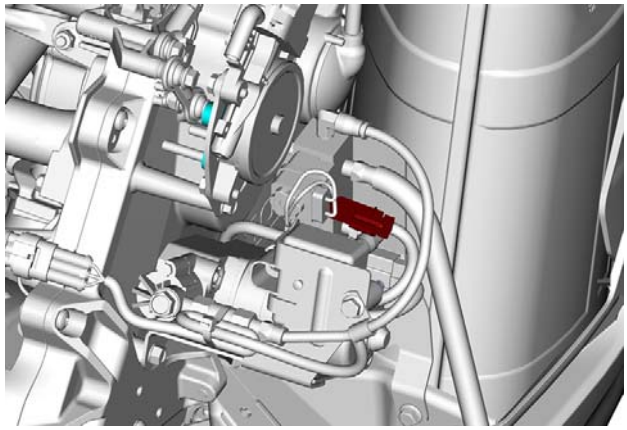

219100985-034-015

4. Disconnect all hoses from ACS manifold.

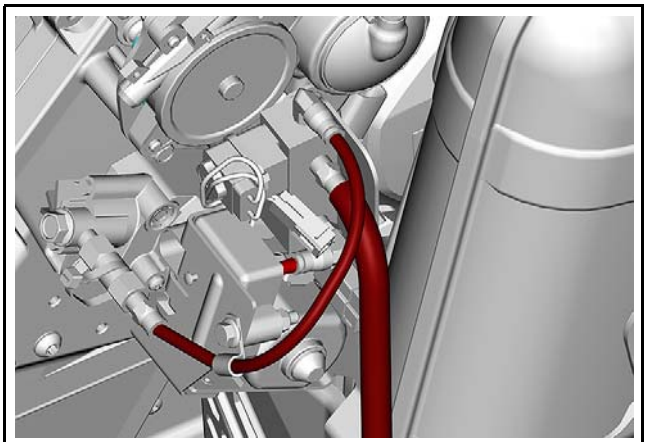

219100985-034-016

5. Remove ACS support screws.

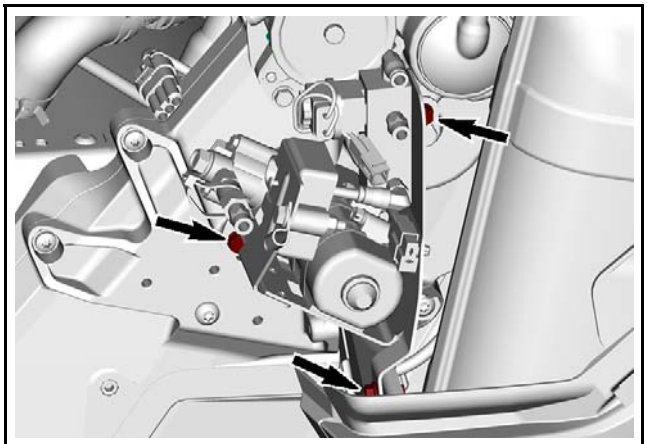

219100985-034-017

6. Remove both screws retaining the ACS manifold to support.

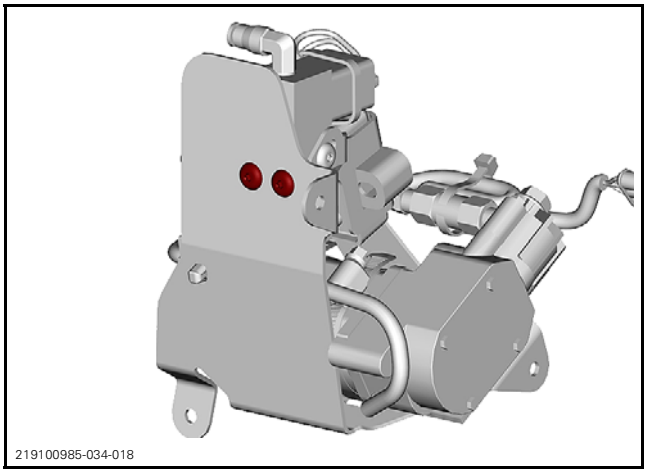

219100985-034-018

7. Remove ACS manifold.

### Installing the ACS Manifold

The installation is the reverse of the removal procedure.

### ACS Manifold Quick Fitting

The installation is the reverse of the removal procedure. However, pay attention to the following.

| TIGHTENING TORQUE | |
|---|---|
| ACS manifold quick fittings | 13 N•m ± 1 N•m (115 lbf•**in** ± 9 lbf•**in**) + LOCTITE 592 (PIPE SEALANT) (P/N 293 800 018) |

# ACS HOSES

## ACS Hose Removal and Installation in Quick Fitting

Release air pressure, refer to *ACS SYSTEM AIR PRESSURE RELEASE* in this subsection.

1. To disconnect ACS hose from the quick fitting, proceed as follows:
   1.1 Push ring towards hose fitting.
   1.2 Hold ring in place.
   1.3 Pull out ACS hose.

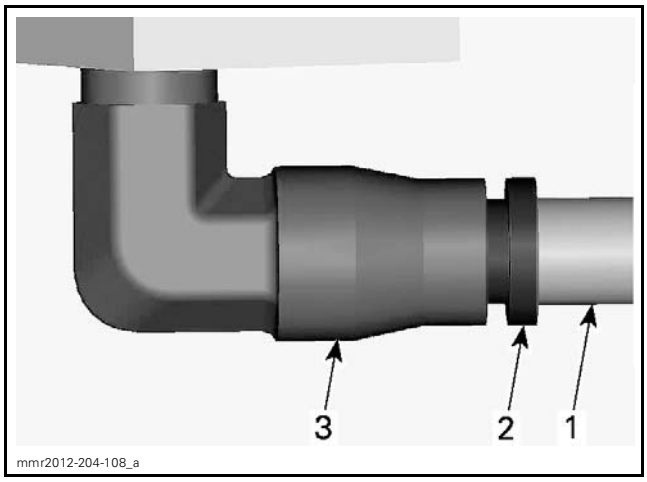


*1. Hose*
*2. Ring*
*3. Fitting*

2. To connect ACS hose to the quick fitting, proceed as follows:
   2.1 Insert ACS hose (approx. 17 mm (.67 in)) into fitting ring until the painted mark disappears under the fitting.

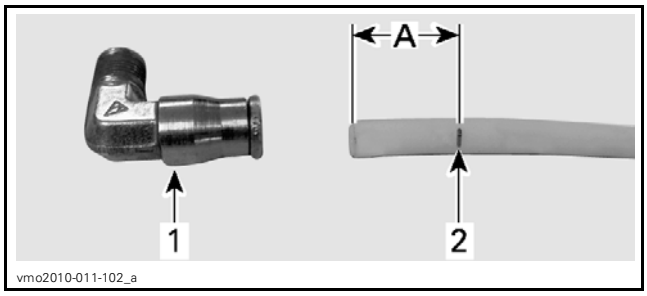


*PUSH HOSE UNTIL THE MARK IS COMPLETELY INSERTED*
*1. Fitting*
*2. Painted mark*
*A. approx. 17 mm (.67 in)*

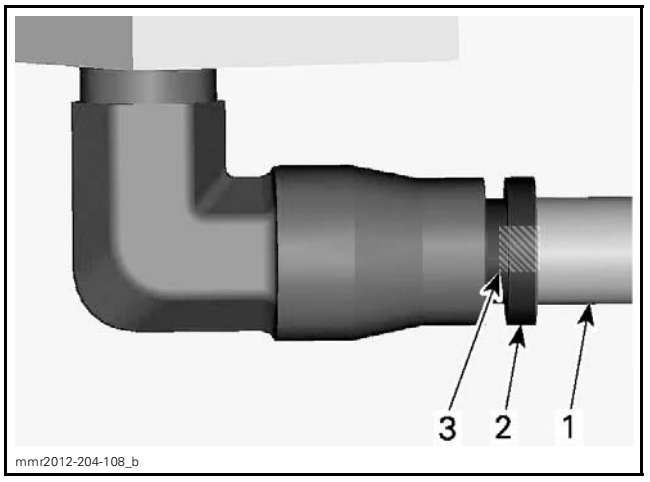


*1. Hose*
*2. Ring*
*3. Painted mark*

   2.2 The ring will automatically lock the ACS hose.

## ACS Hose Leak Test

1. Apply parking brake.
2. Start engine.
3. Press MODE (M) button one time (AIR_SUSP will appear).
4. Set suspension mode to **3** using the heated throttle lever switch.
5. Wait until the actual setting shows 3 (lower display).

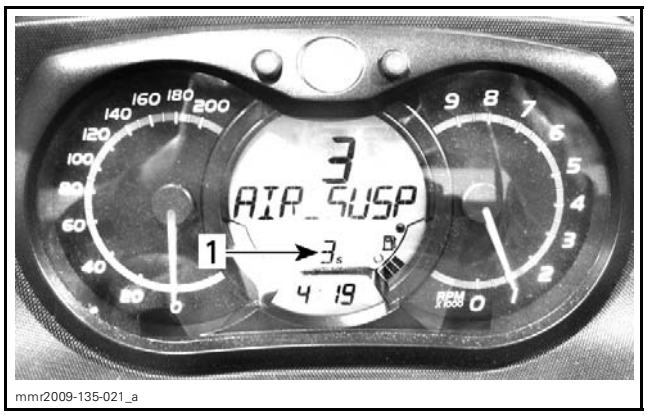


*1. Actual setting (pressure transducer reading)*

NOTE: Make sure to let the system adjust the air pressure.

6. Inspect all hoses and fittings with soapy water to detect leaks.

***NOTICE*** Make sure to inspect every hoses:
– At the shock absorber
– Under the running board
– The long hose in the running board roller
– In the compressor area.

# STEERING SYSTEM

## SERVICE PRODUCTS

| Description | Part Number | Page |
|---|---|---|
| SUSPENSION GREASE | 293 550 033 | 23 |
| XPS BRAKES AND PARTS CLEANER (USA) | 219 701 705 | 11 |
| XPS BRAKES AND PARTS CLEANER | 219 701 776 | 11 |
| XPS SYNTHETIC GREASE | 293 550 010 | 11 |

## SKIS (WITH ADJUSTABLE RUNNER)

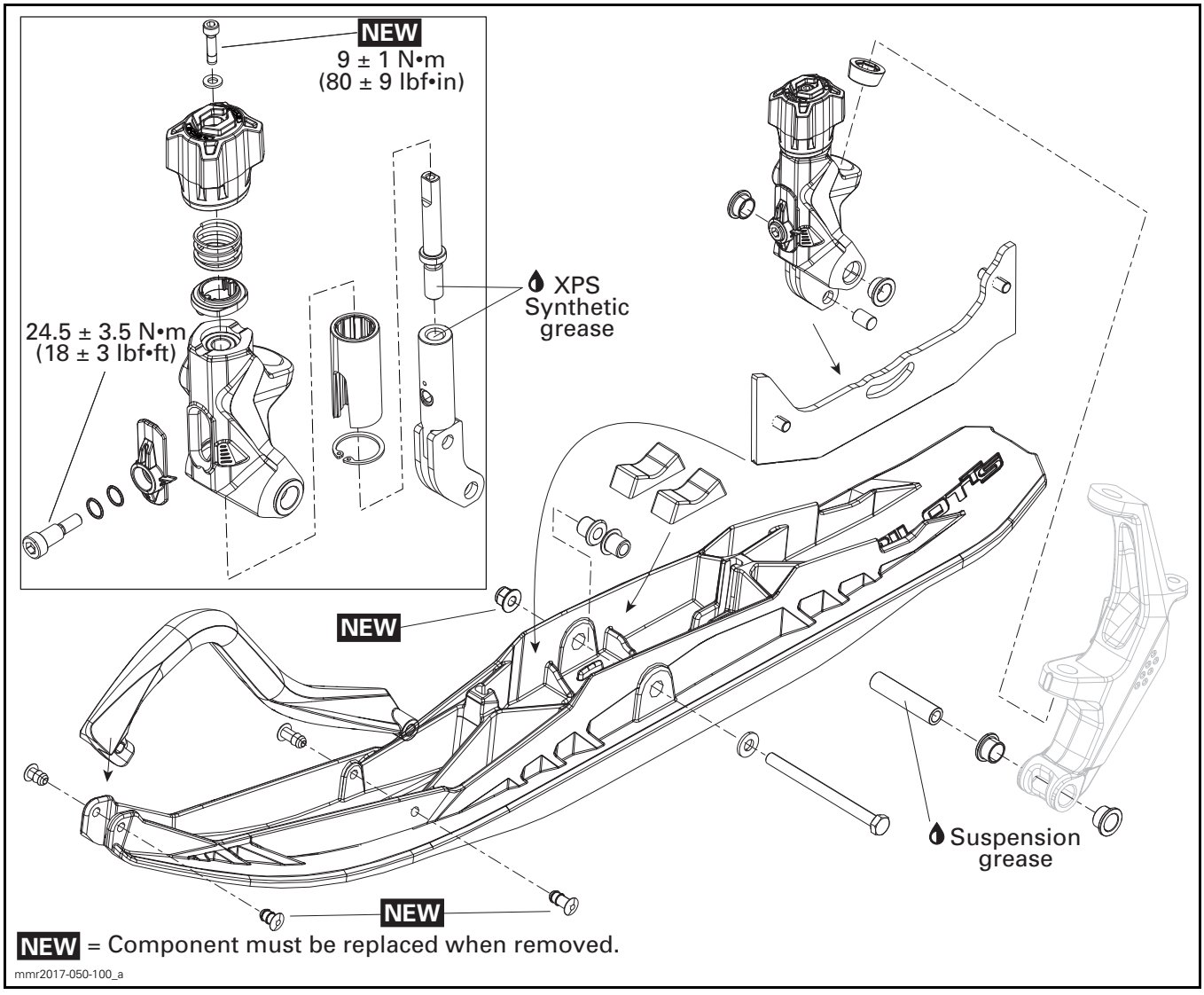

# SKIS (WITHOUT ADJUSTABLE RUNNER)

*Trail and Crossover Models*

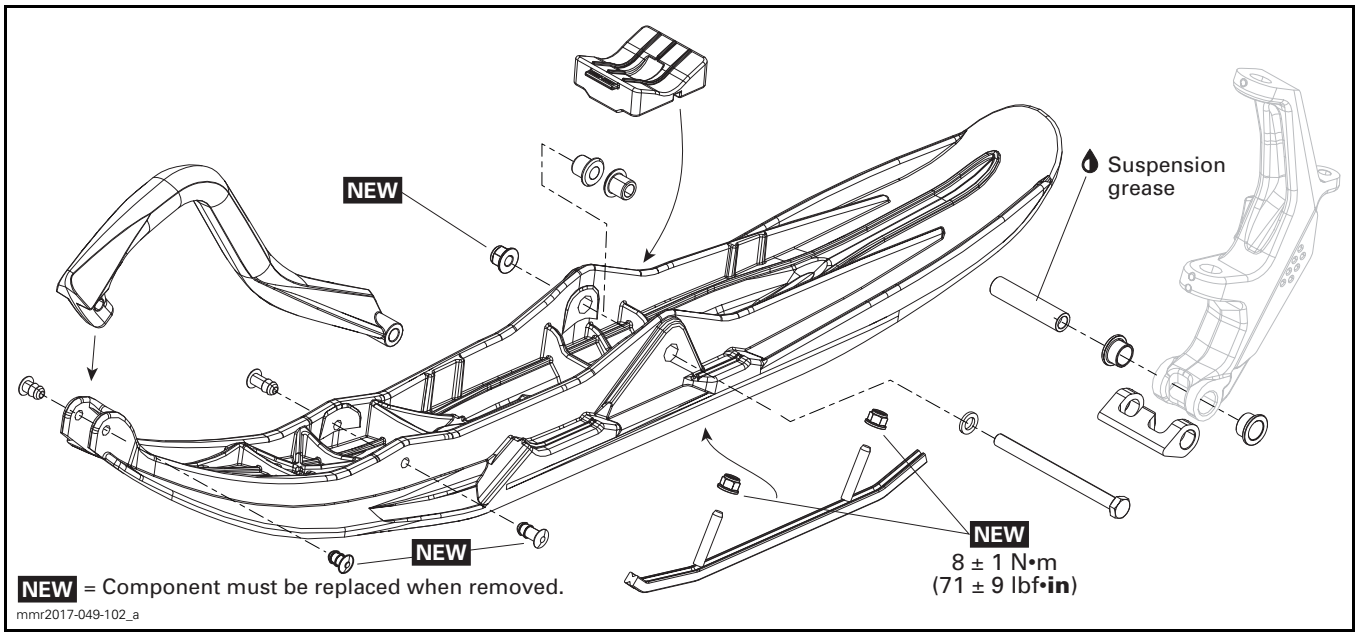

*Mountain Models (Adjustable Stance)*

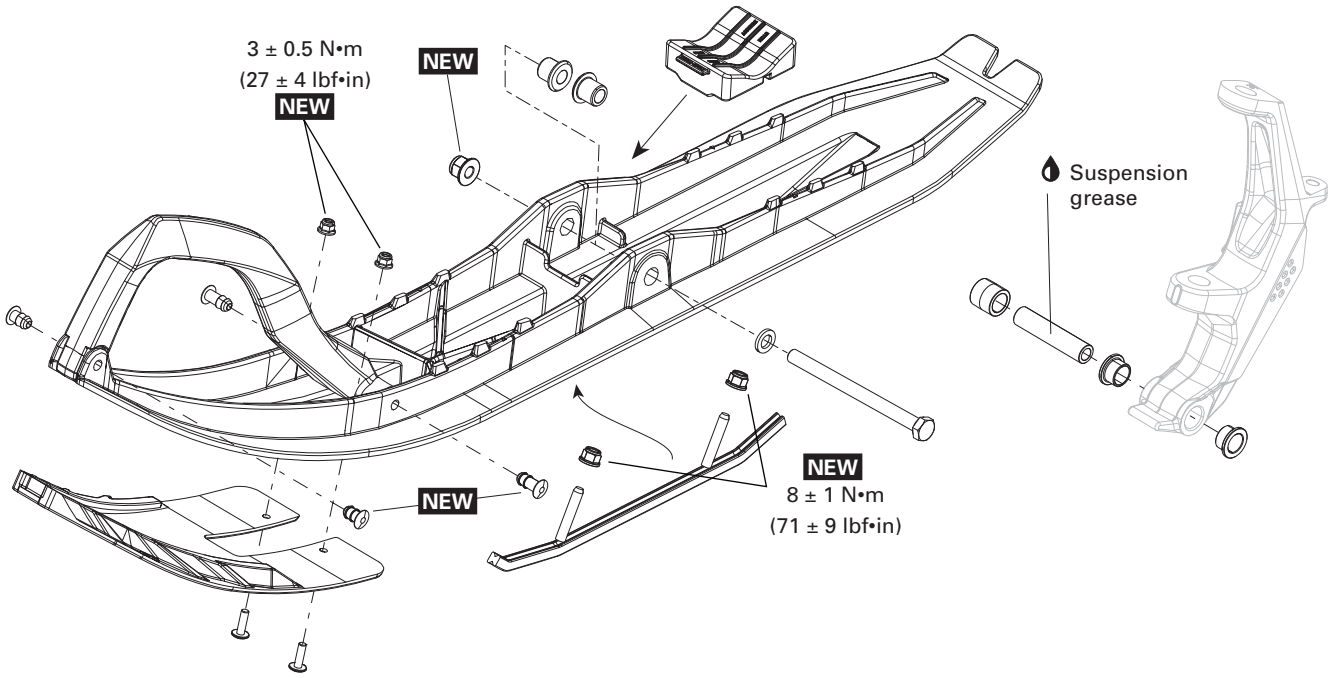


**NEW** = Component must be replaced when removed.

mmr2017-049-103_a

# STEERING COLUMN AND TIE-RODS

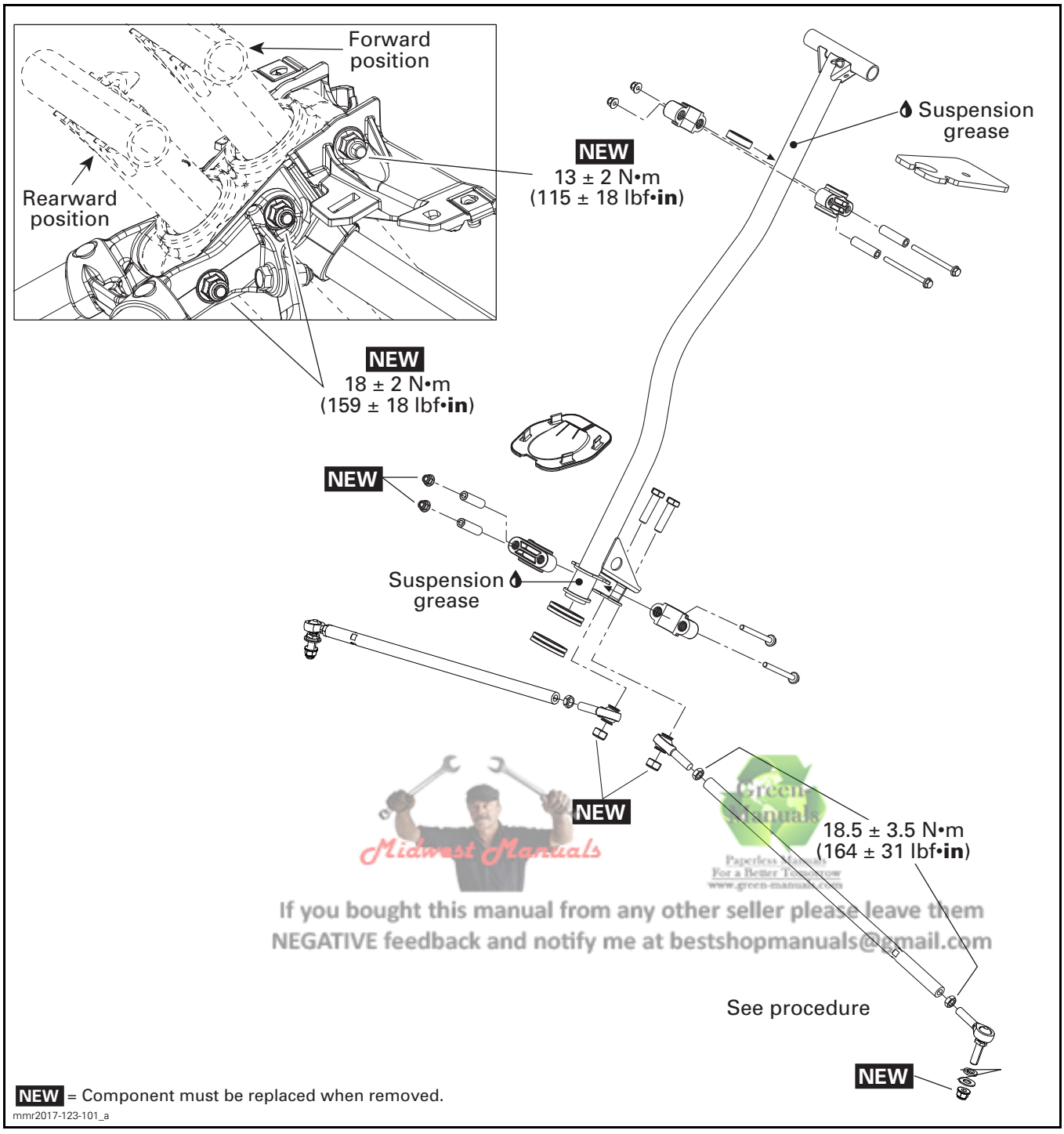


Midwest Manuals
Green Manuals
If you bought this manual from any other seller please leave them NEGATIVE feedback and notify me at bestshopmanuals@gmail.com

# HANDLEBAR

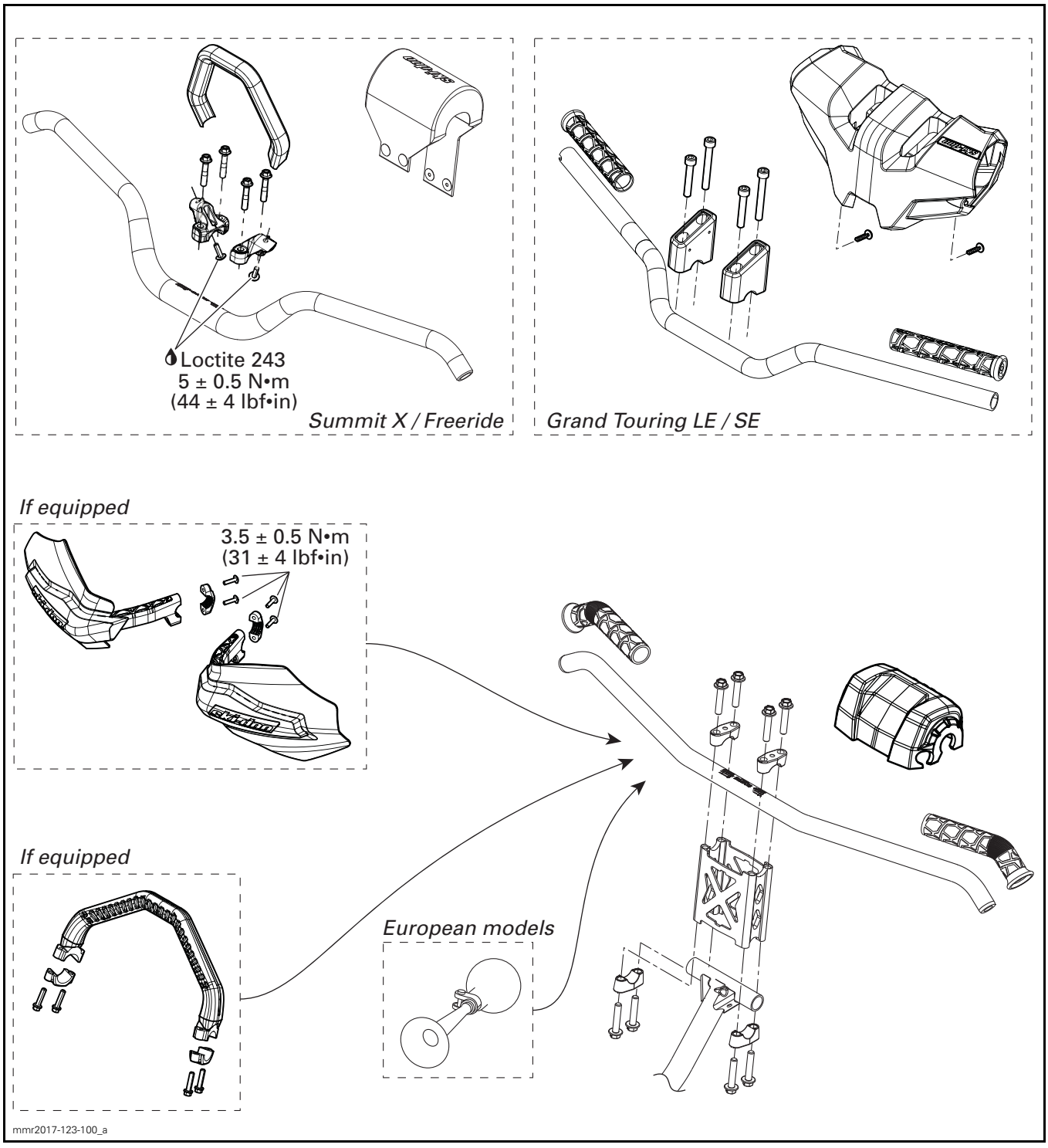
Loctite 243
5 ± 0.5 N•m
(44 ± 4 lbf•in)
Summit X / Freeride
Grand Touring LE / SE
If equipped
3.5 ± 0.5 N•m
(31 ± 4 lbf•in)
If equipped
European models
mmr2017-123-100_a

# GENERAL

When removing or replacing a part of the steering mechanism, perform the steering alignment, refer to *STEERING ALIGNMENT* in this subsection.

During assembly/installation, use the torque values and service products as in the exploded views.

Clean threads before applying a threadlocker. Refer to *SELF-LOCKING FASTENERS* and *LOCTITE APPLICATION* at the beginning of this manual for complete procedure.

**⚠ WARNING**

**Torque wrench tightening specifications must be strictly adhered to.**
**Locking devices when removed (e.g.: locking tabs, elastic stop nuts, cotter pins, etc.) must be replaced.**

***NOTICE*** **Hoses, cables and locking ties removed during a procedure must be reinstalled at the same location.**

# ADJUSTMENT

## STEERING ALIGNMENT

Ski alignment is performed by adjusting the length of left and right tie-rods.

1. Leave the vehicle on the ground on its own weight.
2. Attach ski handles together with a bungee cord.

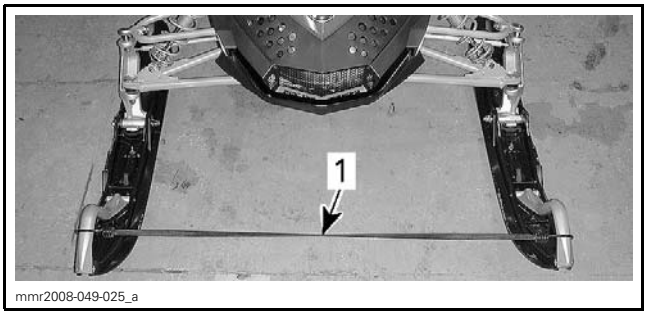


*TYPICAL*
*1. Bungee cord*

3. Position handlebar so that it is straight ahead position by measuring from the extremities of the grips to the rear most edge of the tunnel, as shown.

NOTE: The reference point must be the same to each side.

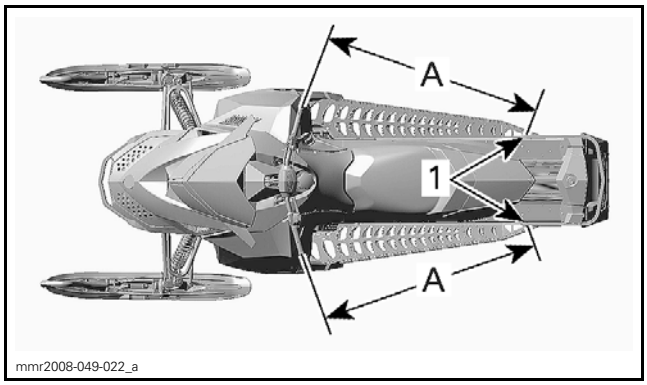


*TYPICAL*
*1. Same reference point*
*A. Equal distance on each side*

4. Ensure track is properly aligned.
5. Verify if skis are in straight-ahead position by placing a straight edge against track and measuring distance between front and rear ski bridges and straight edge.
6. With skis in straight ahead position, adjust the toe-out.
7. Measure the distance between front and rear ski bridges in line with arrows on skis.
8. Use the following illustration and this equation to determine the steering adjustment.

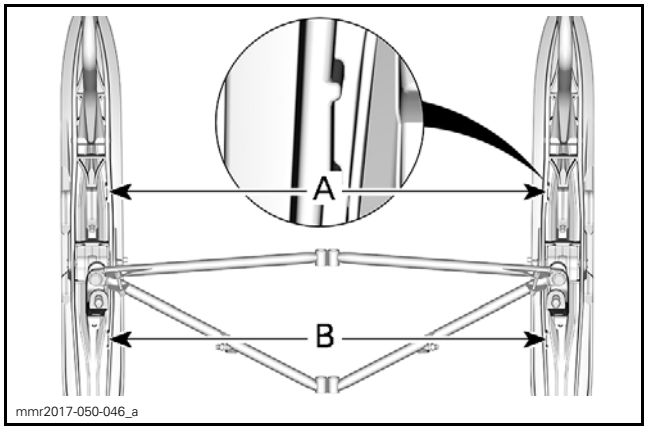


*TRAIL AND CROSSOVER MODELS*

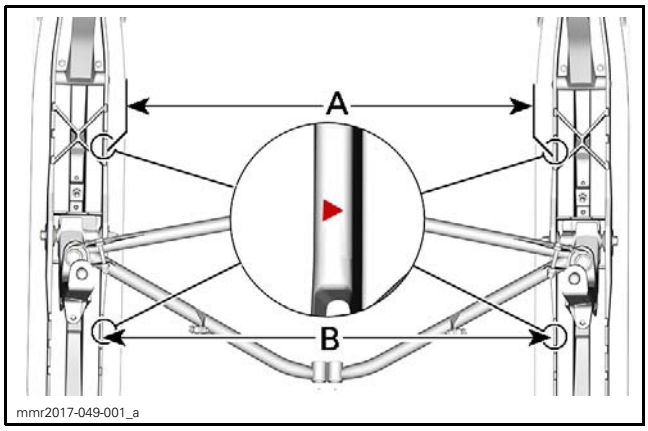


*MOUNTAIN MODELS*

| STEERING ALIGNMENT | |
|---|---|
| Toe-out | A - B = 5 mm (.197 in) |

9. If adjustment is needed, loosen tie-rod jam nuts then turn tie-rods to change their length.
10. Tighten jam nuts to specification.

| TIGHTENING TORQUE | |
|---|---|
| Jam nuts | 18.5 N•m ± 3.5 N•m (164 lbf•**in** ± 31 lbf•**in**) |

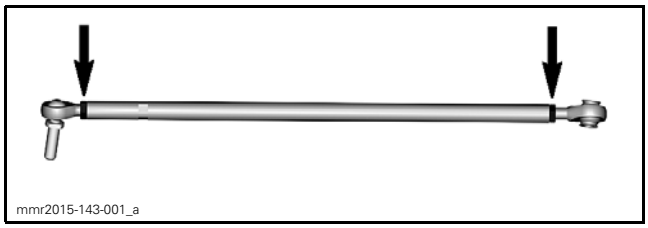


NOTE: The maximum tie-rod end length not engaged in the tie rod must not exceed 34 mm (1.339 in).

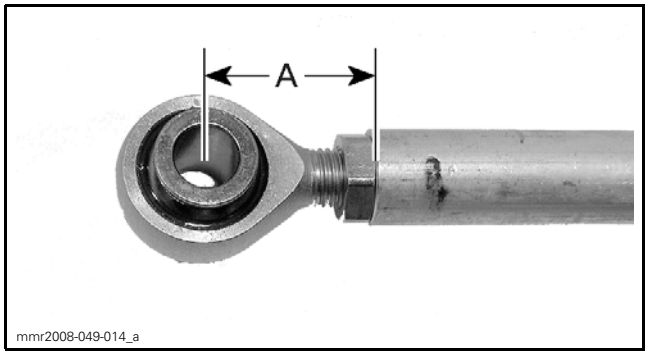


*A. 34 mm (1.339 in) maximum*

# PROCEDURES

## SKI RUNNER

### Ski Runner Inspection

Refer to *PERIODIC MAINTENANCE PROCEDURES*.

### Ski Runner Removal

*Without Adjustable Ski (Pilot TS)*

1. Lift the front of vehicle and support it off the ground.
2. Unscrew the ski runner nuts, then remove the ski runner.

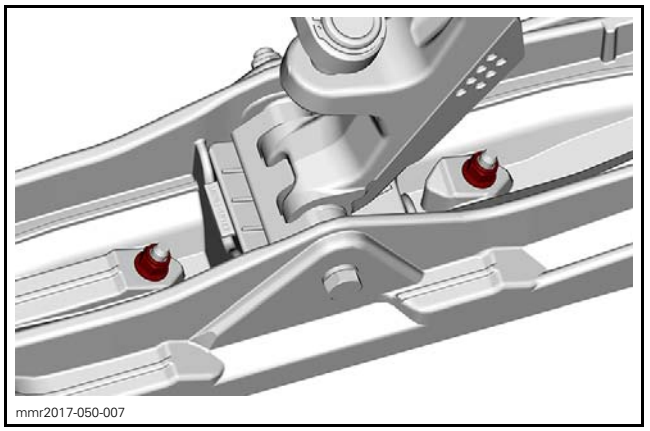


*With Adjustable Ski (Pilot TS)*

1. Remove the ski.
2. Remove the pin.

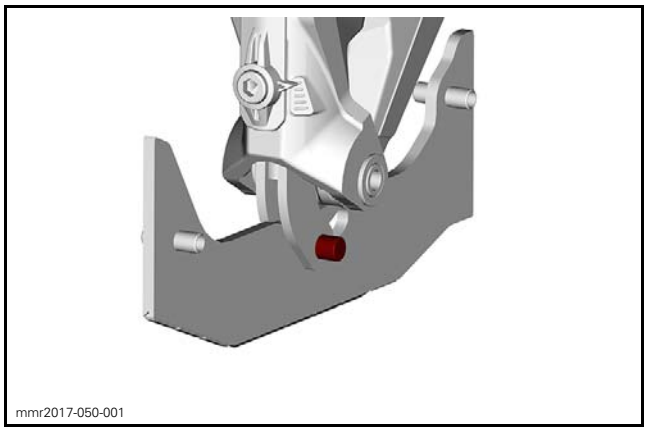


### Ski Runner Installation

The installation is the reverse of the removal procedure. Pay attention to the following.

*Without Adjustable Ski (Pilot TS)*

Tighten ski runner nuts to specification.

| TIGHTENING TORQUE | |
|---|---|
| Runner nut | 8 N•m ± 1 N•m (71 lbf•**in** ± 9 lbf•**in**) |

*With Adjustable Ski (Pilot TS)*

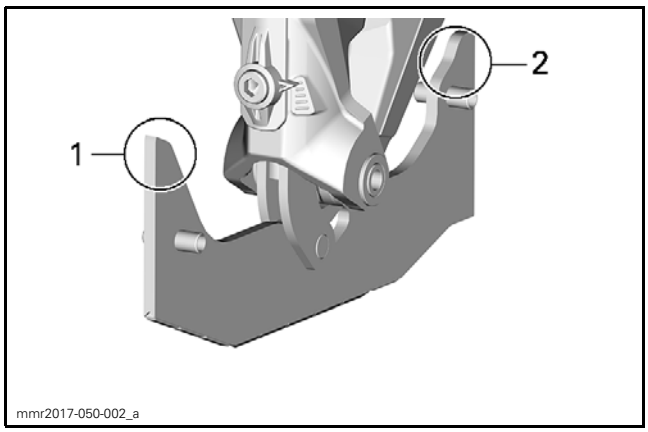


*1. Towards front*
*2. Towards rear*

# SKIS

## Ski Inspection

Refer to *PERIODIC MAINTENANCE PROCEDURES*.

## Ski Removal

1. Lift front of vehicle and support it off ground.
2. Unscrew nut then pull ski bolt out.

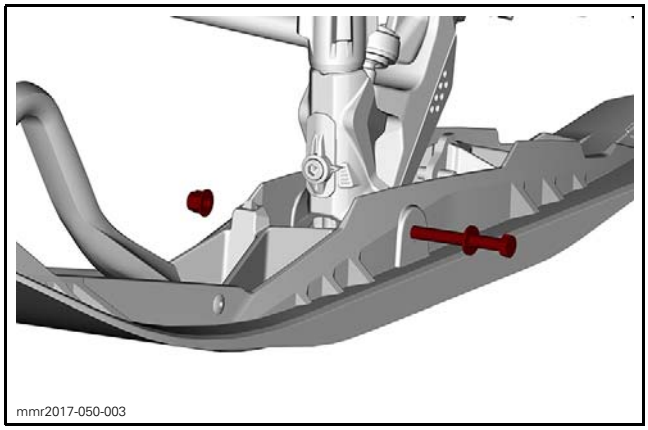


*TYPICAL*

3. Remove ski from vehicle.

## Ski Installation

Make sure bushings are installed in ski holes.

Install the ski stopper. Position indicator in front and make sure the bump in the ski is in the groove of the ski stopper.

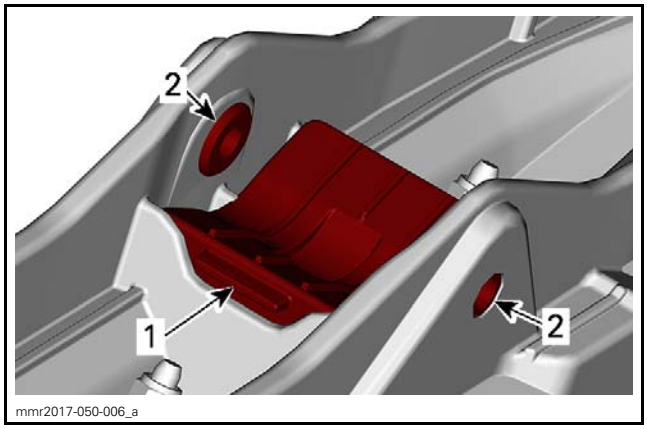


*WITHOUT ADJUSTABLE SKI (PILOT TS)*
*1. Ski stopper*
*2. Bushings*

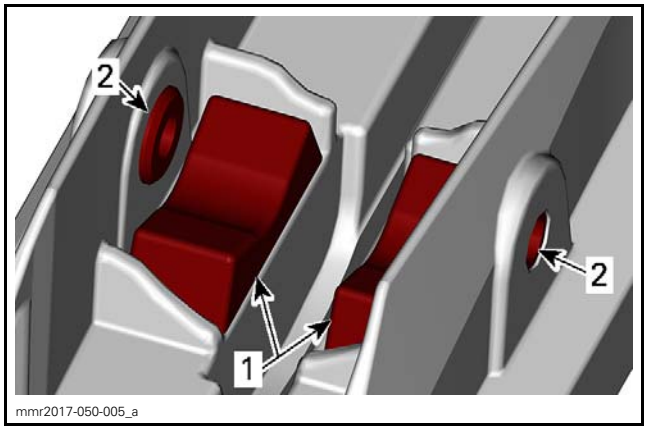


*WITH ADJUSTABLE SKI (PILOT TS)*
*1. Ski stopper*
*2. Bushings*

Install ski on ski leg as per the following illustrations.

*Mountain Models*

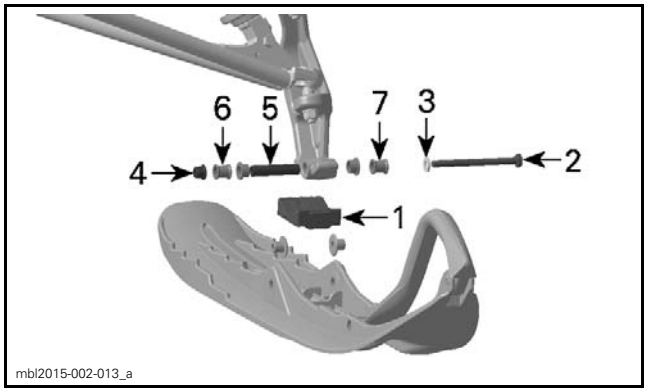


*LH SIDE SHOWN*
*1. Ski stopper*
*2. M10 x 130 screw*
*3. M10 flat washer*
*4. M10 flanged nut*
*5. Ski axel*
*6. Narrow adjustment*
*7. Wide adjustment*

Install the spacer inside for the narrower stance and outside for the wider stance.

**⚠ WARNING**

Proceed to the same setting for both skis.

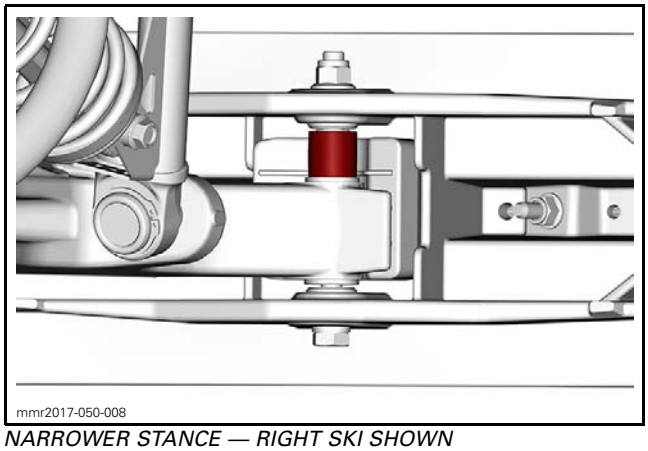


*NARROWER STANCE — RIGHT SKI SHOWN*

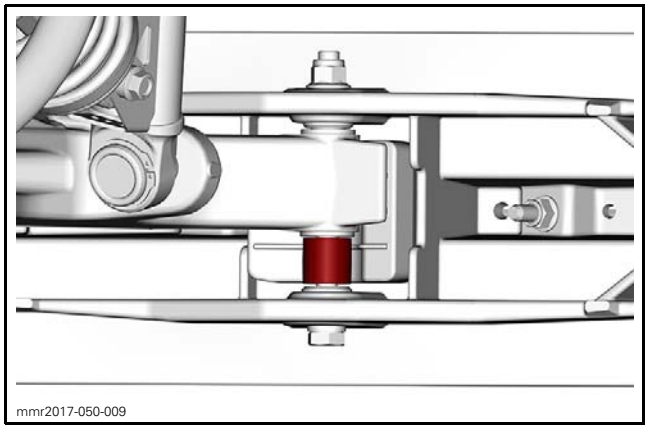


*WIDER STANCE — RIGHT SKI SHOWN*

## *Trail and Crossover Models*

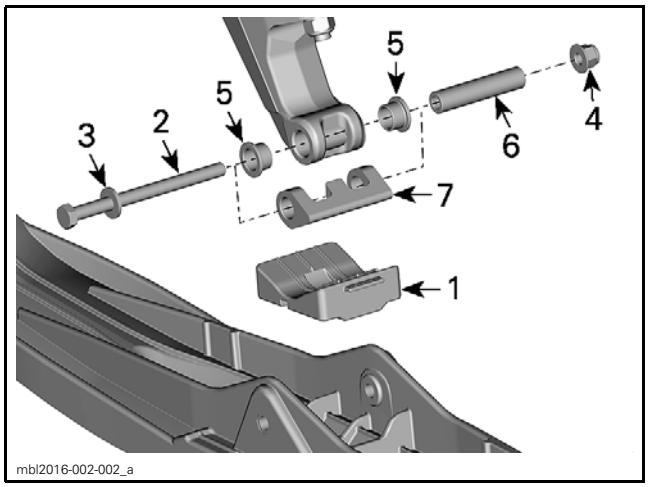


*WITHOUT ADJUSTABLE SKI (PILOT TS)*
1. *Ski stopper*
2. *M10 x 130 screw*
3. *M10 flat washer*
4. *M10 flanged nut*
5. *Ski leg bushings*
6. *Ski leg sleeve*
7. *Ski leg stopper*

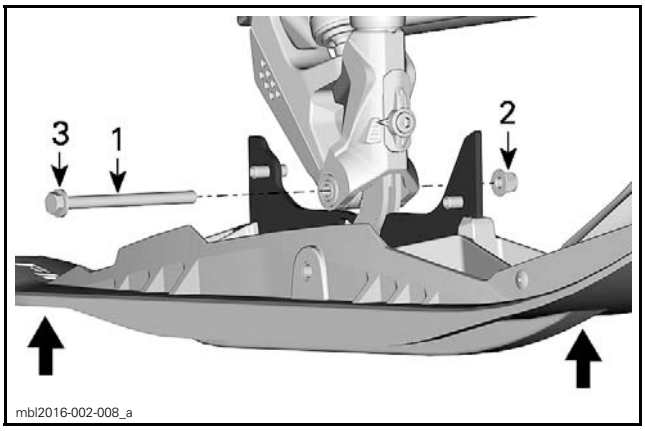


*WITH ADJUSTABLE SKI (PILOT TS)*
1. *Ski screw (previously removed)*
2. *Nut (predelivery kit)*
3. *Washer (predelivery kit)*

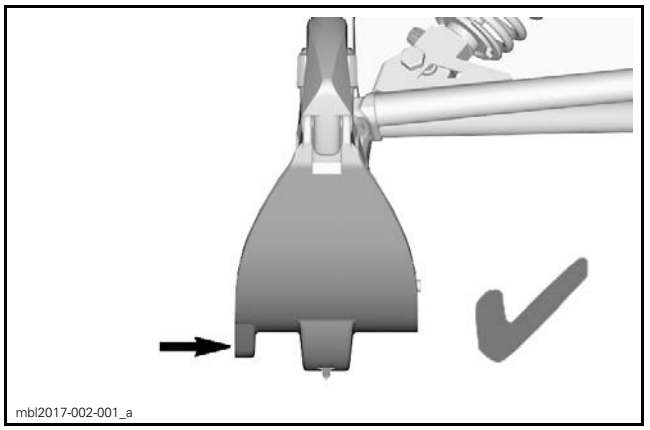


*LATERAL SKI KEEL TOWARDS OUTSIDE (IF EQUIPPED) - CORRECT*

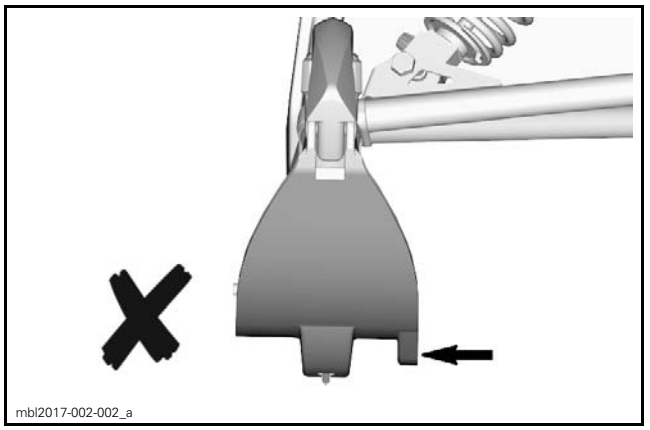


*LATERAL SKI KEEL TOWARDS INSIDE (IF EQUIPPED) - NOT CORRECT*

*All Models*

| TIGHTENING TORQUE | |
|---|---|
| Ski nut | 48 N•m ± 6 N•m (35 lbf•ft ± 4 lbf•ft) |

# ADJUSTABLE SKI MECHANISM

## Inspecting the Adjustable Ski Mechanism

Refer to *PERIODIC MAINTENANCE PROCEDURES*.

## Removing the Adjustable Ski Mechanism

1. Remove the ski and the runner.
2. Slide the sleeve out of the ski leg.

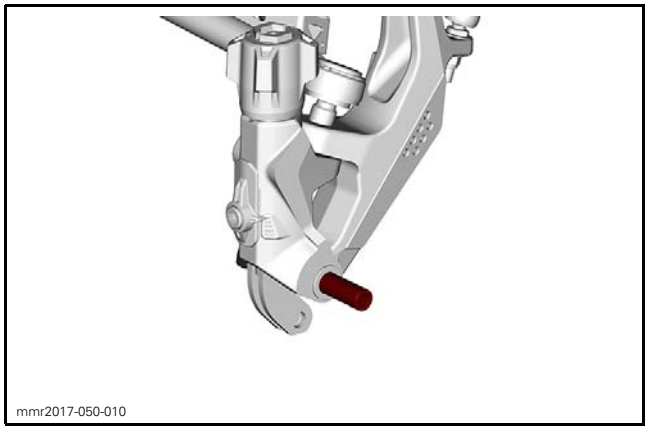


3. Remove the mechanism from the ski leg.

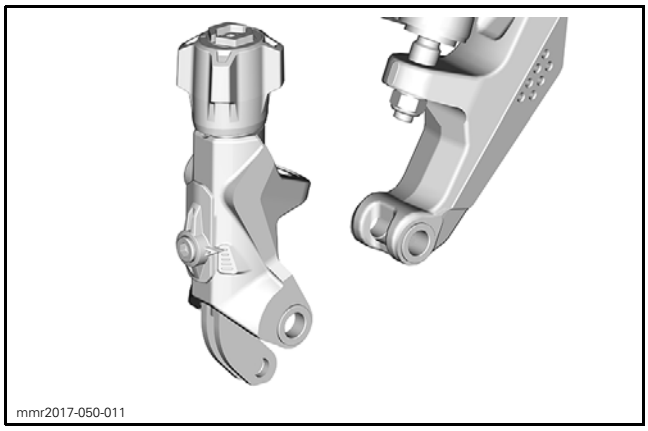


## Adjustable Ski Mechanism Disassembly

1. Remove the adjusting knob and the indicator screws.

NOTE: There is two O-rings on the indicator screw.

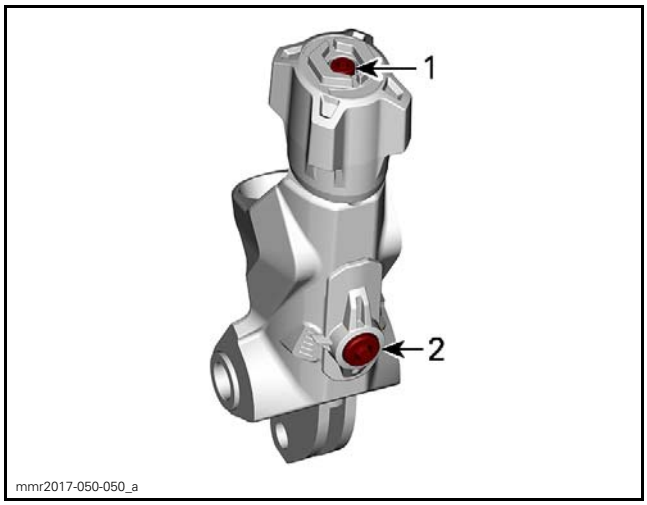


*1. Adjusting knob screw*
*2. Indicator screw*

2. Slide the adjusting screw and the adjusting shaft out of the body.

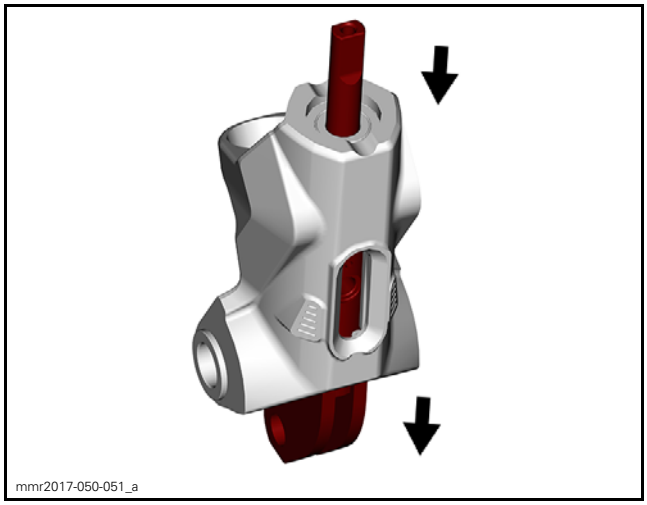


3. Remove the screw from the shaft.

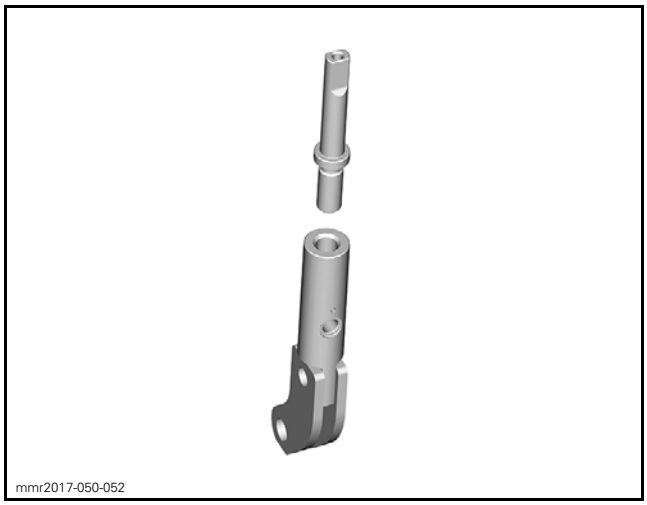

4. Clean the screw thread and the shaft inner thread with XPS BRAKES AND PARTS CLEANER (USA) (P/N 219 701 705) or XPS BRAKES AND PARTS CLEANER (P/N 219 701 776) and a small brush.

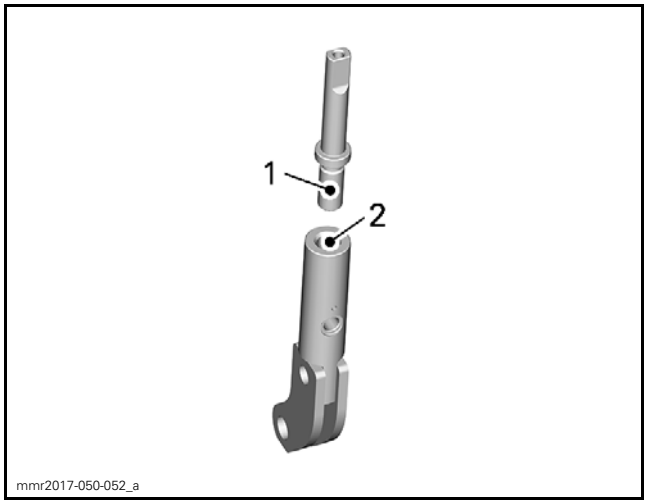


*1. Adjusting screw thread*
*2. Adjusting shaft inner thread*

5. Remove the snap ring.

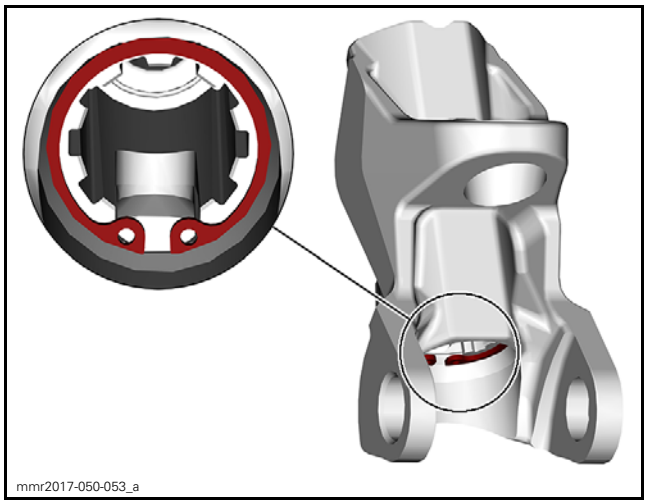


6. Slide the sleeve out of the body.

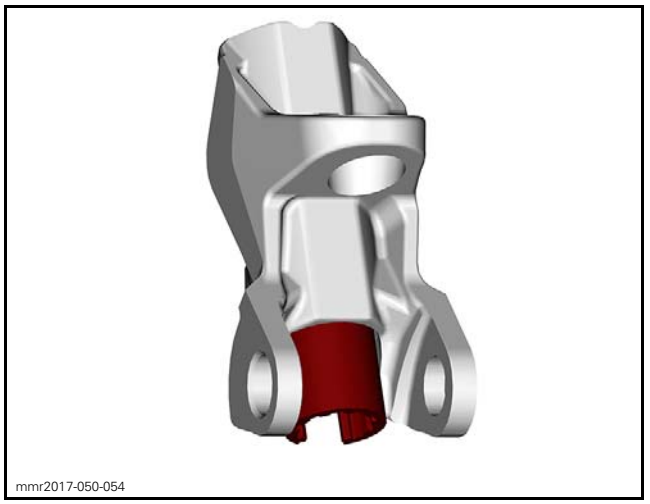


## Inspecting the Adjustable Ski Mechanism

Inspect the mechanism body for cracks. Replace if required.

Inspect the adjusting screw and shaft for:
– Thread damages
– Bending.
Replace if required.

Inspect the sleeve for:
– Cracks
– Spline damages
Replace if required.

Inspect the ball bearing. It should turn freely and smoothly. If bearing needs to be replaced, replace the mechanism assembly.

## Adjustable Ski Mechanism Assembly

The assembly is the reverse of the disassembly procedure. However, pay attention to the following.

Apply XPS SYNTHETIC GREASE (P/N 293 550 010) on screw thread and shaft inner thread.

Install a new knob screw.

| TIGHTENING TORQUE | |
|---|---|
| Adjusting knob screw | 9 N•m ± 1 N•m (80 lbf•**in** ± 9 lbf•**in**) |
| Indicator screw | 24.5 N•m ± 3.5 N•m (18 lbf•ft ± 3 lbf•ft) |

## Installing the Adjustable Ski Mechanism

The installation is the reverse of the removing procedure. However, pay attention to the following.

Ensure all bushings, and the grommet are in place.

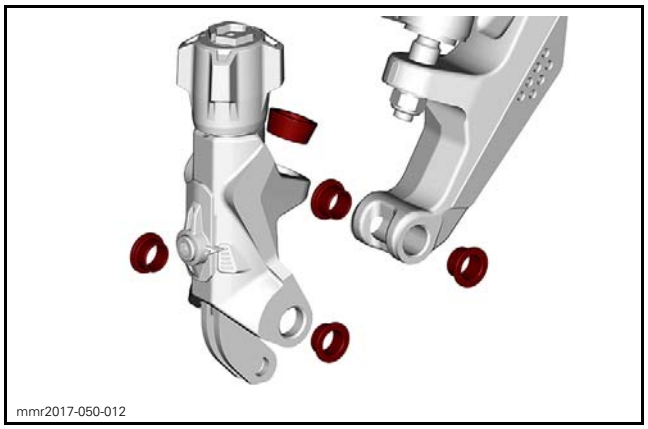
mmr2017-050-012

# SKI HANDLES

## Ski Handle Removal

1. Remove ski from vehicle.
2. Using a 9 mm (3/8 in) drill bit, remove ski handle rivets. Only drill the head of rivet. Do not try to drill all the way through the rivet. Angle the drill bit to reduce the chance of spinning the rivet in the ski.
3. Remove handle from ski.
4. Place handle in hot water for 10 minutes then using a punch, drive the inner part of rivet out of handle.

## Ski Handle Installation

1. To install rivets, use a C-clamp and a short 10 mm socket.
2. Place a rivet in position and insert it into ski and ski handle. Repeat the procedure for the other side.

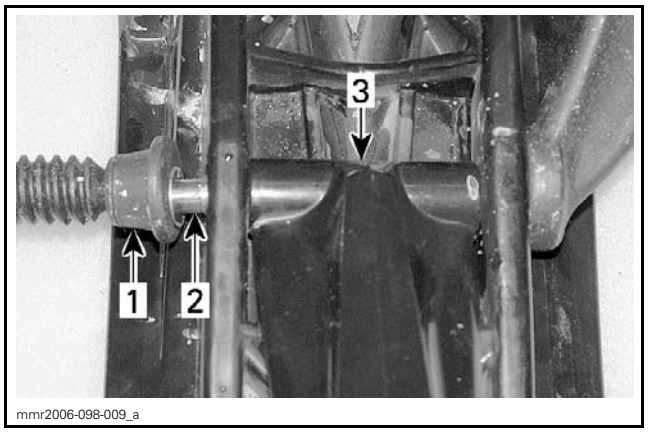

mmr2006-098-009_a

*1. C-clamp*
*2. Rivet*
*3. Handle*

3. When both rivets are installed, use the short 10 mm socket to push rivet heads against the ski.

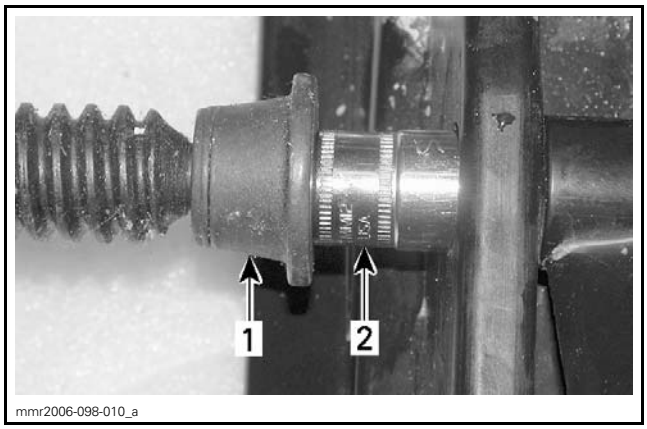

mmr2006-098-010_a

*1. C-clamp*
*2. 10 mm socket*

# SKI FLOTATION EXTENSION (MOUNTAIN MODELS)

## Condition Utilization

The key to the adjustable nose is to reduce the tip-hop that can slow down the vehicle.

In snow conditions with less than 41 cm (16 in) of fresh powder, specially when there is a crust, the narrow tip stays in the snow - which helps to maintain a carve. Also, when side hilling, and crossing a snowmobile rut, the narrow shape moves the impact point - where a change in snow density acts to tip-up the ski - more towards the spindle. This reduces kick back by 50% compared to the wider configuration, minimizing its impact on the attitude of the snowmobile holding a side hill.

In snow conditions with more than 41 cm (16 in) of fresh powder, the wider tip configuration is desirable, as it increases flotation and will bring the nose of the snowmobile up.

## Ski Flotation Extension Removal

1. Remove nuts and screws securing the extension to ski.

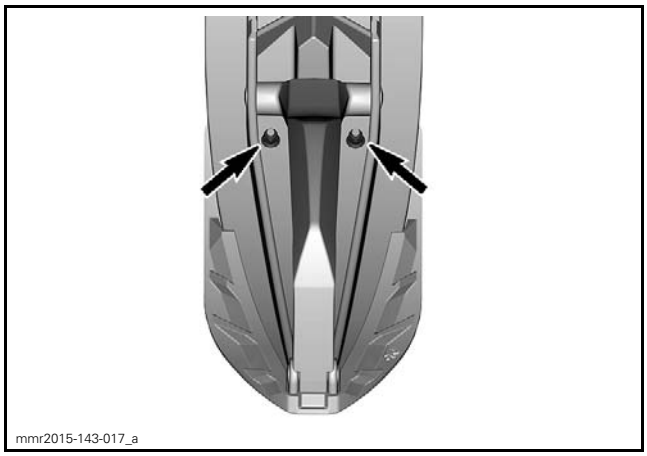
mmr2015-143-017_a

2. Slide the extension off the ski.

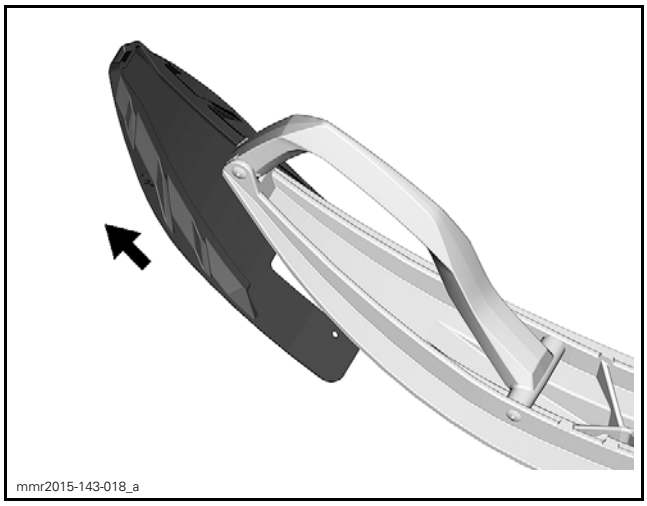
mmr2015-143-018_a

### Ski Flotation Extension Installation

The installation is the reverse of the removal procedure. However, pay attention to the following.

1. Install extension nuts towards up and tighten to specification.

| TIGHTENING TORQUE | |
|---|---|
| Extension nuts | 3 N•m ± 0.5 N•m (27 lbf•**in** ± 4 lbf•**in**) |

## SKI LEG

To replace a ski leg, refer to *FRONT SUSPENSION* subsection.

## HANDLEBAR GRIP

NOTE: To verify or replace heating elements, refer to *ACCESSORIES* subsection.

### Handlebar Grip Removal

Remove grips by pulling while using compressed air, which will inflate or loosen the fit between the grip and handlebar.

mmr2015-143-007

### Handlebar Grip Installation

Insert the handlebar grip on handlebar while blowing compressed air to inflate or loosen the fit between grip and handlebar.

## MULTIFUNCTION SWITCH

### Multifunction Switch Removal

1. Remove steering cover.
2. Cut locking tie securing multifunction switch harness.

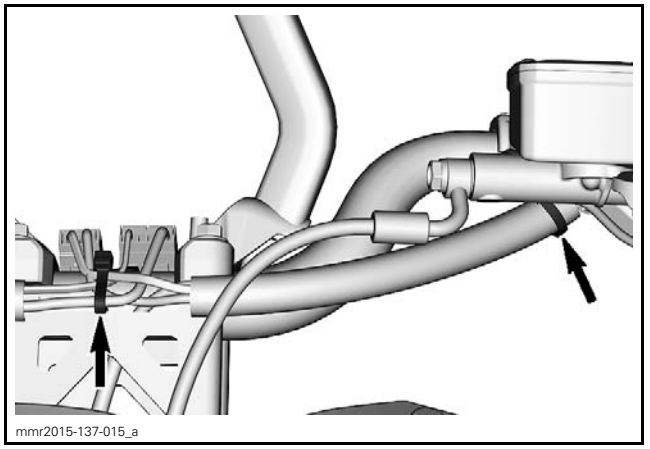
mmr2015-137-015_a

3. Disconnect *LH* connector (4-pin).

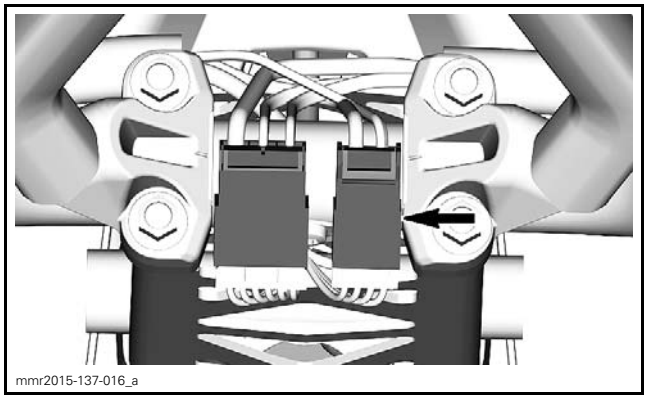
mmr2015-137-016_a

4. Remove multifunction wire terminals from *LH* connector. Refer to *CONNECTORS INFORMATION* subsection.

**NOTICE** Take note of exact positioning of multifunction wire before removing it from the connector.

5. Unscrew master cylinder from handlebar.

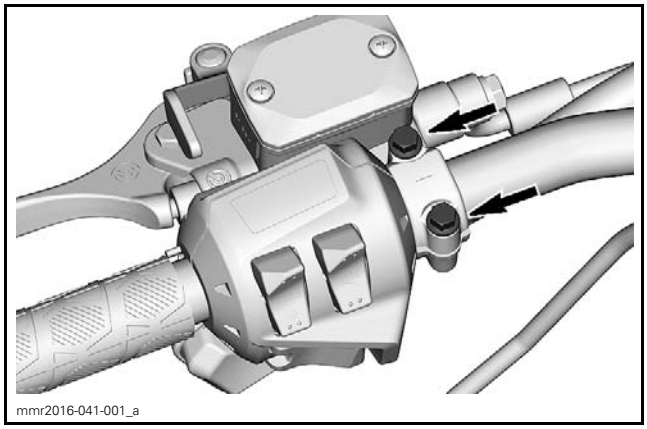
mmr2016-041-001_a

*TRAIL AND CROSSOVER MODELS*

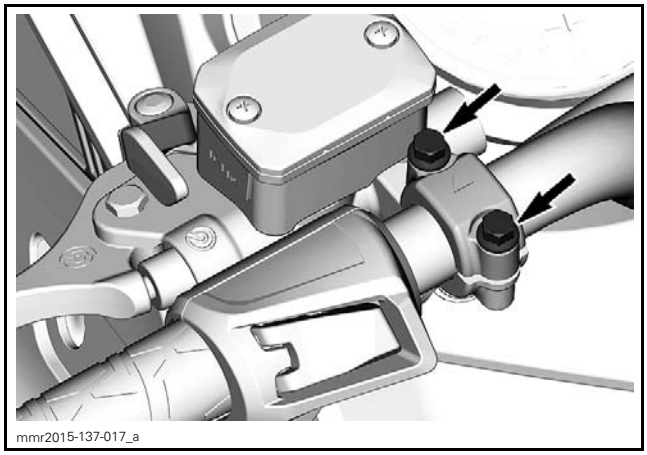
mmr2015-137-017_a

*MOUNTAIN MODELS*

6. Remove master cylinder.

**NOTICE** Do not let master cylinder hang by the hose and do not stretch or twist the hose.

7. Remove multifunction switch screws.

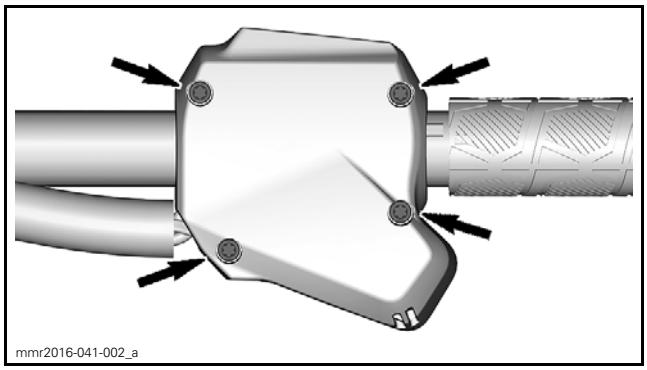
mmr2016-041-002_a

*TRAIL AND CROSSOVER MODELS*

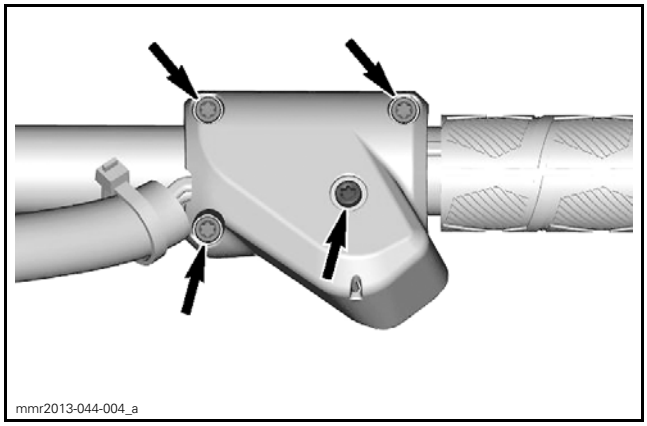
mmr2013-044-004_a

*MOUNTAIN MODELS*

8. Remove multifunction switch and its wire from vehicle.

## Multifunction Switch Installation

The installation is the reverse of the removal procedure. However, pay attention to the following.

Tighten the multifunction switch screws to specification, as per the following sequence.

| TIGHTENING TORQUE | |
|---|---|
| Multifonction switch screws | 2.4 N•m ± 0.2 N•m (21 lbf•**in** ± 2 lbf•**in**) |

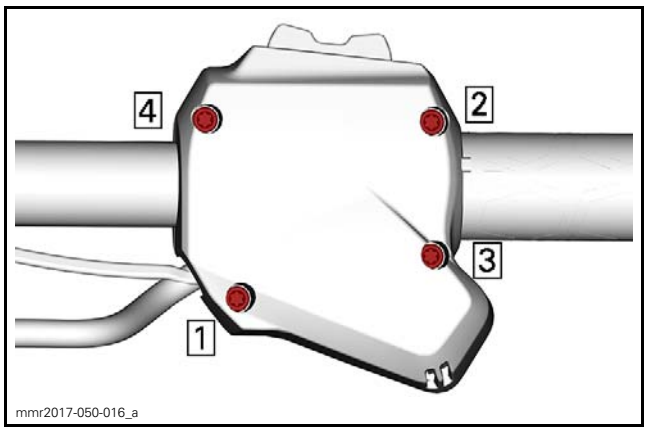

mmr2017-050-016_a

*TRAIL AND CROSSOVER MODELS*

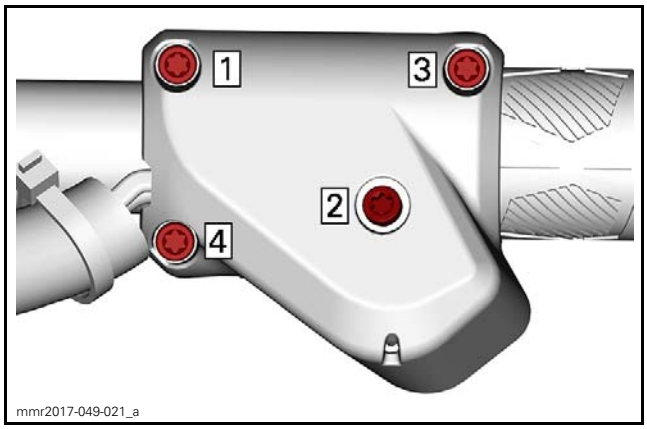


*MOUNTAIN MODELS*

Place the master cylinder on the handlebar.

Install master cylinder retaining clamp with its arrow pointing toward the front of vehicle.

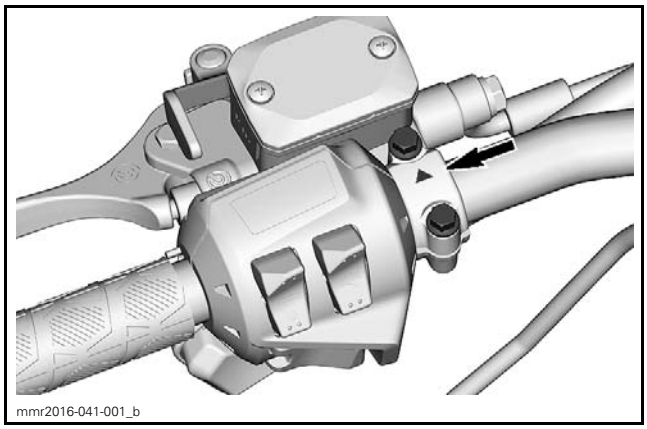


Install master cylinder clamp screws and tighten loosely.

With the handlebar in the straight ahead position, place the reservoir parallel to the ground.

Tighten master cylinder clamp screws to specification.

| TIGHTENING TORQUE | |
|---|---|
| Master cylinder clamp screws | 10 N•m ± 2 N•m (89 lbf•**in** ± 18 lbf•**in**) |

Turn handlebar completely from side to side making sure it does not exert unwanted tension on handlebar wires.

# INTELLIGENT THROTTLE CONTROL (ITC) HOUSING

## ITC Housing Removal

1. Refer to appropriate subsection and remove:
– Side panels
– Multifunction gauge
– Upper body module
2. Remove steering cover from handlebar.
3. Remove the support console cap.

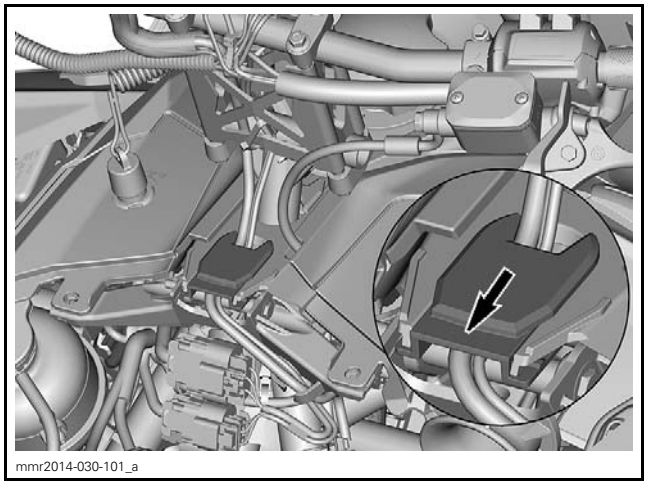


4. Disconnect ITC connector and remove harness from hooks.

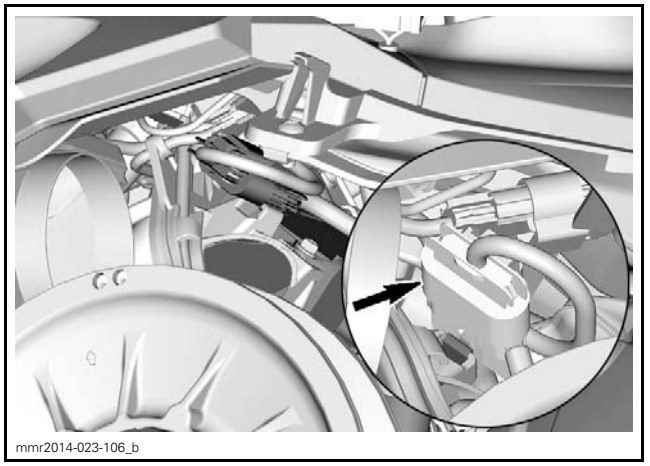


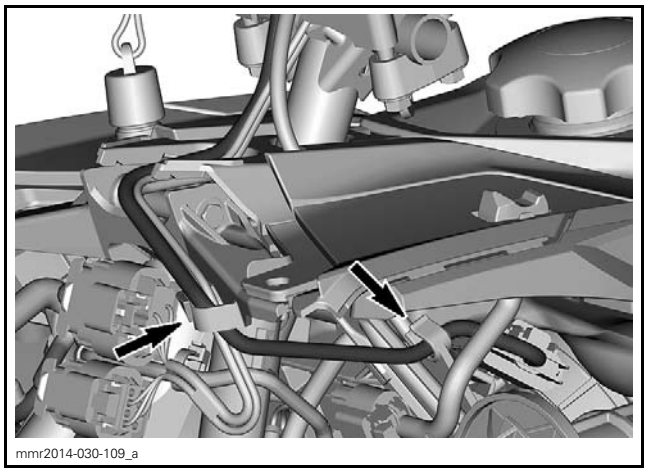


5. Cut locking ties securing ITC housing harness.

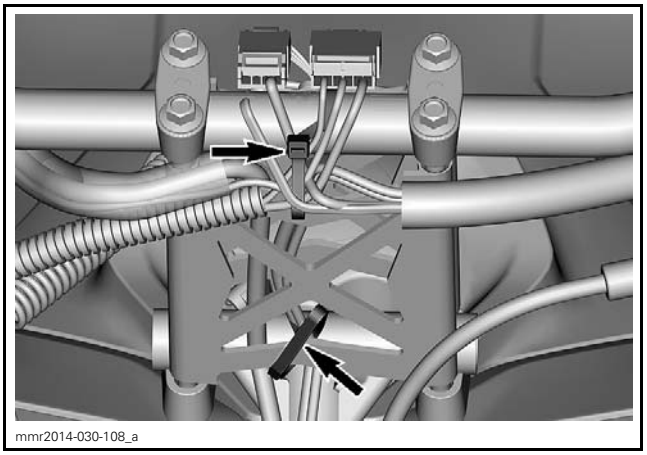
mmr2014-030-108_a

6. Disconnect *RH* steering connector (6-pin).

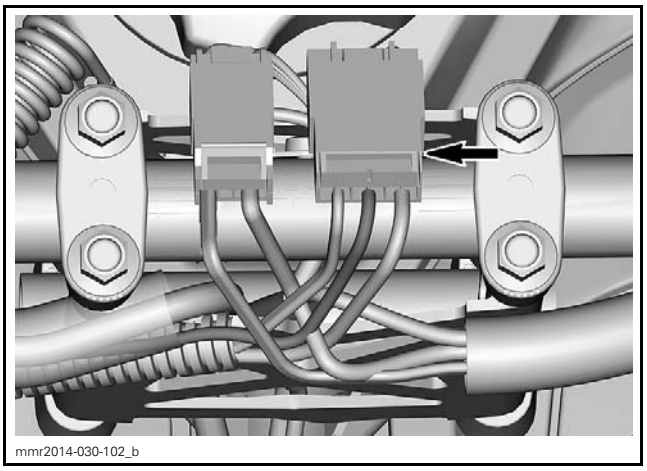
mmr2014-030-102_b

7. Remove ITC housing and emergency stop support retaining screws.

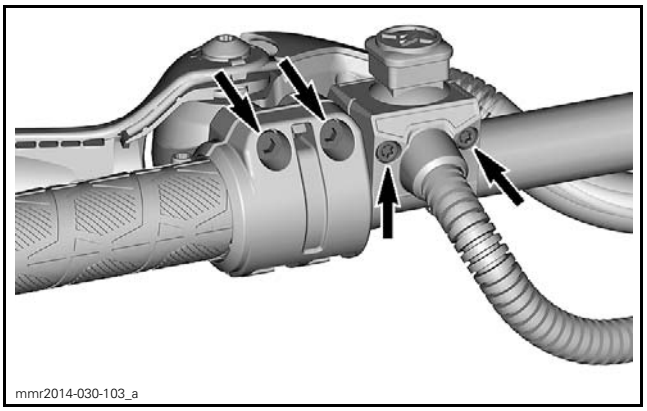
mmr2014-030-103_a

## ITC Housing Installation

The installation is the reverse of the removal procedure. However, pay attention to the following.

Tighten emergency stop support retaining screws to specification.

| TIGHTENING TORQUE | |
|---|---|
| Emergency stop support retaining screws | 2.2 N•m ± 0.2 N•m (19 lbf•**in** ± 2 lbf•**in**) |

Tighten ITC housing retaining screws to specification.

| TIGHTENING TORQUE | |
|---|---|
| ITC housing retaining screws | 1.9 N•m ± 0.1 N•m (17 lbf•**in** ± 1 lbf•**in**) |

Turn handlebar completely from side to side making sure it does not exert unwanted tension on handlebar wires.

# THROTTLE LEVER HOUSING

## Removing the Throttle Lever Housing

1. Remove steering cover from handlebar.
2. Disconnect *RH* steering connector (6-pin).

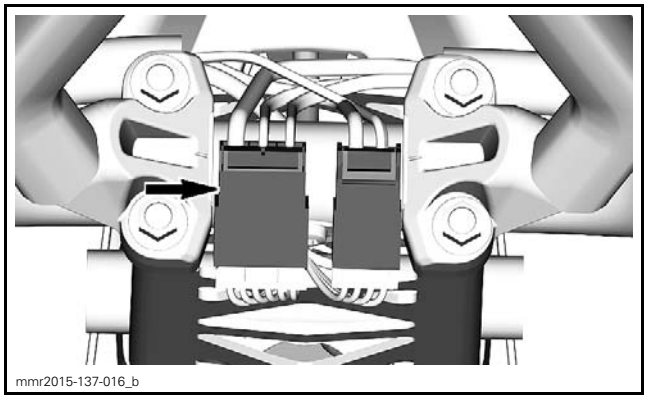
mmr2015-137-016_b

3. Remove the heater element wire terminals from connector. Refer to *CONNECTORS INFORMATION* subsection.

**NOTICE** **Take note of exact positioning of multifunction wire before removing it from the connector.**

4. Disconnect throttle cable from throttle lever.
5. Remove both throttle lever pivot screws.

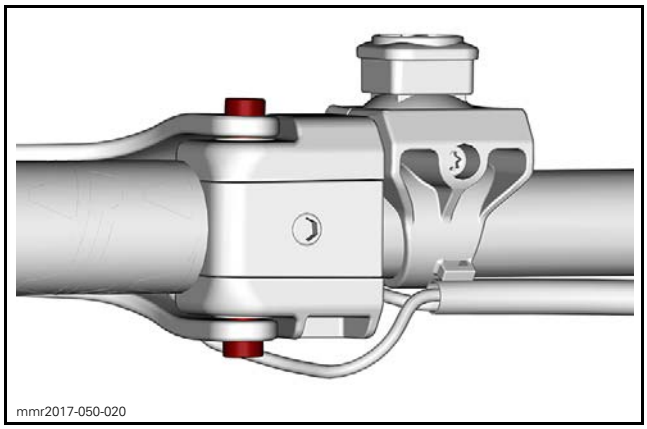


6. Loosen the emergency stop switch screw and slide the switch towards center of handlebar.

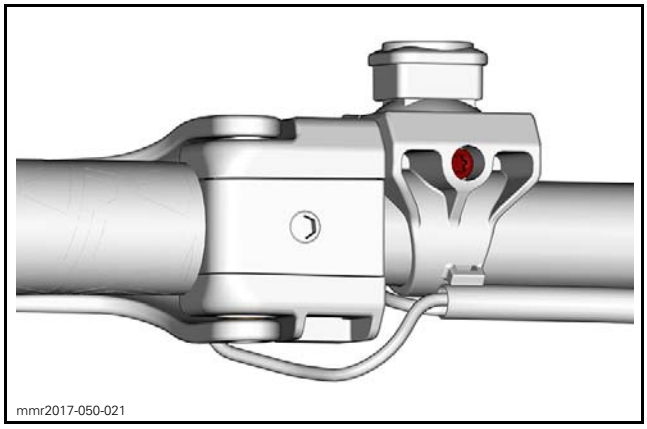


7. Pull the heater element wire out of the throttle lever housing.

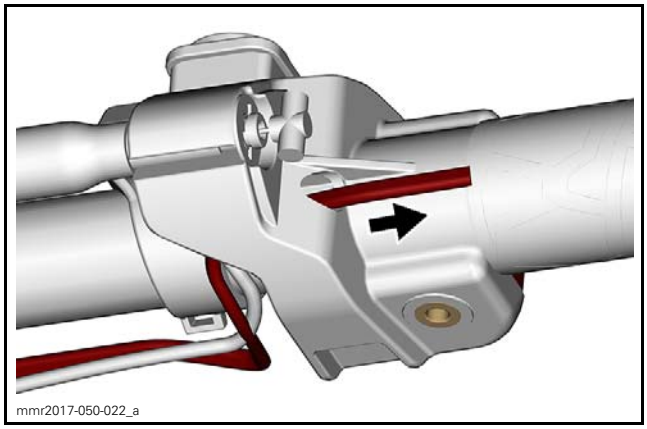


8. Remove throttle cable circlip.

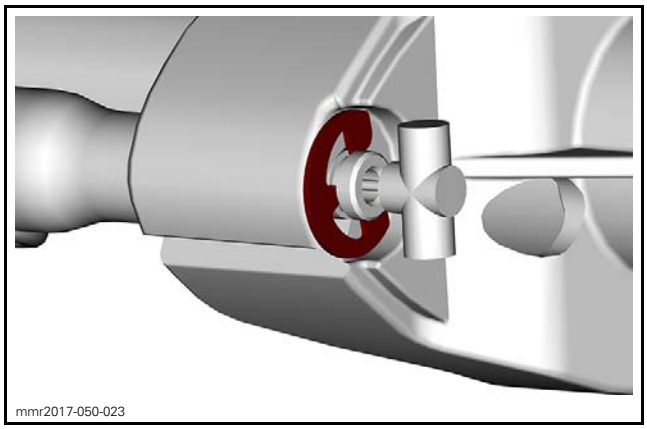


9. Remove the throttle cable from the housing.

10. Loosen throttle lever housing retaining screw.

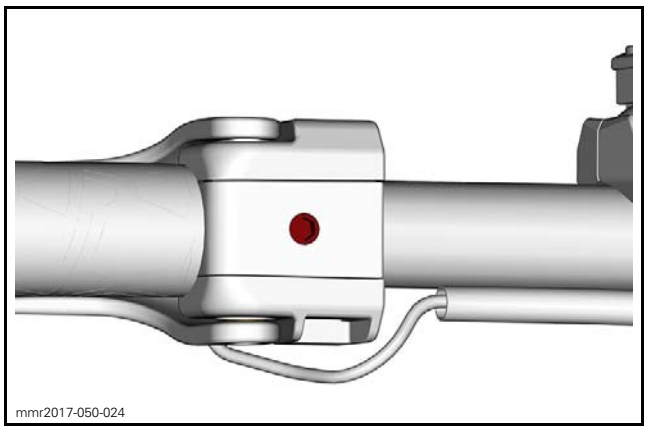


11. Insert a flat screwdriver between the housing and the clamp to release the tab.

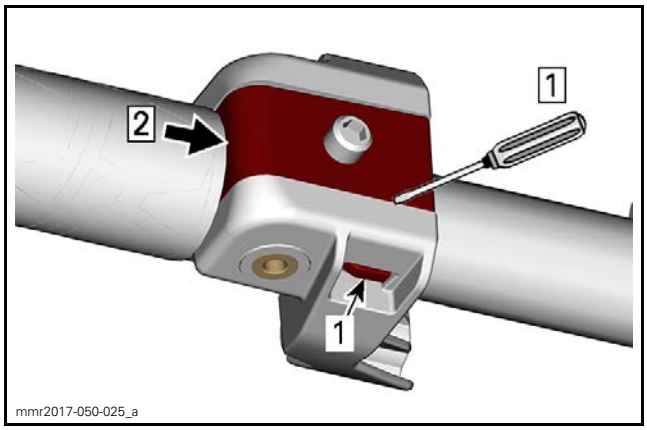


*1. Tab*

12. Slide the clamp out of the housing

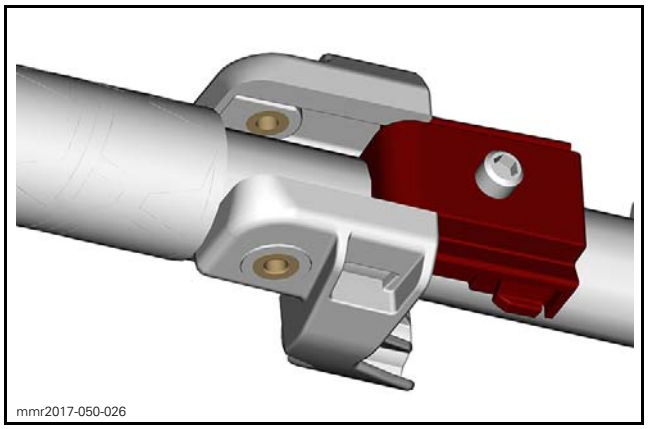
mmr2017-050-026

13. Remove throttle lever housing from handlebar.

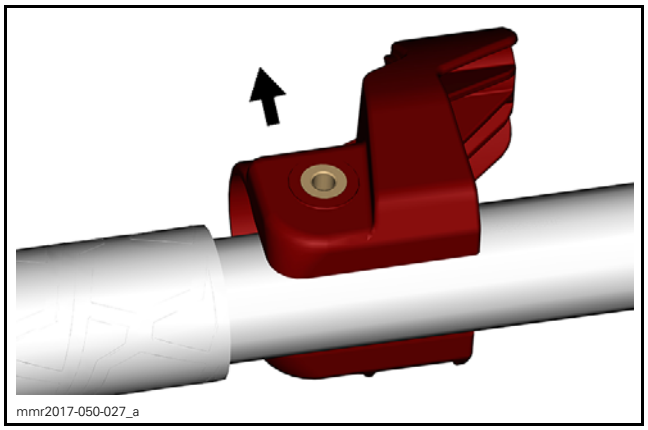
mmr2017-050-027_a

## Installing the Throttle Lever Housing

The installation is the reverse of the removal procedure. However, pay attention to the following.

Tighten throttle lever pivot screws to specification.

| TIGHTENING TORQUE | |
|---|---|
| Throttle lever retaining screws | 1.5 N•m ± 0.2 N•m (13 lbf•**in** ± 2 lbf•**in**) |

Turn handlebar completely from side to side making sure it does not exert unwanted tension on handlebar wires.

# THROTTLE LEVER

## Throttle Lever Removal

1. Remove steering cover from handlebar.
2. Disconnect *RH* steering connector (6-pin).

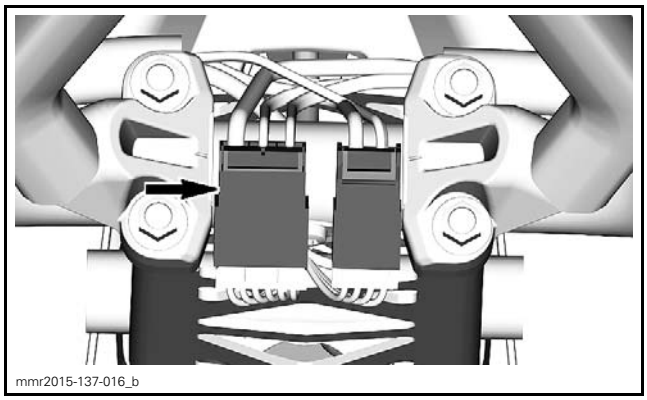
mmr2015-137-016_b

3. Remove throttle lever heater wire terminals from *RH* connector. Refer to *CONNECTOR INFORMATION* subsection.

**NOTICE** **Take note of exact positioning of throttle lever heater before removing it from the connector.**

4. Disconnect throttle cable from throttle lever.
5. Remove throttle lever retaining screws.

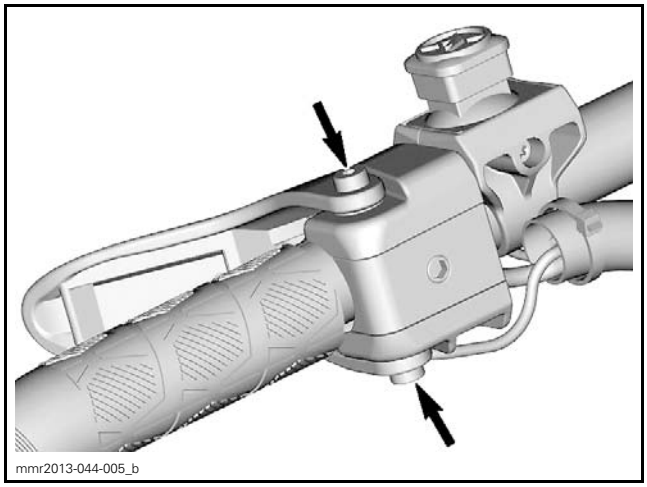
mmr2013-044-005_b

6. Remove throttle lever and heater wires.

## Throttle Lever Installation

The installation is the reverse of the removal procedure. However, pay attention to the following.

Tighten throttle lever retaining screws to specification.

| TIGHTENING TORQUE | |
|---|---|
| Throttle lever retaining screws | 1.5 N•m (13 lbf•**in**) |

Turn handlebar completely from side to side making sure it does not exert unwanted tension on handlebar wires.

# HANDLEBAR

## Handlebar Removal

NOTE: If the handlebar must be changed, remove all components (handlebar grip, throttle lever housing, etc.) before removing it from vehicle.

1. Remove steering cover.
2. Unplug both *RH* and *LH* connectors.

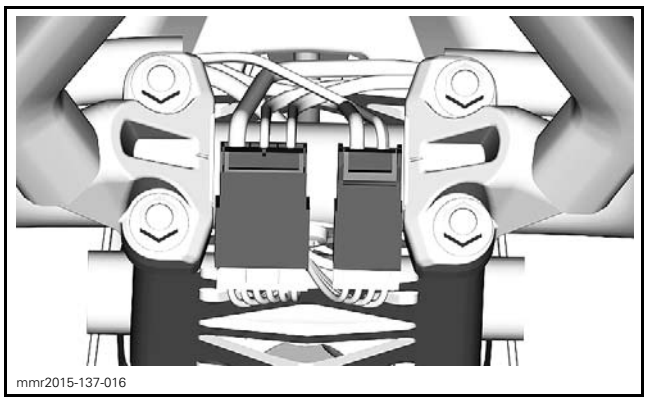
mmr2015-137-016

3. Remove handlebar ground screw.
4. Remove handlebar retaining clamp screws.

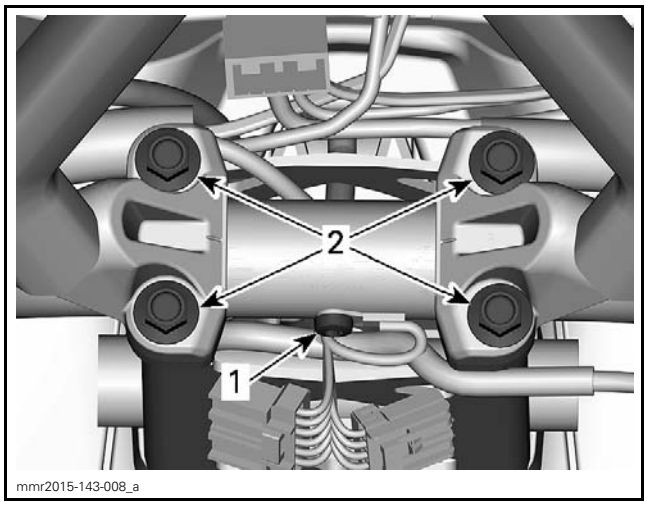

mmr2015-143-008_a

*1. Ground screw*
*2. Handlebar clamp screws*

5. Remove handlebar from handlebar extension.

## Handlebar Inspection

1. Inspect the handlebar for:
   - Damages
   - Cracks
   - Bending.
2. Replace if any of these problems is detected.

**⚠ WARNING**

**Do not try to repair a defective handlebar.**

3. Check handlebar clamps for cracks or distortion, replace if necessary.

## Handlebar Installation

The installation is the reverse of the removal procedure. However, pay attention to the following.

Tighten handlebar clamps screws to specification.

| TIGHTENING TORQUE | |
|---|---|
| Clamp screws | 24.5 N•m ± 3.5 N•m (18 lbf•ft ± 3 lbf•ft) |

Ensure handlebar clamps are parallel with handlebar extension.

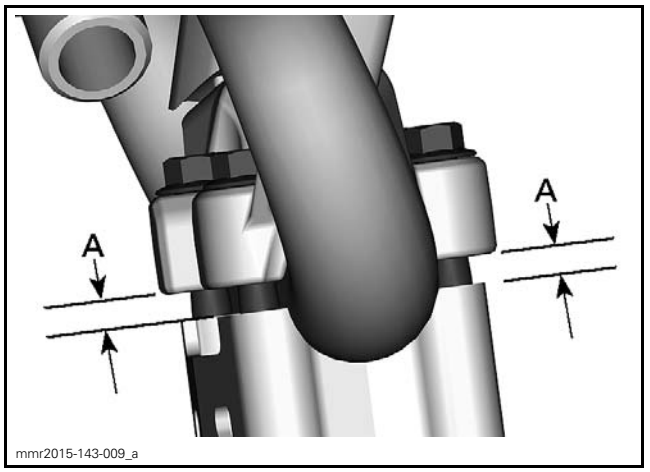

mmr2015-143-009_a

*A. Must be equal on each side*

Turn handlebar completely from side to side making sure it does not exert unwanted tension on handlebar wires.

# HANDLEBAR EXTENSION

## Handlebar Extension Removal

1. Proceed with *HANDLEBAR REMOVAL*, see procedure in this subsection.
2. Remove screws retaining the extension to steering column.

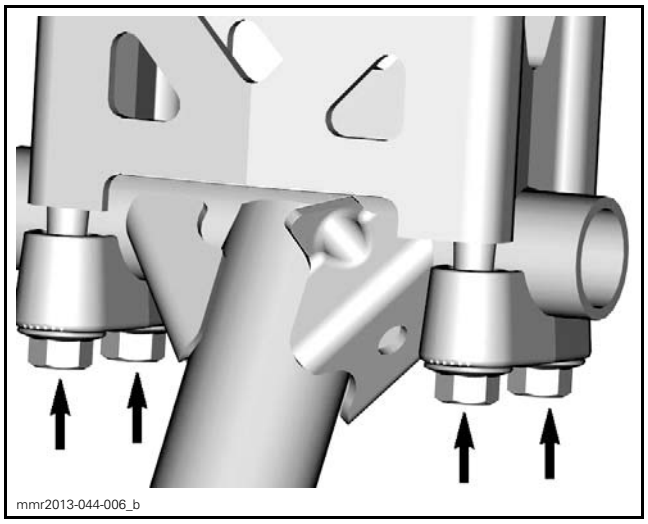


3. Remove handlebar extension from vehicle.

## Handlebar Extension Inspection

1. Check handlebar extension for:
   – Cracks
   – Bending
   – Other damages.
2. Replace if any of these problems is detected.

**⚠ WARNING**

**Do not try to repair a defective handlebar extension.**

## Handlebar Extension Installation

The installation is the reverse of the removal procedure. However, pay attention to the following.

When installing handlebar extension, ensure to leave a gap between handlebar extension and stop block on steering column.

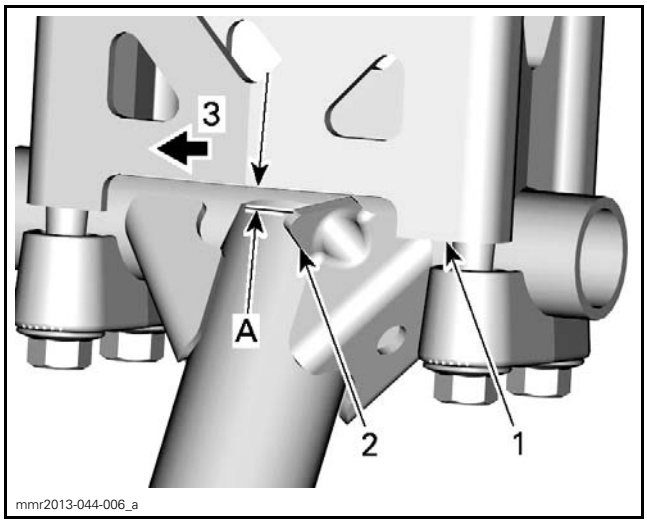


*1. Bottom of handlebar extension*
*2. Steering column stop block*
*3. Front of vehicle*

*A. 1 mm (.039 in) minimum*

Torque handlebar extension retaining screws to specification.

| TIGHTENING TORQUE | |
|---|---|
| Clamp screws | 24.5 N•m ± 3.5 N•m (18 lbf•ft ± 3 lbf•ft) |

Ensure extension clamps are parallel with handlebar extension.

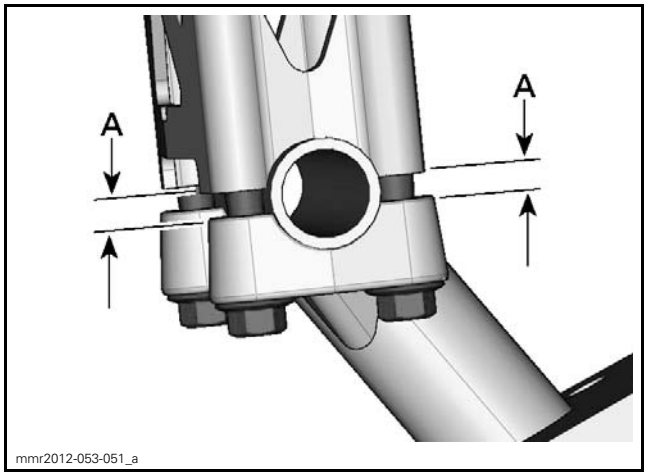


*A. Must be equal on each side*

**⚠ WARNING**

**Handlebar and it's components must not get in contact with anything (windshield, fuel tank cap, etc.) when steering is turned.**

# TIE-RODS

NOTE: The same procedure is applied on RH and LH side.

## Tie-Rod Inspection

Check tie-rod ends for looseness. If play is excessive, replace tie-rod.

Check if the tie-rod is bent, cracked or otherwise damaged. Replace if necessary.

## Tie-Rod Removal

1. Remove the tie-rod ends from the steering column and ski leg.

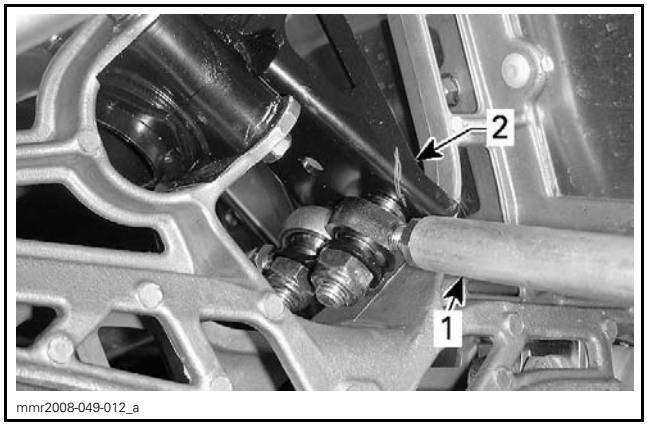


*1. Tie-rod*
*2. Steering column*

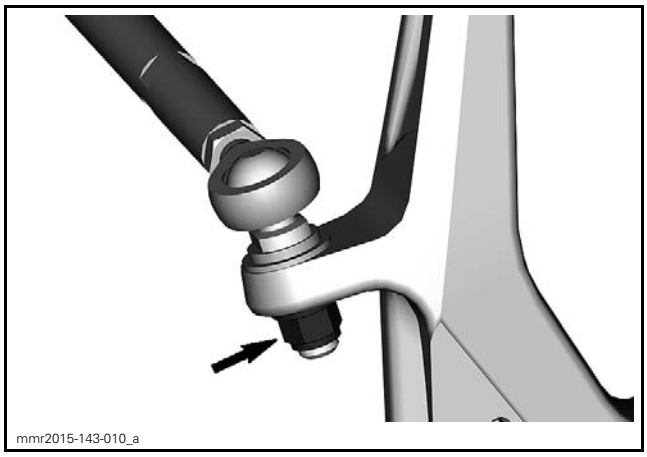


2. Remove tie-rod from vehicle.

## Tie-Rod Installation

1. The installation is the reverse of the removal procedure. However, pay attention to the following.
2. Adjust the length of all tie-rod end to 30 mm (1.181 in) without tightening the jam nuts.

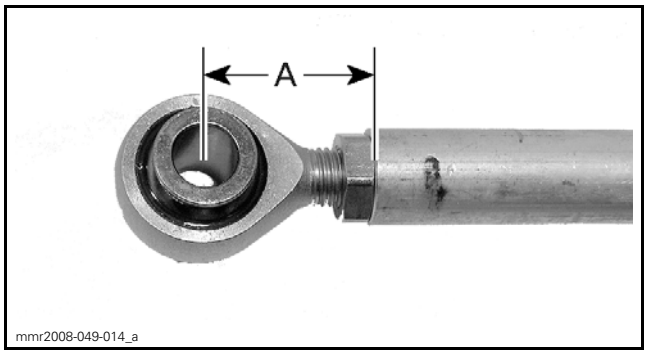


*A. 30 mm (1.181 in)*

**⚠ WARNING**

**The maximum tie-rod end length not engaged in the tie rod must not exceed 34 mm (1.339 in).**

3. Install tie-rod with the groove on ski leg side.

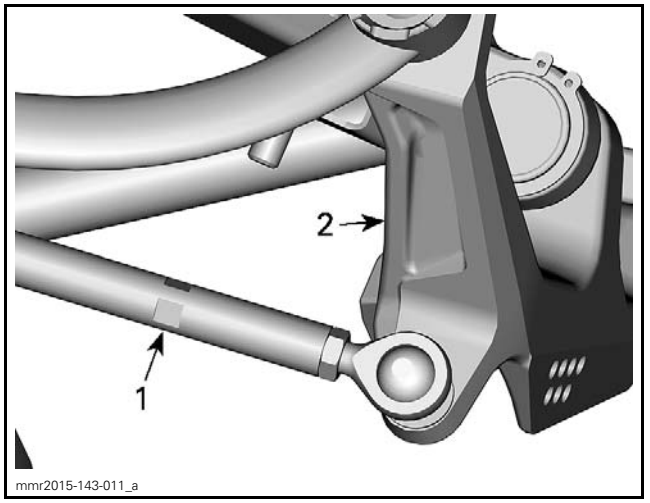


*1. Tie-rod groove*
*2. Ski leg*

4. On ski leg side, install hardened washers as shown.

NOTE: When steering column is installed at the **front** position, **install** spacers against the ski legs as shown. Refer to *STEERING COLUMN* in this subsection.

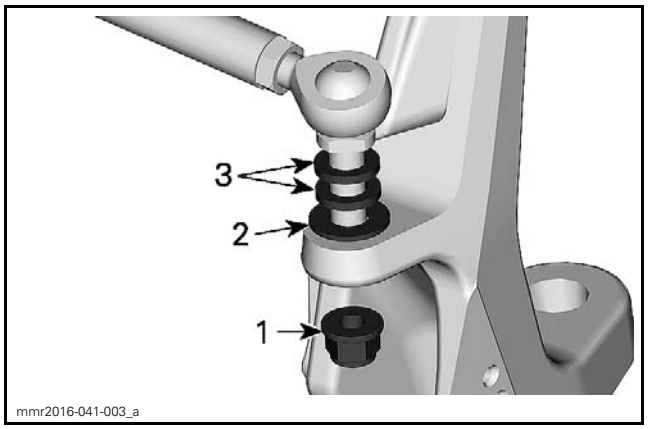


*WHEN STEERING COLUMN IS INSTALLED AT THE* **FRONT** *POSITION*
1. *Nut*
2. *Washer*
3. *Spacers (2)*

NOTE: When steering column is installed at the **rear** position, **remove** spacers against the ski legs as shown. Refer to *STEERING COLUMN* in this subsection.

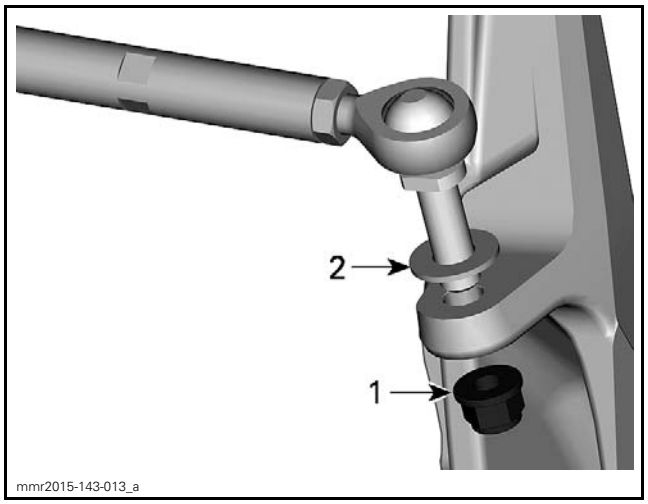


*WHEN STEERING COLUMN IS INSTALLED AT THE* **REAR** *POSITION*
1. *Washer*
2. *Nut*

5. Install nuts retaining tie-rod ends and tighten to specification.

| TIGHTENING TORQUE | |
|---|---|
| Tie-rod end nuts | 48 N•m ± 6 N•m (35 lbf•ft ± 4 lbf•ft) |

6. Perform the steering alignment, refer to *STEERING ALIGNMENT* in this section.

# STEERING COLUMN

## Steering Column Removal

1. Refer to *BODY* subsection and remove:
   – Upper body module
   – Rear console
   – Bottom pan cover
2. Remove *HANDLEBAR EXTENSION* from steering column. See procedure in this section.
3. Remove screws securing steering column upper support.
4. Remove the console front cap.

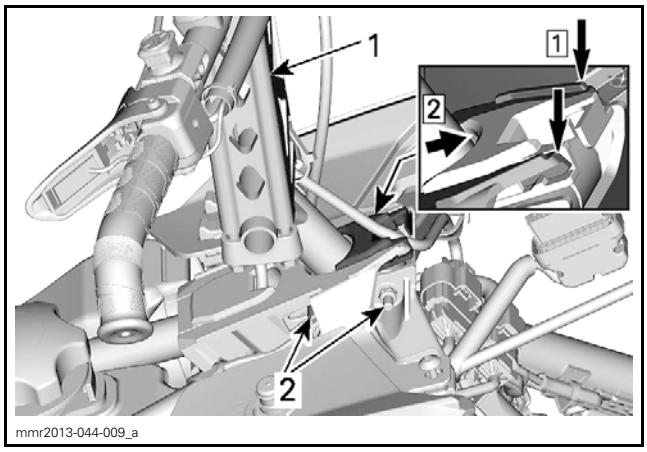


*RH SIDE SHOWN*

*Step 1: Push console support down and hold*
*Step 2: Pull out console front cap*

1. *Handlebar extension*
2. *Screws of steering column upper support*

5. From outside engine compartment, remove the tie-rod ends from the steering column.

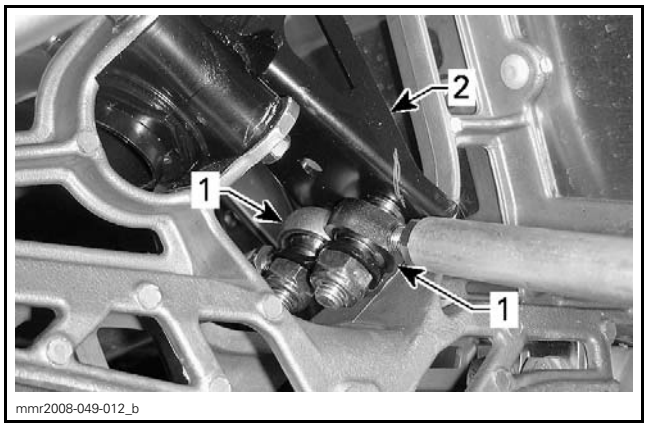


*RH SIDE SHOWN*
1. *Tie-rod ends*
2. *Steering column*

6. Remove screws securing the steering column lower support.

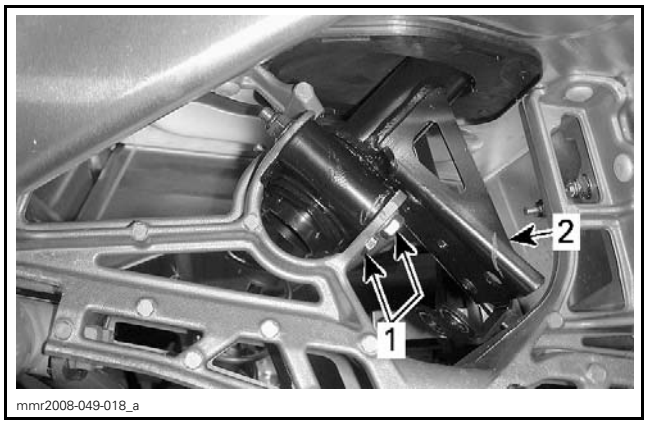


*RH SIDE SHOWN*
1. *Steering column support screws*
2. *Steering column*

7. From inside engine compartment, remove the steering column plate.

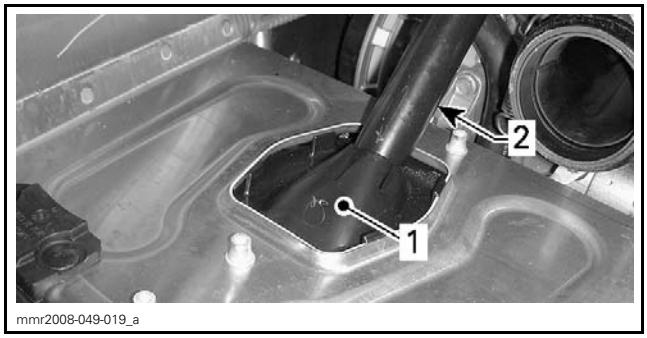


*LH SIDE SHOWN*
1. *Steering column plate*
2. *Steering column*

8. Pull steering column from top.

## Steering Column Inspection

Check if steering column is:
- Cracked
- Bent
- Twisted
- Otherwise damaged.

Replace steering column if necessary.

**⚠ WARNING**

**Do not try to repair a defective steering column.**

## Steering Column Position Adjustment

The steering column may be installed in one of two positions as desired.

### Installation at the Front Position

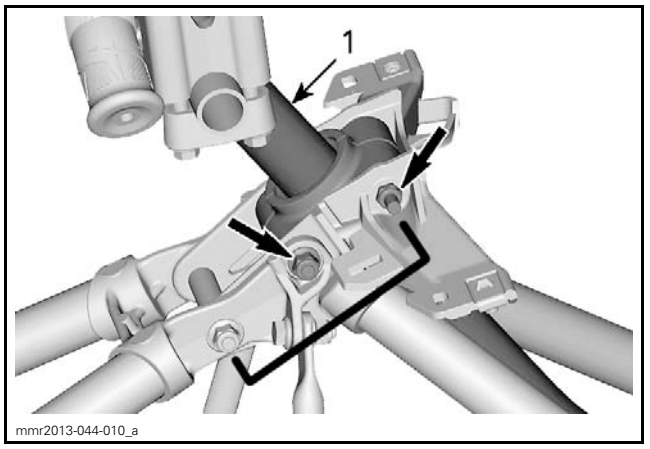


*FRONT POSITION — PARTS REMOVED FOR CLARITY*
1. *Steering column*

- Install the console short cap at the front and the long cap at rear of steering column.
- **Install** spacers against ski legs. Refer to *TIE-ROD INSTALLATION* in this subsection.

### Installation at the Rear Position

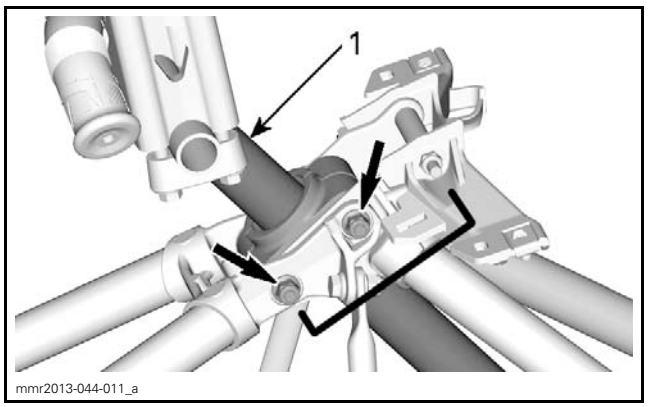


*REAR POSITION — PARTS REMOVED FOR CLARITY*
1. *Steering column*

- Install the console short cap at the rear and the long cap in front of steering column
- **Remove** the spacers against ski legs. Refer to *TIE-ROD INSTALLATION* in this subsection.

## Steering Column Installation

The installation is the reverse of the removal procedure. However, pay attention to the followings.

1. Apply SUSPENSION GREASE (P/N 293 550 033) on vibration dampers before installing upper and lower supports.
2. Install **NEW** elastic nuts on the steering column retaining screws.
3. Refer to exploded view for proper tightening torque.

# STEERING SYSTEM

## SERVICE PRODUCTS

| Description | Part Number | Page |
|---|---|---|
| SYNTHETIC GREASE | 779162 | 12 |
| SYNTHETIC SUSPENSION GREASE | 779163 | 8, 21 |
| XPS BRAKES AND PARTS CLEANER (USA) | 219 701 705 | 11 |
| XPS BRAKES AND PARTS CLEANER | 219 701 776 | 11 |

## SKIS (WITHOUT ADJUSTABLE RUNNER)

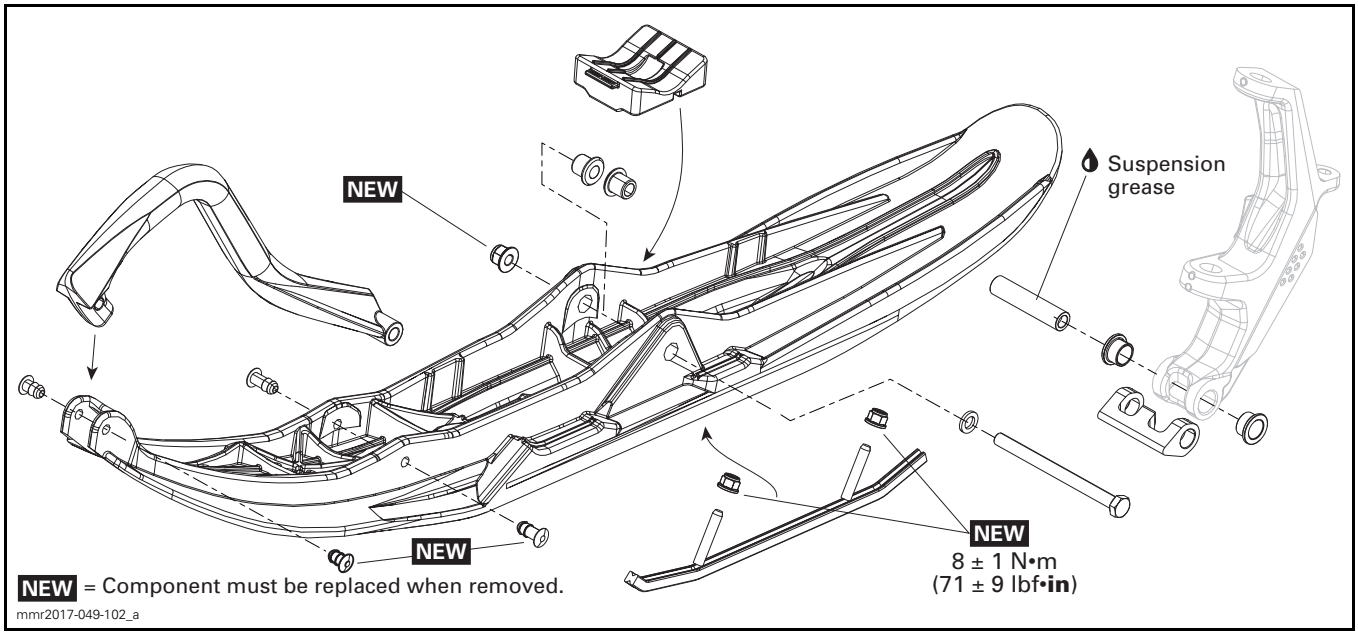

# SKIS (WITH ADJUSTABLE RUNNER)

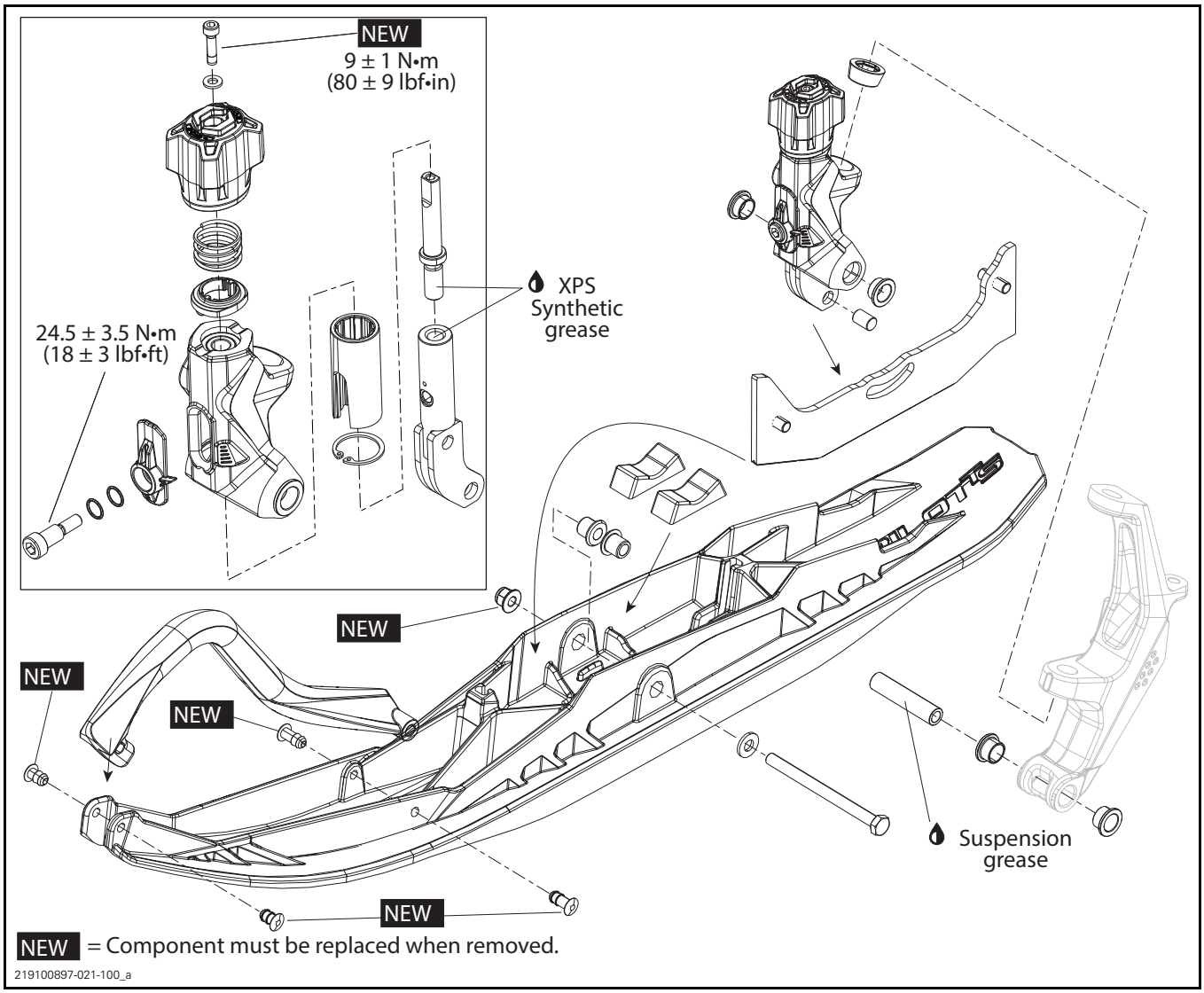

# STEERING COLUMN AND TIE-RODS - PITMAN ARM

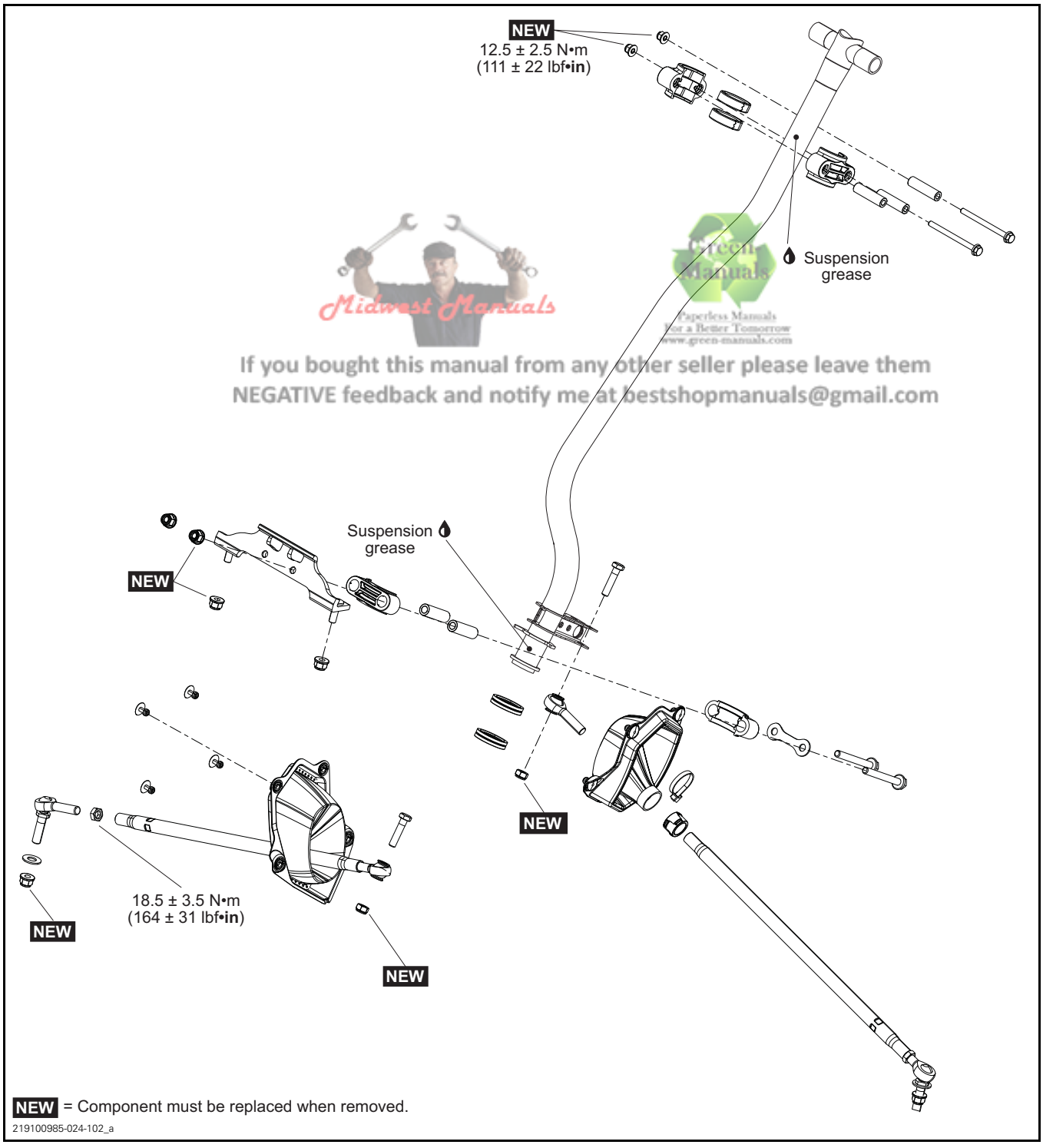


Midwest Manuals
Green Manuals
Paperless Manuals For a Better Tomorrow www.green-manuals.com
If you bought this manual from any other seller please leave them NEGATIVE feedback and notify me at bestshopmanuals@gmail.com

# STEERING COLUMN AND TIE-RODS - RACK

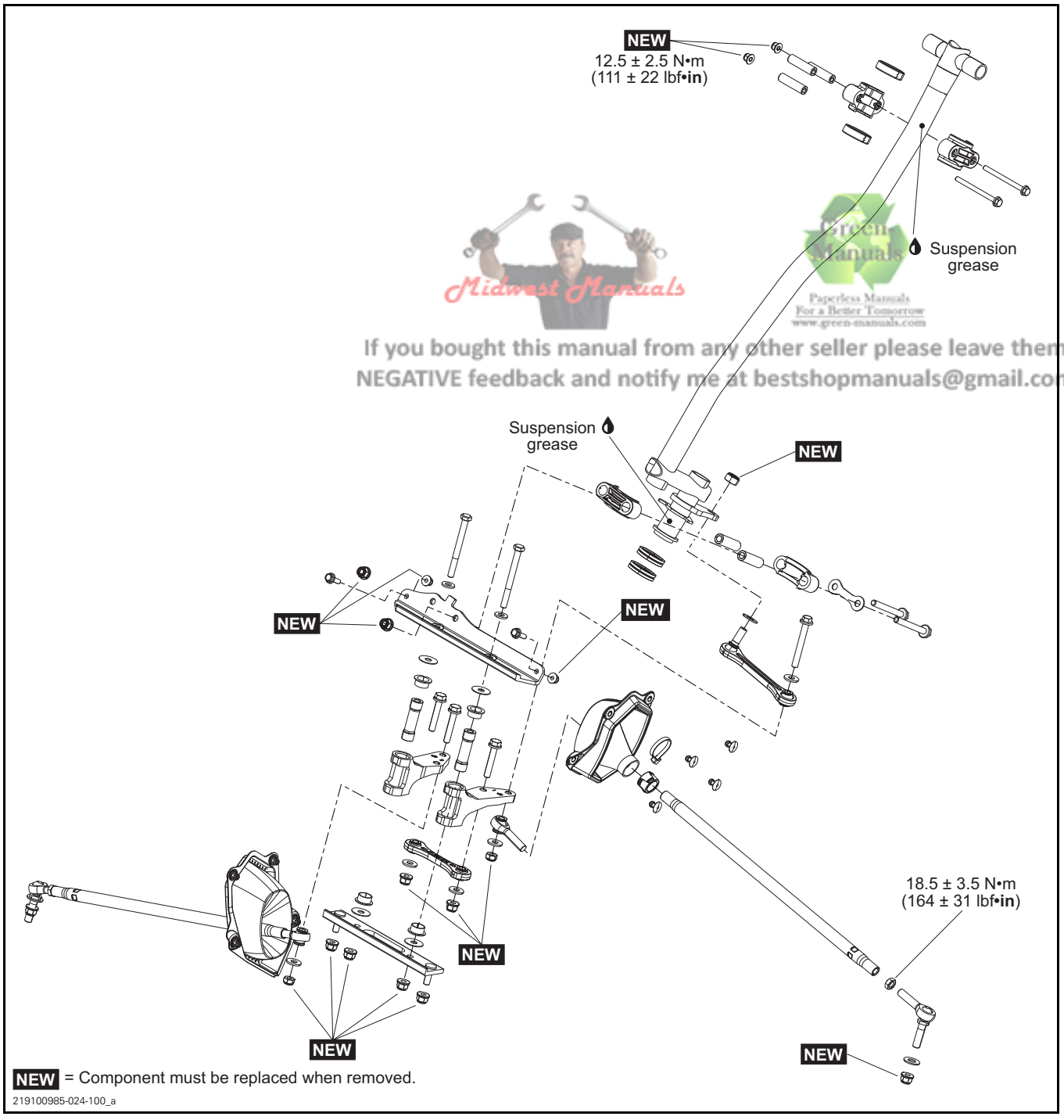


Midwest Manuals
Green Manuals
Paperless Manuals
For a Better Tomorrow
www.green-manuals.com
If you bought this manual from any other seller please leave them
NEGATIVE feedback and notify me at bestshopmanuals@gmail.com

# HANDLEBAR

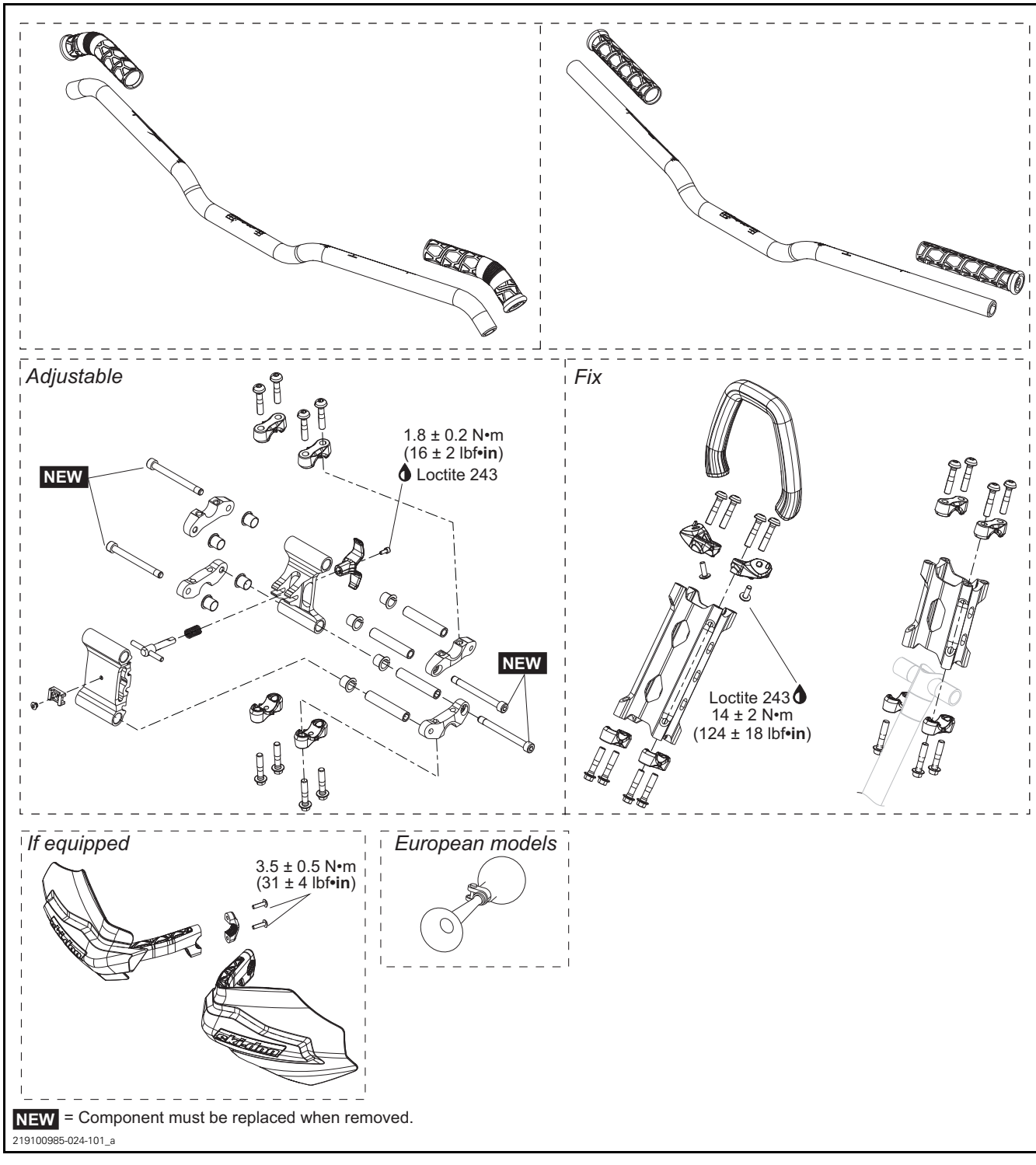


**NEW** = Component must be replaced when removed.

219100985-024-101_a

# GENERAL

When removing or replacing a part of the steering mechanism, perform the steering alignment, refer to *ALIGNING THE STEERING* in this subsection.

During assembly/installation, use the torque values and service products as in the exploded views.

Clean threads before applying a threadlocker. Refer to *SELF-LOCKING FASTENERS* and *LOCTITE APPLICATION* at the beginning of this manual for complete procedure.

**⚠ WARNING**

**Torque wrench tightening specifications must be strictly adhered to.**
**Locking devices when removed (e.g.: locking tabs, elastic stop nuts, cotter pins, etc.) must be replaced.**

***NOTICE*** **Hoses, cables and locking ties removed during a procedure must be reinstalled at the same location.**

# ADJUSTMENT

## ALIGNING THE STEERING

Ski alignment is performed by adjusting the length of left and right tie-rods.

1. Leave the vehicle on the ground on its own weight.
2. Attach ski handles together with a bungee cord.

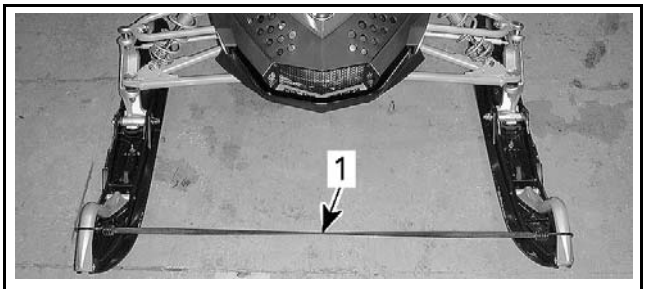

mmr2008-049-025_a

*TYPICAL*
*1. Bungee cord*

3. Position handlebar so that it is straight ahead position by measuring from the extremities of the grips to the rear most edge of the tunnel, as shown.

NOTE: The reference point must be the same to each side.

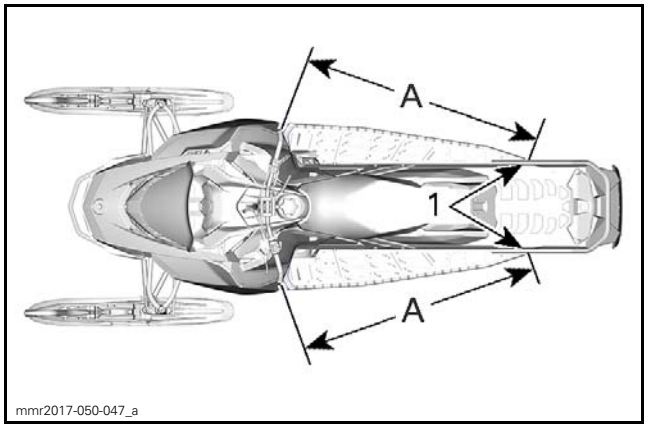

mmr2017-050-047_a

*TYPICAL*
*1. Same reference point*
*A. Equal distance on each side*

4. Ensure track is properly aligned.
5. Verify if skis are in straight-ahead position by placing a straight edge against track and measuring distance between front and rear ski bridges and straight edge.
6. With skis in straight ahead position, adjust the toe-out.
7. Measure the distance between front and rear ski bridges in line with arrows on skis.
8. Use the following illustration and this equation to determine the steering adjustment.

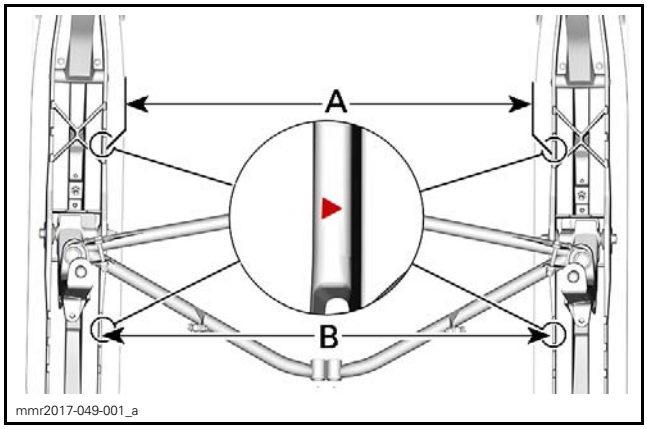

mmr2017-049-001_a

| STEERING ALIGNMENT | |
|---|---|
| Toe-out | A – B = 5 mm (.197 in) |

9. If adjustment is needed, loosen tie-rod jam nuts then turn tie-rods to change their length.

NOTE: There is no jam nut on the inner tie-rods.

10. Tighten jam nuts to specification.

| TIGHTENING TORQUE | |
|---|---|
| Jam nut | 18.5 N•m ± 3.5 N•m (164 lbf•**in** ± 31 lbf•**in**) |

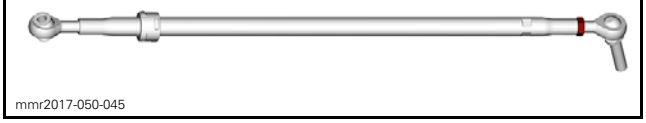
mmr2017-050-045

**⚠ WARNING**

**The maximum tie-rod end length (A) not engaged in the tie rod must not exceed 34 mm (1.339 in).**

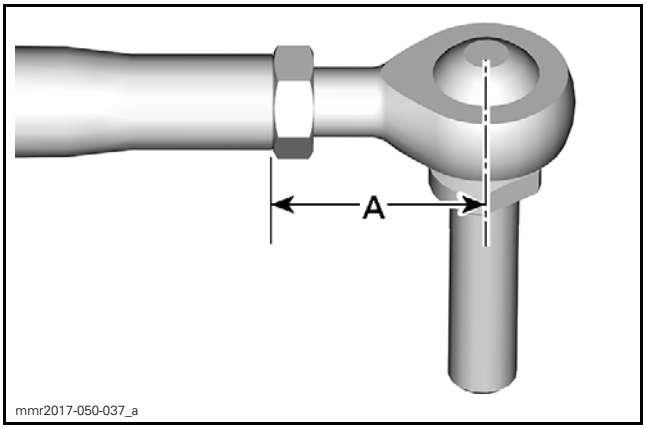

mmr2017-050-037_a

# INSPECTION

## INSPECTING THE SKI AND RUNNER

Lift the front of vehicle and check ski runners for wear or damage (missing or broken carbide). Replace if necessary.

Inspect ski for excessive wear or other damage. Replace if necessary.

Refer to *ADJUSTABLE RUNNER MECHANISM* in this subsection for adjustable ski mechanism inspection.

## INSPECTING THE STEERING MECHANISM

Visually inspect steering mechanism for tightness of components (steering arms, tie rods, ski bolts, ski legs, etc.).

# PROCEDURES

## SKI RUNNER

### Inspecting the Ski Runner

Refer to *INSPECTION*.

### Removing the Ski Runner

*Ski Without Adjustable Runner*

1. Lift the front of vehicle and support it off the ground.
2. Unscrew the ski runner nuts, then remove the ski runner.

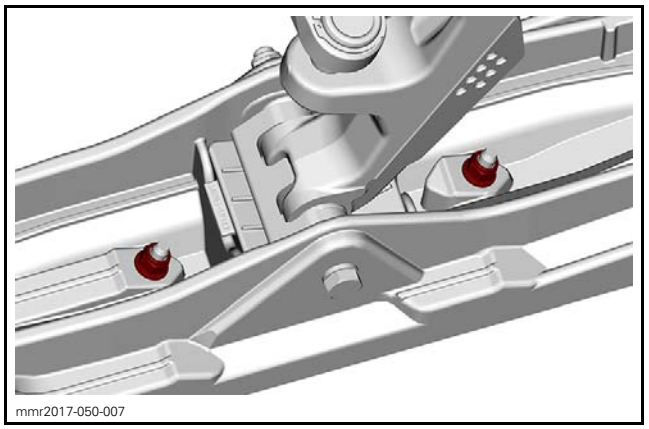
mmr2017-050-007

*Ski With Adjustable Runner*

1. Remove the ski.
2. Remove the pin.

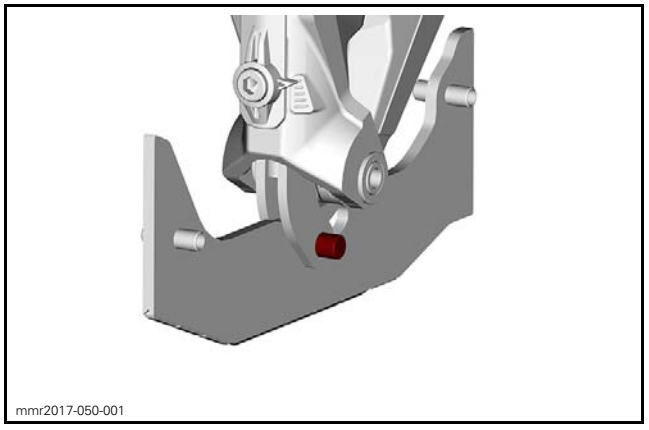
mmr2017-050-001

### Installing the Ski Runner

The installation is the reverse of the removal procedure. Pay attention to the following.

*Ski Without Adjustable Runner*

Tighten ski runner nuts to specification.

| TIGHTENING TORQUE | |
|---|---|
| Runner nut | 8 N•m ± 1 N•m (71 lbf•**in** ± 9 lbf•**in**) |

*Ski With Adjustable Runner*

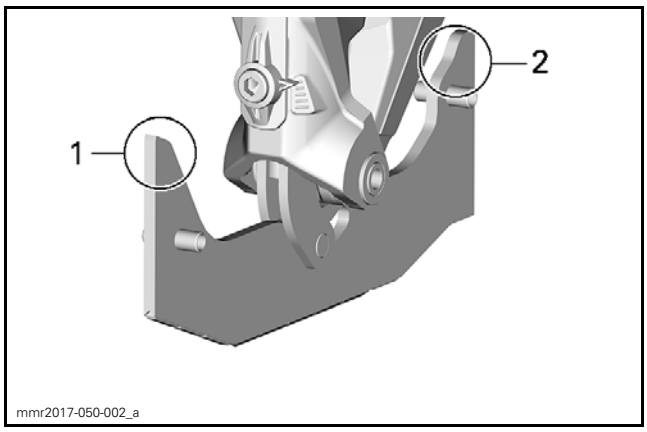


*1. Towards front*
*2. Towards rear*

# SKIS

## Inspecting the Ski

Refer to *INSPECTION*.

## Removing the Ski

1. Lift front of vehicle and support it off ground.
2. Unscrew nut then pull ski bolt out.

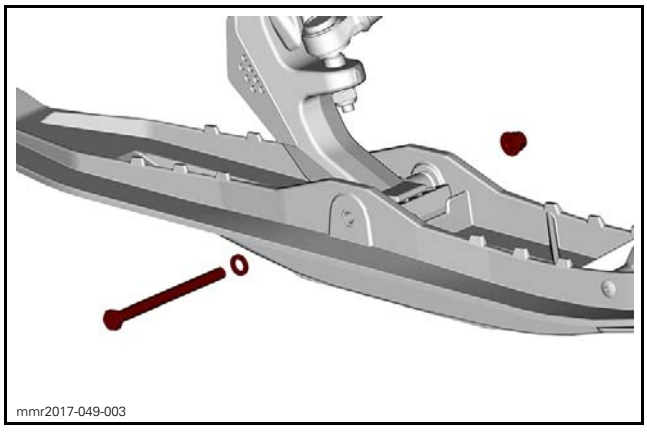


3. Remove ski from vehicle.

## Installing the Ski - Without Adjustable Runner

Make sure bushings are installed in ski holes.

Install the ski stopper. Position indicator in front and make sure the bump in the ski is in the groove of the ski stopper.

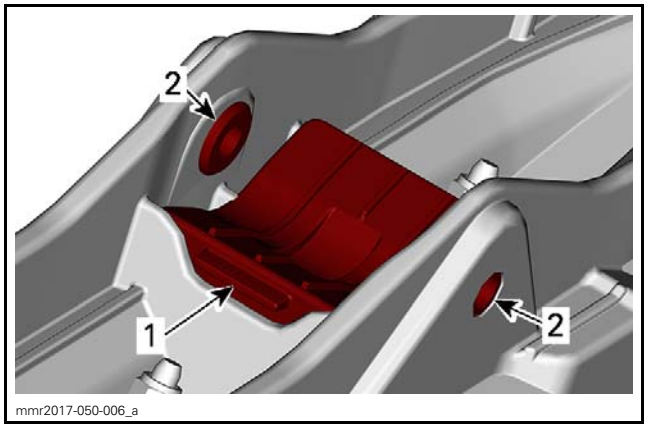


*1. Ski stopper*
*2. Bushings*

Apply grease on the ski axle.

| SERVICE PRODUCT |
|---|
| SYNTHETIC SUSPENSION GREASE (P/N 779163) |

*With Adjustable Ski Stance*

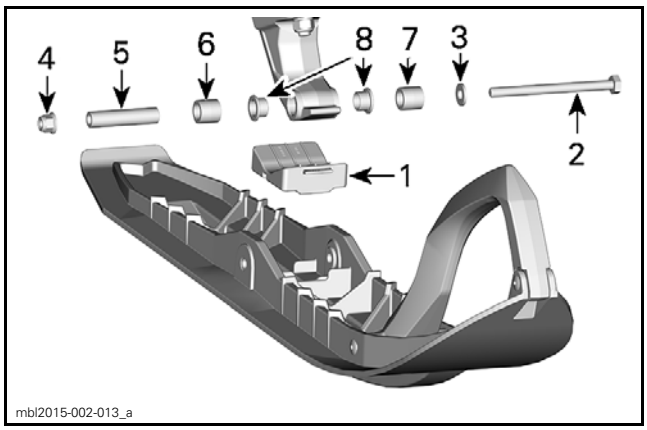


*LH SIDE SHOWN*
*1. Ski stopper*
*2. M10 x 130 screw*
*3. M10 flat washer*
*4. M10 flanged nut*
*5. Ski axel*
*6. Narrow adjustment*
*7. Wide adjustment*

Install the spacer inside for the narrower stance and outside for the wider stance.

**⚠ WARNING**

**Proceed to the same setting for both skis.**

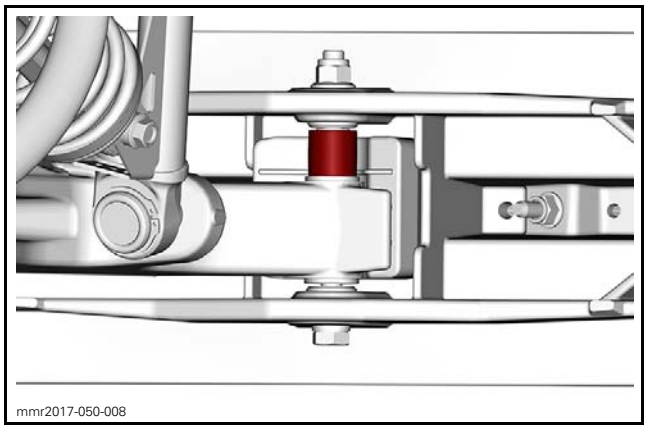


*NARROWER STANCE — RIGHT SKI SHOWN*

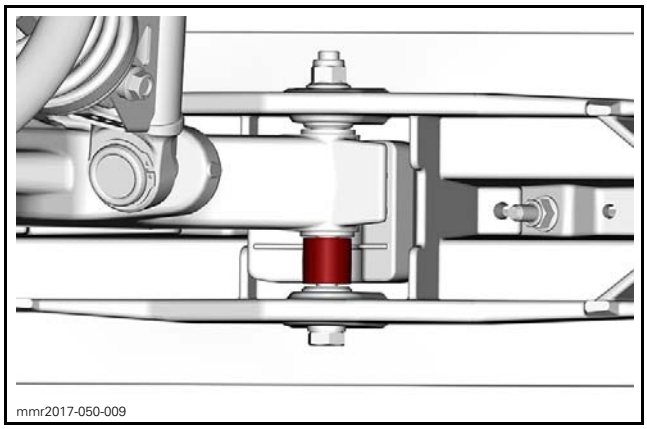


*WIDER STANCE — RIGHT SKI SHOWN*

### *Without Adjustable Ski Stance*

Install ski on ski leg as per the following illustrations.

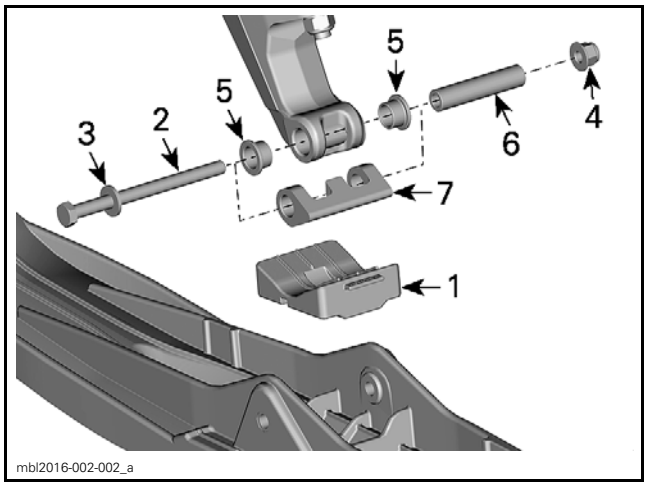


1. *Ski stopper*
2. *M10 x 130 screw*
3. *M10 flat washer*
4. *M10 flanged nut*
5. *Ski leg bushings*
6. *Ski Axle*
7. *Ski leg stopper*

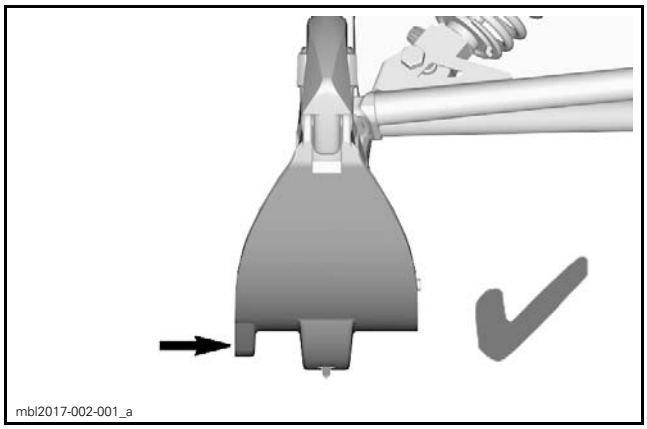


*LATERAL SKI KEEL TOWARDS OUTSIDE (IF EQUIPPED) - CORRECT*

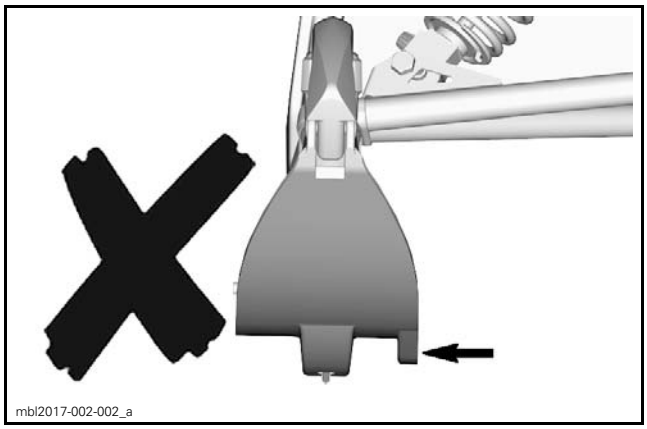


*LATERAL SKI KEEL TOWARDS INSIDE (IF EQUIPPED) - NOT CORRECT*

### *All Models*

| TIGHTENING TORQUE | |
|---|---|
| Ski nut | 48 N•m ± 6 N•m (35 lbf•ft ± 4 lbf•ft) |

## Installing the Ski With Adjustable Runner

Make sure bushings are installed in ski holes.

Install the ski stopper.

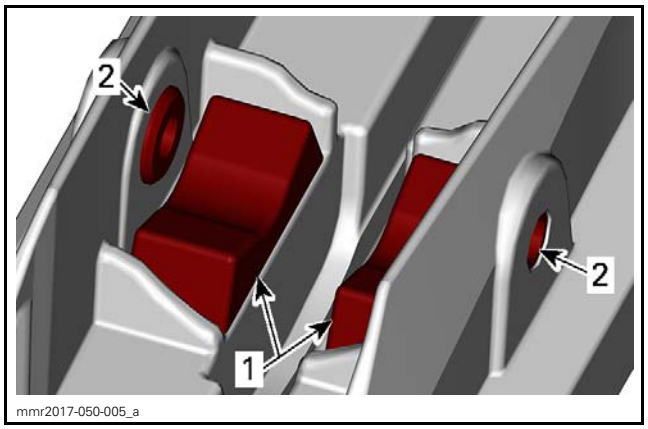


1. *Ski stopper*
2. *Bushings*

Install ski on ski leg as per the following illustrations.

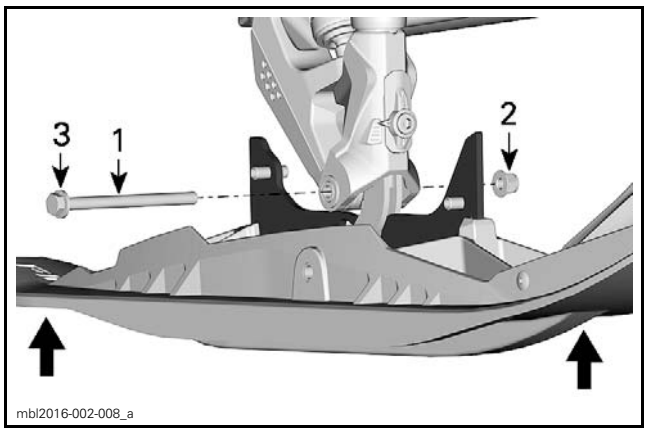


1. *Ski screw*
2. *Nut*
3. *Washer*

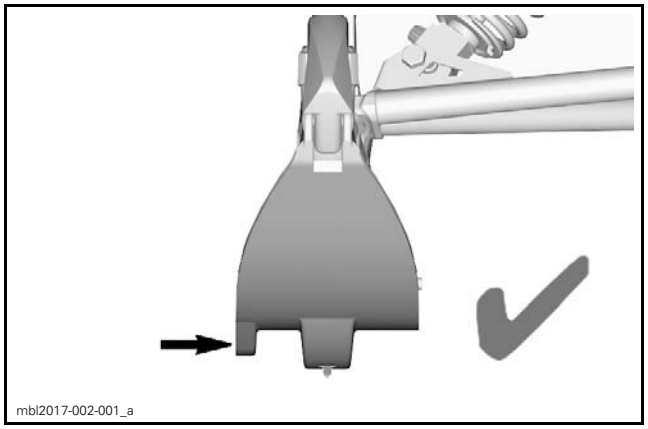


*LATERAL SKI KEEL TOWARDS OUTSIDE (IF EQUIPPED) - CORRECT*

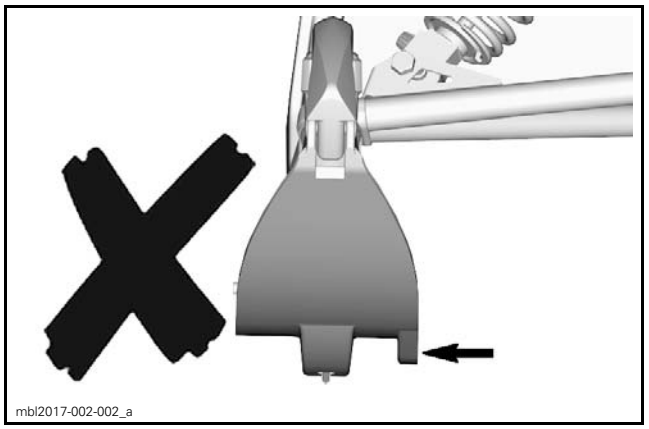


*LATERAL SKI KEEL TOWARDS INSIDE (IF EQUIPPED) - NOT CORRECT*

| TIGHTENING TORQUE | |
|---|---|
| Ski nut | 48 N•m ± 6 N•m (35 lbf•ft ± 4 lbf•ft) |

# ADJUSTABLE RUNNER MECHANISM

## Removing the Adjustable Runner Mechanism

1. Remove the ski and the runner.
2. Slide the sleeve out of the ski leg.

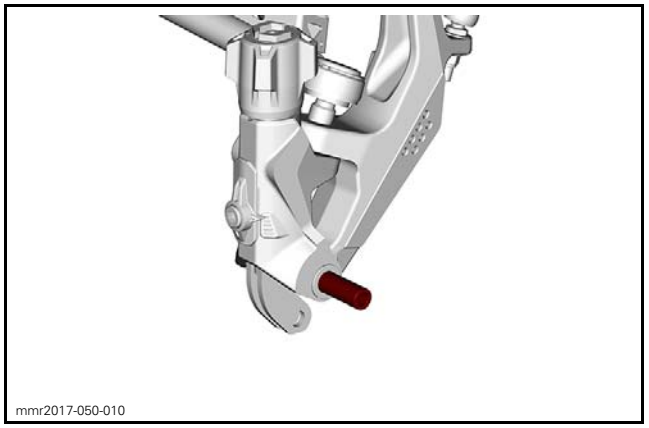


3. Remove the mechanism from the ski leg.

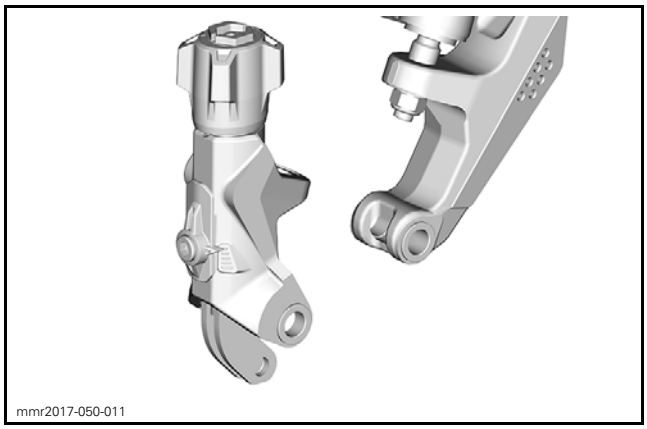
mmr2017-050-011

## Disassembling the Adjustable Runner Mechanism

1. Remove the adjusting knob and the indicator screws.

NOTE: There are two O-rings on the indicator screw.

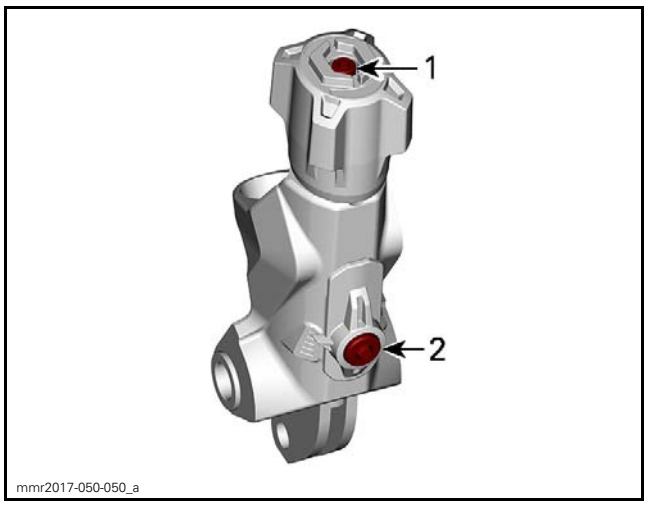

mmr2017-050-050_a

*1. Adjusting knob screw*
*2. Indicator screw*

2. Slide the adjusting screw and the adjusting shaft out of the body.

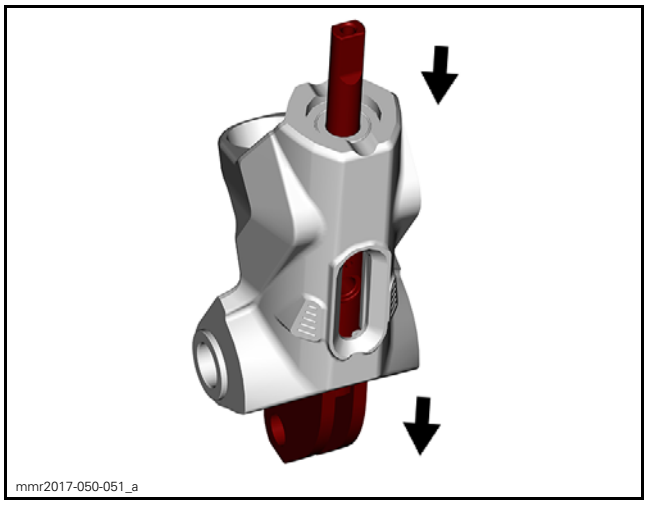
mmr2017-050-051_a

3. Remove the screw from the shaft.

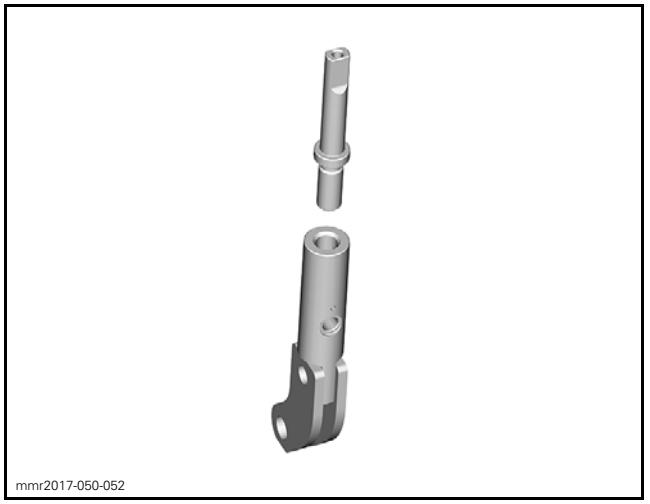
mmr2017-050-052

4. Clean the screw and the shaft inner threads with brake and parts cleaner and a small brush.

| SERVICE PRODUCT |
| --- |
| XPS BRAKES AND PARTS CLEANER (USA) (P/N 219 701 705) or XPS BRAKES AND PARTS CLEANER (P/N 219 701 776) |

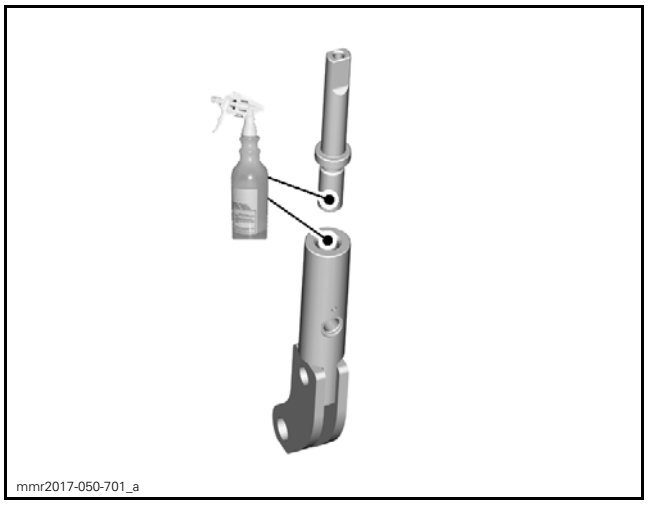


5. Remove the snap ring.

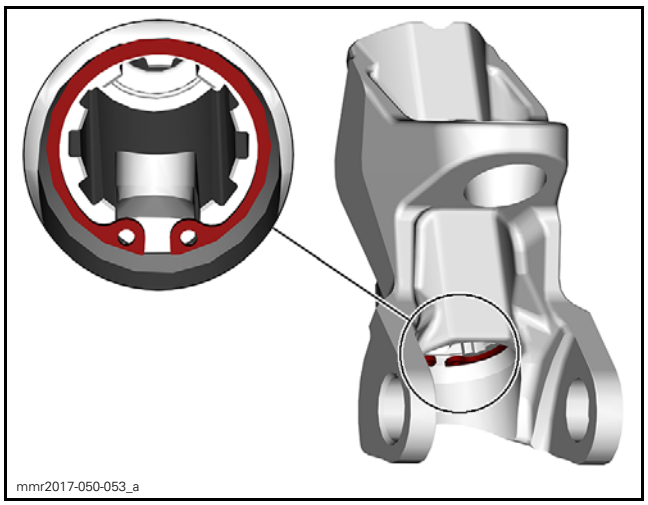


6. Slide the sleeve out of the body.

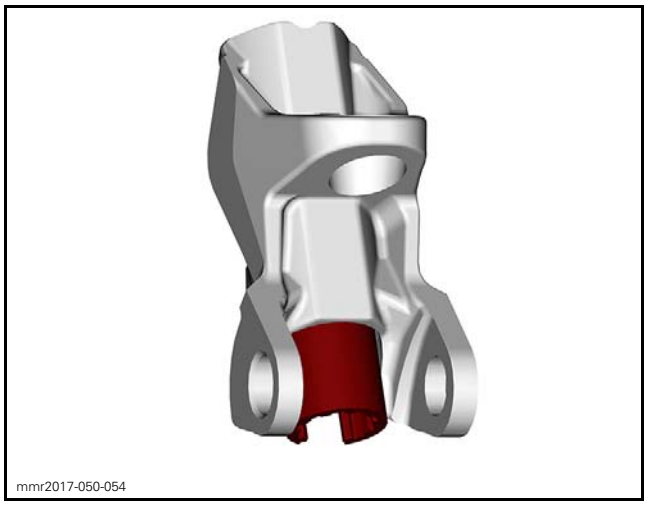


## Inspecting the Adjustable Runner Mechanism

Inspect the mechanism body for cracks. Replace if required.

Inspect the adjusting screw and shaft for:

– Thread damages
– Bending.

Replace if required.

Inspect the sleeve for:

– Cracks
– Spline damages

Replace if required.

Inspect the ball bearing. It should turn freely and smoothly. If bearing needs to be replaced, replace the mechanism assembly.

## Assembling the Adjustable Runner Mechanism

The assembly is the reverse of the disassembly procedure. However, pay attention to the following.

Apply grease on screw thread and shaft inner thread.

| SERVICE PRODUCT |
|---|
| SYNTHETIC GREASE (P/N 779162) |

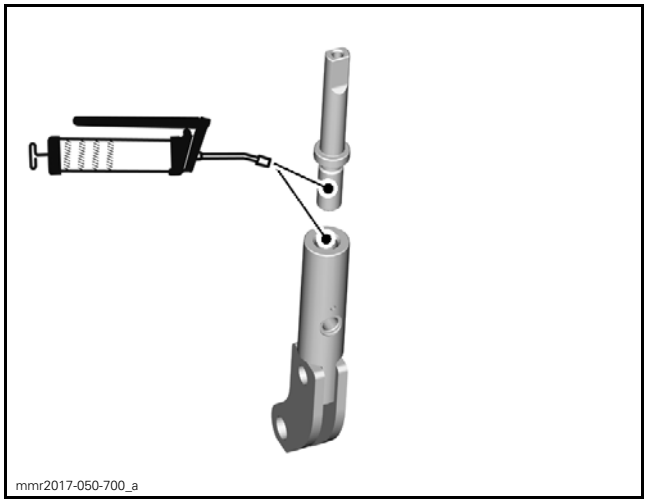


Install a new knob screw.

| TIGHTENING TORQUE | |
|---|---|
| Adjusting knob screw | 9 N•m ± 1 N•m (80 lbf•**in** ± 9 lbf•**in**) |
| Indicator screw | 24.5 N•m ± 3.5 N•m (18 lbf•ft ± 3 lbf•ft) |

## Installing the Adjustable Runner Mechanism

The installation is the reverse of the removing procedure. However, pay attention to the following.

Install rubber grommet on nut first. Align flat against flat.

Ensure all bushings, and the grommet are in place and fully seated.

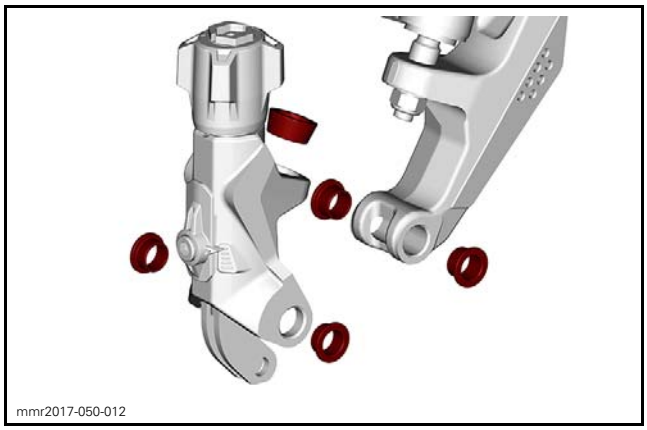


The mechanism is offset and has to be installed on the correct side.

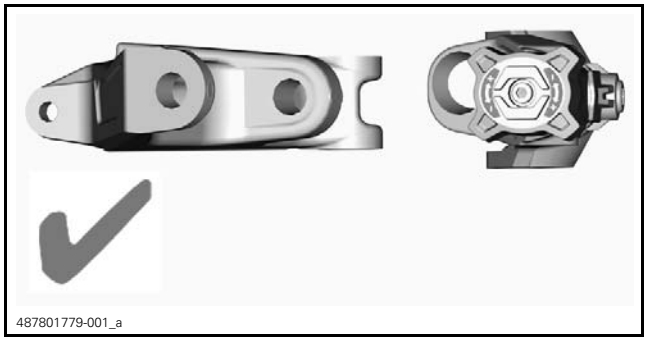


*RH SIDE SHOWN*

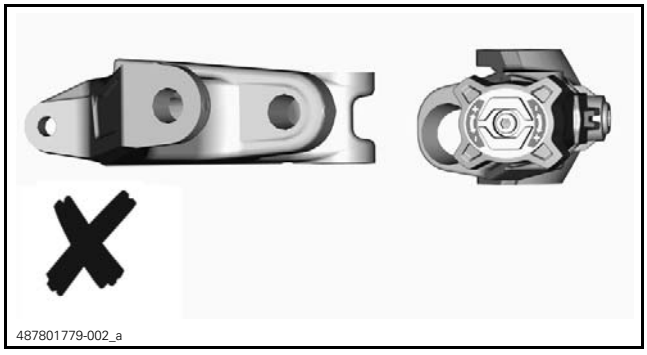


*RH SIDE SHOWN*

# SKI HANDLES

## Removing the Ski Handle

1. Remove ski from vehicle.
2. Using a 9 mm (3/8 in) drill bit, remove ski handle rivets. Only drill the head of rivet. Do not try to drill all the way through the rivet. Angle the drill bit to reduce the chance of spinning the rivet in the ski.
3. Remove handle from ski.
4. Place handle in hot water for 10 minutes then using a punch, drive the inner part of rivet out of handle.

## Installing the Ski Handle

1. To install rivets, use a C-clamp and a short 10 mm socket.
2. Place a rivet in position and insert it into ski and ski handle. Repeat the procedure for the other side.

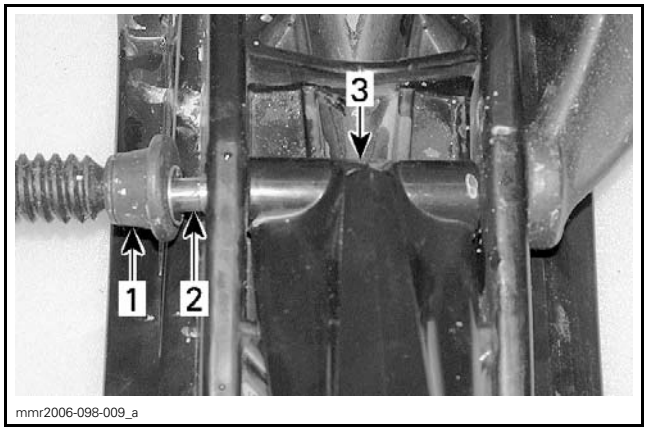


1. *C-clamp*
2. *Rivet*
3. *Handle*

3. When both rivets are installed, use the short 10 mm socket to push rivet heads against the ski.

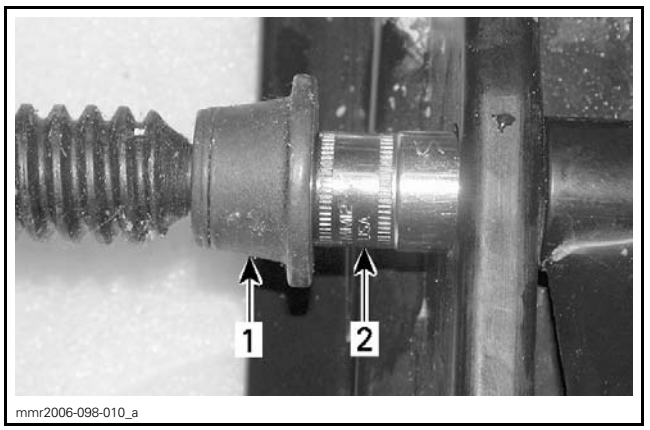


1. *C-clamp*
2. *10 mm socket*

# SKI LEG

To replace a ski leg, refer to *FRONT SUSPENSION* subsection.

# HANDLEBAR GRIP

To verify or replace heating elements, refer to *ACCESSORIES* subsection.

## Removing the Handlebar Grip

Remove grips by pulling while using compressed air, which will inflate or loosen the fit between the grip and handlebar.

mmr2015-143-007

## Installing the Handlebar Grip

Insert the handlebar grip on handlebar while blowing compressed air to inflate or loosen the fit between grip and handlebar.

# MULTIFUNCTION SWITCH

## Removing the Multifunction Switch

1. Remove the gauge support. Refer to *BODY* subsection.
2. Disconnect the multifunction switch connector.

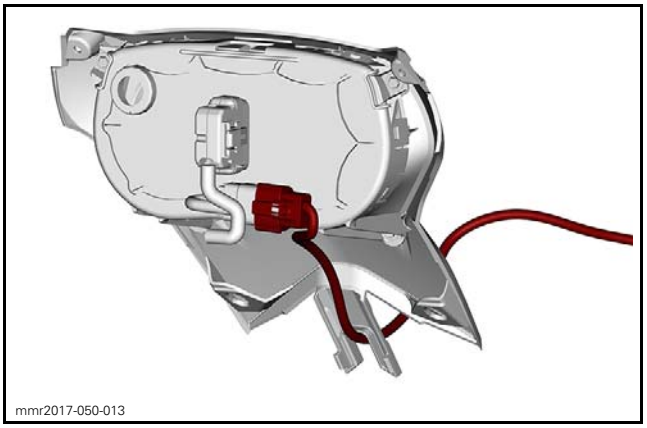
mmr2017-050-013

3. Cut locking ties securing multifunction switch harness.

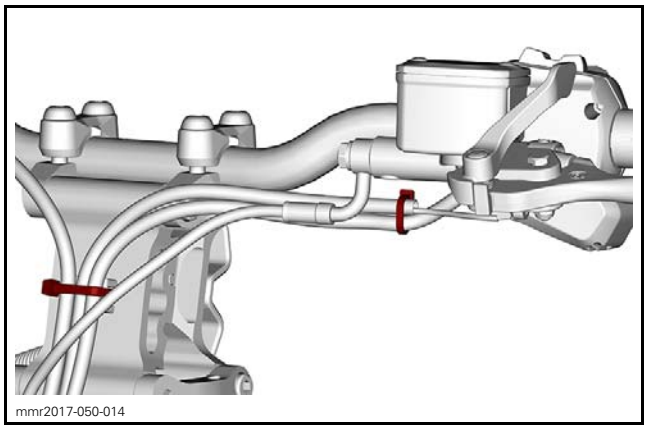
mmr2017-050-014

4. Unscrew master cylinder from handlebar.

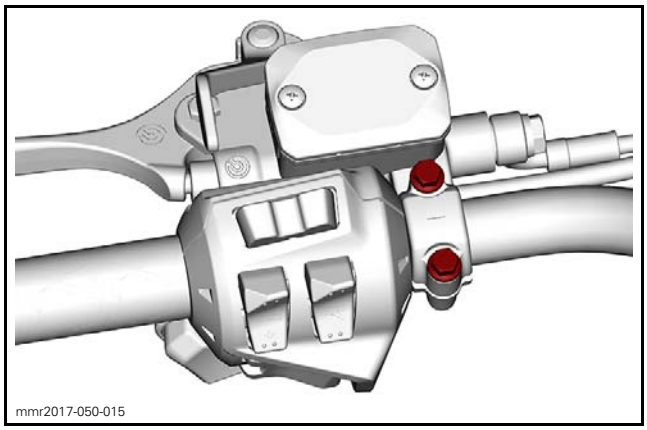
mmr2017-050-015

5. Remove master cylinder.

**NOTICE** **Do not let master cylinder hang by the hose and do not stretch or twist the hose.**

6. Remove multifunction switch screws.

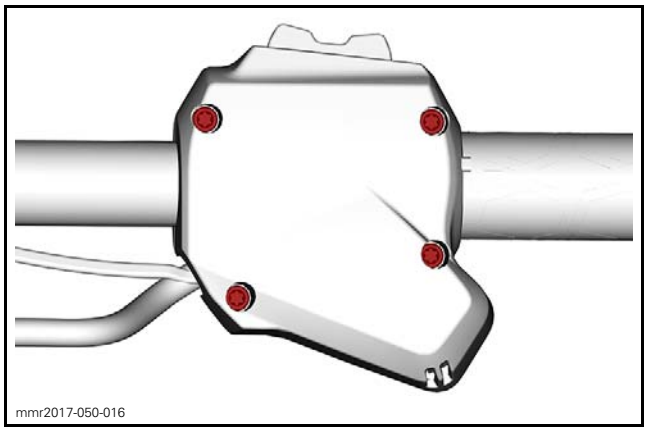
mmr2017-050-016

7. Remove multifunction switch from vehicle.

## Installing the Multifunction Switch

The installation is the reverse of the removal procedure. However, pay attention to the following.

Tighten the multifunction switch screws to specification, as per the following sequence.

| TIGHTENING TORQUE | |
|---|---|
| Multifunction switch screw | 2.4 N•m ± 0.2 N•m (21 lbf•**in** ± 2 lbf•**in**) |

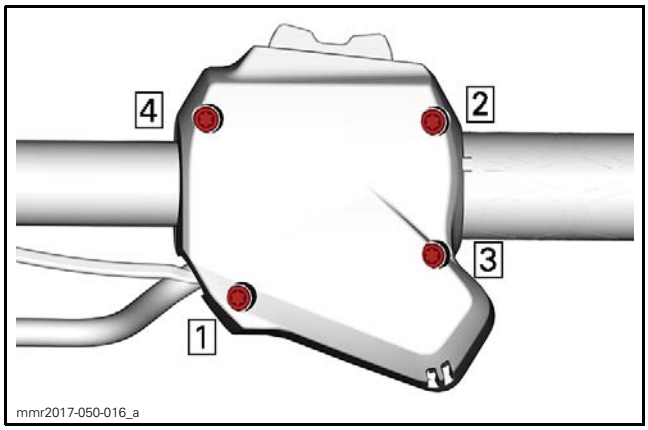


*TRAIL AND CROSSOVER MODELS*

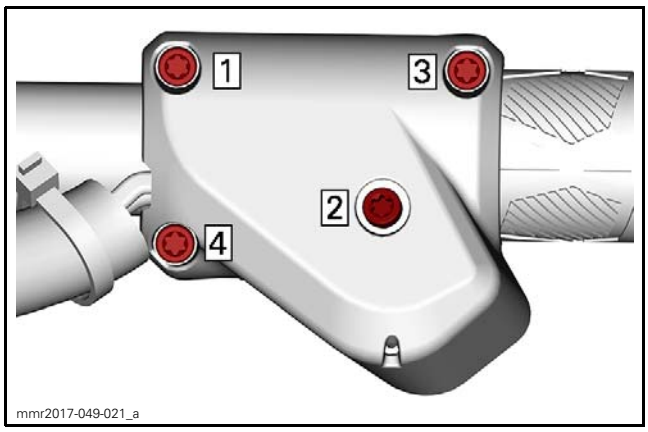


*MOUNTAIN MODELS*

Place the master cylinder on the handlebar.

Install master cylinder retaining clamp with its arrow pointing toward the front of vehicle.

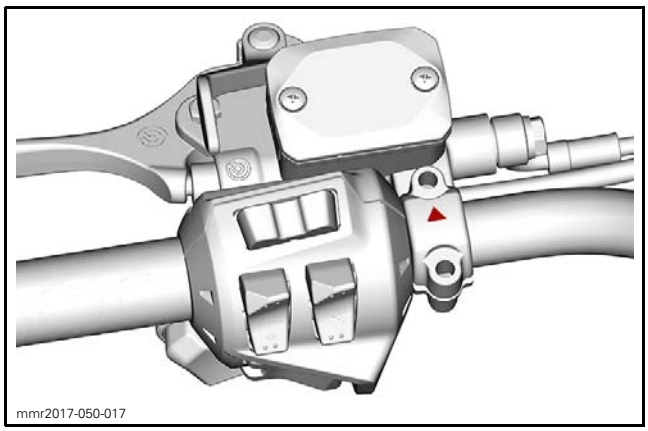


Install master cylinder clamp screws and tighten loosely.

With the handlebar in the straight ahead position, place the reservoir parallel to the ground.

Tighten master cylinder clamp screws to specification.

| TIGHTENING TORQUE | |
|---|---|
| Master cylinder clamp screws | 9 N•m ± 1 N•m (80 lbf•**in** ± 9 lbf•**in**) |

Turn handlebar completely from side to side making sure it does not exert unwanted tension on handlebar wires.

# THROTTLE LEVER HOUSING (iTC)

## Removing the Throttle Lever Housing

1. Remove the upper body module. Refer to *BODY* subsection.
2. From the RH side of vehicle, disconnect the throttle lever connector.
3. Disconnect *RH* steering connector (6-pin).

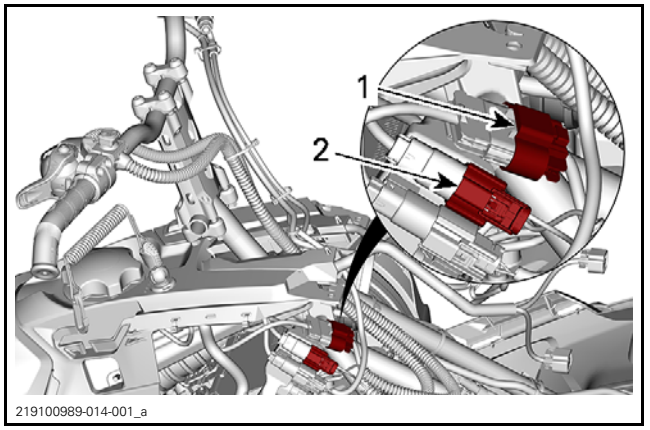


1. *Throttle lever connector*
2. *RH steering connector*

4. Cut locking ties securing the throttle lever harness.
5. Remove the throttle lever housing and emergency stop switch support retaining screws.

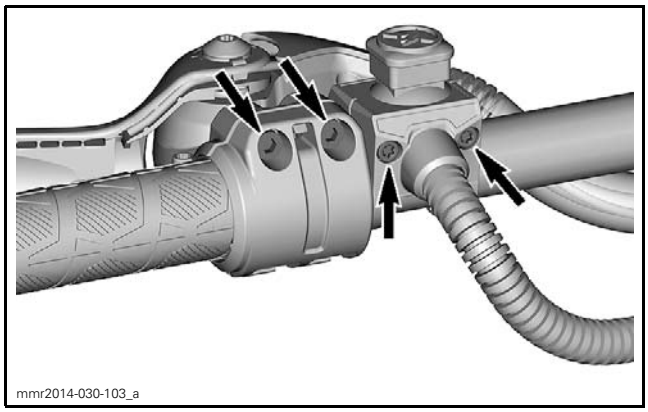
mmr2014-030-103_a

## Installing the Throttle Lever Housing

The installation is the reverse of the removal procedure. However, pay attention to the following.

Tighten emergency stop switch support retaining screws to specification.

| TIGHTENING TORQUE | |
|---|---|
| Emergency stop switch support retaining screws | 2 N•m ± 0.5 N•m (18 lbf•**in** ± 4 lbf•**in**) |

Tighten the throttle lever housing retaining screws to specification.

| TIGHTENING TORQUE | |
|---|---|
| Throttle lever housing retaining screws | 1.9 N•m ± 0.1 N•m (17 lbf•**in** ± 1 lbf•**in**) |

Turn handlebar completely from side to side making sure it does not exert unwanted tension on handlebar wires.

# HANDLEBAR

## Removing the Handlebar

NOTE: If the handlebar must be changed, remove all components (handlebar grip, throttle lever housing, etc.) before removing it from vehicle.

1. Remove handlebar retaining clamp screws.

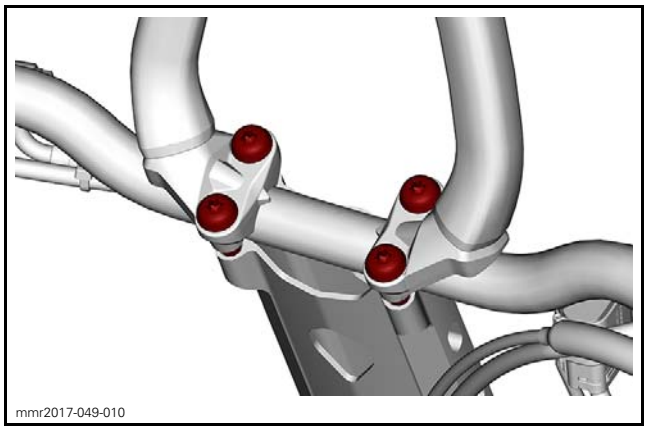
mmr2017-049-010

2. Remove handlebar from handlebar extension.

## Inspecting the Handlebar

1. Inspect the handlebar for:
   – Damages
   – Cracks
   – Bending.
2. Replace if any of these problems is detected.

**⚠ WARNING**

**Do not try to repair a defective handlebar.**

3. Check handlebar clamps for cracks or distortion, replace if necessary.

## Installing the Handlebar

The installation is the reverse of the removal procedure. However, pay attention to the following.

### *With Adjustable Handlebar*

Position the handlebar at +2 with clamps.

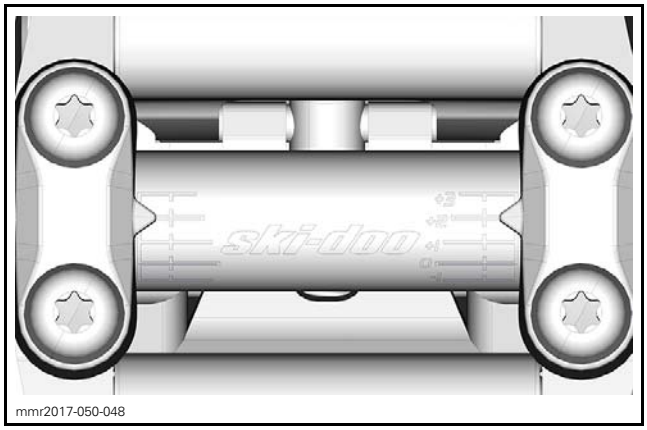

mmr2017-050-048

### *Without Adjustable Handlebar*

Position the handlebar with clamps, as per the following table.

| MODEL | HANDLEBAR POSITION |
|---|---|
| All | +1 |

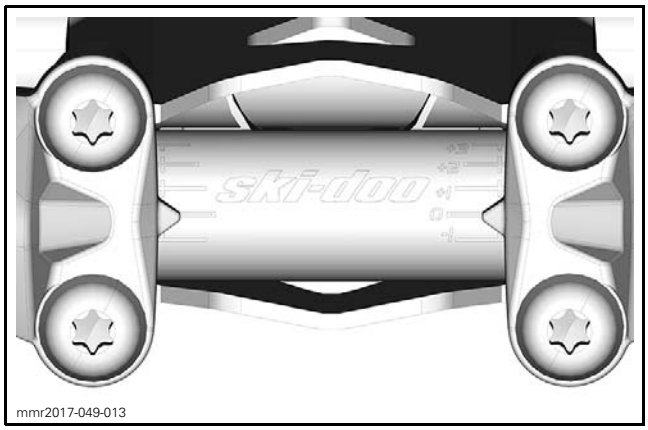


*HANDLEBAR POSITION - MOUNTAIN MODEL SHOWN*

Tighten handlebar clamps screws to specification.

| TIGHTENING TORQUE | |
|---|---|
| Clamp screws | 24.5 N•m ± 3.5 N•m (18 lbf•ft ± 3 lbf•ft) |

Ensure handlebar clamps are parallel with handlebar extension.

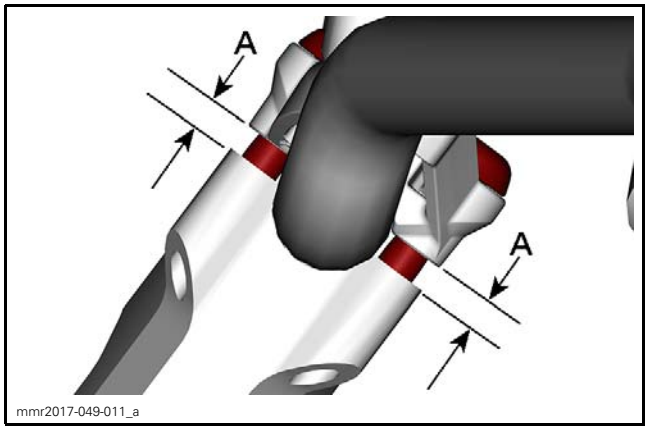


*A. Must be equal on each side*

Turn handlebar completely from side to side making sure it does not exert unwanted tension on handlebar wires.

# HANDLEBAR EXTENSION

## Removing the Handlebar Extension

1. Proceed with *REMOVING THE HANDLEBAR*, see procedure in this subsection.
2. Remove screws retaining the extension to steering column.

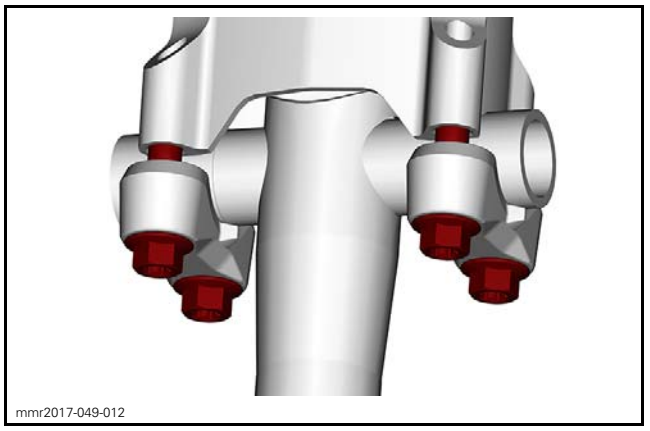


3. Remove handlebar extension from vehicle.

## Inspecting the Handlebar Extension

1. Check handlebar extension for:
   - Cracks
   - Bending
   - Other damages.
2. Replace if any of these problems is detected.

**⚠ WARNING**

**Do not try to repair a defective handlebar extension.**

## Installing the Handlebar Extension

The installation is the reverse of the removal procedure. However, pay attention to the following.

### *With Adjustable Handlebar*

Position the extension in order to have the handlebar horizontal.

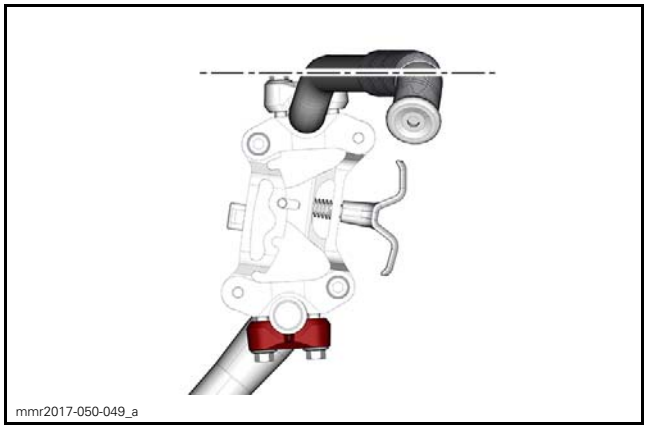


### *Without Adjustable Handlebar*

Position the extension with the steering column, as per the following table.

| MODEL | HANDLEBAR EXTENSION POSITION ANGLE |
|---|---|
| All | 159° |

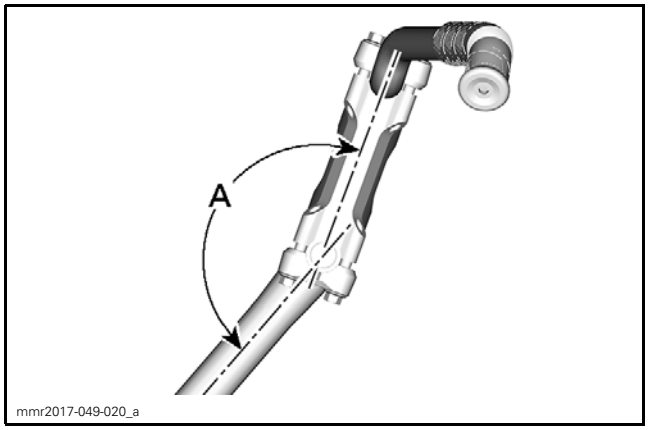


Ensure extension clamps are parallel with handlebar extension.

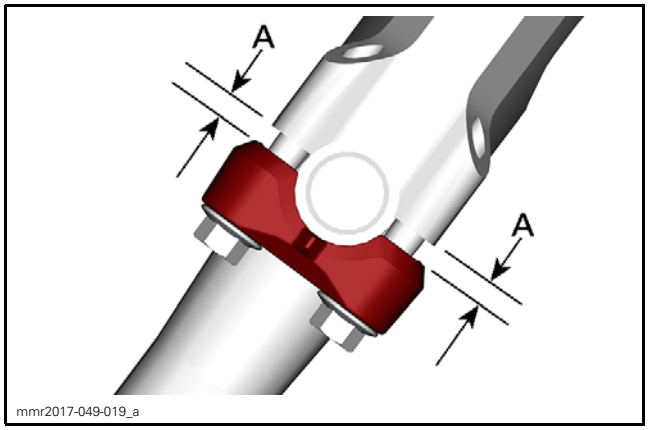


*A. Must be equal on each side*

**⚠ WARNING**

**Handlebar and it's components must not get in contact with anything (windshield, fuel tank cap, etc.) when steering is turned.**

# TIE-RODS

NOTE: The same procedure is applied on RH and LH side.

## Inspecting the Tie-Rod

Check tie-rod ends for looseness. If play is excessive, replace tie-rod.

Check if the tie-rod is bent, cracked or otherwise damaged. Replace if necessary.

## Removing the Tie-Rod

### *With 900 ACE Turbo*

1. Remove the intercooler. Refer to *INTERCOOLER* subsection.

### *All Models*

2. Remove the tie-rod end nuts and screws from the steering column and ski leg.

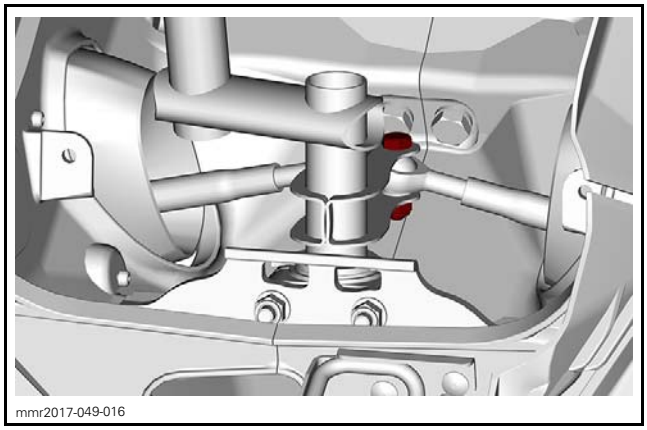


*STEERING COLUMN WITH PITMAN ARM*

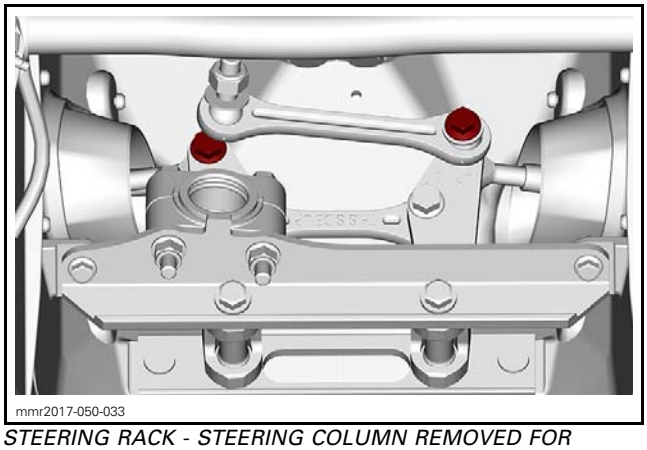


*STEERING RACK - STEERING COLUMN REMOVED FOR CLARITY*

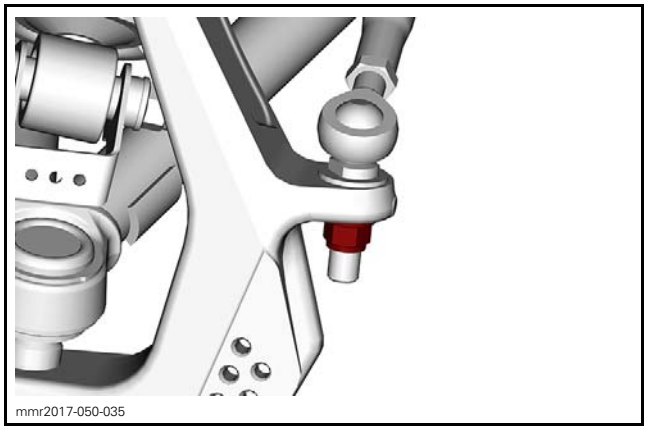


*SKI LEG*

3. Cut the locking tie on the steering boot.

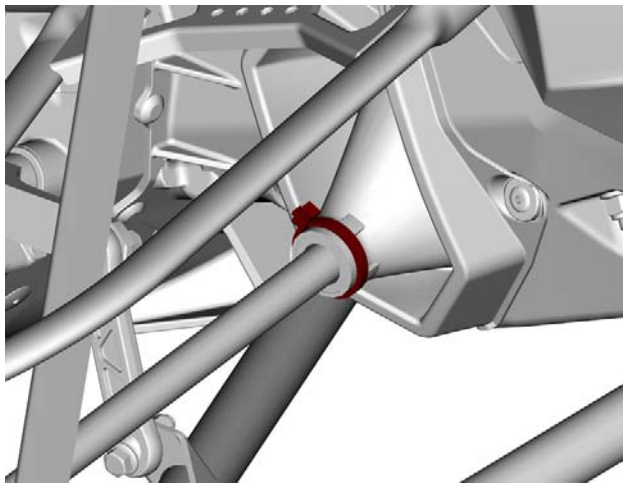
mmr2017-050-059

4. Remove tie-rod with ring from vehicle.

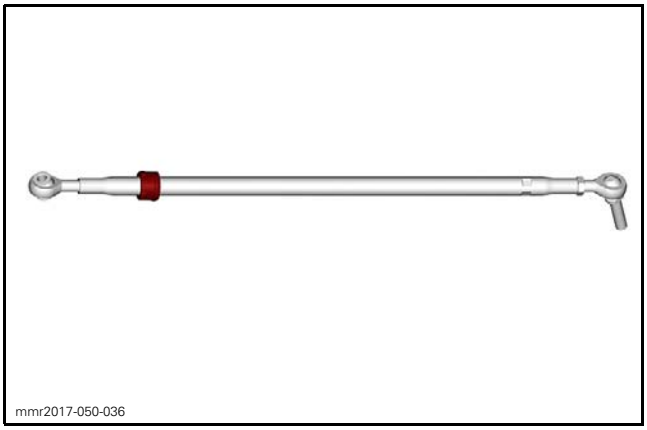
mmr2017-050-036

## Installing the Tie-Rod

The installation is the reverse of the removal procedure. However, pay attention to the following.

Adjust the length of all tie-rod end to specification without tightening the jam nuts.

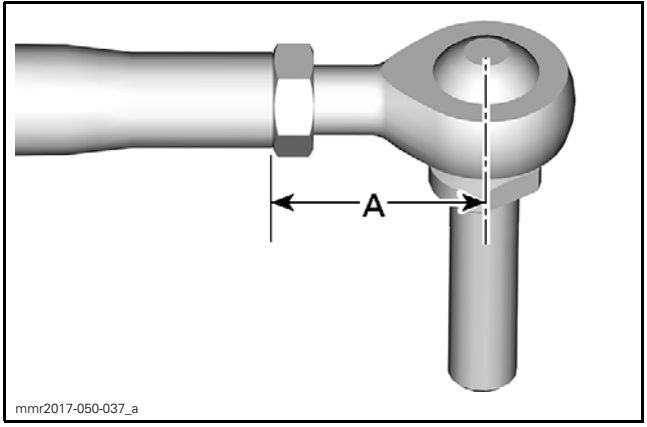

mmr2017-050-037_a

| TIE-ROD LENGTH (A) |
| --- |
| 30 mm (1.181 in) |

**⚠ WARNING**

**The maximum tie-rod end length (A) not engaged in the tie rod must not exceed 34 mm (1.339 in).**

Install tie-rod with the groove on ski leg side.

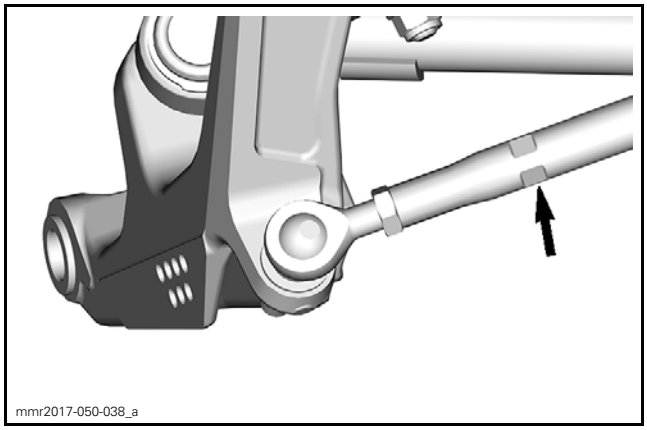
mmr2017-050-038_a

Install the washer and the nut, and tighten to specification.

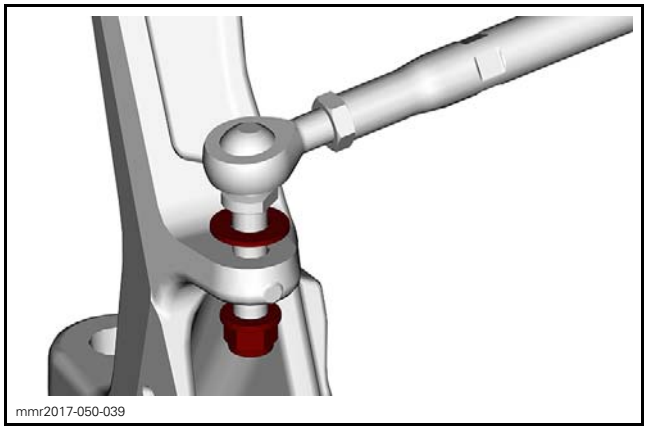
mmr2017-050-039

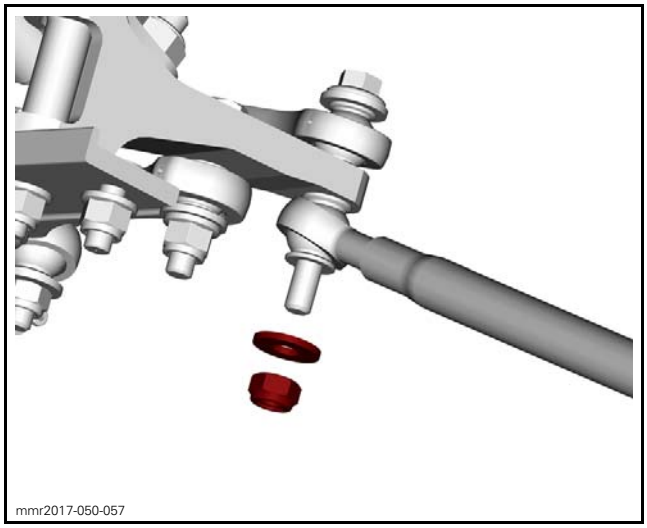
mmr2017-050-057

| TIGHTENING TORQUE | |
|---|---|
| Outer tie-rod end nut | 48 N•m ± 6 N•m (35 lbf•ft ± 4 lbf•ft) |
| Inner tie-rod end nut | 24.5 N•m ± 3.5 N•m (18 lbf•ft ± 3 lbf•ft) |

Ensure the new locking tie is fully seated and the head is positioned upwards.

**NOTICE** To avoid bellows damage, make sure locking tie head is positioned upwards.

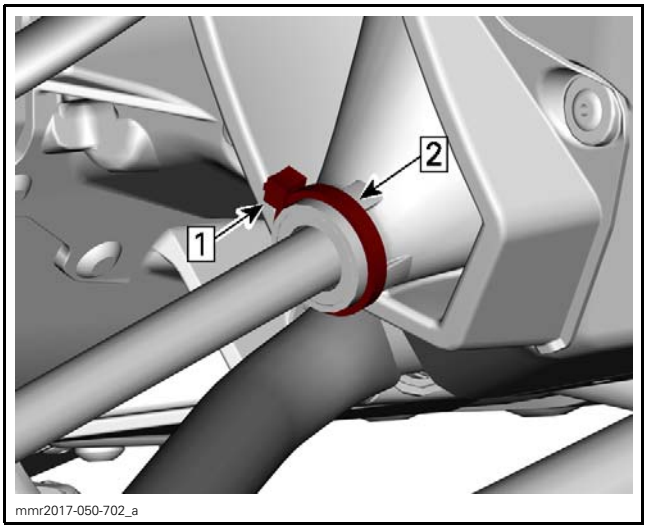

mmr2017-050-702_a

1. *Head up*
2. *Fully seated*

Perform the steering alignment, refer to *ALIGNING THE STEERING* in this section.

# STEERING COLUMN

## Removing the Steering Column - With Pitman Arm

### *With 900 ACE Turbo*

1. Remove the intercooler. Refer to *INTERCOOLER* subsection.

### *All Models*

2. Remove the rear console. Refer to *BODY* subsection.
3. Remove *HANDLEBAR EXTENSION* from steering column. Refer to the procedure in this subsection.
4. Remove the inner tie-rod end nuts and screws. Refer to *TIE-RODS* in this subsection.
5. Remove nuts and screws securing steering column upper support.

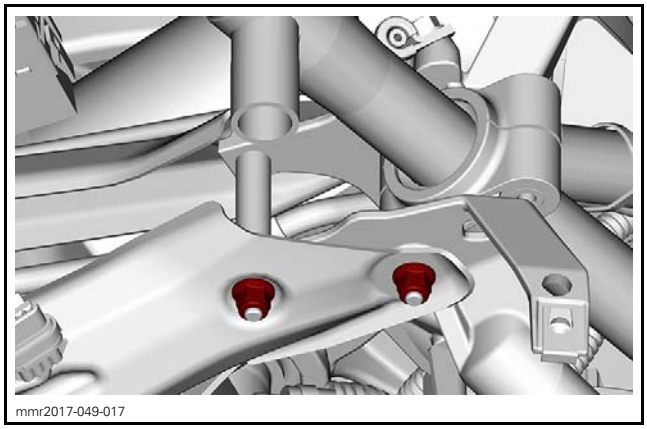
mmr2017-049-017

*FRONTWARD POSITION COLUMN*

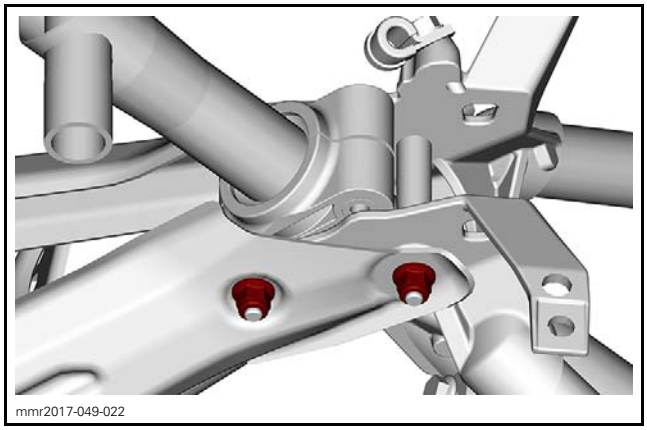
mmr2017-049-022

*REARWARD POSITION COLUMN*

6. Remove nuts and screws securing the steering column lower support.

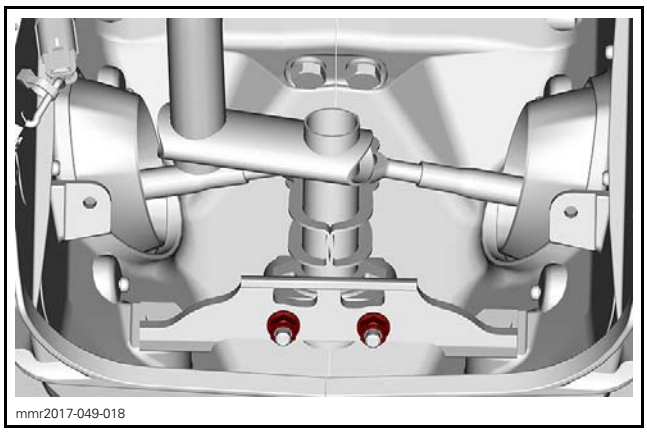
mmr2017-049-018

7. Pull steering column from top.

## Removing the Steering Column - With Steering Rack

### *With 900 ACE Turbo*

1. Remove the intercooler. Refer to *INTERCOOLER* subsection.

*All Models*

2. Remove the rear console. Refer to *BODY* subsection.
3. Remove *HANDLEBAR EXTENSION* from steering column. Refer to the procedure in this subsection.
4. Remove nuts and screws securing steering column upper support.

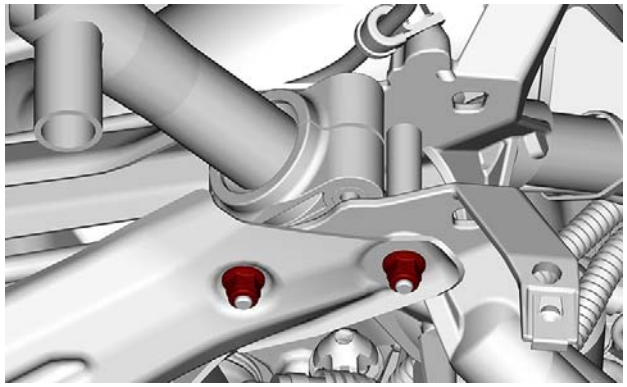
mmr2017-050-040

5. From inside engine compartment, remove the steering column pitman arm nut.

NOTE: Use an Allen key to lock the ball joint.

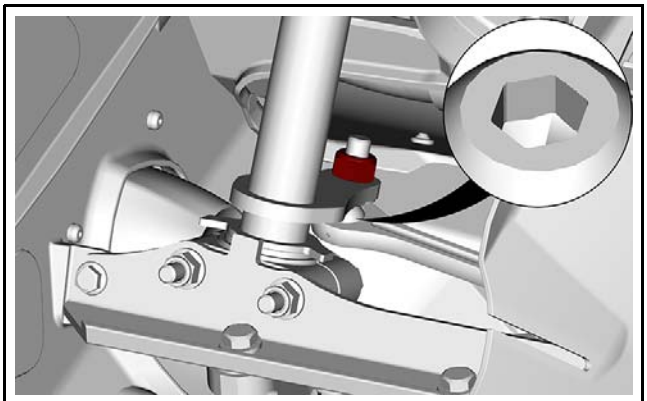
mmr2017-050-041

6. Remove nuts, stopper plate and screws securing the steering column lower support.

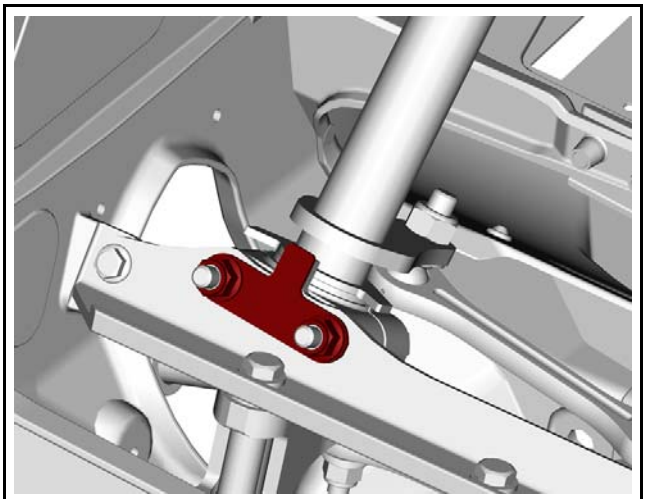
mmr2017-050-058

7. Pull steering column from top.

## Inspecting the Steering Column

Check if steering column is:
- Cracked
- Bent
- Twisted
- Otherwise damaged.

Replace steering column if necessary.

**⚠ WARNING**

**Do not try to repair a defective steering column.**

## Installing the Steering Column

The installation is the reverse of the removal procedure. However, pay attention to the followings.

1. Apply grease on vibration dampers before installing upper and lower supports.

| SERVICE PRODUCT |
|---|
| SYNTHETIC SUSPENSION GREASE (P/N 779163) |

2. Install new elastic nuts on the steering column retaining screws.
3. Tighten nuts to specification.

| TIGHTENING TORQUE | |
|---|---|
| Upper steering column support nut | 12.5 N•m ± 2.5 N•m (111 lbf•**in** ± 22 lbf•**in**) |
| Lower steering column support nut | 23.5 N•m ± 3.5 N•m (17 lbf•ft ± 3 lbf•ft) |

# STEERING RACK

## Inspecting the Steering Rack

### *With 900 ACE Turbo*

Remove the intercooler. Refer to *INTERCOOLER* subsection.

### *All Models*

Check if steering rack component are:
- Cracked
- Bent
- Twisted
- Otherwise damaged.

Check steering rack for looseness.

Check if stopper plate is deformed or otherwise damaged.

Replace component if necessary.

## Removing the Steering Rack

### *With 900 ACE Turbo*

1. Remove the intercooler. Refer to *INTERCOOLER* subsection.

### *All Models*

2. Remove inner tie-rod end nuts and screws.
3. Remove the nuts, stopper plate and screws as per the following illustrations.

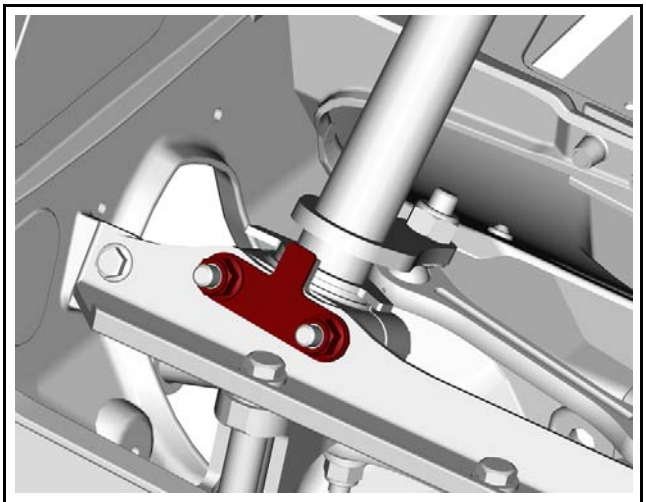

mmr2017-050-058

*INSIDE ENGINE COMPARTMENT*

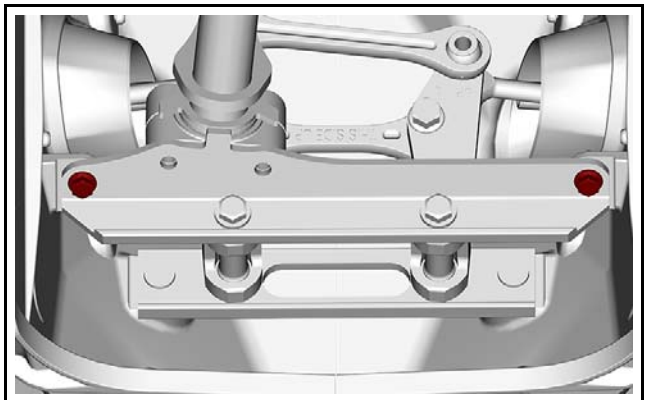

mmr2017-050-043

*INSIDE ENGINE COMPARTMENT*

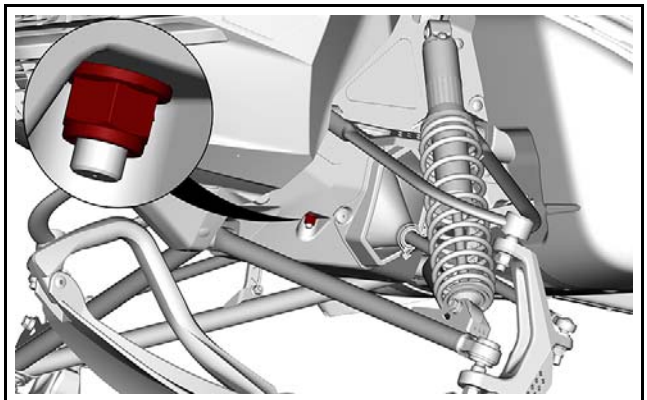

mmr2017-050-044

## Installing the Steering Rack

The installation is the reverse of the removal procedure.

# BODY

## SERVICE TOOLS

| Description | Part Number | Page |
|---|---|---|
| CONSOLE NUT WRENCH | 529 036 183 | 11 |
| SUPERTANIUM DRILL BIT 3/16" | 529 031 800 | 12–15 |

## SERVICE TOOLS – OTHER SUPPLIER

| Description | Part Number | Page |
|---|---|---|
| ARROW TACKER | T-50 | 16 |

## SERVICE PRODUCTS

| Description | Part Number | Page |
|---|---|---|
| DIELECTRIC GREASE | 293 550 004 | 4 |

# GENERAL

## CLEANING

### Seat Cleaning

It is recommended to clean the seat with a solution of warm soapy water, using a soft clean cloth.

**NOTICE** Avoid use of harsh detergents such as strong soaps, degreasing solvents, abrasive cleaners, paint thinners, etc. that may cause damage to the seat cover.

### Plastic Cleaning

Clean the vehicle thoroughly, removing all dirt and grease accumulation.

To clean use a soft clean cloth and either soapy water or isopropyl alcohol.

To remove grease, oil or glue use isopropyl alcohol.

**NOTICE** Do not apply isopropyl alcohol or acetone directly on decals.

Follow these recommendations to protect the glossy finish of polypropylene parts.

Apply a non abrasive wax on glossy finish only.

Non Compatible Cleaning Products

**NOTICE** Polypropylene is not compatible with PETROLEUM BASE PRODUCTS. Contact with petroleum base products, such as cleaners or lubricants will permanently alter the glossy finish of polypropylene parts.

**NOTICE** The following products must not be applied on the plastic components used on the vehicles:

- Gasoline
- Brake fluid
- Kerosene
- Diesel fuel
- Lighter fluid
- Varsol
- Naphtha
- Acetone
- Strong detergents
- Abrasive cleaners
- Waxes containing an abrasive or a cleaning agent in their formula.

| MATERIAL TYPE | NON-COMPATIBLE CLEANING PRODUCTS |
|---|---|
| Polypropylene | ANY PETROLEUM BASE CLEANING PRODUCTS |
| | XP-S ATV Finishing Spray (P/N 219 701 704) |
| | XP-S ATV Cleaning Kit (P/N 219 701 713) (it contains the above XP-S ATV Finishing Spray) |

vbs2012-006-002_a

*DO NOT USE ON POLYPROPYLENE*

## Compatible Cleaning Products

| MATERIAL TYPE | COMPATIBLE CLEANING PRODUCT |
|---|---|
| Polypropylene | XPS ATV Wash (P/N 219 701 702) |
| | Soapy water |

vbs2012-006-001

*SAFE FOR POLYPROPYLENE*

# BODY PARTS REPAIR

The very first step before repairing plastic materials is to find out exactly which type of material is involved.

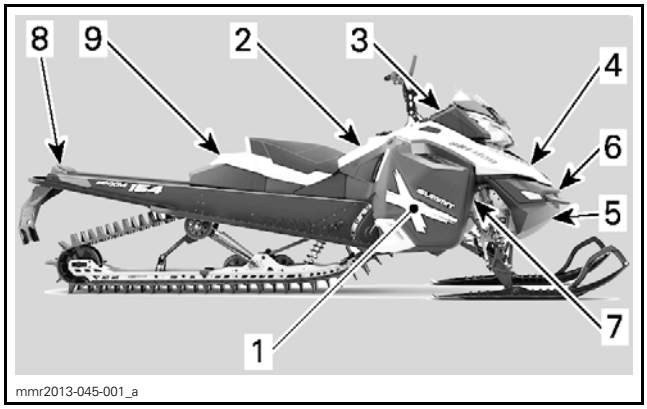


mmr2013-045-001_a

*TYPICAL — SUMMIT X SHOWN*

| PLASTIC PARTS | | |
|---|---|---|
| PARTS | | MATERIAL |
| 1 | Side panel | XS models: Polypropylene for bottom section and surlyn for top sectio<br>XM models: Polypropylene |
| 2 | Console | Surlyn |
| 3 | Gauge support | Polypropylene with glass fiber |
| 4 | Hood | Center section: Polyprolylene<br>Side section: Surlyn |
| 5 | Front bottom pan and side bottom pan | Polypropylene |
| 6 | Bottom pan cover | Polypropylene |
| 7 | Side bottom pan | Polypropylene |
| 8 | Tail light support | Polypropylene |
| 9 | Seat storage compartment | Polypropylene |

***NOTICE*** **Some repair products are not compatible with certain plastics.**

**⚠ WARNING**

**Polycarbonate windshields must never be repaired by welding or otherwise.**

The following company provides a complete line of products to repair plastic materials:

CREST INDUSTRIES, INC.
Trenton, MI 48183
Phone: 734 479-4141
Toll Free: 1 800 822-4100
Fax: 734 479-4040
E-Mail: info@crestauto.com
www.crestauto.com

# PROCEDURES

NOTE: The same procedure applies for RH and LH side. Most of the time, only one side is described in this subsection.

## DECAL

### Decal Replacement

1. To remove a decal; heat old decal with a heat gun (low temperature) and peel off slowly.
2. Using isopropyl alcohol, clean the surface and dry thoroughly.

**NOTICE** Do not apply isopropyl alcohol or solvent directly on decals. Use only in a well ventilated area.

3. Just before beginning to affix the new decals, wipe the surface with a clean damp cloth and allow to dry.
4. Use a pallet to affix the decal. Always work from the center towards the edges.

**NOTICE** Do not remove the pre-mask yet.

5. Once the decal is correctly affixed, carefully make a final pass with the pallet. Apply enough pressure to make sure the glue sticks well on the surface.
6. Remove the pre-mask.

## SIDE PANEL

### Side Panel Removal

1. Unhook both rubber latches.
2. Firmly pull the upper latch **upwards**.

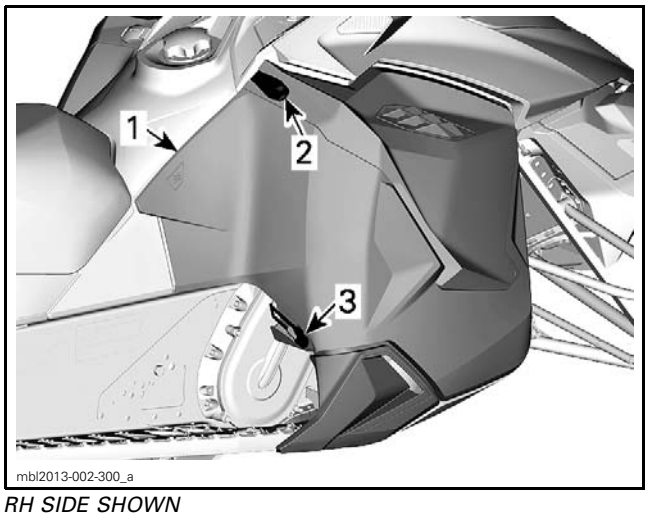


*RH SIDE SHOWN*
1. *Side panel*
2. *Upper latch*
3. *Lower latch*

3. Open side panel.
4. Lift up the side panel and move the lower hinge out of its slot.
5. Free the upper hinge from its slot by lowering the side panel.

**NOTICE** Make sure to place panels in a safe place to avoid scratching.

### Side Panel Installation

The installation is the reverse of the removal procedure.

## REWIND STARTER HANDLE HOUSING

### Rewind Starter Handle Housing Removal

1. Open RH side panel.
2. Remove screws retaining housing to oil reservoir.

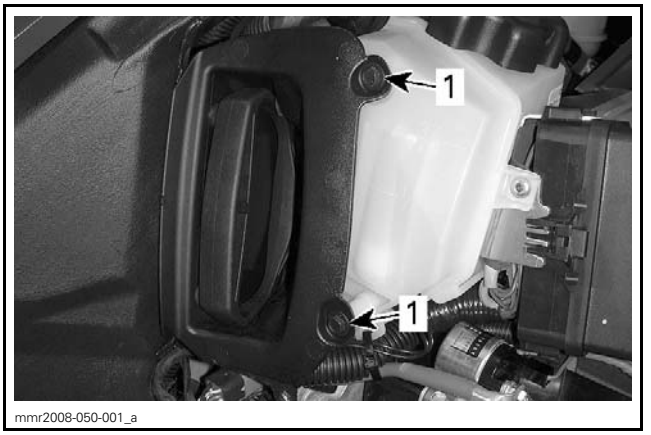


*RH SIDE SHOWN*
1. *Screws*

3. Pull on housing to release it from oil reservoir.

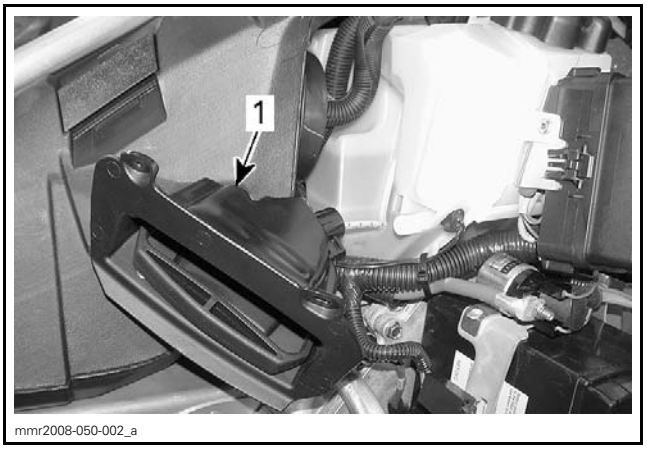


1. *Housing*

4. Remove rewind starter handle. Refer to *REWIND STARTER* subsection.

### Rewind Starter Handle Housing Installation

Installation is the reverse of removal procedure. Pay attention to the following.

Push vigorously handle housing toward oil reservoir. Ensure it is properly set in place before installing hardware.

| PART | TORQUE |
|---|---|
| Rewind starter handle housing screw | 1 N•m (9 lbf•**in**) |

## WINDSHIELD

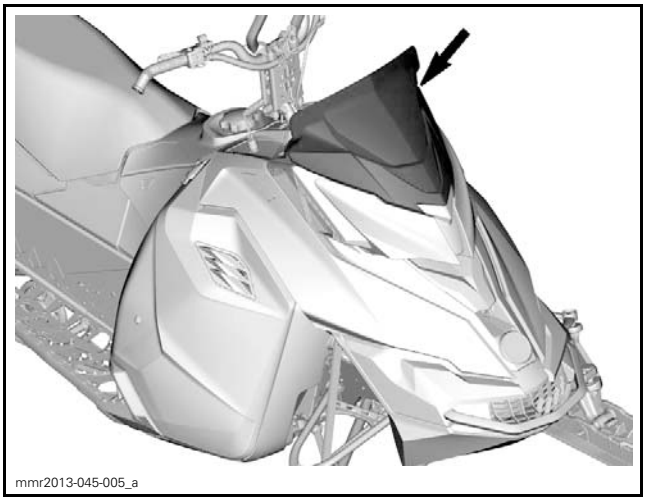
mmr2013-045-005_a

### Windshield Removal

Place your hands on each side of windshield.

Pull the windshield until its pins come out of rubber grommets then pull in the center to remove center pin from grommet.

### Windshield Installation

The installation is the reverse of removal procedure.

Lubricate the grommets using DIELECTRIC GREASE (P/N 293 550 004).

Secure windshield by inserting the windshield pins into the grommets.

NOTE: Make sure not to push grommets through gauge support holes.

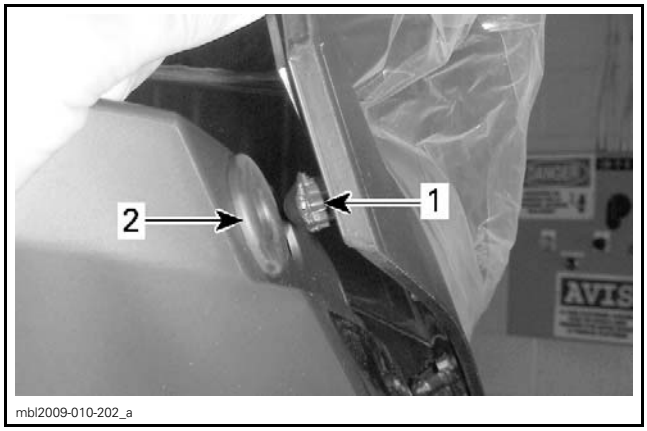

mbl2009-010-202_a

*TYPICAL*
1. *Windshield tab*
2. *Gauge support front grommet*

**⚠ WARNING**

**Make sure that handlebar turns freely in both directions. Make sure that there is no contact at any time between handlebar wind deflectors (if so equipped) and windshield.**

## STORAGE COMPARTMENT COVER

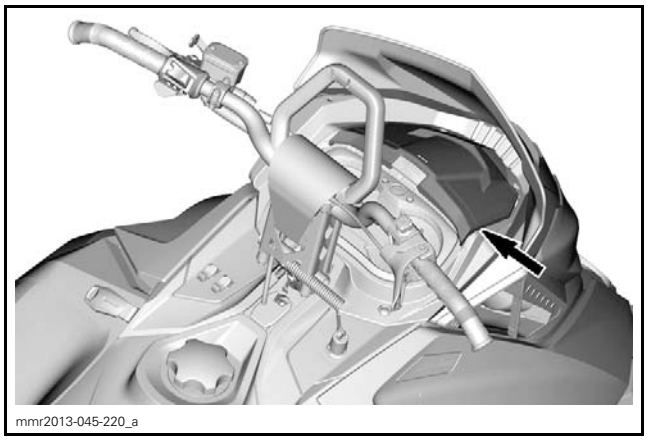
mmr2013-045-220_a

### Storage Compartment Cover Removal

***NOTICE*** **First remove windshield. Otherwise, the storage cover could be damaged during removal.**

1. Remove windshield.
2. Fully open storage cover until it is vertical.
3. Pull out storage cover.

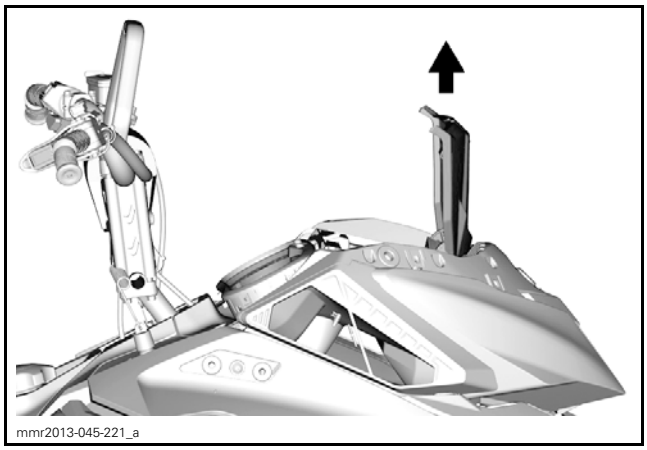
mmr2013-045-221_a

### Storage Compartment Cover Installation

**NOTICE** Ensure windshield is NOT installed. Otherwise, the storage cover could be damaged during installation.

1. Position storage cover vertically.
2. Insert cover onto pivot pins.
3. Close and latch cover.
4. Install windshield.

## GAUGE SUPPORT

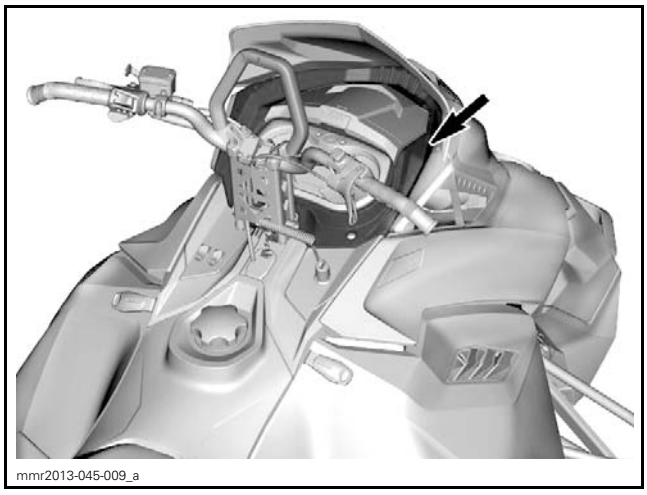
mmr2013-045-009_a

### Gauge Support Removal

1. Remove *WINDSHIELD*. See procedure in this subsection.
2. Remove the multifunction gauge. Refer to *LIGHTS, GAUGE AND ACCESSORIES* subsection.
3. Remove the gauge support screws.

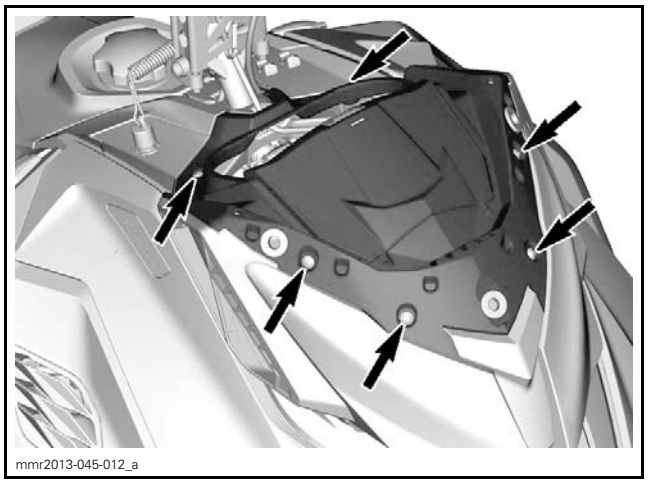
mmr2013-045-012_a

4. Pull out gauge support.

### Gauge Support Installation

The installation is the reverse of removal procedure.

| PART | TORQUE |
|---|---|
| Gauge support screws | 2.3 N•m (20 lbf•**in**) |

## WIND DEFLECTORS (IF EQUIPPED)

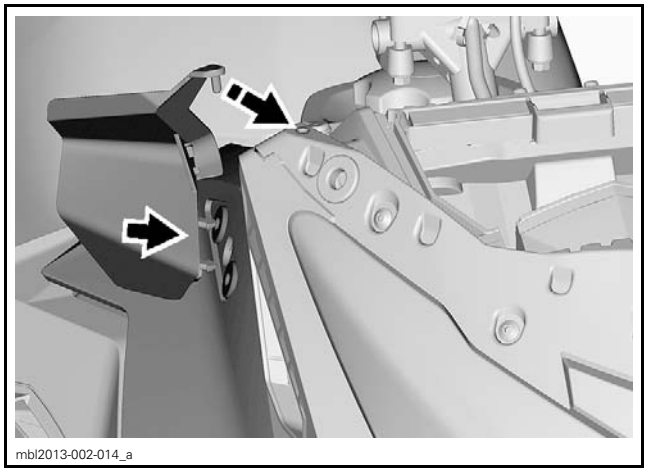
mbl2013-002-014_a

# UPPER BODY MODULE

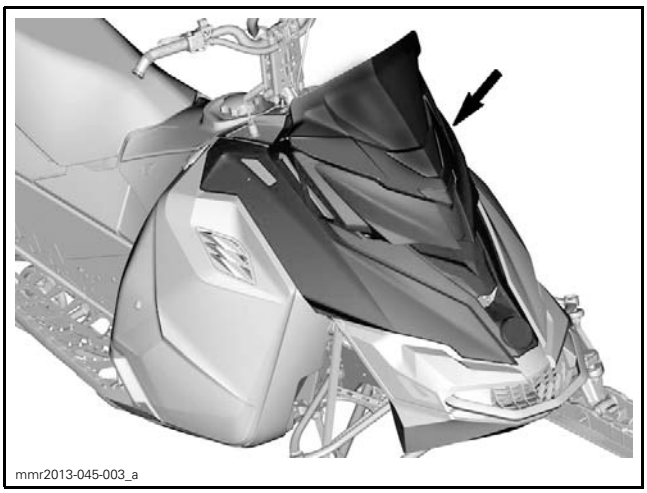
mmr2013-045-003_a

## Upper Body Module Removal

NOTE: Upper body module can be removed with the windshield and gauge support installed as described in this procedure.

1. Remove the multifunction gauge. Refer to *LIGHTS, GAUGE AND ACCESSORIES* subsection.
2. Disconnect the headlight connector.

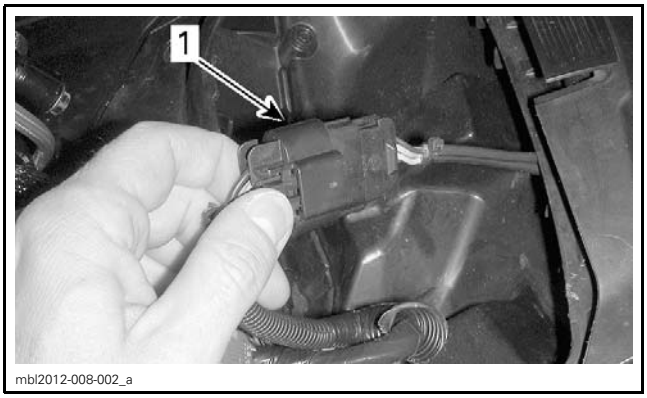

mbl2012-008-002_a

*1. Headlights connector*

3. Remove *SIDE PANELS*. See procedure in this subsection.
4. Remove gauge support rear screws.

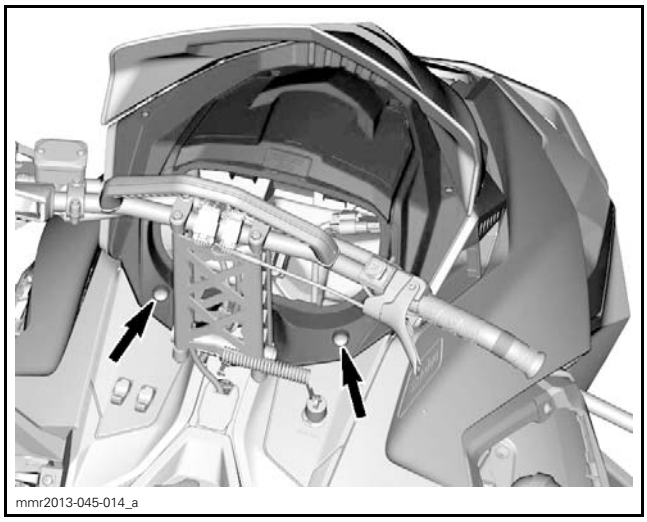
mmr2013-045-014_a

5. Remove the drive belt guard.
6. Disconnect the air intake connector tube.

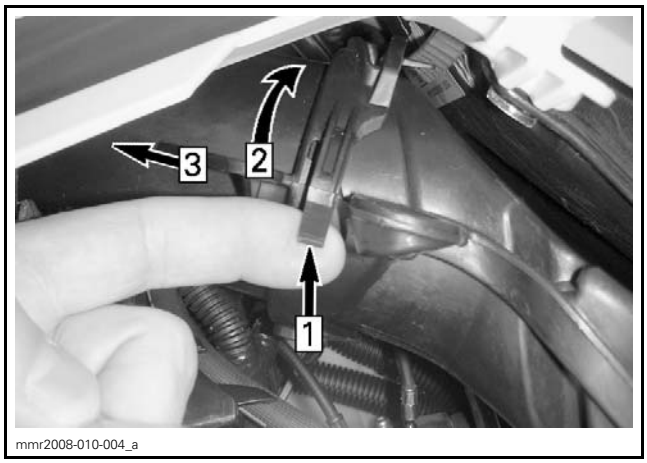

mmr2008-010-004_a

*LH SIDE SHOWN*
*Step 1: Lift tab*
*Step 2: Twist tube*
*Step 3: Pull forward*

7. Disconnect air temperature sensor (ATS) on top of connector tube.

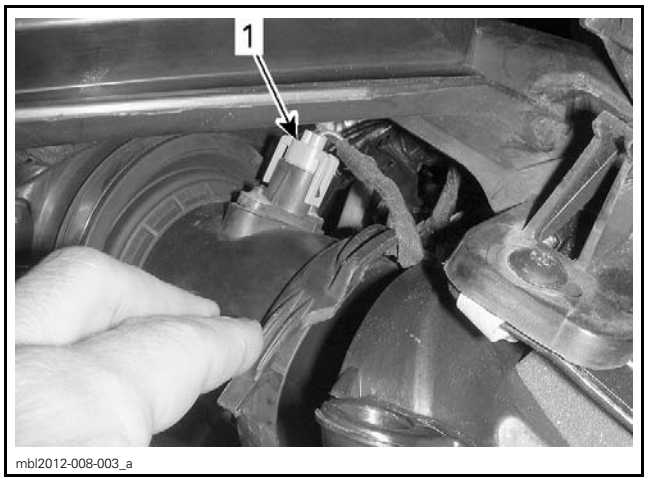

mbl2012-008-003_a

*LH SIDE SHOWN*
*1. ATS connector*

8. Disconnect the APS hose at the ECM.

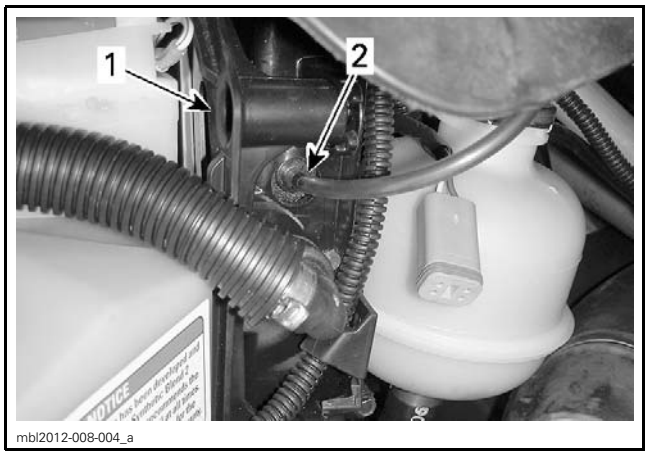


*RH SIDE SHOWN*
1. *ECM*
2. *APS hose*

9. Remove the upper body module retaining screws.

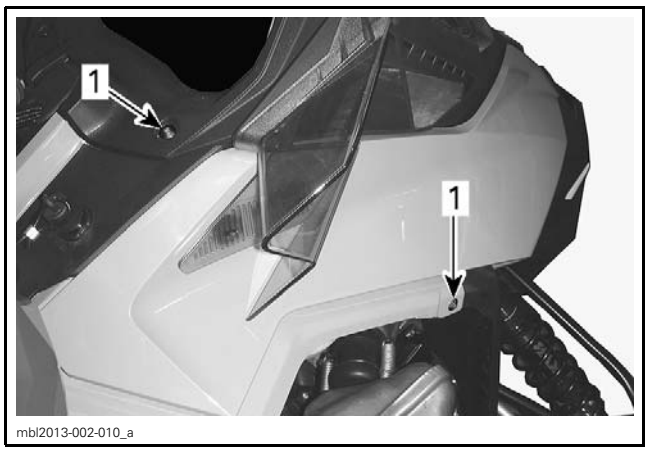


*RH SIDE SHOWN*
1. *Retaining screws*

10. Remove the upper body module.
    - 10.1 Grab the upper body module in the gauge support section.
    - 10.2 Lift the module by approximately 15°.
    - 10.3 Pull the module forward.

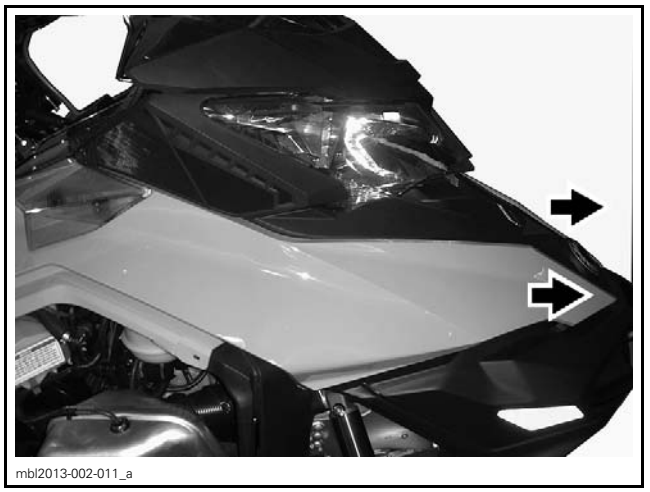


*SLIDE TOWARDS FRONT*

## Upper Body Module Installation

1. Insert the upper body module tabs into the bottom pan cover openings.

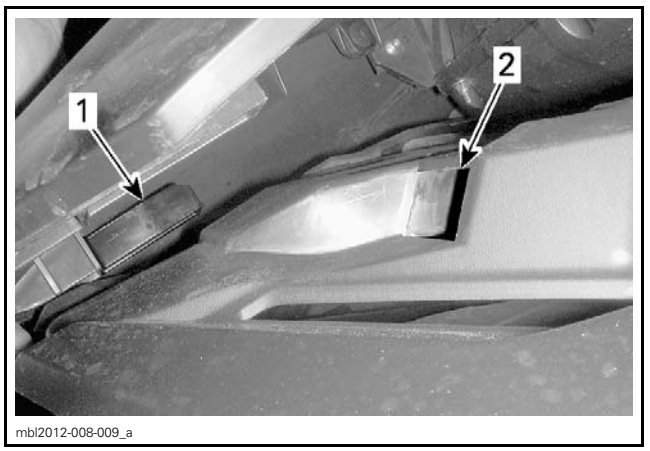


*LH SIDE SHOWN*

2. Slide the module towards rear with an angle of approximately 15°. When the pins are fully inserted in the slots, lower the module to reach the console screws.

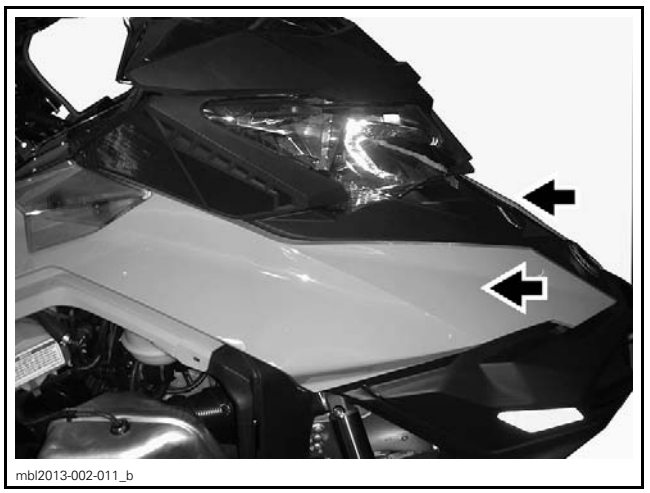

3. On both sides, install the upper body module retaining screws.

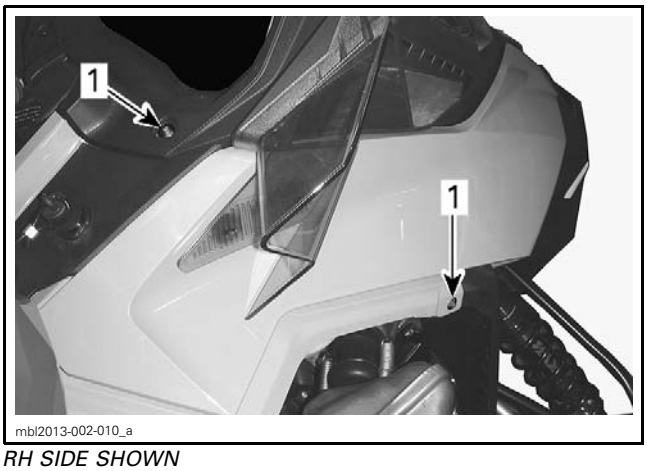


*RH SIDE SHOWN*
*1. Retaining screws*

4. Connect:
   – APS hose on the ECM
   – Headlights connector
   – Gauge connector
   – Air temperature sensor (ATS)
   – Air intake connector tube.
5. Install:
   – Gauge support rear screws
   – Gauge
   – Drive belt guard.
6. Install side panels

# HOOD

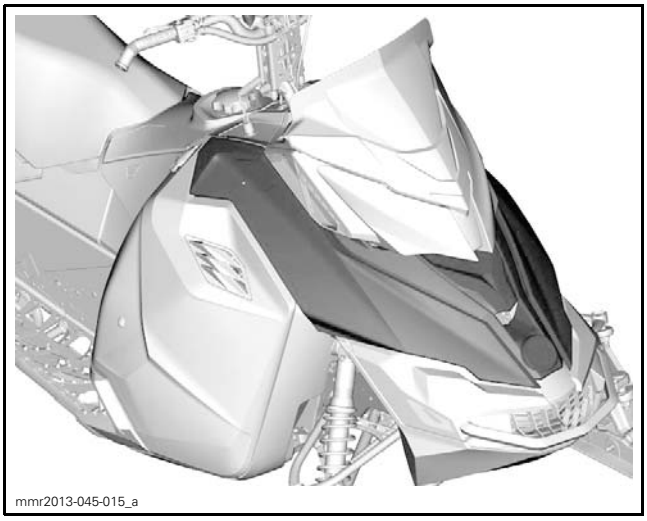


## Hood Removal

1. See procedures in this subsection and remove:
– Windshield
– Upper body module
2. Remove hood access plate.

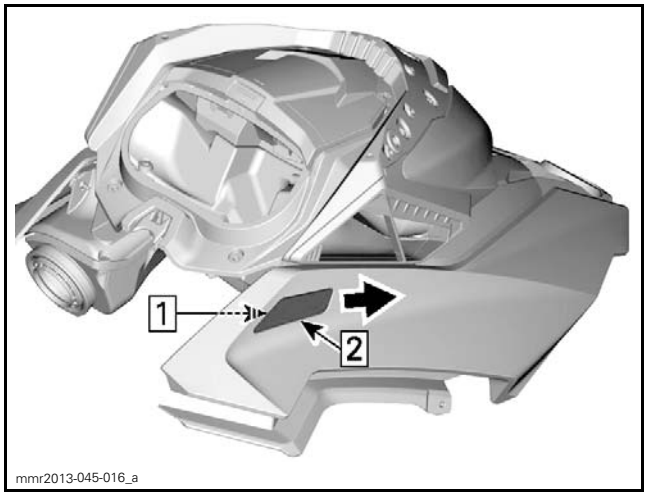


*Step 1: Unlock from the back*
*Step 2: Slide plate forward*

3. Remove hood screws.

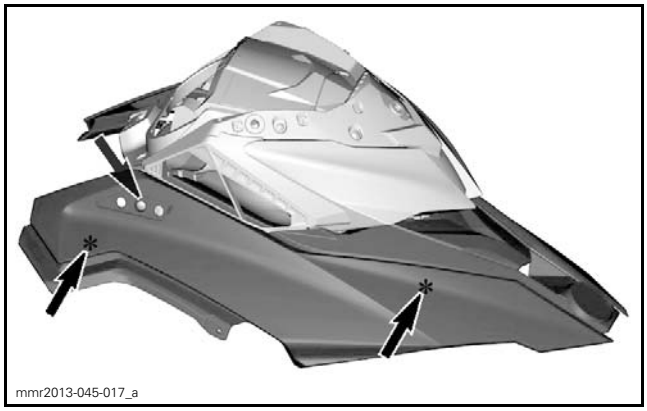


4. Pull out hood.

**NOTE:** You may need to twist the hood before pulling it out.

*TOWARDS FRONT*

## Hood Installation

The installation is the reverse of removal procedure.

| PART | TORQUE |
|---|---|
| Hood screws | 1.7 N•m (15 lbf•**in**) |

# HEADLIGHT MODULE

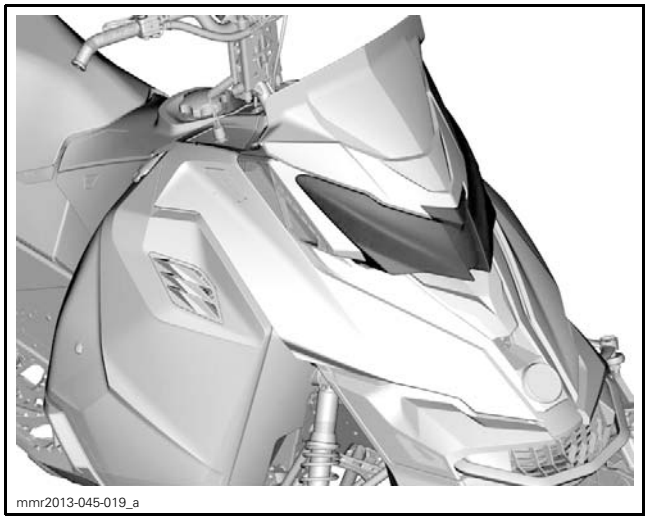


## Headlight Module Removal

1. See procedures in this subsection and remove:
– Hood
– Gauge support
2. Remove retaining screws from mesh filter housing.

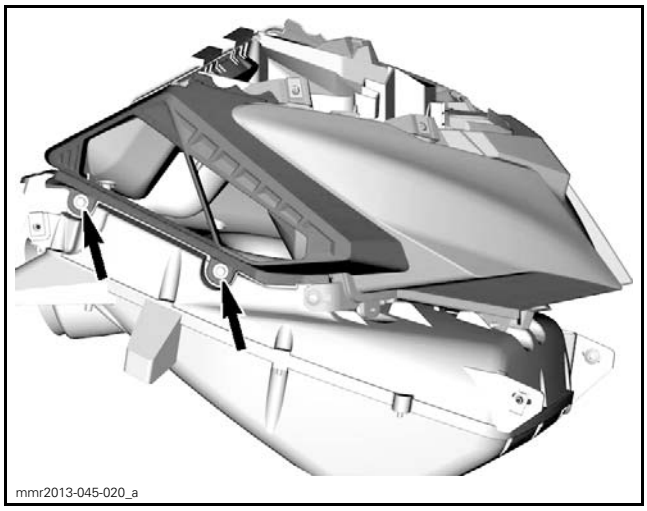


*RH SIDE SHOWN*

3. From top of upper body module, carefully release mesh filter housing tabs.
4. Detach connector from air intake silencer.

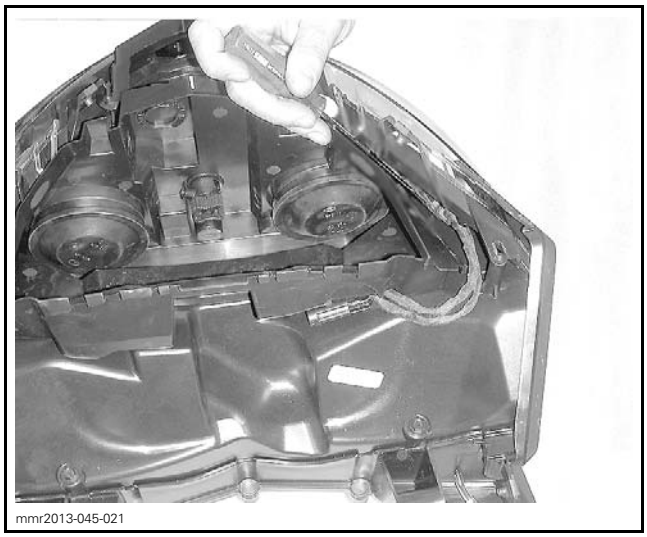


*TOP OF UPPER BODY MODULE — RH SIDE TABS SHOWN*

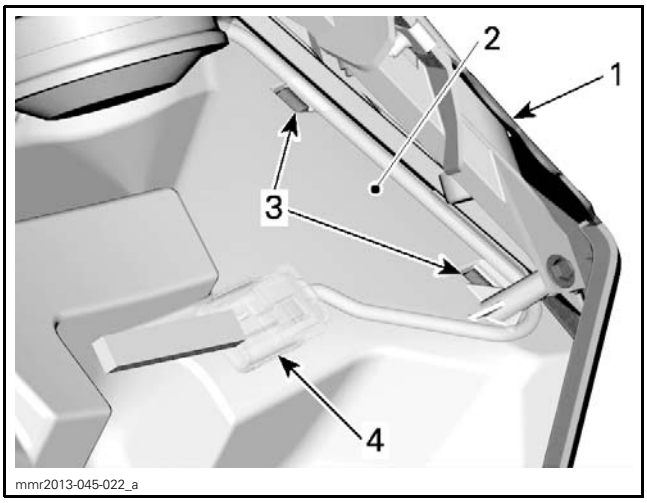

mmr2013-045-022_a

*RH SIDE TABS SHOWN — RELEASE AND PUSH OUT BOTH TABS*
1. *Headlight housing*
2. *Air intake silencer*
3. *Mesh filter housing tabs*
4. *Connector*

5. Remove headlight housing screws.

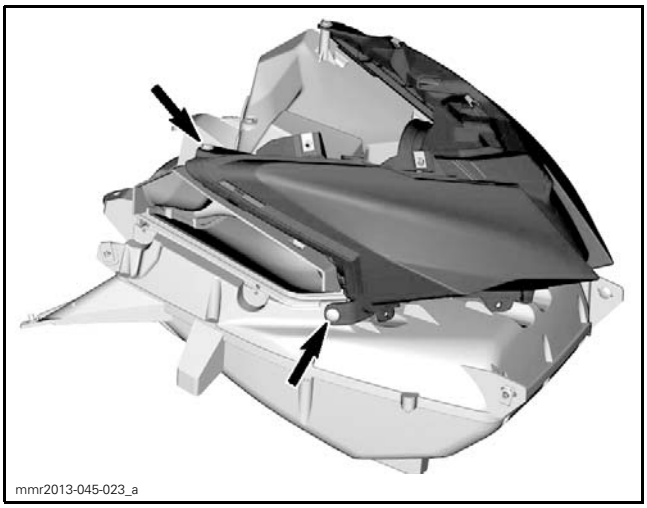
mmr2013-045-023_a

*RH SIDE SHOWN*

6. Pull out headlight housing.

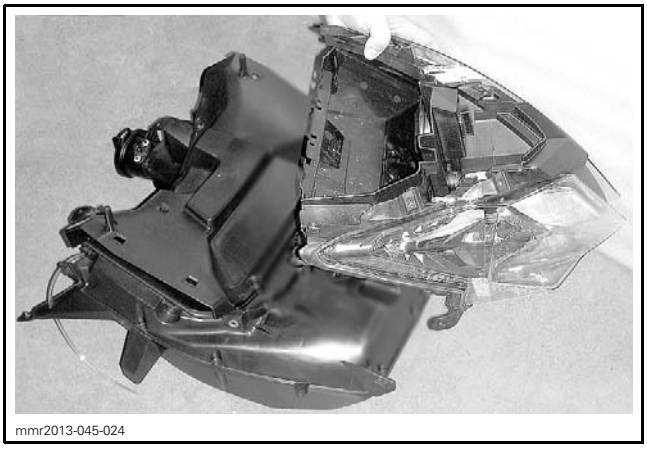
mmr2013-045-024

## Headlight Module Installation

The installation is the reverse of removal procedure.

| PART | TORQUE |
|---|---|
| Mesh filter housing screws | 1.7 N•m (15 lbf•**in**) |
| Headlight housing screws | 1.9 N•m (17 lbf•**in**) |

# CONSOLE

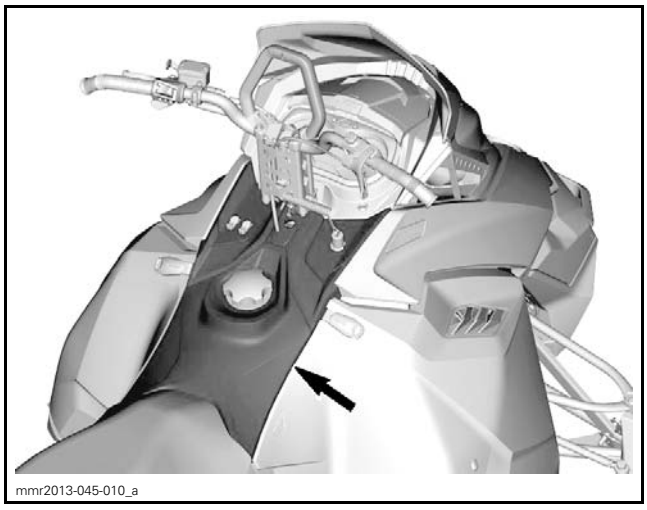
mmr2013-045-010_a

## Console Removal

1. Remove *UPPER BODY MODULE*. See procedure in this subsection.
2. Remove seat.
3. Remove console screws.

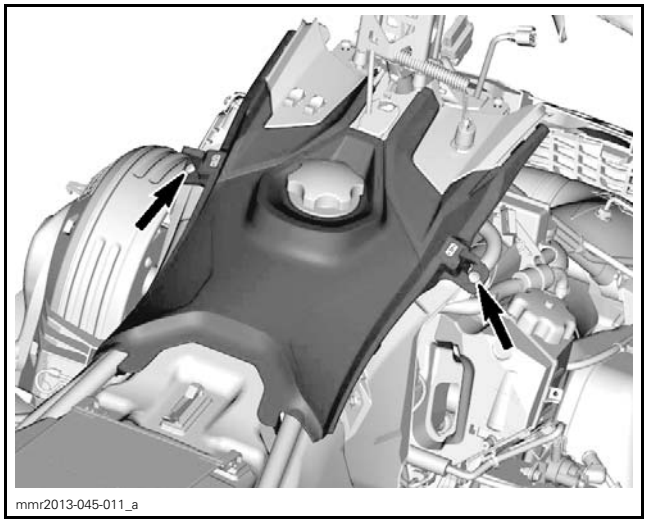
mmr2013-045-011_a

4. Remove fuel tank cap.

5. Using the CONSOLE NUT WRENCH (P/N 529 036 183), unscrew the fuel tank nut.

529036183

mmr2011-110-001

6. Lift up the console and unplug all connectors.
7. Install fuel tank cap.

## Console Installation

The installation is the reverse of removal procedure.

| PART | TORQUE |
|---|---|
| Console screws | 1.9 N•m (17 lbf•**in**) |

# BOTTOM PAN COVER

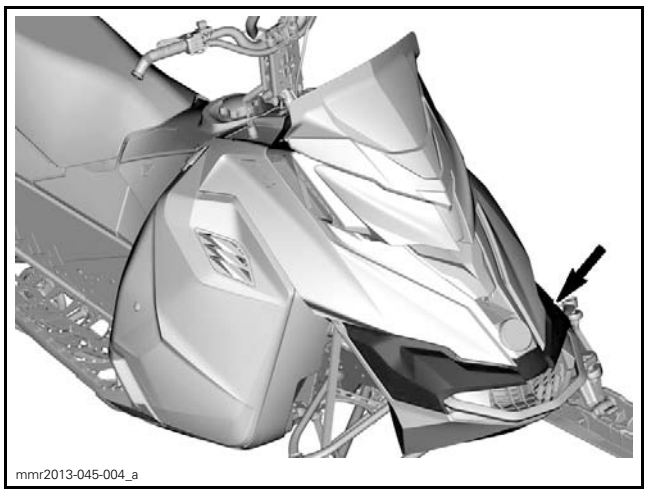
mmr2013-045-004_a

## Bottom Pan Cover Removal

1. Remove *HOOD*.See procedure in this subsection.
2. Remove bottom pan cover screws.

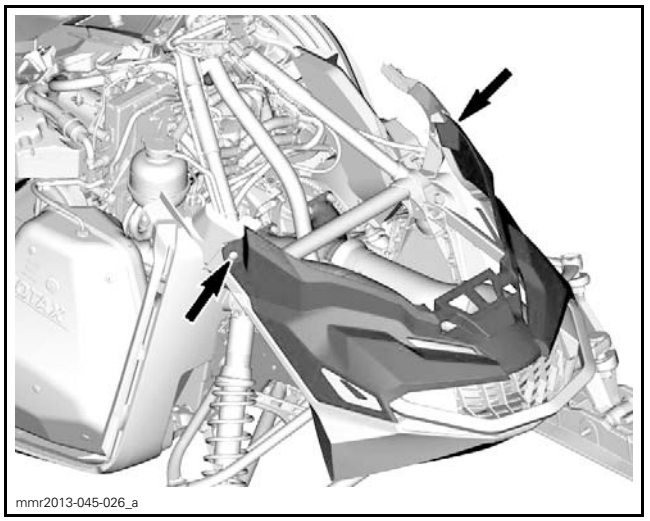
mmr2013-045-026_a

3. Pull out bottom pan cover toward front.

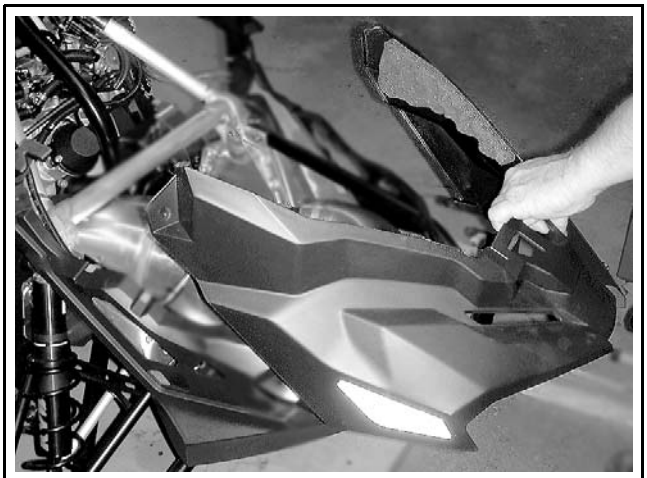
mmr2013-045-027_a

## Bottom Pan Cover Installation

The installation is the reverse of the removal procedure. However, pay attention to the following.

Ensure to slide front sides of bottom pan cover into bottom pan.

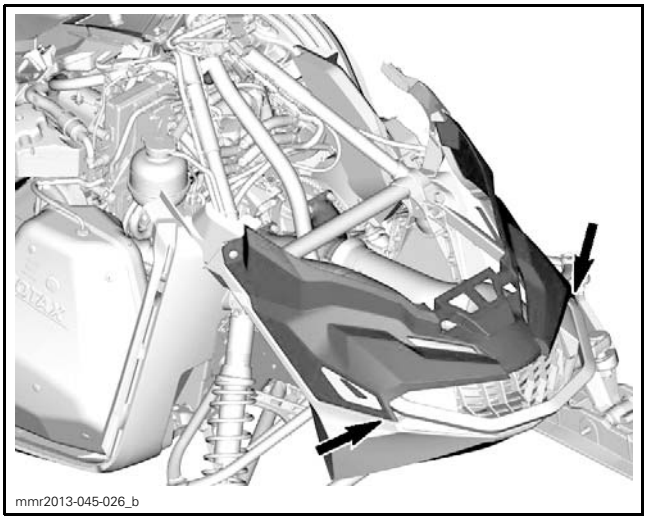
mmr2013-045-026_b

| PART | TORQUE |
|---|---|
| Bottom pan cover screws | 1.9 N•m (17 lbf•**in**) |

# FRONT BUMPER

## Front Bumper Removal

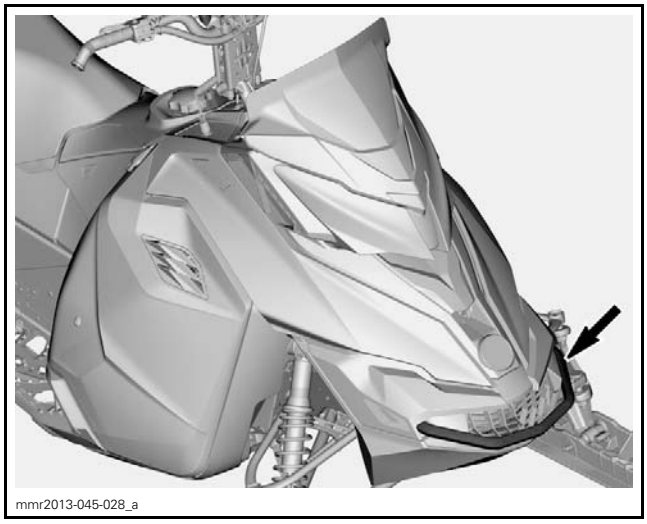
mmr2013-045-028_a

1. Remove *BOTTOM PAN COVER*. See procedure in this subsection.
2. Remove tuned pipe. Refer to *EXHAUST SYSTEM* subsection.
3. Using a SUPERTANIUM DRILL BIT 3/16" (P/N 529 031 800), drill out rivets from front bumper.
4. Remove front bumper bolts.

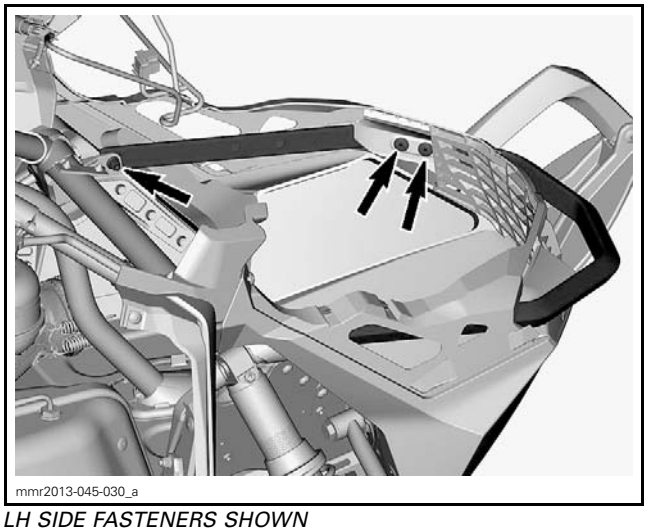
mmr2013-045-030_a

*LH SIDE FASTENERS SHOWN*

5. Pull out bumper toward front.

## Front Bumper Installation

Install bumper on vehicle.

Install new rivets.

Install front bumper bolts and nuts.

| PART | TORQUE |
|---|---|
| Front bumper screws | 10 N•m (89 lbf•**in**) |

Install remaining components.

# FRONT BOTTOM PAN

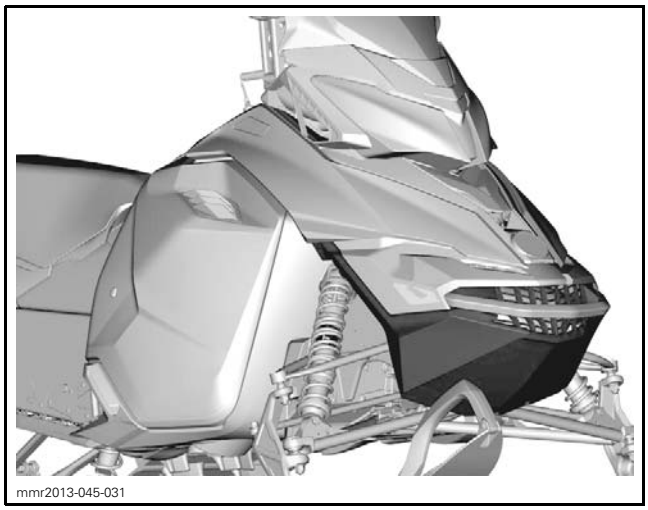
mmr2013-045-031

## Front Bottom Pan Removal

1. Lift front of vehicle until skis are off the ground.
2. Place the front portion of frame on a wooden box to support it securely.

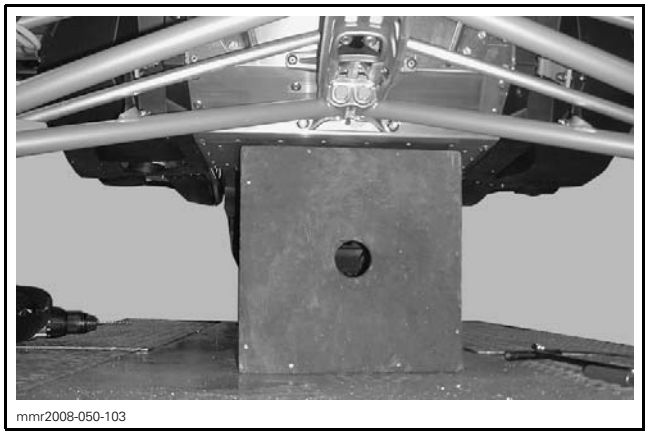
mmr2008-050-103

3. Remove *FRONT BUMPER*. See procedure in this subsection.

| NOTE |
|---|
| Front bumper may remain attached to the front bottom pan. In this case, detach bumper from front member. |

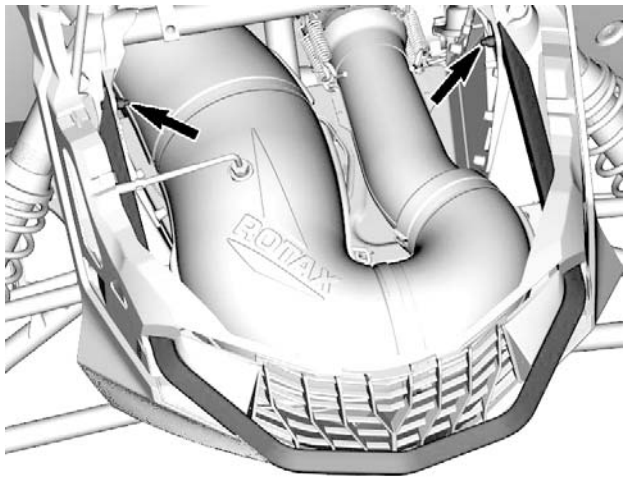

4. Remove tuned pipe. Refer to *EXHAUST SYSTEM* subsection.
5. On 800R models, detach TCM module harness from bottom pan.

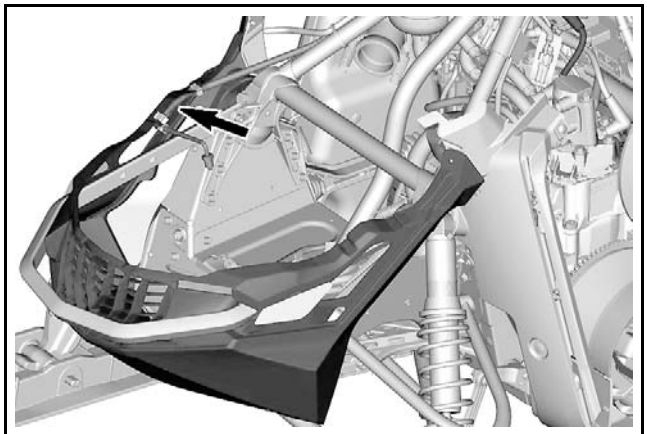
mmr2013-045-034_a

*VIEW FROM LH SIDE — HARNESS ON RH SIDE*

6. Remove front shock absorbers. Refer to *FRONT SUSPENSION* subsection.
7. Using an angle drill and a SUPERTANIUM DRILL BIT 3/16" (P/N 529 031 800), drill out all rivets retaining bottom pan.

NOTE: Refer to *FRAME* for proper procedure when drilling rivets retaining plastic parts.

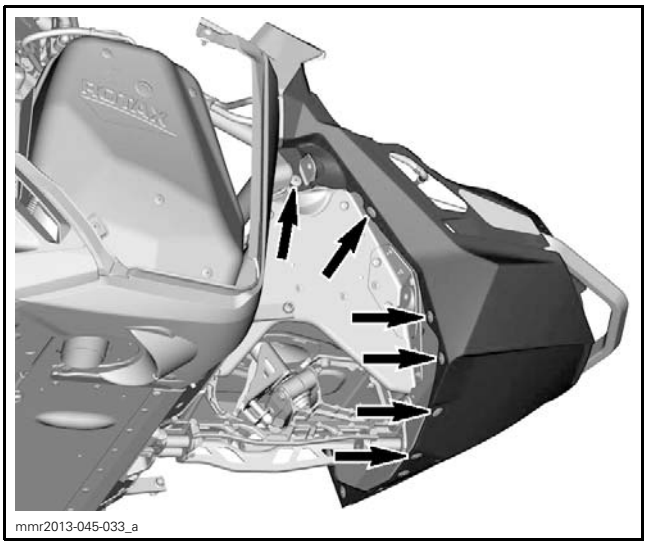


*RH SIDE SHOWN — SOME PARTS REMOVED FOR CLARITY PURPOSE*

8. Remove bottom pan.

### Front Bottom Pan Installation

The installation is the reverse of removal procedure.

## SIDE BOTTOM PAN CAP

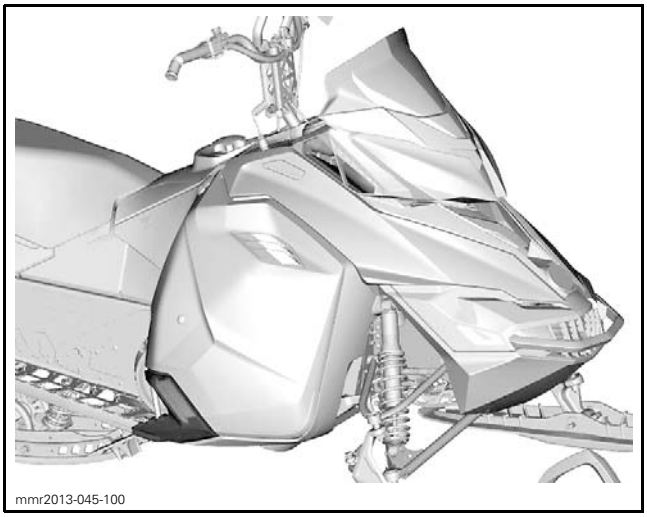


### Side Bottom Pan Cap Removal

1. Remove LH and RH panels. Refer to procedure in this subsection.
2. Remove drive belt guard. Refer to *DRIVE BELT* subsection.
3. Remove muffler. Refer to *EXHAUST SYSTEM* subsection.
4. Using an angle drill and a SUPERTANIUM DRILL BIT 3/16" (P/N 529 031 800), drill out all rivets retaining side bottom pan cap.

NOTE: Refer to *FRAME* for proper procedure when drilling rivets retaining plastic parts.

5. Remove screw retaining the rear of side bottom pan.

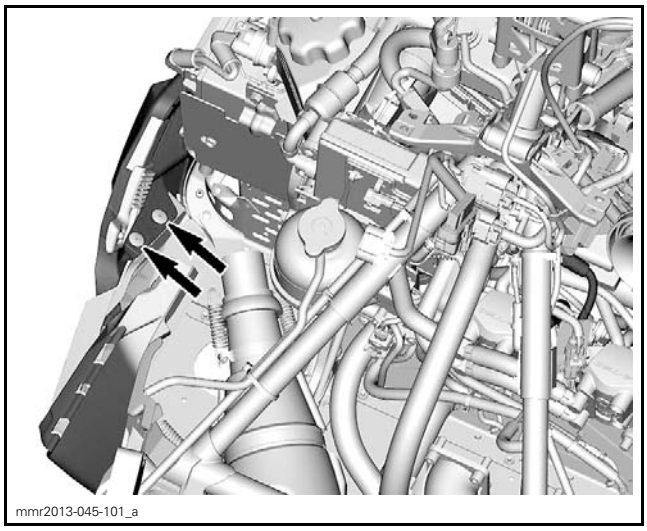


*RH SIDE SEEN FROM FRONT LH SIDE*

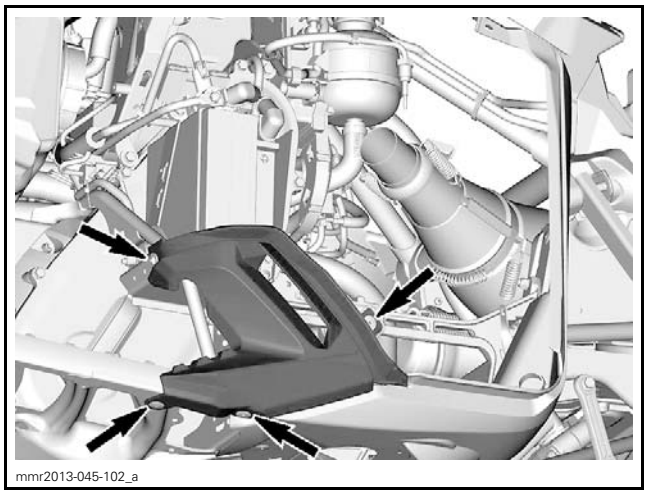


*RH SIDE*

### Side Bottom Pan Cap Installation

The installation is the reverse of removal procedure.

| PART | TORQUE |
|---|---|
| Side bottom pan cap screws | 1.9 N•m (17 lbf•**in**) |

# SIDE BOTTOM PAN

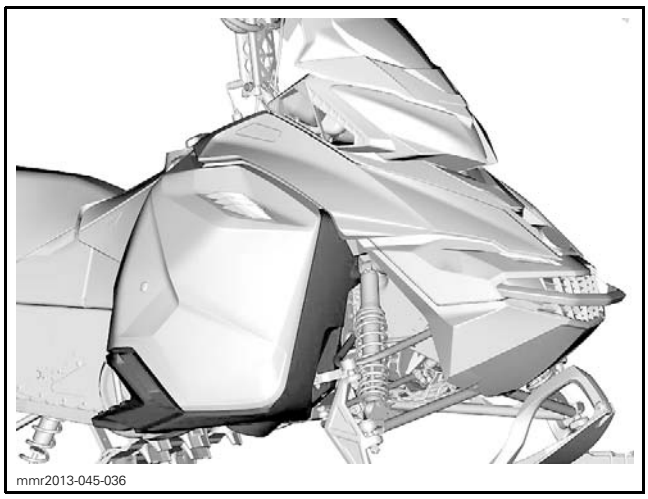
mmr2013-045-036

## Side Bottom Pan Removal

1. Remove LH and RH panels. Refer to procedure in this subsection.
2. Remove drive belt guard. Refer to *DRIVE BELT* subsection.
3. Lift front of vehicle until skis are off the ground.
4. Place the front portion of frame on a wooden box to support it securely.

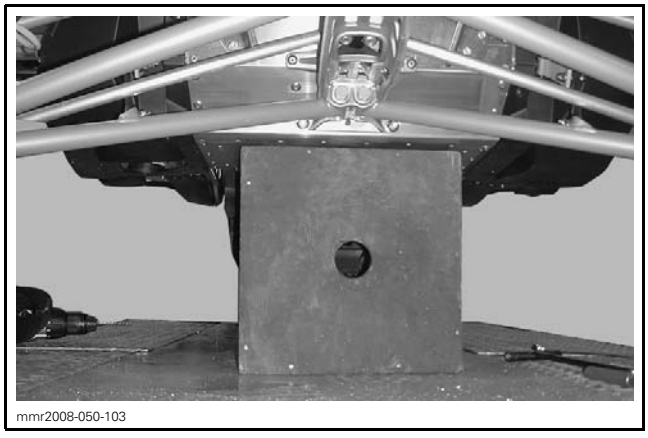
mmr2008-050-103

5. Remove *BOTTOM PAN COVER*. See procedure in this subsection.
6. Disconnect vent tube from side bottom pan.
7. Remove stabilizer bar lever. Refer to *FRONT SUSPENSION* subsection.

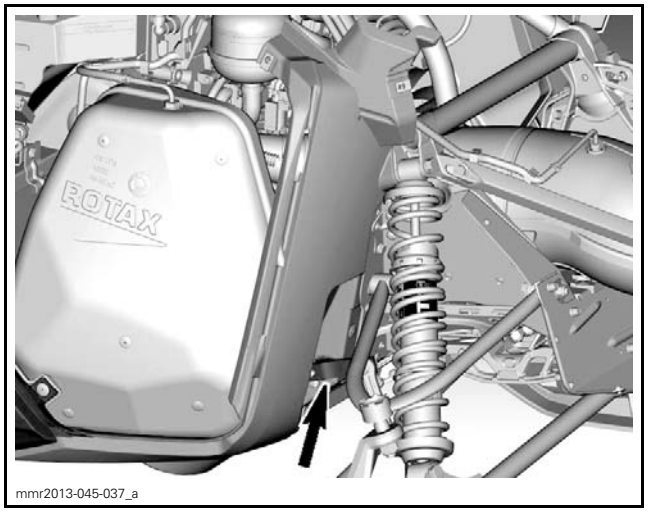

mmr2013-045-037_a

*RH SIDE SHOWN*

8. Using an angle drill and a SUPERTANIUM DRILL BIT 3/16" (P/N 529 031 800), drill out all rivets retaining side bottom pan.

NOTE: Refer to *FRAME* for proper procedure when drilling rivets retaining plastic parts.

9. Remove screws retaining the rear of side bottom pan.

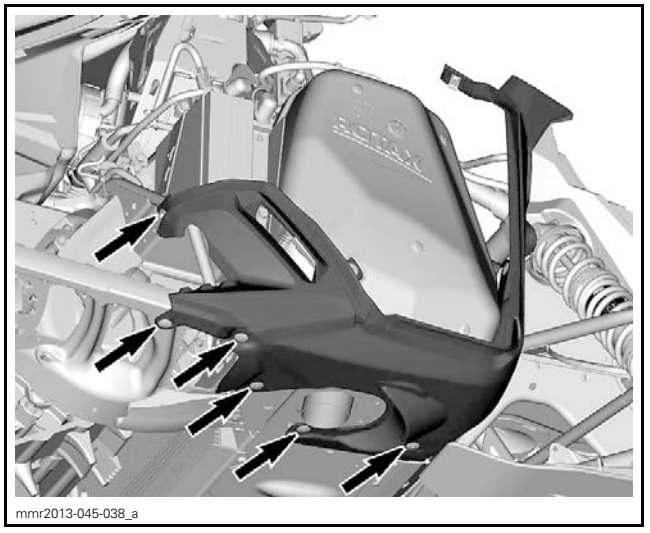

mmr2013-045-038_a

*RH SIDE SHOWN*

**NOTICE** **Be careful not to drill through muffler.**

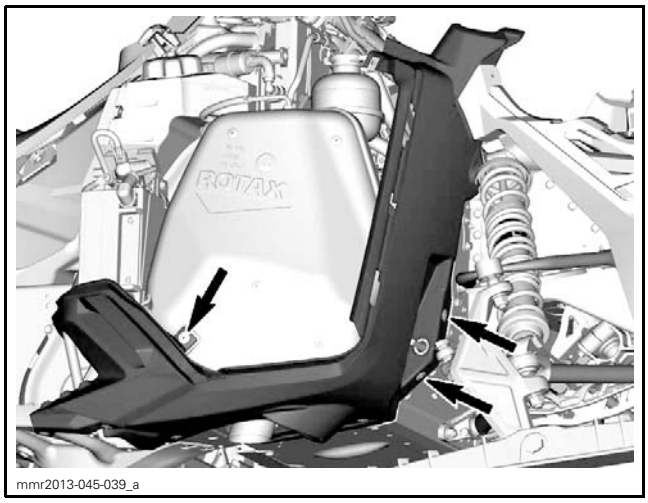


*RH SIDE SHOWN*

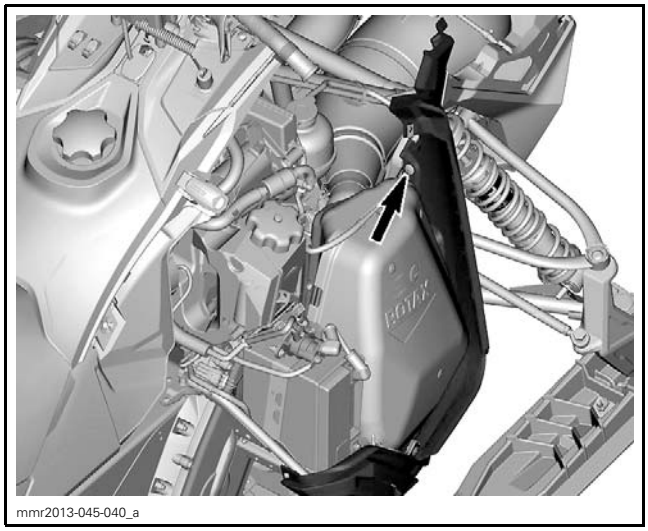


*RH SIDE SHOWN*

10. Remove bottom pan.

### Side Bottom Pan Installation

The installation is the reverse of removal procedure.

| PART | TORQUE |
|---|---|
| Side bottom pan screws | 1.9 N•m (17 lbf•**in**) |

## SEAT COVER

### Seat Cover Replacement

Remove seat.

Remove the old seat cover. Check the foam and replace it if necessary.

Install staples with an electric tacker such as Arrow tacker ETN-50 or with a manual tacker such as ARROW TACKER (P/N T-50).

***NOTICE*** **Ensure to use the proper length staples. Extra long staples would pierce the exposed side of the leatherette.**

NOTE: For an easier installation, it is highly recommended to use an electric tacker.

Ensure that the seat rest firmly against a hard surface such as a piece of wood. This is done to get the staples completely pushed in place.

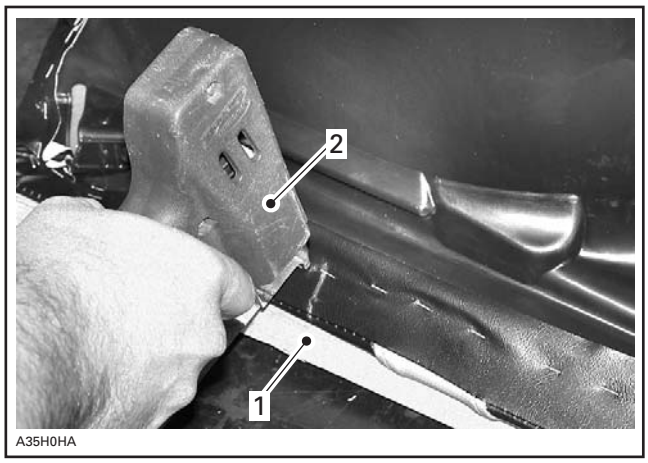


*TYPICAL*
1. *Piece of wood*
2. *Tacker*

After seat cover installation, cut all around the excess of material.

## REAR BUMPER

| PART | TORQUE |
|---|---|
| Rear bumper screws | 16 N•m (142 lbf•**in**) |

## TAIL LIGHT HOUSING

Release the locking tab from underneath tunnel.

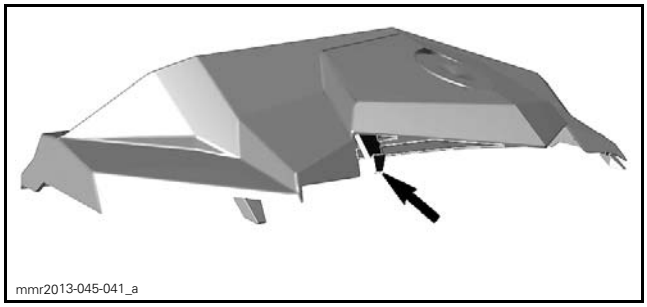


Pull housing toward rear.

# BODY

## SERVICE TOOLS


| Description | Part Number | Page |
|---|---|---|
| SUPERTANIUM DRILL BIT 3/16" | 529 031 800 | 9 |


## SERVICE PRODUCTS


| Description | Part Number | Page |
|---|---|---|
| XPS ATV CLEANING KIT | 219 701 713 | 3 |
| XPS ATV FINISHING SPRAY | 219 701 704 | 3 |
| XPS ATV WASH | 219 701 702 | 3 |

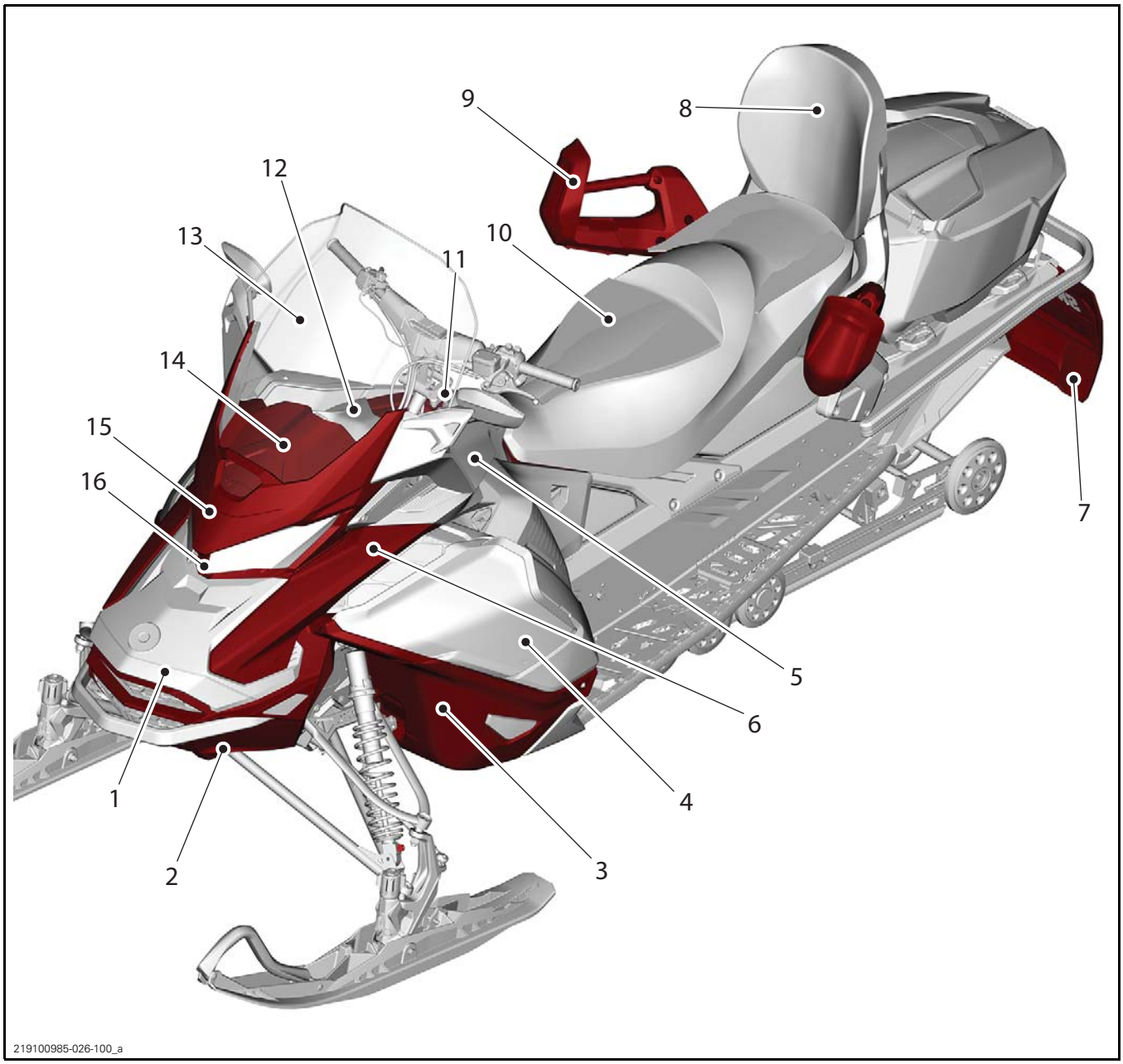


1. *Hood*
2. *Bottom pan*
3. *Side bottom pan*
4. *Side panel*
5. *Side wind deflector*
6. *Lateral hood*
7. *Snow guard*
8. *Passenger backrest*
9. *Passenger handholds*
10. *Seat*
11. *Console*
12. *Gauge support*
13. *Windshield*
14. *Storage compartment cover*
15. *Windshield support*
16. *Headlight trim*

# GENERAL

## CLEANING

### Cleaning the Seat

It is recommended to clean the seat with a solution of warm soapy water, using a soft clean cloth.

**NOTICE** Avoid use of harsh detergents such as strong soaps, degreasing solvents, abrasive cleaners, paint thinners, etc. that may cause damage to the seat cover.

### Cleaning the Plastic

Clean the vehicle thoroughly, removing all dirt and grease accumulation.

To clean use a soft clean cloth and either soapy water or isopropyl alcohol.

To remove grease, oil or glue use isopropyl alcohol.

**NOTICE** Do not apply isopropyl alcohol or acetone directly on decals.

Follow these recommendations to protect the glossy finish of polypropylene parts.

Apply a non abrasive wax on glossy finish only.

#### Non Compatible Cleaning Products

**NOTICE** Polypropylene is not compatible with PETROLEUM BASE PRODUCTS. Contact with petroleum base products, such as cleaners or lubricants will permanently alter the glossy finish of polypropylene parts.

**NOTICE** The following products must not be applied on the plastic components used on the vehicles:

- Gasoline
- Brake fluid
- Kerosene
- Diesel fuel
- Lighter fluid
- Varsol
- Naphtha
- Acetone
- Strong detergents
- Abrasive cleaners
- Waxes containing an abrasive or a cleaning agent in their formula.

| MATERIAL TYPE | NON-COMPATIBLE CLEANING PRODUCTS |
|---|---|
| Polypropylene | ANY PETROLEUM BASE CLEANING PRODUCTS |
| | XPS ATV FINISHING SPRAY (P/N 219 701 704) |
| | XPS ATV CLEANING KIT (P/N 219 701 713) |

vbs2012-006-002_a

*DO NOT USE ON POLYPROPYLENE*

### Compatible Cleaning Products

| MATERIAL TYPE | COMPATIBLE CLEANING PRODUCT |
|---|---|
| Polypropylene | XPS ATV WASH (P/N 219 701 702) |
| | Soapy water |

vbs2012-006-001

*SAFE FOR POLYPROPYLENE*

# REPAIRING BODY PARTS

The very first step before repairing plastic materials is to find out exactly which type of material is involved.

On the inner surface of each part, the production date, part number, and material code are molded in.

| PLASTIC PARTS | |
|---|---|
| CODE | MATERIAL |
| PP | Polypropylene |
| EMA+PA | Surlyn |

**NOTICE** Some repair products are not compatible with certain plastics.

**⚠ WARNING**

**Polycarbonate windshields must never be repaired by welding or otherwise.**

The following company provides a complete line of products to repair plastic materials:

CREST INDUSTRIES, INC.
Trenton, MI 48183
Phone: 734 479-4141
Toll Free: 1 800 822-4100
Fax: 734 479-4040
E-Mail: info@crestauto.com
www.crestauto.com

# PROCEDURES

NOTE: The same procedure applies for RH and LH side. Most of the time, only one side is described in this subsection.

## DECAL

### Replacing the Decal

1. To remove a decal; heat old decal with a heat gun (low temperature) and peel off slowly.
2. Using isopropyl alcohol, clean the surface and dry thoroughly.

**NOTICE** Do not apply isopropyl alcohol or solvent directly on decals. Use only in a well ventilated area.

3. Just before beginning to affix the new decals, wipe the surface with a clean damp cloth and allow to dry.
4. Use a pallet to affix the decal. Always work from the center towards the edges.

**NOTICE** Do not remove the pre-mask yet.

5. Once the decal is correctly affixed, carefully make a final pass with the pallet. Apply enough pressure to make sure the glue sticks well on the surface.
6. Remove the pre-mask.

## SIDE PANEL

### Removing the Side Panel

1. Release all lock devices.

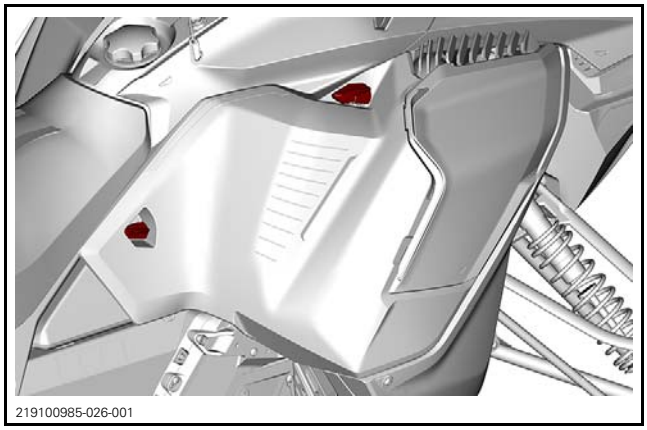


2. Open side panel.
3. Lift the side panel up and towards front.

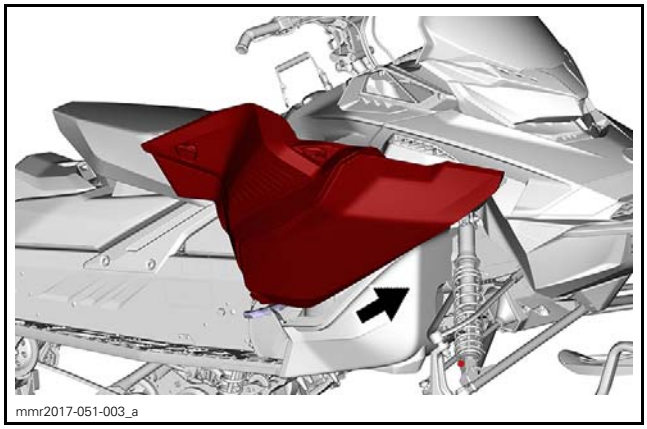


*TYPICAL*

**NOTICE** Make sure to place panels in a safe place to avoid scratching.

### Installing the Side Panel

The installation is the reverse of the removal procedure.

# WINDSHIELD

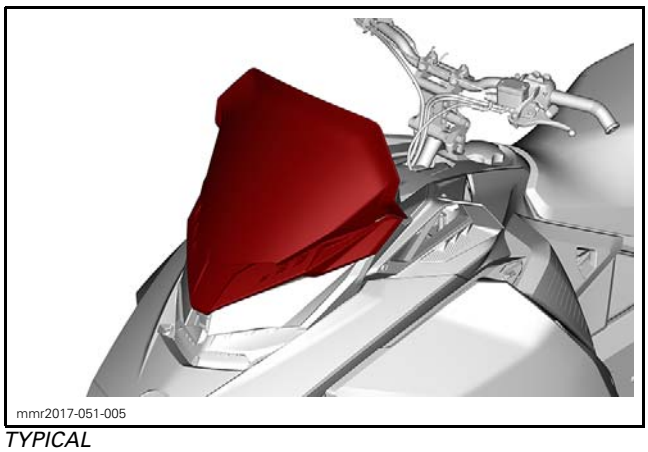


*TYPICAL*

## Removing the Windshield

Place your hands on each side of windshield.

Pull the windshield until its pins come out of rubber grommets then pull in the center to remove center pin from grommet.

## Installing the Windshield

The installation is the reverse of removal procedure.

Lubricate the grommets using soapsuds.

**NOTICE** **Do not lubricate grommets with any type of grease.**

Secure windshield by inserting the windshield pins into the grommets.

NOTE: Make sure not to push grommets through gauge support holes.

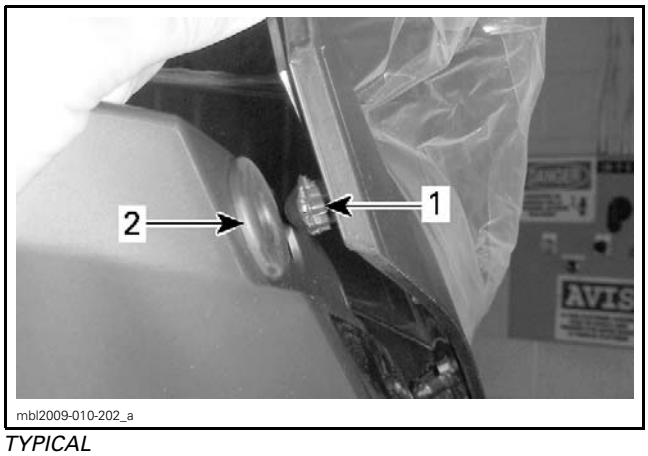


*TYPICAL*
1. *Windshield tab*
2. *Gauge support front grommet*

**⚠ WARNING**

Make sure that handlebar turns freely in both directions. Make sure that there is no contact at any time between handlebar wind deflectors (if so equipped) and windshield.

# STORAGE COMPARTMENT COVER

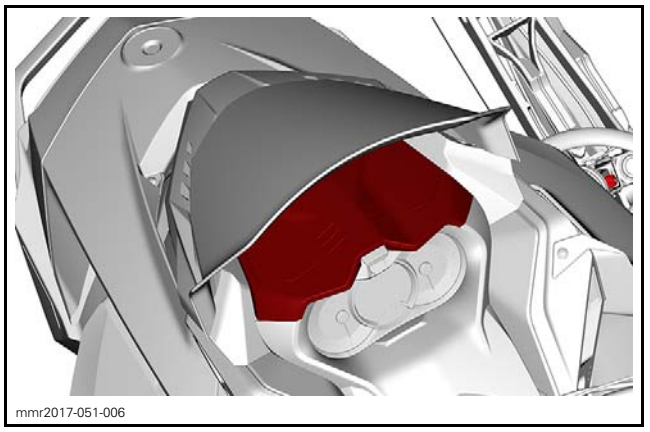


## Removing the Storage Compartment Cover

1. Remove windshield.
2. Open storage cover until it is almost vertical.

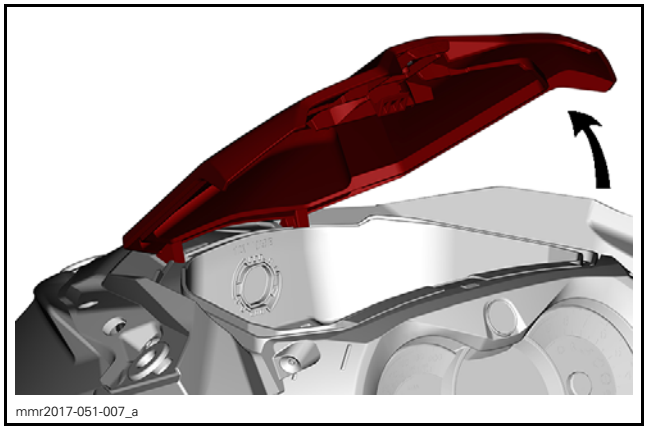


3. Pull out storage cover.

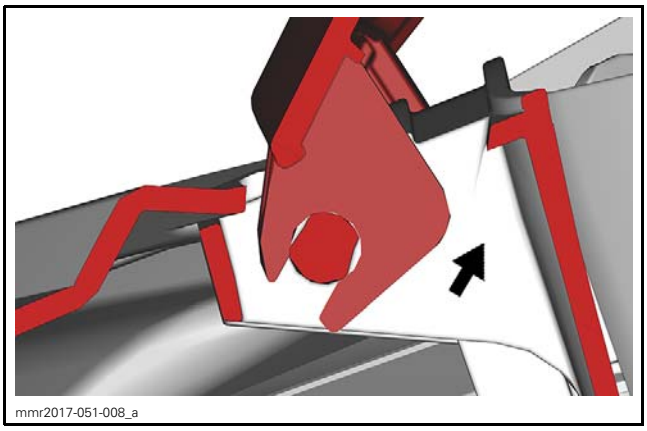
mmr2017-051-008_a

## Installing the Storage Compartment Cover

The installation is the reverse of the removal procedure.

**NOTICE** Ensure windshield is NOT installed. Otherwise, the storage cover could be damaged during installation.

# GAUGE SUPPORT

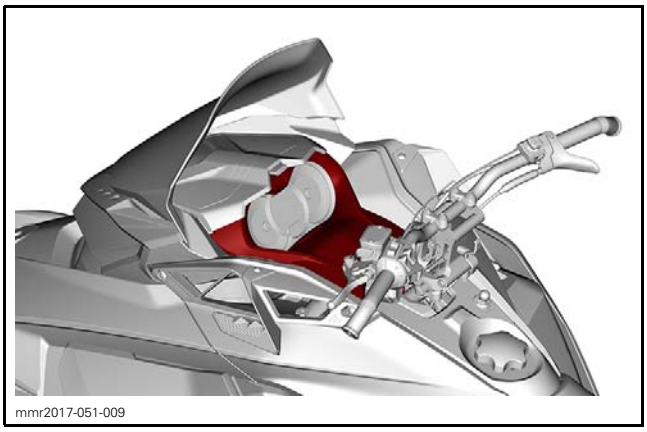
mmr2017-051-009

## Removing the Gauge Support

1. Remove the windshield. Refer to procedure in this subsection.
2. Open the storage compartment cover
3. Remove the gauge support screws.

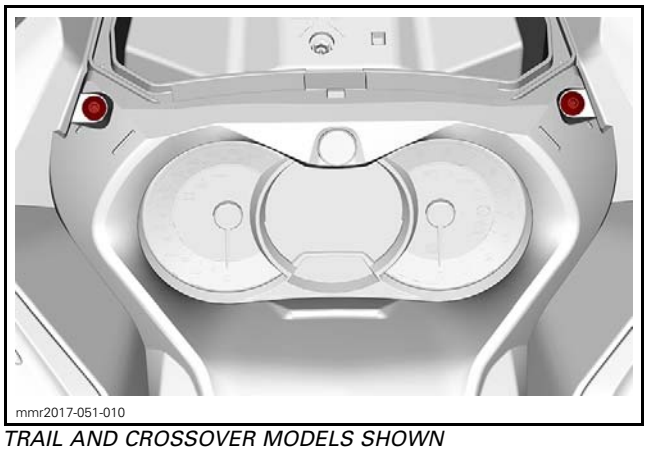
mmr2017-051-010

*TRAIL AND CROSSOVER MODELS SHOWN*

4. Lift the front of the gauge support, then slide it forward to remove it.

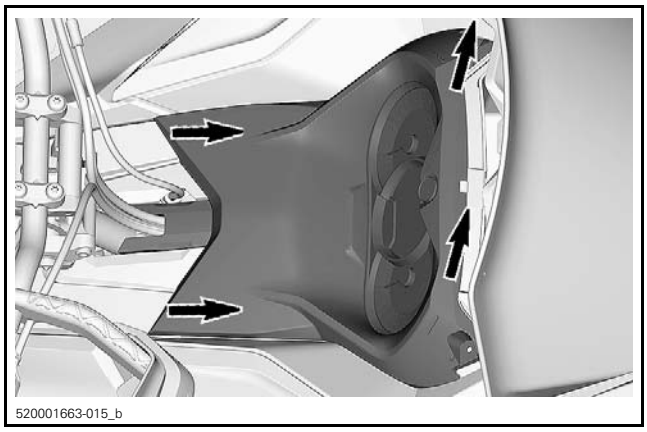
520001663-015_b

5. Remove the multifunction gauge from support. Refer to *GAUGE* subsection.

## Installing the Gauge Support

The installation is the reverse of removal procedure.

| TIGHTENING TORQUE | |
|---|---|
| Gauge support screw | 2.3 N•m ± 0.2 N•m (20 lbf•**in** ± 2 lbf•**in**) |

# UPPER BODY MODULE

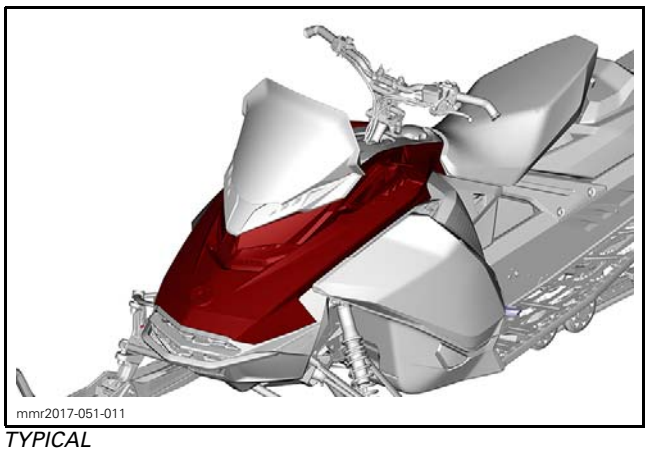

mmr2017-051-011

*TYPICAL*

## Removing the Upper Body Module

1. Refer to procedures in this subsection and remove:
   - Side panels
   - Gauge support
   - Storage compartment and its cover.
2. Disconnect the MAPTS and headlight connectors.

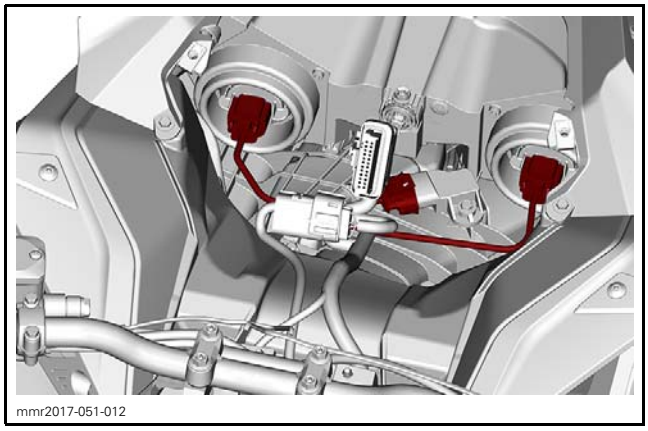

mmr2017-051-012

3. Loosen the air intake hose clamp.

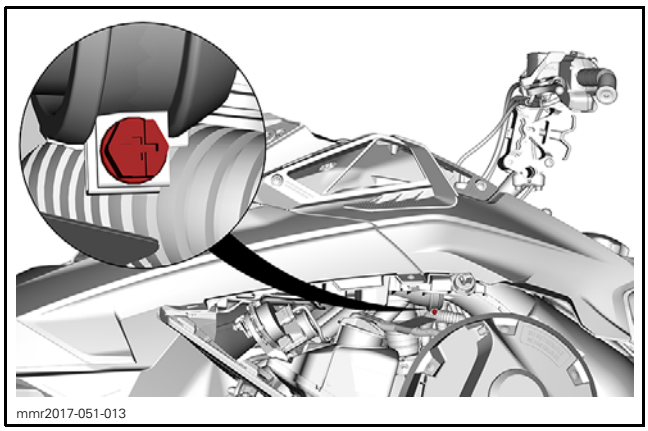

mmr2017-051-013

4. Remove the upper body module retaining screws.

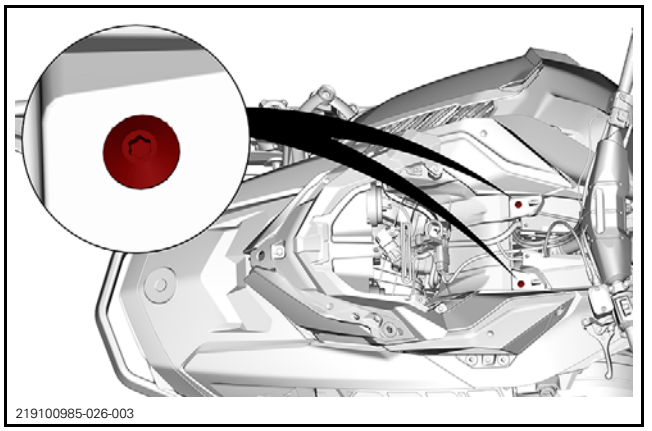

219100985-026-003

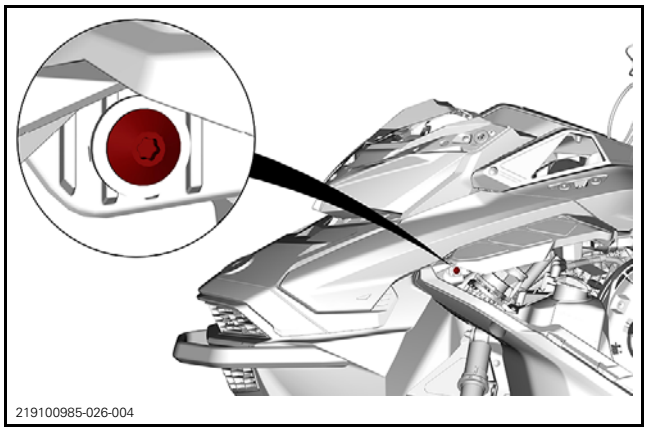

219100985-026-004

5. Lift the rear end of both lateral hood until their tabs come out of the rear console.

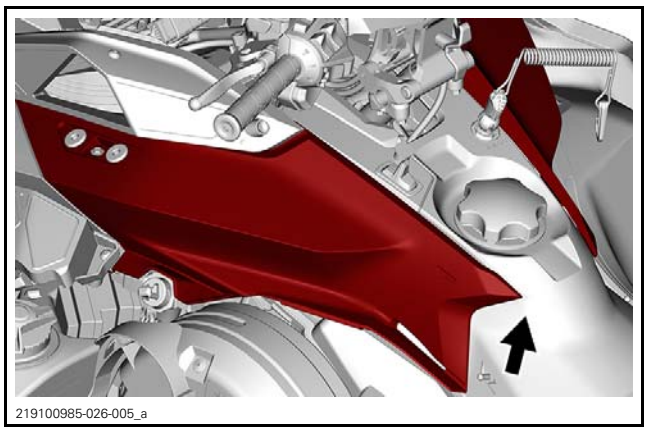

219100985-026-005_a

6. Remove the upper body module.
   - 6.1 Grab the upper body module in the gauge support section.
   - 6.2 Pull the module forward.
   - 6.3 Remove the module from the vehicle.

### Installing the Upper Body Module

The installation is the reverse of the removal procedure. However, pay attention to the following.

Ensure to engage rear hood tabs in rear console.

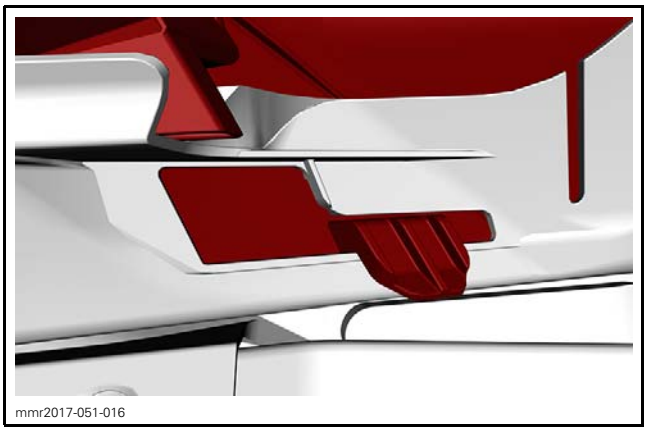
mmr2017-051-016

Ensure to connect the air intake hose.

| TIGHTENING TORQUE | |
|---|---|
| Upper body module screw | 1.8 N•m ± 0.2 N•m (16 lbf•**in** ± 2 lbf•**in**) |

## UPPER BODY MODULE COMPONENTS

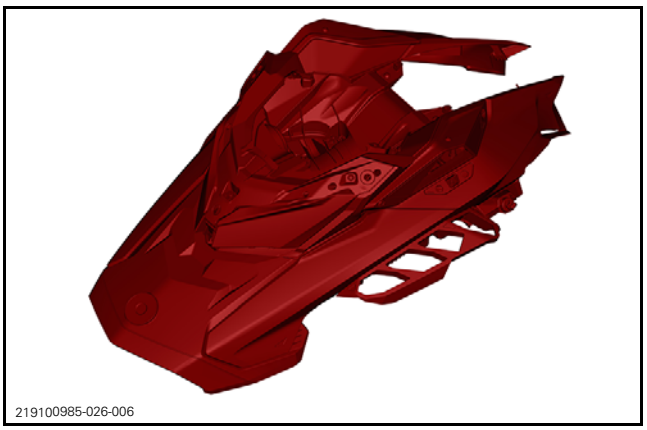
219100985-026-006

### Disassembling the Upper Body Module

1. Remove the upper body module. Refer to procedure in this subsection.
2. Refer to *AIR INTAKE SYSTEM* subsection to disassemble the upper body module.
3. Remove both sides air deflector and air intake filter.

### Assembling the Upper Body Module

The installation is the reverse of removal procedure.

| TIGHTENING TORQUE | |
|---|---|
| Upper body module screw | 1.8 N•m ± 0.2 N•m (16 lbf•**in** ± 2 lbf•**in**) |

## CONSOLE

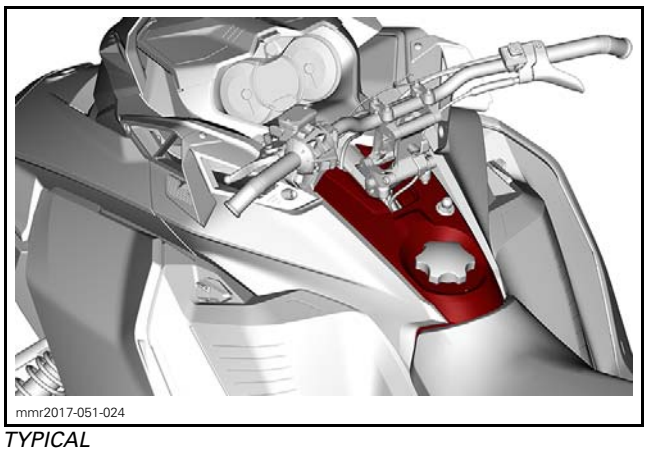
mmr2017-051-024

*TYPICAL*

### Removing the Console

1. Remove *UPPER BODY MODULE*. Refer to procedure in this subsection.
2. Remove the seat. Refer to procedure in this subsection.
3. Cut harness locking ties.
4. Remove console nuts.

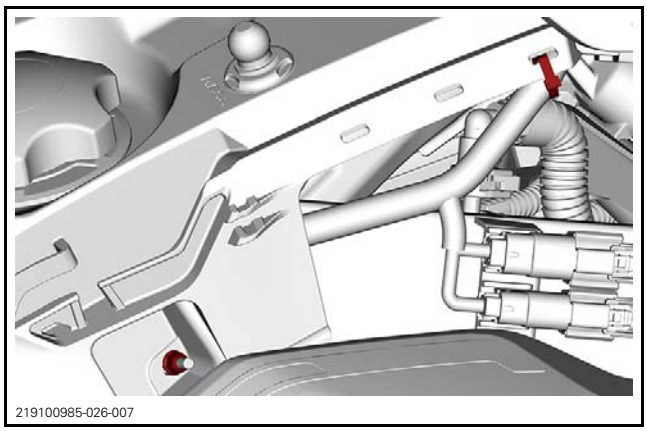
219100985-026-007

5. Remove fuel tank cap.
6. Lift up the console and unplug all connectors.
7. Install fuel tank cap.

### Installing the Console

The installation is the reverse of the removal procedure.

| TIGHTENING TORQUE | |
|---|---|
| Console nut | 2.3 N•m ± 0.2 N•m (20 lbf•**in** ± 2 lbf•**in**) |

## FRONT BUMPER

### Removing the Front Bumper

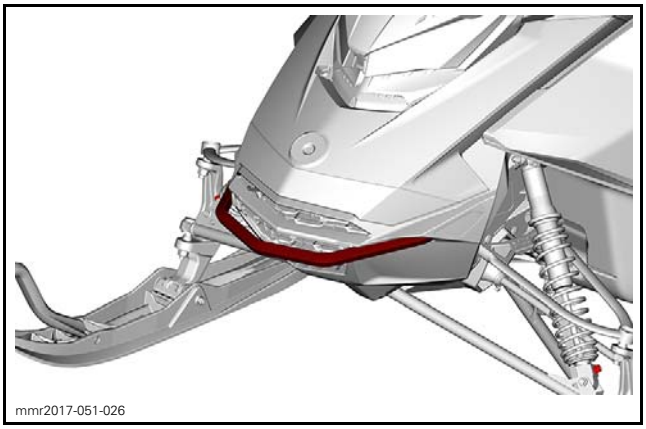
mmr2017-051-026

1. Remove tuned pipe. Refer to *EXHAUST SYSTEM* subsection.
2. Drill out rivets from front bumper.

| REQUIRED TOOL |
|---|
| SUPERTANIUM DRILL BIT 3/16" (P/N 529 031 800) |

3. Remove front bumper screws.

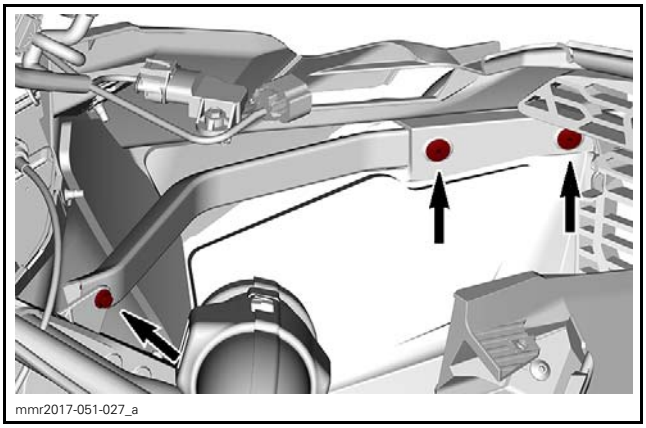
mmr2017-051-027_a

4. Pull out bumper towards front.

### Installing the Front Bumper

The installation is the reverse of the removal procedure. However, pay attention to the following.

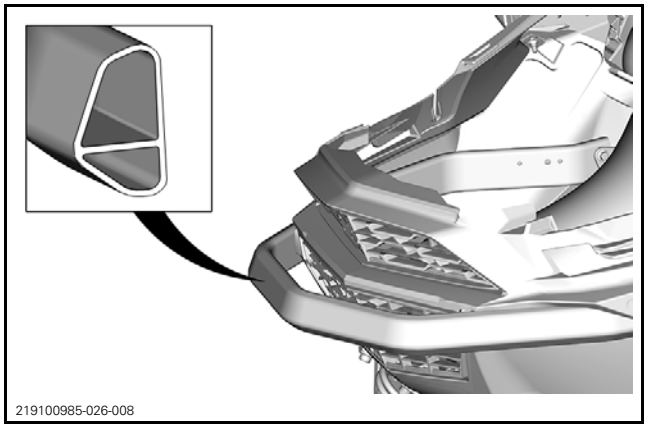
219100985-026-008

| TIGHTENING TORQUE | |
|---|---|
| Front bumper nut | 5 N•m ± 0.5 N•m (44 lbf•**in** ± 4 lbf•**in**) |

## FRONT BOTTOM PAN

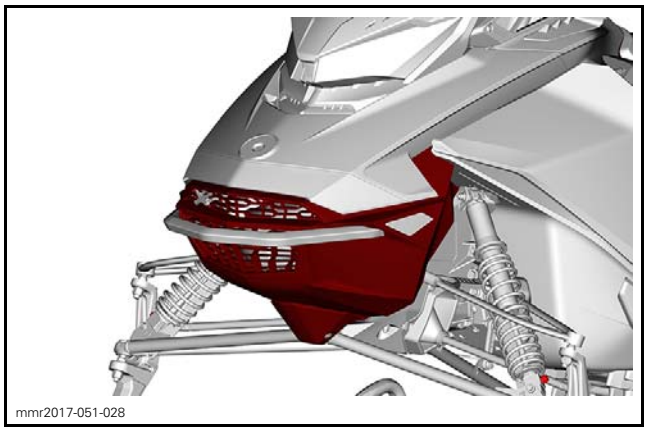
mmr2017-051-028

*TYPICAL*

### Removing the Front Bottom Pan

1. Lift front of vehicle until skis are off the ground.
2. Place the front portion of frame on a wooden box to support it securely.

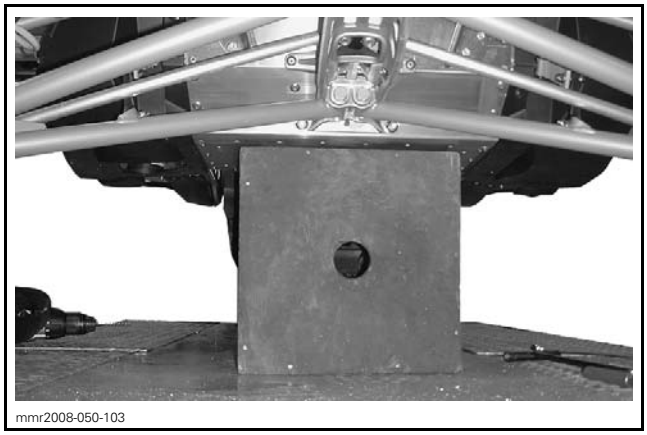
mmr2008-050-103

3. Remove *FRONT BUMPER*. Refer to procedure in this subsection.

If the front bottom pan does not need to be replaced, the bumper may remain attached to bottom pan.

4. Remove bottom pan screws.

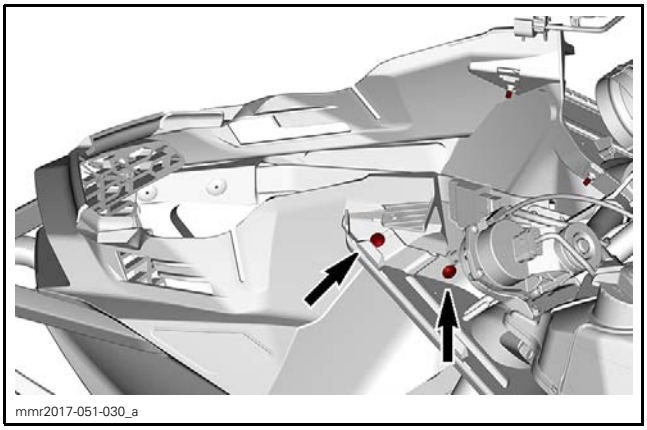


*TYPICAL*

5. Remove front shock absorbers. Refer to *FRONT SUSPENSION* subsection.

6. Drill out all rivets retaining bottom pan.

NOTE: Refer to *FRAME* for proper procedure when drilling rivets retaining plastic parts.

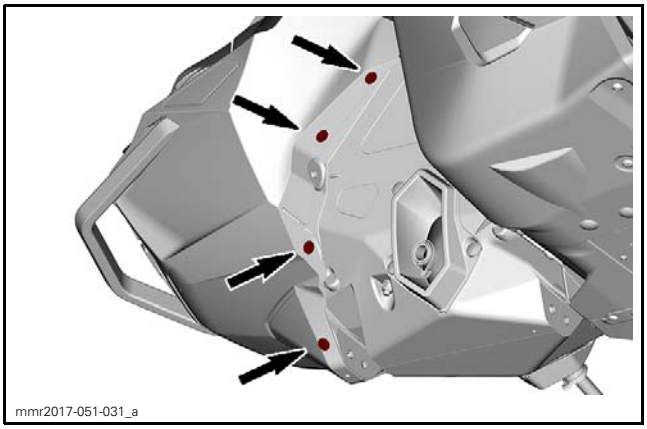


*LH SIDE SHOWN — SOME PARTS REMOVED FOR CLARITY*

7. Remove bottom pan.

## Installing the Front Bottom Pan

The installation is the reverse of the removal procedure.

| TIGHTENING TORQUE | |
|---|---|
| Bottom pan screw | 1.8 N•m ± 0.2 N•m (16 lbf•**in** ± 2 lbf•**in**) |

# SIDE BOTTOM PAN

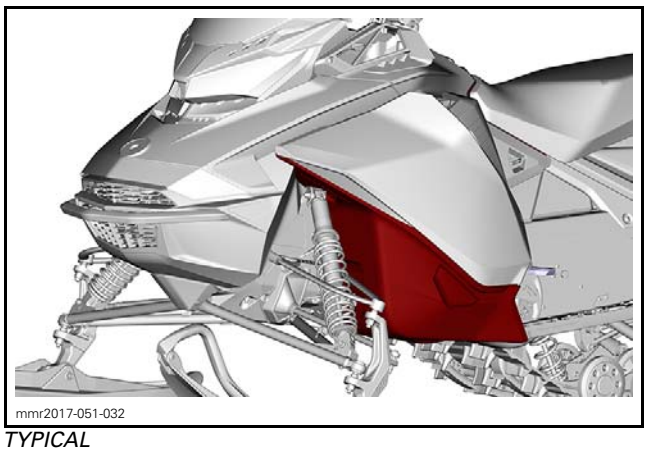


*TYPICAL*

## Removing the Side Bottom Pan

1. Remove the side panel. Refer to procedure in this subsection.
2. Lift front of vehicle until skis are off the ground.
3. Place the front portion of frame on a wooden box to support it securely.

NOTE: Ensure to clear side bottom pans so they can move freely.

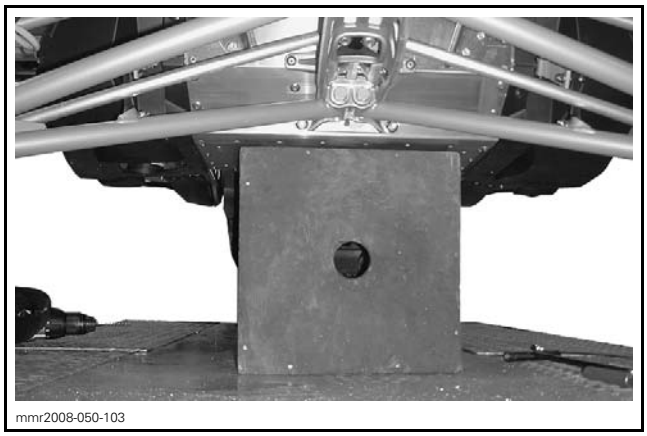


4. Disconnect vent tube from side bottom pan, and remove the screws.

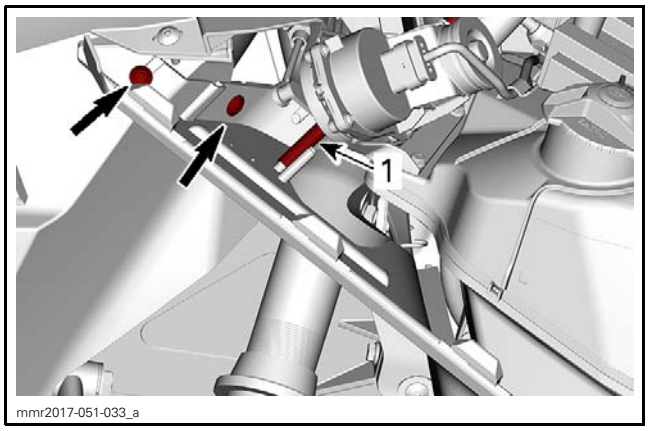


*1. Vent tube*

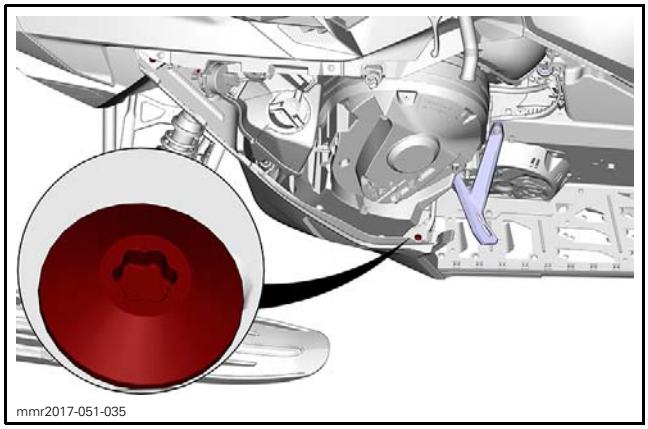


*TYPICAL*

5. To remove the LH side bottom pan, remove the screws and washers.

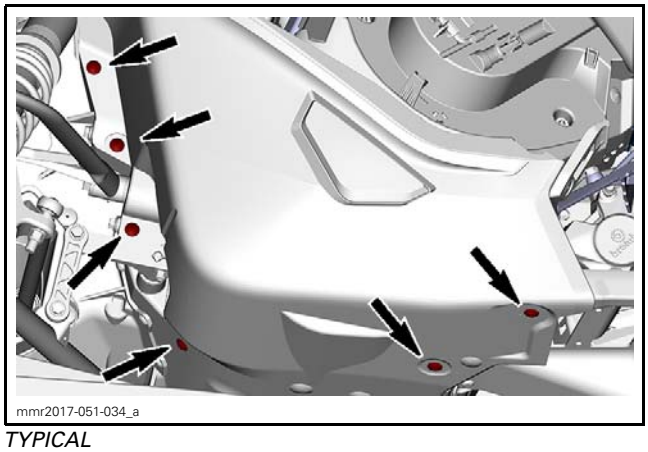


*TYPICAL*

6. To remove the RH side bottom pan, drill out all rivets

NOTE: Refer to *FRAME* for proper procedure when drilling rivets retaining plastic parts.

**NOTICE** **Be careful not to drill through muffler.**

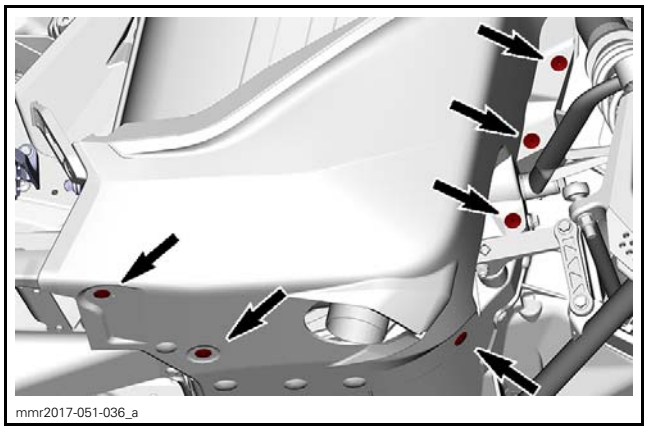


*TYPICAL - RH SIDE SHOWN*

## Installing the Side Bottom Pan

The installation is the reverse of the removal procedure. However, pay attention to the following.

Reinstall the washers at the correct position.

| TIGHTENING TORQUE | |
|---|---|
| Side bottom pan screw on pinched nut | 2.8 N•m ± 0.2 N•m (25 lbf•**in** ± 2 lbf•**in**) |
| Side bottom pan screw on panel nut | 1.8 N•m ± 0.2 N•m (16 lbf•**in** ± 2 lbf•**in**) |

# SEAT

## Removing and Installing the Seat

1. While pushing in the center of the seat towards front, pull on both sides, to unlock, and slide rearwards.

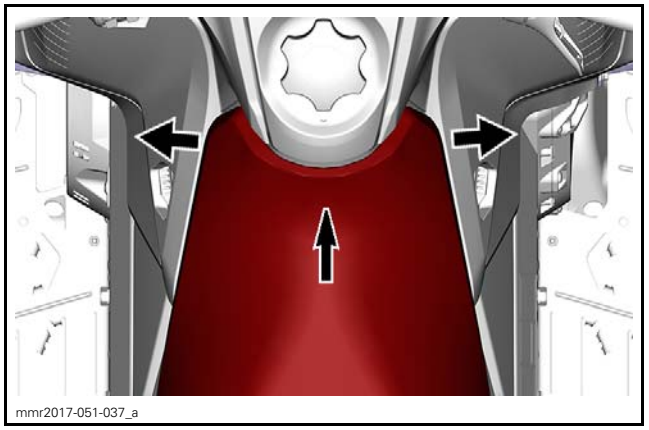


The Installation is the reverse of the removal procedure.

Ensure the seat is locked.

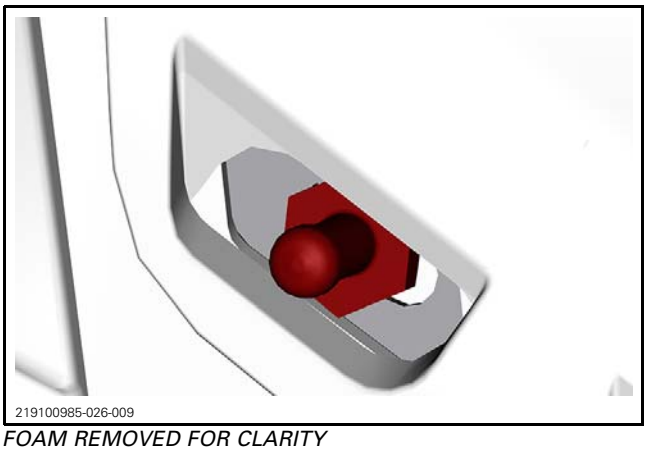


*FOAM REMOVED FOR CLARITY*

## Replacing the Seat Cover

Remove seat.

Remove the old seat cover. Check the foam and replace it if necessary.

Install the new seat cover with staples.

**NOTICE** **Ensure to use the proper length staples. Extra long staples would pierce the exposed side of the leatherette.**

NOTE: For an easier installation, it is highly recommended to use an electric stapler.

Ensure that the seat rest firmly against a hard surface such as a piece of wood. This is done to get the staples completely pushed in place.

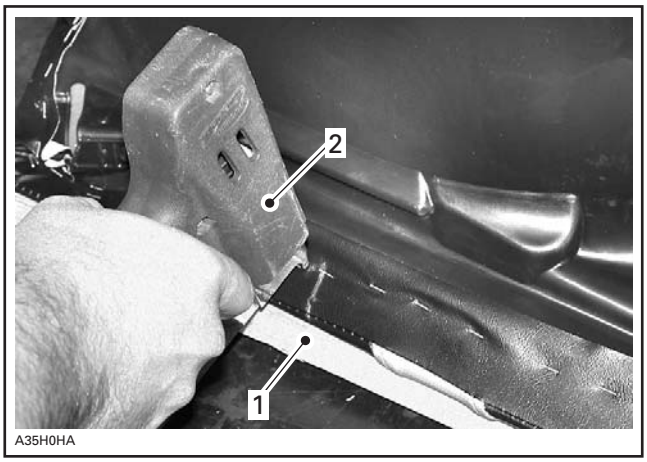


*TYPICAL*
1. *Piece of wood*
2. *Tacker*

The seat needs a special stapling procedure to ensure a strong and durable seat cover installation. Make sure the staples on the rear part of the seat are installed as shown.

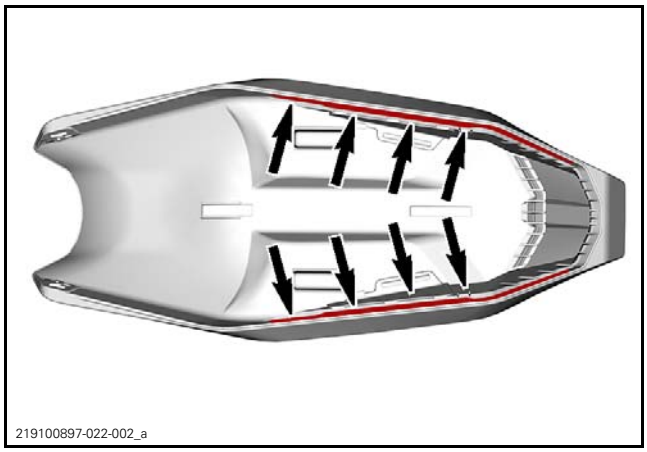


The staples go inside the crease on each side of the seat.

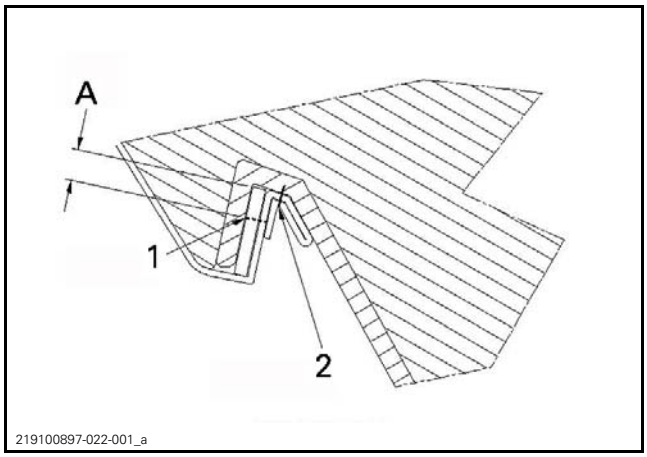


*A = 5 MM (1/4 IN)*
1. *Sewing*
2. *Staple*

After seat cover installation, cut out excess material leaving 5 mm (1/4 in) between staple and edge.

# REAR BUMPER

| TIGHTENING TORQUE | |
|---|---|
| Rear bumper screws | 16 N•m ± 2 N•m (142 lbf•**in** ± 18 lbf•**in**) |

# TAIL LIGHT HOUSING

Drill out the rivets.

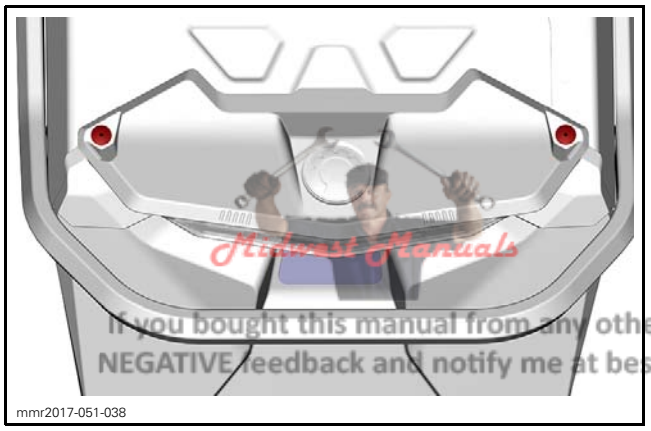


Midwest Manuals
Green Manuals
Paperless Manuals
For a Better Tomorrow
www.green-manuals.com
If you bought this manual from any other seller please leave them
NEGATIVE feedback and notify me at bestshopmanuals@gmail.com

Pull housing towards rear.

# FRAME

## SERVICE TOOLS

| Description | Part Number | Page |
|---|---|---|
| SUPERTANIUM DRILL BIT 3/16" | 529 031 800 | 419 |

## SERVICE PRODUCTS

| Description | Part Number | Page |
|---|---|---|
| XPS SYNTHETIC CHAINCASE OIL | 413 803 300 | 419 |

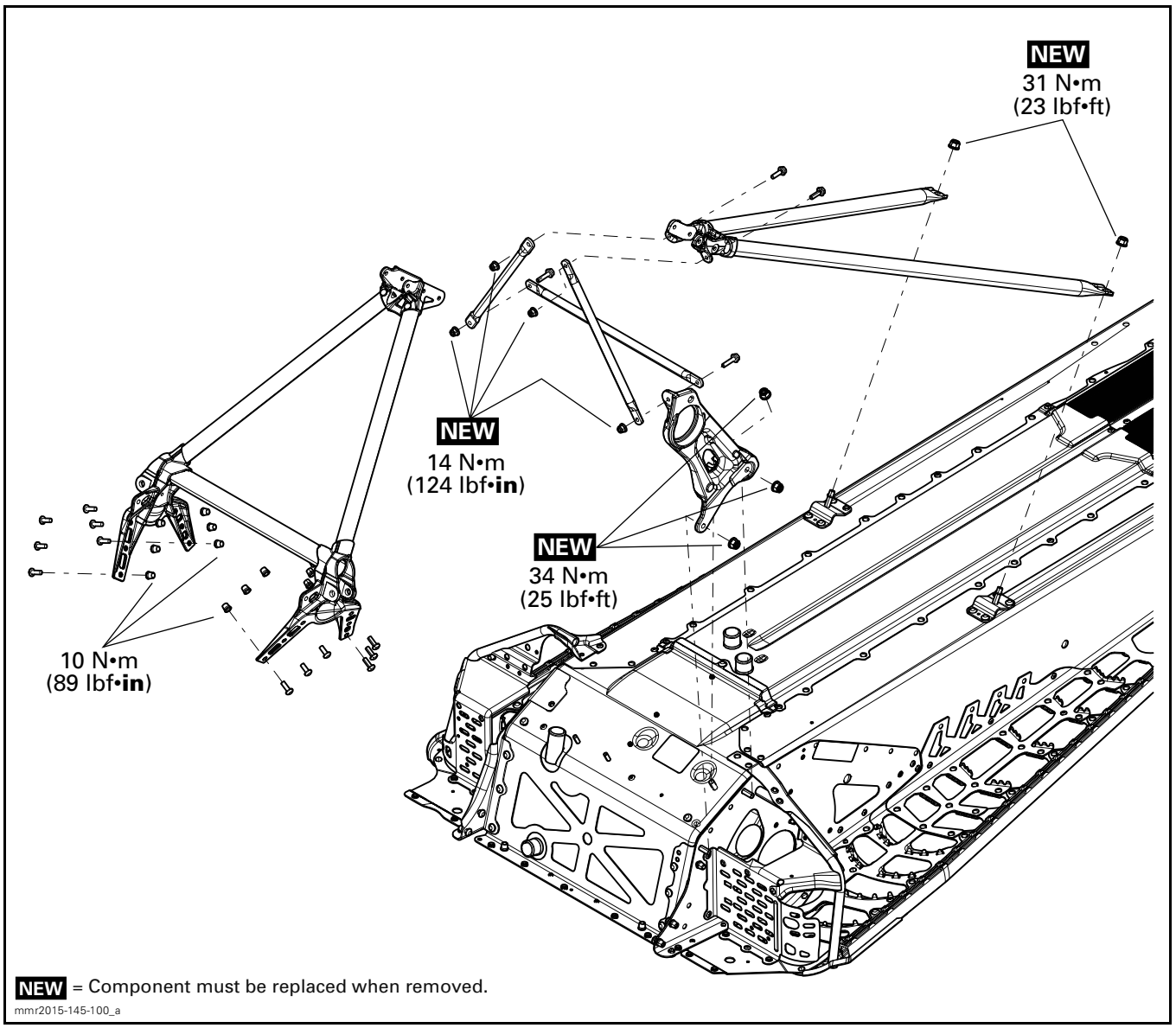


NEW = Component must be replaced when removed.

mmr2015-145-100_a

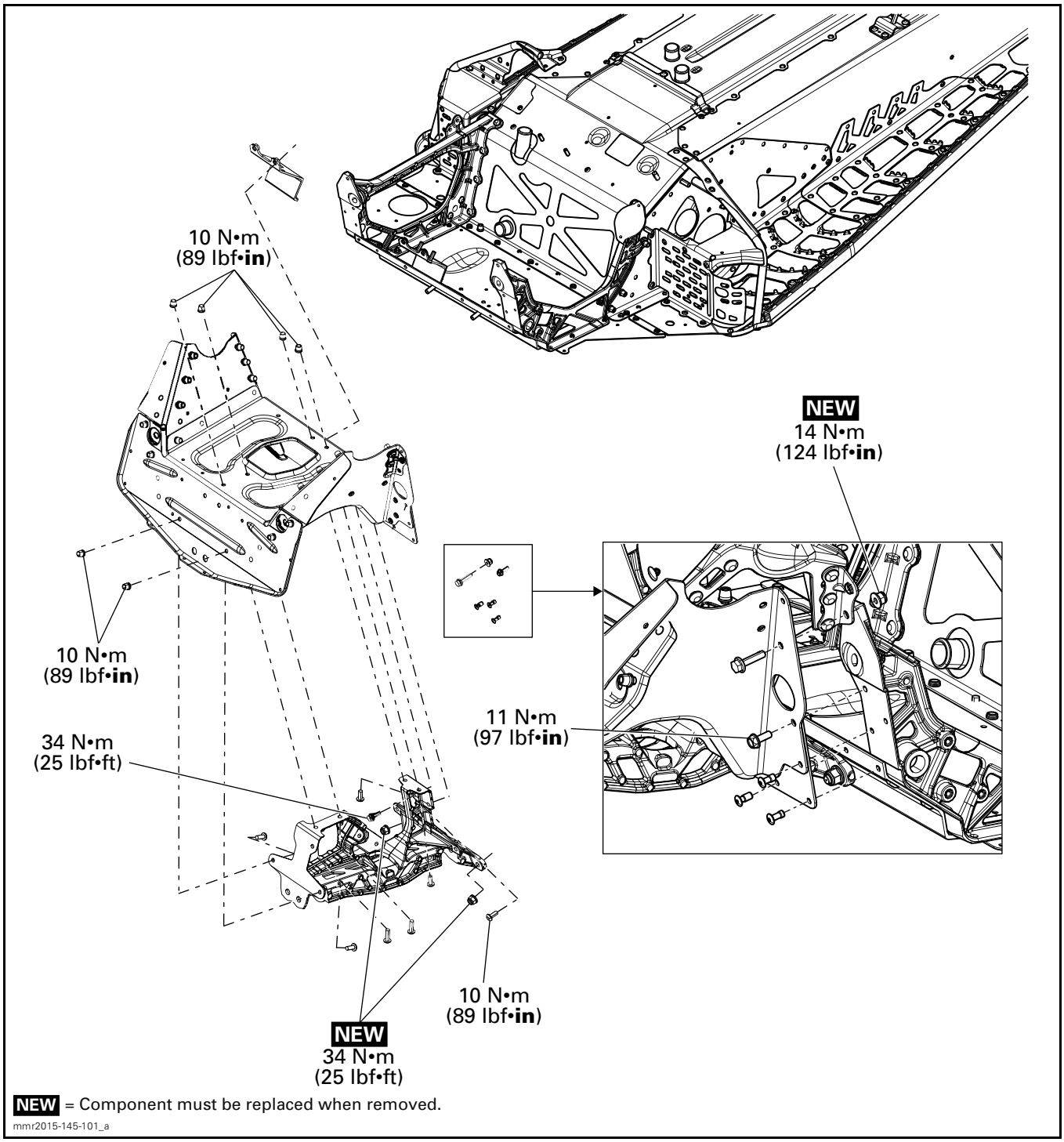


**NEW** = Component must be replaced when removed.

mmr2015-145-101_a

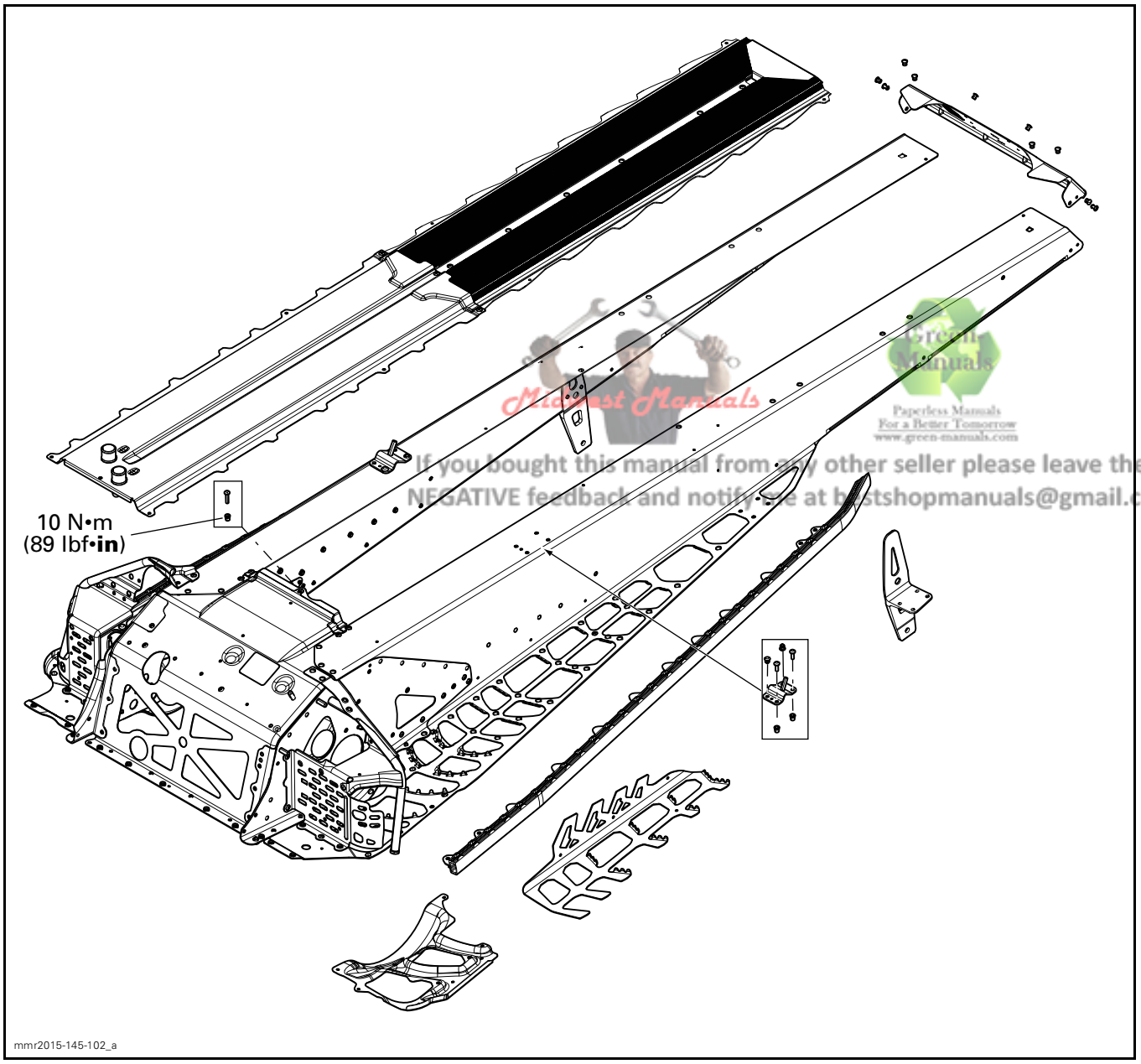


Midwest Manuals
Green Manuals
Paperless Manuals
For a Better Tomorrow
www.green-manuals.com
If you bought this manual from any other seller please leave them
NEGATIVE feedback and notify me at bestshopmanuals@gmail.com

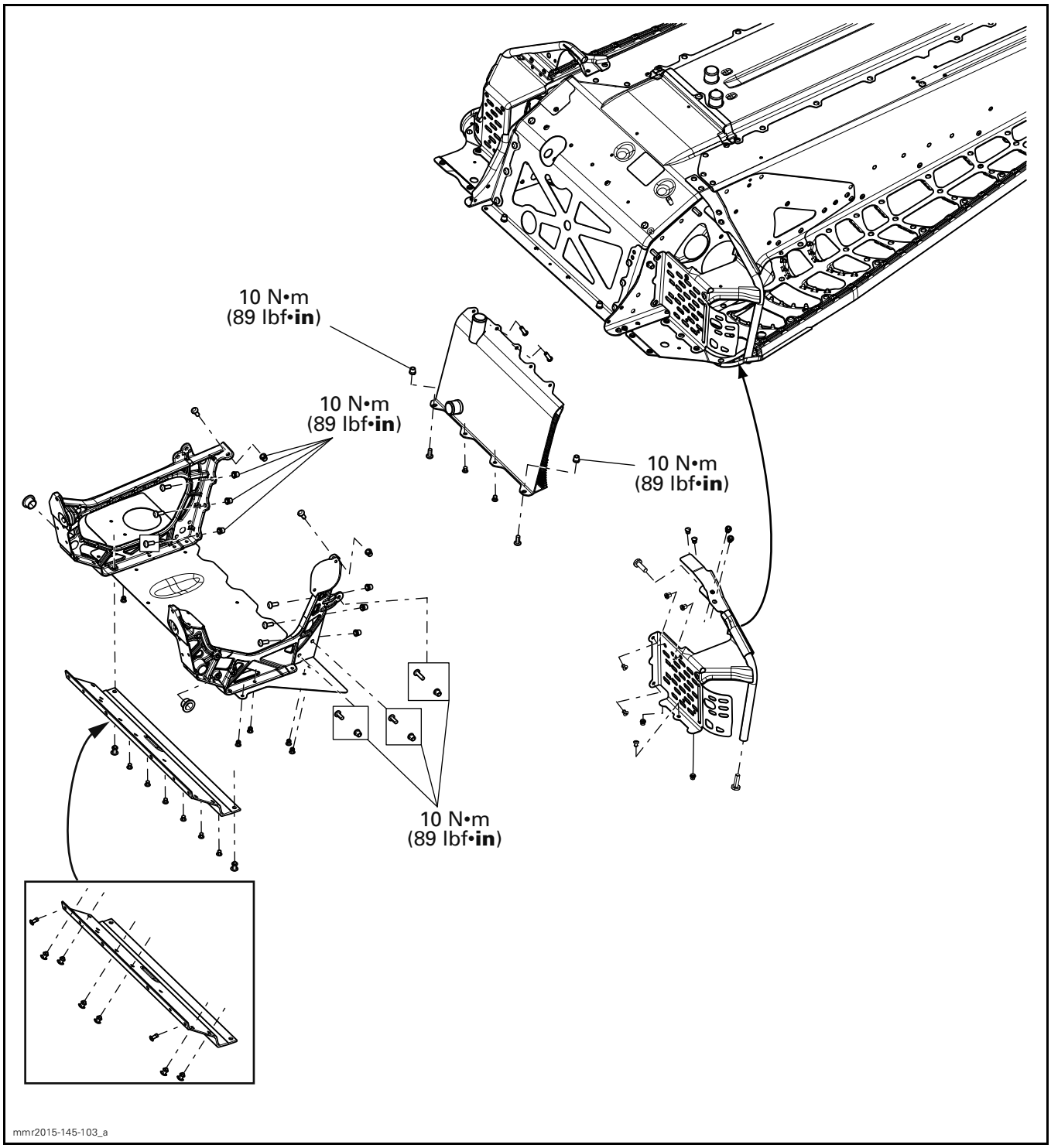
10 N•m
(89 lbf•**in**)
10 N•m
(89 lbf•**in**)
10 N•m
(89 lbf•**in**)
10 N•m
(89 lbf•**in**)
mmr2015-145-103_a

# GENERAL

During assembly/installation, use the torque values and the service products as in the exploded views.

Clean threads before applying a threadlocker. Refer to *SELF-LOCKING FASTENERS* and *LOCTITE APPLICATION* at the beginning of this manual for complete procedure.

**⚠ WARNING**

**Torque wrench tightening specifications must be strictly adhered to.**
**Locking devices (e.g.: locking tabs, elastic stop nuts, cotter pins, etc.) must be replaced with new ones.**

Check for loose, bent, worn out, rusted or otherwise damaged components. Replace the faulty components.

# PROCEDURES

## RIVETS

For proper drilling instructions and to prevent premature wear, follow the procedures as detailed.

***NOTICE*** **When removing rivets, do not enlarge or deform the rivet holes in the frame.**

### Self-Percing Rivet Removal

#### Recommended Method

1. Using a grinding disk, grind the rivet end.

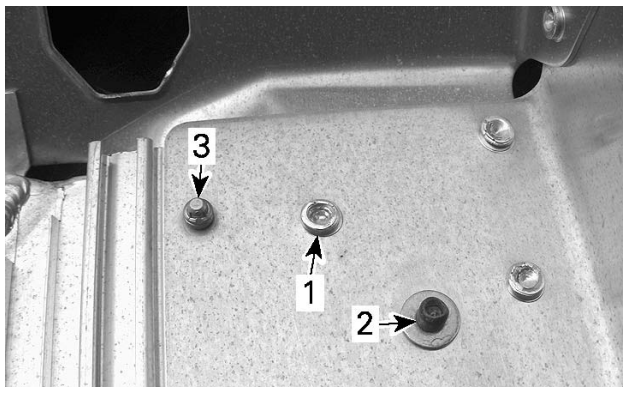


*TYPICAL*
1. *Grind this side of self-drilling rivet*
2. *Pop rivet*
3. *STAVEX rivet*

2. Support the frame around the rivet head with a socket on the opposite side to avoid warpage.

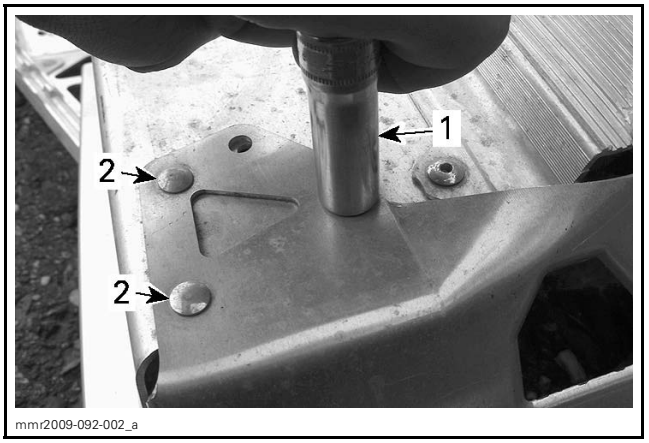


*TYPICAL*
1. *11 mm socket over a rivet head*
2. *Rivet heads*

3. Drive out remaining rivet using a punch.

#### Alternative Method

1. Use a SUPERTANIUM DRILL BIT 3/16" (P/N 529 031 800) and a variable speed drill.
2. Partially drill **rivet end** — not the rivet head.

***NOTICE*** **High speed drilling will cause excessive heat which may destroy the cutting edge of the bit; therefore, avoid using pneumatic drills.**

NOTE: To increase bit life, use XPS SYNTHETIC CHAINCASE OIL (P/N 413 803 300) as a cutting oil.

3. Cut rivet using a chisel.
4. Remove riveted part.
5. Drive out remaining rivet head using a punch.

### Pop Rivet Removal

1. Use a SUPERTANIUM DRILL BIT 3/16" (P/N 529 031 800), and a variable speed drill.
2. Drill **rivet head** sufficiently to cut through rivet head.

***NOTICE*** **Drill only sufficiently to cut rivet head. Do not drill into frame material, or part secured using the rivet. When rivet is used to secure a plastic part, use pliers to avoid rotation of rivet with drill bit and heating or melting of the plastic part.**

3. Using a small punch, drive out the remaining rivet end.

### HUCK Rivet Removal

#### Recommended Method

1. Using a cut-off tool, cut the rivet retainer without touching the retainer's shoulder.

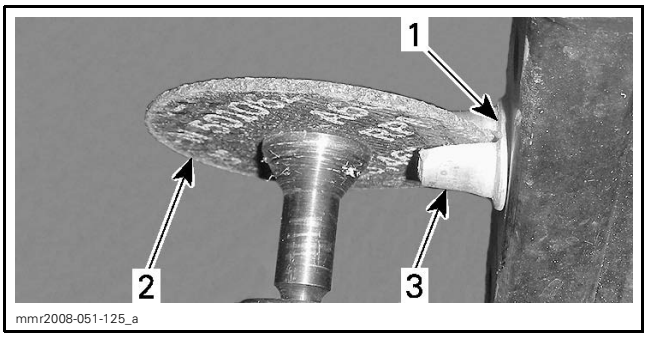


*1. Rivet retainer's shoulder*
*2. Cutter wheel*
*3. Rivet retainer*

NOTE: Apply a thin layer of grease on cutter wheel to increase its durability.

2. Break the rivet retainer's shoulder using a chisel.
3. Use a small punch to drive out the rivet stem.

### Alternative Method

1. Measure outside diameter of rivet stem and select appropriate drill bit.
2. Drill the **rivet stem — not the rivet head** using a variable speed drill until rivet retainer is freed.

NOTE: When possible, use an angle grinder to grind rivet head or use an air hammer to cut the rivet retainer.

# FRAME

## Frame Cleaning

Clean frame and tunnel with appropriate cleaners and rinse with high pressure hose.

NOTE: For bare aluminum frames use only aluminum cleaner and follow instructions on container.

***NOTICE*** **Never direct high-pressure water jet towards decals. They will peel off.**

## Frame Welding

No welding is permitted unless it is specified on a BRP bulletin.

## Frame Repair

NOTE: The following is specific information for aluminum chassis painting. Use common painting techniques.

1. Sand the area to be painted.
2. Clean and dry the area.
3. Apply a thin layer of paint of the appropriate color.
4. Allow paint to dry before re-coating.

NOTE: Paint takes approximately 15 minutes to dry following application.

5. Apply a thin coat of clear.

NOTE: Immediately after the clear coat application, apply a thin coat of HR50 blending solvent **around** the painted area.

6. Allow clear coat to dry.

NOTE: Clear coat takes approximately 2 hours to dry following application.

# REAR BUMPER

Refer to *BODY* subsection for rear bumper removal and installation procedure.

# REAR FRAME MEMBER

## Rear Frame Member Removal

1. Refer to *BODY* subsection to remove the following:
   – Seat
   – Upper body module
   – Rear console.
2. Remove trim panel at the bottom of rear frame member (one each side).

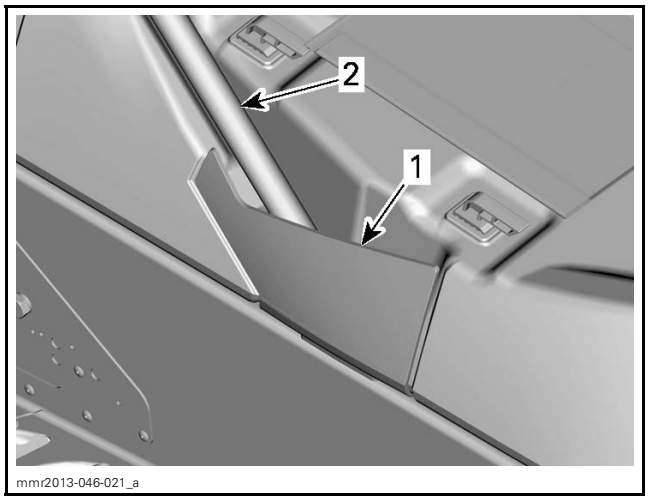


*1. Trim panel*
*2. Rear frame member*

3. Remove nut and shouldered washer securing rear frame member (one each side).

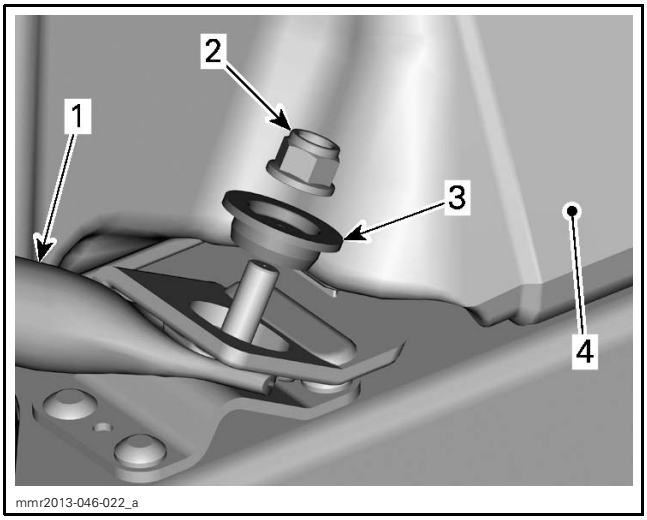


*1. Rear frame member*
*2. Nut to remove*
*3. Shouldered washer*
*4. Fuel tank*

4. Remove screws securing the rear frame member to steering column support and side frame members.

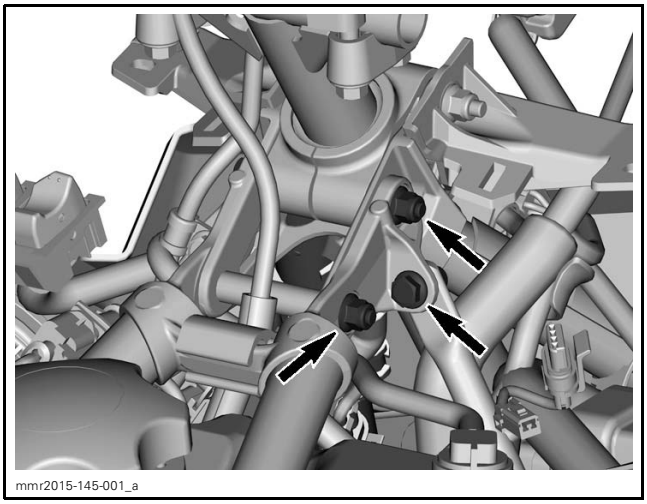


5. Remove rear frame member.

## Rear Frame Member Installation

The installation is the reverse of the removal procedure. However, pay attention to the following.

NOTE: Install all bolts and nuts before tightening them.

| TIGHTENING TORQUE | |
|---|---|
| Rear nuts | 31 N•m (23 lbf•ft) |
| Side frame member nuts | 14 N•m (124 lbf•**in**) |
| Steering column nuts | 18 N•m (159 lbf•**in**) |

# FRONT FRAME MEMBER

## Front Frame Member Removal

1. Refer to *BODY* subsection to remove the following:
   – Upper body module
   – Rear console.
2. Remove the secondary air intake silencer. Refer to *AIR INTAKE SYSTEM* subsection.
3. Remove the tuned pipe. Refer to *EXHAUST SYSTEM* subsection.
4. Lift front of vehicle until skis are off the ground.
5. Place the front portion of frame on a wooden box to support it securely.

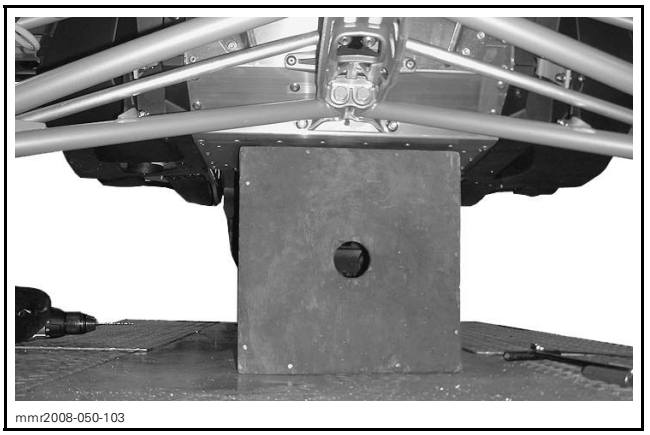


6. Remove front shock absorbers.
7. Drill the rivet retaining the front bottom pan to front frame member (one each side).

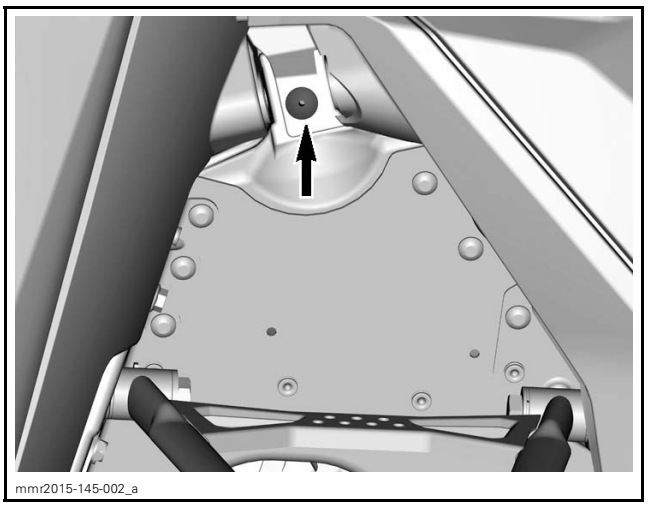


*RH SIDE SHOWN*

8. Remove HUCK rivets (six each side), see removal procedure at the beginning of this section.

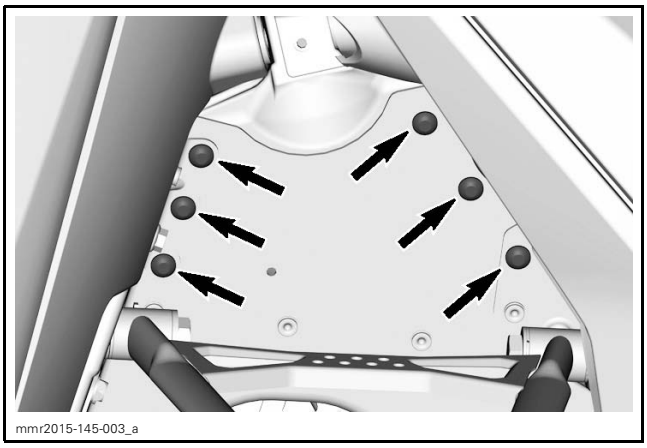
mmr2015-145-003_a

*RH SIDE SHOWN*

9. Remove bolts securing front frame member, rear frame member and steering column support.

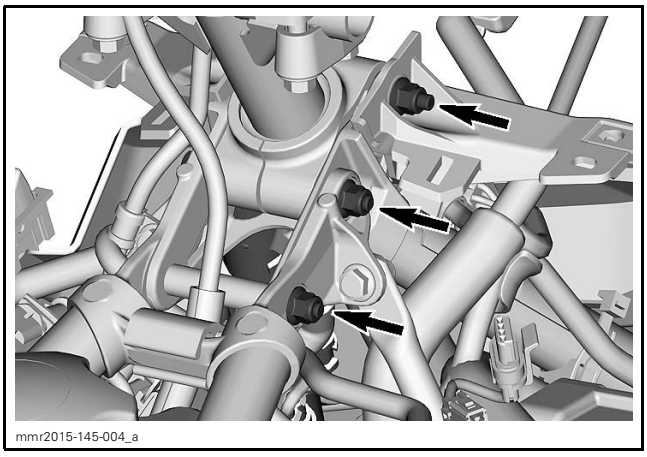
mmr2015-145-004_a

10. Remove the front frame member.

## Front Frame Member Installation

The installation is the reverse of the removal procedure. However, pay attention to the following.

1. Replace the HUCK rivets with the following parts.

| NEW FASTENERS | |
|---|---|
| Hexagonal flanged bolt M6 x 20 | (P/N 207 662 044) |
| Hexagonal flanged elastic stop nut M6 | (P/N 233 261 414) |

NOTE: Unless stated otherwise, install bolt heads toward outside of the vehicle.

2. Tighten new fasteners to specification.

| TIGHTENING TORQUE | |
|---|---|
| Replacement nuts | 10 N•m (89 lbf•**in**) |

# FRONT SUSPENSION MODULE

## Front Suspension Module Removal

1. Lift front of vehicle until skis are off the ground.
2. Place the front portion of frame on a wooden box to support it securely.

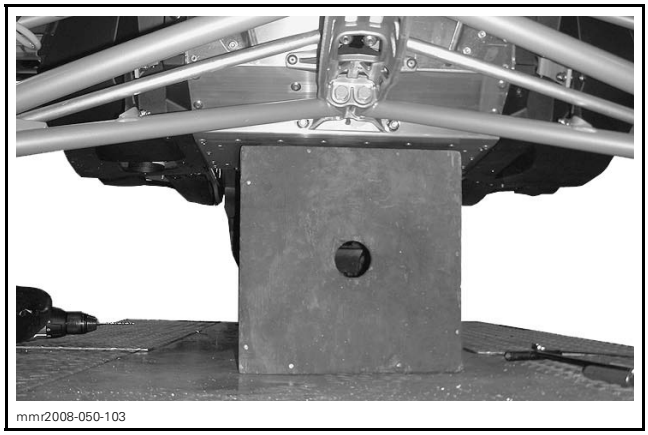
mmr2008-050-103

*TYPICAL*

3. Remove the muffler and the tuned pipe. Refer to *EXHAUST SYSTEM* subsection.
4. Remove the front suspension assembly in the following manner:
   4.1 Detach tie-rod ends from steering column.

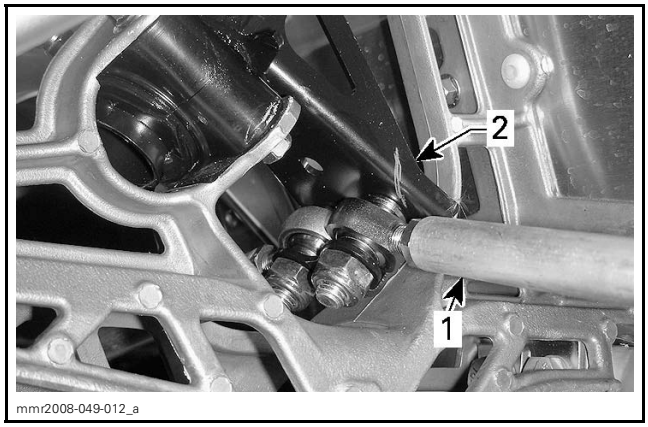

mmr2008-049-012_a

*1. Tie-rod*
*2. Steering column*

   4.2 Remove upper mounting bolt from front shock absorbers.
   4.3 Remove bolt that secures stabilizer link to lower arm.

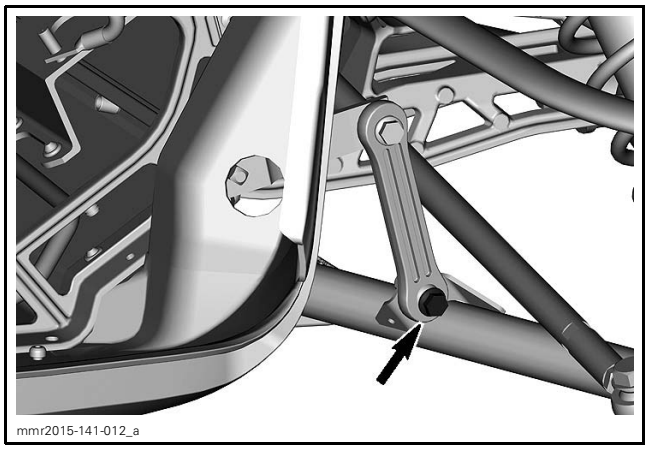
mmr2015-141-012_a

*RH SIDE SHOWN*

4.4 Remove upper and lower suspension arms bolts. Refer to *FRONT SUSPENSION* subsection.

4.5 Pull suspension arms from front suspension module to remove front suspension assembly from vehicle.

5. Remove the stabilizer bar, refer to *FRONT SUSPENSION* subsection.
6. Remove the front bottom pan. Refer to *BODY* subsection.

NOTE: Keep the front bumper installed on front bottom pan.

7. Remove the following pop rivets, refer to *POP RIVET REMOVAL* at the beginning of this subsection.

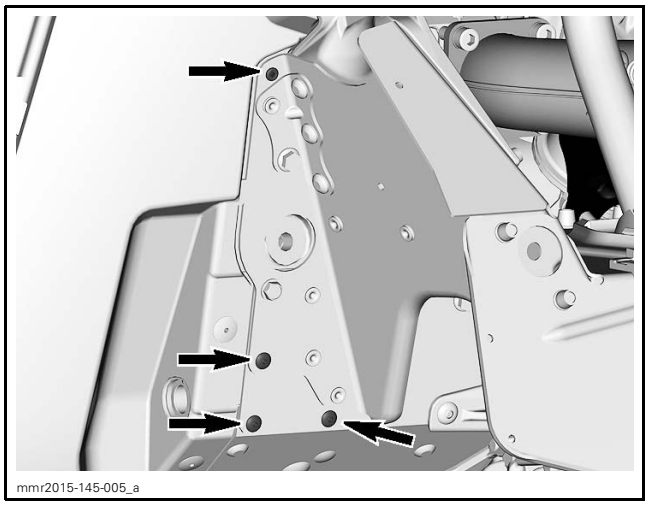
mmr2015-145-005_a

*RH SIDE SHOWN*

8. Remove screws securing front suspension module to frame (2 each side).

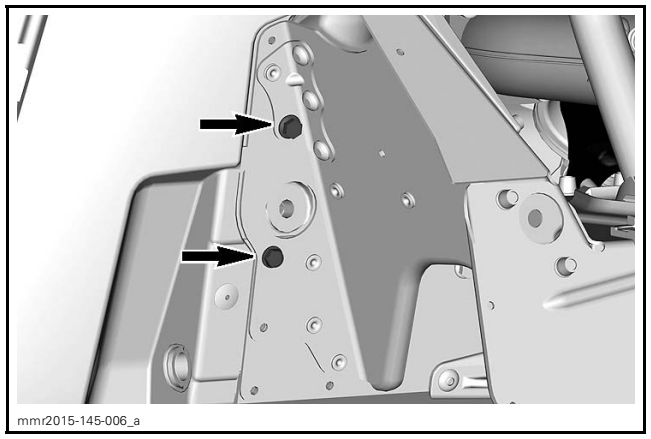
mmr2015-145-006_a

*LH SIDE SHOWN*

9. Remove HUCK rivets (six each side), see removal procedure at the beginning of this subsection.

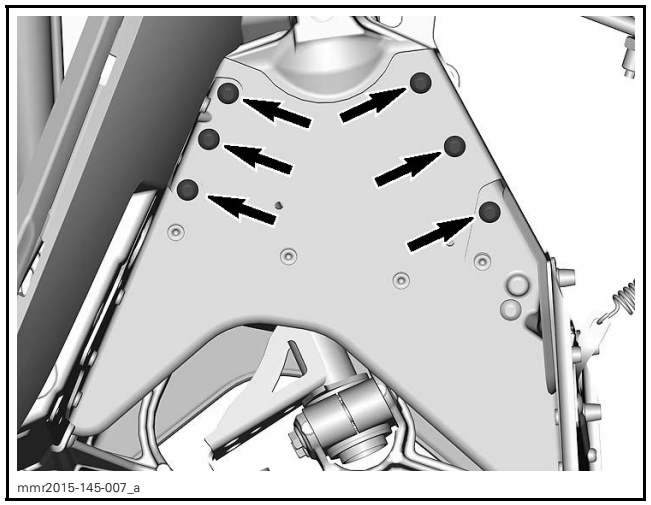
mmr2015-145-007_a

*RH SIDE SHOWN*

10. Grind rivets securing the lower suspension arm support to engine module.

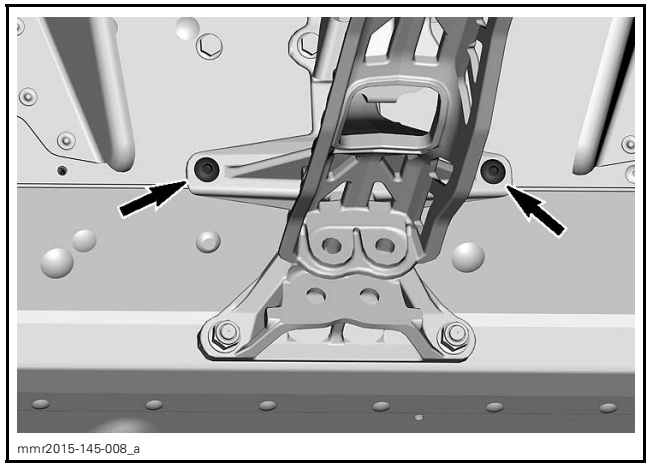
mmr2015-145-008_a

11. Remove the following bolts and nuts.

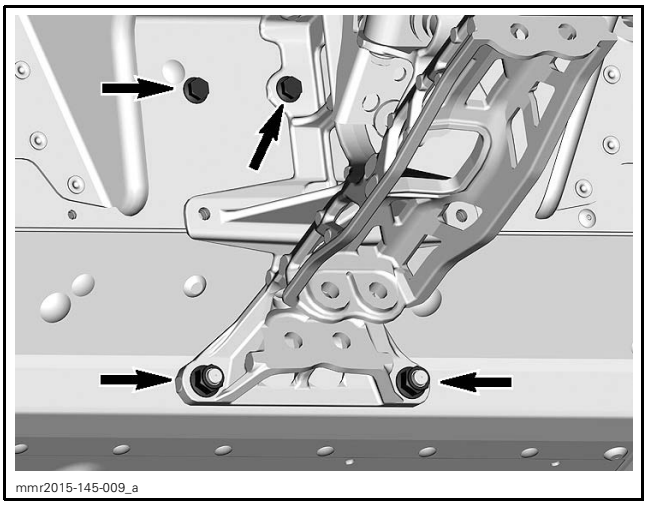
mmr2015-145-009_a

12. Remove the front suspension module.

### Front Suspension Module Installation

The installation is the reverse of the removal procedure. However, pay attention to the following.

1. Replace the HUCK rivets with the following parts.

| NEW FASTENERS | |
|---|---|
| Hexagonal flanged bolt M6 x 20 | (P/N 207 662 044) |
| Hexagonal flanged elastic stop nut M6 | (P/N 233 261 414) |

NOTE: Unless otherwise stated, install bolt heads toward outside of the vehicle.

2. Tighten new fasteners to specification.

| TIGHTENING TORQUE | |
|---|---|
| Replacement nuts | 10 N•m (89 lbf•**in**) |

3. Reinstall all removed parts by using the appropriate installation procedure.

## ENGINE MODULE

### Engine Module Removal

1. Remove engine from vehicle. Refer to *ENGINE REMOVAL AND INSTALLATION* subsection.
2. Remove track, refer to *TRACK* subsection.
3. Remove the *FRONT SUSPENSION MODULE*, see procedure in this subsection.
4. Remove side bottom pans. Refer to *BODY*.
5. On LH side, remove front and rear engine rubber mounts.

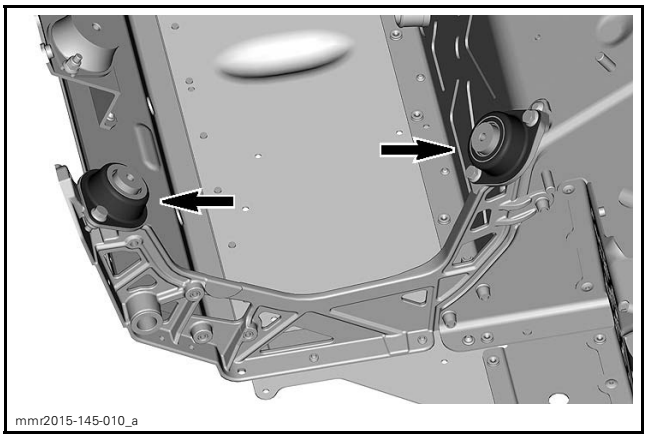
mmr2015-145-010_a

6. Remove HUCK rivets, see removal procedure at the beginning of this subsection.

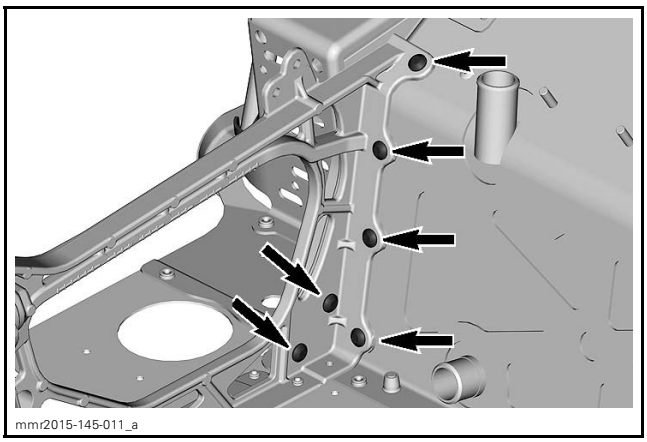
mmr2015-145-011_a

*RH SIDE SHOWN*

7. Drill or grind rivets securing engine module to frame.

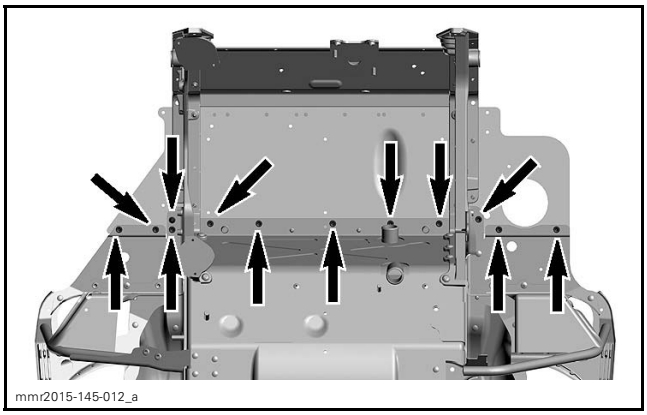
mmr2015-145-012_a

*TOP VIEW*

8. Remove the engine module.

### Engine Module Installation

The installation is the reverse of the removal procedure. However, pay attention to the following.

1. Replace the HUCK rivets with the following parts.

| NEW FASTENERS | |
|---|---|
| Hexagonal flanged bolt M6 x 20 | (P/N 207 662 044) |
| Hexagonal flanged elastic stop nut M6 | (P/N 233 261 414) |

NOTE: Install bolt heads toward outside of the vehicle, except the one securing chaincase.

2. Tighten new fasteners to specification.

| TIGHTENING TORQUE | |
|---|---|
| Replacement nuts | 10 N•m (89 lbf•**in**) |

3. Reinstall all removed parts by using the appropriate installation procedure.

# HEAT EXCHANGERS

## Heat Exchanger Cleaning and Inspection

Remove all debris between heat exchanger fins.

Check if heat exchanger fins are damaged. Replace heat exchanger if necessary.

NOTE: A heat exchanger with many broken fins does not work properly.

## Front Heat Exchanger Removal

1. Drain cooling system. Refer to *COOLING SYSTEM DRAINING* in *PERIODIC MAINTENANCE PROCEDURES* subsection.
2. Remove LH and RH body panels. Refer to *BODY* subsection.
3. Remove drive belt guard. Refer to *DRIVE BELT* subsection.
4. Remove primary air intake silencer. Refer to *AIR INTAKE SYSTEM* subsection.
5. Remove throttle body . Refer to *E-TEC-DIRECT FUEL INJECTION* subsection.

NOTE: To remove the front heat exchanger rivets, refer to *RIVETS* in this subsection for procedure according to rivet type.

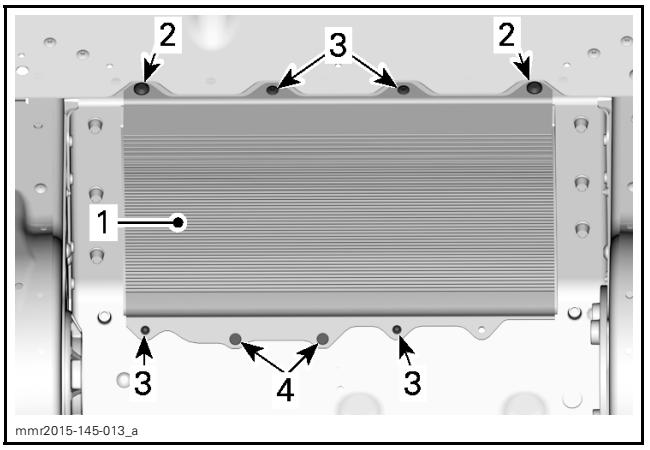


*FRONT HEAT EXCHANGER FASTENERS - VIEW IN TUNNEL*
1. *Front heat exchanger*
2. *HUCK rivets*
3. *AVEX rivets*
4. *Studs (RH aft engine mount)*

6. From underneath the frame, remove rivets securing bottom of front heat exchanger.

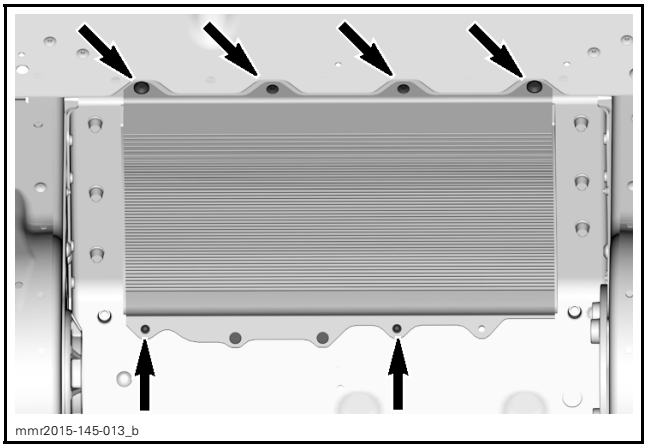


7. Remove nuts retaining RH rear engine mount.

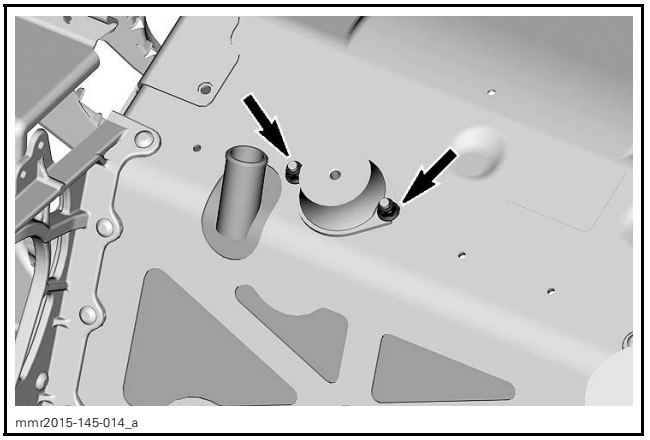


*ENGINE AND COUNTERSHAFT REMOVED FOR CLARITY*

8. Remove Oetiker clamp securing upper coolant hose.

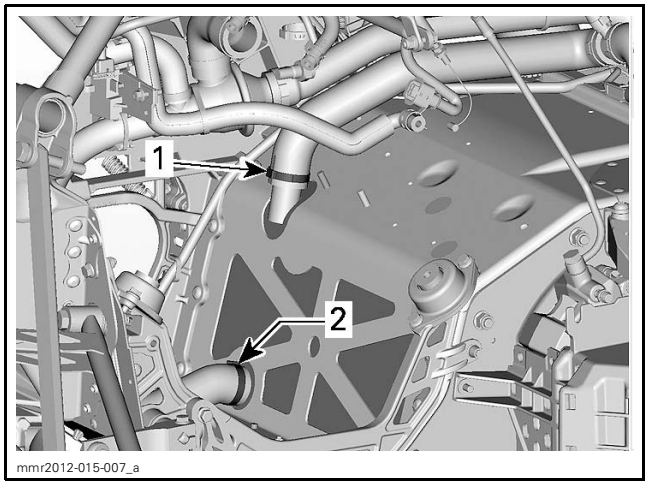


*ENGINE AND COUNTERSHAFT REMOVED FOR CLARITY*
*1. Upper coolant hose*
*2. Lower coolant hose*

9. Disconnect upper coolant hose from heat exchanger.
10. Carefully pull out on bottom of heat exchanger to expose Oetiker clamp on lower coolant hose.
11. Remove Oetiker clamp securing lower coolant hose.
12. Disconnect lower coolant hose from heat exchanger.
13. Remove heat exchanger.

### Front Heat Exchanger Installation

The installation is the reverse of the removal procedure. However, pay attention to the following.

Replace the HUCK rivets with the following parts.

| NEW FASTENERS | |
|---|---|
| Hexagonal flanged bolt M6 x 20 | (P/N 207 662 044) |
| Hexagonal flanged elastic stop nut M6 | (P/N 233 261 414) |

NOTE: Install bolt head towards outside of vehicle.

Tighten new fasteners to specification.

| TIGHTENING TORQUE | |
|---|---|
| Replacement nuts | 10 N•m (89 lbf•**in**) |

Properly refill cooling system. Refer to *COOLING SYSTEM REFILL AND BLEEDING* in *PERIODIC MAINTENANCE PROCEDURES* subsection.

### Rear Heat Exchanger Removal

1. Drain cooling system, Refer to *COOLING SYSTEM DRAINING* in *PERIODIC MAINTENANCE PROCEDURES* subsection.
2. Remove rear suspension. Refer to the *REAR SUSPENSION* subsection.
3. Remove fuel tank. Refer to *FUEL TANK AND FUEL PUMP* subsection.
4. Remove luggage rack if necessary.
5. Remove snow guard.
6. Remove all rivets retaining rear heat exchanger to frame.

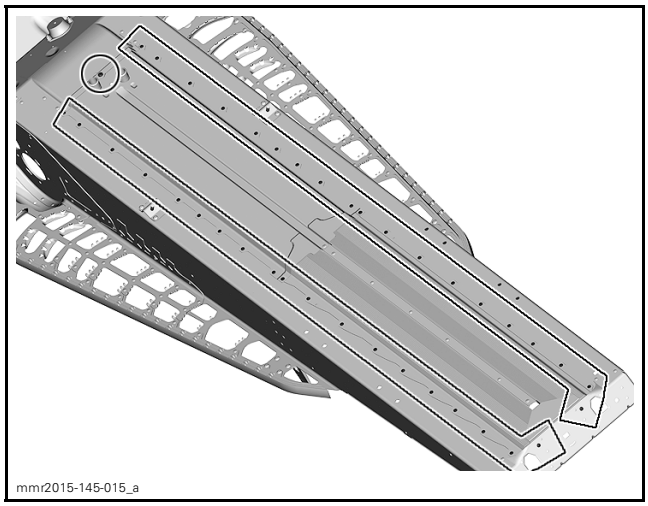


NOTE: When pushing the rivets out, support the frame around the rivet with a socket on the opposite side to avoid frame warping.

7. Unplug coolant hoses from rear heat exchanger then remove it from vehicle.

### Rear Heat Exchanger Installation

The installation is the reverse of the removal procedure. However, pay attention to the following.

Properly refill cooling system. Refer to *COOLING SYSTEM REFILL AND BLEEDING* in *PERIODIC MAINTENANCE PROCEDURES* subsection.

## COUNTERSHAFT BEARING SUPPORT

### Countershaft Bearing Support Removal

1. Remove *DRIVEN PULLEY*, see procedure in this section.
2. Remove drive belt guard bracket.
3. Remove nuts securing the bottom of countershaft bearing support.

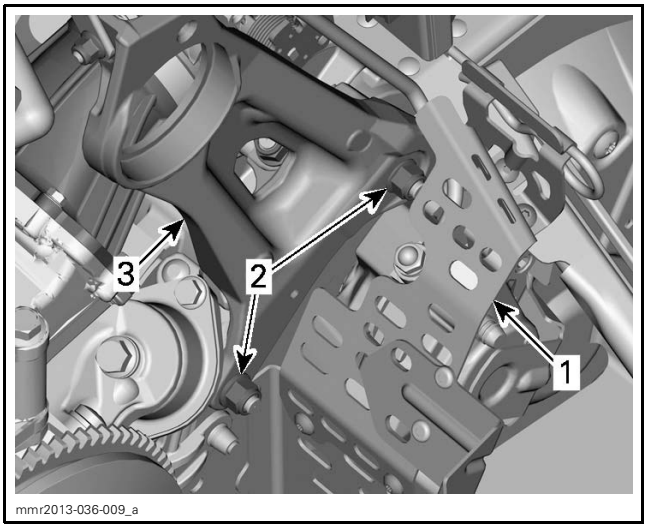


*1. Drive belt guard bracket*
*2. Nuts to remove*
*3. Countershaft bearing support*

4. Remove bolt retaining top of countershaft bearing support.

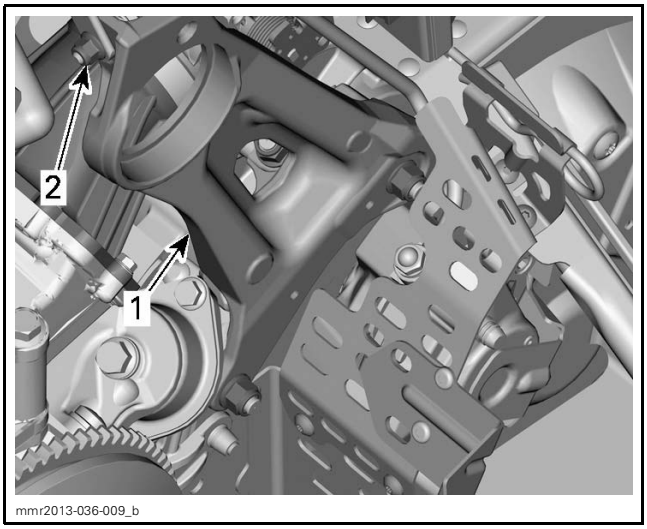


*1. Countershaft bearing support*
*2. Upper bolt*

5. Remove primary air intake silencer.
6. Loosen lower nut located behind support.

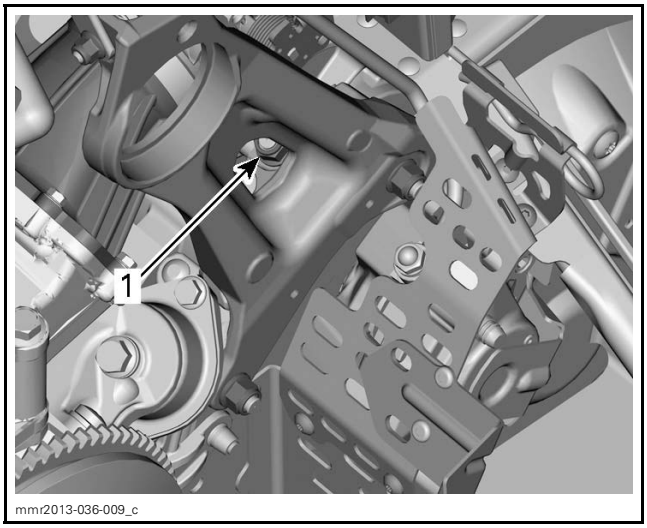


*1. Loosen this nut*

7. Remove the countershaft bearing support.

## Countershaft Bearing Support Installation

1. Position the countershaft bearing support in vehicle.
2. Install all bolts and nuts loosely.
3. Torque all fasteners in the order specified.

| | TIGHTENING TORQUE | |
|---|---|---|
| 1) | Lower bearing support (2 outer nuts) | 34 N•m (25 lbf•ft) |
| 2) | Lower bearing support (inner nut) | |
| 3) | Upper bearing support nut and bolt | 14 N•m (124 lbf•**in**) |

4. Install drive belt guard bracket.

| TIGHTENING TORQUE | |
|---|---|
| Drive belt guard bracket | 3.3 N•m (29 lbf•**in**) |

5. Install the driven pulley with the countershaft then all other removed parts.

# FRAME

## SERVICE TOOLS

| Description | Part Number | Page |
|---|---|---|
| RADIATOR INSTALLATION GAUGES | 529 036 422 | 13 |
| SUPERTANIUM DRILL BIT 3/16" | 529 031 800 | 4 |

## SUSPENSION MODULE

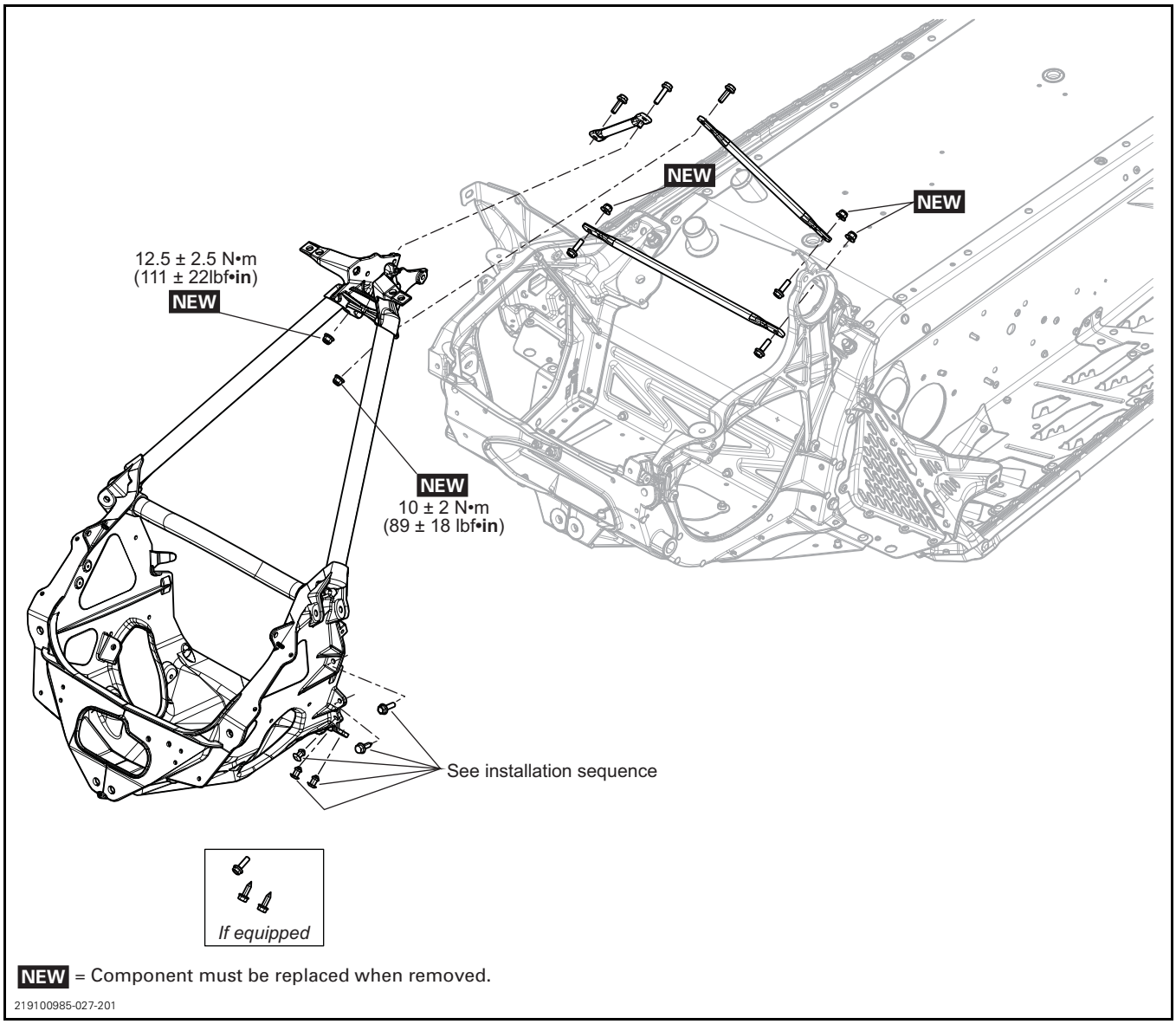


NEW = Component must be replaced when removed.

219100985-027-201

# ENGINE MODULE

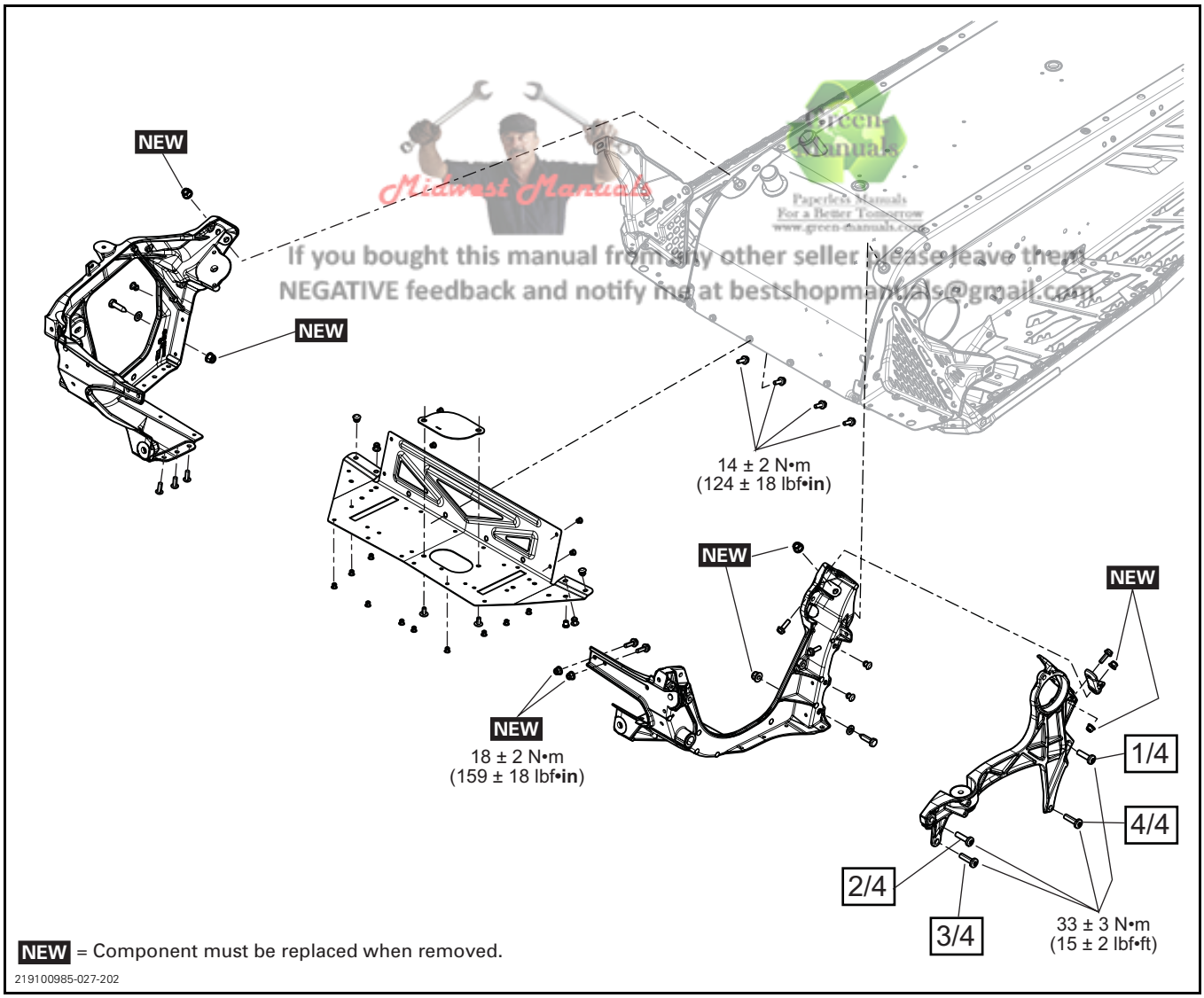


Midwest Manuals
Green Manuals
Paperless Manuals
For a Better Tomorrow
www.green-manuals.com
If you bought this manual from any other seller, please leave them
NEGATIVE feedback and notify me at bestshopmanuals@gmail.com.

# TUNNEL MODULE

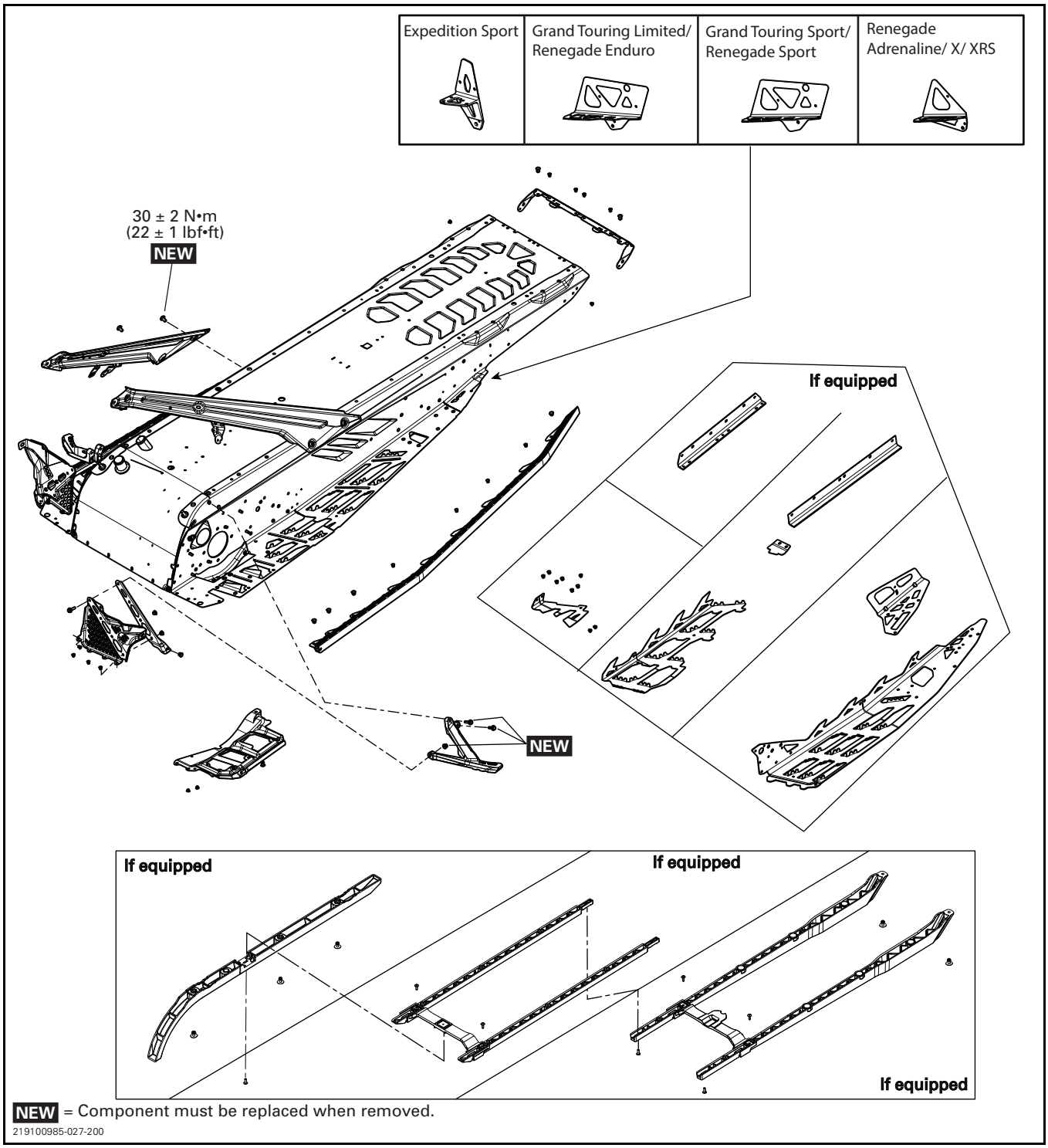


**NEW** = Component must be replaced when removed.

219100985-027-200

# GENERAL

During assembly and installation, use the torque values and the service products as in the exploded views.

Clean threads before applying a threadlocker. Refer to *SELF-LOCKING FASTENERS* and *LOCTITE APPLICATION* at the beginning of this manual for complete procedure.

**⚠ WARNING**

**Torque wrench tightening specifications must be strictly adhered to.**
**Locking devices (e.g.: locking tabs, elastic stop nuts, cotter pins, etc.) must be replaced with new ones.**

Check for loose, bent, worn out, rusted or otherwise damaged components. Replace the faulty components.

# PROCEDURES

## RIVETS

For proper drilling instructions and to prevent premature wear, follow the procedures as detailed.

***NOTICE*** **When removing rivets, do not enlarge or deform the rivet holes in the frame.**

### Removing a Self-Percing Rivet

Henrob and Thomson rivets are self-piercing rivets. They are installed with specific robotized equipment.

1. Using a grinding disk, grind the rivet end.

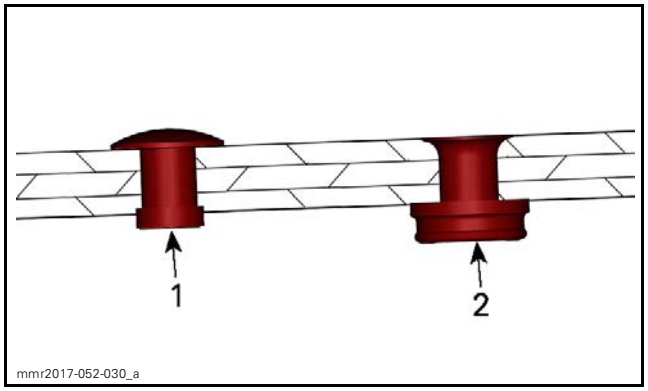


*1. Thomson rivet*
*2. Henrob rivet*

2. Support the frame around the rivet head with a socket on the opposite side to avoid warpage.

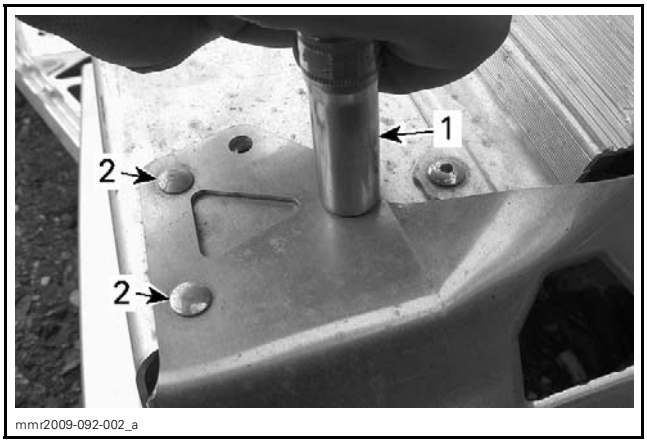


*TYPICAL*
*1. 11 mm socket over a rivet head*
*2. Rivet heads*

3. Drive out remaining rivet using a punch.

### Removing a Pop Rivet

Stavex, Avibulb, and Hemlock rivets are standard pop rivets. They are installed with standard manual or pneumatic tool.

1. Drill rivet head sufficiently to cut through it.

NOTE: To drill a Hemlock rivet, remove the riveting nail using a punch first.

***NOTICE*** **It is highly recommended to support the frame locally around a Hemlock rivet when punching its nail out.**

*HEMLOCK RIVET*

| RECOMMENDED TOOL |
| --- |
| SUPERTANIUM DRILL BIT 3/16" (P/N 529 031 800) |

***NOTICE*** **Drill only sufficiently to cut rivet head. Do not drill into frame material, or part secured using the rivet. When rivet is used to secure a plastic part, use pliers to avoid rotation of rivet with drill bit and heating or melting of the plastic part.**

2. Using a small punch, drive out the remaining rivet end.

### Removing a HUCK Rivet

Huck rivet is a 2 parts type rivet. It is installed with a specific pneumatic tool.

1. Using a cut-off tool, cut the rivet retainer without touching the retainer's shoulder.

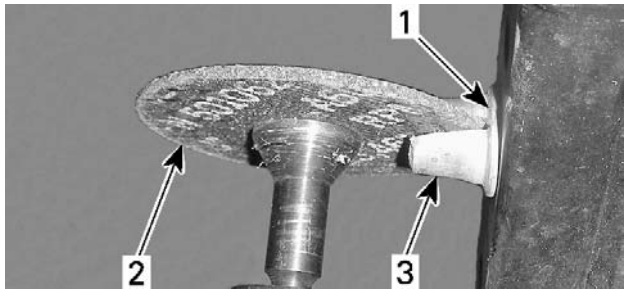

mmr2008-051-125_a

*1. Rivet retainer's shoulder*
*2. Cutter wheel*
*3. Rivet retainer*

NOTE: Apply a thin layer of grease on cutter wheel to increase its durability.

2. Break the rivet retainer's shoulder using a chisel.
3. Use a small punch to drive out the rivet stem.

## FRAME

### Cleaning the Frame

Clean frame and tunnel with appropriate cleaners and rinse with high pressure hose.

NOTE: For bare aluminum frames use only aluminum cleaner and follow instructions on container.

**NOTICE** **Never direct high-pressure water jet towards decals. They will peel off.**

### Welding the Frame

No welding is permitted unless it is specified on a BRP bulletin.

However, the heat exchanger can be welded to plug a small leak.

### Repairing the Frame

The following is specific information for aluminum chassis painting. Use common painting techniques.

1. Sand the area to be painted.
2. Clean and dry the area.
3. Apply a thin layer of paint of the appropriate color.
4. Allow paint to dry before re-coating.

NOTE: Paint takes approximately 15 minutes to dry following application.

5. Apply a thin coat of clear.
6. Immediately after the clear coat application, apply a thin coat of HR50 blending solvent **around** the painted area.
7. Allow clear coat to dry.

NOTE: Clear coat takes approximately 2 hours to dry following application.

## REAR BUMPER

Refer to *BODY* subsection for rear bumper removal and installation procedure.

## REAR FRAME MEMBER

### Removing the Rear Frame Member

1. Refer to *BODY* subsection to remove the following:
   – Seat
   – Upper body module
   – Rear console.
2. Remove fasteners as per the following illustrations.

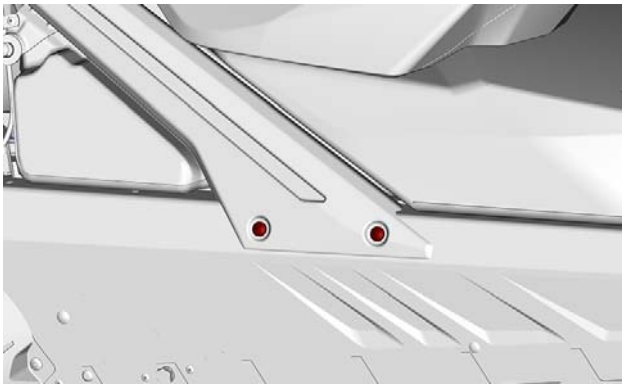
mmr2017-052-001

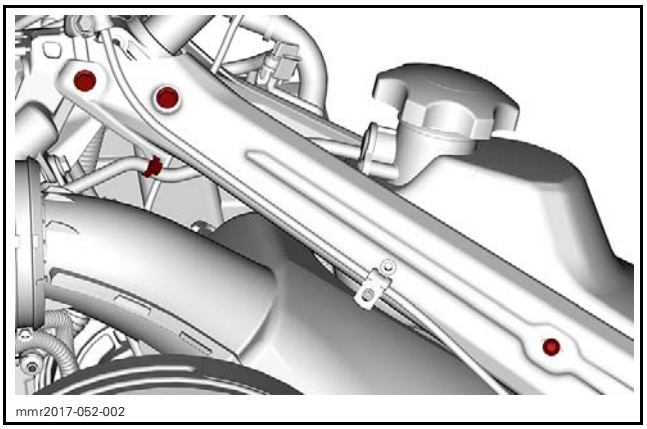
mmr2017-052-002

3. Remove rear frame member.

### Installing the Rear Frame Member

The installation is the reverse of the removal procedure. However, pay attention to the following.

Install all screws and nuts before tightening them.

Refer to exploded views for proper tightening torque.

## FRONT SUSPENSION MODULE

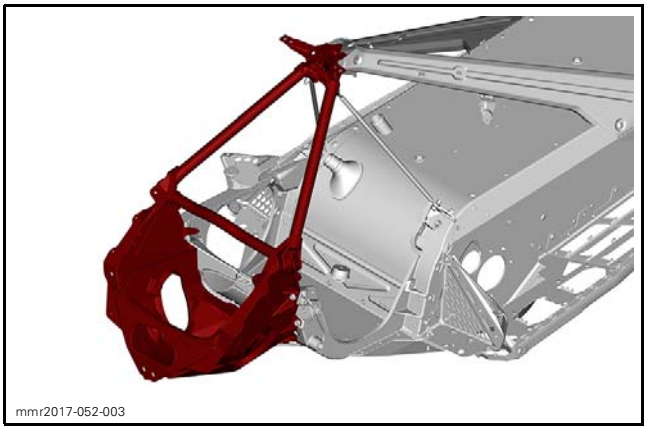
mmr2017-052-003

### Removing the Front Suspension Module

1. Lift front of vehicle until skis are off the ground.
2. Place a wooden box under the engine module to support the frame securely.
3. Refer to the appropriate subsection and remove:
   - Engine
   - Steering column.
4. Detach the brake hose clamp next of the upper steering column support.
5. Detach side frame members from upper steering column support.

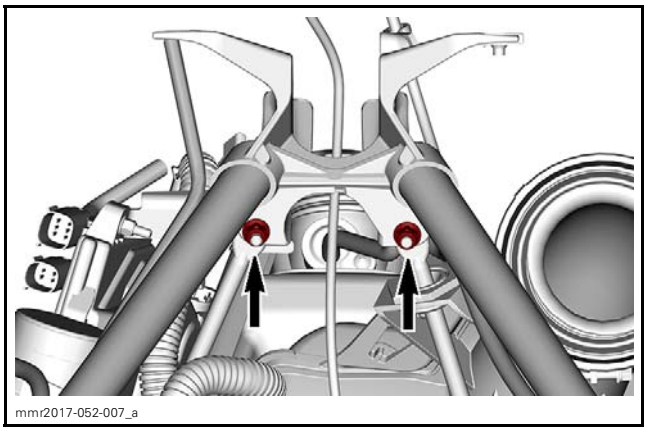
mmr2017-052-007_a

6. Remove the front suspension assembly in the following manner:
   - 6.1 Detach tie-rod ends from steering column.
   - 6.2 Remove upper shock absorber screws.
   - 6.3 Remove screw that secures stabilizer link to lower arm.

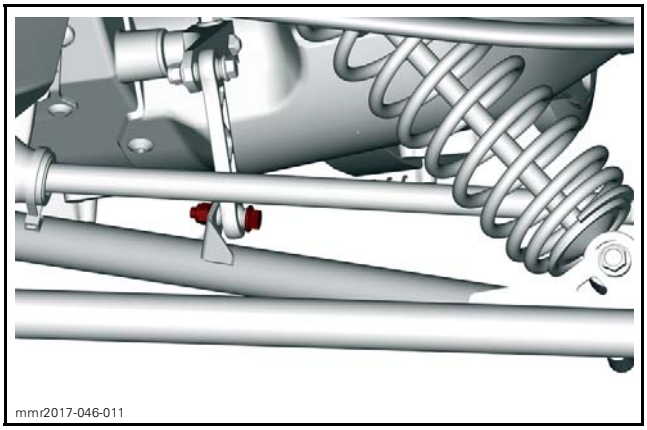
mmr2017-046-011

   - 6.4 Remove upper and lower suspension arms screws and nuts. Refer to *FRONT SUSPENSION* subsection.
   - 6.5 Remove front suspension assembly from vehicle.
7. Remove the stabilizer bar. Refer to *FRONT SUSPENSION* subsection.
8. Remove the front bottom pan. Refer to *BODY* subsection.

**NOTE:** Keep the front bumper installed on front bottom pan.

9. Cut locking ties that secure vents and electrical harness to module tubes.

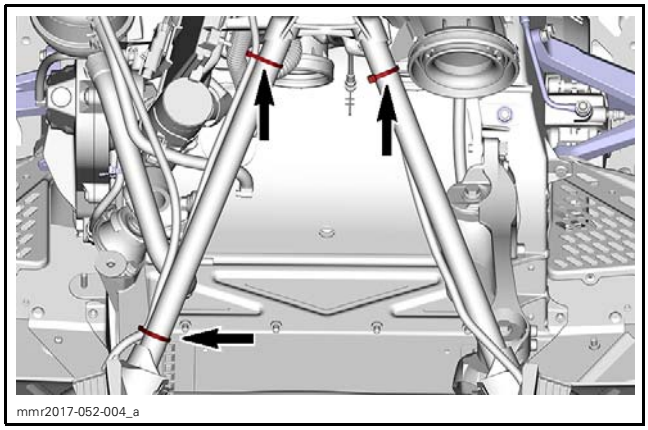
mmr2017-052-004_a

10. If the suspension module needs to be replaced, remove:
    – Steering rack / lower steering column support
    – Tie rod boots.
    Refer to *STEERING SYSTEM* subsection.
11. Remove the lower retaining fasteners.

For riveted models, refer to *REMOVING A POP RIVET* at the beginning of this subsection for procedure.

**NOTICE** **It is highly recommended to support the frame locally around a Hemlock rivet when punching its nail out.**

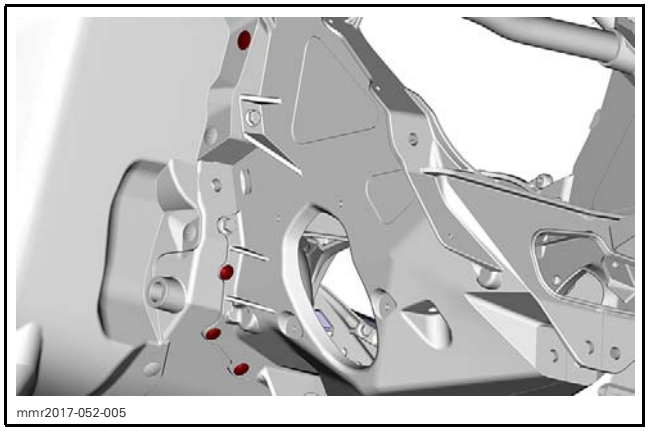
mmr2017-052-005

*RH SIDE SHOWN*

12. Remove the upper retaining fasteners.

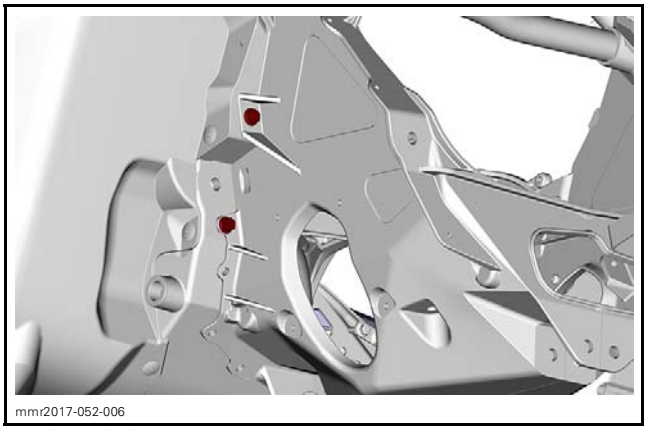
mmr2017-052-006

*RH SIDE SHOWN*

13. Remove the front suspension module.

## Installing the Front Suspension Module

The installation is the reverse of the removal procedure. However, pay attention to the following.

Refer to exploded views for proper tightening torque.

Install fasteners as per the following sequence.

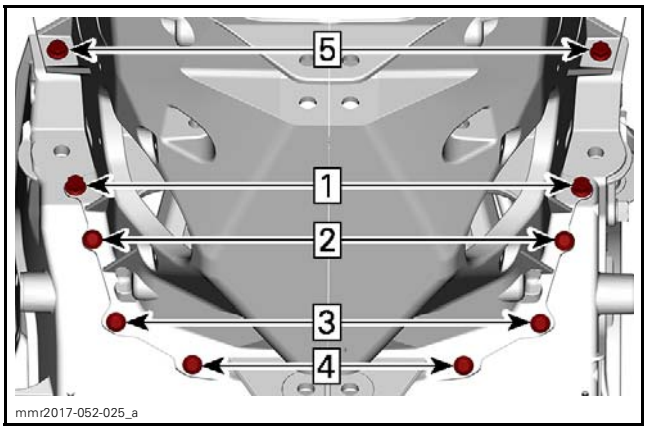

mmr2017-052-025_a

# ENGINE MODULE

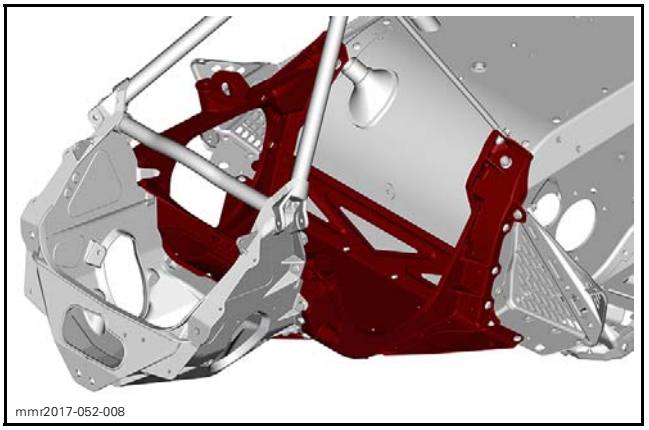
mmr2017-052-008

## Removing the Engine Module

1. Remove the *FRONT SUSPENSION MODULE*, see procedure in this subsection.
2. Remove RH side bottom pan. Refer to *BODY* subsection.
3. Remove the RH side engine rubber mount. Refer to *ENGINE REMOVAL AND INSTALLATION* subsection.
4. Detach side frame members from engine module.

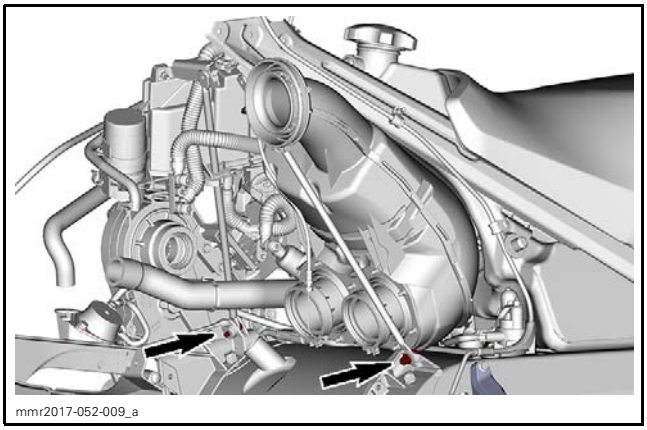
mmr2017-052-009_a

5. Remove toe hook fasteners, if equipped.

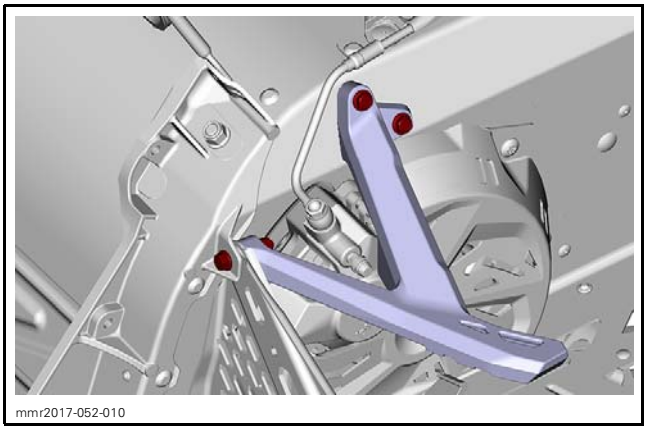
mmr2017-052-010

6. Remove the chaincase cover. Refer to *CHAINCASE* subsection.
7. Remove the screw that secure the chaincase to the engine module.

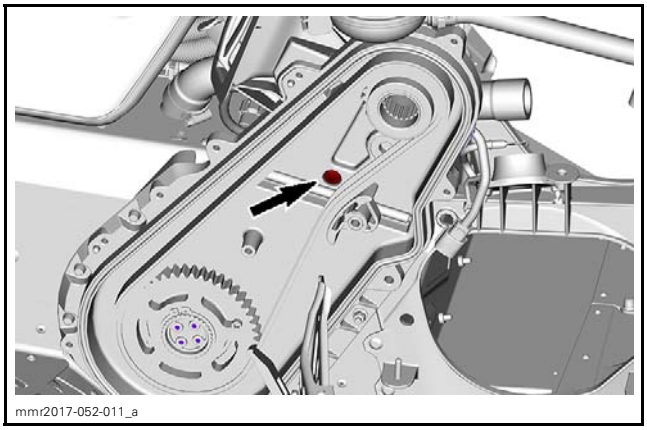
mmr2017-052-011_a

8. Remove the electrical ground screw located between the chaincase and the engine mount.

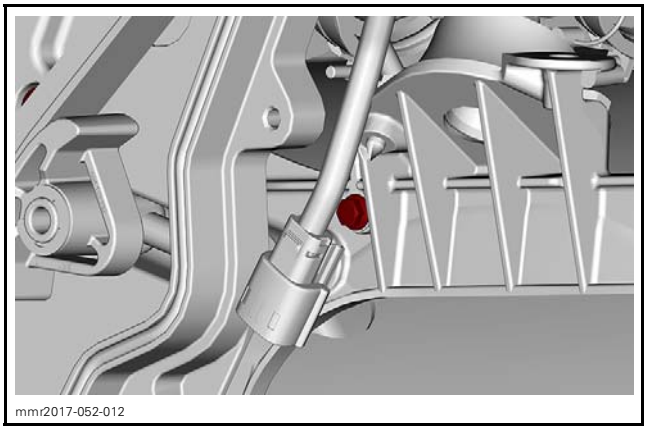
mmr2017-052-012

9. Remove rivets and bolts as per the following illustrations. Refer to *REMOVING A POP RIVET* in this subsection.

**NOTICE** **It is highly recommended to support the frame locally around a Hemlock rivet when punching its nail out.**

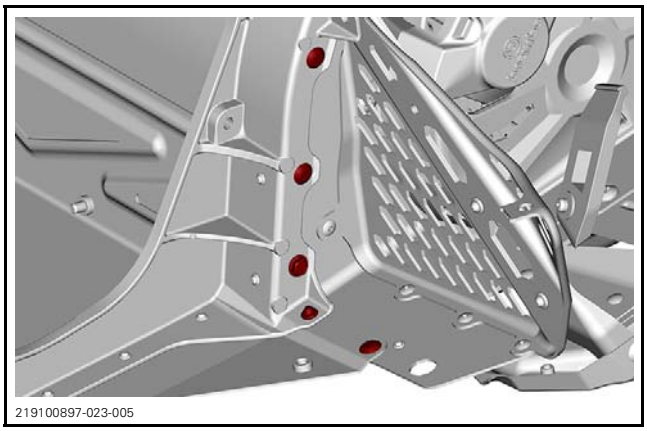
219100897-023-005

*LH SIDE*

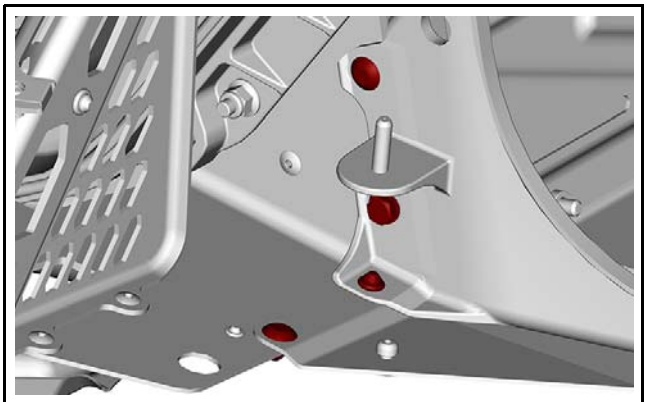


*RH SIDE*

10. Remove nuts and screws securing the engine module to the tunnel.

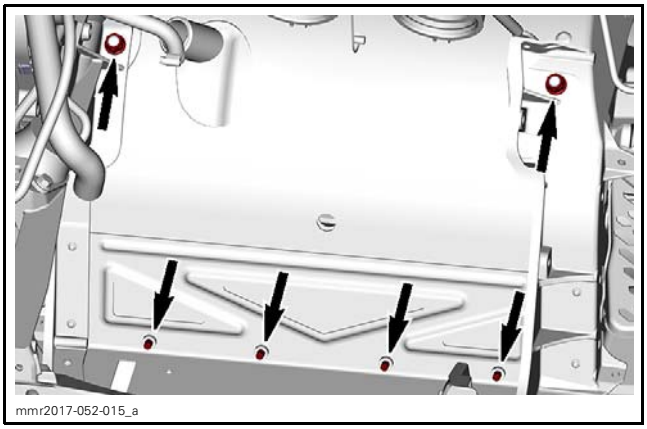


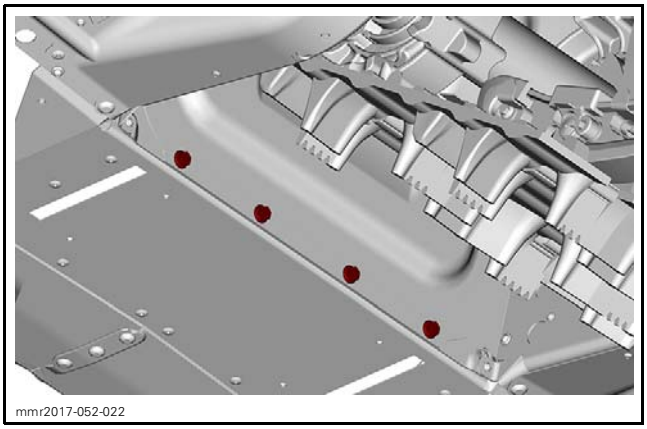


*VIEW FROM INSIDE THE TUNNEL*

11. Remove the engine module.

If only one of the two side members is replaced:

### *Models with Reinforcement Plate*

Remove the rivets and bolts retaining the reinforcement plate.

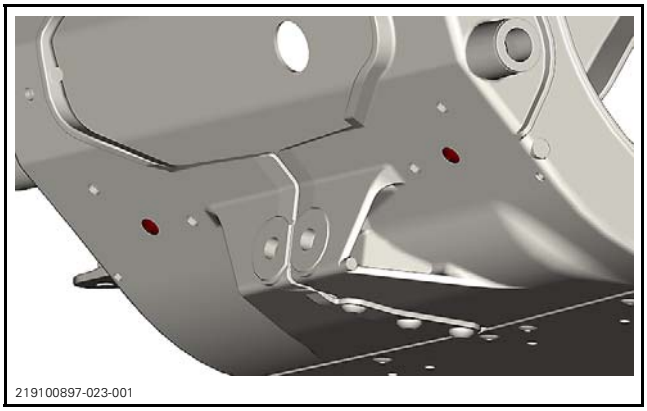


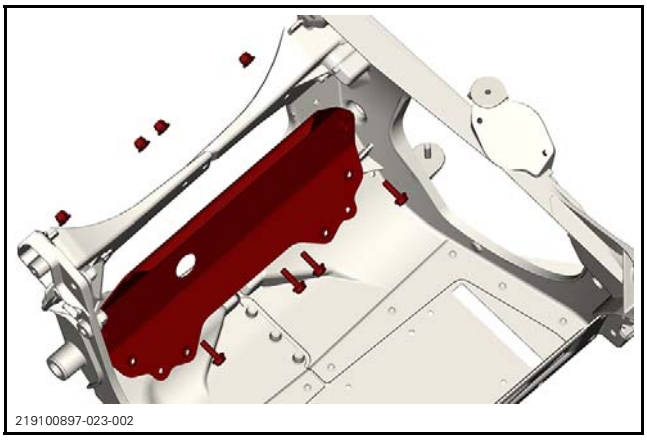


Remove HUCK rivets as per the procedure in this subsection.

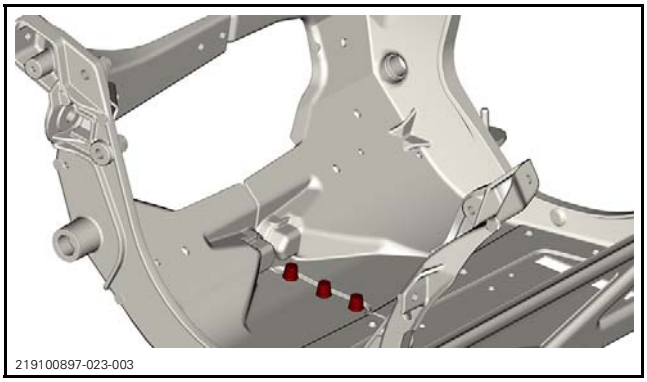


### *Models without Reinforcement Plate*

Remove HUCK rivets and bolts as per the procedure in this subsection.

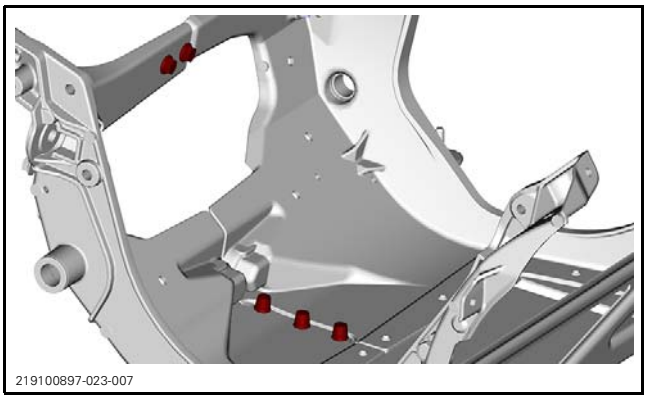
219100897-023-007

## Installing the Engine Module

The installation is the reverse of the removal procedure. However, pay attention to the following.

Assemble LH and RH side frame member before to fix on the tunnel module.

If the HUCK rivets were removed, replace with the following parts.

| NEW FASTENERS | |
|---|---|
| Torx screw M6 x 20 | (P/N 250000712) |
| Hexagonal flanged elastic stop nut M6 | (P/N 233261414) |

NOTE: Install the 3 bottom screws with heads downwards and the 2 upper screws with heads towards the engine.

Install all screws and rivets in there hole (including reinforcement fasteners) before tightening and riveting.

Refer to exploded views for proper tightening torque. Use standard tightening torque when not specified.

# TUNNEL MODULE

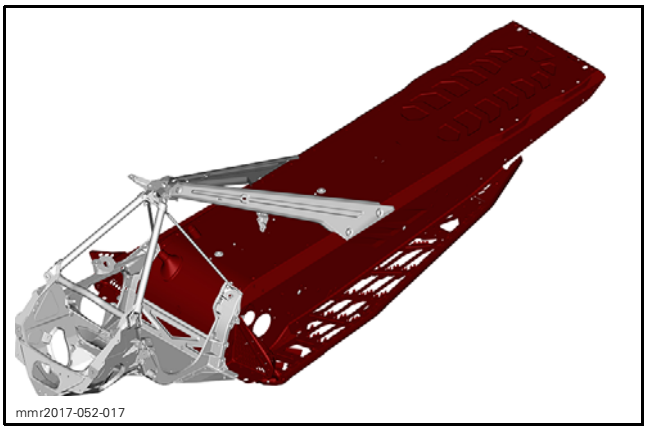
mmr2017-052-017

## Removing the Tunnel Module

1. Drain cooling system, Refer to *COOLING SYSTEM DRAINING* in *PERIODIC MAINTENANCE PROCEDURES* subsection.
2. Place a wooden box under the engine module to support the frame.
3. Refer to the appropriate subsection and remove:
   - Driven pulley and countershaft
   - Fuel tank
   - Primary air intake silencer
   - LH bottom pan
   - Track
4. Remove the remaining drive belt guard bracket screw.

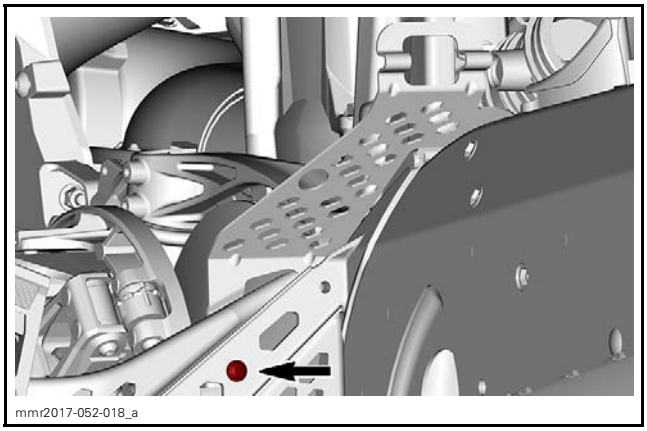
mmr2017-052-018_a

5. Disconnect the starter cable from the solenoid, if equipped.
6. Disconnect and remove the electric harness from the plastic bracket.

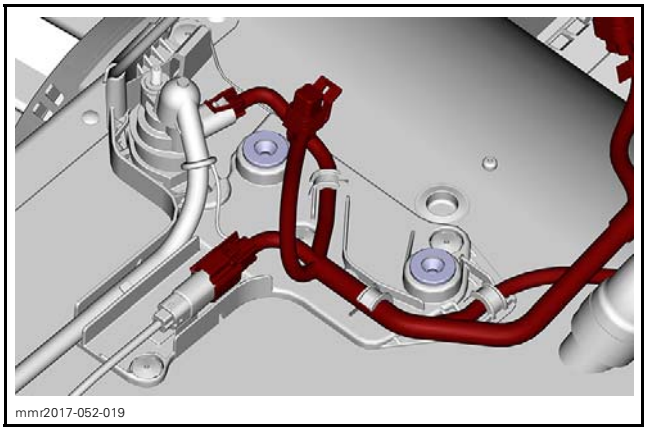
mmr2017-052-019

7. If the tunnel is replaced, remove:
   - Chaincase
   - The plastic bracket
   - Devices that retain the battery cable, if equipped

– Rear bumper
– Taillight
– Snowguard.

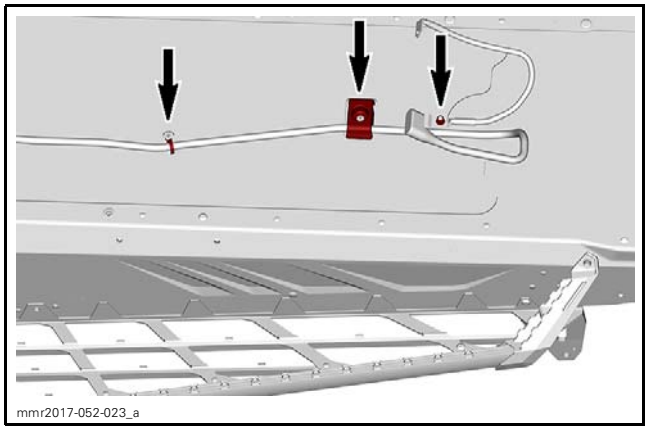
mmr2017-052-023_a

8. Move the plastic bracket, electrical harness, and fuel hoses aside to clear the tunnel.
9. Loosen the coolant hose clamps and disconnect hoses.

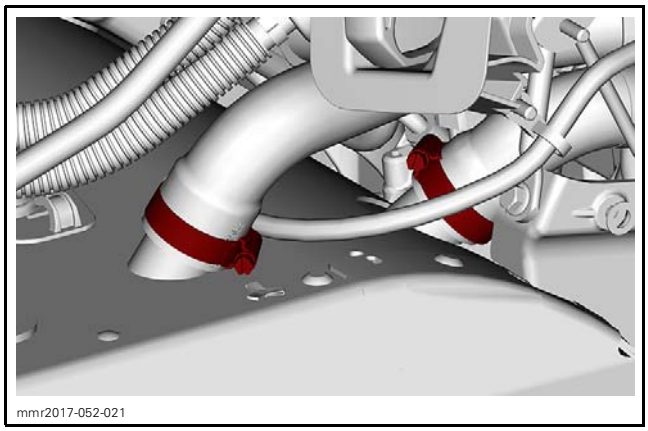
mmr2017-052-021

10. Remove rivets as per the following illustrations. Refer to *REMOVING A POP RIVET* in this subsection.

**NOTICE** **It is highly recommended to support the frame locally around a Hemlock rivet when punching its nail out.**

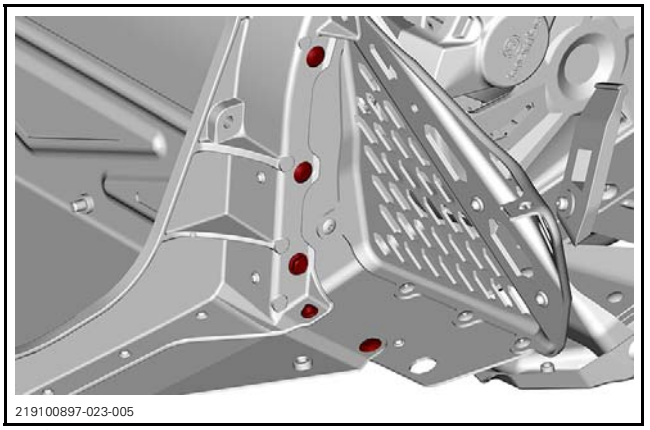
219100897-023-005

*LH SIDE*

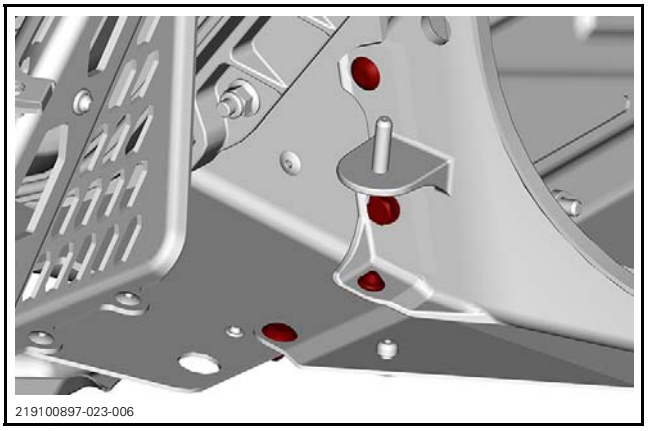
219100897-023-006

*RH SIDE*

11. Remove nuts and screws securing the engine module to the tunnel.

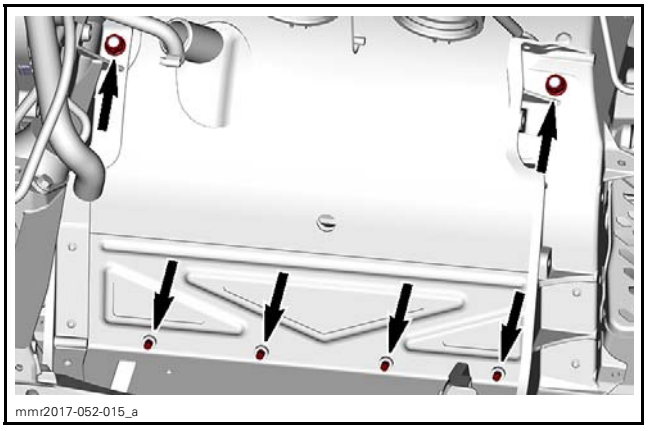
mmr2017-052-015_a

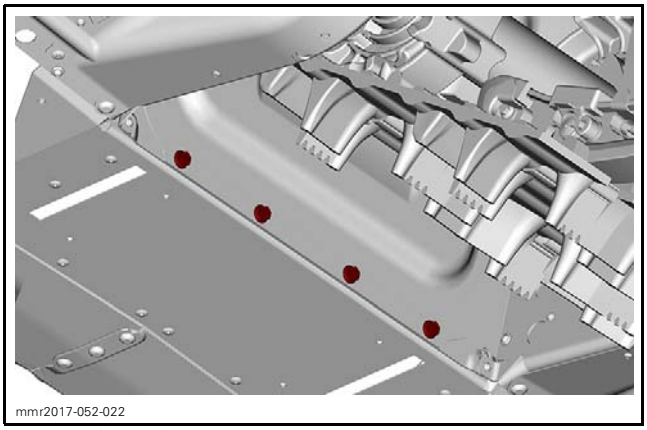
mmr2017-052-022

*VIEW FROM INSIDE THE TUNNEL*

12. Separate the tunnel module from the rest of the frame.
13. Remove the tunnel protectors under the tunnel, if equipped.

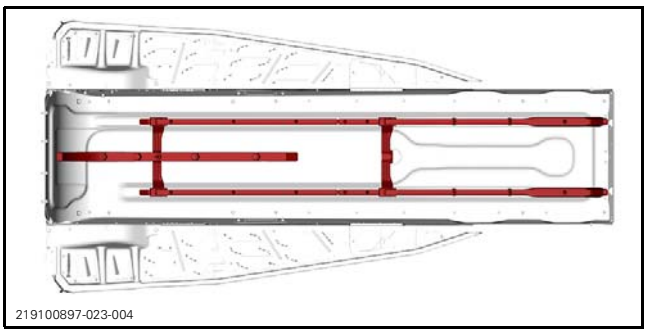
219100897-023-004

## Installing the Tunnel Module

The installation is the reverse of the removal procedure. However, pay attention to the following.

Refer to exploded views or appropriate subsections for proper tightening torque.

Properly refill cooling system. Refer to *COOLING SYSTEM REFILL AND BLEEDING* in *PERIODIC MAINTENANCE PROCEDURES* subsection.

# HEAT EXCHANGER

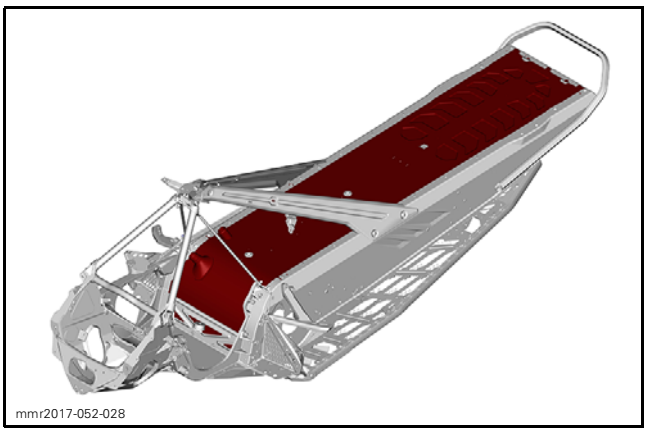
mmr2017-052-028

## Welding the Heat Exchanger

**NOTICE** **Welding aluminum requires special skills, do not try if you're not familiar with the process.**

1. Lower coolant level in the heat exchanger.
2. Clean the leak area with acetone.
3. Use a stainless steel brush to remove all residues.
4. Clean again with acetone.
5. Weld the leak area using a MIG or a TIG welder.
6. Properly refill cooling system. Refer to *COOLING SYSTEM REFILL AND BLEEDING* in *PERIODIC MAINTENANCE PROCEDURES* subsection.

## Replacing the Heat Exchanger

1. Remove the tunnel. Refer to the procedure in this subsection.

Do not remove the chaincase.

2. Remove the tunnel rear cap. Refer to *RIVETS* in this subsection.

**NOTICE** **It is highly recommended to support the frame locally around a Hemlock rivet when punching its nail out.**

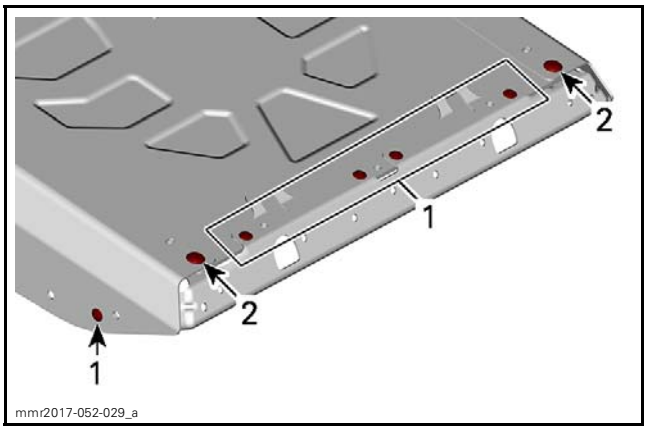

mmr2017-052-029_a

*1. Avibulb rivets (pop rivets)*
*2. Hemlock rivets (pop rivets)*

3. Remove the following rivets.

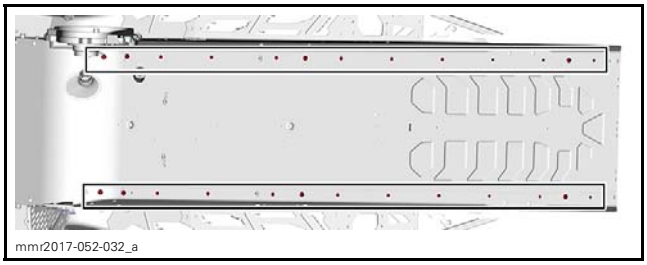
mmr2017-052-032_a

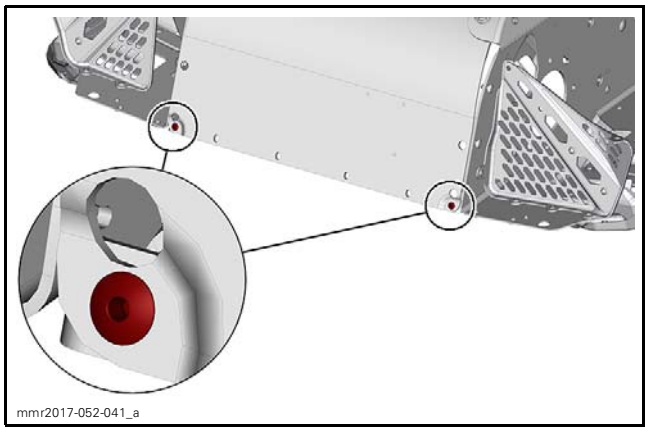


4. Position the new heat exchanger.
5. Install M6 screws and nuts loosely in the Hemlock rivet holes.

NOTE: M6 screws will not fit in self-piercing rivet holes.

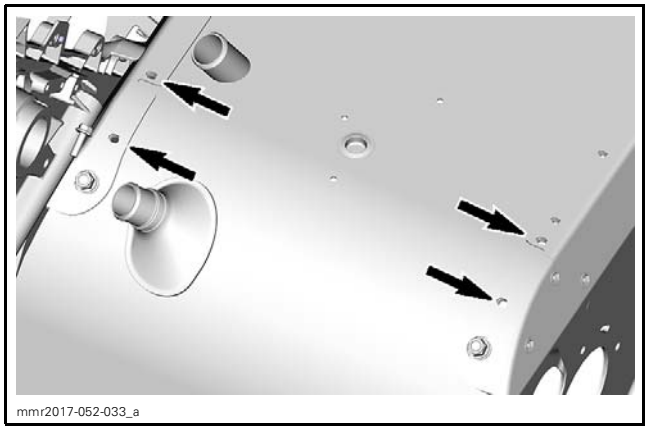


*FRONT RIVET HOLES*

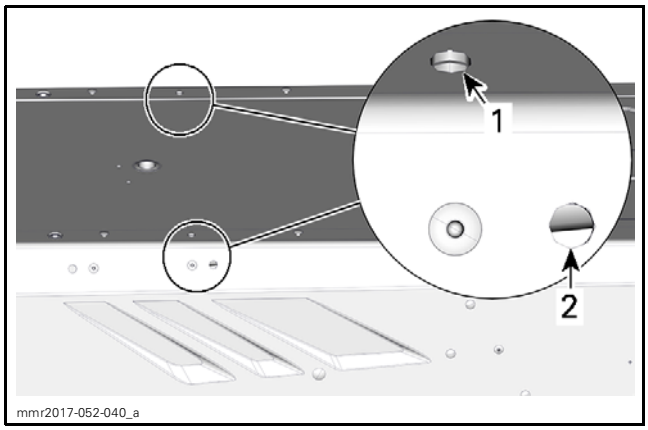


*MID-LENTGH RIVET HOLES*
1. *Install M6 screws and nuts here*
2. *Rear mounting hole for rear frame member*

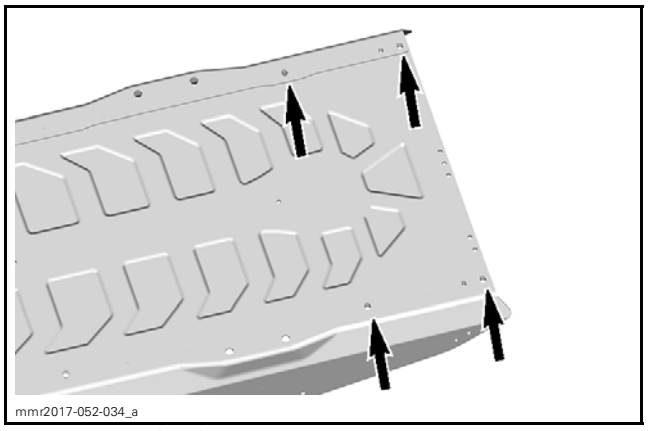


*REAR RIVET HOLES*

6. Install the gauge kit loosely with the appropriate screws, as per the following illustrations.

**NOTICE** **It is imperative to use the gauge kit and to follow each steps of this procedure to avoid drive axle misalignment.**

| REQUIRED TOOL | |
|---|---|
| RADIATOR INSTALLATION GAUGES (P/N 529 036 422) | |

This kit fits all tunnel of 40.64 cm (16 in), regardless of the length.

| CYLINDRICAL GAUGES LENGHT | |
|---|---|
| Rear suspension hole gauges | 419.2 mm (16-1/2 in) |
| Tail gauge | 426.4 mm (16-25/32 in) |

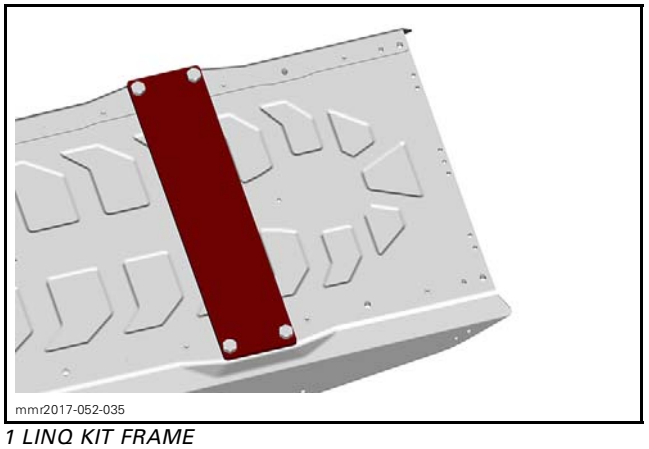


*1 LINQ KIT FRAME*

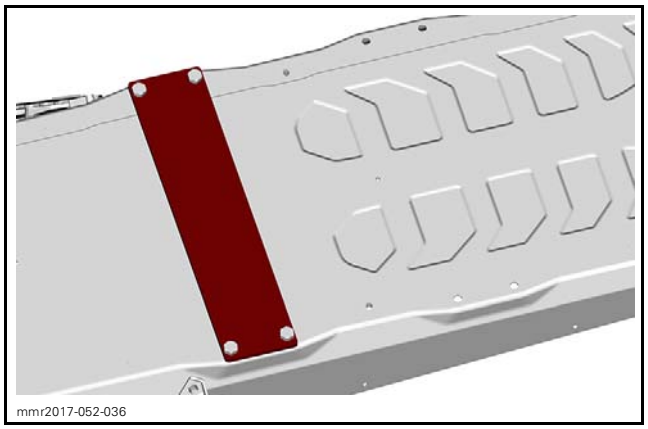


*2 LINQ KIT FRAME - INSTALL ON FRONT HOLES*

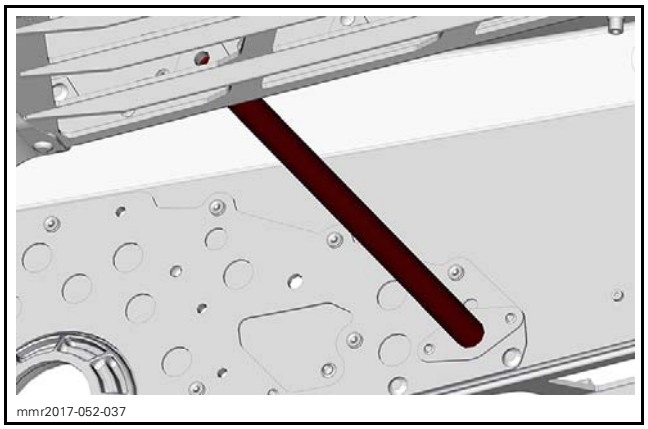


*REAR SUSPENSION FRONT ARM GAUGE*

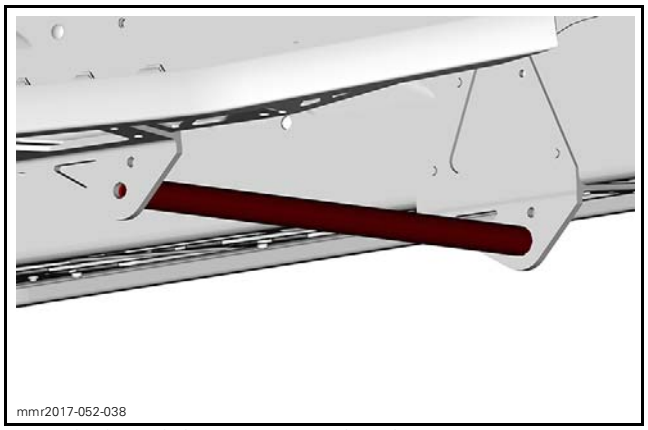


*REAR SUSPENSION REAR ARM GAUGE*

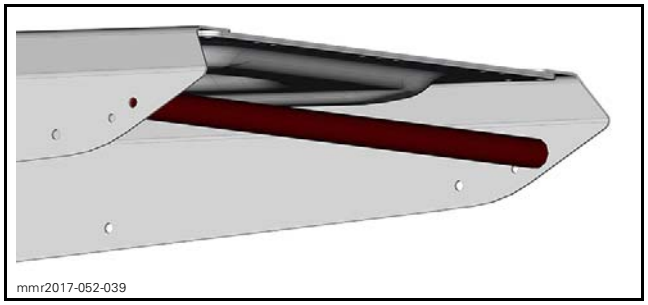


*TAIL GAUGE*

7. Install the drive axle. Refer to *DRIVE AXLE* subsection.

**NOTE:** It is not required to install the chain and the brake disc.

8. Tighten gauges and M6 screws with standard torque.
9. Enlarge self-piercing rivet holes.

| REQUIRED TOOL |
|---|
| Drill bit 6.35 mm (1/4 in) |

10. Install Hemlock rivets in enlarged holes.

| REQUIRED PARTS | |
|---|---|
| Hemlock rivets | (P/N 293150119) |

11. Install the tunnel rear cap.

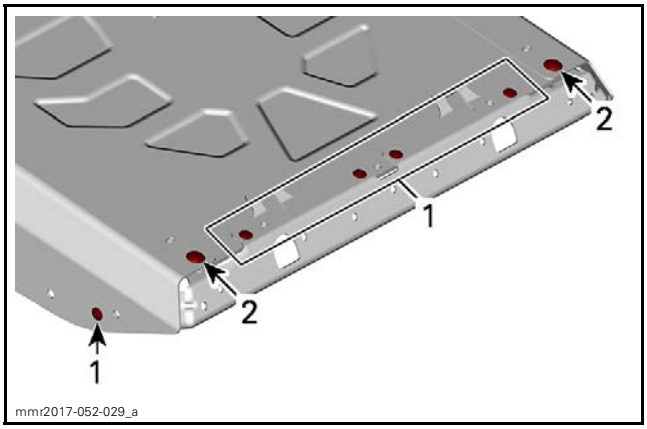


*1. Avibulb 4.76 mm (3/16 in) rivets*
*2. Hemlock 6.4 mm (1/4 in) rivets*

12. Remove the M6 screws and nuts, and install Hemlocks rivets.
13. Remove all gauges and the drive axle.
14. Reassemble the vehicle.

# COUNTERSHAFT BEARING SUPPORT

## Removing the Countershaft Bearing Support

1. Refer to the appropriate subsection and remove:
   - Driven pulley and countershaft
   - LH side bottom pan.
2. Remove the belt guard support.

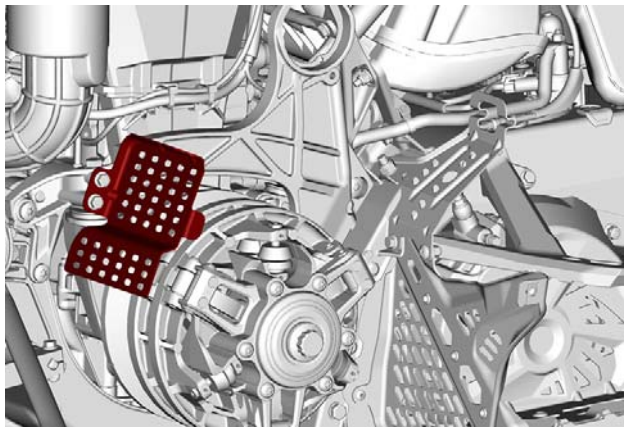
219100985-027-300

3. Insert a pry bar between the engine module and the bottom of the engine to support it during the countershaft bearing support removal.
4. Detach both supports from the top of the countershaft bearing support

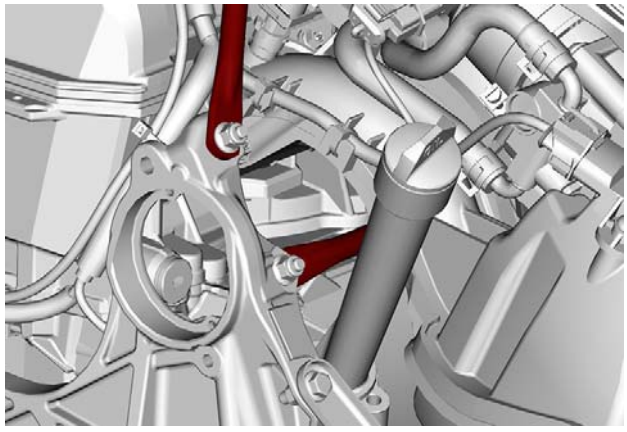
219100985-027-301

5. Detach the top of the support link.

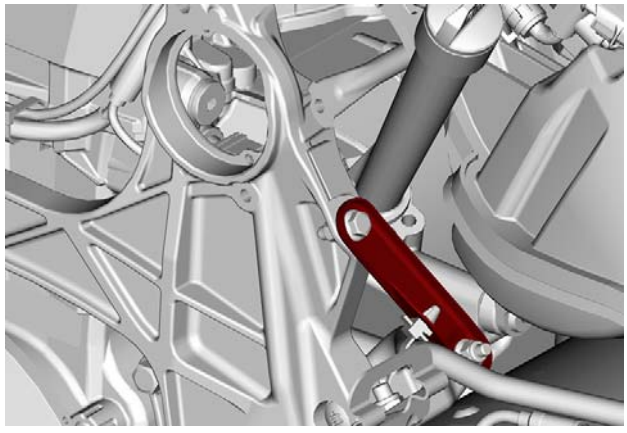
219100985-027-302

6. Remove the front engine support screw.

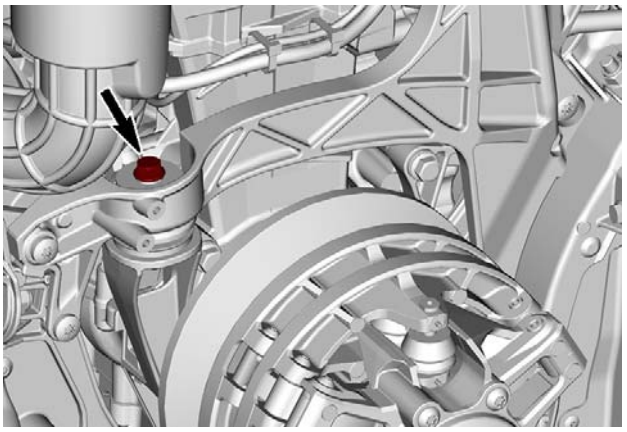
219100985-027-303

7. Remove the countershaft bearing support screws.

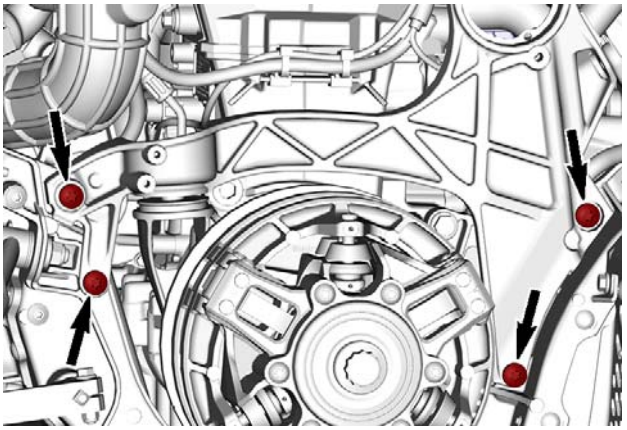
219100985-027-304

8. Remove the rear engine support screw located behind the support.

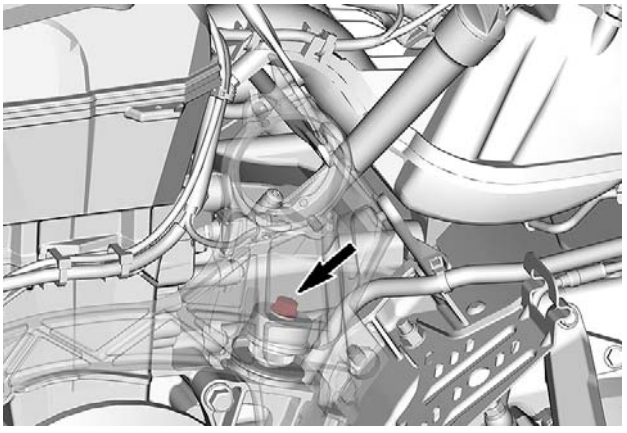
219100985-027-305

9. Remove the countershaft bearing support.

## Installing the Countershaft Bearing Support

The installation is the reverse of the removal procedure. However, pay attention to the following.

| IF INSTALLED ON THE SAME FRAME MEMBER | |
|---|---|
| M8 Hexagonal flange screw (all fasteners) | (P/N 207683044) |
| **IF INSTALLED ON A NEW FRAME MEMBER** | |
| M8 Hexagonal flange self-tapping screw (at rear of bearing support) | (P/N 210283040) |

Refer to exploded views for tightening torque and sequence.

# ENGINE - 600 ACE

| ENGINE | | | |
|---|---|---|---|
| Engine type | | | ROTAX® 600 ACE<br>4-stroke, Double Over Head Camshaft (DOHC), dry sump, liquid cooled |
| Number of cylinders | | | 2 |
| Number of valves | | | 8 valves (self adjusting hydraulic valve lifters) |
| Bore | | | 74 mm (2.91 in) |
| Stroke | | | 69.7 mm (2.74 in) |
| Displacement | | | 599.54 cm³ (36.59 in³) |
| Compression ratio | | | 12.0 : 1 |
| | | | |
| Maximum HP RPM | | | 7250 (± 100) RPM |
| Intake valve opening | | | 3° BTDC |
| Intake valve closing | | | 37° ABDC |
| Exhaust valve opening | | | 44° BBDC |
| Exhaust valve closing | | | 6° ATDC |
| Valve stem diameter | Intake | New | 4.958 mm to 4.972 mm (.1952 in to .1957 in) |
| | | Service limit | 4.94 mm (.1945 in) |
| | Exhaust | New | 4.956 mm to 4.970 mm (.1951 in to .1957 in) |
| | | Service limit | 4.94 mm (.194 in) |
| Valve guide inner diameter | | New | 5.000 mm to 5.020 mm (.1969 in to .1976 in) |
| | | Service limit | 5.050 mm (.1988 in) |
| Valve spring free length | | New | 31.35 mm (1.2343 in) |
| | | Service limit | 29.50 mm (1.1614 in) |
| Valve seat contact width | Intake | New | 1.05 mm to 1.35 mm (.0413 in to .0531 in) |
| | | Service limit | 1.70 mm (.067 in) |
| | Exhaust | New | 1.25 mm to 1.45 mm (.0492 in to .0571 in) |
| | | Service limit | 1.80 mm (.071 in) |
| Piston measurement | | New | 73.95 mm to 73.966 mm (2.9114 in to 2.912 in) |
| | | Service limit | 73.92 mm (2.91 in) |
| Piston/cylinder wall clearance | | New | 0.037 mm to 0.067 mm (.0015 in to .0026 in) |
| | | Service limit | 0.08 mm (.0031 in) |

Midwest Manuals
Green Manuals
If you bought this manual from any other seller please leave them NEGATIVE feedback and notify me at bestshopmanuals@gmail.com

| ENGINE | | | |
|---|---|---|---|
| Piston ring type | | 1st | Upper compression ring, rectangular |
| | | 2nd | Lower compression ring, tapered face |
| | | 3rd | Oil scraper ring |
| Ring end gap | Rectangular | New | 0.20 mm to 0.35 mm (.0079 in to .0138 in) |
| | | Service limit | 1.20 mm (.0472 in) |
| | Taper-face | New | 0.30 mm to 0.50 mm (.0118 in to .0197 in) |
| | | Service limit | 1.20 mm (.0472 in) |
| | Oil scraper ring | New | 0.20 mm to 0.70 mm (.0079 in to .0276 in) |
| | | Service limit | 1.20 mm (.0472 in) |
| Ring/piston groove clearance | Rectangular | New | 0.030 mm to 0.066 mm (.0012 in to .0026 in) |
| | | Service limit | 0.12 mm (.0047 in) |
| | Taper-face | New | 0.020 mm to 0.056 mm (.0008 in to .0022 in) |
| | | Service limit | 0.12 mm (.0047 in) |
| | Oil scraper ring | New | 0.010 mm to 0.040 mm (.0004 in to .0016 in) |
| | | Service limit | 0.15 mm (.0059 in) |
| Cylinder bore | | New | 74.003 mm to 74.017 mm (2.9135 in to 2.9141 in) |
| Cylinder taper | | Maximum New | 0.030 mm (.0012 in) |
| | | Service limit | 0.05 mm (.002 in) |
| Cylinder out of round | | Maximum New | 0.008 mm (.0003 in) |
| | | Service limit | 0.03 mm (.0012 in) |
| Camshaft bearing journal diameter | PTO | New | 25.947 mm to 25.960 mm (1.0215 in to 1.022 in) |
| | | Service limit | 25.92 mm (1.0205 in) |
| | MAG/Center | New | 22.947 mm to 22.960 mm (.9034 in to .9039 in) |
| | | Service limit | 22.92 mm (.9024 in) |
| Camshaft holder bore diameter | PTO | New | 26.00 mm to 26.021 mm (1.0236 in to 1.0244 in) |
| | | Service limit | 26.05 mm (1.0256 in) |
| | MAG/Center | New | 23.00 mm to 23.021 mm (.9055 in to .9063 in) |
| | | Service limit | 23.05 mm (.9075 in) |

| ENGINE | | | |
|---|---|---|---|
| Camshaft lobe height | Intake | New | 38.70 mm to 38.90 mm (1.5236 in to 1.5315 in) |
| | | Service limit | 38.68 mm (1.5228 in) |
| | Exhaust | New | 39.40 mm to 39.60 mm (1.5512 in to 1.5591 in) |
| | | Service limit | 39.38 mm (1.5504 in) |
| Crankshaft bearing journal diameter | | New | 35.990 mm to 36.006 mm (1.4169 in to 1.4176 in) |
| | | Service limit | 35.960 mm (1.4157 in) |
| Crankshaft radial play | | Service limit | 0.080 mm (.0031 in) |
| Crankshaft axial play | | New | 0.120 mm - 0.392 mm (.0047 in - .0154 in) |
| | | Service limit | 0.450 mm (.0177 in) |
| Crankshaft pin diameter | | New | 35.979 mm to 35.995 mm (1.416 in to 1.417 in) |
| | | Service limit | 35.969 mm (1.416 in) |
| Crankshaft deflection | MAG | Maximum | 0.050 mm (.002 in) |
| | Center | Maximum | 0.050 mm (.002 in) |
| | PTO | Maximum | 0.050 mm (.002 in) |
| Crankshaft plain bearing inside diameter | | Service limit | 36.08 mm (1.4205 in) |
| Connecting rod big end diameter | | Service limit | 36.06 mm (1.4197 in) |
| Connecting rod big end radial play | | Service limit | 0.08 mm (.0031 in) |
| Connecting rod big end axial play | | New | 0.100 mm to 0.352 mm (.0039 in to .0139 in) |
| | | Service limit | 0.450 mm (.0177 in) |
| Connecting rod small end diameter | | New | 17.010 mm to 17.020 mm (.6697 in to .6701 in) |
| | | Service limit | 17.060 mm (.6717 in) |
| Piston pin diameter | | New | 16.996 mm to 17.000 mm (.6691 in to .6693 in) |
| | | Service limit | 16.986 mm (.6687 in) |
| Connecting rod small end radial play | | Service limit | 0.04 mm (.0016 in) |

| COOLING SYSTEM | | |
|---|---|---|
| Coolant | Type | Ethyl glycol and distilled water (50%/50%) or coolant specifically formulated for aluminum engines For best performance use BRP LONG LIFE ANTIFREEZE (P/N 219702685) or (P/N 619590204) |
| | Quantity | 5.0 L (1.32 U.S. gal.) |
| Thermostat opening temperature | | 75°C (167°F) |
| Radiator cap opening pressure | | 110 kPa (16 PSI) |

| LUBRICATION SYSTEM | | | |
|---|---|---|---|
| Lubrication | Type | | Dry sump. Replaceable oil filter |
| | Oil filter | | BRP Rotax paper type, replaceable |
| | Minimum engine oil pressure | | 60 kPa (8.7 PSI) @ 1400 RPM |
| | | | 400 kPa (58 PSI) @ 4000 RPM |
| | Engine oil | Capacity (oil change with filter) | 2.1 L (2.22 qt (U.S. liq.)) |
| | | Recommended | XPS 4-stroke full synthetic oil (All climate) or a SAE 0W 40 API service SM or SN synthetic oil |

| FUEL SYSTEM | | | |
|---|---|---|---|
| Fuel injection type | | | Mulitpoint fuel injection |
| Throttle body type | | | 46 mm heated Dell'Orto throttle body with iTC (intelligent Throttle Control) |
| Idle speed | Normal idle | Standard/ECO mode | 1500 ± 100 RPM |
| | | Sport | 1650 ± 100 RPM |
| | Fast idle at -40°C (-40°F) | | 2100 ± 100 RPM |

| ELECTRICAL SYSTEM | | |
|---|---|---|
| Magneto generator output | | 650 W @ 6000 RPM @ 14 V |
| Magneto stator resistance (between any pair of yellow wires) | | 0.1 to 1 Ohm @ 20°C (68°F) |
| Ignition type | | IDI (Inductive Digital Ignition) |
| Spark plug | Make and type | NGK MR7BI-8 |
| | Gap | .70 mm to 0.80 mm (.028 in to .031 in) |
| Ignition timing | | Not adjustable |

# ENGINE - 900 ACE

| ENGINE | | | |
|---|---|---|---|
| Engine type | | | ROTAX® 900 ACE<br>4-stroke, Double Over Head Camshaft (DOHC), dry sump, liquid cooled |
| Number of cylinders | | | 3 |
| Number of valves | | | 12 valves (self adjusting hydraulic valve lifters) |
| Bore | | | 74 mm (2.91 in) |
| Stroke | | | 69.7 mm (2.74 in) |
| Displacement | | | 899.31 $cm^3$ (54.88 $in^3$) |
| Compression ratio | | | 12.0 : 1 |
| Maximum HP RPM | | | 7250 ± 200 RPM |
| Intake valve opening | | | 5° ATDC |
| Intake valve closing | | | 40° ABDC |
| Exhaust valve opening | | | 40° BBDC |
| Exhaust valve closing | | | 5° BTDC |
| Valve stem diameter | Intake | New | 4.958 mm to 4.972 mm (.1952 in to .1957 in) |
| | | Service limit | 4.940 mm (.1945 in) |
| | Exhaust | New | 4.956 mm to 4.970 mm (.1951 in to .1957 in) |
| | | Service limit | 4.940 mm (.1945 in) |
| Valve guide diameter | | New | 5.000 mm to 5.020 mm (.1969 in to .1976 in) |
| | | Service limit | 5.050 mm (.1988 in) |
| Valve out of round | | New | 0.005 mm (.0002 in) |
| | | Service limit | 0.060 mm (.0024 in) |
| Valve spring free length | | New | 31.35 mm (1.2343 in) |
| | | Service limit | 29.50 mm (1.1614 in) |
| Valve seat contact width | Intake | New | 1.05 mm to 1.35 mm (.0413 in to .0531 in) |
| | | Service limit | 1.70 mm (.0669 in) |
| | Exhaust | New | 1.25 mm to 1.45 mm (.0492 in to .0571 in) |
| | | Service limit | 1.80 mm (.0709 in) |
| Cylinder head warpage | | Service limit | 0.15 mm (.0059 in) |
| Piston measurement | | New | 73.950 mm to 73.966 mm (2.9114 in to 2.912 in) |
| | | Service limit | 73.920 mm (2.9102 in) |

| ENGINE | | | |
|---|---|---|---|
| Piston/cylinder wall clearance | | New | 0.037 mm to 0.067 mm (.0015 in to .0026 in) |
| | | Service limit | 0.080 mm (.0031 in) |
| Piston ring type | | 1st | Upper compression ring, rectangular |
| | | 2nd | Lower compression ring, tapered face |
| | | 3rd | Oil scraper ring |
| Ring end gap | Rectangular | New | 0.20 mm to 0.35 mm (.0079 in to .0138 in) |
| | | Service limit | 1.20 mm (.0472 in) |
| | Taper-face | New | 0.30 mm to 0.50 mm (.0118 in to .0197 in) |
| | | Service limit | 1.20 mm (.0472 in) |
| | Oil scraper ring | New | 0.20 mm to 0.70 mm (.0079 in to .0276 in) |
| | | Service limit | 1.20 mm (.0472 in) |
| Ring/piston groove clearance | Rectangular | New | 0.030 mm to 0.066 mm (.0012 in to .0026 in) |
| | | Service limit | 0.120 mm (.0047 in) |
| | Taper-face | New | 0.020 mm to 0.056 mm (.0008 in to .0022 in) |
| | | Service limit | 0.120 mm (.0047 in) |
| | Oil scraper ring | New | 0.010 mm to 0.040 mm (.0004 in to .0016 in) |
| | | Service limit | 0.150 mm (.0059 in) |
| Cylinder bore | | New | 74.003 mm to 74.017 mm (2.9135 in to 2.9141 in) |
| Cylinder taper | | Maximum New | 0.030 mm (.0012 in) |
| | | Service limit | 0.050 mm (.002 in) |
| Cylinder out of round | | Maximum New | 0.008 mm (.0003 in) |
| | | Service limit | 0.03 mm (.0012 in) |
| Camshaft bearing journal diameter | PTO | New | 25.967 mm to 25.980 mm (1.0223 in to 1.0228 in) |
| | | Service limit | 25.940 mm (1.0213 in) |
| | MAG/Center | New | 22.957 mm to 22.970 mm (.9038 in to .9043 in) |
| | | Service limit | 22.930 mm (.9028 in) |

| ENGINE | | | |
|---|---|---|---|
| Camshaft holder bore diameter | PTO | New | 26.00 mm to 26.021 mm (1.0236 in to 1.0244 in) |
| | | Service limit | 26.05 mm (1.0256 in) |
| | MAG/Center | New | 23.00 mm to 23.021 mm (.9055 in to .9063 in) |
| | | Service limit | 23.05 mm (.9075 in) |
| Camshaft journal radial play | All | New | 0.020 mm to 0.054 mm (.0008 in to .0021 in) |
| | | Service limit | 0.080 mm (.0031 in) |
| Camshaft lobe height | Intake | New | 38.35 mm to 38.55 mm (1.51 in to 1.518 in) |
| | | Service limit | 38.33 mm (1.509 in) |
| | Exhaust | New | 38.35 mm to 38.55 mm (1.51 in to 1.518 in) |
| | | Service limit | 38.33 mm (1.509 in) |
| Crankshaft bearing journal diameter | | New | 35.990 mm to 36.006 mm (1.4169 in to 1.4176 in) |
| | | Service limit | 35.960 mm (1.4157 in) |
| Crankshaft radial play | | Service limit | 0.08 mm (.003 in) |
| Crankshaft axial play | | New | 0.120 mm to 0.353 mm (.0047 in to .0139 in) |
| | | Service limit | 0.450 mm (.0177 in) |
| Crankshaft deflection (maximum) | | MAG | 0.050 mm (.002 in) |
| | | CENTER | 0.050 mm (.002 in) |
| | | PTO | 0.080 mm (.003 in) |
| Crankshaft plain bearing inside diameter | | Service limit | 36.08 mm (1.4205 in) |
| Connecting rod big end diameter | | Service limit | 36.06 mm (1.4197 in) |
| Connecting rod big end radial play | | Service limit | 0.08 mm (.0031 in) |
| Connecting rod big end axial play | | New | 0.100 mm to 0.352 mm (.0039 in to .0139 in) |
| | | Service limit | 0.450 mm (.0177 in) |
| Connecting rod small end diameter | | New | 17.010 mm to 17.020 mm (.6697 in to .6701 in) |
| | | Service limit | 17.060 mm (.6717 in) |
| Piston pin diameter | | New | 16.996 mm to 17.000 mm (.6691 in to .6693 in) |
| | | Service limit | 16.986 mm (.6687 in) |
| Connecting rod small end radial play | | Service limit | 0.04 mm (.0016 in) |
| Chain guide groove depth | | Service limit | 1 mm (.039 in) |

| ENGINE | | |
|---|---|---|
| Oil pressure regulator spring free length | New | 46 mm (1.811 in) |
| | Service limit | 45 mm (1.772 in) |
| Oil pump radial clearance | Service limit | 0.25 mm (.0098 in) |
| Oil pump axial clearance | Service limit | 0.15 mm (.0059 in) |

| COOLING SYSTEM | | |
|---|---|---|
| Coolant | Type | Ethyl glycol and distilled water (50%/50%) or coolant specifically formulated for aluminum engines For best performance use BRP LONG LIFE ANTIFREEZE (P/N 219702685) or (P/N 619590204) |
| | Quantity | Refer to *VEHICLE TECHNICAL SPECIFICATIONS* for the quantity required to fill up engine and vehicle. |
| Thermostat opening temperature | | 75°C (167°F) |
| Radiator cap opening pressure | | 110 kPa (16 PSI) |

| LUBRICATION SYSTEM | | |
|---|---|---|
| Type | | Dry sump. Replaceable oil filter |
| Oil filter | | BRP Rotax paper type, replaceable |
| Engine oil pressure at 100°C (212°F) | Minimum | 80 kPa (11.6 PSI) @ idle speed |
| | | 350 kPa (50.8 PSI) @ 6000 to 7250 RPM |
| Engine oil | Capacity (oil change with filter) | 3.3 L (3.5 qt (U.S. liq.)) |
| | Recommended | XPS Synthetic 4-Stroke oil (All climate) (P/N 293 600 112) or a SAE 0W 40 API service SM or SN synthetic oil |

| FUEL SYSTEM | | | |
|---|---|---|---|
| Fuel injection type | | | Multipoint fuel injection |
| Throttle body type | | | 46 mm heated Dell'Orto throttle body with iTC (intelligent Throttle Control) |
| Idle speed | Normal idle | Standard/ECO Mode | 1300 ± 100 RPM |
| | | Sport Mode | 1500 ± 100 RPM |
| | Fast idle at -40°C (-40°F) | | 1850 ± 100 RPM |
| Gasoline type | | | Regular Unleaded |

| FUEL SYSTEM | | |
|---|---|---|
| Minimum octane rating | Inside North America ((R+M)/2) | 87 (No ethanol) |
| | | 91 (10% MAX ethanol) |
| | Outside North America (RON) | 92 (No ethanol) |
| | | 95 (10% MAX ethanol) |
| Fuel tank capacity | | 45 L (11.9 U.S. gal.) |

| ELECTRICAL SYSTEM | | |
|---|---|---|
| Magneto generator output | | 650 W @ 6000 RPM @ 14 V |
| Magneto stator resistance (between any pair of yellow wires) | | 0.1 to 1 Ohm @ 20°C (68°F) |
| Ignition type | | IDI (Inductive Digital Ignition) |
| Spark plug | Make and type | NGK MR8BI-8 |
| | Gap | .70 mm to 0.80 mm (.028 in to .031 in) |
| Ignition timing | | Not adjustable |
| Ignition coil | Primary | 0.80 to 0.97 Ω |
| | Secondary | 9.5 to 13.5 Ω |
| Engine speed limiter setting | | 8000 RPM |

# VEHICLE - RENEGADE SPORT

| COOLING SYSTEM | | |
|---|---|---|
| Coolant | Type | Ethyl glycol and distilled water (50%/50%).Use BRP LONG LIFE ANTIFREEZE or coolant specifically formulated for aluminum engines |
| | Quantity | 5.32 L (5.62 qt (U.S. liq.)) |
| Coolant tank cap opening pressure | | 90 kPa (13 PSI) |

| FUEL SYSTEM | | |
|---|---|---|
| Fuel type | | Regular unleaded |
| Fuel octane rating | Inside North America | 87 ((R+M)/2) (fuel with NO ethanol)<br>91 ((R+M)/2) (fuel which may contain up to 10% MAX ethanol) |
| | Outside North America | 92 (RON) (fuel with NO ethanol)<br>95 (RON) (fuel which may contain up to 10% MAX ethanol) |
| Fuel tank capacity | | 40 L (10.6 U.S. gal.) |
| Gas/oil ratio | | Injection |

| ELECTRICAL SYSTEM | | |
|---|---|---|
| Battery | | 12 V, 18 A•h (with electric starter) |
| Headlamp | | 2 x 60/55 W (H4) |
| Taillight and stoplight | | 21/5 W |
| Fuse | Main | 30 A (with electric starter) |
| | ECM | 5 A (with electric starter) |
| | Headlamp | 15 A |
| | Accessories/taillight | 20 A |
| | Fuel level sensor | 0.25 A |

| DRIVE SYSTEM | | |
|---|---|---|
| Chaincase oil | Type | XPS synthetic chaincase oil |
| | Quantity | 350 ml (12 U.S. oz) |
| Chain drive ratio | | 23/45 |
| Chain | Pitch | 3/8 |
| | Type | Silent |
| | links qty | 104 |
| Drive belt | Width | 37.6 mm (1.48 in) |
| | Wear limit | 35.2 mm (1.386 in) |
| Track | Width | 38 cm (15 in) |
| | Length | 348 cm (137 in) |
| | Profile height | 31.75 mm (1-1/4 in) |

| DRIVE SYSTEM | | |
|---|---|---|
| Track adjustment | Deflection | 30 mm to 35 mm (1-3/16 in to 1-3/8 in) |
| | Force(1) | 6.0 kgf to 8.5 kgf (13 lbf to 19 lbf) |
| (1) Measure gap between slider shoe and bottom inside track when exerting a downward pull to the track. | | |

| DRIVE PULLEY | |
|---|---|
| Type | TRA III |
| Clutch engagement | 3400 ± 100 RPM |
| Spring color | Blue/Purple |
| Spring length | 96.6 mm (3.8 in) |
| Pin | Solid-Short |
| Ramp | 412 |
| Screw position | 3 |

| DRIVEN PULLEY | | |
|---|---|---|
| Type | | QRS-SS |
| Spring color | | Black |
| Spring preload | | 0 |
| Cam angle | | 42° |
| Distance | Z | Not adjustable<br>21 mm (.827 in) |
| | X | Not adjustable<br>36.4 mm ± 1.8 mm (1.433 in ± .071 in) |

| BRAKE SYSTEM | | |
|---|---|---|
| Brake lining minimum thickness | | 1 mm (.039 in) |
| Brake fluid | Type | DOT 4 |
| | Quantity | 65 ml (2.2 U.S. oz) |

| FRONT SUSPENSION | |
|---|---|
| Suspension type | REV-XP |
| Suspension maximum travel | 229 mm (9 in) |
| Shock absorber type | Motion Control |
| Stabilizer bar type | Link |

| REAR SUSPENSION | | |
|---|---|---|
| Suspension type | | SC-5 M |
| Suspension maximum travel | | 340 mm (13.4 in) |
| Shock absorber type | Center | Motion Control |
| | Rear | HPG |
| Stroke limiter standard position | | 3 |

| STEERING SYSTEM | |
|---|---|
| Ski type | Pilot 5.7 |
| Toe-out | 5 mm (.197 in) |
| Camber | 0° |

| WEIGHT AND DIMENSIONS | |
|---|---|
| Mass (dry) | 204 kg (450 lb) |
| Length | 311 cm (122.4 in) |
| Width | 121.7 cm (47.9 in) |
| Height | 121 cm (47.6 in) |
| Ski stance (carbide to carbide) | 107.7 cm (42.4 in) |

# VEHICLES

| COOLING SYSTEM | | | |
|---|---|---|---|
| Coolant | Type | | Ethyl glycol and distilled water (50%/50%). Use BRP LONG LIFE ANTIFREEZE or coolant specifically formulated for aluminum engines |
| | Quantity | With radiator | 6.9 L (7.3 qt (U.S. liq.)) |
| | | Without radiator | 5.9 L (6.2 qt (U.S. liq.)) |
| Radiator fan | | | Turn on @ 100°C (212°F) Turn off @ 95°C (203°F) |
| Radiator cap opening pressure | | | 110 kPa (16 PSI) |

| FUEL SYSTEM | | | | |
|---|---|---|---|---|
| Fuel delivery system | | Operating pressure | | 400 kPa ± 10 kPa (58 PSI ± 1 PSI) @ 2000 RPM |
| Fuel pump | | Type | | Electrical module in fuel tank |
| Fuel | Fuel with NO ethanol | North America | 900 ACE | 87 (R+M)/2 |
| | | | 900 ACE Turbo | 91 (R+M)/2 |
| | | Outside North America | 900 ACE | 92 RON |
| | | | 900 ACE Turbo | 95 RON |
| | Fuel which may contain up to 10% MAX ethanol | North America | | 91 (R+M)/2 |
| | | Outside North America | | 95 RON |
| Fuel tank capacity | | | | 36 L (9.5 U.S. gal.) |
| Idle speed | | | | 1200 RPM ± 200 (not adjustable) |

| ELECTRICAL SYSTEM | | |
|---|---|---|
| Battery | Type | Maintenance free SLA |
| | Model | Yuasa YTX20HL |
| | Voltage | 12 V |
| | Nominal rating | 18 A•h |
| | Recommended charging rate | 2 A•h |
| Headlamp | | 2 x 60/55 W (H-13) |
| Taillight and stoplight | | 2.6 W / 139m W LED |

| ELECTRICAL SYSTEM | | |
|---|---|---|
| Fuses<br>– Grand Touring Limited<br>– Renegade Enduro | F1: Clock / Start / Relays | 5 A |
| | F2: Headlamps | 20 A |
| | F3: Taillight / Brake / PAC | 10 A |
| | F4: ECM / RFID /O2 Sensor / CAPS | 10 A |
| | F5: Fuel Pump/Starter | 10 A |
| | F6: Fan | 15 A |
| | F7: Accessory | 15 A |
| | F8: Cluster | 15 A |
| | F9: ACS | 15 A |
| | F10: RER | 30 A |
| Fuses<br>– Expedition Sport<br>– Grand Touring Sport<br>– Renegade Adrenaline<br>– Renegade X<br>– Renegade XRS | F1: Start / Relays | 5 A |
| | F2: Accessory | 15 A |
| | F3: Taillight / Brake / PAC | 10 A |
| | F4: ECM / RFID /O2 Sensor / CAPS | 10 A |
| | F7: Fuel Pump | 10 A |
| | F8: Cluster | 15 A |
| | F9: Fan | 15 A |
| | F10: Headlamps | 20 A |
| Relays<br>– Grand Touring Limited<br>– Renegade Enduro | RY1 | Main |
| | RY2 | Headlamps |
| | RY3 | Fan |
| | RY4 | Reverse |
| | RY5 | Accessories |
| | RY6 | Lighting |
| Relays<br>– Expedition Sport<br>– Grand Touring Sport<br>– Renegade Adrenaline<br>– Renegade X<br>– Renegade XRS | RY1 | Main |
| | RY2 | Accessories |
| | RY3 | Fan |
| | RY4 | Lighting |

| DRIVE SYSTEM | | |
|---|---|---|
| Chaincase oil | Type | XPS synthetic chaincase oil |
| | Quantity | 550 ml (19 U.S. oz) |
| Chain drive ratio | 900 ACE | 24/49 |
| | 900 ACE Turbo | 25/45 |

| DRIVE SYSTEM | | | |
|---|---|---|---|
| Chain | Pitch | | 9.530 mm (.375 in) |
| | Type | | Silent |
| | Links qty | 900 ACE - Expedition Sport | 116 |
| | | 900 ACE - All other | 110 |
| | | 900 ACE Turbo | 108 |
| Drive pulley type | | | pDrive |
| Drive pulley calibration | Clutch engagement | | 2200 ± 100 RPM |
| | Spring color code | Expedition Sport Grand Touring Sport Grand Touring Limited Renegade Adrenaline (900 ACE) Renegade Enduro (900 ACE) | Red/Blue |
| | | Renegade Adrenaline (900 ACE Turbo) Renegade Enduro (900 ACE Turbo) Renegade X Renegade XRS | Red/Yellow |
| | Spring length | Red/Blue | 90.8 mm (3.575 in) |
| | | Red/Yellow | 96.6 mm (3.803 in) |
| Drive pulley calibration | Ramp | Expedition Sport Grand Touring Sport Grand Touring Limited Renegade Adrenaline (900 ACE) Renegade Enduro (900 ACE) | 826 |
| | | Grand Touring Limited (900 ACE Turbo) | 880 |
| | | Renegade Adrenaline (900 ACE Turbo) Renegade Enduro (900 ACE Turbo) Renegade X Renegade XRS | 873 |
| Drive pulley calibration | Clicker position | | No clicker |

| DRIVE SYSTEM | | | |
|---|---|---|---|
| Driven pulley type | Type | 900 ACE | QRS |
| | | 900 ACE Turbo | QRS ventilated |
| | Spring color code | 900 ACE | Red/Red |
| | | 900 ACE Turbo | White |
| | Spring length | Red/Red | 124.3 mm (4.894 in) |
| | | White | 98.5 mm (3.878 in) |
| | Spring preload | New | 7.3 kgf ± 0.7 kgf (16.1 lbf ± 1.5 lbf) |
| | | After break-in | 6.6 kgf ± 0.7 kgf (14.6 lbf ± 1.5 lbf) |
| | Cam angle | 900 ACE - Expedition Sport | 40° |
| | | 900 ACE - All other | 44°/40° |
| | | 900 ACE Turbo | 47°/40° |
| Pulley distance | Z | | Not adjustable 21.4 mm (.843 in) |
| | X | | Not adjustable 41.9 mm ± 1.8 mm (1.65 in ± .071 in) |
| Offset | Y - X | | Not adjustable 0 mm to 1.63 mm (0 in to .064 in) |
| Drive belt | Width | | 38.3 mm (1.508 in) |
| | Wear limit | | 35.9 mm (1.413 in) |
| Drive sprocket number of teeth | | Grand Touring Limited | 16 |
| | | All other | 8 |
| Track | Width | Expedition Sport | 406.4 mm (16 in) |
| | | All other | 381 mm (15 in) |
| | Length | Expedition Sport | 3 923 mm (154 in) |
| | | All other | 348.7 cm (137 in) |
| | Profile height | Expedition Sport | 38 mm (1.5 in) |
| | | All other | 31.8 mm (1.25 in) OR 40.6 mm (1.6 in) |
| Track adjustment | Deflection | | 3.2 cm (1.26 in) |
| | Force | | 6.0 kgf to 8.5 kgf (13 lbf to 19 lbf) |

| BRAKE SYSTEM | | |
|---|---|---|
| Brake lining minimum thickness | | 1 mm (.039 in) |
| Brake disk minimum thickness | | 4.5 mm (.177 in) |
| Brake fluid | Type | DOT 4 |
| | Quantity | 65 ml (2.2 U.S. oz) |

| FRONT SUSPENSION | | |
|---|---|---|
| Suspension type | | RAS 3 |
| Suspension maximum travel | Expedition Sport | 210 mm (8.3 in) |
| | Renegade X | 233 mm (9.2 in) |
| | Renegade XRS | 255 mm (10 in) |
| | All other | 220 mm (8.7 in) |
| Shock absorber type | Expedition Sport (CA/US) Grand Touring Sport | Motion Control |
| | Renegade XRS | KYB PRO 36 R |
| | Expedition Sport (EUR) Grand Touring Limited | HPG |
| | All other | HPG Plus |
| Stabilizer bar type | | Link |

| REAR SUSPENSION | | | |
|---|---|---|---|
| Suspension type | | Expedition Sport Grand Touring Sport | SC-5MA |
| | | Grand Touring Limited Renegade Enduro | rMotion ACS |
| | | All other | rMotion |
| Suspension maximum travel | | Expedition Sport | 239 mm (9.4 in) |
| | | Grand Touring | 270 mm (10.6 in) |
| Shock absorber type | Center | Renegade X | HPG Plus |
| | | Expedition Sport (CA/US) Grand Touring Sport | Motion Control |
| | | Renegade XRS | KYB PRO 40 EA |
| | | All other | HPG |
| | Rear | Grand Touring Limited Renegade Enduro | ACS |
| | | Renegade X | KYB PRO 36 |
| | | Renegade XRS | KYB PRO 40 EA |
| | | All other | HPG |

| REAR SUSPENSION | | |
|---|---|---|
| Stroke limiter standard position | Expedition Sport<br>Grand Touring Sport | 3 |
| | Grand Touring Limited | 2 |
| | All Renegade | 1 |

| STEERING SYSTEM | | |
|---|---|---|
| Handlebar | | Aluminum with J-Hooks |
| Riser block height | Grand Touring Sport<br>Renegade Adrenaline<br>Renegade Enduro | 120 mm (4.7 in) |
| | Grand Touring Limited<br>Renegade X<br>Renegade XRS | Adjustable - 120 mm (4.7 in) |
| | Expedition Sport | 145 mm (5.7 in) |
| Ski type | Grand Touring Sport<br>Grand Touring Limited | SL |
| | Renegade Enduro<br>Renegade X (with adjustable kit)<br>Renegade XRS (with adjustable kit) | Pilot TS |
| | Renegade Adrenaline (CA/US)<br>Renegade X<br>Renegade XRS (CA/US) | Pilot 5.7 |
| | Expedition Sport<br>Renegade Adrenaline (EUR)<br>Renegade XRS (EUR) | Pilot DS2 |
| Ski alignment | | 5 mm (.197 in) (toe-out) |

| WEIGHT AND DIMENSIONS | | |
|---|---|---|
| Mass (dry) | Renegade Adrenaline 900 ACE | 226 kg (498 lb) |
| | Renegade Adrenaline 900 ACE Turbo | 239 kg (527 lb) |
| | Renegade Enduro 900 ACE | 240 kg (529 lb) |
| | Renegade Enduro 900 ACE Turbo | 252 kg (556 lb) |
| | Renegade X | 239 kg (527 lb) |
| | Renegade XRS | 247 kg (545 lb) |
| | Grand Touring Limited 900 ACE | 269 kg (593 lb) |
| | Grand Touring Limited 900 ACE Turbo | 282 kg (622 lb) |
| | Grand Touring Sport | 249 kg (549 lb) |
| | Expedition Sport | 254 kg (560 lb) |
| Overall length | All except Expedition Sport | 301.4 cm (118.7 in) |
| | Expedition Sport | 335 cm (131.9 in) |
| Overall width | All except Expedition Sport | 121.7 cm (47.9 in) |
| | Expedition Sport | 114 cm (44.9 in) to 118 cm (46.5 in) |
| Overall height | Renegade Adrenaline Renegade Enduro | 133.1 cm (52.4 in) |
| | Renegade X | 126.7 cm (49.9 in) |
| | Renegade XRS | 122.2 cm (48.1 in) |
| | Grand Touring Sport Expedition Sport | 140.5 cm (55.3 in) |
| Ski stance | All except Expedition Sport | 107.7 cm (42.4 in) |
| | Expedition Sport | 97.5 cm (38.4 in) to 102 cm (40.2 in) |

| MATERIAL | |
|---|---|
| Frame | Aluminum |
| Side bottom pan, Front bottom pan, gauge support, gauge support cover, side panel, rear console, windshield support, glove box cover and headlamp surrounding | Polypropylene |
| Rear lateral hood, front hood and top side panel | Surlyn |

# WIRING DIAGRAM INFORMATION

## GENERAL

### WIRING DIAGRAM LOCATION

Wiring diagrams are found in the *WIRING DIAGRAM BOOKLET*.

### WIRING DIAGRAM WITH COLORED LINES

The wiring diagram on the *KNOWLEDGE CENTER* is in color.

#### Color Definition

NOTE: To find the color of the wire on the vehicle skip to *WIRE COLORS AND SIZES* in this subsection.

The following colors refer to the color of the line drawn in the wiring diagram.

| LINE COLOR | LINE TYPE | FUNCTION | DEFINITION |
|---|---|---|---|
| Red | Thick | Unswitched 12 V | Hot at all times |
| | Thin | 3.3 and 5 V | Sensor reference voltage |
| Orange | Thick | 55 - 60 V | High voltage |
| Blue | Thin | Analog signal | Variable voltage |
| Cyan | Thin | Digital signal | Pulsed or constant digital (on/off) |
| Pink | Thick | 12V switched | Condition must be met to activate circuit |
| Green | Thin dotted | Communication | Data communication between modules using a protocol (CAN, LIN, & other) |
| Brown | Thick | Power control | Controls a circuit by providing an on/off control to activate the circuit |
| Yellow | Thick | AC Volts | Alternative current exiting the magneto |
| Black | Thick | Permanent ground | A ground that is in permanent contact |
| | Thin | Module (analog/digital) ground | A ground that is controlled by a module |

### WIRING DIAGRAM CODES

The wiring diagrams use the following codes.

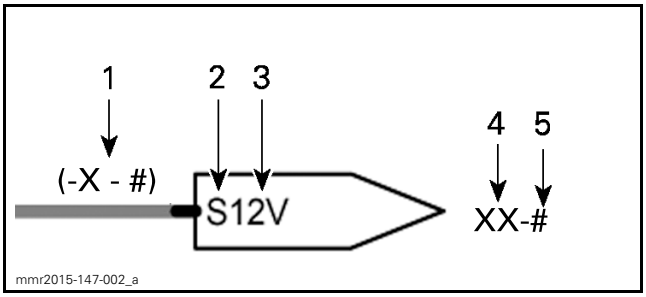


1. *Wiring diagram index*
2. *Power condition*
3. *Voltage of a powered circuit*
4. *Connector code*
5. *Connector pin*

## Wiring Diagram Index

The wiring diagram is separated by rows (letters) and columns (numbers).

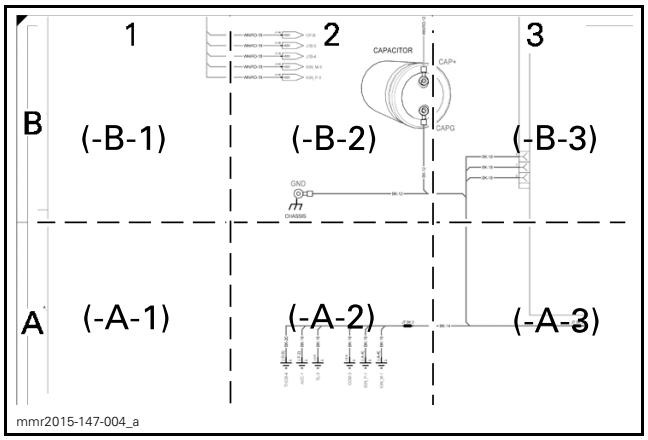


*WIRING DIAGRAM INDEX*

## Power Condition (12V Circuits Only)

The wiring diagram indicates when a circuit is powered:

– S: Switched. Certain conditions must be met;
– U: Unswitched (hot at all times).

## Voltage of Powered Circuit

Voltage references are approximate for a powered circuit in good condition.

| INDICATED VOLTAGE | APPROXIMATION |
|---|---|
| 12V | Battery voltage |
| 5V | Regulated 4.95 - 5V |
| 60V | Regulated 55 - 60V |

## Connector Code

The wire connects to the indicated connector. See image at the beginning of this subsection.

## Connector Pin

The wire is the indicated pin in the connector.

NOTE: Could be identified by either a number or by a letter depending on the type of connector used.

# FOLLOWING A CIRCUIT

To follow a circuit, search the in section of the wiring diagram shown in the wiring diagram index.

In this example, the 60V comes **from** JT WH/RD in section (-B-2).

NOTE: The arrow indicates the direction of the power in the circuit.

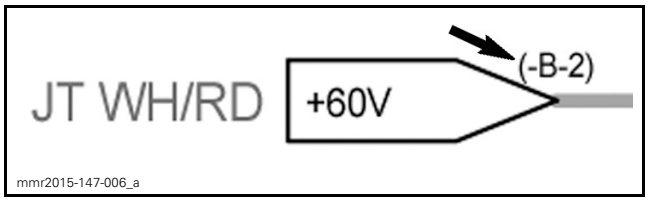


*FROM JT WH/RD (-B-2)*

In following example, the 60V goes **to** the IGN_M connector pin 3 in section (-B-4).

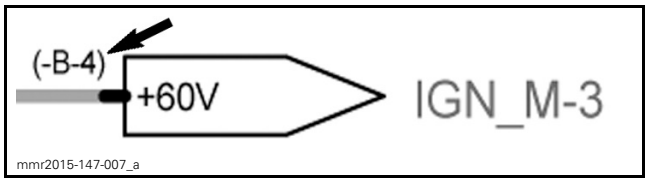


*TO ING_M-3 (-B-4)*

# WIRE COLORS AND SIZES

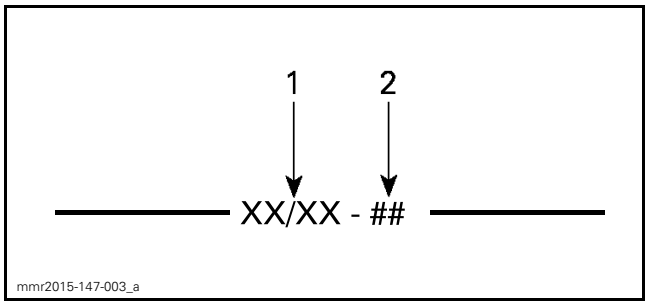


1. *Wire color*
2. *Wire gauge (AWG)*

The first color of a wire is the main color, second color is the stripe.

Example: YE/BK is a YELLOW wire with a BLACK stripe.

| COLOR CODE | | | | | |
|---|---|---|---|---|---|
| BG | — | BEIGE | OG | — | ORANGE |
| BK | — | BLACK | RD | — | RED |
| BU | — | BLUE | VT | — | VIOLET |
| BN | — | BROWN | WH | — | WHITE |
| GN | — | GREEN | YE | — | YELLOW |
| GY | — | GRAY | PK | — | PINK |

LT prefix means a "light" color. E.g: LT GN = Light green.

# SPLICES IN WIRING HARNESS

Splices in wiring harness are indicated on the wiring diagram as follows.

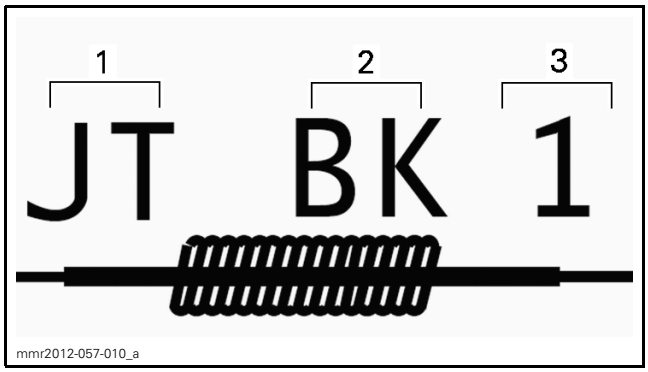


*1. JT: Splice indication*
*2. Spliced wire color*
*3. Splice number on the wire*

Refer to *SPLICE INFORMATION* subsection for more details.

# 2019 600ACE

Expedition Sport
Grand Touring Sport
Renegade Sport

WITH :
RCM : REVERSE CONTROL MODULE
CFM : COOLING FAN MODULE
ACS : AIR CONTROLED SUSPENSION

LINE TYPES

| | |
|---|---|
| 55 / 60 VOLTS | |
| 12 VOLTS SWITCHED | |
| 12 VOLTS UNSWITCHED | |
| 5 OR 3.3 VOLTS | |
| DIGITAL SIGNAL | |
| POWER CONTROL | |
| ANALOG SIGNAL | |
| COMMUNICATION | |
| A-D GROUND | |
| POWER GROUND | |
| AC VOLTAGE | |

ENGINE
CHASSIS
BAT+
STARTER SOLENOID
SD
CONTROL BY ECM
12 VOLTS
SD+
MAIN FUSE
FA
FA: 40A
FUSEBOX
FB
RY3 : ACCESSORY RELAY
ACCESSORY (12 SW)
RY2 : LIGHTING RELAY
HEADLAMP BRAKE LIGHT TAIL LIGHT
START BUTTON CLOCK COOLING FAN
RY1 : MAIN RELAY
IGNITION COILS INJECTORS FUEL PUMP STARTER SOLENOID
ECM MULTIFUNCTION GAUGE CAPS TAIL LIGHT
E-REVERSE (12 SW)
RY2 F4 F3 RY3 F2 RY1 F6 F1 F5
15 10 20
RECTIFIER/REGULATOR
REG
GND
CHASSIS
DRIVER ACCESSORY
ACC1
PASSENGER ACCESSORY
ACC2
12 VOLTS
GROUND
HARNESS INTER CONNECTION
HIC
12 VOLTS FOR CAPS
12 VOLTS FOR REVERSE RELAYS
12 VOLTS FOR INJECTORS
12 VOLTS FOR IGNITION COILS
ECMB
RF IDENTIFICATION KEY
RFID
12 VOLTS
DATA
CONTACT
GROUND
COMMUNICATION CONNECTOR
COM
12 VOLTS
12 VOLTS
ECM POWER IN
GROUND
CAN LO
CAN HI
TAIL LIGHT
TL
12 VOLTS
BRAKE
GROUND
HEADLAMP
HL
LAMP A
LAMP B
GROUND
LOW BEAM
HIGH BEAM
AUXILIARY LIGHT
FUEL PUMP
FP
FUEL LEVEL GROUND
12 VOLTS
FUEL LEVEL SIGNAL
CONTROL
COOLING FAN MODULE
CFM
FAN
SWITCHED 12 VOLTS
GROUND
THROTTLE ACCELERATOR SENSOR
TAS
5 VOLTS
GROUND
SIGNAL 2
5 VOLTS
GROUND
SIGNAL 1
ECO MODE SWITCH
ECO
UP
GROUND
DOWN
REVERSE RELAY
FORWARD RELAY
REVERSE CONTROL MODULE
RCM
REVERSE MOTOR
RV
REVERSE POSITION SWITCH
RPS2
RPS1
MULTIFUNCTION GAUGE
MG
CAN HI
CAN LO
HIGH BEAM
HEATED LEVER OUTPUT
HEATED GRIPS OUTPUT
S12V
CLOCK (U12V)
FUEL LEVEL SIGNAL
12 VOLTS
GROUND
SPEED SIGNAL INPUT
SET
GRIP UP
GRIP DOWN
LEVER UP
LEVER DOWN
MODE
VEHICULE SPEED SENSOR
VSS
12 VOLTS
GROUND
SIGNAL
AIR CONTROLLED SUSPENSION MODULE
ACS
12 VOLTS
DATA
GROUND
STEERING HARNESS CONNECTOR 1
SH1
STEERING HARNESS CONNECTOR 2
SH2
BRAKE SWITCH
LEFT GRIP WARMER
HANDLEBAR GROUND
RIGHT GRIP WARMER
THROTTLE LEVER WARMER
EMERGENCY ENGINE CUT OFF SWITCH
DIMMER SWITCH
START / RER SWITCH
BACK LIGHT
GRIP UP
GRIP DOWN
LEVER UP
LEVER DOWN
SET
MODE

Midwest Manuals
Green Manuals
Paperless Manuals For a Better Tomorrow www.green-manuals.com
If you bought this manual from any other seller please leave them NEGATIVE feedback and notify me at bestshopmanuals@gmail.com

# 2019 *900ACE/900ACE Turbo*

## Grand Touring Limited / Renegade Enduro

WITH :
COOLING FAN
ELECTRO-MECHANICAL REVERSE
AIR CONTROLLED SUSPENSION

LINE TYPES

| | |
|---|---|
| 55 / 60 VOLTS | |
| 12 VOLTS SWITCHED | |
| 12 VOLTS UNSWITCHED | |
| 5 OR 3.3 VOLTS | |
| DIGITAL SIGNAL | |
| POWER CONTROL | |
| ANALOG SIGNAL | |
| COMMUNICATION | |
| A-D GROUND | |
| POWER GROUND | |
| AC VOLTAGE | |

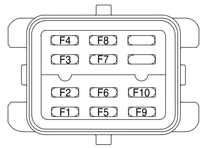


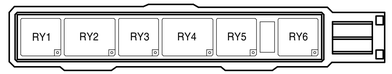


Midwest Manuals
Green Manuals
Paperless Manuals
For a Better Tomorrow
www.green-manuals.com
If you bought this manual from any other seller please leave them
NEGATIVE feedback and notify me at bestshopmanuals@gmail.com

# 2019 *900ACE/900ACE Turbo*

## Expedition Sport / Grand Touring Sport
## Renegade Adrenaline / Enduro WITH : COOLING FAN

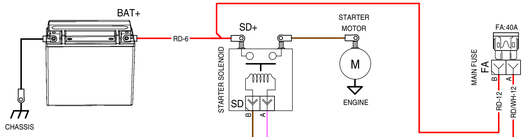

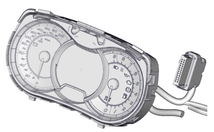

Midwest Manuals
Green Manuals
Paperless Manuals For a Better Tomorrow
www.green-manuals.com
If you bought this manual from any other seller please leave them
NEGATIVE feedback and notify me at bestshopmanuals@gmail.com

PAGE 01
REF: 515178556
REV: 1

219100976-017

# 2019 *Secondary Harnesses*
REV-XP / REV-XS

## ACS SUSPENSION

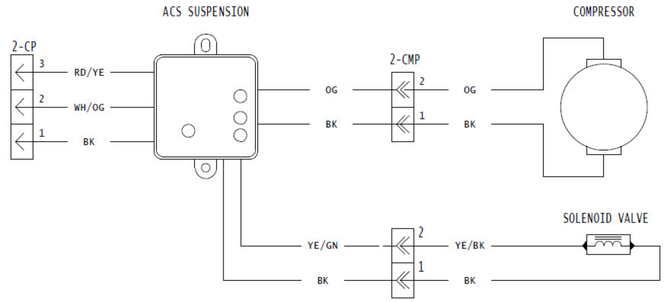


## REAR SEAT HARNESS

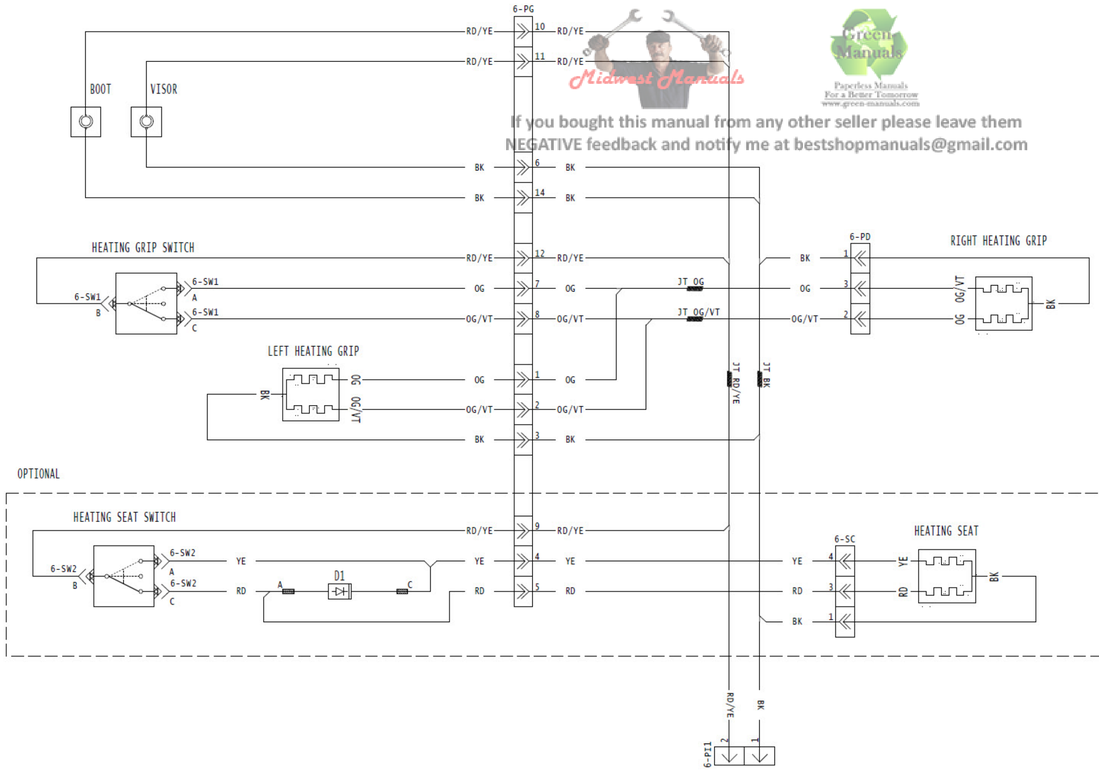


Midwest Manuals
Green Manuals
Paperless Manuals
For a Better Tomorrow
www.green-manuals.com
If you bought this manual from any other seller please leave them
NEGATIVE feedback and notify me at bestshopmanuals@gmail.com

## REAR ACCESORIES T HARNESS

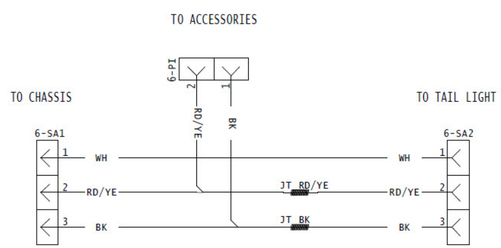


## FRONT SEAT HARNESS

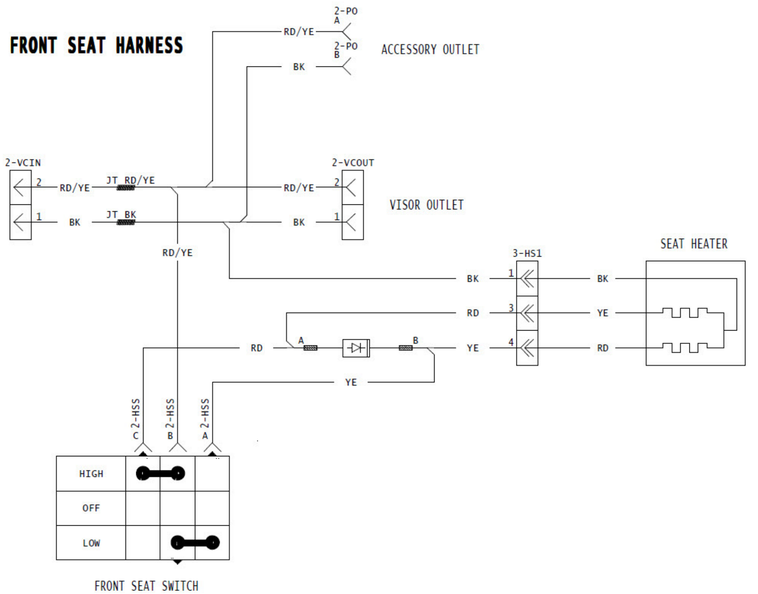




REF: REV:

# 2019 *Secondary Harnesses*

## Rev Gen4

### SEAT HARNESS (GT LIMITED & RENEGADE ENDURO)

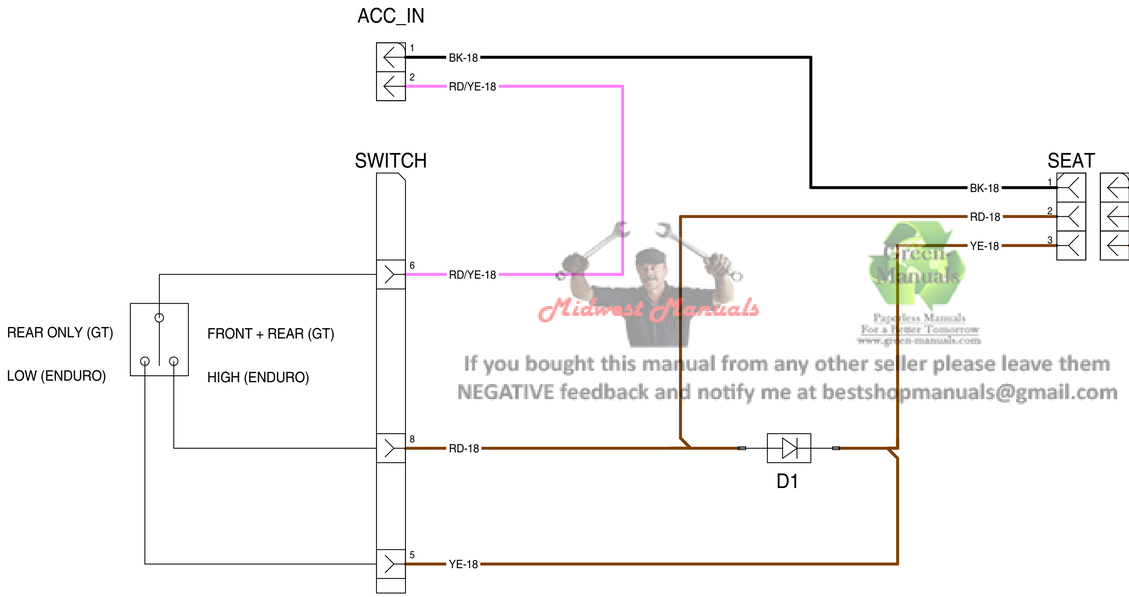


### Y ADAPTER FOR 2 UP SEAT (GT LIMITED ONLY)

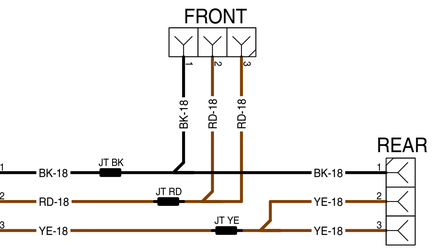


Midwest Manuals
Green Manuals
Paperless Manuals For a Better Tomorrow www.green-manuals.com
If you bought this manual from any other seller please leave them NEGATIVE feedback and notify me at bestshopmanuals@gmail.com

### LINE TYPES

| | |
|---|---|
| 55 / 60 VOLTS | |
| 12 VOLTS SWITCHED | |
| 12 VOLTS UNSWITCHED | |
| 5 OR 3.3 VOLTS | |
| DIGITAL SIGNAL | |
| POWER CONTROL | |
| ANALOG SIGNAL | |
| COMMUNICATION | |
| A-D GROUND | |
| POWER GROUND | |
| AC VOLTAGE | |

### AIR CONTROLLED SUSPENSION HARNESS

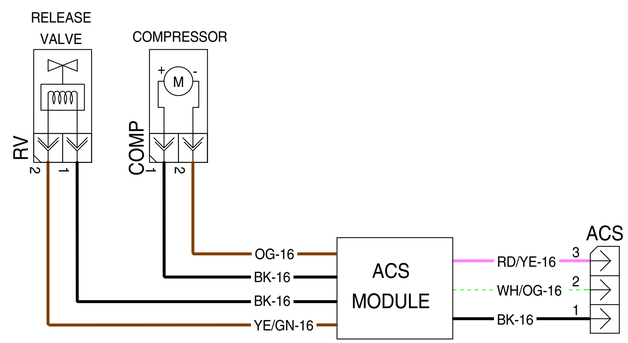


### REAR SEAT HARNESS (HEATED GRIP, VISOR, BOOTS)

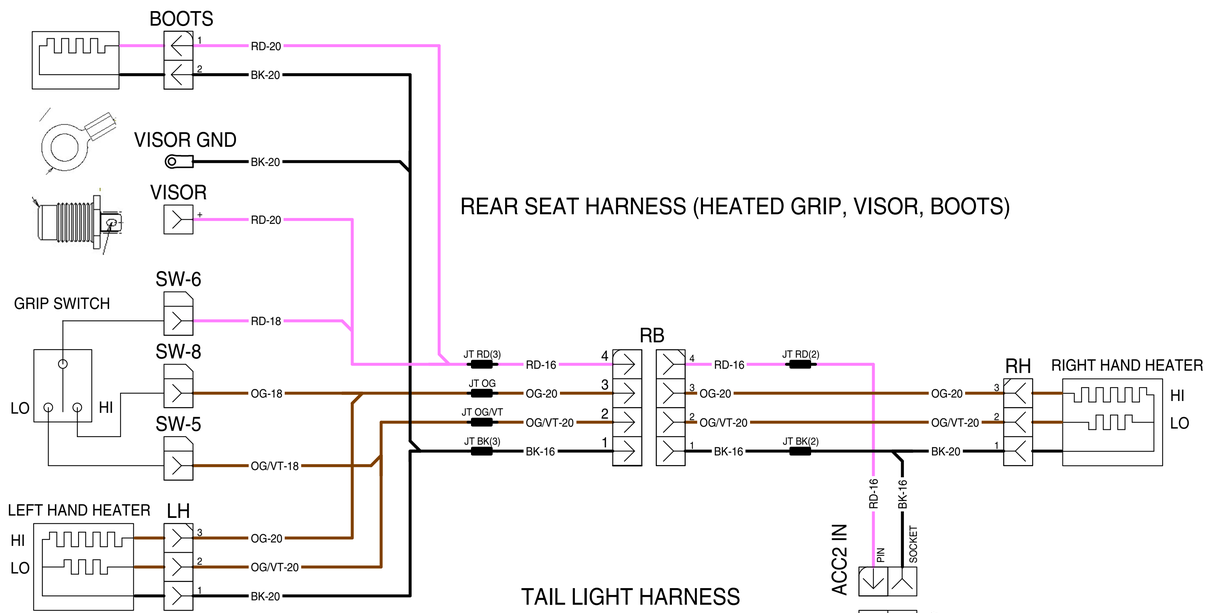


219100976-020

| REF | | REV | 2 |
|---|---|---|---|

# 2019 Engine Harness
## 600ACE

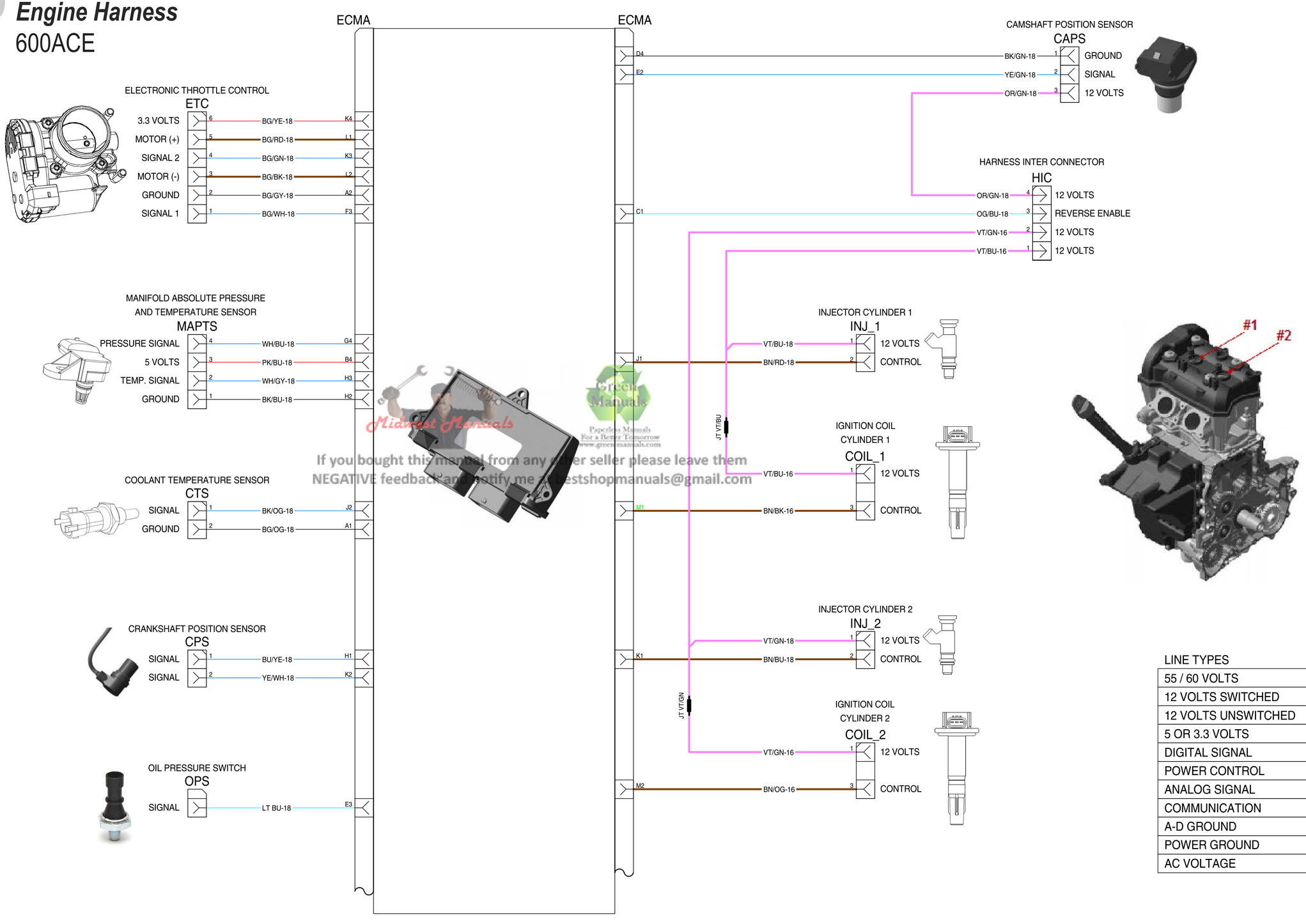



Midwest Manuals
Green Manuals
Paperless Manuals For a Better Tomorrow www.greenmanuals.com
If you bought this manual from any other seller please leave them NEGATIVE feedback and notify me at bestshopmanuals@gmail.com


LINE TYPES

| | |
|---|---|
| 55 / 60 VOLTS | |
| 12 VOLTS SWITCHED | |
| 12 VOLTS UNSWITCHED | |
| 5 OR 3.3 VOLTS | |
| DIGITAL SIGNAL | |
| POWER CONTROL | |
| ANALOG SIGNAL | |
| COMMUNICATION | |
| A-D GROUND | |
| POWER GROUND | |
| AC VOLTAGE | |

219100976-021

REF 864 347 REV

# 2019 *Engine Harness*

## 900ACE (no turbo)

ECMA

ECMA

ELECTRONIC THROTTLE CONTROL

ETC

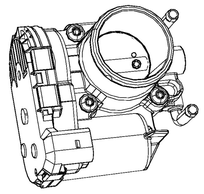

| | | | |
|---|---|---|---|
| 3.3 VOLTS | 6 | BG/YE-18 | K4 |
| MOTOR (+) | 5 | BG/RD-18 | L1 |
| SIGNAL 2 | 4 | BG/GN-18 | K3 |
| MOTOR (-) | 3 | BG/BK-18 | L2 |
| GROUND | 2 | BG/GY-18 | A2 |
| SIGNAL 1 | 1 | BG/WH-18 | F3 |

MANIFOLD ABSOLUTE PRESSURE AND TEMPERATURE SENSOR

MAPTS

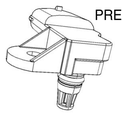

| | | | |
|---|---|---|---|
| PRESSURE SIGNAL | 4 | WH/BU-18 | G4 |
| 5 VOLTS | 3 | PK/BU-18 | B4 |
| TEMP. SIGNAL | 2 | WH/GY-18 | H3 |
| GROUND | 1 | BK/BU-18 | H2 |

COOLANT TEMPERATURE SENSOR

CTS

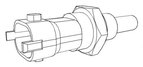

| | | | |
|---|---|---|---|
| SIGNAL | 1 | BK/OG-18 | J2 |
| GROUND | 2 | BG/OG-18 | A1 |

CRANKSHAFT POSITION SENSOR

CPS

| | | | |
|---|---|---|---|
| SIGNAL | 1 | BU/YE-18 | H1 |
| SIGNAL | 2 | YE/WH-18 | K2 |

OIL PRESSURE SWITCH

OPS

| | | | |
|---|---|---|---|
| SIGNAL | | LT BU-18 | E3 |

Midwest Manuals
Green Manuals
Paperless Manuals
If you bought this manual from any other seller please leave them
NEGATIVE feedback and notify me at bestcarmanuals@gmail.com

CAMSHAFT POSITION SENSOR

CAPS

| | | | |
|---|---|---|---|
| BK/GN-18 | 1 | GROUND | D4 |
| YE/GN-18 | 2 | SIGNAL | E2 |
| OR/GN-18 | 3 | 12 VOLTS | |

HARNESS INTER CONNECTOR

HIC

| | | | |
|---|---|---|---|
| OR/GN-18 | 4 | 12 VOLTS | |
| VT/OG-18 | 3 | REVERSE ENABLE | C1 |
| VT/GN-16 | 2 | 12 VOLTS | |
| VT/BU-16 | 1 | 12 VOLTS | |

INJECTOR CYLINDER 1

INJ_1

| | | | |
|---|---|---|---|
| VT/BU-18 | 1 | 12 VOLTS | |
| BN/RD-18 | 2 | CONTROL | B3 |

JT VT/BU

IGNITION COIL CYLINDER 1

COIL_1

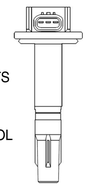

| | | | |
|---|---|---|---|
| VT/GN-16 | 1 | 12 VOLTS | |
| BN/BK-16 | 3 | CONTROL | M4 |

JT VT/GN

INJECTOR CYLINDER 2

INJ_2

| | | | |
|---|---|---|---|
| VT/BU-18 | 1 | 12 VOLTS | |
| BN/BU-18 | 2 | CONTROL | K1 |

IGNITION COIL CYLINDER 2

COIL_2

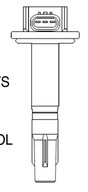

| | | | |
|---|---|---|---|
| VT/GN-16 | 1 | 12 VOLTS | |
| BN/OG-16 | 3 | CONTROL | M2 |

INJECTOR CYLINDER 3

INJ_3

| | | | |
|---|---|---|---|
| VT/BU-18 | 1 | 12 VOLTS | |
| BN/GY-18 | 2 | CONTROL | J1 |

IGNITION COIL 3

COIL_3

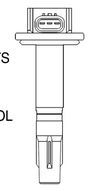

| | | | |
|---|---|---|---|
| VT/GN-16 | 1 | 12 VOLTS | |
| BN/YE-16 | 3 | CONTROL | M1 |

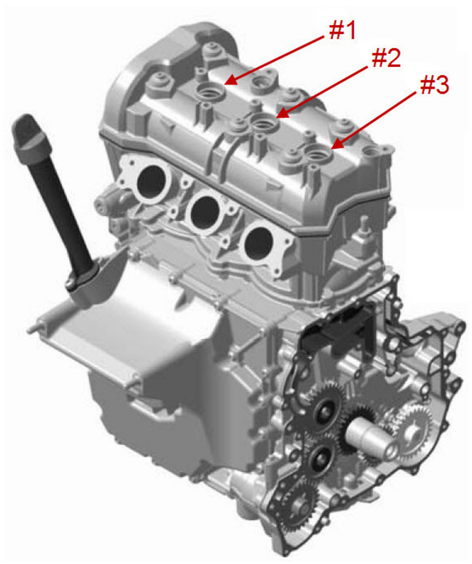


LINE TYPES

| | |
|---|---|
| 55 / 60 VOLTS | |
| 12 VOLTS SWITCHED | |
| 12 VOLTS UNSWITCHED | |
| 5 OR 3.3 VOLTS | |
| DIGITAL SIGNAL | |
| POWER CONTROL | |
| ANALOG SIGNAL | |
| COMMUNICATION | |
| A-D GROUND | |
| POWER GROUND | |
| AC VOLTAGE | |

219100976-027

REF 264422 REV

# 2019 *Engine Harness*

## 900ACE turbo

ECMA

ECMA

BOOST PRESSURE SENSOR
BPS
PRESSURE SIGNAL — 3 — BG/GY-18 — G3
GROUND — 2 — BK/BU-18 — F2
5 VOLTS — 1 — PK/BU-18

MANIFOLD ABSOLUTE PRESSURE AND TEMPERATURE SENSOR
MAPTS
JT PK/BU
PRESSURE SIGNAL — 4 — WH/BU-18 — G4
5 VOLTS — 3 — PK/BU-18 — PK/BU-18 — B4
TEMP. SIGNAL — 2 — WH/GY-18 — H3
GROUND — 1 — BK/BU-18 — H2

KNOCK SENSOR
KS
GROUND — 1 — YE/BU-18 — G2
SIGNAL — 2 — BG/BU-18 — C3

ELECTRONIC THROTTLE CONTROL
ETC
3.3 VOLTS — 6 — BG/YE-18 — K4
MOTOR (+) — 5 — BG/RD-18 — L1
SIGNAL 2 — 4 — BG/GN-18 — K3
MOTOR (-) — 3 — BG/BK-18 — L2
GROUND — 2 — BG/GY-18 — A2
SIGNAL 1 — 1 — BG/WH-18 — F3

COOLANT TEMPERATURE SENSOR
CTS
SIGNAL — 1 — BK/OG-18 — J2
GROUND — 2 — BG/OG-18 — A1

CRANKSHAFT POSITION SENSOR
CPS
SIGNAL — 1 — BU/YE-18 — H1
SIGNAL — 2 — YE/WH-18 — K2

OIL PRESSURE SWITCH
OPS
SIGNAL — LT BU-18 — E3

Midwest Manuals
Green Manuals
If you bought this manual from any other seller please leave them NEGATIVE feedback and notify me at shopmanuals@gmail.com

TURBO CONTROL VALVE (WASTEGATE SOLENOID)
TCV
M3 — BN/BG-18 — 1 — CONTROL
VT/BU-18 — 2 — 12 VOLTS

CAMSHAFT POSITION SENSOR
CAPS
D4 — BK/GN-18 — 1 — GROUND
E2 — YE/GN-18 — 2 — SIGNAL
OR/GN-18 — 3 — 12 VOLTS

HARNESS INTER CONNECTOR
HIC
OR/GN-18 — 4 — 12 VOLTS
C1 — VT/OG-18 — 3 — REVERSE ENABLE
VT/GN-16 — 2 — 12 VOLTS
VT/BU-16 — 1 — 12 VOLTS

INJECTOR CYLINDER 1
INJ_1
VT/BU-18 — 1 — 12 VOLTS
B3 — BN/RD-18 — 2 — CONTROL

JT VT/BU

IGNITION COIL CYLINDER 1
COIL_1
VT/GN-16 — 1 — 12 VOLTS
2 — GROUND
M4 — BN/BK-16 — 3 — CONTROL

JT VT/GN

INJECTOR CYLINDER 2
INJ_2
VT/BU-18 — 1 — 12 VOLTS
K1 — BN/BU-18 — 2 — CONTROL

IGNITION COIL CYLINDER 2
COIL_2
VT/GN-16 — 1 — 12 VOLTS
2 — GROUND
M2 — BN/OG-16 — 3 — CONTROL

INJECTOR CYLINDER 3
INJ_3
VT/BU-18 — 1 — 12 VOLTS
J1 — BN/GY-18 — 2 — CONTROL

IGNITION COIL 3
COIL_3
VT/GN-16 — 1 — 12 VOLTS
2 — GROUND
M1 — BN/YE-16 — 3 — CONTROL

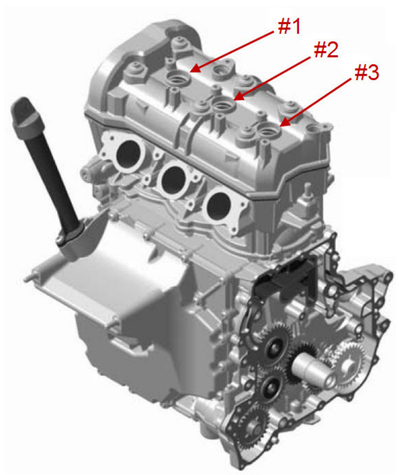


LINE TYPES

| | |
|---|---|
| 55 / 60 VOLTS | |
| 12 VOLTS SWITCHED | |
| 12 VOLTS UNSWITCHED | |
| 5 OR 3.3 VOLTS | |
| DIGITAL SIGNAL | |
| POWER CONTROL | |
| ANALOG SIGNAL | |
| COMMUNICATION | |
| A-D GROUND | |
| POWER GROUND | |
| AC VOLTAGE | |

219100976-028

REF: 666 555 REV:

**Flat rate times are what the manufacturer pays the authorized dealer for warranty work, the times listed are usually unrealistic for even the most experienced mechanic and will take longer to actually complete.**

**Because of this dealers will usually charge more than the times posted.**

**I cannot be held responsible for any errors BRP has made in these service flat rate or parts manuals.**

**If you bought this manual from any other seller, they could be reselling my work.**

**Please leave them negative feedback & email me at bestshopmanuals@gmail.com .**

**Our goal is to be one of the BEST sellers on the internet by providing you with the BEST customer service and the BEST manuals on the market.**

**Thank you for choosing us.**

# INTRODUCTION

This publication governs all warranty labor allowances for 2019 BRP Snowmobiles.

## 1. HOW DOES IT WORK

We follow the procedures detailed in the BRP *Snowmobiles Shop Manual*. The flat rate time is the maximum time allowed for a repair involving any given part.
FLAT RATE TIME IS NOT CUMULATIVE. You must use the flat rate time given for the longest lasting operation.
NOTE: The *Flat Rate Time Schedule* was prepared by skilled mechanics using the hand tool usually found in workshops and all the special tools mentioned in the *Shop Manual*.

## 2. COMPILATION

The *Flat Rate Time Schedule* is compiled as follows:
The actual required time to perform the repair plus (+) 30% correction factor up to 3.0 hours or (+) 15% over 3.0 hours time to take into account, among others:

- Vehicle handling
- Obtaining the parts
- Diagnosis
- Cleaning
- Special compensation (rusted bolts).

## 3. HOW TO USE IT

Refer to the system you need, locate part of series of parts replaced. List JOB CODE in the appropriate column on claim.


| SYSTEM | | PAGE |
|---|---|---|
| 01 | ENGINE | 04 |
| 02 | CARBURETOR AND FUEL SYSTEM | 19 |
| 03 | IGNITION SYSTEM | 23 |
| 04 | STARTER | 25 |
| 05 | TRANSMISSION SYSTEM | 26 |
| 06 | BRAKE SYSTEM | 32 |
| 07 | STEERING SYSTEM AND FRONT SUSPENSION | 34 |
| 08 | REAR SUSPENSION SYSTEM AND TRACK | 39 |
| 09 | BODY | 45 |
| 10 | ELECTRICAL SYSTEM | 58 |


NOTE: Unless otherwise specified, dismantling order is: top to bottom, exterior to interior, front to rear.
All fractions of hours are in tenths:

0.1 = 6 minutes
0.2 = 12 minutes, and so on

LEGEND:

* REQUIRES PRIOR AUTHORIZATION BY DISTRIBUTOR.
** INDICATE LABOUR TIME ON LINE "LABOUR ONLY" OF CLAIM.
*** INDICATE $$$ AMOUNT ON "SUB-CONTRACTED LABOUR" OF CLAIM.

IMPORTANT: Always use the longest flat rate time applicable to the repair performed.

## 4. JOB REQUIREMENTS

All the flat rate times mentioned in the following pages include the required operations such as: engine timing (rotary valve and ignition), connecting rod(s) alignment, cylinder head(s) torque or use of parallel bar, use of ignition tester, piston clearance/ring end gap measurement, crankshaft to crankcase measurement, cylinder honing, engine leak test.

## 5. ILLUSTRATIONS

The illustrations contained in this manual do not necessarily show every components of a given system as *Parts Catalog* do. Their purpose is to facilitate recognition of parts related to a flat rate time. Item numbers on illustrations correspond to the four digit Job Code.

## 6. FLAT RATE TIME SUGGESTION

### SEND A WARRANTY CASE ON BOSSWeb INFO CENTER

In the case, you must provide the following information:

Section *Subject*:

- Flat rate time suggestion

Section *Your Question*:

- Model year;
- Model description;
- Description job code;
- Job code;
- Present flat rate;
- Suggested flat rate;
- Detailed repair procedure;

To ensure that your case will be promptly and efficiently processed please indicate the step by step repair procedure you performed.

# INTRODUCTION

Cette publication détermine le temps de main-d'oeuvre couvert par la garantie pour les motoneiges BRP 2019.

## 1. UTILISATION DU MANUEL

En procédant de la façon indiquée dans le *Manuel de réparation motoneiges* BRP, chaque temps donné représente le maximum permis pour une réparation portant sur cette pièce. LES TEMPS NE SONT PAS CUMULATIFS. On doit inscrire le temps donné pour l'opération qui prend le plus de temps.

REMARQUE: Le *Barème de temps à taux fixe* a été préparé par des mécaniciens compétents utilisant les outils que l'on retrouve normalement dans les ateliers de réparation, en plus de tous les outils spéciaux mentionnés dans le *Manuel de réparation*.

## 2. COMPILATION

Le *Barème de temps à taux fixe* a été établi en compilant le temps nécessaire pour faire la réparation plus (+) un facteur de correction de 30% lorsqu'un travail dure 3.0 heures et moins, ou (+) 15% lorsqu'un travail dure plus de 3.0 heures. Cette compilation comprend, entre autres, les étapes suivantes:

- Manutention du véhicule
- Nettoyage
- Aller chercher les pièces, essais physiques
- Compensation spéciale (boulons rouillés)
- Diagnostic.

## 3. UTILISATION DU BARÈME

Se reporter à la section désirée, repérer la pièce ou l'ensemble de pièces remplacées et inscrire le CODE DE TRAVAIL dans la colonne appropriée sur la formule de réclamation.


| SYSTÈME | | PAGE |
|---|---|---|
| 01 | MOTEUR | 4 |
| 02 | CARBURATEUR ET SYSTÈME D'ALIMENTATION D'ESSENCE | 11 |
| 03 | SYSTÈME D'ALLUMAGE | 17 |
| 04 | DÉMARREUR | 19 |
| 05 | SYSTÈME DE TRANSMISSION | 21 |
| 06 | SYSTÈME DE FREIN | 28 |
| 07 | SYSTÈME DE DIRECTION ET SUSPENSION AVANT | 30 |
| 08 | SYSTÈME DE SUSPENSION ARRIÈRE ET CHENILLE | 35 |
| 09 | CARROSSERIE | 41 |
| 10 | SYSTÈME ÉLECTRIQUE | 53 |


REMARQUE: Sauf indication contraire, le démontage doit s'effectuer de haut en bas, de l'extérieur vers l'intérieur, de l'avant vers l'arrière.

Toutes les fractions d'heures sont exprimées en dixièmes:

0.1 = 6 minutes
0.2 = 12 minutes, et ainsi de suite

LÉGENDE:

* AUTORISATION REQUISE AVANT LE REMPLACEMENT.
** INSCRIRE LE TEMPS À LA LIGNE «MAIN-D'OEUVRE SEULEMENT».
*** INSCRIRE LE MONTANT $$$ À LA LIGNE «OUVRAGE SOUS-CONTRACTÉ».

IMPORTANT: Toujours utiliser le temps donné à l'opération qui nécessite le plus de temps.

## 4. TRAVAUX REQUIS

Tous les temps mentionnés dans les pages suivantes incluent les opérations telles que: réglage du moteur (valve rotative et allumage), alignement de la ou des bielles, couple de serrage de la ou des culasses ou l'utilisation de barres parallèles, utilisation du vérificateur d'allumage, mesure du jet des pistons/jeu en bout des segments, mesure de l'écart entre le vilebrequin et le carter, rectification du cylindre, vérification de fuite du moteur.

## 5. ILLUSTRATIONS

Contrairement aux *Catalogues de pièces*, les illustrations de ce manuel ne montrent pas nécessairement chacune des pièces qu'elles représentent, leur raison d'être étant plutôt de faciliter la reconnaissance des pièces reliées à un barème de temps à taux fixe. **Les numéros d'items sur les illustrations correspondent aux quatre derniers chiffres du code de travail.**

## 6. SUGGESTION DE BARÈME DE TEMPS À TAUX FIXE

ENVOYEZ UNE REQUÊTE GARANTIE BOSSWeb DEPUIS LA SECTION INFO CENTRE

Dans cette requête, vous devez fournir les informations suivantes:

Section *Objet*:

- Suggestion de barème de temps à taux fixe

Section *Votre Question*:

- L'année modèle;
- Description du modèle;
- Description du code de travail;
- Code de travail;
- Temps actuel;
- Temps suggéré;
- Détails de la marche à suivre;

Pour s'assurer que votre demande sera traitée dans les plus brefs délais et efficacement, s.v.p. nous fournir toutes les étapes de réparation dans les détails de la marche à suivre.

# 2019

## LIQUID COOLED 4-STROKE
## *4 TEMPS REFROIDIS PAR LIQUIDE*

| TABLE | DESCRIPTION | MODEL<br>MODÈLE | ENGINE<br>MOTEUR | CHASSIS TYPE<br>TYPE DE CHÂSSIS | REAR SUSPENSION<br>SUSPENSION ARRIÈRE |
|---|---|---|---|---|---|
| **24** | MXZ Sport 600 ACE | MCKA/MCKB | 602 ACE | REV-XS 120″ | SC-5 |
| **25** | GT Sport 600 ACE | ETKA/ETKB | 602 ACE | REV-XS 137" | SC-5 |
| **26** | EXPEDITION Sport 600 ACE | KCKA/KCKB | 602 ACE | REV-XP 154" | SC-5U |
| **27** | TUNDRA Sport 600 ACE | GMKA | 602 ACE | REV-XU 137" | SC-5 |
| | TUNDRA LT 600 ACE | GNKA/GNKB | | REV-XU 154" | SC-5U |
| **28** | SKANDIC WT 600 ACE | FHKB | 602 ACE | REV-XU 154" | SC-5U |

Midwest Manuals
Green Manuals
Paperless Manuals
For a Better Tomorrow
www.green-manuals.com
If you bought this manual from any other seller please leave them
NEGATIVE feedback and notify me at bestshopmanuals@gmail.com

| SYSTEM SYSTÈME | CODE | DESCRIPTION | RENEGADE 600 ACE | GRAND TOURING 600 ACE | EXPEDITION 600 ACE | TUNDRA 600 ACE | SKANDIC 600 ACE |
|---|---|---|---|---|---|---|---|
| | | | 24 | 25 | 26 | 27 | 28 |
| **01** | **00** | **NO LABOR INVOLVED<br>AUCUNE MAIN-D'OEUVRE IMPLIQUÉE** | **0** | **0** | **0** | **0** | **0** |
| **01*** | **01** | **REMOVE AND REPLACE ENGINE (ASS'Y)<br>REMPLACEMENT MOTEUR (COMPLET)** | **3.5** | **3.5** | **3.5** | **3.5** | **3.5** |
| **01** | 03 | OIL PRESSURE SWITCH<br>INTERRUPTEUR DE PRESSION D'HUILE | 0.3 | 0.3 | 0.3 | 0.3 | 0.3 |
| **01** | 07 | AIR DUCT<br>CONDUIT D'AIR | | | | 0.3 | |
| **01** | 08 | FAN<br>VENTILATEUR | | 0.3 | 0.3 | 0.4 | 0.3 |
| **01** | 18 | COOLANT TEMPERATURE SENDER<br>CAPTEUR DE TEMPÉRATURE LIQUIDE DE REFROIDISSEMENT | 0.4 | 0.4 | 0.4 | 0.4 | 0.4 |
| **01** | 19 | THERMOSTAT<br>THERMOSTAT | 0.6 | 0.6 | 0.6 | 0.6 | 0.6 |
| **01** | 38 | WATER PUMP SHAFT (ALL PARTS)<br>ARBRE DE LA POMPE À EAU (TOUTES LES PIÈCES) | 2.7 | 2.7 | 2.7 | 3.0 | 2.7 |
| **01** | 39 | OIL TANK<br>RÉSERVOIR D'HUILE | 3.8 | 3.8 | 3.8 | 3.8 | 3.8 |
| **01** | 46 | RADIATOR AND/OR GROMMET<br>RADIATEUR ET/OU PASSE FILS | | 0.6 | 0.6 | 0.6 | 0.6 |
| **01** | 51 | CYLINDER HEAD GASKET<br>JOINT DE CULASSE | 3.8 | 3.8 | 3.8 | 3.8 | 3.8 |
| **01** | 69 | CRANKSHAFT<br>VILEBREQUIN | 7.0 | 7.0 | 7.0 | 7.0 | 7.0 |
| **01** | 75 | MUFFLER AND/OR EXHAUST GROMMET/SUPPORT<br>SILENCIEUX ET/OU BAGUE D'ÉCHAPPEMENT/SUPPORT | 0.3 | 0.3 | 0.3 | 0.3 | 0.3 |
| **01** | 79 | COOLANT HOSE (TANK TO ENGINE)<br>BOYAU SYSTÈME DE REFROIDISSEMENT (RÉSERVOIR AU MOTEUR) | 1.0 | 1.0 | 1.0 | 1.0 | 1.0 |
| **01** | 83 | EXHAUST MANIFOLD (FRONT)<br>COLLECTEUR D'ÉCHAPPEMENT (AVANT) | 0.4 | 0.4 | 0.4 | 0.4 | 0.4 |
| **01** | 88 | RUBBER MOUNT (MUFFLER )<br>TAMPON D'ANCRAGE (SILENCIEUX) | 0.3 | 0.3 | 0.3 | 0.3 | 0.3 |
| **01** | 90 | ENGINE OIL FILTER<br>FILTRE À HUILE DU MOTEUR | 0.3 | 0.3 | 0.3 | 0.3 | 0.3 |
| **01** | 94 | REAR RADIATOR<br>RADIATEUR ARRIÈRE | 4.3 | 4.3 | 4.3 | 4.3 | 4.9 |
| **01** | 96 | OIL SIEVE<br>CRIBLE D'HUILE | 4.2 | 4.2 | 4.2 | 4.2 | 4.2 |
| **01** | 98 | COOLING RESERVOIR<br>RÉSERVOIR D'ANTIGEL | 0.4 | 0.4 | 0.4 | 0.4 | 0.4 |
| **01** | 100 | RADIATOR OUTLET HOSE<br>BOYAU DE SORTIE DU RADIATEUR | 0.6 | 0.6 | 0.6 | 0.6 | 0.6 |
| **01** | 101 | PISTON, PIN, CIRCLIP, RING (1)<br>PISTON, AXE, FREIN D'AXE, SEGMENT (1) | 6.0 | 6.0 | 6.0 | 6.0 | 6.0 |

| SYSTEM SYSTÈME | CODE | DESCRIPTION | RENEGADE 600 ACE | GRAND TOURING 600 ACE | EXPEDITION 600 ACE | TUNDRA 600 ACE | SKANDIC 600 ACE |
|---|---|---|---|---|---|---|---|
| | | | 24 | 25 | 26 | 27 | 28 |
| 01 | 102 | PISTONS, PINS, CIRCLIPS, RINGS (2)<br>PISTONS, AXES, FREINS D'AXE, SEGMENTS (2) | 6.1 | 6.1 | 6.1 | 6.1 | 6.1 |
| 01 | 109 | VALVE COVER AND/OR GASKET<br>COUVERCLE DE SOUPAPE ET/OU JOINT D'ÉTANCHÉITÉ | 0.5 | 0.5 | 0.5 | 0.5 | 0.5 |
| 01 | 111 | TIMING GEARS<br>ENGRENAGES DE LA DISTRIBUTION | 1.4 | 1.4 | 1.4 | 1.4 | 1.4 |
| 01 | 114 | CYLINDER HEAD AND/OR GASKET<br>CULASSE ET/OU JOINT D'ÉTANCHÉITÉ | 4.8 | 4.8 | 4.8 | 4.8 | 4.8 |
| 01 | 116 | EXHAUST AND/OR INLET VALVE AND/OR SPRING AND/OR SEAL<br>VALVE D'ADMISSION ET/OU D'ÉCHAPPEMENT ET/OU RESSORT ET/OU ANNEAU D'ÉTANCHÉITÉ | 4.0 | 4.0 | 4.0 | 4.0 | 4.0 |
| 01 | 119 | WATER PUMP HOUSING AND/OR IMPELLER<br>CARTER DE POMPE À EAU ET/OU ROUE AILETTES | 0.8 | 0.8 | 0.8 | 0.8 | 0.8 |
| 01 | 132 | OIL PUMP GEAR<br>ENGRENAGE DE LA POMPE À HUILE | 3.0 | 3.0 | 3.0 | 3.0 | 3.0 |
| 01 | 138 | CRANKCASE RESEAL AND/OR GASKET<br>RESCELLEMENT CARTER ET/OU JOINT D'ÉTANCHÉITÉ | 5.0 | 5.0 | 5.0 | 5.0 | 5.0 |
| 01 | 139 | CRANKCASE REPLACEMENT<br>REMPLACEMENT DU CARTER | 6.3 | 6.3 | 6.3 | 6.3 | 6.3 |
| 01 | 146 | OIL PUMP GEAR (2)<br>ENGRENAGE POMPE À L'HUILE (2) | 3.0 | 3.0 | 3.0 | 3.0 | 3.0 |
| 01 | 154 | TIMING CHAIN (PTO SIDE)<br>CHAÎNE D'ENGRENAGE (CÔTÉ PDM) | 5.8 | 5.8 | 5.8 | 5.8 | 5.8 |
| 01 | 179 | CHAIN GUIDE<br>GUIDE DE CHAÎNE | 1.2 | 1.2 | 1.2 | 1.2 | 1.2 |
| 01 | 182 | OIL RADIATOR AND/OR O-RING<br>RADIATEUR D'HUILE ET/OU JOINT | 0.5 | 0.5 | 0.5 | 0.5 | 0.5 |
| 01 | 183 | OIL PUMP COVER AND/OR SHAFT AND/OR ROTOR<br>COUVERCLE POMPE ET/OU ARBRE ET/OU ROTOR | 3.2 | 3.2 | 3.2 | 3.2 | 3.2 |
| 01 | 184 | OIL PUMP HOUSING AND/OR ALL PARTS<br>BOÎTIER POMPE HUILE ET/OU TOUTES LES PIÈCES | 3.2 | 3.2 | 3.2 | 3.2 | 3.2 |
| 01 | 191 | CHAIN TENSION GUIDE<br>GUIDE DE TENSION DE CHAÎNE | 5.0 | 5.0 | 5.0 | 5.0 | 5.0 |
| 01 | 192 | CHAIN TENSIONER (ASS'Y)<br>TENDEUR DE CHAÎNE (COMPLET) | 0.4 | 0.4 | 0.4 | 0.4 | 0.4 |
| 01 | 200 | WATER PUMP GEAR<br>ENGRENAGE POMPE À EAU | 3.0 | 3.0 | 3.0 | 3.0 | 3.0 |
| 01 | 206 | COOLANT HOSE (REAR RADIATOR TO FRONT RADIATOR)<br>BOYAU REFROIDISSEMENT (RADIATEUR ARRIÈRE AU RADIATEUR AVANT) | 1.1 | 1.1 | 1.1 | 1.1 | 1.3 |
| 01 | 207 | COOLANT HOSE (ENGINE TO REAR RADIATOR)<br>BOYAU DE REFROIDISSEMENT (MOTEUR AU RADIATEUR ARRIÈRE) | 1.1 | 1.1 | 1.1 | 1.1 | 1.3 |
| 01 | 215 | OIL DIPSTICK<br>JAUGE À L'HUILE | 0.3 | 0.3 | 0.3 | 0.3 | 0.3 |
| 01 | 216 | PRESSURE CAP<br>BOUCHON DU RADIATEUR | 0.3 | 0.3 | 0.3 | 0.3 | 0.3 |

| SYSTEM SYSTÈME | CODE | DESCRIPTION | RENEGADE 600 ACE | GRAND TOURING 600 ACE | EXPEDITION 600 ACE | TUNDRA 600 ACE | SKANDIC 600 ACE |
|---|---|---|---|---|---|---|---|
| | | | 24 | 25 | 26 | 27 | 28 |
| 01 | 245 | OUTPUT CRANKSHAFT SEAL (PTO SIDE)<br>ANNEAU D'ÉTANCHÉITÉ SORTIE VILEBREQUIN (CÔTÉ PDM) | 0.4 | 0.4 | 0.4 | 0.4 | 0.4 |
| 01 | 246 | WATER PUMP GEARS AND/OR SEAL<br>ENGRENAGES POMPE À EAU ET/OU JOINT D'ÉTANCHÉITÉ | 3.0 | 3.0 | 3.0 | 3.0 | 3.0 |
| 01 | 248 | BREATHER GEAR AND/OR V-RING<br>RENIFLARD ET/OU ANNEAU D'ÉTANCHÉITÉ EN V | 1.0 | 1.0 | 1.0 | 1.0 | 1.0 |
| 01 | 250 | CRANKSHAFT POSITION SENSOR (CPS)<br>CAPTEUR POSITION DU VILEBREQUIN (CPV) | 0.4 | 0.4 | 0.4 | 0.4 | 0.4 |
| 01 | 255 | EXHAUST/INLET VALVES AND/OR SPRINGS AND/OR SEALS (4)<br>VALVES D'ADMISSION/D'ÉCHAPPEMENT ET/OU RESSORTS ET/OU ANNEAUX (4) | 4.1 | 4.1 | 4.1 | 4.1 | 4.1 |
| 01 | 256 | EXHAUST/INLET VALVES AND/OR SPRINGS AND/OR SEALS (8)<br>VALVES D'ADMISSION/D'ÉCHAPPEMENT ET/OU RESSORTS ET/OU ANNEAUX (8) | 4.3 | 4.3 | 4.3 | 4.3 | 4.3 |
| 01 | 264 | LONG BLOCK<br>ENSEMBLE CARTER-CYLINDRE-CULASSE | 5.0 | 5.0 | 5.0 | 5.0 | 5.0 |
| 01 | 274 | CRANKSHAFT PLAIN BEARINGS<br>PALIERS LISSE DU VILEBREQUIN | 7.0 | 7.0 | 7.0 | 7.0 | 7.0 |
| 01 | 289 | FRONT ENGINE SUPPORT (PTO SIDE)<br>SUPPORT MOTEUR AVANT (CÔTÉ PDM) | 0.6 | 0.6 | 0.6 | 0.6 | 0.6 |
| 01 | 290 | REAR ENGINE SUPPORT (PTO SIDE)<br>SUPPORT MOTEUR ARRIÈRE (CÔTÉ PDM) | 0.6 | 0.6 | 0.6 | 0.6 | 0.6 |
| 01 | 291 | FRONT ENGINE SUPPORT (MAG SIDE)<br>SUPPORT MOTEUR AVANT (CÔTÉ MAG) | 0.6 | 0.6 | 0.6 | 0.6 | 0.6 |
| 01 | 292 | REAR ENGINE SUPPORT (MAG SIDE)<br>SUPPORT MOTEUR ARRIÈRE (CÔTÉ MAG) | 0.6 | 0.6 | 0.6 | 0.6 | 0.6 |
| 01 | 293 | FRONT RUBBER MOUNT (PTO SIDE)<br>TAMPON D'ANCRAGE AVANT (CÔTÉ PDM) | 0.6 | 0.6 | 0.6 | 0.6 | 0.6 |
| 01 | 294 | REAR RUBBER MOUNT (PTO SIDE)<br>TAMPON D'ANCRAGE ARRIÈRE (CÔTÉ PDM) | 1.0 | 1.0 | 1.0 | 1.0 | 1.0 |
| 01 | 295 | FRONT RUBBER MOUNT (MAG SIDE)<br>TAMPON D'ANCRAGE AVANT (CÔTÉ MAG) | 0.6 | 0.6 | 0.6 | 0.6 | 0.6 |
| 01 | 296 | REAR RUBBER MOUNT (MAG SIDE)<br>TAMPON D'ANCRAGE ARRIÈRE (CÔTÉ MAG) | 0.8 | 0.8 | 0.8 | 0.8 | 0.8 |
| 01 | 311 | CAMSHAFT INTAKE/EXHAUST AND/OR CAMSHAFT BRACKETS<br>ARBRE À CAME D'ADMISSION/ÉCHAPPEMENT ET/OU SUPPORTS D'ARBRE À CAME | 2.0 | 2.0 | 2.0 | 2.0 | 2.0 |
| 01 | 315 | OIL SUMP COVER AND GASKET<br>COUVERCLE DU CARTER D'HUILE ET JOINT D'ÉTANCHÉITÉ | 3.9 | 3.9 | 3.9 | 3.9 | 3.9 |
| 01 | 318 | RADIATOR SUPPORT<br>SUPPORT DE RADIATEUR | | | | 0.3 | 0.3 |
| 01 | 321 | MODULE SUPPORT<br>SUPPORT DU MODULE | 1.3 | 1.3 | 1.3 | 1.3 | 1.3 |
| 01 | 322 | WATER PIPE<br>TUYAU D'EAU | | 0.4 | 0.4 | 0.4 | 0.4 |

| SYSTEM SYSTÈME | CODE | DESCRIPTION | RENEGADE 600 ACE | GRAND TOURING 600 ACE | EXPEDITION 600 ACE | TUNDRA 600 ACE | SKANDIC 600 ACE |
|---|---|---|---|---|---|---|---|
| | | | 24 | 25 | 26 | 27 | 28 |
| 01 | 323 | WATER PIPE DOUBLE<br>TUYAU D'EAU DOUBLE | | 0.6 | 0.6 | 0.6 | 0.6 |
| 01 | 324 | FAN SUPPORT<br>SUPPORT DU VENTILATEUR | | 0.5 | 0.5 | | |
| 01 | 325 | COOLANT HOSE (WATER PUMP HOUSING TO RADIATOR)<br>BOYAU DE REFROIDISSEMENT (BOÎTIER DE LA POMPE À EAU AU RADIATEUR) | 0.6 | 0.6 | 0.6 | 0.6 | 0.6 |
| 01 | 326 | EXHAUST MANIFOLDS (FRONT) (2)<br>COLLECTEURS D'ÉCHAPPEMENT (AVANT) (2) | 0.5 | 0.5 | 0.5 | 0.5 | 0.5 |
| 01 | 327 | EXHAUST PIPE (MAG)<br>TUYAU D'ÉCHAPPEMENT (MAG) | 0.3 | 0.3 | 0.3 | 0.3 | 0.3 |
| 01 | 328 | EXHAUST PIPE (PTO)<br>TUYAU D'ÉCHAPPEMENT (PDM) | 0.3 | 0.3 | 0.3 | 0.3 | 0.3 |
| 01 | 353 | INJECTOR (ONE OR ALL)<br>INJECTEUR (UN OU TOUS) | 0.8 | 0.8 | 0.8 | 0.8 | 0.8 |

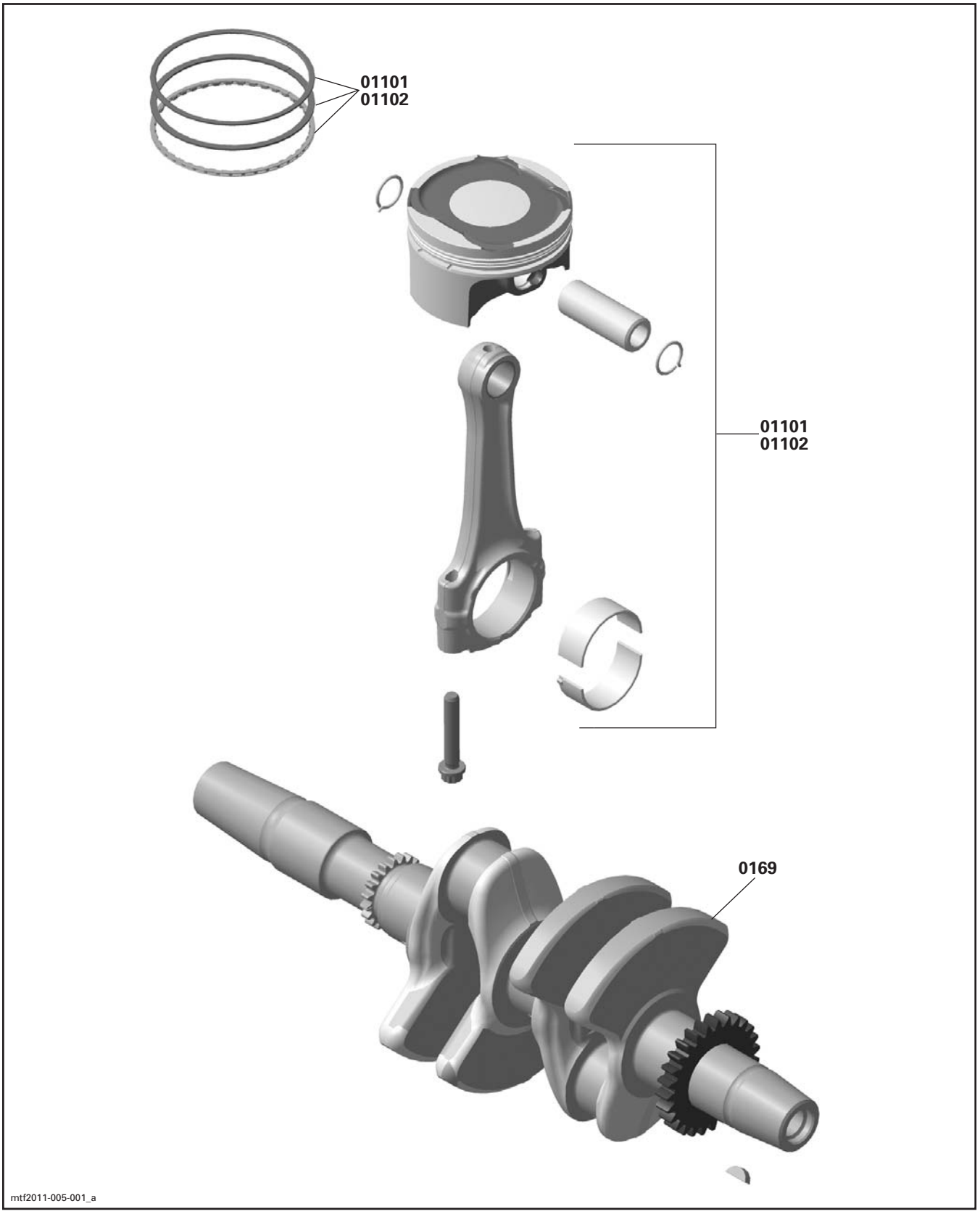
01101
01102
01101
01102
0169
mtf2011-005-001_a

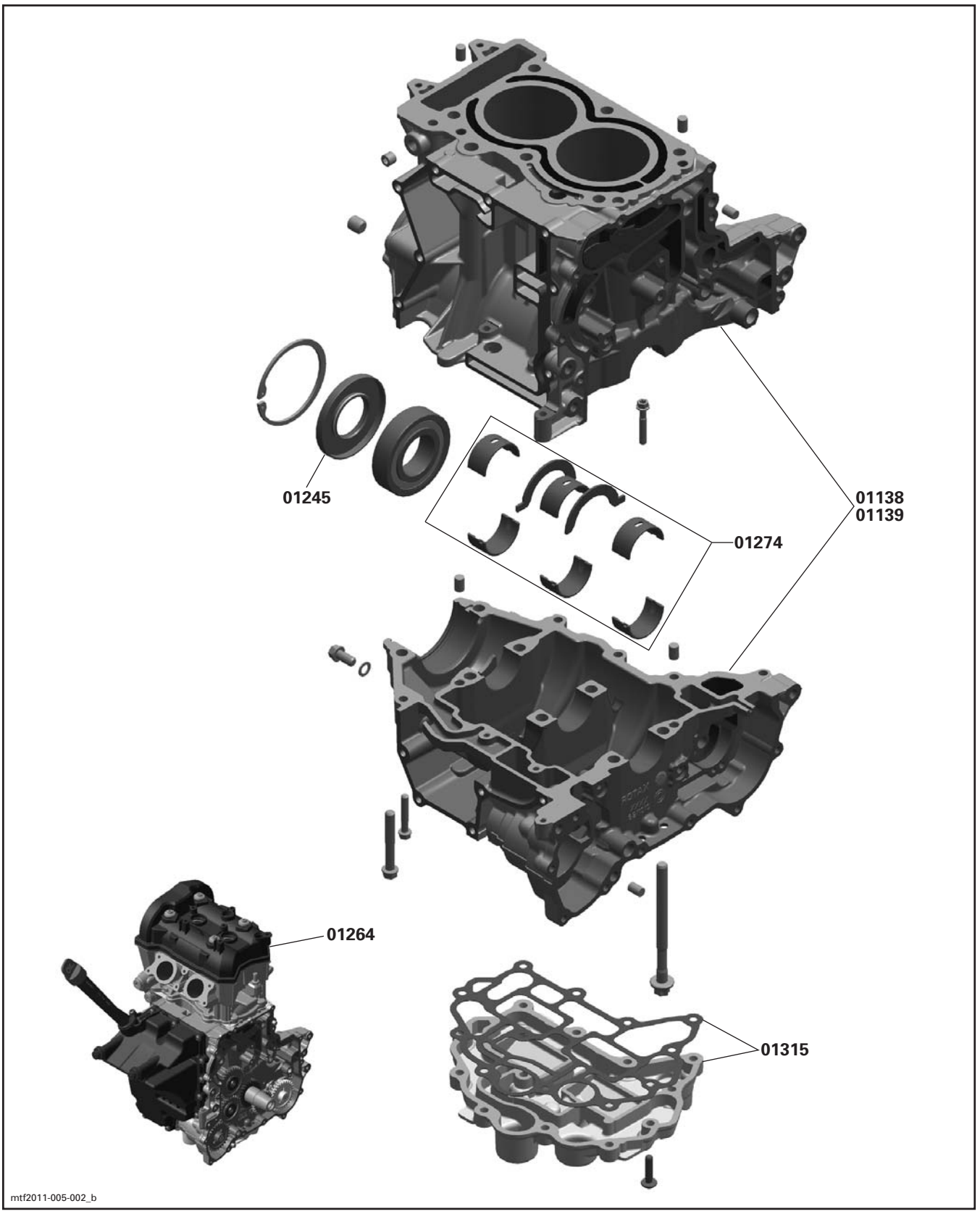
01245
01138
01139
01274
01264
01315
mtf2011-005-002_b

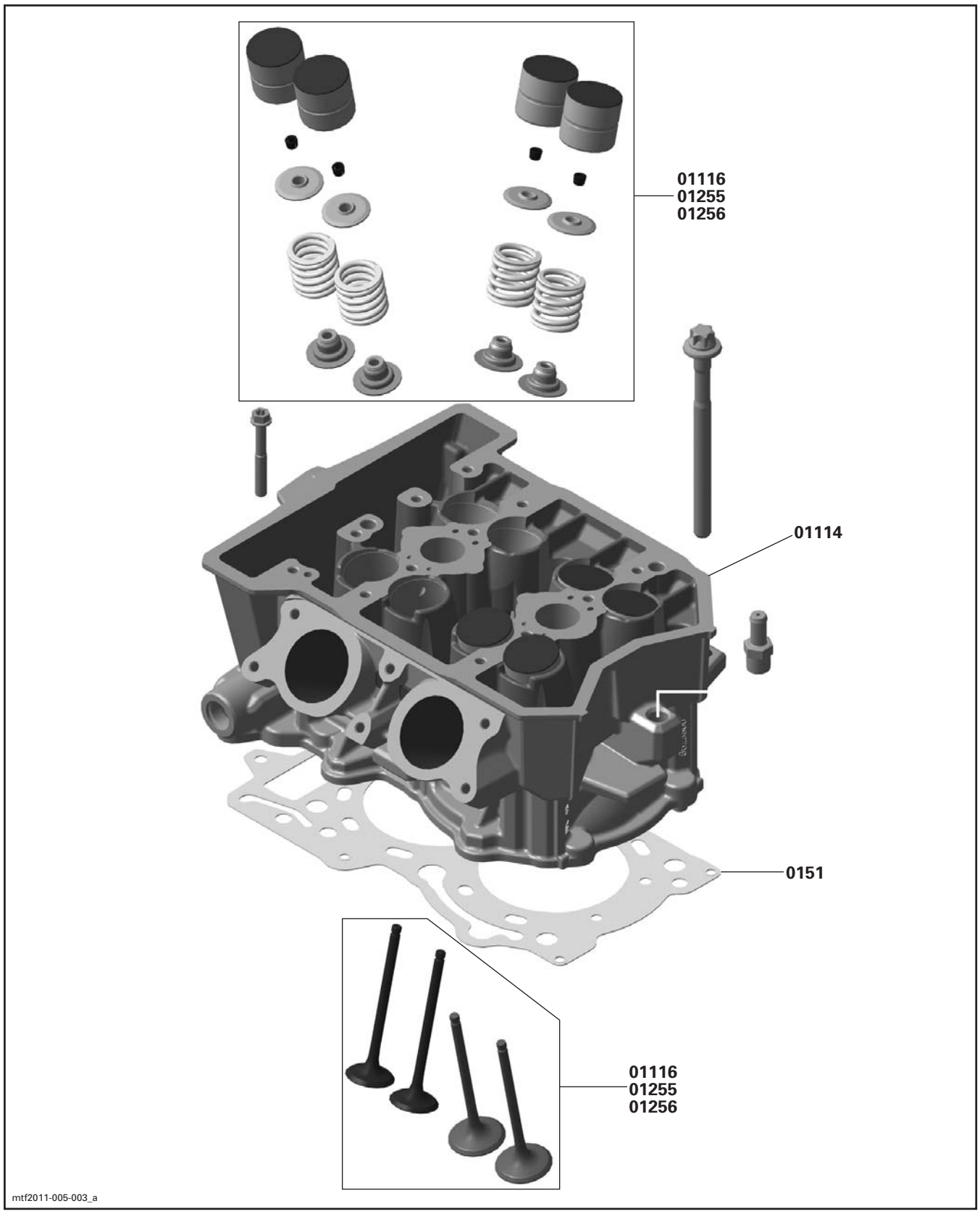
01116
01255
01256
01114
0151
01116
01255
01256
mtf2011-005-003_a

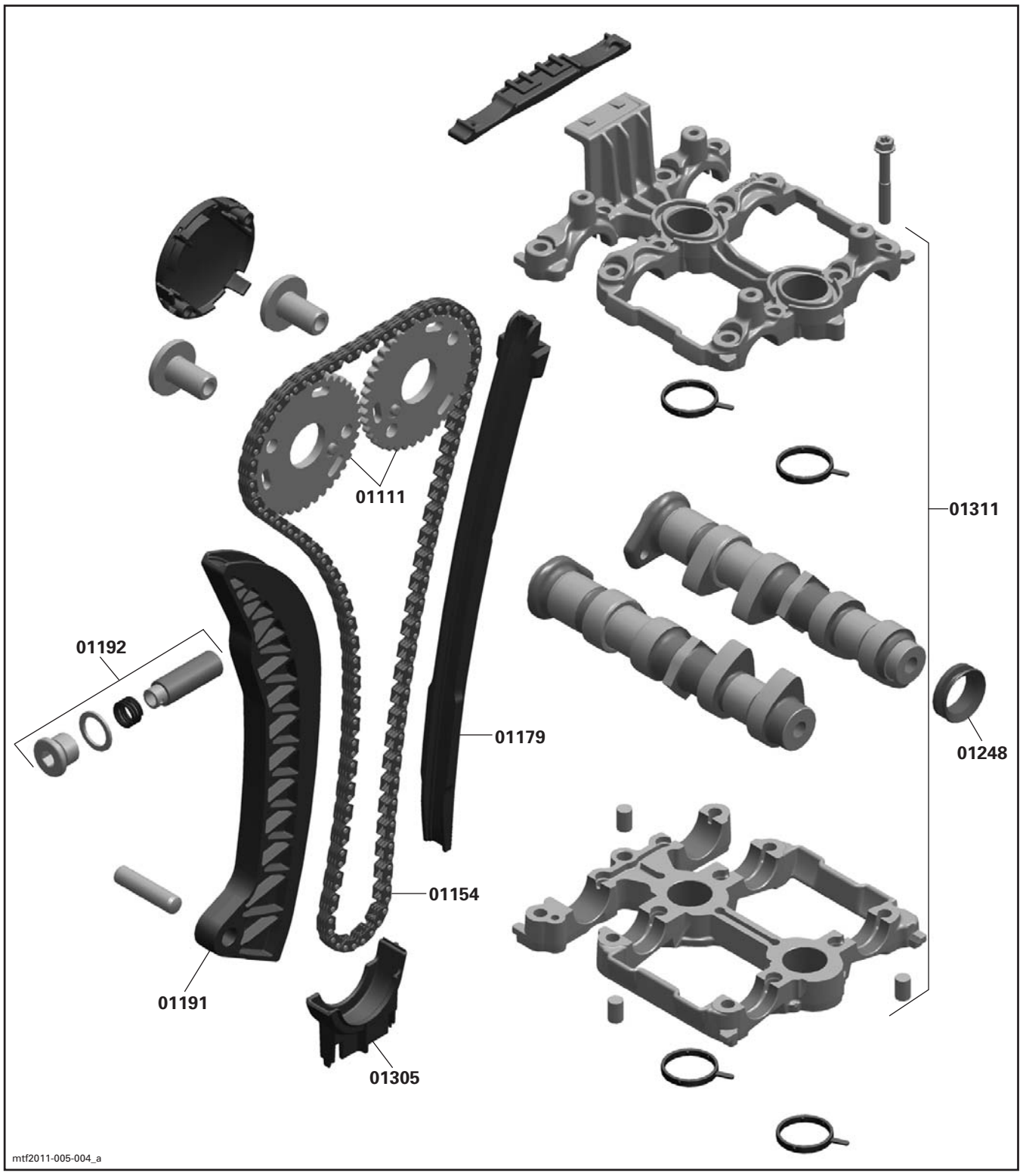
01111
01311
01192
01179
01248
01154
01191
01305
mtf2011-005-004_a

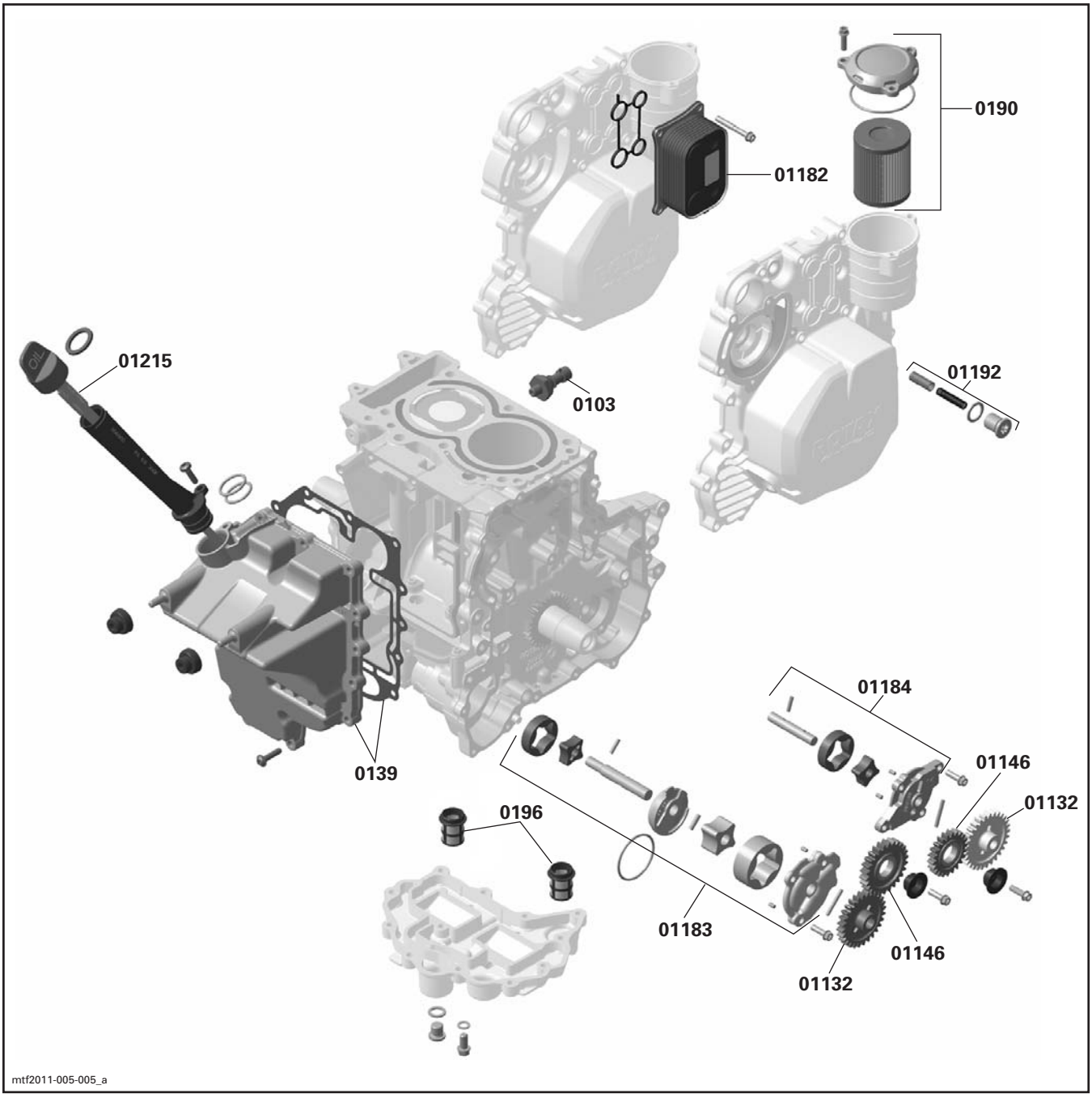
0190
01182
01215
0103
01192
01184
01146
01132
0196
0139
01183
01146
01132
mtf2011-005-005_a

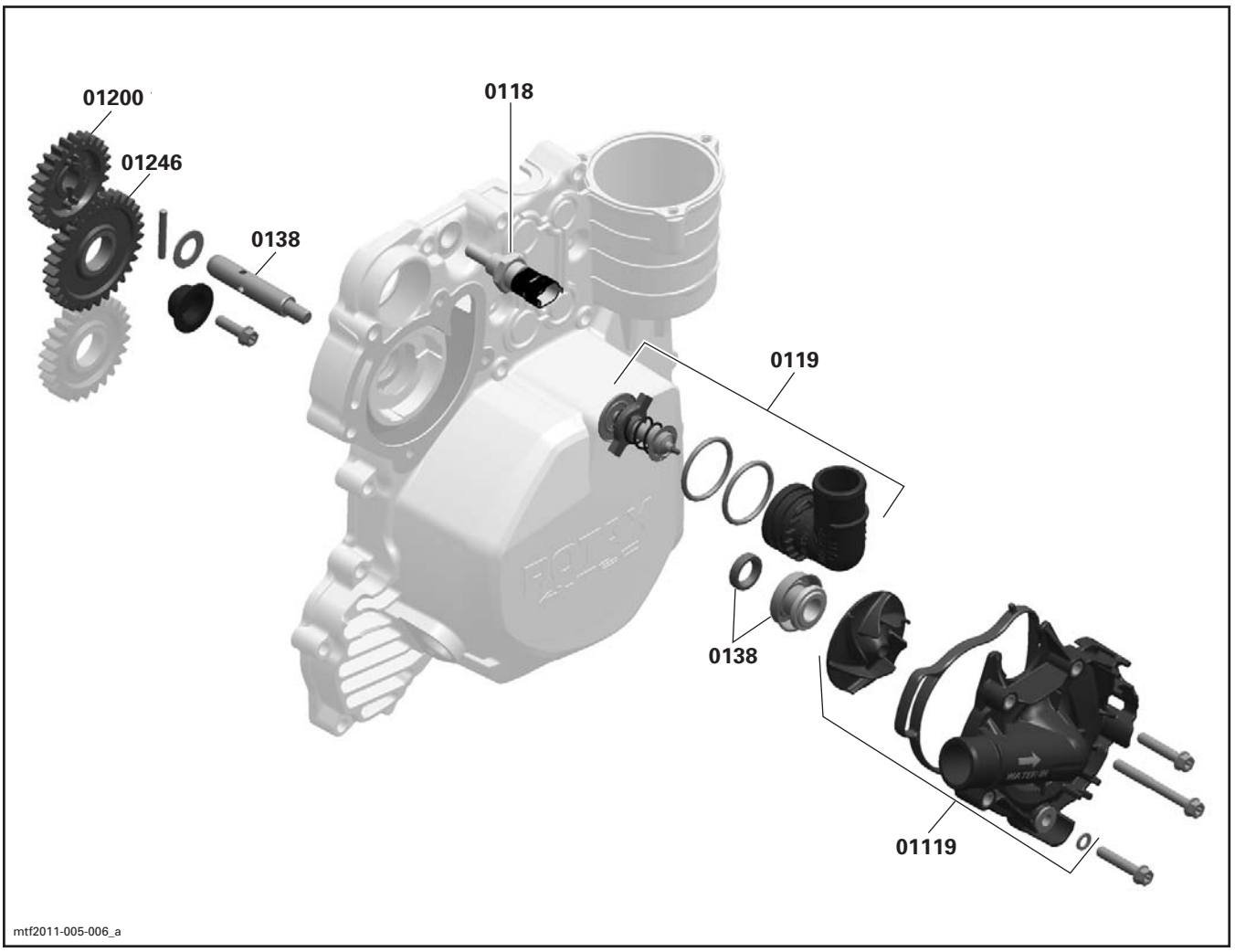
01200
01246
0138
0118
0119
0138
01119
mtf2011-005-006_a

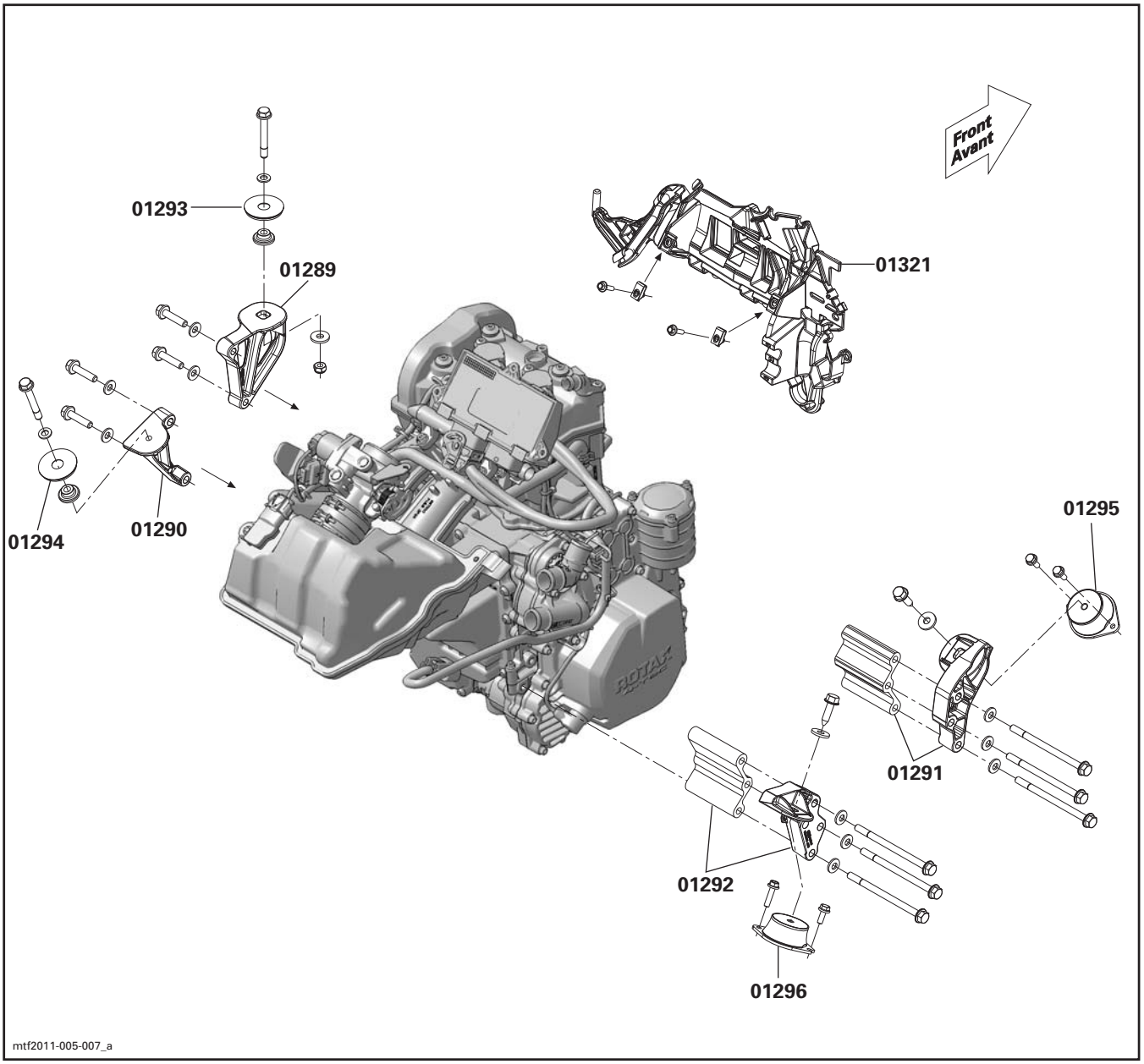
Front
Avant
01293
01289
01321
01294
01290
01295
01291
01292
01296
mtf2011-005-007_a

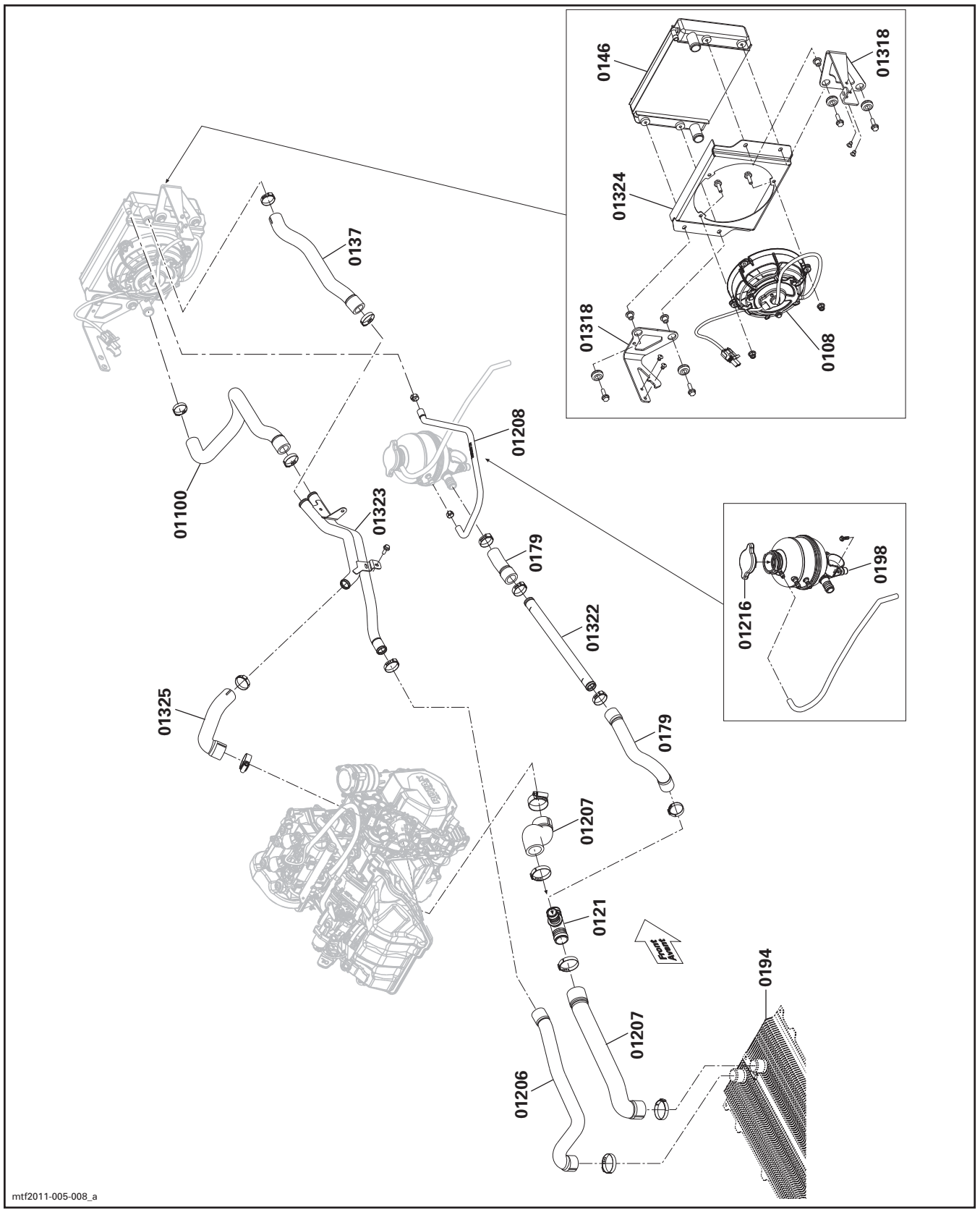
0146
01318
01324
01318
0108
0137
01208
01100
01323
0179
01322
01216
0198
01325
0179
01207
0121
FRONT
AVANT
0194
01207
01206
mtf2011-005-008_a

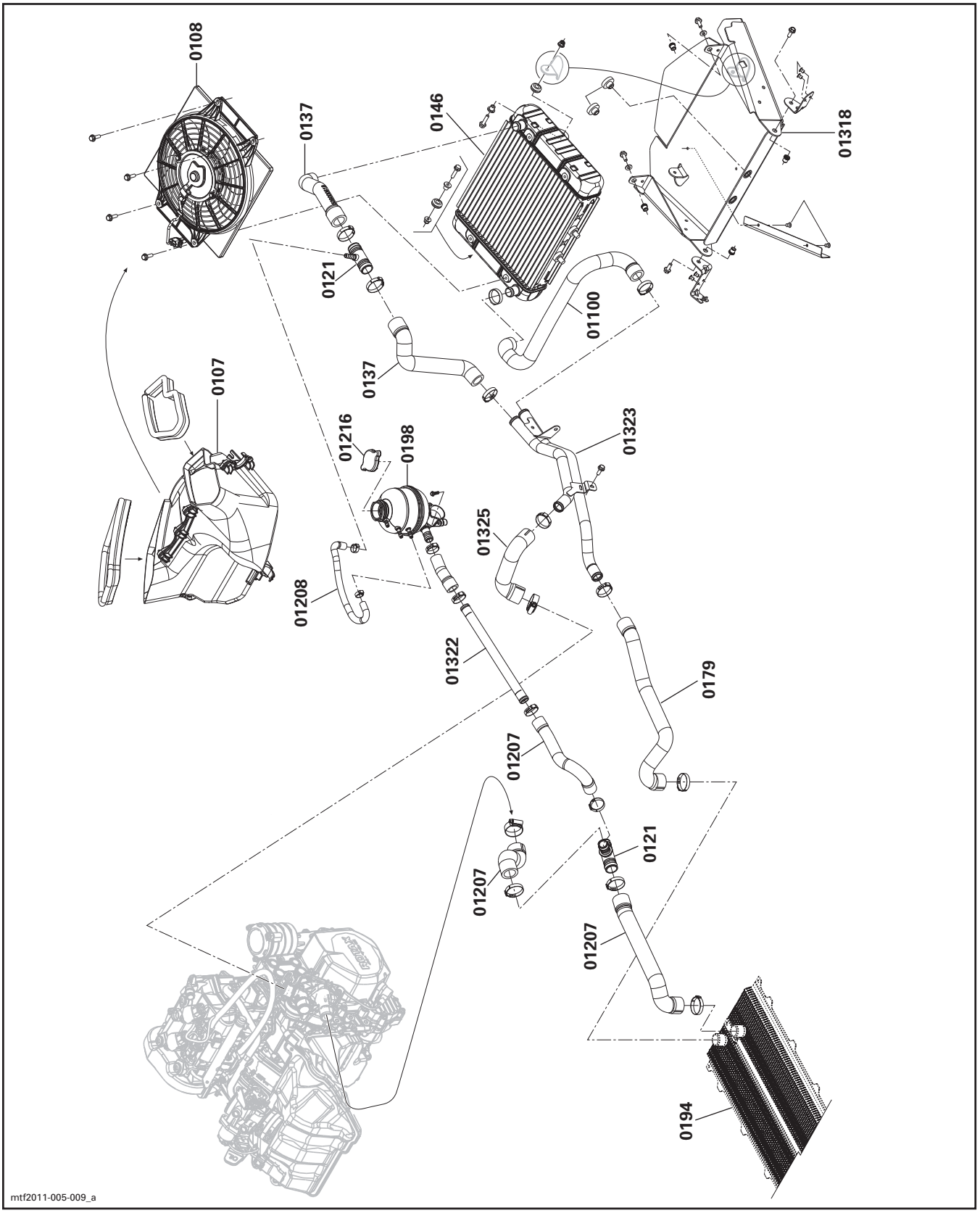
0108
0137
0146
01318
0121
01100
0137
0107
01216
0198
01323
01325
01208
01322
0179
01207
0121
01207
01207
0194
mtf2011-005-009_a

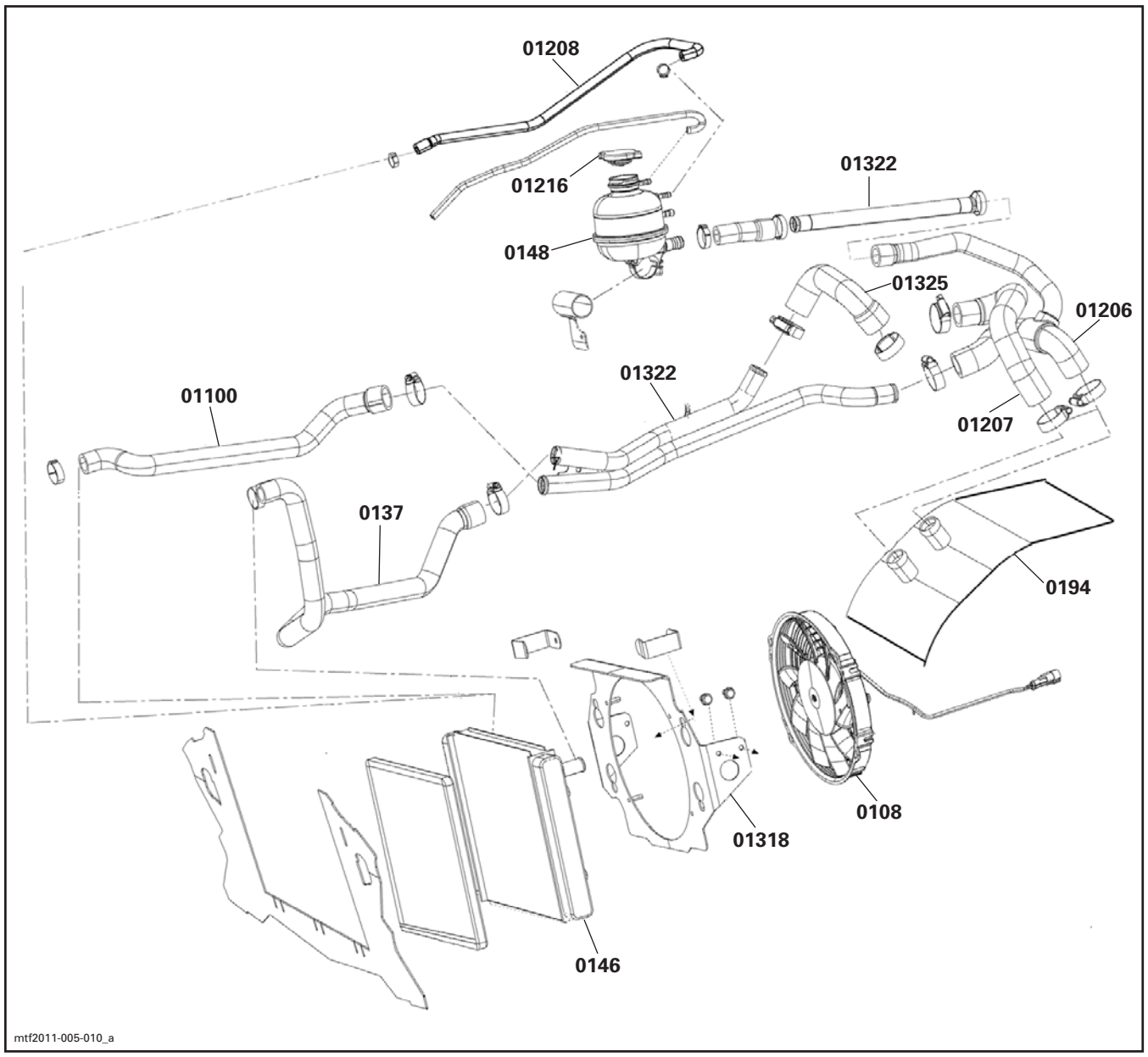
01208
01216
01322
0148
01325
01206
01322
01100
01207
0137
0194
0108
01318
0146
mtf2011-005-010_a

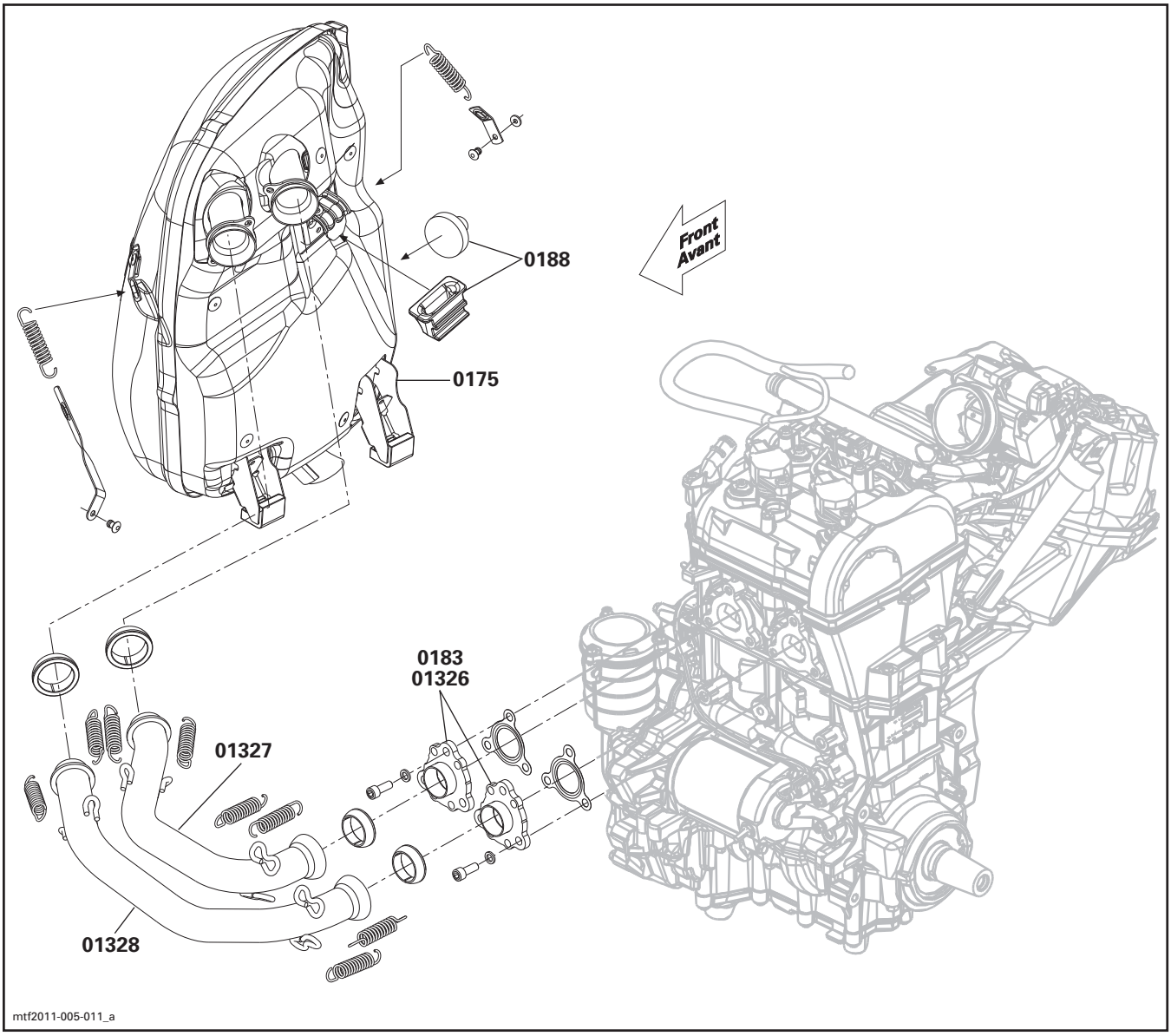
0188
0175
Front
Avant
0183
01326
01327
01328
mtf2011-005-011_a

| SYSTEM SYSTÈME | CODE | DESCRIPTION | RENEGADE 600 ACE | GRAND TOURING 600 ACE | EXPEDITION 600 ACE | TUNDRA 600 ACE | SKANDIC 600 ACE |
|---|---|---|---|---|---|---|---|
| | | | 24 | 25 | 26 | 27 | 28 |
| 02 | 00 | **NO LABOR INVOLVED**<br>**AUCUNE MAIN-D'OEUVRE IMPLIQUÉE** | 0 | 0 | 0 | 0 | 0 |
| 02 | 01 | AIR SILENCER (ASS'Y) (ALL PARTS)<br>SILENCIEUX D'ADMISSION (COMPLET) (TOUTES LES PIÈCES) | 1.5 | 1.5 | 1.5 | 1.5 | 1.5 |
| 02 | 06 | THROTTLE CABLE<br>CÂBLE D'ACCÉLÉRATEUR | 0.8 | 0.8 | 0.8 | 0.8 | 0.8 |
| 02 | 16 | INTAKE ADAPTOR<br>ADAPTATEUR D'ADMISSION | 0.4 | 0.4 | 0.4 | 0.4 | 0.4 |
| 02 | 19 | AIR INTAKE TUBE<br>TUYAU D'ADMISSION D'AIR | 0.3 | 0.3 | 0.3 | 0.3 | 0.3 |
| 02 | 47 | FUEL TANK<br>RÉSERVOIR À ESSENCE | 1.5 | 1.5 | 1.5 | 1.5 | 1.5 |
| 02 | 48 | FUEL TANK CAP<br>BOUCHON DU RÉSERVOIR À ESSENCE | 0.3 | 0.3 | 0.3 | 0.3 | 0.3 |
| 02 | 50 | THROTTLE HANDLE HOUSING<br>LOGEMENT MANETTE ACCÉLÉRATEUR | 0.3 | 0.3 | 0.3 | 0.3 | 0.3 |
| 02 | 52 | FUEL FILTER<br>FILTRE À ESSENCE | 1.2 | 1.2 | 1.2 | 1.2 | 1.2 |
| 02 | 65 | FUEL SENSOR (ASS'Y)<br>CAPTEUR DE NIVEAU D'ESSENCE (COMPLET) | 0.8 | 0.8 | 0.8 | 0.8 | 0.8 |
| 02 | 79 | FUEL RAIL<br>RAMPE D'ESSENCE | 0.8 | 0.8 | 0.8 | 0.8 | 0.8 |
| 02 | 81 | THROTTLE BODY (ASS'Y)<br>CARTER ACCÉLÉRATEUR (COMPLET) | 0.8 | 0.8 | 0.8 | 0.8 | 0.8 |
| 02 | 82 | THROTTLE SENSOR<br>CAPTEUR POSITION ACCÉLÉRATEUR | 0.3 | 0.3 | 0.3 | 0.3 | 0.3 |
| 02 | 83 | AIR PRESSURE SENSOR<br>CAPTEUR PRESSION D'AIR | 0.3 | 0.3 | 0.3 | 0.3 | 0.3 |
| 02 | 84 | IDLE BY-PASS-VALVE<br>VALVE DU RALENTI | 0.3 | 0.3 | 0.3 | 0.3 | 0.3 |
| 02 | 89 | FUEL PUMP MODULE<br>MODULE POMPE À ESSENCE | 1.5 | 1.5 | 1.5 | 1.5 | 1.5 |
| 02 | 99 | FUEL INJECTION HOSE (ASS'Y)<br>BOYAU D'ESSENCE À INJECTION (COMPLET) | 1.0 | 1.0 | 1.0 | 1.0 | 1.0 |
| 02 | 105 | SECONDARY CHAMBER (ASS'Y)<br>CHAMBRE SECONDAIRE (COMPLET) | 0.4 | 0.4 | 0.4 | 0.4 | 0.4 |
| 02 | 108 | FUEL PUMP NUT AND/OR GASKET<br>ÉCROU DE LA POMPE À ESSENCE ET/OU JOINT D'ÉTANCHÉITÉ | 1.5 | 1.5 | 1.5 | 1.5 | 1.5 |
| 02 | 113 | FUEL PUMP INLET FILTER<br>FILTRE INTERNE DE LA POMPE À ESSENCE | 1.5 | 1.5 | 1.5 | 1.5 | 1.5 |
| 02 | 119 | CHECK VALVE<br>SOUPAPE À ESSENCE | 0.3 | 0.3 | 0.3 | 0.3 | 0.3 |

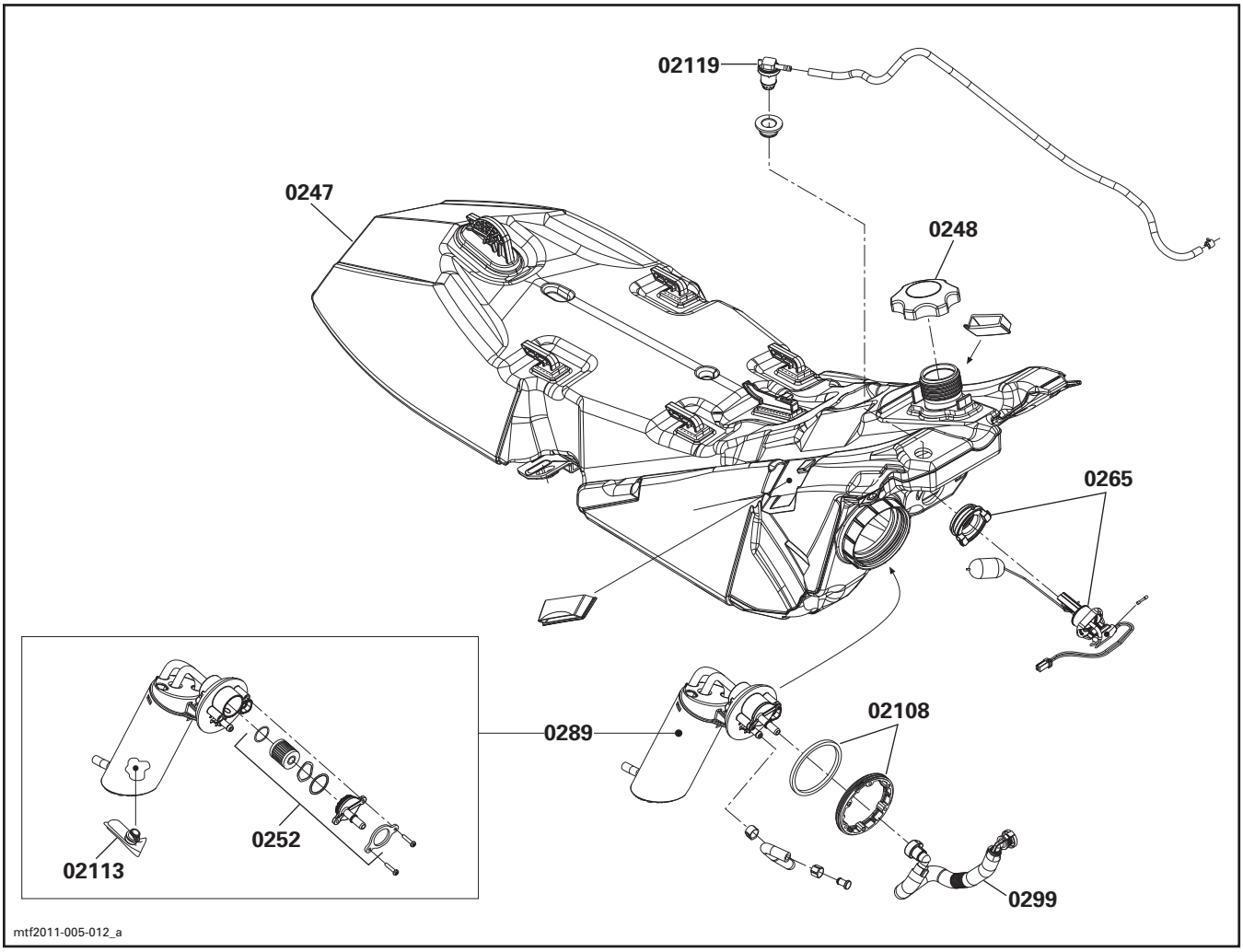
02119
0247
0248
0265
0289
02108
0252
02113
0299
mtf2011-005-012_a

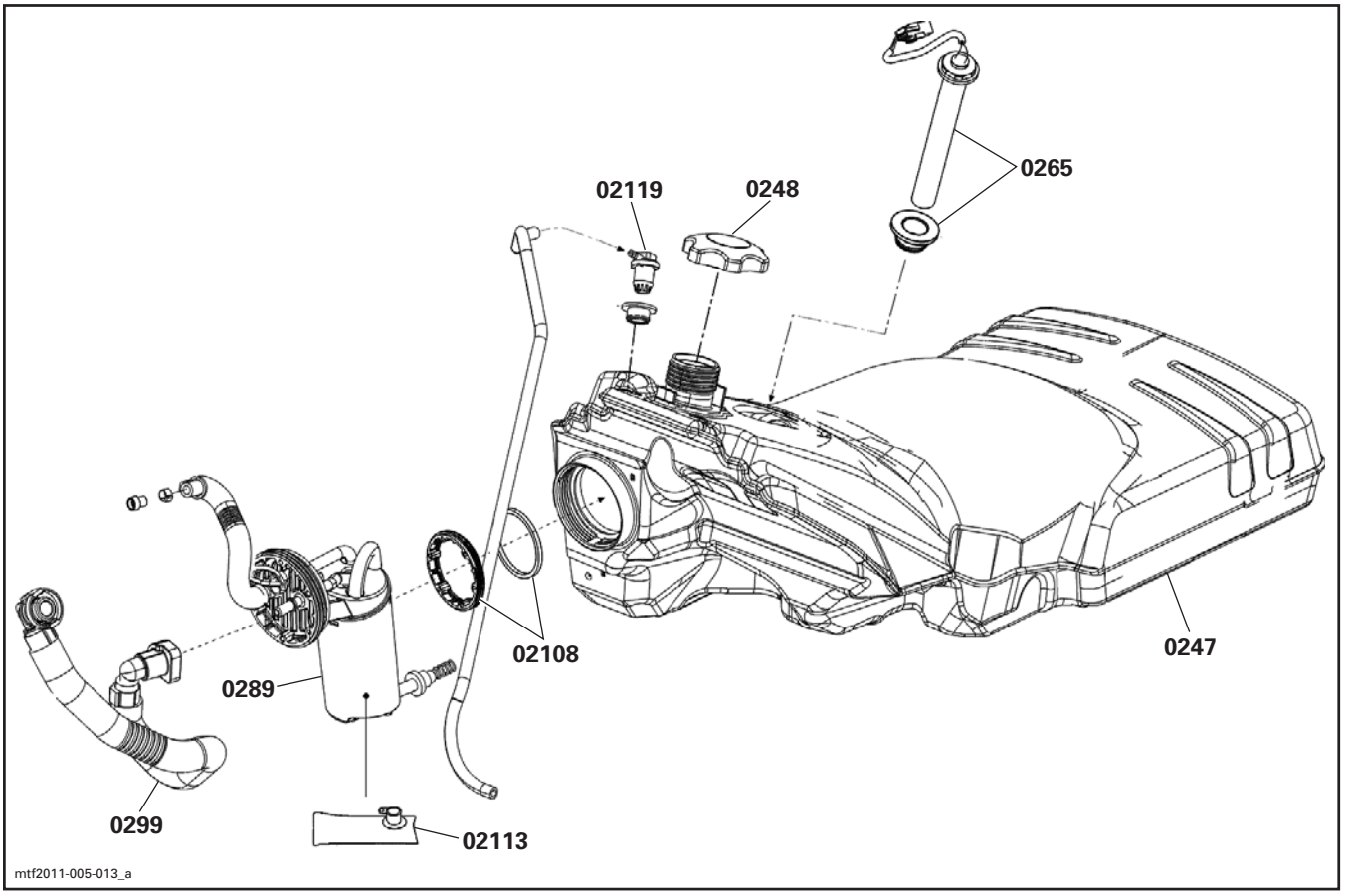
0265
02119
0248
02108
0247
0289
0299
02113
mtf2011-005-013_a

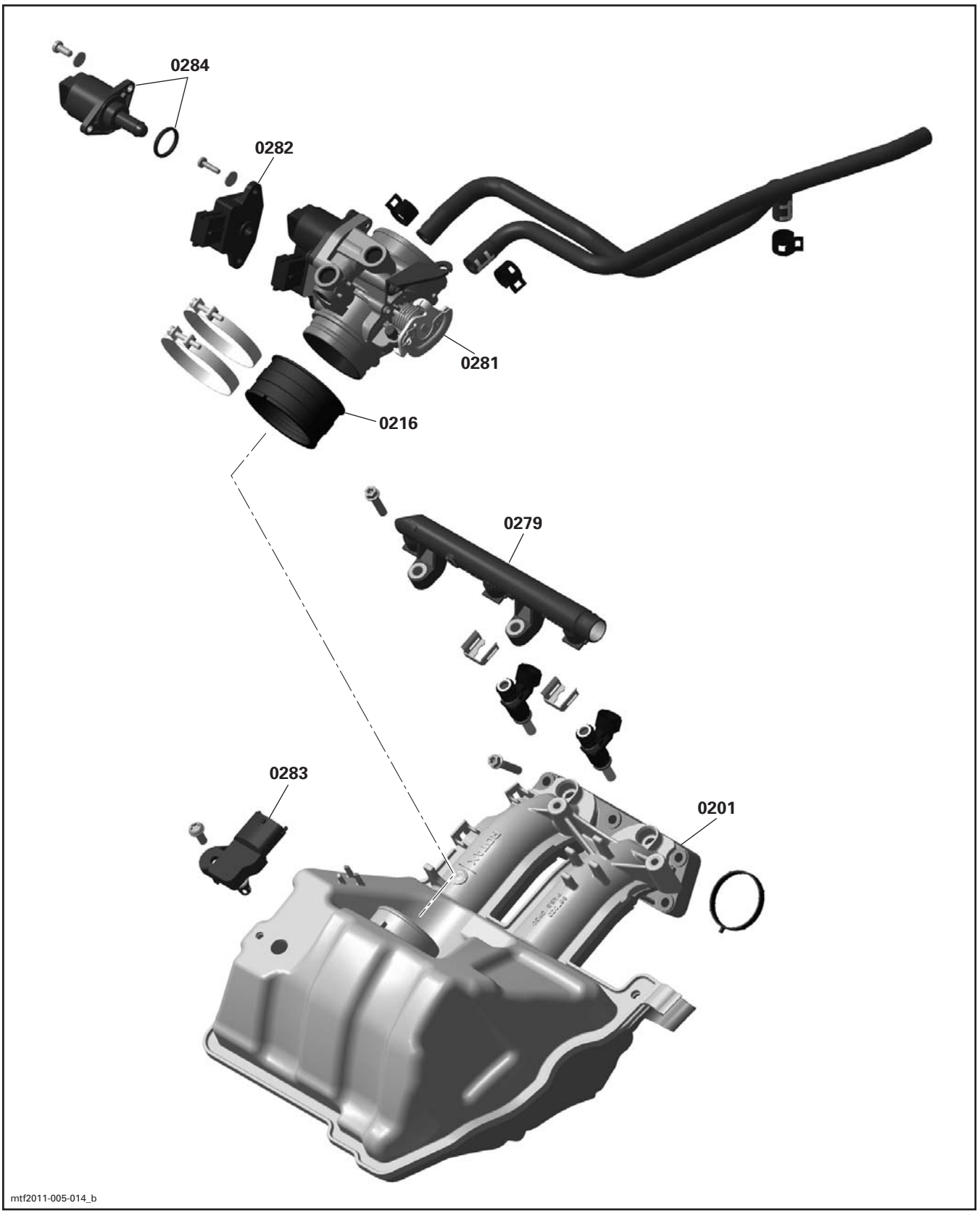
0284
0282
0281
0216
0279
0283
0201
mtf2011-005-014_b

| SYSTEM SYSTÈME | CODE | DESCRIPTION | RENEGADE 600 ACE | GRAND TOURING 600 ACE | EXPEDITION 600 ACE | TUNDRA 600 ACE | SKANDIC 600 ACE |
|---|---|---|---|---|---|---|---|
| | | | 24 | 25 | 26 | 27 | 28 |
| **03** | **00** | **NO LABOR INVOLVED<br>AUCUNE MAIN-D'OEUVRE IMPLIQUÉE** | **0** | **0** | **0** | **0** | **0** |
| **03** | 01 | FLYWHEEL<br>VOLANT MOTEUR | 3.0 | 3.0 | 3.0 | 3.0 | 3.0 |
| **03** | 08 | IGNITION COIL<br>BOBINE D'ALLUMAGE | 0.3 | 0.3 | 0.3 | 0.3 | 0.3 |
| **03** | 26 | MAGNETO COVER AND/OR GASKET<br>COUVERCLE DU MAGNÉTO ET/OU JOINT D'ÉTANCHÉITÉ | 2.7 | 2.7 | 2.7 | 2.7 | 2.7 |
| **03** | 27 | STATOR (ASS'Y)<br>STATOR (COMPLET) | 2.7 | 2.7 | 2.7 | 2.7 | 2.7 |

# IGNITION SYSTEM
# SYSTÈME D'ALLUMAGE

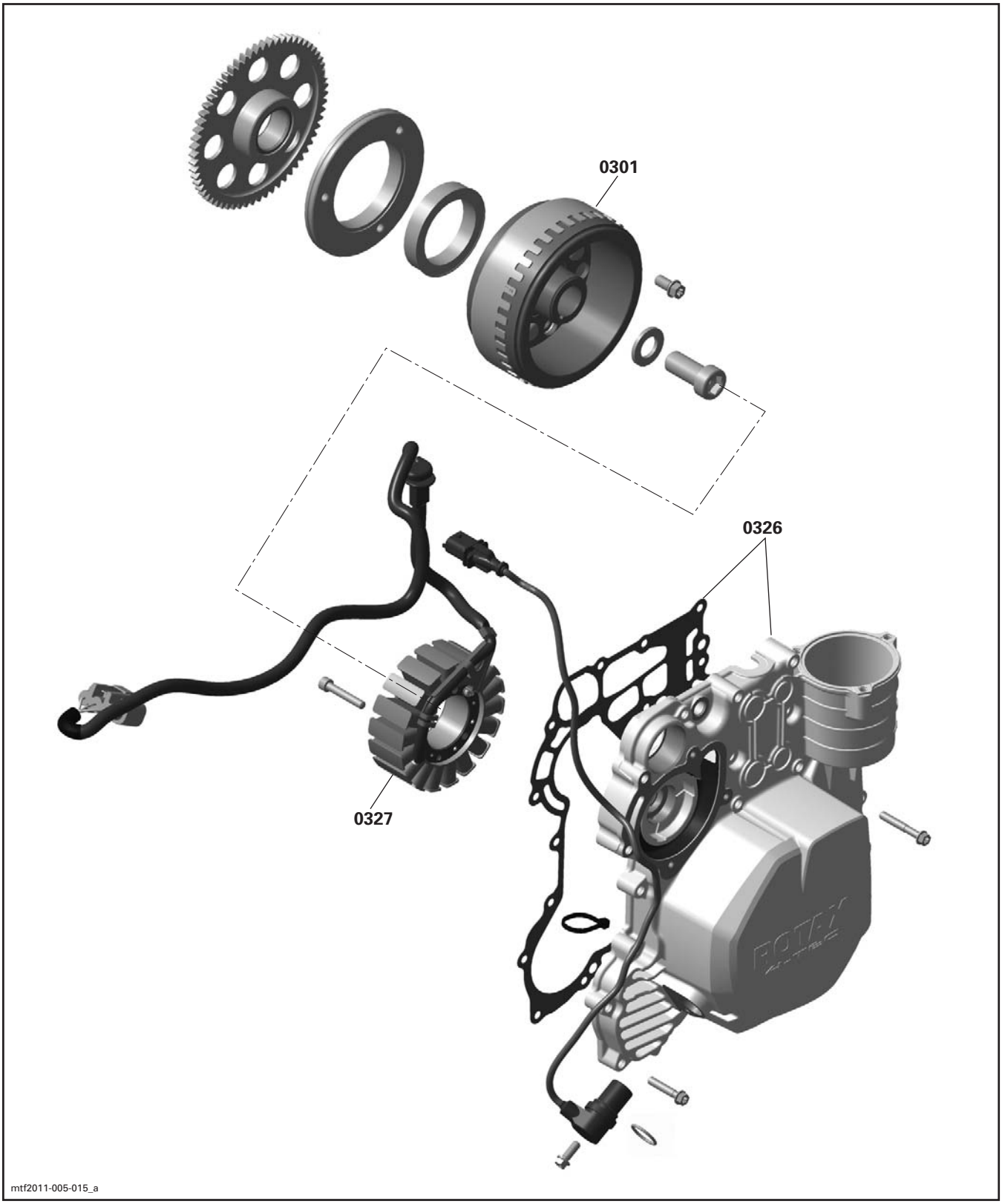

| SYSTEM SYSTÈME | CODE | DESCRIPTION | RENEGADE 600 ACE | GRAND TOURING 600 ACE | EXPEDITION 600 ACE | TUNDRA 600 ACE | SKANDIC 600 ACE |
|---|---|---|---|---|---|---|---|
| | | | 24 | 25 | 26 | 27 | 28 |
| **04** | **00** | **NO LABOR INVOLVED<br>AUCUNE MAIN-D'OEUVRE IMPLIQUÉE** | **0** | **0** | **0** | **0** | **0** |
| **04** | 02 | ELECTRIC STARTER (ASS'Y)<br>DÉMARREUR ÉLECTRIQUE (COMPLET) | 0.3 | 0.3 | 0.3 | 0.4 | 0.3 |
| **04** | 03 | STARTER RELAY<br>SOLÉNOÏDE DE DÉMARREUR | 0.3 | 0.3 | 0.3 | 0.3 | 0.3 |
| **04** | 19 | STARTER DRIVE<br>LANCEUR DÉMARREUR | 3.0 | 3.0 | 3.0 | 3.0 | 3.0 |

# TRANSMISSION SYSTEM
# SYSTÈME DE TRANSMISSION

| SYSTEM SYSTÈME | CODE | DESCRIPTION | RENEGADE 600 ACE | GRAND TOURING 600 ACE | EXPEDITION 600 ACE | TUNDRA 600 ACE | SKANDIC 600 ACE |
|---|---|---|---|---|---|---|---|
| | | | 24 | 25 | 26 | 27 | 28 |
| 05 | 00 | **NO LABOR INVOLVED**<br>**AUCUNE MAIN-D'OEUVRE IMPLIQUÉE** | 0 | 0 | 0 | 0 | 0 |
| 05 | 01 | DRIVE PULLEY (ASS'Y) OR SLIDDING FLANGE<br>POULIE MOTRICE (COMPLET) OU FLASQUE COULISSANTE | 0.3 | 0.3 | 0.3 | 0.3 | 0.3 |
| 05 | 06 | GOVERNOR CUP AND/OR FIXED HALF<br>CUVETTE DE RÉGULATEUR ET/OU PARTIE FIXE | 0.3 | 0.3 | 0.3 | 0.3 | 0.3 |
| 05 | 07 | RAMPS AND/OR ADJUSTMENT SCREW<br>RAMPES ET/OU VIS DE RÉGLAGE DE POULIE | 0.5 | 0.5 | 0.5 | 0.5 | 0.5 |
| 05 | 08 | SPRING COVER AND/OR SPRING AND/OR BUSHING<br>COUVERCLE DU RESSORT ET/OU RESSORT ET/OU DOUILLE | 0.5 | 0.5 | 0.5 | 0.5 | 0.5 |
| 05 | 09 | SLIDER SHOES AND/OR SPRINGS<br>GLISSIÈRE ET/OU RESSORTS | 0.3 | 0.3 | 0.3 | 0.3 | 0.3 |
| 05 | 10 | SLIDING HALF, BUSHING AND/OR LEVER (ASS'Y)<br>DEMI-POULIE COULISSANTE, DOUILLE ET/OU LEVIER (COMPLET) | 0.8 | 0.8 | 0.8 | 0.8 | 0.8 |
| 05 | 11 | DRIVEN PULLEY FIXED HALF<br>DEMI-POULIE MENÉE FIXE | 0.7 | 0.7 | 0.7 | 0.7 | 0.7 |
| 05 | 12 | DRIVEN PULLEY SLIDING HALF<br>DEMI-POULIE MENÉE COULISSANTE | 0.5 | 0.5 | 0.5 | 0.5 | 0.5 |
| 05 | 13 | DRIVEN PULLEY CAM AND/OR SPRING<br>CAME ET/OU RESSORT DE POULIE MENÉE | 0.6 | 0.6 | 0.6 | 0.6 | 0.6 |
| 05 | 17 | COUNTERSHAFT BALL BEARING AND/OR FLANGE<br>ROULEMENT À BILLE DE L'ARBRE DE RENVOI ET/OU FLASQUE | 1.0 | 1.0 | 1.0 | 1.0 | 1.0 |
| 05 | 18 | COUNTERSHAFT<br>ARBRE DE RENVOI | 1.0 | 1.0 | 1.0 | 1.0 | 3.0 |
| 05 | 19 | DRIVE BELT AND/OR BELT GUARD<br>COURROIE D'ENTRAÎNEMENT ET/OU GARDE-COURROIE | 0.1 | 0.1 | 0.1 | 0.1 | 0.1 |
| 05 | 20 | CHAINCASE SEAL AND/OR BEARING<br>ANNEAU D'ÉTANCHÉITÉ DE CARTER ET/OU ROULEMENT | 1.3 | 1.3 | 1.3 | 1.3 | |
| 05 | 21 | CHAINCASE<br>CARTER DE CHAÎNE | 3.9 | 3.9 | 3.9 | 3.9 | |
| 05 | 22 | CHAINCASE COVER<br>COUVERCLE DE CARTER DE CHAÎNE | 1.3 | 1.3 | 1.3 | 1.3 | |
| 05 | 23 | CHAINCASE UPPER SPROCKET AND/OR CENTRAL SPROCKET<br>PIGNON SUPÉRIEUR DE CARTER ET/OU PIGNON CENTRAL | 1.4 | 1.4 | 1.4 | 1.4 | |
| 05 | 24 | CHAINCASE LOWER SPROCKET<br>PIGNON INFÉRIEUR DE CARTER DE CHAÎNE | 1.4 | 1.4 | 1.4 | 1.4 | |
| 05 | 25 | CHAINCASE DRIVE CHAIN<br>CHAÎNE D'ENTRAÎNEMENT DE CARTER DE CHAÎNE | 1.4 | 1.4 | 1.4 | 1.4 | |
| 05 | 26 | CHAINCASE TENSIONERS<br>TENDEURS DE CARTER DE CHAÎNE | 1.3 | 1.3 | 1.3 | 1.3 | |
| 05 | 27 | TENSIONER ADJUSTING SCREW<br>VIS DE RÉGLAGE DE TENDEUR | 0.4 | 0.4 | 0.4 | 0.4 | |
| 05 | 34 | SLIDING SLEEVE AND/OR FORK AND/OR FORK SHAFT<br>CRABOT ET/OU FOURCHETTE ET /OU ARBRE DE FOURCHETTE | 1.4 | 1.4 | 1.4 | 1.4 | 3.0 |
| 05 | 39 | SHIFT LEVER AND/OR SHIFT ROD<br>LEVIER DE TRANSMISSION ET/OU TIGE | 0.4 | 0.4 | 0.4 | 0.4 | |
| 05 | 45 | REVERSE GEAR WHEEL AND SHAFT<br>ENGRENAGE ET ARBRE DE MARCHE ARRIÈRE | 1.4 | 1.4 | 1.4 | 1.4 | 3.0 |

| SYSTEM SYSTÈME | CODE | DESCRIPTION | RENEGADE 600 ACE | GRAND TOURING 600 ACE | EXPEDITION 600 ACE | TUNDRA 600 ACE | SKANDIC 600 ACE |
|---|---|---|---|---|---|---|---|
| | | | 24 | 25 | 26 | 27 | 28 |
| 05 | 49 | DRIVE PULLEY GUARD<br>GARDE DE POULIE MOTRICE | 0.3 | 0.3 | 0.3 | 0.3 | 0.3 |
| 05 | 56 | LEVER (ASS'Y) AND/OR LEVER SPRING<br>LEVIER (COMPLET) ET/OU RESSORT DE LEVIER | | | | | 0.3 |
| 05 | 58 | TIE ROD AND/OR BALL JOINT<br>BARRE D'ACCOMPAGNEMENT ET/OU JOINT ROTULE | | | | | 0.6 |
| 05 | 59 | SPEED SENSOR<br>CAPTEUR DE VITESSE | 1.3 | 1.3 | 1.3 | 1.3 | 0.9 |
| 05 | 66 | GEARSHIFT LEVER<br>LEVIER D'EMBRAYAGE | | | | | 0.5 |
| 05 | 90 | DRIVE AXLE (ASS'Y)<br>AXE D'ENTRAÎNEMENT (COMPLET) | | | | | 2.0 |
| 05 | 91 | MAIN SHAFT (ASS'Y)<br>ARBRE DE RENVOI (COMPLET) | | | | | 3.0 |
| 05 | 103 | SHIFT DRUM<br>TAMBOUR D'EMBRAYAGE | | | | | 3.0 |
| 05 | 114 | SHIFT SHAFT SEAL<br>ANNEAU D'ÉTANCHÉITÉ DE L'ARBRE D'EMBRAYAGE | | | | | 1.0 |
| 05 | 129 | CHAINCASE LOWER BEARING AND SEAL (MAG SIDE)<br>ROULEMENT À BILLES INFÉRIEUR DU CARTER DE CHAÎNE ET ANNEAU ÉTANCHE (CÔTÉ MAG) | 3.0 | 3.0 | 3.0 | 3.0 | |
| 05 | 130 | BEARING HOUSING AND/OR BEARING (PTO SIDE)<br>LOGEMENT DU ROULEMENT À BILLES ET/OU ROULEMENT À BILLES (CÔTÉ PTO) | 2.4 | 2.4 | 2.4 | 2.4 | 2.4 |
| 05 | 131 | MAGNETIC CAP<br>CAPUCHON MAGNÉTIQUE | 0.7 | 0.7 | 0.7 | 0.7 | 3.0 |
| 05 | 132 | ADJUSTMENT RING (ASS'Y)<br>ANNEAU DE RÉGLAGE (COMPLET) | 0.3 | 0.3 | 0.3 | 0.3 | 0.3 |
| 05 | 133 | STUDS AND/OR ROLLERS<br>PIVOTS ET/OU ROULEAUX | 0.8 | 0.8 | 0.8 | 0.8 | 0.8 |
| 05 | 134 | DRIVE AXLE (ASS'Y) (WITH BATTERY)<br>AXE D'ENTRAÎNEMENT (COMPLET) (AVEC BATTERIE) | 2.4 | 2.4 | 2.4 | 2.4 | |
| 05 | 154 | GEARBOX (ASS'Y)<br>BOÎTE DE VITESSE (COMPLET) | | | | | 0.6 |
| 05 | 155 | BUSHINGS, SLIDERS AND ROLLERS (DRIVE PULLEY REPAIR)<br>COUSSINETS, GLISSIÈRES ET ROULEAUX (RÉPARATION DE POULIE MOTRICE) | 0.8 | 0.8 | 0.8 | 0.8 | 0.8 |
| 05 | 156 | CAM, SLIDING FLANGE AND ROLLERS (DRIVEN PULLEY REPAIR)<br>CAME, FLASQUE COULISSANTE ET ROULEAUX (RÉPARATION DE POULIE MENÉE) | 0.8 | 0.8 | 0.8 | 0.8 | 0.8 |
| 05 | 158 | TRANSMISSION BOTTOM SEAL<br>JOINT D'ÉTANCHÉITÉ INFÉRIEUR DE LA TRANSMISSION | | | | | 1.0 |
| 05 | 162 | MIDDLE GEAR<br>ENGRENAGE DU MILIEU | | | | | 3.0 |
| 05 | 163 | LOWER GEAR<br>ENGRENAGE DU BAS | | | | | 3.0 |
| 05 | 164 | COUNTERSHAFT SEAL<br>ANNEAU D'ÉTANCHÉITÉ DE L'ARBRE DE RENVOI | | | | | 1.0 |

# TRANSMISSION SYSTEM
# SYSTÈME DE TRANSMISSION

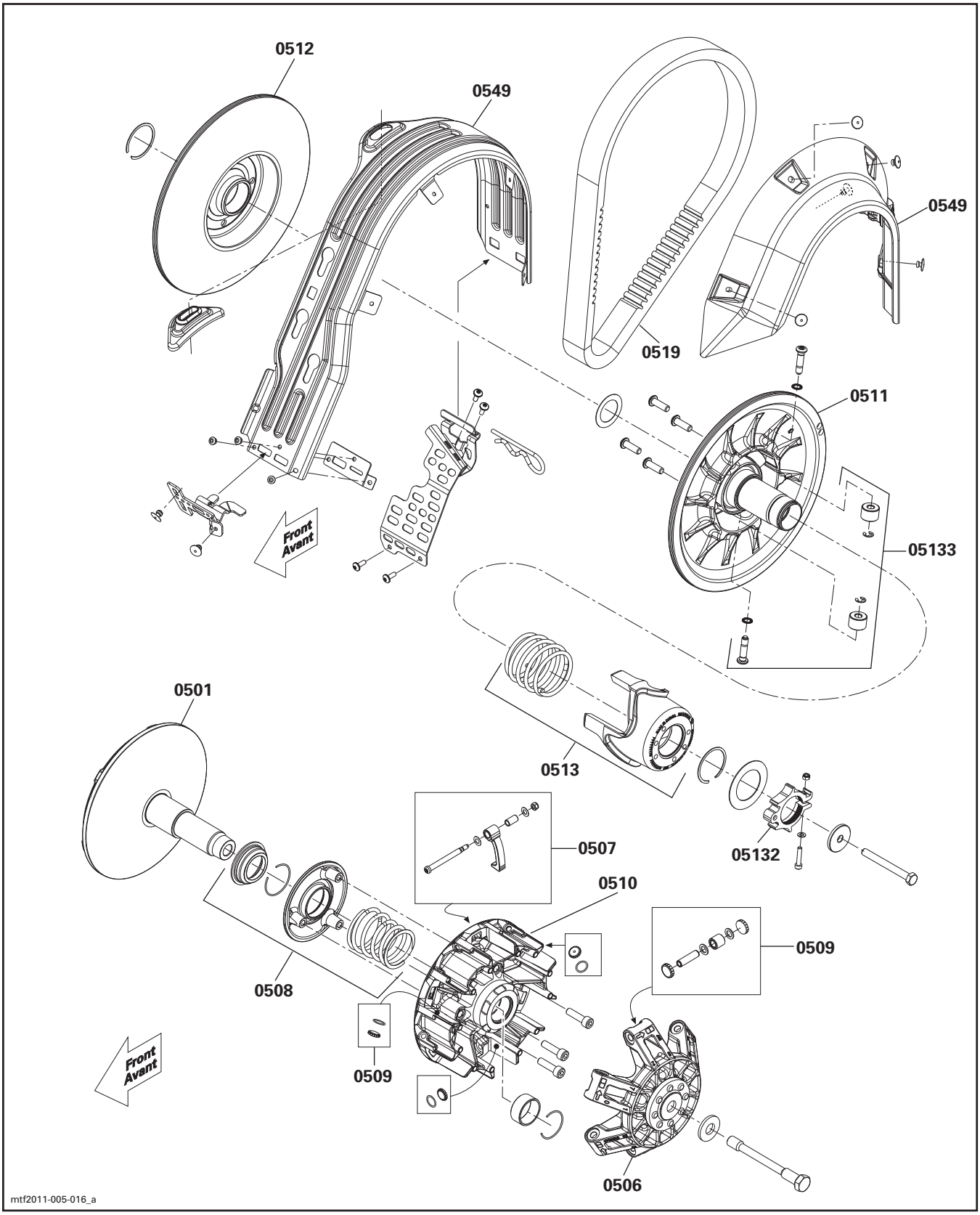

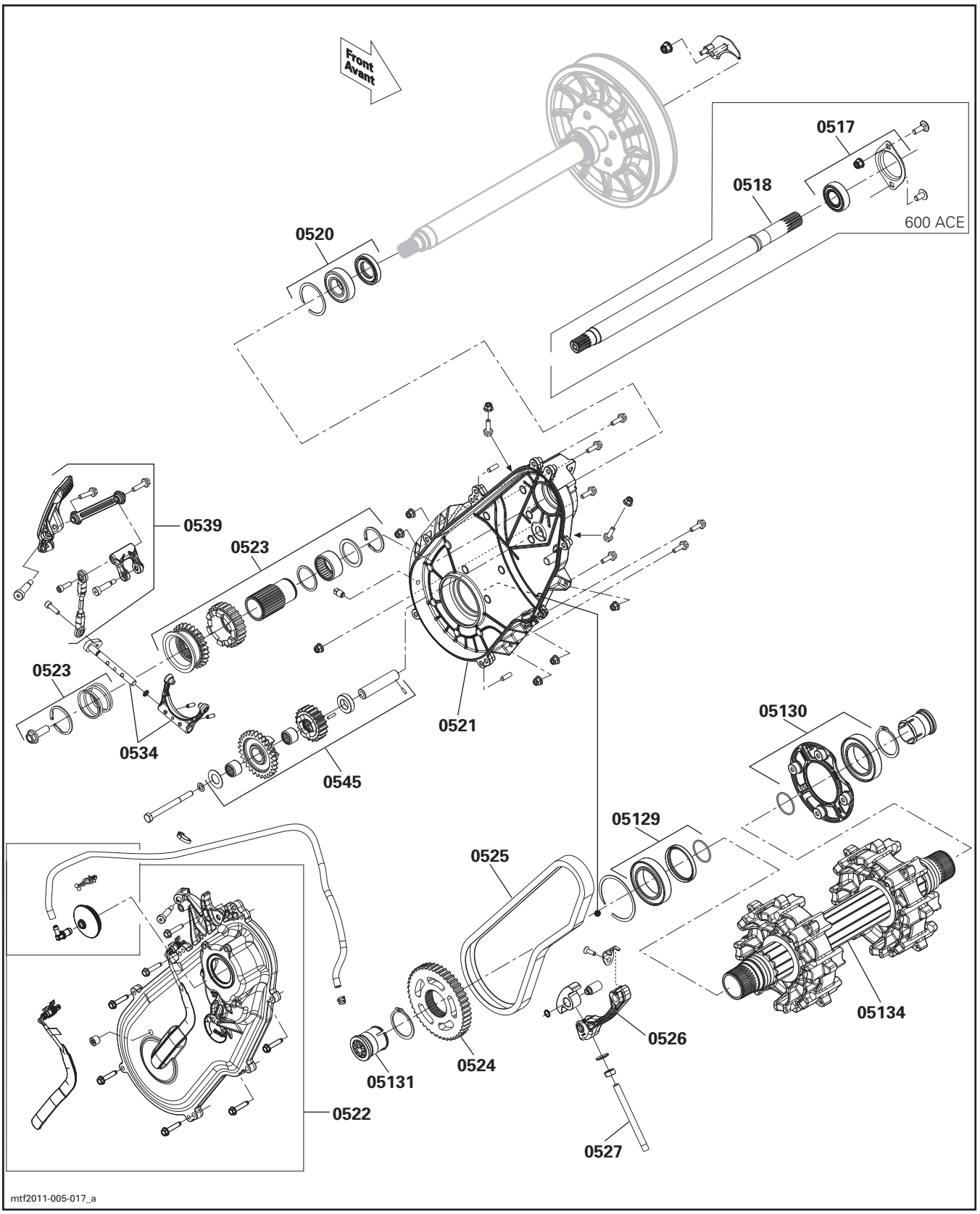
Front
Avant
0517
0518
600 ACE
0520
0539
0523
0523
0534
0545
0521
05130
05129
0525
05134
0526
0524
05131
0522
0527
mtf2011-005-017_a

# TRANSMISSION SYSTEM
# SYSTÈME DE TRANSMISSION

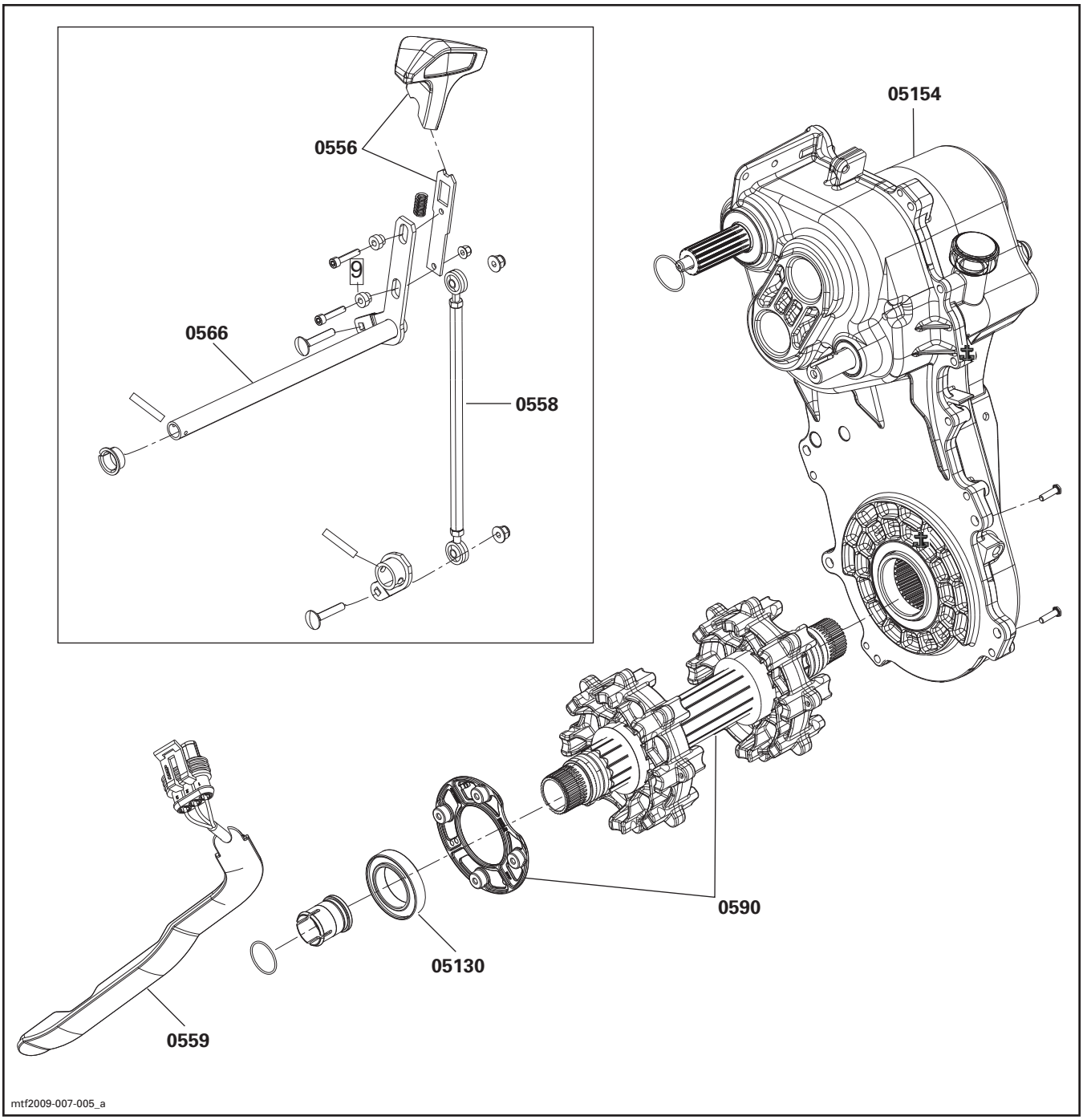

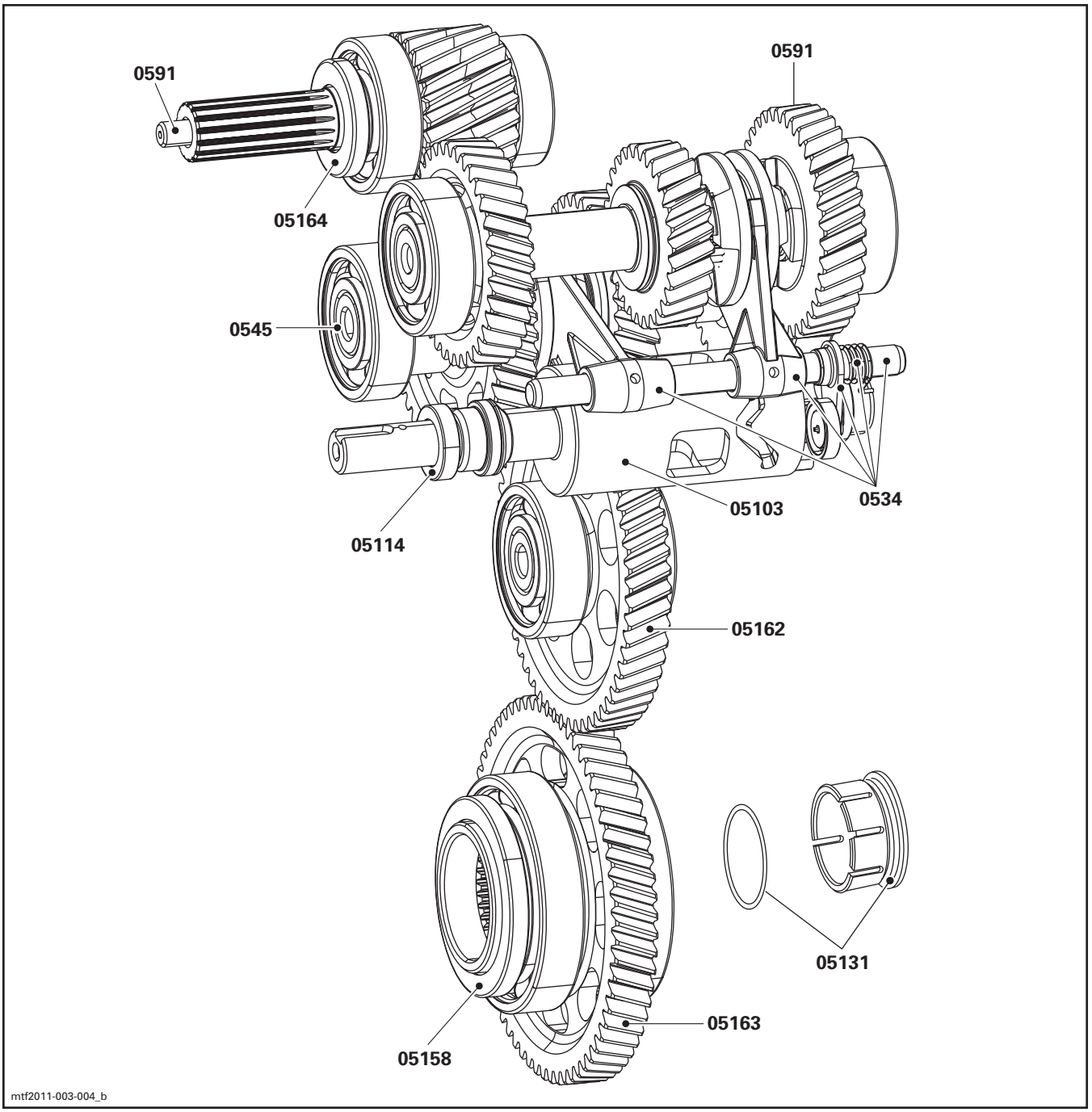
0591
0591
05164
0545
0534
05103
05114
05162
05131
05163
05158
mtf2011-003-004_b

# BRAKE SYSTEM
# SYSTÈME DE FREIN

| SYSTEM SYSTÈME | CODE | DESCRIPTION | RENEGADE 600 ACE | GRAND TOURING 600 ACE | EXPEDITION 600 ACE | TUNDRA 600 ACE | SKANDIC 600 ACE |
|---|---|---|---|---|---|---|---|
| | | | 24 | 25 | 26 | 27 | 28 |
| **06** | **00** | **NO LABOR INVOLVED<br>AUCUNE MAIN-D'OEUVRE IMPLIQUÉE** | **0** | **0** | **0** | **0** | **0** |
| **06** | 01 | BRAKE OIL HOSE<br>BOYAU À HUILE POUR FREIN | 0.5 | 0.5 | 0.5 | 0.5 | 0.5 |
| **06** | 02 | BRACKET, CALIPER, BRAKE PAD, RELEASE SPRING<br>SUPPORT, ÉTRIER, PLAQUETTE DE FREIN, CLIQUET, LEVIER | 0.8 | 0.8 | 0.8 | 0.8 | 0.8 |
| **06** | 03 | DISC<br>DISQUE | 0.7 | 0.7 | 0.7 | 0.7 | 0.7 |
| **06** | 05 | BRAKE PADS<br>PLAQUETTES DE FREIN | 0.4 | 0.4 | 0.4 | 0.4 | 0.4 |
| **06** | 06 | MASTER CYLINDER<br>MAÎTRE CYLINDRE | 0.4 | 0.4 | 0.4 | 0.4 | 0.4 |
| **06** | 07 | BRAKE LEVER (ASS'Y)<br>LEVIER DE FREIN (COMPLET) | 0.3 | 0.3 | 0.3 | 0.3 | 0.3 |
| **06** | 08 | MICROSWITCH BRAKE (ASS'Y)<br>INTERRUPTEUR MICRO-CONTACT DE FREIN (COMPLET) | 0.3 | 0.3 | 0.3 | 0.3 | 0.3 |
| **06** | 39 | DISC PROTECTOR<br>PROTECTEUR DE DISQUE | 0.3 | 0.3 | 0.3 | 0.3 | 0.3 |

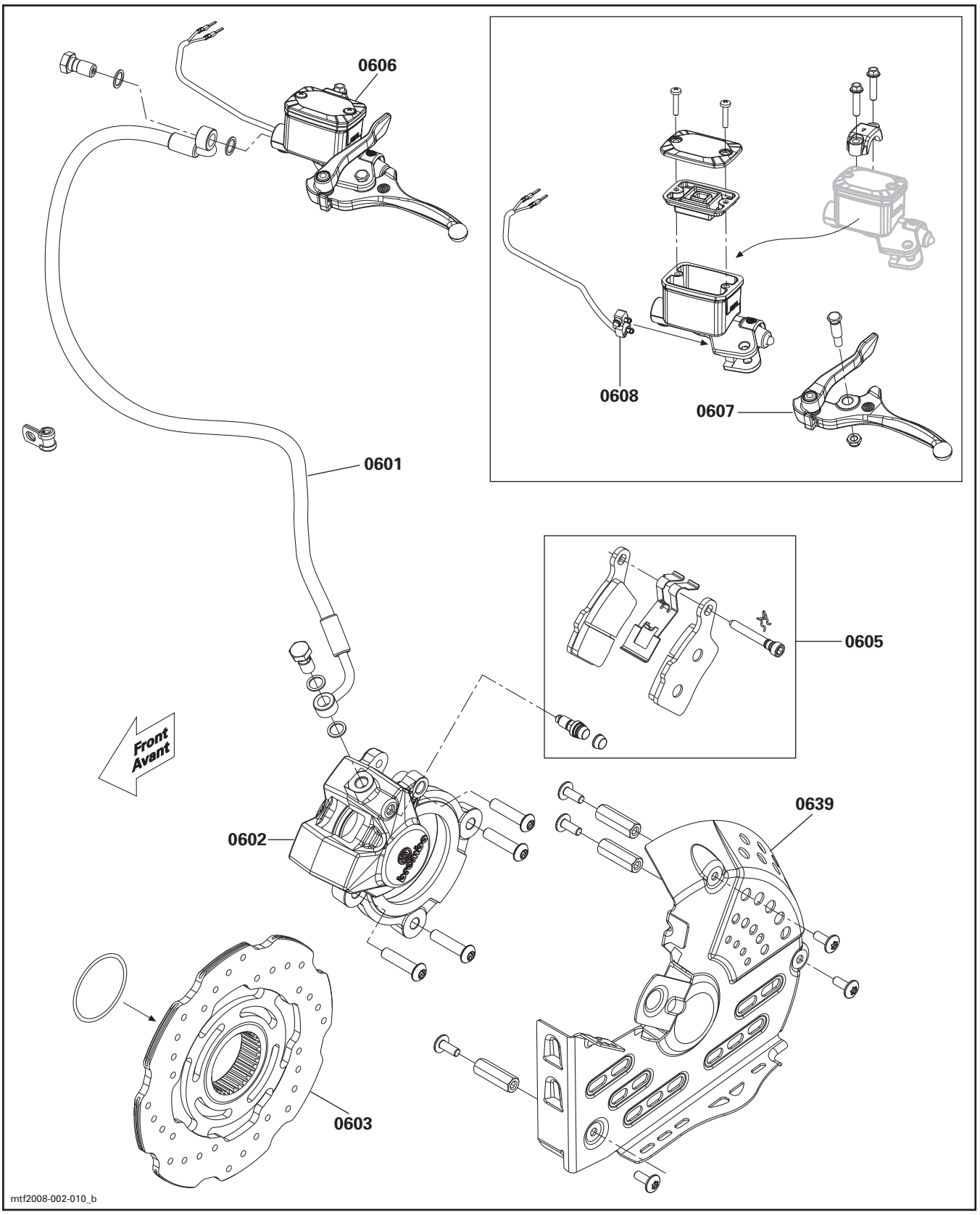
0606
0608
0607
0601
0605
Front
Avant
0602
0639
0603
mtf2008-002-010_b

# STEERING SYSTEM AND FRONT SUSPENSION
# SYSTÈME DE DIRECTION ET SUSPENSION AVANT

| SYSTEM SYSTÈME | CODE | DESCRIPTION | RENEGADE 600 ACE | GRAND TOURING 600 ACE | EXPEDITION 600 ACE | TUNDRA 600 ACE | SKANDIC 600 ACE |
|---|---|---|---|---|---|---|---|
| | | | 24 | 25 | 26 | 27 | 28 |
| **07** | 00 | **NO LABOR INVOLVED**<br>**AUCUNE MAIN-D'OEUVRE IMPLIQUÉE** | **0** | **0** | **0** | **0** | **0** |
| **07** | 01 | SKI (1)<br>SKI (1) | 0.3 | 0.3 | 0.3 | 0.3 | 0.3 |
| **07** | 02 | SKIS (2)<br>SKIS (2) | 0.4 | 0.4 | 0.4 | 0.4 | 0.4 |
| **07** | 03 | SKI RUNNER<br>LISSES | 0.3 | 0.3 | 0.3 | 0.3 | 0.3 |
| **07** | 08 | SKI LEG (RH) AND/OR BUSHING<br>JAMBE DE SKI (DROITE) ET/OU DOUILLE | 0.5 | 0.5 | 0.5 | 0.5 | 0.5 |
| **07** | 09 | SKI LEG (LH) AND/OR BUSHING<br>JAMBE DE SKI (GAUCHE) ET/OU DOUILLE | 0.5 | 0.5 | 0.5 | 0.5 | 0.5 |
| **07** | 10 | STEERING ARM (RH)<br>BRAS DE DIRECTION (DROIT) | | | | 0.5 | 0.5 |
| **07** | 11 | STEERING ARM (LH)<br>BRAS DE DIRECTION (GAUCHE) | | | | 0.5 | 0.5 |
| **07** | 12 | STEERING ARM BALL JOINT (RH)<br>JOINT À ROTULE DE BRAS DE DIRECTION (DROIT) | 0.3 | 0.3 | 0.3 | 0.3 | 0.3 |
| **07** | 13 | STEERING ARM BALL JOINT (LH)<br>JOINT À ROTULE DE BRAS DE DIRECTION (GAUCHE) | 0.3 | 0.3 | 0.3 | 0.3 | 0.3 |
| **07** | 14 | TELESCOPIC TUBE, SPRING, BUSHINGS<br>TUBE TÉLESCOPIQUE, RESSORT, DOUILLES | | | | 0.6 | 0.6 |
| **07** | 17 | TOP CAP<br>CAPUCHON SUPÉRIEUR | | | | 0.3 | 0.3 |
| **07** | 20 | TIE ROD COVER<br>CAPUCHON DE TIMONERIE | 0.3 | 0.3 | 0.3 | | |
| **07** | 23 | STEERING MAIN TUBE BALL JOINT<br>JOINT À ROTULE DE COLONNE DE DIRECTION | 0.6 | 0.6 | 0.6 | 0.6 | 0.6 |
| **07** | 24 | STEERING MAIN TUBE<br>COLONNE DE DIRECTION | 1.4 | 1.4 | 1.4 | 1.4 | 1.4 |
| **07** | 25 | HANDLE BAR<br>GUIDON | 1.1 | 1.1 | 1.1 | 1.1 | 1.1 |
| **07** | 26 | HANDLE BAR GRIP (RIGHT AND/OR LEFT)<br>GAINE DE GUIDON (DROITE ET/OU GAUCHE) | 0.3 | 0.3 | 0.3 | 0.3 | 0.3 |
| **07** | 27 | HANDLE BAR PADDING<br>COUSSINET DE GUIDON | 0.3 | 0.3 | 0.3 | 0.3 | 0.3 |
| **07** | 28 | UPPER STEERING MAIN TUBE BUSHING<br>DOUILLE SUPÉRIEURE DE COLONNE DE DIRECTION | 0.5 | 0.5 | 0.5 | 0.5 | 0.5 |
| **07** | 29 | LOWER STEERING MAIN TUBE BUSHING<br>DOUILLE INFÉRIEURE DE COLONNE DE DIRECTION | 0.5 | 0.5 | 0.5 | 0.5 | 0.5 |
| **07** | 32 | LOWER ARM (LH OR RH)<br>BRAS DE SUSPENSION INFÉRIEUR (GAUCHE OU DROIT) | 0.6 | 0.6 | 0.6 | | |

| SYSTEM SYSTÈME | CODE | DESCRIPTION | RENEGADE 600 ACE | GRAND TOURING 600 ACE | EXPEDITION 600 ACE | TUNDRA 600 ACE | SKANDIC 600 ACE |
|---|---|---|---|---|---|---|---|
| | | | 24 | 25 | 26 | 27 | 28 |
| 07 | 33 | UPPER ARM (LH OR RH)<br>BRAS DE SUSPENSION SUPÉRIEUR (GAUCHE OU DROIT) | 0.5 | 0.5 | 0.5 | | |
| 07 | 35 | HANDLE BAR SUPPORT<br>SUPPORT DE GUIDON | 0.3 | 0.3 | 0.3 | 0.3 | 0.3 |
| 07 | 37 | SHOCK AND/OR SPRING (1)<br>AMORTISSEUR ET/OU RESSORT (1) | 0.3 | 0.3 | 0.3 | 0.6 | 0.6 |
| 07 | 38 | SHOCKS AND/OR SPRINGS (2)<br>AMORTISSEURS ET/OU RESSORTS (2) | 0.4 | 0.4 | 0.4 | 0.4 | 1.0 |
| 07 | 39 | STABILIZER BAR<br>BARRE STABILISATRICE | 0.5 | 0.5 | 0.5 | | |
| 07 | 51 | STEERING MAIN TUBE BALL JOINT<br>JOINT DE ROTULE DE LA COLONNE DE DIRECTION | | | | 0.5 | 0.5 |
| 07 | 59 | TIE ROD (LH)<br>BARRE D'ACCOUPLEMENT (GAUCHE) | 0.3 | 0.3 | 0.3 | 0.3 | 0.3 |
| 07 | 60 | TIE ROD (RH)<br>BARRE D'ACCOUPLEMENT (DROITE) | 0.3 | 0.3 | 0.3 | 0.3 | 0.3 |
| 07 | 61 | LEVER STABILIZER<br>LEVIER STABILISATEUR | 0.3 | 0.3 | 0.3 | | |
| 07 | 64 | DOUBLE BALL JOINT<br>JOINT À ROTULE DOUBLE | 0.3 | 0.3 | 0.3 | | |
| 07 | 102 | LOWER DAMPER<br>AMORTISSEUR VIBRATION INFÉRIEUR | 0.5 | 0.5 | 0.5 | | |
| 07 | 111 | LTS MODULE<br>MODULE LTS | | | | 3.5 | 3.5 |
| 07 | 124 | STRAP<br>SANGLE | | | | 0.3 | 0.3 |

# STEERING SYSTEM AND FRONT SUSPENSION
# SYSTÈME DE DIRECTION ET SUSPENSION AVANT

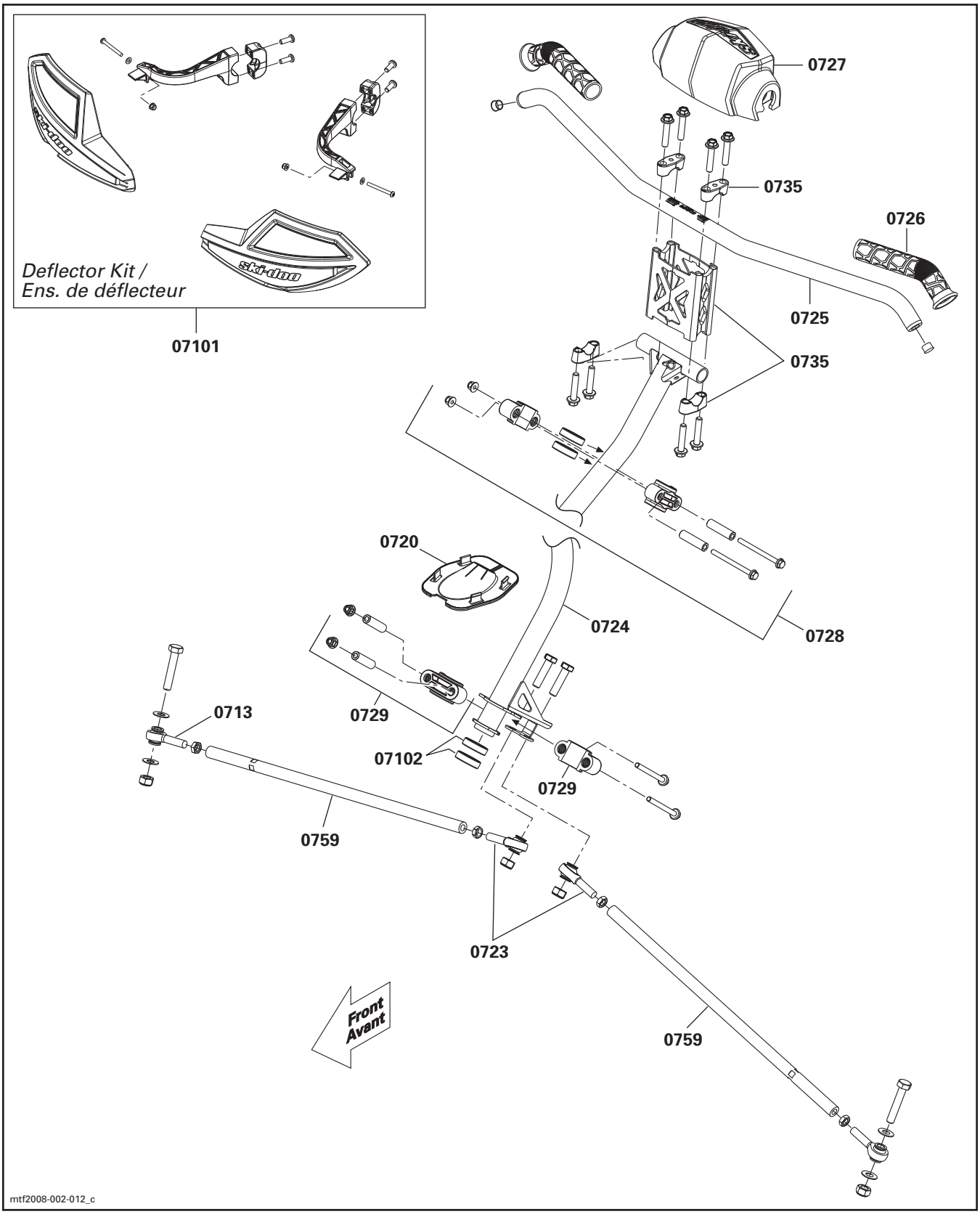

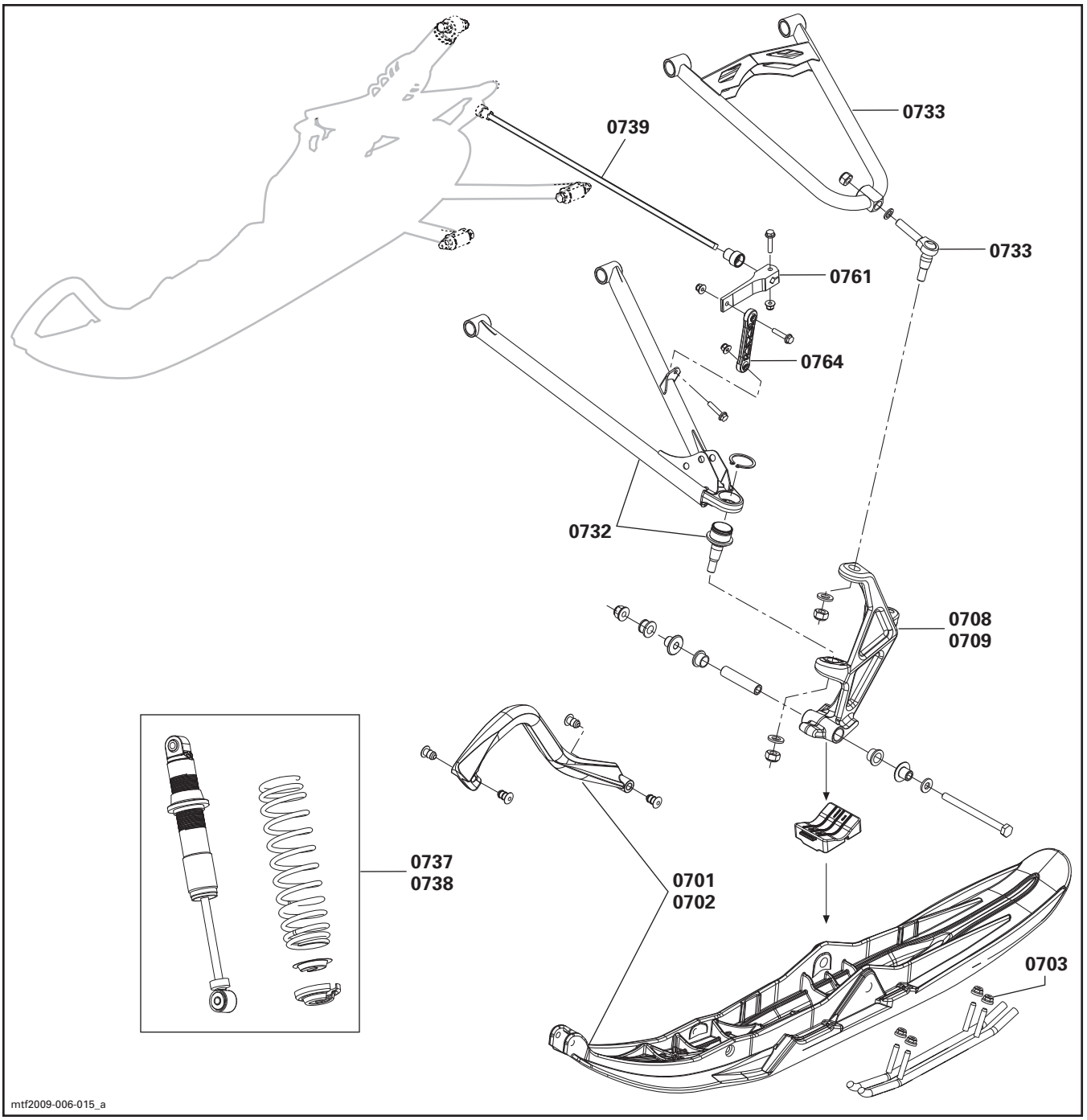
0739
0733
0733
0761
0764
0732
0708
0709
0737
0738
0701
0702
0703
mtf2009-006-015_a

# STEERING SYSTEM AND FRONT SUSPENSION
# SYSTÈME DE DIRECTION ET SUSPENSION AVANT

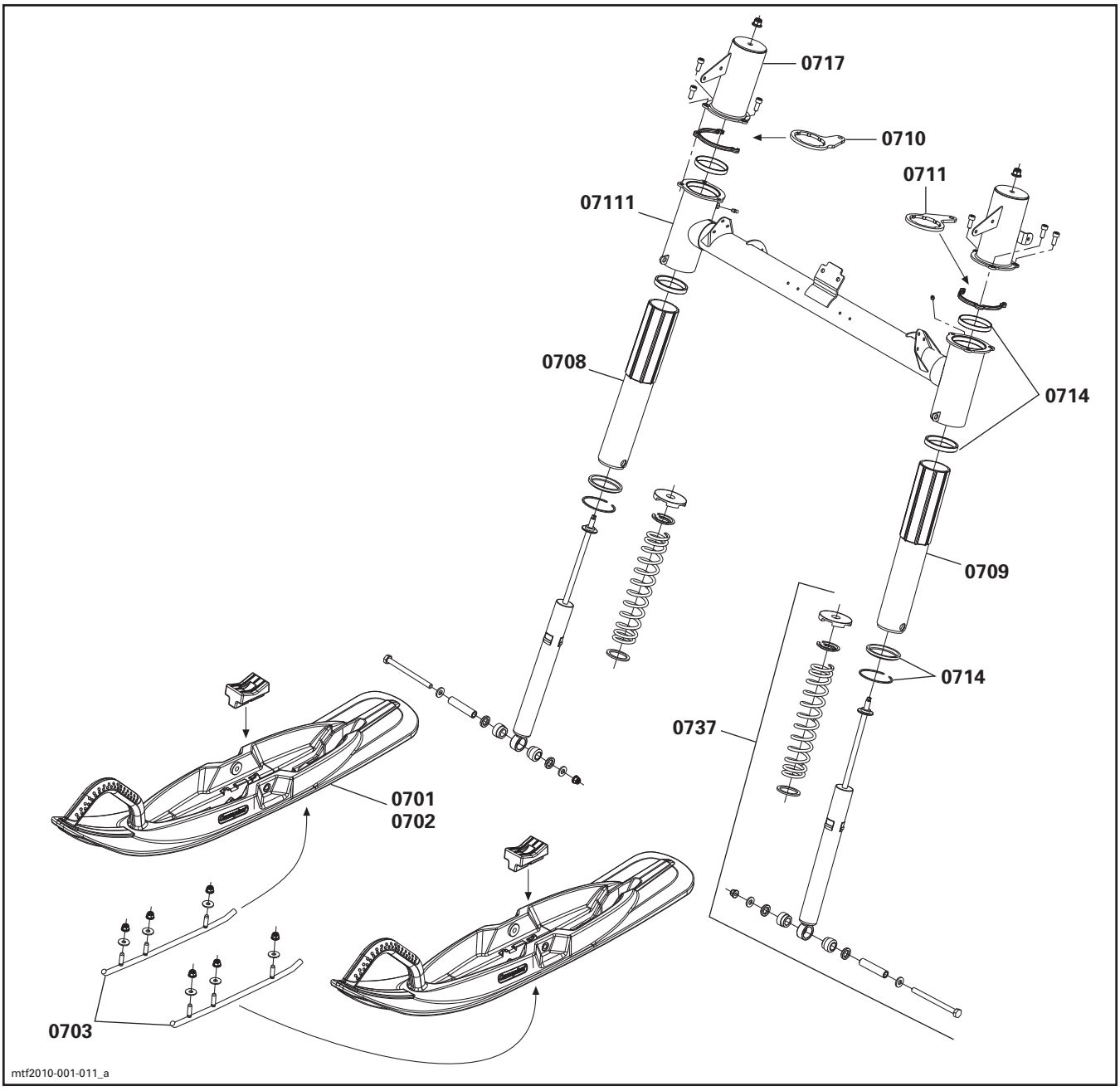

| SYSTEM SYSTÈME | CODE | DESCRIPTION | RENEGADE 600 ACE | GRAND TOURING 600 ACE | EXPEDITION 600 ACE | TUNDRA 600 ACE | SKANDIC 600 ACE |
|---|---|---|---|---|---|---|---|
| | | | 24 | 25 | 26 | 27 | 28 |
| 08 | 00 | **NO LABOR INVOLVED**<br>**AUCUNE MAIN-D'OEUVRE IMPLIQUÉE** | 0 | 0 | 0 | 0 | 0 |
| 08 | 01 | SLIDER SHOE (1)<br>GLISSIÈRE (1) | 0.5 | 0.5 | 0.5 | 0.5 | 0.5 |
| 08 | 02 | SLIDER SHOES (2)<br>GLISSIÈRES (2) | 0.7 | 0.7 | 0.7 | 0.7 | 0.7 |
| 08 | 03 | RUNNER (1)<br>PORTE-GLISSIÈRE (1) | 1.2 | 1.2 | 1.5 | 1.5 | 1.5 |
| 08 | 04 | RUNNERS (2)<br>PORTE-GLISSIÈRES (2) | 1.5 | 1.5 | 1.9 | 1.9 | 1.9 |
| 08 | 09 | FRONT IDLER WHEEL AND/OR BEARING (1)<br>ROUE DE SUPPORT AVANT ET/OU ROULEMENT (1) | 0.3 | 0.3 | 0.3 | 0.3 | 0.3 |
| 08 | 10 | FRONT IDLER WHEELS AND/OR BEARINGS AND/OR SHAFTS (2)<br>ROUES DE SUPPORT AVANT ET/OU ROULEMENTS ET/OU ARBRES (2) | 0.4 | 0.4 | 0.4 | 0.4 | 0.4 |
| 08 | 11 | FRONT IDLER WHEEL SUPPORT (1)<br>SUPPORT DE ROUE AVANT (1) | 0.3 | 0.3 | | | |
| 08 | 12 | FRONT IDLER WHEELS SUPPORTS (2)<br>SUPPORTS DE ROUE AVANT (2) | 0.4 | 0.4 | | | |
| 08 | 13 | CENTER IDLER WHEEL AND/OR BEARING (1)<br>ROUE DE SUPPORT CENTRALE ET/OU ROULEMENT (1) | 0.3 | 0.3 | 0.3 | 0.3 | 0.3 |
| 08 | 14 | CENTER IDLER WHEELS AND/OR BEARINGS AND/OR SHAFTS (2)<br>ROUES DE SUPPORT CENTRALES ET/OU ROULEMENTS ET/OU ARBRES (2) | 0.4 | 0.4 | 0.4 | 0.4 | 0.4 |
| 08 | 15 | CENTER IDLER WHEEL SUPPORT (1)<br>SUPPORT DE ROUE CENTRALE (1) | 0.3 | 0.3 | 0.3 | 0.3 | 0.3 |
| 08 | 17 | REAR IDLER AND/OR BEARING (1)<br>ROUE DE SUPPORT ARRIÈRE ET/OU ROULEMENT (1) | 0.4 | 0.4 | 0.3 | 0.3 | 0.3 |
| 08 | 18 | REAR IDLERS AND/OR BEARINGS (2)<br>ROUES DE SUPPORT ARRIÈRE ET/OU ROULEMENTS (2) | 0.5 | 0.5 | 0.4 | 0.4 | 0.4 |
| 08 | 19 | REAR IDLER WHEELS AXLE<br>ESSIEU DE ROUES DE SUPPORT ARRIÈRE | 0.5 | 0.5 | 0.5 | 0.5 | 0.5 |
| 08 | 22 | TAIL PIVOT IDLER WHEEL, INSIDE (1)<br>ROUE SUPPORT DE PIVOT ARRIÈRE ET/OU ROULEMENT INTÉRIEUR (1) | | | 0.3 | 0.3 | 0.3 |
| 08 | 23 | TAIL PIVOT IDLER WHEELS OR AXLE (2)<br>ROUES SUPPORT DE PIVOT ARRIÈRE/ROULEMENT OU ESSIEU (2) | | | 0.3 | 0.3 | 0.3 |
| 08 | 29 | AXEL (STOPPER STRAP)<br>AXE (COURROIE D'ARRÊT) | 0.3 | 0.3 | 0.3 | 0.3 | 0.3 |
| 08 | 31 | TRACK TENSION ADJUSTER (1)<br>PLAQUE DE RÉGLAGE TENSION CHENILLE (1) | 0.4 | 0.4 | 0.4 | 0.4 | 0.4 |
| 08 | 32 | TRACK TENSION ADJUSTERS (2)<br>PLAQUES DE RÉGLAGE TENSION CHENILLE (2) | 0.5 | 0.5 | 0.5 | 0.5 | 0.5 |
| 08 | 33 | RUNNER RUBBER STOPPER (1)<br>BUTÉE DE CAOUTCHOUC DE PORTE-GLISSIÈRE (1) | 0.3 | 0.3 | 0.3 | 0.3 | 0.3 |
| 08 | 34 | RUNNER RUBBER STOPPERS (2)<br>BUTÉES DE CAOUTCHOUC DE PORTE-GLISSIÈRE (2) | 0.4 | 0.4 | 0.4 | 0.4 | 0.4 |
| 08 | 35 | FRONT ARM AND/OR AXLE<br>BRAS AVANT ET/OU ESSIEU | 0.8 | 0.8 | 0.8 | 0.8 | 0.8 |

# REAR SUSPENSION SYSTEM AND TRACK
# SYSTÈME DE SUSPENSION ARRIÈRE ET CHENILLE

| SYSTEM SYSTÈME | CODE | DESCRIPTION | RENEGADE 600 ACE | GRAND TOURING 600 ACE | EXPEDITION 600 ACE | TUNDRA 600 ACE | SKANDIC 600 ACE |
|---|---|---|---|---|---|---|---|
| | | | 24 | 25 | 26 | 27 | 28 |
| 08 | 36 | FRONT ARM STOPPER STRAP/STOPPER BOLT<br>COURROIE D'ARRÊT BRAS AVANT/BOULON D'ARRÊT | 0.3 | 0.3 | 0.3 | 0.3 | 0.3 |
| 08 | 37 | FRONT ARM SUPPORT<br>SUPPORT DE BRAS AVANT | | | 0.6 | 0.6 | 0.6 |
| 08 | 40 | REAR ARM AND/OR AXLE<br>BRAS ARRIÈRE ET/OU ESSIEU | 0.7 | 0.7 | 0.7 | 0.7 | 0.7 |
| 08 | 41 | REAR ARM IDLER WHEELS (1-2) AND/OR SHAFT-CROSS<br>ROUES DE SUPPORT BRAS ARRIÈRE (1-2) ET/OU AXE TRANSVERSALE | 0.3 | 0.3 | 0.3 | 0.3 | 0.3 |
| 08 | 42 | REAR ARM SHACKLE<br>JUMELLE DE BRAS ARRIÈRE | 0.3 | 0.3 | 0.3 | 0.3 | 0.3 |
| 08 | 44 | REAR AND FRONT ARMS<br>BRAS ARRIÈRE ET AVANT | 1.5 | 1.5 | 1.5 | 1.5 | 1.5 |
| 08 | 50 | REAR TORSION SPRING AND/OR WHEEL (1)<br>RESSORT DE TORSION ARRIÈRE ET/OU ROUE (1) | 0.3 | 0.3 | 0.3 | 0.3 | 0.3 |
| 08 | 51 | REAR TORSION SPRINGS AND/OR WHEELS (2)<br>RESSORTS DE TORSION ET/OU ROUES (2) | 0.4 | 0.4 | 0.4 | 0.4 | 0.4 |
| 08 | 52 | TORSION SPRING SUPPORT<br>SUPPORT DE RESSORT DE TORSION | 0.3 | 0.3 | 0.3 | 0.3 | 0.3 |
| 08 | 53 | SPRING ADJUSTMENT CAM (1)<br>CAME DE RÉGLAGE DE RESSORT (1) | 0.3 | 0.3 | 0.3 | 0.3 | 0.3 |
| 08 | 54 | SPRING ADJUSTMENT CAMS (2)<br>CAMES DE RÉGLAGE DE RESSORT (2) | 0.4 | 0.4 | 0.4 | 0.4 | 0.4 |
| 08 | 55 | SHOCK AND/OR SPRING AND/OR BUSHING<br>AMORTISSEUR ET/OU RESSORT ET/OU DOUILLE | 0.5 | 0.5 | 0.5 | 0.5 | 0.5 |
| 08 | 69 | TRACK (1)<br>CHENILLE (1) | 2.2 | 2.2 | 2.2 | 2.2 | 2.2 |
| 08 | 71 | CLEATS AND/OR GUIDES (0-9)<br>SEGMENTS GUIDE ET/OU GUIDES (0-9) | 0.3 | 0.3 | 0.3 | 0.3 | 0.3 |
| 08 | 72 | CLEATS AND/OR GUIDES (10-14)<br>SEGMENTS GUIDE ET/OU GUIDES (10-14) | 0.4 | 0.4 | 0.4 | 0.4 | 0.4 |
| 08 | 73 | CLEATS AND/OR GUIDES (15-19)<br>SEGMENTS GUIDE ET/OU GUIDES (15-19) | 0.5 | 0.5 | 0.5 | 0.5 | 0.5 |
| 08 | 74 | CLEATS AND/OR GUIDES (20-24)<br>SEGMENTS GUIDE ET/OU GUIDES (20-24) | 0.6 | 0.6 | 0.6 | 0.6 | 0.6 |
| 08 | 75 | CLEATS AND/OR GUIDES (25-29)<br>SEGMENTS GUIDE ET/OU GUIDES (25-29) | 0.7 | 0.7 | 0.7 | 0.7 | 0.7 |
| 08 | 76 | CLEATS AND/OR GUIDES (30-34)<br>SEGMENTS GUIDE ET/OU GUIDES (30-34) | 0.8 | 0.8 | 0.8 | 0.8 | 0.8 |
| 08 | 77 | CLEATS AND/OR GUIDES (35-39)<br>SEGMENTS GUIDE ET/OU GUIDES (35-39) | 0.9 | 0.9 | 0.9 | 0.9 | 0.9 |
| 08 | 78 | CLEATS AND/OR GUIDES (40-44)<br>SEGMENTS GUIDE ET/OU GUIDES (40-44) | 1.0 | 1.0 | 1.0 | 1.0 | 1.0 |
| 08 | 79 | CLEATS AND/OR GUIDES (45-49)<br>SEGMENTS GUIDE ET/OU GUIDES (45-49) | 1.1 | 1.1 | 1.1 | 1.1 | 1.1 |
| 08 | 80 | CLEATS AND/OR GUIDES (50-54)<br>SEGMENTS GUIDE ET/OU GUIDES (50-54) | | | 1.2 | 1.2 | 1.2 |

| SYSTEM SYSTÈME | CODE | DESCRIPTION | RENEGADE 600 ACE | GRAND TOURING 600 ACE | EXPEDITION 600 ACE | TUNDRA 600 ACE | SKANDIC 600 ACE |
|---|---|---|---|---|---|---|---|
| | | | 24 | 25 | 26 | 27 | 28 |
| 08 | 81 | CLEATS AND/OR GUIDES (55-59)<br>SEGMENTS GUIDE ET/OU GUIDES (55-59) | | | 1.3 | 1.3 | 1.3 |
| 08 | 82 | CLEATS AND/OR GUIDES (60-64)<br>SEGMENTS GUIDE ET/OU GUIDES (60-64) | | | 1.4 | 1.4 | 1.4 |
| 08 | 83 | CLEATS AND/OR GUIDES (65-70)<br>SEGMENTS GUIDE ET/OU GUIDES (65-70) | | | 1.5 | 1.5 | 1.5 |
| 08 | 85 | ADJUSTMENT SCREW (1)<br>VIS D'AJUSTEMENT (1) | 0.3 | 0.3 | 0.3 | 0.3 | 0.3 |
| 08 | 86 | ADJUSTMENT SCREWS (2)<br>VIS D'AJUSTEMENT (2) | 0.4 | 0.4 | 0.4 | 0.4 | 0.4 |
| 08 | 87 | SHOCK SUPPORT AND/OR AXLE<br>SUPPORT D'AMORTISSEUR ET/OU AXE | 0.4 | 0.4 | 0.4 | 0.4 | 0.4 |
| 08 | 88 | FRONT SHOCK AND/OR SPRING<br>AMORTISSEUR AVANT ET/OU RESSORT | 0.5 | 0.5 | 0.5 | 0.5 | 0.5 |
| 08 | 89 | FRONT WHEELS SUPPORT AND/OR BEARINGS (3)<br>ROUES DE SUPPORT AVANT ET/OU ROULEMENTS À BILLE (3) | 0.5 | 0.5 | 0.5 | 0.5 | 0.5 |
| 08 | 91 | REAR PIVOT ARM<br>BRAS DE PIVOT ARRIÈRE | | | 0.7 | 0.7 | 0.7 |
| 08 | 144 | CAM AXLE, SPRING, SHAFT AND CUSHIONS<br>AXE DE CAME, RESSORT, ARBRE ET COUSSINETS | | | 0.5 | 0.5 | 0.5 |
| 08 | 145 | BLOCK, GUIDE, CAM AND PIVOT<br>BLOC, GUIDE, CAME ET PIVOT | | | 0.7 | 0.7 | 0.7 |

# REAR SUSPENSION SYSTEM AND TRACK
# SYSTÈME DE SUSPENSION ARRIÈRE ET CHENILLE

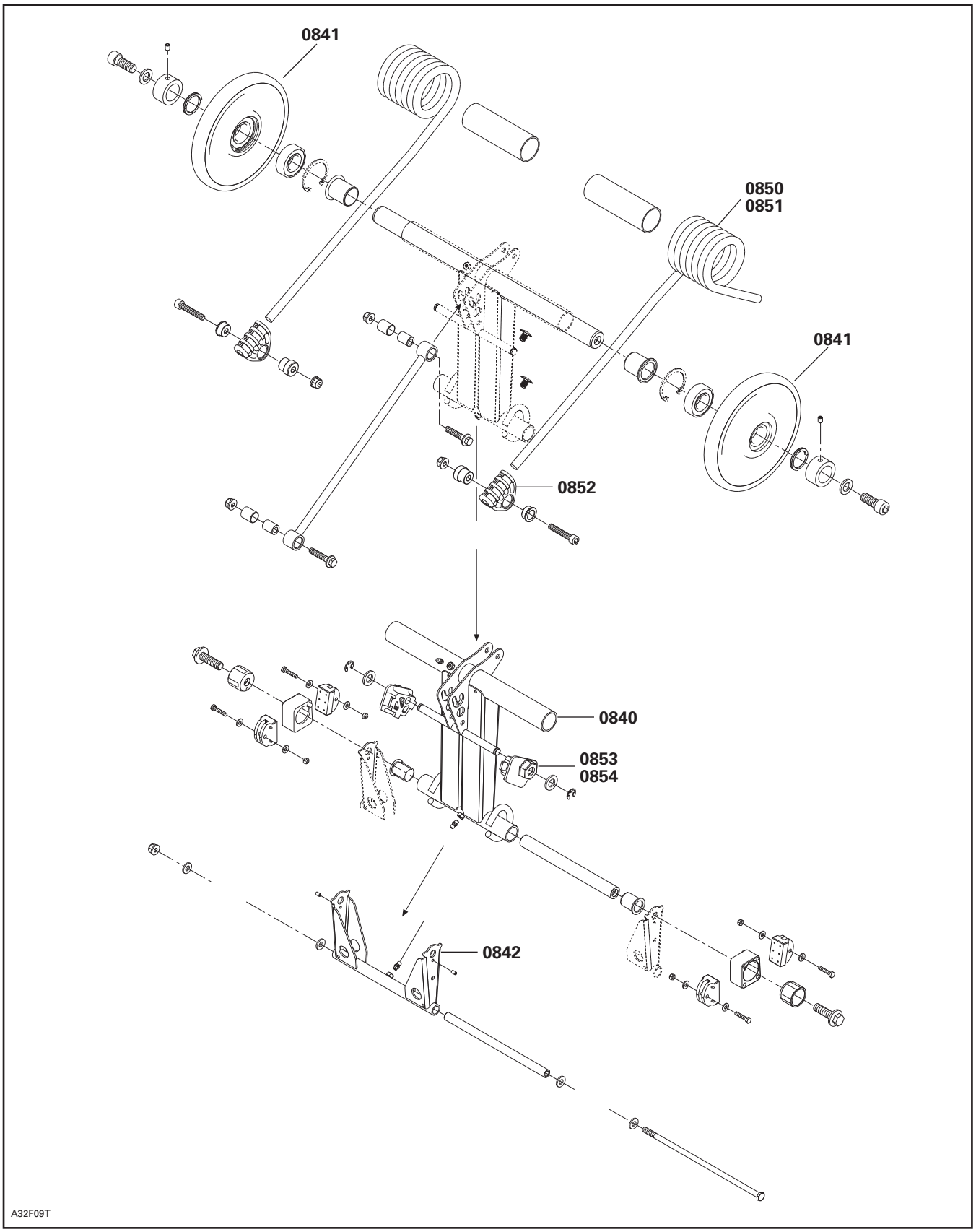

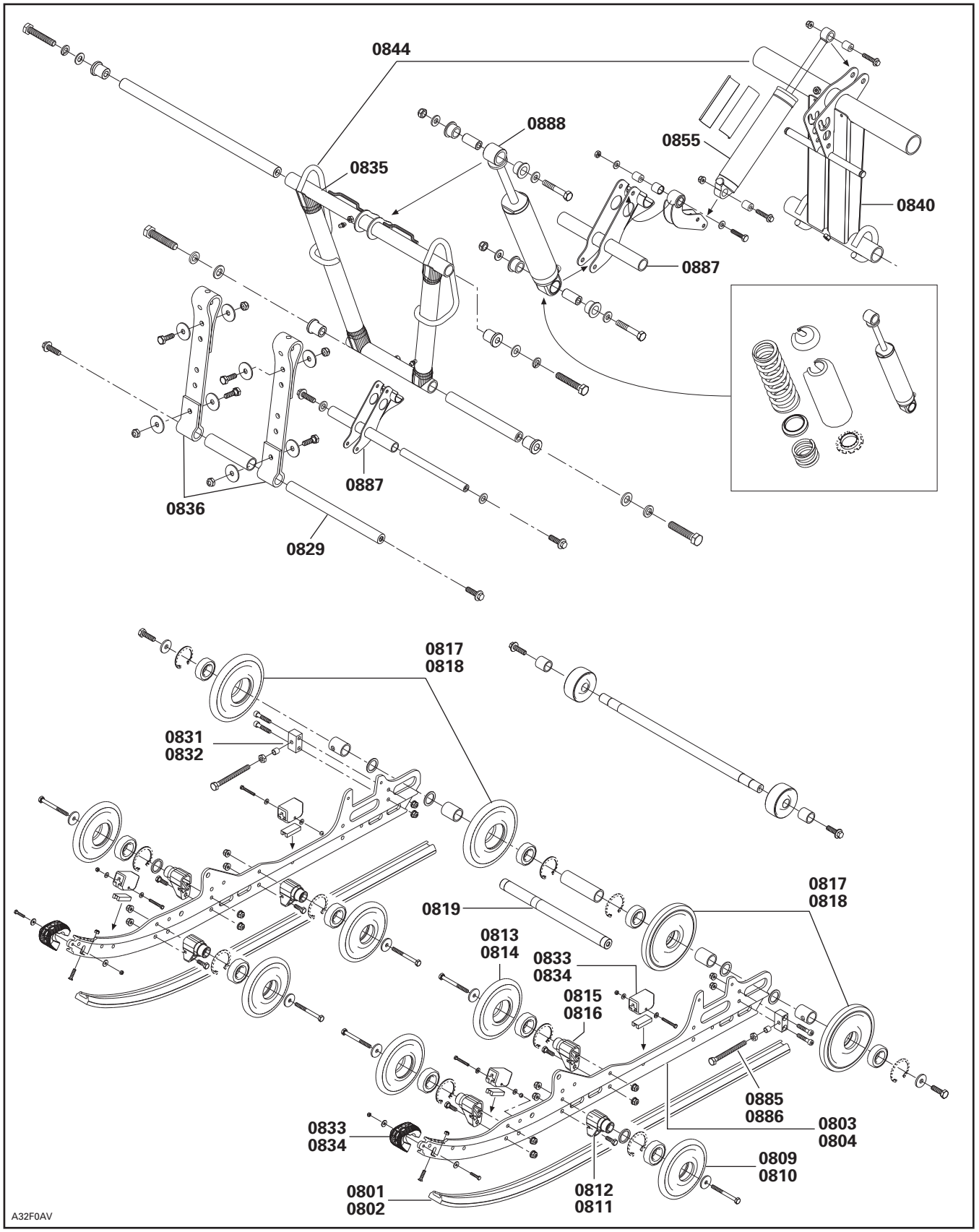
0844
0888
0855
0835
0840
0887
0887
0836
0829
0817
0818
0831
0832
0819
0817
0818
0813
0814
0833
0834
0815
0816
0885
0886
0803
0804
0833
0834
0809
0810
0801
0802
0812
0811
A32F0AV

# REAR SUSPENSION SYSTEM AND TRACK
# SYSTÈME DE SUSPENSION ARRIÈRE ET CHENILLE

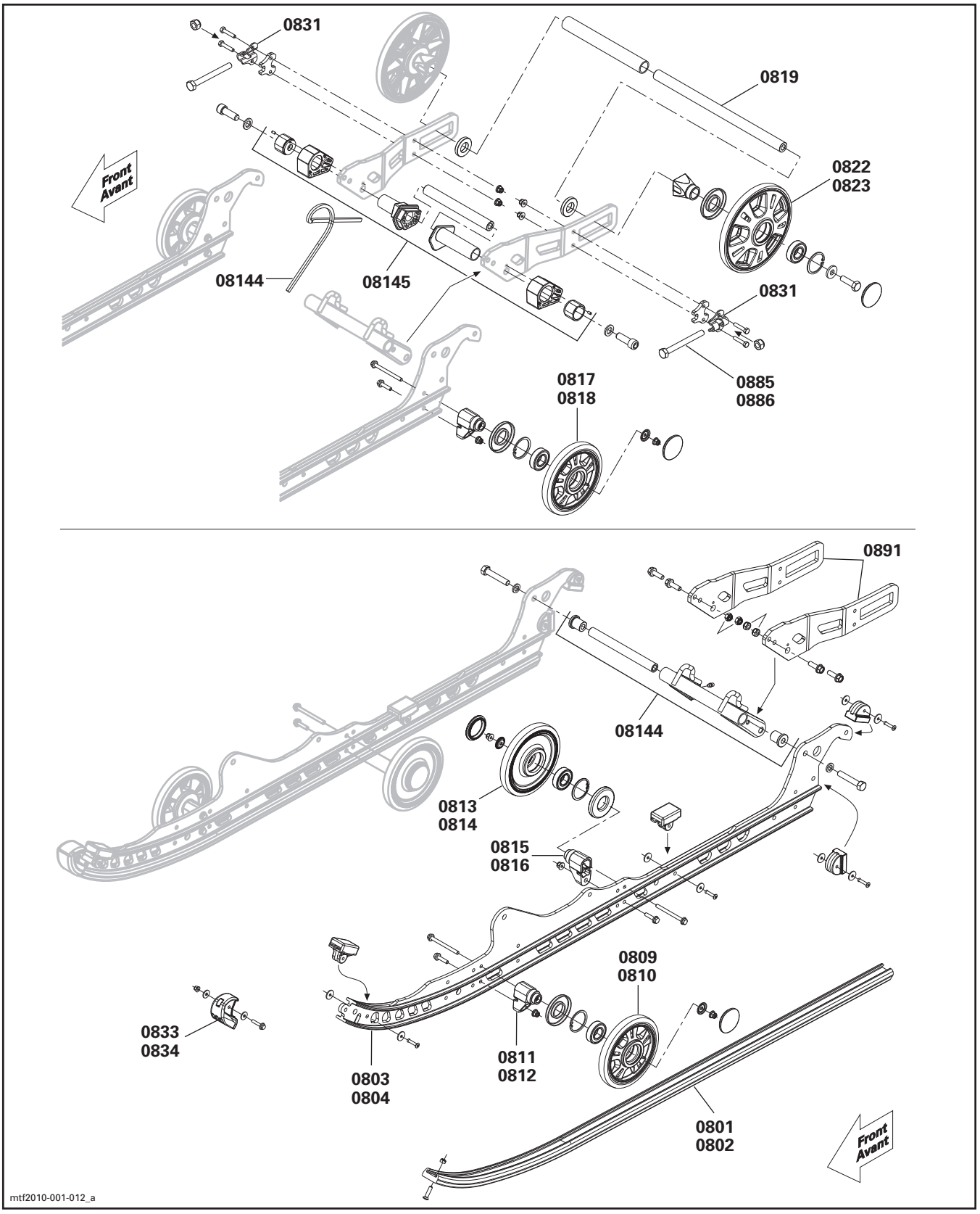

| SYSTEM SYSTÈME | CODE | DESCRIPTION | RENEGADE 600 ACE | GRAND TOURING 600 ACE | EXPEDITION 600 ACE | TUNDRA 600 ACE | SKANDIC 600 ACE |
|---|---|---|---|---|---|---|---|
| | | | 24 | 25 | 26 | 27 | 28 |
| **09** | **00** | **NO LABOR INVOLVED<br>AUCUNE MAIN-D'OEUVRE IMPLIQUÉE** | **0** | **0** | **0** | **0** | **0** |
| **09** | 01 | HOOD<br>CAPOT | 0.3 | 0.3 | 0.3 | 0.3 | 0.3 |
| **09** | 05 | HOOD DECALS (LH OR RH)<br>AUTOCOLLANTS DU CAPOT (GAUCHE OU DROIT) | 0.3 | 0.3 | 0.3 | 0.3 | 0.3 |
| **09** | 06 | HOOD DECALS (ALL)<br>AUTOCOLLANTS DU CAPOT (TOUS) | 0.5 | 0.5 | 0.5 | 0.5 | 0.5 |
| **09** | 09 | WINDSHIELD<br>PARE-BRISE | 0.3 | 0.3 | 0.3 | 0.3 | 0.3 |
| **09** | 13 | CARGO RACK<br>SUPPORT À BAGAGES | | 0.4 | 0.4 | 0.4 | |
| **09** | 14 | FRONT BUMPER<br>PARE-CHOCS AVANT | 0.4 | 0.4 | 0.4 | 0.4 | 0.4 |
| **09** | 17 | CONSOLE<br>CONSOLE | 0.3 | 0.3 | 0.3 | 0.3 | 0.3 |
| **09** | 21 | SEAT (ASS'Y)<br>SIÈGE (COMPLET) | 0.3 | 0.3 | 0.3 | 0.3 | |
| **09** | 22 | SEAT COVER AND/OR FOAM<br>HOUSSE DE SIÈGE ET/OU MOUSSE | 1.0 | 1.0 | 1.0 | 1.0 | 0.7 |
| **09** | 23 | SEAT FOAM<br>CAOUTCHOUC MOUSSE DE SIÈGE | 1.0 | 1.0 | 1.0 | 1.0 | 0.7 |
| **09** | 34 | REAR BUMPER<br>PARE-CHOCS ARRIÈRE | 0.3 | 0.3 | 0.3 | 0.3 | 0.3 |
| **09** | 35 | HITCH SUPPORT (ALL PARTS)<br>SUPPORT D'ATTELAGE (TOUTES LES PIÈCES) | | | 0.3 | 0.3 | 0.3 |
| **09** | 48 | FRONT FOOTREST (LH OR RH)<br>REPOSE-PIED AVANT (GAUCHE OU DROIT) | | 0.3 | 0.3 | | |
| **09*** | 49 | **FRAME (ASS'Y) OR FRONT MEMBER<br>CHÂSSIS (COMPLET) OU CADRE AVANT** | **13.5** | **13.8** | **13.8** | **13.8** | **14.5** |
| **09** | 51 | REAR CAP<br>PARTIE ARRIÈRE DU CHÂSSIS | 0.8 | 0.8 | 0.8 | 0.8 | |
| **09** | 55 | SNOW GUARD (1)<br>GARDE-NEIGE (1) | 0.3 | 0.3 | 0.3 | 0.3 | 0.3 |
| **09** | 58 | BACKREST AND/OR COVER<br>DOSSIER ET/OU HOUSSE | | 0.3 | 0.3 | | |
| **09** | 65 | MIRROR (1)<br>RÉTROVISEUR (1) | | 0.3 | 0.3 | | 0.3 |
| **09** | 66 | MIRRORS (2)<br>RÉTROVISEURS (2) | | 0.3 | 0.3 | | 0.3 |
| **09** | 72 | TUNNEL DECAL (1 OR 2)<br>DÉCALQUE DE TUNNEL (1 OU 2) | 0.3 | 0.3 | 0.3 | 0.3 | 0.3 |
| **09** | 77 | BOTTOM PAN (RH)<br>COQUE CÔTÉ (DROITE) | 0.7 | 0.7 | 0.7 | 0.6 | 0.7 |

| SYSTEM SYSTÈME | CODE | DESCRIPTION | RENEGADE 600 ACE | GRAND TOURING 600 ACE | EXPEDITION 600 ACE | TUNDRA 600 ACE | SKANDIC 600 ACE |
|---|---|---|---|---|---|---|---|
| | | | 24 | 25 | 26 | 27 | 28 |
| 09 | 78 | BOTTOM PAN (LH)<br>COQUE CÔTÉ (GAUCHE) | 0.7 | 0.7 | 0.7 | 0.6 | 0.7 |
| 09 | 79 | BOTTOM PAN (CENTER)<br>COQUE PARTIE (CENTRALE) | 0.5 | 0.5 | 0.5 | 0.7 | 0.8 |
| 09 | 80 | FRONT GRILL (LH AND/OR RH)<br>GRILLE AVANT (GAUCHE ET/OU DROIT) | | | | 0.3 | 0.3 |
| 09 | 81 | SIDE GRILL (LH AND/OR RH)<br>GRILLE LATÉRALE (GAUCHE ET/OU DROIT) | 0.3 | 0.3 | 0.3 | 0.3 | 0.3 |
| 09 | 82 | CABLE RETAINER (LH AND/OR RH)<br>CÂBLE DE RETENUE (GAUCHE ET/OU DROIT) | | | | | 0.3 |
| 09 | 86 | ROLLER<br>ROULEAU | 0.5 | 0.5 | 0.5 | 0.5 | |
| 09 | 87 | BOTTOM PAN DOOR<br>PORTE DE COQQUE | | | | 0.3 | 0.3 |
| 09 | 96 | FOOT PROTECTOR AND/OR SUPPORT (LH OR RH)<br>PROTÈGE PIED ET/OU SUPPORT (GAUCHE OU DROIT) | 1.0 | 1.0 | 1.0 | 1.0 | 1.0 |
| 09 | 149 | ENGINE SIDE PANELS (2)<br>PANNEAUX MOTEUR (2) | 0.9 | 0.9 | 0.9 | 0.7 | 0.9 |
| 09 | 157 | UPPER CONSOLE<br>CONSOLE SUPERIEUR | 0.3 | 0.3 | 0.3 | 0.3 | 0.4 |
| 09 | 163 | MEMBER (LH OR RH)<br>MEMBRURE (GAUCHE OU DROIT) | 0.4 | 0.4 | 0.4 | 0.4 | 0.5 |
| 09 | 168 | FRONT GRILL<br>GRILLE AVANT | | | | | 0.3 |
| 09 | 191 | SIDE PANEL DECAL (LH OR RH) (1)<br>DÉCALQUES DE PANNEAU (GAUCHE OU DROIT) (1) | 0.3 | 0.3 | 0.3 | 0.3 | 0.3 |
| 09 | 192 | SIDE PANEL DECALS (LH OR RH) (ALL)<br>DÉCALQUES DE PANNEAU (GAUCHE OU DROIT) (TOUS) | 0.6 | 0.6 | 0.6 | 0.6 | 0.6 |
| 09 | 194 | ENGINE SIDE PANEL (LH OR RH)<br>PANNEAU MOTEUR (GAUCHE OU DROIT) | 0.5 | 0.5 | 0.5 | 0.4 | 0.5 |
| 09 | 195 | FRONT PLATE<br>PLAQUE AVANT | 4.5 | 4.5 | 4.5 | | |
| 09 | 196 | REAR HANDLE AND/OR GRIP<br>POIGNÉE ARRIÈRE ET/OU GAINE | | 0.5 | | | 0.3 |
| 09 | 197 | REAR HANDLES AND/OR GRIPS (2)<br>POIGNÉES ARRIÈRE ET/OU GAINES (2) | | 0.9 | | | 0.3 |
| 09 | 198 | BACKREST PARTS<br>PIÈCES DU DOSSIER | | 0.3 | 0.3 | | |
| 09 | 199 | REAR SEAT BASE AND/OR ALL PARTS<br>BASE SIÈGE ARRIÈRE ET/OU TOUTES LES PIÈCES | | 1.9 | 1.9 | | 1.9 |
| 09 | 203 | REAR SEAT COVER OR FOAM<br>HOUSSE OU MOUSSE DU SIÈGE ARRIÈRE | | 1.1 | 1.1 | | 1.1 |
| 09 | 233 | UPPER SIDE PANEL (LH OR RH)<br>PANNEAU LATÉRAL SUPÉRIEUR (GAUCHE OU DROIT) | | | | | 0.3 |

| SYSTEM SYSTÈME | CODE | DESCRIPTION | RENEGADE 600 ACE | GRAND TOURING 600 ACE | EXPEDITION 600 ACE | TUNDRA 600 ACE | SKANDIC 600 ACE |
|---|---|---|---|---|---|---|---|
| | | | 24 | 25 | 26 | 27 | 28 |
| 09 | 238 | LOWER SIDE PANEL (LH OR RH)<br>PANNEAU LATÉRAL INFÉRIEUR (GAUCHE OU DROIT) | 0.3 | 0.3 | 0.3 | | |
| 09 | 249 | WINDSHIELD SUPPORT<br>SUPPORT PARE-BRISE | 0.3 | 0.3 | 0.3 | 0.3 | 0.3 |
| 09 | 250 | AIR DEFLECTOR (LH OR RH)<br>DÉFLECTEUR D'AIR (GAUCHE OU DROIT) | 0.3 | 0.3 | 0.3 | 0.3 | 0.3 |
| 09 | 251 | PANEL LATCHES (ALL)<br>LOQUETS DE PANNEAU (TOUS) | 0.3 | 0.3 | 0.3 | 0.3 | 0.3 |
| 09 | 252 | FOOTREST REINFORCEMENT (LH OR RH)<br>RENFORT DE MARCHE-PIED (GAUCHE OU DROIT) | 1.1 | 1.1 | 1.1 | 1.1 | 0.6 |
| 09 | 261 | FRONT MEMBER<br>MEMBRURE AVANT | 2.0 | 2.0 | 2.0 | 2.0 | 2.0 |
| 09 | 284 | BOX DOOR<br>PORTE DE COFFRE | | | | | 0.4 |
| 09 | 293 | PUSH LATCH<br>LOQUET POUSSOIR | | | | | 0.3 |
| 09 | 310 | SEAT BOX<br>BASE SIÈGE | | | | | 1.3 |
| 09 | 311 | E-MODULE<br>MODULE E | 5.8 | 5.8 | 5.8 | 6.0 | 6.0 |
| 09 | 312 | S-MODULE<br>MODULE S | 3.5 | 3.5 | 3.5 | 3.5 | 3.5 |
| 09* | 313 | SEAT BOX FRAME<br>CHÂSSIS BASE DE SIÈGE | | | | | 0.4 |
| 09 | 367 | LOCK<br>VERROU | | | | | 0.3 |
| 09 | 378 | BRACE<br>BRETELLE | 1.0 | 1.0 | 1.0 | 1.0 | 1.0 |
| 09 | 379 | BATTERY SUPPORT<br>SUPPORT DE BATTERIE | 0.5 | 0.5 | 0.5 | 0.5 | |
| 09 | 384 | RADIATOR COVER<br>COUVERCLE DE RADIATEUR | 0.5 | 0.5 | | | |
| 09 | 403 | HEADLAMP MOULDING<br>ENJOLIVEUR DU PHARE | 0.3 | 0.3 | 0.3 | | |
| 09 | 439 | MEMBER CAP<br>CAPUCHON DE MEMBRURE | 0.3 | | 0.3 | 0.3 | |
| 09 | 469 | REAR SUSPENSION BRACKET (RIGHT OR LEFT)<br>ATTACHE DE SUSPENSION ARRIÈRE (DROIT OU GAUCHE) | 0.8 | 0.8 | 0.8 | 0.8 | |

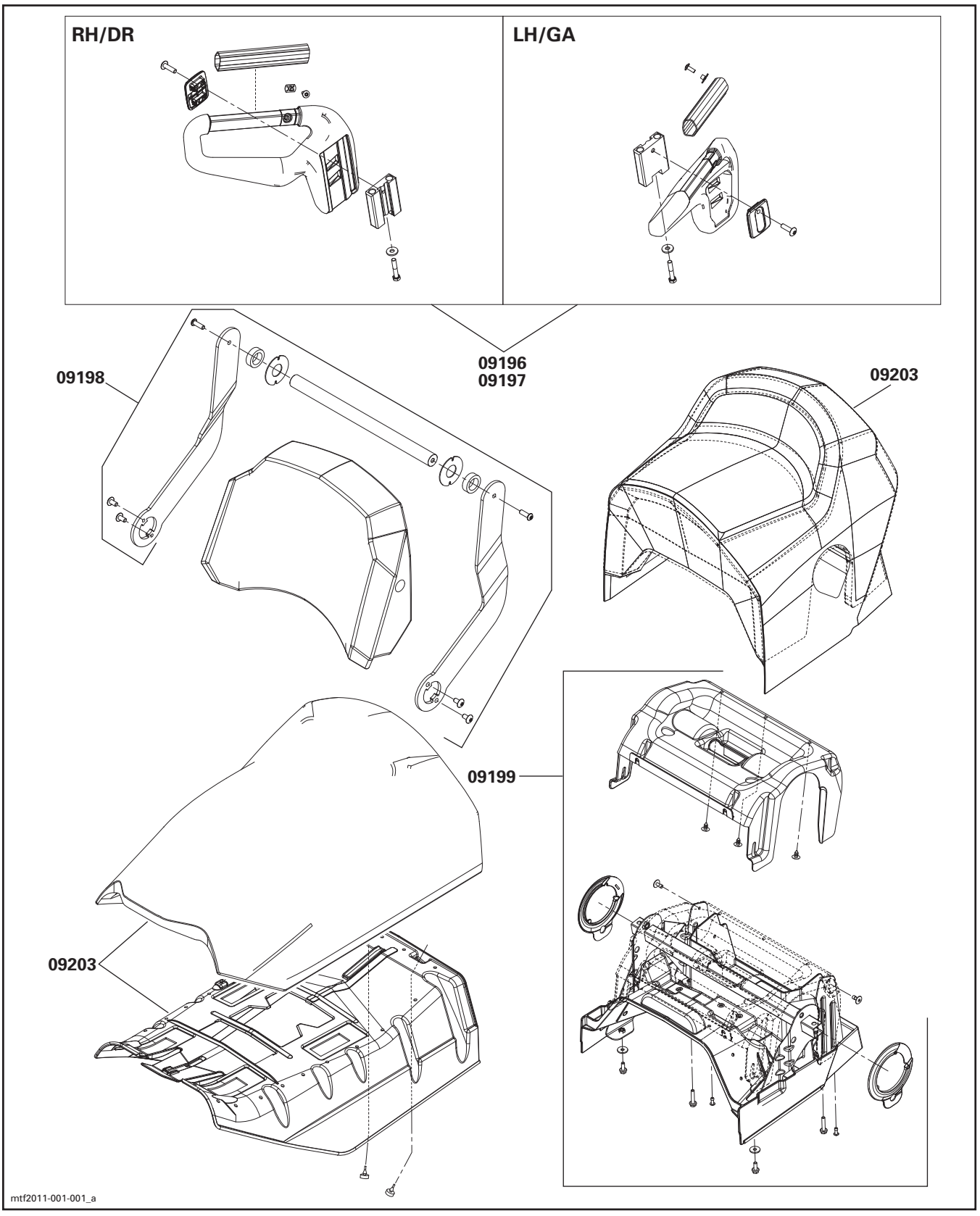
RH/DR
LH/GA
09196
09197
09198
09203
09199
09203
mtf2011-001-001_a

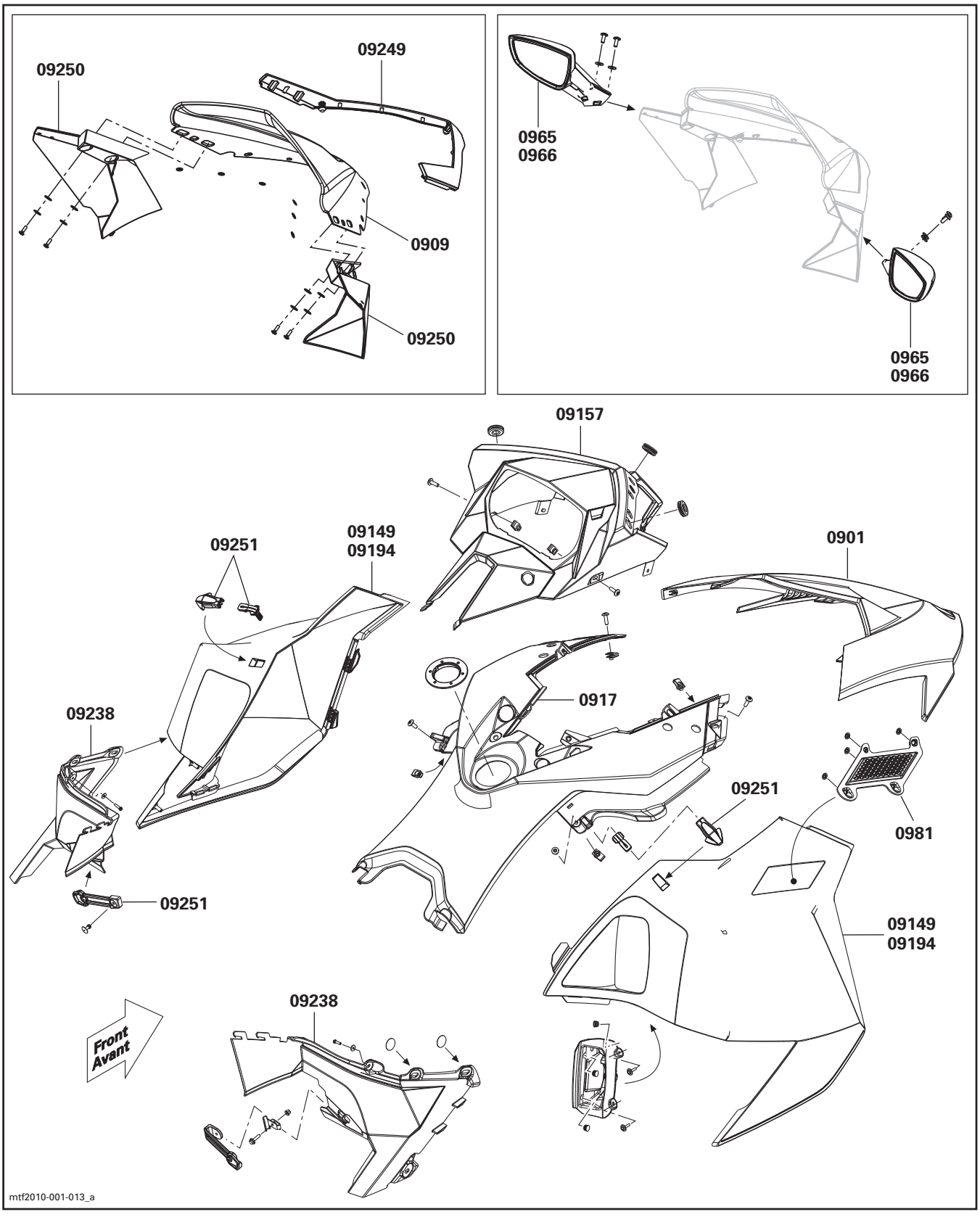
09250
09249
0909
09250
0965
0966
0965
0966
09157
09251
09149
09194
0901
09238
0917
09251
0981
09251
09149
09194
09238
Front
Avant
mtf2010-001-013_a

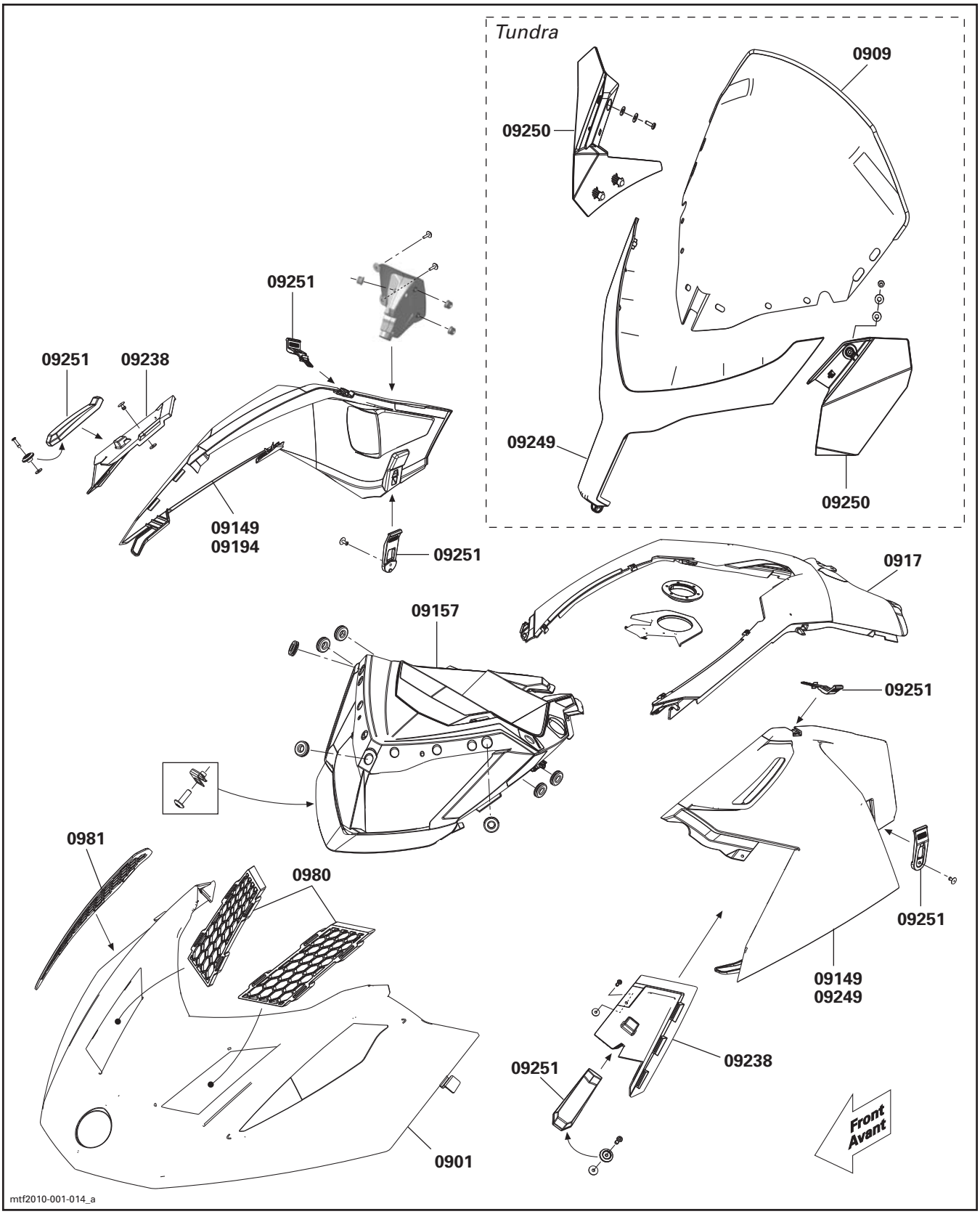
Tundra
0909
09250
09249
09250
09251
09251
09238
09149
09194
09251
0917
09157
09251
0981
0980
09251
09149
09249
09238
09251
0901
Front
Avant
mtf2010-001-014_a

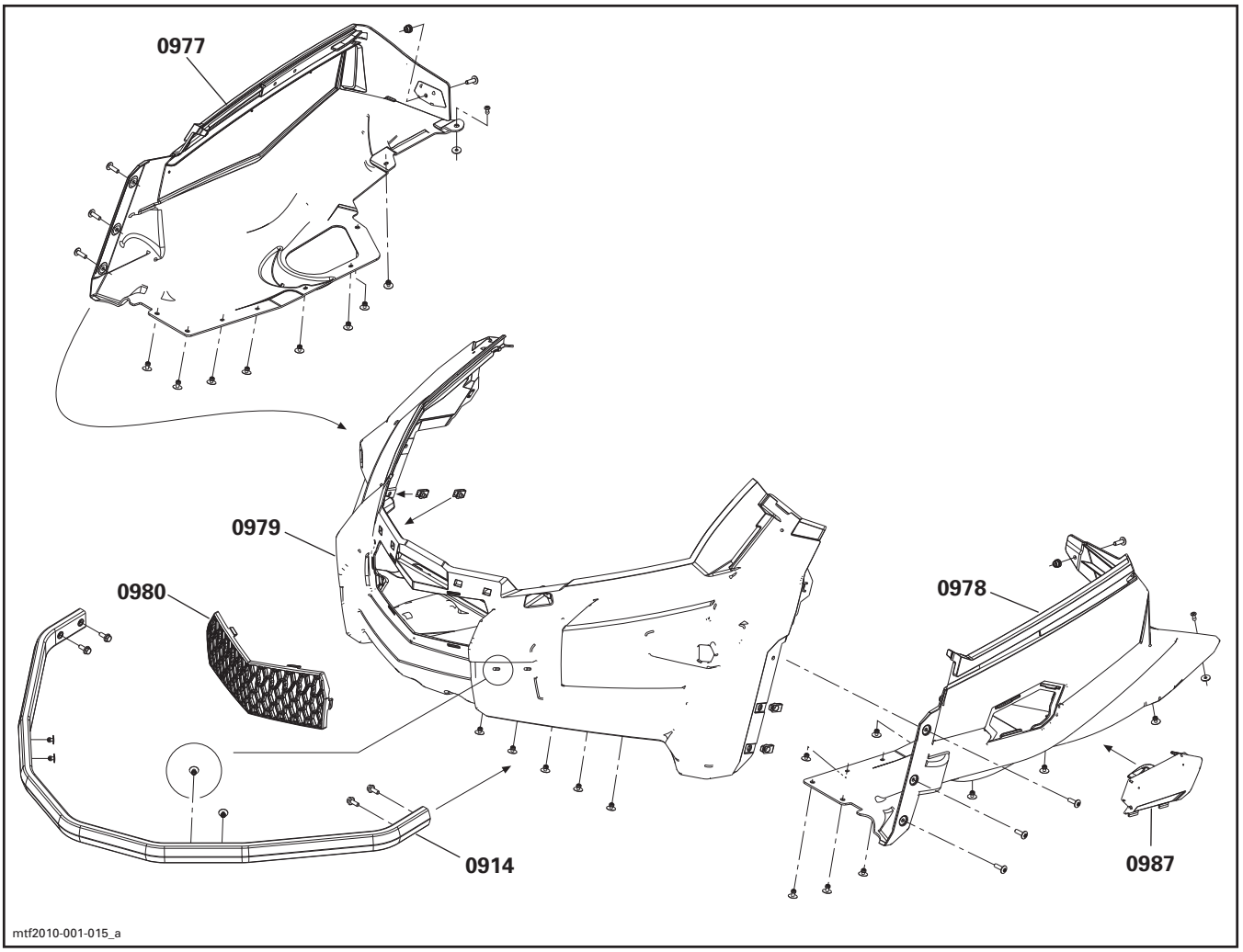
0977
0979
0980
0978
0914
0987
mtf2010-001-015_a

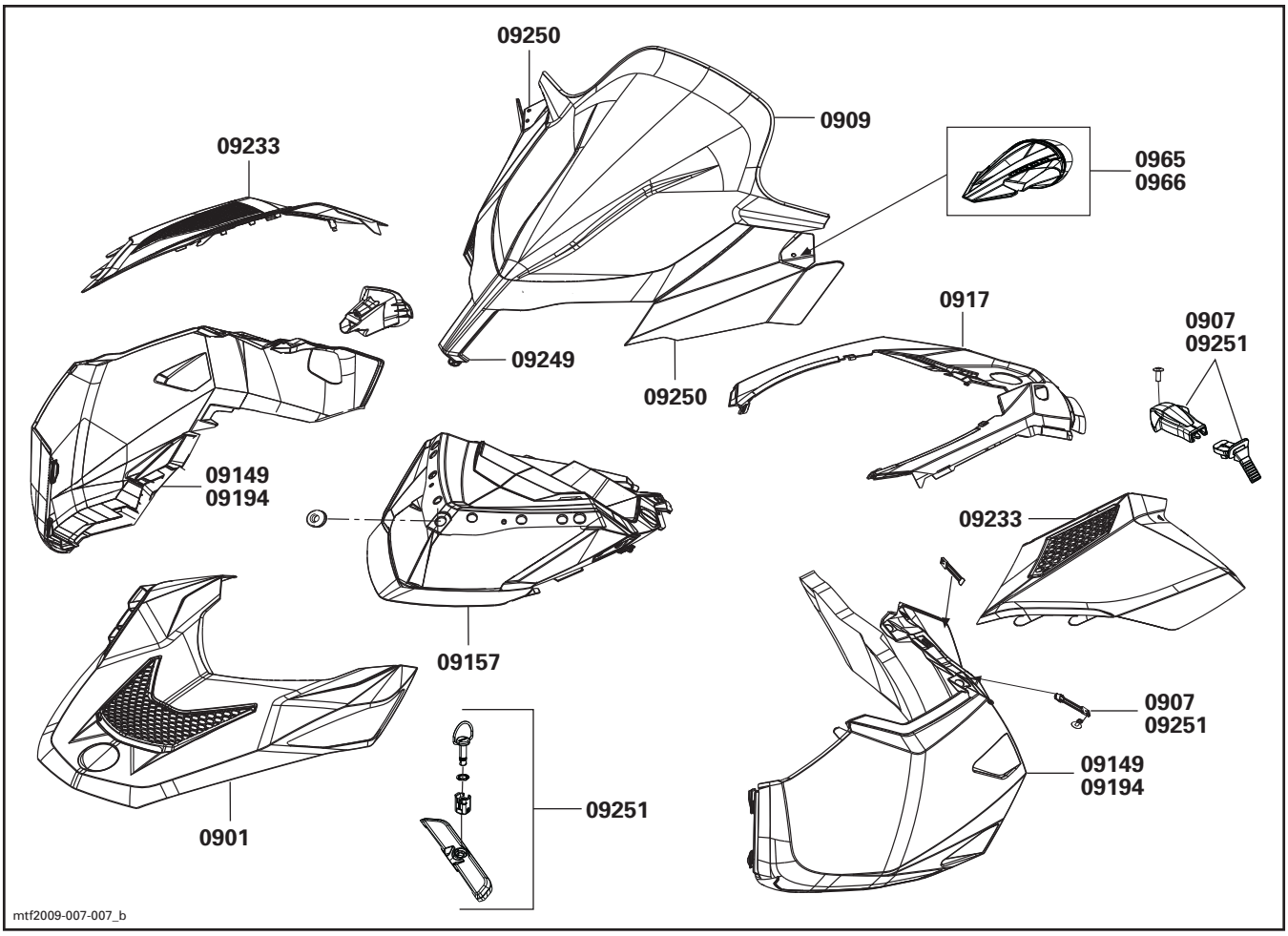
09250
0909
09233
0965
0966
0917
0907
09251
09249
09250
09149
09194
09233
09157
0907
09251
09149
09194
09251
0901
mtf2009-007-007_b

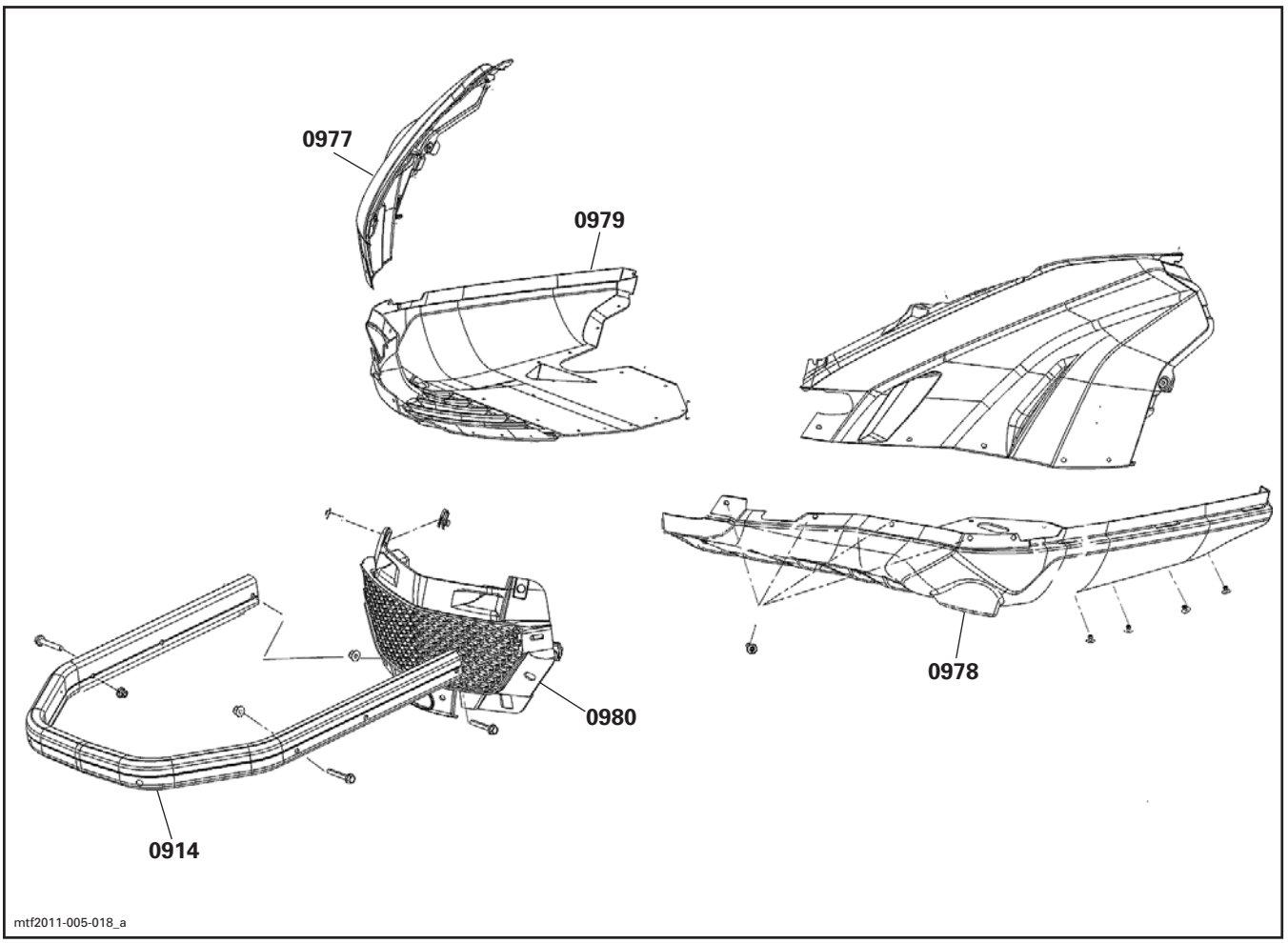
0977
0979
0978
0980
0914
mtf2011-005-018_a

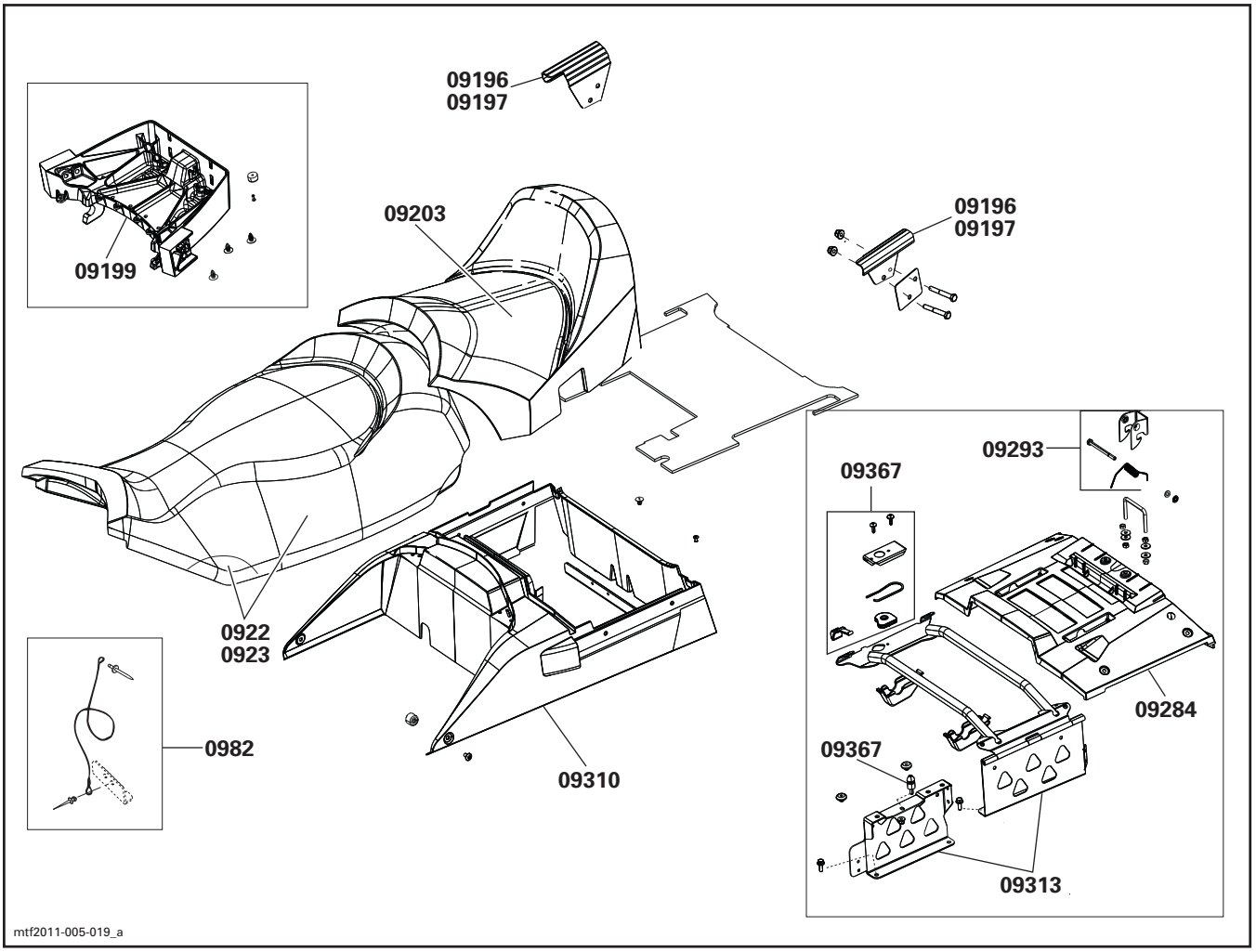
09196
09197
09199
09203
09196
09197
09293
09367
0922
0923
0982
09310
09284
09367
09313
mtf2011-005-019_a

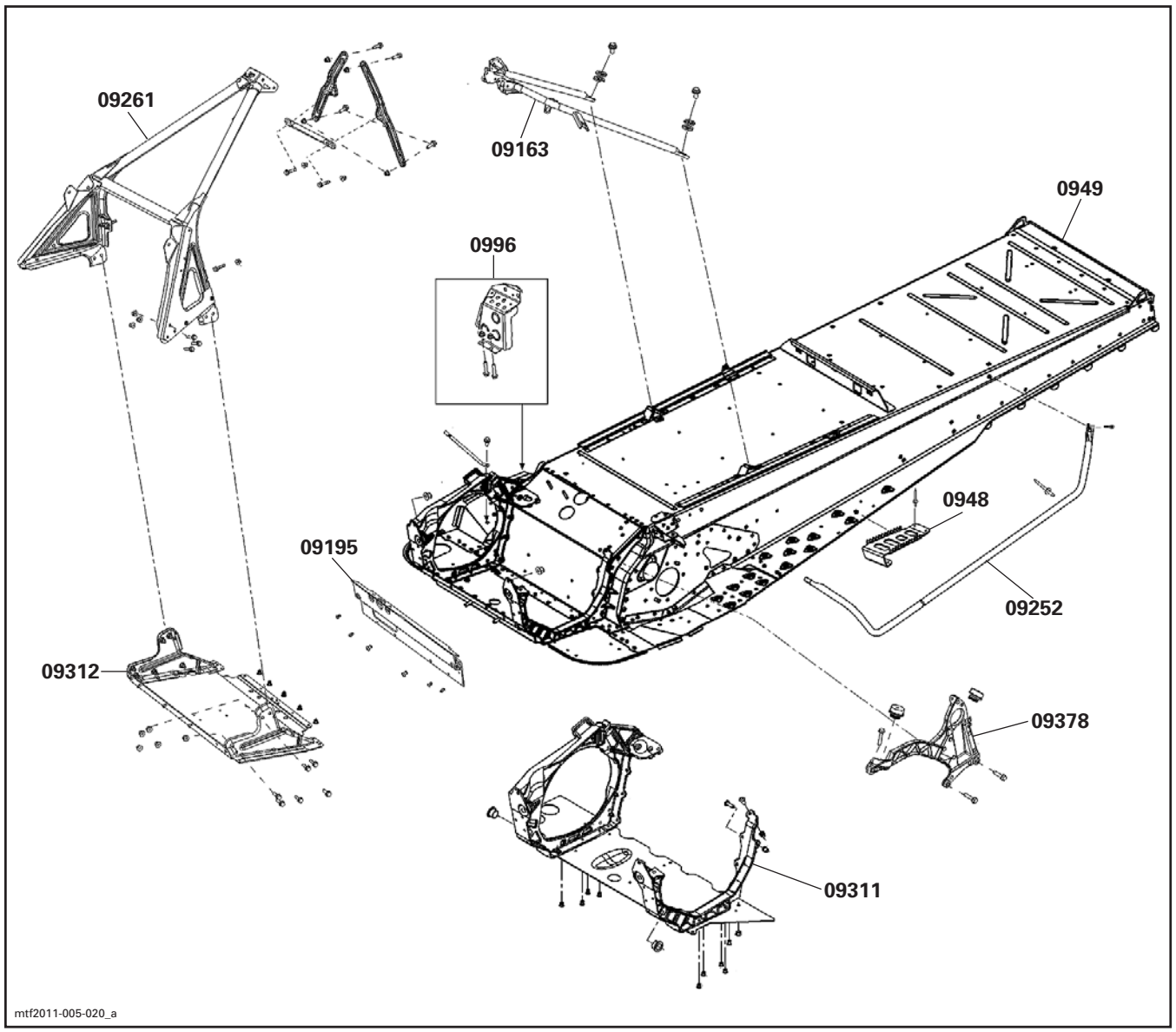
09261
09163
0949
0996
0948
09195
09252
09312
09378
09311
mtf2011-005-020_a

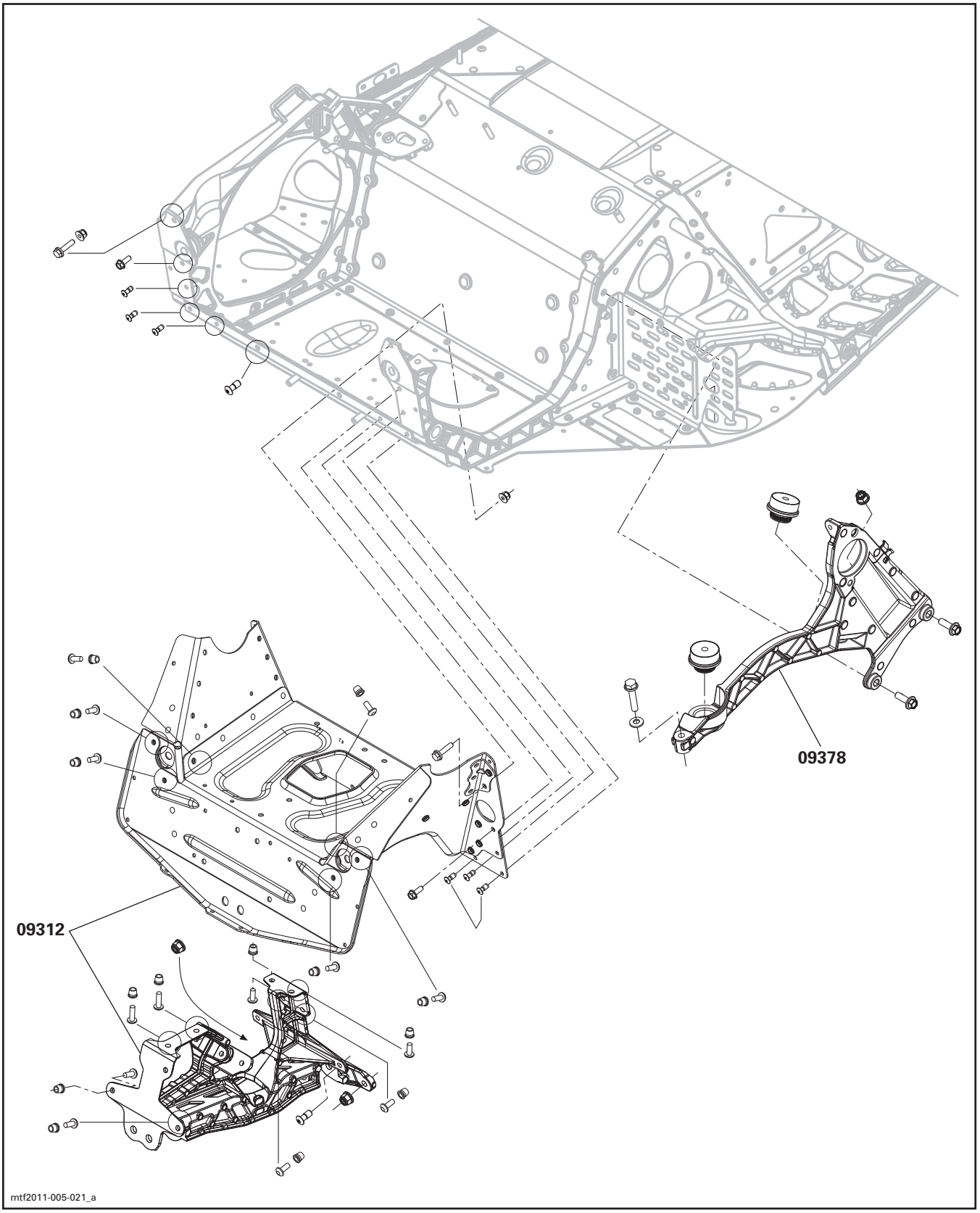
09378
09312
mtf2011-005-021_a

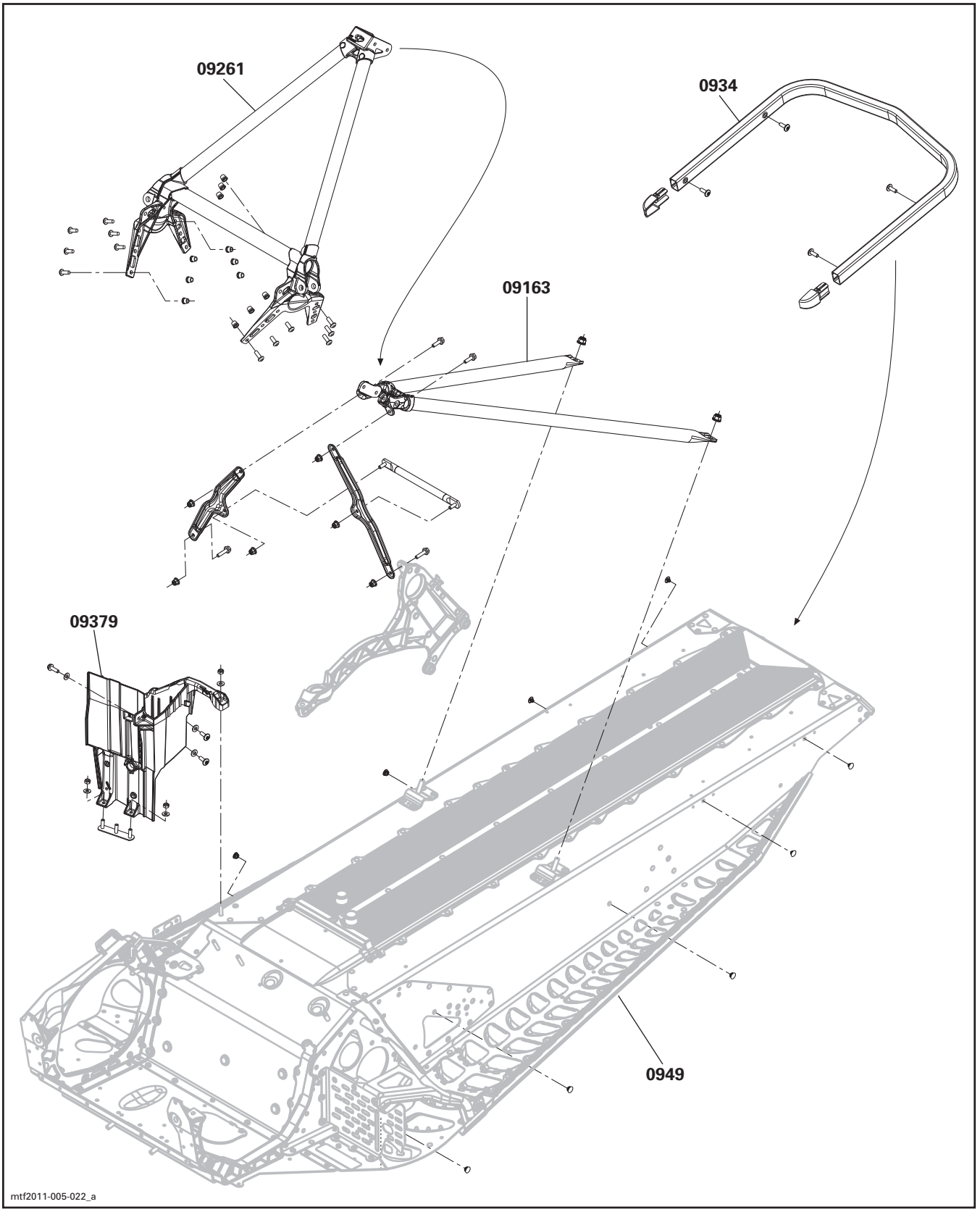
09261
0934
09163
09379
0949
mtf2011-005-022_a

| SYSTEM SYSTÈME | CODE | DESCRIPTION | RENEGADE 600 ACE | GRAND TOURING 600 ACE | EXPEDITION 600 ACE | TUNDRA 600 ACE | SKANDIC 600 ACE |
|---|---|---|---|---|---|---|---|
| | | | 24 | 25 | 26 | 27 | 28 |
| **10** | **00** | **NO LABOR INVOLVED<br>AUCUNE MAIN-D'OEUVRE IMPLIQUÉE** | **0** | **0** | **0** | **0** | **0** |
| **10** | 01 | IGNITION SWITCH<br>INTERRUPTEUR D'ALLUMAGE | 0.3 | 0.3 | 0.3 | 0.3 | 0.3 |
| **10** | 03 | KILL SWITCH<br>D'INTERRUPTEUR D'URGENCE | 0.3 | 0.3 | 0.3 | 0.3 | 0.3 |
| **10** | 05 | BRAKE LIGHT SWITCH<br>INTERRUPTEUR DE FEU D'ARRÊT | 0.3 | 0.3 | 0.3 | 0.3 | 0.3 |
| **10** | 06 | TETHER CORD SWITCH OR D.E.S.S.<br>CAPUCHON COUPE-CIRCUIT OU D.E.S.S. | 0.3 | 0.3 | 0.3 | 0.3 | 0.3 |
| **10** | 07 | IGNITION SWITCH BLOCK<br>LOGEMENT DE RÉCEPTACLE (INTERRUPTEUR) | 0.3 | 0.3 | 0.3 | 0.3 | 0.3 |
| **10** | 08 | CURRENT OR GROUND WIRE<br>FIL DE BATTERIE OU DE MASSE | 0.3 | 0.3 | 0.3 | 0.3 | 0.3 |
| **10** | 09 | HEADLAMP (ASS'Y) (ALL PARTS)<br>PHARE (COMPLET) (TOUTES LES PIÈCES) | 0.3 | 0.3 | 0.3 | 0.3 | 0.3 |
| **10** | 10 | VOLTAGE REGULATOR<br>RÉGULATEUR DE TENSION | 0.7 | 0.7 | 0.7 | 0.7 | 0.7 |
| **10** | 12 | TAIL LIGHT (ASS'Y) (ALL PARTS)<br>FEU ARRIÈRE (COMPLET) (TOUTES LES PIÈCES) | 0.3 | 0.3 | 0.3 | 0.3 | 0.3 |
| **10** | 13 | BATTERY<br>BATTERIE | 0.3 | 0.3 | 0.3 | 0.3 | 0.3 |
| **10** | 15 | HEATED GRIP (1)<br>POIGNÉES CHAUFFANTE (1) | 0.5 | 0.5 | 0.5 | 0.5 | 0.5 |
| **10** | 16 | BULBS (ONE OR ALL)<br>AMPOULES (UNE OU TOUTES) | 0.3 | 0.3 | 0.3 | 0.3 | 0.3 |
| **10** | 17 | HEATED THROTTLE LEVER<br>MANETTE D'ACCÉLÉRATEUR CHAUFFANTE | 0.3 | 0.3 | 0.3 | 0.3 | 0.3 |
| **10** | 23 | HALOGEN BULB<br>AMPOULE HALOGÈNE | 0.3 | 0.3 | 0.3 | 0.3 | 0.3 |
| **10** | 31 | DC OUTLET PLUG<br>PRISE D'ACCESSOIRE DC | | | 0.3 | | 0.3 |
| **10** | 34 | ELECTRONIC MODULE<br>MODULE ÉLECTRONIQUE | 0.7 | 0.7 | 0.7 | 0.7 | 0.7 |
| **10** | 41 | ENGINE HARNESS<br>CÂBLAGE DU MOTEUR | 1.5 | 1.5 | 1.5 | 1.5 | 1.5 |
| **10** | 49 | MULTIFUNCTION GAUGE<br>CADRAN MULTIFONCTION | 0.3 | 0.3 | 0.3 | 0.3 | 0.3 |
| **10** | 50 | HEATED GRIPS (2)<br>POIGNÉES CHAUFFANTES (2) | 0.9 | 0.9 | 0.9 | 0.9 | 0.9 |
| **10** | 51 | MAIN HARNESS<br>CÂBLAGE PRINCIPAL | 1.8 | 1.8 | 1.8 | 1.8 | 1.8 |
| **10** | 59 | REAR HEATED GRIP (1)<br>POIGNÉE CHAUFFANTE ARRIÈRE (1) | | 0.5 | | | |

| SYSTEM SYSTÈME | CODE | DESCRIPTION | RENEGADE 600 ACE | GRAND TOURING 600 ACE | EXPEDITION 600 ACE | TUNDRA 600 ACE | SKANDIC 600 ACE |
|---|---|---|---|---|---|---|---|
| | | | 24 | 25 | 26 | 27 | 28 |
| 10 | 60 | REAR HEATED GRIPS (2)<br>POIGNÉES CHAUFFANTES ARRIÈRE (2) | | 0.9 | | | |
| 10 | 67 | RELAY<br>RELAIS | 0.3 | 0.3 | 0.3 | 0.3 | 0.3 |
| 10 | 81 | MULTIFUNCTION PLATE<br>PLAQUE MULTIFONCTION | 0.4 | 0.4 | 0.4 | 0.4 | 0.4 |
| 10 | 82 | REVERSE SWITCH<br>INTERRUPTEUR DE RENVERSE | 0.3 | 0.3 | 0.3 | 0.3 | 0.3 |
| 10 | 85 | KILL SWITCH SUPPORT<br>SUPPORT D'INTERRUPTEUR D'URGENCE | 0.3 | 0.3 | 0.3 | 0.3 | 0.3 |
| 10 | 118 | STEERING HARNESS<br>CÂBLAGE DU GUIDON | 1.0 | 1.0 | 1.0 | 1.0 | 1.0 |
| 10 | 133 | FAN HARNESS<br>CABLAGE DU VENTILATEUR | | 0.3 | 0.3 | 0.3 | |
| 10 | 136 | ECO HARNESS<br>CABLAGE ECO | 0.3 | 0.3 | 0.3 | 0.3 | 0.3 |
| 10 | 137 | ECO SWITCH<br>INTERRPTEUR ECO | 0.3 | 0.3 | 0.3 | 0.3 | 0.3 |

# ELECTRICAL SYSTEM
# SYSTÈME ÉLECTRIQUE

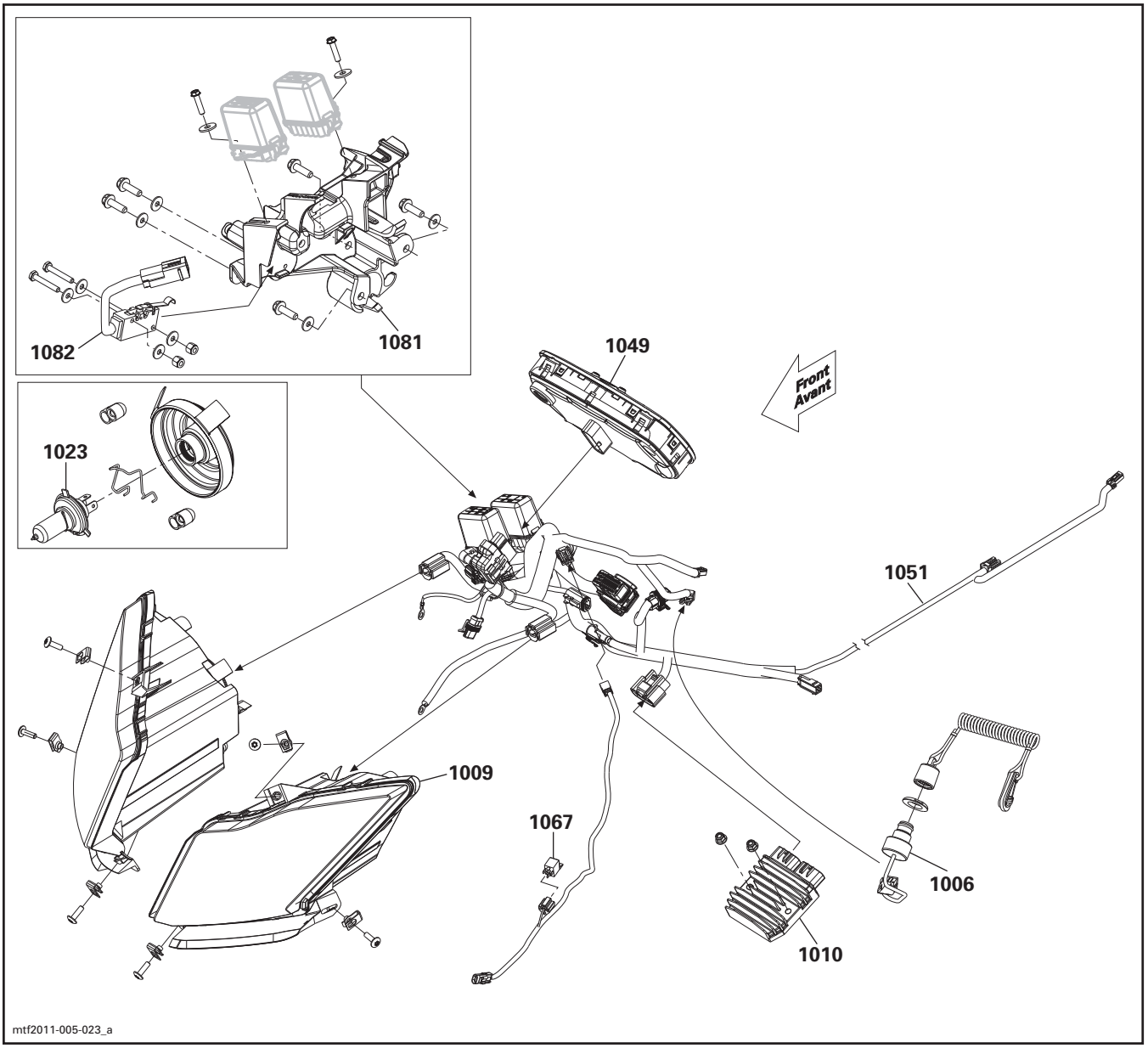

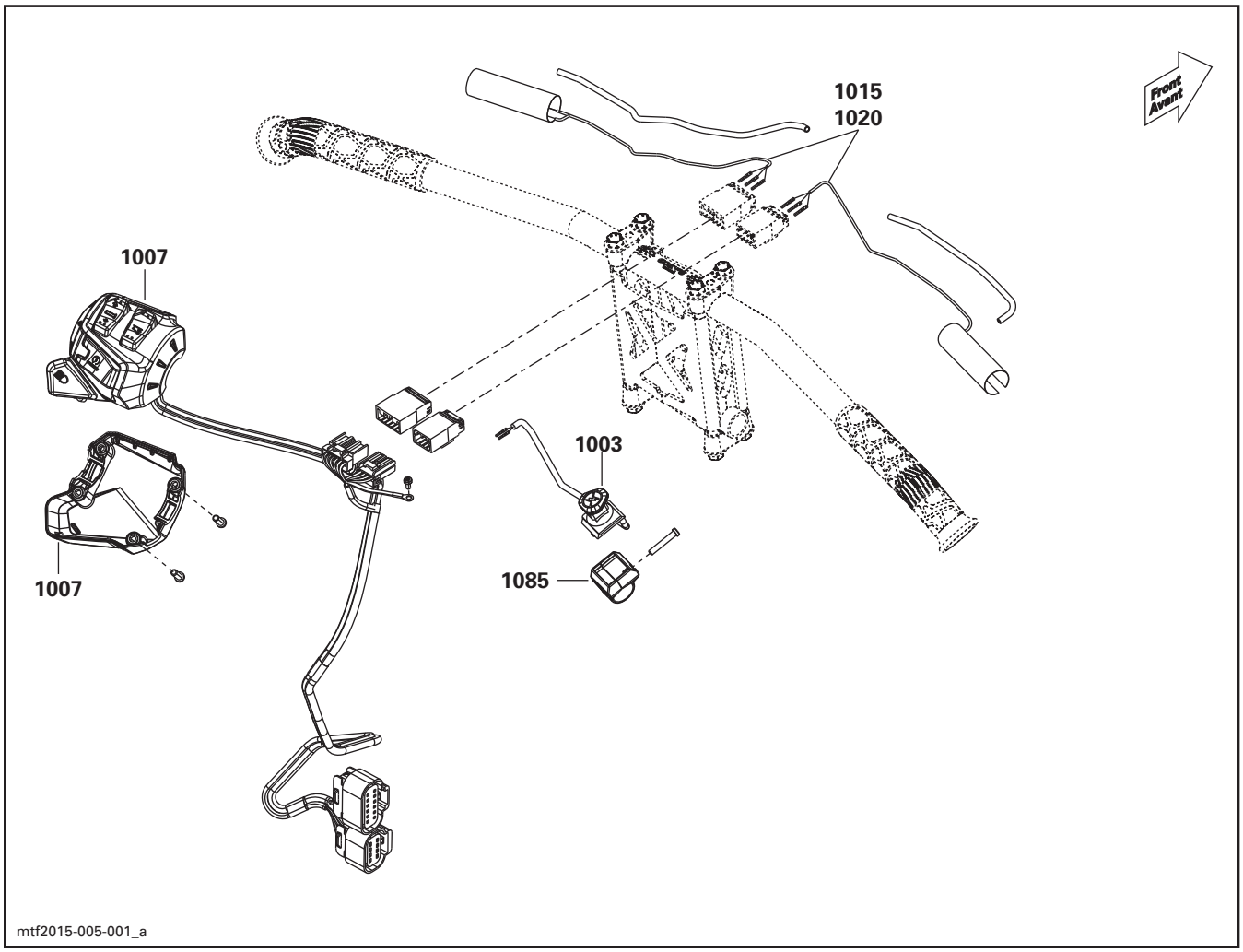
Front
Avant
1015
1020
1007
1003
1007
1085
mtf2015-005-001_a

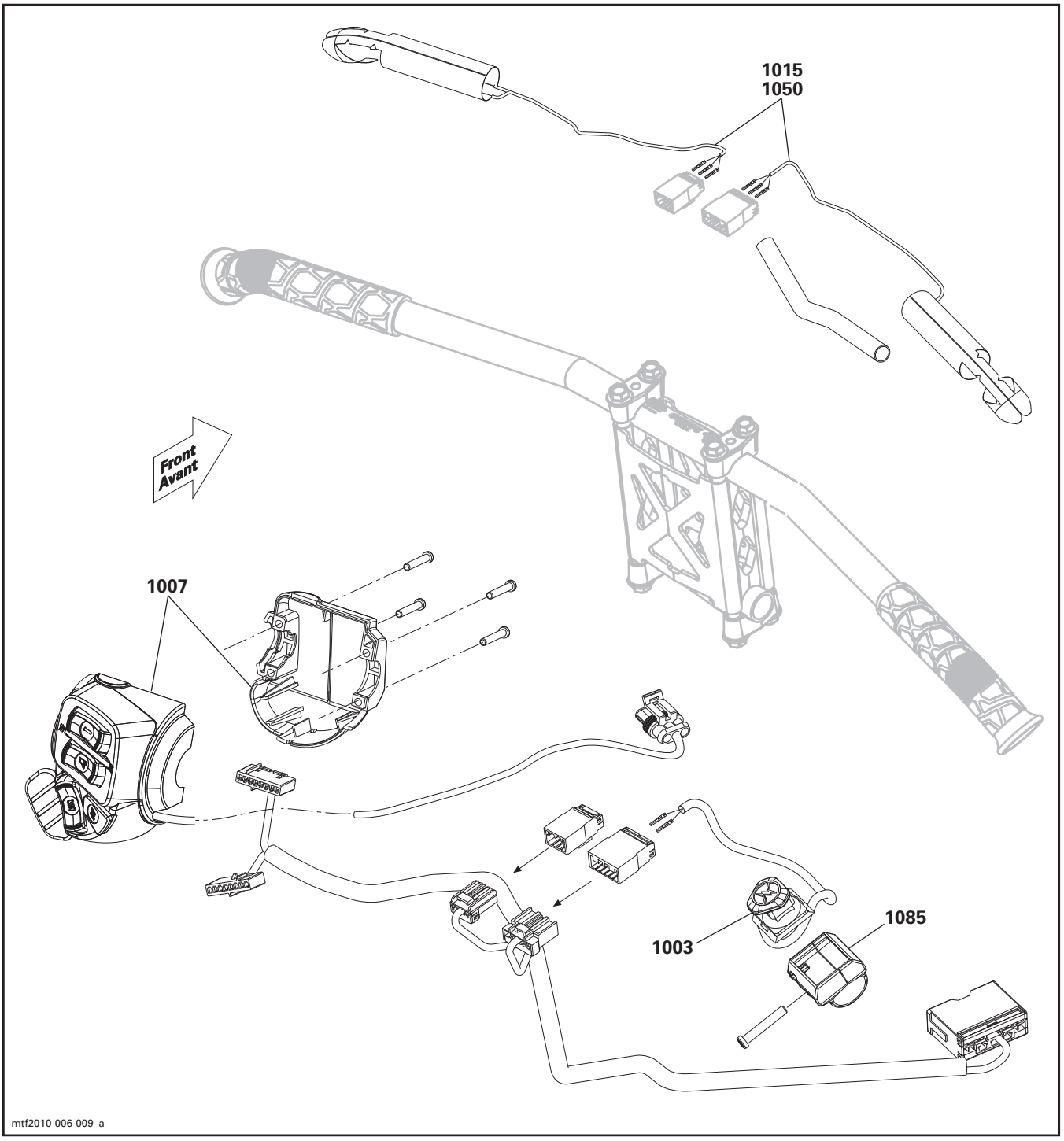
1015
1050
Front
Avant
1007
1003
1085
mtf2010-006-009_a

**Flat rate times are what the manufacturer pays the authorized dealer for warranty work, the times listed are usually unrealistic for even the most experienced mechanic and will take longer to actually complete.**

**Because of this dealers will usually charge more than the times posted.**

**I cannot be held responsible for any errors BRP has made in these service flat rate or parts manuals.**

**If you bought this manual from any other seller, they could be reselling my work.**

**Please leave them negative feedback & email me at bestshopmanuals@gmail.com .**

**Our goal is to be one of the BEST sellers on the internet by providing you with the BEST customer service and the BEST manuals on the market.**

**Thank you for choosing us.**

# INTRODUCTION

This publication governs all warranty labor allowances for 2019 BRP Snowmobiles.

## 1. HOW DOES IT WORK

We follow the procedures detailed in the BRP *Snowmobiles Shop Manual*. The flat rate time is the maximum time allowed for a repair involving any given part.
FLAT RATE TIME IS NOT CUMULATIVE. You must use the flat rate time given for the longest lasting operation.
NOTE: The *Flat Rate Time Schedule* was prepared by skilled mechanics using the hand tool usually found in workshops and all the special tools mentioned in the *Shop Manual*.

## 2. COMPILATION

The *Flat Rate Time Schedule* is compiled as follows:
The actual required time to perform the repair plus (+) 30% correction factor up to 3.0 hours or (+) 15% over 3.0 hours time to take into account, among others:

- Vehicle handling
- Obtaining the parts
- Diagnosis
- Cleaning
- Special compensation (rusted bolts).

## 3. HOW TO USE IT

Refer to the system you need, locate part of series of parts replaced. List JOB CODE in the appropriate column on claim.


| SYSTEM | | PAGE |
|---|---|---|
| 01 | ENGINE | 04 |
| 02 | CARBURETOR AND FUEL SYSTEM | 16 |
| 03 | IGNITION SYSTEM | 19 |
| 04 | STARTER | 21 |
| 05 | TRANSMISSION SYSTEM | 22 |
| 06 | BRAKE SYSTEM | 28 |
| 07 | STEERING SYSTEM AND FRONT SUSPENSION | 30 |
| 08 | REAR SUSPENSION SYSTEM AND TRACK | 35 |
| 09 | BODY | 41 |
| 10 | ELECTRICAL SYSTEM | 52 |


NOTE: Unless otherwise specified, dismantling order is: top to bottom, exterior to interior, front to rear.
All fractions of hours are in tenths:

0.1 = 6 minutes
0.2 = 12 minutes, and so on

LEGEND:

* REQUIRES PRIOR AUTHORIZATION BY DISTRIBUTOR.
** INDICATE LABOUR TIME ON LINE "LABOUR ONLY" OF CLAIM.
*** INDICATE $$$ AMOUNT ON "SUB-CONTRACTED LABOUR" OF CLAIM.

IMPORTANT: Always use the longest flat rate time applicable to the repair performed.

## 4. JOB REQUIREMENTS

All the flat rate times mentioned in the following pages include the required operations such as: engine timing (rotary valve and ignition), connecting rod(s) alignment, cylinder head(s) torque or use of parallel bar, use of ignition tester, piston clearance/ring end gap measurement, crankshaft to crankcase measurement, cylinder honing, engine leak test.

## 5. ILLUSTRATIONS

The illustrations contained in this manual do not necessarily show every components of a given system as *Parts Catalog* do. Their purpose is to facilitate recognition of parts related to a flat rate time. **Item numbers on illustrations correspond to the four digit Job Code.**

## 6. FLAT RATE TIME SUGGESTION

SEND A WARRANTY CASE ON BOSSWeb INFO CENTER

In the case, you must provide the following information:

Section *Subject*:

- Flat rate time suggestion

Section *Your Question*:

- Model year;
- Model description;
- Description job code;
- Job code;
- Present flat rate;
- Suggested flat rate;
- Detailed repair procedure;

To ensure that your case will be promptly and efficiently processed please indicate the step by step repair procedure you performed.

# INTRODUCTION

Cette publication détermine le temps de main-d'oeuvre couvert par la garantie pour les motoneiges BRP 2019.

## 1. UTILISATION DU MANUEL

En procédant de la façon indiquée dans le *Manuel de réparation motoneiges* BRP, chaque temps donné représente le maximum permis pour une réparation portant sur cette pièce. LES TEMPS NE SONT PAS CUMULATIFS. On doit inscrire le temps donné pour l'opération qui prend le plus de temps.

REMARQUE: Le *Barème de temps à taux fixe* a été préparé par des mécaniciens compétents utilisant les outils que l'on retrouve normalement dans les ateliers de réparation, en plus de tous les outils spéciaux mentionnés dans le *Manuel de réparation*.

## 2. COMPILATION

Le *Barème de temps à taux fixe* a été établi en compilant le temps nécessaire pour faire la réparation plus (+) un facteur de correction de 30% lorsqu'un travail dure 3.0 heures et moins, ou (+) 15% lorsqu'un travail dure plus de 3.0 heures. Cette compilation comprend, entre autres, les étapes suivantes:

- Manutention du véhicule
- Nettoyage
- Aller chercher les pièces, essais physiques
- Compensation spéciale (boulons rouillés)
- Diagnostic.

## 3. UTILISATION DU BARÈME

Se reporter à la section désirée, repérer la pièce ou l'ensemble de pièces remplacées et inscrire le CODE DE TRAVAIL dans la colonne appropriée sur la formule de réclamation.


| SYSTÈME | | PAGE |
|---|---|---|
| 01 | MOTEUR | 4 |
| 02 | CARBURATEUR ET SYSTÈME D'ALIMENTATION D'ESSENCE | 16 |
| 03 | SYSTÈME D'ALLUMAGE | 19 |
| 04 | DÉMARREUR | 21 |
| 05 | SYSTÈME DE TRANSMISSION | 22 |
| 06 | SYSTÈME DE FREIN | 28 |
| 07 | SYSTÈME DE DIRECTION ET SUSPENSION AVANT | 30 |
| 08 | SYSTÈME DE SUSPENSION ARRIÈRE ET CHENILLE | 35 |
| 09 | CARROSSERIE | 41 |
| 10 | SYSTÈME ÉLECTRIQUE | 52 |


REMARQUE: Sauf indication contraire, le démontage doit s'effectuer de haut en bas, de l'extérieur vers l'intérieur, de l'avant vers l'arrière.

Toutes les fractions d'heures sont exprimées en dixièmes:

0.1 = 6 minutes
0.2 = 12 minutes, et ainsi de suite

LÉGENDE:

* AUTORISATION REQUISE AVANT LE REMPLACEMENT.
** INSCRIRE LE TEMPS À LA LIGNE «MAIN-D'OEUVRE SEULEMENT».
*** INSCRIRE LE MONTANT $$$ À LA LIGNE «OUVRAGE SOUS-CONTRACTÉ».

IMPORTANT: Toujours utiliser le temps donné à l'opération qui nécessite le plus de temps.

## 4. TRAVAUX REQUIS

Tous les temps mentionnés dans les pages suivantes incluent les opérations telles que: réglage du moteur (valve rotative et allumage), alignement de la ou des bielles, couple de serrage de la ou des culasses ou l'utilisation de barres parallèles, utilisation du vérificateur d'allumage, mesure du jet des pistons/jeu en bout des segments, mesure de l'écart entre le vilebrequin et le carter, rectification du cylindre, vérification de fuite du moteur.

## 5. ILLUSTRATIONS

Contrairement aux *Catalogues de pièces*, les illustrations de ce manuel ne montrent pas nécessairement chacune des pièces qu'elles représentent, leur raison d'être étant plutôt de faciliter la reconnaissance des pièces reliées à un barème de temps à taux fixe. **Les numéros d'items sur les illustrations correspondent aux quatre derniers chiffres du code de travail.**

## 6. SUGGESTION DE BARÈME DE TEMPS À TAUX FIXE

ENVOYEZ UNE REQUÊTE GARANTIE BOSSWeb DEPUIS LA SECTION INFO CENTRE

Dans cette requête, vous devez fournir les informations suivantes:

Section *Objet*:

- Suggestion de barème de temps à taux fixe

Section *Votre Question*:

- L'année modèle;
- Description du modèle;
- Description du code de travail;
- Code de travail;
- Temps actuel;
- Temps suggéré;
- Détails de la marche à suivre;

Pour s'assurer que votre demande sera traitée dans les plus brefs délais et efficacement, s.v.p. nous fournir toutes les étapes de réparation dans les détails de la marche à suivre.

# 2019

## *LIQUID COOLED FOUR STROKES*
## *4 TEMPS REFROIDIS PAR LIQUIDE*

| TABLE | DESCRIPTION | MODEL/ *MODÈLE* | ENGINE/ *MOTEUR* | CHASSIS TYPE/ *TYPE DE CHÂSSIS* | REAR SUSPENSION/ *SUSPENSION ARRIÈRE* |
|---|---|---|---|---|---|
| **29** | RENEGADE ENDURO 900 ACE | UNKA/UNKB | 903 ACE | Gen4 137" | r-MOTION |
| | RENEGADE Adrenaline 900 ACE | MBKA/MBKB MBKC | | | |
| **30** | GT Sport 900 ACE | EAKA | 903 ACE | Gen4 137" | SC-5 |
| | GT LTD 900 ACE | EBKA | | | |
| **31** | EXPEDITION Sport 900 ACE | KDKA/KDKB | 903 ACE | Gen4 154" | SC-5U |
| **32** | EXPEDITION LE 900 ACE | SRKB | 903 ACE | REV-XU 154" | SC-5U |
| | EXPEDITION SE 900 ACE | SRKE | | | |
| | EXPEDITION SWT 900 ACE | SGKC | | | |
| **33** | SKANDIC WT 900 ACE | FRKA | 903 ACE | REV-XU 154" | SC-5U |
| | SKANDIC SWT 900 ACE | LDKA | | | |
| **34** | RENEGADE Adrenaline 900T ACE | DUKA/DUKB | 903T ACE | Gen4 137" | r-Motion |
| | RENEGADE X 900T ACE | DSKA/DSKB DSKC/DSKD DSKE/DSKF DSKG/DSKH DSKJ/DSKM | | | |
| | RENEGADE XRS 900T ACE | DAKA/DAKB DAKC/DAKD DAKE/DAKF DAKG/DAKH DAKJ/DAKK DAKL/DAKM DAKN/DAKP | | | |
| **35** | GT LTD 900T ACE | ERKA | 903T ACE | Gen4 137" | r-Motion |

| SYSTEM SYSTÈME | CODE | DESCRIPTION | RENEGADE 900 ACE | GRAND TOURING 900 ACE | EXPEDITION 900 ACE SPORT | EXPEDITION LE/SE 900 ACE | SKANDIC 900 ACE | RENEGADE 900T ACE | GRAND TOURING 900 T ACE |
|---|---|---|---|---|---|---|---|---|---|
| | | | 29 | 30 | 31 | 32 | 33 | 34 | 35 |
| **01** | **00** | **NO LABOR INVOLVED<br>AUCUNE MAIN-D'OEUVRE IMPLIQUÉE** | **0** | **0** | **0** | **0** | **0** | **0** | **0** |
| **01*** | **01** | **REMOVE AND REPLACE ENGINE (ASS'Y)<br>REMPLACEMENT MOTEUR (COMPLET)** | **3.7** | **3.7** | **3.7** | **3.7** | **3.7** | | |
| **01** | 03 | OIL PRESSURE SWITCH<br>INTERRUPTEUR DE PRESSION D'HUILE | 0.5 | 0.5 | 0.5 | 0.3 | 0.3 | 0.5 | 0.5 |
| **01** | 08 | FAN<br>VENTILATEUR | | | 0.4 | 0.3 | 0.3 | | 0.4 |
| **01** | 18 | COOLANT TEMPERATURE SENDER<br>CAPTEUR DE TEMPÉRATURE LIQUIDE DE REFROIDISSEMENT | 0.4 | 0.4 | 0.4 | 0.4 | 0.4 | 0.4 | 0.4 |
| **01** | 19 | THERMOSTAT<br>THERMOSTAT | 1.3 | 1.3 | 1.3 | 1.0 | 1.0 | 2.4 | 2.4 |
| **01** | 21 | COOLANT HOSE T-FITTING<br>BOYAU DE REFROIDISSEMENT DU RACCORD EN T | 1.2 | 1.2 | 1.2 | | | 1.2 | 1.2 |
| **01** | 38 | WATER PUMP SHAFT (ALL PARTS)<br>ARBRE DE LA POMPE À EAU (TOUTES LES PIÈCES) | 6.0 | 6.0 | 6.0 | 6.0 | 6.0 | 6.7 | 6.7 |
| **01** | 39 | OIL TANK<br>RÉSERVOIR D'HUILE | 4.0 | 4.0 | 4.0 | 4.0 | 4.0 | 4.0 | 4.0 |
| **01** | 46 | RADIATOR AND/OR GROMMET<br>RADIATEUR ET/OU PASSE FILS | | | 0.8 | 0.6 | 0.6 | | 0.8 |
| **01** | 51 | CYLINDER HEAD GASKET<br>JOINT DE CULASSE | 4.5 | 4.5 | 4.5 | 4.5 | 4.5 | 5.5 | 5.5 |
| **01** | 63 | CRANKSHAFT BEARING PTO<br>ROULEMENT DE VILEBREQUIN, COTE PDM | 0.6 | 0.6 | 0.6 | 0.5 | 0.5 | 0.6 | 0.6 |
| **01** | 69 | CRANKSHAFT<br>VILEBREQUIN | 7.5 | 7.5 | 7.5 | 7.5 | 7.5 | 8.2 | 8.2 |
| **01** | 71 | EXHAUST MANIFOLD<br>COLLECTEUR D'ECHAPPEMENT | 0.5 | 0.5 | 0.5 | 0.5 | 0.5 | | |
| **01** | 75 | MUFFLER AND/OR EXHAUST GROMMET/SUPPORT<br>SILENCIEUX ET/OU BAGUE D'ÉCHAPPEMENT/SUPPORT | 0.3 | 0.3 | 0.3 | 0.3 | 0.3 | 0.3 | 0.3 |
| **01** | 79 | COOLANT HOSE (TANK TO ENGINE)<br>BOYAU SYSTÈME DE REFROIDISSEMENT (RÉSERVOIR AU MOTEUR) | | | | 1.0 | 1.0 | | |
| **01** | 88 | RUBBER MOUNT (MUFFLER )<br>TAMPON D'ANCRAGE (SILENCIEUX) | 0.3 | 0.3 | 0.3 | 0.3 | 0.3 | | |
| **01** | 90 | ENGINE OIL FILTER<br>FILTRE À HUILE DU MOTEUR | | | | 0.3 | 0.3 | 0.3 | 0.3 |
| **01** | 94 | REAR RADIATOR<br>RADIATEUR ARRIÈRE | | | | 4.3 | 4.3 | | |
| **01** | 96 | OIL SIEVE<br>CRIBLE D'HUILE | 4.5 | 4.5 | 4.5 | 4.5 | 4.5 | 5.2 | 5.2 |
| **01** | 98 | COOLING RESERVOIR<br>RÉSERVOIR D'ANTIGEL | 0.4 | 0.4 | 0.4 | 0.4 | 0.4 | 0.4 | 0.4 |

| SYSTEM SYSTÈME | CODE | DESCRIPTION | RENEGADE 900 ACE | GRAND TOURING 900 ACE | EXPEDITION 900 ACE SPORT | EXPEDITION LE/SE 900 ACE | SKANDIC 900 ACE | RENEGADE 900T ACE | GRAND TOURING 900 T ACE |
|---|---|---|---|---|---|---|---|---|---|
| | | | 29 | 30 | 31 | 32 | 33 | 34 | 35 |
| 01 | 100 | RADIATOR OUTLET HOSE<br>BOYAU DE SORTIE DU RADIATEUR | 0.6 | 0.6 | 0.6 | 0.6 | 0.6 | 0.6 | 0.6 |
| 01 | 101 | PISTON, PIN, CIRCLIP, RING (1)<br>PISTON, AXE, FREIN D'AXE, SEGMENT (1) | 6.2 | 6.2 | 6.2 | 6.2 | 6.2 | 6.9 | 6.9 |
| 01 | 102 | PISTONS, PINS, CIRCLIPS, RINGS (2)<br>PISTONS, AXES, FREINS D'AXE, SEGMENTS (2) | 6.3 | 6.3 | 6.3 | 6.3 | 6.3 | 7.0 | 7.0 |
| 01 | 103 | PISTON, BEARING, PIN (3 PISTON)<br>PISTON,ROULEMENT,AXE (3 PISTONS) | 6.5 | 6.5 | 6.5 | 6.5 | 6.5 | 7.2 | 7.2 |
| 01 | 109 | VALVE COVER AND/OR GASKET<br>COUVERCLE DE SOUPAPE ET/OU JOINT D'ÉTANCHÉITÉ | 1.5 | 1.5 | 1.5 | 0.7 | 0.7 | 2.2 | 2.2 |
| 01 | 111 | TIMING GEARS<br>ENGRENAGES DE LA DISTRIBUTION | 2.5 | 2.5 | 2.5 | 1.6 | 1.6 | 3.1 | 3.1 |
| 01 | 114 | CYLINDER HEAD AND/OR GASKET<br>CULASSE ET/OU JOINT D'ÉTANCHÉITÉ | 5.9 | 5.9 | 5.9 | 5.0 | 5.0 | 6.5 | 6.5 |
| 01 | 116 | EXHAUST AND/OR INLET VALVE AND/OR SPRING AND/OR SEAL<br>VALVE D'ADMISSION ET/OU D'ÉCHAPPEMENT ET/OU RESSORT<br>ET/OU ANNEAU D'ÉTANCHÉITÉ | 4.5 | 4.5 | 4.5 | 4.0 | 4.0 | 5.9 | 5.9 |
| 01 | 119 | WATER PUMP HOUSING AND/OR IMPELLER<br>CARTER DE POMPE À EAU ET/OU ROUE AILETTES | 1.3 | 1.3 | 1.3 | 1.0 | 1.0 | 2.4 | 2.4 |
| 01 | 132 | OIL PUMP GEAR<br>ENGRENAGE DE LA POMPE À HUILE | 4.7 | 4.7 | 4.7 | 4.2 | 4.2 | 5.4 | 5.4 |
| 01 | 133 | OIL PIPE<br>TUYAU À L'HUILE | 0.3 | 0.3 | 0.3 | 0.3 | 0.3 | 0.3 | 0.3 |
| 01 | 138 | CRANKCASE RESEAL AND/OR GASKET<br>RESCELLEMENT CARTER ET/OU JOINT D'ÉTANCHÉITÉ | 6.0 | 6.0 | 6.0 | 6.0 | 6.0 | 6.7 | 6.7 |
| 01 | 139 | CRANKCASE REPLACEMENT<br>REMPLACEMENT DU CARTER | 8.0 | 8.0 | 8.0 | 7.5 | 7.5 | 8.7 | 8.7 |
| 01 | 146 | OIL PUMP GEAR (2)<br>ENGRENAGE POMPE À L'HUILE (2) | 4.7 | 4.7 | 4.7 | 4.2 | 4.2 | 5.4 | 5.4 |
| 01 | 154 | TIMING CHAIN (PTO SIDE)<br>CHAÎNE D'ENGRENAGE (CÔTÉ PDM) | 6.5 | 6.5 | 6.5 | 6.0 | 6.0 | 7.2 | 7.2 |
| 01 | 179 | CHAIN GUIDE<br>GUIDE DE CHAÎNE | 2.2 | 2.2 | 2.2 | 1.5 | 1.5 | 2.9 | 2.9 |
| 01 | 182 | OIL RADIATOR AND/OR O-RING<br>RADIATEUR D'HUILE ET/OU JOINT | 1.0 | 1.0 | 1.0 | 0.5 | 0.5 | 1.0 | 1.0 |
| 01 | 183 | OIL PUMP COVER AND/OR SHAFT AND/OR ROTOR<br>COUVERCLE POMPE ET/OU ARBRE ET/OU ROTOR | 4.9 | 4.9 | 4.9 | 4.4 | 4.4 | 5.6 | 5.6 |
| 01 | 184 | OIL PUMP HOUSING AND/OR ALL PARTS<br>BOÎTIER POMPE HUILE ET/OU TOUTES LES PIÈCES | 4.9 | 4.9 | 4.9 | 4.4 | 4.4 | 5.6 | 5.6 |
| 01 | 190 | PTO HOUSING AND/OR GASKET<br>BOITIER PDM ET/OU JOINT | 0.6 | 0.6 | 0.6 | 0.5 | 0.5 | 0.6 | 0.6 |
| 01 | 191 | CHAIN TENSION GUIDE<br>GUIDE DE TENSION DE CHAÎNE | 6.1 | 6.1 | 6.1 | 5.2 | 5.2 | 6.7 | 6.7 |

| SYSTEM SYSTÈME | CODE | DESCRIPTION | RENEGADE 900 ACE | GRAND TOURING 900 ACE | EXPEDITION 900 ACE SPORT | EXPEDITION LE/SE 900 ACE | SKANDIC 900 ACE | RENEGADE 900T ACE | GRAND TOURING 900 T ACE |
|---|---|---|---|---|---|---|---|---|---|
| | | | 29 | 30 | 31 | 32 | 33 | 34 | 35 |
| 01 | 192 | CHAIN TENSIONER (ASS'Y)<br>TENDEUR DE CHAÎNE (COMPLET) | 0.5 | 0.5 | 0.5 | 0.4 | 0.4 | 0.5 | 0.5 |
| 01 | 200 | WATER PUMP GEAR<br>ENGRENAGE POMPE À EAU | 4.7 | 4.7 | 4.7 | 4.2 | 4.2 | 5.4 | 5.4 |
| 01 | 206 | COOLANT HOSE (REAR RADIATOR TO FRONT RADIATOR)<br>BOYAU REFROIDISSEMENT (RADIATEUR ARRIÈRE AU RADIATEUR AVANT) | 1.1 | 1.1 | 1.1 | 1.1 | 1.1 | 1.2 | 1.2 |
| 01 | 207 | COOLANT HOSE (ENGINE TO REAR RADIATOR)<br>BOYAU DE REFROIDISSEMENT (MOTEUR AU RADIATEUR ARRIÈRE) | | | | 1.1 | 1.1 | | |
| 01 | 215 | OIL DIPSTICK<br>JAUGE À L'HUILE | 0.3 | 0.3 | 0.3 | 0.3 | 0.3 | 0.3 | 0.3 |
| 01 | 216 | PRESSURE CAP<br>BOUCHON DU RADIATEUR | 0.3 | 0.3 | 0.3 | 0.3 | 0.3 | 0.3 | 0.3 |
| 01 | 245 | OUTPUT CRANKSHAFT SEAL (PTO SIDE)<br>ANNEAU D'ÉTANCHÉITÉ SORTIE VILEBREQUIN (CÔTÉ PDM) | 0.6 | 0.6 | 0.6 | 0.5 | 0.5 | 0.6 | 0.6 |
| 01 | 246 | WATER PUMP GEARS AND/OR SEAL<br>ENGRENAGES POMPE À EAU ET/OU JOINT D'ÉTANCHÉITÉ | 5.0 | 5.0 | 5.0 | 4.5 | 4.5 | 5.7 | 5.7 |
| 01 | 248 | BREATHER GEAR AND/OR V-RING<br>RENIFLARD ET/OU ANNEAU D'ÉTANCHÉITÉ EN V | 1.0 | 1.0 | 1.0 | 1.0 | 1.0 | 1.7 | 1.7 |
| 01 | 250 | CRANKSHAFT POSITION SENSOR (CPS)<br>CAPTEUR POSITION DU VILEBREQUIN (CPV) | 0.4 | 0.4 | 0.4 | 0.4 | 0.4 | 0.4 | 0.4 |
| 01 | 255 | EXHAUST/INLET VALVES AND/OR SPRINGS AND/OR SEALS (4)<br>VALVES D'ADMISSION/D'ÉCHAPPEMENT ET/OU RESSORTS ET/OU<br>ANNEAUX (4) | 4.8 | 4.8 | 4.8 | 4.3 | 4.3 | 6.4 | 6.4 |
| 01 | 256 | EXHAUST/INLET VALVES AND/OR SPRINGS AND/OR SEALS (8)<br>VALVES D'ADMISSION/D'ÉCHAPPEMENT ET/OU RESSORTS ET/OU<br>ANNEAUX (8) | 5.0 | 5.0 | 5.0 | 4.5 | 4.5 | 6.6 | 6.6 |
| 01 | 257 | EXHAUST/INLET VALVE A/O SPRINGS A/O SEALS (12)<br>VALVES ADMISSION/ÉCHAPPEMENT E/O RESSORTS E/O<br>ANNEAUX (12) | 5.2 | 5.2 | 5.2 | 4.7 | 4.7 | 6.8 | 6.8 |
| 01 | 264 | LONG BLOCK<br>ENSEMBLE CARTER-CYLINDRE-CULASSE | 5.9 | 5.9 | 5.9 | 5.4 | 5.4 | 7.6 | 7.6 |
| 01 | 274 | CRANKSHAFT PLAIN BEARINGS<br>PALIERS LISSE DU VILEBREQUIN | 7.5 | 7.5 | 7.5 | 7.5 | 7.5 | 8.2 | 8.2 |
| 01 | 289 | FRONT ENGINE SUPPORT (PTO SIDE)<br>SUPPORT MOTEUR AVANT (CÔTÉ PDM) | 1.3 | 1.3 | 1.3 | 0.6 | 0.6 | 1.3 | 1.3 |
| 01 | 290 | REAR ENGINE SUPPORT (PTO SIDE)<br>SUPPORT MOTEUR ARRIÈRE (CÔTÉ PDM) | 2.0 | 2.0 | 2.0 | 0.6 | 0.6 | 2.0 | 2.0 |
| 01 | 291 | FRONT ENGINE SUPPORT (MAG SIDE)<br>SUPPORT MOTEUR AVANT (CÔTÉ MAG) | 1.2 | 1.2 | 1.2 | 0.6 | 0.6 | 1.2 | 1.2 |
| 01 | 292 | REAR ENGINE SUPPORT (MAG SIDE)<br>SUPPORT MOTEUR ARRIÈRE (CÔTÉ MAG) | 3.0 | 3.0 | 3.0 | 1.0 | 1.0 | 3.0 | 3.0 |

| SYSTEM SYSTÈME | CODE | DESCRIPTION | RENEGADE 900 ACE | GRAND TOURING 900 ACE | EXPEDITION 900 ACE SPORT | EXPEDITION LE/SE 900 ACE | SKANDIC 900 ACE | RENEGADE 900T ACE | GRAND TOURING 900 T ACE |
|---|---|---|---|---|---|---|---|---|---|
| | | | 29 | 30 | 31 | 32 | 33 | 34 | 35 |
| 01 | 293 | FRONT RUBBER MOUNT (PTO SIDE)<br>TAMPON D'ANCRAGE AVANT (CÔTÉ PDM) | 0.8 | 0.8 | 0.8 | 0.6 | 0.6 | 0.8 | 0.8 |
| 01 | 294 | REAR RUBBER MOUNT (PTO SIDE)<br>TAMPON D'ANCRAGE ARRIÈRE (CÔTÉ PDM) | 1.5 | 1.5 | 1.5 | 1.0 | 1.0 | 1.5 | 1.5 |
| 01 | 295 | FRONT RUBBER MOUNT (MAG SIDE)<br>TAMPON D'ANCRAGE AVANT (CÔTÉ MAG) | 1.0 | 1.0 | 1.0 | 0.6 | 0.6 | 1.0 | 1.0 |
| 01 | 296 | REAR RUBBER MOUNT (MAG SIDE)<br>TAMPON D'ANCRAGE ARRIÈRE (CÔTÉ MAG) | 3.0 | 3.0 | 3.0 | 1.2 | 1.2 | 3.0 | 3.0 |
| 01 | 311 | CAMSHAFT INTAKE/EXHAUST AND/OR CAMSHAFT BRACKETS<br>ARBRE À CAME D'ADMISSION/ÉCHAPPEMENT ET/OU SUPPORTS D'ARBRE À CAME | 3.1 | 3.1 | 3.1 | 2.3 | 2.3 | 3.7 | 3.7 |
| 01 | 315 | OIL SUMP COVER AND GASKET<br>COUVERCLE DU CARTER D'HUILE ET JOINT D'ÉTANCHÉITÉ | 4.2 | 4.2 | 4.2 | 4.2 | 4.2 | 4.9 | 4.9 |
| 01 | 318 | RADIATOR SUPPORT<br>SUPPORT DE RADIATEUR | | | | 0.3 | 0.3 | | |
| 01 | 321 | MODULE SUPPORT<br>SUPPORT DU MODULE | 1.3 | 1.3 | 1.3 | 1.3 | 1.3 | 1.3 | 1.3 |
| 01 | 322 | WATER PIPE<br>TUYAU D'EAU | | 0.6 | 0.6 | 0.6 | 0.6 | | |
| 01 | 323 | WATER PIPE DOUBLE<br>TUYAU D'EAU DOUBLE | 0.6 | 0.6 | 0.8 | 0.8 | 0.8 | 0.6 | 0.6 |
| 01 | 324 | FAN SUPPORT<br>SUPPORT DU VENTILATEUR | | | 0.5 | 0.5 | 0.5 | | 0.5 |
| 01 | 325 | COOLANT HOSE (WATER PUMP HOUSING TO RADIATOR)<br>BOYAU DE REFROIDISSEMENT (BOÎTIER DE LA POMPE À EAU AU RADIATEUR) | 1.2 | 1.2 | 1.2 | 0.6 | 0.6 | 1.2 | 1.2 |
| 01 | 335 | COOLANT HOSE (WATER PUMP)<br>BOYAU DE REFROIDISSEMENT (POMPE A EAU) | 1.2 | 1.2 | 1.2 | | | 1.2 | 1.2 |
| 01 | 353 | INJECTORS (ALL)<br>INJECTEUR (TOUS) | 1.2 | 1.2 | 1.2 | 1.2 | 1.2 | 1.2 | 1.2 |
| 01 | 369 | TURBOCHARGER (ASS'Y)<br>TURBOCOMPRESSEUR (COMPLET) | | | | | | 2.2 | 2.2 |
| 01 | 400 | SOLENOIDE VALVE<br>SOUPAPE SOLENOIDE | | | | | | 0.3 | 0.3 |
| 01 | 401 | COOLANT TUBE (TURBO)<br>TUYAU DE REFROIDISSEMENT (TURBO) | | | | | | 0.5 | 0.5 |
| 01 | 403 | TURBO GASKET<br>JOINT D'ETANCHEITE DU TURBO | | | | | | 2.2 | 2.2 |
| 01 | 414 | WASTE GATE ACTUATOR<br>ACTUATEUR SOUPAPE DE DÉCHARGE | | | | | | 1.0 | 1.0 |
| 01 | 415 | EXHAUST FLANGE<br>BRIDE D'ÉCHAPPEMENT | | | | | | 0.5 | 0.5 |

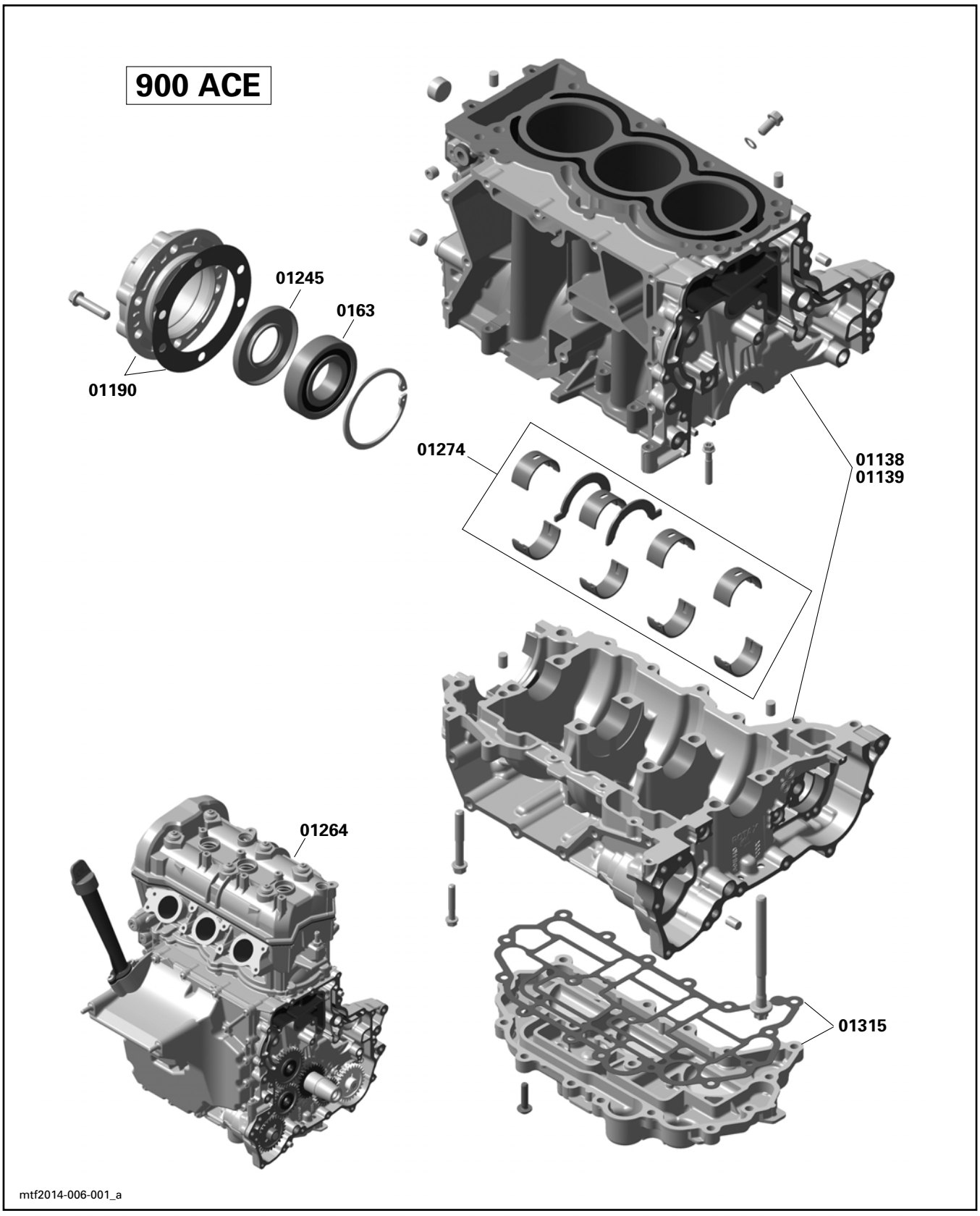
900 ACE
01245
0163
01190
01274
01138
01139
01264
01315
mtf2014-006-001_a

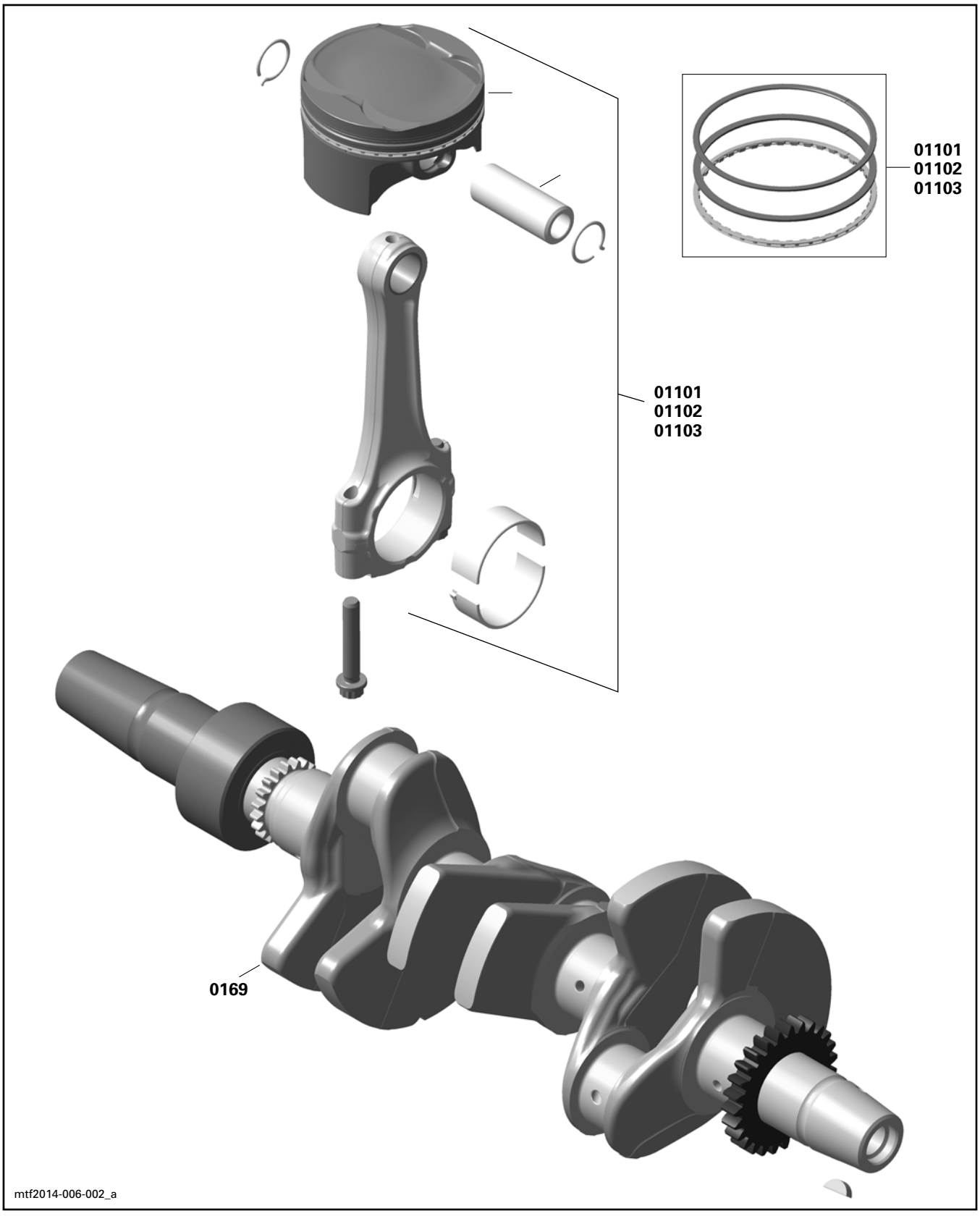
01101
01102
01103
01101
01102
01103
0169
mtf2014-006-002_a

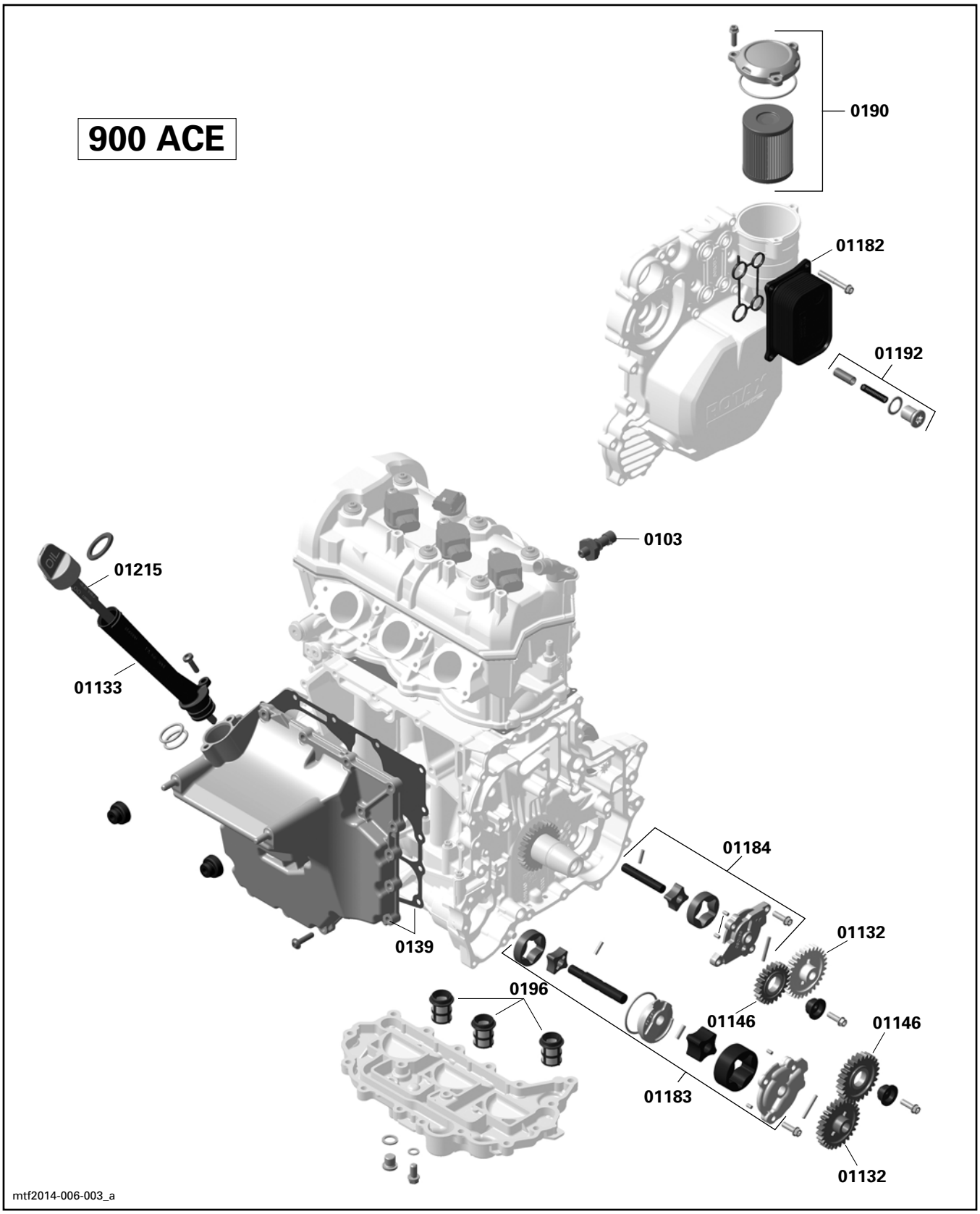
900 ACE
0190
01182
01192
0103
01215
01133
01184
01132
0139
0196
01146
01146
01183
01132
mtf2014-006-003_a

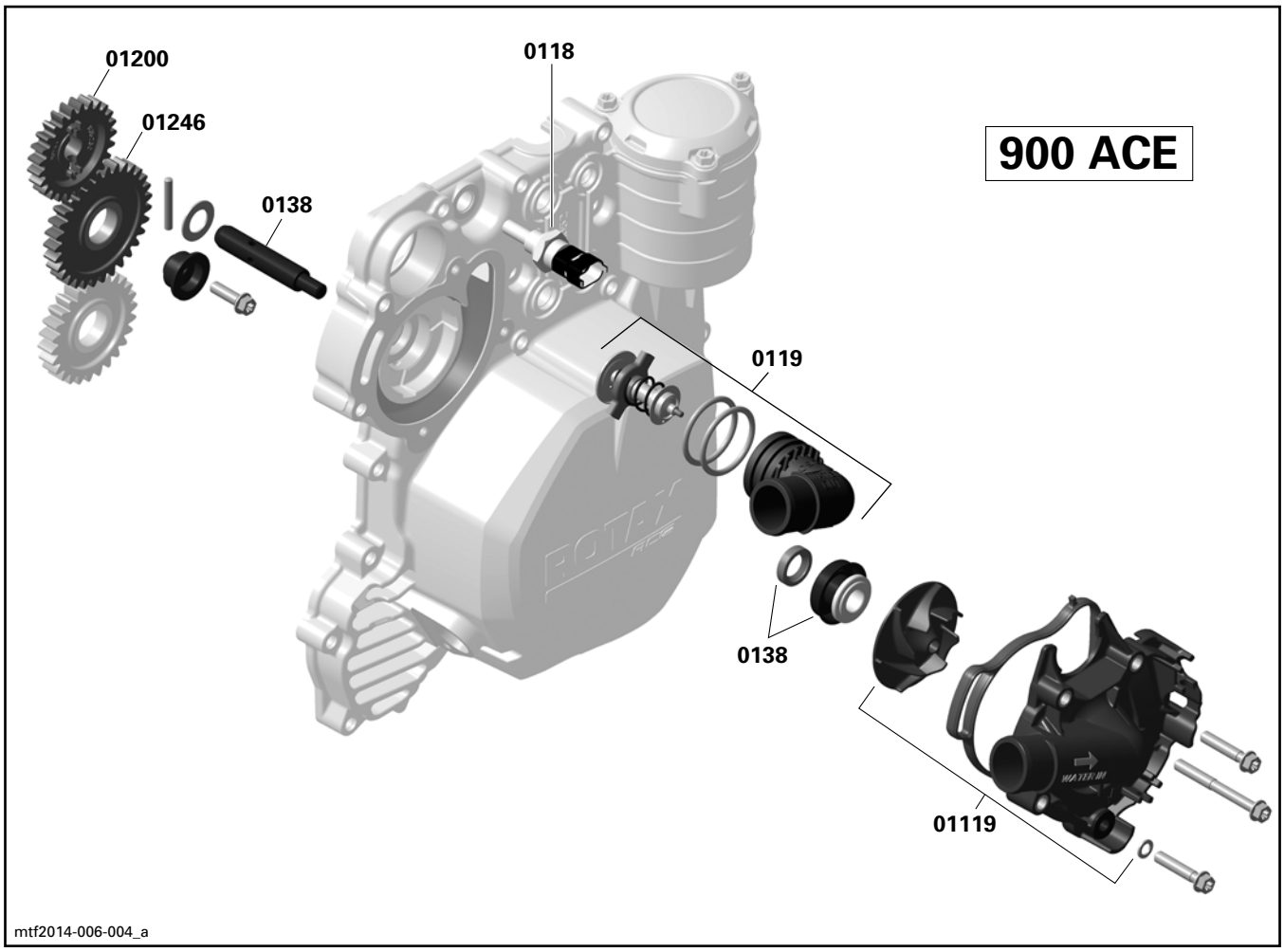
01200
01246
0138
0118
900 ACE
0119
0138
01119
mtf2014-006-004_a

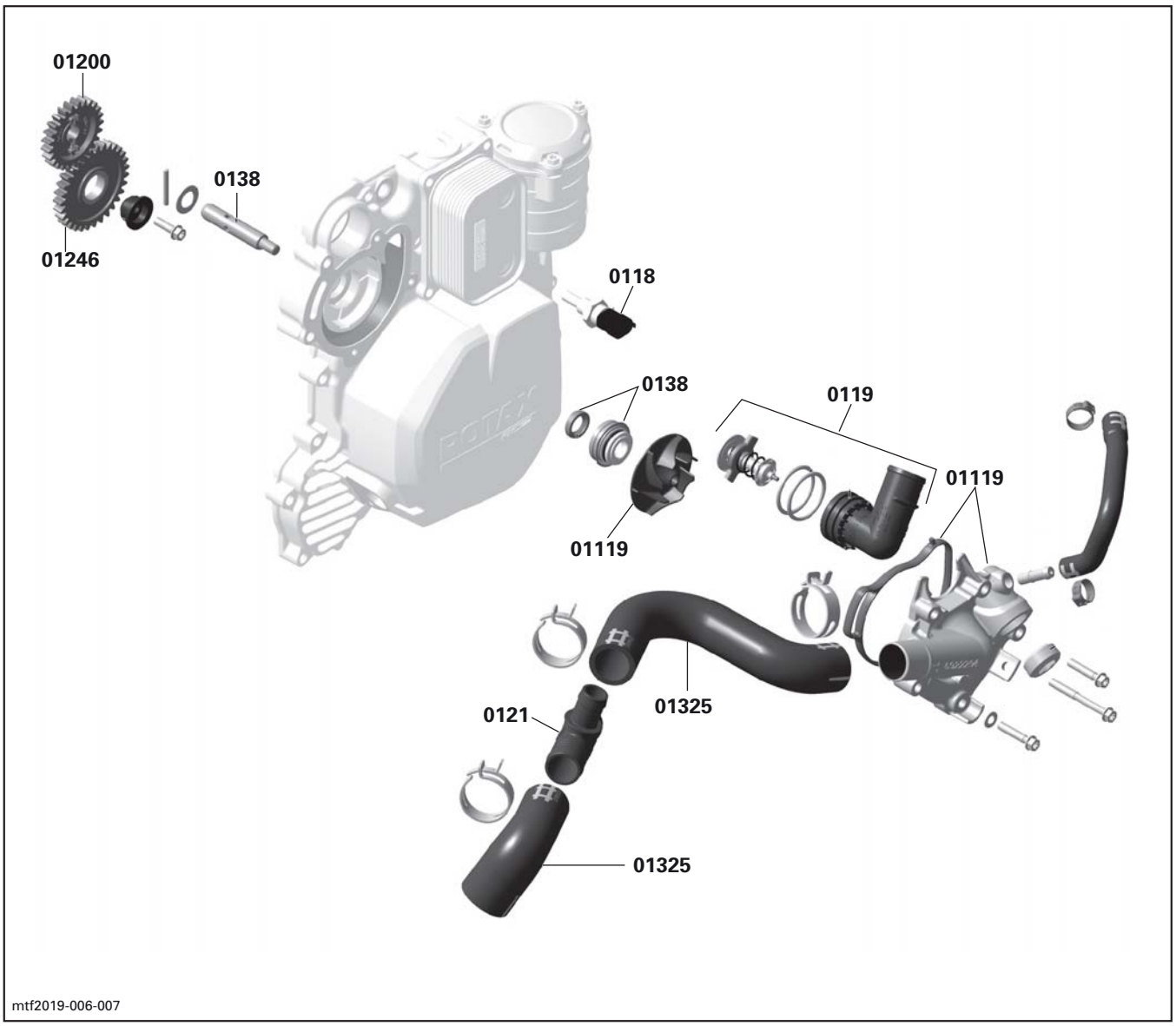


mtf2019-006-007

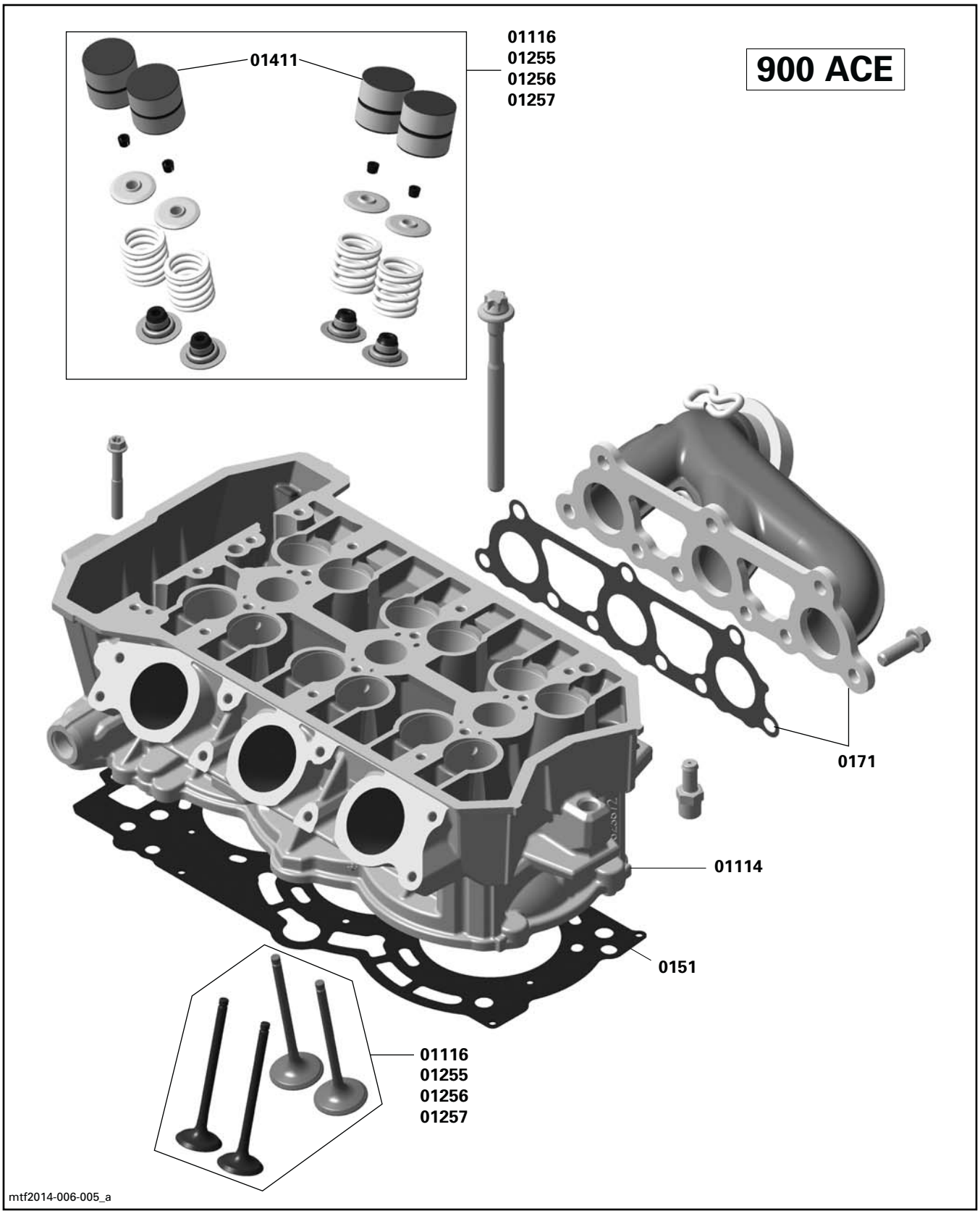
01411
01116
01255
01256
01257
900 ACE
0171
01114
0151
01116
01255
01256
01257
mtf2014-006-005_a

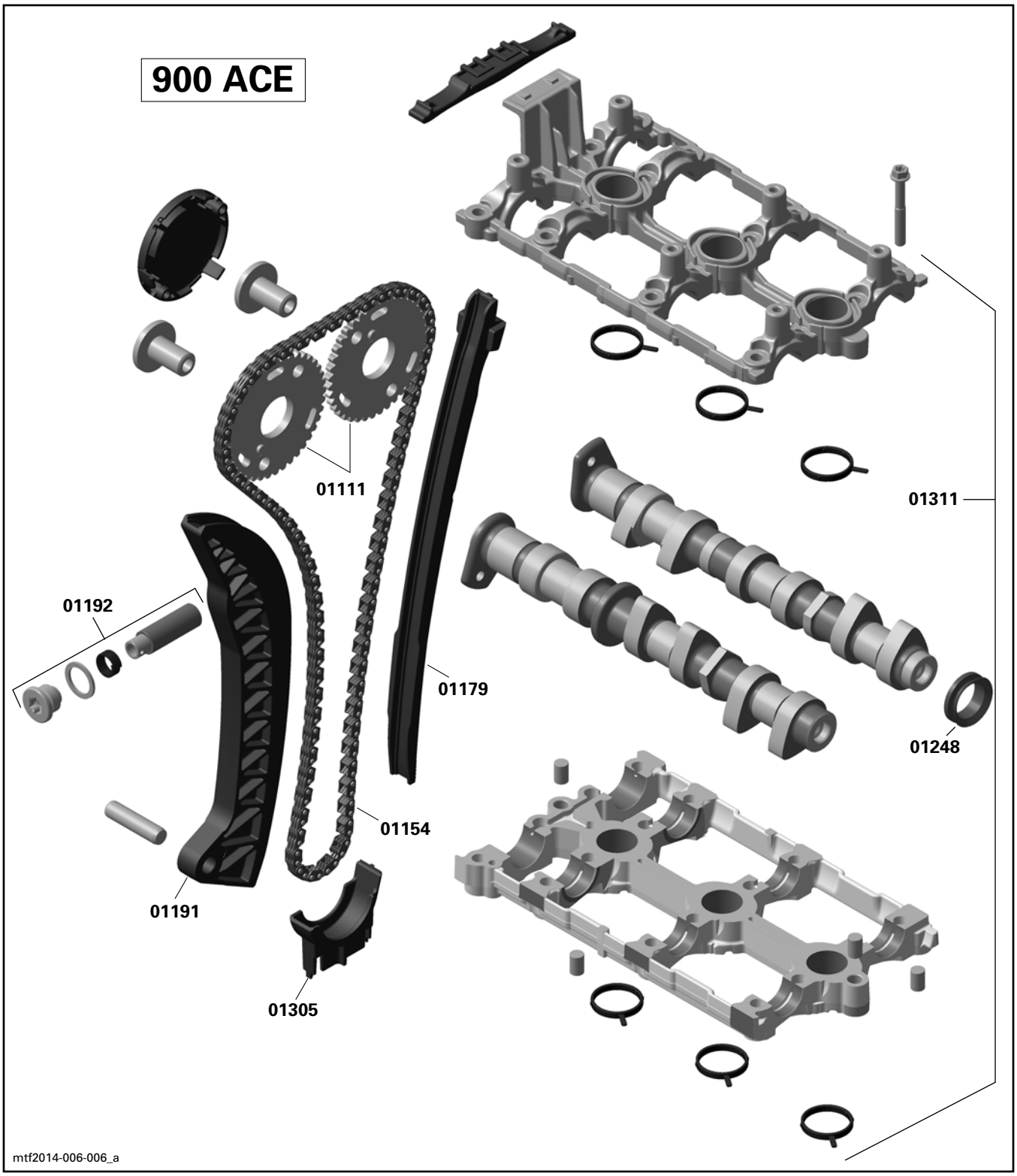
900 ACE
01111
01311
01192
01179
01248
01154
01191
01305
mtf2014-006-006_a

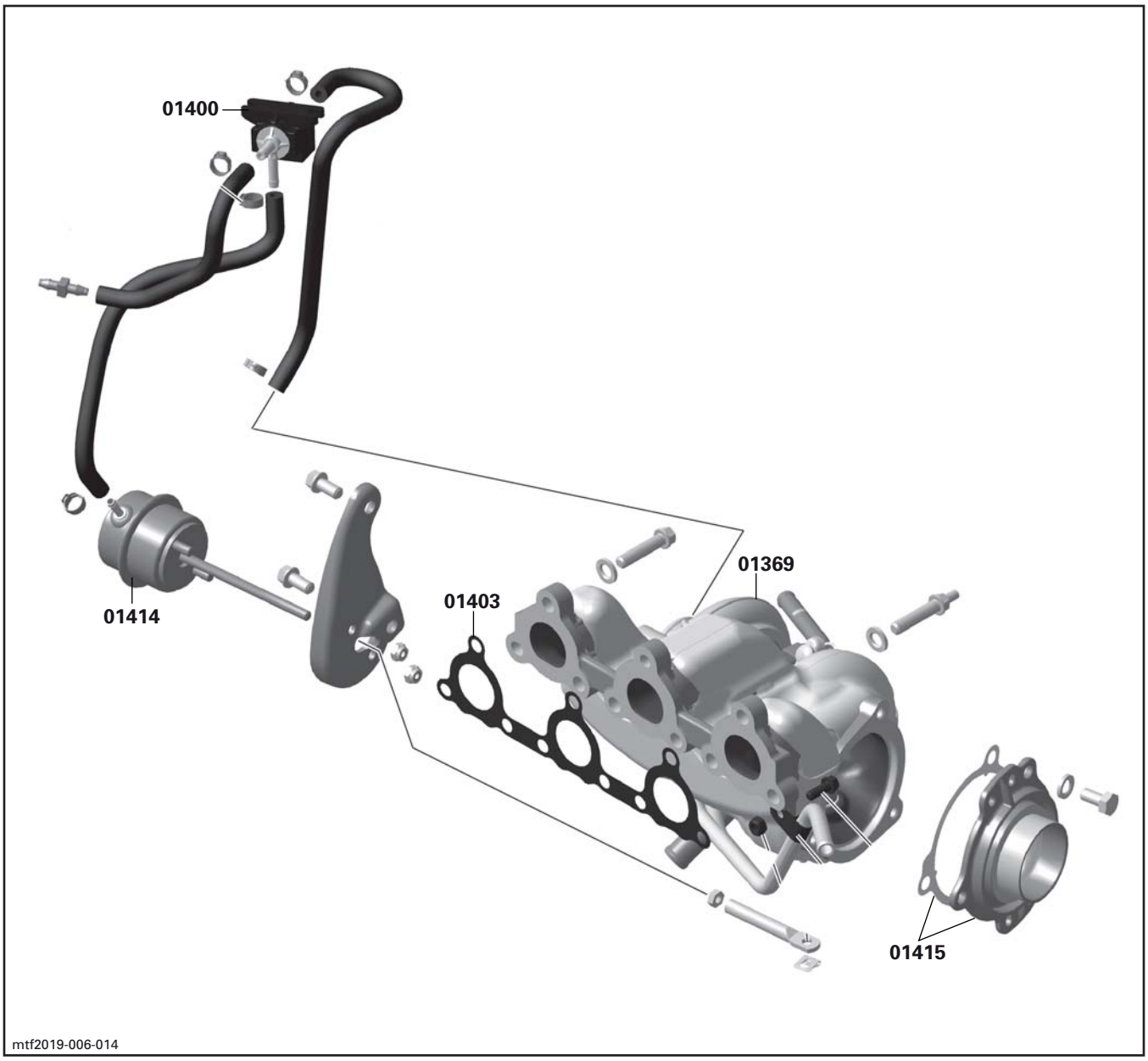
01400
01414
01403
01369
01415
mtf2019-006-014

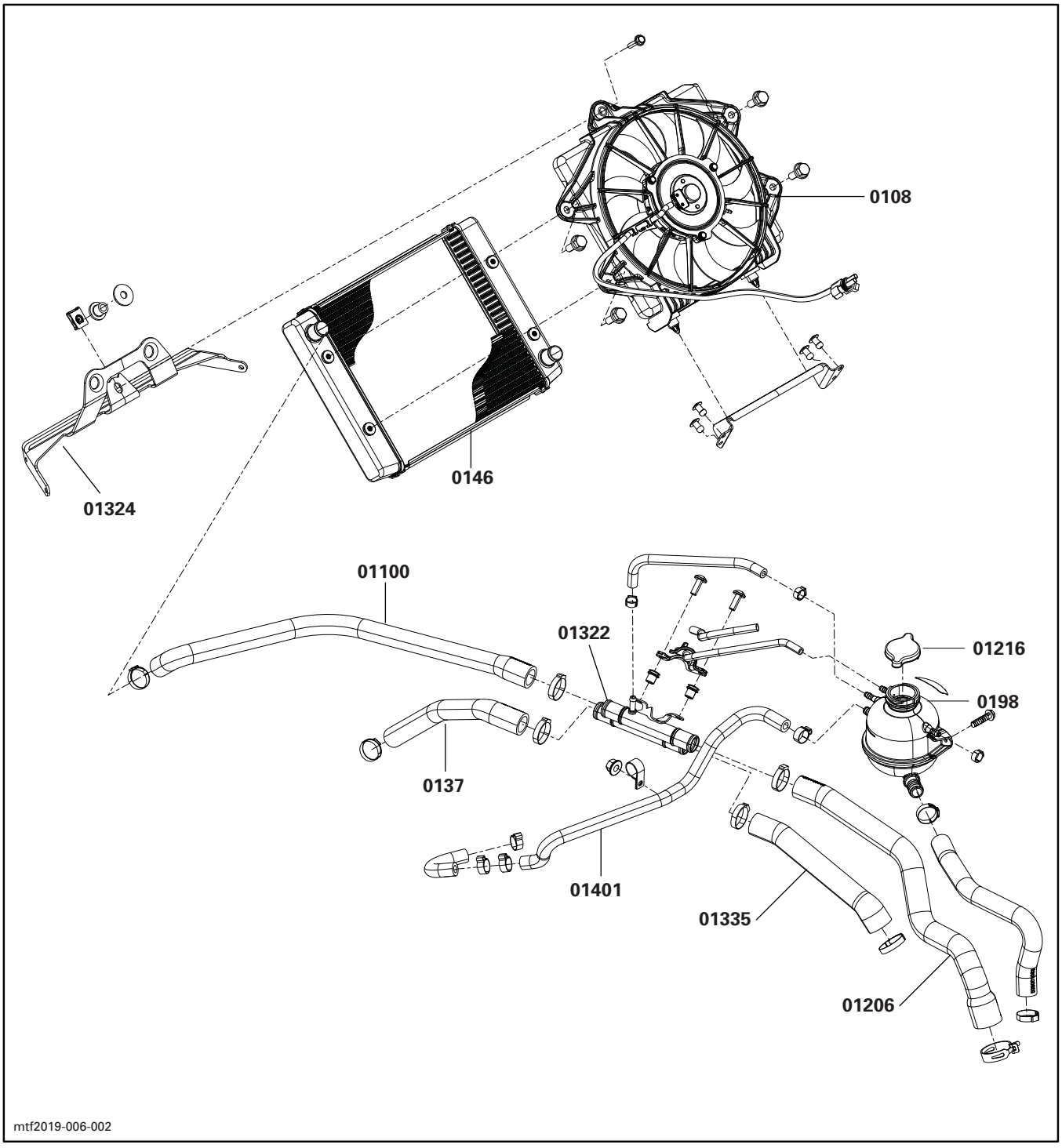
0108
0146
01324
01100
01322
01216
0198
0137
01401
01335
01206
mtf2019-006-002

| SYSTEM SYSTÈME | CODE | DESCRIPTION | RENEGADE 900 ACE | GRAND TOURING 900 ACE | EXPEDITION 900 ACE SPORT | EXPEDITION LE/SE 900 ACE | SKANDIC 900 ACE | RENEGADE 900T ACE | GRAND TOURING 900 T ACE |
|---|---|---|---|---|---|---|---|---|---|
| | | | 29 | 30 | 31 | 32 | 33 | 34 | 35 |
| 02 | 00 | **NO LABOR INVOLVED**<br>**AUCUNE MAIN-D'OEUVRE IMPLIQUÉE** | 0 | 0 | 0 | 0 | 0 | 0 | 0 |
| 02 | 01 | AIR SILENCER (ASS'Y) (ALL PARTS)<br>SILENCIEUX D'ADMISSION (COMPLET) (TOUTES LES PIÈCES) | 2.5 | 2.5 | 2.5 | 1.5 | 1.5 | 2.5 | 2.5 |
| 02 | 16 | INTAKE ADAPTOR<br>ADAPTATEUR D'ADMISSION | 0.5 | 0.5 | 0.5 | 0.5 | 0.5 | 0.5 | 0.5 |
| 02 | 19 | AIR INTAKE TUBE<br>TUYAU D'ADMISSION D'AIR | 0.3 | 0.3 | 0.3 | 0.3 | 0.3 | 0.3 | 0.3 |
| 02 | 47 | FUEL TANK<br>RÉSERVOIR À ESSENCE | 1.2 | 1.2 | 1.2 | 1.5 | 1.5 | 1.2 | 1.2 |
| 02 | 48 | FUEL TANK CAP<br>BOUCHON DU RÉSERVOIR À ESSENCE | 0.3 | 0.3 | 0.3 | 0.3 | 0.3 | 0.3 | 0.3 |
| 02 | 50 | THROTTLE HANDLE HOUSING<br>LOGEMENT MANETTE ACCÉLÉRATEUR | 0.3 | 0.3 | 0.3 | 0.3 | 0.3 | 0.3 | 0.3 |
| 02 | 52 | FUEL FILTER<br>FILTRE À ESSENCE | 1.2 | 1.2 | 1.2 | 1.5 | 1.5 | 1.2 | 1.2 |
| 02 | 65 | FUEL SENSOR (ASS'Y)<br>CAPTEUR DE NIVEAU D'ESSENCE (COMPLET) | 1.2 | 1.2 | 1.2 | 1.5 | 1.5 | 1.2 | 1.2 |
| 02 | 69 | AIR FILTER<br>FILTRE À AIR | 0.3 | 0.3 | 0.3 | 0.3 | 0.3 | 0.3 | 0.3 |
| 02 | 79 | FUEL RAIL<br>RAMPE D'ESSENCE | 1.2 | 1.2 | 1.2 | 1.0 | 1.0 | 1.2 | 1.2 |
| 02 | 81 | THROTTLE BODY (ASS'Y)<br>CARTER ACCÉLÉRATEUR (COMPLET) | 0.8 | 0.8 | 0.8 | 0.8 | 0.8 | 0.8 | 0.8 |
| 02 | 83 | AIR PRESSURE SENSOR<br>CAPTEUR PRESSION D'AIR | 0.3 | 0.3 | 0.3 | 0.3 | 0.3 | 0.3 | 0.3 |
| 02 | 89 | FUEL PUMP MODULE<br>MODULE POMPE À ESSENCE | 1.2 | 1.2 | 1.2 | 1.5 | 1.5 | 1.2 | 1.2 |
| 02 | 99 | FUEL INJECTION HOSE (ASS'Y)<br>BOYAU D'ESSENCE À INJECTION (COMPLET) | 1.0 | 1.0 | 1.0 | 1.0 | 1.0 | 1.0 | 1.0 |
| 02 | 105 | SECONDARY CHAMBER (ASS'Y)<br>CHAMBRE SECONDAIRE (COMPLET) | 0.5 | 0.5 | 0.5 | 0.4 | 0.4 | 0.5 | 0.5 |
| 02 | 108 | FUEL PUMP NUT AND/OR GASKET<br>ÉCROU DE LA POMPE À ESSENCE ET/OU JOINT D'ÉTANCHÉITÉ | 1.2 | 1.2 | 1.2 | 1.4 | 1.4 | 1.2 | 1.2 |
| 02 | 119 | CHECK VALVE<br>SOUPAPE À ESSENCE | 0.3 | 0.3 | 0.3 | 0.3 | 0.3 | 0.3 | 0.3 |
| 02 | 122 | INTERCOOLER<br>REFROIDISSEUR | | | | | | 0.4 | 0.4 |
| 02 | 124 | INTERCOOLER HOSE<br>BOYAU INTERCOOLER | | | | | | 0.4 | 0.4 |

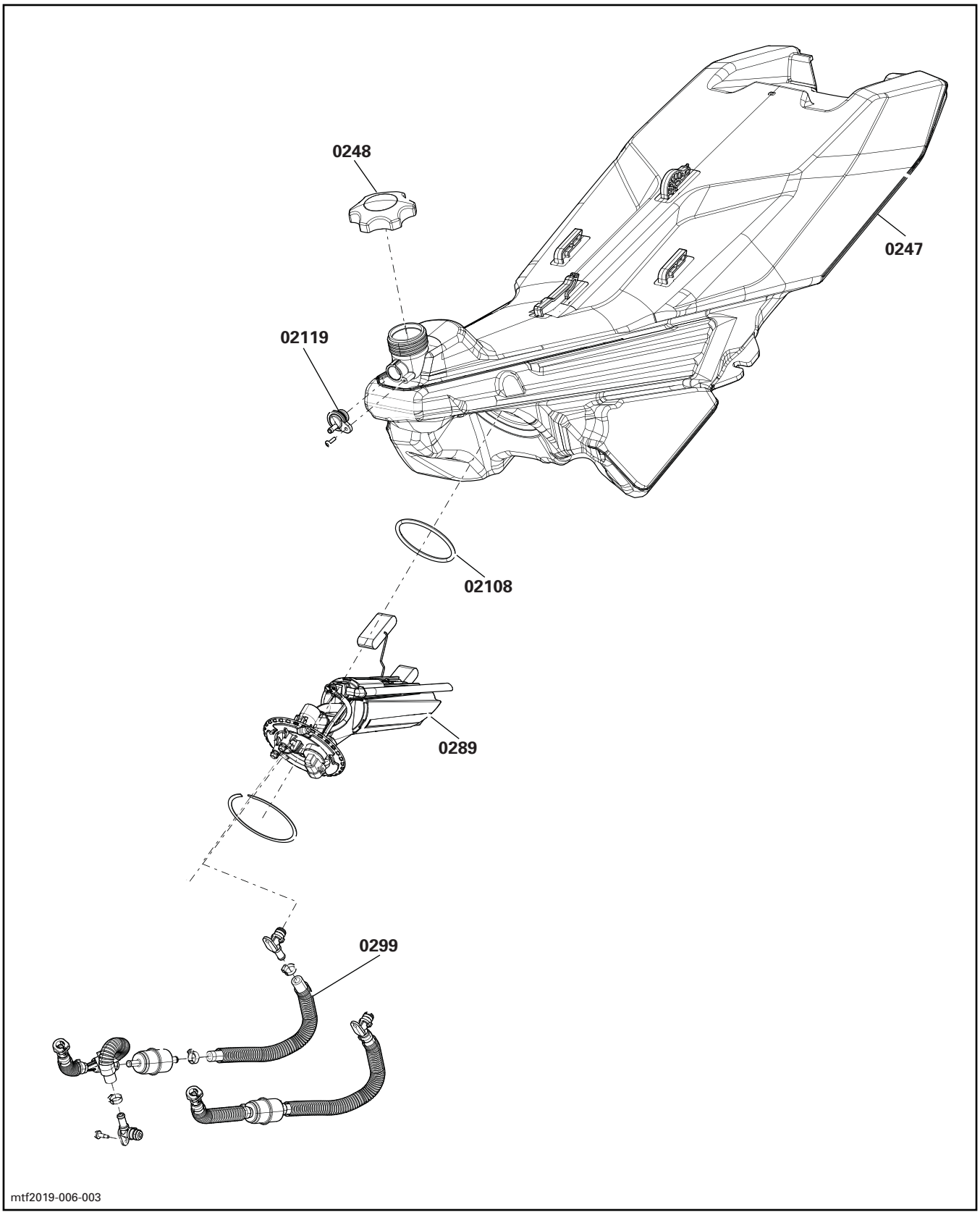
0248
0247
02119
02108
0289
0299
mtf2019-006-003

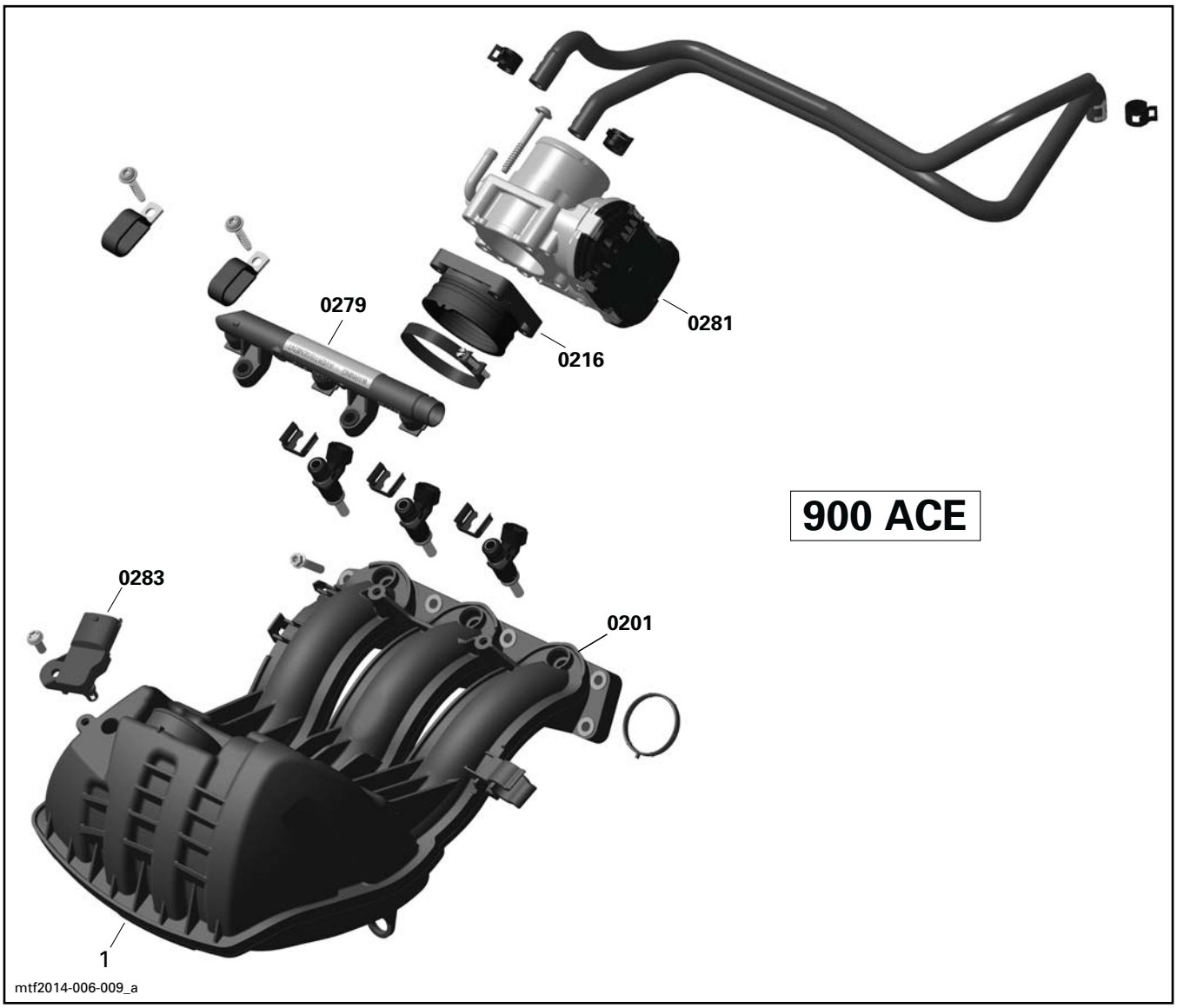
0279
0281
0216
900 ACE
0283
0201
1
mtf2014-006-009_a

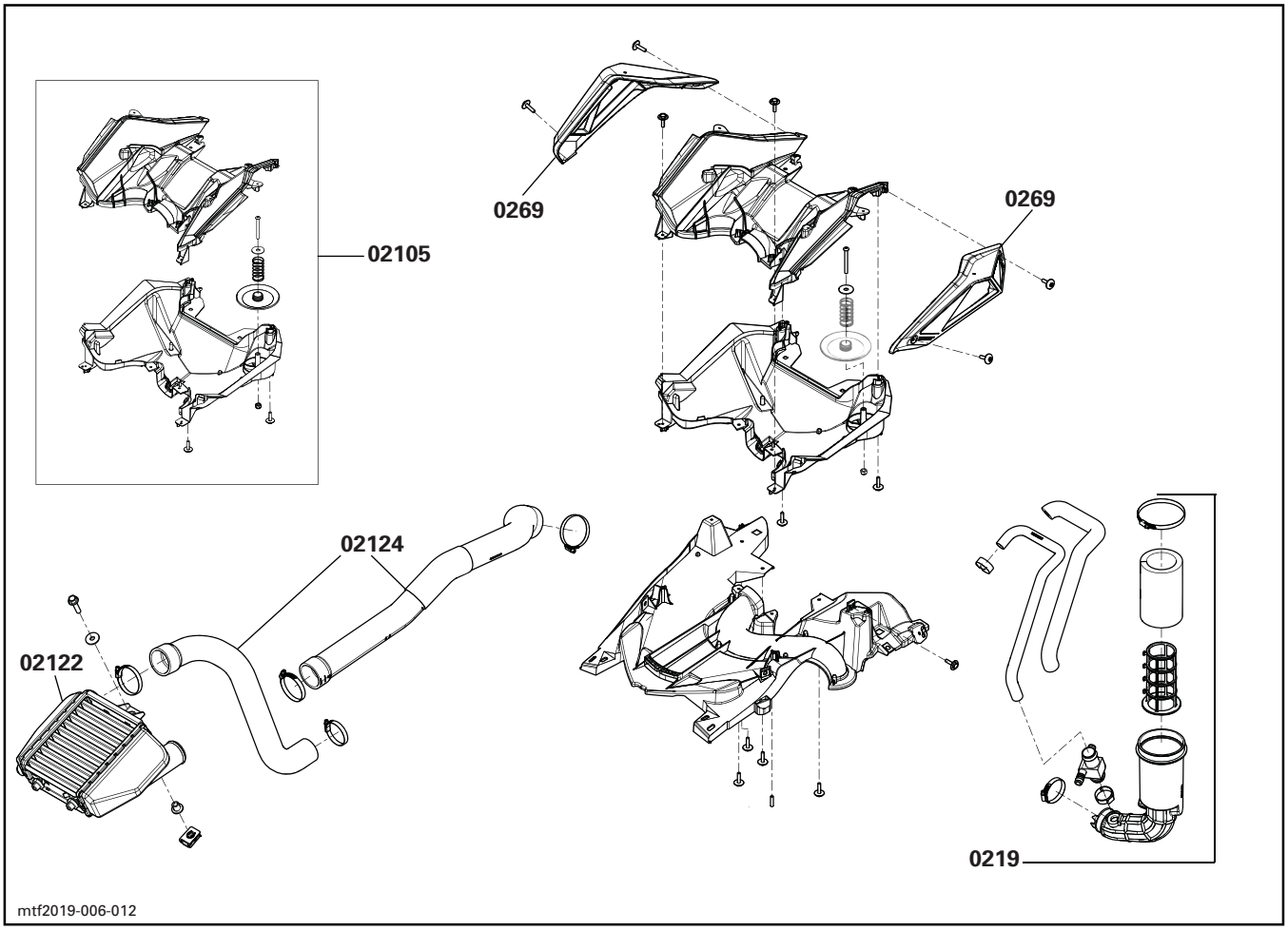
02105
0269
0269
02124
02122
0219
mtf2019-006-012

| SYSTEM SYSTÈME | CODE | DESCRIPTION | RENEGADE 900 ACE | GRAND TOURING 900 ACE | EXPEDITION 900 ACE SPORT | EXPEDITION LE/SE 900 ACE | SKANDIC 900 ACE | RENEGADE 900T ACE | GRAND TOURING 900 T ACE |
|---|---|---|---|---|---|---|---|---|---|
| | | | 29 | 30 | 31 | 32 | 33 | 34 | 35 |
| **03** | **00** | **NO LABOR INVOLVED**<br>**AUCUNE MAIN-D'OEUVRE IMPLIQUÉE** | **0** | **0** | **0** | **0** | **0** | **0** | **0** |
| **03** | 01 | FLYWHEEL<br>VOLANT MOTEUR | 4.7 | 4.7 | 4.7 | 4.2 | 4.2 | 5.4 | 5.4 |
| **03** | 08 | IGNITION COIL<br>BOBINE D'ALLUMAGE | 0.3 | 0.3 | 0.3 | 0.3 | 0.3 | 0.3 | 0.3 |
| **03** | 26 | MAGNETO COVER AND/OR GASKET<br>COUVERCLE DU MAGNÉTO ET/OU JOINT D'ÉTANCHÉITÉ | 4.5 | 4.5 | 4.5 | 4.0 | 4.0 | 5.2 | 5.2 |
| **03** | 27 | STATOR (ASS'Y)<br>STATOR (COMPLET) | 4.5 | 4.5 | 4.5 | 4.0 | 4.0 | 5.2 | 5.2 |

# IGNITION SYSTEM
# SYSTÈME D'ALLUMAGE

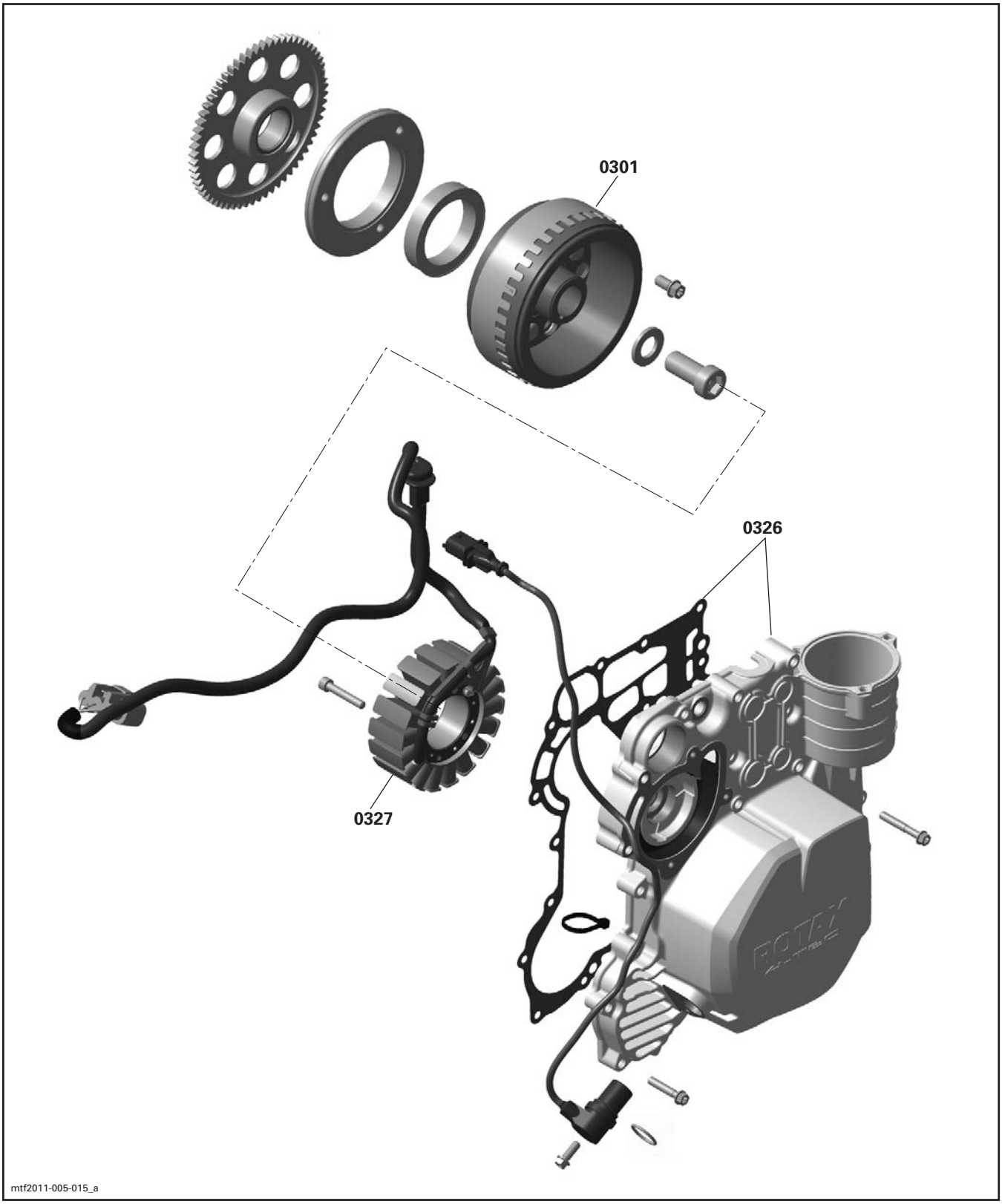

| SYSTEM SYSTÈME | CODE | DESCRIPTION | RENEGADE 900 ACE | GRAND TOURING 900 ACE | EXPEDITION 900 ACE SPORT | EXPEDITION LE/SE 900 ACE | SKANDIC 900 ACE | RENEGADE 900T ACE | GRAND TOURING 900 T ACE |
|---|---|---|---|---|---|---|---|---|---|
| | | | 29 | 30 | 31 | 32 | 33 | 34 | 35 |
| **04** | **00** | **NO LABOR INVOLVED**<br>**AUCUNE MAIN-D'OEUVRE IMPLIQUÉE** | **0** | **0** | **0** | **0** | **0** | **0** | **0** |
| **04** | 02 | ELECTRIC STARTER (ASS'Y)<br>DÉMARREUR ÉLECTRIQUE (COMPLET) | 0.5 | 0.5 | 0.5 | 0.4 | 0.4 | 1.6 | 1.6 |
| **04** | 03 | STARTER RELAY<br>SOLÉNOÏDE DE DÉMARREUR | 0.3 | 0.3 | 0.3 | 0.3 | 0.3 | 0.3 | 0.3 |
| **04** | 19 | STARTER DRIVE<br>LANCEUR DÉMARREUR | 4.7 | 4.7 | 4.7 | 4.2 | 4.2 | 5.4 | 5.4 |
| **04** | 27 | HEAT SHEILD<br>DÉFLECTEUR DE CHALEUR | | | | | | 1.5 | 1.5 |

# STARTER SYSTEM
# SYSTÈME DE DÉMARREUR

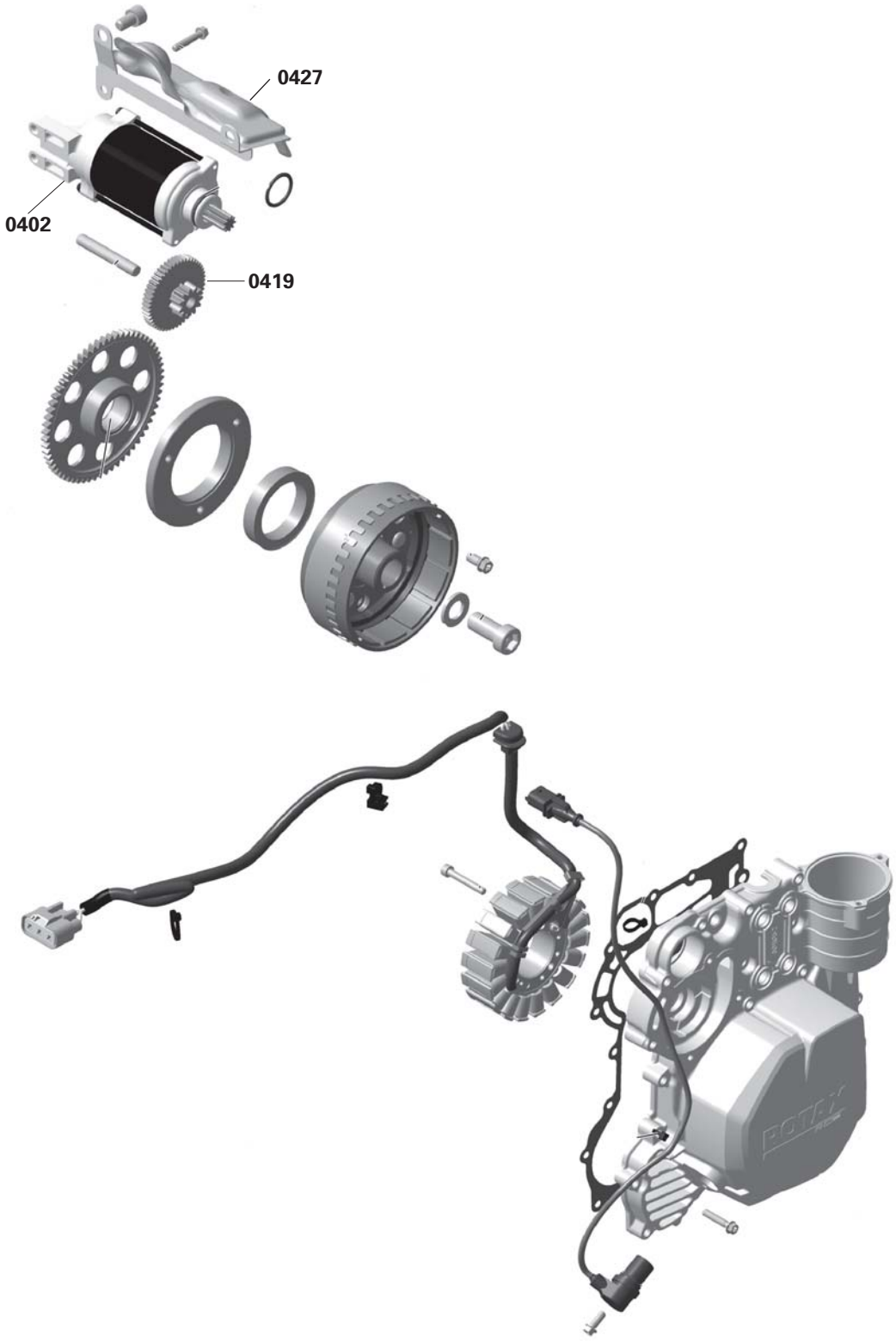


mtf2019-006-001

| SYSTEM SYSTÈME | CODE | DESCRIPTION | RENEGADE 900 ACE | GRAND TOURING 900 ACE | EXPEDITION 900 ACE SPORT | EXPEDITION LE/SE 900 ACE | SKANDIC 900 ACE | RENEGADE 900T ACE | GRAND TOURING 900 T ACE |
|---|---|---|---|---|---|---|---|---|---|
| | | | 29 | 30 | 31 | 32 | 33 | 34 | 35 |
| 05 | 00 | **NO LABOR INVOLVED**<br>**AUCUNE MAIN-D'OEUVRE IMPLIQUÉE** | 0 | 0 | 0 | 0 | 0 | 0 | 0 |
| 05 | 01 | DRIVE PULLEY (ASS'Y) OR SLIDDING FLANGE<br>POULIE MOTRICE (COMPLET) OU FLASQUE COULISSANTE | 0.7 | 0.7 | 0.7 | 0.3 | 0.3 | 0.7 | 0.7 |
| 05 | 06 | GOVERNOR CUP AND/OR FIXED HALF<br>CUVETTE DE RÉGULATEUR ET/OU PARTIE FIXE | | | | 0.8 | 0.8 | | |
| 05 | 07 | RAMPS AND/OR ADJUSTMENT SCREW<br>RAMPES ET/OU VIS DE RÉGLAGE DE POULIE | | | | 0.5 | 0.5 | | |
| 05 | 08 | SPRING COVER AND/OR SPRING AND/OR BUSHING<br>COUVERCLE DU RESSORT ET/OU RESSORT ET/OU DOUILLE | | | | 0.5 | 0.5 | | |
| 05 | 09 | SLIDER SHOES AND/OR SPRINGS<br>GLISSIÈRE ET/OU RESSORTS | | | | 0.8 | 0.8 | | |
| 05 | 10 | SLIDING HALF, BUSHING AND/OR LEVER (ASS'Y)<br>DEMI-POULIE COULISSANTE, DOUILLE ET/OU LEVIER (COMPLET) | | | | 0.8 | 0.8 | | |
| 05 | 11 | DRIVEN PULLEY FIXED HALF<br>DEMI-POULIE MENÉE FIXE | 1.0 | 1.0 | 1.0 | 0.7 | 0.7 | 1.0 | 1.0 |
| 05 | 12 | DRIVEN PULLEY SLIDING HALF<br>DEMI-POULIE MENÉE COULISSANTE | 0.6 | 0.6 | 0.6 | 0.5 | 0.5 | 0.6 | 0.6 |
| 05 | 13 | DRIVEN PULLEY CAM AND/OR SPRING<br>CAME ET/OU RESSORT DE POULIE MENÉE | 0.8 | 0.8 | 0.8 | 0.6 | 0.6 | 0.8 | 0.8 |
| 05 | 17 | COUNTERSHAFT BALL BEARING AND/OR FLANGE<br>ROULEMENT À BILLE DE L'ARBRE DE RENVOI ET/OU FLASQUE | 0.6 | 0.6 | 0.6 | 1.0 | 1.0 | 0.6 | 0.6 |
| 05 | 18 | COUNTERSHAFT<br>ARBRE DE RENVOI | | | | 1.0 | 1.0 | | |
| 05 | 19 | DRIVE BELT AND/OR BELT GUARD<br>COURROIE D'ENTRAÎNEMENT ET/OU GARDE-COURROIE | 0.1 | 0.1 | 0.1 | 0.1 | 0.1 | | |
| 05 | 20 | CHAINCASE SEAL AND/OR BEARING<br>ANNEAU D'ÉTANCHÉITÉ DE CARTER ET/OU ROULEMENT | 0.7 | 0.7 | 0.7 | | | 0.7 | 0.7 |
| 05 | 21 | CHAINCASE<br>CARTER DE CHAÎNE | 3.9 | 3.9 | 3.9 | | | 3.9 | 3.9 |
| 05 | 22 | CHAINCASE COVER<br>COUVERCLE DE CARTER DE CHAÎNE | 0.8 | 1.0 | 0.8 | | | 1.0 | 1.0 |
| 05 | 23 | CHAINCASE UPPER SPROCKET AND/OR CENTRAL SPROCKET<br>PIGNON SUPÉRIEUR DE CARTER ET/OU PIGNON CENTRAL | 0.9 | 1.1 | 0.9 | | | 1.1 | 1.1 |
| 05 | 24 | CHAINCASE LOWER SPROCKET<br>PIGNON INFÉRIEUR DE CARTER DE CHAÎNE | 0.9 | 1.1 | 0.9 | | | 1.1 | 1.1 |
| 05 | 25 | CHAINCASE DRIVE CHAIN<br>CHAÎNE D'ENTRAÎNEMENT DE CARTER DE CHAÎNE | 0.9 | 1.1 | 0.9 | | | 1.1 | 1.1 |
| 05 | 26 | CHAINCASE TENSIONERS<br>TENDEURS DE CARTER DE CHAÎNE | 0.9 | 1.1 | 0.9 | | | 1.1 | 1.1 |
| 05 | 27 | TENSIONER ADJUSTING SCREW<br>VIS DE RÉGLAGE DE TENDEUR | 0.4 | 0.4 | 0.4 | | | 0.4 | 0.4 |
| 05 | 34 | SLIDING SLEEVE AND/OR FORK AND/OR FORK SHAFT<br>CRABOT ET/OU FOURCHETTE ET /OU ARBRE DE FOURCHETTE | | | | 3.0 | 3.0 | | |
| 05 | 39 | SHIFT LEVER AND/OR SHIFT ROD<br>LEVIER DE TRANSMISSION ET/OU TIGE | 0.4 | 0.4 | 0.4 | | | 0.4 | 0.4 |
| 05 | 45 | REVERSE GEAR WHEEL AND SHAFT<br>ENGRENAGE ET ARBRE DE MARCHE ARRIÈRE | 0.9 | 1.1 | 0.9 | 3.0 | 3.0 | 1.1 | 1.1 |

# TRANSMISSION SYSTEM
# SYSTÈME DE TRANSMISSION

| SYSTEM SYSTÈME | CODE | DESCRIPTION | RENEGADE 900 ACE | GRAND TOURING 900 ACE | EXPEDITION 900 ACE SPORT | EXPEDITION LE/SE 900 ACE | SKANDIC 900 ACE | RENEGADE 900T ACE | GRAND TOURING 900 T ACE |
|---|---|---|---|---|---|---|---|---|---|
| | | | 29 | 30 | 31 | 32 | 33 | 34 | 35 |
| 05 | 49 | DRIVE PULLEY GUARD<br>GARDE DE POULIE MOTRICE | 0.3 | 0.3 | 0.3 | 0.3 | 0.3 | 0.3 | 0.3 |
| 05 | 56 | LEVER ASS'Y A/O LEVER SPRING<br>LEVIER ASS E/O RESSORT DE LEVIER | 0.3 | | 0.3 | 0.3 | 0.3 | 0.3 | |
| 05 | 58 | TIE ROD A/O BALL JOINT<br>BARRE D'ACCOUPLEMENT E/O JOINT ROTUL | | | | 0.6 | 0.6 | | |
| 05 | 59 | SPEED SENSOR<br>CAPTEUR DE VITESSE | 1.0 | 1.0 | 1.0 | 0.9 | 0.9 | 1.0 | 1.0 |
| 05 | 66 | GEARSHIFT LEVER<br>LEVIER D'EMBRAYAGE | | | | 0.5 | 0.5 | | |
| 05 | 90 | DRIVE AXLE ASS'Y<br>AXE ENTRAINEMENT COMPLET | 2.1 | 2.4 | 2.1 | 2.0 | 2.0 | 2.1 | 2.4 |
| 05 | 91 | MAIN SHAFT ASS'Y<br>ARBRE DE RENVOI COMPLET | | | | 3.0 | 3.0 | | |
| 05 | 103 | SHIFT DRUM<br>TAMBOUR D'EMBRAYAGE | | | | 3.0 | 3.0 | | |
| 05 | 114 | SHIFT SHAFT SEAL<br>ANNEAU ETANCHE DE L'ABRE D'EMBRAYAGE | | | | 1.0 | 1.0 | | |
| 05 | 129 | CHAINCASE LOWER BEARING AND SEAL (MAG SIDE)<br>ROULEMENT À BILLES INFÉRIEUR DU CARTER DE CHAÎNE ET ANNEAU ÉTANCHE (CÔTÉ MAG) | 2.4 | 2.7 | 2.4 | | | 2.4 | 2.7 |
| 05 | 130 | BEARING HOUSING AND/OR BEARING (PTO SIDE)<br>LOGEMENT DU ROULEMENT À BILLES ET/OU ROULEMENT À BILLES (CÔTÉ PTO) | 2.1 | 2.4 | 2.1 | 2.4 | 2.4 | 2.1 | 2.4 |
| 05 | 131 | MAGNETIC CAP<br>CAPUCHON MAGNÉTIQUE | 0.9 | 1.1 | 0.9 | 3.0 | 3.0 | 1.1 | 1.1 |
| 05 | 132 | ADJUSTMENT RING (ASS'Y)<br>ANNEAU DE RÉGLAGE (COMPLET) | 0.3 | 0.3 | 0.3 | 0.3 | 0.3 | 0.3 | 0.3 |
| 05 | 133 | STUDS AND/OR ROLLERS<br>PIVOTS ET/OU ROULEAUX | 0.6 | 0.6 | 0.6 | 0.8 | 0.8 | 0.6 | 0.6 |
| 05 | 154 | GEARBOX ASS'Y<br>BOITE DE VITESSE (COMPLET) | | | | 0.6 | 0.6 | | |
| 05 | 158 | TRANSMISSION BOTTOM SEAL<br>JOINT D'ÉTANCHEITE INFERIEUR DE LA TRANSMISSION | | | | 1.0 | 1.0 | | |
| 05 | 162 | MIDDLE GEAR<br>ENGRENAGE DU MILIEU | | | | 3.0 | 3.0 | | |
| 05 | 163 | LOWER GEAR<br>ENGRENAGE DU BAS | | | | 3.0 | 3.0 | | |
| 05 | 164 | COUNTERSHAFT SEAL<br>ANNEAU D'ÉTANCHÉITÉ DE L'ABRE DE RENVOI | | | | 1.0 | 1.0 | | |
| 05 | 193 | SLIDING SHEAVE (PDRIVE)<br>POULIE COULISSANTE (PDRIVE) | 0.7 | 0.7 | 0.7 | | | 0.7 | 0.7 |
| 05 | 194 | DAMPER (PDRIVE)<br>AMORTISSEUR DE VIBRATIONS (PDRIVE) | 0.4 | 0.4 | 0.4 | | | 0.4 | 0.4 |
| 05 | 195 | SPRING SEAT AND SPRING (PDRIVE)<br>SIEGE RESSORT ET RESSORT (PDRIVE) | 0.5 | 0.5 | 0.5 | | | 0.5 | 0.5 |
| 05 | 196 | SPIDER (PDRIVE)<br>ARAIGNEE (PDRIVE) | 0.6 | 0.6 | 0.6 | | | 0.6 | 0.6 |

| SYSTEM SYSTÈME | CODE | DESCRIPTION | RENEGADE 900 ACE | GRAND TOURING 900 ACE | EXPEDITION 900 ACE SPORT | EXPEDITION LE/SE 900 ACE | SKANDIC 900 ACE | RENEGADE 900T ACE | GRAND TOURING 900 T ACE |
|---|---|---|---|---|---|---|---|---|---|
| | | | 29 | 30 | 31 | 32 | 33 | 34 | 35 |
| 05 | 197 | TORQUE ROLLERS (PDRIVE)<br>ROULEAUX DE TRANSFERT (PDRIVE) | 0.6 | 0.6 | 0.6 | | | 0.6 | 0.6 |
| 05 | 198 | ROLLERS AND AXLE (PDRIVE)<br>ROULEAUX ET AXE (PDRIVE) | 0.5 | 0.5 | 0.5 | | | 0.5 | 0.5 |
| 05 | 199 | CLICKER A/O LEVERS A/O RAMP (PDRIVE)<br>CAME E/O LEVIERS E/O RAMPES (PDRIVE) | 0.5 | 0.5 | 0.5 | | | 0.5 | 0.5 |
| 05 | 202 | CVT AIR DUCT AND ACOUSTIC PANEL<br>CONDUIT D'AIR DE POULIE ET PANNEAU ACOUSTIQUE | 0.3 | 0.3 | 0.3 | | | 0.3 | 0.3 |

# TRANSMISSION SYSTEM
# SYSTÈME DE TRANSMISSION

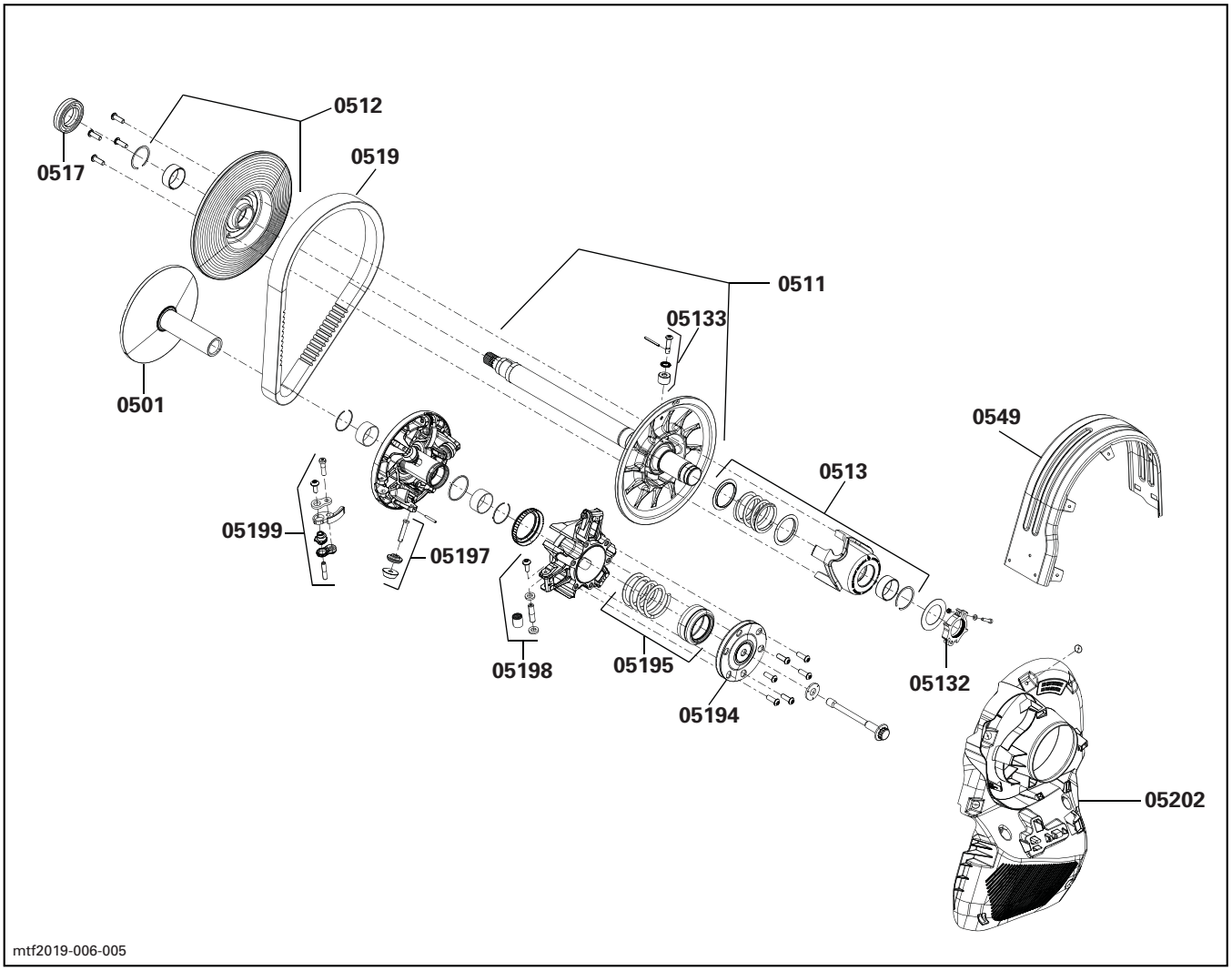

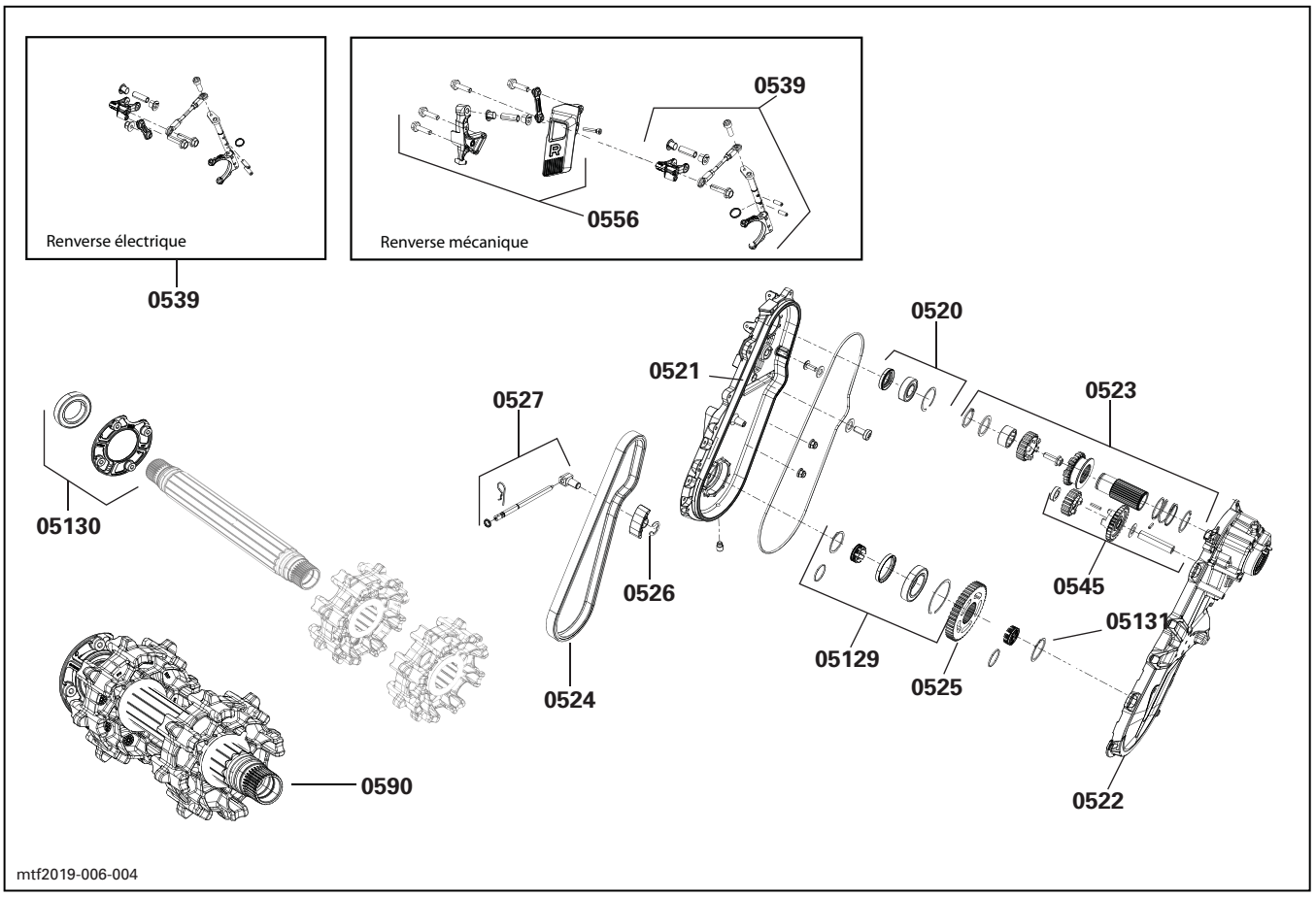
Renverse électrique
0539
Renverse mécanique
0539
0556
0520
0521
0523
0527
05130
0526
0545
05131
05129
0525
0524
0590
0522
mtf2019-006-004

# TRANSMISSION SYSTEM
# SYSTÈME DE TRANSMISSION

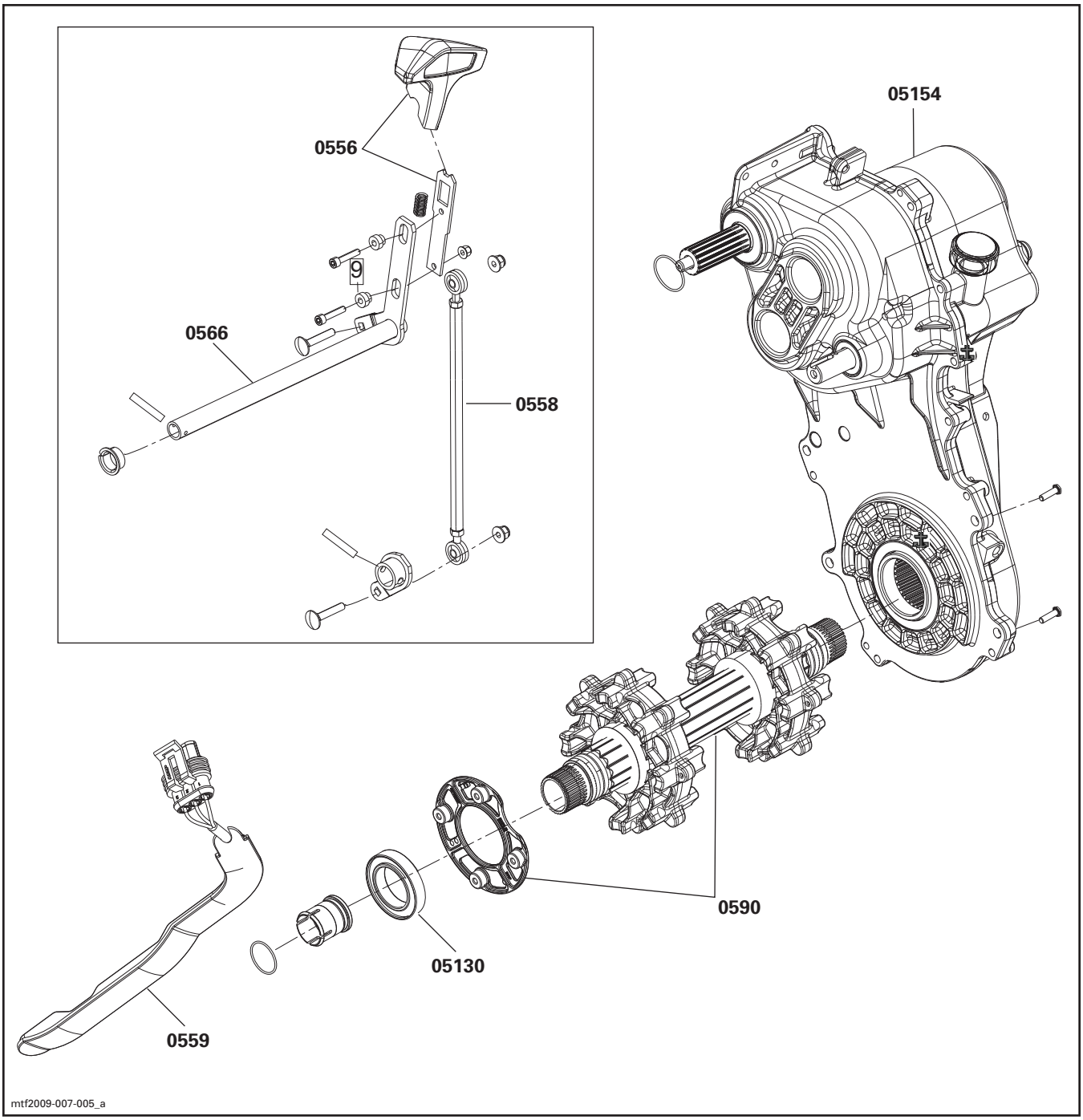

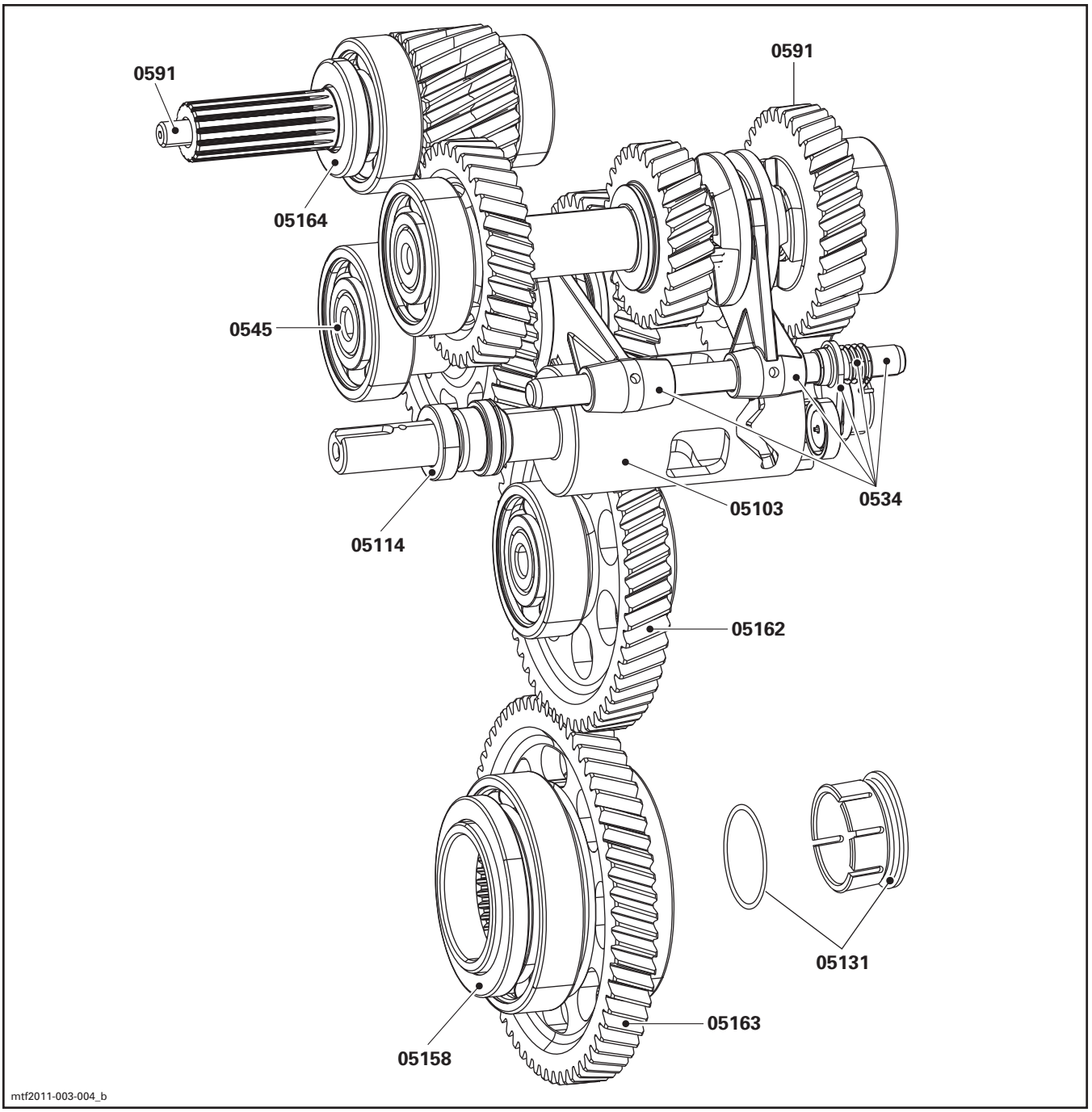
0591
0591
05164
0545
0534
05103
05114
05162
05131
05163
05158
mtf2011-003-004_b

# BRAKE SYSTEM
# SYSTÈME DE FREIN

| SYSTEM SYSTÈME | CODE | DESCRIPTION | RENEGADE 900 ACE | GRAND TOURING 900 ACE | EXPEDITION 900 ACE SPORT | EXPEDITION LE/SE 900 ACE | SKANDIC 900 ACE | RENEGADE 900T ACE | GRAND TOURING 900 T ACE |
|---|---|---|---|---|---|---|---|---|---|
| | | | 29 | 30 | 31 | 32 | 33 | 34 | 35 |
| 06 | 00 | **NO LABOR INVOLVED**<br>**AUCUNE MAIN-D'OEUVRE IMPLIQUÉE** | 0 | 0 | 0 | 0 | 0 | 0 | 0 |
| 06 | 01 | BRAKE OIL HOSE<br>BOYAU À HUILE POUR FREIN | 0.5 | 0.5 | 0.5 | 0.5 | 0.5 | 0.5 | 0.5 |
| 06 | 02 | BRACKET, CALIPER, BRAKE PAD, RELEASE SPRING<br>SUPPORT, ÉTRIER, PLAQUETTE DE FREIN, CLIQUET, LEVIER | 0.8 | 0.8 | 0.8 | 0.8 | 0.8 | 0.8 | 0.8 |
| 06 | 03 | DISC<br>DISQUE | 0.7 | 0.7 | 0.7 | 0.7 | 0.7 | 0.7 | 0.7 |
| 06 | 05 | BRAKE PADS<br>PLAQUETTES DE FREIN | 0.4 | 0.4 | 0.4 | 0.4 | 0.4 | 0.4 | 0.4 |
| 06 | 06 | MASTER CYLINDER<br>MAÎTRE CYLINDRE | 0.4 | 0.4 | 0.4 | 0.4 | 0.4 | 0.4 | 0.4 |
| 06 | 07 | BRAKE LEVER (ASS'Y)<br>LEVIER DE FREIN (COMPLET) | 0.3 | 0.3 | 0.3 | 0.3 | 0.3 | 0.3 | 0.3 |
| 06 | 08 | MICROSWITCH BRAKE (ASS'Y)<br>INTERRUPTEUR MICRO-CONTACT DE FREIN (COMPLET) | 0.3 | 0.3 | 0.3 | 0.3 | 0.3 | 0.3 | 0.3 |
| 06 | 39 | DISC PROTECTOR<br>PROTECTEUR DE DISQUE | 0.3 | 0.3 | 0.3 | 0.3 | 0.3 | 0.3 | 0.3 |

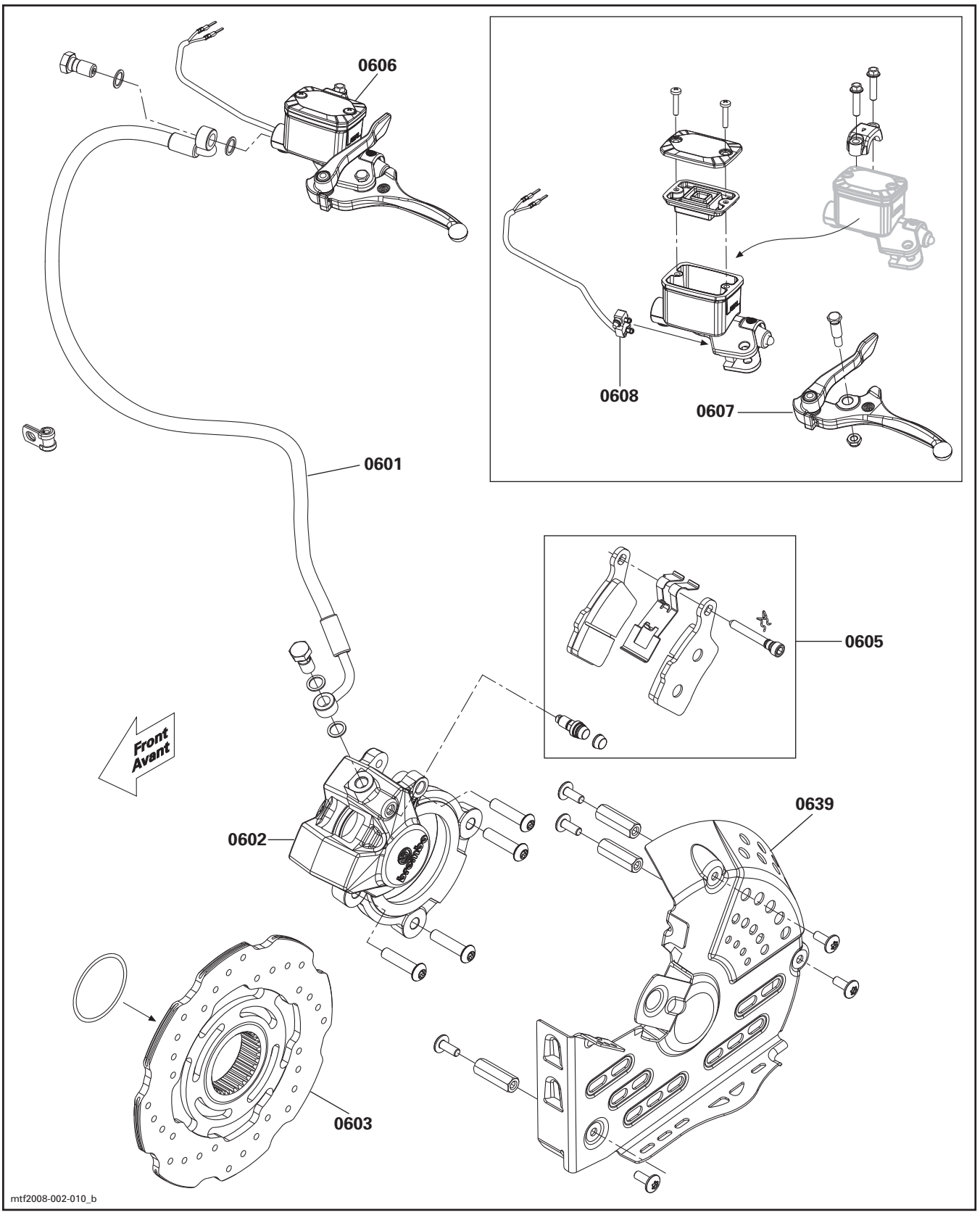
0606
0608
0607
0601
0605
Front
Avant
0602
0639
0603
mtf2008-002-010_b

# STEERING SYSTEM AND FRONT SUSPENSION
# SYSTÈME DE DIRECTION ET SUSPENSION AVANT

| SYSTEM SYSTÈME | CODE | DESCRIPTION | RENEGADE 900 ACE | GRAND TOURING 900 ACE | EXPEDITION 900 ACE SPORT | EXPEDITION LE/SE 900 ACE | SKANDIC 900 ACE | RENEGADE 900T ACE | GRAND TOURING 900 T ACE |
|---|---|---|---|---|---|---|---|---|---|
| | | | 29 | 30 | 31 | 32 | 33 | 34 | 35 |
| **07** | 00 | **NO LABOR INVOLVED**<br>**AUCUNE MAIN-D'OEUVRE IMPLIQUÉE** | **0** | **0** | **0** | **0** | **0** | **0** | **0** |
| **07** | 01 | SKI (1)<br>SKI (1) | 0.3 | 0.3 | 0.3 | 0.3 | 0.3 | 0.3 | 0.3 |
| **07** | 02 | SKIS (2)<br>SKIS (2) | 0.4 | 0.4 | 0.4 | 0.4 | 0.4 | 0.4 | 0.4 |
| **07** | 03 | SKI RUNNER<br>LISSES | 0.3 | 0.3 | 0.3 | 0.3 | 0.3 | 0.3 | 0.3 |
| **07** | 08 | SKI LEG (RH) AND/OR BUSHING<br>JAMBE DE SKI (DROITE) ET/OU DOUILLE | 0.5 | 0.5 | 0.5 | 0.5 | 0.5 | 0.5 | 0.5 |
| **07** | 09 | SKI LEG (LH) AND/OR BUSHING<br>JAMBE DE SKI (GAUCHE) ET/OU DOUILLE | 0.5 | 0.5 | 0.5 | 0.5 | 0.5 | 0.5 | 0.5 |
| **07** | 10 | STEERING ARM (R.H.)<br>BRAS DE DIRECTION (DROIT) | | | | | 0.5 | | |
| **07** | 11 | STEERING ARM (L.H.)<br>BRAS DE DIRECTION (GAUCHE) | | | | | 0.5 | | |
| **07** | 12 | STEERING ARM BALL JOINT (RH)<br>JOINT À ROTULE DE BRAS DE DIRECTION (DROIT) | | | | 0.3 | 0.3 | | |
| **07** | 13 | STEERING ARM BALL JOINT (LH)<br>JOINT À ROTULE DE BRAS DE DIRECTION (GAUCHE) | 0.3 | 0.3 | 0.3 | 0.3 | 0.3 | 0.3 | 0.3 |
| **07** | 14 | TELESC TUBE/SPRING/BUSHING/SAUCER<br>TUBE TELESC/RESS/DOUILLES/SOUPAPE | | | | | 0.6 | | |
| **07** | 17 | TOP CAP<br>CAPUCHON SUPERIEUR | | | | | 0.3 | | |
| **07** | 20 | TIE ROD COVER<br>CAPUCHON DE TIMONERIE | 0.4 | 0.4 | 0.4 | 0.4 | | 0.4 | 0.4 |
| **07** | 21 | TIE ROD COVERS (2)<br>CAPUCHON DE TIMONERIE (2) | 0.8 | 0.8 | 0.8 | | | 0.8 | 0.8 |
| **07** | 22 | STEERING PIVOT ARM<br>BRAS DE DIRECTION PIVOTANT | 0.7 | 0.7 | | | | 0.7 | 0.7 |
| **07** | 23 | STEERING MAIN TUBE BALL JOINT<br>JOINT À ROTULE DE COLONNE DE DIRECTION | 0.6 | 0.6 | 0.6 | 0.6 | 0.6 | 0.4 | 0.6 |
| **07** | 24 | STEERING MAIN TUBE<br>COLONNE DE DIRECTION | 1.0 | 1.0 | 1.0 | 1.4 | 1.4 | 1.0 | 1.0 |
| **07** | 25 | HANDLE BAR<br>GUIDON | 1.1 | 1.1 | 1.1 | 1.1 | 1.1 | 1.0 | 1.1 |
| **07** | 26 | HANDLE BAR GRIP (RIGHT AND/OR LEFT)<br>GAINE DE GUIDON (DROITE ET/OU GAUCHE) | 0.3 | 0.3 | 0.3 | 0.3 | 0.3 | | |
| **07** | 27 | HANDLE BAR PADDING<br>COUSSINET DE GUIDON | 0.3 | 0.3 | 0.3 | 0.3 | 0.3 | | |
| **07** | 28 | UPPER STEERING MAIN TUBE BUSHING<br>DOUILLE SUPÉRIEURE DE COLONNE DE DIRECTION | 0.5 | 0.5 | 0.5 | 0.5 | 0.5 | | |

| SYSTEM SYSTÈME | CODE | DESCRIPTION | RENEGADE 900 ACE | GRAND TOURING 900 ACE | EXPEDITION 900 ACE SPORT | EXPEDITION LE/SE 900 ACE | SKANDIC 900 ACE | RENEGADE 900T ACE | GRAND TOURING 900 T ACE |
|---|---|---|---|---|---|---|---|---|---|
| | | | 29 | 30 | 31 | 32 | 33 | 34 | 35 |
| 07 | 29 | LOWER STEERING MAIN TUBE BUSHING<br>DOUILLE INFÉRIEURE DE COLONNE DE DIRECTION | 0.6 | 0.6 | 0.6 | 0.5 | 0.5 | 0.6 | 0.6 |
| 07 | 32 | LOWER ARM (LH OR RH)<br>BRAS DE SUSPENSION INFÉRIEUR (GAUCHE OU DROIT) | 0.6 | 0.6 | 0.6 | 0.6 | | 0.6 | 0.6 |
| 07 | 33 | UPPER ARM (LH OR RH)<br>BRAS DE SUSPENSION SUPÉRIEUR (GAUCHE OU DROIT) | 0.5 | 0.5 | 0.5 | 0.5 | | 0.5 | 0.5 |
| 07 | 35 | HANDLE BAR SUPPORT<br>SUPPORT DE GUIDON | 0.3 | 0.3 | 0.3 | 0.3 | 0.3 | 0.3 | 0.3 |
| 07 | 37 | SHOCK AND/OR SPRING (1)<br>AMORTISSEUR ET/OU RESSORT (1) | 0.4 | 0.4 | 0.4 | 0.3 | 0.3 | 0.4 | 0.4 |
| 07 | 38 | SHOCKS AND/OR SPRINGS (2)<br>AMORTISSEURS ET/OU RESSORTS (2) | 0.8 | 0.8 | 0.8 | 0.4 | 1.0 | 0.8 | 0.8 |
| 07 | 39 | STABILIZER BAR<br>BARRE STABILISATRICE | 0.5 | 0.5 | 0.5 | 0.5 | | 0.5 | 0.5 |
| 07 | 51 | STEERING MAIN TUBE BALL JOINT<br>JOINT ROTULE DE COLONNE DIRECTION | | | | | 0.5 | | |
| 07 | 59 | TIE ROD (LH)<br>BARRE D'ACCOUPLEMENT (GAUCHE) | 0.3 | 0.3 | 0.3 | 0.3 | 0.3 | 0.3 | 0.3 |
| 07 | 60 | TIE ROD (RH)<br>BARRE D'ACCOUPLEMENT (DROITE) | 0.3 | 0.3 | 0.3 | 0.3 | 0.3 | 0.3 | 0.3 |
| 07 | 61 | LEVER STABILIZER<br>LEVIER STABILISATEUR | 0.3 | 0.3 | 0.3 | 0.3 | | 0.3 | 0.3 |
| 07 | 64 | DOUBLE BALL JOINT<br>JOINT À ROTULE DOUBLE | 0.3 | 0.3 | 0.3 | 0.3 | | 0.3 | 0.3 |
| 07 | 77 | ADJUST STEERING SYSTEM<br>AJUSTEMENT SYSTEME CONDUITE | 0.3 | 0.3 | | | | 0.3 | 0.3 |
| 07 | 101 | DEFLECTOR LH OR RH<br>DEFLECTEUR GA OU DR | 0.3 | | | | | 0.3 | |
| 07 | 102 | LOWER DAMPER<br>AMORTISSEUR VIBRATION INFÉRIEUR | 0.8 | 0.8 | 0.8 | 0.5 | | 0.8 | 0.8 |
| 07 | 111 | LTS MODULE<br>MODULE LTS | | | | | 3.5 | | |
| 07 | 124 | STRAP<br>SANGLE | | | | 0.3 | 0.3 | | |

# STEERING SYSTEM AND FRONT SUSPENSION
# SYSTÈME DE DIRECTION ET SUSPENSION AVANT

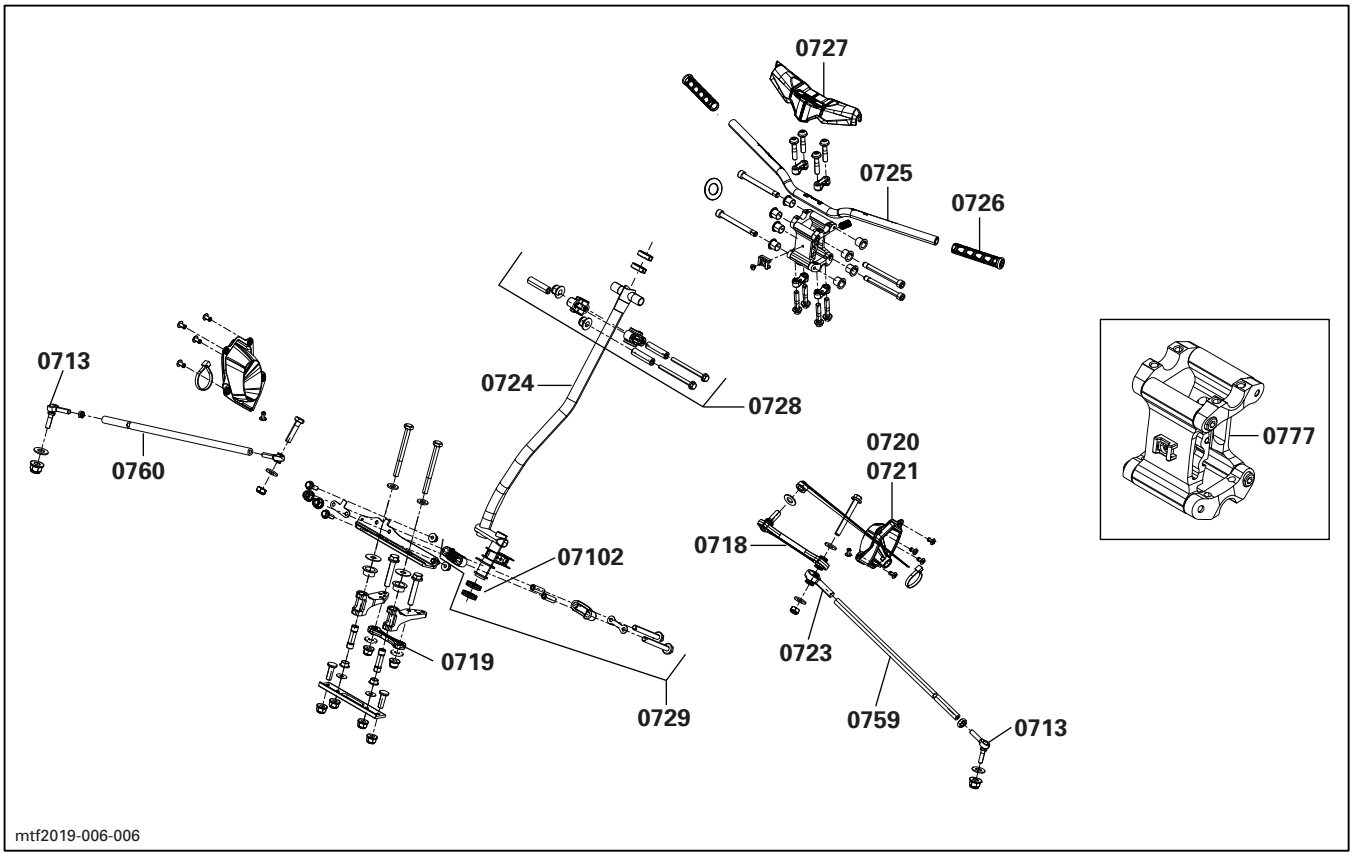

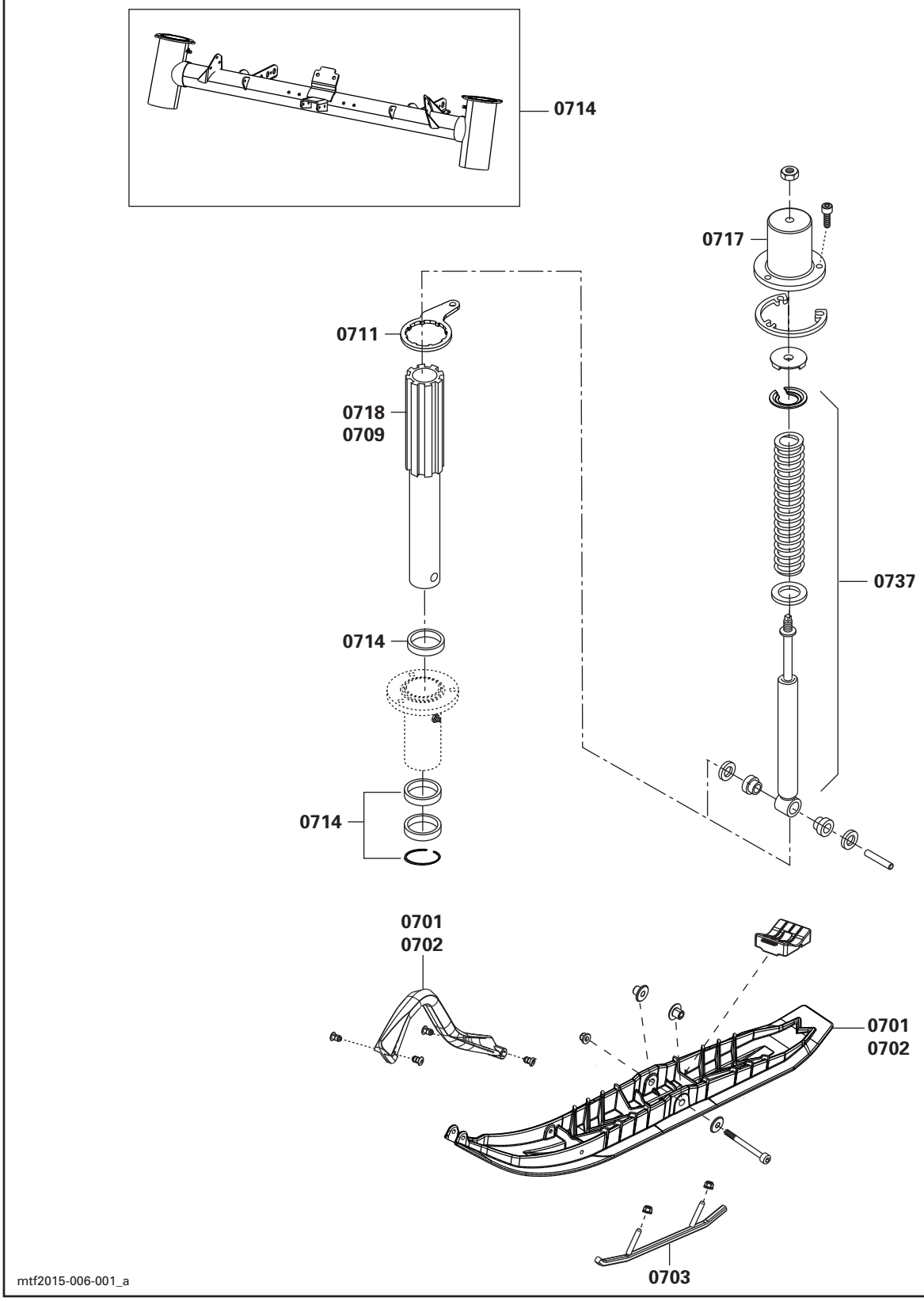
0714
0717
0711
0718
0709
0737
0714
0714
0701
0702
0701
0702
0703
mtf2015-006-001_a

# STEERING SYSTEM AND FRONT SUSPENSION
# SYSTÈME DE DIRECTION ET SUSPENSION AVANT

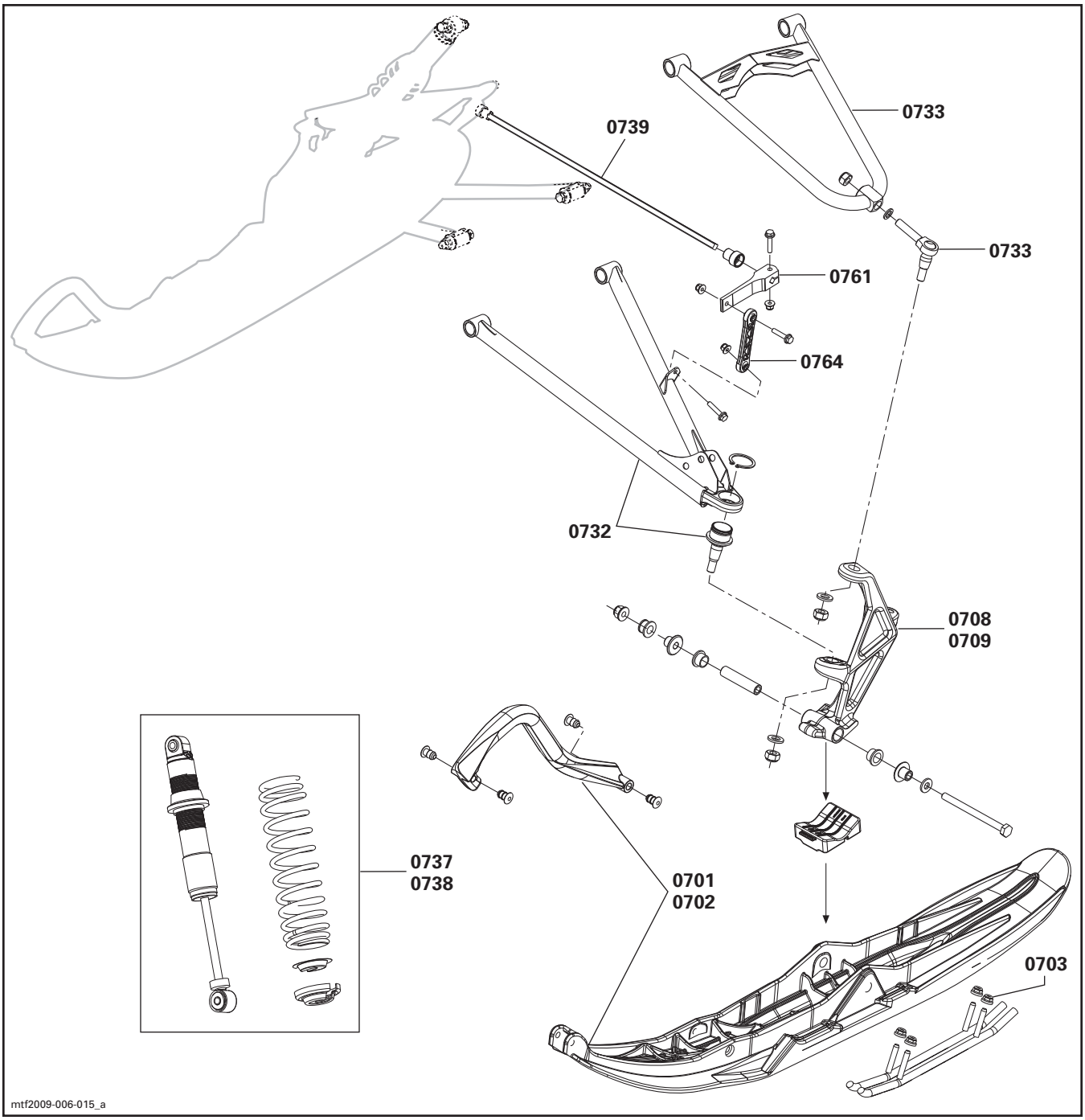

| SYSTEM SYSTÈME | CODE | DESCRIPTION | RENEGADE 900 ACE | GRAND TOURING 900 ACE | EXPEDITION 900 ACE SPORT | EXPEDITION LE/SE 900 ACE | SKANDIC 900 ACE | RENEGADE 900T ACE | GRAND TOURING 900 T ACE |
|---|---|---|---|---|---|---|---|---|---|
| | | | 29 | 30 | 31 | 32 | 33 | 34 | 35 |
| **08** | **00** | **NO LABOR INVOLVED<br>AUCUNE MAIN-D'OEUVRE IMPLIQUÉE** | **0** | **0** | **0** | **0** | **0** | **0** | **0** |
| **08** | 01 | SLIDER SHOE (1)<br>GLISSIÈRE (1) | 0.5 | 0.5 | 0.5 | 0.5 | 0.5 | 0.5 | 0.5 |
| **08** | 02 | SLIDER SHOES (2)<br>GLISSIÈRES (2) | 0.7 | 0.7 | 0.7 | 0.7 | 0.7 | 0.7 | 0.7 |
| **08** | 03 | RUNNER (1)<br>PORTE-GLISSIÈRE (1) | 1.2 | 1.2 | 1.5 | 1.5 | 1.5 | 1.2 | 1.2 |
| **08** | 04 | RUNNERS (2)<br>PORTE-GLISSIÈRES (2) | 1.5 | 1.5 | 1.9 | 1.9 | 1.9 | 1.5 | 1.5 |
| **08** | 09 | FRONT IDLER WHEEL AND/OR BEARING (1)<br>ROUE DE SUPPORT AVANT ET/OU ROULEMENT (1) | 0.3 | 0.3 | 0.3 | 0.3 | 0.3 | 0.3 | 0.3 |
| **08** | 10 | FRONT IDLER WHEELS AND/OR BEARINGS AND/OR SHAFTS (2)<br>ROUES DE SUPPORT AVANT ET/OU ROULEMENTS ET/OU ARBRES (2) | 0.4 | 0.4 | 0.4 | 0.4 | 0.4 | 0.4 | 0.4 |
| **08** | 11 | FRONT IDLER WHEEL SUPPORT (1)<br>SUPPORT DE ROUE AVANT (1) | 0.3 | 0.3 | 0.3 | 0.3 | 0.3 | 0.3 | 0.3 |
| **08** | 12 | FRONT IDLER WHEELS SUPPORTS (2)<br>SUPPORTS DE ROUE AVANT (2) | 0.4 | 0.4 | 0.3 | 0.3 | 0.3 | 0.4 | 0.4 |
| **08** | 13 | CENTER IDLER WHEEL AND/OR BEARING (1)<br>ROUE DE SUPPORT CENTRALE ET/OU ROULEMENT (1) | 0.3 | 0.3 | 0.3 | 0.3 | 0.3 | 0.3 | 0.3 |
| **08** | 14 | CENTER IDLER WHEELS AND/OR BEARINGS AND/OR SHAFTS (2)<br>ROUES DE SUPPORT CENTRALES ET/OU ROULEMENTS ET/OU ARBRES (2) | 0.4 | 0.4 | 0.4 | 0.4 | 0.4 | 0.4 | 0.4 |
| **08** | 15 | CENTER IDLER WHEEL SUPPORT (1)<br>SUPPORT DE ROUE CENTRALE (1) | 0.3 | 0.3 | 0.3 | 0.3 | 0.3 | 0.3 | 0.3 |
| **08** | 17 | REAR IDLER AND/OR BEARING (1)<br>ROUE DE SUPPORT ARRIÈRE ET/OU ROULEMENT (1) | 0.4 | 0.4 | 0.3 | 0.3 | 0.3 | 0.4 | 0.4 |
| **08** | 18 | REAR IDLERS AND/OR BEARINGS (2)<br>ROUES DE SUPPORT ARRIÈRE ET/OU ROULEMENTS (2) | 0.5 | 0.5 | 0.4 | 0.3 | 0.3 | 0.5 | 0.5 |
| **08** | 19 | REAR IDLER WHEELS AXLE<br>ESSIEU DE ROUES DE SUPPORT ARRIÈRE | 0.5 | 0.5 | 0.5 | 0.5 | 0.5 | 0.5 | 0.5 |
| **08** | 21 | COMPRESSOR<br>COMPRESSEUR | 0.3 | 0.3 | | | | 0.3 | 0.3 |
| **08** | 22 | TAIL PIVOT IDLER WHEEL, INSIDE (1)<br>ROUE SUPPORT DE PIVOT ARRIÈRE ET/OU ROULEMENT INTÉRIEUR (1) | | | 0.3 | 0.3 | 0.3 | | |
| **08** | 23 | TAIL PIVOT IDLER WHEELS OR AXLE (2)<br>ROUES SUPPORT DE PIVOT ARRIÈRE/ROULEMENT OU ESSIEU (2) | | | 0.3 | 0.3 | 0.3 | | |
| **08** | 24 | PNEUMATIC HOSE<br>BOYAU PNEUMATIQUE | 0.3 | 0.3 | | | | 0.3 | 0.3 |
| **08** | 29 | AXEL (STOPPER STRAP)<br>AXE (COURROIE D'ARRÊT) | 0.3 | 0.3 | 0.3 | 0.3 | 0.3 | 0.3 | 0.3 |
| **08** | 31 | TRACK TENSION ADJUSTER (1)<br>PLAQUE DE RÉGLAGE TENSION CHENILLE (1) | 0.4 | 0.4 | 0.4 | 0.4 | 0.4 | 0.4 | 0.4 |
| **08** | 32 | TRACK TENSION ADJUSTERS (2)<br>PLAQUES DE RÉGLAGE TENSION CHENILLE (2) | 0.5 | 0.5 | 0.5 | 0.5 | 0.5 | 0.5 | 0.5 |
| **08** | 33 | RUNNER RUBBER STOPPER (1)<br>BUTÉE DE CAOUTCHOUC DE PORTE-GLISSIÈRE (1) | 0.3 | 0.3 | 0.3 | 0.3 | 0.3 | 0.3 | 0.3 |

# REAR SUSPENSION SYSTEM AND TRACK
# SYSTÈME DE SUSPENSION ARRIÈRE ET CHENILLE

| SYSTEM SYSTÈME | CODE | DESCRIPTION | RENEGADE 900 ACE | GRAND TOURING 900 ACE | EXPEDITION 900 ACE SPORT | EXPEDITION LE/SE 900 ACE | SKANDIC 900 ACE | RENEGADE 900T ACE | GRAND TOURING 900 T ACE |
|---|---|---|---|---|---|---|---|---|---|
| | | | 29 | 30 | 31 | 32 | 33 | 34 | 35 |
| 08 | 34 | RUNNER RUBBER STOPPERS (2)<br>BUTÉES DE CAOUTCHOUC DE PORTE-GLISSIÈRE (2) | 0.4 | 0.4 | 0.4 | 0.4 | 0.4 | 0.4 | 0.4 |
| 08 | 35 | FRONT ARM AND/OR AXLE<br>BRAS AVANT ET/OU ESSIEU | 0.8 | 0.8 | 0.8 | 0.8 | 0.8 | 0.8 | 0.8 |
| 08 | 36 | FRONT ARM STOPPER STRAP/STOPPER BOLT<br>COURROIE D'ARRÊT BRAS AVANT/BOULON D'ARRÊT | 0.3 | 0.3 | 0.3 | 0.3 | 0.3 | 0.3 | 0.3 |
| 08 | 37 | FRONT ARM SUPPORT<br>SUPPORT DE BRAS AVANT | | | 0.6 | 0.6 | 0.6 | | |
| 08 | 40 | REAR ARM AND/OR AXLE<br>BRAS ARRIÈRE ET/OU ESSIEU | 0.7 | 0.7 | 0.7 | 0.7 | 0.7 | 0.7 | 0.7 |
| 08 | 41 | REAR ARM IDLER WHEELS (1-2) AND/OR SHAFT-CROSS<br>ROUES DE SUPPORT BRAS ARRIÈRE (1-2) ET/OU AXE TRANSVERSALE | 0.3 | 0.3 | 0.3 | 0.3 | 0.3 | 0.3 | 0.3 |
| 08 | 42 | REAR ARM SHACKLE<br>JUMELLE DE BRAS ARRIÈRE | 0.3 | 0.3 | 0.3 | 0.3 | 0.3 | 0.3 | 0.3 |
| 08 | 44 | REAR AND FRONT ARMS<br>BRAS ARRIÈRE ET AVANT | 1.5 | 1.5 | 1.5 | 1.5 | 1.5 | 1.5 | 1.5 |
| 08 | 50 | REAR TORSION SPRING AND/OR WHEEL (1)<br>RESSORT DE TORSION ARRIÈRE ET/OU ROUE (1) | 0.3 | 0.3 | 0.3 | 0.3 | 0.3 | 0.3 | 0.3 |
| 08 | 51 | REAR TORSION SPRINGS AND/OR WHEELS (2)<br>RESSORTS DE TORSION ET/OU ROUES (2) | 0.4 | 0.4 | 0.4 | 0.4 | 0.4 | 0.4 | 0.4 |
| 08 | 52 | TORSION SPRING SUPPORT<br>SUPPORT DE RESSORT DE TORSION | 0.3 | 0.3 | 0.3 | 0.3 | 0.3 | 0.3 | 0.3 |
| 08 | 53 | SPRING ADJUSTMENT CAM (1)<br>CAME DE RÉGLAGE DE RESSORT (1) | 0.3 | 0.3 | 0.3 | 0.3 | 0.3 | 0.3 | 0.3 |
| 08 | 54 | SPRING ADJUSTMENT CAMS (2)<br>CAMES DE RÉGLAGE DE RESSORT (2) | 0.4 | 0.4 | 0.4 | 0.4 | 0.4 | 0.4 | 0.4 |
| 08 | 55 | SHOCK AND/OR SPRING AND/OR BUSHING<br>AMORTISSEUR ET/OU RESSORT ET/OU DOUILLE | 0.5 | 0.5 | 0.5 | 0.5 | 0.5 | 0.5 | 0.5 |
| 08 | 69 | TRACK (1)<br>CHENILLE (1) | 2.2 | 2.2 | 2.2 | 2.2 | 2.2 | 2.2 | 2.2 |
| 08 | 71 | CLEATS AND/OR GUIDES (0-9)<br>SEGMENTS GUIDE ET/OU GUIDES (0-9) | 0.3 | 0.3 | 0.3 | 0.3 | 0.3 | 0.3 | 0.3 |
| 08 | 72 | CLEATS AND/OR GUIDES (10-14)<br>SEGMENTS GUIDE ET/OU GUIDES (10-14) | 0.4 | 0.4 | 0.4 | 0.4 | 0.4 | 0.4 | 0.4 |
| 08 | 73 | CLEATS AND/OR GUIDES (15-19)<br>SEGMENTS GUIDE ET/OU GUIDES (15-19) | 0.5 | 0.5 | 0.5 | 0.5 | 0.5 | 0.5 | 0.5 |
| 08 | 74 | CLEATS AND/OR GUIDES (20-24)<br>SEGMENTS GUIDE ET/OU GUIDES (20-24) | 0.6 | 0.6 | 0.6 | 0.6 | 0.6 | 0.6 | 0.6 |
| 08 | 75 | CLEATS AND/OR GUIDES (25-29)<br>SEGMENTS GUIDE ET/OU GUIDES (25-29) | 0.7 | 0.7 | 0.7 | 0.7 | 0.7 | 0.7 | 0.7 |
| 08 | 76 | CLEATS AND/OR GUIDES (30-34)<br>SEGMENTS GUIDE ET/OU GUIDES (30-34) | 0.8 | 0.8 | 0.8 | 0.8 | 0.8 | 0.8 | 0.8 |
| 08 | 77 | CLEATS AND/OR GUIDES (35-39)<br>SEGMENTS GUIDE ET/OU GUIDES (35-39) | 0.9 | 0.9 | 0.9 | 0.9 | 0.9 | 0.9 | 0.9 |
| 08 | 78 | CLEATS AND/OR GUIDES (40-44)<br>SEGMENTS GUIDE ET/OU GUIDES (40-44) | 1.0 | 1.0 | 1.0 | 1.0 | 1.0 | 1.0 | 1.0 |

| SYSTEM SYSTÈME | CODE | DESCRIPTION | RENEGADE 900 ACE | GRAND TOURING 900 ACE | EXPEDITION 900 ACE SPORT | EXPEDITION LE/SE 900 ACE | SKANDIC 900 ACE | RENEGADE 900T ACE | GRAND TOURING 900 T ACE |
|---|---|---|---|---|---|---|---|---|---|
| | | | 29 | 30 | 31 | 32 | 33 | 34 | 35 |
| 08 | 79 | CLEATS AND/OR GUIDES (45-49)<br>SEGMENTS GUIDE ET/OU GUIDES (45-49) | 1.1 | 1.1 | 1.1 | 1.1 | 1.1 | 1.1 | 1.1 |
| 08 | 80 | CLEATS AND/OR GUIDES (50-54)<br>SEGMENTS GUIDE ET/OU GUIDES (50-54) | | | 1.2 | 1.2 | 1.2 | | |
| 08 | 81 | CLEATS AND/OR GUIDES (55-59)<br>SEGMENTS GUIDE ET/OU GUIDES (55-59) | | | 1.3 | 1.3 | 1.3 | | |
| 08 | 82 | CLEATS AND/OR GUIDES (60-64)<br>SEGMENTS GUIDE ET/OU GUIDES (60-64) | | | 1.4 | 1.4 | 1.4 | | |
| 08 | 83 | CLEATS AND/OR GUIDES (65-70)<br>SEGMENTS GUIDE ET/OU GUIDES (65-70) | | | 1.5 | 1.5 | 1.5 | | |
| 08 | 85 | ADJUSTMENT SCREW (1)<br>VIS D'AJUSTEMENT (1) | 0.3 | 0.3 | 0.3 | 0.3 | 0.3 | 0.3 | 0.3 |
| 08 | 86 | ADJUSTMENT SCREWS (2)<br>VIS D'AJUSTEMENT (2) | 0.4 | 0.4 | 0.4 | 0.4 | 0.4 | 0.4 | 0.4 |
| 08 | 87 | SHOCK SUPPORT AND/OR AXLE<br>SUPPORT D'AMORTISSEUR ET/OU AXE | 0.4 | 0.4 | 0.4 | 0.4 | 0.4 | 0.4 | 0.4 |
| 08 | 88 | FRONT SHOCK AND/OR SPRING<br>AMORTISSEUR AVANT ET/OU RESSORT | 0.5 | 0.5 | 0.5 | 0.5 | 0.5 | 0.5 | 0.5 |
| 08 | 89 | FRONT WHEELS SUPPORT AND/OR BEARINGS (3)<br>ROUES DE SUPPORT AVANT ET/OU ROULEMENTS À BILLE (3) | 0.5 | 0.5 | 0.5 | 0.5 | 0.5 | 0.5 | 0.5 |
| 08 | 91 | REAR PIVOT ARM<br>BRAS DE PIVOT ARRIÈRE | | | 0.7 | 0.7 | 0.7 | | |
| 08 | 137 | PRESSURE COLLECTOR ASS'Y<br>COLLECTEUR DE PRESSION COMPLET | 0.3 | 0.3 | | | | 0.3 | 0.3 |
| 08 | 141 | AIR DAMPER<br>AMORTISSEUR PNEUMATIQUE | 0.6 | 0.6 | | | | 0.6 | 0.6 |
| 08 | 143 | AIR VALVE AND/OR CONNECTOR<br>SOUPAPE PNEUMATIQUE ET/OU CONNECTEUR | 0.3 | 0.3 | | | | 0.3 | 0.3 |
| 08 | 144 | CAM AXLE, SPRING, SHAFT AND CUSHIONS<br>AXE DE CAME, RESSORT, ARBRE ET COUSSINETS | | | 0.5 | 0.5 | 0.5 | | |
| 08 | 145 | BLOCK, GUIDE, CAM AND PIVOT<br>BLOC, GUIDE, CAME ET PIVOT | | | 0.7 | 0.7 | 0.7 | | |

# REAR SUSPENSION SYSTEM AND TRACK
# SYSTÈME DE SUSPENSION ARRIÈRE ET CHENILLE

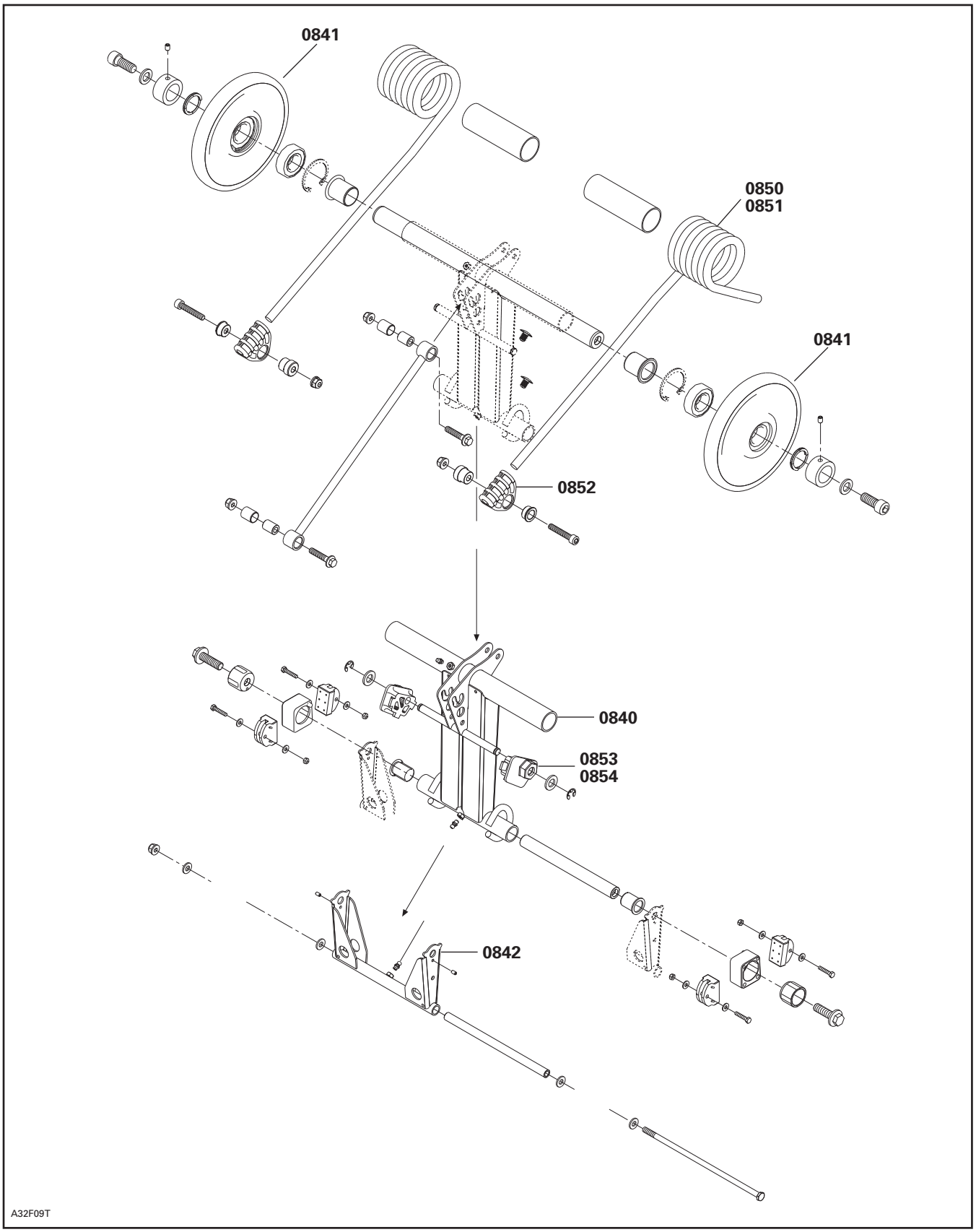

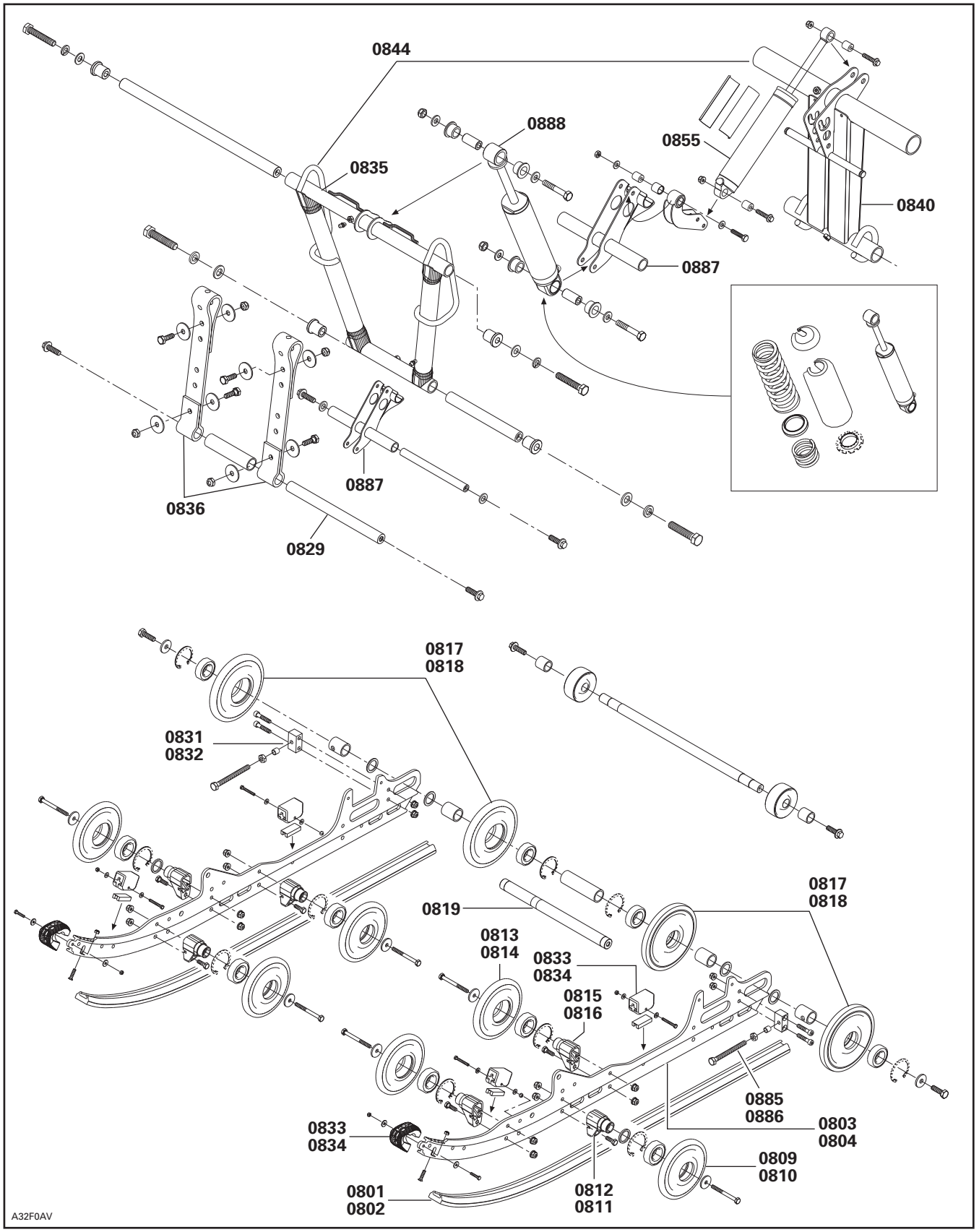
0844
0888
0855
0835
0840
0887
0887
0836
0829
0817
0818
0831
0832
0819
0817
0818
0813
0814
0833
0834
0815
0816
0885
0886
0803
0804
0833
0834
0809
0810
0801
0802
0812
0811
A32F0AV

# REAR SUSPENSION SYSTEM AND TRACK
# SYSTÈME DE SUSPENSION ARRIÈRE ET CHENILLE

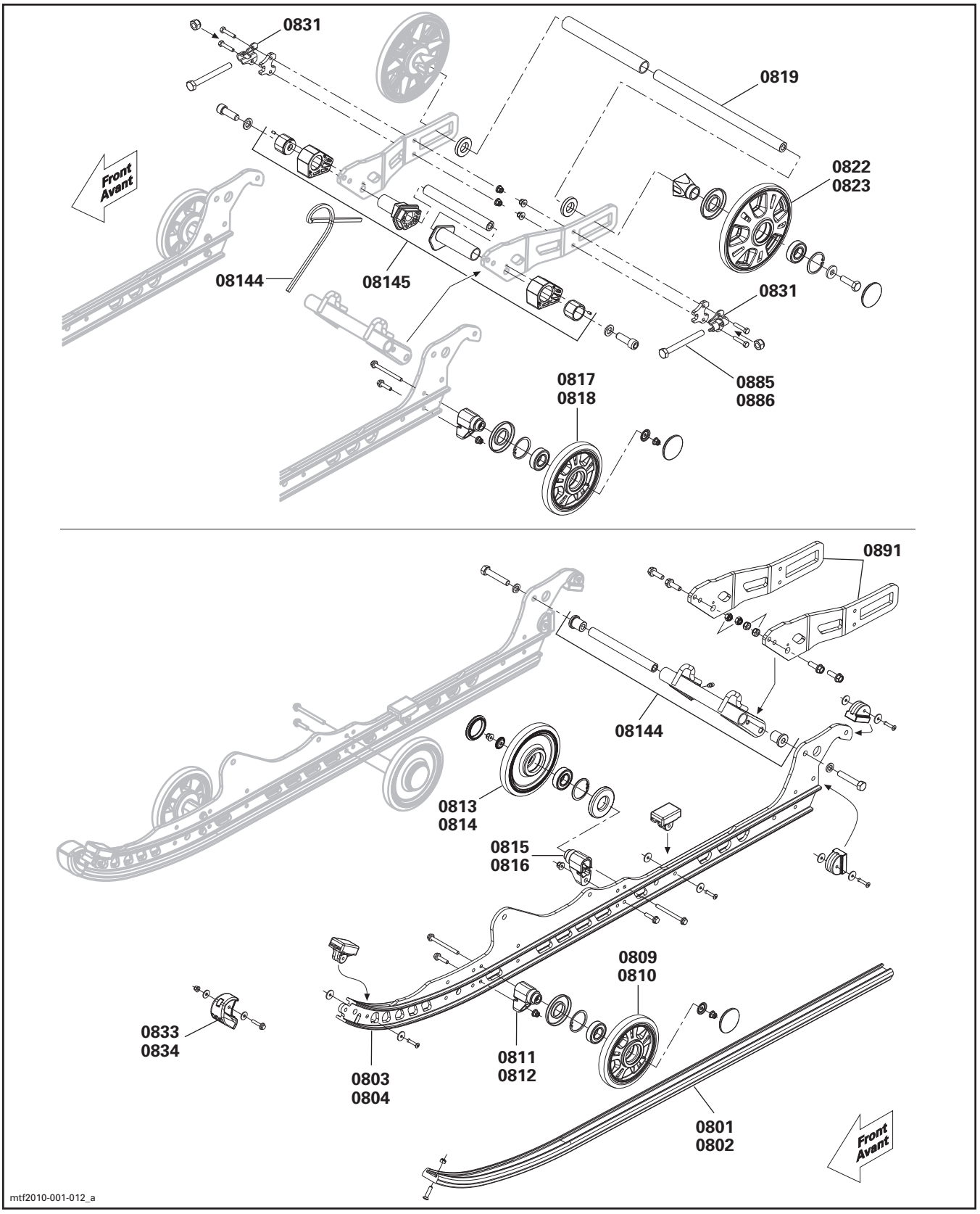

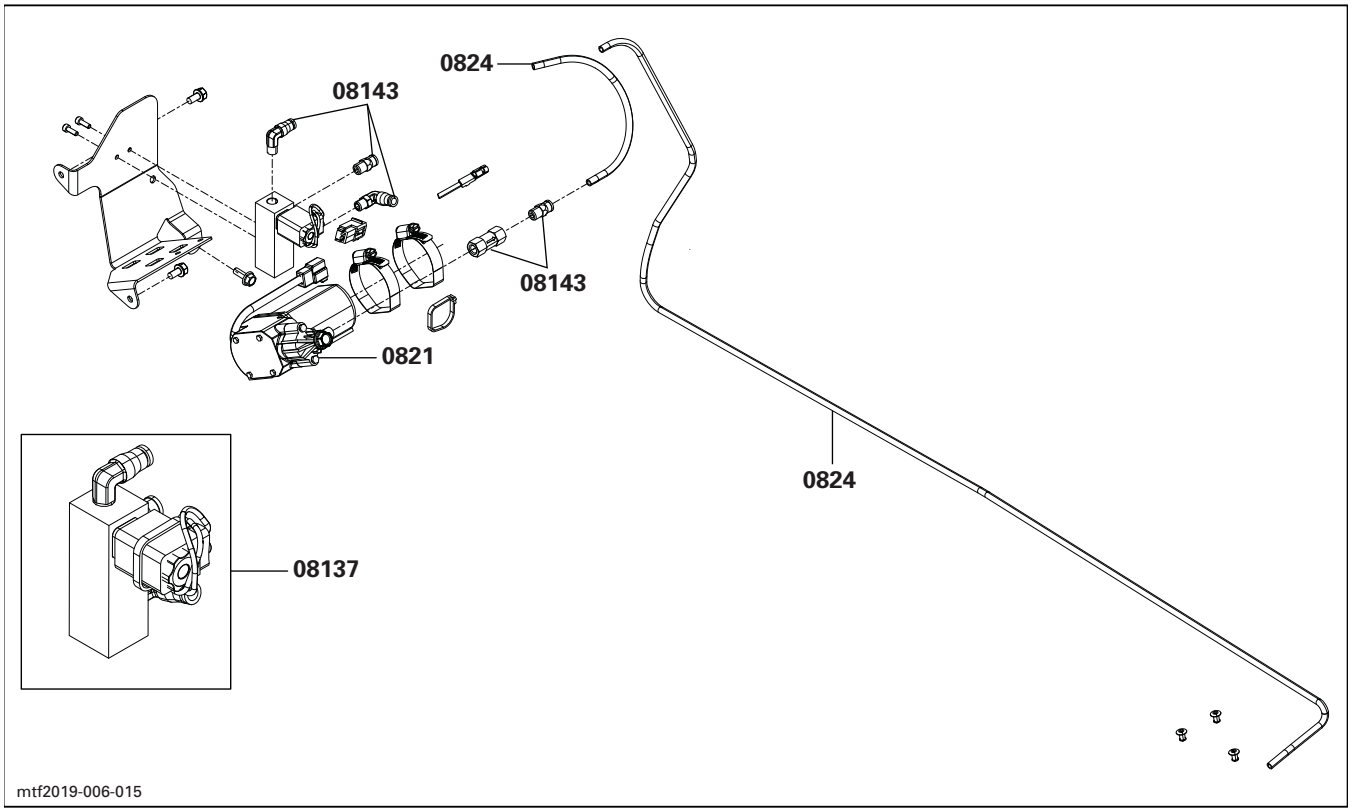
0824
08143
08143
0821
0824
08137
mtf2019-006-015

| SYSTEM SYSTÈME | CODE | DESCRIPTION | RENEGADE 900 ACE | GRAND TOURING 900 ACE | EXPEDITION 900 ACE SPORT | EXPEDITION LE/SE 900 ACE | SKANDIC 900 ACE | RENEGADE 900T ACE | GRAND TOURING 900 T ACE |
|---|---|---|---|---|---|---|---|---|---|
| | | | 29 | 30 | 31 | 32 | 33 | 34 | 35 |
| **09** | **00** | **NO LABOR INVOLVED<br>AUCUNE MAIN-D'OEUVRE IMPLIQUÉE** | **0** | **0** | **0** | **0** | **0** | **0** | **0** |
| **09** | 01 | HOOD<br>CAPOT | | | | 0.3 | 0.3 | | |
| **09** | 05 | HOOD DECALS (LH OR RH)<br>AUTOCOLLANTS DU CAPOT (GAUCHE OU DROIT) | 0.3 | 0.3 | 0.3 | 0.5 | 0.5 | 0.3 | 0.3 |
| **09** | 06 | HOOD DECALS (ALL)<br>AUTOCOLLANTS DU CAPOT (TOUS) | 0.5 | 0.5 | 0.5 | 0.5 | 0.5 | 0.5 | 0.5 |
| **09** | 09 | WINDSHIELD<br>PARE-BRISE | 0.3 | 0.3 | 0.3 | 0.3 | 0.3 | 0.3 | 0.3 |
| **09** | 14 | FRONT BUMPER<br>PARE-CHOCS AVANT | 0.5 | 0.5 | 0.5 | 0.4 | 0.4 | 0.6 | 0.6 |
| **09** | 17 | CONSOLE<br>CONSOLE | 0.4 | 0.4 | 0.4 | 0.3 | 0.3 | 0.4 | 0.4 |
| **09** | 21 | SEAT (ASS'Y)<br>SIÈGE (COMPLET) | 0.3 | 0.3 | 0.3 | | | 0.3 | 0.3 |
| **09** | 22 | SEAT COVER AND/OR FOAM<br>HOUSSE DE SIÈGE ET/OU MOUSSE | 1.0 | 1.0 | 1.0 | 0.7 | 0.7 | 1.0 | 1.0 |
| **09** | 23 | SEAT FOAM<br>CAOUTCHOUC MOUSSE DE SIÈGE | 1.0 | 1.0 | 1.0 | 0.7 | 0.7 | 1.0 | 1.0 |
| **09** | 33 | HEAT EXCHANGER<br>RADIATEUR | 9.7 | 10.0 | 10.0 | | | 9.7 | 10.0 |
| **09** | 34 | REAR BUMPER<br>PARE-CHOCS ARRIÈRE | 0.3 | 0.3 | 0.3 | 0.3 | 0.3 | 0.3 | 0.3 |
| **09** | 35 | HITCH SUPPORT (ALL PARTS)<br>SUPPORT D'ATTELAGE (TOUTES LES PIÈCES) | | | 0.3 | 0.3 | 0.3 | | |
| **09*** | 49 | **FRAME (ASS'Y) OR FRONT MEMBER<br>CHÂSSIS (COMPLET) OU CADRE AVANT** | **14.5** | **15.0** | **14.5** | **14.7** | **14.7** | **15.0** | **15.5** |
| **09** | 51 | REAR CAP<br>PARTIE ARRIÈRE DU CHÂSSIS | 0.7 | 0.7 | 0.7 | | | 0.7 | 0.7 |
| **09** | 52 | SIDE BRACKET (RIGHT OR LEFT)<br>SUPPORT LATERAL (GAUCHE OU DROITE) | 0.4 | 0.4 | 0.4 | | | 0.4 | 0.4 |
| **09** | 55 | SNOW GUARD (1)<br>GARDE-NEIGE (1) | 0.3 | 0.3 | 0.3 | 0.3 | 0.3 | 0.3 | 0.3 |
| **09** | 58 | BACKREST AND/OR COVER<br>DOSSIER ET/OU HOUSSE | | 0.3 | 0.3 | 0.3 | | | 0.3 |
| **09** | 65 | MIRROR (1)<br>RÉTROVISEUR (1) | | 0.3 | | 0.3 | 0.3 | | 0.3 |
| **09** | 66 | MIRRORS (2)<br>RÉTROVISEURS (2) | | 0.3 | | 0.3 | 0.3 | | 0.3 |
| **09** | 77 | BOTTOM PAN (RH)<br>COQUE CÔTÉ (DROITE) | 0.7 | 0.7 | 0.7 | 0.7 | 0.7 | 0.7 | 0.7 |
| **09** | 78 | BOTTOM PAN (LH)<br>COQUE CÔTÉ (GAUCHE) | 0.7 | 0.7 | 0.7 | 0.7 | 0.7 | 0.7 | 0.7 |

| SYSTEM SYSTÈME | CODE | DESCRIPTION | RENEGADE 900 ACE | GRAND TOURING 900 ACE | EXPEDITION 900 ACE SPORT | EXPEDITION LE/SE 900 ACE | SKANDIC 900 ACE | RENEGADE 900T ACE | GRAND TOURING 900 T ACE |
|---|---|---|---|---|---|---|---|---|---|
| | | | 29 | 30 | 31 | 32 | 33 | 34 | 35 |
| 09 | 79 | BOTTOM PAN (CENTER)<br>COQUE PARTIE (CENTRALE) | 0.7 | 0.7 | 0.7 | 0.8 | 0.8 | 0.7 | 0.7 |
| 09 | 80 | FRONT GRILL<br>GRILLE AVANT | 0.3 | 0.3 | 0.3 | 0.3 | 0.3 | 0.3 | 0.3 |
| 09 | 81 | SIDE GRILL (LH AND/OR RH)<br>GRILLE LATÉRALE (GAUCHE ET/OU DROIT) | | | | 0.3 | 0.3 | 0.3 | 0.3 |
| 09 | 86 | ROLLER<br>ROULEAU | 1.2 | 1.2 | 1.2 | 1.5 | 1.5 | 1.2 | 1.2 |
| 09 | 87 | BOTTOM PAN DOOR<br>PORTE DE COQUE | | | | | 0.3 | | |
| 09 | 96 | FOOT PROTECTOR AND/OR SUPPORT (LH OR RH)<br>PROTÈGE PIED ET/OU SUPPORT (GAUCHE OU DROIT) | 1.4 | 1.4 | 1.4 | 1.0 | 1.0 | 1.4 | 1.4 |
| 09 | 149 | ENGINE SIDE PANELS (2)<br>PANNEAUX MOTEUR (2) | | | | 0.9 | 0.9 | | |
| 09 | 157 | UPPER CONSOLE<br>CONSOLE SUPERIEUR | | | | 0.4 | 0.4 | | |
| 09 | 163 | MEMBER (LH OR RH)<br>MEMBRURE (GAUCHE OU DROIT) | 0.4 | 0.4 | 0.4 | 0.5 | 0.5 | 0.4 | 0.4 |
| 09 | 191 | SIDE PANEL DECAL (LH OR RH) (1)<br>DÉCALQUES DE PANNEAU (GAUCHE OU DROIT) (1) | 0.3 | 0.3 | 0.3 | 0.3 | 0.3 | 0.3 | 0.3 |
| 09 | 192 | SIDE PANEL DECALS (LH OR RH) (ALL)<br>DÉCALQUES DE PANNEAU (GAUCHE OU DROIT) (TOUS) | 0.8 | 0.8 | 0.8 | 0.6 | 0.6 | 0.8 | 0.8 |
| 09 | 194 | ENGINE SIDE PANEL (LH OR RH)<br>PANNEAU MOTEUR (GAUCHE OU DROIT) | 0.5 | 0.5 | 0.5 | 0.5 | 0.5 | 0.5 | 0.5 |
| 09 | 195 | FRONT PLATE<br>PLAQUE AVANT | | | | 4.5 | | | |
| 09 | 196 | REAR HANDLE AND/OR GRIP<br>POIGNÉE ARRIÈRE ET/OU GAINE | | 0.5 | | 0.5 | 0.3 | | 0.5 |
| 09 | 197 | REAR HANDLES AND/OR GRIPS (2)<br>POIGNÉES ARRIÈRE ET/OU GAINES (2) | | 0.9 | | 0.9 | 0.3 | | 0.9 |
| 09 | 198 | BACKREST PARTS<br>PIÈCES DU DOSSIER | | 0.3 | 0.3 | 0.3 | | | 0.3 |
| 09 | 199 | REAR SEAT BASE AND/OR ALL PARTS<br>BASE SIÈGE ARRIÈRE ET/OU TOUTES LES PIÈCES | | | | 1.9 | 1.9 | | |
| 09 | 203 | REAR SEAT COVER OR FOAM<br>HOUSSE OU MOUSSE DU SIÈGE ARRIÈRE | | | | 1.0 | 1.0 | | |
| 09 | 233 | UPPER SIDE PANEL (LH OR RH)<br>PANNEAU LATÉRAL SUPÉRIEUR (GAUCHE OU DROIT) | 0.6 | 0.6 | 0.6 | 0.3 | | 0.6 | 0.6 |
| 09 | 238 | LOWER SIDE PANEL (LH OR RH)<br>PANNEAU LATÉRAL INFÉRIEUR (GAUCHE OU DROIT) | 0.6 | 0.6 | 0.6 | 0.5 | 0.5 | 0.6 | 0.6 |
| 09 | 243 | DEFLECTOR PANEL (RIGHT OR LEFT)<br>PANNEAU DEFLECTEUR (DROITE OU GAUCHE) | 0.3 | 0.3 | | | | 0.3 | 0.3 |
| 09 | 249 | WINDSHIELD SUPPORT<br>SUPPORT PARE-BRISE | 0.3 | 0.3 | 0.3 | 0.3 | 0.3 | 0.3 | 0.3 |

| SYSTEM SYSTÈME | CODE | DESCRIPTION | RENEGADE 900 ACE | GRAND TOURING 900 ACE | EXPEDITION 900 ACE SPORT | EXPEDITION LE/SE 900 ACE | SKANDIC 900 ACE | RENEGADE 900T ACE | GRAND TOURING 900 T ACE |
|---|---|---|---|---|---|---|---|---|---|
| | | | 29 | 30 | 31 | 32 | 33 | 34 | 35 |
| 09 | 250 | AIR DEFLECTOR (LH OR RH)<br>DÉFLECTEUR D'AIR (GAUCHE OU DROIT) | 0.3 | 0.3 | 0.3 | 0.3 | 0.3 | 0.3 | 0.3 |
| 09 | 251 | PANEL LATCHES (ALL)<br>LOQUETS DE PANNEAU (TOUS) | 0.3 | 0.3 | 0.3 | 0.3 | 0.3 | 0.3 | 0.3 |
| 09 | 252 | FOOTREST REINFORCEMENT (LH OR RH)<br>RENFORT DE MARCHE-PIED (GAUCHE OU DROIT) | 1.1 | 1.1 | 1.1 | 0.6 | 0.6 | 1.1 | 1.1 |
| 09 | 259 | FRONT CROSS MEMBER<br>LONGERON AVANT DU CHASSIS | | | | 2.3 | | | |
| 09 | 261 | FRONT MEMBER<br>MEMBRURE AVANT | | | | 2.2 | | | |
| 09 | 284 | BOX DOOR<br>PORTE DE COFFRE | 0.3 | 0.3 | 0.3 | 0.4 | | 0.3 | 0.3 |
| 09 | 289 | GLOVES BOX<br>BOITE À GANTS | 0.3 | 0.3 | 0.3 | | | 0.3 | 0.3 |
| 09 | 310 | SEAT BOX<br>BASE SIEGE | | | | 1.3 | 1.3 | | |
| 09 | 311 | E-MODULE<br>MODULE E | 6.0 | 6.0 | 6.0 | 6.4 | 6.4 | 6.0 | 6.5 |
| 09 | 312 | S-MODULE<br>MODULE S | 4.3 | 4.3 | 4.3 | 3.5 | | 4.3 | 4.3 |
| 09 | 313 | SEAT BOX FRAME<br>CHASSIS BASE DE SIEGE | | | | 0.4 | 0.4 | | |
| 09 | 378 | BRACE<br>BRETELLE | 1.3 | 1.3 | 1.3 | 1.0 | 1.0 | 1.3 | 1.3 |
| 09 | 384 | RADIATOR COVER<br>COUVERCLE DE RADIATEUR | 0.5 | 0.5 | 0.6 | | | 0.5 | 0.5 |
| 09 | 400 | CENTER HOOD<br>CAPOT CENTRAL | 0.8 | 0.8 | 0.8 | | | 0.8 | 0.8 |
| 09 | 401 | HOOD (RH OR LH)<br>CAPOT (DROIT OU GAUCHE) | 0.7 | 0.7 | 0.7 | | | 0.7 | 0.7 |
| 09 | 403 | HEADLAMP MOULDING<br>ENJOLIVEUR DE PHARE | 0.3 | 0.3 | 0.3 | | | 0.3 | 0.3 |
| 09 | 469 | REAR SUSPENSION BRACKET (RIGHT OR LEFT)<br>ATTACHE DE SUSPENSION ARRIÈRE (DROITE OU GAUCHE) | 0.8 | 0.8 | 0.8 | | | 0.8 | 0.8 |
| 09 | 520 | REAR PROTECTOR<br>PROTECTEUR ARRIERE | 2.0 | | | | | 2.0 | |

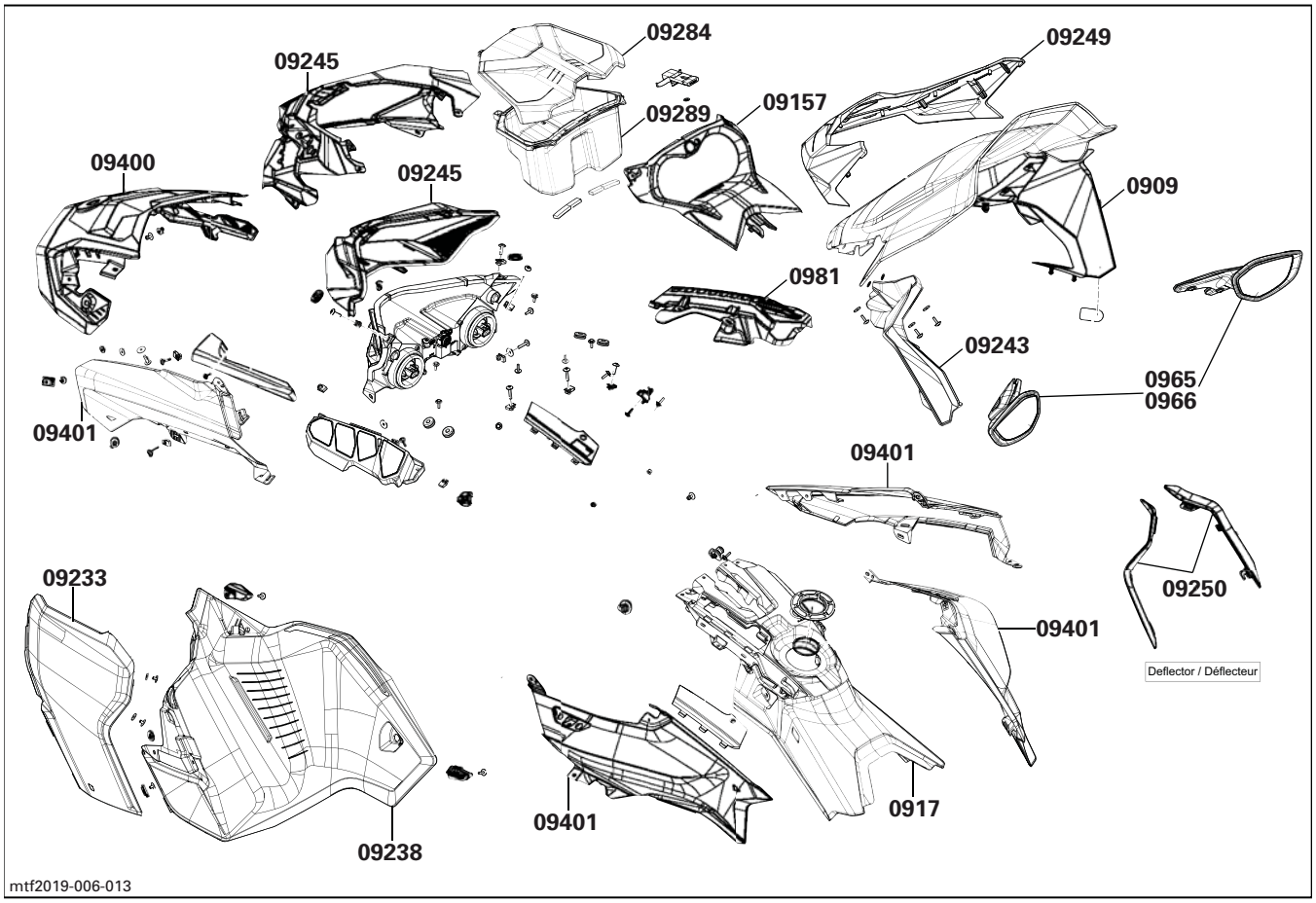
09284
09245
09249
09289
09157
09400
09245
0909
0981
09243
0965
0966
09401
09401
09250
09233
09401
Deflector / Déflecteur
09238
09401
0917
mtf2019-006-013

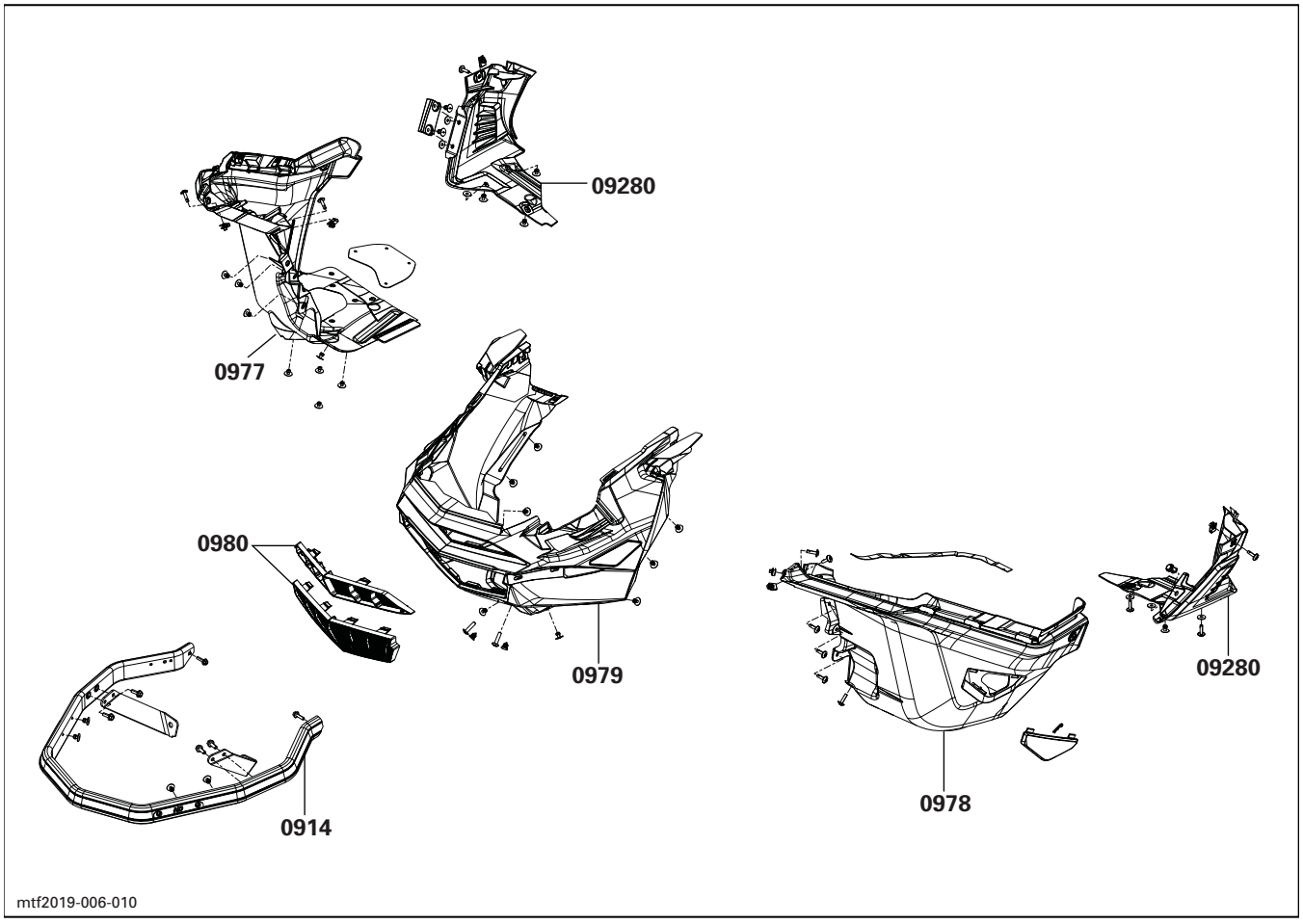
09280
0977
0980
0979
0914
0978
09280
mtf2019-006-010

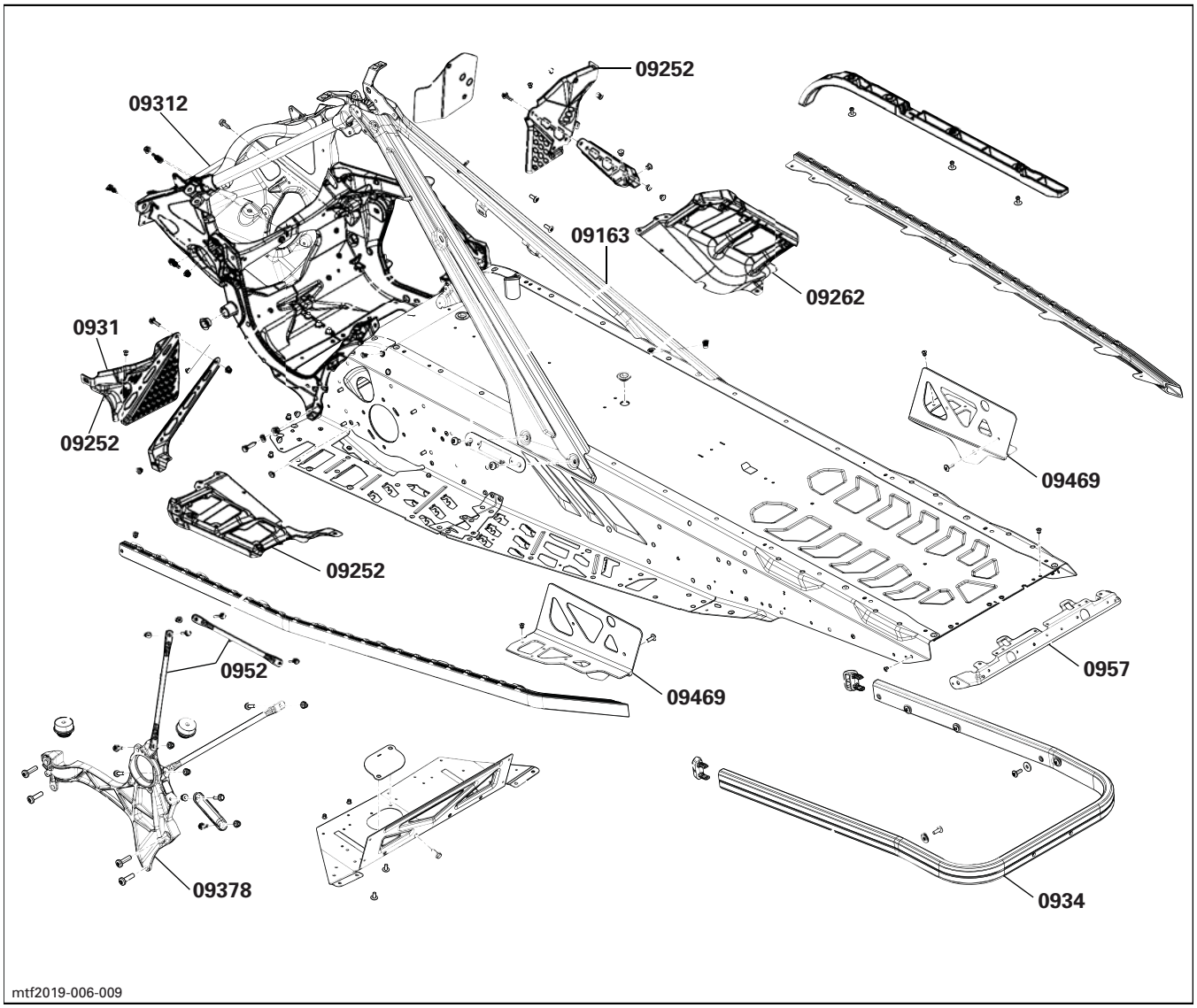
09252
09312
09163
09262
0931
09252
09469
09252
0952
09469
0957
09378
0934
mtf2019-006-009

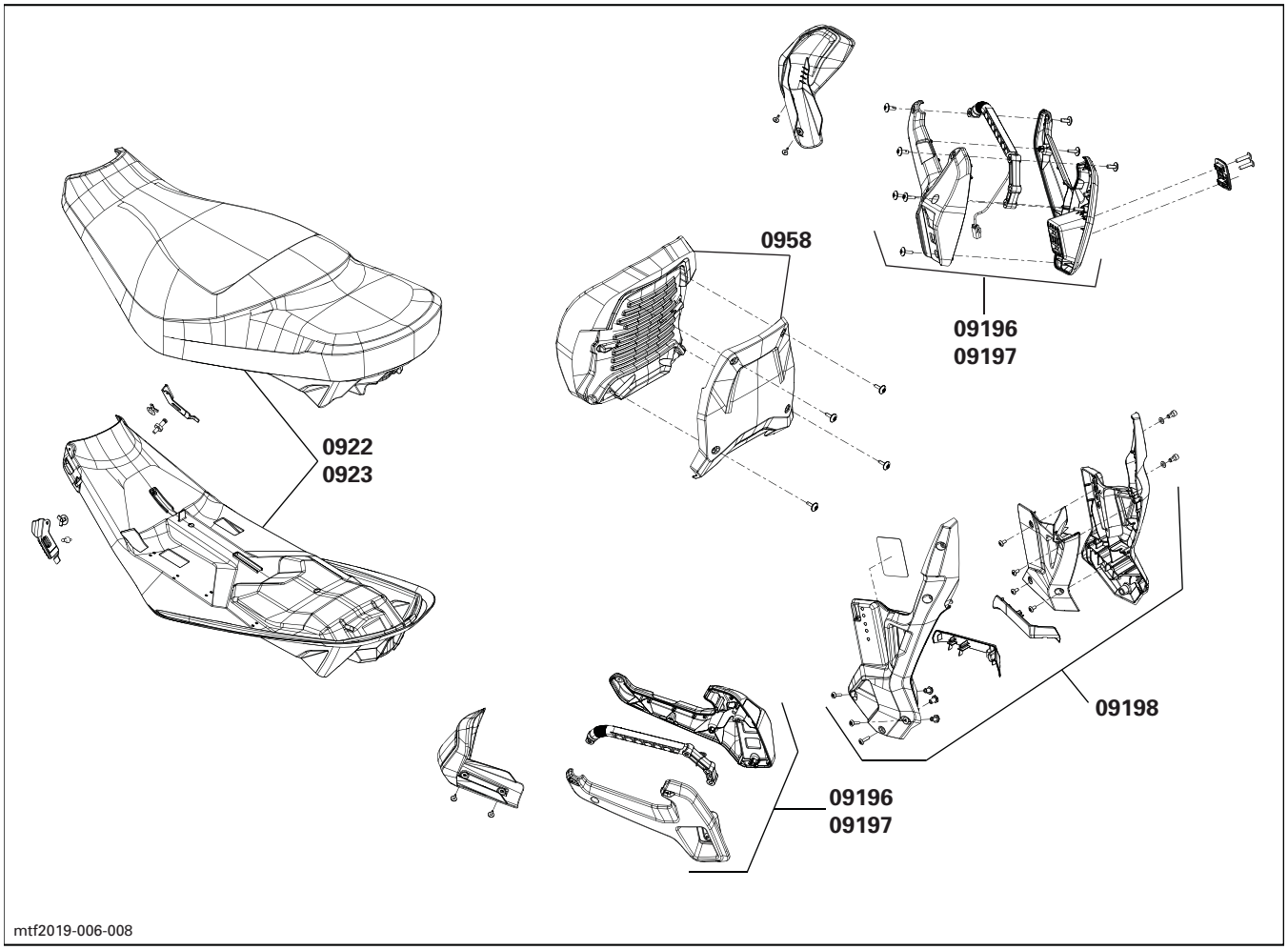
0958
09196
09197
0922
0923
09198
09196
09197
mtf2019-006-008

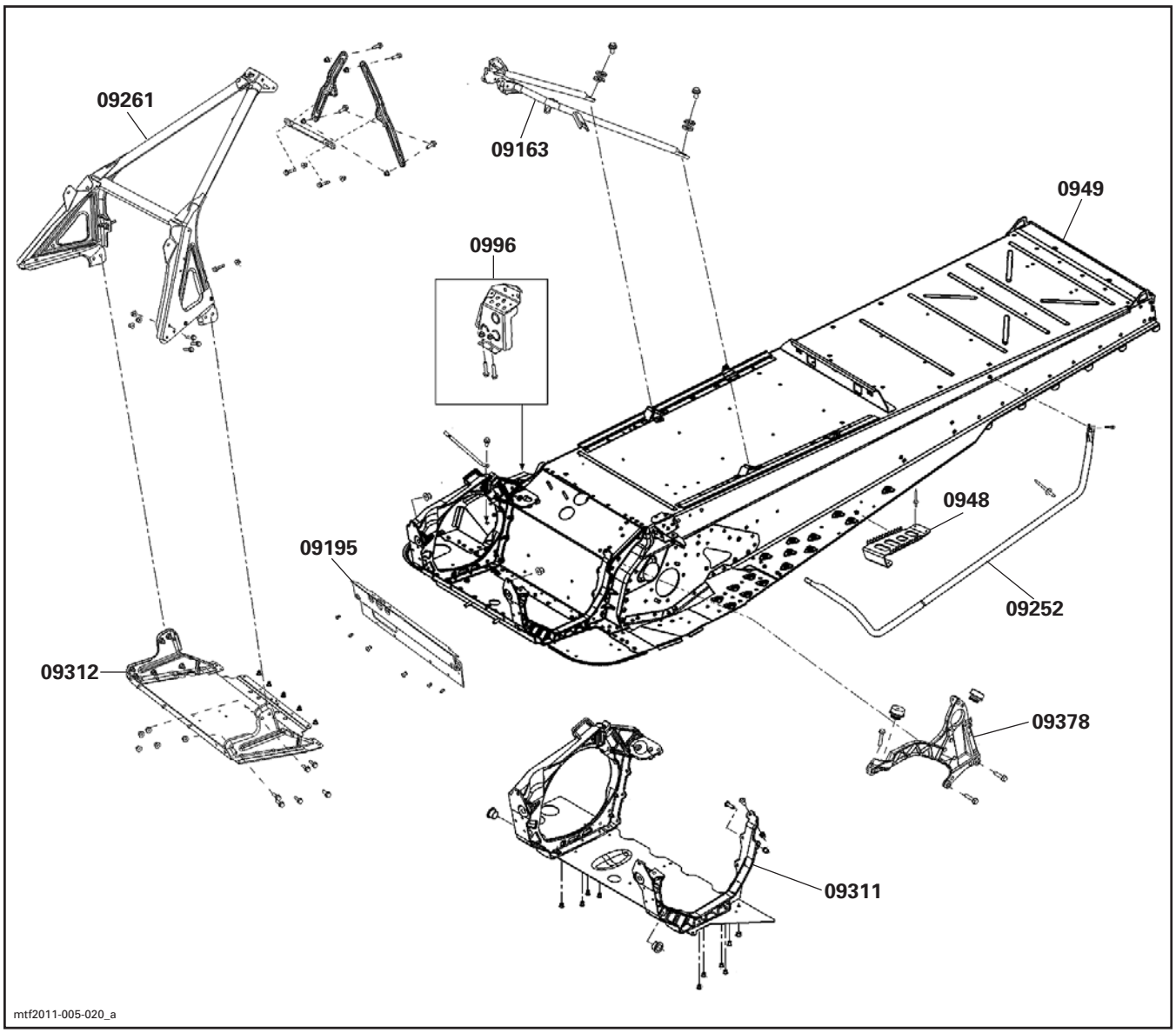
09261
09163
0949
0996
0948
09195
09252
09312
09378
09311
mtf2011-005-020_a

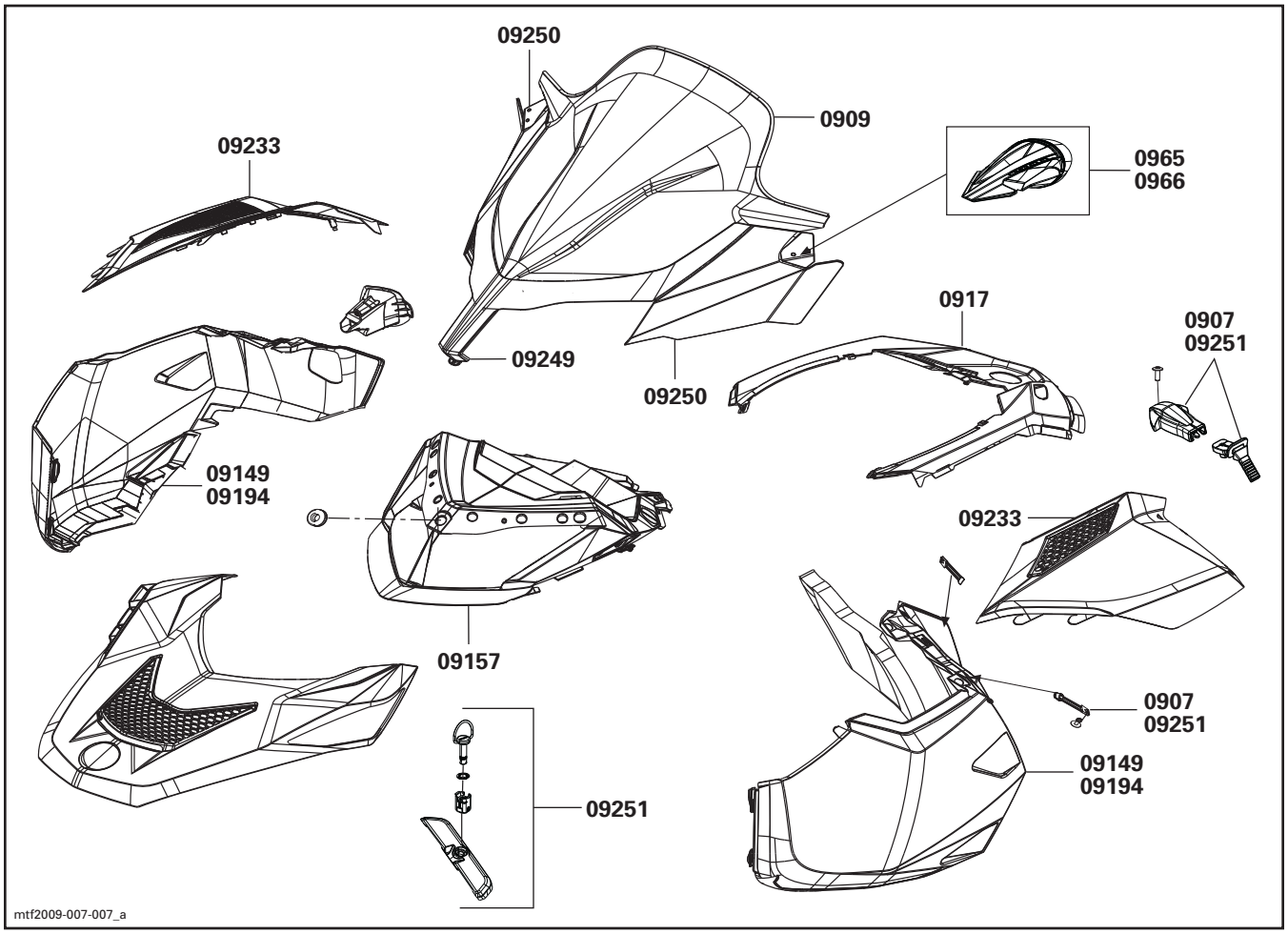
09250
0909
09233
0965
0966
09249
09250
0917
0907
09251
09149
09194
09233
09157
0907
09251
09149
09194
09251
mtf2009-007-007_a

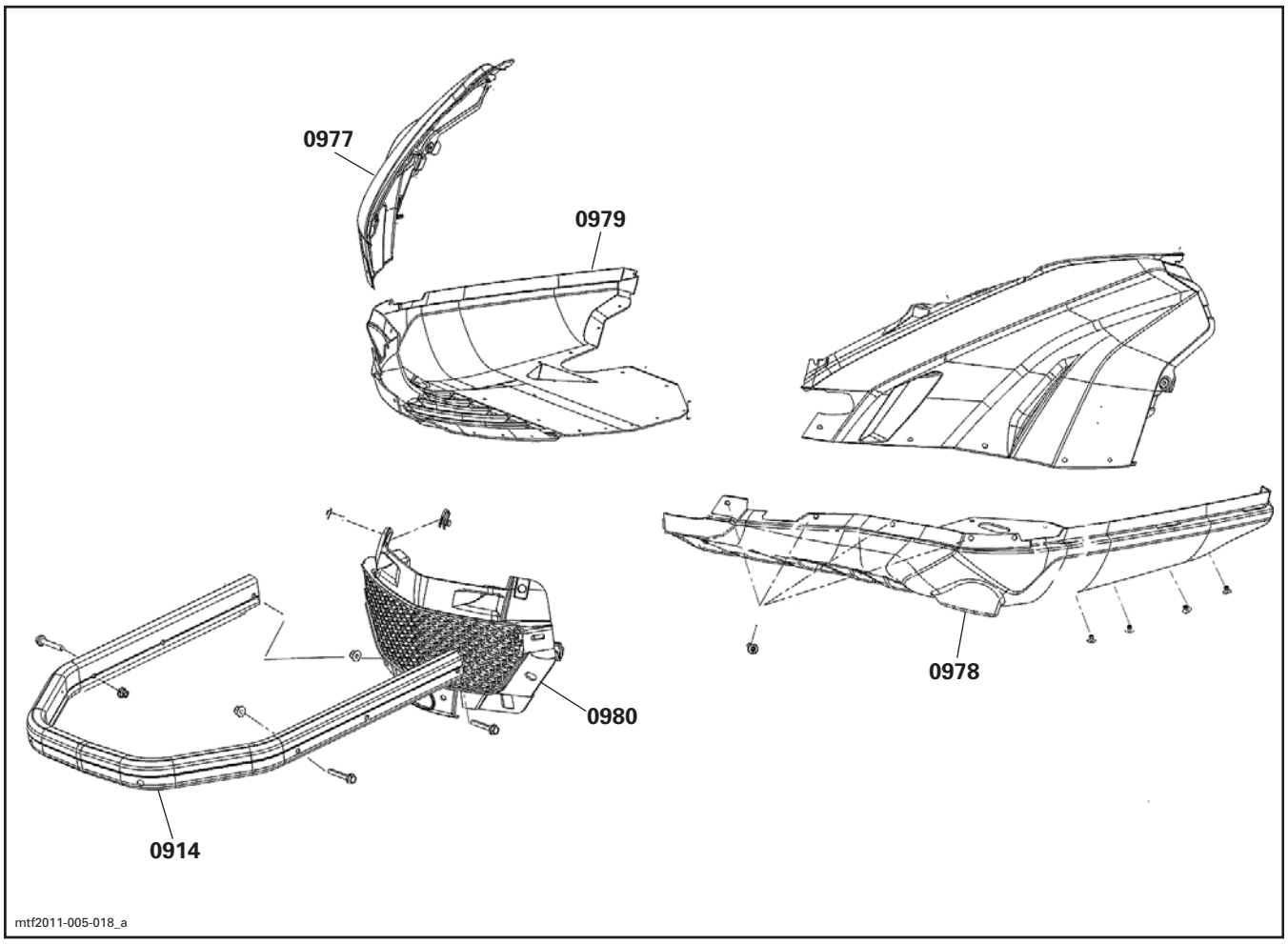
0977
0979
0978
0980
0914
mtf2011-005-018_a

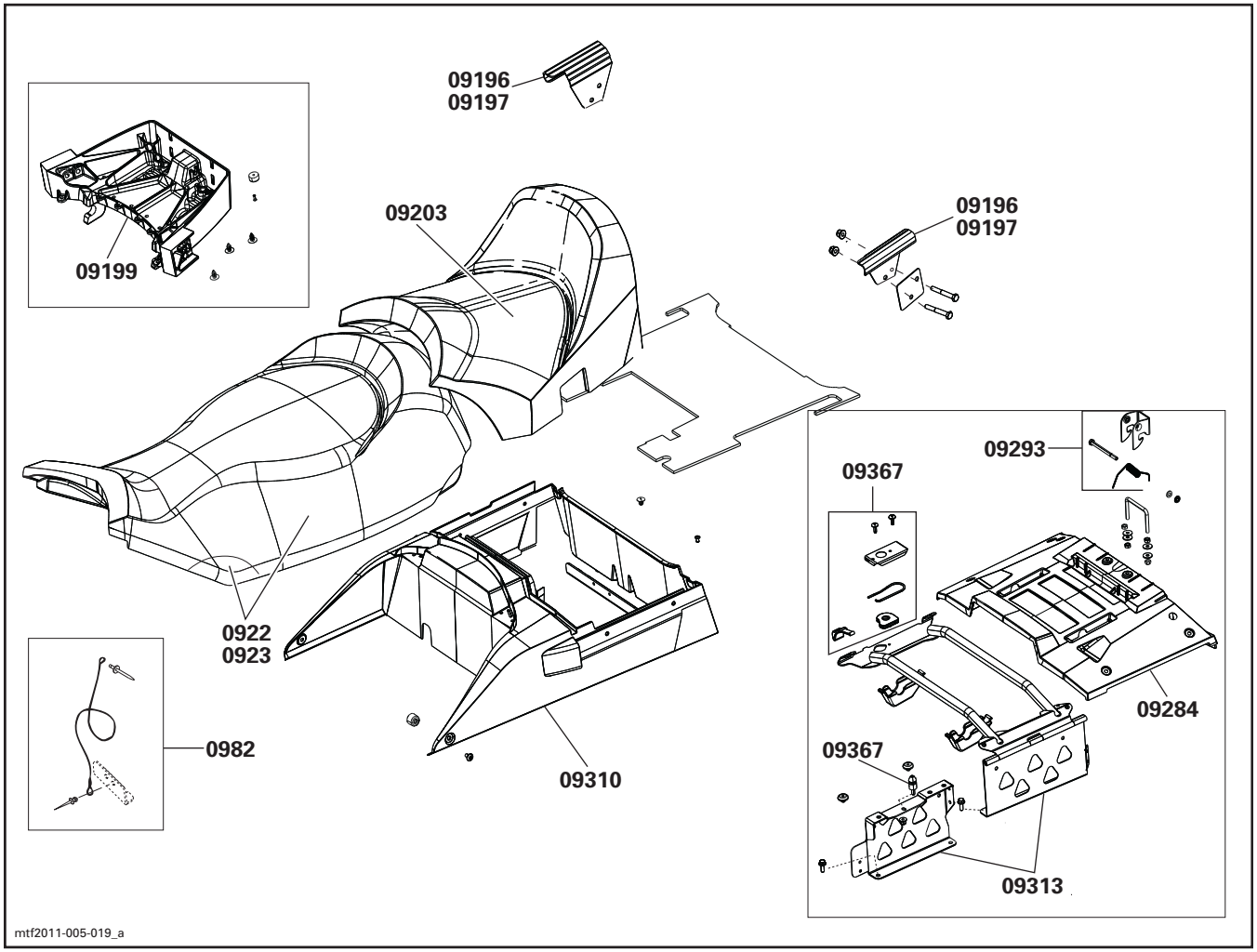
09196
09197
09199
09203
09196
09197
09293
09367
0922
0923
0982
09310
09284
09367
09313
mtf2011-005-019_a

| SYSTEM SYSTÈME | CODE | DESCRIPTION | RENEGADE 900 ACE | GRAND TOURING 900 ACE | EXPEDITION 900 ACE SPORT | EXPEDITION LE/SE 900 ACE | SKANDIC 900 ACE | RENEGADE 900T ACE | GRAND TOURING 900 T ACE |
|---|---|---|---|---|---|---|---|---|---|
| | | | 29 | 30 | 31 | 32 | 33 | 34 | 35 |
| **10** | **00** | **NO LABOR INVOLVED<br>AUCUNE MAIN-D'OEUVRE IMPLIQUÉE** | **0** | **0** | **0** | **0** | **0** | | |
| **10** | 01 | IGNITION SWITCH<br>INTERRUPTEUR D'ALLUMAGE | 0.3 | 0.3 | 0.3 | 0.3 | 0.3 | 0.3 | 0.3 |
| **10** | 03 | KILL SWITCH<br>D'INTERRUPTEUR D'URGENCE | 0.3 | 0.3 | 0.3 | 0.3 | 0.3 | 0.3 | 0.3 |
| **10** | 05 | BRAKE LIGHT SWITCH<br>INTERRUPTEUR DE FEU D'ARRÊT | 0.3 | 0.3 | 0.3 | 0.3 | 0.3 | 0.3 | 0.3 |
| **10** | 06 | TETHER CORD SWITCH OR D.E.S.S.<br>CAPUCHON COUPE-CIRCUIT OU D.E.S.S. | 0.3 | 0.3 | 0.3 | 0.3 | 0.3 | 0.3 | 0.3 |
| **10** | 07 | IGNITION SWITCH BLOCK<br>LOGEMENT DE RÉCEPTACLE (INTERRUPTEUR) | 0.3 | 0.3 | 0.3 | 0.3 | 0.3 | 0.3 | 0.3 |
| **10** | 08 | CURRENT OR GROUND WIRE<br>FIL DE BATTERIE OU DE MASSE | 0.3 | 0.3 | 0.3 | 0.3 | 0.3 | 0.3 | 0.3 |
| **10** | 09 | HEADLAMP (ASS'Y) (ALL PARTS)<br>PHARE (COMPLET) (TOUTES LES PIÈCES) | 0.6 | 0.6 | 0.6 | 0.3 | 0.3 | 0.6 | 0.6 |
| **10** | 10 | VOLTAGE REGULATOR<br>RÉGULATEUR DE TENSION | 1.2 | 1.2 | 1.2 | 0.7 | 0.7 | 1.2 | 1.2 |
| **10** | 12 | TAIL LIGHT (ASS'Y) (ALL PARTS)<br>FEU ARRIÈRE (COMPLET) (TOUTES LES PIÈCES) | 0.3 | 0.3 | 0.3 | 0.3 | 0.3 | 0.3 | 0.3 |
| **10** | 13 | BATTERY<br>BATTERIE | 0.3 | 0.3 | 0.3 | 0.3 | 0.3 | 0.3 | 0.3 |
| **10** | 15 | HEATED GRIP (1)<br>POIGNÉES CHAUFFANTE (1) | 0.5 | 0.5 | 0.5 | 0.5 | 0.5 | 0.5 | 0.5 |
| **10** | 16 | BULBS (ONE OR ALL)<br>AMPOULES (UNE OU TOUTES) | 0.3 | 0.3 | 0.3 | 0.3 | 0.3 | 0.3 | 0.3 |
| **10** | 17 | HEATED THROTTLE LEVER<br>MANETTE D'ACCÉLÉRATEUR CHAUFFANTE | 0.3 | 0.3 | 0.3 | 0.3 | 0.3 | 0.3 | 0.3 |
| **10** | 23 | HALOGEN BULB<br>AMPOULE HALOGÈNE | 0.3 | 0.3 | 0.3 | 0.3 | 0.3 | 0.3 | 0.3 |
| **10** | 31 | DC OUTLET PLUG<br>PRISE D'ACCESSOIRE DC | | | 0.3 | 0.3 | 0.3 | | |
| **10** | 34 | ELECTRONIC MODULE<br>MODULE ÉLECTRONIQUE | 0.7 | 0.7 | 0.7 | 0.7 | 0.7 | 0.7 | 0.7 |
| **10** | 41 | ENGINE HARNESS<br>CABLAGE DU MOTEUR | 2.0 | 2.0 | 2.0 | 1.5 | 1.5 | 2.0 | 2.0 |
| **10** | 49 | MULTIFUNCTION GAUGE<br>CADRAN MULTIFONCTION | 0.3 | 0.3 | 0.3 | 0.3 | 0.3 | 0.3 | 0.3 |
| **10** | 50 | HEATED GRIPS (2)<br>POIGNÉES CHAUFFANTES (2) | 0.9 | 0.9 | 0.9 | 0.9 | 0.9 | 0.9 | 0.9 |
| **10** | 51 | MAIN HARNESS<br>CÂBLAGE PRINCIPAL | 2.4 | 2.4 | 2.4 | 1.8 | 1.8 | 2.4 | 2.4 |
| **10** | 59 | REAR HEATED GRIP (1)<br>POIGNÉE CHAUFFANTE ARRIÈRE (1) | | 0.5 | | 0.5 | | | 0.5 |

| SYSTEM SYSTÈME | CODE | DESCRIPTION | RENEGADE 900 ACE | GRAND TOURING 900 ACE | EXPEDITION 900 ACE SPORT | EXPEDITION LE/SE 900 ACE | SKANDIC 900 ACE | RENEGADE 900T ACE | GRAND TOURING 900 T ACE |
|---|---|---|---|---|---|---|---|---|---|
| | | | 29 | 30 | 31 | 32 | 33 | 34 | 35 |
| 10 | 60 | REAR HEATED GRIPS (2)<br>POIGNÉES CHAUFFANTES ARRIÈRE (2) | | 0.9 | | 0.9 | | | 0.9 |
| 10 | 67 | RELAY<br>RELAIS | 0.3 | 0.3 | 0.3 | 0.3 | 0.3 | 0.3 | 0.3 |
| 10 | 79 | COMPRESSOR MODULE<br>MODULE DU COMPRESSEUR | | 0.3 | | | | | 0.3 |
| 10 | 80 | ELECTRONIC REVERSE MOTOR<br>MOTEUR DE LA RENVERSE ÉLECTRONIQUE | | 0.4 | | | | | 0.4 |
| 10 | 82 | REVERSE SWITCH<br>INTERRUPTEUR DE RENVERSE | 0.3 | 0.3 | 0.3 | 0.3 | 0.3 | 0.3 | 0.3 |
| 10 | 85 | KILL SWITCH SUPPORT<br>SUPPORT D'INTERRUPTEUR D'URGENCE | 0.3 | 0.3 | 0.3 | 0.3 | 0.3 | 0.3 | 0.3 |
| 10 | 117 | SEAT HARNESS<br>CABLAGE DE SIEGE | | 0.3 | | | | | 0.3 |
| 10 | 118 | STEERING HARNESS<br>CÂBLAGE DU GUIDON | 1.0 | 1.0 | 1.0 | 1.0 | 1.0 | 1.0 | 1.0 |
| 10 | 121 | HEATED SEAT SWITCH<br>INTERRUPTEUR DU SIEGE CHAUFFANT | | 0.3 | | | | | 0.3 |
| 10 | 136 | ECO HARNESS<br>CABLAGE ECO | | | | 0.3 | 0.3 | | |
| 10 | 137 | ECO SWITCH<br>INTERRUPTEUR ECO | 0.3 | 0.3 | 0.3 | 0.3 | 0.3 | 0.3 | 0.3 |

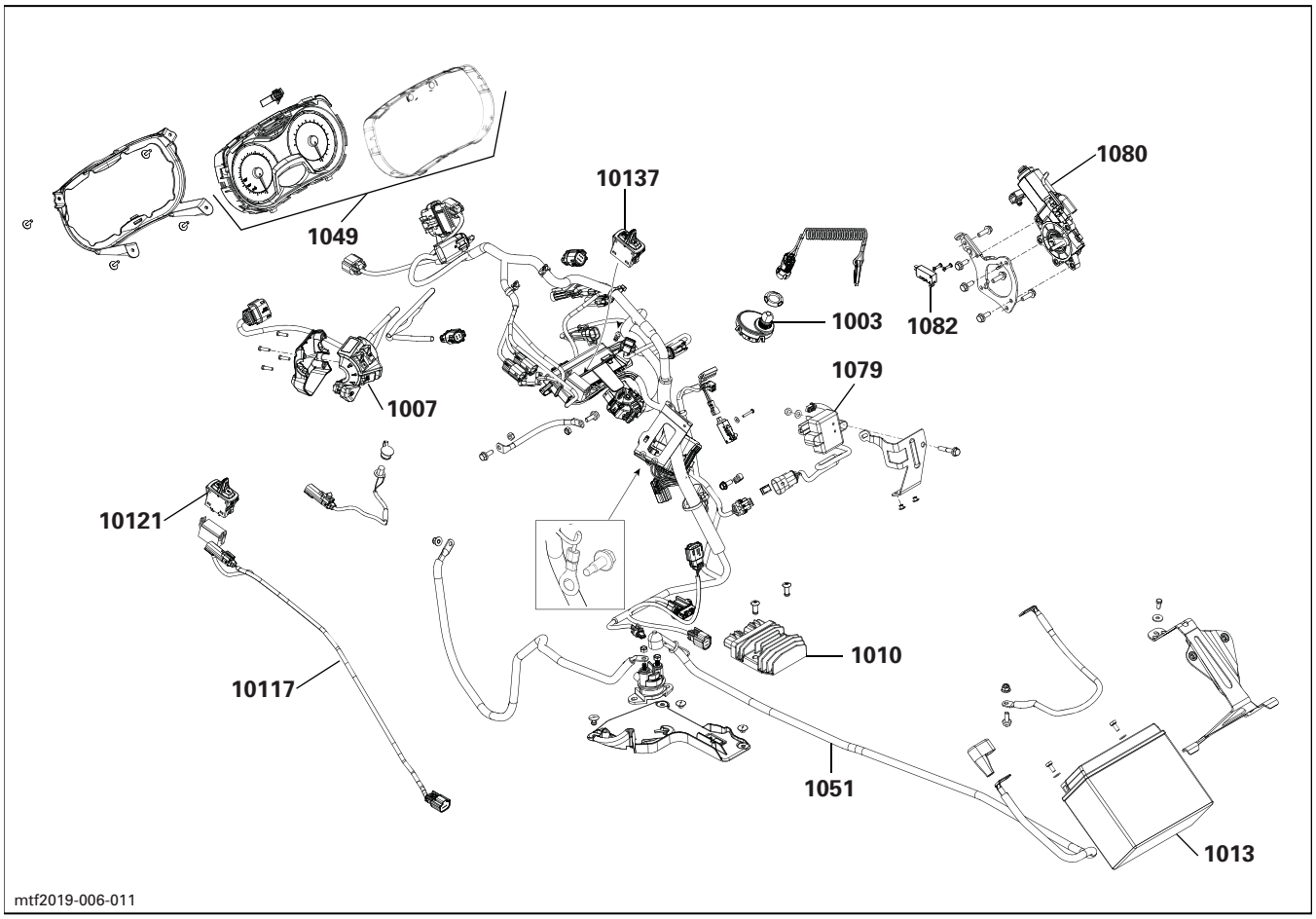
1049
10137
1080
1003
1082
1007
1079
10121
1010
10117
1051
1013
mtf2019-006-011

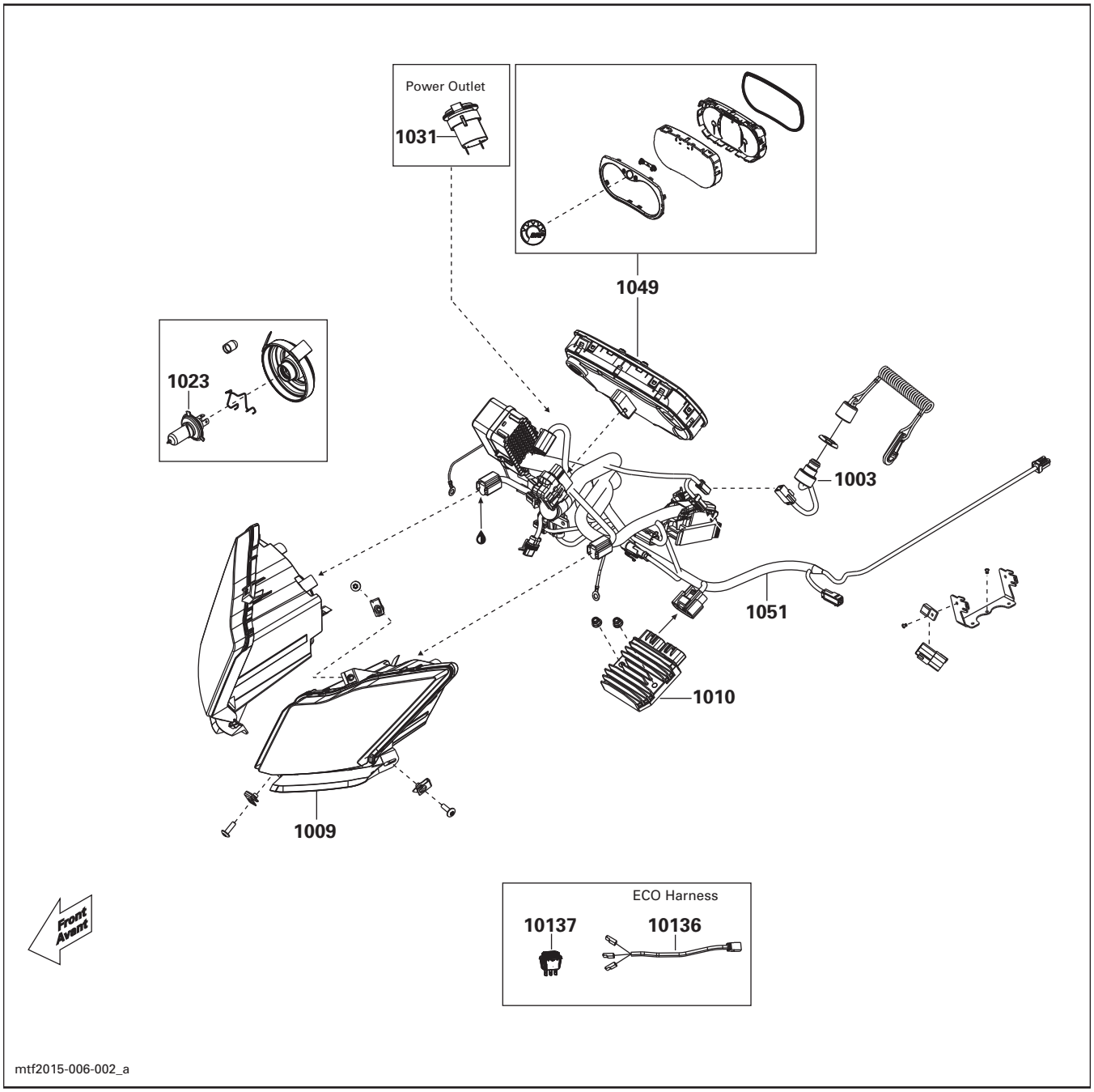
Power Outlet
1031
1049
1023
1003
1051
1010
1009
Front
Avant
ECO Harness
10137
10136
mtf2015-006-002_a

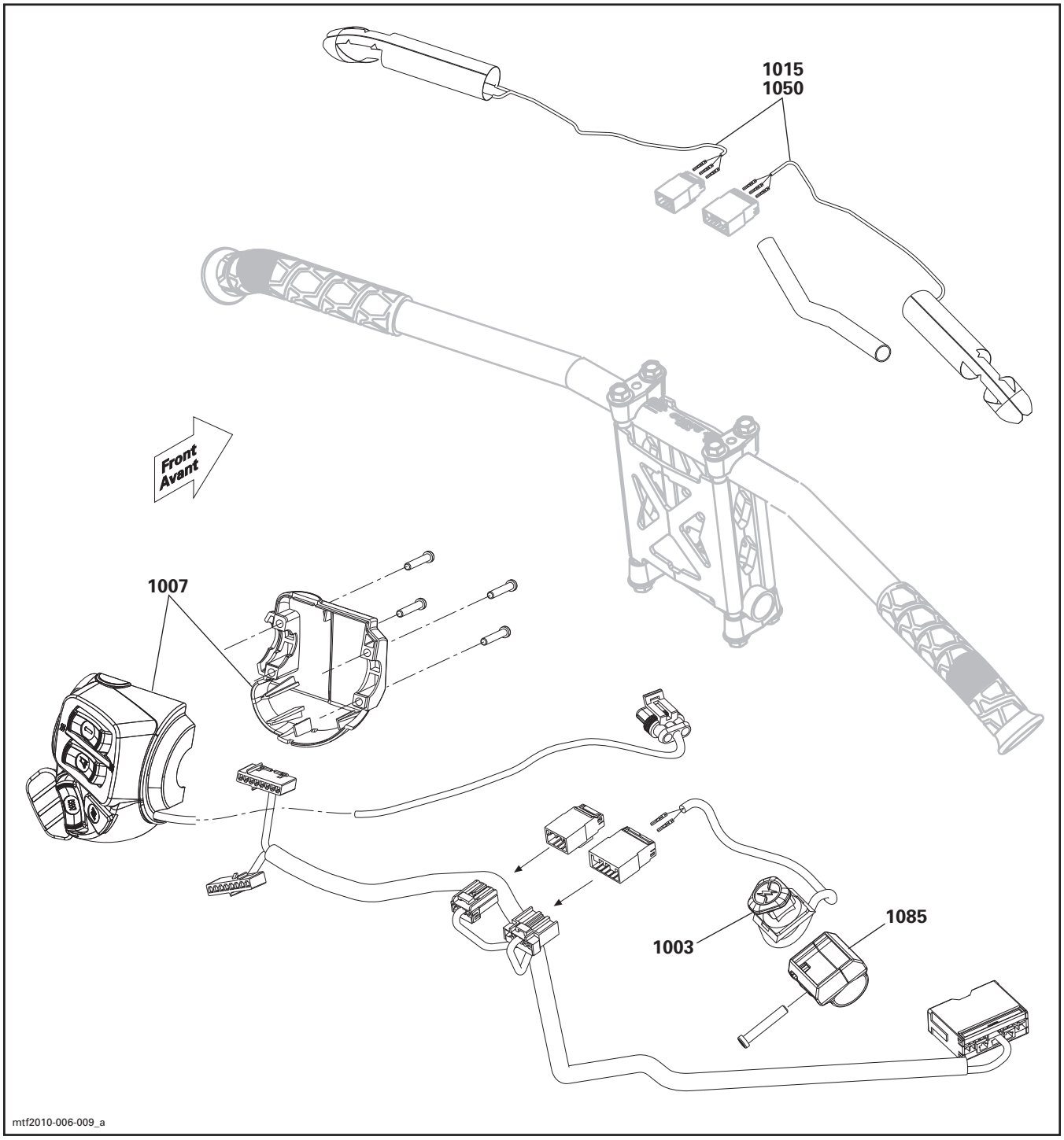
1015
1050
Front
Avant
1007
1003
1085
mtf2010-006-009_a

Welcome to the 2019 Ski-Doo pre-season Technical Presentation

My name is Ken Gauthier Ski-doo Product Specialist

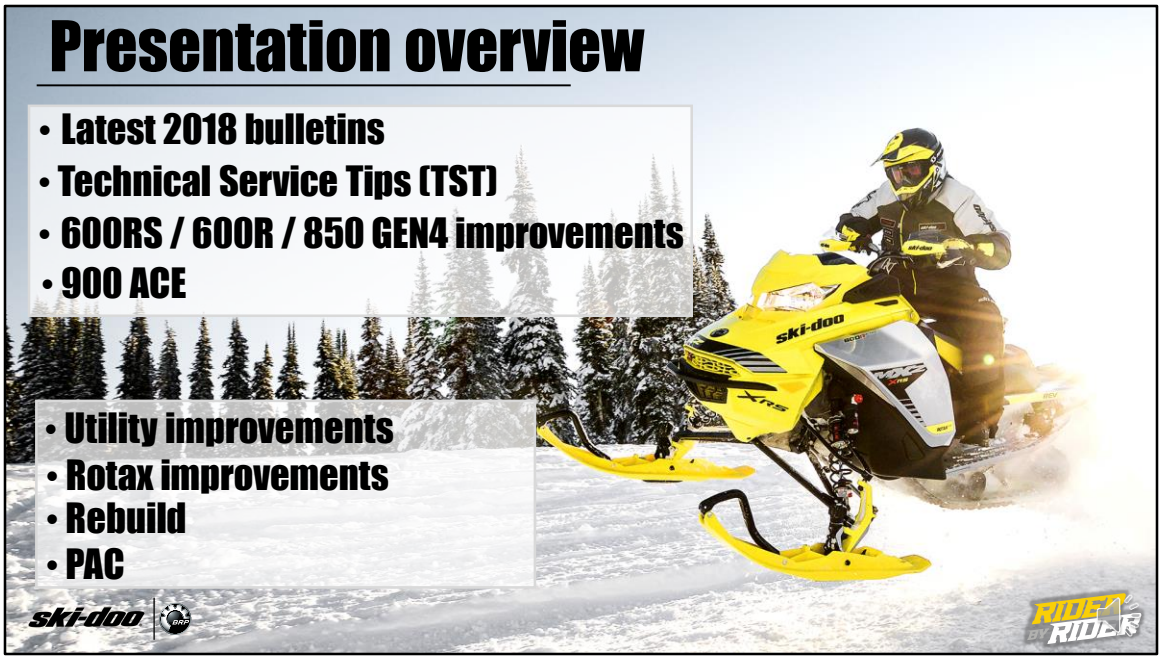


Here is an overview on what we will be discussing in the presentation.

- Review of the latest 2018 bulletins.
- Suggested TSTs
- 600RS/600R/850 GEN4 improvements
- Rotax & Rebuild improvements
- Utility improvements
- PAC

# Warranty Bulletins
# Service Bulletins
# Technical Service Tips

Here are the warranty, service bulletins and TST’S that have been released over the past season, remember to always run the VIN number in the Knowledge Center for pertaining campaigns

# Warranty Bulletins

Lets start with the warranty bulletins

## Warranty Bulletins

- 2018-1 Absolute Crankshaft Position Sensor Wiring Routing Too Tight (850 E-TEC_SHOT)
- 2018-2 Wrong Match Between Direct Fuel Injectors And Cylinders (850 E-TEC)
- 2018-3 Risk Of Piston Seizure (600HO E-TEC)
- 2018-4 Driven Pulley Bearing Support Bolts Out Of Specifications (850 E-TEC) OBSOLETE
- 2018-5 Tundra 600 ACE - Coolant Hose Can Chafe on Frame

I think I should mention that 2018-4 850 Driven Pulley Bearing Support Bolts Out Of Specifications is OBSOLETE and replaced by 2018-7 Driven Pulley Bearing Support Bolts Replacement.

- 2018-1 the routing  that is to for the ACPS on the Shot 850
- 2018-2 850 Injectors that where missed match on the cylinders
- 2018-3 600 E-TEC Risk Of Piston Seizure
- 2018-5 Coolant Hose Can Chafed on the Frame of the 600 ACE Tundra

# Warranty Bulletins

- 2018-6 Rev Gen4 - Ultra High Windshield Manufacturing Error
- 2018-7 Driven Pulley Bearing Support Bolts Replacement (850 E-TEC)
- 2018-8 Incorrect Installation of Coolant Hose Clamp
- 2018-9 850 E-TEC with SHOT- Software Updates for ECM Non-registered vehicles
- 2018-10 Drive Belt Durability 850

Also as reminder for the 2018-10 Drive Belt Durability 850 see Ski-Doo / Lynx Product Specialists blog It's that time to release all the info for the 850 E-TEC GEN4 belt investigation.

- 2018-6 Rev Gen4 - Ultra High Windshield Manufacturing Error
- 2018-7 The 850 Driven Pulley Bearing Support Bolts Replacement that replaced warranty bulletin 2018-4
- 2018-8 The 1200 4-TEC engine had a Incorrect Installation of Coolant Hose Clamp.
- 2018-9 850 E-TEC Software Updates for ECM on Non-registered vehicles with SHOT
- 2018-10 Drive Belt Durability 850

# Service Bulletins

Service bulletins

# Service Bulletins

- 2018-1 Paint Codes
- 2018-2 A - Studs Application B - Studs Installation
- 2018-3 Inspecting Shock Absorbers
- 2018-4 Suspension Spring Chart
- 2018-5 High Altitude / Sea Level Specifications
- 2018-8 Maximizing Drive Belt Life On Rev Gen4 850 E-Tec
- 2018-9 Maximizing Drive Belt Life On All Models

ski-doo | BRP

RIDER BY RIDER

- 2018-1 Paint Codes
- 2018-2  Studs Application and Studs Installation
- 2018-3 Shock Absorbers Inspections
- 2018-4 Suspension Spring Chart
- 2018-5 High Altitude / Sea Level Specifications
- 2018-8 Maximizing Drive Belt Life On Rev Gen4 850 E-Tec
- 2018-9 Maximizing Drive Belt Life On All Models_135190

Technical Service Tips (TST)

# TSTs

- Removing Excessive Plastic From Gen4 Fuel Tank Filler Neck - 134200
- Gen4 Toe-Hold Kit P/N 860201765 Installation - 134297
- 850 Gen4 RF interference – 134342
- Ferrit installation on 850 E-TEC Gen4 - 134347
- Gen4 Chaincase Oil Leaking – 134298
- Gen4 Chaincase Oil Leaking help video - 134348
- 2018 EGTS sensor coming loose - 134349
- Gen4 Broken QRS Bolt Removal - 134199

ski-doo | BRP

RIDER BY RIDER

- Removing Excessive Plastic From Gen4 Fuel Tank Filler Neck_000134200
- Gen4 Toe-Hold Kit P/N 860201765 Installation_000134297
- 850 Gen4 RF interference – 134342
- Ferrit installation on 850 E-TEC Gen4_000134347
- Gen4 Chaincase Oil Leaking – 134298
- Gen4 Chaincase Oil Leaking help video _000134348
- 2018 EGTS sensor coming loose_000134349
- Gen4 Broken Qrs Bolt Removal_134199

## TSTs

- SKI-DOO / LYNX Track Warranty Guidelines – 134259
- BRP CVT Belt Warranty Guidelines – 134179
- BRP Battery Warranty Guidelines – 134171
- 850 E-TEC SHOT Software Update – 134343
- CAN SKI-DOO Summit/Freeride XTI Cam/Helix Modification - 134744
- Europe SKI-DOO Summit/Freeride XTI Cam/Helix Modification - 134751
- USA SKI-DOO Summit/Freeride XTI Cam/Helix Modification – 134745
- SKI-DOO FAQ 850 E-TEC Premature Belt Failure - 135177

- Track Warranty Guidelines
- Belt Warranty Guidelines
- Battery Warranty Guidelines for SKI-DOO / LYNX
- SHOT Software Update for 850 E-TEC
- Canadian, Europe, US Summit/Freeride XTI Cam/Helix Modification
- SKI-DOO FAQ 850 E-TEC Premature Belt Failure - 135177

Rev GEN4 Improvments

# GEN4 Bottom Panel Latch

**MY18**

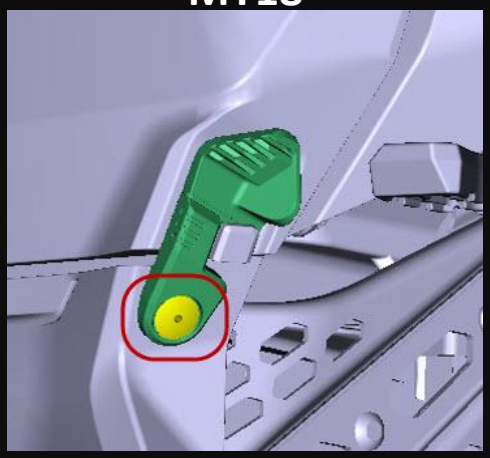

**MY19**

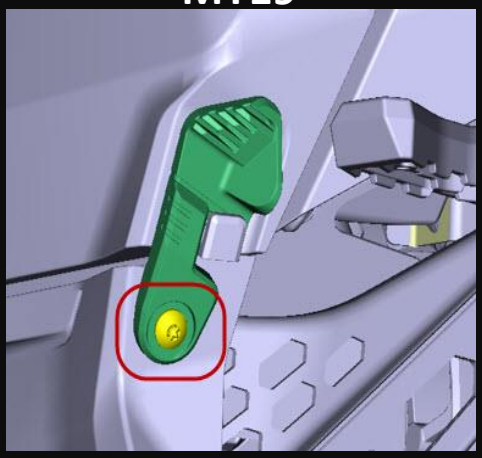

For MY18, depending what angle the pop-rivet was installed at the factory, some vehicles may have a loose or a hard latch.
On MY19, the rivets have been replaced with screws and nuts to limit the variation and make the locking of the side-panels much easier.

# 850 E-TEC GEN4 Pre-Filter

**MY18**

**MY19**

In MY18, the 850 E-TEC GEN4 came from factory with pre filters but there was a difference between mountain and trail models. The Summit and Backcountry had both pre filter (A/B) ,while the GEN4 trail sled only had the Lower screen(B). For MY19 all 850 E-TEC GEN4's will come with both upper and lower pre filters

## All MY19 GEN4 Models (except 600r) : Vented QRS Driven Clutch

The driven pulley on the GEN4 except the 600r E-Tec as been redesigned with fins for better cooling at low speeds.
The QRS will retrofit to MY17 & 18 but the seal in the chaincase will need to be changed as it has a smaller diameter.

# New CVT Cover

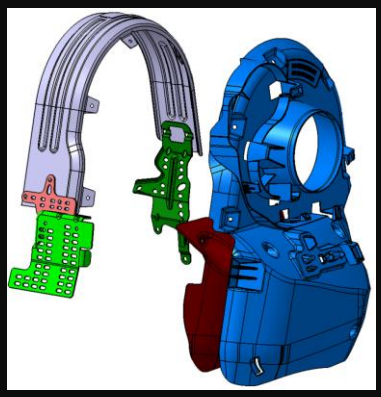

With the driven pulley having fins the CVT cover had to be modified to correspond with the new CVT cooling system.
The cover is now closer to the driven pulley and with new improved belt cover brackets, this will help with installation/removal.

Will retro fit MY17 & MY18 with some small modifications.

Here is a little video of how easy it is to remove and re-install.

# New Clutch Guard Bracket

A new belt guard bracket design to help avoid possible belt contact in certain riding conditions.

Will retro fit MY17 & MY18

# Clicker Adjusment Decal on CVT Cover

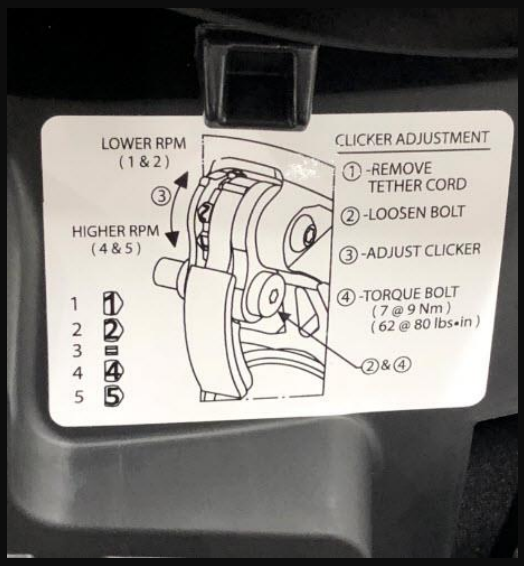


A decal has been added to the CVT cover to show how to adjust the clickers this is important to show the customers at PDI and to explain how critical it is to adjust in different riding conditions.

# MY19 Vented Panels

To correspond with the pulleys a new CVT INTAKE duct ventilation system has been introduced on the left side panel. This includes a grill (left image) and a duct (right image). The reason this is an intake is that both pulleys now have fins pulling air inside the CVT compartment.
Its location has been optimized so that it will be protected from branches. The left grill has been optimized for easy snow removal.
It is important to replace the mesh if punctured or damaged as this could lead to snow/water infiltration inside the CVT area leading up to belt slippage and eventually a belt failure.

Will retro fit MY17 & MY18 with some small modifications.

# New Optimized Cooling for the Belt

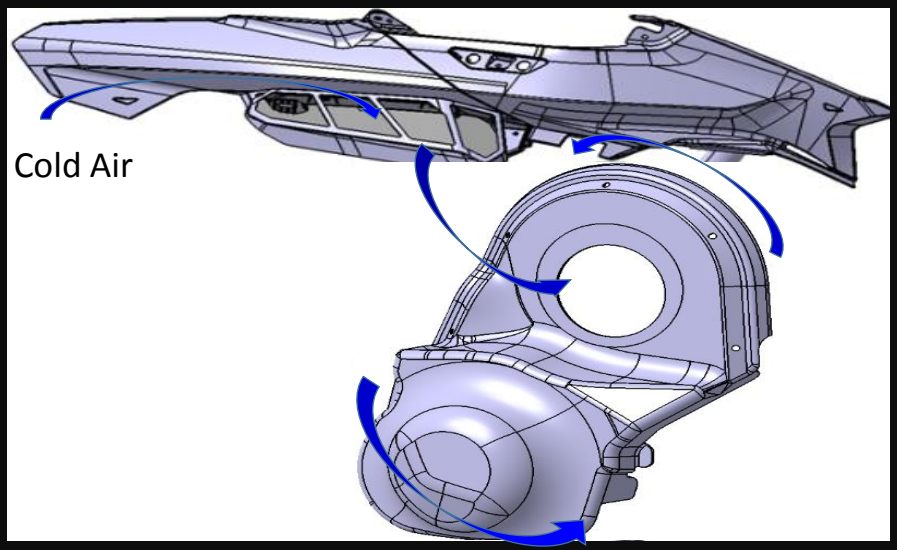


The animation is from a widebody, it is still the same concept for the narrowbody where the venting is on the left rear side of the panel.
The cool air is pulled in with the new finned QRS with the help of the finned pDrive pushing the hot air out of the new optimized duct outlet.

# New Optimized Cooling for the Belt

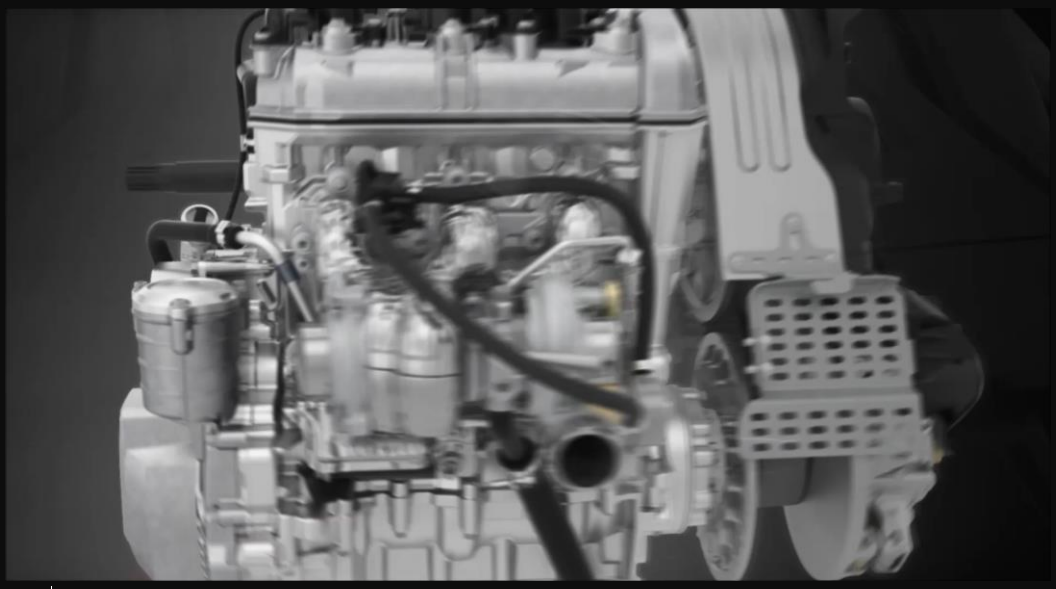

## pDrive Spider

**MY18**

**MY19**

The pDrive spider has been revised so that weight can be added for fine tuning without coming into contact and leading to a failure.
It is highly recommended not to remove any material from MY17/18 as it can change the integrity of the part.

**Note:** That Sea-level Calibration 860201905 should not be installed on MY17/18 as the pivot bolt and weight comes into contact with the spider and could cause damages. Use the appropriate high altitude chart for the model year that is being worked on.

## New Console on All Gen4

**MY18**

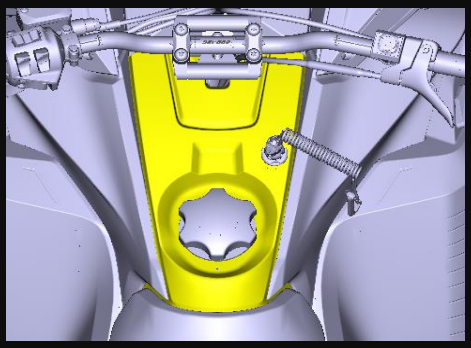

**MY19**

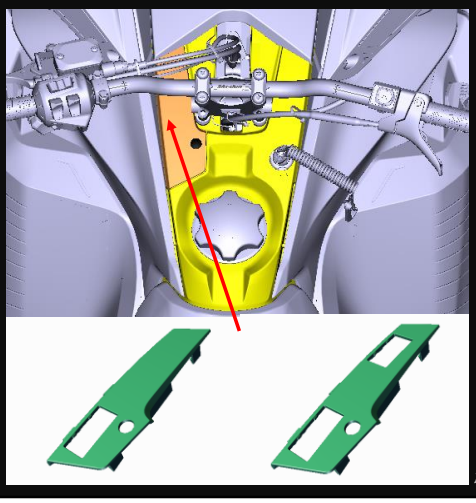

New rear console is being introduced in 2019 on all Gen4s narrow and widebody. The small hole for the heated visor will be capped if the unit does not have that accessory from factory.

## New Console Nut on All Gen4

MY18

MY19

A new console nut will be on all MY19 Gen4s as a esthetic improvement.
The nut is wider, this helps with the gap that sometimes is present when gas tank is slightly offset from the rear console.

## New Location of Vehicle Description and VIN Decal on Gen4

**MY18**

**MY19**

On MY19, the location of the vehicle description and VIN decal has been relocated to the top just above the chaincase to prevent accidental peeling or rubbing off while riding.

# 850 E-TEC Fuel Pump

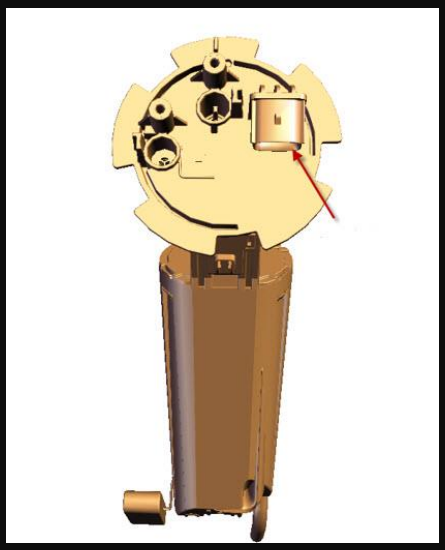

On MY19 the E-TEC fuel pump module will have a new connector.
This fuel pump module will retro to MY17 and MY18 but an electrical jumper 515178468 will need to be installed in-line.

# Improved XTI Cam / Helix

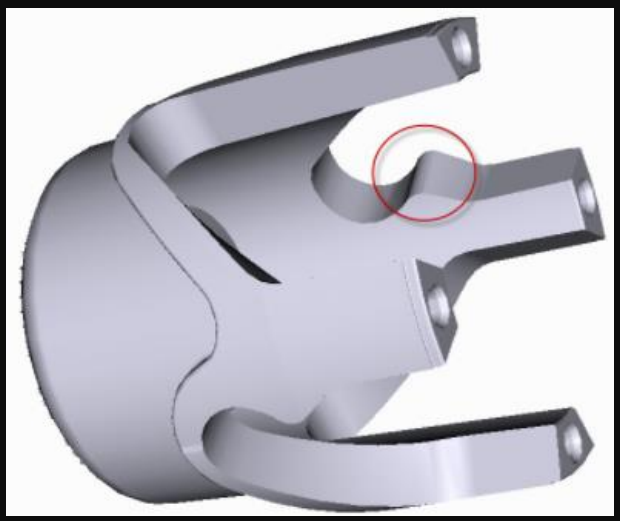

Rounding off the sharp radius reduces the possibility of breaking the roller, with this small improvement it increases the durability of the roller.
Remember there is no need to change MY18 cam if a roller has broken see TST's for Summit/Freeride XTI Cam/Helix Modification.

# Improved EGT Sensor Torque Specification

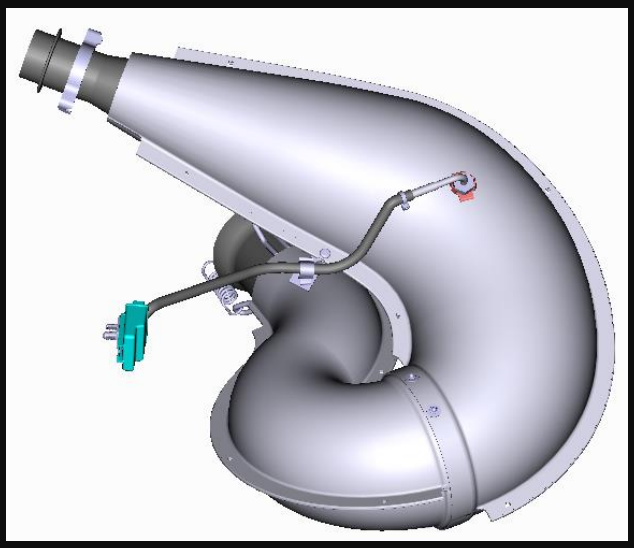

The torque has increased from 45N.m (33ft-lb) to 80 N.m (59ft-lb) by increasing the torque it will reduce the possibliy of the sensor backing out from the constant temprature changes in the pipe.

## 850 E-TEC After-muffler EGT Relocation

**MY18**

**MY19**

The EGT probe has been moved from the top to the bottom of the after-muffler to improve the response time of the EGT probe, as the exhaust gases pass into the bottom chamber first. Thus, the temperature changes measured by the probe are captured are more accurate.

# Improved QRS Support Bolts

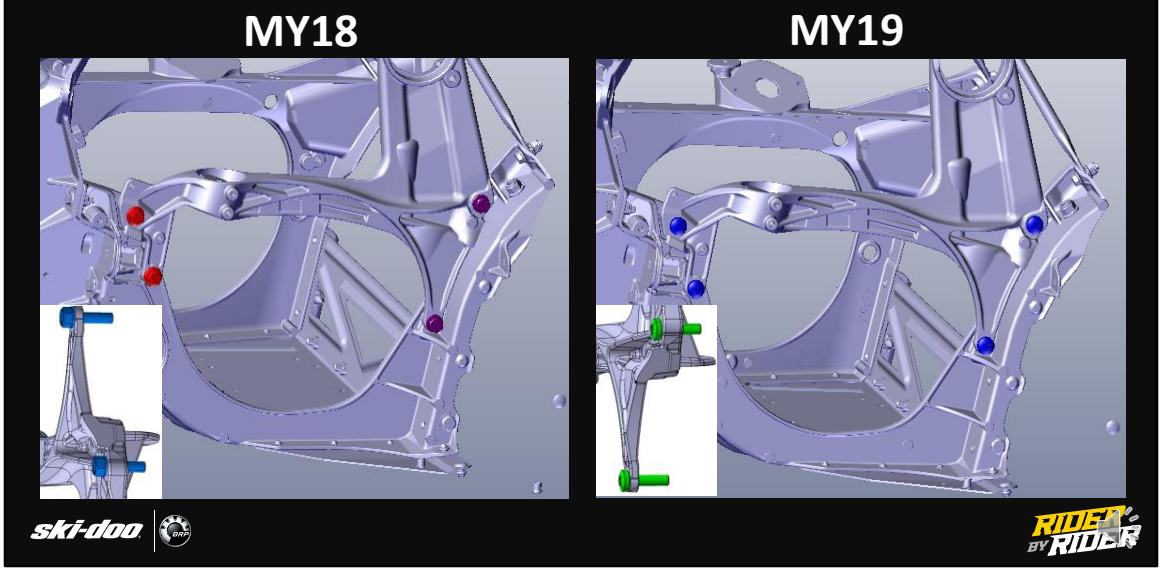


Running change for MY19 for the QRS bolts, they have been changed from hex bolt to a Torx bolt with a new plating and there are no sharp edges.

# MY19 Specific improvements of each model

Changes marked with X or Y for deep snow specific

| Engine | Model | Side Panel Duct | New Belt Guard | Finned Secondary | MAG Engine Mount | PTO Engine Mount |
|---|---|---|---|---|---|---|
| 600R E-TEC | MXZ | X | X | | | X |
| | Renegade | X | X | | | X |
| | Enduro / GT | | X | | | X |
| | Backcountry | X | X | X | | X |
| | Summit | X | X | X | X | X |
| | | | | | | |
| 850 E-TEC | MXZ | X | X | X | | X |
| | Renegade | X | X | X | | X |
| | Enduro | | X | X | | X |
| | Backcountry 1.6 | X | X | X | | X |
| | Backcountry 2.0 | X | X | X | X | Y |
| | Summit | X | X | X | X | Y |
| | Freeride | X | X | X | X | Y |

There are more specific improvements that have been made to each model based on their expected use, which include combinations of new engine mounts (specific designs for mountain or trail use), a finned driven pulley, new pulley calibrations and the additional intake ducting mentioned above.

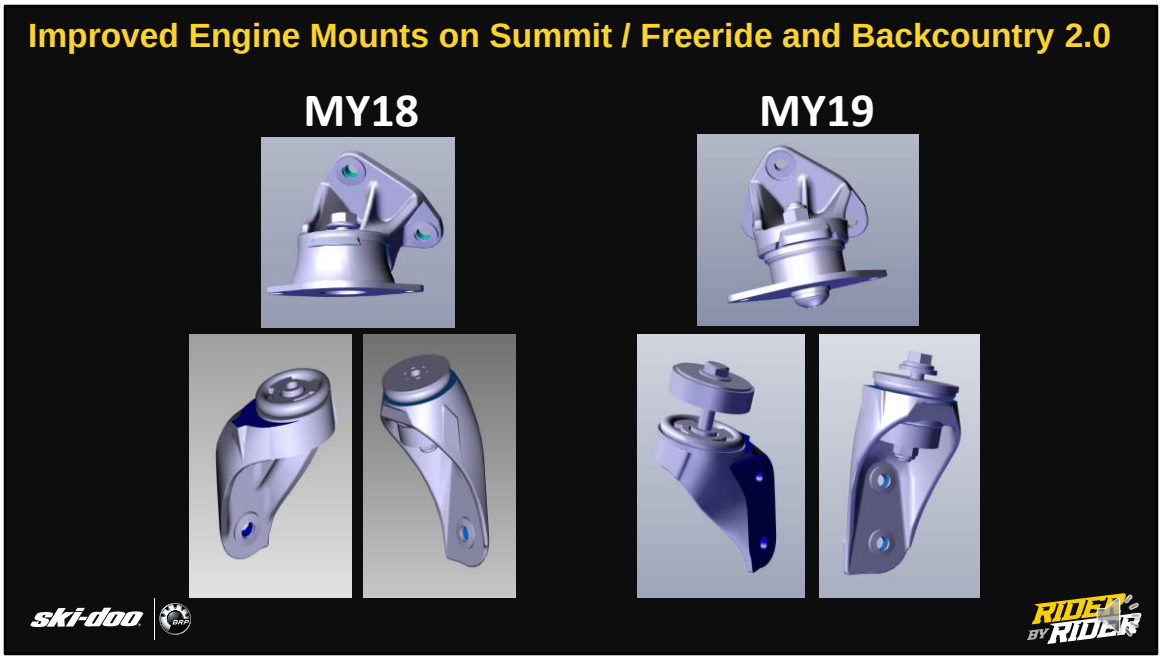


MY19 Summit/Freeride and Backcountry 2.0 have improved engine mounts on the mag , front PTO and rear PTO side.
The trail units have PTO side mounts.

## Mountain Vehicles Reinforcement Plate

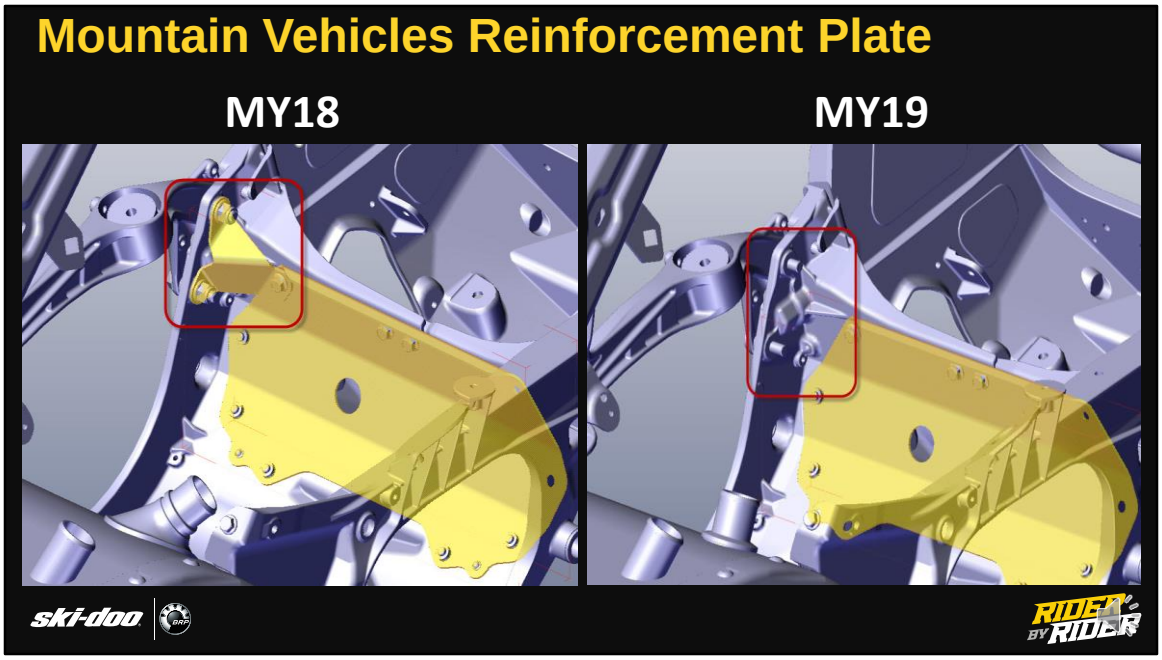


MY19 mountain vehicles, re-enforcement plate part number 518330196 has been removed for standardisation with the widebody.
The E module is more impact resistant with new suspension upper a-arm on the S36 and S39.

## Radiator Fitting Improvement

MY18

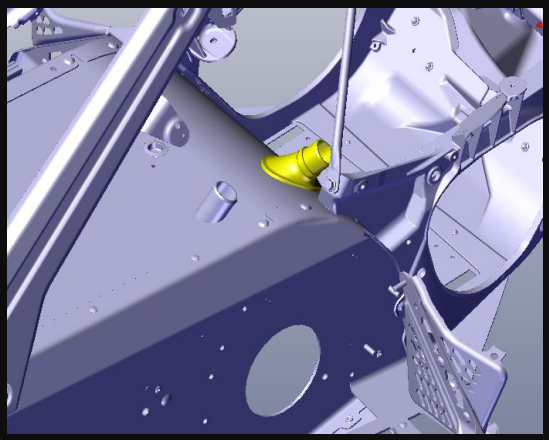

MY19

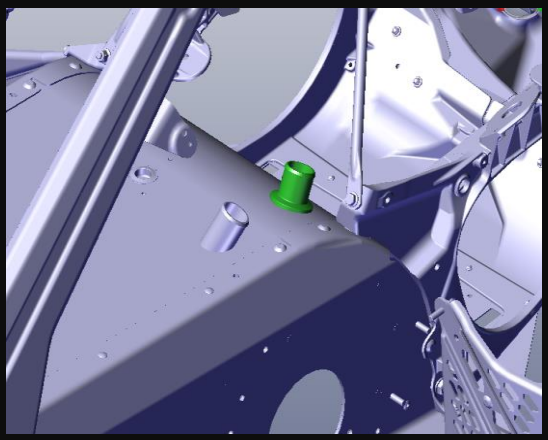

The improved position of the lower heat exchanger fitting is machined and is closer to the fuel tank compared to the MY18 that was further away and it was a cast fitting.

## T-motion Suspension Rails

**MY18**

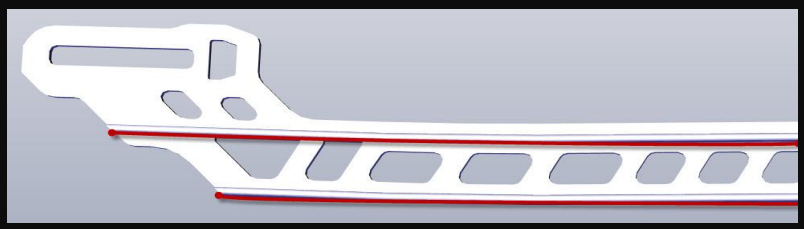

**MY19**

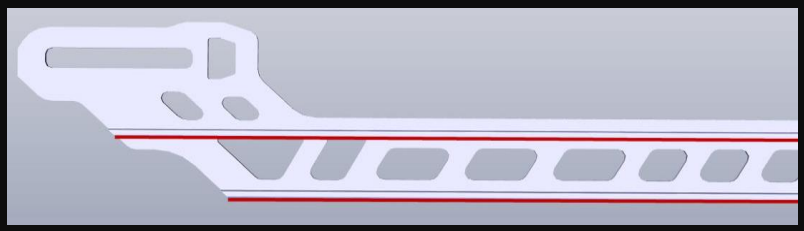

The T-motion GEN4 suspension rails on MY19 are straight compared to MY18 that had a slight curve at the rear, this will improve traction and reduce transfer, this small modification will help to keep the nose down and have better control in the deep snow.

# New Link for Safety Video on all Ski-Doo Models

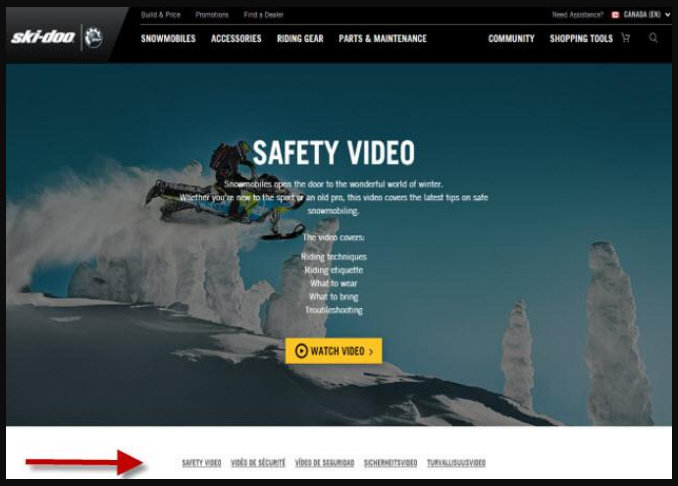


ski-doo

RIDE BY RIDER

The safety video is now linked to a QR code on the warning label that is on the left side body panel of the vehicle. This will link to the BRP website where you can chose your video language. Switching the Languages is at the bottom of the web site page,this means that there will be no DVD in vehicles.
New warning decal 516009224 with QR code (old p/n 516004653).

Utility

# Changes to All NA Ski-Doo Utility Models

- No green “Learning Key” provided with the vehicle anymore.
- New more accurate fuel sensor (old 513033538, new 513033902)

- Changes to all NA Ski-Doo Utility models.
- No green “Learning Key” with the vehicle anymore.
- New more accurate fuel sensor old P/N 513033538, new P/N 513033902.

# Rubber Stopper on All NA Ski-Doo Utility Models

**MY18**

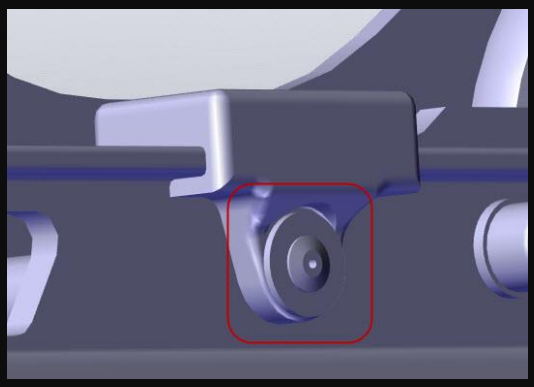

**MY19**

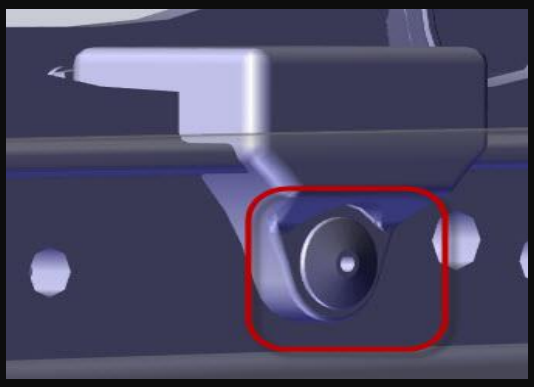

The rear suspension front & rear rubber stoppers rivets changed, there is no need for washers on both sides.

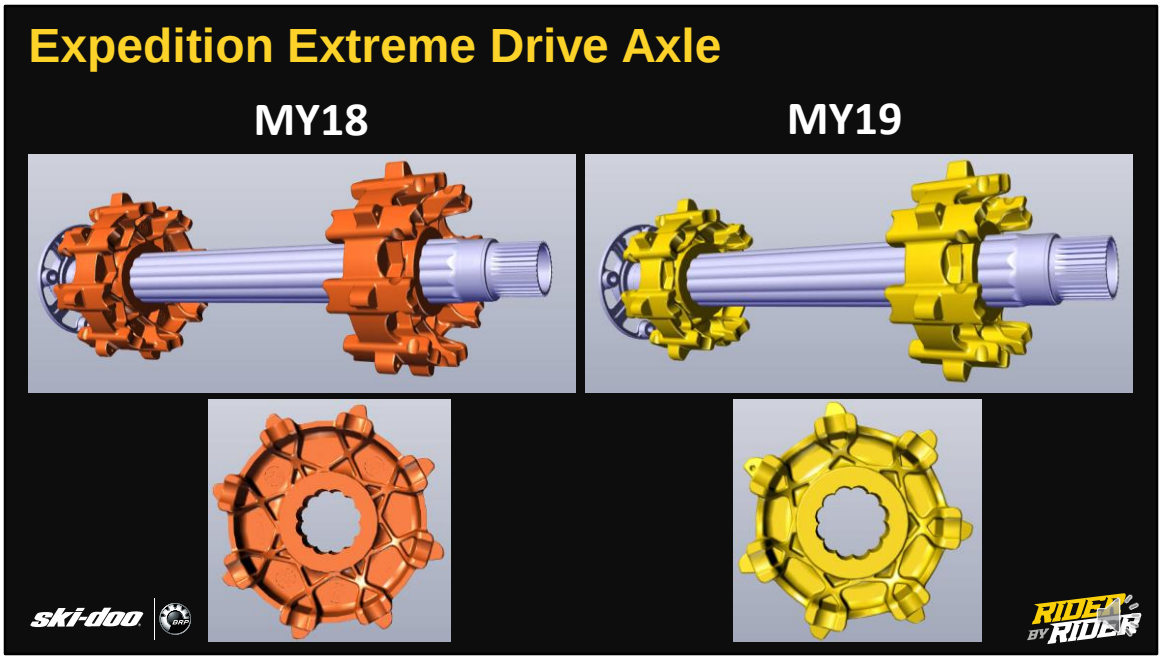


MY18 Expedition Extreme came with 2.86/8 tooth drive coggs, as product improvement for MY19 the Extreme has been change to a 2.86/7 tooth coggs to help with deep snow maneuverability.

Rotax

# 600RS / 600R / 850 E-TEC

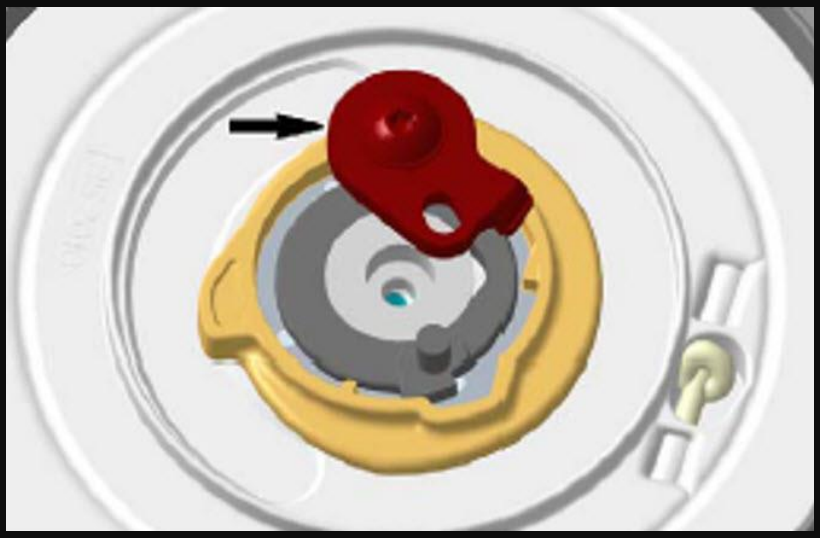

Modified rewind starter improved design of the pawl and lock lever for better durability.

## 600RS / 600R / 850 E-TEC

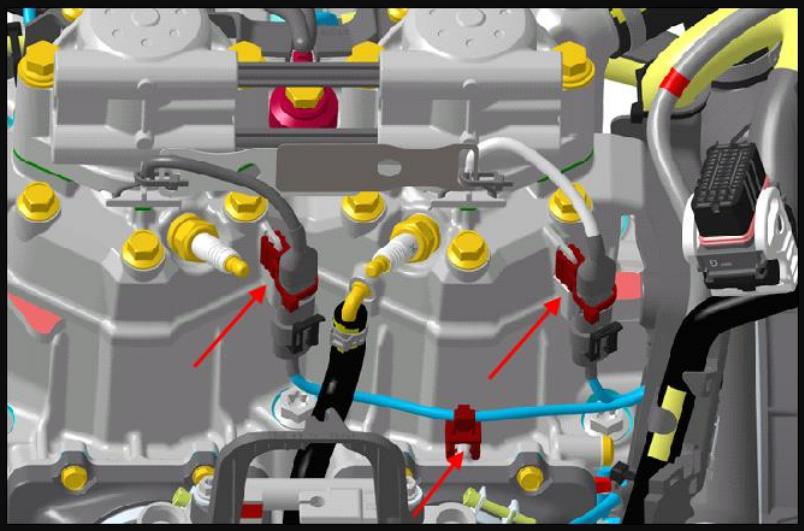

Modified cylinder block and cylinder head with added ribs for improved routing of the injector connector harness.

# 600RS / 600R / 850 E-TEC

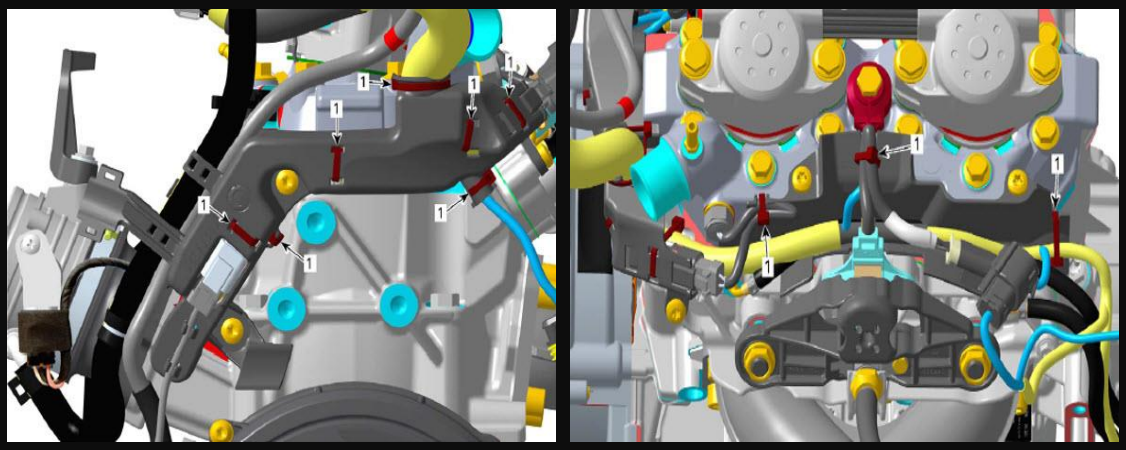

New engine wiring harness assy. with modified harness supports, new design for easier assembly and improved durability.

# 600RS / 600R / 850 E-TEC

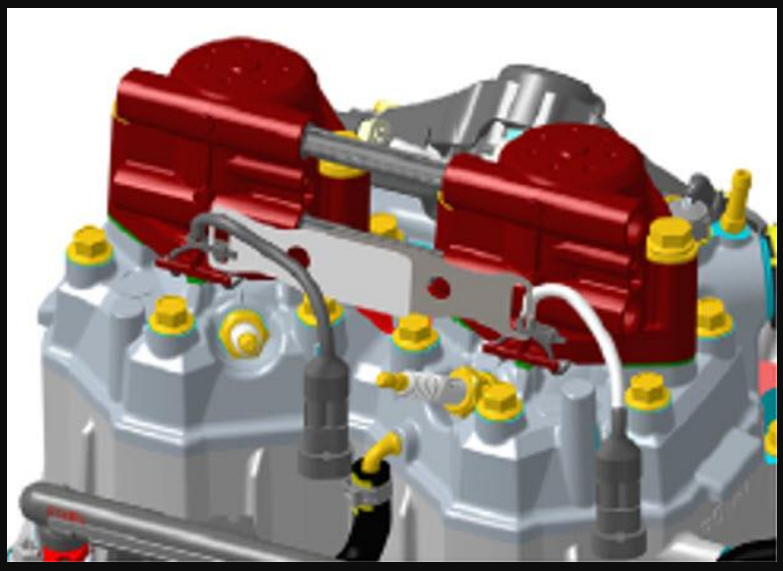

- Knock sensor is now integrated in the engine wiring harness
- Fuel injectors MAG / PTO new cup design for improved durability; requires longer screws
- different routing of the injector connector wire
- spring washer is obsolete now
- improved indexation of the injectors on the fuel rail

# MY19 New RAVE Seals 850 E-TEC

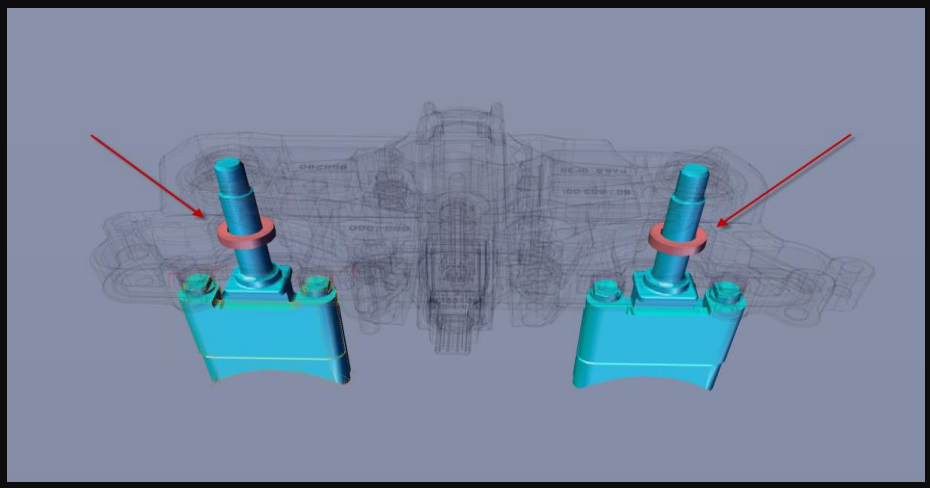

New RAVE seals on the 850 E-TEC will reduce the possibility of leaking.
If a MY17/18 rave is leaking you will receive the new seals, Inventory has been updated.
Normal warranty applies.

# 600RS / 600R / 850 E-TEC

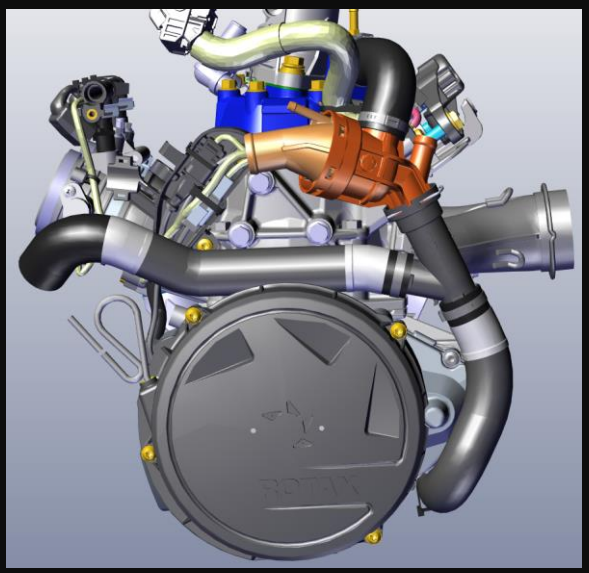

- Modified routing of the molded hose (thermostat housing to water pump cover)
- Modified thermostat housing assy.
- Internal thermostat Improvements
- Modified water pump housing for improved efficiency of the water pump
- O-rings (connection thermostat assy. to molded hose assy.)
- Additional plug for non electric-start models to close the hole for the electric starter
- Oil lines and corrugated tubing's Modified length

# 850 E-TEC

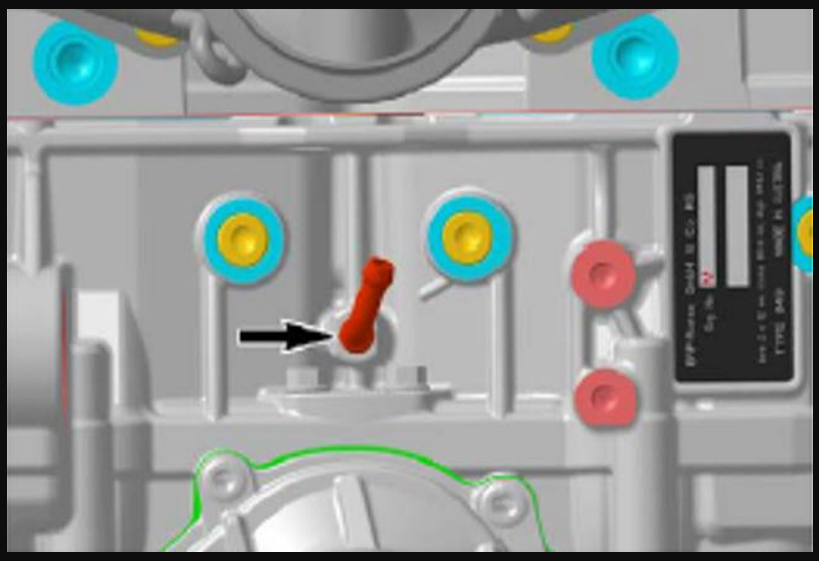

Impulse fitting for water pump chamber different angle for easier installation of the oil line.

# 850 E-TEC

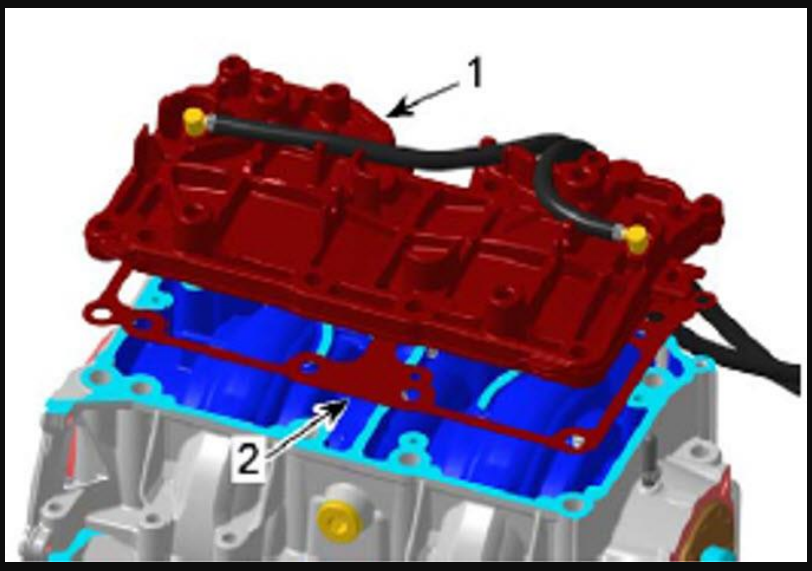


Modified base plate with less oil bores & check valves , no direct feed of center main bearings is required, this provides improved lubrification of the conrod bearings.

# 850 E-TEC – Connecting Rods

MY18

MY19

MY18 connecting rods had lubrication pockets in MY19 the pockets have been removed, this will improve wear and durability on the rods.

# 600 ACE

- Sealing rings made of aluminum instead of copper:
  - oil pressure regulating valve
  - coolant drain screw (Plastic waterpump housing)
  - chain tensioner → standardization on 600/900 ACE engines (snowmobile application)
- Intermediate gear 22T pressure pump improved for better durability


- Sealing rings made of aluminum instead of copper:
  - oil pressure regulating valve
  - coolant drain screw (plastic waterpump housing)
  - chain tensioner standardization on 600/900 ACE engines (snowmobile application)
- Intermediate gear 22T pressure pump improved for better durability

# Widebody: New filler neck check valve

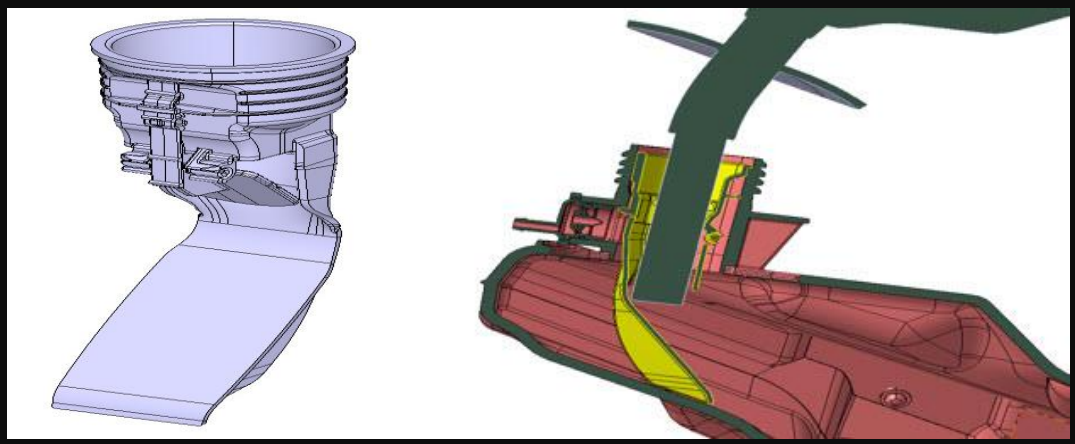

On Gen4 widebody, a new filler neck check valve has been introduced but there is a few things to get use to. The fuel noozle at the gas station does not go all they way in as prior years, this is normal, when looking inside you can't see the fuel in the tank with this new concept, also the flap at the bottom of the valve is slightly open so it can flow right in with no restrictions.

## 900 ACE

- Sealing rings made of aluminum instead of copper:
  - oil pressure regulating valve
  - coolant drain screw (water pump housing)
  - chain tensioner
    - standardization on 600/900 ACE engines (snowmobile application)
- Thermostat
  - slightly increased flow and temperature range from 90°C to 95°C (fully open)
- Thermostat cover
  - slightly modified angle


- Sealing rings made of aluminum instead of copper:
  - oil pressure regulating valve
  - chain tensioner
  - standardization on 600/900 ACE engines (snowmobile application)
- Thermostat
  - slightly increased flow and temperature range from 90°C to 95°C (fully open)
- Thermostat cover
  - slightly modified angle

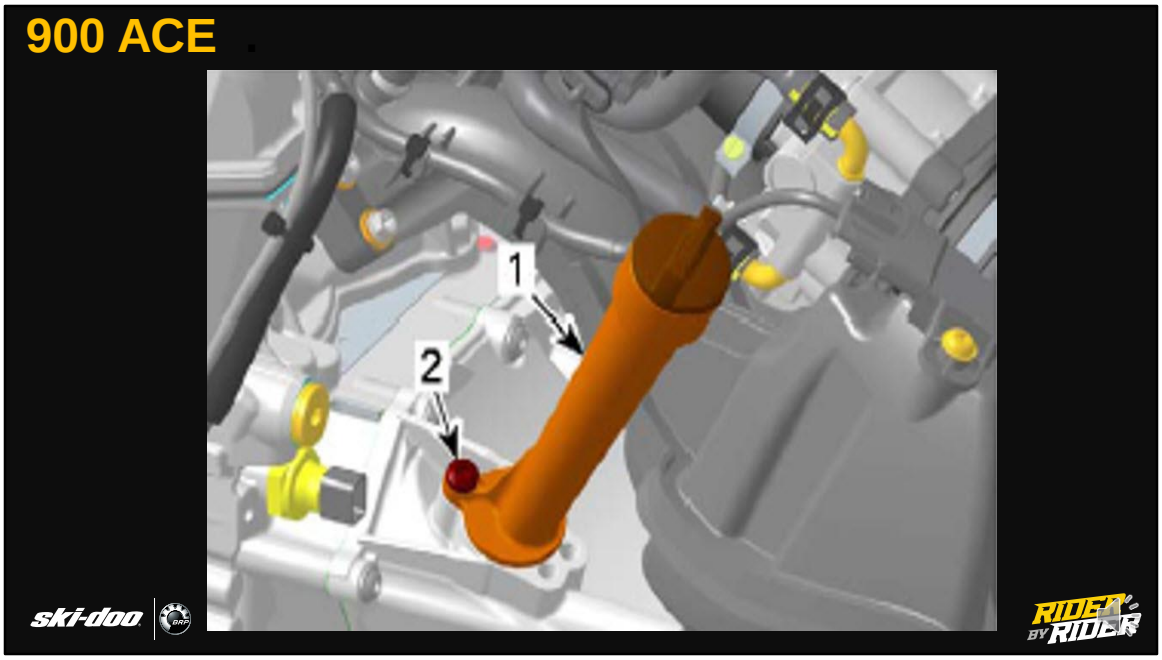


New oil filler tube and oil dipstick standardization with 900 ACE Turbo.

(picture from 900 ACE Turbo)

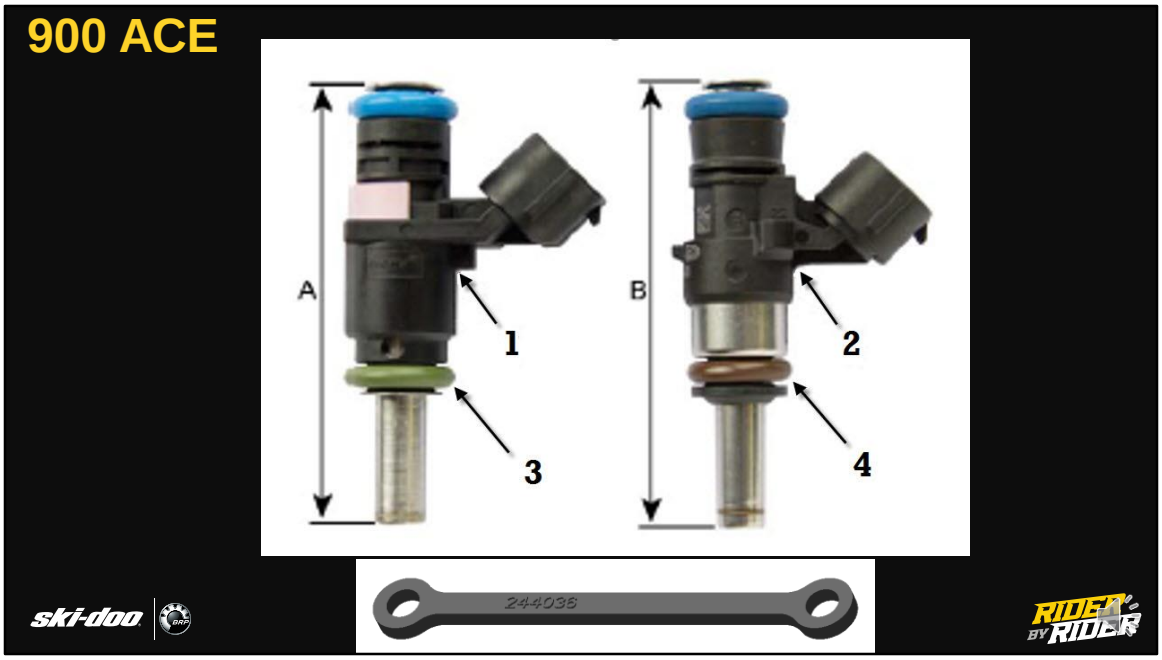


The 900 Ace will have a new injector from Bosch

1 - Continental fuel injector
A – 61.9 mm +/- 0.6mm (2.437in +/- .024in)

2 - New Bosch fuel injector
B – 63.3mm +/- 0.4mm (2.492in +/- .016in)

3 - O-rings for Continental fuel injectors

4 - New O-rings for new Bosch fuel injector's

Since XU is still using the old fuel injector's from continental, washers have to be installed underneath the fuel rail.

NOTE:
To ease installation and to avoid loosing or forgetting a washer, the washers will be replaced by a spacer (picture below ) as a running change.

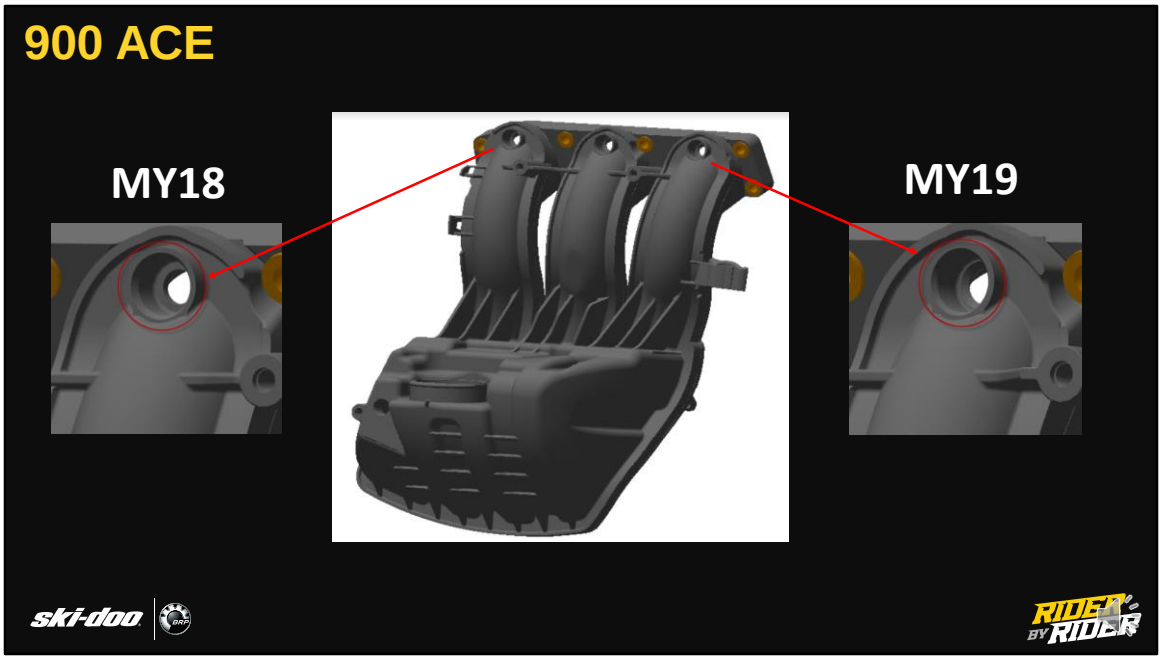


Airbox assembly modified to fit the new fuel injectors from Bosch and the Blow by connector slightly modified angle.

# 900 ACE

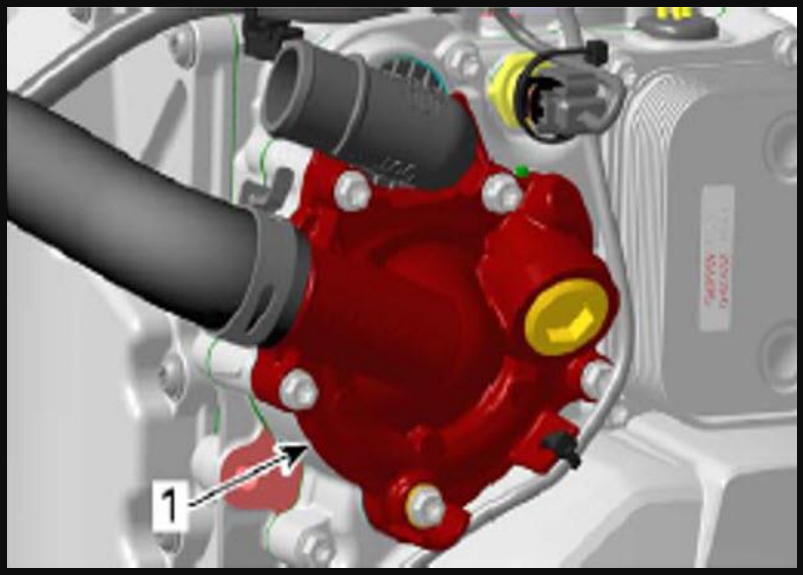


The Water pump housing of the 900 ACE is now made of aluminum instead of plastic and is possible to install a block heater.

## 900 ACE New Water Pump Impeller

MY18

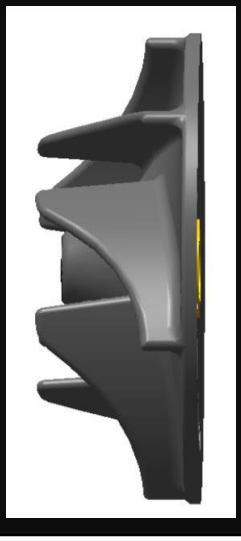

MY19

New water pump impeller for standardization the height / geometry of the impeller fins has changed. The number of fins hasn't changed.
Doesn’t not retrofit.

## 900 ACE

- Modified routing of the molded hose (“OUT”) for throttle body heating
- Electric starter quality improvement
  - Ball bearing with integrated seal instead of needle bearing
  - Additional drain hole
- New electronic box (ECM)
- New wiring harness assembly
  - New routing, ground wire for each ignition coil etc.
- New ignition cover
  - slight modifications → standardization
- New Oil filter cover o-ring
  - slightly bigger to prevent jamming of the o-ring

- Modified routing of the molded hose (“OUT”) for throttle body heating
- Electric starter Improvement ball bearing with integrated seal instead of needle bearing with a additional drain hole
- A new electronic box
- New wiring harness assy, new routing, ground wire for each ignition coil etc.
- New ignition cover with slight modifications for standardization
- New Oil filter cover O-ring slightly bigger to prevent jamming of the O-ring

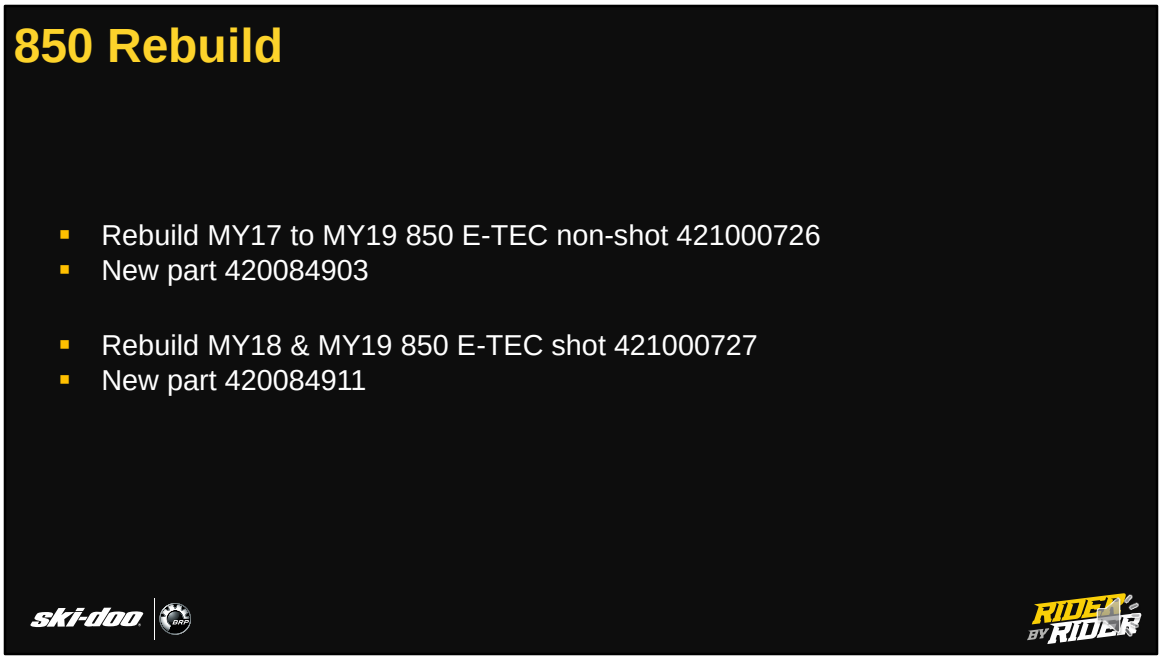


Here are the two rebuilt part numbers for the 850 E-TEC shortblocks

- Rebuild MY17 to MY19 850 E-TEC non shot P/N # 421000726
- New P/N # 420084903

- Rebuild MY18 & MY19 850E-TEC shot = P/N  421000727
- New MY18 & 19 850cc SHOT = P/N # 420084911

The difference is that the oil lines on MY19 have been removed the "internal" oil line going from MAG side outer bearing to PTO inner bearing and vice versa for both non shot and shot version.

PAC

# Low Battery Fast Idle Calibration

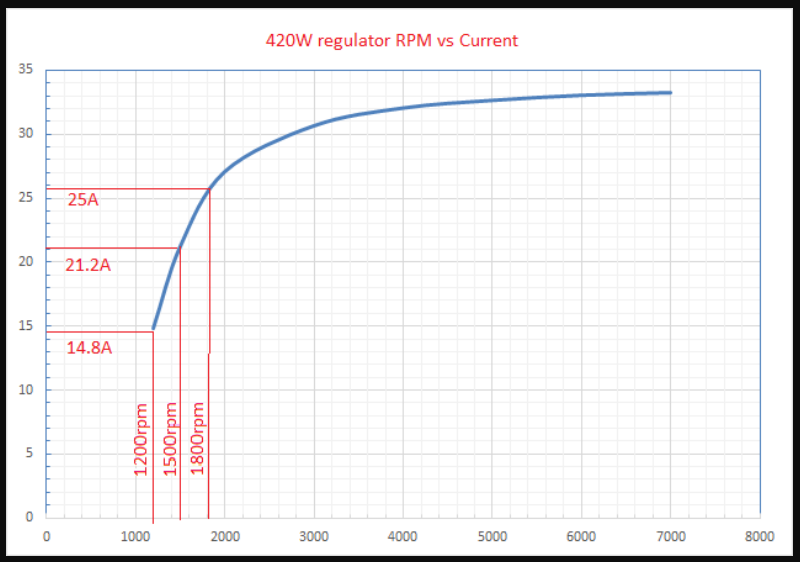


As more accessories are installed on the four stroke 420w system the battery could discharge a little quicker at idle so to provide power to critical PAC accessories at idle and to keep the accessories working proper we added a fast-idle software to the MY19 ECU.

The ECM monitor system voltage at idle and depending on the current battery charge and electrical loads, it will increase idle speed to approximately 1800 RPM's. It will remain at fast idle until the throttle is pressed or the engine is killed. After the throttle is pressed and the engine return to idle, the ECM will re-evaluated if fast-idle must be reactivated or if the battery has been recharged enough to maintain low idle speed. The rest of the logistics of idle shutdown/overheat stays the same.

In the graph above it shows total magneto power output available to run the engine and its accessories.
The idle is at 1200 Rpm's with 14.8 amps once the Rpm's increase to 1500 Rpm's the amps increase to 21.2Amps So, at 1800 rpm's we have an amperage of 25A to supply and charge the battery efficiently this is also easier on the load for the stator at idle.

# Adjustable Limiter Strap

**MY19 vehicle configuration**

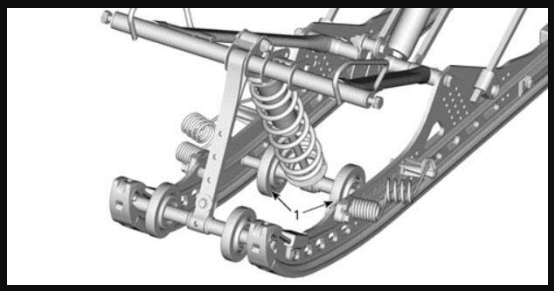

**MY19 adjustable limiter** strap configuration

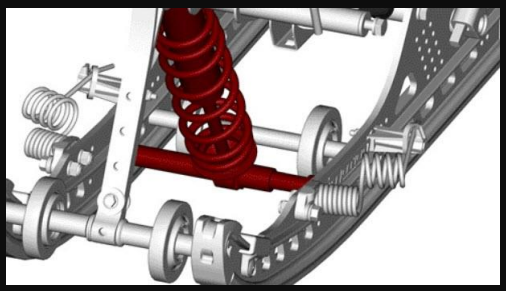

On MY19 units equipped with the wheels in position 2,The remote adjustable limiter strap P/N 860201855 & Adjustable limiter strap P/N 860201861 are interfering with the rear suspension configuration. Refer to the new procedure for the installation. It is very important that the remote stopper strap adjuster needs to be adjusted properly before use if not adjusted properly it could lead to a premature failure.

# Adjustable Windshield

The Adjustable Ultra-High windshield P/N 860201782 has a thickness of 4,5mm without a trim and protects the driver even more then past windshield at full extension.

# Auxiliary Light

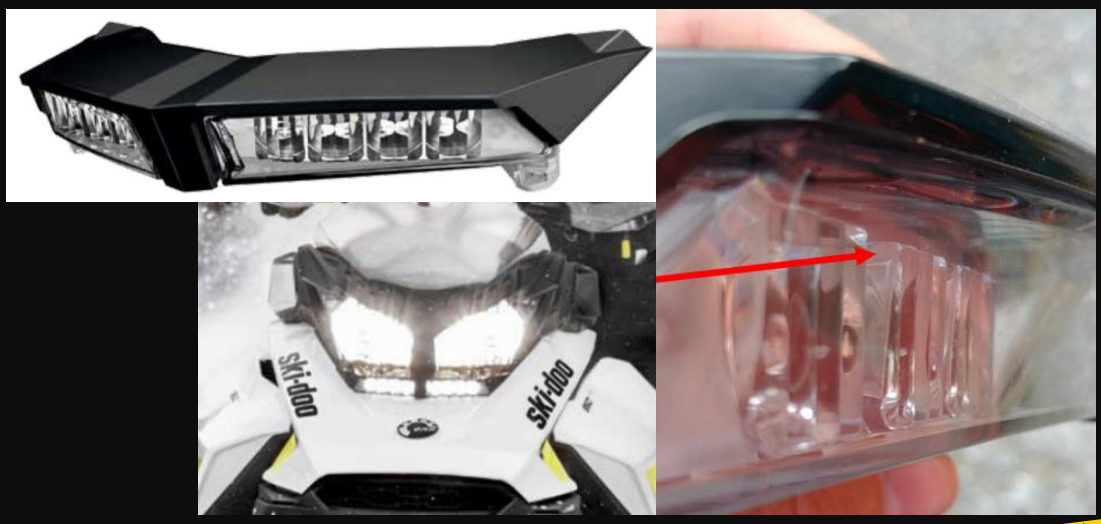


Here are the auxiliary light configurations that we have in the network.

- **Narrowbody :**
    - 860201229 first Gen Auxiliary light can be installed with the spacer 860201777, but not included in the kit
    - 860201786 Auxiliary light with additional ground Comes from factory with the spacer 860201777 within the kit
    - 860201776 Auxiliary light: additional ground + new TIR (red arrow in picture)
    - 860201818 Additional ground integrated in the light + New TIR (red arrow in picture)
    - Note that new TIR raises the light beam higher
- **Widebody:**
    - 860201650

**Note:** Auxiliary light 776/818 should never be installed with P/N 777

# 1+1 Seat 860201766

The 1+1 seat P/N 860201766 is a quick, easy installation and ideal ergonomics for driver and passenger with full tunnel capacity that allows additional accessories to be added.
Battery cover (860201407) required for vehicle without battery.

Improvements of the bottom mounting holes shapes of the seat is much easier to align with hooks the material more flexible.
The front straps are replaced by more flexible material plastic clips to facilitate the ease of installing and removing of the seat.

**Note:** that this seat is included in the kit 860201837 (LinQ 1 + 1 seat )

P/N 860200665 does not fit on the Rev-Gen4 platform, it is only for XS-XM-XP-XR there are no changes and the attachment concept are different.

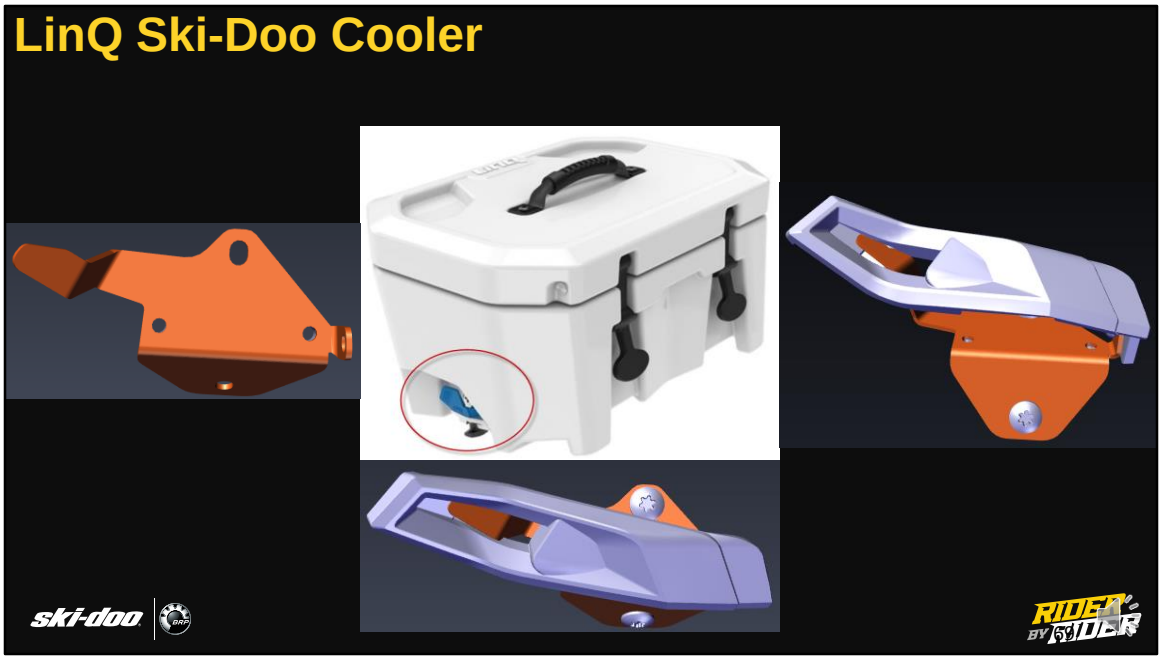


As we know costumers have been purchasing the sea-doo cooler 295100698 and installing them on the snowmobile if kit 778 is not installed there is a possibility with the vibration and the terrain that it could unclip and end up loosing the cooler.
The ski-doo cooler will come with the fasteners kit P/N 860201778.

## Removable snowflap improvement

**MY18**

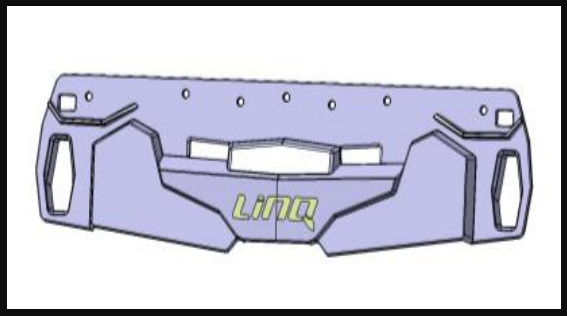


**MY19**

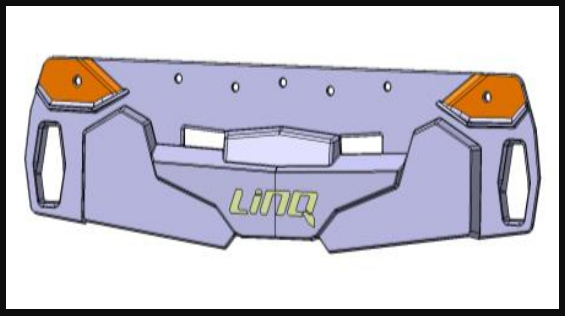


MY19 removable snowflap improvements are a new material that is more flexible. The square holes in base plate have been removed and are thicker (orange area).

# Removable snowflap improvement

**MY18**

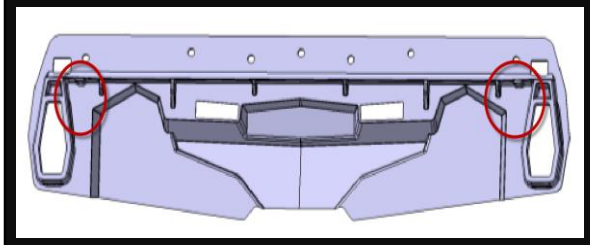

**MY19**

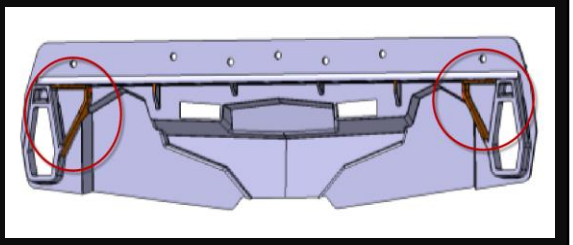

Improved rib patterns.

# Removable snowflap improvement

**MY18**

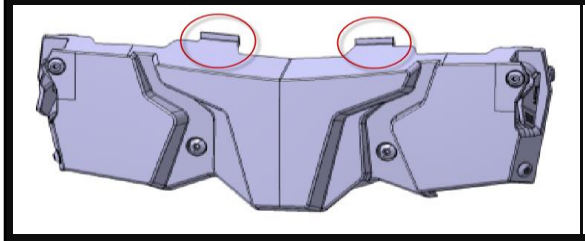

**MY19**

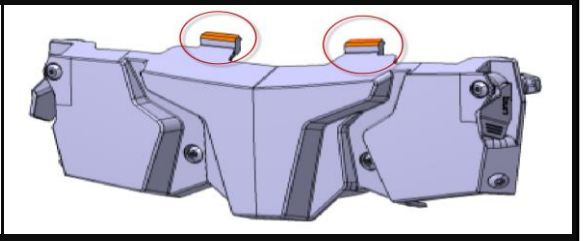

The junction plate hooks are longer and curved for better self-alignment.

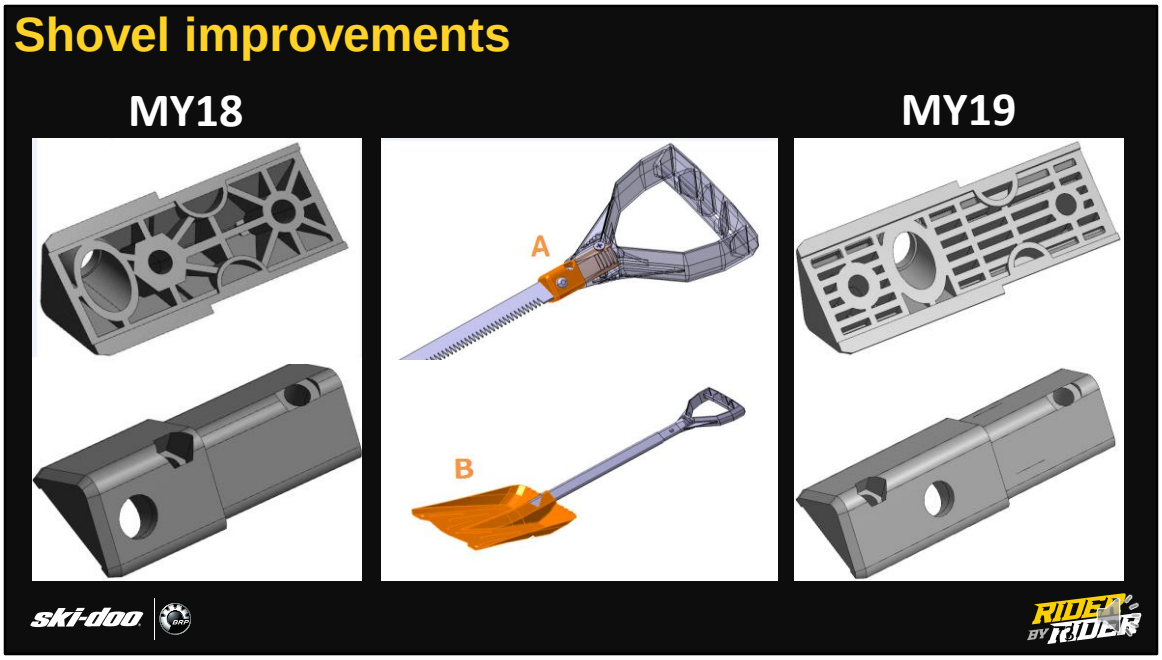


Shovel improvements for MY19 are the junction bloc (A) is more robust, it is longer with more ribs, the hex nut has been relocated and a thicker scoop.

# Oxygen Helmet

BRP's new Oxygen helmet that combines the top characteristics of a sport helmet with the comfort of a touring helmet.

M-Forge Composite shells have 10% to 40% lower weights than comparable materials, the Composite Technology delivers superior safety through improved impact performance compared to top-end carbon fibre materials, with a lighter shell weight, a superior performance compared to other materials for repeated impacts at a far slower rate that is Eco-friendly . The visor, sun visor, cheek pads, inner liner, the front & rear light and finally the noise control ear pads are all replaceable/serviceable.

The rear light turns ON as soon as you are connected to your vehicle and your engine is running, there is no switch to turn this light OFF.

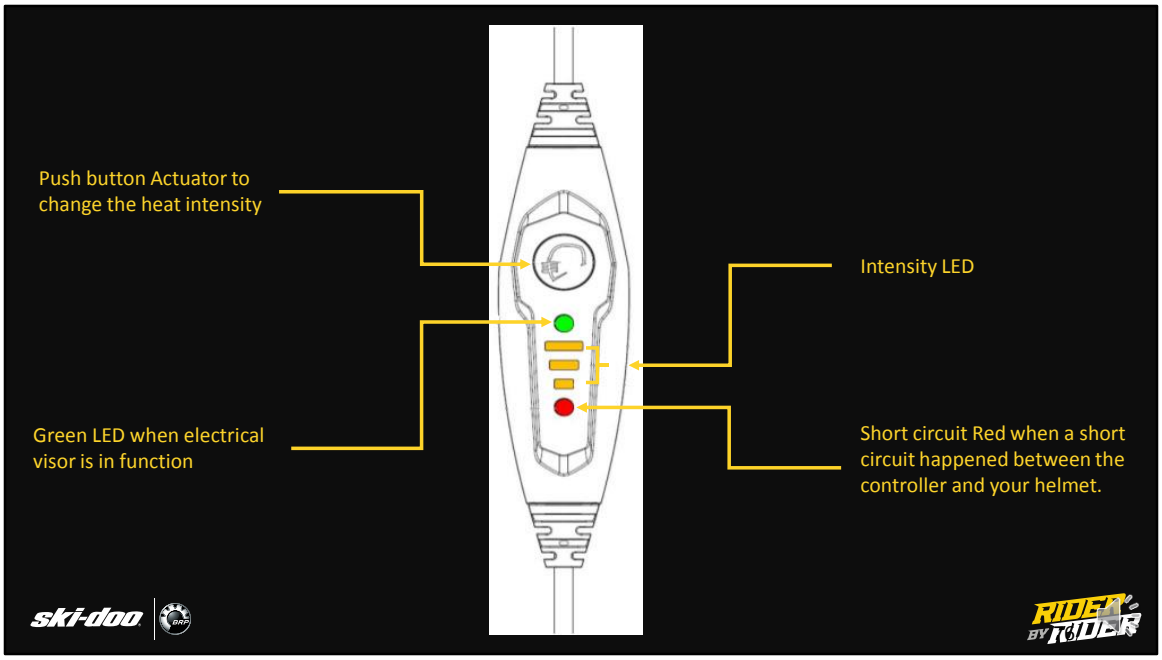


The oxygen has a magnetic remote control that connect on the back of the helmet, by Pushing the button this will change the heat intensity. Press during 1 sec. to change from high 100% to 75% medium to 50% low intensity the LEDS will give you indication of what intensity it is at.
When the green LED is on the visor is in function mode when the red LED is on this is a indication that there is a short circuit between the controller and the helmet.

Thanks for listening and have a great season.
Ken Gauthier

ski-doo®

BRP

# 2019

# OPERATOR'S GUIDE

Includes Safety, Vehicle and Maintenance Information

# REV-XS™ Series

**⚠ WARNING**

Read this guide thoroughly.
It contains important safety information.
Minimum recommended operator's age: 16 years old.
Keep this Operator's Guide in the vehicle.

5 2 0 0 0 1 8 9 4

Original Instructions

## ⚠ WARNING

Disregarding any of the safety precautions and instructions contained in this Operator's Guide, *SAFETY VIDEO* and on-product safety labels could cause injury including the possibility of death!

## ⚠ WARNING

This vehicle may exceed the performance of other vehicles you may have ridden. Take time to familiarize yourself with your new vehicle.

CALIFORNIA PROPOSITION 65 WARNING

⚠ **WARNING:** Operating, servicing and maintaining an off-road vehicle can expose you to chemicals including engine exhaust, carbon monoxide, phthalates, and lead, which are known to the State of California to cause cancer and birth defects or other reproductive harm. To minimize exposure, avoid breathing exhaust, do not idle the engine except as necessary, service your vehicle in a well-ventilated area and wear gloves or wash your hands frequently when servicing your vehicle. For more information go to www.p65warnings.ca.gov/products/passenger-vehicle.

In USA, products are distributed by BRP US Inc.

In Canada, products are distributed by Bombardier Recreational Products Inc.

The following are trademarks of Bombardier Recreational Products Inc. or its subsidiaries.

| | | | | | | |
|---|---|---|---|---|---|---|
| ACE® | Expedition® | iTC™ | RAVE™ | REV-XS™ | SC™ | TRA™ |
| D.E.S.S.™ | Grand Touring™ | Learning Key™ | Renegade™ | rMotion | Ski-Doo® | XPS™ |
| eDrive™ | HPG™ | Pilot™ | RER™ | ROTAX™ | TEK™ | X-RS™ |

The KYB Pro series is a registered mark of KYB America LLC.

# FOREWORD

| | |
|---|---|
| Deutsch | Dieses Handbuch ist möglicherweise in Ihrer Landessprache verfügbar. Bitte wenden Sie sich an Ihren Händler oder besuchen Sie: **www.operatorsguides.brp.com** |
| English | This guide may be available in your language. Check with your dealer or go to: **www.operatorsguides.brp.com** |
| Español | Es posible que este manual esté disponible en su idioma. Consulte a su distribuidor o visite: **www.operatorsguides.brp.com** |
| Français | Ce guide peut être disponible dans votre langue. Vérifier avec votre concessionnaire ou aller à: **www.operatorsguides.brp.com** |
| 中文 | 本手册可能有您的语种的翻译版本。请向经销商问询，或者登录 www.operatorsguides.brp.com 查询。 |
| 日本語 | このガイドは、言語によって翻訳版が用意されています。. ディーラーに問い合わせるか、次のアドレスでご確認ください： www.operatorsguides.brp.com |
| Nederlands | Deze handleiding kan beschikbaar zijn in uw taal. Vraag het aan uw dealer of ga naar: **www.operatorsguides.brp.com** |
| Norsk | Denne boken kan finnes tilgjengelig på ditt eget språk. Kontakt din forhandler eller gå til: **www.operatorsguides.brp.com** |
| Português | Este manual pode estar disponível em seu idioma. Fale com sua concessionária ou visite o site: **www.operatorsguides.brp.com** |
| Suomi | Käyttöohjekirja voi olla saatavissa omalla kielelläsi. Tarkista jälleenmyyjältä tai käy osoitteessa: **www.operatorsguides.brp.com** |
| Svenska | Denna bok kan finnas tillgänglig på ditt språk. Kontakta din återförsäljare eller gå till: **www.operatorsguides.brp.com** |

Congratulations on your purchase of a new Ski-Doo® snowmobile. Whatever model you have chosen, it is backed by the Bombardier Recreational Products Inc. (BRP) warranty and a network of authorized Ski-Doo snowmobile dealers ready to provide the parts, service or accessories you may require.

Your dealer is committed to your satisfaction. He has taken training to perform the initial set-up and inspection of your snowmobile as well as completed the final adjustment required to suit your specific weight and riding environment before you took possession.

At delivery, you were informed of the warranty coverage and signed the *PREDELIVERY CHECK LIST* to ensure your new vehicle was prepared to your entire satisfaction.

## Know Before you Go

To learn how to reduce the risk for you, your passenger or bystanders being injured or killed, read the following sections before you operate the vehicle:

– *SAFETY INFORMATION*
– *VEHICLE INFORMATION*.

Also read all safety labels on your snowmobile and watch attentively your *SAFETY VIDEO* located at www.ski-doo.com/safety.

We highly recommend that you take a safety riding course. Please check with your dealer or local authorities for availability in your area.

Failure to follow the warnings contained in this Operator's Guide can result in SERIOUS INJURY or DEATH.

The proper functioning of a snowmobile depends in part on the surface on which it is driven.

Driving on very hard or snow-free surfaces compromises the cooling of the engine and the lubrication of rear suspension components. Avoid prolonged driving on such surfaces.

## Safety Messages

The types of safety messages, what they look like and how they are used in this guide are explained as follows:

The safety alert symbol ⚠ indicates a potential injury hazard.

**⚠ WARNING**

Indicates a potential hazard, if not avoided, could result in serious injury or death.

**⚠ CAUTION** Indicates a hazard situation which, if not avoided, could result in minor or moderate injury.

***NOTICE*** Indicates an instruction which, if not followed, could severely damage vehicle components or other property.

## About this Operator's Guide

This Operator's Guide has been prepared to acquaint the owner/operator and passenger with this snowmobile and its various controls, safe riding and maintenance instructions.

The following terminology in regards to operator, passenger and vehicle configuration is used as follows throughout this guide:

- Operator: refers to the person being behind the controls and driving the snowmobile.
- Passenger: refers to a person sitting behind the operator.
- 1-UP: refers to a model designed for an operator only.
- 2-UP: refers to a model designed to accommodate one passenger.

Keep this Operator's Guide in the vehicle as you can refer to it for things such as maintenance, troubleshooting and instructing others.

Note that this guide is available in several languages. In the event of any discrepancy, the English version shall prevail.

If you want to view and/or print an extra copy of your Operator's Guide, simply visit the following website www.operatorsguides.brp.com.

The informations contained in this document are correct at the time of publication. BRP, however, maintains a policy of continuous improvement of its products without imposing upon itself any obligation to install them on products previously manufactured. Due to late changes, some differences between the manufactured product and the descriptions and/or specifications in this guide may occur. BRP reserves the right at any time to discontinue or

change specifications, designs, features, models or equipment without incurring any obligation upon itself.

This Operator's Guide should remain with the vehicle when it's sold.

# TABLE OF CONTENTS


**FOREWORD ..... 1**
Know Before you Go ..... 1
Safety Messages ..... 2
About this Operator's Guide ..... 2

***SAFETY INFORMATION***

**GENERAL PRECAUTIONS ..... 10**
Avoid Carbon Monoxide Poisoning ..... 10
Avoid Gasoline Fires and Other Hazards ..... 10
Avoid Burns from Hot Parts ..... 10
Accessories and Modifications ..... 10
**SPECIAL SAFETY MESSAGES ..... 11**
**ACTIVE TECHNOLOGIES (iTC) ..... 15**
Introduction ..... 15
iTC (intelligent Throttle Control) ..... 15
**RIDING THE VEHICLE ..... 16**
Pre-Ride Inspection ..... 16
How to Ride ..... 18
Carrying a Passenger ..... 19
Terrain/Riding Variations ..... 20
Environment ..... 24
**TRACTION ENHANCING PRODUCTS ..... 27**
Manoeuvrability ..... 27
Acceleration ..... 28
Braking ..... 28
Important Safety Rules ..... 28
Effects of Having a Studded Track on the Life of the Snowmobile ..... 29
Installation of Studs on BRP Approved Tracks ..... 29
Maintenance/Replacement ..... 30
**IMPORTANT ON-PRODUCT LABELS ..... 31**
Hang Tag(s) ..... 31
Vehicle Safety Labels ..... 31
Compliance Labels ..... 36
Technical Information Labels ..... 37

***VEHICLE INFORMATION***

**CONTROLS, INSTRUMENTS AND EQUIPMENT ..... 40**
1) Handlebar ..... 41
2) Throttle Lever ..... 41
3) Brake Lever ..... 43
4) Parking Brake Lever ..... 43
5) Engine Cut-off Switch ..... 43
6) Emergency Engine Stop Switch ..... 44

**CONTROLS, INSTRUMENTS AND EQUIPMENT** (cont'd)
7) Shift Lever ..... 45
8) Multifunction Switch ..... 45
9) Seat Latch ..... 47
10) Tool Kit ..... 48
11) Front and Rear Bumpers ..... 49
12) Analog/Digital Gauge ..... 49
13) Storage Compartment ..... 54
14) Front Storage Compartment ..... 54
15) Hitch (Europe only) ..... 54
16) Drive Belt Guard ..... 56
17) Spare Drive Belt Holder ..... 57
18) Upper Body Module (Hood) ..... 57
19) Side Panels ..... 59
20) Rewind Starter Handle (If Applicable) ..... 59
21) Passenger Seat (2-UP Models) ..... 60
22) Passenger Handhold (2-UP Models) ..... 60
23) Backrest ..... 60
24) Adjustable Mirrors (if applicable) ..... 60
25) Electric Visor Jack Connector (On Applicable Models) ..... 60
26) Operator's Guide ..... 60
27) ECO/Standard/Sport Mode Switch ..... 60
28) Passenger Heated Grip Switch ..... 61
29) Heated Seats Switches ..... 61
30) Rear Rack ..... 61

**FUEL ..... 62**
Fuel Requirements ..... 62
Vehicle Fueling Procedure ..... 63

**BREAK-IN PERIOD ..... 64**
Operation During Break-In ..... 64

**OPERATING MODES ..... 65**
ECO Mode (Fuel Economy Mode) ..... 65
Standard Mode ..... 65
Sport Mode ..... 65
Navigating Operating Modes ..... 65
Learning Key Modes ..... 66

**BASIC PROCEDURES ..... 67**
Engine Starting Procedure ..... 67
Emergency Starting ..... 67
Vehicle Warm-Up ..... 67
Shifting in Reverse or Forward ..... 68
Shutting Off the Engine ..... 68

**RIDING CONDITIONS AND YOUR SNOWMOBILE ..... 69**
Altitude ..... 69
Temperature ..... 69
Hard Packed Snow ..... 69

**SPECIAL OPERATION** ..... **70**
Towing an Accessory ..... 70
Towing Another Snowmobile ..... 70
**TUNE YOUR RIDE** ..... **71**
Rear Suspension Adjustments ..... 71
Front Suspension Adjustments ..... 77
Adjustment Tips According to Vehicle Behavior ..... 79
**VEHICLE TRANSPORTATION** ..... **80**

## *MAINTENANCE*

**FIRST INSPECTION** ..... **82**
**MAINTENANCE SCHEDULE** ..... **83**
**MAINTENANCE PROCEDURES** ..... **85**
Air Filter with Dual Air Intake ..... 85
Engine Coolant ..... 85
Engine Oil ..... 86
Engine Oil Filter ..... 88
Exhaust System ..... 89
Spark Plugs ..... 90
Brake Fluid ..... 90
Chaincase Oil ..... 91
Drive Chain ..... 92
Drive Belt ..... 92
Track ..... 94
Suspension ..... 98
Skis ..... 99
Fuses ..... 99
Lights ..... 100
**VEHICLE CARE** ..... **102**
Post-Operation Care ..... 102
Vehicle Cleaning and Protection ..... 102
**STORAGE** ..... **103**

## *TECHNICAL INFORMATION*

**VEHICLE IDENTIFICATION** ..... **106**
Vehicle Description Decal ..... 106
Identification Numbers ..... 106
**NOISE EMISSION AND VIBRATION VALUES (ALL COUNTRIES EXCEPT CANADA/UNITED STATES)** ..... **107**
**EC DECLARATION OF CONFORMITY** ..... **108**
**EPA CERTIFIED ENGINES** ..... **109**
Engine Emissions Information ..... 109

**RADIO FREQUENCY DIGITALLY ENCODED SECURITY SYSTEM (RF D.E.S.S. KEY) ..... 110**

**SPECIFICATIONS ..... 111**

## *TROUBLESHOOTING*

**TROUBLESHOOTING GUIDELINES ..... 116**

**MONITORING SYSTEM ..... 119**

Pilot Lamps, Messages and Beeper Codes ..... 119

## *WARRANTY*

**BRP LIMITED WARRANTY USA AND CANADA: 2019 SKI-DOO® SNOWMOBILES ..... 124**

**US EPA EMISSION-RELATED WARRANTY ..... 128**

**BRP INTERNATIONAL LIMITED WARRANTY: 2019 SKI-DOO® SNOWMOBILES ..... 131**

**BRP LIMITED WARRANTY FOR THE EUROPEAN AND THE COMMONWEALTH OF THE INDEPENDENT STATES (CIS) AREAS AND TURKEY : 2019 SKI-DOO® SNOWMOBILES ..... 135**

## *CUSTOMER INFORMATION*

**PRIVACY INFORMATION ..... 142**

# *SAFETY INFORMATION*

## Avoid Carbon Monoxide Poisoning

All engine exhaust contains carbon monoxide, a deadly gas. Breathing carbon monoxide can cause headaches, dizziness, drowsiness, nausea, confusion and eventually death.

Carbon monoxide is a colorless, odorless, tasteless gas that may be present even if you do not see or smell any engine exhaust. Deadly levels of carbon monoxide can collect rapidly, and you can quickly be overcome and unable to save yourself. Also, deadly levels of carbon monoxide can linger for hours or days in enclosed or poorly ventilated areas. If you experience any symptoms of carbon monoxide poisoning, leave the area immediately, get fresh air and seek medical treatment.

To prevent serious injury or death from carbon monoxide:

- Never run the vehicle in poorly ventilated or partially enclosed areas such as garages, carports or barns. Even if you try to ventilate engine exhaust with fans or open windows and doors, carbon monoxide can rapidly reach dangerous levels.
- Never run the vehicle outdoors where engine exhaust can be drawn into a building through openings such as windows and doors.

## Avoid Gasoline Fires and Other Hazards

Gasoline is extremely flammable and highly explosive. Fuel vapors can spread and be ignited by a spark or flame many feet away from the engine. To reduce the risk of fire or explosion, follow these instructions:

- Use only an approved gasoline container to store fuel.
- Strictly adhere to instructions in *FUELING PROCEDURE*.
- Never start or operate the engine if the fuel cap is not properly installed.

Gasoline is poisonous and can cause injury or death.

- Never siphon gasoline by mouth.
- If you swallow gasoline, get any in your eye or inhale gasoline vapor, see your doctor immediately.

If gasoline spills on you, wash with soap and water and change your clothes.

## Avoid Burns from Hot Parts

The exhaust system and engine become hot during operation. Avoid contact during and shortly after operation to avoid burns.

## Accessories and Modifications

Do not make unauthorized modifications, or use attachments or accessories that are not approved by BRP. Since these changes have not been tested by BRP, they may increase the risk of crashes or injuries, and they can make the vehicle illegal.

Tunnel accessories must be loaded onto vehicle as per instructions provided for each accessories.

Accessory passenger seats approved by BRP and conforming to SSCC standards may be available for certain models. If such a seat is used, you must follow the guidelines and recommendations in regards to a passenger in this guide.

**⚠ WARNING**

**Passenger seat must have a strap or handholds and must meet SSCC standards.**

See your authorized Ski-Doo dealer for available accessories for your vehicle.

# SPECIAL SAFETY MESSAGES

SEVERE INJURY OR DEATH can result if you do not follow these instructions:

- Always make a pre-ride inspection BEFORE you start the engine.
- Throttle mechanism should be checked for free movement and return to idle position before starting engine.
- Always attach tether cord eyelet to clothing before starting the engine.
- Never operate the engine without belt guard and brake disk guard securely installed or, with hood or side panels opened or removed. Never run the engine without drive belt installed. Running an unloaded engine such as without drive belt or with track raised, can be dangerous.
- Always engage parking brake before starting the engine.
- Everyone is a beginner the first time he sits behind the controls of a snowmobile regardless of previous experience in driving any other type of vehicle. The safe use of your snowmobile depends on many conditions such as visibility, speed, weather, environment, traffic, vehicle condition and the condition of the operator.
- Basic training is required for the safe operation of any snowmobile. Study your operator's guide paying particular attention to cautions and warnings. Join your local snowmobile club: its social activities and trail systems are planned for both fun and safety. Obtain basic instructions from your snowmobile dealer, friend, fellow club member or enroll in your state or provincial safety training program.
- Any new operator must read and understand all safety labels on the snowmobile, the Operator's Guide and watch the *SAFETY VIDEO* at www.ski-doo.com/safety before operating the snowmobile. Only allow a new operator to operate the snowmobile in a restricted flat area, at least until he is completely familiar with its operation. If snowmobile operators training course is offered in your area, have him enroll.
- The performance of some snowmobiles may significantly exceed that of other snowmobiles you have operated. Therefore, use by novice or inexperienced operators is not recommended.
- Snowmobiles are used in many areas and in many snow conditions. Not all models perform the same in similar conditions. Always consult your snowmobile dealer when selecting the snowmobile model for your particular needs and uses.
- Injury or death may result to the snowmobile operator, passenger or bystander if the snowmobile is used in risky conditions which are beyond the operator's, passenger's or snowmobile's capabilities or intended use.
- BRP recommends the operator has at least 16 years old of age. Verify also your local laws for age and training requirements.
- It is very important to inform any operator, regardless of his experience, of the handling characteristics of this snowmobile. The snowmobile configuration, such as ski stance, ski type, suspension type, track length, width and type vary from a model to another. The snowmobile handling is greatly influenced by these characteristics.
- The novice operator should become familiar with the snowmobile through practice on a level area at slow speeds before venturing far afield.

- Know your local laws. Federal, state, provincial and local government agencies have enacted laws and regulations pertaining to the safe use and operation of snowmobiles. It is your responsibility as a snowmobiler to learn and obey these laws and regulations. Respect and observance will result in safer snowmobiling for all. Be aware of the liability property damages and insurance laws regarding your equipment.
- Speeding can be fatal. In many cases, you cannot react or respond quickly enough to the unexpected. Always ride at a speed which is suitable to the trail, weather conditions and your own ability. Know your local rules. Speed limit may be in effect and meant to be observed.
- Always keep right hand side of the trail.
- Always keep a safe distance from other snowmobiles and bystanders.
- Remember, promotional material may show risky maneuvers performed by professional riders under ideal and/or controlled conditions. You should never attempt any such risky maneuvers if they are beyond your level of riding ability.
- Never use this vehicle with drugs or alcohol. They slow reaction time and impair judgement.
- Your snowmobile is not designed to be operated on public streets, roads or highways.
- Avoid road traveling. If you must do so, and it is permitted, reduce speed. The snowmobile is not designed to operate or turn on paving. When crossing a road, make a full stop, then look carefully in both directions before crossing at a 90° angle. Be wary of parked vehicles.
- Snowmobiling at night can be a delightful experience but because of reduced visibility, be extra cautious. Avoid unfamiliar terrain and be sure your lights are working. Always carry a flashlight and spare light bulbs.
- Never remove any original equipment from your snowmobile. Each vehicle has many built in safety features. Such features include various guards and consoles, plus reflective materials and safety labels.
- Nature is wonderful but don't let it distract your attention from driving. If you want to truly appreciate winter's scenery, stop your snowmobile on the side of the trail so that you don't become a hazard to others.
- Fences represent a very serious threat for both you and your snowmobile. Give a wide berth to telephone poles or posts.
- Hidden wires unseen from a distance can cause serious accidents.
- Always wear an approved safety helmet, eye protection and a face shield. This also applies to your passenger.
- Be aware of inherent risks associated with riding off trails, such as avalanche and other natural or man made hazards or obstacles.
- Tailgating another snowmobile should be avoided. If the snowmobile in front of you slows for any reason, its operator and passenger could be harmed through your neglect. Maintain a safe stopping distance between you and the snowmobile in front of you. Depending on the terrain condition, stopping may require a little more space than you think. Play it safe. Be prepared to use evasive driving.

- Venturing out alone with your snowmobile could also be hazardous. You could run out of fuel, have an accident, or damage your snowmobile. Remember, your snowmobile is capable of traveling further in half an hour than you may be able to walk in a day. Use the "buddy system". Always ride with a friend or member of your snowmobile club. Even then, tell someone where you are going and the approximate time you plan to return.
- Meadows sometimes have low areas where water accumulate and freezes over in winter. This ice is usually glare ice. Attempting to turn or brake on this surface could cause your vehicle to spin out of control. Never brake or attempt speeding or turning on glare ice. If you do happen to travel over such a condition, reduce speed by carefully releasing the throttle.
- Never "jump" with your snowmobile.
- While on safari, do not "gun" the throttle. Snow and ice can be thrown back into the path of a following snowmobile. In addition, when "gunning" the throttle, the vehicle digs into and leaves an irregular snow surface for others.
- Safaris are both fun and enjoyable but don't show off or overtake others in the group. A less experienced operator might try to do the same as you and fail. When riding with others, limit your abilities to the experience of others.
- In an emergency, the snowmobile engine can be stopped by pressing down on the emergency engine stop switch or by pulling the tether cord cap from the engine cut-off switch, while applying brake.
- Always engage parking brake when vehicle is not in use.
- Never run the engine in a non-ventilated area and/or if vehicle is left unattended.
- Electric start models only: Never charge or boost a battery while installed on snowmobile.
- Never attempt any fuel system or electrical system maintenance or repair. Any maintenance or repair of these systems must be performed by an authorized Ski-Doo dealer.
- Ensure the path behind is clear of obstacles or bystanders before proceeding in reverse.
- Always remove the tether cord cap from engine cut-off switch when vehicle is not in operation in order to prevent accidental engine starting, to avoid unauthorized use by children or others or theft.
- NEVER stand behind or near a rotating track. Debris could be projected causing severe injuries. To remove packed snow or ice, stop engine, tilt and hold vehicle on its side and use wrench tool on the belt guard.
- Do not stud the track unless it has been approved for studs. At speed, a studded track that has not been approved for studs could tear and separate from vehicle. See an authorized Ski-Doo dealer for current specific studding availability and applications.
- You may stud the track on this vehicle model. However, you MUST only use the BRP approved type stud for use on Ski-Doo snowmobiles. DO NOT EVER use conventional studs because the track thickness is thinner then our standard tracks. The stud could tear off of track and separate from vehicle.
- Always wear an approved helmet and follow the same dressing guidelines as those recommended for the operator and described in this guide.
- Make sure that you are able to achieve a stable stance, both feet resting positively on the footboards of footrests with good grip, and that you are able to hold on firmly to the handholds.

– Do not forget, with 2-UP models, the operator is responsible for the safety of the passenger. Always remember that the snowmobile handling, stability and braking distance may be affected when riding with a passenger.
– Before riding the vehicle, ask your passenger to inform you to slowdown or stop immediately if he feels uncomfortable or insecure during the ride. Keep a watchful eye on your passenger while riding.

# ACTIVE TECHNOLOGIES (iTC)

## Introduction

NOTE: Some functions or features described in this section may not apply to every model, or may be available as an option.

The throttle is electronic and provides a command signal to an electronic module whose function is to assure proper operation of its system within set parameters.

It is extremely important for operators to read all information contained in this operator's guide so as to become familiar with this snowmobile, its systems, controls, capabilities and limitations.

## iTC (intelligent Throttle Control)

The system uses an electronic throttle control (ETC) that provides command signals to the ECM (Engine Control Module). With this system, there is no need for a traditional throttle cable.

The iTC allows the following operating modes:

- ECO mode
- Standard mode
- Sport mode.

### ECO Mode

When ECO mode is selected (fuel economy mode), vehicle torque and speed are limited whereby an optimal cruising speed is maintained in order to reduce fuel consumption.

Refer to *OPERATING MODES* subsection for detailed instructions.

### Standard Mode

In standard mode, acceleration is reduced when accelerating from a complete stop and when operating in the low vehicle speed range under certain conditions.

### Sport Mode

In sport mode, maximum engine power is available throughout the engine operational range.

Refer to *OPERATING MODES* subsection for detailed instructions.

### Learning Key Modes

The Ski-Doo™ learning key limits the torque and speed of the snowmobile therefore enabling first time users and less experienced operators to learn how to operate the snowmobile while gaining the necessary confidence and control.

#### Limitations

The ability of a novice to operate the snowmobile can be exceeded even when a learning key is used.

Refer to *OPERATING MODES* subsection for details.

Each operator has a responsibility to ensure the safety of other recreationists or bystanders.

You are responsible for proper operation of your vehicle as well as training those whom you allow to ride or drive. There may be noticeable handling and performance differences from one snowmobile to the other.

A snowmobile is relatively simple to operate but like any other vehicle or mechanical equipment, it can be hazardous if you or a passenger are reckless, thoughtless or inattentive. We encourage you to have an Annual Safety Inspection of your snowmobile. Please contact an authorized Ski-Doo dealer for further details. Though not required, it is recommended that an authorized Ski-Doo dealer performs the preseason preparation of your snowmobile. Each visit to your authorized Ski-Doo dealer is a great opportunity for your dealer to verify if your snowmobile is included in any safety campaign. We also urge you to visit your authorized Ski-Doo dealer in a timely manner if you become aware of any safety related campaigns.

See an authorized Ski-Doo dealer for available accessories you may require.

Before venturing on the trails, operate the snowmobile in a restricted flat area until you are completely familiar with its operation and feel comfortable that you can safely tackle a more demanding task. Have an enjoyable and safe ride.

## Pre-Ride Inspection

**⚠ WARNING**

**The pre-operation check is very important prior to operating the vehicle. Always check the proper operation of critical controls, safety features and mechanical components before starting.**

**Before Starting the Engine**

1. Remove snow and ice from body including lights, seat, footrests, controls and instruments.
2. Verify that air silencer prefilter is free of snow.
3. Verify that skis and steering operate freely. Check corresponding action of skis versus handlebar.
4. Check fuel and injection oil (if applicable) for levels and leaks. Replenish if necessary and in case of any leaks; you should seek service from an authorized Ski-Doo dealer, repair shop, or person of your own choosing for maintenance, repair, or replacement. Please refer to the *US EPA EMISSION-RELATED WARRANTY* contained herein for information about warranty claims.
5. All storage compartments must be properly latched and they must not contain any heavy or breakable objects. Hood and side panels must be also properly latched.
6. Activate the throttle control lever several times to check that it operates easily and smoothly. It must return to idle position when released.
7. Activate the brake lever and make sure the brake fully applies before the brake control lever touches the handlebar grip. It must fully return when released.
8. Apply parking brake and check if it operates properly. Leave parking brake applied.
9. Inspect drive belt condition and height, refer to *DRIVE BELT* in *MAINTENANCE PROCEDURES*.

**After Engine is Started**

For proper engine starting procedure, refer to the appropriate *ENGINE STARTING PROCEDURE* section.

1. Check headlights high beam and low beam, taillight, stop light and pilot lamps operation.

NOTE: You may need to detach tether cord from your clothes to check lights. In such a case, attach cord as soon as you get back at the controls of the snowmobile.

2. Check the engine cut-off switch (by pulling tether cord cap) and emergency engine stop switch operation.
3. Release parking brake.
4. Refer to the *WARM UP* section and follow instructions.

**Pre-Ride Check List**

| ITEM | OPERATION | ✔ |
|---|---|---|
| BODY INCLUDING SEAT, FOOTRESTS, LIGHTS, AIR FILTER, CONTROLS AND INSTRUMENTS | Check condition and remove snow or ice. | |
| SKIS AND STEERING ACTION | Check for free movement and proper operation. | |
| FUEL AND INJECTION OIL (IF APPLICABLE) | Check for proper level and no leaks. | |
| COOLANT | Check for proper level and no leaks. | |
| BRAKE FLUID | Check for proper level and no leaks. | |
| STORAGE COMPARTMENT | Check for proper latching and no heavy or breakable objects. | |
| THROTTLE LEVER | Check for proper action. | |
| TRACK | Check condition and remove snow or ice. | |
| BRAKE LEVER | Check for proper operation. | |
| PARKING BRAKE, BRAKE | Check for proper operation. | |
| EMERGENCY ENGINE STOP SWITCH AND ENGINE CUT-OFF SWITCH (TETHER CORD CAP) | Check for proper action. Tether cord must be attached to operator clothing eyelet. | |
| LIGHTS | Check for proper operation. | |
| SKIS AND RUNNERS | Check for proper operation. | |
| SLIDER SHOES | Check for proper operation. | |
| INSPECT DRIVE BELT | Check condition for cracks, fraying or abnormal wear and proper height. | |

## How to Ride

### Riding Gear

Proper snowmobile clothing should be worn. It should be comfortable and not too tight. Always check the weather forecast before going on a ride. Dress for the coldest weather expected. Thermal underwear next to the skin also provides a good insulation.

Wear an approved helmet at all times for safety and comfort. They provide both warmth and reduce injury. A stocking type cap, balaclava and face mask should always be carried or worn. Goggles or a face shield that attach to the helmet are indispensable.

Hands should be protected by a pair of snowmobile gloves or mitts which have sufficient insulation and allow use of thumbs and fingers for operation of controls.

Rubber bottom boots with either a nylon or a leather top, with removable felt liners are best suited for snowmobiling.

You should keep yourself as dry as possible when snowmobiling. When you come indoors, take your snowmobile suit and boots off and make certain they dry properly.

Do not wear a long scarf or loose apparels that could get caught in moving parts.

Carry colored lens goggles.

### What to Bring

| | |
|---|---|
| First aid kit | Provided tool kit |
| Mobile phone | Knife |
| Spare spark plugs | Flashlight |
| Friction tape | Trail map |
| Spare drive belt | Snack |

### Rider Position (Forward Operation)

Your riding position and balance are the two basic principles of making your snowmobile go where you want it to. When turning on the side of a hill, you and your passenger must be ready to shift body weight to help it turn in the desired direction. Operator and passenger must never attempt this maneuvering by placing feet outside of the vehicle. Experience will teach you how much lean to put into turns at different speeds and how much you will have to lean into a slope to maintain proper balance.

Generally, the riding position for best balance and control is sitting. However, the posting, kneeling or standing positions are also used under certain conditions.

**⚠ WARNING**

**Do not attempt any maneuvers if they are beyond your abilities.**

#### Sitting

Feet on the running boards, body midway back on seat is an ideal position when operating the snowmobile over familiar, smooth terrain. Knees and hips should remain flexible to absorb shocks.

mmo2008-003-001

#### Posting

A semi-sitting position with the body off the seat and the feet under the body in a sort of squatting posture, thus al-

lowing the legs to absorb the shocks when traveling over uneven terrain. Avoid abrupt stops.

mmo2008-003-002

### Kneeling

This position is achieved by placing one foot firmly on the running board and the opposite knee on the seat. Avoid abrupt stops.

mmo2008-003-003

### Standing

Place both feet on the running boards. Knees should be flexed to absorb the shock from surface bumps. This is an effective position to see better and to shift weight as conditions dictate. Avoid abrupt stop.

mmo2008-003-004

### Rider Position (Reverse Operation)

We recommend sitting on your snowmobile when operating in reverse.

Avoid standing up. Your weight could shift forward against throttle lever while operating in reverse, causing an unexpected acceleration.

**⚠ WARNING**

Unexpected acceleration when snowmobile operates in reverse can cause a loss of control.

## Carrying a Passenger

Certain snowmobiles are designed for an operator only (1-UP), and others can allow one passenger (2-UP). Make sure to identify and respect the warnings according to your specific models.

Even when a passenger is allowed, this person must be physically fit for snowmobiling.

**⚠ WARNING**

Any passenger must be able to firmly lay his feet on the footrests and keep his hands on the handholds or seat strap at all times when seated. Respecting those physical criteria is important to ensure that the passenger is stable and to reduce the risks of ejection.

The operator has a responsibility to ensure the safety of his passenger and should inform the passenger about snowmobiling basics.

**⚠ WARNING**

- Passenger must only sit on designated passenger seat. Never allow anyone to sit between the handlebar and the operator.
- Passenger and operator must always wear an approved helmet and warm clothing appropriate for snowmobiling. Make sure that no skin is exposed.
- If the passenger feels uncomfortable or insecure for any reason, he must right away inform the operator to slowdown or stop.

Riding with a passenger on board is different than riding alone. The operator has the benefit of knowing what will be the next maneuver and is able to prepare himself accordingly. The operator also benefits from the support of his grip on the handlebar. In contrast, the passenger has to rely on the operator's careful and safe operation of the vehicle. In addition, "body english" is limited with a passenger, and the operator can sometimes see more of the trail ahead than the passenger. Therefore, smooth starting and stopping are required with a passenger, and the operator must slow down. The operator must also warn the passenger about side hills, bumps, branches, etc. An unforeseen bump can leave you passenger-less. Remind your passenger to lean into the turn with you, without causing the vehicle to topple. Be extremely careful, go more slowly and check the passenger frequently.

**⚠ WARNING**

When riding with a passenger:

- Braking ability and steering control are reduced. Decrease speed and allow extra space to maneuver.
- Adjust suspension according to weight.

For complete information on how to adjust the suspension, please refer to the *TUNE YOUR RIDE* subsection.

### Riding with a Child

On snowmobiles allowing two passengers (with optional seat), if you have an adult and a child for passenger, BRP recommends that the child sits in the center location. This allows an adult sitting in the rear seat to keep a visual contact with the child and hold him if necessary. In addition, the child is best protected against the wind and cold temperature if seated in the center location.

Use extra caution and go even more slowly with a young passenger. Check frequently to make certain the child has a firm grip and is properly positioned with his feet on the running boards.

## Terrain/Riding Variations

### Groomed Trail

On a maintained trail, sitting is the most preferred riding position. Do not race and, above all, keep to the right hand side of the trail. Be prepared for the unexpected. Observe all trail signs. Do not zigzag from one side of the trail to the other.

### Ungroomed Trail

Unless there has been a fresh snowfall you can expect "washboard" and snowdrift conditions. Taken at excessive speeds, such conditions can be physically harmful. Slow down. Hold on the handlebar and assume a post-

ing position. Feet should be under the body assuming a crouched position to absorb any jarring effect. On longer stretches of "washboard" trails, the kneeling position of one knee on the seat can be adopted. This provides a certain amount of comfort, while at the same time keeps the body loose and capable of vehicle control. Beware of hidden rocks or tree stumps partially hidden by a recent snowfall.

**Deep Snow**

In deep "powder" snow, your vehicle could begin to "bog" down. If this occurs, turn in as wide an arc as possible and look for a firmer base. If you do get "bogged", and it happens to everyone, do not spin your track as this makes the vehicle sink deeper. Instead, turn the engine off, get off and move the back of the vehicle onto new snow. Then tramp a clear path ahead of the vehicle. A few feet will generally suffice. Restart the engine. Assume the standing position and rock the vehicle gently as you steadily and slowly apply the throttle. Depending on whether the front or rear end of the vehicle is sinking, your feet should be placed on the opposing end of the running boards. Never place foreign material beneath the track for support. Do not allow anyone to stand in front of, or to the rear of, the snowmobile with the engine running. Stay away from the track. Personal injury will result if contact is made with the revolving track.

**Frozen Water**

Traveling frozen lakes and rivers can be fatal. Avoid waterways. If you are in an unfamiliar area, ask the local authorities or residents about the ice condition, inlets, outlets, springs, fast moving currents or other hazards. Never attempt to operate your snowmobile on ice that may be too weak to support you and the vehicle. Operating a snowmobile on ice or icy surfaces can be very dangerous if you do not observe certain precautions. The very nature of ice is foreign to good control of a snowmobile or any vehicle. Traction for starting, turning or stopping is much less than that on snow. Thus, these distances can be multiplied manyfold. Steering is minimal, and uncontrolled spins are an ever present danger. When operating on ice, drive slowly with caution. Allow yourself plenty of room for stopping and turning. This is especially true at night.

**Hard Packed Snow**

Don't underestimate hard packed snow. It can be difficult to negotiate as both skis and track do not have as much traction. Best advice is to slow down and avoid rapid acceleration, turning or braking.

**Uphill**

There are two types of hills you can encounter — the open hill on which there are few trees, cliffs or other obstacles, and a hill that can only be climbed directly. On an open hill, the approach is to climb it by side hilling or slaloming. Approach at an angle. Adopt a kneeling position. Keep your weight on the uphill side at all times. Maintain a steady, safe speed. Continue as far as you can in this direction, then switch to an opposite hill angle and riding position.

A direct climb could present problems. Choose the standing position, accelerate before you start the climb and then reduce throttle pressure to prevent track slippage.

In either case, vehicle speed should be as fast as the incline demands. Always slow down as you reach the crest. If you cannot proceed further, don't spin your track. Turn the engine off, free the skis by pulling them out and downhill, place the rear of the snowmobile uphill restart the engine and ease it out with slow even throttle pressure. Position yourself to avoid tipping over, then descend.

### Downhill

Downhill driving requires that you have full control of your vehicle at all times. On steeper hills, keep your center of gravity low and both hands on the handlebar. Maintain slight throttle pressure and allow the machine to run downhill with the engine operating. If a higher than safe speed is reached, slow down by braking but apply the brake with frequent light pressure. Never jam the brake and lock the track.

### Side Hill

When crossing a side hill or traversing up or downhill, certain procedures must be followed. All riders should lean towards the slope as required for stability. The preferred operating positions are the kneeling position, with the knee of the down hill leg on the seat and the foot of the uphill leg on the running board, or the posting position. Be prepared to shift your weight quickly as needed. Side hills and steep slopes are not recommended for a beginner or a novice snowmobiler.

### Avalanche Hazard

When riding on mountainous terrain, you should be aware of the risk of avalanches. Avalanches vary in size and shapes and generally occur in steep terrain and on unstable snow.

New snow, animals, people, wind and snowmobiles can all trigger an avalanche. Avoid high marking or traversing steep terrain when avalanche conditions are possible. When in unstable snow conditions, travel should be restricted to lower angle slopes. Wind formed cornices should be avoided. Staying off unstable conditions is the key to safe mountain riding. Probably most important is to be aware of the conditions and dangers on a daily basis when in the mountains. Check local avalanche forecasts and threats each day before heading out to ride and heed forecasters advice.

You should always carry a snow shovel, probe and avalanche beacon while riding on mountains. We recommend that all mountain riders take a local avalanche safety training course to become more familiar with snow conditions and learn how to properly use their equipment.

Here are some web sites that can help you finding important information:

- US: www.avalanche.org
- Europe: www.avalanches.org
- Canada: www.avalanche.ca

### Slush

Slush should be avoided at all times. Always check for slush before starting across any lake or river. If dark spots appear in your tracks, get off the ice immediately. Ice and water can be thrown rearward into the path of a following snowmobile. Getting a vehicle out of a slush area is strenuous and in some cases, impossible.

### Fog or Whiteout Conditions

On land or water, fog or visibility-limiting snow can form. If you have to proceed into the fog or heavy snow, do so slowly with your lights on and watch intently for hazards. If you are not sure of your way, do not proceed. Keep a safe distance behind other snowmobilers to improve visibility and reaction time.

### Unfamiliar Territory

Whenever you enter an area that is new to you, drive with extreme caution. Go slow enough to recognize potential hazards such as fences or fence posts, brooks crossing your path, rocks, sudden dips, guy wires and countless other obstacles which could result in a termination of your snowmobile ride. Even when following existing tracks, be cautious. Travel at a speed so you can see what is around the next bend or over the top of the hill.

### Bright Sunshine

Bright sunny days can considerably reduce your vision. The glare from sun and snow may blind you to the extent that you cannot easily distinguish ravines, ditches or other obstacles. Goggles with colored lenses should always be worn under these conditions.

### Unseen Obstruction

There may be obstructions hidden beneath the snow. Driving off established trails and in the woods requires reduced speed and increased vigilance. Driving too fast in an area can make even minor obstacles very hazardous. Even hitting a small rock or stump could throw your snowmobile out of control and cause injury to its riders. Stay on established trails to reduce your exposure to hazards. Be safe, slow down and enjoy the scenery.

### Hidden Wires

Always be on the lookout for hidden wires, especially in areas that may have been farmed at one time or another. Too many accidents have been caused by running into wires in the fields, guy wires next to poles and roads, and into chains and wires used as road closures. Slow speeds are a must.

### Obstacles and Jumping

Unplanned jumps of snowdrifts, snowplow ridges, culverts or indistinguishable objects can be dangerous. You can avoid them by wearing the proper color lenses or face shields and by operating at a lower speed.

Jumping can be a hazardous situation. Be prepared before landing to absorb the shock and brace yourself for the impact. Knees must be flexed to act as shock absorbers. If the trail does suddenly drop away from you, crouch (stand) towards the rear of the vehicle and keep the skis up and straight ahead. Apply partial throttle and brace yourself for the impact. Knees must be flexed to act as shock absorbers.

### Turning

Depending on terrain conditions, there are two preferred ways to turn or corner a snowmobile. For most snow surfaces, "body english" is the key to turning. Leaning towards the inside of the turn and positioning body weight on the inside foot will create a "banking" condition beneath the track. By adopting this position and positioning yourself as far forward as possible, weight will be transferred to the inside ski.

On occasion, you will find that the only way to turn the vehicle about in deep snow is to pull the snowmobile around. Do not over-exert yourself. Get assistance. Remember to always lift using your legs as opposed to your back.

mmo2008-003-005

### Road Crossing

In some cases, you will be approaching the road from a ditch or snowbank. Choose a place where you know you can climb without difficulty. Use the standing position and proceed with only as much speed needed to crest the bank. Stop completely at the top of the bank and wait for all traffic to clear. Judge the drop to the roadway. Cross the road at a 90° angle. If you encounter another snowbank on the opposite side, position your feet near the

rear of the vehicle. Remember, your snowmobile is not designed to operate on bare pavement and steering on this type of surface is more difficult.

### Railroad Crossing

Never ride on railroad tracks. It is illegal. Railroad tracks and railroad rights-of-way are private property. A snowmobile is no match for a train. Before crossing a railroad track, stop, look and listen.

### Night Rides

The amount of natural and artificial light at a given time can effect your ability to see or to be seen. Nighttime snowmobiling is delightful. It can be a unique experience if you acknowledge your reduced visibility. Before you start, make certain your lights are clean and work properly. Drive at speeds that will allow you to stop in time when you see an unknown or dangerous object ahead. Stay on established trails and never operate in unfamiliar territory. Avoid rivers and lakes. Guy wires, barbed wire fences, cabled road entrances and other objects such as tree limbs are difficult to see at night. Never drive alone. Always carry a flashlight. Keep away from residential areas and respect the right of others to sleep.

### Riding in a Group

Before starting out, designate a "trail boss" to lead the party and another person to follow-up at the end of the party. Ensure that all members of the party are aware of the proposed route and destination. Make certain that you are carrying all necessary tools and equipment and that you have sufficient fuel to complete the trip. Never overtake the trail boss or, for that matter, any other snowmobile. Use down-the-line hand signals to indicate hazards or intent of direction change. Assist others whenever necessary.

It is always IMPORTANT to keep a safe distance between each snowmobile. Always maintain a safe interval and allow sufficient stopping distance. Don't be a tailgater. Know the position of the machine ahead.

### Signals

If you intend to stop, raise either hand straight above your head. A left turn is indicated by extending your left hand straight out in the proper direction. For right turns, extend the left arm and raise the hand to a vertical position so it forms a right angle at the elbow. Every snowmobiler should relay any signal to the ones behind.

### Trail Stops

Whenever possible, pull off the trail when you stop. This will reduce the hazard to other snowmobilers using the trail.

### Trails and Signs

Trail signs are used to control, direct or regulate the use of snowmobiles on trails. Become familiar with all signs used in the area where you are snowmobiling.

## Environment

Wildlife compliments your snowmobiling day. Snowmobile tracks provide firm ground over which animals can travel from area to area. Do not violate this privilege by chasing or harassing wildlife. Fatigue and exhaustion can lead to animal's death. Avoid areas posted for the protection or feeding of wildlife.

If you happen to be fortunate enough to see an animal, stop your snowmobile and observe quietly.

The guidelines that we support are not designed to limit your snowmobiling fun, but to preserve the beautiful freedom that you can experience only on a snowmobile! These guidelines will keep snowmobilers healthy, happy and

able to introduce others to what they know and enjoy about their favorite winter pastime. So, the next time you hit the trails on a cool, crisp and clear winter day, we ask you to remember that you are paving the way for the future of our sport. Help us lead it down the right path! From all of us at BRP, thank you for doing your share.

There is nothing more exhilarating than snowmobiling. Venturing onto snowmobile trails that cross wild areas is an exciting and healthy winter sport. However, as the number of people using these recreational parks increases, so does the potential for damage to the environment. Abuse of land, facilities and resources inevitably leads to restrictions and closures of both private and public land.

In essence, the greatest threat to our sport, is all around us. Which leaves us with one logical choice. When we snowmobile, we must always ride responsibly.

The vast majority respect the law and the environment. Each of us must set an example for those who are new to the sport, young and old alike.

It is in every one's best interest to tread lightly into our recreational areas. Because, in the long run, to protect the sport we must preserve the environment.

Recognizing the importance of this issue and the need for snowmobilers to do their share in preserving areas that make it possible to enjoy our sport, BRP has developed the "Light Treading Is Smart Sledding" campaign for snowmobilers.

Light Treading refers to more than the thread of our tracks. It's a statement of concern, respect and willingness to take the lead and take action. It applies to the environment in general, its proper care and maintenance, its natural inhabitants and all enthusiasts and the public at large who enjoy the great outdoors. With this theme, we invite all snowmobilers to remember that respecting the environment is not only critical to the future of our industry but to future generations.

Light Treading in no way suggests you should curb your appetite for snowmobiling fun! It simply means tread with respect!

The fundamental objective of Light Treading is one of respect for where and how you ride a snowmobile. You're a light treader when you follow the principles below.

Become informed. Obtain maps, regulations and other information from the Forest Service or from other public land agencies. Learn the rules and follow them and that goes for speed limits, too!

Avoid running over young trees, shrubs, and grasses and don't cut wood. On flatlands or areas where trail riding is popular, it's important to ride only where authorized. Remember, there is a link between protecting your environment and your own safety.

Respect wildlife and be particularly sensitive of animals that are rearing young or suffering from food shortage. Stress can sap scarce energy reserves. Refrain from riding in areas where only animals are intended to tread!

Obey gate closures and regulatory signs and remember, light treaders don't litter!

Stay out of wilderness areas. They're closed to all vehicles. Know where the boundaries are.

Obtain permission to travel across private land. Respect the rights of landowners and other people's privacy. Remember, snowmobile technology has lowered the noise factor considerably, but you still shouldn't rev your engines where quiet "is the order of the day".

Snowmobilers know all too well the efforts that have been made throughout the sport's history to enjoy access to

areas where people can snowmobile safely and responsibly. This effort continues today, as strong as ever.

Respecting the areas where we ride... wherever they may be... is the only way to ensure their future enjoyment. That's one major reason why we know you'll agree that Light Treading is smart sledding! And there are more.

Enjoying the opportunity to see winter and all its natural majestic wonders, is an experience cherished by snowmobilers. Light Treading will preserve this opportunity and will make it possible for us to expose others to the beauty of winter and the unique thrill of our sport! Light Treading will help our sport to grow!

Finally, Light Treading is the sign of a smart snowmobiler. You don't have to leave big tracks or careen through a virgin forest to show you can ride. So whether you're driving a high performance Ski-Doo, a sporty snowmobile or any other make or model, show you know what you're doing. Show you know how to send snow flying and make tracks with a light touch!

# TRACTION ENHANCING PRODUCTS

NOTE: This section is applicable to snowmobiles equipped with a factory installed track that has been approved by BRP for special studs installation.

**⚠ WARNING**

Never stud a track that has not been approved for studs. Installing studs on an unapproved track could increase the risk of the track tearing or severing.

**⚠ WARNING**

You may stud the track on this vehicle model. However, you MUST only use the BRP approved type stud for use on these Ski-Doo snowmobiles. DO NOT EVER use conventional studs as the track thickness is thinner then other standard tracks. The stud could tear off of track and separate from vehicle. See an authorized Ski-Doo dealer for current specific studding availability and applications.

Using traction enhancing products such as, adjustable or more aggressive ski carbide runners and/or studs on your snowmobile will change its behavior, particularly in terms of manoeuvrability, acceleration, and braking.

Using traction enhancing products gives a better grip on packed snow and ice, but has no noticeable effect on soft snow. For this reason, driving a snowmobile equipped with traction enhancing products requires a certain adaptation period. If your snowmobile is equipped with traction enhancing products, be sure to take plenty of time to get used to the way it handles when turning, accelerating, and braking.

Also, always check local regulations concerning the use of traction enhancing products on snowmobiles. Always drive your snowmobile in a responsible manner, respecting the environment and other people's property.

## Manoeuvrability

Using traction enhancing products such as, more aggressive ski carbide runners and/or studs makes the snowmobile grip the ground better at both the front and at the rear. The use of carbide runners is therefore required to give the skis a better grip, so that the front and rear of the snowmobile are in balance. While off-the-shelf carbide ski runners are adequate, they don't necessarily give you optimal control, since that depends on your personal preferences, your riding style, and how your suspension is adjusted.

**⚠ WARNING**

If the front and rear of the snowmobile are out of balance due to an incorrect combination of traction enhancing products, the snowmobile may tend to oversteer or understeer, which could lead to a loss of control.

### Oversteering

In certain conditions, using more aggressive ski carbide runners without studs on the rear track could make the snowmobile prone to oversteering, see illustration.

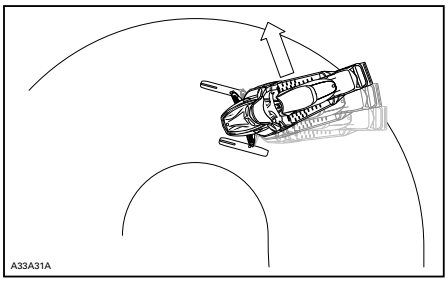


*OVERSTEERING*

### Understeering

In certain conditions, the use of studs on the track could make the snowmobile prone to understeering if the skis are not equipped with more aggressive ski carbide runners, see illustration.

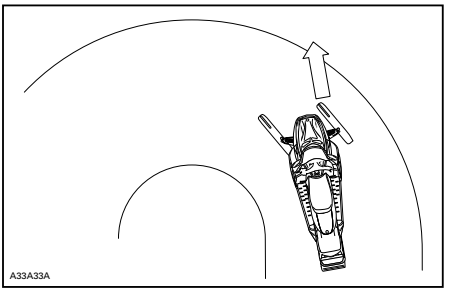


*UNDERSTEERING*

### Controlled Driving

A balanced combination of carbide ski runners and studs on the track ensures adequate control and better handling, see illustration.

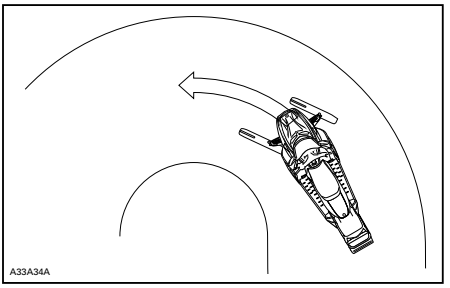


*CONTROLLED DRIVING*

## Acceleration

Using studs on the track will allow your sled to accelerate better on packed snow and ice but will have no noticeable effect on soft snow. This can cause sudden variations in traction under certain conditions.

**⚠ WARNING**

To prevent surprises that could lead to a loss of control of the snowmobile:

- Always go easy on the throttle.
- NEVER try to spin the track to make the rear of the snowmobile skid.

This could cause debris or ice to be thrown violently backwards, possibly injuring others nearby or on snowmobiles behind you.

## Braking

As in the case of acceleration, using studs on the track will give you better braking capacity on packed snow or ice but will have no noticeable effect on soft snow. Braking may thus vary suddenly under certain conditions. Be sure to use restraint in braking to keep from blocking the track in order to avoid surprises that could lead to a loss of control.

## Important Safety Rules

**⚠ WARNING**

To prevent serious injury to individuals near the snowmobile:

- NEVER stand behind or near a moving track.
- Always use a wide-base snowmobile stand with a rear deflector panel if it is necessary to rotate track.
- When the track is raised off the ground, only run it at the lowest possible speed.

Centrifugal force could cause debris, damaged or loose studs, pieces of torn track, or an entire severed track to be violently thrown backwards out of the tunnel with tremendous force.

## Effects of Having a Studded Track on the Life of the Snowmobile

The use of traction enhancing products can increase the load and the stress on certain snowmobile components, as well as the vibration level. This can cause premature wear on parts such as belts, brake linings, bearings, chain, chaincase sprocket, and on approved studded tracks, shorten track life. Always proceed with a visual inspection of your track before each use. For more information, refer to the *TRACK* section in *MAINTENANCE*.

Studs on the track can also cause serious damage to your snowmobile if it is not equipped with the tunnel protectors designed for your particular model. Damage to the electrical wiring or perforation of the heat exchangers are potential hazards, that could cause the engine to overheat and be severely damaged.

**⚠ WARNING**

**If tunnel protectors are excessively worn or not installed, the gas tank could be punctured, causing a fire.**

***NOTICE*** **Ask your dealer for the appropriate tunnel protectors model and kit number required for your snowmobile.**

NOTE: Consult the BRP limited warranty to find out what warranty limitations are related to the use of studs.

## Installation of Studs on BRP Approved Tracks

**⚠ WARNING**

**Never stud a track that has not been approved for studs. Approved tracks can be identified by a stud symbol (see illustration below) molded into the track surface. Installing studs on an unapproved track could increase the risk of the track tearing or severing.**

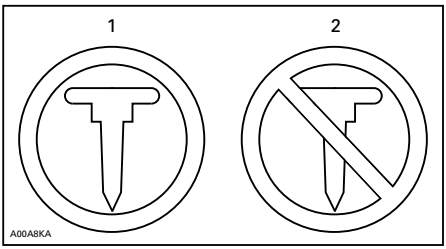


*TRACK SYMBOLS*
1. *Approved*
2. *NOT Approved*

To ensure safe and proper installation, BRP recommends to have the studs installed by your dealer.

– Use only the BRP approved special studs.
– Never use studs that exceed the height of your snowmobile's track profile by more than 9.5 mm (3/8 in).

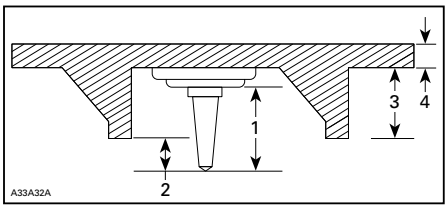


*INSTALLATION OF STUDS*
1. *Stud size*
2. *Penetration range 6.4 mm to 9.5 mm (1/4 in to 3/8 in)*
3. *Track lug height*
4. *Track belt thickness*

**⚠ WARNING**

- See an authorized Ski-Doo dealer for current specific studding availability and applications.
- DO NOT EVER use conventional stud because, the track thickness is thinner then our standard tracks and the stud could tear off of track and separate from vehicle.
- Studs should only be installed in the locations indicated by molded bulges in the track surface. Some track models have two types of molded bulges; triangles and circles. See the warning molded into the track surface to know which one to use.
- Never stud a track with a profile of 35 mm (1-3/8 in) or more.
- The number of studs installed must always perfectly match the pattern of molded bulges in the track.
- Always consult the traction product manufacturer's installation instructions and recommendations before having your dealer install studs and runners. It is very important to follow the torque specifications for the stud bolts.

INSTALLING AN INCORRECT NUMBER OF STUDS OR AN IMPROPER INSTALLATION CAN INCREASE THE RISK OF THE TRACK TEARING OR SEVERING.

## Maintenance/Replacement

PROCEED WITH A VISUAL INSPECTION OF YOUR TRACK BEFORE EACH USE.

Look for any defects, such as:

- Perforations in the track
- Tears in the track (particularly around traction holes on studded tracks)
- Lugs that are broken or torn off, exposing portions of rods
- Delamination of the rubber
- Broken rods
- Broken studs (studded tracks)
- Bent studs (studded tracks)
- Missing studs
- Studs that are torn off the track
- Missing track guide(s)
- Also, ensure that studs nut are tighten to the recommended torque.

On approved studded tracks, replace broken or damaged studs immediately. If your track shows signs of deterioration, it must be replaced immediately. When in doubt, ask your dealer. Always proceed with a visual inspection of your track before each use.

**⚠ WARNING**

Riding with a damaged track or studs could lead to loss of control.

# IMPORTANT ON-PRODUCT LABELS

## Hang Tag(s)

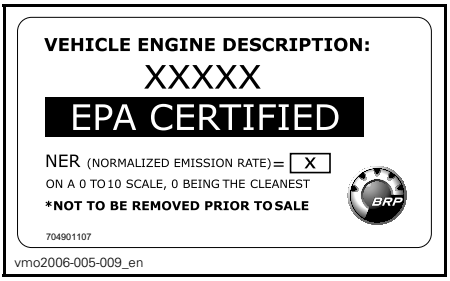


*TYPICAL*

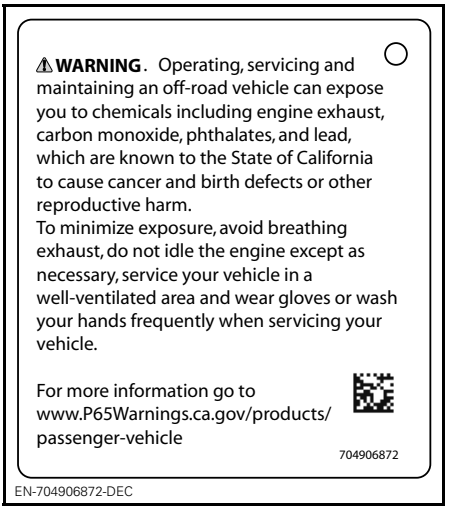


## Vehicle Safety Labels

These labels are affixed to the vehicle for the safety of the operator, passenger or bystanders.

The following labels are on your vehicle and they should be considered permanent parts of the vehicle. If missing or damaged, the decals can be replaced free of charge. See an authorized Ski-Doo dealer.

NOTE: In the event of any discrepancy between this guide and the vehicle, the safety labels on the vehicle have precedence over the labels in this guide.

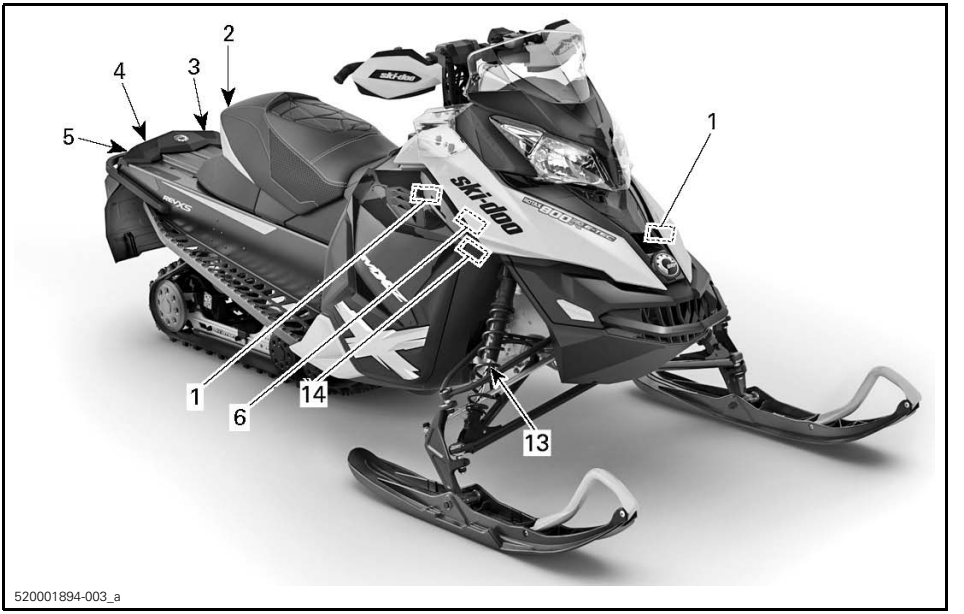


*TYPICAL*

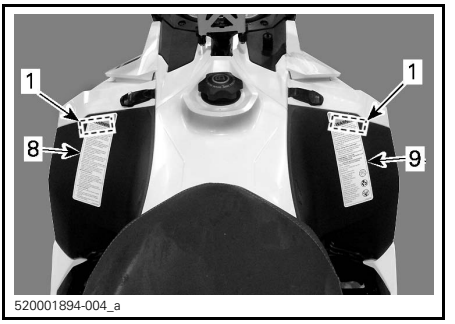


*TYPICAL*

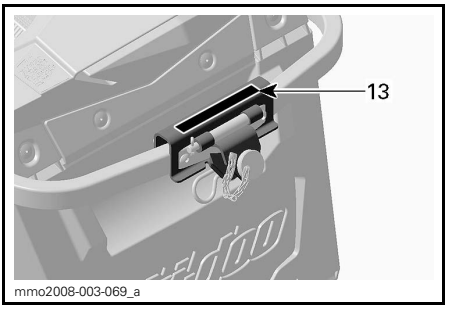


*TYPICAL*

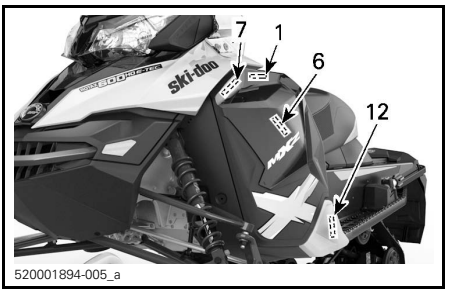


*TYPICAL*

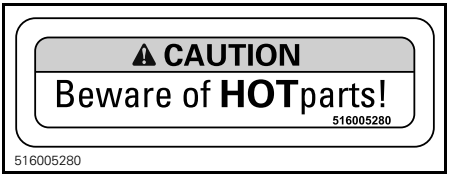


*LABEL 1*

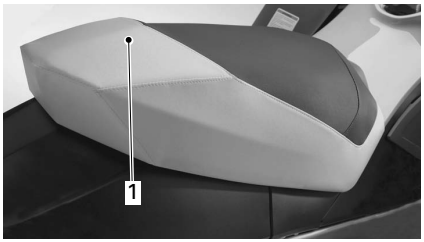


*LABEL 2 - 1 UP MODELS*
*1. DO NOT SIT HERE*

*LABEL 3*

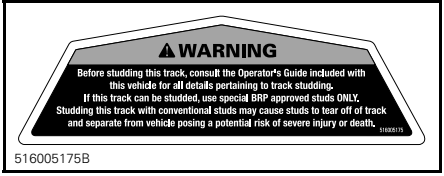


*LABEL 4 - APPLICABLE MODELS*

*LABEL 5*

*LABEL 5 - EXPEDITION SPORT ONLY*

*LABEL 6*

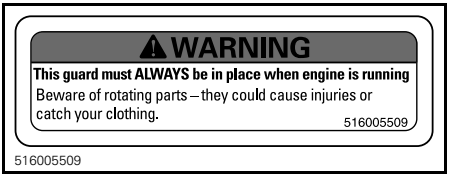


*LABEL 7*

*LABEL 8*

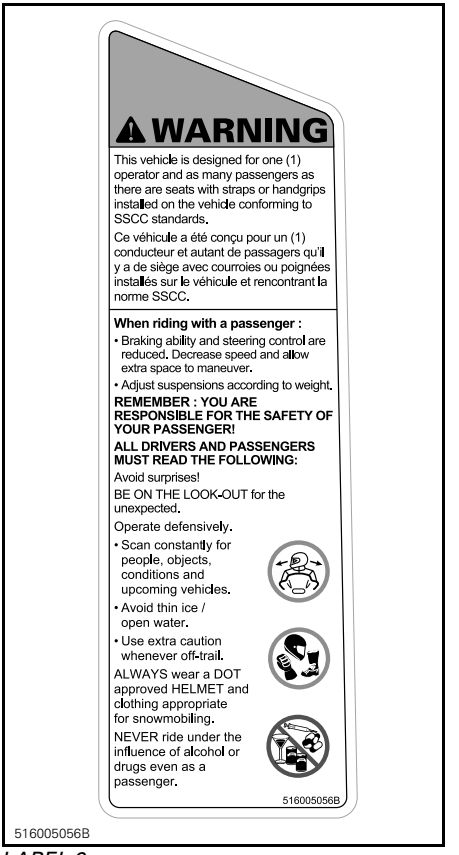


*LABEL 9*

*LABEL 10- EUROPEAN MODELS*

**⚠ WARNING**

Towing a load may affect handling of your snowmobile. • Reduce speed. • Use rigid tow bar.
• Ensure that the tow bar is securely fastened. Do not exceed the following loads:
TOWING WEIGHT 250Kg / 562 lbs Max. VERTICAL LOAD 10Kg / 23 lbs Max.

516004568

516004568

*LABEL 11*

mmo2008-008-023

*LABEL 12- ON BRAKE DISC GUARD (BARE METAL TUNNEL)*

516005525

*LABEL 12 - ON BRAKE DISC GUARD (PAINTED TUNNEL)*

**⚠ WARNING**

- This shock absorber is pressurized.
- An explosion may occur if heated or punctured.
- Do not disassemble.

mmo2010-003-101_en

*LABEL 13 - ON GAS CHARGED SHOCK ABSORBERS*

516005904A

*LABEL 14*

**⚠ CAUTION**

ENGINE OIL AND CERTAIN COMPOMENTS IN THE ENGINE COMPARTMENT MAY BE HOT. DIRECT CONTACT MAY RESULT IN SKIN BURN.

**CHECKING ENGINE OIL LEVEL**

- Make sure engine is at operating temperature.
- Vehicle must be level to perform verification.
- Let engine running at idle for at least 30 seconds.
- Stop engine and wait at least 30 seconds.
- Check oil level using the dipstick.
- The engine of this snowmobile has been developed and validated using the BRP XPS™ Synthetic 4-stroke oil ( 293 600 112 ). BRP recommends the use of its XPS™ approved lubricant or equivalent. Damages caused by oil which is not suitable for this engine may not be covered by the BRP limited warranty. See operator`s guide.

516007500

*IN ENGINE COMPARTMENT*

## Compliance Labels

*TYPICAL*

*TYPICAL*

### EPA Compliance Label

**EMISSION CONTROL INFORMATION**
THIS VEHICLE IS CERTIFIED TO OPERATE ON UNLEADED GASOLINE AND MEETS XXXX U.S. EPA REGULATIONS FOR SNOWMOBILE SI ENGINES.
EC 121

| | | |
|---|---|---|
| ENGINE FAMILY | XXXXXXXXXXXX | FAMILLE DE MOTEUR |
| PERMEATION FAMILY | XXXXXXXXXXXX | FAMILLE DE PERMÉATION |
| FEL | XX g/kW-hr HC<br>XXX g/kW-hr CO<br>X.X g/ m2 / day | LIMITE DES ÉMISSIONS DES FAMILLES |
| ENGINE DISPLACEMENT | XXX $cm^3$ | CYLINDRÉE |
| EXHAUST EMISSION CONTROL SYSTEM | XXXX | SYSTÈME DE CONTRÔLE DES ÉMISSIONS |

**RENSEIGNEMENTS SUR LE DISPOSITIF ANTIPOLLUTION**
CE VÉHICULE EST CERTIFIÉ POUR FONCTIONNER À L'ESSENCE SANS PLOMB ET IL RÉPOND AUX NORMES XXXX DE L'EPA DES É.-U. POUR LES MOTONEIGES À MOTEUR SI.
**SEE OPERATOR'S GUIDE FOR MAINTENANCE SPECIFICATIONS**
**VOIR GUIDE DU CONDUCTEUR POUR LES SPÉCIFICATIONS D'ENTRETIENS**
**BOMBARDIER RECREATIONAL PRODUCTS INC.** 6865

516006865

*TYPICAL: COMPLIANCE LABEL 1 - IN ENGINE COMPARTMENT*

516007475

*TYPICAL - LABEL 2*

### SSCC Label

Safety standards for snowmobiles have been adopted by the Snowmobile Safety and Certification Committee (SSCC) of which BRP is a proud participating member. Assurance that your snowmobile meets these standards is easily checked by locating the Certification Label on a right vertical portion of the vehicle.

The following label shows that an independent testing laboratory has verified compliance with the SSCC safety standards.

*LABEL 3*

## Technical Information Labels

*TYPICAL*

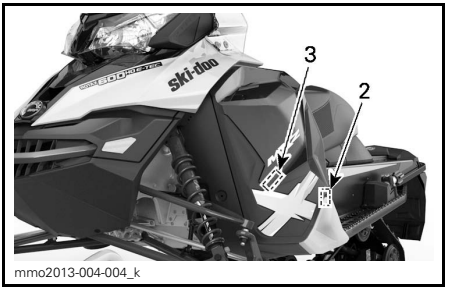


*TYPICAL*

**NOTICE**

**The engine of this snowmobile has been developed and validated using the BRP XPS™ approved lubricant. BRP recommends the use of its XPS™ approved lubricant or equivalent.**
**Damages caused by oil which is not suitable for this engine may not be covered by the BRP limited warranty. See the operator´s guide.**
516007443

516007443

*LABEL 1*

**NOTICE**

- **To comply with noise regulations, this engine is designed to operate with an air intake silencer.**
- **Operation without air intake silencer or with one not properly installed may cause engine damage.**

5876A

516005876

*LABEL 2*

**NOTICE**

Drive pulley bolt recommended torque
**85-92 lbf-ft / 115-125N-m**
Not applying the recommended torque may result in a major failure of the drive pulley and the engine.Refer to the shop manual for the complete assembly procedure

516005503

516005503

*LABEL 3*

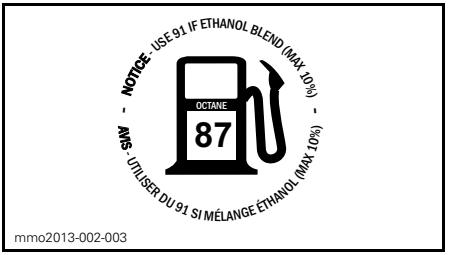


*LOCATED ON FUEL CAP, IN COUNTRIES USING PUMP POSTED AKI (RON+MON)/2 OCTANE RATINGS*

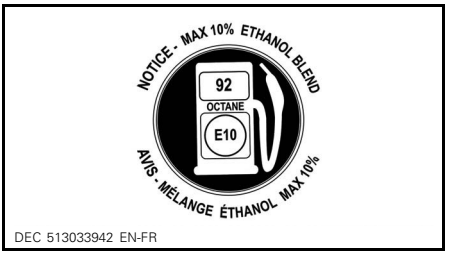


*LOCATED ON FUEL CAP, IN COUNTRIES USING RON OCTANE RATINGS*

# *VEHICLE INFORMATION*

# CONTROLS, INSTRUMENTS AND EQUIPMENT

NOTE: Some features may not apply to your model or could be optional.

NOTE: Some vehicle safety labels are not shown on illustrations. For information on vehicle safety labels, refer to *VEHICLE SAFETY LABELS* subsection.

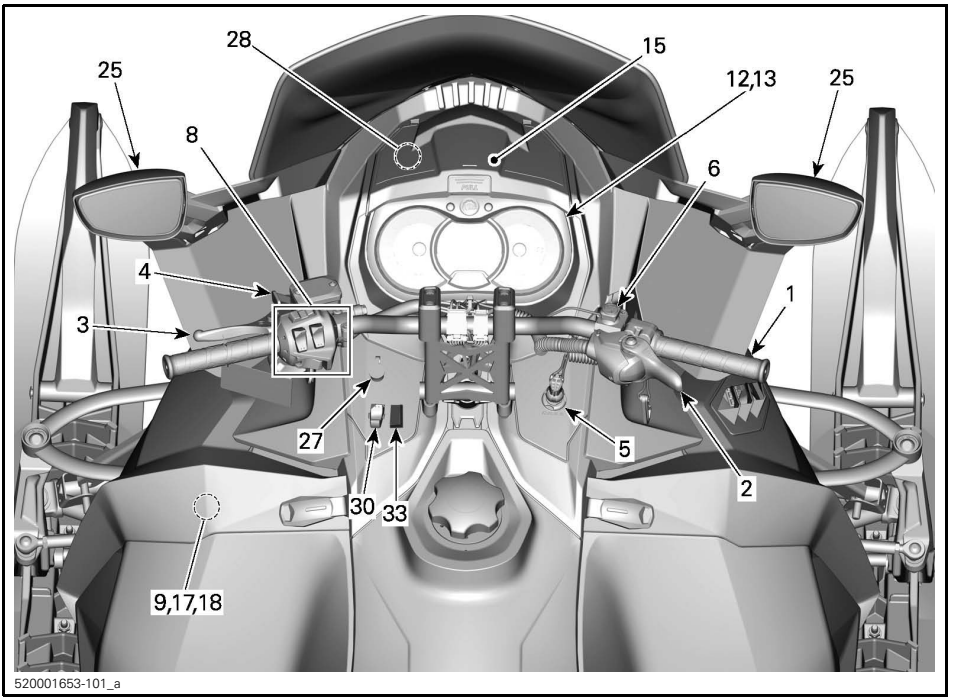


*TYPICAL - GRAND TOURING SHOWN*

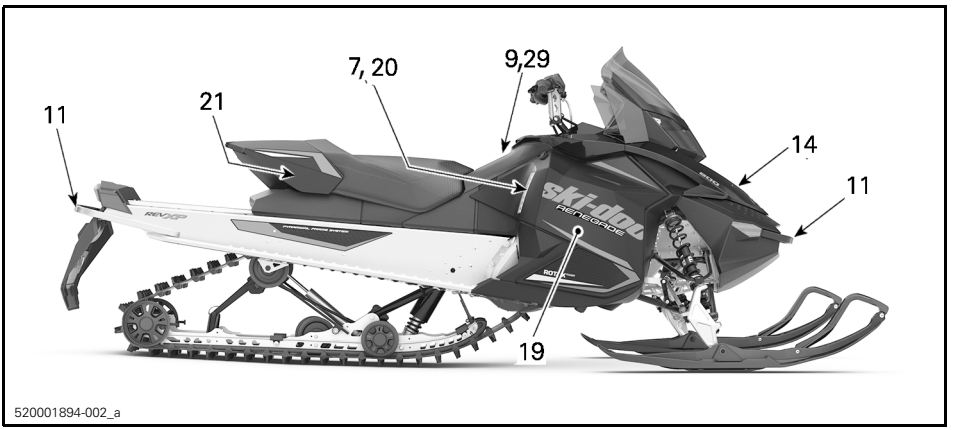


*TYPICAL - RENEGADE SPORT SHOWN*

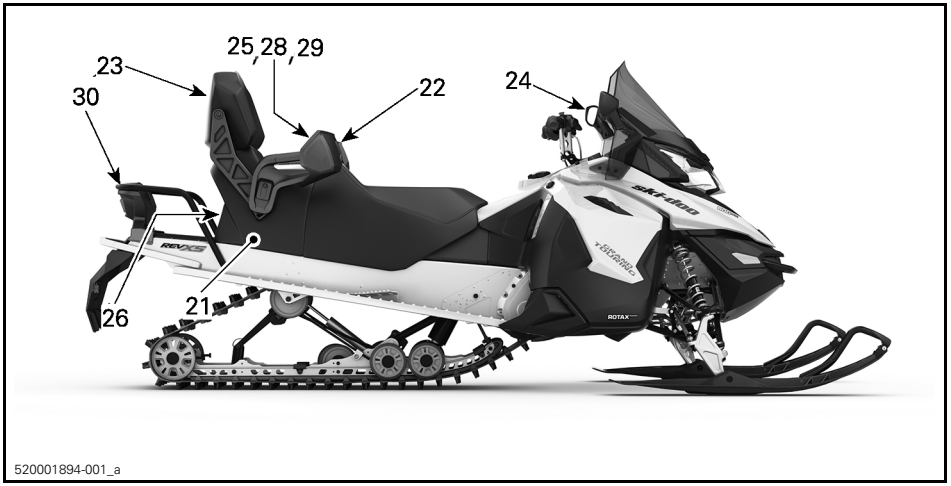


*TYPICAL - GRAND TOURING SPORT SHOWN*

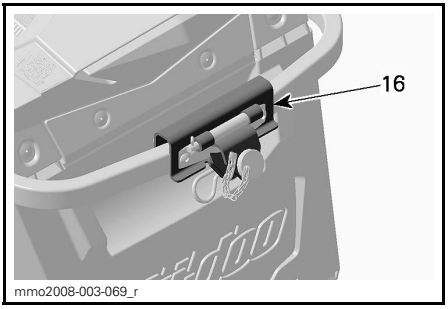


*SOME EUROPEAN MODELS*

## 1) Handlebar

The handlebar controls the steering of the snowmobile. As the handlebar is rotated to right or left, the skis are turned right or left to steer the snowmobile.

**⚠ WARNING**

**Fast reverse while turning, could result in loss of stability and control.**

## 2) Throttle Lever

Throttle lever is located on the RH side of handlebar.

Designed to be thumb activated. When squeezed, it increases the engine speed. When released, engine speed returns automatically to idle.

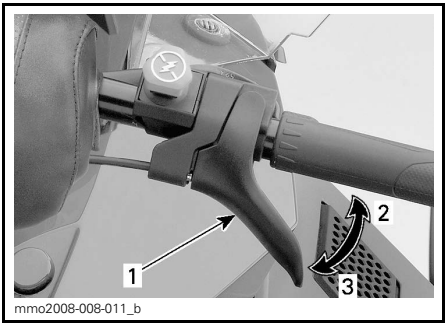


*TYPICAL*
1. *Throttle lever*
2. *To accelerate*
3. *To decelerate*

**⚠ WARNING**

**Test the throttle lever operation each time before starting the engine. The lever must return to the rest position once released. Otherwise, do not start engine.**

**Throttle Lever**

Throttle lever is located on the RH side of handlebar.

Designed to be either thumb activated or finger activated. When squeezed, it increases the engine speed. When released, engine speed returns automatically to idle.

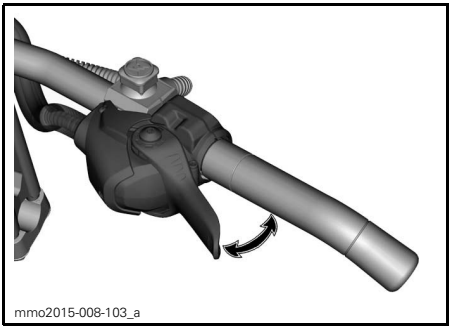


*TYPICAL*

**⚠ WARNING**

Test the throttle lever operation each time before starting the engine. The lever must return to its the rest position once released. Otherwise, do not start engine.

Switching from Thumb to Finger Throttle Position

**⚠ CAUTION** It is highly recommended to immobilize the snowmobile before attempting any modification to the throttle position as it could lead to a hazardous situation.

There are mainly three positions to choose from when going from the thumb to the finger throttle position and the best one will be to the rider's preference and in direct relation with the riding style and conditions.

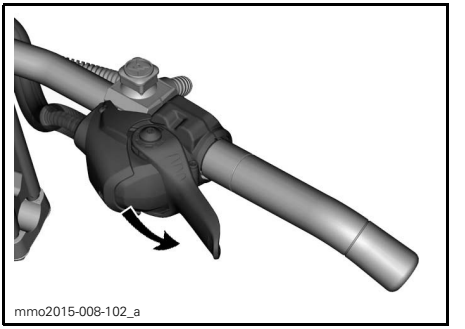


*THUMB THROTTLE POSITION : PUSH DOWNWARD TO ROTATE THROTTLE HOUSING*

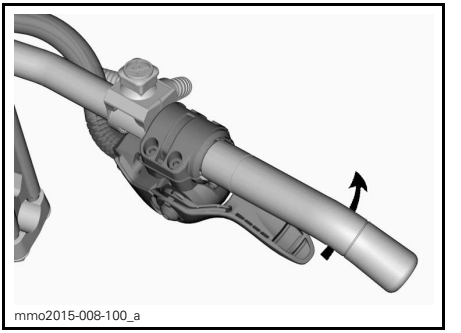


*IF WANTED, CONTINUE TO ROTATE THE THROTTLE HOUSING*

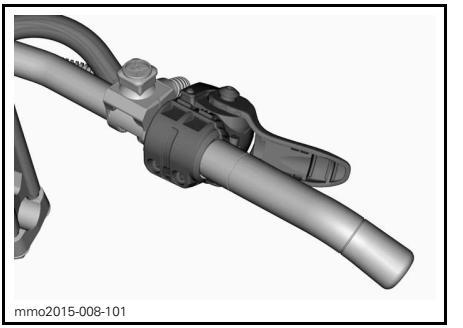


*FINGER THROTTLE POSITION*

**⚠ CAUTION**

- It is HIGHLY recommended to use gloves and NOT mitts when using the finger throttle position.
- It is not recommended to use the finger throttle position while riding in dense off trail areas.

The procedure to go back to the thumb throttle position is the reverse of the one shown above.

## 3) Brake Lever

Brake lever is located on the LH side of handlebar.

When squeezed, brake is applied. When released, it automatically returns to the rest. Braking effect is proportional to the pressure applied on the lever and to the type of terrain and its snow coverage.

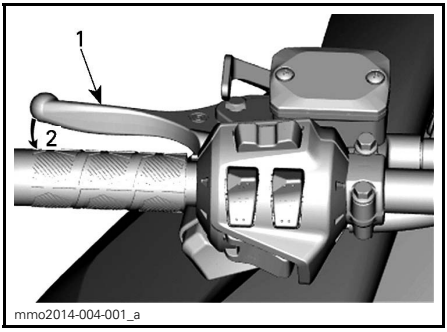


*TYPICAL*
1. *Brake lever*
2. *To apply brake*

## 4) Parking Brake Lever

Parking brake lever is located on the LH side of handlebar.

Parking brake should be used whenever snowmobile is parked.

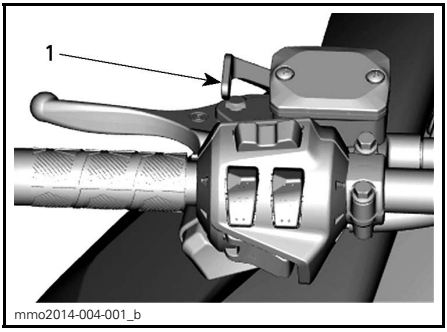


*TYPICAL*
1. *Parking brake lever*

**⚠ WARNING**

Make sure parking brake is fully disengaged before operating the snowmobile. When you ride the vehicle, brake pads that are caused to drag by a continuous pressure on the lever may cause damage to the brake system and cause loss of braking capacity and/or fire.

### To Engage Parking Brake

Apply and hold brake, then lock brake lever using the parking brake lever as shown.

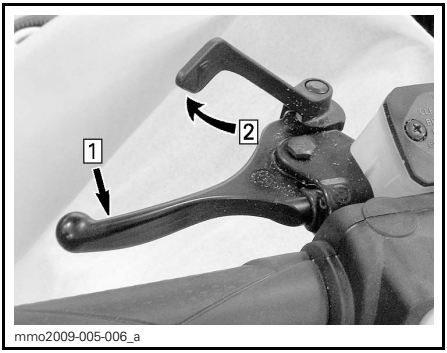


*TYPICAL — ENGAGE MECHANISM*
*Step 1: Apply and hold brake*
*Step 2: Lock brake lever using parking brake lever*

### To Release Parking Brake

Squeeze brake lever. Parking brake lever will automatically return to its original position. Always release parking brake before riding.

## 5) Engine Cut-off Switch

The engine cut-off switch (tether cord) is located to on the RH side of console.

The tether cord cap must be securely snapped on the engine cut-off switch to allow vehicle operation.

NOTE: After engine starting, 2 short beeps should be heard if a programmed D.E.S.S. key (tether cord cap) is correctly snapped on engine cut-off switch. If another beep code is heard, refer to *MONITORING SYSTEM* for D.E.S.S. malfunction codes information.

Pulling the tether cord cap from the switch shuts the engine off.

**⚠ WARNING**

**Always attach the tether cord eyelet to clothing before starting the engine.**

**D.E.S.S. (Digitally Encoded Security System)**

The tether cord cap has an integrated D.E.S.S. key to provide you and your snowmobile with the equivalent security of a conventional lock key.

The D.E.S.S. key contains an electronic chip which features a unique permanently memorized digital code.

Your authorized Ski-Doo dealer has programed the D.E.S.S. of your snowmobile to recognize the D.E.S.S. key in the tether cord cap to allow vehicle operation.

If another tether cord is used without programming the D.E.S.S., the engine will start but will not reach drive pulley engagement speed to move vehicle.

Make sure the tether cord cap is free of dirt or snow.

**D.E.S.S. Flexibility**

The D.E.S.S. of your snowmobile can be programmed by your authorized Ski-Doo dealer to accept up to 8 different keys.

We recommend the purchase of additional tether cords from your authorized Ski-Doo dealer. If you have more than one D.E.S.S. equipped Ski-Doo snowmobile, each can be programmed by your authorized Ski-Doo dealer to accept the other vehicles D.E.S.S. keys.

**RF D.E.S.S. Key Types**

Two types of keys can be used:
– Normal key
– Learning key.

To ease key type recognition, the key comes in different colors.

| KEY TYPE | COLOR |
|---|---|
| Normal | Gray |
| Learning | Green |

The Ski-Doo learning key, limits the speed of the snowmobile and the engine torque, therefore enabling first time users and less experienced operators to learn how to operate the snowmobile while gaining the necessary confidence and control.

NOTE: The initial learning key programming can limit the speed to 40 km/h (25 MPH) or 70 km/h (43 MPH). Refer to your authorized Ski-Doo dealer to modify this setting.

Refer to *OPERATING MODES* subsection for details.

## 6) Emergency Engine Stop Switch

The emergency engine stop switch is located on the RH side of handlebar.

Push-pull type switch.

To stop the engine in an emergency, select OFF position (down) and simultaneously apply the brake. To restart, button must be at the ON position (up).

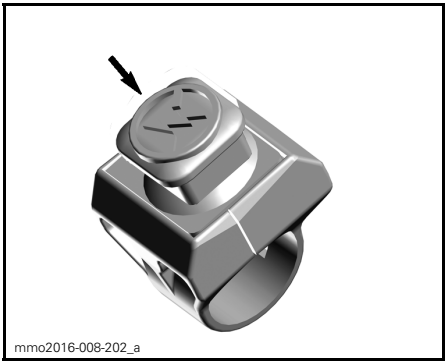


*OFF POSITION*

To allow engine starting, the switch must be in the ON position (UP).

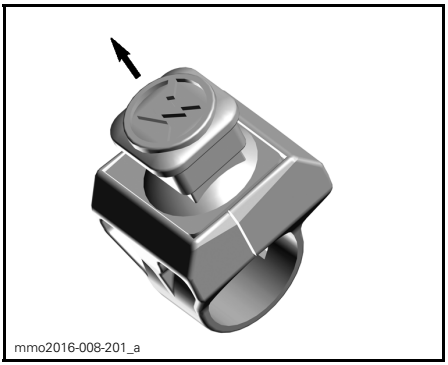


*ON POSITION*

All operators of the snowmobile should familiarize themselves with the function of the emergency engine stop switch by using it several times on first outing and whenever stopping the engine thereafter. This engine stopping procedure will become a reflex and will prepare operators for emergency situations requiring its use.

**⚠ WARNING**

If the switch has been used in an emergency caused by a suspected malfunction, the source of the malfunction should be determined and corrected before restarting engine. See an authorized Ski-Doo dealer for servicing.

## 7) Shift Lever

Use this lever to shift in forward or reverse.

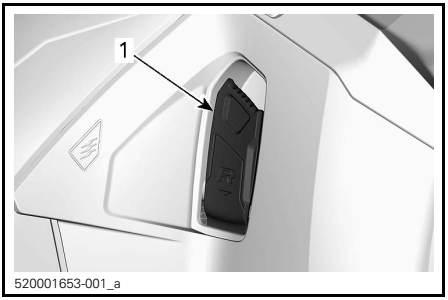


*1. Reverse shift lever*

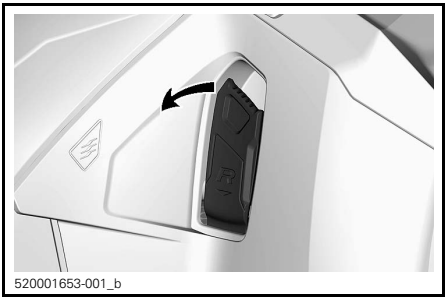


*PULL TO ENGAGE REVERSE GEAR*

Refer to *OPERATING IN REVERSE* in *BASIC PROCEDURES* for details.

## 8) Multifunction Switch

Multifunction switch is located on the LH side of handlebar.

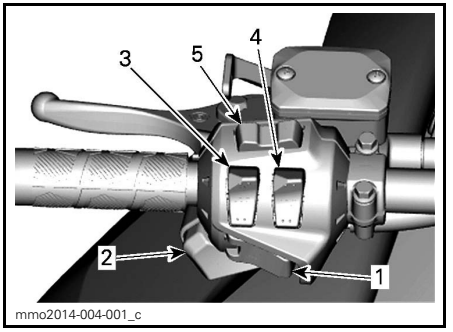


*TYPICAL*
1. *Start/Electronic Reverse button*
2. *Headlights dimmer switch*
3. *Heated grips*
4. *Heated throttle lever*
5. *Mode/set button*

### Start/Electronic Reverse Button

On electric start models, press to start engine. Refer to *ENGINE STARTING PROCEDURE* in the *BASIC PROCEDURES* subsection.

#### *Electronic Reverse Models*

Once engine is started, press to engage the electronic reverse. Refer to *REVERSE (RER)* in *BASIC PROCEDURES* section for procedure.

### Headlights Dimmer Switch

Press to select HI or LOW beam. Lights are automatically ON when the engine is running.

### Heated Grips Switch

NOTE: Heated grips are enabled above 2000 engine RPM.

Depress switch as required to select heating intensity to keep your hands at a comfortable temperature.

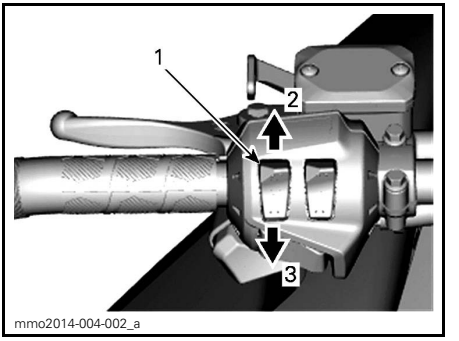


*TYPICAL*
1. *Heated grip switch*
2. *Increase heat*
3. *Decrease heat*

NOTE: When released, display will return to fuel tank level.

The heating intensity is displayed via the digital display.

NOTE: There are nine intensity settings.

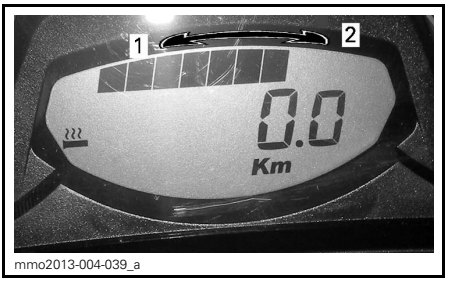


*HEATING INTENSITY DISPLAY*
1. *Less heat*
2. *More heat*

Heated grips will be in OFF position when there are no bars displayed on the gauge.

### Heated Throttle Lever Switch

NOTE: Heated throttle lever is enabled above 2000 engine RPM.

Depress switch as required to select heating intensity to keep your thumb at a comfortable temperature.

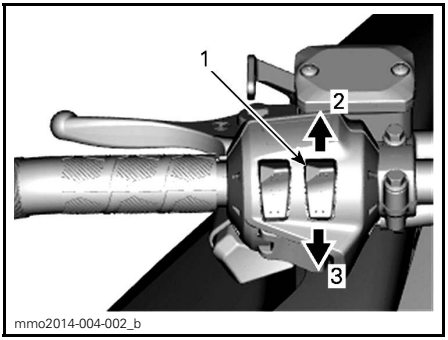


*TYPICAL*
1. *Heated throttle lever switch*
2. *Increase heat*
3. *Decrease heat*

NOTE: The heating intensity is displayed via the digital display with the activation of the throttle lever switch. There are nine intensity settings. When released, display will return to fuel tank level.

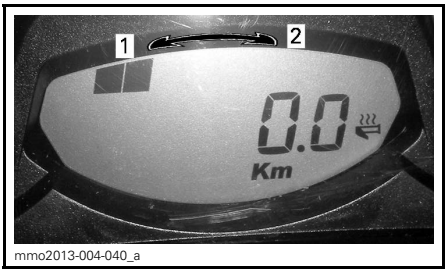


*HEATING INTENSITY DISPLAY*
1. *Less heat*
2. *More heat*

Heated throttle lever will be in OFF position when there are no bars displayed on the gauge.

## 9) Seat Latch

Operator's seat can be removed to access to the Operator's Guide (located in seat base) or for maintenance purposes.

Seat latch is located at the front of the seat.

### Seat Removal

To remove the operator's seat, proceed as follows:

NOTE: On Grand Touring models, it is necessary to remove the passenger seat. Refer to *PASSENGER SEAT (2-UP MODELS)*.

Pull front of seat cushion, firmly push seat forward to unload latch, then pull tab to unlock seat.

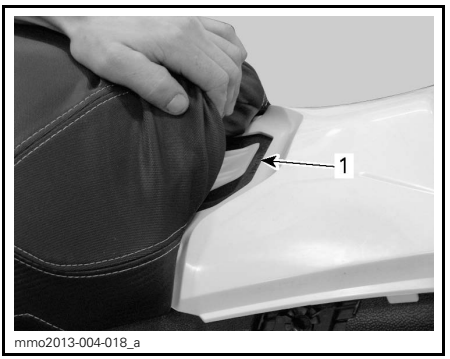


*TYPICAL*
1. *Seat latch*

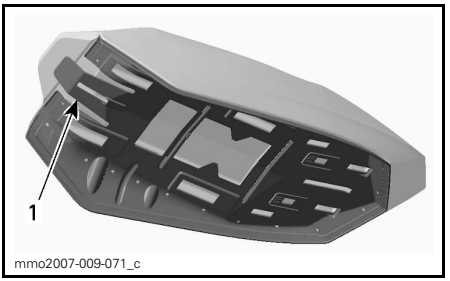


1. *Seat latch*

Pull and hold seat latch, then, pull seat with a rearward movement.

NOTE: On models with a heated seat, disconnect the electrical connector located underneath the seat.

**NOTICE** **Do not stretch the electrical connector and wiring.**

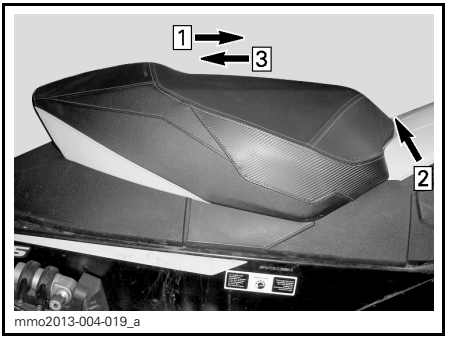


*TYPICAL*
*Step 1: Push seat forward*
*Step 2: Pull and hold seat latch*
*Step 3: Pull seat with a rearward movement*

**Seat Installation**

***NOTICE*** Riding the vehicle with any objects between the seat and the fuel tank could damage the fuel tank. NEVER place any objects between seat and fuel tank.

Position seat in place.

NOTE: On models equipped with a heated seat, connect the electrical connector.

Push seat forward until it latches in position.

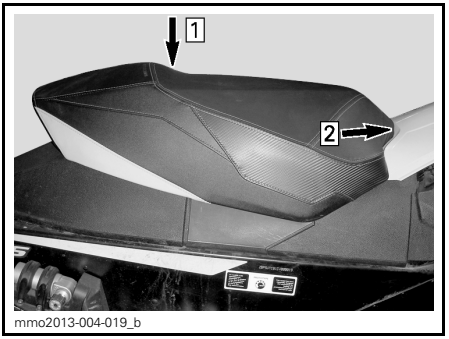


*TYPICAL*
*Step 1: Position seat in place*
*Step 2: Push seat forward until it latches*

NOTE: A distinctive snap will be felt. Double check that the seat is secure by giving it a tug to confirm proper latching.

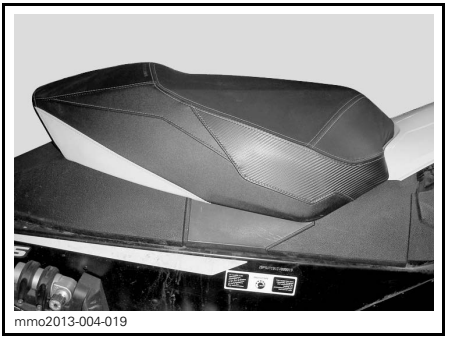


*TYPICAL - SEAT INSTALLED*

**⚠ WARNING**

Make sure seat is securely latched before riding.

## 10) Tool Kit

A tool kit containing tools for basic maintenance is supplied with the vehicle.

The tools are located directly on the pulley drive guard.

***NOTICE*** Make sure tools are secured properly to avoid contact with CVT (continuously variable transmission). The driven pulley expander is inserted through the starter clip.

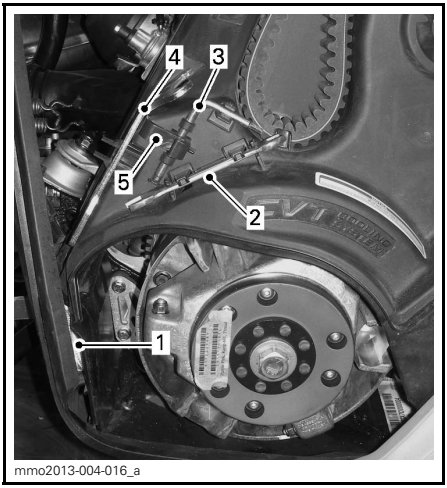

mmo2013-004-016_a

*TYPICAL*
1. *Emergency rope*
2. *Wrench*
3. *Driven pulley expander*
4. *Suspension adjustment tool*
5. *Starter clip*

## 11) Front and Rear Bumpers

To be used whenever snowmobile requires manual lifting.

**⚠ CAUTION** Beware of injuries by using proper lifting techniques, notably using your legs force. Do not attempt to lift the rear of vehicle if it is above your limits. Use appropriate lifting device or have assistance to share lifting stress if possible.

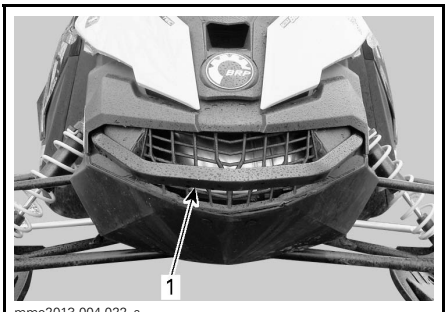

mmo2013-004-022_a

*TYPICAL - FRONT*
1. *Front bumper*

mmo2013-004-023_a

*TYPICAL - REAR*
1. *Rear bumper*

***NOTICE*** Do not use skis to pull or lift snowmobile.

## 12) Analog/Digital Gauge

**⚠ WARNING**

Reading the gauge digital display can distract from the operation of the vehicle, particularly from constantly scanning the environment.

### Gauge Description

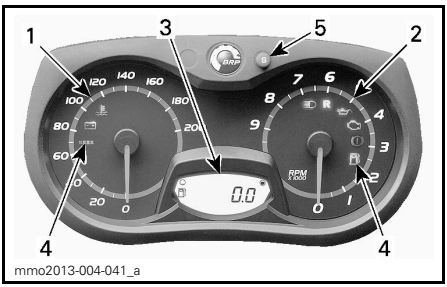

mmo2013-004-041_a

*ANALOG/DIGITAL GAUGE (STANDARD)*
1. *Speedometer*
2. *Tachometer (RPM)*
3. *Gauge digital display*
4. *Pilot lamps*
5. *Gauge SET (S) button*

NOTE: The gauge is factory preset in Imperial units but it is possible to change it to metric units, contact an authorized Ski-Doo dealer for unit settings.

### 1) Speedometer

Measures vehicle speed (in miles per hour or kilometers per hour depending on the setting).

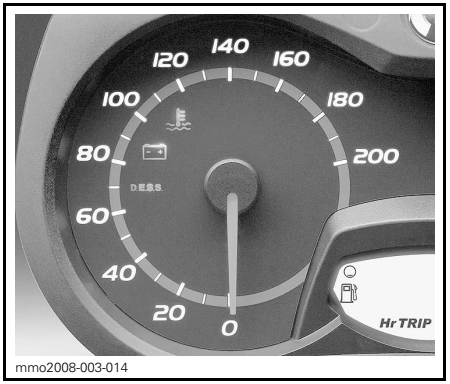


*LH PORTION OF GAUGE*

### 2) Tachometer (RPM)

Measures engine revolution per minute (RPM). Multiply by 1000 to obtain the actual revolutions.

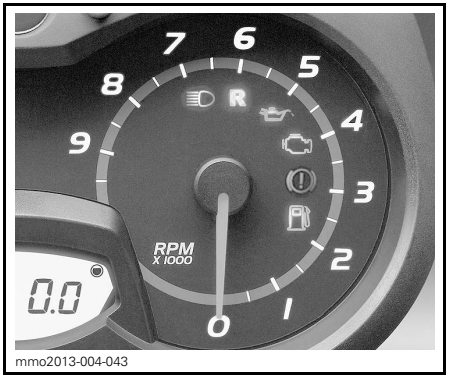


*RH PORTION OF GAUGE*

### 3) Digital Display

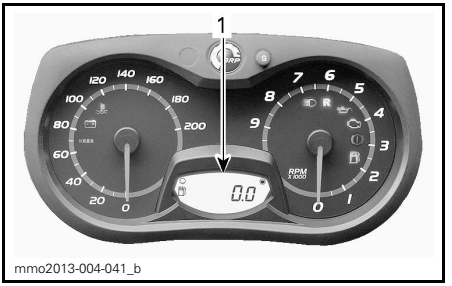


*1. Digital display*

The multifunction display is used to:

- Display the WELCOME message on power up
- Display the KEY recognition message
- Provide various indications as selected by the operator
- Activating or changing various functions or modes of operation
- Display scrolling messages of function activation or system faults
- Display fault codes.

**⚠ WARNING**

**Never adjust or set functions on the multifunction gauge while riding the vehicle.**

### 4) Pilot Lamps and Messages

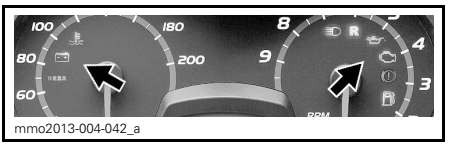


*TYPICAL — PILOT LAMPS*

See table below for usual pilot lamps information. Refer to *MONITORING SYSTEM* for details on malfunction pilot lamps.

| PILOT LAMP(S) ON | BEEPER | DESCRIPTION |
|---|---|---|
| | — | Low fuel level. One (1) bar left in fuel level display. Replenish fuel tank as soon as possible. |
| | Long beeps repeating slowly | Reverse is selected. |
| | 3 short beeps | Reverse did not engage, try again. |
| | — | High beam headlights are selected. |
| | — | ECO mode is selected. |
| | — | Standard mode is selected. |
| | — | Sport mode is selected. |

### 5) SET (S) Button

Button used to navigate, adjust or reset gauge multifunction display.

In order to memorize settings, engine must be running.

NOTE: SET (S) button on the multifunction switch has the same functions and can also be used.

## Gauge Features

| GAUGE FEATURES | |
|---|---|
| FUNCTIONS | |
| A) Odometer | X |
| B) Trip meter "A" or "B" | X |
| C) Trip hour meter | X |
| D) Fuel level | X |
| E) Engine coolant temperature (1) | Opt |
| F) Heated grips heating intensity | X |
| G) Heated throttle Lever heating intensity | X |
| X = An X indicates a standard feature<br>Opt = Feature available as an option<br><br>(1) Coolant temperature is an option package. See a Ski-Doo dealer for more information. | |

NOTE: The display is factory preset in Imperial units but it is possible to change it to Metric units, contact an authorized Ski-Doo dealer for unit settings.

### A) Odometer

Records the total distance travelled.

Press the SET (S) button to select odometer mode.

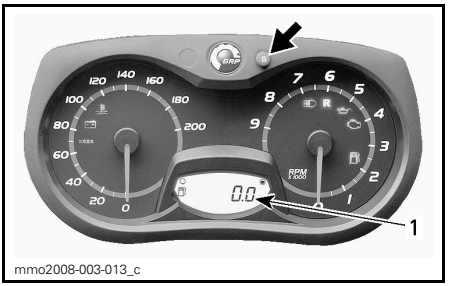


*1. Odometer mode*

### B) Trip Meter A or B

Trip meters records distance travelled since it has been reset.

Press the SET (S) button to select trip meter (TRIP A/TRIP B) mode.

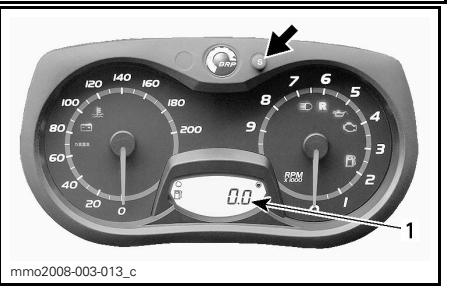


*1. Trip meter (TRIP A/TRIP B) mode*

Press and hold the SET (S) button to reset.

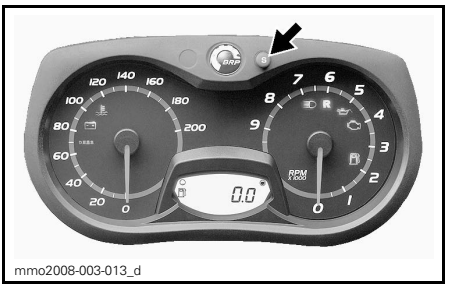


### C) Trip Hour Meter

Records vehicle running time when the electrical system is activated since it has been reset.

Press the SET (S) button to select trip hour meter (HrTRIP) mode.

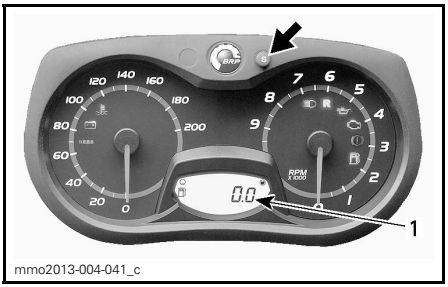


*1. Trip hour meter (HrTRIP) mode*

Press and hold the SET (S) button to reset.

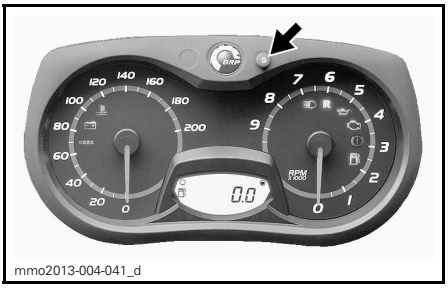


### D) Fuel Level

Bar gauge that continuously indicates the amount of fuel left in the fuel tank.

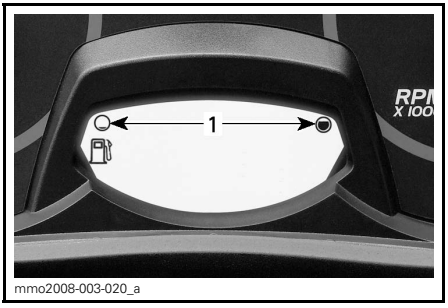


*FUEL LEVEL*
*1. Operating range*

### E) Engine Coolant Temperature (Optional Module)

The engine temperture level is displayed via the digital display.

**NOTICE** If engine overheats, stop vehicle in a safe place. Refer to TROUBLESHOOTING section.

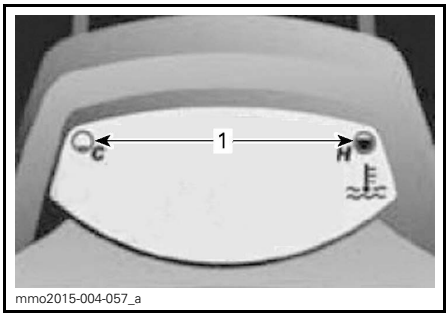


*OPTIONAL MODULE INSTALLED*
*1. Engine temperature level*

### F) Heated Grips Heating Intensity

The heating intensity is displayed via the digital display.

NOTE: There are nine intensity settings. When released, display will return to fuel tank level.

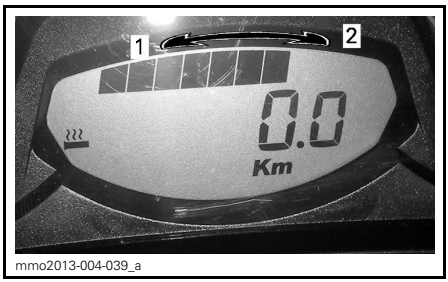


*HEATING INTENSITY DISPLAY*
*1. Less heat*
*2. More heat*

### G) Heated Throttle Lever Heating Intensity

NOTE: The heating intensity is displayed via the digital display with the activation of the throttle lever switch. When released, display will return to fuel tank level.

NOTE: There are nine intensity settings.

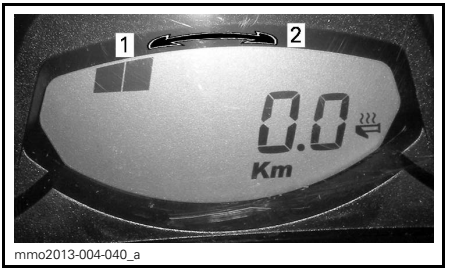


*HEATING INTENSITY DISPLAY*
1. *Less heat*
2. *More heat*

## 13) Storage Compartment

**⚠ WARNING**

**All storage compartments must be securely closed and must not contain any sharp, heavy or breakable objects.**

***NOTICE*** **MAXIMUM load is 1.8 kg (4 lb) evenly distributed.**

Turn latch right then pull down right hand side of cover to unlock compartment.

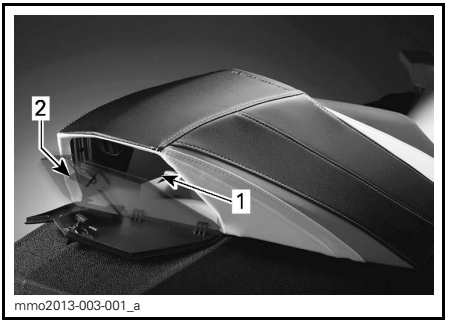


1. *Storage compartment*
2. *Latch*

Push left hand side of cover back up first then push back right hand side of cover and turn latch right to lock.

Close cover and pull latch downward and secure it to the hook.

### *2-UP Models*

The storage compartment is located at rear of the rear seat.

Simply open and close using the zipper.

1. *Storage compartment zipper*

## 14) Front Storage Compartment

A storage compartment is located at the front of the vehicle, above the gauge.

To open the storage compartment, pull the tab.

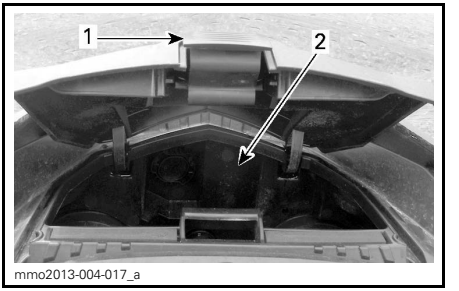


1. *Tab*
2. *Storage compartment*

## 15) Hitch (Europe only)

Use this hitch in conjunction with a tow bar to tow an accessory.

NOTE: Refer to decal on vehicle for towing weight capacities.

**⚠ WARNING**

Never tow an accessory with a rope. Always use a rigid tow bar. Using a rope would result in a collision between the object and the snowmobile and possibly in a tip over in case of a rapid deceleration or on a downward slope.

### How to Use the Hitch

Detach hitch from its support by removing the hairpin.

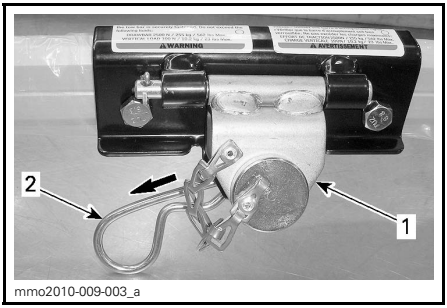


*1. Hitch*
*2. Hairpin*

Remove rod from hitch then attach rigid tow bar to hitch using the same rod.

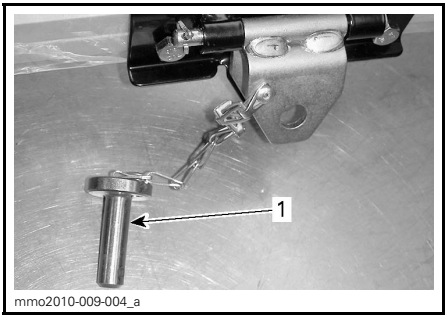


*TYPICAL*
*1. Rod*

Secure rod to hitch using hairpin previously removed.

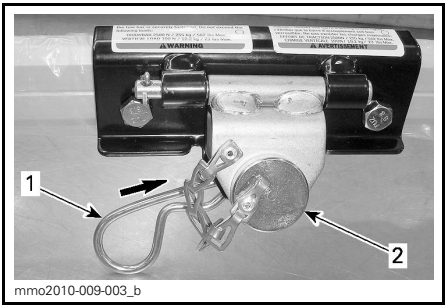


*TYPICAL*
*1. Hairpin*
*2. Rod*

***NOTICE*** To avoid damages to the vehicle, always release hitch from its support. Ensure hitch moves freely when towing accessories.

*HITCH MOVES FREELY WHEN TOWING*

To avoid noise from hitch when not in use, secure hitch to its support by using the hairpin.

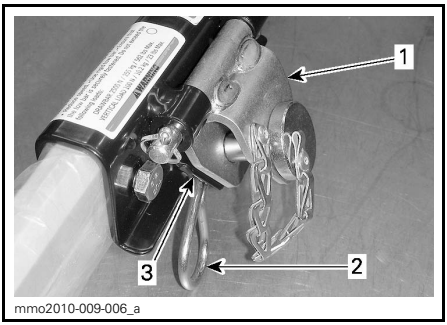


*HITCH NOT IN USE*
*1. Hitch*
*2. Hairpin*
*3. Support*

## 16) Drive Belt Guard

### Drive Belt Guard Removal

**⚠ WARNING**

NEVER operate engine:
- Without shields and belt guard securely installed.
- With hood and/or side panels opened or removed.

NEVER attempt to make adjustments to moving parts while engine is running.

NOTE: Belt guard is purposely made slightly oversize to maintain tension on its pins and retainers preventing undue noise and vibration. It is important that this tension be maintained when reinstalling.

Remove tether cord cap from engine cut-off switch.

Open engine compartment LH side panel.

Remove retaining pin.

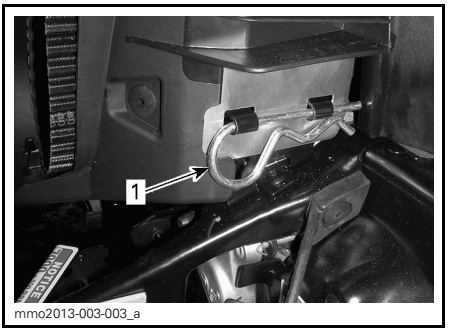


*1. Retaining pin*

Lift rear portion of guard then release from front tab by pivoting the guard outwards.

### Drive Belt Guard Installation

When reinstalling belt guard, position its cutaway toward front of snowmobile.

Insert the tab into the slot and push it into place

*TYPICAL*
*1. Tab*

Position the grommet over the retaining rod. It may be necessary to slightly lift the console to make room.

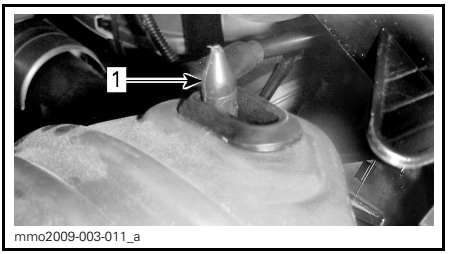


*TYPICAL*
*1. Retaining rod*

Position rear portion of the belt guard over the retainer and secure it using the retaining pin.

NOTE: Make sure rear portion of the belt guard is properly positioned on the stopper.

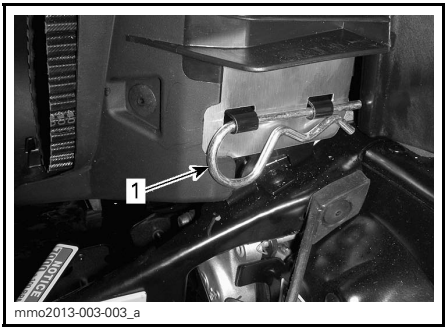


*1. Retaining pin*

## 17) Spare Drive Belt Holder

A spare drive belt can be stored in its holder located on the drive belt guard.

NOTE: The spare drive belt is not supplied with the snowmobile.

Position spare drive belt into drive belt guard slot.

Secure in place by sliding it into the fastener tabs.

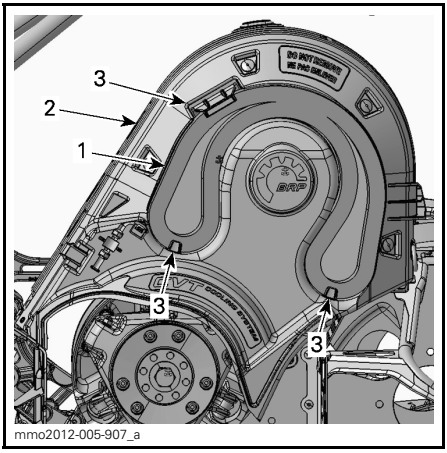


*1. Spare drive belt*
*2. Drive belt guard*
*3. Fastener tabs*

## 18) Upper Body Module (Hood)

### Upper Body Module Removal

1. Remove the gauge.

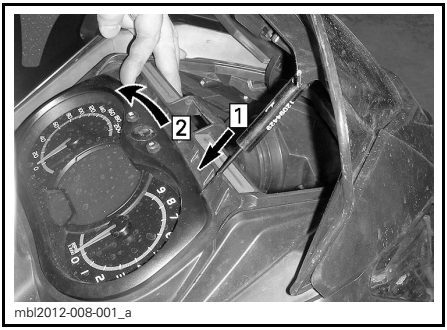


*Step 1: Unlock*
*Step 2: Tilt*

2. Disconnect the gauge connector.
3. Disconnect the headlights connector.

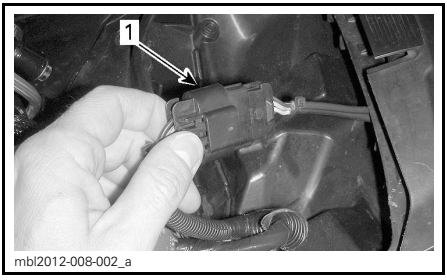


*1. Headlights connector*

4. Open LH side panel.
5. Remove LH and RH side panels.
6. Remove the drive belt guard.
7. Disconnect the air intake connector tube.

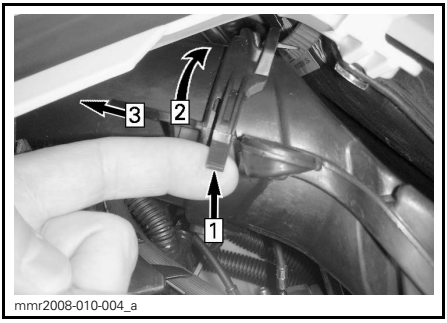


*Step 1: Lift tab*
*Step 2: Twist tube*
*Step 3: Pull forward*

8. Disconnect air temperature sensor (ATS) on top of connector tube.

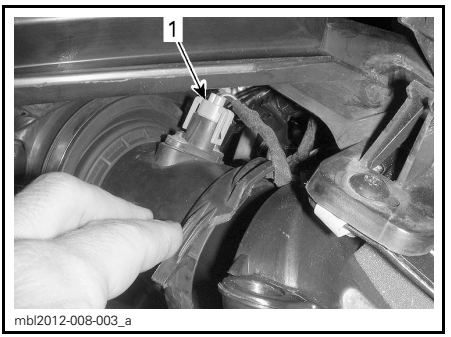


*1. ATS connector*

9. Open and remove RH side panel.
10. Disconnect the APS hose at the ECM.

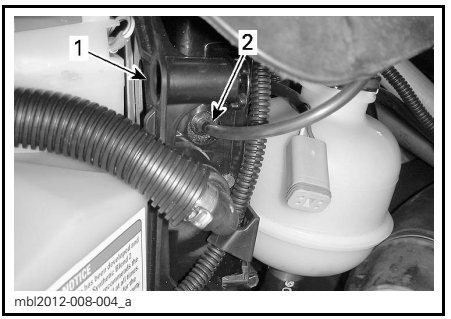


*1. ECM*
*2. APS hose*

11. Remove the four upper body module retaining screws, two on each side.

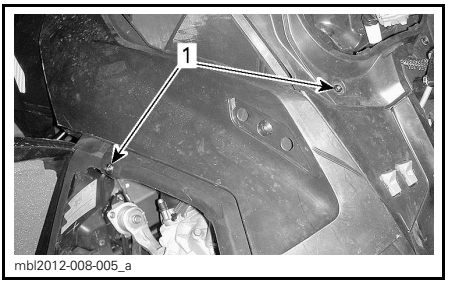


*LH SIDE SHOWN*
*1. Retaining screws*

12. Tilt the upper body module 5 degrees up towards the top section and then push it towards the front of the vehicle.
13. Remove the upper body module.

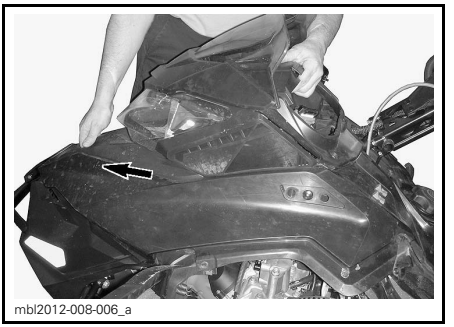


*SLIDE TOWARDS FRONT*

### Upper Body Module Installation

1. Insert the upper body module tabs into the upper bottom pan openings.

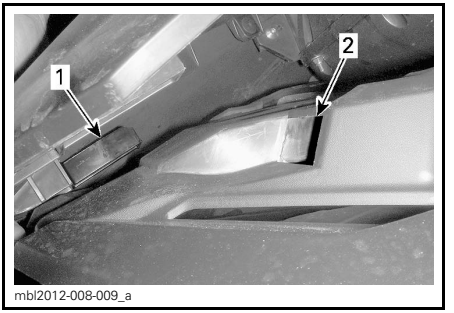


*1. Upper body module tab*
*2. Upper bottom pan opening*

2. Slide the module towards rear.

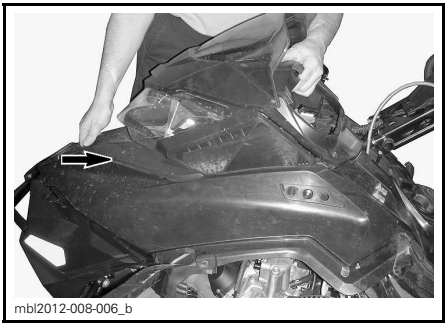
mbl2012-008-006_b

*SLIDE TOWARDS REAR*

3. On both sides, install the upper body module retaining screws.

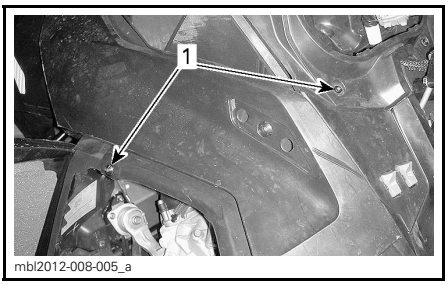

mbl2012-008-005_a

*LH SIDE SHOWN*
*1. Retaining screws*

4. Connect:
   - APS hose on the ECM
   - Headlights connector
   - Gauge connector
   - Air temperature sensor (ATS)
   - Air intake connector tube.
5. Install:
   - Gauge
   - Drive belt guard.

## 19) Side Panels

To open a side panel, stretch and unhook both latches. Pull firmly to release the stud.

Firmly pull the latch upward to release it from the console hook. The stud should pop out by itself.

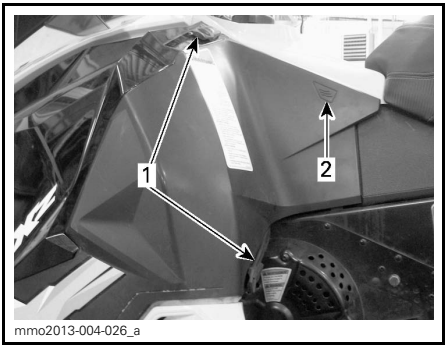

mmo2013-004-026_a

*TYPICAL*
*1. Latches*
*2. Stud location*

To close a side panel, stretch and hook the latches. Push firmly on the stud location to make sure it is secured.

To remove a side panel, open it then lift it up. Free the lower hinge from its slot, then free the upper hinge by lowering the panel.

To install a side panel, insert the upper hinge and then the lower hinge.

Close the side panel.

**⚠ WARNING**

**Never operate engine with side panels opened or removed from vehicle.**

## 20) Rewind Starter Handle (If Applicable)

Auto-rewind type located on right hand side of snowmobile. To engage mechanism, pull handle slowly until a resistance is felt then pull vigorously. Slowly release handle.

NOTE: The maximum torque that can be transmitted to the engine by the rewind starter is 80 N•m (59 lbf•ft). The maximum force that can be exerted on the on the rope is 2 200 N (494.6 lbf).

## 21) Passenger Seat (2-UP Models)

**⚠ WARNING**

Any passenger must be able to firmly lay is feet on the footrests and keep his hands on the handholds at all times when seated. Respecting those physical criteria is important to ensures that the passenger is stable and to reduce the risks of ejection.

*Grand Touring Sport and Expedition Sport*

The passenger seat is fixed.

## 22) Passenger Handhold (2-UP Models)

*Grand Touring Sport and Expedition Sport*

The passenger handholds are fixed.

## 23) Backrest

*Grand Touring Sport and Expedition Sport*

The backrest is not adjustable

## 24) Adjustable Mirrors (if applicable)

Each mirror can be adjusted to suit operator's preference.

**⚠ WARNING**

Adjust with vehicle at rest in a safe place.

## 25) Electric Visor Jack Connector (On Applicable Models)

An electric visor can be connected to the jack connector. Electric current is supplied whenever engine is running. A stress relief extension is supplied with the vehicle.

## 26) Operator's Guide

*1-UP Models*

Underneath the seat. Refer to *OPERATOR'S SEAT* for its access.

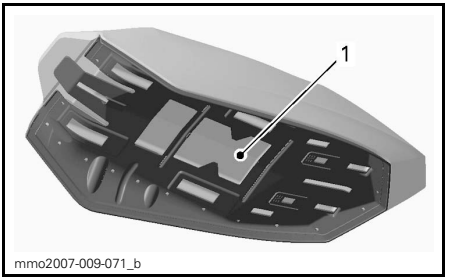


*TYPICAL - SEAT*
*1. Operator's Guide location*

*2-UP Models*

In the seat storage compartment.

## 27) ECO/Standard/Sport Mode Switch

The Mode switch is located on the LH side of fuel tank.

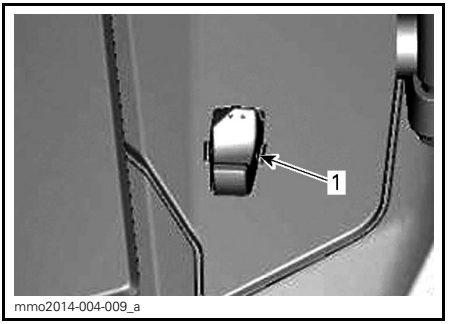


*TYPICAL - LH SIDE OF FUEL TANK*
*1. Mode switch*

It is used to activate or deactivate Eco/Standard/Sport modes.

Refer to *OPERATING MODES* subsection for details.

## 28) Passenger Heated Grip Switch

The switch is located on the LH passenger handhold.

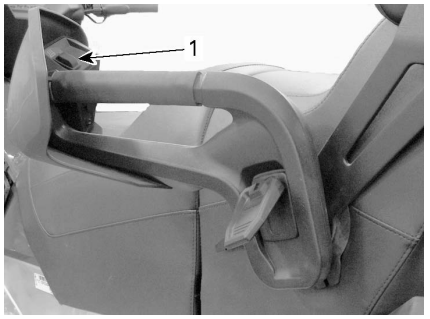


*1. Passenger heated grip switch*

Adjust heating intensity as shown.

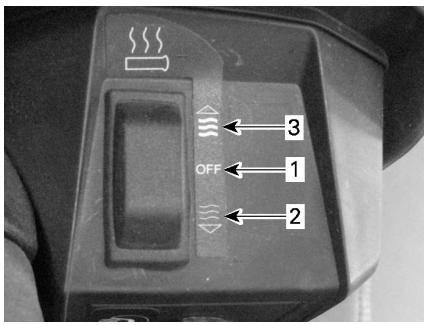


*1. Off*
*2. Warm*
*3. Hot*

## 29) Heated Seats Switches

The front seat switch is located on the console to the right of the steering column.

The Grand Touring SE model is equipped with heated operator and passenger seats.

The rear seat switch is located on the LH handhold.

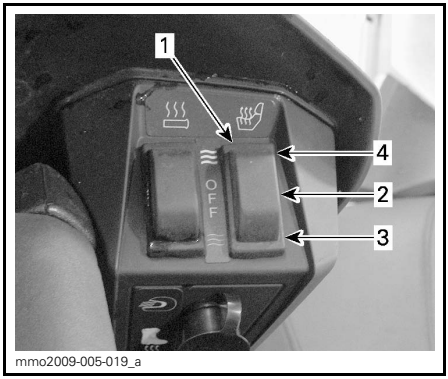


*REAR SEAT SWITCH SHOWN*
*1. Heated seat*
*2. OFF*
*3. Warm*
*4. Hot*

## 30) Rear Rack

*Grand Touring and Expedition Models*

**⚠ WARNING**

All objects in rear rack must be properly latched. Do not carry any breakable objects. Load in rack may reduce steering ability. The MAXIMUM cargo load is 15.8 kg (35 lb) including the storage compartment load. Reduce your speed when carrying a load. Always readjust suspension according to the load.

## Fuel Requirements

**NOTICE** Always use fresh gasoline. Gasoline will oxidize; the result is loss of octane, volatile compounds, and the production of gum and varnish deposits which can damage the fuel system.

Alcohol fuel blending varies by country and region. Your vehicle has been designed to operate using the recommended fuels, however, be aware of the following:

- Use of fuel containing alcohol above the percentage specified by government regulations is not recommended and can result in the following problems in the fuel system components:
  - Starting and operating difficulties.
  - Deterioration of rubber or plastic parts.
  - Corrosion of metal parts.
  - Damage to internal engine parts.
- Inspect frequently for the presence of fuel leaks or other fuel system abnormalities if you suspect the presence of alcohol in gasoline exceeds the current government regulations.
- Alcohol blended fuels attract and hold moisture which may lead to fuel phase separation and can result in engine performance problems or engine damage.

### Recommended Fuel

Use unleaded gasoline containing MAXIMUM 10% ethanol. The gasoline must have the following minimum octane requirements.

| FUEL TYPE | ENGINE | MIN. OCTANE RATING |
|---|---|---|
| Fuel with NO ethanol | 600 ACE | 87 AKI (RON+MON)/2<br>92 RON |
| Fuel which may contain up to 10% MAX ethanol | 600 ACE | 91 AKI (RON+MON)/2<br>95 RON<br>E10 |

**NOTICE** Never experiment with other fuels. Engine or fuel system damages may occur with the use of an inadequate fuel.

**NOTICE** Do NOT use fuel from fuel pumps labeled E85.

Use of fuel labeled E15 is prohibited by U.S. EPA Regulations.

### Fuel Antifreeze Additives

When using oxygenated fuel, additional gas line antifreeze or water absorbing additives are not required and should be not used.

When using non-oxygenated fuel, isopropyl base gas line antifreeze can be used in a proportion of 150 ml (5 U.S. oz) of gas line antifreeze added to 40 L (10.6 U.S. gal.) of gas.

This precaution is in order to reduce the risk of frost buildup in fuel system components which may lead, in certain cases, to severe damage to engine.

NOTE: Use only methyl hydrate free gas line antifreeze.

## Vehicle Fueling Procedure

**⚠ WARNING**

- Fuel is flammable and explosive under certain conditions.
- Never use an open flame to check fuel level.
- Never smoke or allow flame or spark in vicinity.
- Always work in a well-ventilated area.

1. Stop engine.

**⚠ WARNING**

Always stop engine before refueling.

2. Have operator and passenger get off vehicle.

**⚠ WARNING**

Do not allow anyone seated on the vehicle while fueling.

3. Unscrew slowly the fuel reservoir cap counterclockwise to remove it.

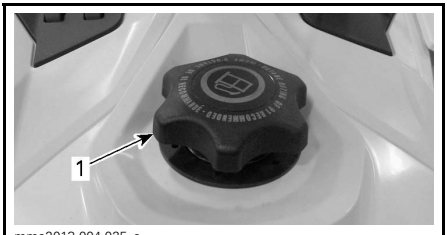


*TYPICAL*
*1. Fuel tank cap*

**⚠ WARNING**

If a differential pressure condition is noticed (whistling sound heard when loosening fuel reservoir cap) have vehicle inspected and/or repaired before further operation.

4. Insert the spout into the filler neck.
5. Pour fuel slowly so that air can escape from the tank and prevent fuel flow back. Be careful not to spill fuel.
6. Stop filling when the fuel reaches the bottom of filler neck. Do not overfill.

**⚠ WARNING**

Never top up the fuel tank before placing the vehicle in a warm area. As temperature increases, fuel expands and may overflow.

7. Fully tighten fuel reservoir cap clockwise.

**⚠ WARNING**

Always wipe off any fuel spillage from the vehicle.

NOTE: Do not sit or lean on seat when fuel tank cap is not properly installed.

# BREAK-IN PERIOD

## Operation During Break-In

A break-in period of 10 operating hours or 500 km (300 mi) is required for the vehicle.

After the break-in period, the vehicle should be inspected by an authorized Ski-Doo dealer, repair shop or person of your own choosing. Refer to *FIRST INSPECTION* in the *MAINTENANCE* section.

### Engine

During the break-in period:

- Avoid prolonged full throttle operation.
- Avoid sustained accelerations.
- Avoid prolonged cruising speeds.
- Avoid engine overheating.

However, brief accelerations and speed variations contribute to a good break-in.

During the first few hours of break-in, the engine management system controls some engine parameters which will slightly reduce the engine performance.

### Drive Belt

A new drive belt requires a break in period of 50 km (30 mi).

During the break-in period:

- Avoid strong acceleration and deceleration.
- Avoid pulling a load.
- Avoid high speed cruising.

**⚠ WARNING**

Whenever changing operating mode, make sure to maintain situational awareness while riding.

## ECO Mode (Fuel Economy Mode)

When ECO mode is selected (fuel economy mode), vehicle torque and speed are limited whereby an optimal cruising speed is maintained in order to reduce fuel consumption.

Once activated, ECO mode will remain active until it is deactivated by the operator.

## Standard Mode

A Standard mode indicator is ON in the multifunction gauge to confirm the active mode of operation.

## Sport Mode

**⚠ WARNING**

Ensure passenger is advised to hold on tightly before activating Sport mode. Sport mode provides increased acceleration.

When selected, Sport mode provides for instant throttle response and more rapid accelerations than Standard or ECO mode.

Once activated, Sport mode will remain active until it is deactivated by the operator.

## Navigating Operating Modes

Use ECO/Standard/Sport Mode switch to navigate between power levels, from ECO (reduced power) to Standard (full power) to Sport (increased response).

To increase power, press the switch upwards. To decrease power, press the switch downwards.

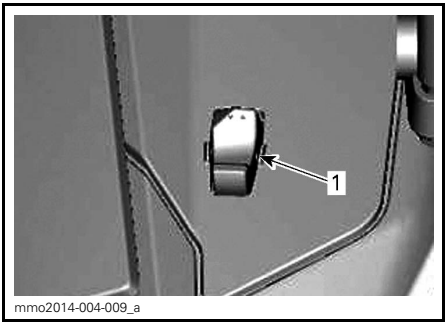


*TYPICAL - LH SIDE OF FUEL TANK*
*1. Mode switch*

To activate Standard mode when in Sport mode, press bottom end of switch once.

To activate ECO mode when in Sport mode, press bottom end of switch twice.

To activate ECO mode when in Standard mode, press bottom end of switch once.

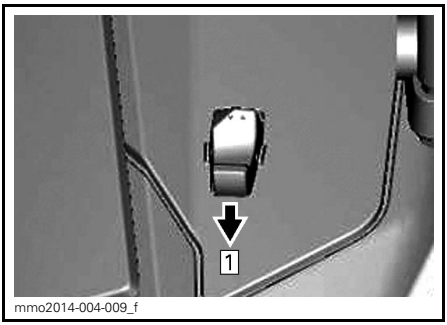


*TYPICAL*
*Step 1: Press bottom end of switch*

**⚠ WARNING**

Ensure passenger is advised to hold on tightly before activating Sport mode. Sport mode provides increased acceleration.

To activate Sport mode when in Standard mode, press top end of switch once.

To activate Sport mode when in ECO mode, press top end of switch twice.

To activate Standard mode when in ECO mode, press top end of switch once.

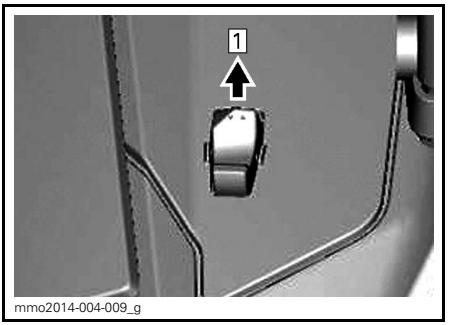


*TYPICAL*
*Step 1: Press top end of switch*

**⚠ WARNING**

**When adjusting modes, be sure to maintain situational awareness of other snowmobiles, obstacles, or persons .**

## Learning Key Modes

The learning key provides a mode of operation whereby engine torque and speed are limited.

NOTE: The initial learning key programming can limit the speed to 40 km/h (25 MPH) or 70 km/h (43 MPH). Refer to your authorized Ski-Doo dealer to modify this setting.

There are 3 levels available for the learning key mode.

### Changing Learning Key Settings

To change learning key setting, carry out the following:

1. Press the START/electronic reverse button to wake up the electrical system and install the NORMAL key on the engine cut-off switch.
2. Wait for the information center to complete its self-test and display the key recognition message.
3. Press the SET button until ACCEL. is visible in the digital screen of the information center.
4. Use the heated grip switch to toggle the key setting between 1 and 3.

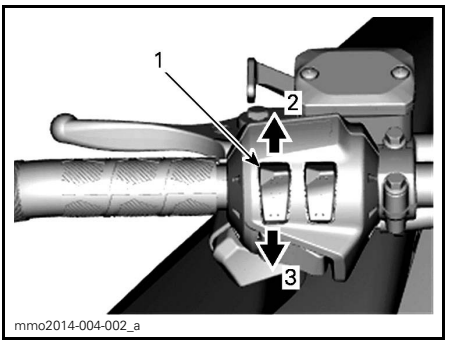


*TYPICAL*
1. *Heated grip switch*
2. *Increase*
3. *Decrease*

NOTE: Setting 1 is the lowest available torque, while setting 3 is the highest available torque for learning key.

5. After a few seconds, the setting is automatically confirmed and saved.

NOTE: The key speed setting is applicable to any key of the same type used on a specific snowmobile. The same key type used on a different snowmobile may therefore have a different key speed setting.

NOTE: Vehicle performance may vary depending on riding conditions.

## Engine Starting Procedure

**Procedure**

1. Apply parking brake.
2. Recheck throttle control lever operation.
3. Put your helmet on.
4. Ensure that the tether cord cap is installed on the engine cut-off switch and that the cord is attached to your clothing eyelet.
5. Ensure that the emergency engine stop switch is in the ON position (up).
6. Depress the START/electronic reverse button to engage the electric starter and start the engine. Release button immediately when engine has started.

**⚠ WARNING**

**Never depress throttle while starting engine.**

7. Release parking brake.

NOTE: For an initial cold start, do not release parking brake. Perform the *VEHICLE WARM-UP* procedure as explained below.

Manual Start Models

Grab rewind starter handle, pull handle slowly until a resistance is felt, then hold handle firmly and pull vigorously to start engine.

Electric Start Models

Depress the START/RER button to engage the electric starter and start the engine. Release button immediately when engine has started.

***NOTICE*** **Do not engage electric starter for more than 10 seconds at a time. A rest period should be observed between the cranking cycles to allow electric starter to cool down.**

## Emergency Starting

Do not attempt an emergency starting procedure. Have the battery charged or replaced.

NOTE: Emergency manual engine start is not provided.

## Vehicle Warm-Up

Before every ride, vehicle has to be warmed up as follows.

1. Start engine as explained in *ENGINE STARTING PROCEDURE* above.
2. Allow engine to warm up one or two minutes at idle speed.

NOTE: ACE engine will shut down after 5 minutes of idling when coolant temperature is higher than 70°C (158°F). This delay increase to 12 minutes if a radiator fan is mounted.

3. Disengage parking brake.
4. Apply throttle until drive pulley engages. Drive at low speed the first two or three minutes.

***NOTICE*** **If vehicle does not move when throttle is applied, stop engine, remove tether cord cap from the engine cut-off switch, then do the following.**

- **Check if skis are stuck on the ground. Lift one ski at a time by the handle, then put it down.**
- **Check if track is stuck on the ground. Lift rear of snowmobile enough to clear track from the ground, then drop.**
- **Check rear suspension for hard snow or ice accumulation that could interfere with track rotation. Clean the area.**

⚠ **CAUTION** **Beware of injuries by using proper lifting techniques, notably using your legs force. Do not attempt to lift the rear of vehicle if it is above your limits.**

**⚠ WARNING**

Make sure tether cord cap is removed before standing in front the vehicle, getting close to the track or rear suspension components.

## Shifting in Reverse or Forward

**⚠ WARNING**

When shifting in reverse, wait until the reverse alarm sounds and the pilot lamp comes on in the analog/digital gauge before operating throttle. The reverse speed is not limited. Always proceed with caution as fast reverse could result in loss of vehicle stability. Come to complete stop before depressing engaging the reverse. Always remain seated and apply the brake before shifting. Ensure the path behind is clear of obstacles or bystanders before proceeding.

**Reverse (Manual Shift Models)**

Shifting in Reverse

To engage reverse gear, proceed as follows:

1. Bring vehicle to a complete stop.
2. Apply and hold brake. Remain seated, refer to *RIDER POSITION (REVERSE OPERATION)* for posture information.
3. With engine at idle speed, pull the reverse shift lever all the way out.
4. Gently depress throttle lever.

Shifting in Forward

To engage forward gear, proceed as follows:

1. Bring vehicle to a complete stop.
2. Apply and hold brake.
3. With engine at idle speed, push the reverse shift lever all the way in.
4. Gently depress throttle lever.

**Reverse (Electronic Shift Models)**

Shifting in Reverse/Shifting in Forward

To engage reverse or forward, proceed as follows:

1. Bring vehicle to a complete stop.
2. Apply and hold brake.
3. With engine at idle speed, press the START/RER button and release.
4. Gently depress throttle lever.

## Shutting Off the Engine

Release throttle lever and wait until engine has returned to idle speed.

Shut off the engine using either the emergency engine stop switch or by pulling off the tether cord cap from the engine cut-off switch.

**⚠ WARNING**

Always remove the tether cord cap from engine cut-off switch when vehicle is not in operation in order to prevent accidental engine starting or to avoid unauthorized use by children or others or theft.

## Altitude

At factory, your snowmobile was calibrated to be used within an altitude range (height above the sea level). For your model's factory calibration, refer to the following table.

| MODELS | FACTORY CALIBRATION |
|---|---|
| All models (North America) | Sea level up to 600 m (2,000 ft) |

| MODELS | FACTORY CALIBRATION |
|---|---|
| All models (Europe) | Sea level up to 600 m (2,000 ft) |

If your snowmobile is to be used at an altitude outside the specified range, have it calibrated accordingly by an authorized Ski-Doo dealer.

**NOTICE** An inappropriate altitude calibration would decrease performance and may cause serious damage to the snowmobile.

## Temperature

The engine management of these engines provides the optimum air/fuel ratio for all temperatures.

## Hard Packed Snow

*Models Equipped with Minimum Track Profile of 1.75 in*

BRP does **not recommend** to ride a snowmobile equipped with high lug profile track at **high speed** in a trail, on hard packed surfaces or ice for an extended period of time.

In the event that you have to, **reduce your speed**, then minimize the distance you ride on those surfaces.

**NOTICE** Running those tracks at high speed in a trail, on hard packed surfaces or ice put more stress on the lugs, which tend to heat up as a result. To avoid potential degradation or damage to the track, reduce your speed, then minimize the distance you ride on those surfaces.

## Towing an Accessory

Always use a rigid tow bar to tow an accessory. Any towed accessory should have reflectors on both sides and at the rear. Check local laws for brake light(s) requirements.

**⚠ WARNING**

**Never tow an accessory with a rope. Always use a rigid tow bar. Using a rope would result in a collision between the object and the snowmobile and possibly in a tip over in case of a rapid deceleration or on a downward slope.**

## Towing Another Snowmobile

If a snowmobile is disabled and must be towed use a rigid tow bar. Remove the drive belt from disabled snowmobile, refer to *DRIVE BELT* in the *MAINTENANCE PROCEDURES* subsection and tow at moderate speed.

***NOTICE*** **Always remove the drive belt of the snowmobile that is to be towed to prevent damage to its belt and drive system.**

In an emergency situation only, if a rigid tow bar is not available, a rope can be used. Proceed with extra caution. In some areas, it may be illegal to do so. Check with state or local authorities.

Remove the drive belt, attach the rope to the ski legs (spindles), have someone sit on the towed snowmobile to activate the brake, and tow at low speed.

***NOTICE*** **In order to prevent damage to the steering system, never attach the tow rope to the ski loops (handles).**

**⚠ WARNING**

**Never ride at high speed when towing a disabled snowmobile. Proceed slowly with extra caution.**

Snowmobile handling and comfort depend upon multiple adjustments.

**⚠ WARNING**

**Suspension adjustment could affect vehicle handling. Always take time to familiarize yourself with the vehicle's behavior after any suspension adjustment have been made. Always adjust LH and RH suspension components to the same setting.**

Choice of suspension adjustments vary with carrying load, operator's weight, personal preference, riding speed and field condition.

NOTE: Some adjustments may not apply to your snowmobile.

**⚠ WARNING**

**Before proceeding with any suspension adjustment, remember:**

- **Park in a safe place.**
- **Remove the tether cord cap from the engine cut-off switch.**
- **Use appropriate lifting device or have assistance to share lifting stress. If a lifting device is not used, use proper lifting techniques, notably using your legs force.**
- **Do not attempt to lift the front or rear of vehicle if it is above your limits.**
- **Support front of vehicle off the ground with a suitable device before adjusting suspension.**
- **Support rear of vehicle off the ground with a wide-base snowmobile stand with a rear deflector panel.**
- **Make sure support device is stable and secure.**

The best way to set up the suspension is to customize each adjustment one at a time. Various adjustments are interrelated. It may be necessary to readjust center spring after adjusting front springs for instance. Test run the snowmobile under the same conditions; trail, speed, snow, operator riding position, etc. Proceed methodically until you are satisfied.

Following are guidelines to fine-tune suspension. Use suspension adjustment tool provided in the tool kit.

## Rear Suspension Adjustments

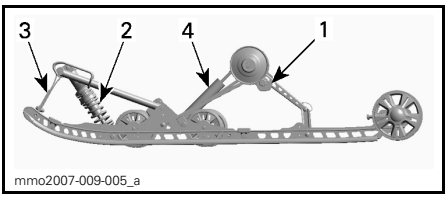


*TYPICAL SC-5M™ REAR SUSPENSION*
1. *Rear spring cams*
2. *Center spring and shock absorber*
3. *Stopper strap*
4. *Rear shock absorber*

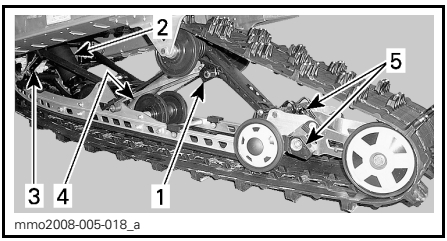


*TYPICAL SC-5U REAR SUSPENSION*
1. *Rear spring cams*
2. *Center spring and shock absorber*
3. *Stopper strap*
4. *Rear shock absorber*
5. *Rear suspension extension adjustments*

***NOTICE*** **Whenever adjusting rear suspension, check track tension and adjust if necessary.**

### Stopper Strap

Stopper strap length has an effect on the amount of weight the center spring has to carry especially during acceleration, therefore on the front end uplift.

Stopper strap length also has an effect on center spring travel.

**NOTICE** Whenever stopper strap length is changed, track tension must be checked.

| ACTION | RESULT |
|---|---|
| Increasing stopper strap length | Lighter ski pressure under acceleration |
| | More center spring travel |
| | More bump absorption capability |
| Decreasing stopper strap length | Heavier ski pressure under acceleration |
| | Less center spring travel |
| | Less bump absorption capability |

NOTE: Stopper strap could be set to position 1, 2, 3, 4 and 5. Below are illustrations for position 1, 2, 3. Smaller numbers correspond to a longer strap setting.

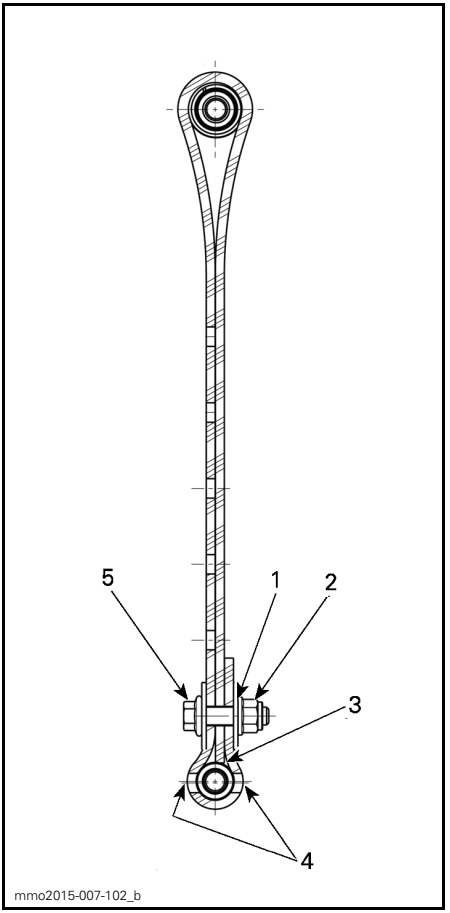


*STOPPER STRAP POSITION 1 (1ST HOLE, LONGEST)*

1. *1st hole from end*
2. *Towards rear*
3. *Tip of strap touching strap axis*
4. *Two holes left open between screw head and nut*
5. *Towards front*

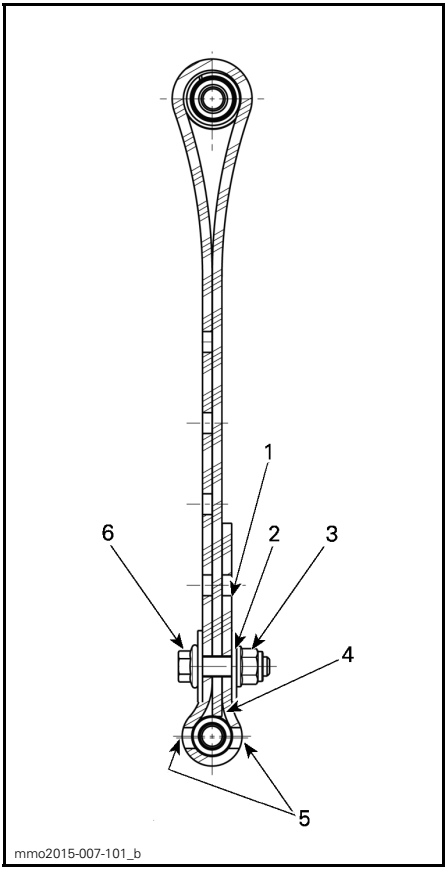


*STOPPER STRAP POSITION 2 (2ND HOLE)*

1. *Free hole*
2. *2nd hole from end*
3. *Towards rear*
4. *Tip of strap touching strap axis*
5. *Two holes left open between screw head and nut*
6. *Towards front*

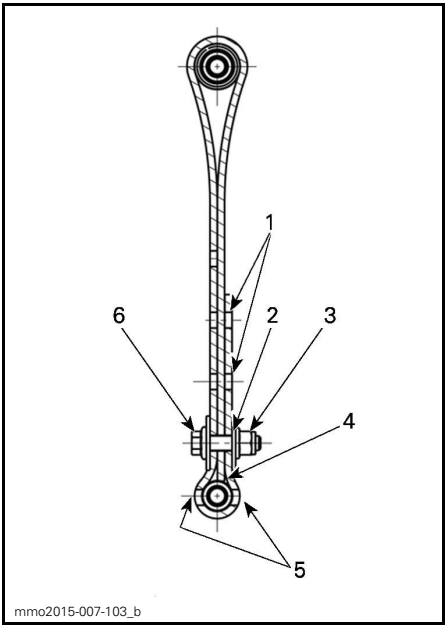


*STOPPER STRAP POSITION 3 (3RD HOLE)*

1. *Free holes*
2. *3rd hole from end*
3. *Towards rear*
4. *Tip of strap touching strap axis*
5. *Two holes left open between screw head and nut*
6. *Towards front*

NOTE: Decreasing the stopper strap length may reduce comfort. If too much weight transfer is felt, try to correct it by adjusting the coupling blocks first. Always install stopper strap bolt as close as possible to the lower shaft.

When operating the snowmobile in deep snow, it may be necessary to vary stopper strap length and/or riding position, to change the angle at which the track rides on the snow. Operator's familiarity with the various adjustments as well as snow conditions will dictate the most efficient combination.

Generally, a longer stopper strap setting gives better performance in deep snow on a flat landscape.

### Center Spring

Center spring preload has an effect on steering effort, handling and bump absorption.

Also, since center spring preload adjustment puts more or less pressure on the front of the track, it has an effect on the performance in deep snow.

| ACTION | RESULT |
|---|---|
| Increasing preload | Lighter steering |
| | More bump absorption capability |
| | Better deep snow starts |
| | Better deep snow performance and handling |
| Decreasing preload | Heavier steering |
| | Less bump absorption capability |
| | Better trail handling |

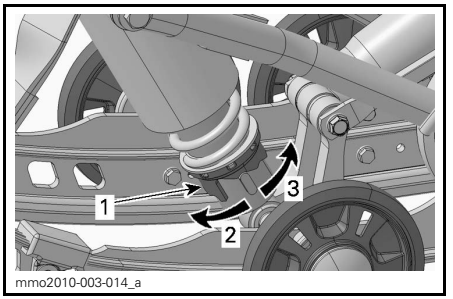


*CAM TYPE - MOTION CONTROL SHOCK ABSORBER*
1. *Spring preload adjustment cam*
2. *Increase preload*
3. *Decrease preload*

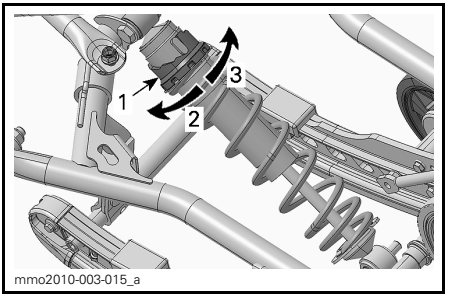


*CAM TYPE - HPG™ SHOCK ABSORBER*
1. *Spring preload adjustment cam*
2. *Decrease preload*
3. *Increase preload*

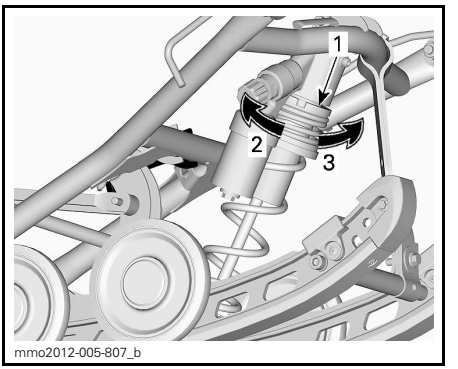


*TYPICAL- RING TYPE*
1. *Spring preload adjustment ring*
2. *Increase preload*
3. *Decrease preload*

NOTE: Use the suspension adjustment tool provided in the tool kit.

### Rear Spring

Rear spring preload has an effect on comfort, ride height and load compensation.

Also, adjusting rear spring preload shifts more or less weight to the snowmobile front end. As a result, more or less weight is applied to the skis. This has an effect on performance in deep snow, steering effort and handling.

Slight suspension bottoming occurring under the worst riding conditions indicates a good choice of spring preload.

| ACTION | RESULT |
|---|---|
| Increasing preload | Firmer rear suspension |
| | Higher rear end |
| | More bump absorption capability |
| | Heavier steering |
| Decreasing preload | Softer rear suspension |
| | Lower rear end |
| | Less bump absorption capability |
| | Lighter steering |
| | Better performance and handling in deep snow |

Refer to the following to determine if preload is correct.

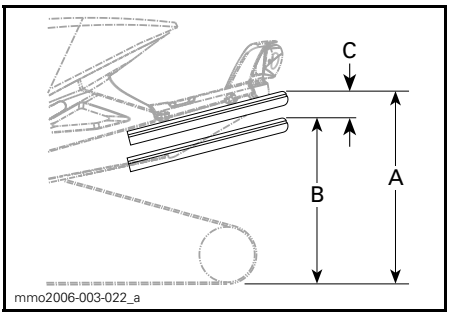


*TYPICAL - PROPER ADJUSTMENT*
*A. Suspension fully extended*
*B. Suspension has collapsed with operator, passenger(s) and load added*
*C. Distance between dimension "A" and "B", see table below*

| C | WHAT TO DO |
|---|---|
| 50 mm to 75 mm (2 in to 3 in) | No adjustment required |
| More than 75 mm (3 in) | Adjusted too soft. Increase preload |
| Less than 50 mm (2 in) | Adjusted too firm. Decrease preload |

NOTE: If the specification is unattainable with the original springs, see an authorized Ski-Doo dealer for other available springs.

**⚠ WARNING**

**Both rear spring preload must be set at the same position. Otherwise vehicle behavior may be unpredictable and suspension may become warped.**

The adjustment cams have 5 different settings, 1 being the softest.

| ACTION | RESULT |
|---|---|
| Increasing preload | Firmer rear suspension |
| | Higher rear end |
| | More bump absorption capability |
| | Heavier steering |
| Decreasing preload | Softer rear suspension |
| | Lower rear end |
| | Less bump absorption capability |
| | Lighter steering |
| | Better performance and handling in deep snow |

**Rear Suspension Extension Spring Preload (SC-5U)**

Adjust by turning the preload cam.

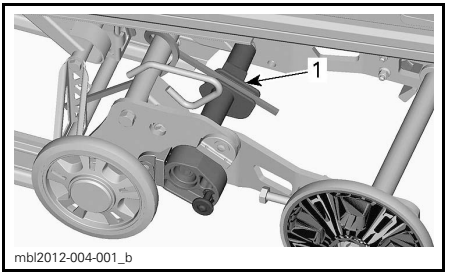


*1. Preload cam*

| ACTION | RESULT |
|---|---|
| Increasing preload | More track surface on the ground |
| | Less extension lift |
| Decreasing preload | Better reverse capability especially in deep snow |
| | More extension lift |

**Rear Suspension Extension Stabilizer Cam**

*SC-5U Only*

To change stabilizer cam setting, pull lock off, then turn cam.

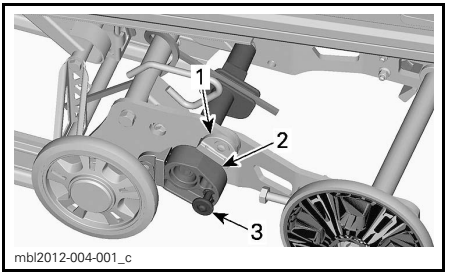


*1. Stop block*
*2. Stabilizer cam*
*3. Lock*

| CAM SETTING | RESULT |
|---|---|
| Away from upper stop block | Allows free movement of the suspension extension on its entire stroke |
| | General use |
| | Good reverse capability |
| Leaning on both stop blocks | Locks the suspension extension in line with the suspension rails |
| | Better traction, full track contact surface |
| | Better towing capability |

**Coupling Blocks**

Coupling blocks adjustment has an effect on vehicle handling during acceleration only.

NOTE: A high coupling block setting will reduce both comfort and transfer under acceleration.

To adjust, push on release button under cam and turn coupling block to the desired setting.

Place the desired setting number towards rubber stopper. No tools required.

**⚠ WARNING**

**Both blocks must be set at the same position. Otherwise vehicle behavior may be unpredictable and suspension may become warped.**

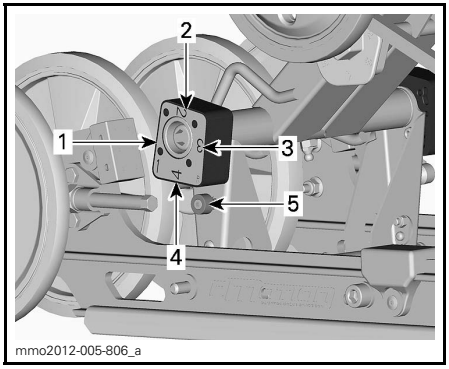


*COUPLING BLOCK - RIGHT SIDE VIEW (R - RIGHT EMBOSSED ON BLOCK)*
1. *Position 1 (minimum)*
2. *Position 2*
3. *Position 3*
4. *Position 4 (maximum)*
5. *Release button*

Coupling Blocks Setting

| POSITION | USE |
|---|---|
| 1 | More ski lift during acceleration - and best comfort |
| 2 | Intermediate setting |
| 3 | Intermediate setting |
| 4 | Less ski lift during acceleration - and some comfort loss |

## Front Suspension Adjustments

### Skis (Expedition Sport)

On theses models, it is possible to set the ski stance to two different width.

When the spacer is installed inside the ski leg, skis are set to the narrower stance.

When the spacer is installed outside the ski leg, skis are set to the wider stance.

To change the ski stance, proceed as follows on both sides:

1. Lift the front of vehicle.
2. Remove the ski bolt.
3. Place the spacer according to the desired stance, see illustration.

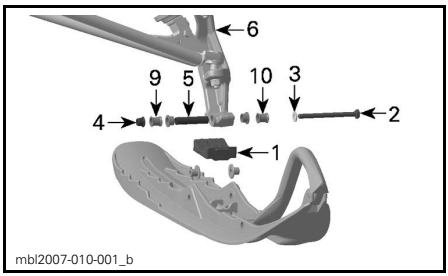


*PARTS LAYOUT - LH SIDE SHOWN*
1. *Ski stopper*
2. *Ski bolt*
3. *Washer*
4. *Nut*
5. *Ski leg bushing (in the ski leg bore)*
6. *Ski leg*
9. *Spacer inwards-narrow stance*
10. *Spacer outwards-wide stance*

4. Install all the other parts and tighten nut to specification.

| TIGHTENING TORQUE | |
|---|---|
| Ski bolt | 48 N•m ± 6 N•m (35 lbf•ft ± 4 lbf•ft) |

NOTE: Make sure your vehicle does not exceed the maximum width allowed for trail riding. Check local regulations.

### Front Springs

Front spring preload has an effect on front suspension firmness.

Front spring preload also has an effect on the steering behavior.

| ACTION | RESULT |
|---|---|
| Increasing preload | Firmer front suspension |
| | Higher front end |
| | More precise steering |
| | More bump absorption capability |
| Decreasing preload | Softer front suspension |
| | Lower front end |
| | Lighter steering |
| | Less bump absorption capability |

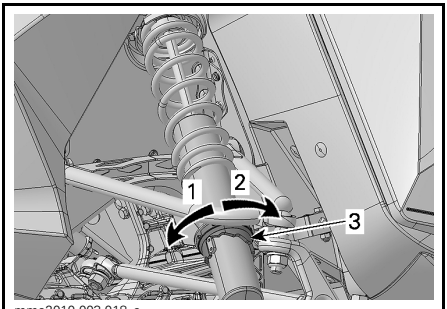


*CAM TYPE - MOTION CONTROL SHOCK ABSORBER*
1. *Increase preload*
2. *Decrease preload*
3. *Spring preload adjustment cam*

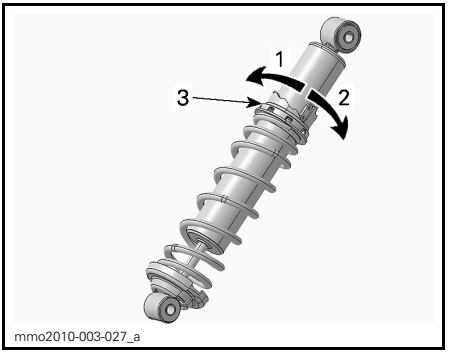


*CAM TYPE - HPG SHOCK ABSORBER*
1. *Decrease preload*
2. *Increase preload*
3. *Spring preload adjustment cam*

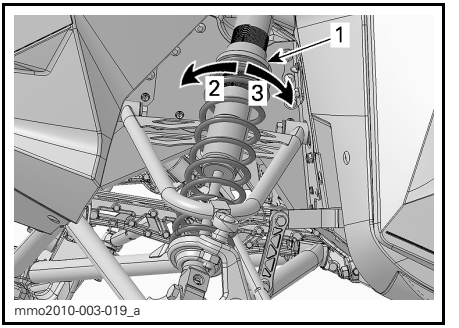


*TYPICAL - RING TYPE*
1. *Spring preload adjustment ring*
2. *Increase preload*
3. *Decrease preload*

## Adjustment Tips According to Vehicle Behavior

| PROBLEM | CORRECTIVE MEASURES |
|---|---|
| Front suspension darting | Check ski alignment.<br>– Reduce front suspension spring preload.<br>– Increase center spring preload.<br>– Reduce rear spring preload. |
| Steering feels too heavy at steady speeds | – Reduce front suspension spring preload.<br>– Increase center spring preload. |
| Steering feels too heavy during acceleration | – Set coupling blocks to a lower position.<br>– Reduce rear spring preload.<br>– Lengthen limiter strap. |
| Too much ski lift during cornering or acceleration | – Set coupling blocks to a higher position.<br>– Shorten limiter strap.<br>– Increase rear spring preload. |
| Rear of snowmobile seems too stiff | – Reduce rear spring preload.<br>– Reduce compression damping adjustment if equipped |
| Rear of snowmobile seems too soft | – Increase rear spring preload. |
| Rear suspension is frequently bottoming | – Increase compression damping adjustment if equipped.<br>– Increase rear spring preload.<br>– Increase center spring preload.<br>– Lengthen limiter strap.<br>– Increase compression damping adjustment if equipped. |
| Snowmobile seems to pivot around its center | – Reduce center spring preload.<br>– Increase rear spring preload.<br>– Increase front suspension spring preload.<br>– Shorten limiter strap. |
| Track spins too much at start | – Set coupling blocks to a lower position.<br>– Lengthen limiter strap. |
| Ski diving in deep snow | – Install ski tip enlarger. |

# VEHICLE TRANSPORTATION

Make sure that oil reservoir and fuel tank caps are properly installed.

Tilt bed trailers can easily be equipped with a winch mechanism to afford maximum safety in loading. Simple as it may seem, never drive your snowmobile onto a tilt bed trailer or any other kind of trailer or vehicle. Many serious accidents have resulted from driving up and over a trailer. Anchor your vehicle securely, front and rear, even on short hauls. Be certain all equipment is securely fastened. Cover your snowmobile when trailering to prevent road grime from causing damage.

Be certain your trailer meets state or provincial requirements. Ensure the hitch and safety chains are secure and the brake, turn indicators and clearance lights all function.

**⚠ WARNING**

**Do not tow the vehicle facing backwards. If the vehicle is towed facing backwards, the wind may cause damage to the windshield or even loss of the windshield.**

# MAINTENANCE

# FIRST INSPECTION

This vehicle should be serviced by an authorized Ski-Doo dealer, repair shop or person of your own choosing. The first inspection is very important and must not be neglected.

NOTE: The first inspection is at the expense of the vehicle owner.

| Date of inspection | Signature of the Authorized Ski-Doo dealer, repair shop, or person |
|---|---|
| | Name of the Authorized Ski-Doo dealer, repair shop, or person |

| FIRST INSPECTION (ALL MODELS) AFTER THE FIRST 1 500 KM (1,000 MI) |
|---|
| Adjust drive chain |
| Check chaincase oil level |
| Adjust and align track |

| FIRST INSPECTION (ALL MODELS) AFTER THE FIRST 3 000 KM (2,000 MI) OR 1 YEAR OF OPERATION, WHICHEVER COMES FIRST |
|---|
| Change engine oil and filter |

# MAINTENANCE SCHEDULE

Maintenance is very important for keeping your vehicle in safe operating condition. A repair shop or person of the owner's choosing may maintain, replace, or repair emission control devices and systems. These instructions do not require components or service by BRP or authorized Ski-Doo dealers. Although an authorized Ski-Doo dealer has an in-depth technical knowledge and tools to service the Ski-Doo snowmobile, the emission-related warranty is not conditioned on the use of an authorized Ski-Doo dealer or any other establishment with which BRP has a commercial relationship. For emission-related warranty claims, BRP is limiting the diagnosis and repair of emission-related parts to the authorized Ski-Doo dealers. For more information, please refer to the *US EPA EMISSION-RELATED WARRANTY* contained herein. Proper maintenance is the owner's responsibility. A warranty claim may be denied if, among other things, the owner or operator caused the problem through improper maintenance or use. You must follow the instructions for fuel requirements in the fuel section of this manual. Even if gasoline containing greater than ten volume percent ethanol is readily available, the US EPA issued a prohibition against the use of gasoline containing greater than 10 vol% ethanol that applies to this vehicle. The use of gasoline containing greater than 10 vol% ethanol with this engine may harm the emission control system. The vehicle should be serviced as per the maintenance schedule.

The maintenance schedule does not exempt the pre-ride inspection.

**⚠ WARNING**

**Failure to properly maintain the vehicle according to the maintenance schedule and procedures can make it unsafe to operate.**

| EVERY 3 000 KM (2,000 MI) OR EVERY YEAR AT PRESEASON (WHICHEVER COMES FIRST) |
|---|
| Perform pre-ride inspection |
| Check fault codes |
| Charge battery (on models with electric starter) |
| Adjust drive chain |
| Change chaincase oil |
| Inspect brake hose, pads and disk |
| Check coolant density |
| Inspect drive belt |
| Visually inspect and clean drive pulley |
| Tighten drive pulley retaining screw to specified torque |
| Clean driven pulley |
| Inspect engine seals and gaskets for leaks |
| Inspect exhaust system and check for leaks |
| Tighten exhaust manifold screws or nuts to specified torque |

| EVERY 3 000 KM (2,000 MI) OR EVERY YEAR AT PRESEASON (WHICHEVER COMES FIRST) |
|---|
| Adjust and align track |
| Inspect rear suspension (including stopper straps and slider shoes) |
| Lubricate rear suspension (lubricate whenever the vehicle is used in wet conditions (rain, puddles)) |
| Inspect fuel lines and connections |
| Inspect front suspension |
| Inspect tie-rod ends and alignment |
| Adjust headlight beam aiming |

| EVERY 6 000 KM (4,000 MI) OR AT PRE-SEASON (WHICHEVER COMES FIRST) |
|---|
| Change engine oil and filter |

| EVERY 6 000 KM (4,000 MI) OR 2 YEARS (WHICHEVER COMES FIRST) |
|---|
| Replace brake fluid |
| Clean and lubricate rewind starter |
| Replace fuel pump outlet filter |
| Inspect engine rubber mounts |

| EVERY 10 000 KM (6,000 MI) OR 3 YEARS (WHICHEVER COMES FIRST) |
|---|
| Replace spark plugs |

| EVERY 5 YEARS |
|---|
| Replace engine coolant |

# MAINTENANCE PROCEDURES

This section includes instructions for basic maintenance procedures.

**⚠ WARNING**

Turn off the engine, remove tether cord cap and follow these maintenance procedures when performing maintenance. If you do not follow proper maintenance procedures you can be injured by hot parts, moving parts, electricity, chemicals or other hazards.

**⚠ WARNING**

Should removal of a locking device be required (e.g. lock tabs, self-locking fasteners, etc.) when undergoing disassembly/assembly, always replace with a new one.

## Air Filter with Dual Air Intake

### Air Filter Verification

There are two air intake pre-filters, one on each side of the console.

Ensure the air intake prefilters are properly installed, clean and in good condition.

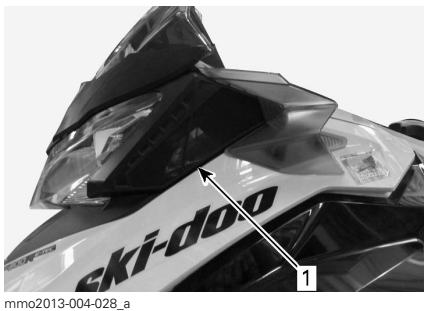


mmo2013-004-028_a

*1. LH Air filter*

If the air filter has to be cleaned or replaced, see an authorized Ski-Doo dealer, repair shop or person of your own choosing.

## Engine Coolant

**⚠ WARNING**

Never open coolant tank cap when engine is hot.

### Engine Coolant level Verification

Check coolant level at room temperature with the cap removed. Liquid should be at cold level line (engine cold) of coolant tank.

NOTE: When checking level at low temperature it may be slightly lower then the mark.

If additional coolant is necessary or if entire system has to be refilled, refer to an authorized Ski-Doo dealer, repair shop or person of your own choosing.

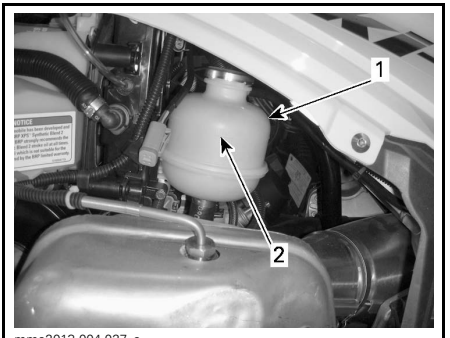


mmo2013-004-027_a

*TYPICAL*
*1. Coolant tank*
*2. COLD LEVEL line*

**Recommended Engine Coolant**

| BRP RECOMMENDED PRODUCT | COOLANT |
|---|---|
| Scandinavia | EXTENDED LIFE PRE-MIXED COOLANT (EUR) (619590204) (P/N 779223) |
| All other countries | EXTENDED LIFE PRE-MIXED COOLANT (219702685) (P/N 779150) |
| Alternative, or if not available | Distilled water and antifreeze solution (50% distilled water, 50% antifreeze) |

**NOTICE** Always use ethylene-glycol antifreeze containing corrosion inhibitors specifically for internal combustion aluminum engines.

## Engine Oil

**Recommended Engine Oil**

| RECOMMENDED ENGINE OIL | |
|---|---|
| Scandinavia | 4T 0W40 SYNTHETIC OIL (EUR) (619590114) (P/N 779286) |
| All other countries | 4T 0W40 SYNTHETIC OIL (293600112) (P/N 779139) |

**NOTICE** The engine of this snowmobile has been developed and validated using the recommended BRP XPS™ oil. BRP recommends the use of its recommended XPS oil or equivalent. Damages caused by oil which is not suitable for this 4-stroke engine may not be covered by the BRP limited warranty.

If the recommended oil is not available, use SAE 0W-40 synthetic-based oil that meets or exceeds the requirements for API service classification SM.

**Engine Oil Level Verification**

**NOTICE** Check level every 10 hours of use and refill if necessary. Do not overfill. Operating the engine with an improper level may severely damage engine. Wipe off any spillage.

Make sure the engine is at normal operating temperature.

NOTE: The engine reaches normal temperature when the rear radiator gets warm indicating the thermostat has opened.

Place vehicle on a level surface and proceed as follows to check oil level:

1. Let engine run at idle for approximately 30 seconds.
2. Stop engine.
3. Open the LH side panel, refer to *CONTROLS, INSTRUMENTS AND EQUIPMENT*.
4. Remove the drive belt guard, refer to *CONTROLS, INSTRUMENTS AND EQUIPMENT*.
5. Remove dipstick from the filler tube, then wipe it clean.
6. Completely insert dipstick in the filler tube.

7. Remove dipstick and check the oil level. Oil level should be between the MIN. and MAX. marks as shown, add if necessary.

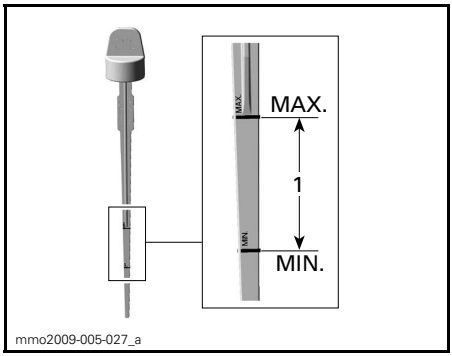


*1. Oil level between MIN. and MAX.*

**⚠ WARNING**

**Wipe off any oil spills. Oil is highly flammable when heated.**

**Engine Oil Replacement**

**⚠ CAUTION** **The engine oil can be very hot. Wait until engine oil is warm.**

***NOTICE*** **Engine oil and oil filter must be replaced at the same time.**

1. Bring engine to its normal operating temperature.
2. Place vehicle on a level surface.
3. Remove the LH side panel.
4. Remove dipstick.

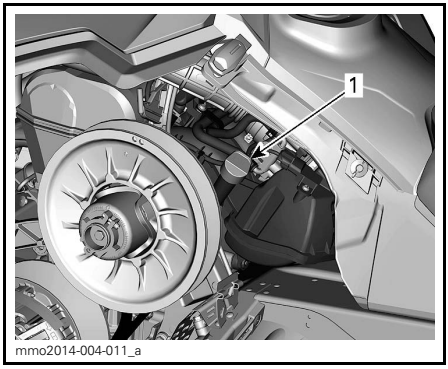


*LH SIDE OF VEHICLE*
*1. Oil tank dipstick*

5. Remove *OIL FILTER*, see procedure in this subsection.
6. From underneath the vehicle, access the drain plug:
   - 6.1 Remove one access cover retaining screw and loosen the other.
   - 6.2 Pivot the access cover to clear the bottom pan opening.

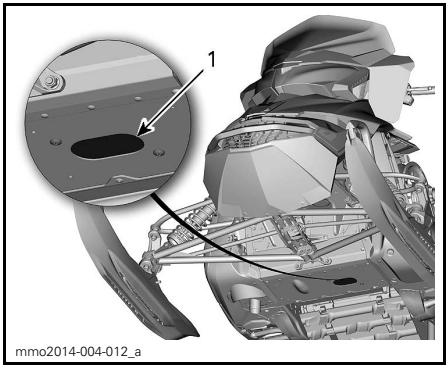


*1. Drain plugs access cover*

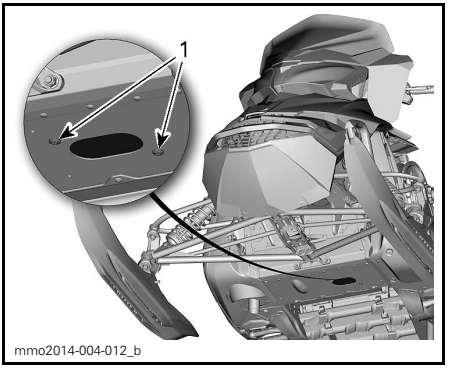


*PIVOT THE ACCESS COVER*
1. *Retaining screws*

7. Clean drain plug area.
8. Place a drain pan under the bottom pan opening.
9. Remove engine drain plugs in the following order.
   9.1 Main drain plug.
   9.2 Secondary drain plug.

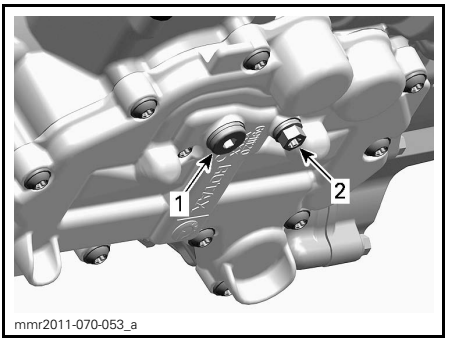


*UNDERNEATH THE ENGINE*
1. *Main drain plug*
2. *Secondary drain plug*

10. Allow oil to drain completely.
11. Replace *OIL FILTER*, see procedure in this subsection.
12. Install NEW sealing washers on oil drain plugs.

**NOTICE** Never use a sealing washer a second time. Always replace with a new one.

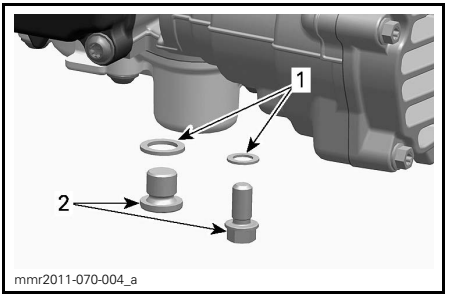


1. *Sealing washer*
2. *Oil drain plug*

13. Install drain plugs and tighten to specification.

| TIGHTENING TORQUE | |
|---|---|
| Drain plugs | 20 N•m ± 2 N•m (15 lbf•ft ± 1.5 lbf•ft) |

14. Install a new *OIL FILTER*, see procedure in this subsection.
15. Refill oil tank at the proper level with the recommended oil.

| APPROXIMATE ENGINE OIL CAPACITY (WITH FILTER) |
|---|
| 2.1 L (2.2 qt (U.S. liq.)) |

16. Reinstall dipstick in oil tank and properly tighten it.
17. Start engine and let it idle for a few minutes.
18. Ensure there are no leaks.
19. Stop engine and check oil level as explained in this subsection. Refill if necessary.
20. Dispose oil and filter as per your local environmental regulations.

## Engine Oil Filter

### Engine Oil Filter Replacement

Oil Filter Removal

1. Remove the RH side panel.
2. Clean oil filter area.

3. Remove:
   – Oil filter cover screws
   – Oil filter cover with O-ring
   – Oil filter.

NOTE: If there is oil in the oil filter housing, before removing the oil filter slightly rotate the drive pulley by hand until the oil drains out.

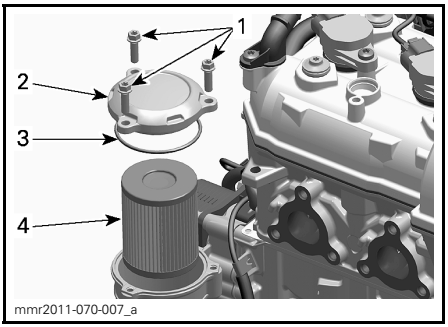


1. *Oil filter cover screws*
2. *Oil filter cover*
3. *O-ring*
4. *Oil filter*

4. Dispose filter as per your local environmental regulations.

### Oil Filter Installation

1. Check the oil filter inlet and outlet orifices inside oil filter receptacle (integrated part of magneto cover) for dirt and contaminations.

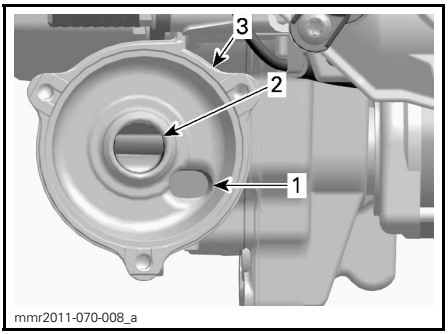


1. *Oil inlet orifice from the oil pressure pump*
2. *Oil outlet orifice to the engine lubrication system*
3. *Oil filter receptacle*

2. Install a NEW O-ring on oil filter cover.
3. Install the new filter into the cover.
4. Lubricate filter seal and cover O-ring with engine oil.

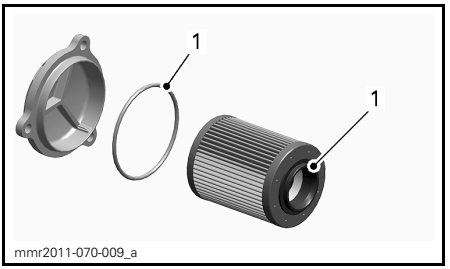


1. *Lubricate with engine oil*

5. Install the oil filter cover.

**NOTICE** **Pay attention to avoid pinching the O-ring during filter and cover installation.**

6. Tighten oil filter cover screws to specification.

| TIGHTENING TORQUE | |
|---|---|
| Oil Filter Cover screws | 10 N•m ± 1 N•m (89 lbf•**in** ± 9 lbf•**in**) |

7. Wipe off any oil spillage on engine.
8. Reinstall remaining parts if applicable.

## Exhaust System

### Exhaust System Verification

The muffler tail pipe should be centered with the exit hole in the bottom pan. Exhaust system must be free of rust or leaks. Make sure that all parts are securely in place.

Check retaining springs condition and replace if necessary.

The exhaust system is designed to reduce noise and to improve the total performance of the engine. Modification may be in violation of local laws.

**NOTICE** If any exhaust system component is removed, modified or damaged, severe engine damage may result.

## Spark Plugs

Spark plugs inspection or replacement may be performed by an authorized Ski-Doo dealer, repair shop, or person of your own choosing. Spark plugs inspection or replacement requires an in-depth technical knowledge. Though not required, it is recommended that an authorized Ski-Doo dealer performs spark plugs inspection or replacement.

## Brake Fluid

### Recommended Fluid

Use only DOT 4 brake fluid from a sealed container. An opened container may be contaminated or may have absorbed moisture from the air.

**⚠ WARNING**

Use only DOT 4 brake fluid from a sealed container. To avoid serious damage to the braking system, do not use fluids other than the recommended one, nor mix different fluids for topping up.

**NOTICE** Brake fluid can damage painted and plastic parts. Handle with care. Rinse thoroughly in case of spillage.

Brake Fluid Level Verification

**NOTICE** Vehicle must be on a level surface before checking any fluid levels.

Check brake fluid (DOT 4) in reservoir for proper level. Add fluid (DOT 4) as required.

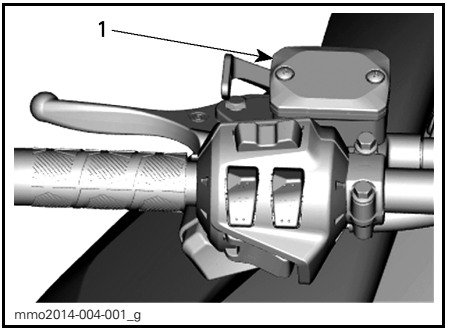


*TYPICAL*
1. *Brake fluid reservoir*

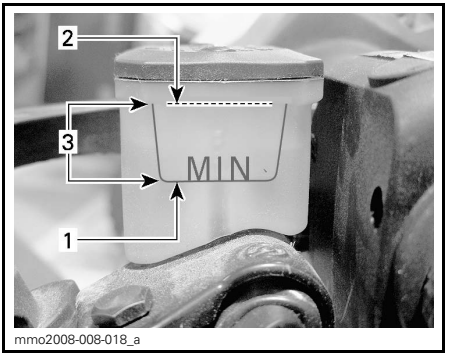


1. *Minimum*
2. *Maximum*
3. *Operating range*

**⚠ CAUTION** Avoid getting brake fluid on skin or eyes - it may cause severe burns. In case of contact skin, wash thoroughly. In case of contact with the eyes, immediately rinse with plenty of water for at least 10 minutes and then consult a doctor immediately.

## Chaincase Oil

### Recommended Chaincase Oil

| RECOMMENDED CHAINCASE OIL | |
|---|---|
| Scandinavia | SYNTHETIC CHAINCASE OIL (EUR) (P/N 779185) |
| All other countries | SYNTHETIC CHAINCASE OIL (413803300) (P/N 779156) |

**NOTICE** The chaincase of this snowmobile has been developed and validated using the XPS™ Synthetic chaincase oil. BRP strongly recommends the use of its XPS Synthetic chaincase oil at all times. Damages caused by oil which is not suitable for the chaincase will not be covered by the BRP limited warranty.

### Access to Chaincase

Open RH side panel, refer to *CONTROLS, INSTRUMENTS AND EQUIPMENT*.

### Chaincase Oil Level Verification

With the vehicle on a level surface, check the oil level by removing the check plug.

NOTE: It is normal to find metallic particles stuck to magnetic check plug. If bigger pieces of metal are found, remove the chaincase cover and inspect the chaincase parts.

Remove metal particles from magnetic check plug.

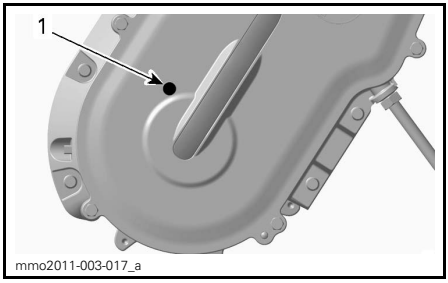


*TYPICAL*
*1. Check plug*

#### *All Models*

Oil level must reach the threaded hole.

### Chaincase Filling Procedure

Remove the check plug.

Remove the filler cap on the chaincase cover.

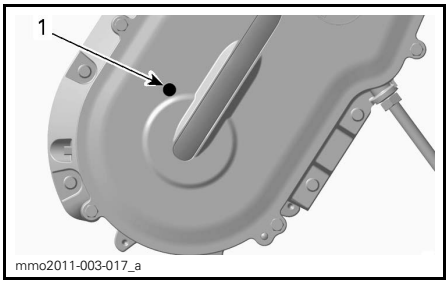


*TYPICAL*
*1. Check plug*

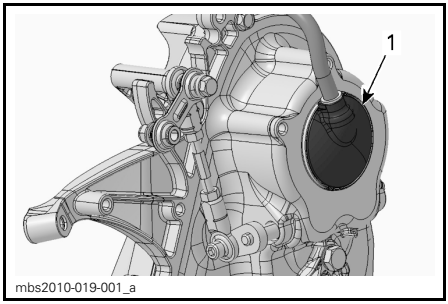


*1. Filler cap*

Pour recommended oil in chaincase by the filler hole until oil comes out by the check plug hole.

Reinstall check plug and tighten to specification.

| TIGHTENING TORQUE | |
|---|---|
| Check Plug | 6 N•m ± 1 N•m (53 lbf•**in** ± 9 lbf•**in**) |

Reinstall the filler cap.

## Drive Chain

### Access to Chaincase

Open RH side panel, refer to *CONTROLS, INSTRUMENTS AND EQUIPMENT*.

### Drive Chain Adjustment

1. Remove muffler, refer to *EXHAUST SYSTEM* in this subsection.
2. Unscrew tensioner lock nut several turns.

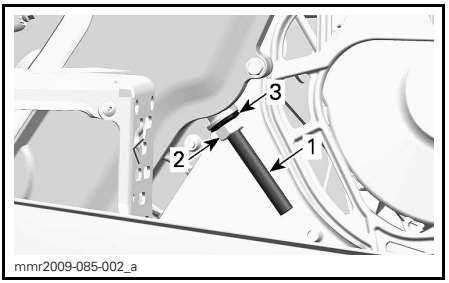


*1. Tensioner adjustment screw*
*2. Lock nut*
*3. Seal washer*

3. Unscrew tensioner adjustment screw a few turns.
4. Pull seal washer back.
5. Clean adjustment screw threads if necessary.

***NOTICE*** Adjustment screw threads must be clean to obtain an accurate adjustment.

6. Tighten tensioner adjustment screw by hand.

NOTE: Turn adjustment screw until resistance is strong enough that it can not be turned by hand.

7. Hold tensioner adjustment screw and tighten lock nut to specification.

| TIGHTENING TORQUE | |
|---|---|
| Check lock nut | 36 N•m ± 3 N•m (27 lbf•ft ± 2 lbf•ft) |

8. Install muffler.

## Drive Belt

### Drive Belt Inspection

Inspect belt for cracks, fraying or abnormal wear (uneven wear, wear on one side, missing cogs, cracked fabric). If abnormal wear is noted, probable cause could be pulley misalignment, excessive RPM with frozen track, fast starts without warm-up period, burred or rusty sheave, oil on belt or distorted spare belt. Contact an authorized Ski-Doo dealer.

### Drive Belt Replacement

Drive Belt Removal

1. Remove tether cord cap from engine cut-off switch.
2. Remove drive belt guard, refer to *CONTROLS, INSTRUMENTS AND EQUIPMENT*.
3. Insert the driven pulley expander provided in the tool kit in the threaded hole on the adjuster hub as shown.

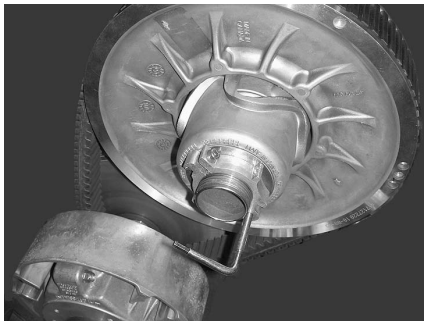
mmo2012-005-980

*PULLEY EXPANDER INSTALLED ON ADJUSTER HUB*

4. Open the driven pulley by screwing the tool in.
5. Remove the drive belt by slipping it over the top of the driven pulley, then over the drive pulley.

### Drive Belt Installation

1. If necessary, open the driven pulley, refer to *DRIVE BELT REMOVAL* above.
2. Slip the belt over the drive pulley, then over the driven pulley.

**NOTICE** **Do not force or use tools to pry the belt into place, as this could cut or break the cords in the belt.**

NOTE: The maximum drive belt life span is obtained when belt is installed with arrows in the direction of rotation.

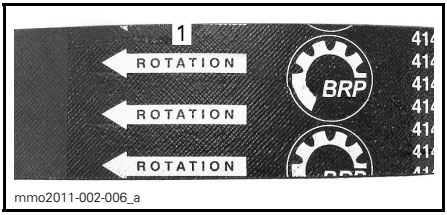

mmo2011-002-006_a

*1. To be pointed in the direction of rotation*

3. Unscrew and remove the driven pulley expander from the pulley.
4. Rotate the driven pulley several times to properly set the belt between the sheaves.
5. If a new belt was installed, an adjustment will be required for the proper belt height. Refer to *DRIVE BELT HEIGHT ADJUSTMENT* below.
6. Install belt guard, refer to *CONTROLS, INSTRUMENTS AND EQUIPMENT*.
7. Close side panel, refer to *CONTROLS, INSTRUMENTS AND EQUIPMENT*.

### Drive Belt Height Adjustment

The drive belt height must be checked every time a new drive belt is installed and as part of the pre-ride inspection.

To adjust the drive belt height, proceed as follows:

1. Remove tether cord cap from engine cut-off switch.
2. Remove drive belt guard.
3. Loosen the clamping bolt.

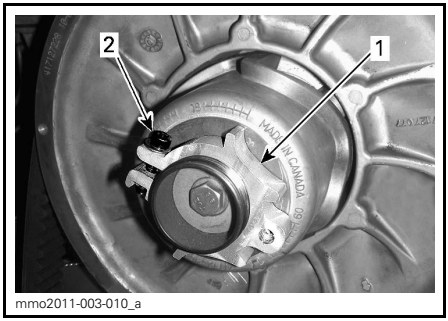

mmo2011-003-010_a

*1. Adjuster hub*
*2. Clamping bolt*

4. Using the suspension adjustment tool provided in the tool kit, turn the ring 1/4 turn at a time then rotate the driven pulley to properly set the drive belt between the pulley sheaves.

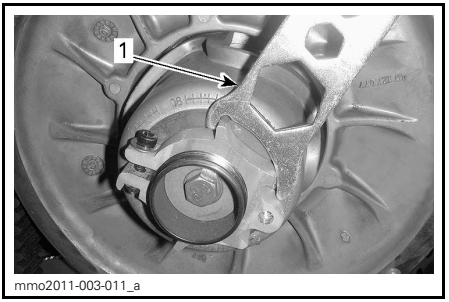


*1. Suspension adjustment tool*

NOTE: The adjustment ring has left hand treads.

Repeat step 4 until the lowest portion of the cogs on the external surface of drive belt is even with the driven pulley edge.

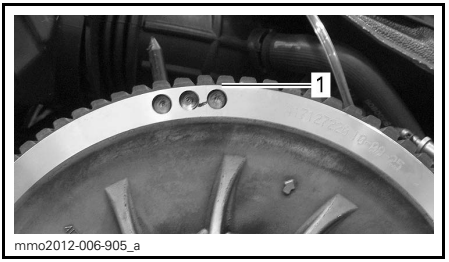


*TYPICAL - PRELIMINARY SETTING*
*1. Lowest portion of cogs even with external surface of drive belt*

NOTE: Turning the ring counterclockwise lowers the drive belt in the pulley. Turning the ring clockwise raises the drive belt in the pulley.

5. Firmly tighten the clamping bolt. If possible, tighten to specification using a torque wrench.

| TIGHTENING TORQUE | |
|---|---|
| Clamping bolt | 5.5 N•m ± 0.5 N•m (49 lbf•**in** ± 4 lbf•**in**) |

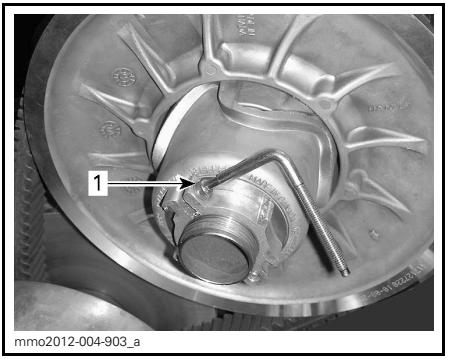


*TYPICAL*
*1. Clamping bolt*

6. Install drive belt guard.
7. Install side panel.

NOTE: These settings are correct as a preliminary adjustment for most models. In some cases, when starting the engine, the vehicle could creep, indicating that the drive belt is too tight.

If the vehicle creeps, lower the drive belt height from the preliminary setting. Repeat procedure until creeping stops.

### Reverse Activation

NOTE: The reverse may not activate if the belt is positioned too high in the driven pulley. If reverse activation does not work properly, ensure the drive belt is properly adjusted. Adjust the drive belt lower in the driven pulley if needed.

## Track

### Track Condition

**⚠ WARNING**

**Remove tether cord cap from engine cut-off switch before performing any maintenance or adjustment, unless otherwise specified. Vehicle must be parked in a safe place, away from the trail.**

Remove tether cord cap from engine cut-off switch.

Lift the rear of the snowmobile and support it with a wide-base snowmobile mechanical stand with a rear deflector panel. With the engine off, rotate the track by hand, and inspect condition. If worn or cut, or if track fibers are exposed, or if missing or defective inserts or guides are noted; contact an authorized Ski-Doo dealer.

### *Snowmobiles Equipped with Traction Enhancing Products*

If your snowmobile is equipped with a BRP approved studded track, PROCEED WITH A VISUAL INSPECTION OF YOUR TRACK BEFORE EACH USE.

Look for any defects, such as:

- Perforations in the track
- Tears in the track (particularly around traction holes on studded tracks)
- Lugs that are broken or torn off, exposing portions of rods
- Delamination of the rubber
- Broken rods
- Broken studs (studded tracks)
- Bent studs (studded tracks)
- Missing studs
- Studs that are torn off the track
- Missing track guide(s)
- Also, ensure that studs nut are tighten to specification.

On approved studded tracks, replace broken or damaged studs immediately. If your track shows signs of deterioration, it must be replaced immediately. When in doubt, ask your dealer.

**⚠ WARNING**

**Riding with a damaged track or studs could lead to a loss of control.**

For complete information on traction enhancing products, refer to the section entitled *TRACTION ENHANCING PRODUCTS* in the *SAFETY INFORMATION* section at the beginning of this Operator's Guide.

### Track Tension and Alignment

NOTE: Track tension and alignment are interrelated. Do not adjust one without the other.

**⚠ WARNING**

**To prevent serious injury to individuals near the snowmobile:**

- **NEVER stand behind or near a moving track.**
- **Always use a wide-base snowmobile stand with a rear deflector panel if it is necessary to rotate track.**
- **When the track is raised off the ground, only run it at the lowest possible speed.**

**Centrifugal force could cause debris, damaged or loose studs, pieces of torn track, or an entire severed track to be violently thrown backwards out of the tunnel with tremendous force, possibly resulting in the loss of a leg or other serious injury.**

#### Track Tension Verification

NOTE: Ride the snowmobile in snow about 15 to 20 minutes prior to adjusting track tension.

1. Remove tether cord cap from engine cut-off switch.
2. Lift rear of vehicle and support it off the ground.

**⚠ CAUTION Use proper lifting techniques, notably using your legs force. Do not attempt to lift the rear of vehicle if it is above your limits.**

3. Allow rear suspension to fully extend.
4. Use the TENSIOMETER (P/N 414 348 200).

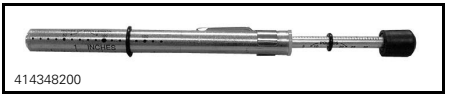


5. Set deflection between 30 mm and 35 mm (1-3/16 in and 1-3/8 in) using bottom O-ring.

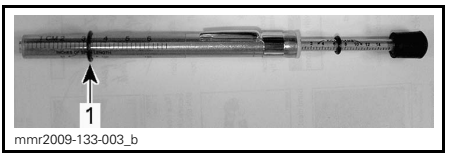


*DEFLECTION SETTING*
*1. Bottom O-ring set to specification*

6. Place upper O-ring to 0 kgf (0 lbf).
7. Position the tensiometer on track, halfway between front and rear idler wheels.
8. Push the tensiometer downwards until bottom O-ring (deflection set earlier) be aligned with the bottom of slider shoe.

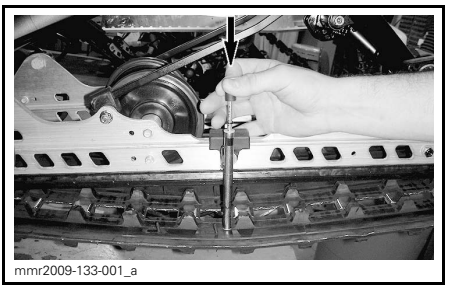


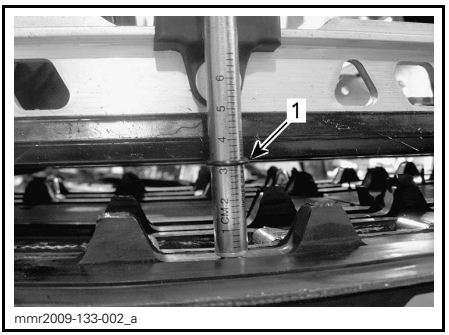


*1. Deflection O-ring aligned with slider shoe*

9. Read load recorded by the upper O-ring on the tensiometer.

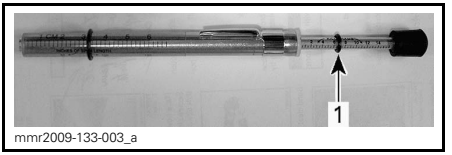


*LOAD READING*
*1. Upper O-ring*

10. Load reading must be as per the following table.

| TRACK ADJUSTMENT SPECIFICATION | |
|---|---|
| Track deflection setting All models except Expedition | 30 mm - 35 mm (1-3/16 in - 1-3/8 in) |
| Track deflection setting Expedition | 45 mm - 50 mm (1-3/4 in - 1-31/32 in) |
| Track load reading | 6 kgf to 8.5 kgf (13 lbf to 19 lbf) |

11. If load reading is not in accordance with the specification, adjust track tension. Refer to *TRACK TENSION ADJUSTMENT*.

### Track Tension Adjustment

1. Remove tether cord cap from engine cut-off switch.
2. Remove rear wheel caps (if so equipped).

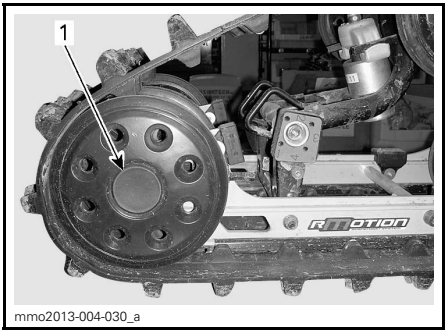


*rMOTION*
*1. RH rear idler wheel cap*

3. Loosen the rear idler wheel retaining screw and nut.

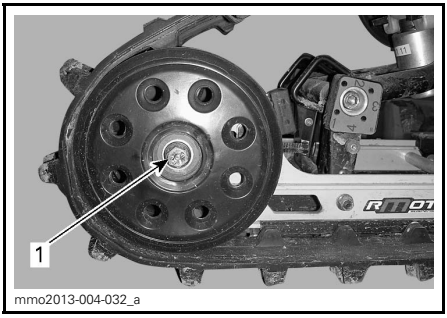


*rMOTION*
*1. RH rear idler wheel nut*

4. Tighten or loosen both adjustment screws to increase or decrease track tension.

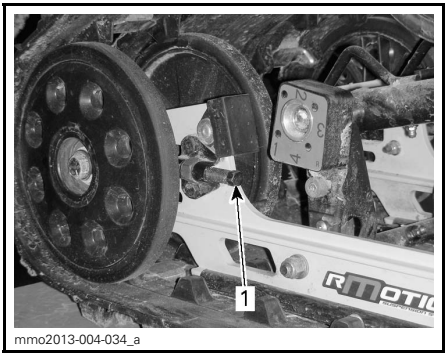


*rMOTION*
*1. RH adjustment screw*

5. If correct tension is unattainable, contact an authorized Ski-Doo dealer.
6. Retighten retaining bolts to specification.

| TIGHTENING TORQUE | |
|---|---|
| Retaining bolts | 48 N•m ± 6 N•m (35 lbf•ft ± 4 lbf•ft) |

7. Check track alignment as described below.

Track Alignment

**⚠ WARNING**

**Before checking track alignment, ensure that the track is free of all particles which could be thrown out while track is rotating. Keep hands, tools, feet and clothing clear of track. Always lift the snowmobile on a wide-base stand with a rear deflector panel. Ensure no one is standing in close proximity to the snowmobile, especially at the rear of the track. Never rotate track at high speed.**
**Centrifugal force could cause debris, damaged or loose studs, pieces of torn track, or an entire severed track to be violently thrown backwards out of the tunnel with tremendous force.**

1. Lift rear of vehicle and support it off the ground.

**⚠ CAUTION** **Use proper lifting techniques, notably using your legs force. Do not attempt to lift the rear of vehicle if it is above your limits.**

2. Start engine and accelerate slightly so that track slowly turns. This must be done in a short period of time (15 to 20 seconds).

3. Check that the track is well centered; equal distance on both sides between edges of track guides and slider shoes.

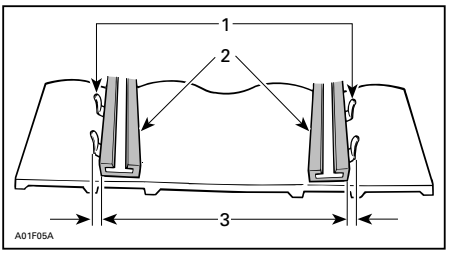


*1. Guides*
*2. Slider shoes*
*3. Equal distance*

4. To correct track alignment:
   4.1 Stop engine.
   4.2 Remove tether cord cap from engine cut-off switch.

**⚠ WARNING**

**Remove tether cord cap from engine cut-off switch before performing any maintenance or adjustment, unless otherwise specified. Vehicle must be parked in a safe place, away from the trail.**

   4.3 Loosen rear wheel retaining screws.
   4.4 Tighten adjustment screw on side where the slider shoe is the farthest from the track insert guides.

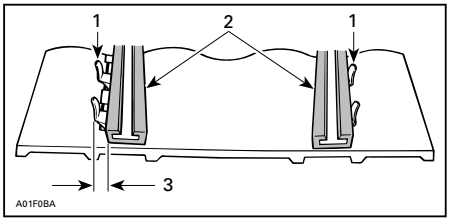


*1. Guides*
*2. Slider shoes*
*3. Tighten on this side*

5. Tighten retaining screws.

**⚠ WARNING**

**Properly tighten wheel retaining bolt, otherwise wheel may come off and cause track to "lock".**

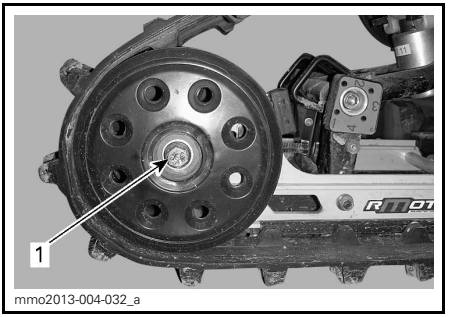


*rMOTION*
*1. Retighten to 48 N•m ± 6 N•m (35 lbf•ft ± 4 lbf•ft)*

6. Restart engine and rotate track slowly to recheck alignment.
7. Reposition snowmobile on the ground.
8. Install rear wheel caps if so equipped.

## Suspension

### Rear Suspension Condition

Visually inspect all suspension components including slider shoes, springs, wheels, etc.

NOTE: During normal driving, snow will act as a lubricant and coolant for the slider shoes. Extensive riding on ice or sanded snow, will create excessive heat build-up and cause premature slider shoe wear.

### Suspension Stopper Strap Condition

Inspect stopper straps for wear and cracks, bolt and nut for tightness. If loose inspect holes for deformation. Replace as required. Tighten nut to specification.

| TIGHTENING TORQUE | |
|---|---|
| Stopper strap nut | 10 N•m ± 1 N•m (89 lbf•**in** ± 9 lbf•**in**) |

### Suspension Lubrication

Lubricate the following suspension pivots at grease fittings. Refer to *MAINTENANCE SCHEDULE* for maintenance frequency.

| SUSPENSION GREASE | |
|---|---|
| Scandinavia | SYNTHETIC GREASE SUSPENSION (EUR) (619590193) (P/N 779226) |
| All other countries | SYNTHETIC GREASE SUSPENSION (293550033) (P/N 779163) |

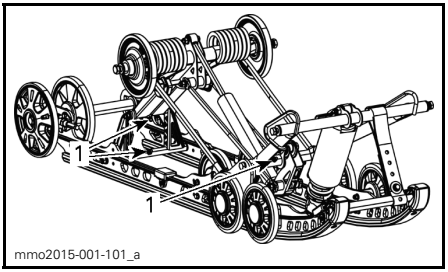


*SC-5M*
*1. Grease fittings*

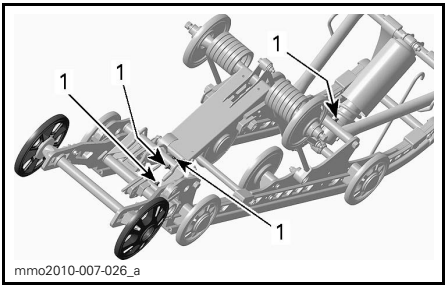


*SC-5U*
*1. Grease fittings*

### Steering and Front Suspension Condition

Visually inspect steering and front suspension for tightness of components (steering arms, control arms and links, tie rods, ball joints, ski bolts, ski legs, etc.). If necessary, contact an authorized Ski-Doo dealer.

## Skis

### Wear and Condition of Skis and Runners

Check the condition of the skis and ski runner carbides. If worn, contact an authorized Ski-Doo dealer.

**⚠ WARNING**

**Excessively worn skis and/or ski runners will adversely affect snowmobile control.**

## Fuses

### Fuse Inspection

Check fuse condition and replace it if necessary.

To remove fuse from holder, pull fuse out. Check if filament is melted.

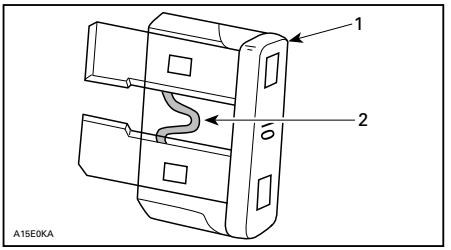


*1. Fuse*
*2. Check if melted*

**⚠ WARNING**

Do not use a higher rated fuse.

**⚠ WARNING**

If fuse has burnt out, source of malfunction should be determined and corrected before restarting. See an authorized Ski-Doo dealer for servicing.

### Fuse Location

The fuse box is located on top of the chain case.

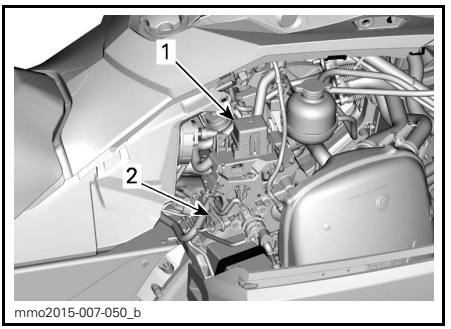


*1. Fuse box*
*2. 40 A charging system fuse*

| FUSE AND RELAY BOX DESCRIPTION | | |
|---|---|---|
| NO | DESCRIPTION | RATING |
| FA | Main | 40 A |
| F1 | Ignition coils/ Fuel injectors/ Fuel pump/ Starter solenoid | 10 A |
| F2 | Accessories/ Heating elements | 20 A |
| F3 | Electromechanical reverse (applicable models) | 30 A |
| F4 | Start button/Cooling fan/Clock | 15 A |
| F5 | Headlights/Taillight/ Brake light | 20 A |
| F6 | ECM/Gauge/Caps | 10 A |
| R1 | Main relay | Fuses F1, F3 and F6 |
| R2 | Lighting relay | Fuse F5 |
| R3 | Accessories relay | Fuse F2 |

## Lights

Always check light operation after bulb replacement.

### Headlights Bulb Replacement

***NOTICE*** Never touch glass portion of an halogen bulb with bare fingers, it shortens its operating life. If glass is touched, clean it with isopropyl alcohol which will not leave a film on the bulb.

1. Open the front storage compartment by pulling the tab.

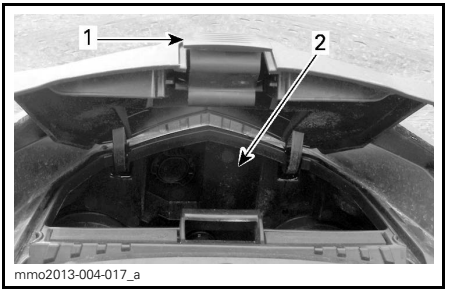


*1. Tab*
*2. Storage compartment*

2. Remove the applicable rubber boot.

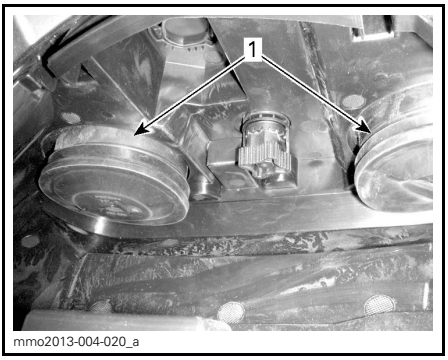


*1. Rubber boots*

NOTE: Make sure to properly reinstall both rubber boots to ensure that no humidity gets inside the headlamp. Humidity can create fog inside the headlamp.

3. Disconnect electrical connector.

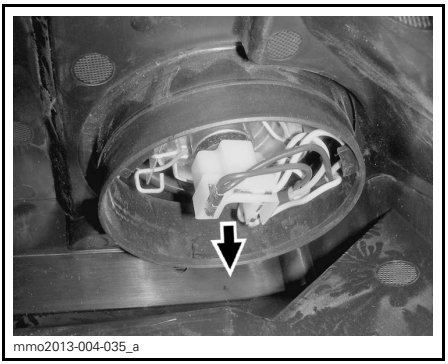


*ELECTRICAL CONNECTOR*

NOTE: Make sure to properly reconnect the electrical connector.

4. Press and pull both sides of the retaining clip at the same time to release it from bulb support.

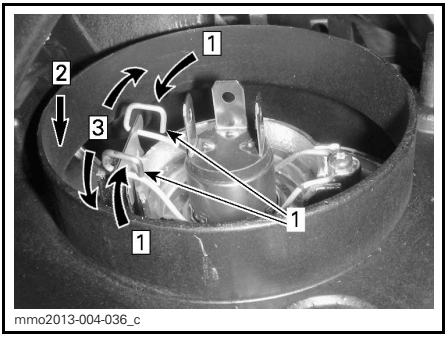


*Step 1: Push both sides*
*Step 2: Push down to release*
*Step 3: Release both sides*

*1. Retaining clip*

5. Pull bulb and replace. Properly reinstall parts.

### Headlights Beam Aiming

Open the front storage compartment.

Turn knob to adjust beam height.

Turn knob clockwise to lower the beam height.

Turn knob counterclockwise to raise the beam height.

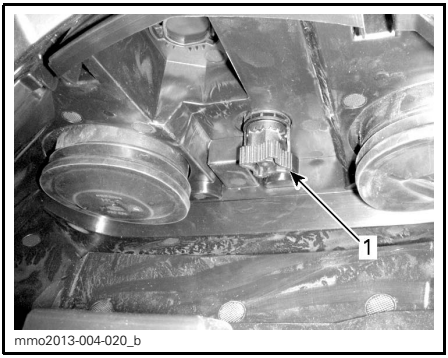


*TYPICAL*
*1. Knob*

## Post-Operation Care

Remove snow and ice from rear suspension, track, front suspension, steering mechanism and skis.

**⚠ WARNING**

**Make sure tether cord cap is away from engine cut-off switch before standing in front the vehicle, getting close to the track or rear suspension components.**

Always cover your snowmobile when leaving it outside overnight or during extended periods of inactivity. This will protect it from frost and snow as well as help retain its appearance.

## Vehicle Cleaning and Protection

Wash snowmobile with water mixed with a mild detergent. Use only microfiber cloths or an equivalent.

***NOTICE*** **It is necessary to use microfiber cloths or equivalent on windshield and hood to avoid damaging further surfaces to clean.**

To remove grease, oil and grime, use BRP HEAVY DUTY CLEANER (P/N 293 110 001).

***NOTICE*** **Do not use Heavy duty cleaner on decals or vinyl.**

To remove stubborn dirt from all plastic and vinyl surfaces, use CLEANER AND DEGREASER PRO C1 (P/N 779262).

***NOTICE*** **Never clean plastic parts or hood with strong detergent, degreasing agent, paint thinner, acetone, products containing chlorine, etc.**

Wax painted portion of the vehicle for better protection.

NOTE: Apply wax on glossy finish only.

# STORAGE

During summer, or when a snowmobile is not in use for more than three months, proper storage is necessary.

| STORAGE |
| --- |
| Clean the vehicle |
| Add fuel stabilizer to fuel following the product manufacturer recommendations. Run the engine after adding the product to the fuel |
| Lubricate engine |
| Lubricate brake lever pivot |
| Lubricate rear suspension |
| Charge battery monthly to keep it fully charged during storage (on models with electric starter) |
| Block muffler outlet with rags |
| Lift rear of vehicle until track is clear of the ground. Do not release track tension |

**CAUTION** Use appropriate lifting device or have assistance to share lifting stress. If a lifting device is not used, use proper lifting techniques, notably using your legs force. Do not attempt to lift the rear of vehicle if it is above your limits.

***NOTICE*** The snowmobile has to be stored in a cool and dry place and covered with an opaque but ventilated tarpaulin. This will prevent sun rays and grime from affecting plastic components and vehicle finish.

***NOTICE*** Fuel stabilizer should be added prior to engine lubrication to ensure carburetor protection against varnish deposits.

***This page is intentionally blank***

# TECHNICAL INFORMATION

## Vehicle Description Decal

Vehicle description decal is located on right hand side of tunnel.

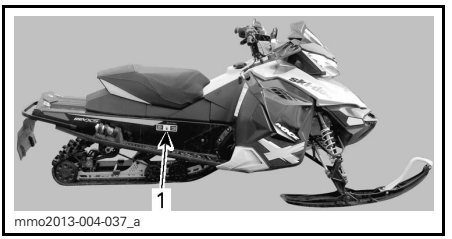


*TYPICAL*
1. *Vehicle description decal*

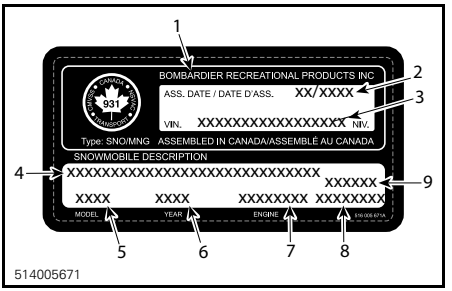


*VEHICLE DESCRIPTION DECAL*
1. *Manufacturer name*
2. *Manufacturing date*
3. *Vehicle identification number (VIN)*
4. *Model and package name*
5. *Model number*
6. *Model year*
7. *Engine type*
8. *Vehicle weight (European models)*
9. *Vehicle engine power (European models)*

## Identification Numbers

The main components of your snowmobile (engine and frame) are identified by different identification numbers. It may sometimes become necessary to locate these numbers for warranty purposes or to trace your snowmobile in the event of loss. These numbers are required by the authorized Ski-Doo dealer to complete warranty claims properly. We strongly recommend that you take note of all the identification numbers on your snowmobile and supply them to your insurance company.

### Vehicle Identification Number (VIN)

VIN is scribed on vehicle description decal. See above. It is also engraved on tunnel near vehicle description decal.

Model number and model year are part of the information found in the VIN. See illustration.

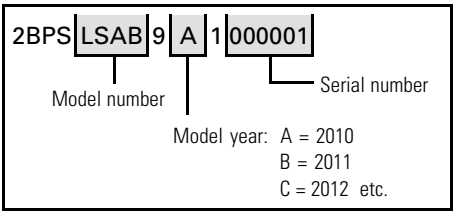


### Engine Identification Number

Refer to the following illustration to locate the engine identification number on the engine.

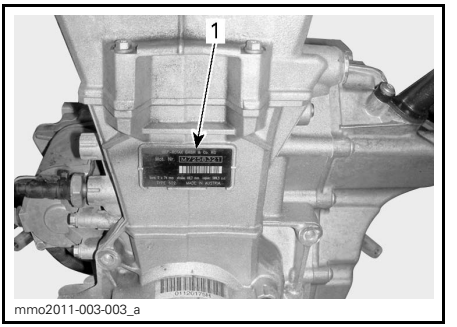


*600 ACE ENGINE*
1. *Engine identification number*

# NOISE EMISSION AND VIBRATION VALUES (ALL COUNTRIES EXCEPT CANADA/UNITED STATES)

| MODEL | | 600 ACE |
|---|---|---|
| NOISE EMISSION AND VIBRATION VALUES[1] | | |
| Noise | Sound power level ($L_{WA}$) | 90,4 dB @ 3625 RPM (Uncertainty ($K_{wa}$) 3 dB) |
| | Sound pressure ($L_{pA}$) | 80 dB @ 3625 RPM (Uncertainty ($K_{pA}$) 3 dB) |
| Vibration | Hand-arm system | <2.5 $m/s^2$ @ 3625 RPM |
| | Whole body at seat | <0.5 $m/s^2$ @ 3625 RPM |
| [1]: Noise emission and Vibration values are measured in accordance with Standard ISMA 1: 2014 on a paved surface, at neutral or without belt. | | |

The EC-Declaration of Conformity does not appear in this version of the Operator's Guide.

Please refer to the printed version that was delivered with your vehicle.

# EPA CERTIFIED ENGINES

## Engine Emissions Information

### Manufacturer's Responsibility

Beginning with **2007 model year engines**, snowmobile manufacturers of snowmobile engines need to determine the exhaust emission levels for each engine horsepower family and certify these engines with the United States of America Environmental Protection Agency (EPA). An emissions control information label, showing emission levels and engine specifications, must be placed on each vehicle at the time of manufacture.

### Dealer's Responsibility

When performing service on a certified Ski-Doo snowmobiles that carry an emissions control information label, adjustments must be kept within published factory specifications.

Replacement or repair of any emission related component must be executed in a manner that maintains emission levels within the prescribed certification standards.

Dealers are not to modify the engine in any manner that would alter the horsepower or allow emission levels to exceed their predetermined factory specifications.

Exceptions include manufacturer's prescribed changes, such as altitude adjustments for example.

### Owner Responsibility

The owner/operator is required to have engine maintenance performed to maintain emission levels within prescribed certification standards.

The owner/operator is not to, and should not allow anyone to modify the engine in any manner that would alter the horsepower or allow emissions levels to exceed their predetermined factory specifications.

### EPA Emission Regulations

All Ski-Doo snowmobiles manufactured by BRP are certified to the EPA as conforming to the requirements of the regulations for the control of air pollution from new snowmobile engines. This certification is contingent on certain adjustments being set to factory standards. For this reason, the factory procedure for servicing the product must be strictly followed and, whenever practicable, returned to the original intent of the design.

The responsibilities listed above are general and in no way a complete listing of the rules and regulations pertaining to the EPA requirements on exhaust emissions for snowmobile products. For more detailed information on this subject, you may contact the following locations:

**MAIL:**

U.S. Environmental Protection Agency
Certification Division
Gasoline Engine Compliance Center
2000 Traverwood Drive
Ann Arbor MI 48105
USA

**INTERNET WEB SITE:**

www.epa.gov/otaq

# RADIO FREQUENCY DIGITALLY ENCODED SECURITY SYSTEM (RF D.E.S.S. KEY)

This device complies with FCC Part 15 and Industry Canada license exempt RSS standard(s).

Operation is subject to the following two conditions: (1) this device may not cause interference, and (2) this device must accept any interference, including interference that may cause undesired operation of the device.

Changes or modifications not expressly approved by the party responsible for compliance could void the user's authority to operate the equipment.

IC Registration Number: 12006A-M01456

FCC ID: 2ACERM01456

We, the party responsible for compliance, declare under our sole responsibility that the device is in conformity with the provisions of the following Council Directive: 2014/53/EU. To which this declaration relates is in conformity with the essential requirements and other relevant requirements. The product is in conformity with the following directives, harmonized standards and regulations:

Radio Equipment Directive (RED) 2014/53/EU and Harmonized Standards:

EN 300 330-2, EN 60950-1

# SPECIFICATIONS

| MODEL | | 600 ACE |
|---|---|---|
| ENGINE | | |
| Engine type | | Rotax 600, liquid cooled, 4-stroke, D.O.H.C., dry sump. |
| Cylinders | | 2 |
| Displacement | | 600 $cm^3$ (36.6 $in^3$) |
| Bore | | 74 mm (2.91 in) |
| Stroke | | 69.7 mm (2.74 in) |
| Maximum horsepower RPM | | 7250 RPM |
| Fuel injection system | | Multi point EFI, 46 mm throttle body |
| Exhaust system | | Double front pipe, baffle muffler |
| Engine oil | | Scandinavia: 4T 0W40 SYNTHETIC OIL (EUR) (619590114) (P/N 779286)<br>All other countries: 4T 0W40 SYNTHETIC OIL (293600112) (P/N 779139) or equivalent |
| Engine oil tank capacity | | Oil change, 2.1 L (2.22 qt (U.S. liq.)) |
| Coolant | | Scandinavia: EXTENDED LIFE PRE-MIXED COOLANT (EUR) (619590204) (P/N 779223)<br>All other countries: EXTENDED LIFE PRE-MIXED COOLANT (EUR) (619590204) (P/N 779223) or coolant specifically designed for aluminum engines |
| Recommended fuel | | Regular unleaded<br>Refer to *FUEL REQUIREMENTS* |
| Minimum octane rating. | | 87 Pump Posted AKI (RON+MON)/2 (fuel with NO ethanol) |
| | | 92 RON (fuel with NO ethanol) |
| | | 91 Pump Posted AKI (RON+MON)/2 (fuel which may contain up to 10% MAX ethanol) |
| | | 95 RON (fuel which may contain up to 10% MAX ethanol) |
| Fuel tank capacity | | 40 L (10.6 U.S. gal.) |
| DRIVE SYSTEM | | |
| Drive pulley type | | eDrive II |
| Driven pulley type | | QRS (Short shaft) |
| Engagement | | 2200 RPM |
| Chaincase oil | Type | Scandinavia: SYNTHETIC CHAINCASE OIL (EUR) (P/N 779185)<br>All other countries: SYNTHETIC CHAINCASE OIL (413803300) (P/N 779156) |
| | Capacity | 500 ml (16.9 U.S. oz) |

| MODEL | | | 600 ACE |
|---|---|---|---|
| DRIVE SYSTEM (cont'd) | | | |
| Small sprocket number of teeth | | Expedition Sport<br>Renegade Sport<br>Grand Touring Sport | 21 |
| Large sprocket number of teeth | | Expedition Sport | 51 |
| | | Renegade Sport<br>Grand Touring Sport | 49 |
| Drive sprocket number of teeth | Inside North America | | 8 |
| | Europe | | 7 |
| Track nominal width | | Renegade Sport | 38.1 cm (15 in) |
| | | Expedition Sport<br>Grand Touring Sport | 40.6 cm (16 in) |
| Track nominal length | | Renegade Sport<br>Grand Touring Sport | 348.7 cm (137 in) |
| | | Expedition Sport | 392.3 cm (154 in) |
| Track profile height | | Renegade Sport<br>Grand Touring Sport | 31.8 mm (1.25 in) |
| | | Expedition Sport | 38.1 mm (1.5 in) |
| Track tension | Deflection | Expedition Sport | 45 mm - 50 mm (1-3/4 in - 1-31/32 in) |
| | Force (1) | | 6 kgf to 8.5 kgf (13 lbf to 19 lbf) |
| Track alignment | | | Equal distance between edges of track guides and slider shoes |
| BRAKE SYSTEM | | | |
| Brake system type | | | Hydraulic, REV-XP™ brake type |
| Brake fluid | | | DOT 4 |

| MODEL | | 600 ACE |
|---|---|---|
| SUSPENSION | | |
| Front suspension | | Dual A-arms |
| Front shock | Renegade Sport<br>Grand<br>Touring Sport<br>Expedition Sport | Motion control |
| | Renegade Sport<br>(Europe) | HPG Plus |
| Front suspension max. travel | Renegade Sport<br>Grand Touring<br>Sport | 220 mm (8.7 in) |
| | Expedition Sport | 210 mm (8.3 in) |
| Rear suspension | Renegade Sport<br>Grand Touring<br>Sport | SC-5M |
| | Expedition Sport | SC-5U |
| Center shock | Renegade Sport<br>Expedition Sport<br>Grand Touring<br>Sport | Motion control |
| | Renegade Sport<br>(Europe) | HPG™ |
| Rear shock | Renegade Sport<br>Expedition Sport<br>Grand Touring<br>Sport | HPG™ |
| Rear suspension max. travel | Renegade Sport<br>Expedition Sport<br>Grand Touring<br>Sport | 245 mm (9.6 in) |

| MODEL | | | 600 ACE |
|---|---|---|---|
| ELECTRICAL SYSTEM | | | |
| Lightning system output | | | 420/650 watts @ 6000 RPM |
| Headlights bulb HI/LOW beam | | | 2 x 60/55 watts (H-4) |
| Taillight bulb | | | 2.6 W / 139m W LED |
| Spark plug | Type | | NGK MR7BI or equivalent |
| | Gap | | 0.8 mm (.031 in) |
| Fuses and relays | | | Refer to *FUSES* in *MAINTENANCE* |
| WEIGHT AND DIMENSIONS | | | |
| Dry weight | | Renegade Sport | 211 kg (465 lb) |
| | | Expedition Sport | 244 kg (537 lb) |
| | | Grand Touring Sport | 234 kg (515 lb) |
| Vehicle overall length | | Renegade Sport Grand Touring Sport | 3 000 mm (118.1 in) |
| | | Expedition Sport | 3 247 mm (127.8 in) |
| Vehicle overall width | | Renegade Sport Grand Touring Sport | 1 217 mm (47.9 in) |
| | | Expedition Sport | 1 140 mm to 1 180 mm (44.9 in to 46.5 in) |
| Ski stance | | Renegade Sport Grand Touring Sport | 1 077 mm (42.4 in) |
| | | Expedition Sport | 975 mm or 1 020 mm (38.4 in or 40.2 in) |
| Ski width | | Expedition Sport Renegade Sport (Europe) Grand Touring Sport (Europe) | 165 mm (6.5 in) |
| | | Renegade Sport Grand Touring Sport | 145 mm (5.7 in) |

(1) Measure gap between slider shoe and bottom inside track when exerting a downward pull to the track.

# TROUBLESHOOTING

# TROUBLESHOOTING GUIDELINES

## ELECTRIC STARTER DOES NOT WORK

1. Emergency engine stop switch in OFF position or tether cord cap not installed on engine cut-off switch.
   – *Place the emergency engine stop switch in the ON position and install tether cord cap (on engine cut-off switch.*
2. Throttle applied while attempting an engine start.
   – *Release throttle while cranking.*

## ENGINE IS CRANKED BUT FAILS TO START

1. No fuel to the engine.
   – *Check fuel tank level, add fuel if necessary.*
2. System voltage too low.
   – *Contact an authorized Ski-Doo dealer.*

## ENGINE RPM DOES NOT REACH CLUTCH ENGAGEMENT POINT

1. D.E.S.S. did not read D.E.S.S. key code in the tether cord cap. D.E.S.S. pilot lamp blinks (slow short beeps/repetitive).
   – *Properly install tether cord cap.*
2. D.E.S.S. has read a different code than the one programmed. D.E.S.S. pilot lamp blinks rapidly (fast short beeps/repetitive).
   – *Install a tether cord cap for which this snowmobile was programmed.*
3. ECM does not recognize the D.E.S.S. key.
   – *Refer to an authorized Ski-Doo dealer.*

## ENGINE LACKS ACCELERATION OR POWER

1. Learning key used.
   – *Use a Normal key.*
2. Sport mode not activated.
   – *Refer to ACTIVATING SPORT MODE in OPERATING MODES.*
3. Engine warm-up in progress.
   – *Drive vehicle at low speeds for a few minutes.*
4. Engine break-in period not completed.
   – *Complete break-in period.*
5. Drive and driven pulleys require servicing.
   – *Contact an authorized SKI-DOO dealer.*
6. Engine overheats.
   – *Check coolant level, see MAINTENANCE PROCEDURES.*
   – *Check heat exchangers cleanliness. Clean if necessary.*
7. Drive belt worn too thin.
   – *If the drive belt has lost more than 3 mm (1/8 in) of its original width, it will affect vehicle performance.*
   – *Replace drive belt.*

ENGINE LACKS ACCELERATION OR POWER (cont'd)

8. Incorrect track adjustment.
   – *See MAINTENANCE and/or an authorized SKI-DOO dealer for proper alignment and tension adjustments.*
9. Fuel pressure too low.
   – *Seek service from an authorized Ski-Doo dealer, repair shop, or person of your own choosing for maintenance, repair, or replacement. Please refer to the US EPA EMISSIONS-RELATED WARRANTY contained herein for information about warranty claims.*

ENGINE BACKFIRES

1. Engine is running too hot.
   – *See item 5 of ENGINE LACKS POWER.*
2. Ignition timing is incorrect or there is an ignition system failure.
   – *Seek service from an authorized Ski-Doo dealer, repair shop, or person of your own choosing for maintenance, repair, or replacement. Please refer to the US EPA EMISSIONS-RELATED WARRANTY contained herein for information about warranty claims.*
3. Exhaust system leak.
   – *Seek service from an authorized Ski-Doo dealer, repair shop, or person of your own choosing for maintenance, repair, or replacement. Please refer to the US EPA EMISSIONS-RELATED WARRANTY contained herein for information about warranty claims.*
4. Fuel pressure too low.
   – *Seek service from an authorized Ski-Doo dealer, repair shop, or person of your own choosing for maintenance, repair, or replacement. Please refer to the US EPA EMISSIONS-RELATED WARRANTY contained herein for information about warranty claims.*

ENGINE MISFIRES

1. Water in fuel.
   – *Drain fuel system and refill with fresh fuel.*
2. RAVE valves malfunction.
   – *Have RAVE valves system inspected. Seek service from an authorized Ski-Doo dealer, repair shop, or person of your own choosing for maintenance, repair, or replacement. Please refer to the US EPA EMISSIONS-RELATED WARRANTY contained herein for information about warranty claims.*

NO RESPONSE FROM THE THROTTLE LEVER INPUTS. MESSAGE DISPLAYED: PRESS START TO GO

1. Engine management system has detected a sensor problem.
   – *Press and hold the Start/electronic reverse button in order to move vehicle. Seek service from an authorized Ski-Doo dealer, repair shop, or person of your own choosing for maintenance, repair, or replacement. Please refer to the US EPA EMISSIONS-RELATED WARRANTY contained herein for information about warranty claims.*

## HEATED GRIPS/THUMB WARMERS ARE NOT WORKING

1. Engine RPM is too low.
   – *Make sure engine RPM is above 2000.*

## ENGINE HAS SHUT DOWN

1. The engine shuts down after long periods of idling.
   – *Do not let engine idle too long. Refer to VEHICLE WARM-UP in OPERATING INSTRUCTION.*

## Pilot Lamps, Messages and Beeper Codes

Gauge pilot lamp(s) will inform you if an anomaly occurs or to inform you of a particular condition.

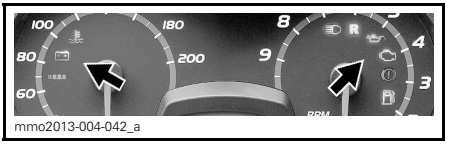


*TYPICAL — PILOT LAMPS*

Pilot lamp can flash alone or in combination with another lamp.

On the multifunction analog/digital gauge, the display is used as a complement of the pilot lamps to give you a brief description if an anomaly occurs or to inform you of a particular condition.

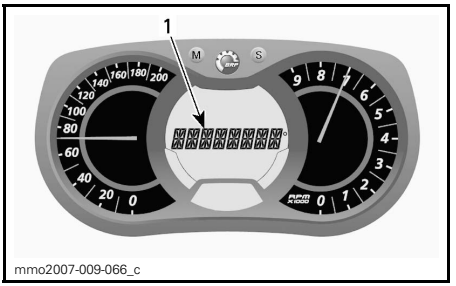


*1. Message display*

Messages will be displayed with a beep code and pilot lamp(s).

Beeper codes will be heard and messages (depending on gauge model) will be displayed to catch your attention.

See table below for details.

NOTE: Some of the listed pilot lamps and messages do not apply to all models. The message display is available only on the multifunction analog/digital gauge.

| PILOT LAMP(S) ON | BEEPER | MESSAGE DISPLAY | DESCRIPTION |
|---|---|---|---|
| | 4 short beeps every 5 minutes | LOW OIL | ACE: Low engine oil pressure. Stop vehicle in a safe place then, check oil level. Fill to proper level. If oil level was correct, discontinue use and contact an authorized Ski-Doo dealer. |
| | 4 short beeps every 30 seconds | ENGINE OVERHEAT | Engine is overheating, reduce snowmobile speed and run in loose snow or stop engine immediately and let engine cool down. Check coolant level, refer to *MAINTENANCE*. If coolant level is correct and overheating persists, contact an authorized Ski-Doo dealer. Do not run the engine if condition persists. |
| | | MUFFLER | Reduce speed or stop engine. Let engine cool down and restart. If overheating persists, contact an authorized Ski-Doo dealer. Do not run the engine if condition persists. |
| | Short beeps repeating rapidly | ENGINE OVERHEAT | Critical overheat. Stop engine immediately and let engine cool down. Check coolant level, refer to *MAINTENANCE*. If coolant level is correct and overheating persists, contact an authorized Ski-Doo dealer. Do not run the engine if condition persists. |
| | | MUFFLER OVERHEAT | Critical overheat. Stop engine immediately and let engine cool down. If overheating persists, contact an authorized Ski-Doo dealer. Do not run the engine if condition persists. Do not run the engine if condition persists. |
| | | ECM OVERHEAT | |
| | 4 short beeps every 5 minutes | LOW BAT | Indicate a low or high battery voltage condition. See an authorized Ski-Doo dealer as soon as possible. |
| | | HIGH BAT | |
| | 4 short beeps | CHECK ENGINE | Engine fault, see an authorized Ski-Doo dealer, repair shop or person of your own choosing as soon as possible. |
| | — | | Displayed when brake is applied for more than 15 seconds while throttle lever is squeezed and vehicle is moving at more than 5 km/h (3 MPH). |

| PILOT LAMP(S) ON | BEEPER | MESSAGE DISPLAY | DESCRIPTION |
|---|---|---|---|
| — | 4 short beeps every 5 minutes | KNOCK | Engine detonation (RPM is limited when this condition occurs).<br>– Ensure recommended fuel is used.<br>– Check fuel quality, replace if necessary.<br>– If fault still occurs, contact an authorized Ski-Doo dealer, repair shop, or person of your own choosing. |
| — | 4 short beeps every 5 minutes | REV LIMIT | Engine RPM limited for protection when certain faults occur. |
| — | Short beeps repeating rapidly | SHUTDOWN | Shutdown procedure in force due to engine overheating or fuel pump problem, remove tether cord cap from engine cut-off switch and contact an authorized Ski-Doo dealer, repair shop, or person of your own choosing. |
| — | — | COMMUNICATION | Communication problem between ECM and gauge. Stop engine, remove tether cord cap. Wait a few minutes, then start engine. If problem persists, contact an authorized Ski-Doo dealer. |
| **DESS** | 2 short beeps | — | Good key, vehicle ready to operate. |
| | Short beeps, repeating slowly | CHECK KEY | Unable to read key (bad connection). Make sure the key is clean and correctly snapped on post. |
| | Short beeps repeating rapidly | BAD KEY | Invalid key or key not programmed. Use the proper key for the vehicle or have the programmed. |
| — | — | (blinking) | Fuel level sensor problem. |
| — | — | THROTTLE OPEN | Throttle lever applied while attempting an engine start (engine cranks but won't run). Release throttle lever while starting. |
| — | — | DROWN MODE | Throttle wide open while attempting an engine start (engine cranks but won't run). Release throttle while starting. |

***This page is intentionally blank***

# *WARRANTY*

# BRP LIMITED WARRANTY USA AND CANADA: 2019 SKI-DOO® SNOWMOBILES

## 1) SCOPE OF THE LIMITED WARRANTY

Bombardier Recreational Products Inc. ("BRP")* warrants its 2019 Ski-Doo snowmobiles sold by authorized BRP dealers (as defined below) in the United States of America ("USA") and in Canada from defects in material or workmanship for the period and under the conditions described below. This limited warranty will become null and void if: (1) the snowmobile was used for racing or any other competitive activity, at any point, even by a previous owner; or (2) the snowmobile has been altered or modified in such a way so as to adversely affect its operation, performance or durability, or has been altered or modified to change its intended use.

Non-factory installed parts and accessories are not covered under this limited warranty. Please refer to the applicable parts and accessories limited warranty text.

## 2) LIMITATIONS OF LIABILITY

THIS WARRANTY IS EXPRESSLY GIVEN AND ACCEPTED IN LIEU OF ANY AND ALL OTHER WARRANTIES, EXPRESSED OR IMPLIED, INCLUDING WITHOUT LIMITATION ANY WARRANTY OF MERCHANTABILITY OR FITNESS FOR A PARTICULAR PURPOSE. TO THE EXTENT THAT THEY CANNOT BE DISCLAIMED, THE IMPLIED WARRANTIES ARE LIMITED IN DURATION TO THE LIFE OF THE EXPRESS WARRANTY. INCIDENTAL AND CONSEQUENTIAL DAMAGES ARE EXCLUDED FROM COVERAGE UNDER THIS WARRANTY. SOME STATES/PROVINCES DO NOT ALLOW FOR THE DISCLAIMERS, LIMITATIONS AND EXCLUSIONS IDENTIFIED ABOVE, AS A RESULT, THEY MAY NOT APPLY TO YOU. THIS WARRANTY GIVES YOU SPECIFIC RIGHTS, AND YOU MAY ALSO HAVE OTHER LEGAL RIGHTS WHICH MAY VARY FROM STATE TO STATE, OR PROVINCE TO PROVINCE.

Neither the distributor, any BRP dealer nor any other person has been authorized to make any affirmation, representation or warranty regarding the product, other than those contained in this limited warranty, and if made, shall not be enforceable against BRP. BRP reserves the right to modify this limited warranty at any time, being understood that such modification will not alter the warranty conditions applicable to the products sold while this warranty is in effect.

## 3) EXCLUSIONS – ARE NOT WARRANTED

The following are not warranted under any circumstances:

- Normal wear and tear;
- Routine maintenance items, tune ups, adjustments;
- Damage caused by failure to provide proper maintenance and/or storage, as described in the Operator's Guide;
- Damage resulting from removal of parts, improper repairs, service, maintenance, modifications or use of parts or accessories not manufactured or approved by BRP or resulting from repairs done by a person that is not an authorized servicing BRP dealer;
- Damage caused by abuse, abnormal use, neglect, use of the product on surfaces other than snow, or operation of the product in a manner inconsistent with the recommended operation described in the Operator's Guide;

– Damage resulting from accident, submersion, fire, theft, vandalism or any act of God;
– Operation with fuels, oils or lubricants which are not suitable for use with the product (see the Operator's Guide);
– Snow or water ingestion;
– Incidental or consequential damages, or damages of any kind including without limitation towing, storage, telephone, rental, taxi, inconvenience, insurance coverage, loan payments, loss of time, loss of income; and
– Damage resulting from studs installed on tracks if the installation does not conform to BRP's instructions.

## 4) WARRANTY COVERAGE PERIOD

This limited warranty will be in effect from the date of delivery to the first retail consumer or the date the product is first put into use, whichever occurs first and for the following period:

TWELVE (12) CONSECUTIVE MONTHS, for private or commercial use owners. However, the warranty coverage period on a snowmobile delivered between June 1st and December 1st of a given year will expire November 30th of the following year.

For emission-related components; please also refer to the *US EPA EMISSION-RELATED WARRANTY* contained herein.

The repair or replacement of parts or the performance of service under this warranty does not extend the life of this warranty beyond its original expiration date.

## 5) CONDITIONS REQUIRED FOR WARRANTY COVERAGE

This warranty coverage is available **only** if each of the following conditions has been fulfilled:
– The 2019 Ski-Doo snowmobile must be purchased as new and unused by its first owner from a BRP dealer authorized to distribute Ski-Doo snowmobiles in the country in which the sale occurred ("BRP dealer");
– The BRP specified pre-delivery inspection process must be completed and documented and signed by the purchaser;
– The 2019 Ski-Doo snowmobile must have undergone proper registration by an authorized BRP dealer;
– The 2019 Ski-Doo snowmobile must be purchased in the country in which the purchaser resides; and
– Routine maintenance outlined in the Operator's Guide must be timely performed in order to maintain warranty coverage. BRP reserves the right to make warranty coverage contingent upon proof of proper maintenance.

BRP will not honor this limited warranty to any private use owner or commercial use owner if one of the preceding conditions has not been met. Such limitations are necessary in order to allow BRP to preserve both the safety of its products, and also that of its consumers and the general public.

## 6) WHAT TO DO TO OBTAIN WARRANTY COVERAGE

The customer must cease using the snowmobile upon the appearance of an anomaly. The customer must notify a servicing BRP dealer within three (3) days of the appearance of a defect, and provide it with reasonable access to the product and reasonable opportunity to repair it. The customer must also present to the authorized BRP dealer, proof of purchase of the product and must sign the repair/work order prior to starting the repair in order to validate the warranty repair. All parts replaced under this limited warranty become the property of BRP.

## 7) WHAT BRP WILL DO

BRP's obligations under this warranty are limited to, at its sole discretion, repairing parts found defective under normal use, maintenance and service, or replacing such parts with new genuine Ski-Doo parts without charge for parts and labor , at any authorized BRP dealer during the warranty coverage period under the conditions described herein. No claim of breach of warranty shall be cause for cancellation or rescission of the sale of the snowmobile to the owner.

In the event that service is required outside of the country of original sale, the owner will bear responsibility for any additional charges due to local practices and conditions, such as, but not limited to, freight, insurance, taxes, license fees, import duties, and any and all other financial charges, including those levied by governments, states, territories and their respective agencies.

BRP reserves the right to improve or modify products from time to time without assuming any obligation to modify products previously manufactured.

## 8) TRANSFER

If the ownership of a product is transferred during the warranty coverage period, this limited warranty, subject to its terms and conditions, shall also be transferred and be valid for the remaining coverage period provided BRP or an authorized Ski-Doo Distributor/Dealer receives a proof that the former owner agreed to the transfer of ownership, in addition to the co-ordinates of the new owner.

## 9) CONSUMER ASSISTANCE

In the event of a controversy or a dispute in connection with this limited warranty, BRP suggests that you try to resolve the issue at the Ski-Doo Distributor/Dealer level. We recommend discussing the issue with the authorized Ski-Doo Distributor/Dealer's service manager or owner.

If the matter still remains unresolved, contact BRP by filling out the customer contact form at www.brp.com or contact BRP by mail at one of the addresses listed under the *CONTACT US* section of this guide.

* In the USA, products are distributed and serviced by BRP US Inc.
© 2018 Bombardier Recreational Products Inc. All rights reserved.
® Registered trademark of Bombardier Recreational Products Inc.

# US EPA EMISSION-RELATED WARRANTY

Bombardier Recreational Products Inc. ("BRP")* warrants to the ultimate purchaser and each subsequent purchaser that this new engine, including all parts of its exhaust emission-control system and its evaporative emission-control system, meets two conditions:

1. It is designed, built, and equipped so it conforms at the time of sale to the ultimate purchaser with the requirements of 40 CFR 1051 and 40 CFR 1060.
2. It is free from defects in materials and workmanship that may keep it from meeting the requirements of 40 CFR 1051 and 40 CFR 1060.

Where a warrantable condition exists, BRP will repair or replace, as it elects, any part or component with a defect in materials or workmanship that would increase the engine's emissions of any regulated pollutant within the stated warranty period at no cost to the owner, including expenses related to diagnosing and repairing or replacing emission-related parts. All defective parts replaced under this warranty become the property of BRP.

For all emission-related warranty claims, BRP is limiting the diagnosis and repair of emission-related parts to the authorized Ski-Doo dealers, unless for emergency repairs as required by item 2 of the following list.

As a certifying manufacturer, BRP will not deny emission-related warranty claims based on any of the following:

1. Maintenance or other service BRP or BRP's authorized facilities performed.
2. Engine/equipment repair work that an operator performed to correct an unsafe, emergency condition attributable to BRP as long as the operator tries to restore the engine/equipment to its proper configuration as soon as possible.
3. Any action or inaction by the operator unrelated to the warranty claim.
4. Maintenance that was performed more frequently than BRP specify.
5. Anything that is BRP fault or responsibility.
6. The use of any fuel that is commonly available where the equipment operates unless BRP written maintenance instructions state that this fuel would harm the equipment's emission control system and operators can readily find the proper fuel. See maintenance information section and fuel requirements of fueling section.

## Emission-Related Warranty Period

The emission-related warranty is valid for the following period whichever comes first:

| | HOURS | MONTHS | KILOMETERS |
|---|---|---|---|
| Exhaust emission-related components | 200 | 30 | 4000 |
| Evaporative emission-related components | N/A | 24 | N/A |

## Components Covered

The emission-related warranty covers all components whose failure would increase an engine's emissions of any regulated pollutant, including the following listed components:

1. For exhaust emissions, emission-related components include any engine parts related to the following systems:
   – Air-induction system
   – Fuel system
   – Ignition system
   – Exhaust gas recirculation systems
2. The following parts are also considered emission-related components for exhaust emissions:
   – Aftertreatment devices
   – Crankcase ventilation valves
   – Sensors
   – Electronic control units
3. The following parts are considered emission-related components for evaporative emissions:
   – Fuel tank
   – Fuel cap
   – Fuel line
   – Fuel line fittings
   – Clamps*
   – Pressure relief valves*
   – Control valves*
   – Control solenoids*
   – Electronic controls*
   – Vacuum control diaphragms*
   – Control cables*
   – Control linkages*
   – Purge valves
   – Vapor hoses
   – Liquid/vapor separator
   – Carbon canister
   – Canister mounting brackets
   – Carburetor purge port connector
4. Emission-related components also include any other part whose only purpose is to reduce emissions or whose failure will increase emissions without significantly degrading engine/equipment performance.

*As related to the evaporative emission control system

## Limited Applicability

As a certifying manufacturer, BRP may deny emission-related warranty claims for failures that have been caused by the owner's or operator's improper maintenance or use, by accidents for which the manufacturer has no responsibility, or by acts of God. For example, an emission-related warranty claim need not be honored for failures that have been directly caused by the operator's abuse of the engine/equipment or the operator's use of the engine/equipment in a manner for which it was not designed and are not attributable to the manufacturer in any way.

If you have any question regarding your warranty rights and responsibility, you should contact Bombardier Recreational Products at 1-888-272-9222.

* In the USA, products are distributed and serviced by BRP US Inc.

# BRP INTERNATIONAL LIMITED WARRANTY: 2019 SKI-DOO® SNOWMOBILES

## 1) SCOPE OF THE LIMITED WARRANTY

Bombardier Recreational Products Inc. ("BRP")* warrants its 2019 Ski-Doo snowmobiles sold by distributors or dealers authorized by BRP to distribute Ski-Doo snowmobiles ("Ski-Doo Distributor/Dealer") outside of the fifty United States, Canada, members of the European Economic Area (which is comprised of the member states of the European Union plus Norway, Iceland and Liechtenstein) ("EEA"), members states of the Commonwealth of the Independent States (including Ukraine and Turkmenistan) (''CIS'') and Turkey, from defects in material or workmanship for the period and under the conditions described below.

Non-factory installed parts and accessories are not covered under this limited warranty. Please refer to the applicable parts and accessories limited warranty text.

This limited warranty will become null and void if: (1) the snowmobile was used for racing or any other competitive activity, at any point, even by a previous owner; or (2) the snowmobile has been altered or modified in such a way so as to adversely affect its operation, performance or durability, or has been altered or modified to change its intended use.

## 2) LIMITATIONS OF LIABILITY

TO THE EXTENT PERMITTED BY LAW, THIS WARRANTY IS EXPRESSLY GIVEN AND ACCEPTED IN LIEU OF ANY AND ALL OTHER WARRANTIES, EXPRESSED OR IMPLIED, INCLUDING WITHOUT LIMITATION ANY WARRANTY OF MERCHANTABILITY OR FITNESS FOR A PARTICULAR PURPOSE. TO THE EXTENT THAT THEY CANNOT BE DISCLAIMED, THE IMPLIED WARRANTIES ARE LIMITED IN DURATION TO THE LIFE OF THE EXPRESS WARRANTY. INCIDENTAL AND CONSEQUENTIAL DAMAGES ARE EXCLUDED FROM COVERAGE UNDER THIS WARRANTY. SOME JURISDICTIONS DO NOT ALLOW FOR THE DISCLAIMERS, LIMITATIONS AND EXCLUSIONS IDENTIFIED ABOVE, AS A RESULT, THEY MAY NOT APPLY TO YOU. THIS WARRANTY GIVES YOU SPECIFIC RIGHTS, AND YOU MAY ALSO HAVE OTHER LEGAL RIGHTS WHICH MAY VARY FROM COUNTRY TO COUNTRY. (FOR PRODUCTS PURCHASED IN AUSTRALIA SEE CLAUSE 4 BELOW).

Neither the Ski-Doo Distributor/Dealer nor any other person has been authorized to make any affirmation, representation or warranty regarding the product, other than those contained in this limited warranty, and if made, shall not be enforceable against BRP.

BRP reserves the right to modify this warranty at any time, being understood that such modification will not alter the warranty conditions applicable to the products sold while this warranty is in effect.

## 3) EXCLUSIONS – ARE NOT WARRANTED

The following are not warranted under this limited warranty under any circumstances:

- Normal wear and tear;
- Routine maintenance items, tune ups, adjustments;
- Damage caused by negligence or failure to provide proper maintenance and/or storage, as described in the Operator's Guide;

– Damage resulting from removal of parts, improper repairs, service, maintenance, modifications or use of parts or accessories not manufactured or approved by BRP which in its reasonable judgement are either incompatible with the product or adversely affect its operation, performance and durability, or resulting from repairs done by a person that is not an authorized servicing Ski-Doo Distributor/Dealer;
– Damage caused by abuse, abnormal use, neglect, racing or operation of the product on surfaces other than snow, or operation of the product in a manner inconsistent with the recommended operation described in the Operator's Guide;
– Damage resulting from accident, submersion, fire, snow or water ingestion, theft, vandalism or any act of God;
– Operation with fuels, oils or lubricants which are not suitable for use with the product (see the Operator's Guide);
– Damage resulting from rust, corrosion or exposure to the elements;
– Incidental or consequential damages, or damages of any kind including without limitation towing, storage, transportation expenses, telephone, rental, taxi, inconvenience, insurance coverage, loan payments, loss of time, loss of income; or time missed for downtime experience due to service work.
– And damage resulting from studs installed on tracks if the installation does not conform to BRP's instructions.

## 4) WARRANTY COVERAGE PERIOD

This warranty will be in effect from (1) the date of delivery to the first retail consumer or (2) the date the product is first put into use, whichever occurs first and for a period of:

TWELVE (12) CONSECUTIVE MONTHS, for private or commercial use owners. However, the warranty coverage period on a snowmobile delivered between June 1st and December 1st of a given year will expire November 30th of the following year.

The repair or replacement of parts or the performance of service under this warranty does not extend the life of this warranty beyond its original expiration date.

Note that the duration and any other modalities of the warranty coverage are subject to the applicable national or local legislation in the customer's country.

**FOR PRODUCTS SOLD IN AUSTRALIA ONLY**

Nothing in these Warranty terms and conditions should be taken to exclude, restrict or modify the application of any condition, warranty, guarantee, right or remedy conferred or implied under the Competition and Consumer Act 2010 (Cth), including the Australian Consumer Law or any other law, where to do so would contravene that law, or cause any part of these terms and conditions to be void. The benefits given to you under this limited warranty are in addition to other rights and remedies that you have under Australian law.

Our goods come with guarantees that cannot be excluded under the Australian Consumer Law. You are entitled to a replacement or refund for a major failure and for compensation for any other reasonably foreseeable loss or damage. You are also entitled to have the goods repaired or replaced if the goods fail to be of acceptable quality and the failure does not amount to a major failure.

## 5) CONDITIONS TO HAVE WARRANTY COVERAGE

This warranty coverage is available **only** if each of the following conditions has been fulfilled:

- The 2019 Ski-Doo snowmobile must be purchased as new and unused by its first owner from a Ski-Doo Distributor/Dealer authorized to distribute Ski-Doo snowmobiles in the country in which the sale occurred;
- The BRP specified pre-delivery inspection process must be completed and documented;
- The product must have undergone proper registration by an authorized Ski-Doo Distributor/Dealer;
- The 2019 Ski-Doo snowmobile must be purchased in the country or union of countries in which the purchaser resides.
- Routine maintenance outlined in the Operator's Guide must be timely performed in order to maintain warranty coverage. BRP reserves the right to make warranty coverage contingent upon proof of proper maintenance.

BRP will not honour this limited warranty to any private use owner or commercial use owner if one of the preceding conditions has not been met. Such limitations are necessary in order to allow BRP to preserve both the safety of its products, and also that of its consumers and the general public.

## 6) WHAT TO DO TO OBTAIN WARRANTY COVERAGE

The customer must cease using the snowmobile upon the appearance of an anomaly. The customer must notify a servicing Ski-Doo Distributor/Dealer within two (2) days of the appearance of a defect, and provide it with reasonable access to the product and reasonable opportunity to repair it. The customer must also present to the authorized Ski-Doo Distributor/Dealer, proof of purchase of the product and must sign the repair/work order prior to starting the repair in order to validate the warranty repair. All parts replaced under this limited warranty become the property of BRP.

Note that the notification period is subject to the applicable national or local legislation in customer's country.

## 7) WHAT BRP WILL DO

To the extent permitted by law, BRP's obligations under this warranty are limited to, at its sole discretion, repairing parts found defective under normal use, maintenance and service, or replacing such parts with new genuine Ski-Doo parts without charge for parts and labour, at any authorized Ski-Doo Distributor/Dealer during the warranty coverage period under the conditions described herein. BRP's responsibility is limited to making the required repairs or replacements of parts. No claim of breach of warranty shall be cause for cancellation or rescission of the sale of the snowmobile to the owner. You may have other legal rights which may vary from country to country.

In the event that service is required outside of the country of original sale, the owner will bear responsibility for any additional charges due to local practices and conditions, such as, but not limited to, freight, insurance, taxes, license fees, import duties, and any and all other financial charges, including those levied by governments, states, territories and their respective agencies.

BRP reserves the right to improve or modify products from time to time without assuming any obligation to modify products previously manufactured.

## 8) TRANSFER

If the ownership of a product is transferred during the warranty coverage period, this limited warranty, subject to its terms and conditions, shall also be transferred and be valid for the remaining coverage period provided BRP or an authorized Ski-Doo Distributor/Dealer receives a proof that the former owner agreed to the transfer of ownership, in addition to the co-ordinates of the new owner.

## 9) CONSUMER ASSISTANCE

In the event of a controversy or a dispute in connection with this limited warranty, BRP suggests that you try to resolve the issue at the Ski-Doo Distributor/Dealer level. We recommend discussing the issue with the authorized Ski-Doo Distributor/Dealer's service manager or owner.

If the matter still remains unresolved, contact BRP by filling out the customer contact form at www.brp.com or contact BRP by mail at one of the addresses listed under the *CONTACT US* section of this guide.

* For the territory covered by this limited warranty, products are distributed and serviced by Bombardier Recreational Products Inc. or its affiliates.

© 2018 Bombardier Recreational Products Inc. All rights reserved.
® Registered trademark of Bombardier Recreational Products Inc.

# BRP LIMITED WARRANTY FOR THE EUROPEAN AND THE COMMONWEALTH OF THE INDEPENDENT STATES (CIS) AREAS AND TURKEY : 2019 SKI-DOO® SNOWMOBILES

## 1) SCOPE OF THE LIMITED WARRANTY

Bombardier Recreational Products Inc. (“BRP”)* warrants its 2019 Ski-Doo snowmobiles sold by distributors or dealers authorized by BRP to distribute Ski-Doo snowmobiles ("Ski-Doo Distributor/Dealer") in member states of the European Economic Area (which is comprised of the member states of the European Union plus Norway, Iceland and Liechtenstein) ("EEA"), in member states of the Commonwealth of the Independent States (including Ukraine and Turkmenistan) (''CIS'') and Turkey from defects in material or workmanship for the period and under the conditions described below.

Non-factory installed parts and accessories are not covered under this limited warranty. Please refer to the applicable parts and accessories limited warranty text.

This limited warranty will become null and void if: (1) the snowmobile was used for racing or any other competitive activity, at any point, even by a previous owner; or (2) the snowmobile has been altered or modified in such a way so as to adversely affect its operation, performance or durability, or has been altered or modified to change its intended use.

## 2) LIMITATIONS OF LIABILITY

TO THE EXTENT PERMITTED BY LAW, THIS WARRANTY IS EXPRESSLY GIVEN AND ACCEPTED IN LIEU OF ANY AND ALL OTHER WARRANTIES, EXPRESSED OR IMPLIED, INCLUDING WITHOUT LIMITATION ANY WARRANTY OF MERCHANTABILITY OR FITNESS FOR A PARTICULAR PURPOSE. TO THE EXTENT THAT THEY CANNOT BE DISCLAIMED, THE IMPLIED WARRANTIES ARE LIMITED IN DURATION TO THE LIFE OF THE EXPRESS WARRANTIES. INCIDENTAL AND CONSEQUENTIAL DAMAGES ARE EXCLUDED FROM COVERAGE UNDER THIS WARRANTY. SOME JURISDICTIONS DO NOT ALLOW FOR THE DISCLAIMERS, LIMITATIONS AND EXCLUSIONS IDENTIFIED ABOVE, AS A RESULT, THEY MAY NOT APPLY TO YOU. THIS WARRANTY GIVES YOU SPECIFIC RIGHTS, AND YOU MAY ALSO HAVE OTHER LEGAL RIGHTS WHICH MAY VARY FROM COUNTRY TO COUNTRY.

Neither the Ski-Doo Distributor/Dealer nor any other person has been authorized to make any affirmation, representation or warranty regarding the product, other than those contained in this limited warranty, and if made, shall not be enforceable against BRP.

BRP reserves the right to modify this warranty at any time, being understood that such modification will not alter the warranty conditions applicable to the products sold while this warranty is in effect.

## 3) EXCLUSIONS – ARE NOT WARRANTED

The following are not warranted under this limited warranty under any circumstances:

– Normal wear and tear;
– Routine maintenance items, tune ups, adjustments;

– Damage caused by negligence or failure to provide proper maintenance and/or storage, as described in the Operator's Guide;
– Damage resulting from removal of parts, improper repairs, service, maintenance, modifications or use of parts or accessories not manufactured or approved by BRP which in its reasonable judgement are either incompatible with the product or adversely affect its operation, performance and durability, or resulting from repairs done by a person that is not an authorized servicing Ski-Doo Distributor/Dealer;
– Damage caused by abuse, abnormal use, neglect, racing or operation of the product on surfaces other than snow, or operation of the product in a manner inconsistent with the recommended operation described in the Operator's Guide;
– Damage resulting from accident, submersion, fire, snow or water ingestion, theft, vandalism or any act of God;
– Operation with fuels, oils or lubricants which are not suitable for use with the product (see the Operator's Guide);
– Damage resulting from rust, corrosion or exposure to the elements;
– Incidental or consequential damages, or damages of any kind including without limitation towing, transportation expenses, storage, telephone, rental, taxi, inconvenience, insurance coverage, loan payments, loss of time, loss of income or time missed for downtime experience due to service work;
– and damage resulting from studs installed on tracks if the installation does not conform to BRP's instructions.

## 4) WARRANTY COVERAGE PERIOD

This warranty will be in effect from (1) the date of delivery to the first retail consumer or (2) the date the product is first put into use, whichever occurs first and for a period of:

TWENTY-FOUR (24) CONSECUTIVE MONTHS, for private use owners and TWELVE (12) CONSECUTIVE MONTHS for commercial use owners. However, the warranty coverage period on a snowmobile delivered between June 1st and December 1st of a given year will expire November 30th of the applicable year. A snowmobile is used commercially when it is used in connection with generating income or any work or employment during any part of the warranty period. A snowmobile is also used commercially when, at any point during the warranty period, it has commercial tags or is licensed for commercial use.

The repair or replacement of parts or the performance of service under this warranty does not extend the life of this warranty beyond its original expiration date.

Note that the duration and any other modalities of the warranty coverage are subject to the applicable national or local legislation in the customer's country.

## 5) CONDITIONS TO HAVE WARRANTY COVERAGE

This warranty coverage is available **only** if each of the following conditions has been fulfilled:

– The 2019 Ski-Doo snowmobile must be purchased as new and unused by its first owner from a Ski-Doo Distributor/Dealer authorized to distribute Ski-Doo products in the country in which the sale occurred;

– The BRP specified pre-delivery inspection process must be completed and documented;
– The product must have undergone proper registration by an authorized Ski-Doo Distributor/Dealer;
– The 2019 Ski-Doo snowmobile must be purchased within the EEA by an EEA resident, in the CIS for residents of the countries comprised in such area and in Turkey for residents of Turkey; and
– Routine maintenance outlined in the Operator's Guide must be timely performed in order to maintain warranty coverage. BRP reserves the right to make warranty coverage contingent upon proof of proper maintenance.

BRP will not honour this limited warranty to any private use owner or commercial use owner if one of the preceding conditions has not been met. Such limitations are necessary in order to allow BRP to preserve both the safety of its products, and also that of its consumers and the general public.

## 6) WHAT TO DO TO OBTAIN WARRANTY COVERAGE

The customer must cease using the snowmobile upon the appearance of an anomaly. The customer must notify a servicing Ski-Doo Distributor/Dealer within two (2) months of the appearance of a defect, and provide it with reasonable access to the product and reasonable opportunity to repair it. The customer must also present to the authorized Ski-Doo Distributor/Dealer, proof of purchase of the product and must sign the repair/work order prior to starting the repair in order to validate the warranty repair. All parts replaced under this limited warranty become the property of BRP.

Note that the notification period is subject to the applicable national or local legislation in customer's country.

## 7) WHAT BRP WILL DO

To the extent permitted by law, BRP's obligations under this warranty are limited to, at its sole discretion, repairing parts found defective under normal use, maintenance and service, or replacing such parts with new genuine Ski-Doo parts without charge for parts and labour, at any authorized Ski-Doo Distributor/Dealer during the warranty coverage period under the conditions described herein. BRP's responsibility is limited to making the required repairs or replacements of parts. No claim of breach of warranty shall be cause for cancellation or rescission of the sale of the snowmobile to the owner. You may have other legal rights which may vary from country to country.

In the event that service is required outside of the EEA, CIS or Turkey, the owner will bear responsibility for any additional charges due to local practices and conditions, such as, but not limited to, freight, insurance, taxes, license fees, import duties, and any and all other financial charges, including those levied by governments, states, territories and their respective agencies.

BRP reserves the right to improve or modify products from time to time without assuming any obligation to modify products previously manufactured.

## 8) TRANSFER

If the ownership of a product is transferred during the warranty coverage period, this limited warranty, subject to its terms and conditions, shall also be transferred and be valid for the remaining coverage period provided BRP or an authorized Ski-Doo Distributor/Dealer receives a proof that the former owner agreed to the transfer of ownership, in addition to the contact information of the new owner.

## 9) CONSUMER ASSISTANCE

In the event of a controversy or a dispute in connection with this limited warranty, BRP suggests that you try to resolve the issue at the Ski-Doo Distributor/Dealer level. We recommend discussing the issue with the authorized Ski-Doo Distributor/Dealer's service manager or owner.

If the matter still remains unresolved, contact BRP by filling out the customer contact form at www.brp.com or contact BRP.

## ADDITIONAL TERMS AND CONDITIONS FOR FRANCE ONLY

The following terms and conditions are applicable to products sold in France only:

The seller shall deliver goods that are complying with the contract and shall be responsible for defects existing upon delivery. The seller shall also be responsible for defects resulting from packaging, assembling instructions or the installation when it is its responsibility per the contract or if accomplished under its responsibility. To be compliant with the contract, the good shall:

1. Be fit for normal use for goods similar thereto and, if applicable:
   - Correspond to the description provided by the seller and have the qualities presented to the buyer though sample or model;
   - Have the qualities that a buyer may legitimately expect considering the public declarations of the seller, the manufacturer of its representative, including in advertising or labeling; or
2. Have the characteristics mutually agreed upon as between the parties or be fit for the specific use intended by the buyer and brought to the attention of the seller and which accepted

The action for failure to comply is prescribed after two years after delivery of the goods. The seller is responsible for the warranty for hidden defects of the good sold if such hidden defects are rendering the good unfit for the intended use, or if they diminish its use in such a way that the buyer would not have acquired the good or would have given a lesser price, had he known. The action for such hidden defects shall be taken by the buyer within 2 years of the discovery of the defect.

*This page is intentionally blank*

# CUSTOMER INFORMATION

# PRIVACY INFORMATION

BRP wishes to inform you that your coordinates will be used for safety and warranty related purposes. Furthermore, BRP and its affiliates may use its customer list to distribute marketing and promotional information about BRP and related products.

To exercise your right to consult or correct your data, or to be removed from the addressee-list for direct marketing, please contact BRP.

# CHANGE OF ADDRESS/OWNERSHIP

If your address has changed or if you are the new owner of the Snowmobile, be sure to notify BRP by either:

- Notifying an authorized Ski-Doo dealer.
- North America Only: calling at 1 888 272-9222.
- Mailing one of the change of address cards on the following pages at one of the BRP addresses indicated in the *CONTACT US* section of this guide.

In case of change of ownership, please join a proof that the former owner agreed to the transfer.

Notifying BRP, even after the expiration of the limited warranty, is very important as it enables BRP to reach the Snowmobile owner if necessary, like when safety recalls are initiated. It is the owner's responsibility to notify BRP.

STOLEN UNITS: If your personal Snowmobile is stolen, you should notify BRP or an authorized Ski-Doo dealer. We will ask you to provide your name, address, phone number, the vehicle identification number and the date it was stolen.

CHANGE OF ADDRESS ❑ CHANGE OF OWNERSHIP ❑

VEHICLE IDENTIFICATION NUMBER

Model Number | Vehicle Identification Number (V.I.N.)

OLD ADDRESS OR PREVIOUS OWNER:

NAME

NO. STREET APT

CITY STATE/PROVINCE ZIP/POSTAL CODE

COUNTRY TELEPHONE

NEW ADDRESS OR NEW OWNER:

NAME

NO. STREET APT

CITY STATE/PROVINCE ZIP/POSTAL CODE

COUNTRY TELEPHONE

E-MAIL ADDRESS

V00A2F

CHANGE OF ADDRESS ❑ CHANGE OF OWNERSHIP ❑

VEHICLE IDENTIFICATION NUMBER

Model Number | Vehicle Identification Number (V.I.N.)

OLD ADDRESS OR PREVIOUS OWNER:

NAME

NO. STREET APT

CITY STATE/PROVINCE ZIP/POSTAL CODE

COUNTRY TELEPHONE

NEW ADDRESS OR NEW OWNER:

NAME

NO. STREET APT

CITY STATE/PROVINCE ZIP/POSTAL CODE

COUNTRY TELEPHONE

E-MAIL ADDRESS

V00A2F

***This page is intentionally blank***

CHANGE OF ADDRESS ☐ CHANGE OF OWNERSHIP ☐

VEHICLE IDENTIFICATION NUMBER

Model Number | Vehicle Identification Number (V.I.N.)

OLD ADDRESS OR PREVIOUS OWNER:

NAME

NO. STREET APT

CITY STATE/PROVINCE ZIP/POSTAL CODE

COUNTRY TELEPHONE

NEW ADDRESS OR NEW OWNER:

NAME

NO. STREET APT

CITY STATE/PROVINCE ZIP/POSTAL CODE

COUNTRY TELEPHONE

E-MAIL ADDRESS

V00A2F

CHANGE OF ADDRESS ☐ CHANGE OF OWNERSHIP ☐

VEHICLE IDENTIFICATION NUMBER

Model Number | Vehicle Identification Number (V.I.N.)

OLD ADDRESS OR PREVIOUS OWNER:

NAME

NO. STREET APT

CITY STATE/PROVINCE ZIP/POSTAL CODE

COUNTRY TELEPHONE

NEW ADDRESS OR NEW OWNER:

NAME

NO. STREET APT

CITY STATE/PROVINCE ZIP/POSTAL CODE

COUNTRY TELEPHONE

E-MAIL ADDRESS

V00A2F

***This page is intentionally blank***

# NOTES

# NOTES

# NOTES

# NOTES

## ⚠ WARNING

**BEFORE YOU OPERATE THIS VEHICLE, READ THIS OPERATOR'S GUIDE, ALL ON-PRODUCT SAFETY LABELS AND WATCH THE SAFETY VIDEO.**

ski-doo®

BRP

# 2019

# OPERATOR'S GUIDE

Includes Safety, Vehicle and Maintenance Information

# REV™ G4

**Trail / Crossover ACE™ Series**

**⚠ WARNING**

Read this guide thoroughly.
It contains important safety information.
Minimum recommended operator's age: 16 years old.
Keep this Operator's Guide in the vehicle.

**5 2 0 0 0 1 8 9 9**

**Original Instructions**

## ⚠ WARNING

Disregarding any of the safety precautions and instructions contained in this Operator's Guide, *SAFETY VIDEO* and on-product safety labels could cause injury including the possibility of death!

## ⚠ WARNING

This vehicle may exceed the performance of other vehicles you may have ridden. Take time to familiarize yourself with your new vehicle.

CALIFORNIA PROPOSITION 65 WARNING

⚠ **WARNING:** Operating, servicing and maintaining an off-road vehicle can expose you to chemicals including engine exhaust, carbon monoxide, phthalates, and lead, which are known to the State of California to cause cancer and birth defects or other reproductive harm. To minimize exposure, avoid breathing exhaust, do not idle the engine except as necessary, service your vehicle in a well-ventilated area and wear gloves or wash your hands frequently when servicing your vehicle. For more information go to www.p65warnings.ca.gov/products/passenger-vehicle.

# FOREWORD

The following are trademarks of Bombardier Recreational Products Inc. or its subsidiaries.

| | | | |
|---|---|---|---|
| ACE™ | G4™ | **Pilot™** | rMotion™ |
| Adrenaline™ | Grand Touring™ | Quick Adjust™ | ROTAX™ |
| D.E.S.S.™ | HPG™ | Renegade™ | Ski-Doo® |
| EXPEDITION® | iTC™ | RER™ | XPS™ |
| Enduro™ | pDrive™ | REV® | X-RS™ |

The KYB Pro series is a registered mark of KYB America LLC.

| | |
|---|---|
| Deutsch | Dieses Handbuch ist möglicherweise in Ihrer Landessprache verfügbar. Bitte wenden Sie sich an Ihren Händler oder besuchen Sie: www.operatorsguides.brp.com |
| English | This guide may be available in your language. Check with your dealer or go to: www.operatorsguides.brp.com |
| Español | Es posible que este manual esté disponible en su idioma. Consulte a su distribuidor o visite: www.operatorsguides.brp.com |
| Français | Ce guide peut être disponible dans votre langue. Vérifier avec votre concessionnaire ou aller à: www.operatorsguides.brp.com |
| Italiano | Questa guida potrebbe essere disponibile nella propria lingua. Contattare il concessionario o consultare: www.operatorsguide.brp.com |
| 中文 | 本手册可能有您的语种的翻译版本。请向经销商问询，或者登录 www.operatorsguides.brp.com 查询。 |
| 日本語 | このガイドは、言語によって翻訳版が用意されています。. ディーラーに問い合わせるか、次のアドレスでご確認ください： www.operatorsguides.brp.com |
| Nederlands | Deze handleiding kan beschikbaar zijn in uw taal. Vraag het aan uw dealer of ga naar: www.operatorsguides.brp.com |
| Norsk | Denne boken kan finnes tilgjengelig på ditt eget språk. Kontakt din forhandler eller gå til: www.operatorsguides.brp.com |
| Português | Este manual pode estar disponível em seu idioma. Fale com sua concessionária ou visite o site: www.operatorsguides.brp.com |
| Русский | Воспользуйтесь руководством на вашем языке. Узнайте о его наличии у дилера или на странице по адресу www.operatorsguide.brp.com |
| Suomi | Käyttöohjekirja voi olla saatavissa omalla kielelläsi. Tarkista jälleenmyyjältä tai käy osoitteessa: www.operatorsguides.brp.com |
| Svenska | Denna bok kan finnas tillgänglig på ditt språk. Kontakta din återförsäljare eller gå till: www.operatorsguides.brp.com |

Congratulations on your purchase of a new Ski-Doo® snowmobile. Whatever model you have chosen, it is backed by the Bombardier Recreational Products Inc. (BRP) warranty and a network of authorized Ski-Doo snowmobile dealers ready to provide the parts, service or accessories you may require.

Your dealer is committed to your satisfaction. He has taken training to perform the initial set-up and inspection of your snowmobile as well as completed the final adjustment required to suit your specific weight and riding environment before you took possession.

At delivery, you were informed of the warranty coverage and signed the *PREDELIVERY CHECK LIST* to ensure your new vehicle was prepared to your entire satisfaction.

## Know Before you Go

To learn how to reduce the risk for you, your passenger or bystanders being injured or killed, read the following sections before you operate the vehicle:

– *SAFETY INFORMATION*
– *VEHICLE INFORMATION*.

Also read all safety labels on your snowmobile and watch attentively your *SAFETY VIDEO* located at www.ski-doo.com/safety.

We highly recommend that you take a safety riding course. Please check with your dealer or local authorities for availability in your area.

Failure to follow the warnings contained in this Operator's Guide can result in SERIOUS INJURY or DEATH.

The proper functioning of a snowmobile depends in part on the surface on which it is driven.

Driving on very hard or snow-free surfaces compromises the cooling of the engine and the lubrication of rear suspension components. Avoid prolonged driving on such surfaces.

## Safety Messages

The types of safety messages, what they look like and how they are used in this guide are explained as follows:

The safety alert symbol ⚠ indicates a potential injury hazard.

**⚠ WARNING**

Indicates a potential hazard, if not avoided, could result in serious injury or death.

**⚠ CAUTION** Indicates a hazard situation which, if not avoided, could result in minor or moderate injury.

***NOTICE*** Indicates an instruction which, if not followed, could severely damage vehicle components or other property.

## About this Operator's Guide

This Operator's Guide has been prepared to acquaint the owner/operator and passenger with this snowmobile and its various controls, safe riding and maintenance instructions.

The following terminology in regards to operator, passenger and vehicle configuration is used as follows throughout this guide:

- Operator: refers to the person being behind the controls and driving the snowmobile.
- Passenger: refers to a person sitting behind the operator.
- 1-UP: refers to a model designed for an operator only.
- 2-UP: refers to a model designed to accommodate one passenger.

Keep this Operator's Guide in the vehicle as you can refer to it for things such as maintenance, troubleshooting and instructing others.

Note that this guide is available in several languages. In the event of any discrepancy, the English version shall prevail.

If you want to view and/or print an extra copy of your Operator's Guide, simply visit the following website www.operatorsguides.brp.com.

The information contained in this document is correct at the time of publication. BRP, however, maintains a policy of continuous improvement of its products without imposing upon itself any obli-

gation to install them on products previously manufactured. Due to late changes, some differences between the manufactured product and the descriptions and/or specifications in this guide may occur. BRP reserves the right at any time to discontinue or change specifications, designs, features, models or equipment without incurring any obligation upon itself.

This Operator's Guide should remain with the vehicle when it's sold.

# TABLE OF CONTENTS

**FOREWORD** ..... **1**
Know Before you Go ..... 2
Safety Messages ..... 3
About this Operator's Guide ..... 3

***SAFETY INFORMATION***

**GENERAL PRECAUTIONS** ..... **12**
Avoid Carbon Monoxide Poisoning ..... 12
Avoid Gasoline Fires and Other Hazards ..... 12
Avoid Burns from Hot Parts ..... 13
Accessories and Modifications ..... 13

**SPECIAL SAFETY MESSAGES** ..... **14**

**ACTIVE TECHNOLOGIES (iTC) (900 ACE AND 900 ACE TURBO)** ..... **19**
Introduction ..... 19
iTC (intelligent Throttle Control) ..... 19

**RIDING THE VEHICLE** ..... **20**
Pre-Ride Inspection ..... 20
How to Ride ..... 23
Carrying a Passenger ..... 26
Terrain/Riding Variations ..... 28
Environment ..... 35

**TRACTION ENHANCING PRODUCTS** ..... **38**
Manoeuvrability ..... 38
Acceleration ..... 41
Braking ..... 41
Important Safety Rules ..... 41
Effects of Having a Studded Track on the Life of the Snowmobile ..... 42
Installation of Studs on BRP Approved Tracks ..... 42
Maintenance/Replacement ..... 45

**IMPORTANT ON-PRODUCT LABELS** ..... **46**
Hang Tag(s) ..... 46
Vehicle Safety Labels ..... 49
Compliance Labels ..... 58
Technical Information Labels ..... 60

## *VEHICLE INFORMATION*

**CONTROLS, INSTRUMENTS AND EQUIPMENT..... 64**
1) Handlebar..... 65
2) Throttle Lever..... 66
3) Brake Lever..... 69
4) Parking Brake Lever..... 69
5) Engine Cut-off Switch..... 71
6) Emergency Engine Stop Switch..... 72
7) Adjustable Handlebar Riser (If Equipped)..... 74
8) Handlebar Multifunction Switch..... 75
9) Start/Electronic Reverse (RER) Button..... 84
10) Seat..... 84
11) Tools..... 86
12) Front and Rear Bumpers..... 87
13) Analog/Digital Gauge..... 89
14) Multifunction Analog/Digital Gauge..... 94
15) Storage Compartment..... 112
16) Drive Belt Guard..... 113
17) Spare Drive Belt Holder..... 116
18) Upper Body Module (Hood)..... 117
19) Side Panels..... 123
20) Operator's Guide..... 124
21) Passenger Seat (On Applicable Models)..... 124
22) Passenger Handhold (On Applicable Models)..... 125
23) Backrest (On Applicable Models)..... 127
24) Adjustable Mirrors (On Applicable Models)..... 130
25) Electric Visor Jack Connector (On Applicable Models)..... 132
26) Passenger Heated Grip Switch (On Applicable Models) 133
27) Heated Seats Switches (On Applicable Models)..... 134
28) Cargo Box (On Applicable Models)..... 136

**FUEL AND OIL..... 138**
Fuel Requirements..... 138
Fueling Procedure..... 139
Recommended Oil..... 141

**BREAK-IN PERIOD..... 143**
Operation During Break-In..... 143

**OPERATING MODES..... 144**
ECO Mode (Fuel Economy Mode)..... 144

**OPERATING MODES** (cont'd)
Standard Mode ..... 144
Sport Mode ..... 144
Navigating Operating Modes ..... 145

**BASIC PROCEDURES ..... 147**
Engine Starting Procedure ..... 147
Emergency Starting ..... 147
Vehicle Warm-Up ..... 147
Shifting in Forward ..... 150
Shutting Off the Engine ..... 150

**RIDING CONDITIONS AND YOUR SNOWMOBILE ..... 151**
Altitude ..... 151
Temperature ..... 151

**SPECIAL OPERATION ..... 152**
Towing an Accessory ..... 152
Towing Another Snowmobile ..... 152

**TUNE YOUR RIDE ..... 153**
Ski Runner Depth Setting (Pilot TS Skis) ..... 154
Rear Suspension Adjustments ..... 155
Front Suspension Adjustments ..... 177
Adjustment Tips According to Vehicle Behavior ..... 183

**VEHICLE TRANSPORTATION ..... 185**

***MAINTENANCE***

**MAINTENANCE SCHEDULE ..... 188**

**MAINTENANCE PROCEDURES ..... 191**
Engine Coolant ..... 191
Engine Oil ..... 192
Engine Oil Filter ..... 198
Exhaust System ..... 200
Spark Plugs ..... 200
Brake Fluid ..... 200
Chaincase Oil ..... 202
Drive Chain ..... 205
Drive Belt ..... 206
Track ..... 212
Suspension ..... 219

**MAINTENANCE PROCEDURES** (cont'd)
Skis ..... 222
Fuses ..... 222
Headlights ..... 225
Removing Battery ..... 229
Installing Battery ..... 231

**VEHICLE CARE ..... 233**
Post-Operation Care ..... 233
Vehicle Cleaning and Protection ..... 233

**STORAGE ..... 234**

## *TECHNICAL INFORMATION*

**VEHICLE IDENTIFICATION ..... 236**
Vehicle Description Decal ..... 236
Identification Numbers ..... 236

**NOISE EMISSION AND VIBRATION VALUES (ALL COUNTRIES EXCEPT CANADA/UNITED STATES) ..... 238**

**EC DECLARATION OF CONFORMITY ..... 239**

**EPA CERTIFIED ENGINES ..... 240**
Engine Emissions Information ..... 240

**RADIO FREQUENCY DIGITALLY ENCODED SECURITY SYSTEM (RF D.E.S.S. KEY) ..... 242**

**SPECIFICATIONS (ENGINE) ..... 243**

**SPECIFICATIONS (VEHICLE) ..... 245**

## *TROUBLE-SHOOTING*

**TROUBLESHOOTING GUIDELINES ..... 254**

**MONITORING SYSTEM ..... 257**
Pilot Lamps, Messages and Beeper Codes ..... 257
Fault Codes ..... 260

## *WARRANTY*

**BRP LIMITED WARRANTY USA AND CANADA: 2019 SKI-DOO® SNOWMOBILES ..... 262**

**US EPA EMISSION-RELATED WARRANTY** ..... **267**

**BRP INTERNATIONAL LIMITED WARRANTY: 2019 SKI-DOO® SNOWMOBILES** ..... **270**

**BRP LIMITED WARRANTY FOR THE EUROPEAN AND THE COMMONWEALTH OF THE INDEPENDENT STATES (CIS) AREAS AND TURKEY: 2019 SKI-DOO® SNOWMOBILES**.... **275**

***CUSTOMER INFORMATION***

**PRIVACY INFORMATION**..... **282**

# *SAFETY INFORMATION*

# GENERAL PRECAUTIONS

## Avoid Carbon Monoxide Poisoning

All engine exhaust contains carbon monoxide, a deadly gas. Breathing carbon monoxide can cause headaches, dizziness, drowsiness, nausea, confusion and eventually death.

Carbon monoxide is a colorless, odorless, tasteless gas that may be present even if you do not see or smell any engine exhaust. Deadly levels of carbon monoxide can collect rapidly, and you can quickly be overcome and unable to save yourself. Also, deadly levels of carbon monoxide can linger for hours or days in enclosed or poorly ventilated areas. If you experience any symptoms of carbon monoxide poisoning, leave the area immediately, get fresh air and seek medical treatment.

To prevent serious injury or death from carbon monoxide:

– Never run the vehicle in poorly ventilated or partially enclosed areas such as garages, carports or barns. Even if you try to ventilate engine exhaust with fans or open windows and doors, carbon monoxide can rapidly reach dangerous levels.
– Never run the vehicle outdoors where engine exhaust can be drawn into a building through openings such as windows and doors.

## Avoid Gasoline Fires and Other Hazards

Gasoline is extremely flammable and highly explosive. Fuel vapors can spread and be ignited by a spark or flame many feet away from the engine. To reduce the risk of fire or explosion, follow these instructions:

– Use only an approved gasoline container to store fuel.
– Strictly adhere to instructions in *VEHICLE FUELING PROCEDURE*.
– Never start or operate the engine if the fuel cap is not properly installed.

Gasoline is poisonous and can cause injury or death.

– Never siphon gasoline by mouth.
– If you swallow gasoline, get any in your eye or inhale gasoline vapor, see your doctor immediately.

If gasoline spills on you, wash with soap and water and change your clothes.

## Avoid Burns from Hot Parts

The exhaust system and engine become hot during operation. Avoid contact during and shortly after operation to avoid burns.

## Accessories and Modifications

Do not make unauthorized modifications, or use attachments or accessories that are not approved by BRP. Since these changes have not been tested by BRP, they may increase the risk of crashes or injuries, and they can make the vehicle illegal.

Tunnel accessories must be loaded onto vehicle as per instructions provided for each accessories.

Accessory passenger seats approved by BRP and conforming to SSCC standards may be available for certain models. If such a seat is used, you must follow the guidelines and recommendations in regards to a passenger in this guide.

**⚠ WARNING**

Passenger seat must have a strap or handholds and must meet SSCC standards.

See your authorized Ski-Doo dealer for available accessories for your vehicle.

## SPECIAL SAFETY MESSAGES

SEVERE INJURY OR DEATH can result if you do not follow these instructions:

- Always make a pre-ride inspection BEFORE you start the engine.
- Throttle mechanism should be checked for free movement and return to idle position before starting engine.
- Always attach tether cord eyelet to clothing before starting the engine.
- Never operate the engine without belt guard and brake disk guard securely installed or, with hood or side panels opened or removed. Never run the engine without drive belt installed. Running an unloaded engine such as without drive belt or with track raised, can be dangerous.
- Always engage parking brake before starting the engine.
- Everyone is a beginner the first time he sits behind the controls of a snowmobile regardless of previous experience in driving any other type of vehicle. The safe use of your snowmobile depends on many conditions such as visibility, speed, weather, environment, traffic, vehicle condition and the condition of the operator.
- Basic training is required for the safe operation of any snowmobile. Study your operator's guide paying particular attention to cautions and warnings. Join your local snowmobile club: its social activities and trail systems are planned for both fun and safety. Obtain basic instructions from your snowmobile dealer, friend, fellow club member or enroll in your state or provincial safety training program.
- Any new operator must read and understand all safety labels on the snowmobile, the Operator's Guide and watch the *SAFETY VIDEO* at www.ski-doo.com/safety before operating the snowmobile. Only allow a new operator to operate the snowmobile in a restricted flat area, at least until he is completely familiar with its operation. If snowmobile operator's training course is offered in your area, have him enroll.
- The performance of some snowmobiles may significantly exceed that of other snowmobiles you have operated. Therefore, use by novice or inexperienced operators is not recommended.
- Snowmobiles are used in many areas and in many snow conditions. Not all models perform the same in similar conditions. Always consult your snowmobile dealer when selecting the snowmobile model for your particular needs and uses.

- Injury or death may result to the snowmobile operator, passenger or bystander if the snowmobile is used in risky conditions which are beyond the operator's, passenger's or snowmobile's capabilities or intended use.
- BRP recommends the operator has at least 16 years old of age. Verify also your local laws for age and training requirements.
- It is very important to inform any operator, regardless of his experience, of the handling characteristics of this snowmobile. The snowmobile configuration, such as ski stance, ski type, suspension type, track length, width and type vary from a model to another. The snowmobile handling is greatly influenced by these characteristics.
- The novice operator should become familiar with the snowmobile through practice on a level area at slow speeds before venturing far afield.
- Know your local laws. Federal, state, provincial and local government agencies have enacted laws and regulations pertaining to the safe use and operation of snowmobiles. It is your responsibility as a snowmobiler to learn and obey these laws and regulations. Respect and observance will result in safer snowmobiling for all. Be aware of the liability property damages and insurance laws regarding your equipment.
- Speeding can be fatal. In many cases, you cannot react or respond quickly enough to the unexpected. Always ride at a speed which is suitable to the trail, weather conditions and your own ability. Know your local rules. Speed limit may be in effect and meant to be observed.
- Always keep right hand side of the trail.
- Always keep a safe distance from other snowmobiles and bystanders.
- Remember, promotional material may show risky maneuvers performed by professional riders under ideal and/or controlled conditions. You should never attempt any such risky maneuvers if they are beyond your level of riding ability.
- Never use this vehicle with drugs or alcohol. They slow reaction time and impair judgement.
- Your snowmobile is not designed to be operated on public streets, roads or highways.

- Avoid road traveling. If you must do so, and it is permitted, reduce speed. The snowmobile is not designed to operate or turn on paving. When crossing a road, make a full stop, then look carefully in both directions before crossing at a 90° angle. Be wary of parked vehicles.
- Snowmobiling at night can be a delightful experience but because of reduced visibility, be extra cautious. Avoid unfamiliar terrain and be sure your lights are working. Always carry a flashlight and spare light bulbs.
- Never remove any original equipment from your snowmobile. Each vehicle has many built in safety features. Such features include various guards and consoles, plus reflective materials and safety labels.
- Nature is wonderful but don't let it distract your attention from driving. If you want to truly appreciate winter's scenery, stop your snowmobile on the side of the trail so that you don't become a hazard to others.
- Fences represent a very serious threat for both you and your snowmobile. Give a wide berth to telephone poles or posts.
- Hidden wires unseen from a distance can cause serious accidents.
- Always wear an approved safety helmet, eye protection and a face shield. This also applies to your passenger.
- Be aware of inherent risks associated with riding off trails, such as avalanche and other natural or man made hazards or obstacles.
- Tailgating another snowmobile should be avoided. If the snowmobile in front of you slows for any reason, its operator and passenger could be harmed through your neglect. Maintain a safe stopping distance between you and the snowmobile in front of you. Depending on the terrain condition, stopping may require a little more space than you think. Play it safe. Be prepared to use evasive driving.
- Venturing out alone with your snowmobile could also be hazardous. You could run out of fuel, have an accident, or damage your snowmobile. Remember, your snowmobile is capable of traveling further in half an hour than you may be able to walk in a day. Use the "buddy system". Always ride with a friend or member of your snowmobile club. Even then, tell someone where you are going and the approximate time you plan to return.

- Meadows sometimes have low areas where water accumulate and freezes over in winter. This ice is usually glare ice. Attempting to turn or brake on this surface could cause your vehicle to spin out of control. Never brake or attempt speeding or turning on glare ice. If you do happen to travel over such a condition, reduce speed by carefully releasing the throttle.
- Never "jump" with your snowmobile.
- While on safari, do not "gun" the throttle. Snow and ice can be thrown back into the path of a following snowmobile. In addition, when "gunning" the throttle, the vehicle digs into and leaves an irregular snow surface for others.
- Safaris are both fun and enjoyable but don't show off or overtake others in the group. A less experienced operator might try to do the same as you and fail. When riding with others, limit your abilities to the experience of others.
- In an emergency, the snowmobile engine can be stopped by pressing down on the emergency engine stop switch or by pulling the tether cord cap from the engine cut-off switch, while applying brake.
- Always engage parking brake when vehicle is not in use.
- Never run the engine in a non-ventilated area and/or if vehicle is left unattended.
- Electric start models only: Never charge or boost a battery while installed on snowmobile.
- Never attempt any fuel system or electrical system maintenance or repair. Any maintenance or repair of these systems must be performed by an authorized Ski-Doo dealer.
- Ensure the path behind is clear of obstacles or bystanders before proceeding in reverse.
- Always remove the tether cord cap from engine cut-off switch when vehicle is not in operation in order to prevent accidental engine starting, to avoid unauthorized use by children or others or theft.
- NEVER stand behind or near a rotating track. Debris could be projected causing severe injuries. To remove packed snow or ice, stop engine, tilt and hold vehicle on its side and use wrench tool on the belt guard.
- Do not stud the track unless it has been approved for studs. At speed, a studded track that has not been approved for studs could tear and separate from vehicle. See an authorized Ski-Doo dealer for current specific studding availability and applications.

– You may stud the track on this vehicle model. However, you MUST only use the BRP approved type stud for use on Ski-Doo snowmobiles. DO NOT EVER use conventional studs because the track thickness is thinner then our standard tracks. The stud could tear off of track and separate from vehicle.
– Always wear an approved helmet and follow the same dressing guidelines as those recommended for the operator and described in this guide.
– Make sure that you are able to achieve a stable stance, both feet resting positively on the footboards of footrests with good grip, and that you are able to hold on firmly to the handholds.
– Do not forget, with 2-UP models, the operator is responsible for the safety of the passenger. Always remember that the snowmobile handling, stability and braking distance may be affected when riding with a passenger.
– Before riding the vehicle, ask your passenger to inform you to slowdown or stop immediately if he feels uncomfortable or insecure during the ride. Keep a watchful eye on your passenger while riding.

# ACTIVE TECHNOLOGIES (iTC) (900 ACE AND 900 ACE TURBO)

## Introduction

NOTE: Some functions or features described in this section may not apply to every model, or may be available as an option.

The throttle is electronic and provides a command signal to an electronic module whose function is to assure proper operation of its system within set parameters.

It is extremely important for operators to read all information contained in this operator's guide so as to become familiar with this snowmobile, its systems, controls, capabilities and limitations.

## iTC (intelligent Throttle Control)

The system uses an electronic throttle control (ETC) that provides command signals to the ECM (Engine Control Module). With this system, there is no need for a traditional throttle cable.

The iTC allows the following operating modes:

- ECO mode
- Standard mode
- Sport mode.

### ECO Mode

When ECO mode is selected (fuel economy mode), vehicle torque and speed are limited whereby an optimal cruising speed is maintained in order to reduce fuel consumption.

Refer to *OPERATING MODES* subsection for detailed instructions.

### Standard Mode

In standard mode, acceleration is reduced when accelerating from a complete stop and when operating in the low vehicle speed range under certain conditions.

### Sport Mode

In sport mode, maximum engine power is available throughout the engine operational range.

Refer to *OPERATING MODES* subsection for detailed instructions.

# RIDING THE VEHICLE

Each operator has a responsibility to ensure the safety of other recreationists or bystanders.

You are responsible for proper operation of your vehicle as well as training those whom you allow to ride or drive. There may be noticeable handling and performance differences from one snowmobile to the other.

A snowmobile is relatively simple to operate but like any other vehicle or mechanical equipment, it can be hazardous if you or a passenger are reckless, thoughtless or inattentive. We encourage you to have an Annual Safety Inspection of your snowmobile. Please contact an authorized Ski-Doo dealer for further details. Though not required, it is recommended that an authorized Ski-Doo dealer performs the preseason preparation of your snowmobile. Each visit to your authorized Ski-Doo dealer is a great opportunity for your dealer to verify if your snowmobile is included in any safety campaign. We also urge you to visit your authorized Ski-Doo dealer in a timely manner if you become aware of any safety related campaigns.

See an authorized Ski-Doo dealer for available accessories you may require.

Before venturing on the trails, operate the snowmobile in a restricted flat area until you are completely familiar with its operation and feel comfortable that you can safely tackle a more demanding task. Have an enjoyable and safe ride.

## Pre-Ride Inspection

**⚠ WARNING**

**The pre-operation check is very important prior to operating the vehicle. Always check the proper operation of critical controls, safety features and mechanical components before starting.**

**Before Starting the Engine**

1. Remove snow and ice from body including lights, seat, footrests, controls and instruments.
2. Verify that air silencer prefilter is free of snow.
3. Verify that skis and steering operate freely. Check corresponding action of skis versus handlebar.

4. Check fuel and oil levels and look for leaks. Replenish if necessary and in case of any leaks; you should seek service from an authorized Ski-Doo dealer, repair shop, or person of your own choosing for maintenance, repair, or replacement. Please refer to the *US EPA EMISSION-RELATED WARRANTY* contained herein for information about warranty claims.
5. All storage compartments must be properly latched and they must not contain any heavy or breakable objects. Hood and side panels must be also properly latched.
6. Activate the throttle control lever several times to check that it operates easily and smoothly. It must return to idle position when released.
7. Activate the brake lever and make sure the brake fully applies before the brake control lever touches the handlebar grip. It must fully return when released.
8. Apply parking brake and check if it operates properly. Leave parking brake applied.
9. Inspect drive belt condition and height, refer to *DRIVE BELT* in *MAINTENANCE PROCEDURES*.

**After Engine is Started**

For proper engine starting procedure, refer to *ENGINE STARTING PROCEDURE*.

1. Check headlights high beam and low beam, taillight, stop light and pilot lamps operation.

NOTE: You may need to detach tether cord from your clothes to check lights. In such a case, attach cord as soon as you get back at the controls of the snowmobile.

2. Check the engine cut-off switch (by pulling tether cord cap) and emergency engine stop switch operation.
3. Release parking brake.
4. Refer to *VEHICLE WARM UP* and follow instructions.

**Pre-Ride Check List**

| ITEM | OPERATION | ✔ |
|---|---|---|
| BODY INCLUDING SEAT, FOOTRESTS, LIGHTS, AIR FILTER, CONTROLS AND INSTRUMENTS | Check condition and remove snow or ice. | |
| SKIS AND STEERING ACTION | Check for free movement and proper operation. | |
| FUEL AND OIL | Check for proper level and no leaks. | |
| COOLANT | Check for proper level and no leaks. | |
| BRAKE FLUID | Check for proper level and no leaks. | |
| STORAGE COMPARTMENT | Check for proper latching and no heavy or breakable objects. | |
| TRACK | Check condition and remove snow or ice. For studded tracks, refer to *TRACTION ENHANCING PRODUCTS*. | |
| THROTTLE LEVER | Check for proper operation. | |
| BRAKE LEVER | Check for proper operation. | |
| PARKING BRAKE, BRAKE | Check for proper operation. | |
| EMERGENCY ENGINE STOP SWITCH AND ENGINE CUT-OFF SWITCH (TETHER CORD CAP) | Check for proper action. Tether cord must be attached to operator clothing eyelet. | |
| LIGHTS | Check for proper operation. | |
| SKI RUNNERS | Check for proper operation. | |
| SLIDER SHOES | Check for proper operation. | |
| DRIVE BELT | Check for cracks, fraying or abnormal wear and proper height. | |

## How to Ride

### Riding Gear

Proper snowmobile clothing should be worn. It should be comfortable and not too tight. Always check the weather forecast before going on a ride. Dress for the coldest weather expected. Thermal underwear next to the skin also provides a good insulation.

Wear an approved helmet at all times for safety and comfort. They provide both warmth and reduce injury. A stocking type cap, balaclava and face mask should always be carried or worn. Goggles or a face shield that attach to the helmet are indispensable.

Hands should be protected by a pair of snowmobile gloves or mitts which have sufficient insulation and allow use of thumbs and fingers for operation of controls.

Rubber bottom boots with either a nylon or a leather top, with removable felt liners are best suited for snowmobiling.

You should keep yourself as dry as possible when snowmobiling. When you come indoors, take your snowmobile suit and boots off and make certain they dry properly.

Do not wear a long scarf or loose apparels that could get caught in moving parts.

Carry colored lens goggles.

### What to Bring

| | |
|---|---|
| First aid kit | Provided tool kit |
| Mobile phone | Knife |
| Spare spark plugs | Flashlight |
| Friction tape | Trail map |
| Spare drive belt | Snack |

### Rider Position (Forward Operation)

Your riding position and balance are the two basic principles of making your snowmobile go where you want it to. When turning on the side of a hill, you and your passenger must be ready to shift body weight to help it turn in the desired direction. Operator and passenger must never attempt this maneuvering by placing feet

outside of the vehicle. Experience will teach you how much lean to put into turns at different speeds and how much you will have to lean into a slope to maintain proper balance.

Generally, the riding position for best balance and control is sitting. However, the posting, kneeling or standing positions are also used under certain conditions.

**⚠ WARNING**

Do not attempt any maneuvers if they are beyond your abilities.

### Sitting

Feet on the running boards, body midway back on seat is an ideal position when operating the snowmobile over familiar, smooth terrain. Knees and hips should remain flexible to absorb shocks.

mmo2008-003-001

### Posting

A semi-sitting position with the body off the seat and the feet under the body in a sort of squatting posture, thus allowing the legs to absorb the shocks when traveling over uneven terrain. Avoid abrupt stops.

mmo2008-003-002

Kneeling

This position is achieved by placing one foot firmly on the running board and the opposite knee on the seat. Avoid abrupt stops.

mmo2008-003-003

### Standing

Place both feet on the running boards. Knees should be flexed to absorb the shock from surface bumps. This is an effective position to see better and to shift weight as conditions dictate. Avoid abrupt stop.

mmo2008-003-004

**Rider Position (Reverse Operation)**

We recommend sitting on your snowmobile when operating in reverse.

Avoid standing up. Your weight could shift forward against throttle lever while operating in reverse, causing an unexpected acceleration.

**⚠ WARNING**

Unexpected acceleration when snowmobile operates in reverse can cause a loss of control.

## Carrying a Passenger

Certain snowmobiles are designed for an operator only (1-UP), and others can allow one passenger (2-UP). Make sure to identify and respect the warnings according to your specific models.

Even when a passenger is allowed, this person must be physically fit for snowmobiling.

## ⚠ WARNING

Any passenger must be able to firmly lay his feet on the footrests and keep his hands on the handholds or seat strap at all times when seated. Respecting those physical criteria is important to ensure that the passenger is stable and to reduce the risks of ejection.

The operator has a responsibility to ensure the safety of his passenger and should inform the passenger about snowmobiling basics.

## ⚠ WARNING

- Passenger must only sit on designated passenger seat. Never allow anyone to sit between the handlebar and the operator.
- Passenger and operator must always wear an approved helmet and warm clothing appropriate for snowmobiling. Make sure that no skin is exposed.
- If the passenger feels uncomfortable or insecure for any reason, he must right away inform the operator to slow-down or stop.

Riding with a passenger on board is different than riding alone. The operator has the benefit of knowing what will be the next maneuver and is able to prepare himself accordingly. The operator also benefits from the support of his grip on the handlebar. In contrast, the passenger has to rely on the operator's careful and safe operation of the vehicle. In addition, "body english" is limited with a passenger, and the operator can sometimes see more of the trail ahead than the passenger. Therefore, smooth starting and stopping are required with a passenger, and the operator must slow down. The operator must also warn the passenger about side hills, bumps, branches, etc. An unforeseen bump can leave you passenger-less. Remind your passenger to lean into the turn with you, without causing the vehicle to topple. Be extremely careful, go more slowly and check the passenger frequently.

**⚠ WARNING**

When riding with a passenger:

- Braking ability and steering control are reduced. Decrease speed and allow extra space to maneuver.
- Adjust suspension according to weight.

For complete information on how to adjust the suspension, please refer to *TUNE YOUR RIDE*.

**Riding with a Child**

On snowmobiles allowing two passengers (with optional seat), if you have an adult and a child for passenger, BRP recommends that the child sits in the center location. This allows an adult sitting in the rear seat to keep a visual contact with the child and hold him if necessary. In addition, the child is best protected against the wind and cold temperature if seated in the center location.

Use extra caution and go even more slowly with a young passenger. Check frequently to make certain the child has a firm grip and is properly positioned with his feet on the running boards.

## Terrain/Riding Variations

**Groomed Trail**

On a maintained trail, sitting is the most preferred riding position. Do not race and, above all, keep to the right hand side of the trail. Be prepared for the unexpected. Observe all trail signs. Do not zigzag from one side of the trail to the other.

**Ungroomed Trail**

Unless there has been a fresh snowfall you can expect "washboard" and snowdrift conditions. Taken at excessive speeds, such conditions can be physically harmful. Slow down. Hold on the handlebar and assume a posting position. Feet should be under the body assuming a crouched position to absorb any jarring effect. On longer stretches of "washboard" trails, the kneeling position of one knee on the seat can be adopted. This provides a certain amount of comfort, while at the same time keeps the body loose and capable of vehicle control. Beware of hidden rocks or tree stumps partially hidden by a recent snowfall.

**Deep Snow**

In deep "powder" snow, your vehicle could begin to "bog" down. If this occurs, turn in as wide an arc as possible and look for a firmer base. If you do get "bogged", and it happens to everyone, do not spin your track as this makes the vehicle sink deeper. Instead, turn the engine off, get off and move the back of the vehicle onto new snow. Then tramp a clear path ahead of the vehicle. A few feet will generally suffice. Restart the engine. Assume the standing position and rock the vehicle gently as you steadily and slowly apply the throttle. Depending on whether the front or rear end of the vehicle is sinking, your feet should be placed on the opposing end of the running boards. Never place foreign material beneath the track for support. Do not allow anyone to stand in front of, or to the rear of, the snowmobile with the engine running. Stay away from the track. Personal injury will result if contact is made with the revolving track.

**Frozen Water**

Traveling frozen lakes and rivers can be fatal. Avoid waterways. If you are in an unfamiliar area, ask the local authorities or residents about the ice condition, inlets, outlets, springs, fast moving currents or other hazards. Never attempt to operate your snowmobile on ice that may be too weak to support you and the vehicle. Operating a snowmobile on ice or icy surfaces can be very dangerous if you do not observe certain precautions. The very nature of ice is foreign to good control of a snowmobile or any vehicle. Traction for starting, turning or stopping is much less than that on snow. Thus, these distances can be multiplied manyfold. Steering is minimal, and uncontrolled spins are an ever present danger. When operating on ice, drive slowly with caution. Allow yourself plenty of room for stopping and turning. This is especially true at night.

**Hard Packed Snow**

Don't underestimate hard packed snow. It can be difficult to negotiate as both skis and track do not have as much traction. Best advice is to slow down and avoid rapid acceleration, turning or braking.

**Uphill**

There are two types of hills you can encounter — the open hill on which there are few trees, cliffs or other obstacles, and a hill that can only be climbed directly. On an open hill, the approach is to climb it by side hilling or slaloming. Approach at an angle. Adopt a kneeling

position. Keep your weight on the uphill side at all times. Maintain a steady, safe speed. Continue as far as you can in this direction, then switch to an opposite hill angle and riding position.

A direct climb could present problems. Choose the standing position, accelerate before you start the climb and then reduce throttle pressure to prevent track slippage.

In either case, vehicle speed should be as fast as the incline demands. Always slow down as you reach the crest. If you cannot proceed further, don't spin your track. Turn the engine off, free the skis by pulling them out and downhill, place the rear of the snowmobile uphill restart the engine and ease it out with slow even throttle pressure. Position yourself to avoid tipping over, then descend.

**Downhill**

Downhill driving requires that you have full control of your vehicle at all times. On steeper hills, keep your center of gravity low and both hands on the handlebar. Maintain slight throttle pressure and allow the machine to run downhill with the engine operating. If a higher than safe speed is reached, slow down by braking but apply the brake with frequent light pressure. Never jam the brake and lock the track.

**Side Hill**

When crossing a side hill or traversing up or downhill, certain procedures must be followed. All riders should lean towards the slope as required for stability. The preferred operating positions are the kneeling position, with the knee of the down hill leg on the seat and the foot of the uphill leg on the running board, or the posting position. Be prepared to shift your weight quickly as needed. Side hills and steep slopes are not recommended for a beginner or a novice snowmobiler.

**Avalanche Hazard**

When riding on mountainous terrain, you should be aware of the risk of avalanches. Avalanches vary in size and shapes and generally occur in steep terrain and on unstable snow.

New snow, animals, people, wind and snowmobiles can all trigger an avalanche. Avoid high marking or traversing steep terrain when avalanche conditions are possible. When in unstable snow conditions, travel should be restricted to lower angle slopes. Wind formed cornices should be avoided. Staying off unstable conditions is the key to safe mountain riding. Probably most important is to be

aware of the conditions and dangers on a daily basis when in the mountains. Check local avalanche forecasts and threats each day before heading out to ride and heed forecasters advice.

You should always carry a snow shovel, probe and avalanche beacon while riding on mountains. We recommend that all mountain riders take a local avalanche safety training course to become more familiar with snow conditions and learn how to properly use their equipment.

Here are some web sites that can help you finding important information:

- US: www.avalanche.org
- Europe: www.avalanches.org
- Canada: www.avalanche.ca

**Slush**

Slush should be avoided at all times. Always check for slush before starting across any lake or river. If dark spots appear in your tracks, get off the ice immediately. Ice and water can be thrown rearward into the path of a following snowmobile. Getting a vehicle out of a slush area is strenuous and in some cases, impossible.

**Fog or Whiteout Conditions**

On land or water, fog or visibility-limiting snow can form. If you have to proceed into the fog or heavy snow, do so slowly with your lights on and watch intently for hazards. If you are not sure of your way, do not proceed. Keep a safe distance behind other snowmobilers to improve visibility and reaction time.

**Unfamiliar Territory**

Whenever you enter an area that is new to you, drive with extreme caution. Go slow enough to recognize potential hazards such as fences or fence posts, brooks crossing your path, rocks, sudden dips, guy wires and countless other obstacles which could result in a termination of your snowmobile ride. Even when following existing tracks, be cautious. Travel at a speed so you can see what is around the next bend or over the top of the hill.

**Bright Sunshine**

Bright sunny days can considerably reduce your vision. The glare from sun and snow may blind you to the extent that you cannot easily distinguish ravines, ditches or other obstacles. Goggles with colored lenses should always be worn under these conditions.

**Unseen Obstruction**

There may be obstructions hidden beneath the snow. Driving off established trails and in the woods requires reduced speed and increased vigilance. Driving too fast in an area can make even minor obstacles very hazardous. Even hitting a small rock or stump could throw your snowmobile out of control and cause injury to its riders. Stay on established trails to reduce your exposure to hazards. Be safe, slow down and enjoy the scenery.

**Hidden Wires**

Always be on the lookout for hidden wires, especially in areas that may have been farmed at one time or another. Too many accidents have been caused by running into wires in the fields, guy wires next to poles and roads, and into chains and wires used as road closures. Slow speeds are a must.

**Obstacles and Jumping**

Unplanned jumps of snowdrifts, snowplow ridges, culverts or indistinguishable objects can be dangerous. You can avoid them by wearing the proper color lenses or face shields and by operating at a lower speed.

Jumping can be a hazardous situation. Be prepared before landing to absorb the shock and brace yourself for the impact. Knees must be flexed to act as shock absorbers. If the trail does suddenly drop away from you, crouch (stand) towards the rear of the vehicle and keep the skis up and straight ahead. Apply partial throttle and brace yourself for the impact. Knees must be flexed to act as shock absorbers.

**Turning**

Depending on terrain conditions, there are two preferred ways to turn or corner a snowmobile. For most snow surfaces, "body english" is the key to turning. Leaning towards the inside of the turn and positioning body weight on the inside foot will create a

"banking" condition beneath the track. By adopting this position and positioning yourself as far forward as possible, weight will be transferred to the inside ski.

On occasion, you will find that the only way to turn the vehicle about in deep snow is to pull the snowmobile around. Do not over-exert yourself. Get assistance. Remember to always lift using your legs as opposed to your back.

mmo2008-003-005

**Road Crossing**

In some cases, you will be approaching the road from a ditch or snowbank. Choose a place where you know you can climb without difficulty. Use the standing position and proceed with only as much speed needed to crest the bank. Stop completely at the top of the bank and wait for all traffic to clear. Judge the drop to the roadway. Cross the road at a 90° angle. If you encounter another snowbank on the opposite side, position your feet near the rear of the vehicle. Remember, your snowmobile is not designed to operate on bare pavement and steering on this type of surface is more difficult.

**Railroad Crossing**

Never ride on railroad tracks. It is illegal. Railroad tracks and railroad rights-of-way are private property. A snowmobile is no match for a train. Before crossing a railroad track, stop, look and listen.

**Night Rides**

The amount of natural and artificial light at a given time can effect your ability to see or to be seen. Nighttime snowmobiling is delightful. It can be a unique experience if you acknowledge your reduced visibility. Before you start, make certain your lights are clean and work properly. Drive at speeds that will allow you to stop in time when you see an unknown or dangerous object ahead. Stay on established trails and never operate in unfamiliar territory. Avoid rivers and lakes. Guy wires, barbed wire fences, cabled road entrances and other objects such as tree limbs are difficult to see at night. Never drive alone. Always carry a flashlight. Keep away from residential areas and respect the right of others to sleep.

**Riding in a Group**

Before starting out, designate a "trail boss" to lead the party and another person to follow-up at the end of the party. Ensure that all members of the party are aware of the proposed route and destination. Make certain that you are carrying all necessary tools and equipment and that you have sufficient fuel to complete the trip. Never overtake the trail boss or, for that matter, any other snowmobile. Use down-the-line hand signals to indicate hazards or intent of direction change. Assist others whenever necessary.

It is always IMPORTANT to keep a safe distance between each snowmobile. Always maintain a safe interval and allow sufficient stopping distance. Don't be a tailgater. Know the position of the machine ahead.

**Signals**

If you intend to stop, raise either hand straight above your head. A left turn is indicated by extending your left hand straight out in the proper direction. For right turns, extend the left arm and raise the hand to a vertical position so it forms a right angle at the elbow. Every snowmobiler should relay any signal to the ones behind.

**Trail Stops**

Whenever possible, pull off the trail when you stop. This will reduce the hazard to other snowmobilers using the trail.

**Trails and Signs**

Trail signs are used to control, direct or regulate the use of snowmobiles on trails. Become familiar with all signs used in the area where you are snowmobiling.

## Environment

Wildlife compliments your snowmobiling day. Snowmobile tracks provide firm ground over which animals can travel from area to area. Do not violate this privilege by chasing or harassing wildlife. Fatigue and exhaustion can lead to animal's death. Avoid areas posted for the protection or feeding of wildlife.

If you happen to be fortunate enough to see an animal, stop your snowmobile and observe quietly.

The guidelines that we support are not designed to limit your snowmobiling fun, but to preserve the beautiful freedom that you can experience only on a snowmobile! These guidelines will keep snowmobilers healthy, happy and able to introduce others to what they know and enjoy about their favorite winter pastime. So, the next time you hit the trails on a cool, crisp and clear winter day, we ask you to remember that you are paving the way for the future of our sport. Help us lead it down the right path! From all of us at BRP, thank you for doing your share.

There is nothing more exhilarating than snowmobiling. Venturing onto snowmobile trails that cross wild areas is an exciting and healthy winter sport. However, as the number of people using these recreational parks increases, so does the potential for damage to the environment. Abuse of land, facilities and resources inevitably leads to restrictions and closures of both private and public land.

In essence, the greatest threat to our sport, is all around us. Which leaves us with one logical choice. When we snowmobile, we must always ride responsibly.

The vast majority respect the law and the environment. Each of us must set an example for those who are new to the sport, young and old alike.

It is in every one's best interest to tread lightly into our recreational areas. Because, in the long run, to protect the sport we must preserve the environment.

Recognizing the importance of this issue and the need for snowmobilers to do their share in preserving areas that make it possible to enjoy our sport, BRP has developed the "Light Treading Is Smart Sledding" campaign for snowmobilers.

Light Treading refers to more than the thread of our tracks. It's a statement of concern, respect and willingness to take the lead and take action. It applies to the environment in general, its proper care and maintenance, its natural inhabitants and all enthusiasts and the public at large who enjoy the great outdoors. With this theme, we invite all snowmobilers to remember that respecting the environment is not only critical to the future of our industry but to future generations.

Light Treading in no way suggests you should curb your appetite for snowmobiling fun! It simply means tread with respect!

The fundamental objective of Light Treading is one of respect for where and how you ride a snowmobile. You're a light treader when you follow the principles below.

Become informed. Obtain maps, regulations and other information from the Forest Service or from other public land agencies. Learn the rules and follow them and that goes for speed limits, too!

Avoid running over young trees, shrubs, and grasses and don't cut wood. On flatlands or areas where trail riding is popular, it's important to ride only where authorized. Remember, there is a link between protecting your environment and your own safety.

Respect wildlife and be particularly sensitive of animals that are rearing young or suffering from food shortage. Stress can sap scarce energy reserves. Refrain from riding in areas where only animals are intended to tread!

Obey gate closures and regulatory signs and remember, light treaders don't litter!

Stay out of wilderness areas. They're closed to all vehicles. Know where the boundaries are.

Obtain permission to travel across private land. Respect the rights of landowners and other people's privacy. Remember, snowmobile technology has lowered the noise factor considerably, but you still shouldn't rev your engines where quiet "is the order of the day".

Snowmobilers know all too well the efforts that have been made throughout the sport's history to enjoy access to areas where people can snowmobile safely and responsibly. This effort continues today, as strong as ever.

Respecting the areas where we ride... wherever they may be... is the only way to ensure their future enjoyment. That's one major reason why we know you'll agree that Light Treading is smart sledding! And there are more.

Enjoying the opportunity to see winter and all its natural majestic wonders, is an experience cherished by snowmobilers. Light Treading will preserve this opportunity and will make it possible for us to expose others to the beauty of winter and the unique thrill of our sport! Light Treading will help our sport to grow!

Finally, Light Treading is the sign of a smart snowmobiler. You don't have to leave big tracks or careen through a virgin forest to show you can ride. So whether you're driving a high performance Ski-Doo, a sporty snowmobile or any other make or model, show you know what you're doing. Show you know how to send snow flying and make tracks with a light touch!

## TRACTION ENHANCING PRODUCTS

NOTE: This section is applicable to snowmobiles equipped with a factory installed track that has been approved by BRP for special studs installation.

**⚠ WARNING**

Never stud a track that has not been approved for studs. Installing studs on an unapproved track could increase the risk of the track tearing or severing.

**⚠ WARNING**

You may stud the track on this vehicle model. However, you MUST only use the BRP approved type stud for use on these Ski-Doo snowmobiles. DO NOT EVER use conventional studs as the track thickness is thinner then other standard tracks. The stud could tear off of track and separate from vehicle. See an authorized Ski-Doo dealer for current specific studding availability and applications.

Using traction enhancing products such as, adjustable or more aggressive ski carbide runners and/or studs on your snowmobile will change its behavior, particularly in terms of manoeuvrability, acceleration, and braking.

Using traction enhancing products gives a better grip on packed snow and ice, but has no noticeable effect on soft snow. For this reason, driving a snowmobile equipped with traction enhancing products requires a certain adaptation period. If your snowmobile is equipped with traction enhancing products, be sure to take plenty of time to get used to the way it handles when turning, accelerating, and braking.

Also, always check local regulations concerning the use of traction enhancing products on snowmobiles. Always drive your snowmobile in a responsible manner, respecting the environment and other people's property.

### Manoeuvrability

Using traction enhancing products such as, more aggressive ski carbide runners and/or studs makes the snowmobile grip the ground better at both the front and at the rear. The use of carbide runners is therefore required to give the skis a better grip, so that the front and rear of the snowmobile are in balance. While off-the-shelf carbide

ski runners are adequate, they don't necessarily give you optimal control, since that depends on your personal preferences, your riding style, and how your suspension is adjusted.

## ⚠ WARNING

If the front and rear of the snowmobile are out of balance due to an incorrect combination of traction enhancing products, the snowmobile may tend to oversteer or understeer, which could lead to a loss of control.

**Oversteering**

In certain conditions, using more aggressive ski carbide runners without studs on the rear track could make the snowmobile prone to oversteering, see illustration.

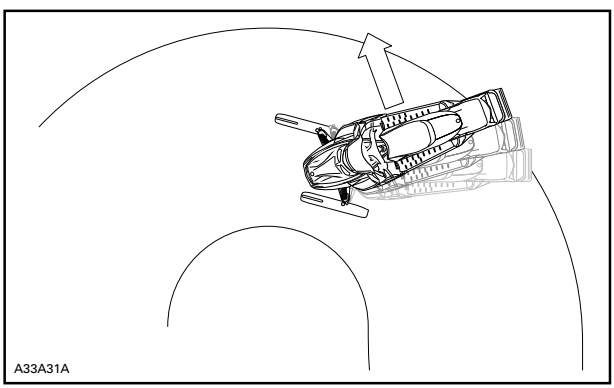


*OVERSTEERING*

**Understeering**

In certain conditions, the use of studs on the track could make the snowmobile prone to understeering if the skis are not equipped with more aggressive ski carbide runners, see illustration.

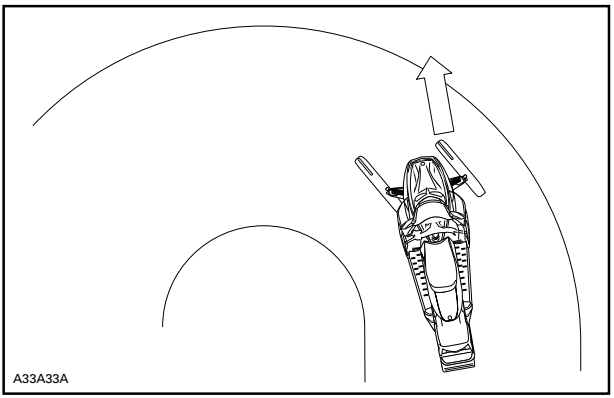


*UNDERSTEERING*

**Controlled Driving**

A balanced combination of carbide ski runners and studs on the track ensures adequate control and better handling, see illustration.

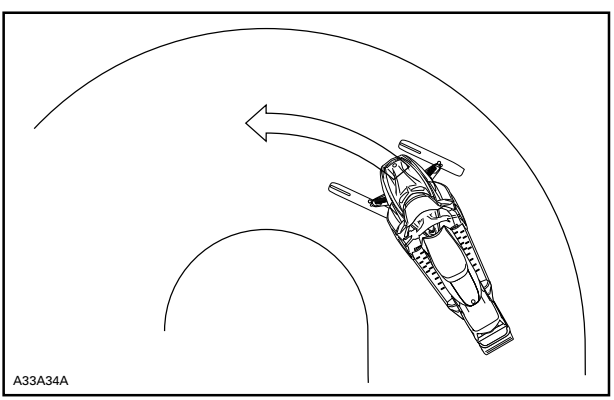


*CONTROLLED DRIVING*

## Acceleration

Using studs on the track will allow your sled to accelerate better on packed snow and ice but will have no noticeable effect on soft snow. This can cause sudden variations in traction under certain conditions.

**⚠ WARNING**

To prevent surprises that could lead to a loss of control of the snowmobile:

- Always go easy on the throttle.
- NEVER try to spin the track to make the rear of the snowmobile skid.

This could cause debris or ice to be thrown violently backwards, possibly injuring others nearby or on snowmobiles behind you.

## Braking

As in the case of acceleration, using studs on the track will give you better braking capacity on packed snow or ice but will have no noticeable effect on soft snow. Braking may thus vary suddenly under certain conditions. Be sure to use restraint in braking to keep from blocking the track in order to avoid surprises that could lead to a loss of control.

## Important Safety Rules

**⚠ WARNING**

To prevent serious injury to individuals near the snowmobile:

- NEVER stand behind or near a moving track.
- Always use a wide-base snowmobile stand with a rear deflector panel if it is necessary to rotate track.
- When the track is raised off the ground, only run it at the lowest possible speed.

Centrifugal force could cause debris, damaged or loose studs, pieces of torn track, or an entire severed track to be violently thrown backwards out of the tunnel with tremendous force.

## Effects of Having a Studded Track on the Life of the Snowmobile

The use of traction enhancing products can increase the load and the stress on certain snowmobile components, as well as the vibration level. This can cause premature wear on parts such as belts, brake linings, bearings, chain, chaincase sprocket, and on approved studded tracks, shorten track life. Always proceed with a visual inspection of your track before each use. For more information, refer to *TRACK* in *MAINTENANCE*.

Studs on the track can also cause serious damage to your snowmobile if it is not equipped with the tunnel protectors designed for your particular model. Damage to the electrical wiring or perforation of the heat exchangers are potential hazards, that could cause the engine to overheat and be severely damaged.

**⚠ WARNING**

If tunnel protectors are excessively worn or not installed, the gas tank could be punctured, causing a fire.

***NOTICE*** Ask your dealer for the appropriate tunnel protectors model and kit number required for your snowmobile.

NOTE: Consult the BRP limited warranty to find out what warranty limitations are related to the use of studs.

## Installation of Studs on BRP Approved Tracks

**⚠ WARNING**

Never stud a track that has not been approved for studs. Approved tracks can be identified by a stud symbol (see illustration below) molded into the track surface. Installing studs on an unapproved track could increase the risk of the track tearing or severing.

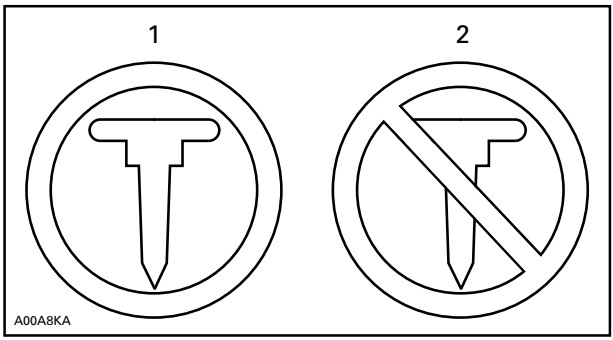


*TRACK SYMBOLS*
1. *Approved*
2. *NOT Approved*

To ensure safe and proper installation, BRP recommends to have the studs installed by your dealer.

– Use only the BRP approved special studs.
– Never use studs that exceed the height of your snowmobile's track profile by more than 9.5 mm (3/8 in).

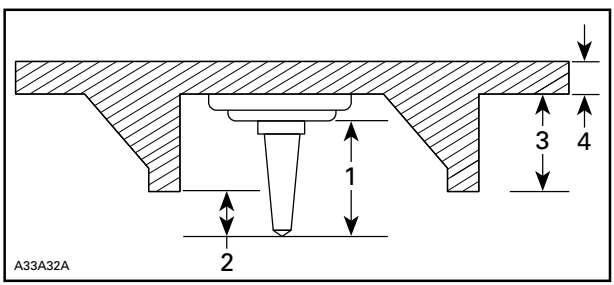


*INSTALLATION OF STUDS*
1. *Stud size*
2. *Penetration range 6.4 mm to 9.5 mm (1/4 in to 3/8 in)*
3. *Track lug height*
4. *Track belt thickness*

## ⚠ WARNING

- See an authorized Ski-Doo dealer for current specific studding availability and applications.
- DO NOT EVER use conventional stud because, the track thickness is thinner then our standard tracks and the stud could tear off of track and separate from vehicle.
- Studs should only be installed in the locations indicated by molded bulges in the track surface. Some track models have two types of molded bulges; triangles and circles. See the warning molded into the track surface to know which one to use.
- Never stud a track with a profile of 35 mm (1-3/8 in) or more.
- The number of studs installed must always perfectly match the pattern of molded bulges in the track.
- Always consult the traction product manufacturer's installation instructions and recommendations before having your dealer install studs and runners. It is very important to follow the torque specifications for the stud bolts.

INSTALLING AN INCORRECT NUMBER OF STUDS OR AN IMPROPER INSTALLATION CAN INCREASE THE RISK OF THE TRACK TEARING OR SEVERING.

## Maintenance/Replacement

PROCEED WITH A VISUAL INSPECTION OF YOUR TRACK BEFORE EACH USE.

Look for any defects, such as:

- Perforations in the track
- Tears in the track (particularly around traction holes on studded tracks)
- Lugs that are broken or torn off, exposing portions of rods
- Delamination of the rubber
- Broken rods
- Broken studs (studded tracks)
- Bent studs (studded tracks)
- Missing studs
- Studs that are torn off the track
- Missing track guide(s)
- Also, ensure that studs nut are tighten to the recommended torque.

On approved studded tracks, replace broken or damaged studs immediately. If your track shows signs of deterioration, it must be replaced immediately. When in doubt, ask your dealer. Always proceed with a visual inspection of your track before each use.

**⚠ WARNING**

**Riding with a damaged track or studs could lead to loss of control.**

## IMPORTANT ON-PRODUCT LABELS

### Hang Tag(s)

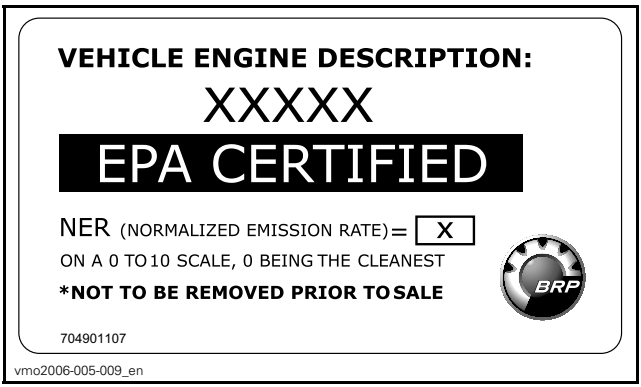


*TYPICAL*

⚠ **WARNING**. Operating, servicing and maintaining an off-road vehicle can expose you to chemicals including engine exhaust, carbon monoxide, phthalates, and lead, which are known to the State of California to cause cancer and birth defects or other reproductive harm.
To minimize exposure, avoid breathing exhaust, do not idle the engine except as necessary, service your vehicle in a well-ventilated area and wear gloves or wash your hands frequently when servicing your vehicle.

For more information go to www.P65Warnings.ca.gov/products/passenger-vehicle

704906872

EN-704906872-DEC

Have you asked your dealer to adjust your suspension to **YOUR** riding style?

**·Limiter strap length**
**·Spring preload**

for more details.

**See the operator's guide**
**-Tune your ride section**

***This hangtag may ONLY be removed by the customer.**

516004302

mmo2010-003-100_en

## Vehicle Safety Labels

These labels are affixed to the vehicle for the safety of the operator, passenger or bystanders.

The following labels are on your vehicle and they should be considered permanent parts of the vehicle. If missing or damaged, the decals can be replaced free of charge. See an authorized Ski-Doo dealer.

NOTE: In the event of any discrepancy between this guide and the vehicle, the safety labels on the vehicle have precedence over the labels in this guide.

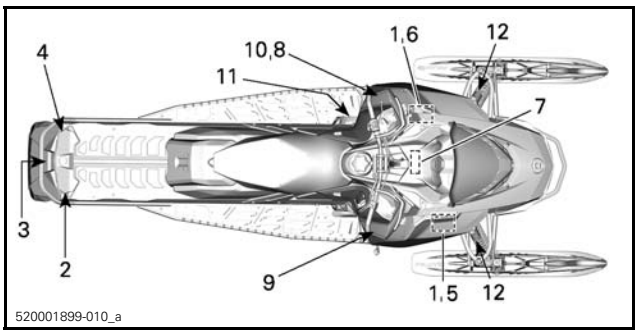

*LABEL 1*

*LABEL 2*

*LABEL 3 - APPLICABLE MODELS*

*LABEL 4*

mmo2008-003-007

*LABEL 5*

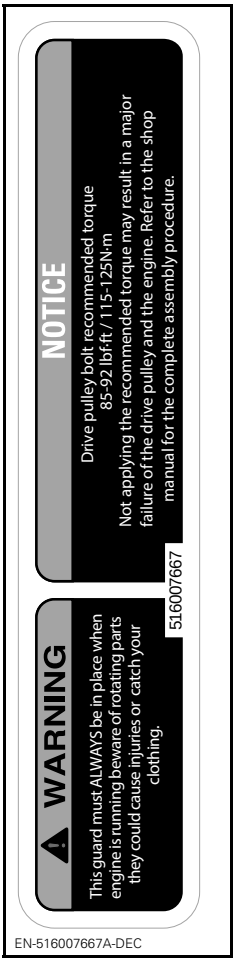
WARNING
This guard must ALWAYS be in place when engine is running beware of rotating parts they could cause injuries or catch your clothing.
NOTICE
Drive pulley bolt recommended torque
85-92 lbf·ft / 115-125N·m
Not applying the recommended torque may result in a major failure of the drive pulley and the engine. Refer to the shop manual for the complete assembly procedure.
516007667
EN-516007667A-DEC

*LABEL 6*

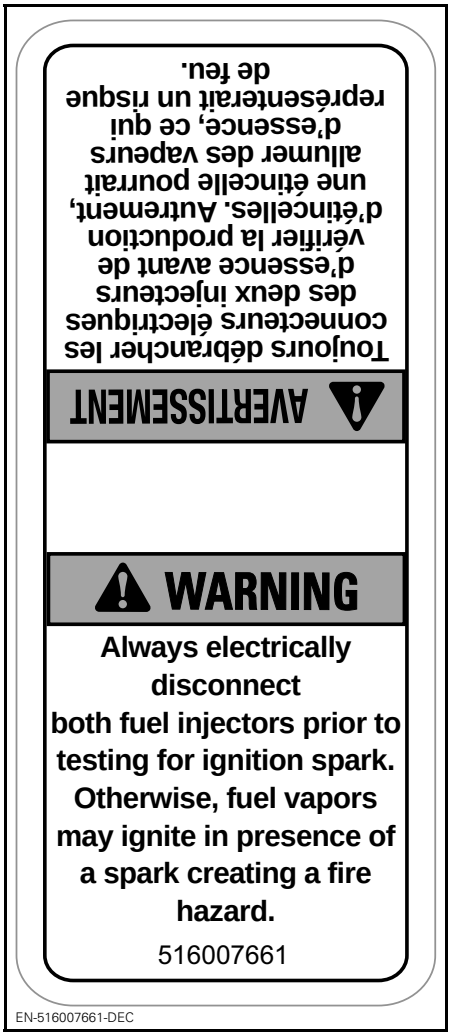
Toujours débrancher les connecteurs électriques des deux injecteurs d'essence avant de vérifier la production d'étincelles. Autrement, une étincelle pourrait allumer des vapeurs d'essence, ce qui représenterait un risque de feu.
AVERTISSEMENT
WARNING
Always electrically disconnect both fuel injectors prior to testing for ignition spark. Otherwise, fuel vapors may ignite in presence of a spark creating a fire hazard.
516007661
EN-516007661-DEC

*LABEL 7*

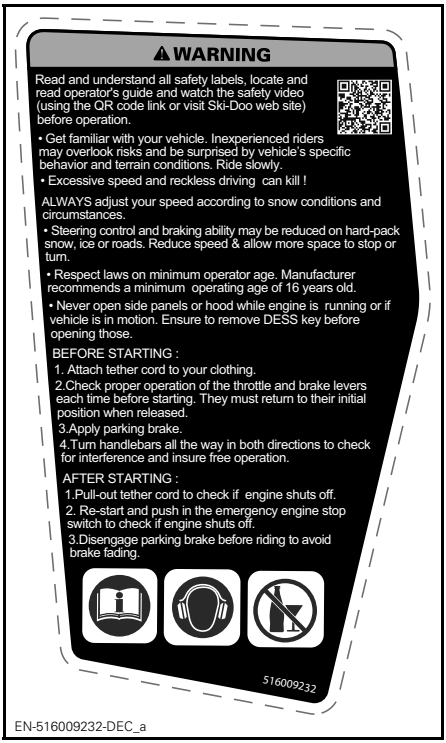
⚠ WARNING
Read and understand all safety labels, locate and read operator's guide and watch the safety video (using the QR code link or visit Ski-Doo web site) before operation.
• Get familiar with your vehicle. Inexperienced riders may overlook risks and be surprised by vehicle's specific behavior and terrain conditions. Ride slowly.
• Excessive speed and reckless driving can kill !
ALWAYS adjust your speed according to snow conditions and circumstances.
• Steering control and braking ability may be reduced on hard-pack snow, ice or roads. Reduce speed & allow more space to stop or turn.
• Respect laws on minimum operator age. Manufacturer recommends a minimum operating age of 16 years old.
• Never open side panels or hood while engine is running or if vehicle is in motion. Ensure to remove DESS key before opening those.
BEFORE STARTING :
1. Attach tether cord to your clothing.
2.Check proper operation of the throttle and brake levers each time before starting. They must return to their initial position when released.
3.Apply parking brake.
4.Turn handlebars all the way in both directions to check for interference and insure free operation.
AFTER STARTING :
1.Pull-out tether cord to check if engine shuts off.
2. Re-start and push in the emergency engine stop switch to check if engine shuts off.
3.Disengage parking brake before riding to avoid brake fading.
516009232
EN-516009232-DEC_a

*LABEL 8*

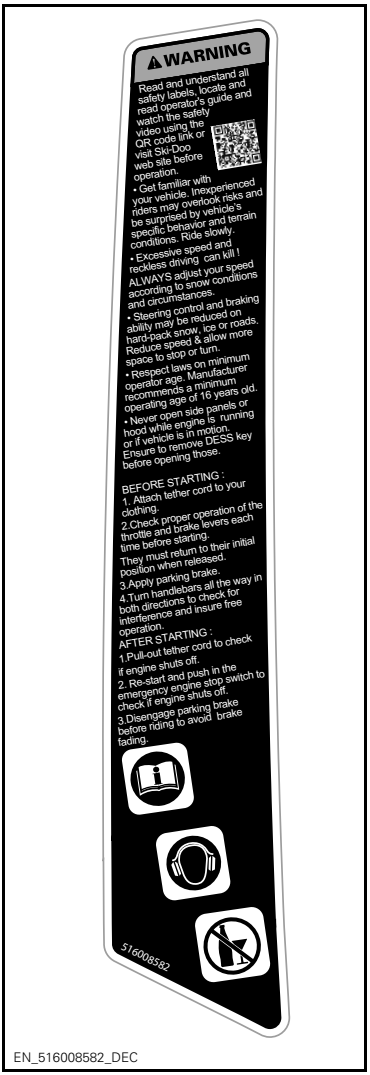


EN_516008582_DEC

*LABEL 9*

EN_516008583_DEC

*LABEL 10*

*LABEL 11*

*LABEL 12 - ON SHOCK GAS CHARGED ABSORBERS*

## Compliance Labels

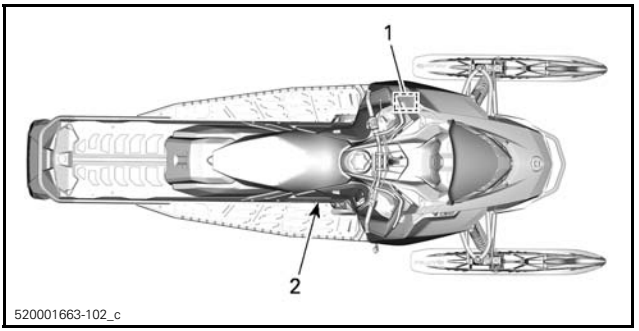


**EPA Compliance Label**

**EMISSION CONTROL INFORMATION**

THIS VEHICLE IS CERTIFIED TO OPERATE ON UNLEADED GASOLINE AND MEETS XXXX U.S. EPA REGULATIONS FOR SNOWMOBILE SI ENGINES.

EC 121

| | | |
|---|---|---|
| ENGINE FAMILY | XXXXXXXXXXXX | FAMILLE DE MOTEUR |
| PERMEATION FAMILY | XXXXXXXXXXXX | FAMILLE DE PERMÉATION |
| FEL | XX g/kW-hr HC<br>XXX g/kW-hr CO<br>X.X g/ m2 / day | LIMITE DES ÉMISSIONS DES FAMILLES |
| ENGINE DISPLACEMENT | XXX $cm^3$ | CYLINDRÉE |
| EXHAUST EMISSION CONTROL SYSTEM | XXXX | SYSTÈME DE CONTRÔLE DES ÉMISSIONS |

**RENSEIGNEMENTS SUR LE DISPOSITIF ANTIPOLLUTION**

CE VÉHICULE EST CERTIFIÉ POUR FONCTIONNER À L'ESSENCE SANS PLOMB ET IL RÉPOND AUX NORMES XXXX DE L'EPA DES É.-U. POUR LES MOTONEIGES À MOTEUR SI.

**SEE OPERATOR'S GUIDE FOR MAINTENANCE SPECIFICATIONS**
**VOIR GUIDE DU CONDUCTEUR POUR LES SPÉCIFICATIONS D'ENTRETIENS**

**BOMBARDIER RECREATIONAL PRODUCTS INC.** 6865

516006865

*TYPICAL: COMPLIANCE LABEL 1 - IN ENGINE COMPARTMENT*

**SSCC Label**

Safety standards for snowmobiles have been adopted by the Snowmobile Safety and Certification Committee (SSCC) of which BRP is a proud participating member. Assurance that your snowmobile meets these standards is easily checked by locating the Certification Label on a right vertical portion of the vehicle.

The following label shows that an independent testing laboratory has verified compliance with the SSCC safety standards.

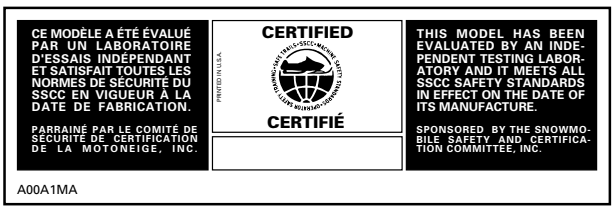


*LABEL 2*

## Technical Information Labels

*LOCATED ON FUEL CAP - ON 900 ACE ENGINE (IN COUNTRIES USING RON OCTANE RATINGS)*

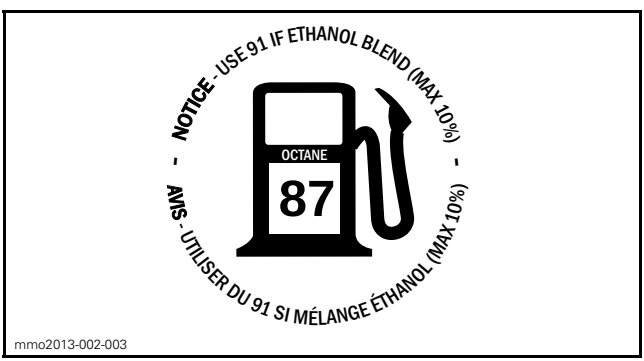


*LOCATED ON FUEL CAP - ON 900 ACE ENGINE (IN COUNTRIES USING PUMP POSTED AKI (RON+MON)/2 OCTANE RATINGS)*

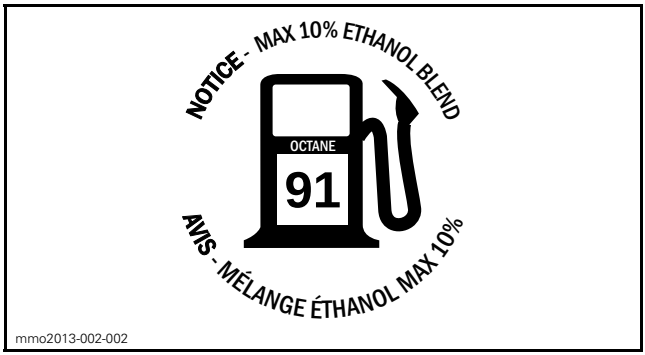


*ON FUEL CAP - ON TURBO ENGINES (IN COUNTRIES USING PUMP POSTED AKI (RON+MON)/2 OCTANE RATINGS)*

*ON FUEL CAP - ON TURBO ENGINES (IN COUNTRIES USING RON OCTANE RATINGS)*

***This page is intentionally blank***

# VEHICLE INFORMATION

# CONTROLS, INSTRUMENTS AND EQUIPMENT

NOTE: Some features may not apply to your model or could be optional.

NOTE: Some vehicle safety labels are not shown on illustrations. For information on vehicle safety labels, refer to *IMPORTANT ON-PRODUCT LABELS*.

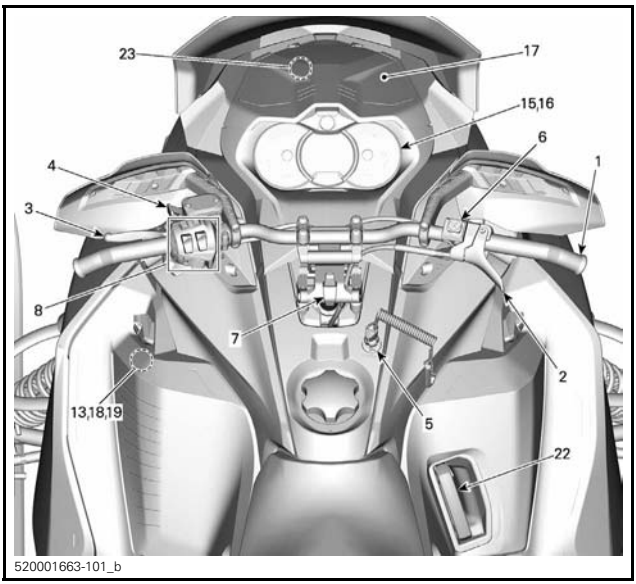


*TYPICAL*

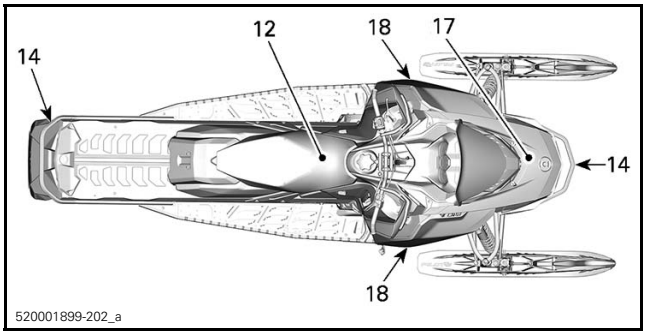


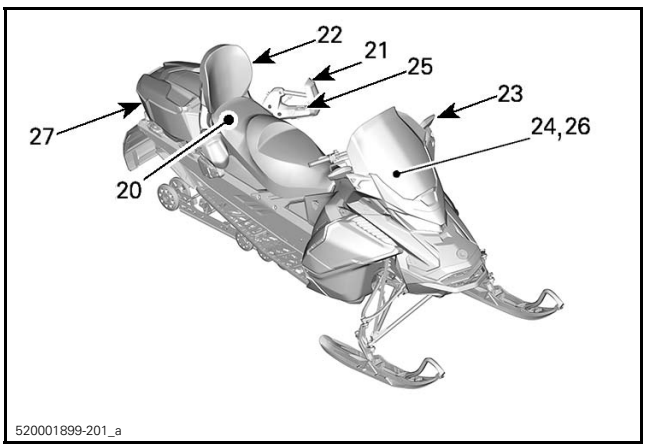


## 1) Handlebar

The handlebar controls the steering of the snowmobile. As the handlebar is rotated to right or left, the skis are turned right or left to steer the snowmobile.

**⚠ WARNING**

Fast reverse while turning, could result in loss of stability and control.

## 2) Throttle Lever

Throttle lever is located on the RH side of handlebar.

Designed to be either thumb activated or finger activated. When squeezed, it increases the engine speed. When released, engine speed returns automatically to idle.

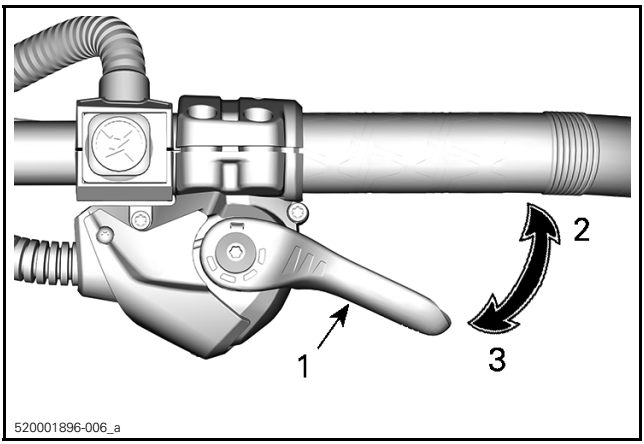


*TYPICAL*
1. *Throttle lever*
2. *To accelerate*
3. *To decelerate*

**⚠ WARNING**

Test the throttle lever operation each time before starting the engine. The lever must return to the rest position once released. Otherwise, do not start engine.

**Switching from Thumb to Finger Throttle Position**

**⚠ CAUTION** It is highly recommended to immobilize the snowmobile before attempting any modification to the throttle position as it could lead to a hazardous situation.

There are mainly three positions to choose from when going from the thumb to the finger throttle position and the best one will be to the rider's preference and in direct relation with the riding style and conditions.

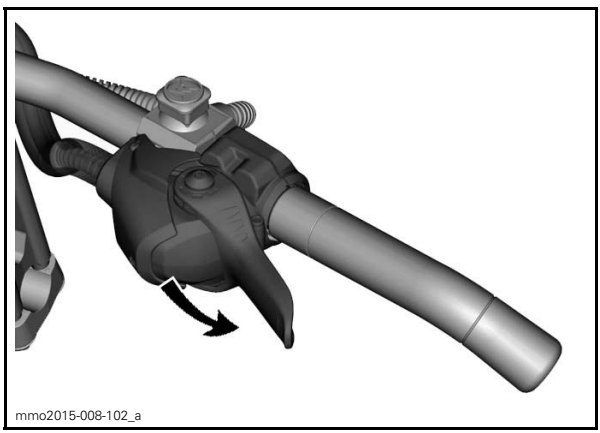


*THUMB THROTTLE POSITION : PUSH DOWNWARD TO ROTATE THROTTLE HOUSING*

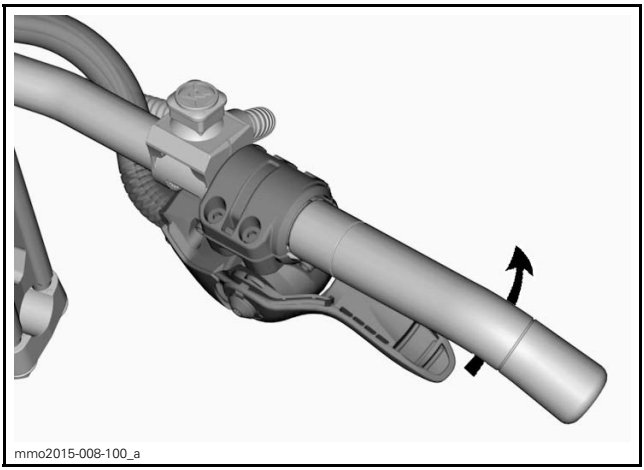


*IF WANTED, CONTINUE TO ROTATE THE THROTTLE HOUSING*

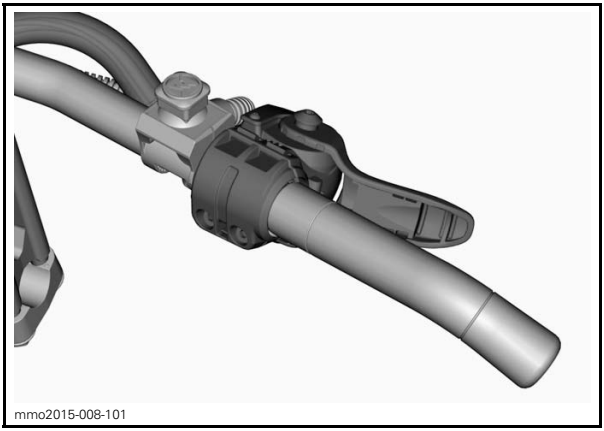


*FINGER THROTTLE POSITION*

**⚠ CAUTION**

- It is HIGHLY recommended to use gloves and NOT mitts when using the finger throttle position.
- It is not recommended to use the finger throttle position while riding in dense off trail areas.

The procedure to go back to the thumb throttle position is the reverse of the one shown above.

## 3) Brake Lever

Brake lever is located on the LH side of handlebar.

When squeezed, brake is applied. When released, it automatically returns to the rest. Braking effect is proportional to the pressure applied on the lever and to the type of terrain and its snow coverage.

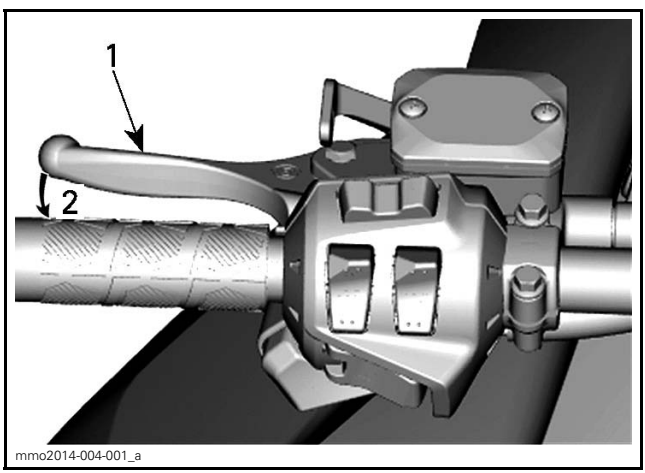


*TYPICAL*
1. *Brake lever*
2. *To apply brake*

## 4) Parking Brake Lever

Parking brake lever is located on the LH side of handlebar.

Parking brake should be used whenever snowmobile is parked.

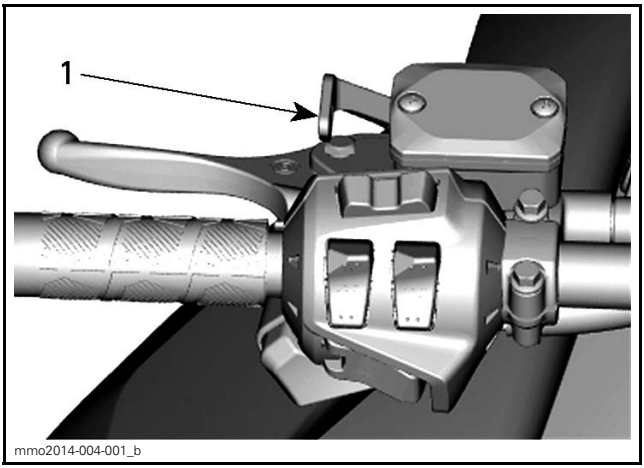


*TYPICAL*
*1. Parking brake lever*

## ⚠ WARNING

Make sure parking brake is fully disengaged before operating the snowmobile. When you ride the vehicle, brake pads that are caused to drag by a continuous pressure on the lever may cause damage to the brake system and cause loss of braking capacity and/or fire.

**To Engage Parking Brake**

Apply and hold brake, then lock brake lever using the parking brake lever as shown.

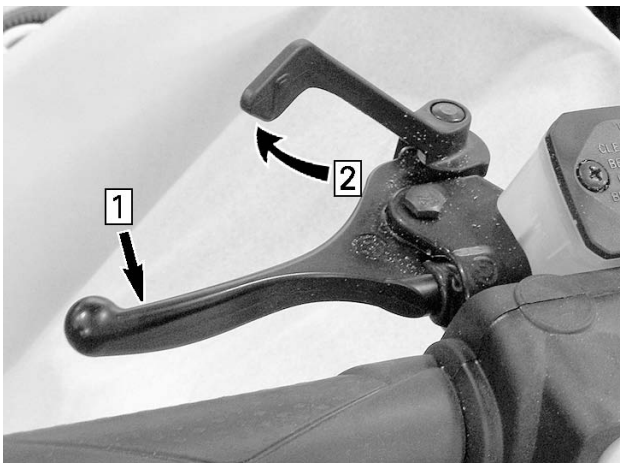


mmo2009-005-006_a

*TYPICAL — ENGAGE MECHANISM*
*Step 1: Apply and hold brake*
*Step 2: Lock brake lever using parking brake lever*

**To Release Parking Brake**

Squeeze brake lever. Parking brake lever will automatically return to its original position. Always release parking brake before riding.

## 5) Engine Cut-off Switch

The engine cut-off switch (tether cord) is located on the console.

The tether cord cap must be securely snapped on the engine cut-off switch to allow vehicle operation.

NOTE: After engine starting, 2 short beeps should be heard if a programmed D.E.S.S. key (tether cord cap) is correctly snapped on engine cut-off switch. If another beep code is heard, refer to *MONITORING SYSTEM* for D.E.S.S. malfunction codes information.

Pulling the tether cord cap from the switch shuts the engine off.

**⚠ WARNING**

Always attach the tether cord eyelet to clothing before starting the engine.

**D.E.S.S. (Digitally Encoded Security System)**

The tether cord cap has an integrated D.E.S.S. key to provide you and your snowmobile with the equivalent security of a conventional lock key.

The D.E.S.S. key contains an electronic chip which features a unique permanently memorized digital code.

Your authorized Ski-Doo dealer has programed the D.E.S.S. of your snowmobile to recognize the D.E.S.S. key in the tether cord cap to allow vehicle operation.

If another tether cord is used without programming the D.E.S.S., the engine will start but will not reach drive pulley engagement speed to move vehicle.

Make sure the tether cord cap is free of dirt or snow.

**D.E.S.S. Flexibility**

The D.E.S.S. of your snowmobile can be programmed by your authorized Ski-Doo dealer to accept up to 8 different keys.

We recommend the purchase of additional tether cords from your authorized Ski-Doo dealer. If you have more than one D.E.S.S. equipped Ski-Doo snowmobile, each can be programmed by your authorized Ski-Doo dealer to accept the other vehicles D.E.S.S. keys.

## 6) Emergency Engine Stop Switch

The emergency engine stop switch is located on the RH side of handlebar.

Push-pull type switch.

To stop the engine in an emergency, select OFF position (down) and simultaneously apply the brake. To restart, button must be at the ON position (up).

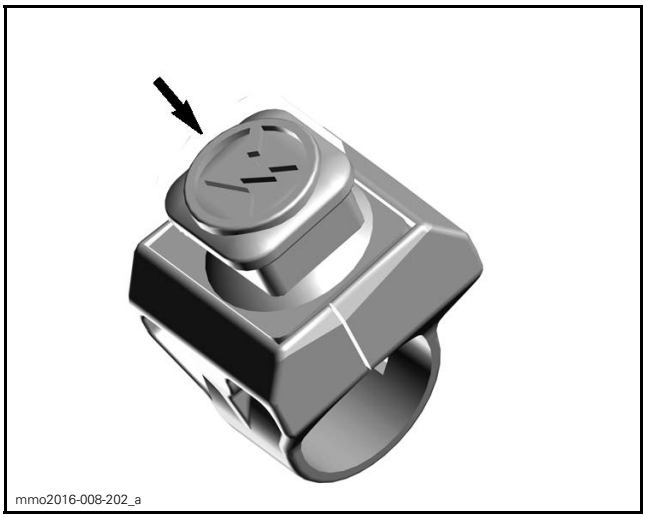


*OFF POSITION*

To allow engine starting, the switch must be in the ON position (UP).

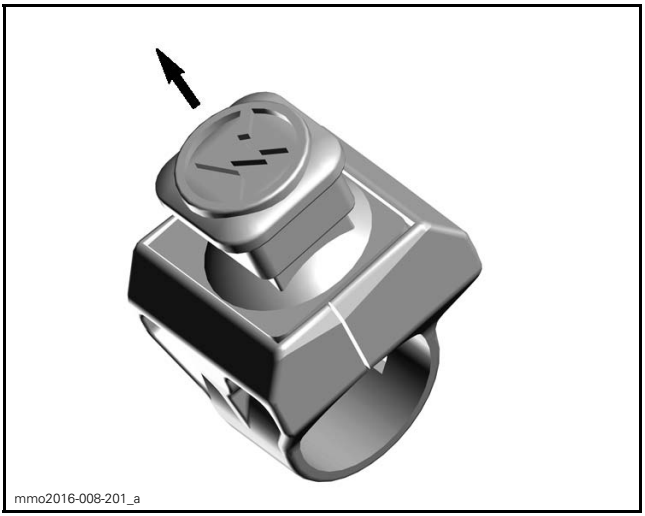


*ON POSITION*

All operators of the snowmobile should familiarize themselves with the function of the emergency engine stop switch by using it several times on first outing and whenever stopping the engine thereafter. This engine stopping procedure will become a reflex and will prepare operators for emergency situations requiring its use.

**⚠ WARNING**

If the switch has been used in an emergency caused by a suspected malfunction, the source of the malfunction should be determined and corrected before restarting engine. See an authorized Ski-Doo dealer for servicing.

### 7) Adjustable Handlebar Riser (If Equipped)

**⚠ WARNING**

Always stop engine before adjusting handlebar.

The handlebar can be set in four different positions.

To change handlebar position, pull lever and position handlebar as desired.

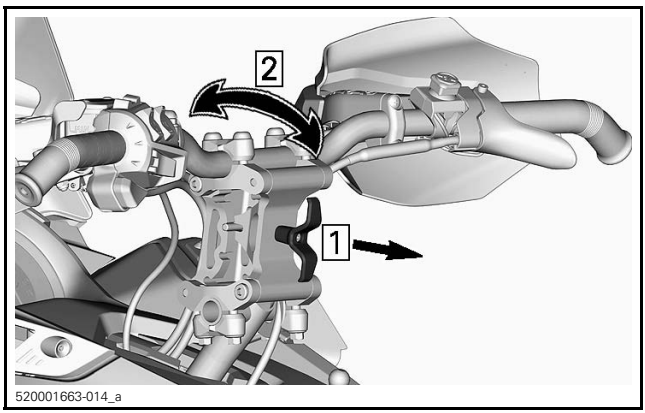


*TYPICAL*

Move the handlebar back and forth to make sure mechanism is securely engaged.

## 8) Handlebar Multifunction Switch

Multifunction switch is located on the LH side of handlebar.

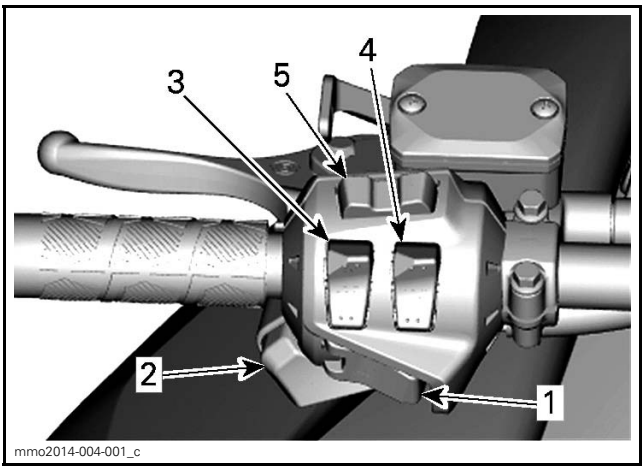


*TYPICAL*
1. *Start/Electronic Reverse button*
2. *Headlights dimmer switch*
3. *Heated grips switch*
4. *Heated throttle lever switch*
5. *Mode/set button (If equipped)*

**Start/Electronic Reverse Button**

Press to start engine. Refer to *ENGINE STARTING PROCEDURE* in *BASIC PROCEDURES*.

Once engine is started, press to engage the electronic reverse. Refer to *REVERSE (RER)* in *BASIC PROCEDURES* for procedure.

**Headlights Dimmer Switch**

Press to select HI or LOW beam. Lights are automatically ON when the engine is running.

**Heated Grips Switch**

NOTE: Under 2000 RPM, heated grips will be limited at 50%.

Depress switch as required to select heating intensity to keep your hands at a comfortable temperature.

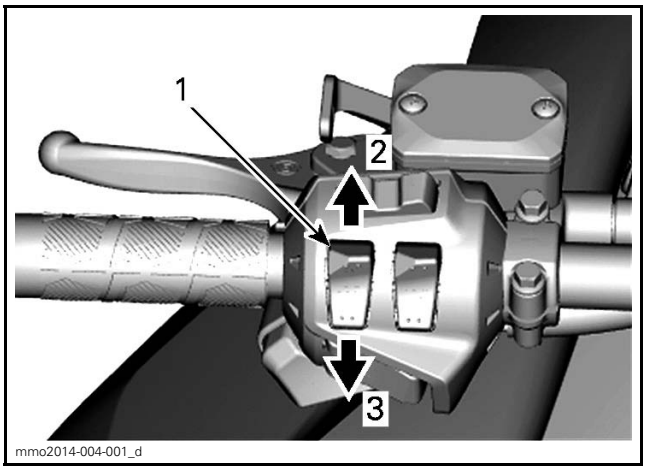


*VARIABLE INTENSITY*
1. *Heated grip switch*
2. *Increase heat*
3. *Decrease heat*

The heating intensity is displayed via the digital display.

### *Models with Analog/Digital Gauge*

NOTE: There are nine intensity settings. When released, display will return to fuel level.

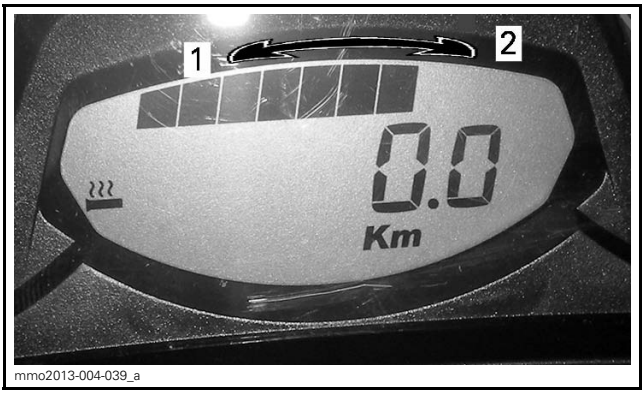


*HEATING INTENSITY DISPLAY*
1. *Less heat*
2. *More heat*

### *Models with Multifunction Analog/Digital Gauge*

NOTE: There are nine intensity settings. When released, display will return to engine coolant temperature (if equipped).

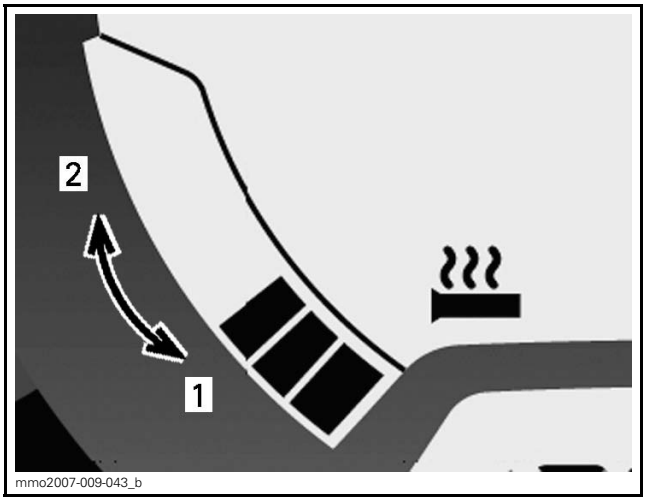


*HEATING INTENSITY DISPLAY*
1. *Less heat*
2. *More heat*

Heated grips will be in OFF position when there are no bars displayed on the gauge.

**Heated Throttle Lever Switch**

NOTE: Under 2000 RPM, heated throttle lever will be limited at 50%.

Depress switch as required to select heating intensity to keep your thumb at a comfortable temperature.

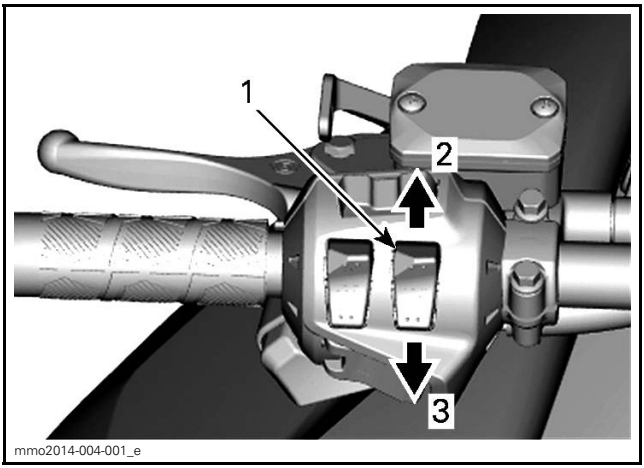


*VARIABLE INTENSITY*
1. *Heated throttle lever switch*
2. *Increase heat*
3. *Decrease heat*

NOTE: There are nine intensity settings. When released, display will return to fuel tank level.

*Models with Analog/Digital Gauge*

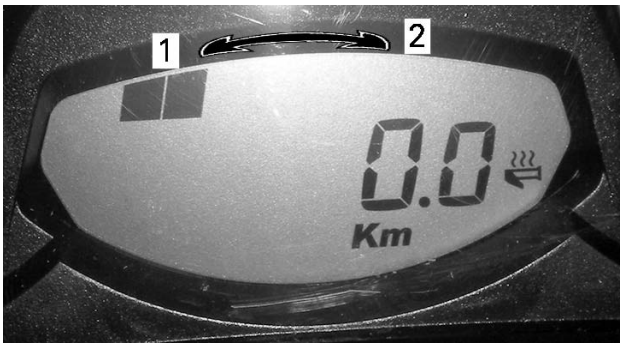


mmo2013-004-040_a

*HEATING INTENSITY DISPLAY*
1. *Less heat*
2. *More heat*

*Models with Multifunction Analog/Digital Gauge*

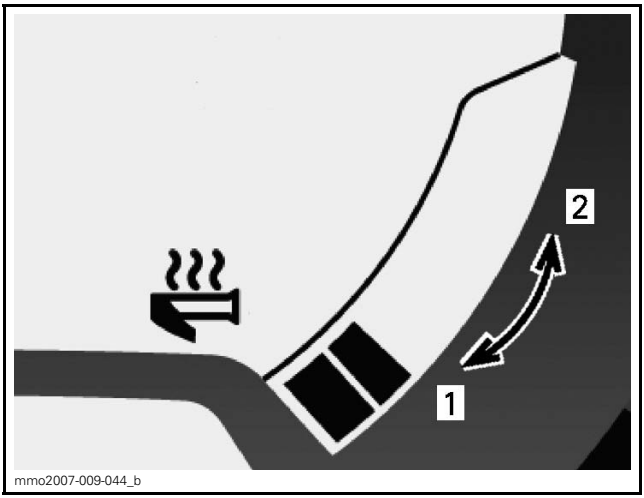


*HEATING INTENSITY DISPLAY*
1. *Less heat*
2. *More heat*

Heated throttle lever will be in OFF position when there are no bars displayed on the gauge.

**Mode/Set Button (If equipped)**

This button is used to manage the information displayed on the multifunction analog/digital gauge.

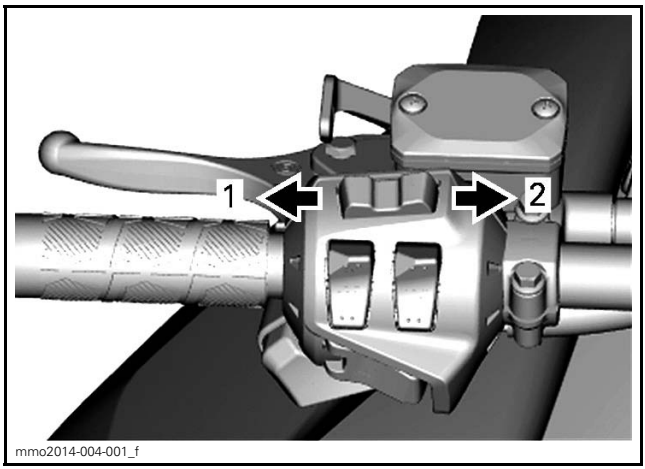


*MULTIFUNCTION GAUGE*
1. *MODE function*
2. *SET function*

## 9) Start/Electronic Reverse (RER) Button

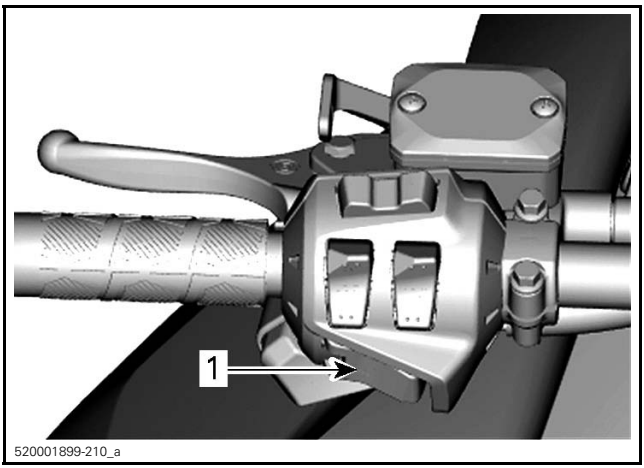


*1. Start / RER button*

On electric start models, press to start engine. Refer to *ENGINE STARTING PROCEDURE* in *BASIC PROCEDURES*.

Once engine is started, press to engage the electronic reverse. Refer to *REVERSE (RER)* in *BASIC PROCEDURES* for procedure.

## 10) Seat

### Seat Removal

While pushing in the center of the seat towards front, pull on both sides. Insert hand between seat and body to lift up and backward to unlock.

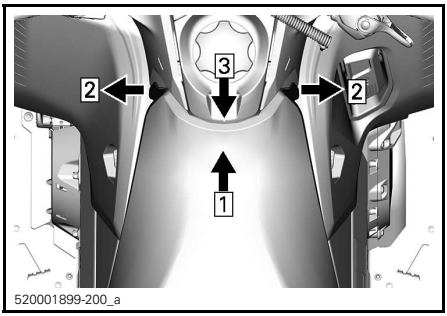


*Step 1: Push*
*Step 2: Pull*
*Step 3: Lift up and backward to unlock seat*

Slide seat rearwards to remove it.

**Seat Installation**

***NOTICE*** Riding the vehicle with any objects between the seat and the fuel tank could damage the fuel tank. NEVER place any objects between seat and fuel tank.

Place seat over the hooks, then slide it forward.

Securely engage both ball studs at front.

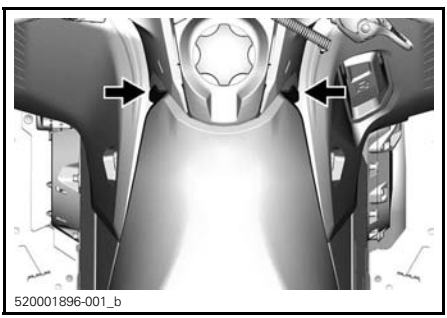


**⚠ WARNING**

Make sure seat is securely latched before riding.

## 11) Tools

A part of the drive belt guard is designed to hold the tools allowing for basic maintenance.

The tools are supplied with the vehicle.

**NOTICE** Make sure tools are secured properly.

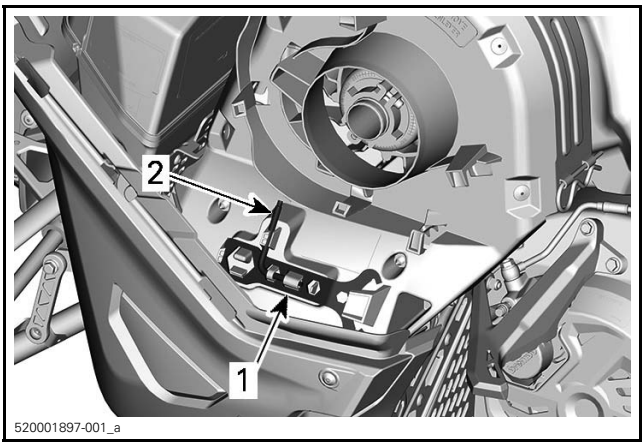


*TYPICAL - DRIVE BELT GUARD*
1. *Suspension adjustment tool location*
2. *Pulley expander location*

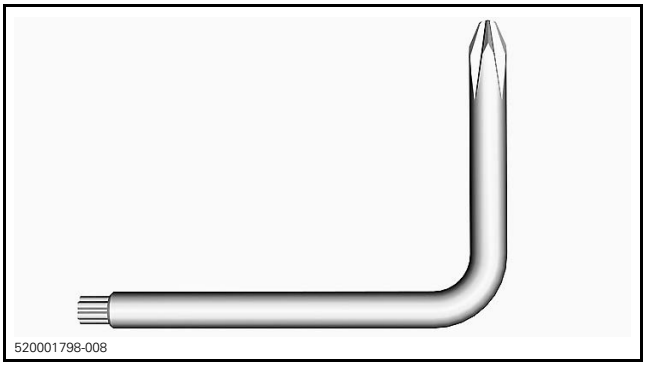


*PULLEY EXPANDER*

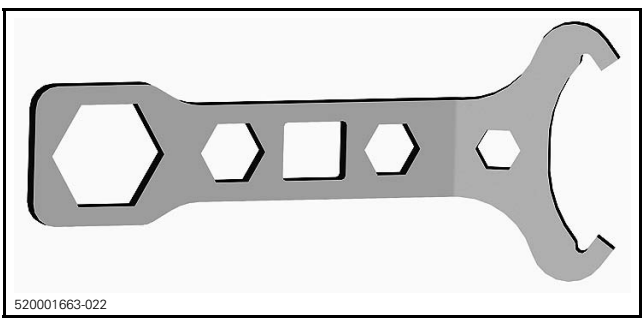


*SUSPENSION ADJUSTMENT TOOL*

## 12) Front and Rear Bumpers

To be used whenever snowmobile requires manual lifting.

⚠ **CAUTION** Beware of injuries by using proper lifting techniques, notably using your legs force. Do not attempt to lift the rear of vehicle if it is above your limits. Use appropriate lifting device or have assistance to share lifting stress if possible.

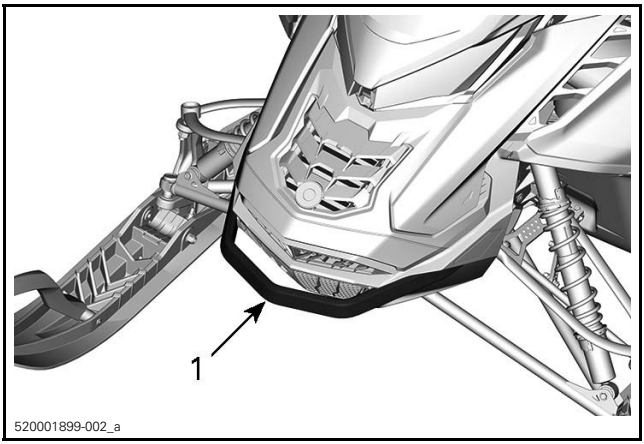


*1. Front bumper*

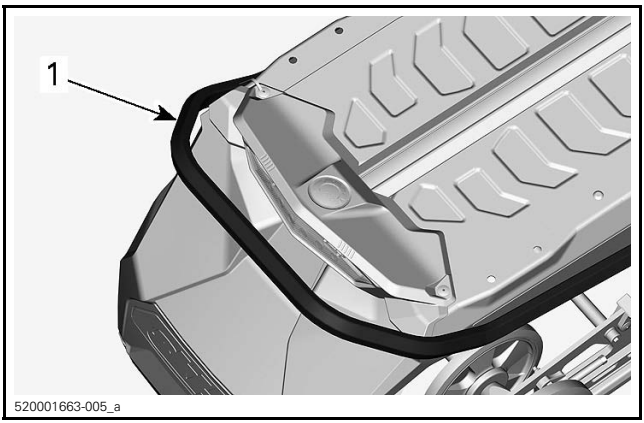


*TYPICAL*
*1. Rear bumper*

**NOTICE** Do not use skis to pull or lift snowmobile.

## 13) Analog/Digital Gauge

**⚠ WARNING**

Reading the gauge digital display can distract from the operation of the vehicle, particularly from constantly scanning the environment.

NOTE: The gauge is factory preset in Imperial units. To change units, contact an authorized Ski-Doo dealer for unit settings.

**Gauge Features**

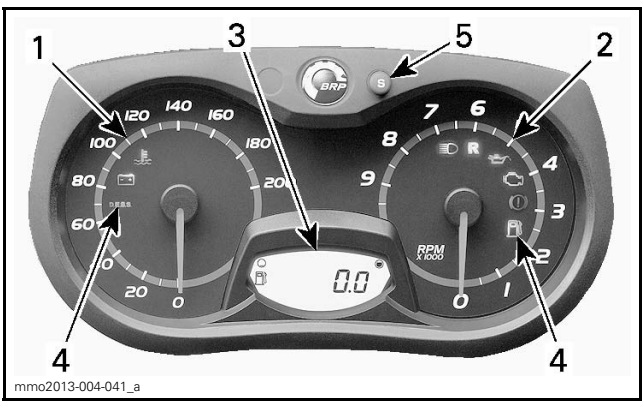


*ANALOG/DIGITAL GAUGE*
1. *Analog speedometer*
2. *Analog tachometer*
3. *Digital display*
4. *Pilot lamps*
5. *SET (S) button*

### 1) Analog Speedometer

Indicates vehicle speed.

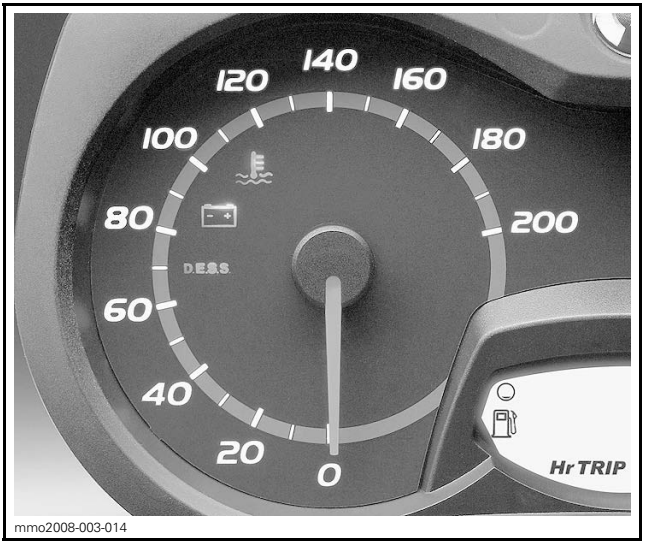


*TYPICAL - LH PORTION OF GAUGE*

**2) Analog Tachometer**

Indicates engine revolution per minute (RPM). Multiply by 1000 to obtain the actual revolutions.

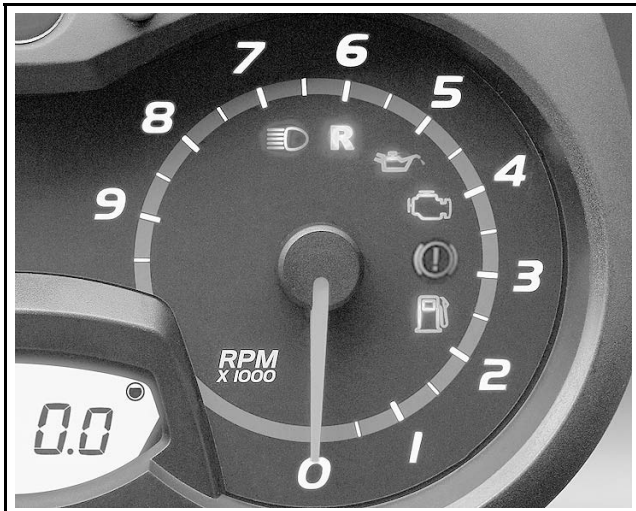


*TYPICAL - RH PORTION OF GAUGE*

**3) Digital Display**

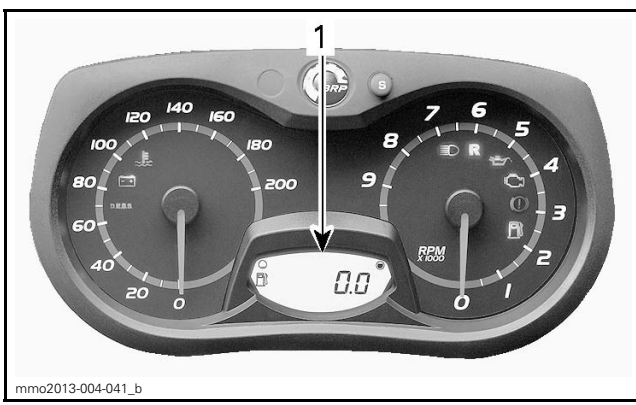


*1. Digital display*

The digital display provides various indications as selected by the operator.

The following information can be selected on the digital display:

| DIGITAL DISPLAY SELECTABLE INFORMATION |
|---|
| Odometer |
| Trip meter "A" or "B" |
| Trip Hour Meter |
| Fuel Level |
| Engine Coolant Temperature (Optional Module) |
| Heated Grips Heating Intensity |
| Heated Throttle Lever Heating Intensity |

To set the information to be displayed, see *DIGITAL DISPLAY SETUP*.

**4) Pilot Lamps and Messages**

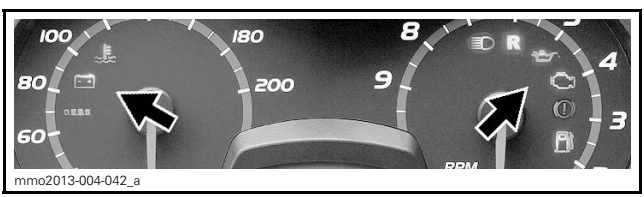


*TYPICAL — PILOT LAMPS*

See table below for usual pilot lamps information. Refer to *MONITORING SYSTEM* for details on malfunction pilot lamps.

| PILOT LAMP(S) ON | BEEPER | DESCRIPTION |
|---|---|---|
| | 4 short beeps every 5 minutes | Stop vehicle in a safe place then, Refer to *MONITORING SYSTEM*. |
| | — | Low fuel level. One (1) bar left in fuel level display. Replenish fuel tank as soon as possible. |
| | Long beeps repeating slowly | Reverse is selected. |
| | 3 short beeps | Reverse did not engage, try again. |
| | — | High beam headlights are selected. |
| | — | ECO mode active |
| ***SPORT*** | — | Sport mode active |

**5) SET (S) Button**

This button is used to manage the information displayed on the digital display.

**Digital Display Set-Up**

The bar gauge at the top, displays:

- Fuel level (default)
- Heat level of the heated throttle lever and heated grips (while changing heat level)
- Engine Coolant Temperature (Optional Module).

To select the desired information to be displayed on the digital display at the bottom, use the SET (S) button.

To reset a trip odometer or the trip hour meter, press and hold the SET (S) button.

## 14) Multifunction Analog/Digital Gauge

**⚠ WARNING**

Reading the gauge digital display can distract from the operation of the vehicle, particularly from constantly scanning the environment.

NOTE: The gauge is factory preset in Imperial units and in English. To change units or language, contact an authorized Ski-Doo dealer.

**Gauge Features**

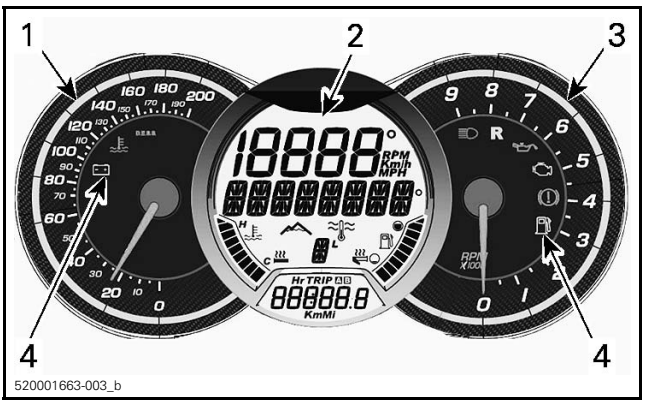


520001663-003_b

*MULTIFUNCTION ANALOG/DIGITAL GAUGE*
1. *Analog speedometer*
2. *Multifunction digital display*
3. *Analog tachometer*
4. *Pilot lamps*

**1) Analog Speedometer**

Indicates vehicle speed.

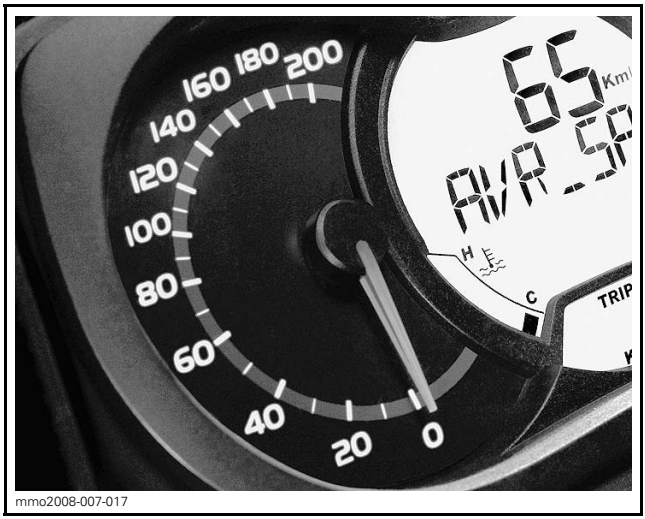


*TYPICAL - LH PORTION OF GAUGE*

**2) Analog Tachometer**

Indicates engine revolution per minute (RPM). Multiply by 1000 to obtain the actual revolutions.

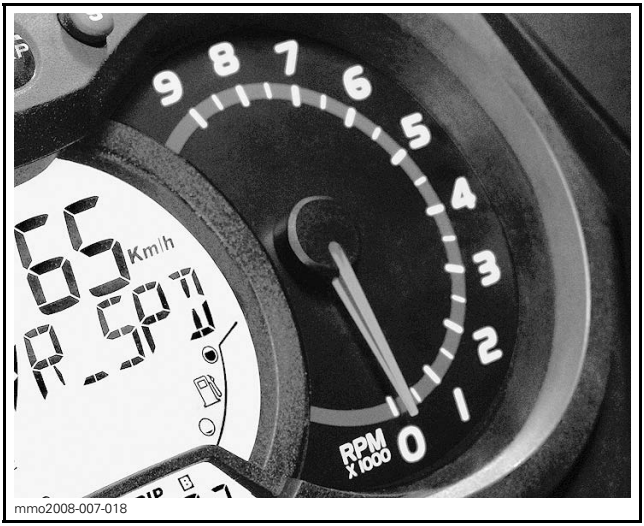


mmo2008-007-018

*TYPICAL - RH PORTION OF GAUGE*

### 3) Pilot Lamps and Messages

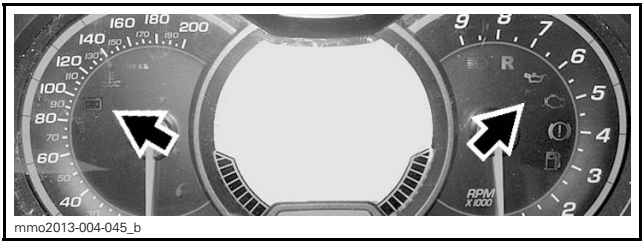


mmo2013-004-045_b

*TYPICAL — PILOT LAMPS*

See table below for usual pilot lamps information. Refer to *MONITORING SYSTEM* for details on malfunction pilot lamps and messages.

| PILOT LAMP ON | BEEPER | MESSAGE DISPLAY | DESCRIPTION |
|---|---|---|---|
| | 4 short beeps every 5 minutes | LOW OIL | Oil level is low. Stop vehicle in a safe place then, Refer to *MONITORING SYSTEM*. |
| | — | — | Low fuel level. One (1) bar left in fuel level display. Replenish fuel tank as soon as possible. |
| | Long beeps repeating slowly | REVERSE | Reverse is selected. |
| | 3 short beeps | REV. FAIL | Reverse did not engage, try again. |
| | — | — | High beam headlights are selected. |
| — | — | WARM UP | Engine need to warm-up before normal operation. The engine's RPM is limited until desired temperature is reached (up to 10 minutes when driving). Warm-up period may occur after a restart in very cold weather. |
| SPORT | — | SPORT MODE | Sport mode active |
| ECO | — | ECO MODE | ECO mode active |

**4) Multifunction Digital Display**

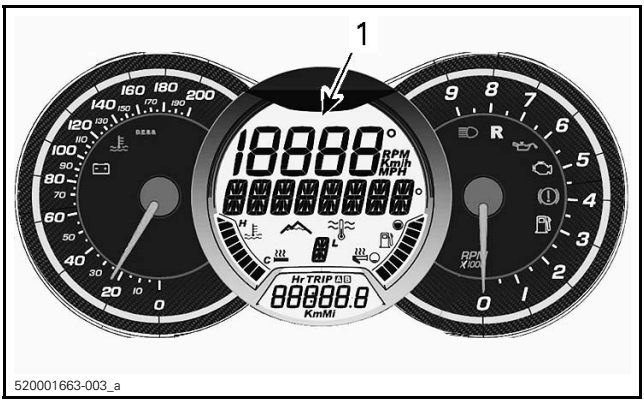


*1. Multifunction display*

The multifunction display is used to:

- Display the WELCOME message on power up
- Display the KEY recognition message
- Provide various indications as selected by the operator
- Display scrolling messages of function activation or system faults
- Display fault codes.

There are five digital displays where various information can be displayed.

- Upper display
- Center display
- Lower display
- LH side bar gauge
- RH side bar gauge

**⚠ WARNING**

Never adjust or set functions on the multifunction gauge while riding the vehicle.

## Upper Display

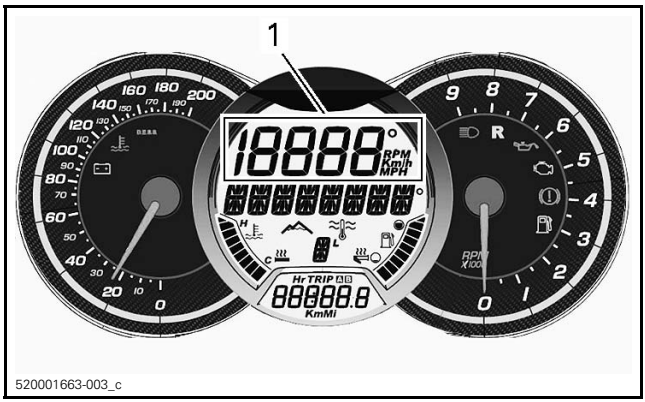


*1. Upper Display*

The following information can be selected on the upper display:

| UPPER DISPLAY INFORMATION |
|---|
| Vehicle speed |
| Top speed<br>(Since the last reset) |
| Average speed<br>(Since the last reset) |
| Engine RPM |
| Top RPM<br>(Since the last reset) |
| Instant fuel consumption |
| Total fuel consumption<br>(Since the last reset) |

To set the display to your preference, see *UPPER DISPLAY AND CENTER DISPLAY SET-UP*

## Center Display

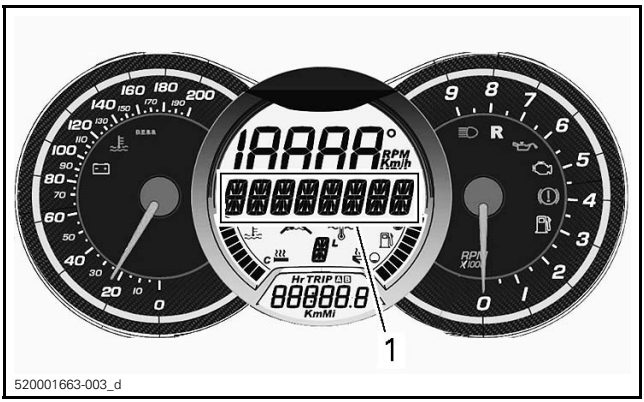


*1. Center Display*

The following information can be selected on the center display:

| CENTER DISPLAY INFORMATION |
|---|
| Vehicle speed |
| Engine RPM |
| Engine coolant temperature |
| System messages<br>See *PILOT LAMPS AND MESSAGES* and *MONITORING SYSTEM* for details |

To set the display to your preference, see *UPPER DISPLAY AND CENTER DISPLAY SET-UP*

Lower display

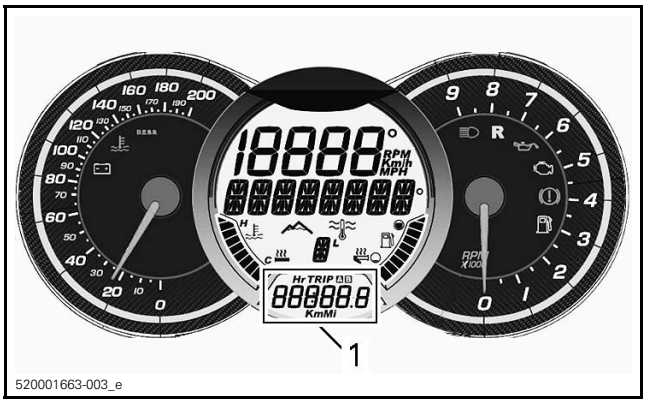


*1. Lower display*

The following information can be selected on the lower display:

| LOWER DISPLAY INFORMATION |
|---|
| Odometer |
| Trip odometer |
| Trip hour |
| Clock |

To set the display to your preference, see *LOWER DISPLAY SET-UP*

LH side Bar Gauge

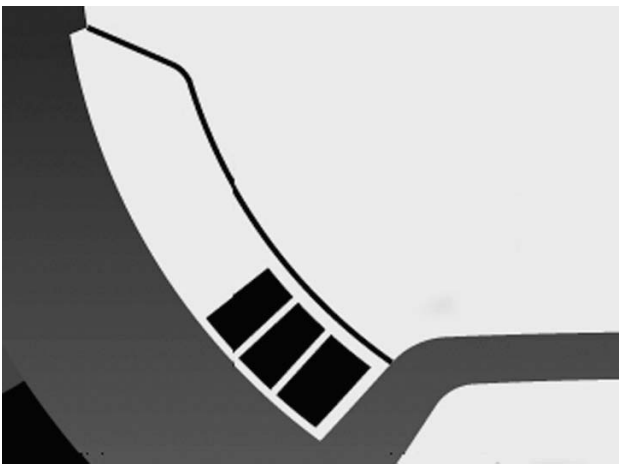

520001663-019

| LH BAR GAUGE INFORMATION |
| --- |
| Engine coolant temperature |
| Heated grips level |

The LH side bar gauge displays the engine coolant temperature except while adjusting the heated grips.

***NOTICE*** **If engine overheats, stop vehicle in a safe place. Refer to TROUBLESHOOTING.**

For details on heated grips operation, see *HEATED GRIPS SWITCH* in this section.

RH side Bar Gauge

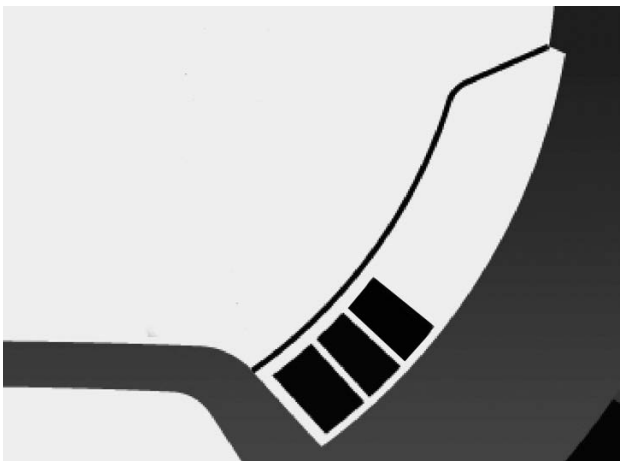

520001663-020

| RH BAR GAUGE INFORMATION |
| --- |
| Fuel level |
| Heated throttle lever level |

The RH side bar gauge displays the fuel level except while adjusting the heated throttle lever.

For details on heated throttle lever operation, see *HEATED THROTTLE LEVER SWITCH* in this section.

**Upper Display and Center Display Set-Up**

1. Select the upper or center display by using the MODE (M) button on the multifunction switch.

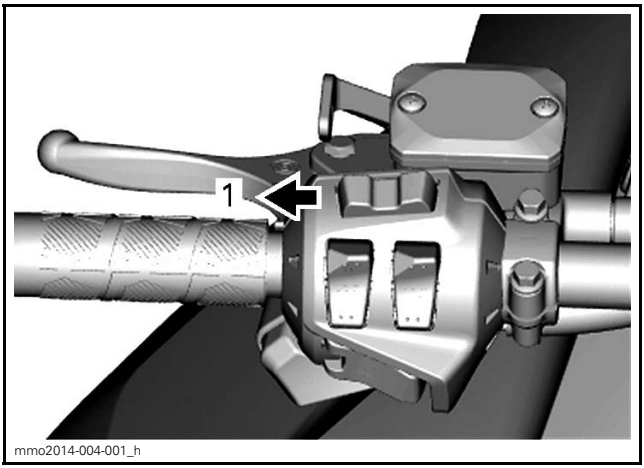


*1. MODE (M) button*

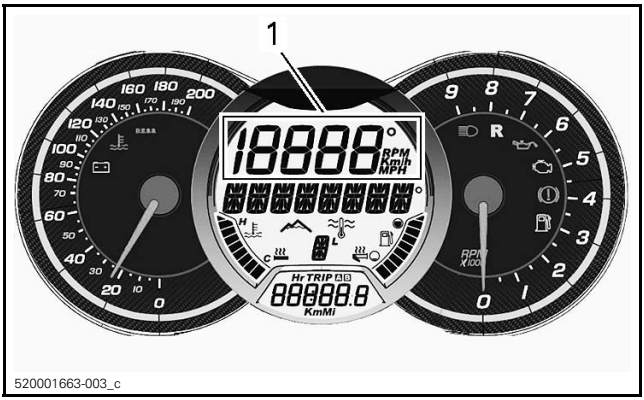


*1. Upper display*

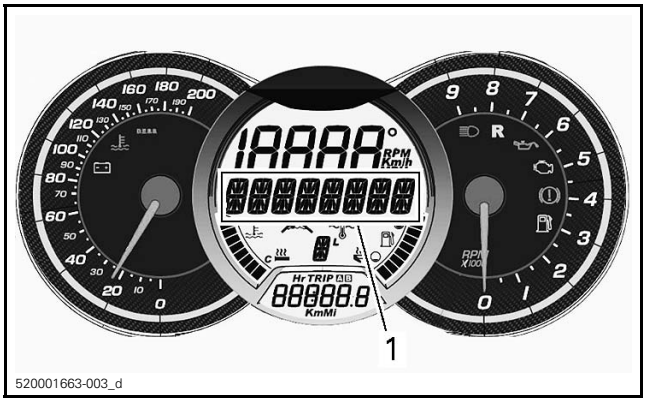


*1. Center display*

2. While the desired display is flashing, navigate through the display, by using the SET (S) button on the multifunction switch.

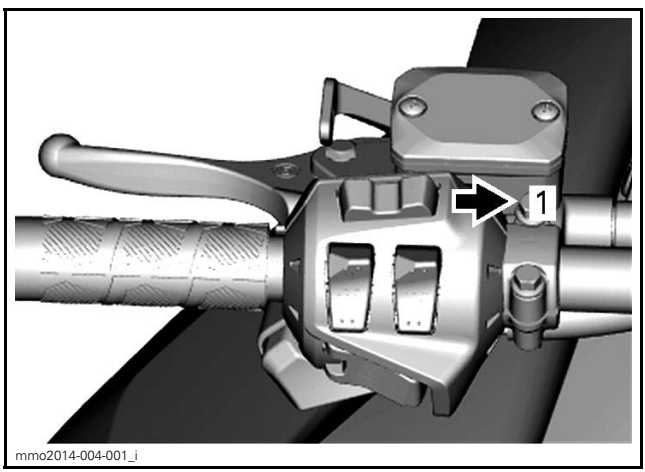


*1. SET (S) button*

Once the desired information is displayed, press the MODE (M) button or wait 5 seconds to confirm.

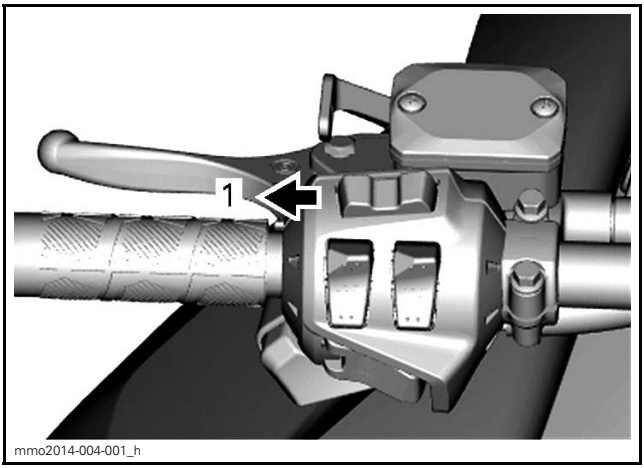


*1. MODE (M) button*

To reset
- Average speed
- Top speed
- Total fuel consumption
- Top RPM

Press and hold the SET (S) button while display is flashing.

**Lower Display Set-Up**

Odometer and Hour Meter

Select the desired information by using the SET (S) button on the multifunction switch.

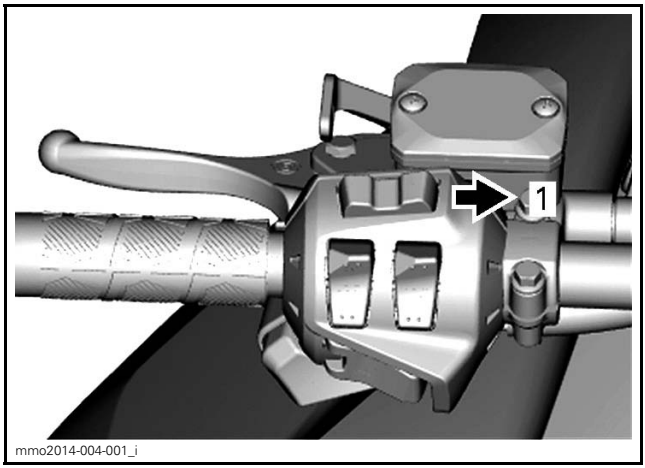


*1. SET (S) button*

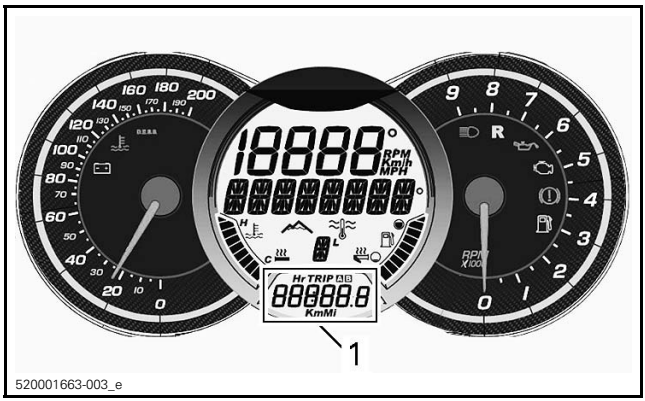


*1. Lower display*

To reset

– Trip odometer A or B
– Trip hour Meter

Press and hold the SET (S) button.

Clock

NOTE: This clock displays hour in the 24-hour format only.

Press the SET (S) button to select the clock mode on the lower display.

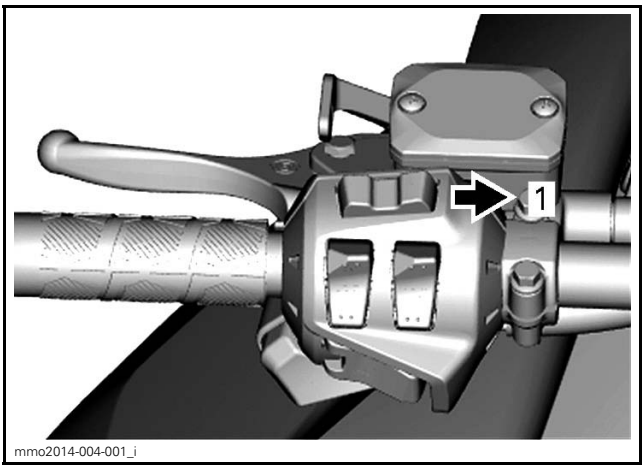


*1. SET (S) button*

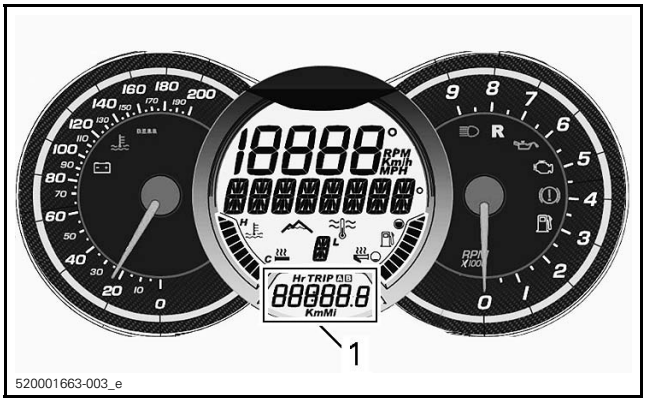


*1. Lower display*

To set time:

– Press and hold the SET (S) button
– While the hour digits are flashing, use the SET (S) button to set
– Use the MODE (M) button to switch to the minutes digits
– While the minutes digits are flashing, use the SET (S) button to set
– Press the MODE (M) button to save clock set-up and exit.

**Lap Record Mode (If Equipped)**

Entering Lap Record Mode

To enter the lap record mode

– Select the odometer on the lower display by repeatedly pressing the SET (S) button
– Press and HOLD the SET (S) button.

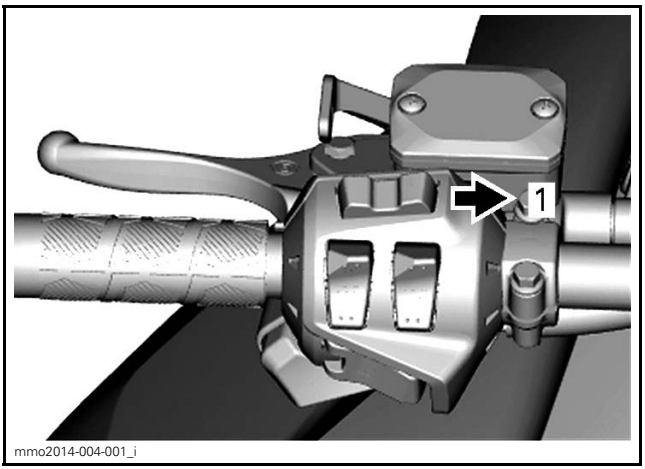


*1. SET (S) button*

The message "REC" will appear on the center display.

To change between record and playback (REC and PLAY), press the SET (S) button.

### Exiting Lap Record Mode

To exit the lap record mode, press and HOLD the SET (S) button.

### Selecting Information on Upper Display (SELECT)

The information recorded by default are:

– Vehicle speed on the on the analog speedometer
– Engine speed on the analog tachometer (RPM)

In addition, the upper display can record various information. Refer to *UPPER DISPLAY* for listing.

To change the information to be recorded on the upper display, refer to *UPPER DISPLAY AND CENTER DISPLAY SET-UP*.

You can now record the selected information.

### Recording Information (REC)

To record information:

– Enter the lap record mode

– Use the SET (S) button to select the REC function.
– To start recording, press the MODE (M) button
– To pass to the following lap (following recording), press the MODE (M) button
– To stop recording, press the SET (S) button.

While recording,
– The center display shows the lap time
– The single digit display shows the lap number. A maximum of 10 laps can be recorded.
– The analog gauges show the vehicle speed and engine speed (RPM)
– The upper display shows the additional selected information.

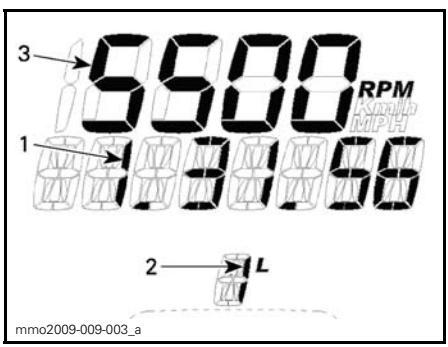


*1. Lap time*
*2. Lap number*
*3. Additional selected information*

If the memory reaches its maximum capacity, the recording will stop by itself.

### Playing Back a Recorded Lap (PLAY)

To playback a recording:
– Enter the lap record mode
– Use the SET (S) button to select the PLAY function.
– To start a playback, press the MODE (M) button

– To pass to the following lap (following recording), press the MODE (M) button
– To stop a playback, press the SET (S) button.

The display is similar to the REC function.

## 15) Storage Compartment

A storage compartment is located at the front of the vehicle, above the gauge.

The Operator's Guide and the emergency starter rope are in the front storage compartment.

To open, push the button and lift the cover.

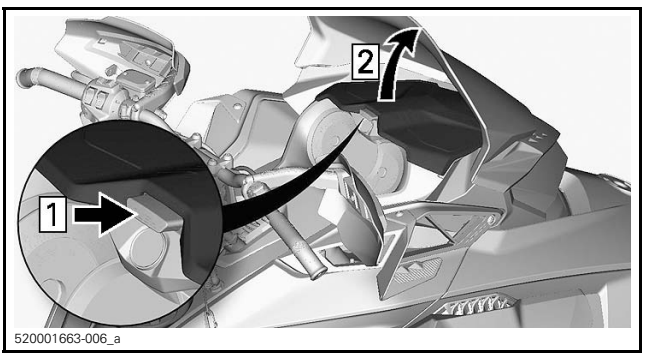


*TYPICAL*

NOTE: When closing, make sure cover is secured properly. You will hear a "clic".

On select models, a storage compartment is located at the rear of the seat, above the battery cover.

To open, turn the latch counterclockwise.

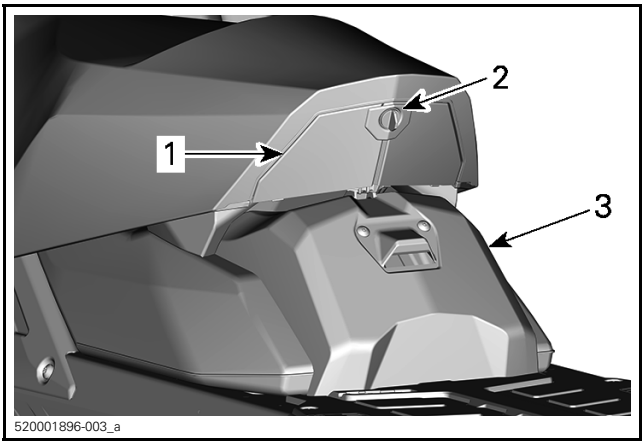


1. *Storage compartment*
2. *Latch*
3. *Battery cover*

## 16) Drive Belt Guard

**Drive Belt Guard Removal**

**⚠ WARNING**

NEVER operate engine:

– Without shields and belt guard securely installed.

– With hood and/or side panels opened or removed.

NEVER attempt to make adjustments to moving parts while engine is running.

NOTE: Belt guard is purposely made slightly oversize to maintain tension on its pins and retainers preventing undue noise and vibration. It is important that this tension be maintained when reinstalling.

Remove tether cord cap from engine cut-off switch.

Open the LH side panel. See procedure in this section.

Remove retaining pin.

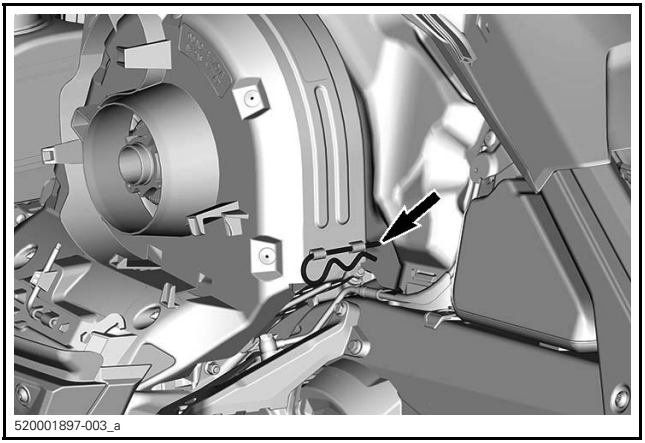
520001897-003_a

Lift rear portion of guard then release from front tab.

**Drive Belt Guard Installation**

Insert the tab into the slot and push belt guard toward engine into place.

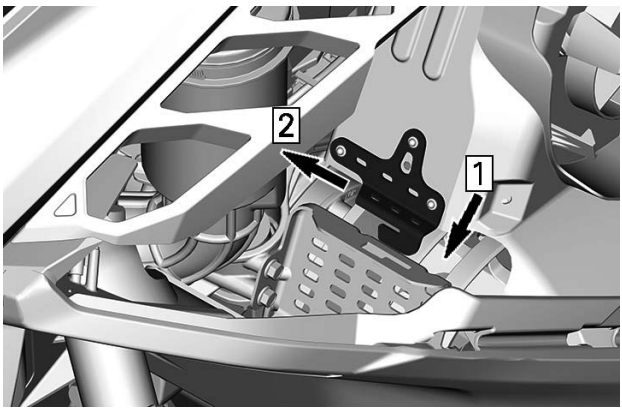


520001899-211_a

*Step 1: Lower belt guard*
*Step 2: Slide belt guard*

Position the rear portion of the belt guard over the retainer and secure it using the retaining pin.

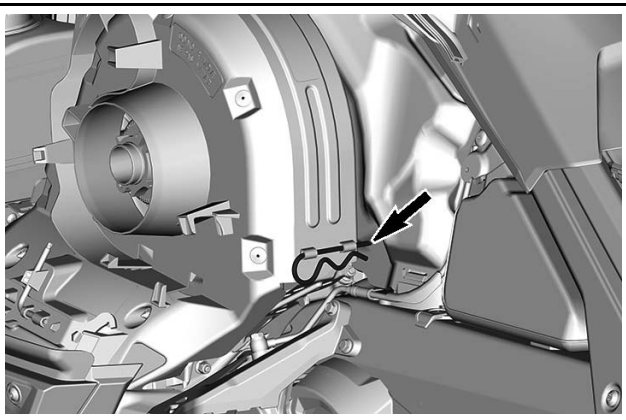

520001897-003_a

## 17) Spare Drive Belt Holder

A spare drive belt can be stored in a holder located on the drive belt guard.

NOTE: The spare drive belt is not supplied with the snowmobile.

Position spare drive belt into drive belt guard slot.

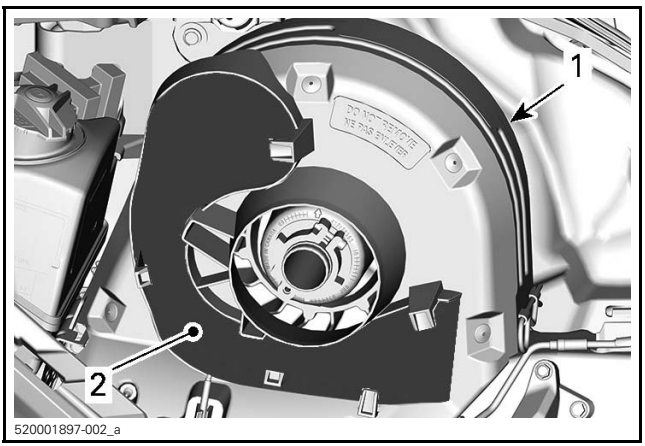


*TYPICAL*
1. *Drive belt guard*
2. *Slot*

Secure in place by sliding it behind the tabs.

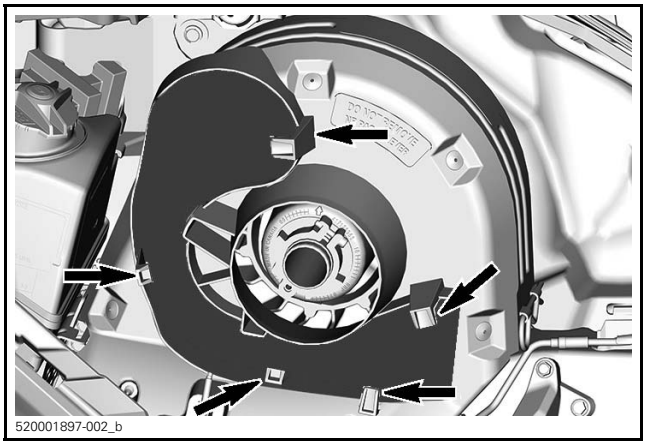
520001897-002_b

*TYPICAL*

## 18) Upper Body Module (Hood)

### Upper Body Module Removal

1. Open the storage compartment.

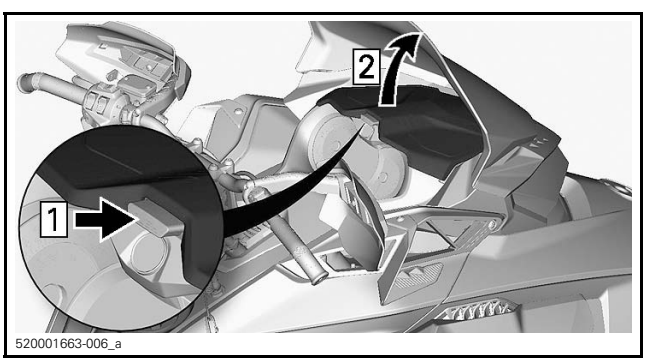

520001663-006_a

2. Remove the gauge retaining screws.

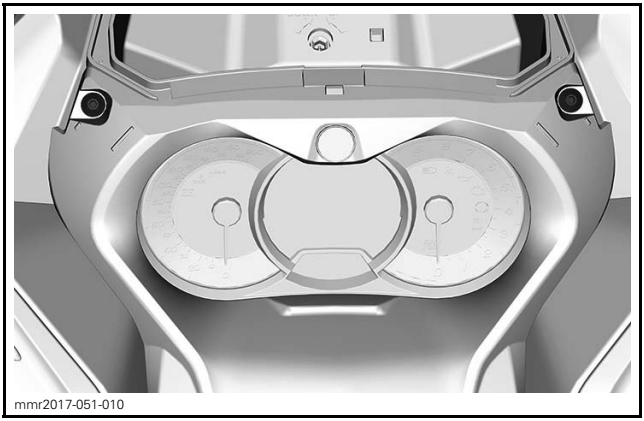
mmr2017-051-010

3. Lift the front of the gauge, then slide it forward to remove it.

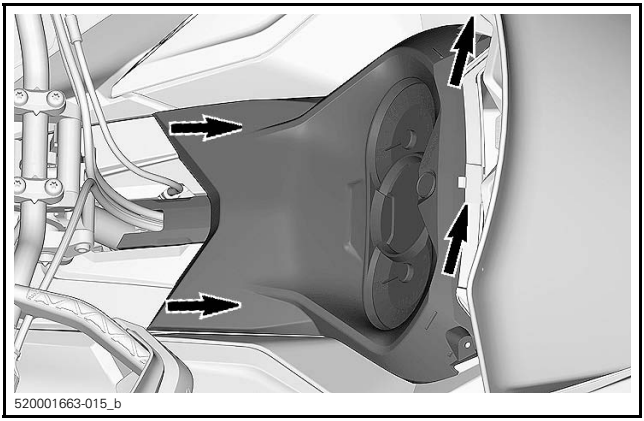
520001663-015_b

4. Set gauge aside.
5. Remove the storage compartment.

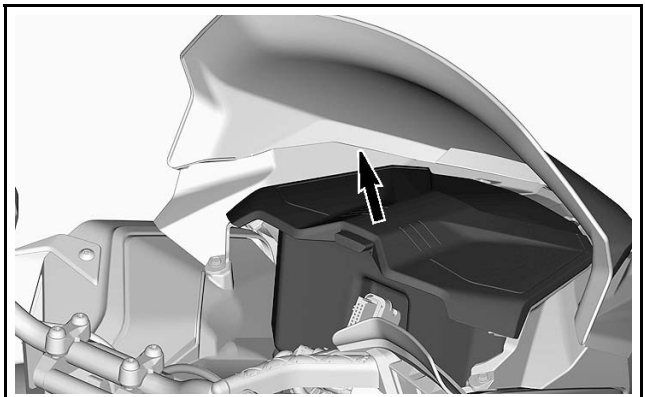
520001663-017_a

6. Disconnect the headlight connectors.

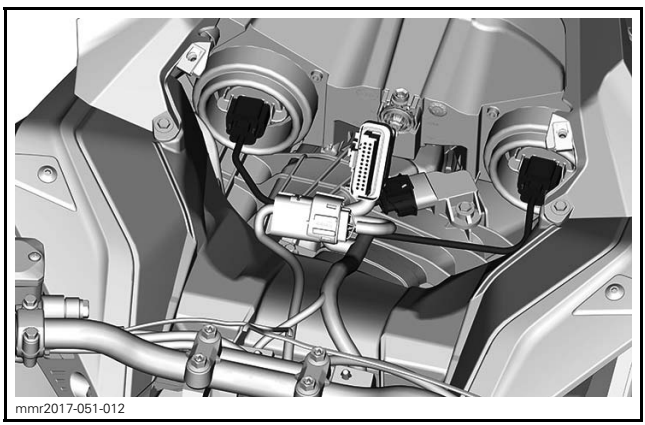
mmr2017-051-012

7. Loosen the air intake duct clamp.

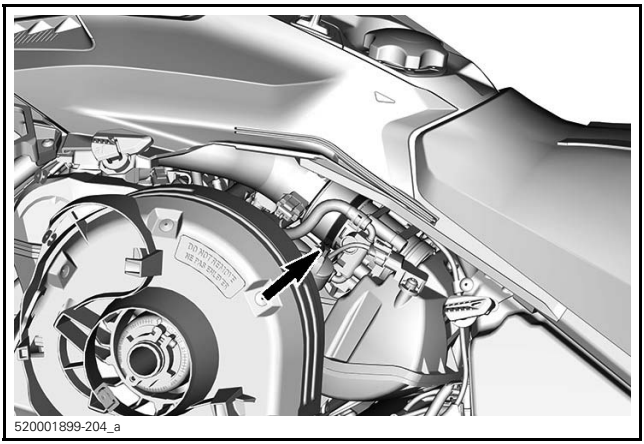


*1. Clamp*

8. Remove the upper body module retaining screws on both sides.

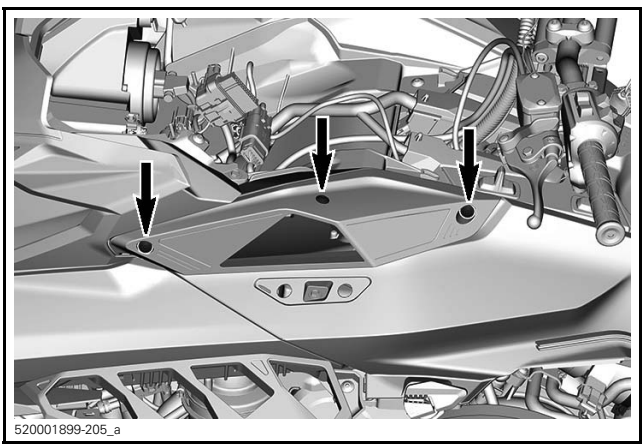

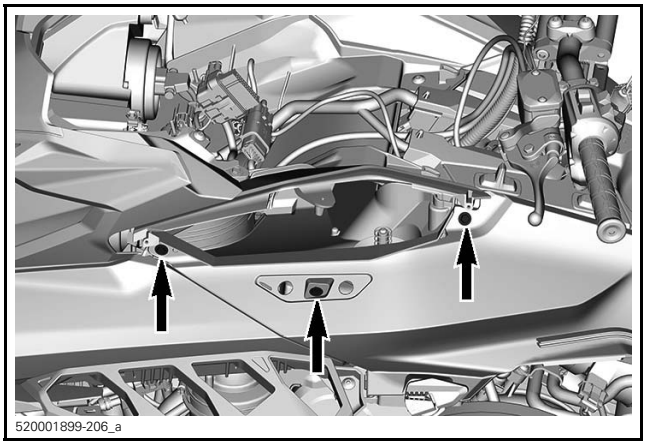

520001899-206_a

9. Free the rear end hooks of the upper body module from the slots in the console.

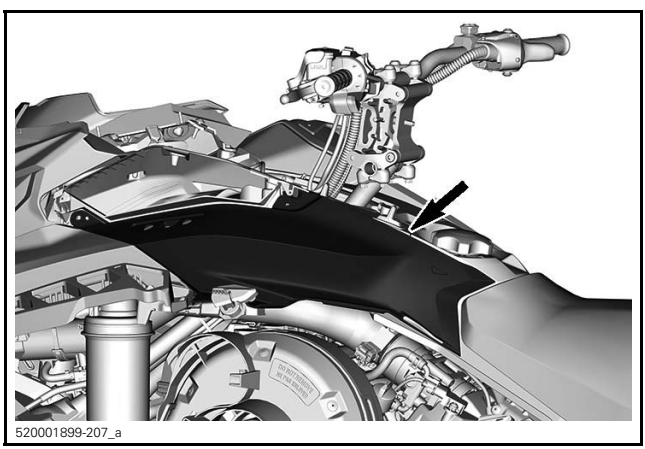

520001899-207_a

10. Remove the upper body module.
    10.1 Grab the upper body module in the gauge support section.

10.2 Pull the module forward.

10.3 Remove the module from the vehicle.

**Upper Body Module Installation**

1. At front, insert the upper body module tabs into the upper bottom pan openings.
2. Lower the rear end of the upper body module.
3. Insert the rear end hooks of the upper body module into the slots in the console.

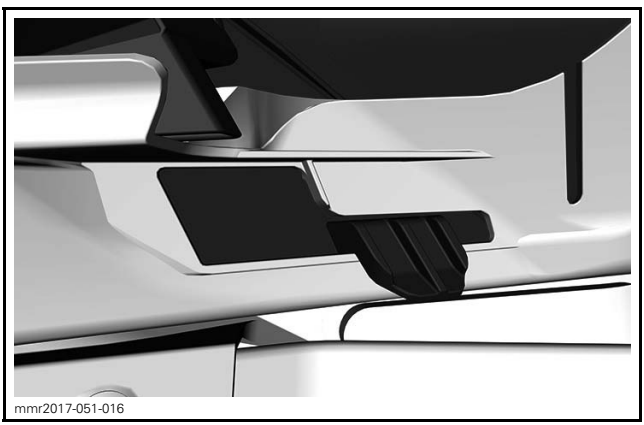
mmr2017-051-016

NOTE: Make sure the air intake duct is positioned correctly in the boot.

4. Tighten air intake duct clamp.
5. On both sides, install the upper body module retaining screws.

| TIGHTENING TORQUE | |
|---|---|
| Upper body screws | 2.3 N•m ± 0.2 N•m (20 lbf•**in** ± 2 lbf•**in**) |

6. Connect the manifold air pressure and temperature sensor (MAPTS) connector.
7. Connect the headlight connectors.

8. Install the storage compartment but leave the cover open.
9. Install gauge, secure with the screws.

| TIGHTENING TORQUE | |
|---|---|
| Gauge screws | 2.3 N•m ± 0.2 N•m (20 lbf•**in** ± 2 lbf•**in**) |

## 19) Side Panels

**⚠ WARNING**

Never operate engine with side panels opened or removed from vehicle.

**Side Panels Opening and Closing**

Unlock all three latches, then open panel.

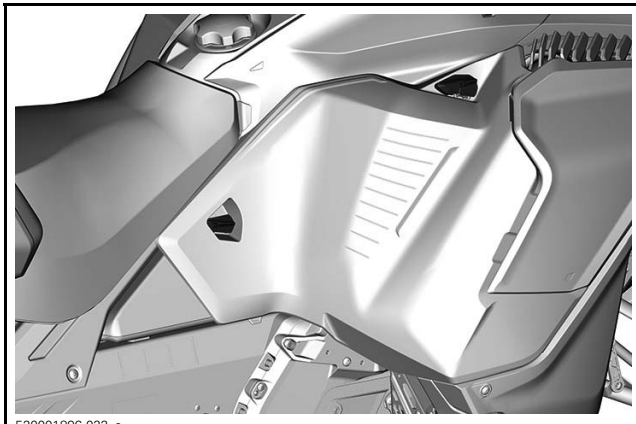

520001896-022_a

When closing panel, make sure latches are locked securely.

**Side Panels Removal**

Open side panel.

Pull the hinges off the bottom pan.

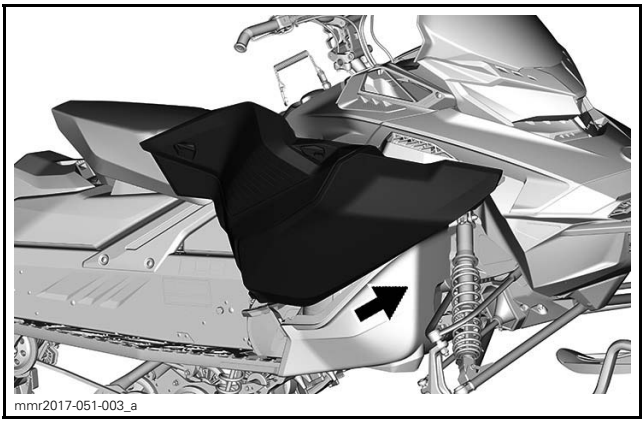
mmr2017-051-003_a

## 20) Operator's Guide

The Operator's Guide should be stored in the *STORAGE COMPARTMENT*.

## 21) Passenger Seat (On Applicable Models)

**⚠ WARNING**

**Any passenger must be able to firmly lay is feet on the footrests and keep his hands on the handholds at all times when seated. Respecting those physical criteria is important to ensures that the passenger is stable and to reduce the risks of ejection.**

To remove the passenger seat, proceed as follows:

Pushing in the center of the seat towards front, pull on both sides. Insert hand between body and seat to pull up and backward to unlock.

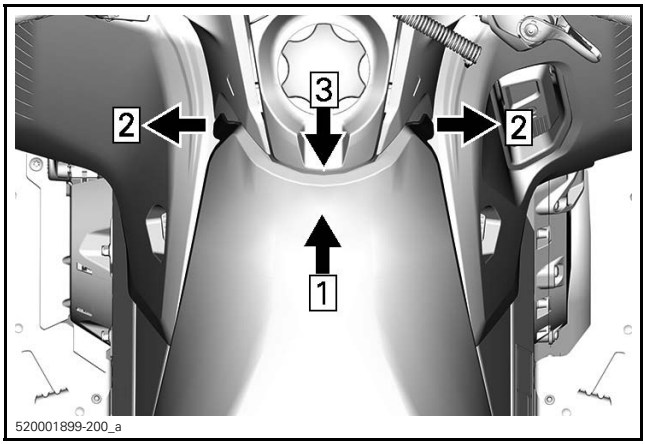


*Step 1: Push*
*Step 2: Pull*
*Step 3: Lift up and backward to unlock seat*

Slide seat rearwards to remove it.

## 22) Passenger Handhold (On Applicable Models)

To adjust the handhold height, proceed as follows:

1. Remove screws.

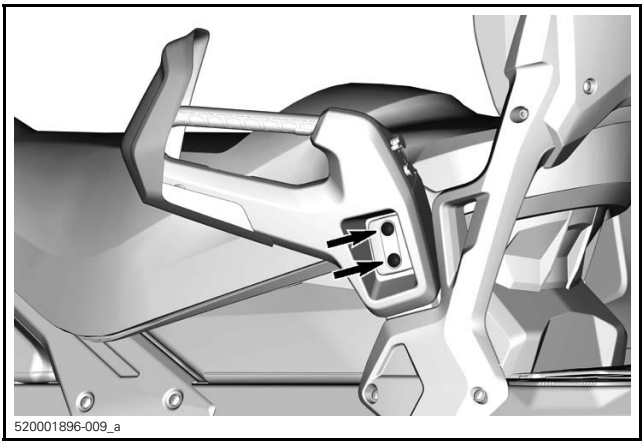

520001896-009_a

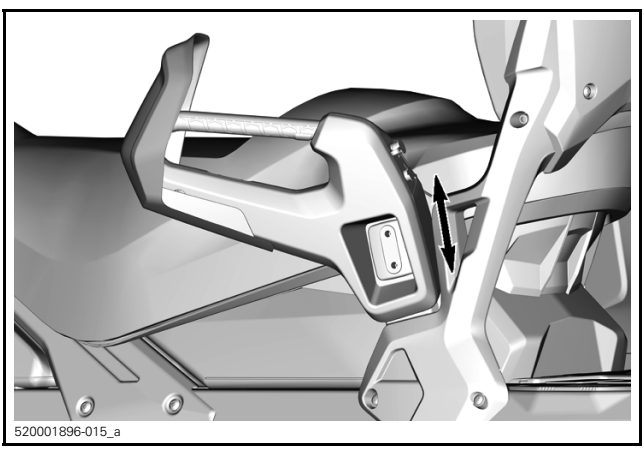

520001896-015_a

2. Raise or lower the handhold to suit passenger's comfort.
3. Reinstall screws. Tighten to specification.

| TIGHTENING TORQUE | |
|---|---|
| Screws | 24.5 N•m ± 3.5 N•m (18 lbf•ft ± 3 lbf•ft) |

## 23) Backrest (On Applicable Models)

**Backrest Removal**

To remove the backrest, proceed as follows:

1. Disconnect seat electrical connector located behind the seat.

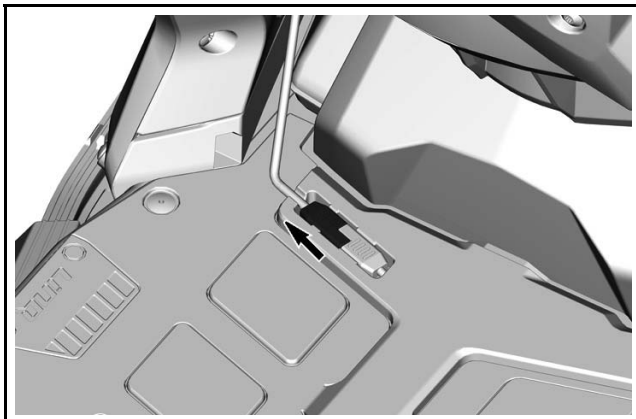

520001896-016_a

2. Remove screws or LinQ on the backrest arms on both side.

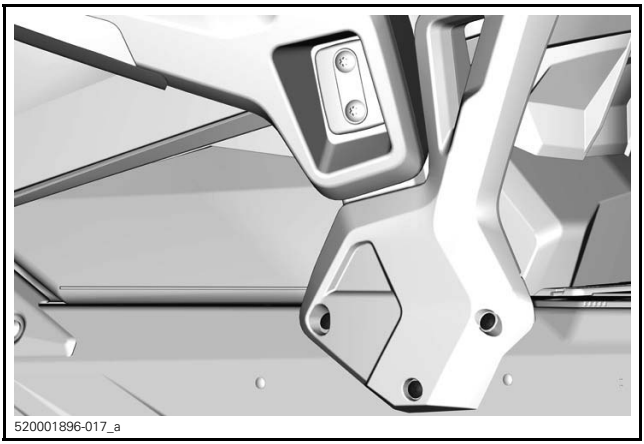

520001896-017_a

*GRAND TOURING*

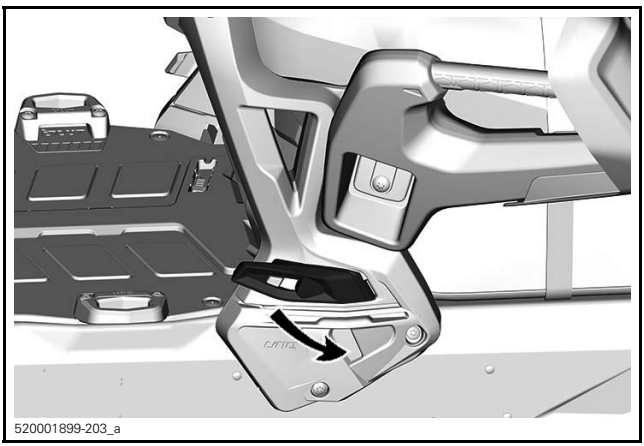

520001899-203_a

*EXPEDITION SPORT*

3. Remove backrest from vehicle.

**Backrest Installation**

To install the backrest, proceed as follows:

1. Install backrest on vehicle.
2. Install screws on the backrest harms on both side.

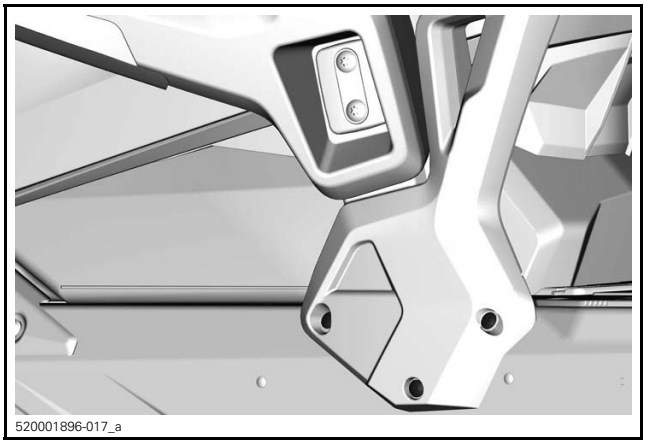


*GRAND TOURING*

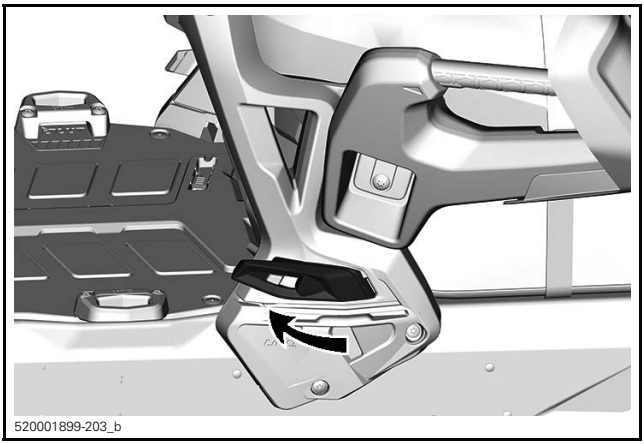

520001899-203_b

*EXPEDITION SPORT*

3. Connect seat electrical connector located behind the seat.

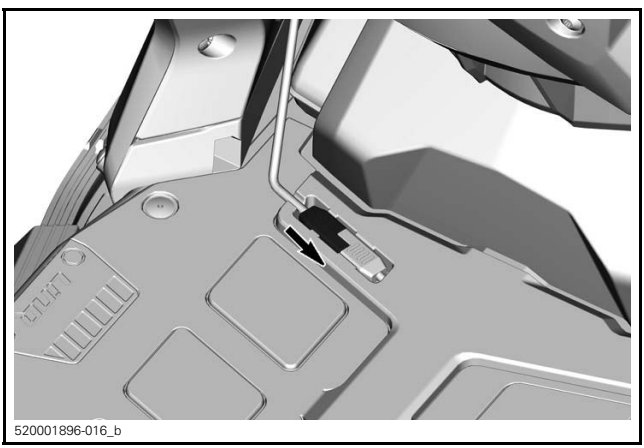

520001896-016_b

## 24) Adjustable Mirrors (On Applicable Models)

Each mirror can be adjusted to suit operator's preference.

**⚠ WARNING**

Adjust with vehicle at rest in a safe place.

When installing a cover, the mirrors can be tilted downward to ease installation.

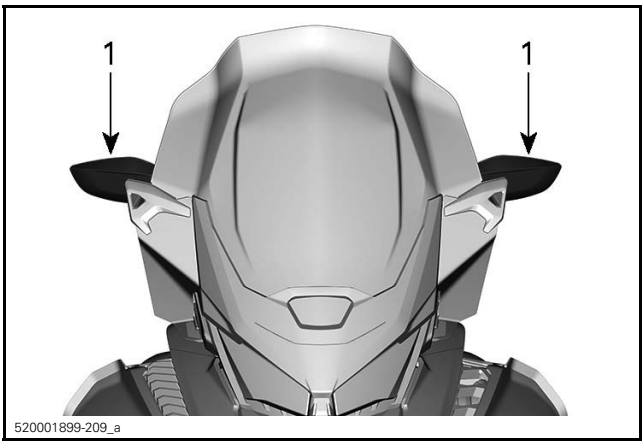


*1. Mirrors*

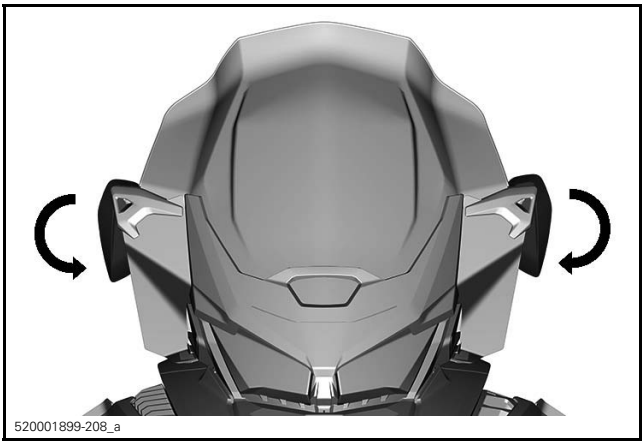


## 25) Electric Visor Jack Connector (On Applicable Models)

An electric visor can be connected to the jack connector. A stress relief extension is supplied with the vehicle.

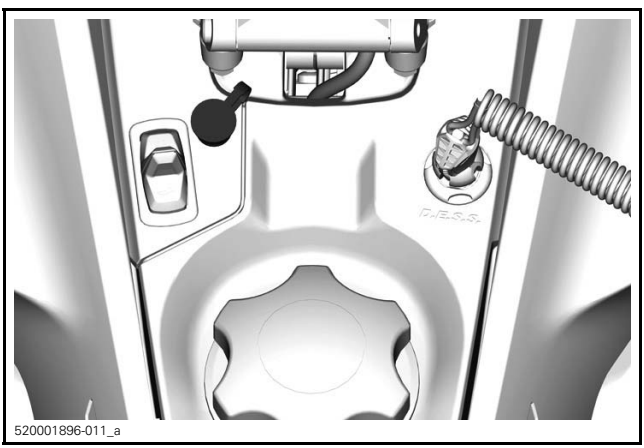


*DRIVER - ELECTRIC VISOR JACK CONNECTOR LOCATION*

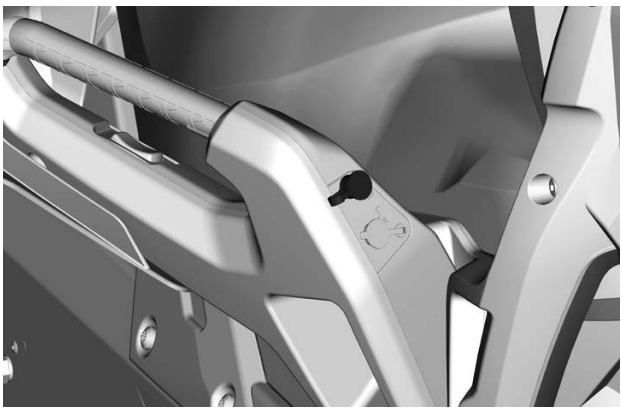


*PASSENGER - ELECTRIC VISOR JACK CONNECTOR LOCATION*

## 26) Passenger Heated Grip Switch (On Applicable Models)

The switch is located on the LH passenger handhold.

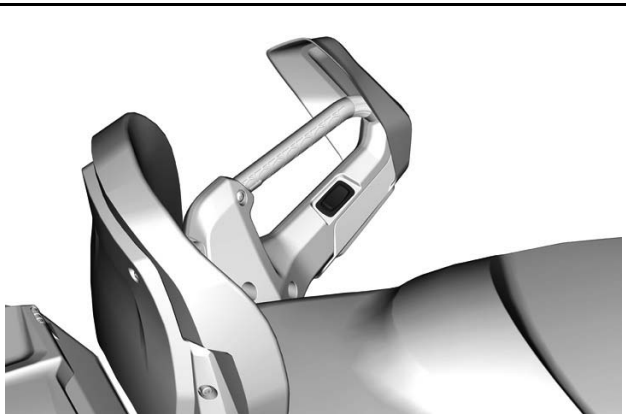


Adjust heating intensity as shown.

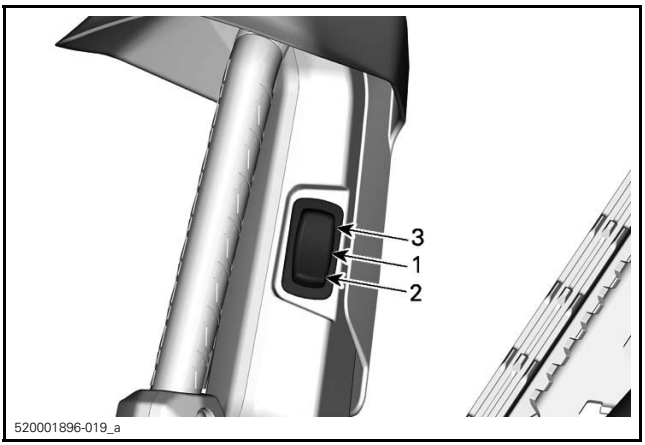


1. *Off*
2. *Warm*
3. *Hot*

## 27) Heated Seats Switches (On Applicable Models)

The heated seat switch is located on the console to the left of the steering column.

The Grand Touring model is equipped with heated operator and passenger seats.

The Enduro model is equipped with heated operator seat only.

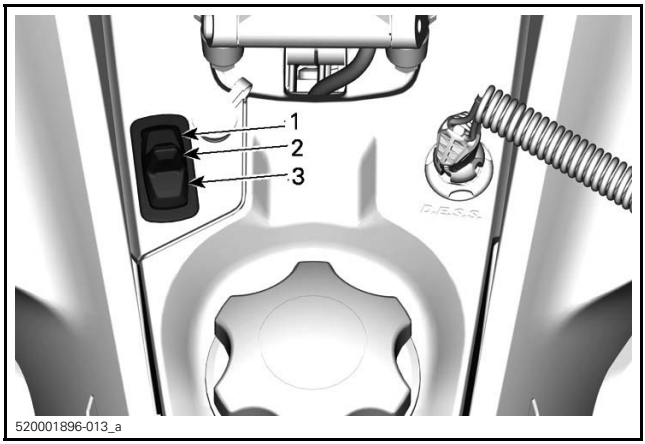


*GRAND TOURING MODELS*
1. *Driver and passenger seat*
2. *OFF*
3. *Passenger seat*

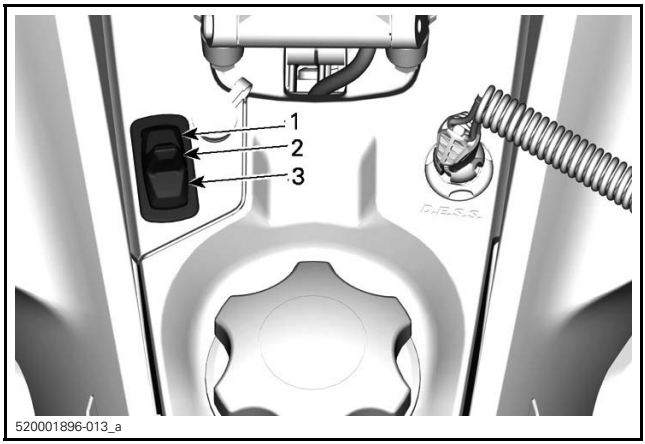


*ENDURO MODELS*
1. *Hi*
2. *OFF*
3. *Low*

## 28) Cargo Box (On Applicable Models)

The cargo box is secured by LinQ attachment. To Install, follow the steps.

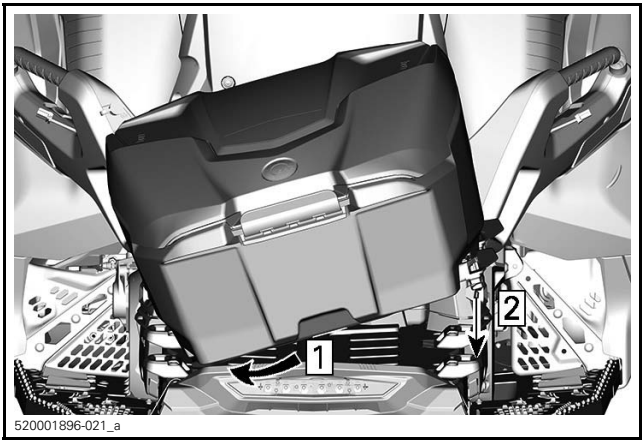


*Step 1: Slide cargo box toward LH side.*
*Step 2: Lower cargo box.*

Turn LinQ levers toward the rear of the vehicle to lock.

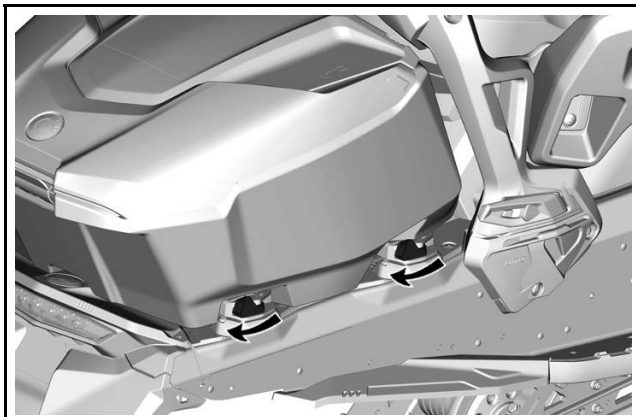

520001896-014_a

# FUEL AND OIL

## Fuel Requirements

***NOTICE*** **Always use fresh gasoline. Gasoline will oxidize; the result is loss of octane, volatile compounds, and the production of gum and varnish deposits which can damage the fuel system.**

Alcohol fuel blending varies by country and region. Your vehicle has been designed to operate using the recommended fuels, however, be aware of the following:

– Use of fuel containing alcohol above the percentage specified by government regulations is not recommended and can result in the following problems in the fuel system components:
  - Starting and operating difficulties.
  - Deterioration of rubber or plastic parts.
  - Corrosion of metal parts.
  - Damage to internal engine parts.
– Inspect frequently for the presence of fuel leaks or other fuel system abnormalities if you suspect the presence of alcohol in gasoline exceeds the current government regulations.
– Alcohol blended fuels attract and hold moisture which may lead to fuel phase separation and can result in engine performance problems or engine damage.

**Recommended Fuel**

Use unleaded gasoline containing MAXIMUM 10% ethanol. The gasoline must have the following minimum octane requirements:

| FUEL TYPE | ENGINE | MINIMUM OCTANE RATING |
|---|---|---|
| Fuel with NO ethanol | 900 ACE | 87 AKI (RON+MON)/2<br>92 RON |
| | 900 ACE Turbo | 91 AKI (RON+MON)/2<br>95 RON |
| Fuel which may contain up to 10% MAX ethanol | 900 ACE<br>900 ACE Turbo | 91 AKI (RON+MON)/2<br>95 RON<br> |

**NOTICE** Never experiment with other fuels. Engine or fuel system damages may occur with the use of an inadequate fuel.

**NOTICE** Do NOT use fuel from fuel pumps labeled E85.

Use of fuel labeled E15 is prohibited by U.S. EPA Regulations.

**Fuel Antifreeze Additives**

When using oxygenated fuel, additional gas line antifreeze or water absorbing additives are not required and should not be used. When using non oxygenated fuel, isopropyl base gas line antifreeze can be used in a proportion of 150 ml (5 U.S. oz) of gas line antifreeze added to 40 L (10.6 U.S. gal.) of gas.

This precaution is in order to reduce the risk of frost buildup in carburetors or other fuel system components which may lead, in certain cases, to severe damage to engine.

NOTE: Use only methyl hydrate free gas line antifreeze.

## Fueling Procedure

**⚠ WARNING**

- Always stop engine before refueling..
- Always open cap slowly, ensure there is no residual pressure inside fuel tank by slightly unscrewing the cap before removing completely.
- Do not allow anyone seated on the vehicle while fueling.
- Fuel is flammable and explosive under certain conditions.
- Never use an open flame to check fuel level.
- Never smoke or allow flame or spark in vicinity.
- Always work in a well-ventilated area.
- Never top up the fuel tank before placing the vehicle in a warm area. As temperature increases, fuel expands and may overflow.
- Always wipe off any fuel spillage from the vehicle.

NOTE: Do not sit or lean on seat when fuel tank cap is not properly installed.

1. Stop engine.

**⚠ WARNING**

Always stop engine before refueling.

2. Have operator and passenger get off vehicle.

**⚠ WARNING**

Do not allow anyone seated on the vehicle while fueling.

3. To open cap for refueling, first loosen the cap to ensure there is no residual pressure in tank, then slowly unscrew the cap.

**⚠ WARNING**

Always open cap slowly, ensure there is no residual pressure inside fuel tank by slightly unscrewing the cap before removing completely.

NOTE: A short whistling sound is normal.

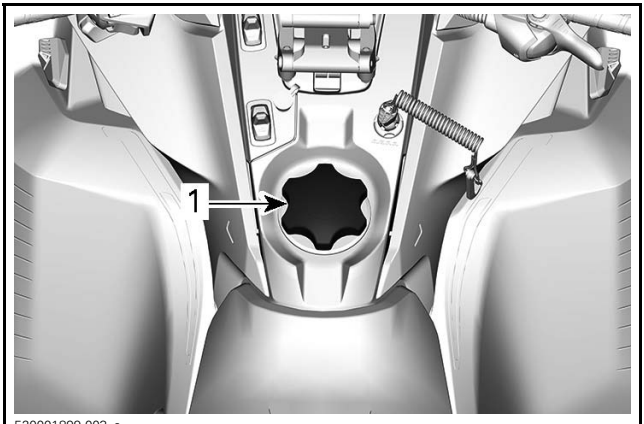


*TYPICAL*
*1. Fuel tank cap*

4. Insert the spout into the filler neck.

5. Pour fuel slowly so that air can escape from the tank and prevent fuel flow back. Be careful not to spill fuel.
6. Stop filling when the fuel reaches the bottom of filler neck. Do not overfill.

**⚠ WARNING**

Never top up the fuel tank before placing the vehicle in a warm area. As temperature increases, fuel expands and may overflow.

7. Fully tighten fuel reservoir cap clockwise.

**⚠ WARNING**

Always wipe off any fuel spillage from the vehicle.

NOTE: Do not sit or lean on seat when fuel tank cap is not properly installed.

## Recommended Oil

*Scandinavia Countries*

| XPS™ RECOMMENDED ENGINE OIL | |
|---|---|
| 900 ACE<br>900 ACE turbo | 4T 0W40 SYNTHETIC OIL (EUR)<br>(P/N 779286) |
| **IF THE RECOMMENDED XPS ENGINE OIL IS NOT AVAILABLE** | |
| Use a 0W40 4-stroke SAE synthetic engine oil meeting or exceeding the following lubricant industry specifications:<br>– API service classification SM or SN<br>Always check the API service label certification on the oil container, it must contain at least the indicated standard. | |

Rotax® engines were developed and validated using the XPS™ oil. BRP recommends the use of its XPS engine oil or an equivalent at all time. Do not add any oil additives to the recommended engine oil. Damages caused by the use of an oil not suitable for the engine or by adding of an oil additives may not be covered by the BRP Limited Warranty.

*All Other Countries*

| XPS™ RECOMMENDED ENGINE OIL | |
|---|---|
| 900 ACE<br>900 ACE turbo | 4T 0W40 SYNTHETIC OIL<br>(P/N 779139) |

| IF THE RECOMMENDED XPS ENGINE OIL IS NOT AVAILABLE |
|---|
| Use a 0W40 4-stroke SAE synthetic engine oil meeting or exceeding the following lubricant industry specifications:<br>– API service classification SM or SN<br>Always check the API service label certification on the oil container, it must contain at least the indicated standard. |

Rotax® engines were developed and validated using the XPS™ oil. BRP recommends the use of its XPS engine oil or an equivalent at all time. Do not add any oil additives to the recommended engine oil. Damages caused by the use of an oil not suitable for the engine or by adding of an oil additives may not be covered by the BRP Limited Warranty.

# BREAK-IN PERIOD

## Operation During Break-In

### Engine

During the break-in period:

– Avoid prolonged full throttle operation.
– Avoid sustained accelerations.
– Avoid prolonged cruising speeds.
– Avoid engine overheating.

However, brief accelerations and speed variations contribute to a good break-in.

During a predetermined period, the engine management system controls some engine parameters.

The duration is based on fuel volume. It will take approximately two fuel tanks to complete the break-in.

During this period:

– The engine performance and behavior will not be optimal.
– The fuel and oil consumption will be higher.

### Drive Belt

A new drive belt requires a break in period of 50 km (30 mi).

During the break-in period:

– Avoid strong acceleration and deceleration.
– Avoid pulling a load.
– Avoid high speed cruising.

## OPERATING MODES

**⚠ WARNING**

Whenever changing operating mode, make sure to maintain situational awareness while riding.

### ECO Mode (Fuel Economy Mode)

When ECO mode is selected (fuel economy mode), vehicle torque and speed are limited whereby an optimal cruising speed is maintained in order to reduce fuel consumption.

Once activated, ECO mode will remain active until it is deactivated by the operator.

### Standard Mode

When in Standard mode, no indicator is in the multifunction gauge.

### Sport Mode

**⚠ WARNING**

Ensure passenger is advised to hold on tightly before activating Sport mode. Sport mode provides increased acceleration.

When selected, Sport mode provides for instant throttle response and more rapid accelerations than Standard or ECO mode.

Once activated, Sport mode will remain active until it is deactivated by the operator.

A message of the selected mode will be displayed at activation and deactivation as follow:

| OPERATING MODE | MESSAGE AT ACTIVATION |
|---|---|
| Sport | SPORT MODE |
| Normal | NORMAL MODE |
| Eco | ECO MODE |

## Navigating Operating Modes

Use ECO/Standard/Sport Mode switch to navigate between power levels, from ECO (reduced power) to Standard (full power) to Sport (increased response).

To increase power, press the switch upwards. To decrease power, press the switch downwards.

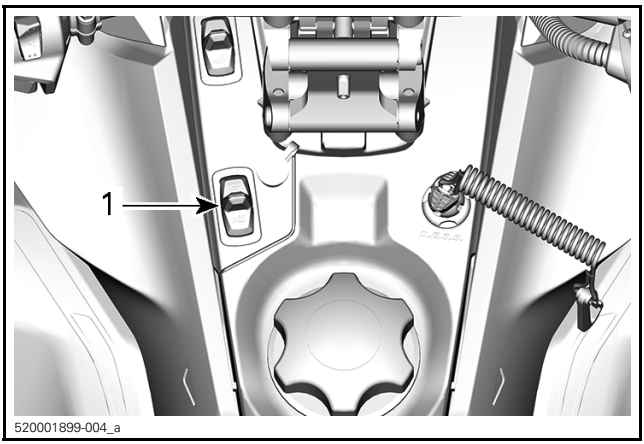


*TYPICAL - LH SIDE OF FUEL TANK*
*1. Mode switch*

To activate Standard mode when in Sport mode, press bottom end of switch once.

To activate ECO mode when in Sport mode, press bottom end of switch twice.

To activate ECO mode when in Standard mode, press bottom end of switch once.

**⚠ WARNING**

**Ensure passenger is advised to hold on tightly before activating Sport mode. Sport mode provides increased acceleration.**

To activate Sport mode when in Standard mode, press top end of switch once.

To activate Sport mode when in ECO mode, press top end of switch twice.

To activate Standard mode when in ECO mode, press top end of switch once.

**⚠ WARNING**

**When adjusting modes, be sure to maintain situational awareness of other snowmobiles, obstacles, or persons.**

# BASIC PROCEDURES

## Engine Starting Procedure

**Procedure**

1. Apply parking brake.
2. Recheck throttle control lever operation.
3. Put your helmet on.
4. Ensure that the tether cord cap is installed on the engine cut-off switch and that the cord is attached to your clothing eyelet.
5. Ensure that the emergency engine stop switch is in the ON position (up).

**⚠ WARNING**

Never depress throttle while starting engine.

6. Release parking brake.

NOTE: For an initial cold start, do not release parking brake. Perform the *VEHICLE WARM-UP* procedure as explained below.

7. Depress the START button to engage the electric starter and start the engine. Release button immediately when engine has started.

***NOTICE*** Do not engage electric starter for more than 10 seconds at a time. A rest period should be observed between the cranking cycles to allow electric starter to cool down.

## Emergency Starting

Do not attempt any emergency starting procedure. Have the battery charged or replaced.

## Vehicle Warm-Up

Before every ride, vehicle has to be warmed up as follows.

1. Start engine as explained in *ENGINE STARTING PROCEDURE* above.
2. Allow engine to warm up one or two minutes at idle speed.

NOTE: Engine will shut down after approximately 12 minutes of idling.

3. Disengage parking brake.

4. Apply throttle until drive pulley engages. Drive at low speed the first two or three minutes.

**NOTICE** If vehicle does not move when throttle is applied, stop engine, remove tether cord cap from the engine cut-off switch, then do the following.

- Check if skis are stuck on the ground. Lift one ski at a time by the handle, then put it down.
- Check if track is stuck on the ground. Lift rear of snowmobile enough to clear track from the ground, then drop.
- Check rear suspension for hard snow or ice accumulation that could interfere with track rotation. Clean the area.

**⚠ CAUTION** Beware of injuries by using proper lifting techniques, notably using your legs force. Do not attempt to lift the rear of vehicle if it is above your limits.

**⚠ WARNING**

Make sure tether cord cap is removed before standing in front the vehicle, getting close to the track or rear suspension components.

NOTE: Warm-up is electronically controlled. During this period (up to 10 minutes depending on ambient temperature), engine RPM is limited.

**Shifting in Reverse**

1. Bring vehicle to a complete stop.
2. Apply and hold brake. Remain seated, refer to *RIDER POSITION (REVERSE OPERATION)* in *RIDING THE VEHICLE* for posture information.
3. With engine at idle speed, select reverse (R) gear using the reverse lever or Start / RER button.

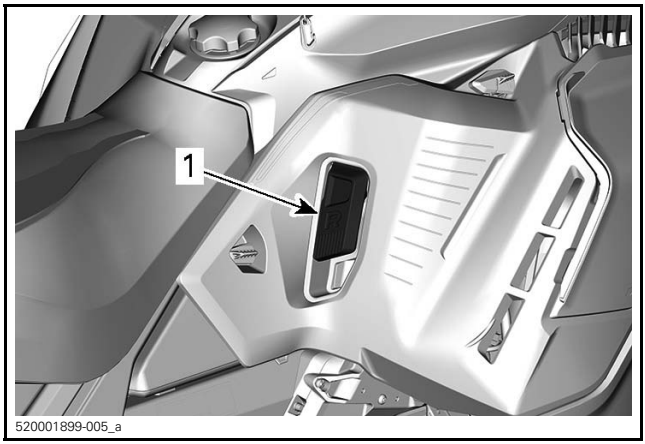


*1. Reverse lever*

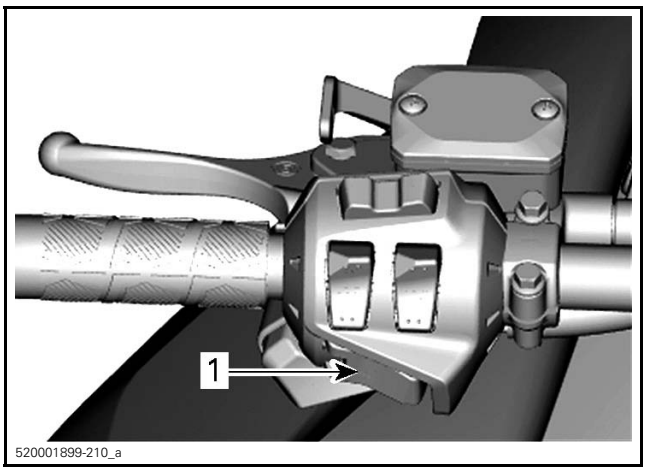


*1. Start / RER button*

**⚠ WARNING**

Engaging the reverse mode is done by depressing the RER button when the engine is running. Wait until the reverse alarm sounds and the RER pilot lamp comes on in the analog/digital gauge before operating throttle to proceed in reverse. The reverse speed is not limited. Always proceed with caution as fast reverse could result in loss of vehicle stability. Come to complete stop before depressing RER button. Always remain seated and apply the brake before shifting. Ensure the path behind is clear of obstacles or bystanders before proceeding.

## Shifting in Forward

1. Bring vehicle to a complete stop.
2. Apply and hold brake.
3. Press and release the RER button or reverse lever.
4. Apply throttle slowly and evenly. Allow drive pulley to engage then accelerate carefully.

## Shutting Off the Engine

Release throttle lever and wait until engine has returned to idle speed.

Shut off the engine using either the emergency engine stop switch or by pulling off the tether cord cap from the engine cut-off switch.

**⚠ WARNING**

Always remove the tether cord cap from engine cut-off switch when vehicle is not in operation in order to prevent accidental engine starting or to avoid unauthorized use by children or others or theft.

# RIDING CONDITIONS AND YOUR SNOWMOBILE

## Altitude

At factory, your snowmobile was calibrated to be used within an altitude range (height above the sea level). For your model's factory calibration, refer to the following table.

| MODELS | FACTORY CALIBRATION |
|---|---|
| All models (North America) | Sea level up to 600 m (2,000 ft) |

| MODELS | FACTORY CALIBRATION |
|---|---|
| All models (Europe) | Sea level up to 600 m (2,000 ft) |

If your snowmobile is to be used at an altitude outside the specified range, have it calibrated accordingly by an authorized Ski-Doo dealer.

***NOTICE*** An inappropriate altitude calibration would decrease performance and may cause serious damage to the snowmobile.

## Temperature

The engine management of these engines provides the optimum air/fuel ratio for all temperatures.

# SPECIAL OPERATION

## Towing an Accessory

Always use a rigid tow bar to tow an accessory. Any towed accessory should have reflectors on both sides and at the rear. Check local laws for brake light(s) requirements.

**⚠ WARNING**

**Never tow an accessory with a rope. Always use a rigid tow bar. Using a rope would result in a collision between the object and the snowmobile and possibly in a tip over in case of a rapid deceleration or on a downward slope.**

## Towing Another Snowmobile

If a snowmobile is disabled and must be towed use a rigid tow bar. Remove the drive belt from disabled snowmobile, refer to *DRIVE BELT* in *MAINTENANCE PROCEDURES* and tow at moderate speed.

***NOTICE*** **Always remove the drive belt of the snowmobile that is to be towed to prevent damage to its belt and drive system.**

In an emergency situation only, if a rigid tow bar is not available, a rope can be used. Proceed with extra caution. In some areas, it may be illegal to do so. Check with state or local authorities.

Remove the drive belt, attach the rope to the ski legs (spindles), have someone sit on the towed snowmobile to activate the brake, and tow at low speed.

***NOTICE*** **In order to prevent damage to the steering system, never attach the tow rope to the ski lhandles.**

**⚠ WARNING**

**Never ride at high speed when towing a disabled snowmobile. Proceed slowly with extra caution.**

## TUNE YOUR RIDE

Snowmobile handling and comfort depend upon multiple adjustments.

**⚠ WARNING**

Suspension adjustment could affect vehicle handling. Always take time to familiarize yourself with the vehicle's behavior after any suspension adjustment have been made. Always adjust LH and RH suspension components to the same setting.

Choice of suspension adjustments vary with carrying load, operator's weight, personal preference, riding speed and field condition.

NOTE: Some adjustments may not apply to your snowmobile.

**⚠ WARNING**

Before proceeding with any suspension adjustment, remember:

- Park in a safe place.
- Remove the tether cord cap from the engine cut-off switch.
- Use appropriate lifting device or have assistance to share lifting stress. If a lifting device is not used, use proper lifting techniques, notably using your legs force.
- Do not attempt to lift the front or rear of vehicle if it is above your limits.
- Support front of vehicle off the ground with a suitable device before adjusting suspension.
- Support rear of vehicle off the ground with a wide-base snowmobile stand with a rear deflector panel.
- Make sure support device is stable and secure.

The best way to set up the suspension is to customize each adjustment one at a time. Various adjustments are interrelated. It may be necessary to readjust center spring after adjusting front springs for instance. Test run the snowmobile under the same conditions; trail, speed, snow, operator riding position, etc. Proceed methodically until you are satisfied.

Following are guidelines to fine-tune suspension. Use suspension adjustment tool provided in the tool kit.

## Ski Runner Depth Setting (Pilot TS Skis)

Pilot TS skis enables the rider to dial in the amount of ski bite for conditions and riding style.

A knob adjacent to the ski leg raises or lowers the ski runner.

Ski behavior depends largely on trail conditions but also on ski runner adjustment. Same as drivers behavior adapts to trail condition change.

Ski runner bottom face conditions must be regularly checked especially if the snow condition is marginal such as a lack of snow, presence of rocks or sand. Snowmobile must be driven slowly when on paved surfaces in order to prevent overheating of the ski runner bottoms and as such, damage to carbide inserts. Ski runners must be replaced as soon as any of the carbide inserts are worn out or missing. Worn out runner usage may lead to damage of ski sole.

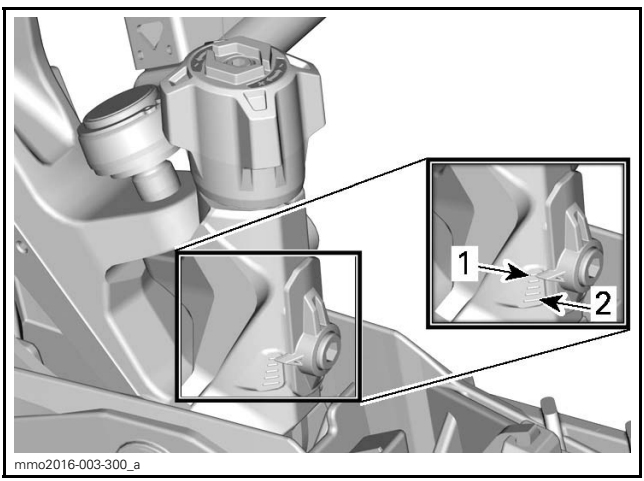


*PILOT TS SKIS ADJUSTMENT KNOB*
1. *Position 1*
2. *Position 5*

| PILOT TS SKI ADJUSTABILITY | | | | |
|---|---|---|---|---|
| Position | Lateral grip | Handling | Possible understeering | Possible oversteering |
| 1 | * | * | *** | |
| 2 | ** | ** | ** | |
| 3 | *** | *** | * | * |
| 4 | **** | **** | | ** |
| 5 | ***** | ***** | | *** |

## Rear Suspension Adjustments

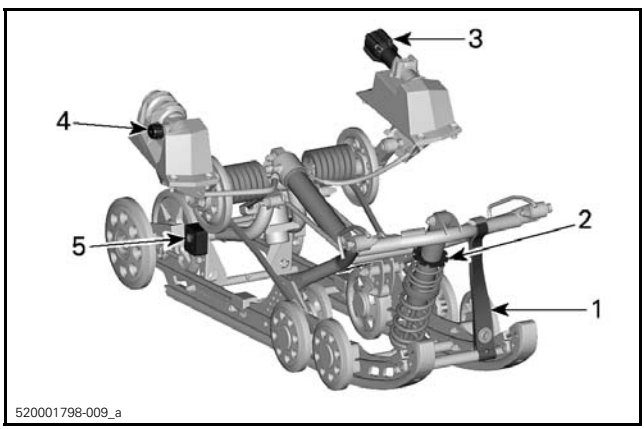


*rMOTION WITH QUICK ADJUST- ADJUSTABLE COMPONENTS*

1. *Stopper strap*
2. *Center spring*
3. *Rear spring*
4. *Rear shock absorber*
5. *Coupling blocks (RH side shown)*

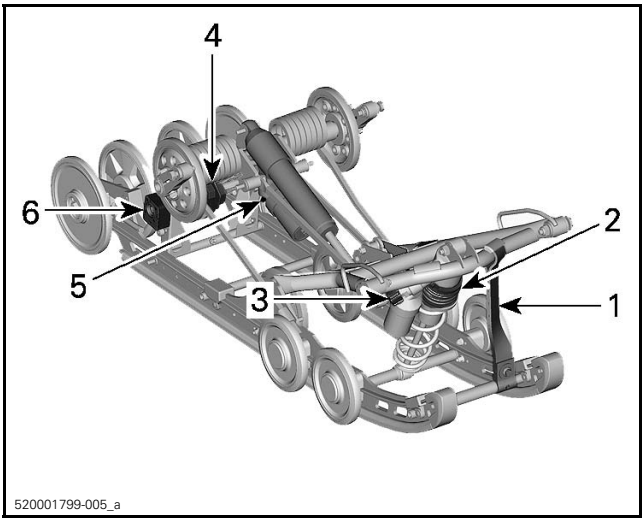


*rMOTION WITHOUT QUICK ADJUST- ADJUSTABLE COMPONENTS*

1. *Stopper strap*
2. *Center spring*
3. *Center shock absorber*
4. *Rear spring*
5. *Rear shock absorber*
6. *Coupling blocks (RH side shown)*

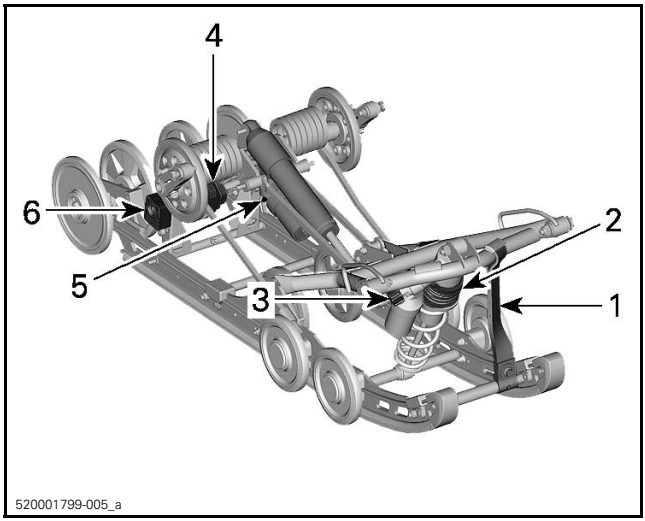


*rMOTION WITHOUT QUICK ADJUST- ADJUSTABLE COMPONENTS*

1. *Stopper strap*
2. *Center spring*
3. *Center shock absorber*
4. *Rear spring*
5. *Rear shock absorber*
6. *Coupling blocks (RH side shown)*

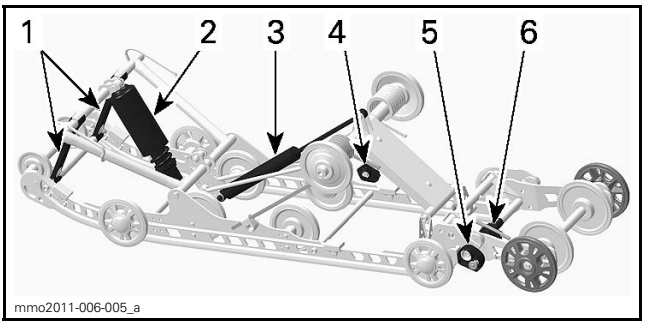


*SC5-U ADJUSTABLE COMPONENTS*
1. *Stopper straps*
2. *Center spring*
3. *Rear shock absorber (SC-5U with ACS and SC-5U with easy adjust)*
4. *Rear springs*
5. *Extension stabilizer cam*
6. *Extension spring cam*

**NOTICE** Whenever adjusting rear suspension, check track tension and adjust if necessary.

**Stopper Strap**

Stopper strap length has an effect on the amount of weight the center spring has to carry especially during acceleration, therefore on the front end uplift.

Stopper strap length also has an effect on center spring travel.

**NOTICE** Whenever stopper strap length is changed, track tension must be checked.

| ACTION | RESULT |
|---|---|
| Increasing stopper strap length | Lighter ski pressure under acceleration |
| | More center spring travel |
| | More bump absorption capability |
| Decreasing stopper strap length | Heavier ski pressure under acceleration |
| | Less center spring travel |
| | Less bump absorption capability |

NOTE: Stopper strap could be set to position 1, 2, 3, 4 and 5. Below are illustrations for position 1, 2, 3. Smaller numbers correspond to a longer strap setting.

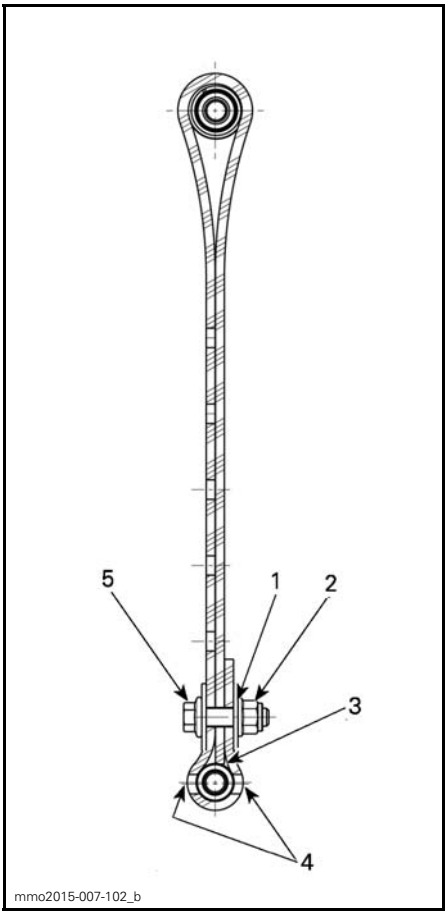


*STOPPER STRAP POSITION 1 (1ST HOLE, LONGEST)*

1. *1st hole from end*
2. *Towards rear*
3. *Tip of strap touching strap axis*
4. *Two holes left open between screw head and nut*
5. *Towards front*

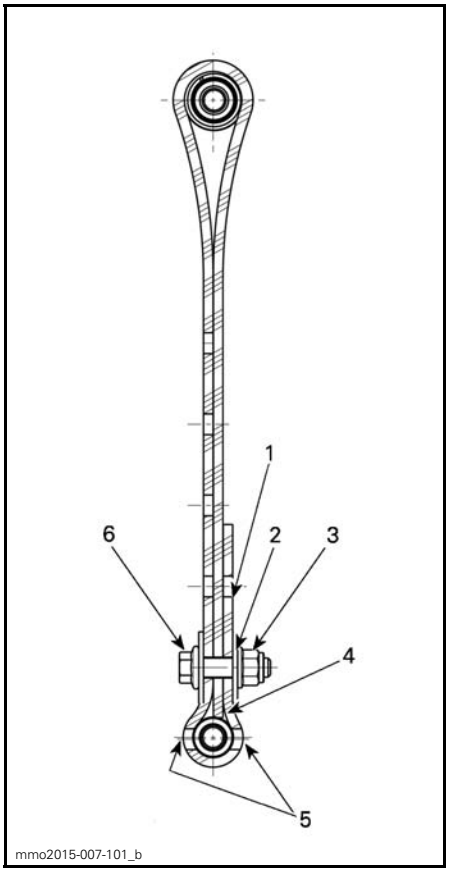


*STOPPER STRAP POSITION 2 (2ND HOLE)*

1. *Free hole*
2. *2nd hole from end*
3. *Towards rear*
4. *Tip of strap touching strap axis*
5. *Two holes left open between screw head and nut*
6. *Towards front*

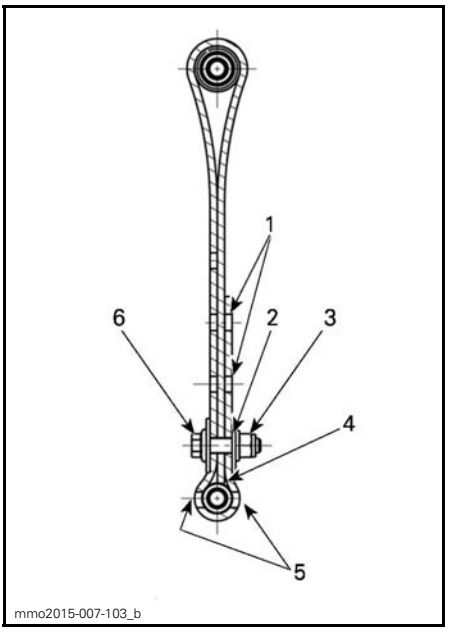


*STOPPER STRAP POSITION 3 (3RD HOLE)*
1. *Free holes*
2. *3rd hole from end*
3. *Towards rear*
4. *Tip of strap touching strap axis*
5. *Two holes left open between screw head and nut*
6. *Towards front*

NOTE: Decreasing the stopper strap length may reduce comfort. If too much weight transfer is felt, try to correct it by adjusting the coupling blocks first. Always install stopper strap bolt as close as possible to the lower shaft.

When operating the snowmobile in deep snow, it may be necessary to vary stopper strap length and/or riding position, to change the angle at which the track rides on the snow. Operator's familiarity with the various adjustments as well as snow conditions will dictate the most efficient combination.

Generally, a longer stopper strap setting gives better performance in deep snow on a flat landscape.

**Center Spring**

Center spring preload has an effect on steering effort, handling and bump absorption.

Also, since center spring preload adjustment puts more or less pressure on the front of the track, it has an effect on the performance in deep snow.

| ACTION | RESULT |
|---|---|
| Increasing preload | Lighter steering |
| | More bump absorption capability |
| | Better deep snow starts |
| | Better deep snow performance and handling |
| Decreasing preload | Heavier steering |
| | Less bump absorption capability |
| | Better trail handling |

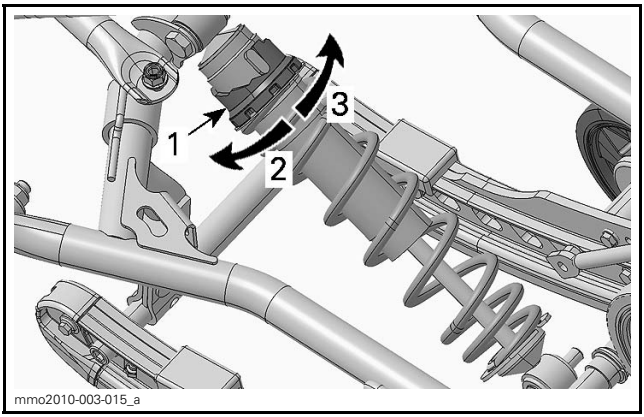


*TYPICAL- CAM TYPE*
1. *Spring preload adjustment cam*
2. *Decrease preload*
3. *Increase preload*

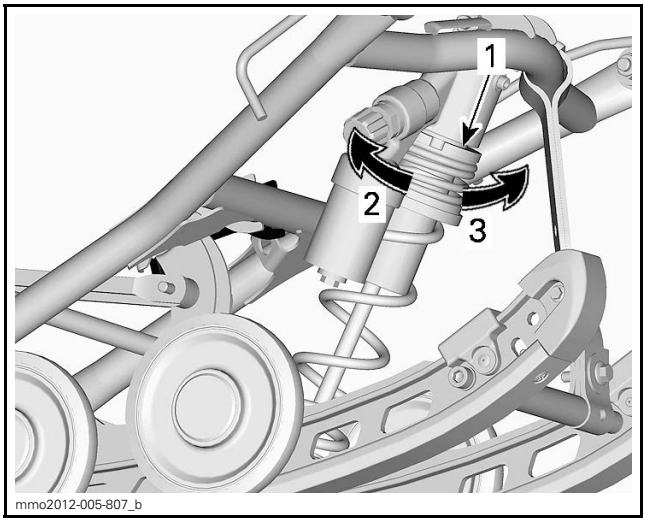


*TYPICAL- RING TYPE*
1. *Spring preload adjustment ring*
2. *Increase preload*
3. *Decrease preload*

NOTE: Use the suspension adjustment tool provided with the vehicle.

**Rear Spring**

Rear spring preload has an effect on comfort, ride height and load compensation.

Also, adjusting rear spring preload shifts more or less weight to the snowmobile front end. As a result, more or less weight is applied to the skis. This has an effect on performance in deep snow, steering effort and handling.

Slight suspension bottoming occurring under the worst riding conditions indicates a good choice of spring preload.

| ACTION | RESULT |
|---|---|
| Increasing preload | Firmer rear suspension |
| | Higher rear end |
| | More bump absorption capability |
| | Heavier steering |
| Decreasing preload | Softer rear suspension |
| | Lower rear end |
| | Less bump absorption capability |
| | Lighter steering |
| | Better performance and handling in deep snow |

Refer to the following to determine if preload is correct.

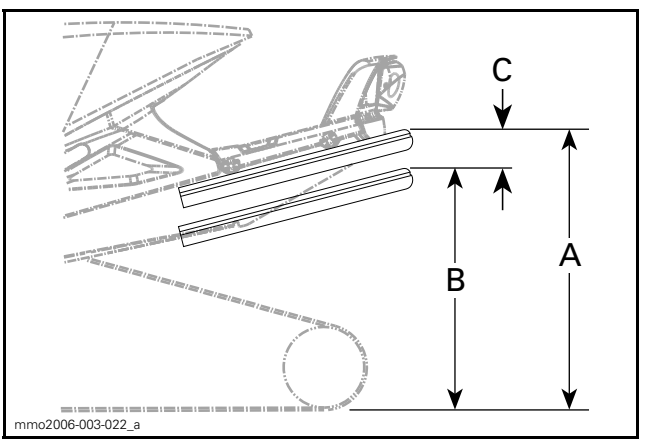


*TYPICAL - PROPER ADJUSTMENT*
*A. Suspension fully extended*
*B. Suspension has collapsed with operator, passenger(s) and load added*
*C. Distance between dimension "A" and "B", see table below*

| C | WHAT TO DO |
|---|---|
| 50 mm to 75 mm (2 in to 3 in) | No adjustment required |
| More than 75 mm (3 in) | Adjusted too soft. Increase preload |
| Less than 50 mm (2 in) | Adjusted too firm. Decrease preload |

NOTE: If the specification is unattainable with the original springs, see an authorized Ski-Doo dealer for other available springs.

*rMotion Without Quick Adjust*

To increase spring preload using tool, always turn the left side adjustment cam in a clockwise direction, and the right side cam in a counterclockwise direction.

**⚠ CAUTION** Never set preload cams directly from position 5 to 1 or directly from position 1 to 5.

**⚠ WARNING**

Both rear spring preload must be set at the same position. Otherwise vehicle behavior may be unpredictable and suspension may become warped.

The adjustment cams have 5 different settings, 1 being the softest.

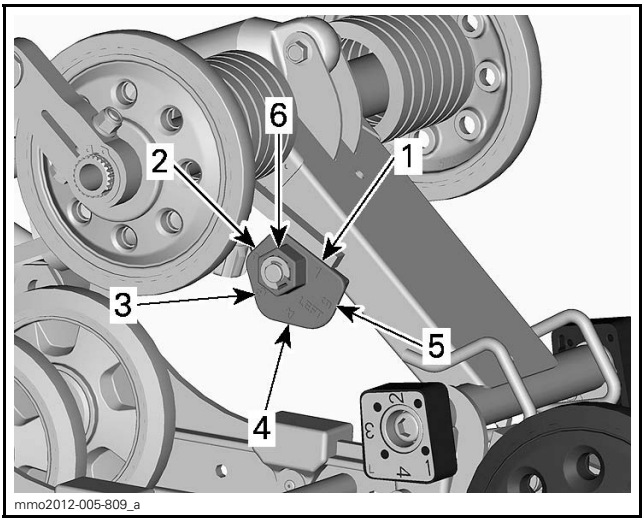


*rMOTION WITHOUT QUICK ADJUST - LH SIDE SHOWN*

1. *Position 1*
2. *Position 2*
3. *Position 3*
4. *Position 4*
5. *Position 5*
6. *Adjustment nut*

### *rMotion - With Quick Adjust*

Turn the left side knob to adjust the spring preload.

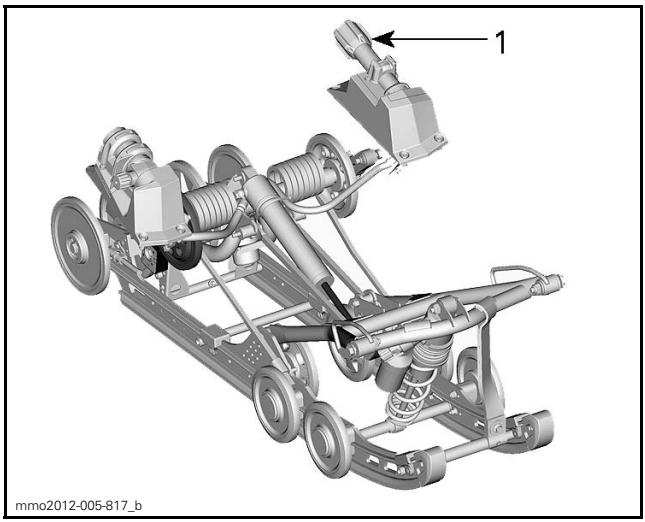


*rMOTION WITH QUICK ADJUST*
*1. LH side knob to adjust spring preload*

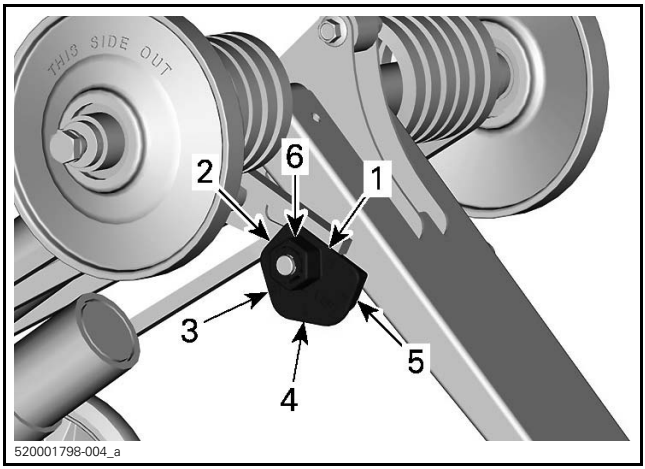


*cMOTION - LH SIDE SHOWN*
1. *Position 1*
2. *Position 2*
3. *Position 3*
4. *Position 4*
5. *Position 5*
6. *Adjustment nut*

| ACTION | RESULT |
|---|---|
| Increasing preload | Firmer rear suspension |
| | Higher rear end |
| | More bump absorption capability |
| | Heavier steering |
| Decreasing preload | Softer rear suspension |
| | Lower rear end |
| | Less bump absorption capability |
| | Lighter steering |
| | Better performance and handling in deep snow |

**Center Shock Absorber**

Center Shock Compression Damping (If Equipped)

NOTE: Both low and high speed compression damping are adjusted simultaneously.

Low speed compression damping controls how the shock absorber reacts to a low suspension velocity (slow compression strokes, in most cases when riding at lower speeds).

High speed compression damping controls how the shock absorber reacts to a high suspension velocity (quick compression strokes, in most cases when riding at higher speeds).

| ACTION | RESULT ON BIG AND SMALL BUMPS |
|---|---|
| Increasing compression damping force | Firmer compression damping |
| Decreasing compression damping force | Softer compression damping |

To adjust, turn clockwise to increase damping force and counter-clockwise to decrease damping force.

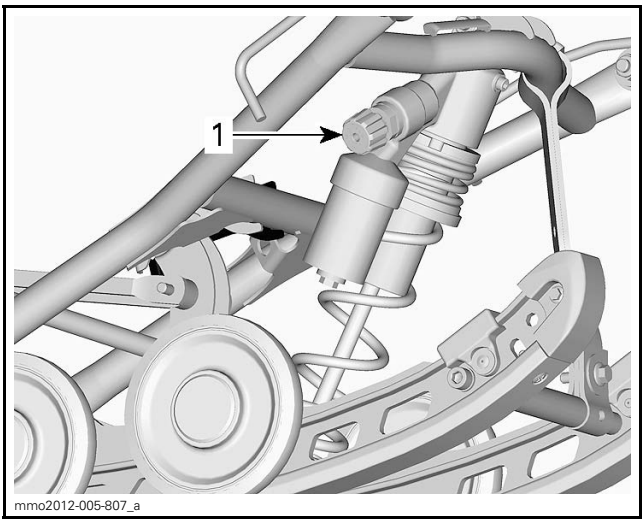


*1. Center shock compression damping adjustment knob*

**Rear Shock Absorber**

Rear Shock Compression Damping (If Equipped)

NOTE: Both low and high speed compression damping are adjusted simultaneously.

Low speed compression damping controls how the shock absorber reacts to a low suspension velocity (slow compression strokes, in most cases when riding at lower speeds).

High speed compression damping controls how the shock absorber reacts to a high suspension velocity (quick compression strokes, in most cases when riding at higher speeds).

| TURNING | ACTION | RESULT ON BIG AND SMALL BUMPS |
|---|---|---|
| Clockwise | Increasing compression damping force | Firmer compression damping |
| Counter Clockwise | Decreasing compression damping force | Softer compression damping |

To adjust, turn the adjuster button located on the oil reservoir on shock clockwise to increase compression damping force and counterclockwise to decrease compression damping force.

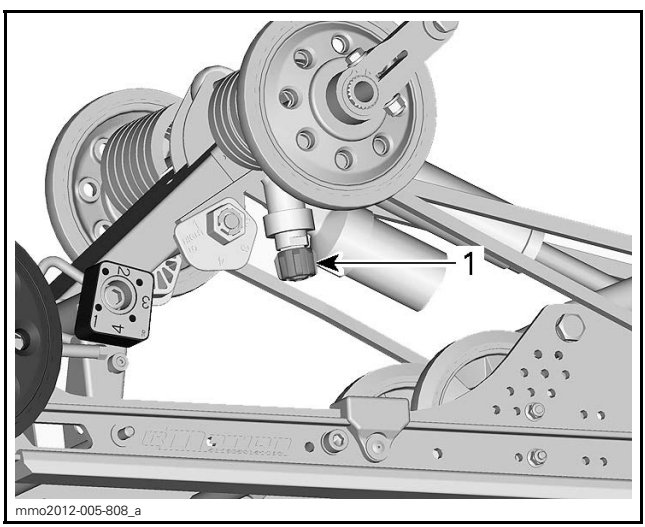


*TYPICAL - rMOTION WITHOUT QUICK ADJUST*
*1. Compression damping adjustment button*

### *rMotion With Quick Adjust*

Turn the right side knob to adjust the shock compression speed.

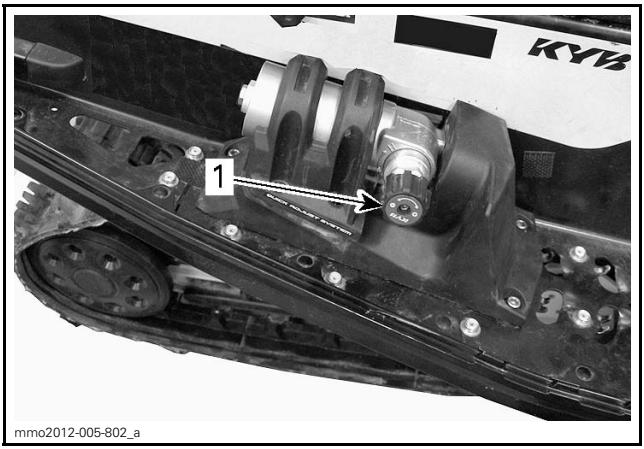


*TYPICAL - rMOTION WITH QUICK ADJUST - RH SIDE*

1. *Knob to adjust low/high speed compression damping*

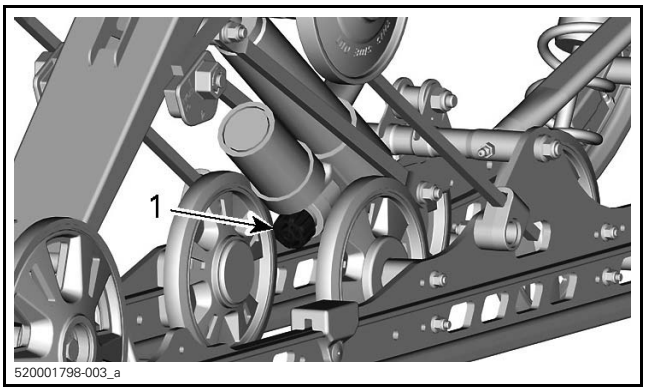


*TYPICAL - cMOTION*

1. *Compression damping adjustment button*

**Rear Shock Absorber (SC-5U With ACS)**

The operator can adjust the comfort and ride height by adjusting the air pressure inside the air shock absorber.

To adjust, proceed as follows:

1. Start engine.
2. Press the MODE (M) button to select suspension mode.

When the air suspension mode is selected, AIR_SUSP is displayed. The display also shows the actual suspension setting (a number from 1 to 5, 1 being the softest setting).

3. Depress the heated throttle lever switch as shown to increase or decrease air pressure.

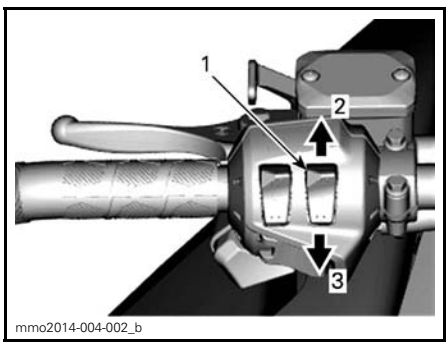


*TYPICAL*
1. *Heated throttle lever switch*
2. *Increase pressure*
3. *Decrease pressure*

4. The desired set point appears on the display. To confirm, press the MODE (M) button or wait 5 seconds.

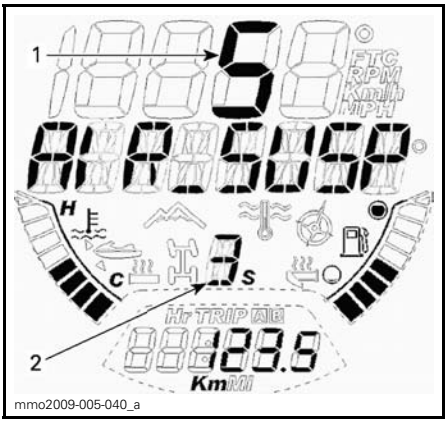


1. *Set point*
2. *Actual setting*

**Coupling Blocks (rMotion)**

Coupling blocks adjustment has an effect on vehicle handling during acceleration only.

NOTE: A high coupling block setting will reduce both comfort and transfer under acceleration.

To adjust, push on release button under cam and turn coupling block to the desired setting.

Place the desired setting number towards rubber stopper. No tools required.

**⚠ WARNING**

Both blocks must be set at the same position. Otherwise vehicle behavior may be unpredictable and suspension may become warped.

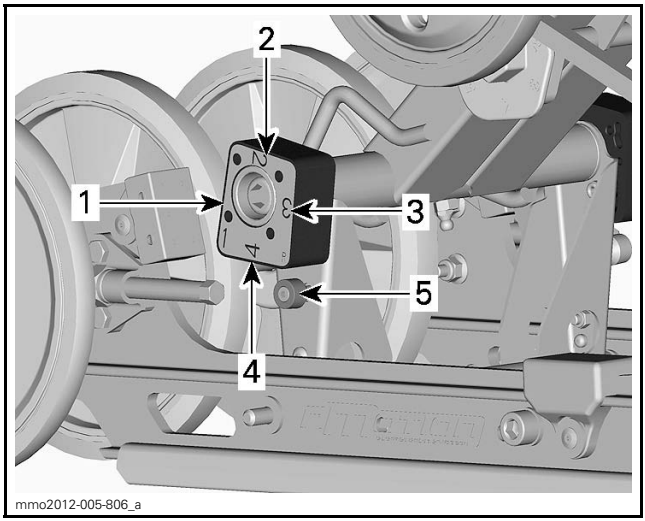


*COUPLING BLOCK - RIGHT SIDE VIEW*
*(R - RIGHT EMBOSSED ON BLOCK)*
1. *Position 1 (minimum)*
2. *Position 2*
3. *Position 3*
4. *Position 4 (maximum)*
5. *Release button*

Coupling Blocks Setting

| POSITION | USE |
|---|---|
| 1 | More ski lift during acceleration - and best comfort |
| 2 | Intermediate setting |
| 3 | Intermediate setting |
| 4 | Less ski lift during acceleration - and some comfort loss |

## Front Suspension Adjustments

### Ski Stance (Applicable Models)

Ski stance can be set to two different width.

For the narrow setting, install the spacer inside the ski leg.

For the wide setting, install the spacer outside the ski leg.

Proceed as follows to change the stance setting:

1. Lift the front of vehicle.
2. Remove the ski bolt.
3. Place the spacer according to the desired stance see illustration.

**⚠ WARNING**

**Proceed to the same setting for both skis.**

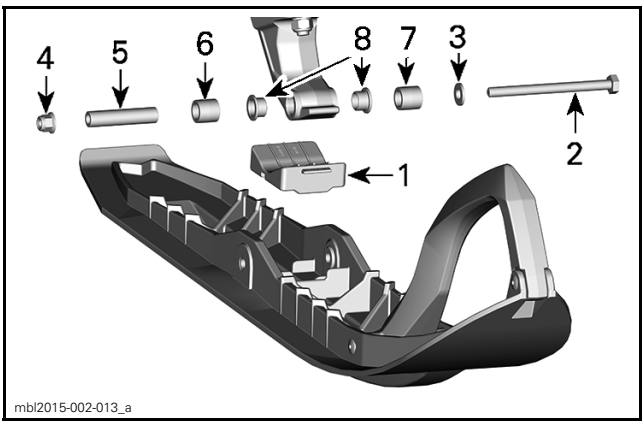


*LH SIDE SHOWN*
1. *Ski stopper*
2. *M10 x 130 screw*
3. *M10 flat washer*
4. *M10 flanged nut*
5. *Ski axel*
6. *Narrow adjustment*
7. *Wide adjustment*

4. Tighten nut to the specified torque.

| TIGHTENING TORQUE | |
|---|---|
| Ski nut | 48 N•m ± 6 N•m<br>(35 lbf•ft ± 4 lbf•ft) |

**Front Springs**

Front spring preload has an effect on front suspension firmness.

Front spring preload also has an effect on the steering behavior.

| ACTION | RESULT |
|---|---|
| Increasing preload | Firmer front suspension |
| | Higher front end |
| | More precise steering |
| | More bump absorption capability |
| Decreasing preload | Softer front suspension |
| | Lower front end |
| | Lighter steering |
| | Less bump absorption capability |

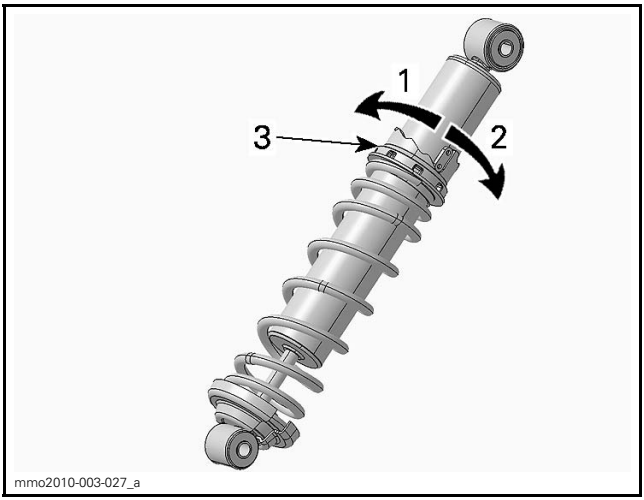


*CAM TYPE - HPG SHOCK ABSORBER*
1. *Decrease preload*
2. *Increase preload*
3. *Spring preload adjustment cam*

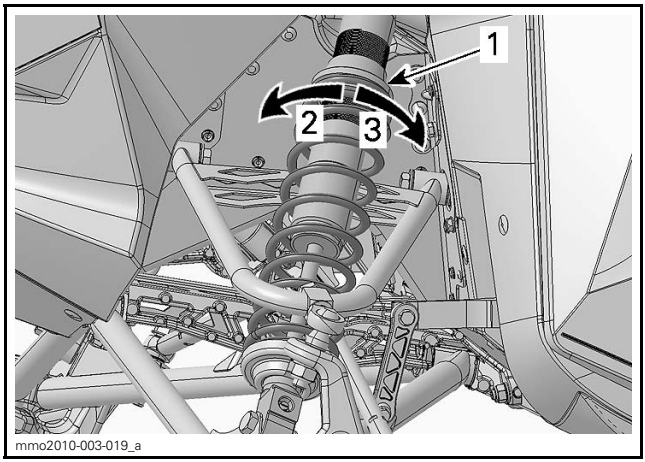


*TYPICAL - RING TYPE*
1. *Spring preload adjustment ring*
2. *Increase preload*
3. *Decrease preload*

**Front Shock Absorber**

Front Shock Compression Damping (KYB PRO Series Only)

NOTE: Both low and high speed compression damping are adjusted simultaneously.

Low speed compression damping controls how the shock absorber reacts to a low suspension velocity (slow compression strokes, in most cases when riding at lower speeds).

High speed compression damping controls how the shock absorber reacts to a high suspension velocity (quick compression strokes, in most cases when riding at higher speeds).

To adjust, turn the adjuster button located on the reservoir.

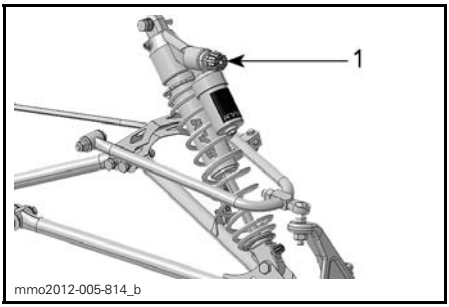


*1. Compression damping adjuster button*

| TURNING | ACTION | RESULT ON BIG AND SMALL BUMPS |
|---|---|---|
| Clockwise | Increasing compression damping force | Firmer compression damping |
| Counter Clockwise | Decreasing compression damping force | Softer compression damping |

### Shock Rebound Damping (KYB PRO R Series Only)

Rebound damping controls how the shock absorber restrains the extension stroke.

To adjust, turn the adjuster button or slot located at the bottom of the shock absorber.

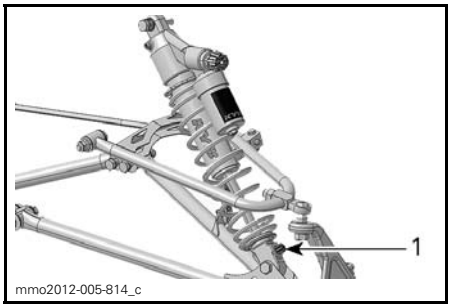


*1. Rebound adjuster button*

| TURNING | ACTION | RESULT ON BIG AND SMALL BUMPS |
|---|---|---|
| Clockwise | Increasing rebound damping force | Firmer rebound damping (slower extension speed) |
| Counter Clockwise | Decreasing rebound damping force | Softer rebound damping (faster extension speed) |

NOTE: In repetitive short small bumps (ripple), it is recommended to use a lower rebound damping setting.

## Adjustment Tips According to Vehicle Behavior

| PROBLEM | CORRECTIVE MEASURES |
|---|---|
| Front suspension darting | Check ski alignment.<br>– Reduce front suspension spring preload.<br>– Increase center spring preload.<br>– Reduce rear spring preload. |
| Steering feels too heavy at steady speeds | – Reduce front suspension spring preload.<br>– Increase center spring preload. |

| PROBLEM | CORRECTIVE MEASURES |
|---|---|
| Steering feels too heavy during acceleration | – Set coupling blocks to a lower position.<br>– Reduce rear spring preload.<br>– Lengthen limiter strap. |
| Too much ski lift during cornering or acceleration | – Set coupling blocks to a higher position.<br>– Shorten limiter strap.<br>– Increase rear spring preload. |
| Rear of snowmobile seems too stiff | – Reduce rear spring preload.<br>– Reduce compression damping adjustment if equipped |
| Rear of snowmobile seems too soft | – Increase rear spring preload. |
| Rear suspension is frequently bottoming | – Increase compression damping adjustment if equipped.<br>– Increase rear spring preload.<br>– Increase center spring preload.<br>– Lengthen limiter strap.<br>– Increase compression damping adjustment if equipped. |
| Snowmobile seems to pivot around its center | – Reduce center spring preload.<br>– Increase rear spring preload.<br>– Increase front suspension spring preload.<br>– Shorten limiter strap. |
| Track spins too much at start | – Set coupling blocks to a lower position.<br>– Lengthen limiter strap. |
| Ski diving in deep snow | – Install ski tip enlarger. |

## VEHICLE TRANSPORTATION

Make sure that oil reservoir and fuel tank caps are properly installed.

Tilt bed trailers can easily be equipped with a winch mechanism to afford maximum safety in loading. Simple as it may seem, never drive your snowmobile onto a tilt bed trailer or any other kind of trailer or vehicle. Many serious accidents have resulted from driving up and over a trailer. Anchor your vehicle securely, front and rear, even on short hauls. Be certain all equipment is securely fastened. Cover your snowmobile when trailering to prevent road grime from causing damage.

Be certain your trailer meets state or provincial requirements. Ensure the hitch and safety chains are secure and the brake, turn indicators and clearance lights all function.

**⚠ WARNING**

**Do not tow the vehicle facing backwards. If the vehicle is towed facing backwards, the wind may cause damage to the windshield or even loss of the windshield.**

***This page is intentionally blank***

# *MAINTENANCE*

## MAINTENANCE SCHEDULE

Maintenance is very important for keeping your vehicle in safe operating condition. A repair shop or person of the owner's choosing may maintain, replace, or repair emission control devices and systems. These instructions do not require components or service by BRP or authorized Ski-Doo dealers. Although an authorized Ski-Doo dealer has an in-depth technical knowledge and tools to service the Ski-Doo snowmobile, the emission-related warranty is not conditioned on the use of an authorized Ski-Doo dealer or any other establishment with which BRP has a commercial relationship. For emission-related warranty claims, BRP is limiting the diagnosis and repair of emission-related parts to the authorized Ski-Doo dealers. For more information, please refer to the *US EPA EMISSION-RELATED WARRANTY* contained herein. Proper maintenance is the owner's responsibility. A warranty claim may be denied if, among other things, the owner or operator caused the problem through improper maintenance or use. You must follow the instructions for fuel requirements in *FUEL*. Even if gasoline containing greater than ten volume percent ethanol is readily available, the US EPA issued a prohibition against the use of gasoline containing greater than 10 vol% ethanol that applies to this vehicle. The use of gasoline containing greater than 10 vol% ethanol with this engine may harm the emission control system. The vehicle should be serviced as per the maintenance schedule.

The maintenance schedule does not exempt the pre-ride inspection.

**⚠ WARNING**

**Failure to properly maintain the vehicle according to the maintenance schedule and procedures can make it unsafe to operate.**

| FIRST INSPECTION AFTER THE FIRST 1 500 KM (1,000 MI) |
|---|
| Adjust drive chain |
| Check chaincase oil level |
| Adjust and align track |

| FIRST INSPECTION AFTER THE FIRST 3 000 KM (2,000 MI) OR 1 YEAR OF OPERATION (WHICHEVER COMES FIRST) |
|---|
| Change engine oil and filter |

| EVERY YEAR AT PRESEASON OR 3 000 KM (2,000 MI) (WHICHEVER COMES FIRST) |
|---|
| Perform pre-ride inspection |
| Check fault codes |
| Charge battery |
| Adjust drive chain |
| Inspect track tension, adjust and align (if necessary) |
| Inspect brake hose, pads and disk |
| Check coolant density |
| Inspect drive belt |
| Inspect and clean drive pulley |
| Tighten drive pulley retaining screw to specified torque |
| Inspect and clean driven pulley |
| Inspect engine seals and gaskets for leaks |
| Lubricate rear suspension. Lubricate whenever the vehicle is used in wet conditions (rain, puddles) |
| Inspect exhaust system and check for leaks |
| Tighten exhaust manifold screws to specified torque |
| Inspect fuel lines and connections |
| Inspect front suspension |

| EVERY YEAR AT PRESEASON OR 3 000 KM (2,000 MI) (WHICHEVER COMES FIRST) |
|---|
| Inspect rear suspension (including stopper straps and slider shoes) |
| Inspect tie-rod ends and ski alignment |
| Adjust headlight beam aiming |

| EVERY 6 000 KM (4,000 MI) OR AT PRE-SEASON (WHICHEVER COMES FIRST) |
|---|
| Change engine oil and filter |

| EVERY 2 YEARS OR 6 000 KM (4,000 MI) (WHICHEVER COMES FIRST) |
|---|
| Replace brake fluid |
| Clean and lubricate rewind starter (on applicable models) |
| Replace chaincase oil |

| EVERY 3 YEARS OR 10 000 KM (6,000 MI) (WHICHEVER COMES FIRST) |
|---|
| Replace spark plugs |
| Replace turbo exhaust gasket (on applicable models) |

| EVERY 5 YEARS |
|---|
| Replace engine coolant |
| Replace fuel pump outlet filter |

# MAINTENANCE PROCEDURES

This section includes instructions for basic maintenance procedures.

**⚠ WARNING**

Turn off the engine, remove tether cord cap and follow these maintenance procedures when performing maintenance. If you do not follow proper maintenance procedures you can be injured by hot parts, moving parts, electricity, chemicals or other hazards.

**⚠ WARNING**

Should removal of a locking device be required (e.g. lock tabs, self-locking fasteners, etc.) when undergoing disassembly/assembly, always replace with a new one.

## Engine Coolant

**⚠ WARNING**

Never open coolant tank cap when engine is hot.

### Engine Coolant level Verification

Open the RH side panel, see *CONTROLS, INSTRUMENTS AND EQUIPMENT*.

Check coolant level at room temperature. Liquid should be at cold level line of coolant tank.

NOTE: When checking level at low temperature it may be slightly lower then the mark.

If additional coolant is necessary or if entire system has to be refilled, refer to an authorized Ski-Doo dealer, repair shop or person of your own choosing.

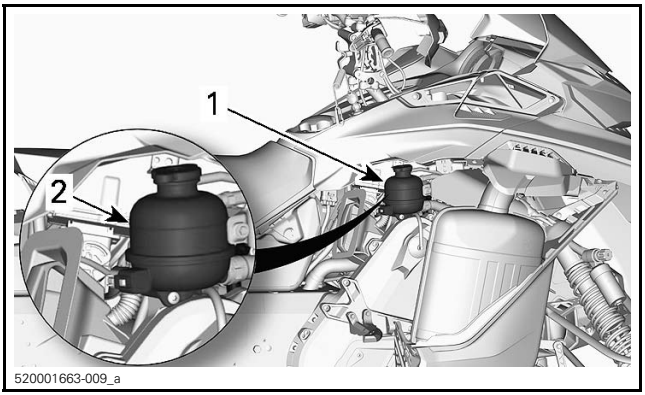


1. *Coolant reservoir*
2. *COLD line*

**Recommended Engine Coolant**

| COUNTRY | RECOMMENDED COOLANT |
|---|---|
| Scandinavia | EXTENDED LIFE PRE-MIXED COOLANT (EUR) (P/N 779223) |
| All other countries | EXTENDED LIFE PRE-MIXED COOLANT (P/N 779150) |
| Alternative, or if not available | Distilled water and antifreeze solution (50% distilled water, 50% antifreeze) |

***NOTICE*** Always use ethylene-glycol antifreeze containing corrosion inhibitors specifically for internal combustion aluminum engines.

## Engine Oil

### Engine Oil Level Verification

***NOTICE*** Check level before each ride and refill if necessary. Do not overfill. Operating the engine with an improper level may severely damage engine. Wipe off any spillage.

Place vehicle on a level surface and proceed as follows to check oil level:

1. Start engine and let it reach its normal operating temperature. Engine is at normal temperature when rear radiator gets warm, indicating that the thermostat is open.
2. Let engine run at idle for 30 more seconds.
3. Stop engine.
4. Open the LH side panel, refer to *CONTROLS, INSTRUMENTS AND EQUIPMENT*.
5. Remove the drive belt guard, refer to *DRIVE BELT GUARD*.
6. Remove dipstick from the filler tube, then wipe it clean.
7. Completely insert dipstick in the filler tube.
8. Remove dipstick and check the oil level. Oil level should be between the MIN and MAX marks as shown, add if necessary.

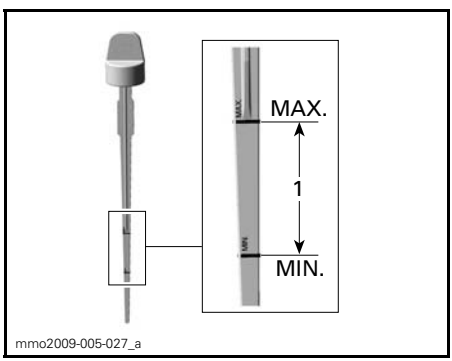


*1. Oil level between MIN. and MAX.*

**⚠ CAUTION** Engine oil can be very hot.

**⚠ WARNING**

Wipe off any oil spills. Oil is highly flammable when heated.

**Engine Oil Replacement**

**⚠ CAUTION** The engine oil can be very hot. Wait until engine oil is warm.

***NOTICE*** Engine oil and oil filter must be replaced at the same time.

1. Bring engine to its normal operating temperature.
2. Place vehicle on a level surface.
3. Remove the LH side panel.
4. Remove dipstick.

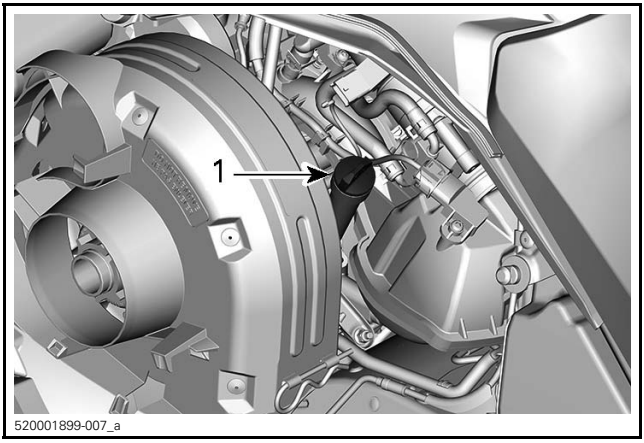


*LH SIDE OF VEHICLE*
*1. Oil tank dipstick*

5. Remove *OIL FILTER*, see procedure in this subsection.
6. From underneath the vehicle, access the drain plug:
   - 6.1 Remove one access cover retaining screw and loosen the other.
   - 6.2 Pivot the access cover to clear the bottom pan opening.

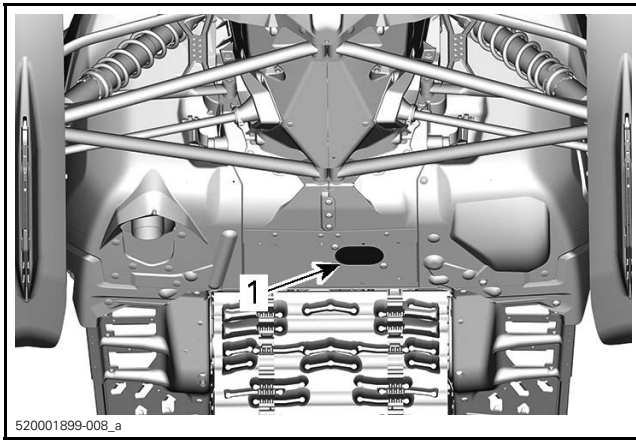


*1. Drain plugs access cover*

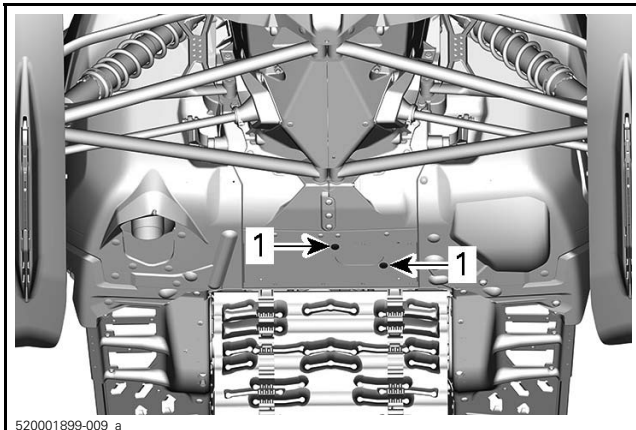


*PIVOT THE ACCESS COVER*
*1. Retaining screws*

7. Clean drain plug area.
8. Place a drain pan under the bottom pan opening.

9. Remove engine drain plugs in the following order.
   9.1 Main drain plug.
   9.2 Secondary drain plug.

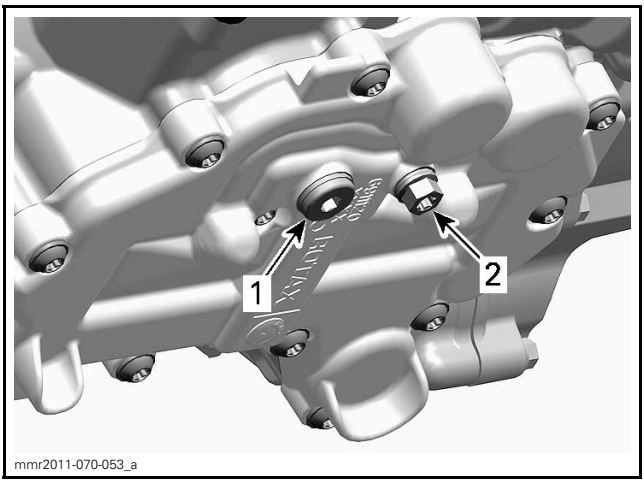


*UNDERNEATH THE ENGINE*
1. *Main drain plug*
2. *Secondary drain plug*

10. Allow oil to drain completely.
11. Install NEW sealing washers on oil drain plugs.

***NOTICE*** Never use a sealing washer a second time. Always replace with a new one.

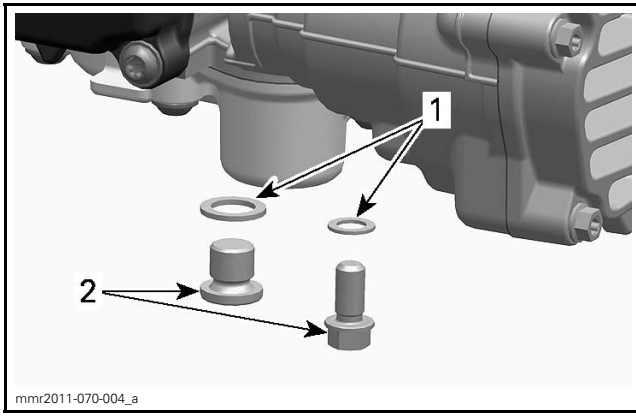


*1. Sealing washer*
*2. Oil drain plug*

12. Install drain plugs and tighten to specification.

| TIGHTENING TORQUE | |
|---|---|
| Drain plugs | 20 N•m ± 2 N•m (15 lbf•ft ± 1.5 lbf•ft) |

13. Install a new *OIL FILTER*, see procedure in this subsection.
14. Refill oil tank at the proper level with the recommended oil.

| APPROXIMATE ENGINE OIL CAPACITY (WITH FILTER) |
|---|
| 3.3 L (3.5 qt (U.S. liq.)) |

15. Reinstall dipstick in oil tank and properly tighten it.
16. Start engine and let it idle for a few minutes.
17. Ensure there are no leaks.
18. Stop engine and check oil level as explained in this subsection. Refill if necessary.
19. Dispose oil and filter as per your local environmental regulations.

## Engine Oil Filter

### Engine Oil Filter Replacement

Oil Filter Removal

1. Remove the RH side panel.
2. Clean oil filter area.
3. Remove:
   - Oil filter cover screws
   - Oil filter cover with O-ring
   - Oil filter.

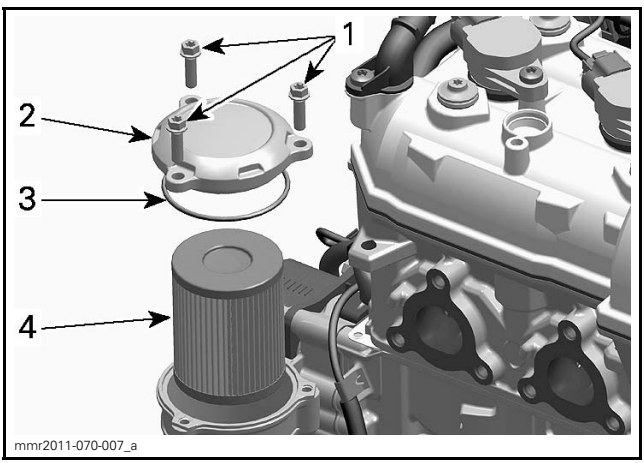


1. *Oil filter cover screws*
2. *Oil filter cover*
3. *O-ring*
4. *Oil filter*

4. Dispose filter as per your local environmental regulations.

Oil Filter Installation

1. Check the oil filter inlet and outlet orifices inside oil filter receptacle (integrated part of magneto cover) for dirt and contaminations.

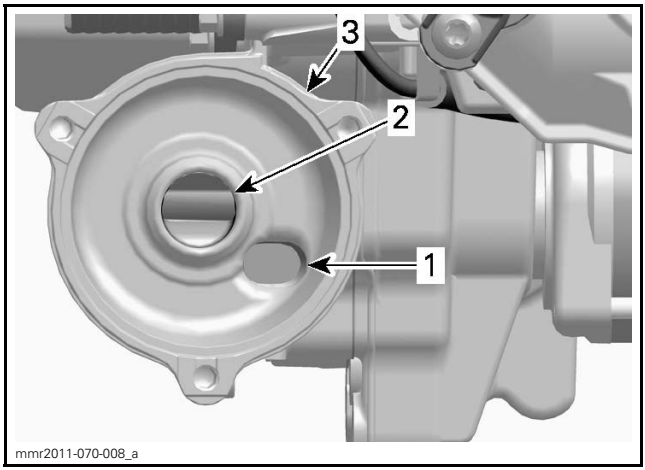


1. *Oil inlet orifice from the oil pressure pump*
2. *Oil outlet orifice to the engine lubrication system*
3. *Oil filter receptacle*

2. Install a NEW O-ring on oil filter cover.
3. Install the new filter into the cover.
4. Lubricate filter seal and cover O-ring with engine oil.

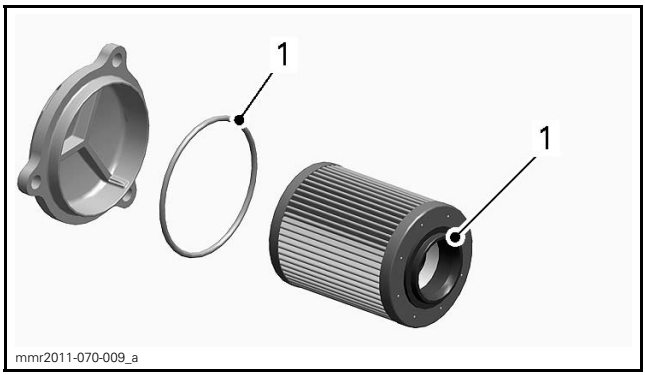


1. *Lubricate with engine oil*

**NOTICE** Pay attention to avoid pinching the O-ring during filter and cover installation.

5. Install the oil filter cover.
6. Tighten oil filter cover screws to specification.

| TIGHTENING TORQUE | |
|---|---|
| Oil filter cover screws | 10 N•m ± 1 N•m (89 lbf•**in** ± 9 lbf•**in**) |

7. Wipe off any oil spillage on engine.

## Exhaust System

### Exhaust System Verification

The muffler tail pipe should be centered with the exit hole in the bottom pan. Exhaust system must be free of rust or leaks. Make sure that all parts are securely in place.

Check retaining springs and heat shields condition and replace if necessary.

The exhaust system is designed to reduce noise and to improve the total performance of the engine. Modification may be in violation of local laws.

**NOTICE** If any exhaust system component is removed, modified or damaged, severe engine damage may result.

## Spark Plugs

Spark plugs inspection or replacement may be performed by an authorized Ski-Doo dealer, repair shop, or person of your own choosing. Spark plugs inspection or replacement requires an in-depth technical knowledge. Though not required, it is recommended that an authorized Ski-Doo dealer performs spark plugs inspection or replacement.

## Brake Fluid

### Recommended Fluid

Use only DOT 4 brake fluid from a sealed container. An opened container may be contaminated or may have absorbed moisture from the air.

## ⚠ WARNING

Use only DOT 4 brake fluid from a sealed container. To avoid serious damage to the braking system, do not use fluids other than the recommended one, nor mix different fluids for topping up.

***NOTICE*** Brake fluid can damage painted and plastic parts. Handle with care. Rinse thoroughly in case of spillage.

Brake Fluid Level Verification

***NOTICE*** Vehicle must be on a level surface before checking any fluid levels.

Check brake fluid (DOT 4) in reservoir for proper level. Add fluid (DOT 4) as required.

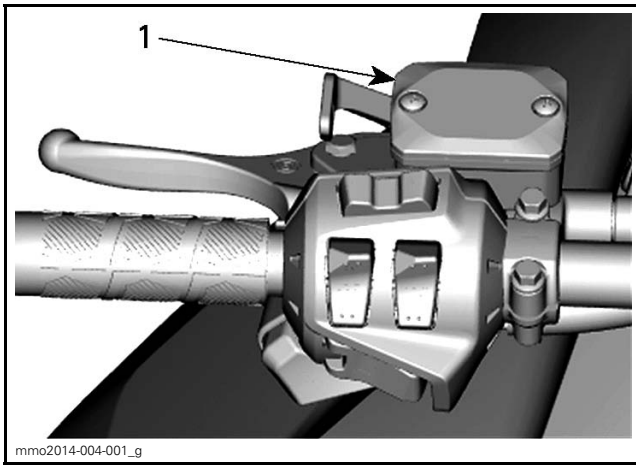


*TYPICAL*
*1. Brake fluid reservoir*

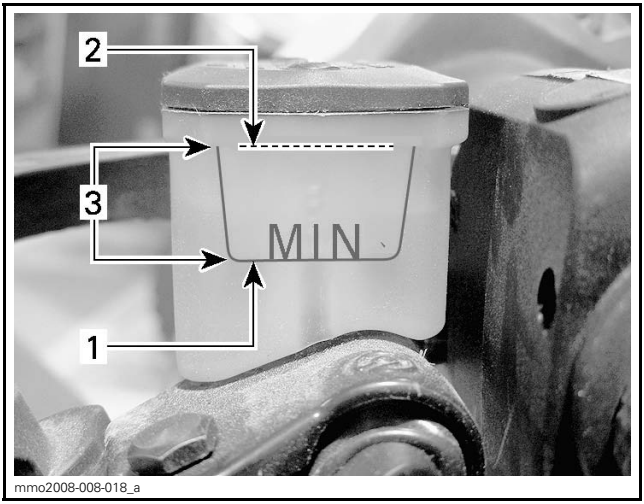


*TYPICAL*
1. *Minimum*
2. *Maximum*
3. *Operating range*

**⚠ CAUTION** Avoid getting brake fluid on skin or eyes - it may cause severe burns. In case of contact skin, wash thoroughly. In case of contact with the eyes, immediately rinse with plenty of water for at least 10 minutes and then consult a doctor immediately.

## Chaincase Oil

**Recommended Chaincase Oil**

| RECOMMENDED CHAINCASE OIL | |
|---|---|
| Scandinavia | SYNTHETIC CHAINCASE OIL (EUR) (P/N 779185) |
| All other countries | SYNTHETIC CHAINCASE OIL (P/N 779156) |

**NOTICE** The chaincase of this snowmobile has been developed and validated using the XPS™ Synthetic chaincase oil. BRP strongly recommends the use of its XPS Synthetic chaincase oil at all times. Damages caused by oil which is not suitable for the chaincase will not be covered by the BRP limited warranty.

**Access to Chaincase**

Open RH side panel, refer to *CONTROLS, INSTRUMENTS AND EQUIPMENT*.

**Chaincase Oil Level Verification**

With the vehicle on a level surface, check the oil level by removing the check plug.

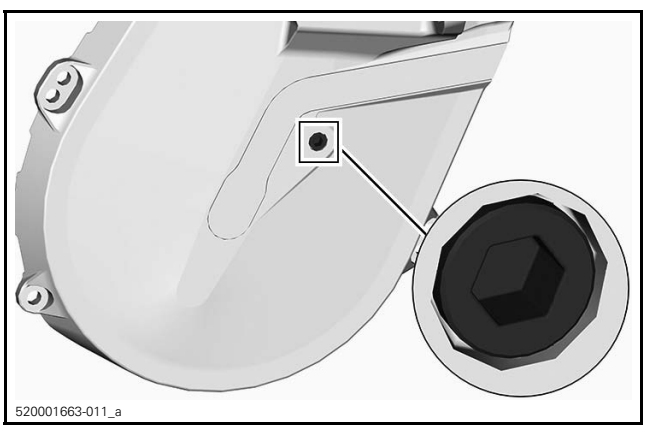


*CHECK PLUG*

Oil level must reach the threaded hole.

If level is correct, reinstall check plug and tighten to the specified torque.

| TIGHTENING TORQUE | |
|---|---|
| Check plug | 6 N•m ± 1 N•m (53 lbf•**in** ± 9 lbf•**in**) |

If level is insufficient, See *CHAINCASE FILLING PROCEDURE*.

**Chaincase Filling Procedure**

Remove the check plug.

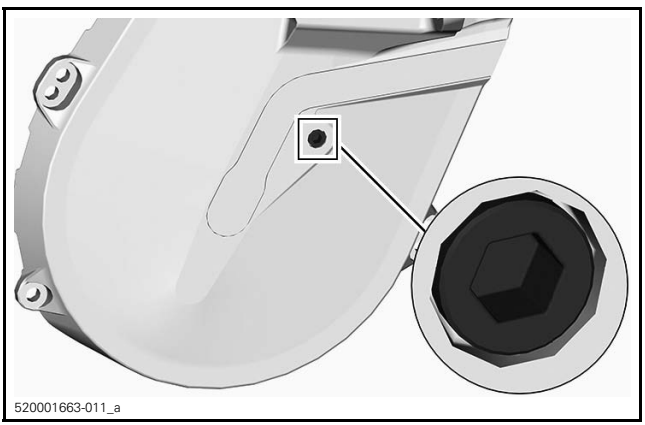


*CHECK PLUG*

Remove the filler cap.

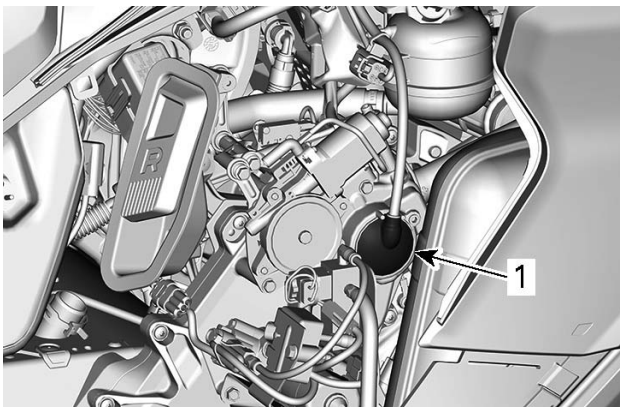


*TYPICAL - TOP OF CHAINCASE*
*1. Filler cap*

Pour recommended oil in the filler hole until oil comes out by the check plug hole.

Reinstall check plug and tighten to the specified torque.

| TIGHTENING TORQUE | |
|---|---|
| Check plug | 6 N•m ± 1 N•m (53 lbf•**in** ± 9 lbf•**in**) |

Reinstall the filler cap.

## Drive Chain

### Access to Chaincase

Open RH side panel, refer to *CONTROLS, INSTRUMENTS AND EQUIPMENT*.

### Drive Chain Adjustment

Using the Torx end of the driven pulley expander, GENTLY turn tensioner clockwise to eliminate the play.

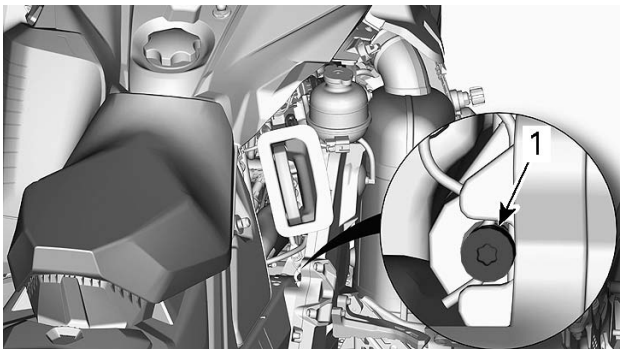


*TYPICAL*

Do not force the tensioner in.

NOTE: Do not remove the hair cotter pin.

**NOTICE** Overtightening the drive chain could result in severe damage to the chaincase components.

## Drive Belt

### Drive Belt Inspection

Inspect belt for cracks, fraying or abnormal wear (uneven wear, wear on one side, missing cogs, cracked fabric). If abnormal wear is noted, probable cause could be pulley misalignment, excessive RPM with frozen track, fast starts without warm-up period, burred or rusty sheave, oil on belt or distorted spare belt. Contact an authorized Ski-Doo dealer.

### Drive Belt Replacement

Drive Belt Removal

1. Remove tether cord cap from engine cut-off switch.
2. Remove drive belt guard, refer to *CONTROLS, INSTRUMENTS AND EQUIPMENT*.
3. Insert the driven pulley expander provided in the threaded hole on the adjuster hub as shown.

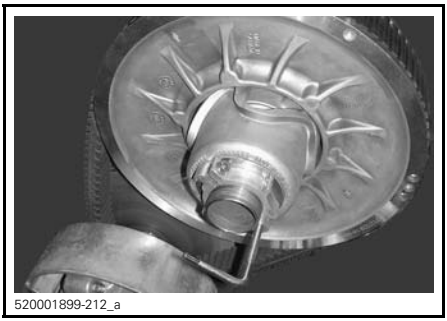
520001899-212_a

*TYPICAL - PULLEY EXPANDER INSTALLED ON ADJUSTER HUB*

4. Open the driven pulley by screwing the tool in.
5. Remove the drive belt by slipping it over the top of the driven pulley, then over the drive pulley.

### Drive Belt Installation

1. If necessary, open the driven pulley, refer to *DRIVE BELT REMOVAL* above.
2. Slip the belt over the drive pulley, then over the driven pulley.

**NOTICE** Do not force or use tools to pry the belt into place, as this could cut or break the cords in the belt.

NOTE: The maximum drive belt life span is obtained when belt is installed with arrows in the direction of rotation.

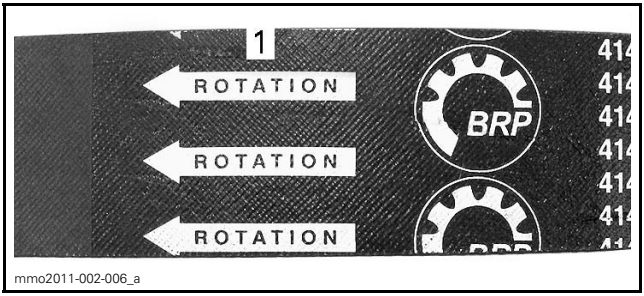

mmo2011-002-006_a

*1. To be pointed in the direction of rotation*

3. Unscrew and remove the driven pulley expander from the pulley.

4. Rotate the driven pulley several times to properly set the belt between the sheaves.
5. If a new belt was installed, an adjustment will be required for the proper belt height. Refer to *DRIVE BELT HEIGHT ADJUSTMENT* below.
6. Install belt guard, refer to *CONTROLS, INSTRUMENTS AND EQUIPMENT*.
7. Close side panel, refer to *CONTROLS, INSTRUMENTS AND EQUIPMENT*.

**Drive Belt Height Adjustment**

The drive belt height must be checked every time a new drive belt is installed and as part of the pre-ride inspection.

To adjust the drive belt height, proceed as follows:

1. Remove tether cord cap from engine cut-off switch.
2. Remove drive belt guard.
3. Loosen the clamping bolt.

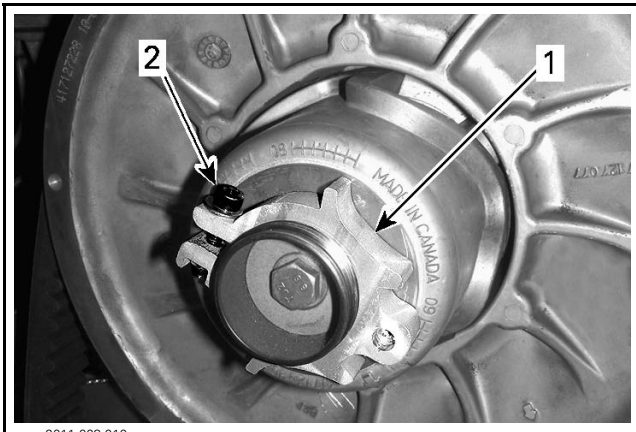


mmo2011-003-010_a

*1. Adjuster hub*
*2. Clamping bolt*

4. Using the suspension adjustment tool provided, turn the ring 1/4 turn at a time then rotate the driven pulley to properly set the drive belt between the pulley sheaves.

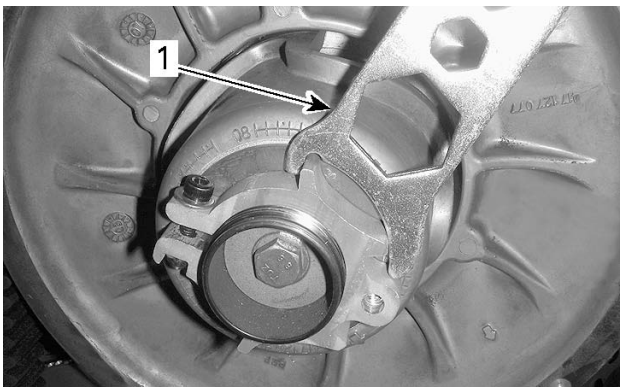


mmo2011-003-011_a

*1. Suspension adjustment tool*

NOTE: The adjustment ring has left hand treads.

Repeat step 4 until the lowest portion of the cogs on the external surface of drive belt is even with the driven pulley edge.

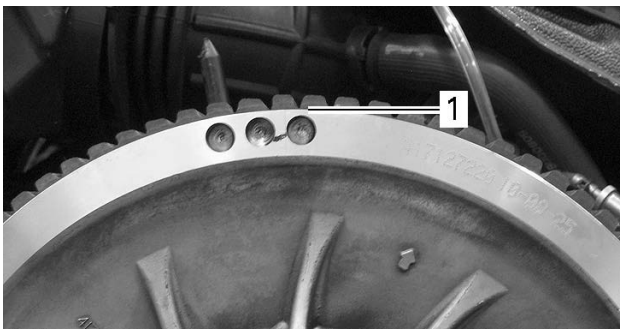


*TYPICAL - PRELIMINARY SETTING*
*1. Lowest portion of cogs even with external surface of drive belt*

NOTE: Turning the ring counterclockwise lowers the drive belt in the pulley. Turning the ring clockwise raises the drive belt in the pulley.

5. Firmly tighten the clamping bolt. If possible, tighten to specified torque using a torque wrench.

| TIGHTENING TORQUE | |
|---|---|
| Clamping bolt | 5.5 N•m ± 0.5 N•m (49 lbf•**in** ± 4 lbf•**in**) |

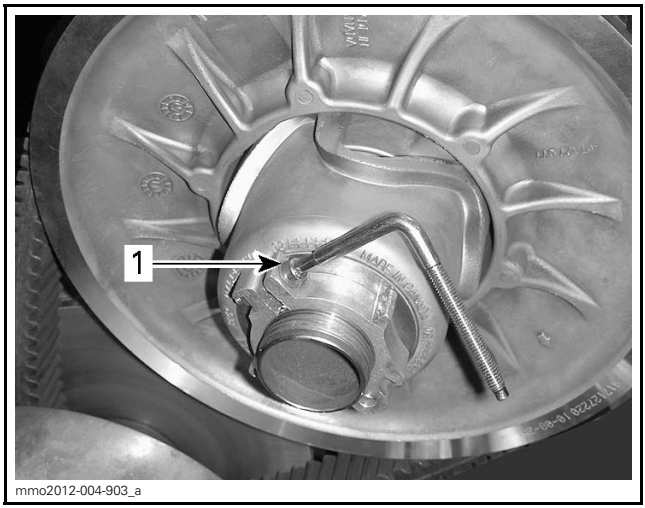


*TYPICAL*
*1. Clamping bolt*

6. Install drive belt guard.
7. Install side panel.

NOTE: These settings are correct as a preliminary adjustment for most models. In some cases, when starting the engine, the vehicle could creep, indicating that the drive belt is too tight.

If the vehicle creeps, lower the drive belt height from the preliminary setting. Repeat procedure until creeping stops.

### Reverse Activation

NOTE: The reverse may not activate if the belt is positioned too high in the driven pulley. If reverse activation does not work properly, ensure the drive belt is properly adjusted. Adjust the drive belt lower in the driven pulley if needed.

## Track

### Track Condition

**⚠ WARNING**

**Remove tether cord cap from engine cut-off switch before performing any maintenance or adjustment, unless otherwise specified. Vehicle must be parked in a safe place, away from the trail.**

Remove tether cord cap from engine cut-off switch.

Lift the rear of the snowmobile and support it with a wide-base snowmobile mechanical stand with a rear deflector panel. With the engine off, rotate the track by hand, and inspect condition. If worn or cut, or if track fibers are exposed, or if missing or defective inserts or guides are noted; contact an authorized Ski-Doo dealer.

*Snowmobiles Equipped with Traction Enhancing Products*

If your snowmobile is equipped with a BRP approved studded track, PROCEED WITH A VISUAL INSPECTION OF YOUR TRACK BEFORE EACH USE.

Look for any defects, such as:

- Perforations in the track
- Tears in the track (particularly around traction holes on studded tracks)
- Lugs that are broken or torn off, exposing portions of rods
- Delamination of the rubber
- Broken rods
- Broken studs (studded tracks)
- Bent studs (studded tracks)
- Missing studs
- Studs that are torn off the track
- Missing track guide(s)
- Also, ensure that studs nut are tighten to the recommended torque.

On approved studded tracks, replace broken or damaged studs immediately. If your track shows signs of deterioration, it must be replaced immediately. When in doubt, ask your dealer.

**⚠ WARNING**

Riding with a damaged track or studs could lead to a loss of control.

For complete information on traction enhancing products, refer to *TRACTION ENHANCING PRODUCTS* in *SAFETY INFORMATION* at the beginning of this Operator's Guide.

**Track Tension and Alignment**

NOTE: Track tension and alignment are interrelated. Do not adjust one without the other.

**⚠ WARNING**

To prevent serious injury to individuals near the snowmobile:

- NEVER stand behind or near a moving track.
- Always use a wide-base snowmobile stand with a rear deflector panel if it is necessary to rotate track.
- When the track is raised off the ground, only run it at the lowest possible speed.

Centrifugal force could cause debris, damaged or loose studs, pieces of torn track, or an entire severed track to be violently thrown backwards out of the tunnel with tremendous force, possibly resulting in the loss of a leg or other serious injury.

Track Tension Verification

NOTE: Ride the snowmobile in snow about 15 to 20 minutes prior to adjusting track tension.

1. Remove tether cord cap from engine cut-off switch.
2. Lift rear of vehicle and support it off the ground.

**⚠ CAUTION** Use proper lifting techniques, notably using your legs force. Do not attempt to lift the rear of vehicle if it is above your limits.

3. Allow rear suspension to fully extend.
4. Use the TENSIOMETER (P/N 414 348 200).

414348200

5. Set deflection between 30 mm and 35 mm (1-3/16 in and 1-3/8 in) using bottom O-ring.

mmr2009-133-003_b

*DEFLECTION SETTING*
*1. Bottom O-ring set to specification*

6. Place upper O-ring to 0 kgf (0 lbf).
7. Position the tensiometer on track, halfway between front and rear idler wheels.
8. Push the tensiometer downwards until bottom O-ring (deflection set earlier) be aligned with the bottom of slider shoe.

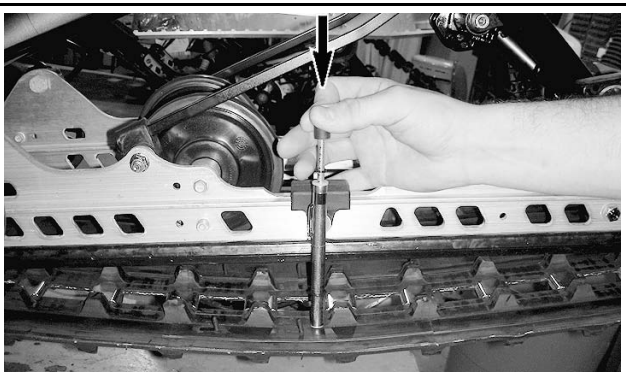

mmr2009-133-001_a

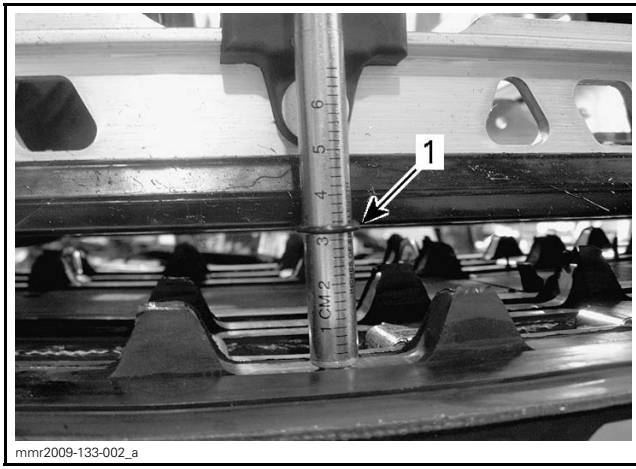

mmr2009-133-002_a

*1. Deflection O-ring aligned with slider shoe*

9. Read load recorded by the upper O-ring on the tensiometer.

mmr2009-133-003_a

*LOAD READING*
*1. Upper O-ring*

10. Load reading must be as per the following table.

| TRACK ADJUSTMENT SPECIFICATION | |
|---|---|
| Track deflection setting | 3.2 cm (1.26 in) |
| Track load reading | 6 kgf to 8.5 kgf (13 lbf to 19 lbf) |

11. If load reading is not in accordance with the specification, adjust track tension. Refer to *TRACK TENSION ADJUSTMENT*.

Track Tension Adjustment

1. Remove tether cord cap from engine cut-off switch.

**⚠ CAUTION** Use proper lifting techniques, notably using your legs force. Do not attempt to lift the rear of vehicle if it is above your limits.

2. Remove wheel caps.
3. Loosen the rear axle screws on both sides or, on 2 idler wheel models, the rear axel nut.
4. Tighten or loosen both adjustment screws (equally) to increase or decrease track tension.

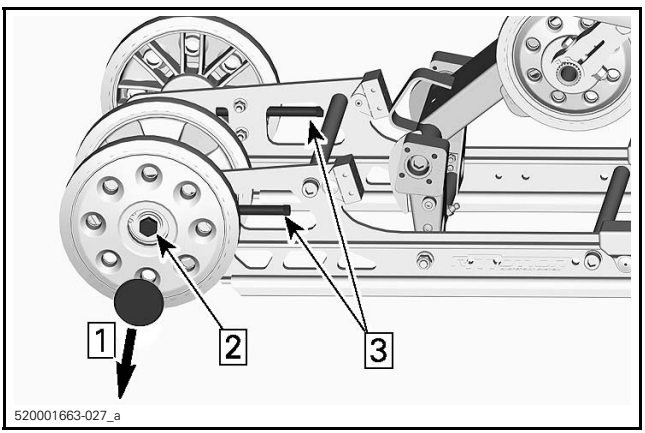


*Step 1: Remove cap*
*Step 2: Loosen the axle screw or nut*
*Step 3: Tighten or loosen adjustment screws*

5. If correct tension is unattainable, contact an authorized Ski-Doo dealer.
6. Retighten the rear axle fasteners to specification.

| TIGHTENING TORQUE | |
|---|---|
| Rear idler wheel retaining screws **(3 wheels and 4 wheels models)** | 48 N•m ± 6 N•m (35 lbf•ft ± 4 lbf•ft) |
| Rear idler wheel retaining nut and screw **(2 idler wheels models)** | 24.5 N•m ± 3.5 N•m (18 lbf•ft ± 3 lbf•ft) |

7. Check track alignment as described below.

Track Alignment

**⚠ WARNING**

**Before checking track alignment, ensure that the track is free of all particles which could be thrown out while track is rotating. Keep hands, tools, feet and clothing clear of track. Always lift the snowmobile on a wide-base stand with a rear deflector panel. Ensure no one is standing in close proximity to the snowmobile, especially at the rear of the track. Never rotate track at high speed.**
**Centrifugal force could cause debris, damaged or loose studs, pieces of torn track, or an entire severed track to be violently thrown backwards out of the tunnel with tremendous force.**

1. Lift rear of vehicle and support it off the ground.

**⚠ CAUTION** **Use proper lifting techniques, notably using your legs force. Do not attempt to lift the rear of vehicle if it is above your limits.**

2. Start engine and accelerate slightly so that track slowly turns. This must be done in a short period of time (15 to 20 seconds).
3. Check that the track is well centered; equal distance on both sides between edges of track guides and slider shoes.

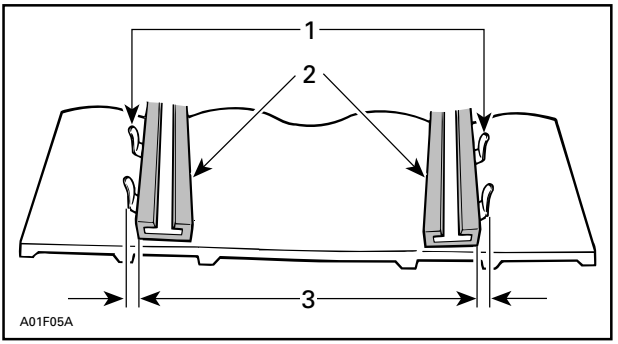


*1. Guides*
*2. Slider shoes*
*3. Equal distance*

4. To correct track alignment:

   4.1 Stop engine.

   4.2 Remove tether cord cap from engine cut-off switch.

> **⚠ WARNING**
>
> Remove tether cord cap from engine cut-off switch before performing any maintenance or adjustment, unless otherwise specified. Vehicle must be parked in a safe place, away from the trail.

   4.3 Loosen the rear axle nut.

   4.4 Tighten adjustment screw on side where the slider shoe is the farthest from the track insert guides.

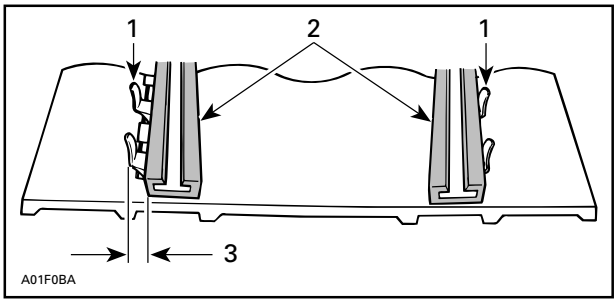


*1. Guides*
*2. Slider shoes*
*3. Tighten on this side*

5. Tighten the rear axle nut.

**⚠ WARNING**

**Properly tighten wheel retaining bolt, otherwise wheel may come off and cause track to "lock".**

6. Restart engine and rotate track slowly to recheck alignment.
7. Tighten the rear axle nut to specified torque.

| TIGHTENING TORQUE | |
|---|---|
| Rear idler wheel retaining screws **(3 and 4 idler wheels system)** | 48 N•m ± 6 N•m (35 lbf•ft ± 4 lbf•ft) |
| Rear idler wheel retaining nut and screw **(2 idler wheels system)** | 24.5 N•m ± 3.5 N•m (18 lbf•ft ± 3 lbf•ft) |

8. Reposition snowmobile on the ground.

## Suspension

### Rear Suspension Condition

Visually inspect all suspension components including slider shoes, springs, wheels, etc.

NOTE: During normal driving, snow will act as a lubricant and coolant for the slider shoes. Extensive riding on ice or sanded snow, will create excessive heat build-up and cause premature slider shoe wear.

**Suspension Stopper Strap Condition**

Inspect stopper straps for wear and cracks, bolt and nut for tightness. If loose inspect holes for deformation. Replace as required. Tighten nut to specification.

| TIGHTENING TORQUE | |
|---|---|
| Stopper strap nut | 10 N•m ± 1 N•m (89 lbf•**in** ± 9 lbf•**in**) |

**Suspension Lubrication**

Lubricate the following suspension pivots at grease fittings. Refer to *MAINTENANCE SCHEDULE* for maintenance frequency.

| SUSPENSION GREASE | |
|---|---|
| Scandinavia | SYNTHETIC GREASE SUSPENSION (EUR) (P/N 779226) |
| All other countries | SYNTHETIC GREASE SUSPENSION (P/N 779163) |

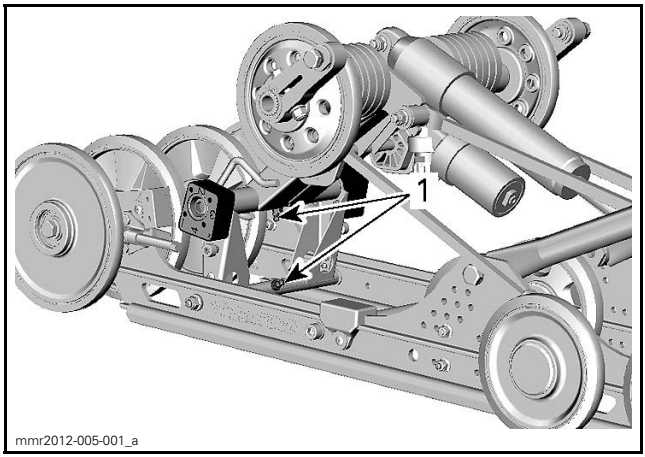


*rMOTION*
*1. Grease fitting*

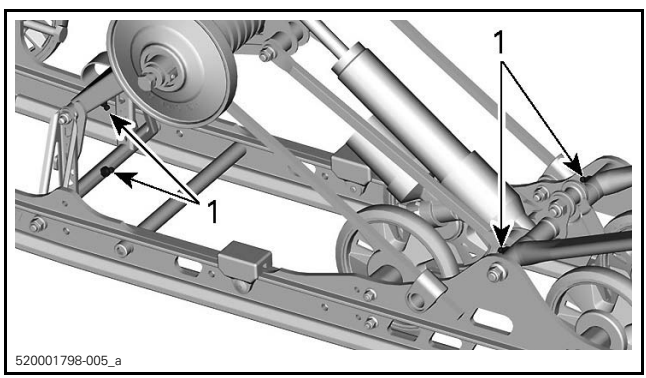


*cMOTION*
*1. Grease fitting*

**Steering and Front Suspension Condition**

Visually inspect steering and front suspension for tightness of components (steering arms, control arms and links, tie rods, ball joints, ski bolts, ski legs, etc.). If necessary, contact an authorized Ski-Doo dealer.

## Skis

### Wear and Condition of Skis and Runners

Check the condition of the skis and ski runner carbides. If worn, contact an authorized Ski-Doo dealer.

**⚠ WARNING**

Excessively worn skis and/or ski runners will adversely affect snowmobile control.

## Fuses

### Access to Fuse Block

Open RH side panel, refer to *CONTROLS, INSTRUMENTS AND EQUIPMENT*.

### Fuses Location

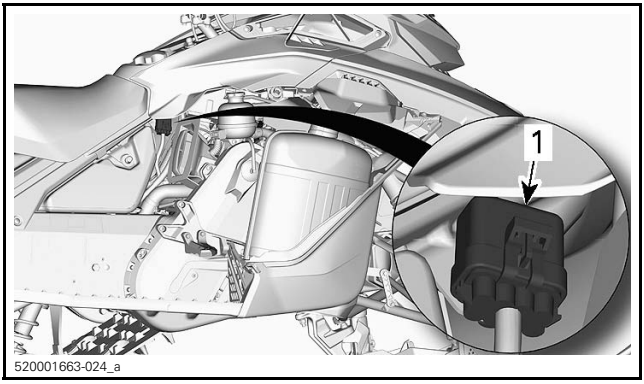


*TYPICAL*
*1. Fuse block*

Unlock fuse block from its cover.

*Renegade Enduro, Grand Touring Limited*

| FUSE IDENTIFICATION | | AMPERAGE RATING |
|---|---|---|
| F1 | Clock/Start/Relays | 5 A |
| F2 | Headlamps | 20 A |
| F3 | Taillight/Brake/PAC | 10 A |
| F4 | ECM/RFID/O2 Sensor/CAPS | 10 A |
| F5 | Fuel Pump/Starter | 10 A |
| F6 | Fan | 15 A |
| F7 | Accessory | 15 A |
| F8 | Cluster | 15 A |
| F9 | ACS | 15 A |
| F10 | RER | 30 A |

| RELAY IDENTIFICATION | |
|---|---|
| RY1 | Main Relay |
| RY2 | Headlamps |
| RY3 | Fan |
| RY4 | Reverse |
| RY5 | Accessory |
| RY6 | Lighting |

*Renegade, Grand Touring Sport and Expedition Sport*

| FUSE IDENTIFICATION | | AMPERAGE RATING |
|---|---|---|
| F1 | Start/Relays | 5 A |
| F2 | Accessory | 15 A |
| F3 | Taillight/Brake/PAC | 10 A |
| F4 | ECM/RFID/O2 Sensor/CAPS | 10 A |
| F7 | Fuel Pump | 10 A |
| F8 | Cluster | 15 A |
| F9 | Fan | 15 A |
| F10 | Headlamp | 20 A |
| RY1 | Main Relay | - |
| RY2 | Accessory Relay | - |
| RY3 | Fan Relay | - |
| RY4 | Lighting Relay | - |

**Fuse Inspection**

Check fuse condition and replace it if necessary.

To remove fuse from holder, pull fuse out. Check if filament is melted.

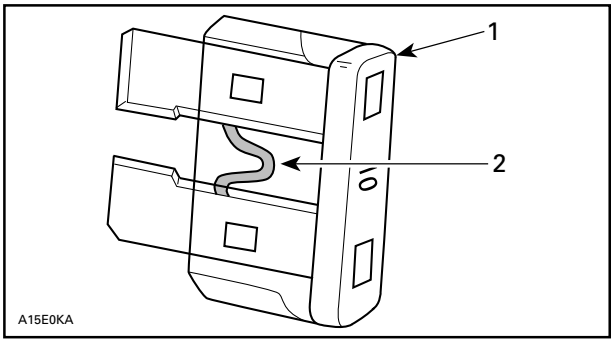


*1. Fuse*
*2. Check if melted*

**⚠ WARNING**

Do not use a higher rated fuse.

**⚠ WARNING**

If fuse has burnt out, source of malfunction should be determined and corrected before restarting. See an authorized Ski-Doo dealer for servicing.

## Headlights

### Headlights Bulb Replacement

1. Open the storage compartment.

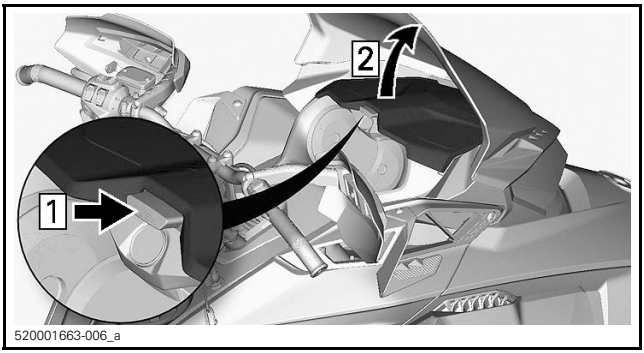

520001663-006_a

2. Remove the gauge retaining screws.

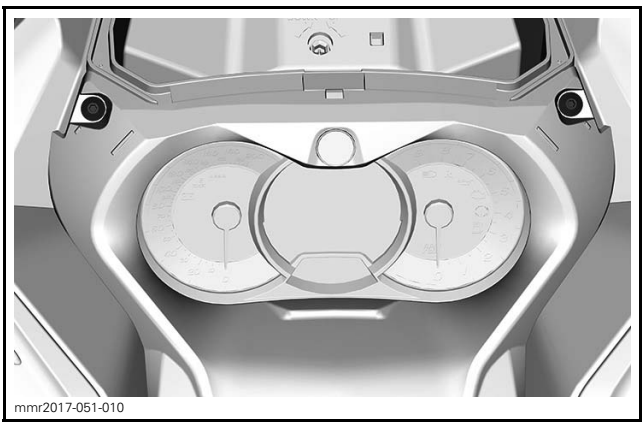
mmr2017-051-010

3. Lift the front of the gauge, then slide it forward to remove it.

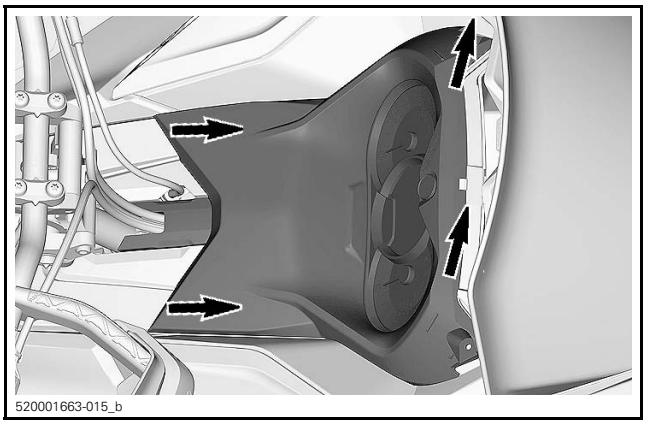
520001663-015_b

4. Set gauge aside.
5. Remove the storage compartment.

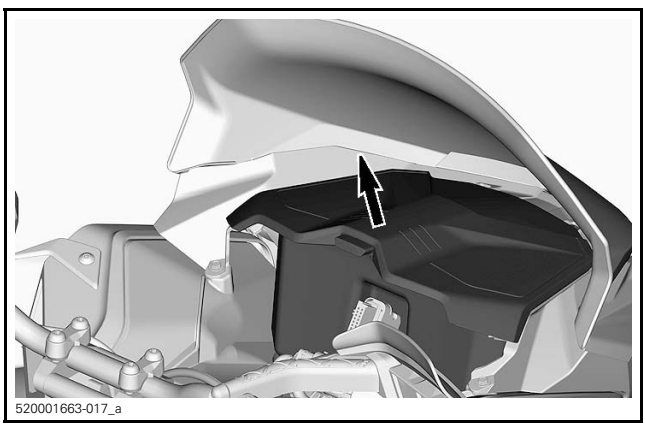
520001663-017_a

6. Disconnect bulb connector.

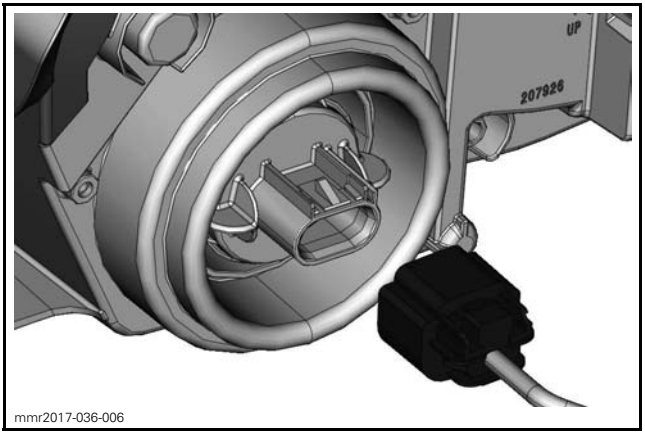

mmr2017-036-006

7. Unlock bulb by turning it counterclockwise.
8. Pull bulb out.

NOTE: Ensure bulb seal stays in place.

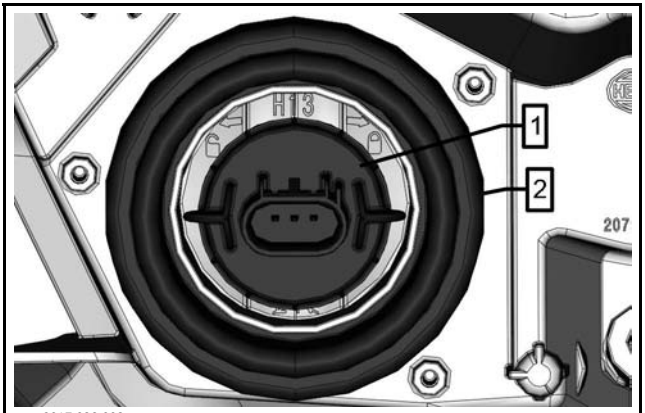

mmr2017-036-008

*1. Bulb*
*2. Bulb seal*

Install a new bulb using the reverse of the removal procedure.

**NOTICE** Never touch glass portion of an halogen bulb with bare fingers, it shortens its operating life. If glass is touched, clean it with isopropyl alcohol which will not leave a film on the bulb.

Check headlights operation.

**Headlights Beam Aiming**

Open the storage compartment, see *FRONT STORAGE COMPARTMENT*.

Turn the adjustment screw with appropriate screwdriver to reach desired beam height.

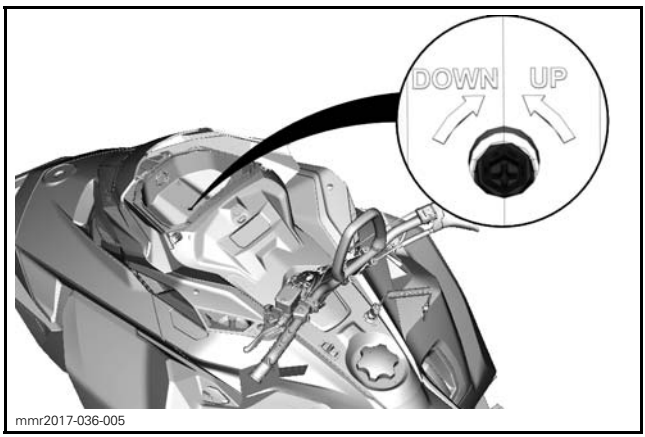

mmr2017-036-005

## Removing Battery

1. Remove cargo box (if applicable).
2. Disconnect passenger heated grips (if applicable).
3. Remove seat and backrest (if applicable).
4. Remove battery cover.

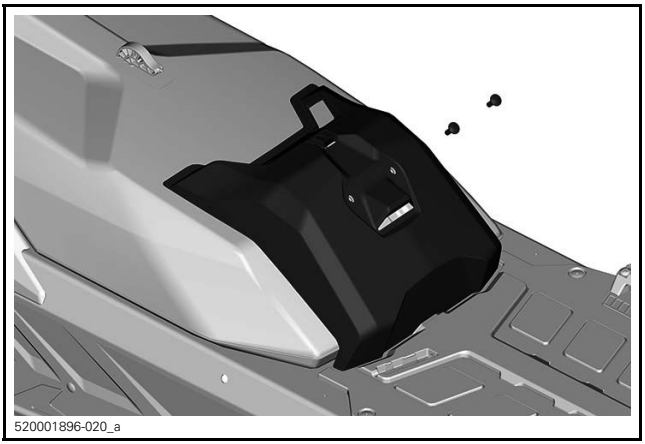


*TYPICAL*

5. Disconnect negative before positive terminal.

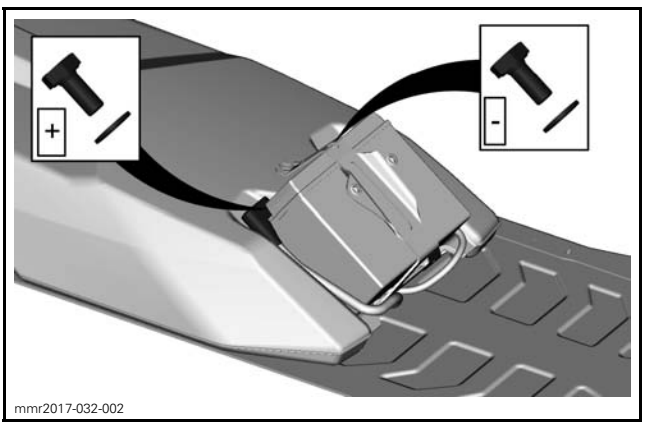


6. Remove battery hold down bracket.

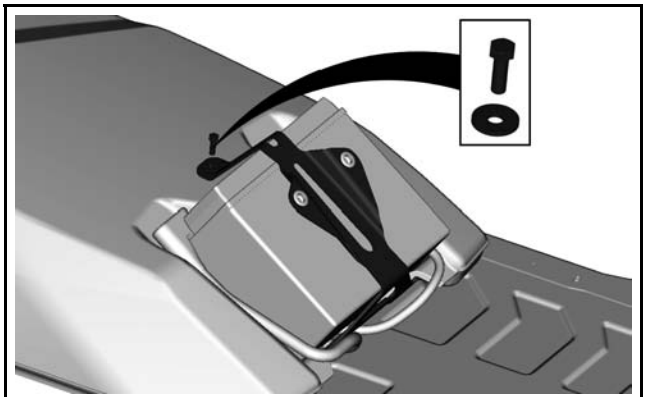
mmr2017-032-003

7. Remove battery.

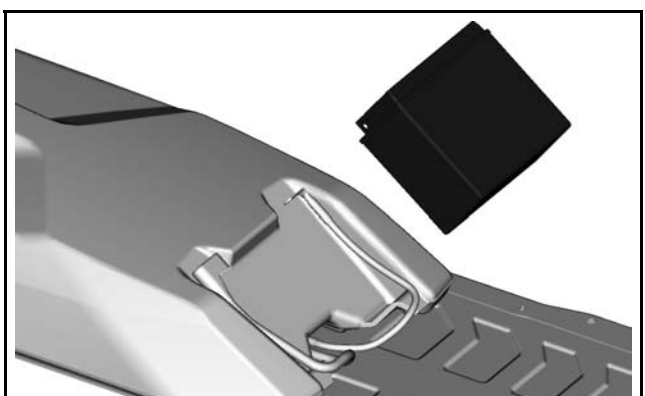
mmr2017-032-004

## Installing Battery

The installation is the reverse of the removal procedure. However, pay attention to the following details.

| TIGHTENING TORQUE | |
|---|---|
| Battery terminals (positive and negative) | 10 N•m ± 2 N•m (89 lbf•**in** ± 18 lbf•**in**) |
| Battery hold down bracket | 5 N•m ± 0.5 N•m (44 lbf•**in** ± 4 lbf•**in**) |
| Battery cover retaining screws | 7 N•m ± 1 N•m (62 lbf•**in** ± 9 lbf•**in**) |

Reinstall the seat, backrest and cargo box if applicable.

# VEHICLE CARE

## Post-Operation Care

Remove snow and ice from rear suspension, track, front suspension, steering mechanism and skis.

**⚠ WARNING**

**Make sure tether cord cap is away from engine cut-off switch before standing in front the vehicle, getting close to the track or rear suspension components.**

Always cover your snowmobile when leaving it outside overnight or during extended periods of inactivity. This will protect it from frost and snow as well as help retain its appearance.

## Vehicle Cleaning and Protection

Wash snowmobile with water mixed with a mild detergent. Use only microfiber cloths or an equivalent.

***NOTICE*** **It is necessary to use microfiber cloths or equivalent on windshield and hood to avoid damaging further surfaces to clean.**

To remove grease, oil and grime, use XPS BRAKES AND PARTS CLEANER (P/N 219 701 776) or CLEANER AND DEGREASER PRO C1 (P/N 779262).

***NOTICE*** **Do not use XPS Brake and Parts Cleaner on plastic, decals or vinyl.**

To remove stubborn dirt from all plastic and vinyl surfaces, use CLEANER AND DEGREASER PRO C1 (P/N 779262).

***NOTICE*** **Never clean plastic parts or hood with strong detergent, degreasing agent, paint thinner, acetone, products containing chlorine, etc.**

Wax painted portion of the vehicle for better protection.

NOTE: Apply wax on glossy finish only.

## STORAGE

During summer, or when a snowmobile is not in use for more than three months, proper storage is necessary.

| STORAGE |
| --- |
| Clean the vehicle |
| Add fuel stabilizer to fuel following the product manufacturer recommendations.<br>Run the engine after adding the product to the fuel |
| Lubricate engine |
| Lubricate brake lever pivot |
| Lubricate rear suspension |
| Charge battery monthly to keep it fully charged during storage (on models with electric starter) |
| Block muffler outlet with rags |
| Lift rear of vehicle until track is clear of the ground. Do not release track tension |

⚠ **CAUTION** Use appropriate lifting device or have assistance to share lifting stress. If a lifting device is not used, use proper lifting techniques, notably using your legs force. Do not attempt to lift the rear of vehicle if it is above your limits.

***NOTICE*** The snowmobile has to be stored in a cool and dry place and covered with an opaque but ventilated tarpaulin. This will prevent sun rays and grime from affecting plastic components and vehicle finish.

***NOTICE*** Fuel stabilizer should be added prior to engine lubrication to ensure carburetor protection against varnish deposits.

# TECHNICAL INFORMATION

# VEHICLE IDENTIFICATION

## Vehicle Description Decal

Vehicle description decal is located on right hand side of tunnel.

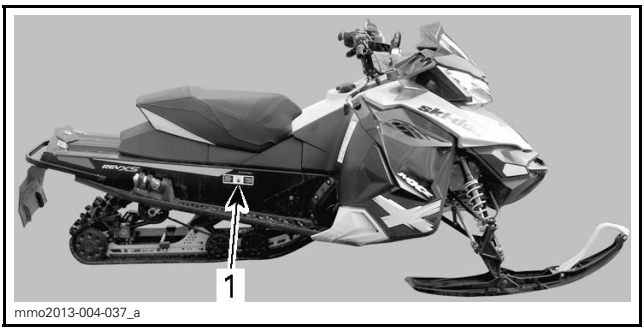


*TYPICAL*
1. *Vehicle description decal*

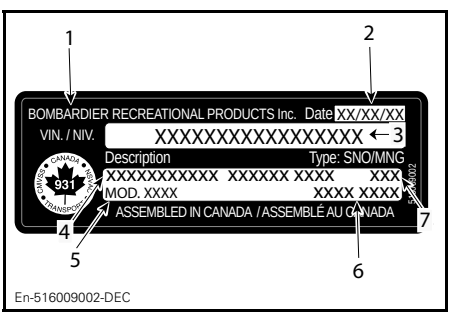


*VEHICLE DESCRIPTION DECAL*
1. *Manufacturer name*
2. *Manufacturing date*
3. *Vehicle identification number (VIN)*
4. *Model, package name and year*
5. *Model number*
6. *Vehicle weight (European models)*
7. *Vehicle engine power (European models)*

## Identification Numbers

The main components of your snowmobile (engine and frame) are identified by different identification numbers. It may sometimes become necessary to locate these numbers for warranty purposes

or to trace your snowmobile in the event of loss. These numbers are required by the authorized Ski-Doo dealer to complete warranty claims properly. We strongly recommend that you take note of all the identification numbers on your snowmobile and supply them to your insurance company.

**Vehicle Identification Number (VIN)**

VIN is scribed on vehicle description decal. See above. It is also engraved on tunnel near vehicle description decal.

Model number and model year are part of the information found in the VIN. See illustration.

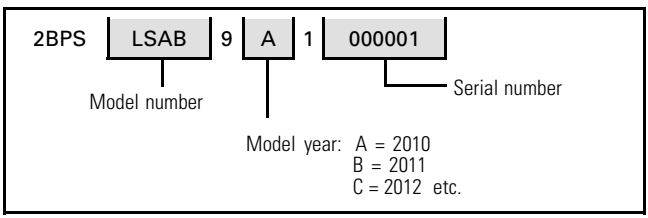


**Engine Identification Number Location**

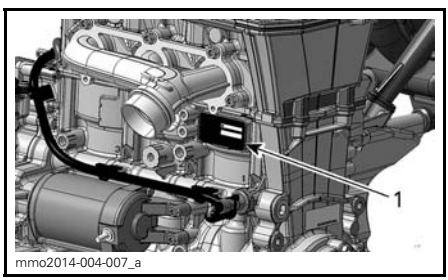


*1. Engine identification number*

## NOISE EMISSION AND VIBRATION VALUES (ALL COUNTRIES EXCEPT CANADA/UNITED STATES)

| MODEL | | 900 ACE | 900ACE Turbo |
|---|---|---|---|
| NOISE EMISSION AND VIBRATION VALUES[1] | | | |
| Noise | Sound power level ($L_{WA}$) | 91,2 dB @ 3625 RPM (Uncertainty ($K_{wa}$) 3 dB) | 98,4 dB @ 3625 RPM (Uncertainty ($K_{wa}$) 3 dB) |
| Vibration | Hand-arm system | 3.15 $m/s^2$ @ 3625 RPM | <2.5 $m/s^2$ @ 3625 RPM |
| | Whole body at seat | <0.5$m/s^2$ @ 3625 RPM | <0.5$m/s^2$ @ 3625 RPM |
| [1]: Noise emission and Vibration values are measured in accordance with Standard ISMA 1:2014 on a paved surface, at neutral or without belt. | | | |

# EC DECLARATION OF CONFORMITY

The EC-Declaration of Conformity does not appear in this version of the Operator's Guide.

Please refer to the printed version that was delivered with your vehicle.

# EPA CERTIFIED ENGINES

## Engine Emissions Information

### Manufacturer's Responsibility

Beginning with **2007 model year engines**, snowmobile manufacturers of snowmobile engines need to determine the exhaust emission levels for each engine horsepower family and certify these engines with the United States of America Environmental Protection Agency (EPA). An emissions control information label, showing emission levels and engine specifications, must be placed on each vehicle at the time of manufacture.

### Dealer's Responsibility

When performing service on a certified Ski-Doo snowmobiles that carry an emissions control information label, adjustments must be kept within published factory specifications.

Replacement or repair of any emission related component must be executed in a manner that maintains emission levels within the prescribed certification standards.

Dealers are not to modify the engine in any manner that would alter the horsepower or allow emission levels to exceed their predetermined factory specifications.

Exceptions include manufacturer's prescribed changes, such as altitude adjustments for example.

### Owner Responsibility

The owner/operator is required to have engine maintenance performed to maintain emission levels within prescribed certification standards.

The owner/operator is not to, and should not allow anyone to modify the engine in any manner that would alter the horsepower or allow emissions levels to exceed their predetermined factory specifications.

### EPA Emission Regulations

All Ski-Doo snowmobiles manufactured by BRP are certified to the EPA as conforming to the requirements of the regulations for the control of air pollution from new snowmobile engines. This certification is contingent on certain adjustments being set to factory standards. For this reason, the factory procedure for servicing the product must be strictly followed and, whenever practicable, returned to the original intent of the design.

The responsibilities listed above are general and in no way a complete listing of the rules and regulations pertaining to the EPA requirements on exhaust emissions for snowmobile products. For more detailed information on this subject, you may contact the following locations:

**MAIL:**

U.S. Environmental Protection Agency
Certification Division
Gasoline Engine Compliance Center
2000 Traverwood Drive
Ann Arbor MI 48105
USA

**INTERNET WEB SITE:**

www.epa.gov/otaq/

## RADIO FREQUENCY DIGITALLY ENCODED SECURITY SYSTEM (RF D.E.S.S. KEY)

This device complies with FCC Part 15 and Industry Canada license exempt RSS standard(s).

Operation is subject to the following two conditions: (1) this device may not cause interference, and (2) this device must accept any interference, including interference that may cause undesired operation of the device.

Changes or modifications not expressly approved by the party responsible for compliance could void the user's authority to operate the equipment.

IC Registration Number: 12006A-M01456

FCC ID: 2ACERM01456

We, the party responsible for compliance, declare under our sole responsibility that the device is in conformity with the provisions of the following Council Directive: 2014/53/EU. To which this declaration relates is in conformity with the essential requirements and other relevant requirements. The product is in conformity with the following directives, harmonized standards and regulations:

Radio Equipment Directive (RED) 2014/53/EU and Harmonized Standards:

EN 300 330-2, EN 60950-1

## SPECIFICATIONS (ENGINE)

| ENGINE | 900 ACE |
|---|---|
| Engine type | Rotax 903, liquid cooled, 4-stroke, D.O.H.C., dry sump |
| Number of cylinder | 3 |
| Bore | 74 mm (2.9 in) |
| Stroke | 69.7 mm (2.74 in) |
| Displacement | 899 $cm^3$ (54.9 $in^3$) |
| Maximum power engine speed | 7250 RPM |

| ENGINE | 900 ACE TURBO |
|---|---|
| Engine type | Rotax 903, liquid cooled, 4-stroke, D.O.H.C., dry sump, turbo with intercooler |
| Number of cylinder | 3 |
| Bore | 74 mm (2.9 in) |
| Stroke | 69.7 mm (2.74 in) |
| Displacement | 899 $cm^3$ (54.9 $in^3$) |
| Maximum power engine speed | 7750 RPM |

| FUEL SYSTEM | |
|---|---|
| Fuel delivery | Multi point EFI, 46 mm heated throttle body |
| Idle speed (not adjustable) | 1200 ± 200 RPM |

| ELECTRICAL SYSTEM | | |
|---|---|---|
| Total system output | | 30 A @ 14.5 V<br>1340 W @ 6000 RPM |
| Spark plug | Type 900 ACE | NGK ILKR8Q7<br>(engine and spark plug threads are indexed) |
| | Gap 900 ACE | Not adjustable<br>0.6 mm to 0.7 mm<br>(.024 in to .028 in) |
| | Type 900 ACE Turbo | NGK LMAR9AI-8 |
| | Gap 900 ACE Turbo | Not adjustable<br>0.7 mm to 0.8 mm<br>(.028 in to .031 in) |

| LUBRICATION SYSTEM | | |
|---|---|---|
| Engine oil | Type Refer to *RECOMMENDED OIL* | Scandinavia:<br>4T 0W40 SYNTHETIC OIL (EUR)<br>(P/N 779286)<br>All other countries:<br>4T 0W40 SYNTHETIC OIL<br>(P/N 779139)<br>or equivalent. |
| | Quantity | Oil change with filter: 3.5 L<br>(3.7 qt (U.S. liq.)) |

## SPECIFICATIONS (VEHICLE)

| COOLING SYSTEM | | |
|---|---|---|
| Coolant | Type | Scandinavia: EXTENDED LIFE PRE-MIXED COOLANT (EUR) (P/N 779223) All other countries: EXTENDED LIFE PRE-MIXED COOLANT (P/N 779150) or or coolant specifically formulated for aluminum engines. Ethyl glycol and distilled water (50%/50%) |

| FUEL SYSTEM | | | |
|---|---|---|---|
| Fuel pump | | | In-tank electrical |
| Fuel | 900 ACE | Type | Regular unleaded Refer to *FUEL REQUIREMENTS* |
| | | Octane rating | 87 Pump Posted AKI (R+M)/2) |
| | 900 ACE Turbo | Type | Premium unleaded gasoline Refer to *FUEL REQUIREMENTS* |
| | | Octane rating | 91 Pump Posted AKI (RON+MON)/2 95 RON |
| Fuel tank capacity | | | 36 L (9.5 U.S. gal.) |

| ELECTRICAL SYSTEM | |
|---|---|
| Battery | 12 V, 18 A•h |
| Headlamp | 2 x 60/55 W (H-13) |
| Taillight and stoplight | 2.6 W / 139m W LED |
| Fuses | Refer to *FUSES* in *MAINTENANCE* |

| DRIVE SYSTEM | | | |
|---|---|---|---|
| Chaincase oil | Type | | Scandinavia: SYNTHETIC CHAINCASE OIL (EUR) (P/N 779185) All other countries: SYNTHETIC CHAINCASE OIL (P/N 779156) |
| | Capacity | | 350 ml (12 U.S. oz) |
| Chain drive ratio | | 900 ACE | 24/49 |
| | | 900 ACE Turbo | 25/45 |
| Drive pulley | Type | | pDrive |
| | Engagement RPM | All | 2200 ± 100 RPM |
| Driven pulley | Type | | QRS |

| DRIVE SYSTEM | | | |
|---|---|---|---|
| Drive sprocket number of teeth | | All Renegades Grand Touring Sport Expedition Sport | 8 |
| | | Grand Touring Limited | 16 |
| Track | Width | All excl. Expedition Sport | 38 cm (15 in) |
| | | Expedition Sport | 40.6 cm (16 in) |
| | Length | All excl. Expedition Sport | 348.7 cm (137 in) |
| | | Expedition Sport | 391.2 cm (154 in) |
| | Profile height | All excl. Expedition Sport | 31.8 mm (1.25 in) OR 40.6 mm (1.6 in) |
| | | Expedition Sport | 38.1 mm (1.5 in) |
| Track adjustment | | Deflection | 3.2 cm (1.26 in) |
| | | Force | 6.0 kgf to 8.5 kgf (13 lbf to 19 lbf) |

| BRAKE SYSTEM | | |
|---|---|---|
| Brake fluid | Type | DOT 4 |
| | Quantity | 65 ml (2.2 U.S. oz) |

| FRONT SUSPENSION | | |
|---|---|---|
| Suspension type | | RAS 3 |
| Suspension maximum travel | Renegade<br>Adrenaline<br>Renegade Enduro | 220 mm (8.7 in) |
| | Renegade X | 233 mm (9.2 in) |
| | Renegade X-RS | 255 mm (10 in) |
| | Expedition Sport | 210 mm (8.3 in) |
| | Grand Touring | 206 mm (8.1 in) |
| Shock absorber type | Renegade X-RS | KYB Pro 36 |
| | Renegade<br>Adrenaline<br>Renegade Enduro<br>Renegade X | HPG Plus |
| | Grand Touring<br>Limited | HPG |
| | Grand Touring Sport<br>Expedition Sport | Motion control |

| REAR SUSPENSION | | |
|---|---|---|
| Suspension type | All Renegades<br>Grand Touring<br>Limited | rMotion |
| | Grand Touring Sport | SC-5M |
| | Expedition Sport | SC-5U |
| Suspension maximum travel<br>Measured at rear arm | All excl.<br>Expedition Sport<br>and Grand Touring<br>Sport | 270 mm (10.6 in) |
| | Expedition Sport | 239 mm (9.4 in) |
| | Grand Touring Sport | 245 mm (9.6 in) |

| REAR SUSPENSION | | | |
|---|---|---|---|
| Shock absorber type | Center | Renegade Adrenaline<br>Renegade Enduro<br>Grand Touring LTD | HPG |
| | | Renegade X | HPG Plus |
| | | Renegade X_RS | KYB PRO 40 EA |
| | | Grand Touring Sport<br>Expedition Sport | Motion control |
| | Rear | Renegade Adrenaline<br>Grand Touring Sport<br>Expedition Sport | HPG |
| | | Renegade Enduro<br>Grand Touring LTD | ACS (Air Controlled Suspension) |
| | | Renegade X | KYB PRO 36 EA |
| | | Renegade X-RS | KYB PRO 40 EA |

| WEIGHT AND DIMENSIONS | | |
|---|---|---|
| Mass (dry) | Renegade Adrenaline 900 ACE | 226 kg (498 lb) |
| | Renegade Adrenaline 900 ACE Turbo | 239 kg (527 lb) |
| | Renegade Enduro 900 ACE | 240 kg (529 lb) |
| | Renegade Enduro 900 ACE Turbo | 252 kg (556 lb) |
| | Renegade X | 239 kg (527 lb) |
| | Renegade X-RS | 247 kg (545 lb) |
| | Grand Touring Limited 900 ACE | 269 kg (593 lb) |
| | Grand Touring Limited 900 ACE Turbo | 282 kg (622 lb) |
| | Grand Touring Sport | 249 kg (549 lb) |
| | Expedition Sport | 254 kg (560 lb) |
| Overall length | All except Expedition Sport | 301.4 cm (118.7 in) |
| | Expedition Sport | 335 cm (131.9 in) |
| Overall width | All except Expedition Sport | 121.7 cm (47.9 in) |
| | Expedition Sport | 114 cm (44.9 in) to 118 cm (46.5 in) |

| WEIGHT AND DIMENSIONS | | |
|---|---|---|
| Overall height | Renegade Adrenaline Renegade Enduro | 133.1 cm (52.4 in) |
| | Renegade X | 126.7 cm (49.9 in) |
| | Renegade X-RS | 122.2 cm (48.1 in) |
| | Grand Touring Sport Expedition Sport | 140.5 cm (55.3 in) |
| Ski stance | All except Expedition Sport | 107.7 cm (42.4 in) |
| | Expedition Sport | 97.5 cm (38.4 in) to 102 cm (40.2 in) |

***This page is intentionally blank***

# TROUBLE-SHOOTING

# TROUBLESHOOTING GUIDELINES

## ELECTRIC STARTER DOES NOT WORK

1. **Emergency engine stop switch in OFF position or tether cord cap not installed on engine cut-off switch.**
   – *Place the emergency engine stop switch in the ON position and install tether cord cap (on engine cut-off switch.*
2. **Throttle applied while attempting an engine start.**
   – *Release throttle while cranking.*

## ENGINE IS CRANKED BUT FAILS TO START

1. **No fuel to the engine.**
   – *Check fuel tank level, add fuel if necessary.*
2. **System voltage too low.**
   – *Contact an authorized Ski-Doo dealer.*

## ENGINE RPM DOES NOT REACH CLUTCH ENGAGEMENT POINT

1. **D.E.S.S. did not read D.E.S.S. key code in the tether cord cap. D.E.S.S. pilot lamp blinks (slow short beeps/repetitive).**
   – *Properly install tether cord cap.*
2. **D.E.S.S. has read a different code than the one programmed. D.E.S.S. pilot lamp blinks rapidly (fast short beeps/repetitive).**
   – *Install a tether cord cap for which this snowmobile was programmed.*
3. **ECM does not recognize the D.E.S.S. key.**
   – *Refer to an authorized Ski-Doo dealer.*

## ENGINE LACKS ACCELERATION OR POWER

1. **Engine warm-up in progress.**
   – *Drive vehicle at low speeds for a few minutes.*
2. **Engine break-in period not completed.**
   – *Complete break-in period.*
3. **Drive and driven pulleys require servicing.**
   – *Contact an authorized SKI-DOO dealer.*

## ENGINE LACKS ACCELERATION OR POWER (cont'd)

4. **Engine overheats.**
   - *Check coolant level, see MAINTENANCE PROCEDURES.*
   - *Check heat exchangers cleanliness. Clean if necessary.*
5. **Drive belt worn too thin.**
   - *If the drive belt has lost more than 3 mm (1/8 in) of its original width, it will affect vehicle performance.*
   - *Replace drive belt.*
6. **Incorrect track adjustment.**
   - *See MAINTENANCE PROCEDURES and/or an authorized SKI-DOO dealer for proper alignment and tension adjustments.*
7. **Fuel pressure too low.**
   - *Seek service from an authorized Ski-Doo dealer, repair shop, or person of your own choosing for maintenance, repair, or replacement. Please refer to the US EPA EMISSIONS-RELATED WARRANTY contained herein for information about warranty claims.*

## ENGINE BACKFIRES

1. **Engine is running too hot.**
   - *See item 4 of ENGINE LACKS POWER.*
2. **Ignition timing is incorrect or there is an ignition system failure.**
   - *Seek service from an authorized Ski-Doo dealer, repair shop, or person of your own choosing for maintenance, repair, or replacement. Please refer to the US EPA EMISSIONS-RELATED WARRANTY contained herein for information about warranty claims.*
3. **Exhaust system leak.**
   - *Seek service from an authorized Ski-Doo dealer, repair shop, or person of your own choosing for maintenance, repair, or replacement. Please refer to the US EPA EMISSIONS-RELATED WARRANTY contained herein for information about warranty claims.*

## ENGINE BACKFIRES (cont'd)

**4. Fuel pressure too low.**

– *Seek service from an authorized Ski-Doo dealer, repair shop, or person of your own choosing for maintenance, repair, or replacement. Please refer to the US EPA EMISSIONS-RELATED WARRANTY contained herein for information about warranty claims.*

## ENGINE MISFIRES

**1. Water in fuel.**

– *Drain fuel system and refill with fresh fuel.*

## HEATED GRIPS/THUMB WARMERS ARE NOT WORKING

**1. Engine RPM is too low.**

– *Make sure engine RPM is above 2000.*

## ENGINE HAS SHUT DOWN

**1. The engine shuts down after long periods of idling.**

– *Do not let engine idle too long. Refer to VEHICLE WARM-UP in OPERATING INSTRUCTION.*

# MONITORING SYSTEM

## Pilot Lamps, Messages and Beeper Codes

Gauge pilot lamp(s) will inform you if an anomaly occurs or to inform you of a particular condition.

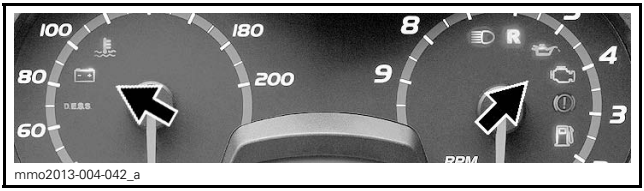


*TYPICAL — PILOT LAMPS*

Pilot lamp can flash alone or in combination with another lamp.

On the multifunction analog/digital gauge, the center display is used as a complement of the pilot lamps to give you a brief description if an anomaly occurs or to inform you of a particular condition.

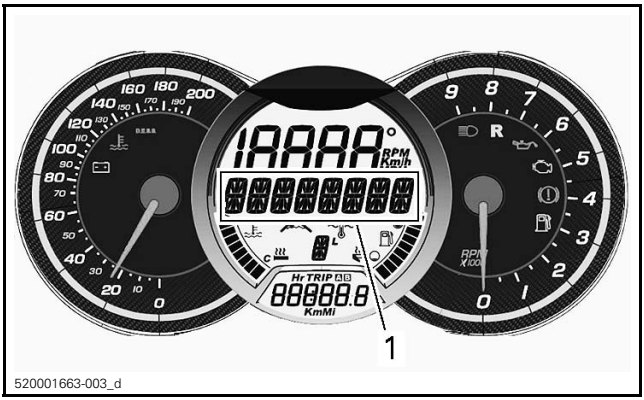


*1. Center Display*

Messages will be displayed with a beep code and pilot lamp(s).

Beeper codes will be heard and messages will be displayed to catch your attention.

See table below for details.

NOTE: Some of the listed pilot lamps and messages do not apply to all models. The message display is available only on the multifunction analog/digital gauge.

| PILOT LAMP ON | BEEPER | MESSAGE DISPLAY | DESCRIPTION |
|---|---|---|---|
| | 4 short beeps every 5 minutes | LOW OIL | Low engine oil pressure. Stop vehicle in a safe place then, check oil level. Fill to proper level. If oil level was correct, discontinue use and contact an authorized Ski-Doo dealer. |
| | 4 short beeps every 30 seconds | ENGINE OVERHEAT | Engine is overheating, reduce snowmobile speed and run in loose snow or stop engine immediately and let engine cool down. Check coolant level, refer to *MAINTENANCE*. If coolant level is correct and overheating persists, contact an authorized Ski-Doo dealer. Do not run the engine if condition persists. |

| PILOT LAMP ON | BEEPER | MESSAGE DISPLAY | DESCRIPTION |
|---|---|---|---|
| | Short beeps repeating rapidly | ENGINE OVERHEAT | Critical overheat. Stop engine immediately and let engine cool down. Check coolant level, refer to *MAINTENANCE*. If coolant level is correct and overheating persists, contact an authorized Ski-Doo dealer. Do not run the engine if condition persists. |
| | | ECM OVERHEAT | Critical overheat. Stop engine immediately and let engine cool down. If overheating persists, contact an authorized Ski-Doo dealer. Do not run the engine if condition persists. |
| | 4 short beeps every 5 minutes | LOW BAT | Indicate a low or high battery voltage condition. See an authorized Ski-Doo dealer as soon as possible. |
| | | HIGH BAT | |
| | 4 short beeps | CHECK ENGINE | Engine fault, see an authorized Ski-Doo dealer, repair shop or person of your own choosing as soon as possible. |
| | — | — | Displayed when brake is applied for more than 15 seconds while throttle lever is squeezed and vehicle is moving at more than 5 km/h (3 MPH). |
| — | Short beeps repeating rapidly | SHUTDOWN | Shutdown procedure in force due to engine overheating or fuel pump problem. |

| PILOT LAMP ON | BEEPER | MESSAGE DISPLAY | DESCRIPTION |
|---|---|---|---|
| — | — | COMMUNICA-TION | Communication problem between ECM and gauge. Stop engine, remove tether cord cap. Wait a few minutes, then start engine. If problem persists, contact an authorized Ski-Doo dealer. |
| **DESS** | 2 short beeps | — | Good key, vehicle ready to operate. |
| | Short beeps, repeating slowly | CHECK KEY | Unable to read key (bad connection). Make sure the key is clean and correctly snapped on post. |
| | Short beeps repeating rapidly | BAD KEY | Invalid key or key not programmed. Use the proper key for the vehicle or have the programmed. |
| — | — | (blinking) | Fuel level sensor problem. |

## Fault Codes

On the multifunction analog/digital gauge, fault codes can be displayed on the center display.

To read any active fault code, press and hold MODE (M) Button and simultaneously depress the HI/LOW beam switch repeatedly several times.

If two or more codes are registered, use SET (S) or MODE (M) to scroll.

To exit the fault codes mode, press and hold MODE (M) button.

Contact an authorized Ski-Doo dealer for code signification.

# *WARRANTY*

# BRP LIMITED WARRANTY USA AND CANADA: 2019 SKI-DOO® SNOWMOBILES

## 1) SCOPE OF THE LIMITED WARRANTY

Bombardier Recreational Products Inc. ("BRP")* warrants its 2019 Ski-Doo snowmobiles sold by authorized BRP dealers (as defined below) in the United States of America ("USA") and in Canada from defects in material or workmanship for the period and under the conditions described below. This limited warranty will become null and void if: (1) the snowmobile was used for racing or any other competitive activity, at any point, even by a previous owner; or (2) the snowmobile has been altered or modified in such a way so as to adversely affect its operation, performance or durability, or has been altered or modified to change its intended use.

Non-factory installed parts and accessories are not covered under this limited warranty. Please refer to the applicable parts and accessories limited warranty text.

## 2) LIMITATIONS OF LIABILITY

THIS WARRANTY IS EXPRESSLY GIVEN AND ACCEPTED IN LIEU OF ANY AND ALL OTHER WARRANTIES, EXPRESSED OR IMPLIED, INCLUDING WITHOUT LIMITATION ANY WARRANTY OF MERCHANTABILITY OR FITNESS FOR A PARTICULAR PURPOSE. TO THE EXTENT THAT THEY CANNOT BE DISCLAIMED, THE IMPLIED WARRANTIES ARE LIMITED IN DURATION TO THE LIFE OF THE EXPRESS WARRANTY. INCIDENTAL AND CONSEQUENTIAL DAMAGES ARE EXCLUDED FROM COVERAGE UNDER THIS WARRANTY. SOME STATES/PROVINCES DO NOT ALLOW FOR THE DISCLAIMERS, LIMITATIONS AND EXCLUSIONS IDENTIFIED ABOVE, AS A RESULT, THEY MAY NOT APPLY TO YOU. THIS WARRANTY GIVES YOU SPECIFIC RIGHTS, AND YOU MAY ALSO HAVE OTHER LEGAL RIGHTS WHICH MAY VARY FROM STATE TO STATE, OR PROVINCE TO PROVINCE.

Neither the distributor, any BRP dealer nor any other person has been authorized to make any affirmation, representation or warranty regarding the product, other than those contained in this limited warranty, and if made, shall not be enforceable against BRP. BRP reserves the right to modify this limited warranty at any time, being understood that such modification will not alter the warranty conditions applicable to the products sold while this warranty is in effect.

# 3) EXCLUSIONS – ARE NOT WARRANTED

The following are not warranted under any circumstances:

- Normal wear and tear;
- Routine maintenance items, tune ups, adjustments;
- Damage caused by failure to provide proper maintenance and/or storage, as described in the Operator's Guide;
- Damage resulting from removal of parts, improper repairs, service, maintenance, modifications or use of parts or accessories not manufactured or approved by BRP or resulting from repairs done by a person that is not an authorized servicing BRP dealer;
- Damage caused by abuse, abnormal use, neglect, use of the product on surfaces other than snow, or operation of the product in a manner inconsistent with the recommended operation described in the Operator's Guide;
- Damage resulting from accident, submersion, fire, theft, vandalism or any act of God;
- Operation with fuels, oils or lubricants which are not suitable for use with the product (see the Operator's Guide);
- Snow or water ingestion;
- Incidental or consequential damages, or damages of any kind including without limitation towing, storage, telephone, rental, taxi, inconvenience, insurance coverage, loan payments, loss of time, loss of income; and
- Damage resulting from studs installed on tracks if the installation does not conform to BRP's instructions.

# 4) WARRANTY COVERAGE PERIOD

This limited warranty will be in effect from the date of delivery to the first retail consumer or the date the product is first put into use, whichever occurs first and for the following period:

TWELVE (12) CONSECUTIVE MONTHS, for private or commercial use owners. However, the warranty coverage period on a snowmobile delivered between June 1st and December 1st of a given year will expire November 30th of the following year.

For emission-related components; please also refer to the *US EPA EMISSION-RELATED WARRANTY* contained herein.

The repair or replacement of parts or the performance of service under this warranty does not extend the life of this warranty beyond its original expiration date.

## 5) CONDITIONS REQUIRED FOR WARRANTY COVERAGE

This warranty coverage is available **only** if each of the following conditions has been fulfilled:

- The 2019 Ski-Doo snowmobile must be purchased as new and unused by its first owner from a BRP dealer authorized to distribute Ski-Doo snowmobiles in the country in which the sale occurred ("**BRP dealer**");
- The BRP specified pre-delivery inspection process must be completed and documented and signed by the purchaser;
- The 2019 Ski-Doo snowmobile must have undergone proper registration by an authorized BRP dealer;
- The 2019 Ski-Doo snowmobile must be purchased in the country in which the purchaser resides; and
- Routine maintenance outlined in the Operator's Guide must be timely performed in order to maintain warranty coverage. BRP reserves the right to make warranty coverage contingent upon proof of proper maintenance.

BRP will not honor this limited warranty to any private use owner or commercial use owner if one of the preceding conditions has not been met. Such limitations are necessary in order to allow BRP to preserve both the safety of its products, and also that of its consumers and the general public.

## 6) WHAT TO DO TO OBTAIN WARRANTY COVERAGE

The customer must cease using the snowmobile upon the appearance of an anomaly. The customer must notify a servicing BRP dealer within three (3) days of the appearance of a defect, and provide it with reasonable access to the product and reasonable opportunity to repair it. The customer must also present to the authorized BRP dealer, proof of purchase of the product and must sign the repair/work order prior to starting the repair in order to validate the warranty repair. All parts replaced under this limited warranty become the property of BRP.

# 7) WHAT BRP WILL DO

BRP's obligations under this warranty are limited to, at its sole discretion, repairing parts found defective under normal use, maintenance and service, or replacing such parts with new genuine Ski-Doo parts without charge for parts and labor , at any authorized BRP dealer during the warranty coverage period under the conditions described herein. No claim of breach of warranty shall be cause for cancellation or rescission of the sale of the snowmobile to the owner.

In the event that service is required outside of the country of original sale, the owner will bear responsibility for any additional charges due to local practices and conditions, such as, but not limited to, freight, insurance, taxes, license fees, import duties, and any and all other financial charges, including those levied by governments, states, territories and their respective agencies.

BRP reserves the right to improve or modify products from time to time without assuming any obligation to modify products previously manufactured.

# 8) TRANSFER

If the ownership of a product is transferred during the warranty coverage period, this limited warranty, subject to its terms and conditions, shall also be transferred and be valid for the remaining coverage period provided BRP or an authorized Ski-Doo Distributor/Dealer receives a proof that the former owner agreed to the transfer of ownership, in addition to the co-ordinates of the new owner.

# 9) CONSUMER ASSISTANCE

In the event of a controversy or a dispute in connection with this limited warranty, BRP suggests that you try to resolve the issue at the Ski-Doo Distributor/Dealer level. We recommend discussing the issue with the authorized Ski-Doo Distributor/Dealer's service manager or owner.

If the matter still remains unresolved, contact BRP by filling out the customer contact form at www.brp.com or contact BRP by mail at one of the addresses listed under the *CONTACT US* section of this guide.

# US EPA EMISSION-RELATED WARRANTY

Bombardier Recreational Products Inc. ("BRP")* warrants to the ultimate purchaser and each subsequent purchaser that this new engine, including all parts of its exhaust emission-control system and its evaporative emission-control system, meets two conditions:

1. It is designed, built, and equipped so it conforms at the time of sale to the ultimate purchaser with the requirements of 40 CFR 1051 and 40 CFR 1060.
2. It is free from defects in materials and workmanship that may keep it from meeting the requirements of 40 CFR 1051 and 40 CFR 1060.

Where a warrantable condition exists, BRP will repair or replace, as it elects, any part or component with a defect in materials or workmanship that would increase the engine's emissions of any regulated pollutant within the stated warranty period at no cost to the owner, including expenses related to diagnosing and repairing or replacing emission-related parts. All defective parts replaced under this warranty become the property of BRP.

For all emission-related warranty claims, BRP is limiting the diagnosis and repair of emission-related parts to the authorized Ski-Doo dealers, unless for emergency repairs as required by item 2 of the following list.

As a certifying manufacturer, BRP will not deny emission-related warranty claims based on any of the following:

1. Maintenance or other service BRP or BRP's authorized facilities performed.
2. Engine/equipment repair work that an operator performed to correct an unsafe, emergency condition attributable to BRP as long as the operator tries to restore the engine/equipment to its proper configuration as soon as possible.
3. Any action or inaction by the operator unrelated to the warranty claim.
4. Maintenance that was performed more frequently than BRP specify.
5. Anything that is BRP fault or responsibility.
6. The use of any fuel that is commonly available where the equipment operates unless BRP written maintenance instructions state that this fuel would harm the equipment's emission control system and operators can readily find the proper fuel. See maintenance information section and fuel requirements of fueling section.

## Emission-Related Warranty Period

The emission-related warranty is valid for the following period whichever comes first:

| | HOURS | MONTHS | KILOMETERS |
|---|---|---|---|
| Exhaust emission-related components | 200 | 30 | 4000 |
| Evaporative emission-related components | N/A | 24 | N/A |

## Components Covered

The emission-related warranty covers all components whose failure would increase an engine's emissions of any regulated pollutant, including the following listed components:

1. For exhaust emissions, emission-related components include any engine parts related to the following systems:
   - Air-induction system
   - Fuel system
   - Ignition system
   - Exhaust gas recirculation systems
2. The following parts are also considered emission-related components for exhaust emissions:
   - Aftertreatment devices
   - Crankcase ventilation valves
   - Sensors
   - Electronic control units
3. The following parts are considered emission-related components for evaporative emissions:
   - Fuel tank
   - Fuel cap
   - Fuel line
   - Fuel line fittings
   - Clamps†
   - Pressure relief valves†
   - Control valves†

- Control solenoids†
- Electronic controls†
- Vacuum control diaphragms†
- Control cables†
- Control linkages†
- Purge valves
- Vapor hoses
- Liquid/vapor separator
- Carbon canister
- Canister mounting brackets
- Carburetor purge port connector

4. Emission-related components also include any other part whose only purpose is to reduce emissions or whose failure will increase emissions without significantly degrading engine/equipment performance.

## Limited Applicability

As a certifying manufacturer, BRP may deny emission-related warranty claims for failures that have been caused by the owner's or operator's improper maintenance or use, by accidents for which the manufacturer has no responsibility, or by acts of God. For example, an emission-related warranty claim need not be honored for failures that have been directly caused by the operator's abuse of the engine/equipment or the operator's use of the engine/equipment in a manner for which it was not designed and are not attributable to the manufacturer in any way.

If you have any question regarding your warranty rights and responsibility, you should contact Bombardier Recreational Products at 1-888-272-9222.

†As related to the evaporative emission control system
* In the USA, products are distributed and serviced by BRP US Inc.

## BRP INTERNATIONAL LIMITED WARRANTY: 2019 SKI-DOO® SNOWMOBILES

# 1) SCOPE OF THE LIMITED WARRANTY

Bombardier Recreational Products Inc. ("BRP")* warrants its 2019 Ski-Doo snowmobiles sold by distributors or dealers authorized by BRP to distribute SKI-Doo snowmobiles ("Ski-Doo Distributor/Dealer") outside of the fifty United States, Canada, members of the European Economic Area (which is comprised of the member states of the European Union plus Norway, Iceland and Liechtenstein) ("EEA"), members states of the Commonwealth of the Independent States (including Ukraine and Turkmenistan) (''CIS'') and Turkey, from defects in material or workmanship for the period and under the conditions described below.

Non-factory installed parts and accessories are not covered under this limited warranty. Please refer to the applicable parts and accessories limited warranty text.

This limited warranty will become null and void if: (1) the snowmobile was used for racing or any other competitive activity, at any point, even by a previous owner; or (2) the snowmobile has been altered or modified in such a way so as to adversely affect its operation, performance or durability, or has been altered or modified to change its intended use.

# 2) LIMITATIONS OF LIABILITY

TO THE EXTENT PERMITTED BY LAW, THIS WARRANTY IS EXPRESSLY GIVEN AND ACCEPTED IN LIEU OF ANY AND ALL OTHER WARRANTIES, EXPRESSED OR IMPLIED, INCLUDING WITHOUT LIMITATION ANY WARRANTY OF MERCHANTABILITY OR FITNESS FOR A PARTICULAR PURPOSE. TO THE EXTENT THAT THEY CANNOT BE DISCLAIMED, THE IMPLIED WARRANTIES ARE LIMITED IN DURATION TO THE LIFE OF THE EXPRESS WARRANTY. INCIDENTAL AND CONSEQUENTIAL DAMAGES ARE EXCLUDED FROM COVERAGE UNDER THIS WARRANTY. SOME JURISDICTIONS DO NOT ALLOW FOR THE DISCLAIMERS, LIMITATIONS AND EXCLUSIONS IDENTIFIED ABOVE, AS A RESULT, THEY MAY NOT APPLY TO YOU. THIS WARRANTY GIVES YOU SPECIFIC RIGHTS, AND YOU MAY ALSO HAVE OTHER LEGAL RIGHTS WHICH MAY VARY FROM COUNTRY TO COUNTRY. (FOR PRODUCTS PURCHASED IN AUSTRALIA SEE CLAUSE 4 BELOW).

Neither the Ski-Doo Distributor/Dealer nor any other person has been authorized to make any affirmation, representation or warranty regarding the product, other than those contained in this limited warranty, and if made, shall not be enforceable against BRP.

BRP reserves the right to modify this warranty at any time, being understood that such modification will not alter the warranty conditions applicable to the products sold while this warranty is in effect.

## 3) EXCLUSIONS – ARE NOT WARRANTED

The following are not warranted under this limited warranty under any circumstances:

- Normal wear and tear;
- Routine maintenance items, tune ups, adjustments;
- Damage caused by negligence or failure to provide proper maintenance and/or storage, as described in the Operator's Guide;
- Damage resulting from removal of parts, improper repairs, service, maintenance, modifications or use of parts or accessories not manufactured or approved by BRP which in its reasonable judgement are either incompatible with the product or adversely affect its operation, performance and durability, or resulting from repairs done by a person that is not an authorized servicing Ski-Doo Distributor/Dealer;
- Damage caused by abuse, abnormal use, neglect, racing or operation of the product on surfaces other than snow, or operation of the product in a manner inconsistent with the recommended operation described in the Operator's Guide;
- Damage resulting from accident, submersion, fire, snow or water ingestion, theft, vandalism or any act of God;
- Operation with fuels, oils or lubricants which are not suitable for use with the product (see the Operator's Guide);
- Damage resulting from rust, corrosion or exposure to the elements;
- Incidental or consequential damages, or damages of any kind including without limitation towing, storage, transportation expenses, telephone, rental, taxi, inconvenience, insurance coverage, loan payments, loss of time, loss of income; or time missed for downtime experience due to service work.
- And damage resulting from studs installed on tracks if the installation does not conform to BRP's instructions.

# 4) WARRANTY COVERAGE PERIOD

This warranty will be in effect from (1) the date of delivery to the first retail consumer or (2) the date the product is first put into use, whichever occurs first and for a period of:

TWELVE (12) CONSECUTIVE MONTHS, for private or commercial use owners. However, the warranty coverage period on a snowmobile delivered between June 1st and December 1st of a given year will expire November 30th of the following year.

The repair or replacement of parts or the performance of service under this warranty does not extend the life of this warranty beyond its original expiration date.

Note that the duration and any other modalities of the warranty coverage are subject to the applicable national or local legislation in the customer's country.

**FOR PRODUCTS SOLD IN AUSTRALIA ONLY**

Nothing in these Warranty terms and conditions should be taken to exclude, restrict or modify the application of any condition, warranty, guarantee, right or remedy conferred or implied under the Competition and Consumer Act 2010 (Cth), including the Australian Consumer Law or any other law, where to do so would contravene that law, or cause any part of these terms and conditions to be void. The benefits given to you under this limited warranty are in addition to other rights and remedies that you have under Australian law.

Our goods come with guarantees that cannot be excluded under the Australian Consumer Law. You are entitled to a replacement or refund for a major failure and for compensation for any other reasonably foreseeable loss or damage. You are also entitled to have the goods repaired or replaced if the goods fail to be of acceptable quality and the failure does not amount to a major failure.

# 5) CONDITIONS TO HAVE WARRANTY COVERAGE

This warranty coverage is available only if each of the following conditions has been fulfilled:

– The 2019 Ski-Doo snowmobile must be purchased as new and unused by its first owner from a Ski-Doo Distributor/Dealer authorized to distribute Ski-Doo snowmobiles in the country in which the sale occurred;

– The BRP specified pre-delivery inspection process must be completed and documented;
– The product must have undergone proper registration by an authorized Ski-Doo Distributor/Dealer;
– The 2019 Ski-Doo snowmobile must be purchased in the country or union of countries in which the purchaser resides.
– Routine maintenance outlined in the Operator's Guide must be timely performed in order to maintain warranty coverage. BRP reserves the right to make warranty coverage contingent upon proof of proper maintenance.

BRP will not honour this limited warranty to any private use owner or commercial use owner if one of the preceding conditions has not been met. Such limitations are necessary in order to allow BRP to preserve both the safety of its products, and also that of its consumers and the general public.

## 6) WHAT TO DO TO OBTAIN WARRANTY COVERAGE

The customer must cease using the snowmobile upon the appearance of an anomaly. The customer must notify a servicing Ski-Doo Distributor/Dealer within two (2) days of the appearance of a defect, and provide it with reasonable access to the product and reasonable opportunity to repair it. The customer must also present to the authorized Ski-Doo Distributor/Dealer, proof of purchase of the product and must sign the repair/work order prior to starting the repair in order to validate the warranty repair. All parts replaced under this limited warranty become the property of BRP.

Note that the notification period is subject to the applicable national or local legislation in customer's country.

## 7) WHAT BRP WILL DO

To the extent permitted by law, BRP's obligations under this warranty are limited to, at its sole discretion, repairing parts found defective under normal use, maintenance and service, or replacing such parts with new genuine Ski-Doo parts without charge for parts and labour, at any authorized Ski-Doo Distributor/Dealer during the warranty coverage period under the conditions described herein. BRP's responsibility is limited to making the required repairs or replacements of parts. No claim of breach of warranty shall be cause

for cancellation or rescission of the sale of the snowmobile to the owner. You may have other legal rights which may vary from country to country.

In the event that service is required outside of the country of original sale, the owner will bear responsibility for any additional charges due to local practices and conditions, such as, but not limited to, freight, insurance, taxes, license fees, import duties, and any and all other financial charges, including those levied by governments, states, territories and their respective agencies.

BRP reserves the right to improve or modify products from time to time without assuming any obligation to modify products previously manufactured.

## 8) TRANSFER

If the ownership of a product is transferred during the warranty coverage period, this limited warranty, subject to its terms and conditions, shall also be transferred and be valid for the remaining coverage period provided BRP or an authorized Ski-Doo Distributor/Dealer receives a proof that the former owner agreed to the transfer of ownership, in addition to the co-ordinates of the new owner.

## 9) CONSUMER ASSISTANCE

In the event of a controversy or a dispute in connection with this limited warranty, BRP suggests that you try to resolve the issue at the Ski-Doo Distributor/Dealer level. We recommend discussing the issue with the authorized Ski-Doo Distributor/Dealer's service manager or owner.

If the matter still remains unresolved, contact BRP by filling out the customer contact form at www.brp.com or contact BRP by mail at one of the addresses listed under the *CONTACT US* section of this guide.

* For the territory covered by this limited warranty, products are distributed and serviced by Bombardier Recreational Products Inc. or its affiliates.

© 2018 Bombardier Recreational Products Inc. All rights reserved.
® Registered trademark of Bombardier Recreational Products Inc.

# BRP LIMITED WARRANTY FOR THE EUROPEAN AND THE COMMONWEALTH OF THE INDEPENDENT STATES (CIS) AREAS AND TURKEY: 2019 SKI-DOO® SNOWMOBILES

## 1) SCOPE OF THE LIMITED WARRANTY

Bombardier Recreational Products Inc. ("**BRP**")* warrants its 2019 Ski-Doo snowmobiles sold by distributors or dealers authorized by BRP to distribute Ski-Doo snowmobiles ("Ski-Doo Distributor/Dealer") in member states of the European Economic Area (which is comprised of the member states of the European Union plus Norway, Iceland and Liechtenstein) ("EEA"), in member states of the Commonwealth of the Independent States (including Ukraine and Turkmenistan) (''CIS'') and Turkey from defects in material or workmanship for the period and under the conditions described below.

Non-factory installed parts and accessories are not covered under this limited warranty. Please refer to the applicable parts and accessories limited warranty text.

This limited warranty will become null and void if: (1) the snowmobile was used for racing or any other competitive activity, at any point, even by a previous owner; or (2) the snowmobile has been altered or modified in such a way so as to adversely affect its operation, performance or durability, or has been altered or modified to change its intended use.

## 2) LIMITATIONS OF LIABILITY

TO THE EXTENT PERMITTED BY LAW, THIS WARRANTY IS EXPRESSLY GIVEN AND ACCEPTED IN LIEU OF ANY AND ALL OTHER WARRANTIES, EXPRESSED OR IMPLIED, INCLUDING WITHOUT LIMITATION ANY WARRANTY OF MERCHANTABILITY OR FITNESS FOR A PARTICULAR PURPOSE. TO THE EXTENT THAT THEY CANNOT BE DISCLAIMED, THE IMPLIED WARRANTIES ARE LIMITED IN DURATION TO THE LIFE OF THE EXPRESS WARRANTIES. INCIDENTAL AND CONSEQUENTIAL DAMAGES ARE EXCLUDED FROM COVERAGE UNDER THIS WARRANTY. SOME JURISDICTIONS DO NOT ALLOW FOR THE DISCLAIMERS, LIMITATIONS AND EXCLUSIONS IDENTIFIED ABOVE, AS A RESULT, THEY MAY NOT APPLY TO YOU. THIS

WARRANTY GIVES YOU SPECIFIC RIGHTS, AND YOU MAY ALSO HAVE OTHER LEGAL RIGHTS WHICH MAY VARY FROM COUNTRY TO COUNTRY.

Neither the Ski-Doo Distributor/Dealer nor any other person has been authorized to make any affirmation, representation or warranty regarding the product, other than those contained in this limited warranty, and if made, shall not be enforceable against BRP.

BRP reserves the right to modify this warranty at any time, being understood that such modification will not alter the warranty conditions applicable to the products sold while this warranty is in effect.

## 3) EXCLUSIONS – ARE NOT WARRANTED

The following are not warranted under this limited warranty under any circumstances:

- Normal wear and tear;
- Routine maintenance items, tune ups, adjustments;
- Damage caused by negligence or failure to provide proper maintenance and/or storage, as described in the Operator's Guide;
- Damage resulting from removal of parts, improper repairs, service, maintenance, modifications or use of parts or accessories not manufactured or approved by BRP which in its reasonable judgement are either incompatible with the product or adversely affect its operation, performance and durability, or resulting from repairs done by a person that is not an authorized servicing Ski-Doo Distributor/Dealer;
- Damage caused by abuse, abnormal use, neglect, racing or operation of the product on surfaces other than snow, or operation of the product in a manner inconsistent with the recommended operation described in the Operator's Guide;
- Damage resulting from accident, submersion, fire, snow or water ingestion, theft, vandalism or any act of God;
- Operation with fuels, oils or lubricants which are not suitable for use with the product (see the Operator's Guide);
- Damage resulting from rust, corrosion or exposure to the elements;

– Incidental or consequential damages, or damages of any kind including without limitation towing, transportation expenses, storage, telephone, rental, taxi, inconvenience, insurance coverage, loan payments, loss of time, loss of income or time missed for downtime experience due to service work;
– and damage resulting from studs installed on tracks if the installation does not conform to BRP's instructions.

# 4) WARRANTY COVERAGE PERIOD

This warranty will be in effect from (1) the date of delivery to the first retail consumer or (2) the date the product is first put into use, whichever occurs first and for a period of:

TWENTY-FOUR (24) CONSECUTIVE MONTHS, for private use owners and TWELVE (12) CONSECUTIVE MONTHS for commercial use owners. However, the warranty coverage period on a snowmobile delivered between June 1st and December 1st of a given year will expire November 30th of the applicable year. A snowmobile is used commercially when it is used in connection with generating income or any work or employment during any part of the warranty period. A snowmobile is also used commercially when, at any point during the warranty period, it has commercial tags or is licensed for commercial use.

The repair or replacement of parts or the performance of service under this warranty does not extend the life of this warranty beyond its original expiration date.

Note that the duration and any other modalities of the warranty coverage are subject to the applicable national or local legislation in the customer's country.

# 5) CONDITIONS TO HAVE WARRANTY COVERAGE

This warranty coverage is available **only** if each of the following conditions has been fulfilled:

– The 2019 Ski-Doo snowmobile must be purchased as new and unused by its first owner from a Ski-Doo Distributor/Dealer authorized to distribute Ski-Doo products in the country in which the sale occurred;
– The BRP specified pre-delivery inspection process must be completed and documented;

– The product must have undergone proper registration by an authorized Ski-Doo Distributor/Dealer;
– The 2019 Ski-Doo snowmobile must be purchased within the EEA by an EEA resident, in the CIS for residents of the countries comprised in such area and in Turkey for residents of Turkey; and
– Routine maintenance outlined in the Operator's Guide must be timely performed in order to maintain warranty coverage. BRP reserves the right to make warranty coverage contingent upon proof of proper maintenance.

BRP will not honour this limited warranty to any private use owner or commercial use owner if one of the preceding conditions has not been met. Such limitations are necessary in order to allow BRP to preserve both the safety of its products, and also that of its consumers and the general public.

## 6) WHAT TO DO TO OBTAIN WARRANTY COVERAGE

The customer must cease using the snowmobile upon the appearance of an anomaly. The customer must notify a servicing Ski-Doo Distributor/Dealer within two (2) months of the appearance of a defect, and provide it with reasonable access to the product and reasonable opportunity to repair it. The customer must also present to the authorized Ski-Doo Distributor/Dealer, proof of purchase of the product and must sign the repair/work order prior to starting the repair in order to validate the warranty repair. All parts replaced under this limited warranty become the property of BRP.

Note that the notification period is subject to the applicable national or local legislation in customer's country.

## 7) WHAT BRP WILL DO

To the extent permitted by law, BRP's obligations under this warranty are limited to, at its sole discretion, repairing parts found defective under normal use, maintenance and service, or replacing such parts with new genuine Ski-Doo parts without charge for parts and labour, at any authorized Ski-Doo Distributor/Dealer during the warranty coverage period under the conditions described herein. BRP's responsibility is limited to making the required repairs or replacements of parts. No claim of breach of warranty shall be cause for cancellation or rescission of the sale of the snowmobile to the owner. You may have other legal rights which may vary from country to country.

In the event that service is required outside of the EEA, CIS or Turkey, the owner will bear responsibility for any additional charges due to local practices and conditions, such as, but not limited to, freight, insurance, taxes, license fees, import duties, and any and all other financial charges, including those levied by governments, states, territories and their respective agencies.

BRP reserves the right to improve or modify products from time to time without assuming any obligation to modify products previously manufactured.

## 8) TRANSFER

If the ownership of a product is transferred during the warranty coverage period, this limited warranty, subject to its terms and conditions, shall also be transferred and be valid for the remaining coverage period provided BRP or an authorized Ski-Doo Distributor/Dealer receives a proof that the former owner agreed to the transfer of ownership, in addition to the co-ordinates of the new owner.

## 9) CONSUMER ASSISTANCE

In the event of a controversy or a dispute in connection with this limited warranty, BRP suggests that you try to resolve the issue at the Ski-Doo Distributor/Dealer level. We recommend discussing the issue with the authorized Ski-Doo Distributor/Dealer's service manager or owner.

If the matter still remains unresolved, contact BRP by filling out the customer contact form at www.brp.com or contact BRP.

ADDITIONAL TERMS AND CONDITIONS FOR FRANCE ONLY

The following terms and conditions are applicable to products sold in France only:

The seller shall deliver goods that are complying with the contract and shall be responsible for defects existing upon delivery. The seller shall also be responsible for defects resulting from packaging, assembling instructions or the installation when it is its responsibility per the contract or if accomplished under its responsibility. To be compliant with the contract, the good shall:

1. Be fit for normal use for goods similar thereto and, if applicable:

   - Correspond to the description provided by the seller and have the qualities presented to the buyer though sample or model;

   - Have the qualities that a buyer may legitimately expect considering the public declarations of the seller, the manufacturer of its representative, including in advertising or labeling; or

2. Have the characteristics mutually agreed upon as between the parties or be fit for the specific use intended by the buyer and brought to the attention of the seller and which accepted

The action for failure to comply is prescribed after two years after delivery of the goods. The seller is responsible for the warranty for hidden defects of the good sold if such hidden defects are rendering the good unfit for the intended use, or if they diminish its use in such a way that the buyer would not have acquired the good or would have given a lesser price, had he known. The action for such hidden defects shall be taken by the buyer within 2 years of the discovery of the defect.

# *CUSTOMER INFORMATION*

# PRIVACY INFORMATION

BRP wishes to inform you that your coordinates will be used for safety and warranty related purposes. Furthermore, BRP and its affiliates may use its customer list to distribute marketing and promotional information about BRP and related products.

To exercise your right to consult or correct your data, or to be removed from the addressee-list for direct marketing, please contact BRP.

***This page is intentionally blank***

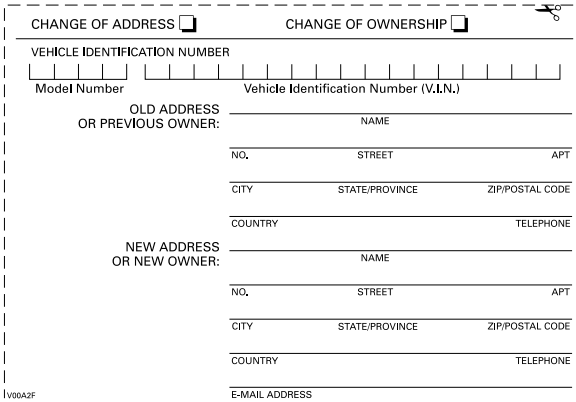
CHANGE OF ADDRESS ❑ CHANGE OF OWNERSHIP ❑

VEHICLE IDENTIFICATION NUMBER

Model Number | Vehicle Identification Number (V.I.N.)

OLD ADDRESS OR PREVIOUS OWNER:

NAME

NO. STREET APT

CITY STATE/PROVINCE ZIP/POSTAL CODE

COUNTRY TELEPHONE

NEW ADDRESS OR NEW OWNER:

NAME

NO. STREET APT

CITY STATE/PROVINCE ZIP/POSTAL CODE

COUNTRY TELEPHONE

V00A2F

E-MAIL ADDRESS

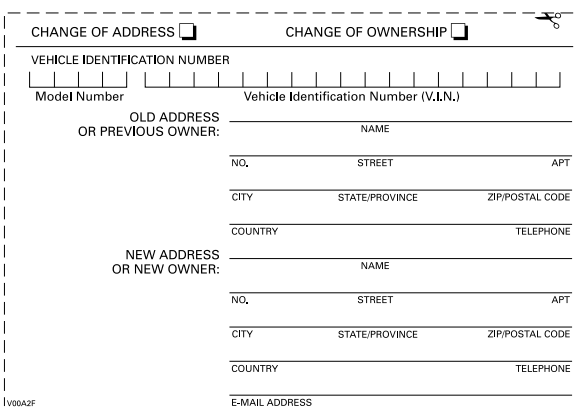
CHANGE OF ADDRESS ❑ CHANGE OF OWNERSHIP ❑

VEHICLE IDENTIFICATION NUMBER

Model Number | Vehicle Identification Number (V.I.N.)

OLD ADDRESS OR PREVIOUS OWNER:

NAME

NO. STREET APT

CITY STATE/PROVINCE ZIP/POSTAL CODE

COUNTRY TELEPHONE

NEW ADDRESS OR NEW OWNER:

NAME

NO. STREET APT

CITY STATE/PROVINCE ZIP/POSTAL CODE

COUNTRY TELEPHONE

V00A2F

E-MAIL ADDRESS

**WARNING**

**BEFORE YOU OPERATE THIS VEHICLE, READ THIS OPERATOR'S GUIDE, ALL ON-PRODUCT SAFETY LABELS AND WATCH THE SAFETY VIDEO.**

FAIT AU / MADE IN CANADA U/M:P.C.

®™ AND THE BRP LOGO ARE TRADEMARKS OF BOMBARDIER RECREATIONAL PRODUCTS INC. OR ITS AFFILIATES.
©2018 BOMBARDIER RECREATIONAL PRODUCTS INC. ALL RIGHTS RESERVED. PRINTED IN CANADA.