2008 Ski-Doo XP/RF Series

This manual may cover later years than listed above.

Some models may need supplemental manuals which have blue titles.

This manual is fully searchable, just hold down the control key and the F key to search on any word.

If you bought this manual from any other seller, they are reselling my work.

Please leave them negative feedback & email me at bestshopmanuals@gmail.com.

Our goal is to be one of the BEST sellers on eBay and the internet by providing you with the BEST customer service and the BEST manuals on the market.

Thank you for choosing us.



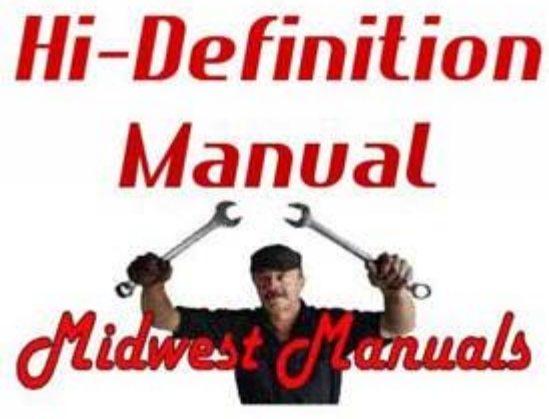

TABLE OF CONTENTS

SAFETY NOTICE ..... **IX**

INTRODUCTION ..... **X**
GENERAL INFORMATIONS X
VEHICLE IDENTIFICATION NUMBER X
ENGINE SERIAL NUMBER X
SNOWMOBILE LIFTING XI
ENGINE EMISSIONS INFORMATION XI
TIGHTENING TORQUE XII
SELF-LOCKING FASTENERS PROCEDURE XIII
LOCTITE APPLICATION PROCEDURE XIII
MANUAL INFORMATION XVI

01 MAINTENANCE
01 – MAINTENANCE CHART **1**
02 – STORAGE PROCEDURES **3**
GENERAL 3
ENGINE 3
ENGINE MANAGEMENT SYSTEM 4
FUEL SYSTEM 4
ELECTRICAL SYSTEM 4
DRIVE/BRAKE SYSTEM 4
CHASSIS 4
VEHICLE 4
03 – PRESEASON PREPARATION **7**
GENERAL 7
ENGINE 7
FUEL SYSTEM 7
ELECTRICAL SYSTEM 8
DRIVE/BRAKE SYSTEM 8

02 TROUBLESHOOTING
01 – TECHNICAL GUIDELINES **9**
ENGINE 9
FUEL AND OIL SYSTEMS 14
DRIVE SYSTEM 16
BRAKE SYSTEM 18
REAR SUSPENSION 18
ELECTRICAL SYSTEM 19
STEERING SYSTEM 21
SUSPENSION 22
02 – FLOW CHARTS **23**
3D RAVE VALVE FLOW CHART 23
ENGINE LEAK VERIFICATION FLOW CHART 24
FUEL DELIVERY DIAGNOSTIC FLOW CHART 25

03 ENGINE
01 – ENGINE REMOVAL/INSTALLATION **27**
GENERAL **29**
PROCEDURES **29**
ENGINE 29
ENGINE SUPPORT 36
ENGINE RUBBER MOUNT 37
02 – ENGINE LEAK TEST **39**
PREPARATION 39
PROCEDURE 39

TABLE OF CONTENTS

03 – ENGINE MEASUREMENT 43
CYLINDER HEAD WARPAGE 43
CYLINDER TAPER 43
CYLINDER OUT OF ROUND 43
CYLINDER/PISTON CLEARANCE 44
RING/PISTON GROOVE CLEARANCE 46
RING END GAP 46
CRANKSHAFT DEFLECTION 46
CONNECTING ROD BIG END AXIAL PLAY 47
CRANKSHAFT ALIGNMENT 47
COMBUSTION CHAMBER VOLUME MEASUREMENT 48
04 – AIR INTAKE SYSTEM 51
PROCEDURES 52
AIR FILTER 52
PRIMARY AIR INTAKE SILENCER 52
SECONDARY AIR INTAKE SILENCER 53
05 – EXHAUST SYSTEM 55
GENERAL 56
PROCEDURES 56
TUNED PIPE 56
MANIFOLD 56
MUFFLER 57
EXHAUST GAS TEMPERATURE SENSOR (EGTS) 57
06 – REWIND STARTER 59
GENERAL 61
PROCEDURES 61
REWIND STARTER HANDLE 61
REWIND STARTER 61
ROPE 64
07 – LUBRICATION SYSTEM 65
GENERAL 68
OIL TYPE 68
INSPECTION 68
OIL SYSTEM LEAK TEST 68
PROCEDURES 69
OIL RESERVOIR 69
OIL LEVEL SENSOR 71
OIL FILTER 72
OIL INJECTION PUMP 72
INJECTION NOZZLE 75
08 – COOLING SYSTEM 77
GENERAL 79
INSPECTION 79
VEHICLE COOLING SYSTEM LEAK TEST 79
ENGINE COOLING SYSTEM LEAK TEST 79
MAINTENANCE 80
COOLANT REPLACEMENT 80
PROCEDURES 80
THERMOSTAT 80
RADIATOR CAP 81
FRONT RADIATOR 81
REAR RADIATOR 82
COOLANT TANK 82
WATER PUMP 82
COOLANT TEMPERATURE SENSOR (CTS) 82

09 – MAGNETO SYSTEM **85**
GENERAL **89**
PROCEDURES **89**
MAGNETO FLYWHEEL 89
STATOR 91
CRANKSHAFT POSITION SENSOR (CPS) 92
TRIGGER COIL 92
MAGNETO HOUSING 92
10 – TOP END (593) **95**
GENERAL **99**
PROCEDURES **99**
REED VALVE 99
E-RAVE SOLENOID 99
RAVE AND E-RAVE VALVES 104
CYLINDER HEAD COVER 107
CYLINDER HEAD 108
CYLINDER 108
PISTON 109
11 – TOP END (797) **113**
GENERAL **116**
PROCEDURES **116**
REED VALVE 116
3D RAVE VALVE 116
CHECK VALVES (3D RAVE VALVES) 128
SOLENOIDS (3D RAVE VALVES) 129
CYLINDER HEAD 132
CYLINDER BLOCK 132
PISTON 133
12 – BOTTOM END (593) **137**
GENERAL **140**
PROCEDURES **140**
WATER PUMP 140
WATER/OIL PUMP SHAFT 141
CRANKCASE 144
CRANKSHAFT 145
13 – BOTTOM END (797) **153**
GENERAL **155**
PROCEDURES **155**
WATER PUMP 155
WATER/OIL PUMP SHAFT 156
CRANKCASE 159
CRANKSHAFT 162

04 ENGINE MANAGEMENT SYSTEM
01 – ENGINE MANAGEMENT (500SS) **169**
OVERVIEW **169**
ENGINE CONTROL MODULE (ECM) 169
02 – ENGINE MANAGEMENT (800R) **171**
OVERVIEW **171**
ENGINE CONTROL MODULE (ECM) 172
03 – ENGINE MANAGEMENT (600 HO SDI) **175**
ENGINE MANAGEMENT SYSTEM FUNCTIONS 176
OVERVIEW **177**
ENGINE CONTROL MODULE (ECM) 178
04 – COMMUNICATION TOOLS/B.U.D.S. SOFTWARE **181**
MULTI-PURPOSE INTERFACE (MPI) 181

TABLE OF CONTENTS

MULTI-PURPOSE INTERFACE-2 (MPI-2) 185
B.U.D.S. SOFTWARE 189
05 – MONITORING SYSTEM/FAULT CODES 191
MONITORING SYSTEM 191
FAULT CODES 193
SPECIFIC FAULT CODES 193
FAULT CODE TABLES 195

05 FUEL SYSTEM
01 – FUEL TANK/FUEL PUMP 199
GENERAL 202
INSPECTION 202
FUEL SYSTEM PRESSURIZATION 202
HIGH PRESSURE LEAK TEST (ELECTRIC FUEL PUMP CIRCUIT) 203
FUEL PUMP PRESSURE TEST 203
PROCEDURES 204
DIAPHRAGM FUEL PUMP 204
ELECTRIC FUEL PUMP 205
FUEL PRESSURE REGULATOR 208
IN-TANK FUEL STRAINER 209
IN-LINE FUEL FILTER 212
ELECTRIC FUEL LEVEL SENSOR 212
FUEL TANK 214
OETIKER CLAMPS 218
02 – TM CARBURETORS 219
PROCEDURES 221
CARBURETOR 221
THROTTLE POSITION SENSOR (TPS) 227
THROTTLE CABLE 231
CHOKE CABLE 232
03 – DPM SYSTEM (800R) 235
OVERVIEW 237
PROCEDURES 237
AIR TEMPERATURE SENSOR (ATS) 237
AIR PRESSURE SENSOR (APS) 239
DPM SOLENOID 240
DPM MANIFOLD 240
04 – SEMI-DIRECT INJECTION (SDI) 243
OVERVIEW 243
GENERAL PRECAUTIONS 244
FUEL SYSTEM 244
ELECTRICAL SYSTEM 245
BASIC ADJUSTMENTS 248
IDLE SPEED 248
CLOSED THROTTLE RESET (TPS) 248
THROTTLE CABLE 249
PROCEDURES 250
FUEL INJECTORS 250
ENGINE CONTROL MODULE (ECM) 255
THROTTLE BODY 262
THROTTLE POSITION SENSOR (TPS) 263
CRANKSHAFT POSITION SENSOR (CPS) 265
AIR TEMPERATURE SENSOR (ATS) 268
COOLANT TEMPERATURE SENSOR (CTS) 270
AIR PRESSURE SENSOR (APS) 271
EXHAUST GAS TEMPERATURE SENSOR (EGTS) 273

KNOCK SENSOR (KS) 274
CAPACITOR 275

06 ELECTRICAL SYSTEM
01 – IGNITION SYSTEM 279
GENERAL 279
IGNITION SYSTEM TESTING SEQUENCE 279
ADJUSTMENT 280
IGNITION TIMING 280
PROCEDURES 283
SPARK PLUG 283
DESS POST 284
ENGINE CUT-OUT SWITCH 284
IGNITION COIL 284
TRIGGER COIL 288
CRANKSHAFT POSITION SENSOR (CPS) 289
KNOCK SENSOR (KS) 289
ENGINE CONTROL MODULE (ECM) 290
02 – CHARGING SYSTEM 297
GENERAL 297
PROCEDURES 298
CHARGING FUSE 298
CHARGING RELAY (R2) 298
VOLTAGE REGULATOR 298
STATOR 302
BATTERY (YT4L-BS) 304
BATTERY (YTX20L-BS) 305
03 – STARTING SYSTEM 309
GENERAL 311
TROUBLESHOOTING 311
PROCEDURES 311
START/RER FUSE 311
BATTERY 312
ENGINE CUT-OUT SWITCH 312
START/RER SWITCH 312
STARTER SOLENOID 316
ELECTRIC STARTER 319
04 – DIGITALLY ENCODED SECURITY SYSTEM (DESS) 325
GENERAL 325
PROCEDURES 325
DESS KEY 325
BEEPER 326
DESS POST 326
05 – ROTAX ELECTRONIC REVERSE 329
GENERAL 329
TROUBLESHOOTING 329
PROCEDURES 329
RER SWITCH 329
BEEPER (REVERSE ALARM) 333
06 – LIGHTS/GAUGE/ACCESSORIES 335
GENERAL 335
DIAGNOSTIC 336
LIGHTING AND ACCESSORIES SYSTEM TESTING 336
PROCEDURES 337
FUSES 337
RELAY R1 (LIGHTS AND ACCESSORIES) 339

TABLE OF CONTENTS

RELAY R3 (LIGHTS AND ACCESSORIES) 340
HEADLIGHT 342
TAILLIGHT 344
GAUGE 345
SPEED SENSOR 350
FUEL LEVEL SENSOR 351
HEATED THROTTLE LEVER 351
HEATED HANDLEBAR GRIPS 353
12-VOLT POWER OUTLET 355
VISOR OUTLET 355

07 DRIVE SYSTEM/BRAKE

01 – DRIVE BELT 357
GENERAL **357**
APPLICATION CHART 357
PROCEDURES **357**
DRIVE BELT GUARD 357
DRIVE BELT GUARD SUPPORT 358
DRIVE BELT 358
02 – DRIVE PULLEY 363
GENERAL **366**
PROCEDURES **366**
DRIVE PULLEY 366
03 – DRIVEN PULLEY AND COUNTERSHAFT 377
GENERAL **379**
PROCEDURES **379**
DRIVEN PULLEY 379
COUNTERSHAFT 384
COUNTERSHAFT BEARING 384
04 – BRAKE 387
GENERAL **388**
PROCEDURES **388**
BRAKE FLUID 388
BRAKE PADS 389
CALIPER 390
BRAKE DISC 392
MASTER CYLINDER 392
BRAKE LIGHT SWITCH 393
05 – CHAINCASE 395
GENERAL **397**
MAINTENANCE **397**
CHAINCASE OIL 397
DRIVE CHAIN ADJUSTMENT 397
PROCEDURES **398**
CHAINCASE COVER 398
CHAINCASE 399
CHAINCASE BEARING 401
CHAIN TENSIONER 403
06 – DRIVE AXLE 405
GENERAL **406**
PROCEDURES **406**
DRIVE AXLE 406
DRIVE AXLE BEARING 407
MAGNETIC CAP 407
07 – TRACK 409
TRACK 409

TRACTION ENHANCING PRODUCTS (STUDS) 411

08 CHASSIS

01 – FRONT SUSPENSION 415
GENERAL 417
ADJUSTMENT 417
SUSPENSION SPRING 417
SHOCK ABSORBER 418
PROCEDURES 418
SHOCK ABSORBER 418
UPPER SUSPENSION ARM 420
UPPER BALL JOINT 421
LOWER SUSPENSION ARM 422
LOWER BALL JOINT 423
SKI LEG 424
STABILIZER BAR 424

02 – REAR SUSPENSION 427
GENERAL 439
PROCEDURES 439
SUSPENSION ASSEMBLY 439
REAR AXLE 440
REAR SHOCK ABSORBER 441
FRONT SHOCK ABSORBER 444
REAR SPRING 445
SLIDER SHOE 447
FRONT ARM 448
REAR ARM 450
COUPLING BLOCK 451
IDLER WHEELS 452
IDLER WHEEL SUPPORT 452
STOPPER STRAP 452
REPAIR 453
SHOCK ABSORBER REBUILT PROCEDURE 453

03 – STEERING SYSTEM 469
GENERAL 473
ADJUSTMENT 473
STEERING ALIGNMENT 473
PROCEDURES 474
SKI RUNNER 474
SKI 474
SKI HANDLE 475
SKI LEG 475
HANDLEBAR GRIP 475
HANDLEBAR 478
HANDLEBAR EXTENSION 478
TIE-ROD 479
STEERING COLUMN 480

04 – BODY 483
GENERAL 483
PROCEDURES 484
DECAL 484
SIDE PANEL 484
REWIND STARTER HANDLE HOUSING 484
HOOD 485
BOTTOM PAN COVER 485
FRONT BUMPER 485

TABLE OF CONTENTS

FRONT BOTTOM PAN 485
WINDSHIELD 486
GAUGE SUPPORT 486
CONSOLE 487
05 – FRAME 489
GENERAL 491
RIVET DRILLING PROCEDURE 491
PROCEDURES 492
FRAME 492
REAR BUMPER 492
REAR FRAME MEMBER 492
FRONT FRAME MEMBER 493
FRONT CROSS MEMBER 494
ENGINE MEMBER 496

09 TECHNICAL SPECIFICATIONS
01 – 500SS MODELS 499
02 – 800R MODELS 503
03 – 600 HO SDI MODELS 515

10 ELECTRICAL CONNECTORS AND WIRING DIAGRAMS
01 – ELECTRICAL CONNECTORS 523
PROCEDURES 525
TAB AND RECEPTACLE CONNECTORS 525
SUMITOMO CONNECTOR 525
DEUTSCH CONNECTORS 526
PACKARD CONNECTOR 526
AMP MULTILOCK CONNECTOR 528
AMP CONNECTOR (8-CIRCUIT) 529
KOSTAL CONNECTORS (ECM) 530
BATTERY CABLE TERMINAL 532
02 – WIRING DIAGRAMS 535
WIRING DIAGRAMS 535
WIRING DIAGRAM LEGEND 535

INTRODUCTION

GENERAL INFORMATIONS

This shop manual covers the following BRP made 2008 REV XP series models:

MODEL	ENGINE TYPE
GSX Limited 600 HO SDI	593
GSX Limited 800R Power TEK	797
GSX Limited Touring 600 HO SDI	593
GSX Sport 500SS	593
MX Z Adrenaline 600 HO SDI	593
MX Z Adrenaline 800R Power TEK	797
MX Z Renegade 600 HO SDI	593
MX Z Renegade 800R Power TEK	797
MX Z Renegade X 600 HO SDI	593
MX Z Renegade X 800R Power TEK	797
MX Z TNT 500SS	593
MX Z TRAIL 500SS	593
MX Z X 600 HO SDI	593
MX Z X 800R Power TEK	797
SUMMIT EVEREST 800R Power TEK	797
SUMMIT X 800R Power TEK	797

VEHICLE IDENTIFICATION NUMBER

Vehicle Identification Number Location

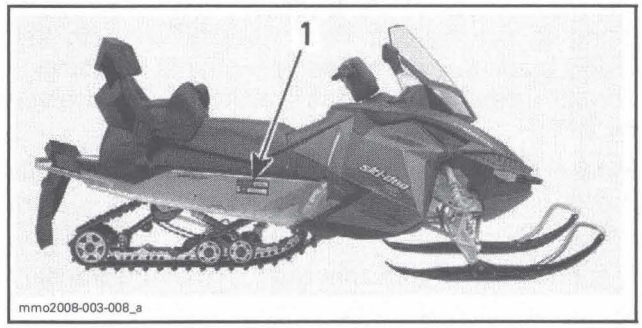

TYPICAL
1. Vehicle identification number

Identification Number Meaning

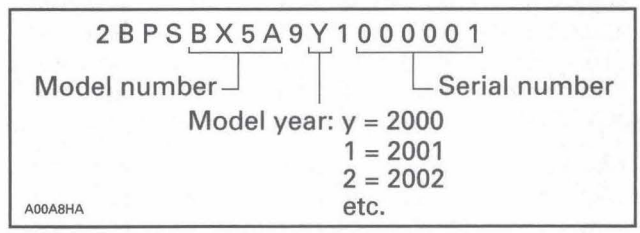

ENGINE SERIAL NUMBER

Engine Serial Number Location

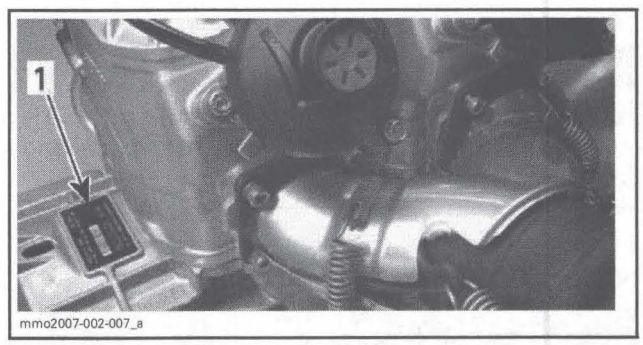

TYPICAL — 500SS AND 600 HO SDI ENGINES
1. Engine serial number

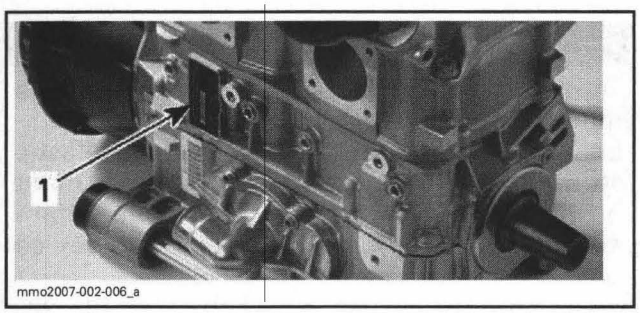

TYPICAL — 800R ENGINE
1. Engine serial number

SNOWMOBILE LIFTING

To lift a REV XP securely, it is important to use the reinforced footrest holes.

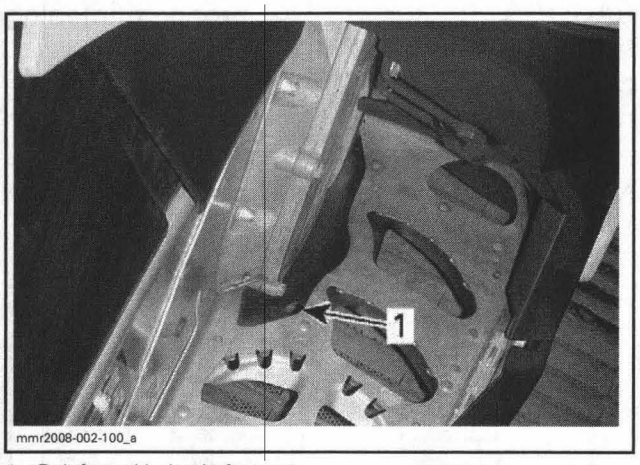

1. Reinforced holes in footrest

Install lifting tool hooks in holes as shown.

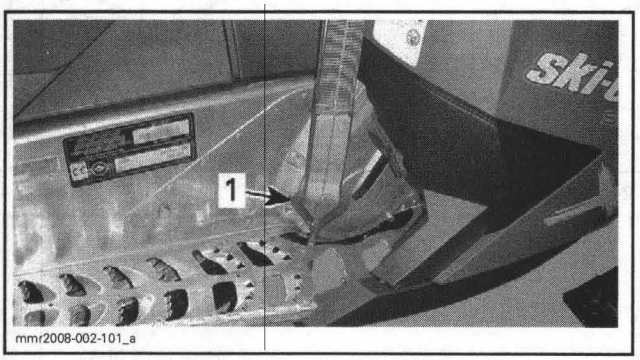

1. Hook of lifting tool

CAUTION: Do not use footrest opening or steering column to lift the snowmobile. Frame or steering system could be seriously damaged.

ENGINE EMISSIONS INFORMATION

Manufacturer's Responsibility

Manufacturers of engines must determine the exhaust emission levels for each engine horsepower family and certify these engines with the United States of America *ENVIRONMENTAL PROTECTION AGENCY (EPA)*. An emissions control information label, showing emission levels and engine specifications, must be placed on each vehicle at the time of manufacture.

Dealer Responsibility

When performing service on snowmobiles that carry an emissions control information label, adjustments must be kept within published factory specifications.

Replacement or repair of any emission related component must be executed in a manner that maintains emission levels within the prescribed certification standards.

Dealers are not to modify the engine in any manner that would alter the horsepower or allow emission levels to exceed their predetermined factory specifications.

Exceptions include manufacturer's prescribed changes, such as altitude adjustments for example.

Owner Responsibility

The owner/operator is required to have engine maintenance performed to maintain emission levels within prescribed certification standards.

The owner/operator is not to, and should not allow anyone to modify the engine in any manner that would alter the horsepower or allow emissions levels to exceed their predetermined factory specifications.

EPA Emission Regulations

Some Ski-Doo snowmobiles manufactured by BRP are certified to the EPA as conforming to the requirements of the regulations for the control of air pollution from new snowmobiles engines. This certification is contingent on certain adjustments being set to factory standards. For this reason, the factory procedure for servicing the product must be strictly followed and, whenever practicable, returned to the original intent of the design.

The responsibilities listed above are general and in no way a complete listing of the rules and regulations pertaining to the EPA requirements on exhaust emissions for snowmobiles products. For more detailed information on this subject, you may contact the following locations:

FOR ALL COURIER SERVICES:
U.S. Environmental Protection Agency
Office of Transportation and Air Quality
1310 L Street NW
Washington D.C. 20005

REGULAR US POSTAL MAIL:
1200 Pennsylvania Ave. NW
Mail Code 6403J
Washington D.C. 20460

INTERNET: http://www.epa.gov/otaq/

E-MAIL: otaqpublicweb@epa.gov

TIGHTENING TORQUE

Tighten fasteners to torque mentioned in exploded views and/or text, When they are not specified, refer to following table.

⚠ WARNING

Torque wrench tightening specifications must strictly be adhered to.
Locking devices (e.g.: locking tabs, elastic stop nuts, self-locking fasteners, etc.) must be installed or replaced with new ones, where specified. If the efficiency of a locking device is impaired, it must be renewed.

In order to avoid a poor assembling, tighten screws, bolts or nuts in accordance with the following procedure:

- Manually screw all screws, bolts and/or nuts.
- Apply the half of the recommended torque value.

CAUTION: Be sure to use proper tightening torque for the proper strength grade.

NOTE: When possible, always apply torque on the nut.

- Torque at the recommended torque value.

NOTE: Always torque screws, bolts and/or nuts in a criss-cross sequence.

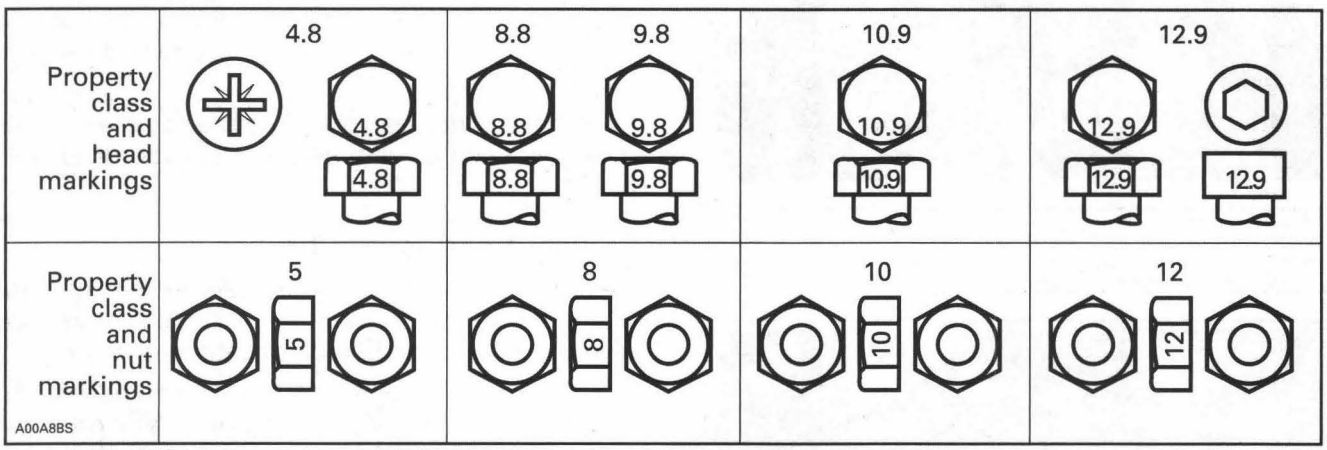

FASTENER SIZE	FASTENER GRADE/TORQUE			
	5.8 Grade	**8.8** Grade	**10.9** Grade	**12.9** Grade
M4	1.5 – 2 N•m (13 – 18 lbf•**in**)	2.5 – 3 N•m (22 – 27 lbf•**in**)	3.5 – 4 N•m (31 – 35 lbf•**in**)	4 – 5 N•m (35 – 44 lbf•**in**)
M5	3 – 3.5 N•m (27 – 31 lbf•**in**)	4.5 – 5.5 N•m (40 – 47 lbf•**in**)	7 – 8.5 N•m (62 – 75 lbf•**in**)	8 – 10 N•m (71 – 89 lbf•**in**)
M6	6.5 – 8.5 N•m (58 – 75 lbf•**in**)	8 – 12 N•m (71 – 106 lbf•**in**)	10.5 – 15 N•m (93 – 133 lbf•**in**)	16 N•m (142 lbf•**in**)
M8	15 N•m (133 lbf•**in**)	24.5 N•m (18 lbf•ft)	31.5 N•m (23 lbf•ft)	40 N•m (30 lbf•ft)
M10	29 N•m (21 lbf•ft)	48 N•m (35 lbf•ft)	61 N•m (45 lbf•ft)	72.5 N•m (53 lbf•ft)
M12	52 N•m (38 lbf•ft)	85 N•m (63 lbf•ft)	105 N•m (77 lbf•ft)	127.5 N•m (94 lbf•ft)
M14	85 N•m (63 lbf•ft)	135 N•m (100 lbf•ft)	170 N•m (125 lbf•ft)	200 N•m (148 lbf•ft)

SELF-LOCKING FASTENERS PROCEDURE

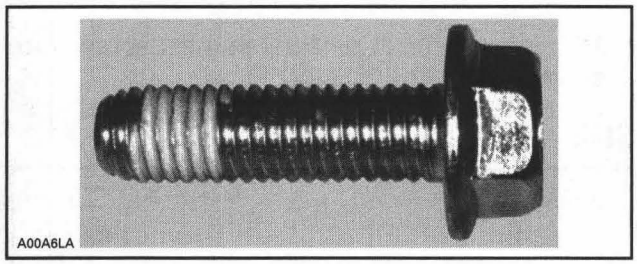

TYPICAL — SELF-LOCKING FASTENER

The following describes the most common application procedures when working with self-locking fasteners.

Use a metal brush or a tap to clean the hole properly then use a solvent, let act during 30 minutes and wipe off. The solvent utilization is to ensure the adhesive works properly.

LOCTITE APPLICATION PROCEDURE

The following describes the most common application procedures when working with Loctite products.

NOTE: Always use proper strength Loctite product as recommended in this shop manual.

Threadlocker

Uncovered Holes (bolts and nuts)

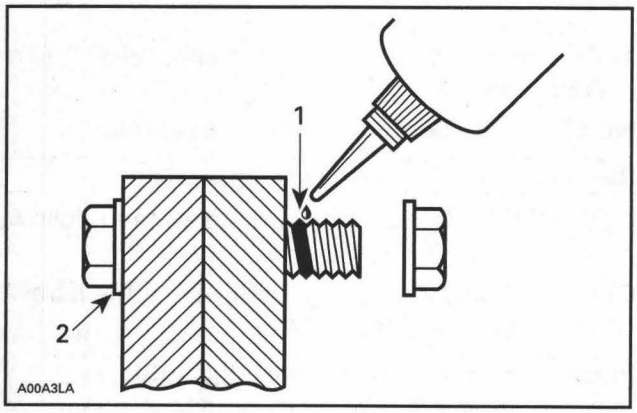

1. Apply here
2. Do not apply

- Clean threads (bolt and nut) with solvent.
- Apply Loctite Primer N (P/N 293 800 041) on threads and allow to dry.
- Choose proper strength Loctite threadlocker.
- Fit bolt in the hole.
- Apply a few drops of threadlocker at proposed tightened nut engagement area.
- Position nut and tighten as required.

Blind Holes

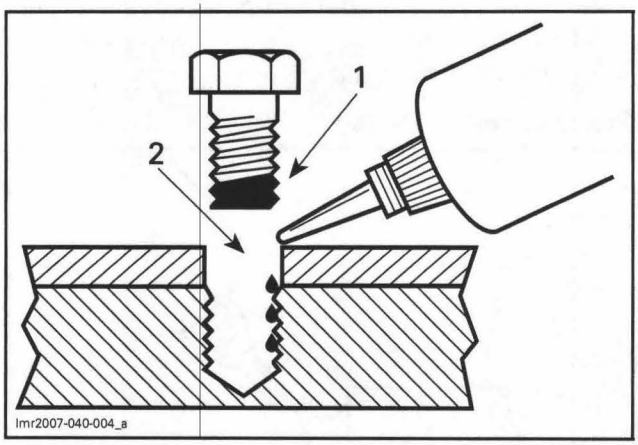

1. On threads
2. On threads and at the bottom of hole

- Clean threads (bolt and hole) with solvent.
- Apply Loctite Primer N (P/N 293 800 041) on threads (bolt and nut) and allow to dry for 30 seconds.
- Choose proper strength Loctite threadlocker.
- Apply several drops along the threaded hole and at the bottom of the hole.
- Apply several drops on bolt threads.
- Tighten as required.

Stud in Blind Holes

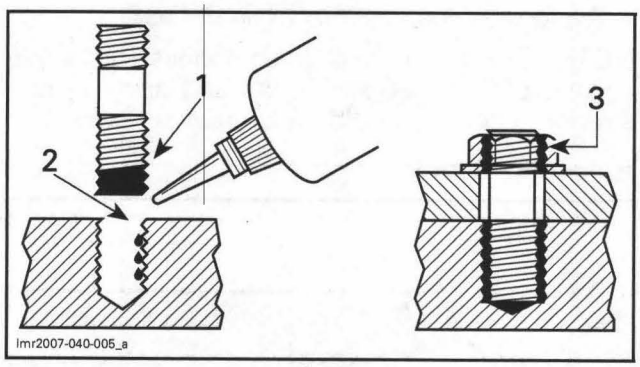

1. On threads
2. On threads and in the hole
3. Onto nut threads

- Clean threads (stud and hole) with solvent.
- Apply Loctite Primer N (P/N 293 800 041) on threads and allow to dry.
- Put 2 or 3 drops of proper strength Loctite threadlocker on female threads and in hole.

NOTE: To avoid a hydro lock situation, do not apply too much Loctite.

- Apply several drops of proper strength Loctite on stud threads.
- Install stud.
- Install cover, etc.
- Apply drops of proper strength Loctite on uncovered threads.
- Tighten nuts as required.

Pre-assembled Parts

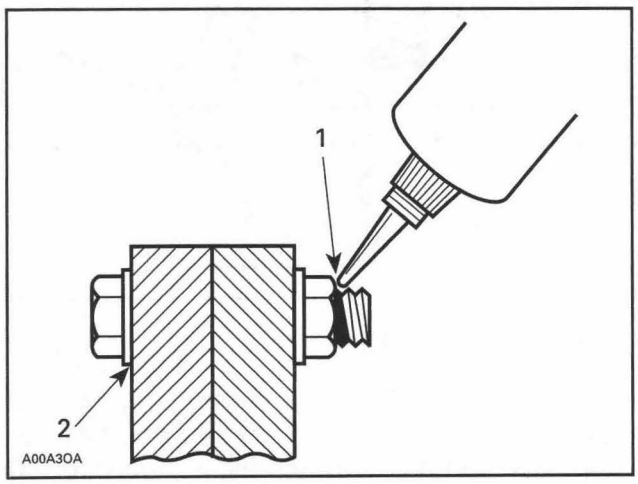

1. Apply here
2. Do not apply

- Clean bolts and nuts with solvent.
- Assemble components.
- Tighten nuts.
- Apply drops of proper strength Loctite on bolt/nut contact surfaces.
- Avoid touching metal with tip of flask.

NOTE: For preventive maintenance on existing equipment, retighten nuts and apply proper strength Loctite on bolt/nut contact surfaces.

Adjusting Screw

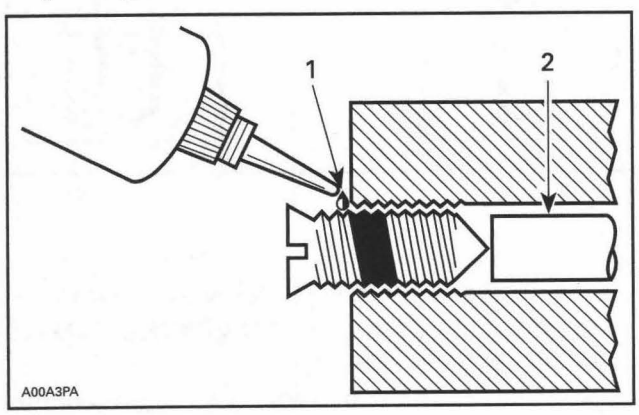

1. Apply here
2. Plunger

- Adjust screw to proper setting.
- Apply drops of proper strength Loctite threadlocker on screw/body contact surfaces.
- Avoid touching metal with tip of flask.

NOTE: If it is difficult to readjust, heat screw with a soldering iron (232°C (450°F)).

Stripped Thread Repair

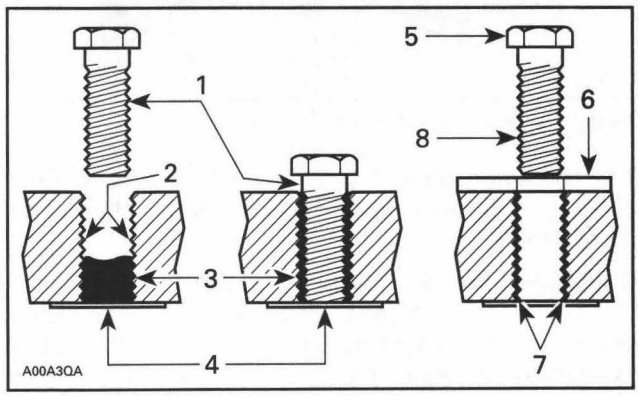

1. Release agent
2. Stripped threads
3. Form-A-Thread
4. Tapes
5. Cleaned bolt
6. Plate
7. New threads
8. Threadlocker

Standard Thread Repair

- Follow instructions on Loctite FORM-A-THREAD 81668 package.
- If a plate is used to align bolt:

a. Apply release agent on mating surfaces.
b. Put waxed paper or similar film on the surfaces.

- Twist bolt when inserting it to improve thread conformation.

NOTE: NOT intended for engine stud repairs.

Repair of Small Holes/Fine Threads

Option 1: Enlarge damaged hole, then follow *STANDARD THREAD REPAIR* procedure.

Option 2: Apply FORM-A-THREAD on the screw and insert in damaged hole.

Permanent Stud Installation (light duty)

- Use a stud or thread on desired length.
- DO NOT apply release agent on stud.
- Do a STANDARD THREAD REPAIR.
- Allow to cure for 30 minutes.
- Assemble.

Gasket Compound

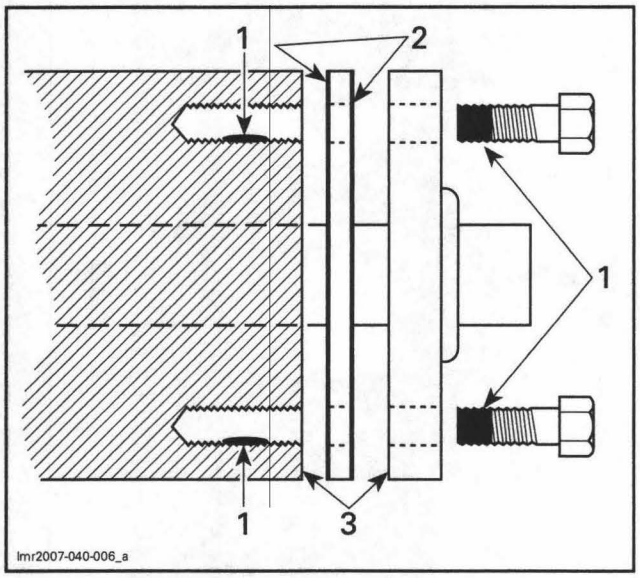

1. Proper strength Loctite
2. Loctite Primer N (P/N 293 800 041) and Gasket Eliminator 518 (P/N 293 800 038) on both sides of gasket
3. Loctite Primer N only

- Remove old gasket and other contaminants with Loctite Chisel remover (P/N 413 708 500). Use a mechanical mean if necessary.

NOTE: Avoid grinding.

- Clean both mating surfaces with solvent.
- Spray Loctite Primer N on both mating surfaces and on both sides of gasket. Allow to dry 1 or 2 minutes.
- Apply GASKET ELIMINATOR 518 (P/N 293 800 038) on both sides of gasket, using a clean applicator.
- Place gasket on mating surfaces and assemble immediately.

NOTE: If the cover is bolted to blind holes (above), apply proper strength Loctite in the hole and on threads. Tighten.

If holes are sunken, apply proper strength Loctite on bolt threads.

- Tighten as usual.

Mounting on Shaft

Mounting with a Press

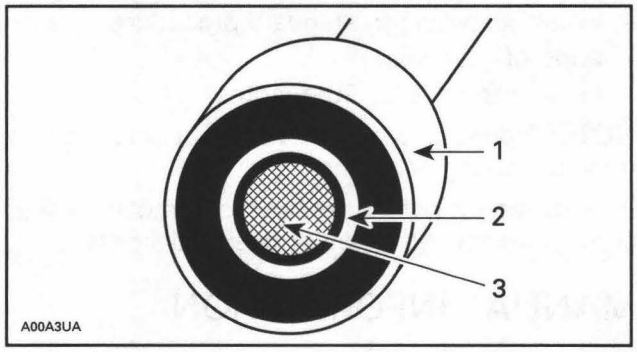

1. Bearing
2. Proper strength Loctite
3. Shaft

- Clean shaft external part and element internal part.
- Apply a strip of proper strength Loctite on shaft circumference at insert or engagement point.

NOTE: Retaining compound is always forced out when applied on shaft.

- DO NOT use antiseize Loctite or any similar product.
- No curing period is required.

Mounting in Tandem

1. Apply retaining compound on internal element bore.
2. Continue to assemble as shown above.

Case-In Components

Metallic Gaskets

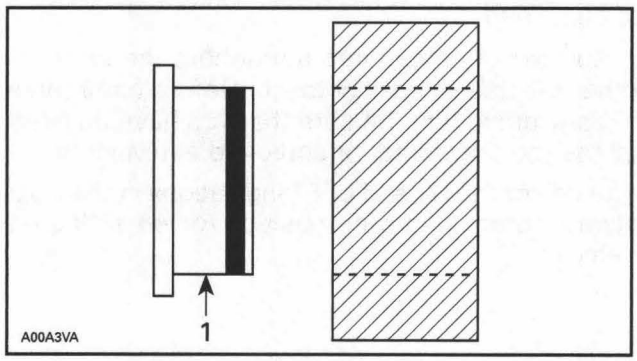

1. Proper strength Loctite

- Clean inner housing diameter and outer gasket diameter.
- Spray housing and gasket with Loctite Primer N (P/N 293 800 041).
- Apply a strip of proper strength Loctite on leading edge of outer metallic gasket diameter.

NOTE: Any Loctite product can be used here. A low strength liquid is recommended as normal strength and gap are required.

- Install according to standard procedure.
- Wipe off surplus.
- Allow it to cure for 30 minutes.

NOTE: Normally used on worn-out housings to prevent leaking or sliding.

It is generally not necessary to remove gasket compound applied on outer gasket diameter.

MANUAL INFORMATION

The manual is divided into many major sections as you can see in the main table of contents at the beginning of the manual.

Each section is divided in various subsections, and again, each subsection has one or more division.

Illustrations and photos show the typical construction of the different assemblies and, in all cases, may not reproduce the full detail or exact shape of the parts shown. However, they represent parts which have the same or a similar function.

CAUTION: Most components of those vehicles are built with parts dimensioned in the metric system. Most fasteners are metric and must not be replaced by customary fasteners or vice-versa. Mismatched or incorrect fasteners could cause damage to the vehicle or possible personal injury.

As many of the procedures in this manual are interrelated, we suggest, that before undertaking any task, you read and thoroughly understand the entire section or subsection in which the procedure is contained.

A number of procedures throughout the book require the use of special tools. Before commencing any procedure, be sure that you have on hand all the tools required, or approved equivalents.

The use of RIGHT and LEFT indications in the text, always refers to driving position (when sitting on vehicle).

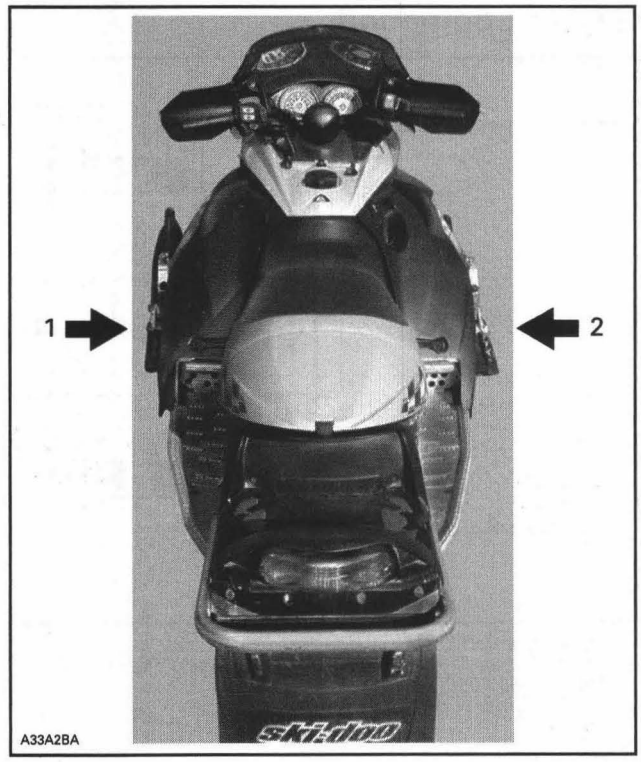

TYPICAL
1. Left
2. Right

This *Shop Manual* uses technical terms wich may be slightly different from the ones in the parts catalog.

TYPICAL PAGE

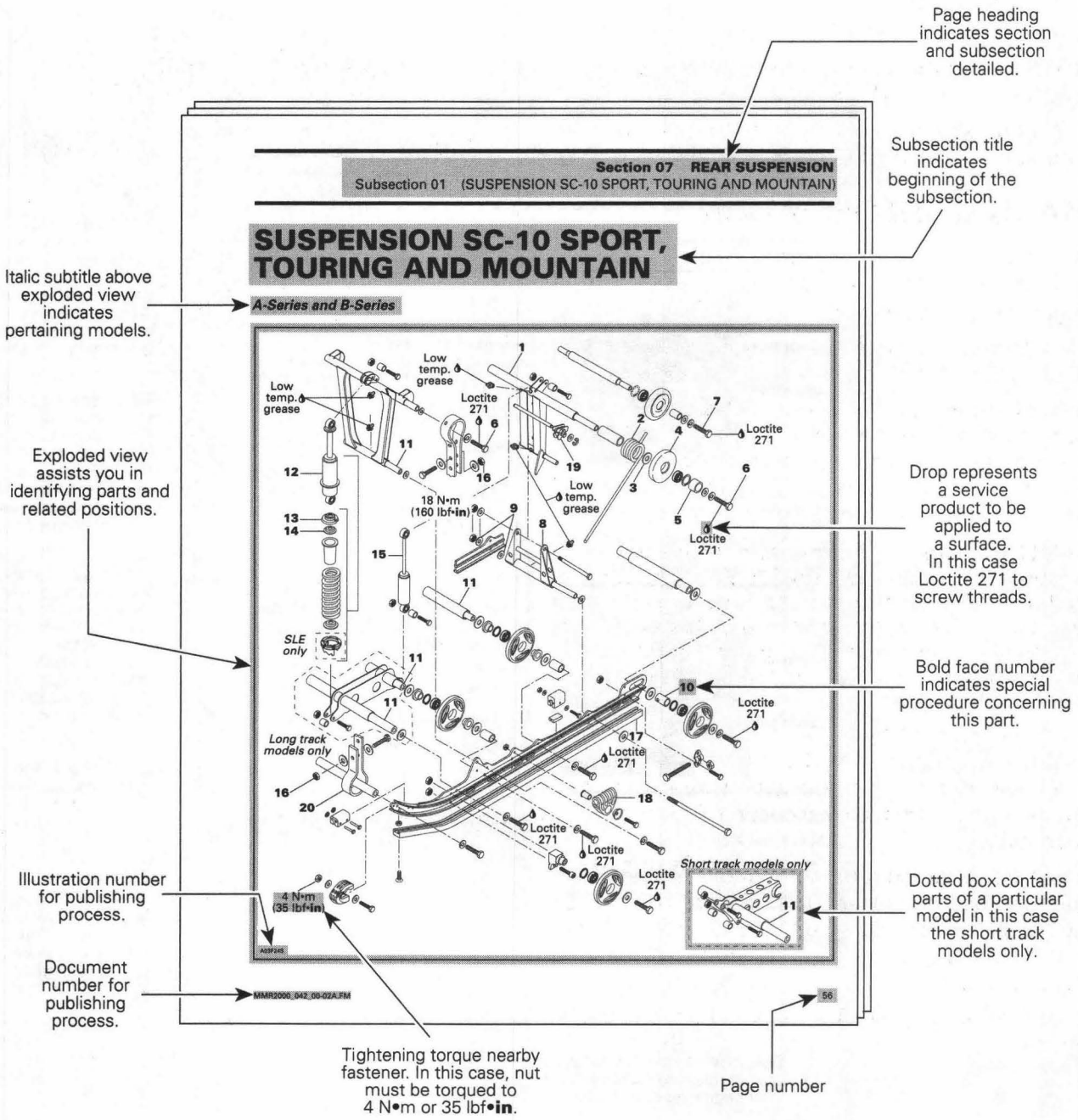

CAUTION: Pay attention to torque specifications. Some of these are in lbf•**in** instead of lbf•ft. Use appropriate torque wrench.

A00A7XS

TYPICAL PAGE

Turn puller handle and sliding half at once to extract the bushing.

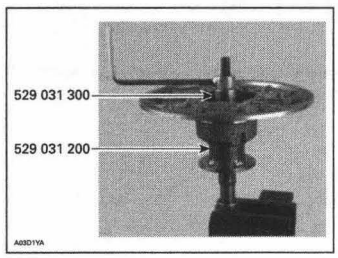

IMPORTANT: Large bushing retaining screws and washers must be removed before small bushing installation.

Coat bushing outside diameter with Loctite 609 (P/N 413 703 100).

Install bushing as following photo.

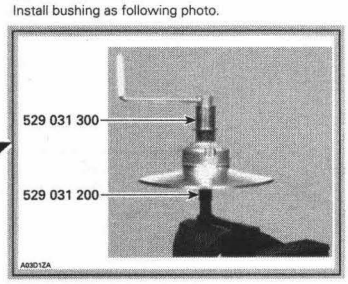

ASSEMBLY

Came Slider Shoe

When replacing slider shoes **no. 4**, always install a new set (3 shoes) to maintain equal pressure on the cam.

Assemble driven pulley components by reversing the disassembly procedure.

Cam

Coat cam **no. 18** interior with anti-seize lubricant.

INSTALLATION

Countershaft

CAUTION: Always apply anti-seize lubricant (P/N 413 701 000) on the countershaft before final pulley installation.

A-Series and B-Series Only

Should installation procedure be required, refer to BRAKE then look for **Brake Disc and Countershaft Bearing Adjustment**.

Reinstall the pulley on the countershaft by reversing the removal procedure.

All Models

Check end play of driven pulley on countershaft by pushing pulley towards outer housing so that the inner shims (P/N 504 108 200) contact it. Measure end play at the mounting screw end between shim(s) and puley. See illustration.

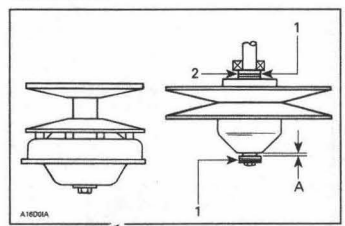

TYPICAL — TOP VIEW.
1. Shim (P/N 504 108 200) as required.
2. Contact.
A. 0 to 1 mm (0 to .040 in)

Torque retaining screw **no. 13** to 25 N•m (18 lbf•ft).

ADJUSTMENT

Refer to PULLEY DISTANCE AND ALIGNMENT to adjust pulley distance. Adjust drive belt height between pulley halves to obtain specified belt deflection.

Title indicates main procedure to be carried-out.

Italic bold face type setting indicates a particular procedure concerning a model.

Italic bold face setting in this case indicates that particular procedure for A and B-Series is finished, so from this point, all models are concerned.

"TYPICAL" caption indicates a general view which does not represent full detail. "TOP VIEW" caption helps you in understanding illustration.

Illustration always follows text to which it pertains.

Call-outs for above illustration.

Reference to look up a certain section and subsection. In this case it concerns pulleys adjustment.

Subtitle indicates a particular procedure for the named part.

Bold face number following part name refers to exploded view at beginning of subsection.

A00A7YS

MAINTENANCE CHART

A: ADJUST
C: CLEAN
I: INSPECT
L: LUBRICATE
R: REPLACE
T: PROCEED WITH TASK

PART/TASK	10–HOUR OR 500 km (300 mi) INITIAL INSPECTION (1)	MONTHLY OR EVERY 800 km (500 mi)	ONCE A YEAR OR EVERY 3200 km (2000 mi)	EVERY 2 YEARS OR 6000 km (3700 mi)	STORAGE (1)	PRESEASON PREPARATION (1)	REFER TO
ENGINE							
Rewind starter					L,C	I	*REWIND STARTER*
Engine motor mounts	I		I		I		*ENGINE REMOVAL AND INSTALLATION*
Exhaust system	I		I		I		*EXHAUST SYSTEM*
Exhaust manifold screws	I					I	
Cooling system cap, hoses and clamps	I		I			I	*COOLING SYSTEM*
Coolant	I			R			
Crankshaft PTO Seal						I	*BOTTOM END*
RAVE valves			C				*TOP END*
RAVE valves solenoid (SDI and Power TEK)			I				
Air filter		I,C				I,C	*AIR INTAKE SYSTEM*
Injection oil filter				R			*LUBRICATION SYSTEM*
Oil injection pump	A		A			A	
Engine lubrication					T		*STORAGE PROCEDURES*
ENGINE MANAGEMENT SYSTEMS							
Fault Codes	I				I		*MONITORING SYSTEM/FAULT CODES*
FUEL SYSTEM							
Fuel filter				R			*PRESEASON PREPARATION*
Fuel lines, fuel rail and connections	I					T	*FUEL SYSTEM*
Carburetor						A,C	
Throttle	I		I	L		I	
Choke (except SDI)	I		I			I	*FUEL SYSTEM*
Throttle body (SDI)						C	*SEMI-DIRECT INJECTION (SDI)*
Fuel stabilizer (4)					T		*STORAGE PROCEDURES*
ELECTRICAL SYSTEM							
Spark plugs (3)	I	I				R	*IGNITION SYSTEM*
Battery (if so equipped)	I	I			I	I	*CHARGING SYSTEM*
Wiring harnesses and cables	I	I			I		*ELECTRICAL CONNECTORS*

A: ADJUST
C: CLEAN
I: INSPECT
L: LUBRICATE
R: REPLACE
T: PROCEED WITH TASK

PART/TASK	10–HOUR OR 500 km (300 mi) INITIAL INSPECTION (1)	MONTHLY OR EVERY 800 km (500 mi)	ONCE A YEAR OR EVERY 3200 km (2000 mi)	EVERY 2 YEARS OR 6000 km (3700 mi)	STORAGE (1)	PRESEASON PREPARATION (1)	REFER TO
DRIVE/BRAKE SYSTEM							
Drive belt condition	I	I				I	*DRIVE BELT*
Drive belt height adjustment	EVERY BELT REPLACEMENT						
Drive and driven pulleys	I	I	C		I	C	*DRIVE PULLEY* and *DRIVEN PULLEY AND COUNTERSHAFT*
Drive pulley screw (torque)	I		I				*DRIVE PULLEY*
Brake fluid	I	I		R		I	*BRAKE*
Brake hose, pads and disk	I	I				I	
Drive chain tension	A	A			A		*CHAINCASE*
Drive axle end bearing (brake side)					I		*DRIVE AXLE*
Track condition	I	I			I		*TRACK*
Track tension and alignment	A	AS REQUIRED					
Chaincase oil	I				R		*CHAINCASE*
CHASSIS							
Front suspension	I	I			I		*FRONT SUSPENSION*
Rear suspension (2)	I	I,L			I,L		*REAR SUSPENSION*
Suspension stopper strap(s)			I		I		
Steering mechanism	I	I			I		*STEERING SYSTEM*
Skis and runners	I	I			I		

(1) To be performed by an authorized Ski-Doo dealer.

(2) Lubricate whenever the vehicle is used in wet conditions (wet snow, rain, puddles).

(3) Before installing new spark plugs at preseason preparation, it is suggested to burn excess storage oil by starting the engine with the old spark plugs. Only perform this operation in a well-ventilated area.

(4) If vehicle is not intended to be used within one month, add fuel stabilizer in fuel tank to prevent fuel deterioration.

STORAGE PROCEDURES

SERVICE PRODUCTS

Description	Part Number	Page
suspension grease	293 550 033	4
XP-S Lube	293 600 016	4
fuel stabilizer	413 408 600	4
BRP Plastic & Vinyl cleaner	413 711 200	5
storage oil (Canada)	413 711 600	3
storage oil (USA)	413 711 900	3
scratch remover kit	861 774 800	5

GENERAL

Proper snowmobile storage is a necessity during the summer months or when a vehicle is not being used for certain period of time.

If vehicle is not intended to be used within one month, add fuel stabilizer in fuel tank to prevent fuel deterioration. Refer to *FUEL SYSTEM* further in this section.

If vehicle is not intended to be used within three months, refer to storage column from *MAINTENANCE CHART* jointly with the present storage procedures in order to cover each and every aspect of the snowmobile storage procedure. Any worn, broken or damaged parts must be replaced.

⚠ WARNING

Unless otherwise specified, engine should be turned off for storage procedure.

To facilitate the inspection and ensure adequate lubrication of components, it is recommended to clean the entire vehicle.

ENGINE

Rewind Starter

For inspection, cleaning and lubrication, refer to *REWIND STARTER* section.

Engine Motor Mounts

Check if engine supports are cracked or damaged. Replace if necessary.

Check rubber mount on engine supports. Replace them if brittle, cracked or damaged.

Exhaust System

Check and replace if necessary:
- Tuned pipe shields and deflectors for damages
- Tuned pipe ends for cracks or damages
- Manifold for cracks or damages.

Engine Lubrication

CAUTION: Fuel stabilizer should be added prior to engine lubrication to ensure carburetor protection against varnish deposit.

Engine internal parts must be lubricated to protect them from possible rust formation during the storage period.

Proceed as follows:
- Place the vehicle in a well ventilated area and start the engine.
- Start the engine and let it run at idle speed until it reached its operating temperature.
- Stop the engine.
- Remove the primary air intake silencer. Refer to *AIR INTAKE SYSTEM* for the removal procedure.
- Restart engine and run at idle speed.
- Inject storage oil into each carburetor/throttle body until the engine stalls or until a sufficient quantity of oil has entered the engine (approximately half a can).
- With the engine stopped, remove the spark plugs and spray storage oil (Canada) (P/N 413 711 600) or storage oil (USA) (P/N 413 711 900) into each cylinder.
- Crank slowly 2 or 3 revolutions to lubricate cylinders.
- Reinstall the spark plugs and primary air intake silencer.

ENGINE MANAGEMENT SYSTEM

Fault Codes

Using B.U.D.S., verify if fault codes appear in the engine management system (EMS). Repair or replace defective parts.

FUEL SYSTEM

Fuel Stabilizer

It is critical to use the fuel stabilizer (P/N 413 408 600) (250 mL) to prevent fuel deterioration, gum formation and fuel system components corrosion. Follow manufacturer's instructions for proper use.

Pour fuel stabilizer in fuel tank. Fill up fuel tank completely. Ensure there is no water inside fuel tank.

CAUTION: Should any water be trapped inside fuel tank, severe internal damage will occur to the fuel injection system (SDI models).

Do not drain fuel system.

ELECTRICAL SYSTEM

Battery (if so equipped)

Remove battery, clean its tray and surrounding area with water and baking soda.

Inspect, clean and charge battery as explained in *CHARGING SYSTEM* section.

Wiring Harnesses, Cables and Connectors

Inspect for wear, deterioration or damage, replace defective parts if necessary.

DRIVE/BRAKE SYSTEM

Drive and Driven Pulleys

Remove drive belt.

Inspect and clean pulleys.

Spray XP-S Lube (P/N 293 600 016) on sheaves to protect them from rust.

Do not reinstall drive belt.

Drive Axle End Bearing (brake side)

Make a visual inspection of the bearing seal to ensure it is not damaged. Replace bearing if damaged. Refer to *DRIVE AXLE*.

Track

NOTE: Do not release track tension.

Visually inspect track for:
- Cuts and abnormal wear
- Broken rods
- Broken or missing track cleats.

If track is damaged or rods are broken, replace track, refer to *TRACK* section.

For damaged or missing cleats, refer to *TRACK* section for procedure.

Chaincase

Chaincase Oil

Replace chaincase oil, refer to *CHAINCASE* section.

Drive Chain

Check drive chain tension and adjust if necessary, refer to *CHAINCASE* section.

CHASSIS

Front Suspension

Inspect the front suspension arms for wear or damages, replace if necessary. Refer to *FRONT SUSPENSION* section.

Rear Suspension

Inspect rear suspension components for wear, deterioration or damage, replace defective parts if necessary.

Inspect strap(s) for wear or cracks, bolt and nut for tightness. If loose, inspect hole for deformation. Replace if necessary.

Lubricate rear arm at grease fittings using suspension grease (P/N 293 550 033).

Steering Mechanism

Lubricate the steering mechanism if needed. **Inspect all components for tightness.**

Skis and Runners

Inspect skis and runners for wear, deterioration or damage, replace if necessary.

VEHICLE

Vehicle Cleaning

Keep engine compartment clean of grass, twigs, cloth, etc. These are combustible under certain conditions.

To clean the vehicle, do not use high pressure washers (like the ones found in car washes) as it may damage certain parts of the vehicle.

To clean the vehicle, proceed as follows:

Rinse the vehicle thoroughly with water to remove loose dirt.

Using a soft clean cloth, wash the vehicle with water mixed with a mild detergent, such as soap specially formulated for motorcycles or automobiles.

While washing the vehicle, check for grease or oil. If necessary, use BRP Plastic & Vinyl cleaner (P/N 413 711 200) or a mild automotive degreaser. Follow thoroughly the manufacturer's instructions.

CAUTION: Do not use heavy duty cleaner on decals or vinyl.

Dry the vehicle with a chamois or a soft towel.

⚠ WARNING

Do not apply a vinyl or plastic protector on the seat as the surface will become slippery and the operator or the passenger may slip off the vehicle.

Windshield Polishing

Windshield can be polished using scratch remover kit (P/N 861 774 800) or a plastic cleaner specially formulated for these special surfaces.

CAUTION: Do not clean the windshield with alkaline or acid cleaner, gasoline or solvent to avoid windshield damage.

Vehicle Waxing

Apply only nonabrasive wax safe for clearcoats paints on glossy finishes.

Avoid applying wax on mat surfaces.

Vehicle Protection

Block air intake and muffler with clean rags.

Touch up all metal spots where paint has been scratched off.

Cover the vehicle with a permeable material. Avoid using plastic or similar non-breathing, coated materials that restrict air flow and allow heat and moisture to accumulate.

Store vehicle in a dry unheated area, away from sunlight, with a small amount of daily temperature variation.

Lift rear of vehicle until track is clear of the ground. Install on a snowmobile mechanical stand.

PRESEASON PREPARATION

SERVICE PRODUCTS

Description	Part Number	Page
pulley flange cleaner	413 711 809	7–8

GENERAL

Proper vehicle preparation is necessary after the summer months or when a vehicle has not been used for more than three months.

Refer to preseason preparation column from *MAINTENANCE CHART* jointly with the present preseason preparation procedures in order to cover each and every aspect of the snowmobile preseason preparation procedure.

Any worn, broken or damaged parts found during the storage procedure should have been replaced. If not, proceed with the replacement.

⚠ WARNING

Unless otherwise specified, engine should be turned off for preparation procedure.

ENGINE

Rewind Starter

Check if rope is fraying, replace if so.

When pulling starter grip, it must return freely. If not, check for damaged parts or lack of lubrication. Replace parts or lubricate accordingly.

Exhaust Manifold

Check exhaust manifold screws for looseness. Retorque if necessary.

Muffler

Remove rags that were installed during storage preparation.

Cooling System

Inspect cooling system for leaks, to perform a cooling system leak test, refer to *COOLING SYSTEM*.

Check coolant level in coolant reservoir. Add coolant if necessary.

If engine is cold, refill up to 15 mm (5/8 in) over COLD level line.

If engine is hot, refill up to 25 mm (1 in) over COLD level line. Use caution when opening pressurized coolant reservoir cap. Place a rag over cap and turn it slowly to release pressure.

Crankshaft PTO Seal

Make sure there is no grease coming out from crankshaft PTO seal, if so replace seal. Refer to *BOTTOM END* section.

Air Filter

Ensure that air filter is properly installed and in good condition.

Rinse filter with fresh water to clean or replace if damaged.

Oil Injection Pump

Make sure oil injection pump is properly adjusted, refer to *LUBRICATION SYSTEM*.

FUEL SYSTEM

Inspect fuel system for leaks. Perform a fuel system leak test, refer to *FUEL TANK AND FUEL PUMP*.

Carburetors

All Models except 600 HO SDI

Disassemble carburetors in order to clean all internal parts. Do not hesitate to replace any jets having gum or varnish on their surfaces.

NOTE: Cleaning is not required if vehicle was prepared as per storage procedures.

Make sure carburetors are properly adjusted, refer to *FUEL SYSTEM*.

Throttle Body

600 HO SDI Models

Using the pulley flange cleaner (P/N 413 711 809), clean the throttle plates and throttle body bores.

NOTE: To ease cleaning, throttle body should be partially pulled from engine, without disconnecting throttle cable or coolant hose.

CAUTION: Ensure the cleaner does not enter engine intake.

Throttle

Make sure that throttle lever operates freely, adjust and lubricate throttle cable as required, refer to *FUEL SYSTEM*.

Choke (except 600 HO SDI)

Make sure choke lever operates freely, adjust and lubricate choke cable as required. Refer to *FUEL SYSTEM*.

ELECTRICAL SYSTEM

Spark Plugs

Once preseason preparation is done, start engine with the old spark plugs to burn excess storage oil. Then, install new spark plugs.

NOTE: Ensure to replace with recommended spark plugs.

Battery (if so equipped)

Verify that battery is fully charged, if not, refer to the appropriate charging procedure in *CHARGING SYSTEM*.

DRIVE/BRAKE SYSTEM

Drive and Driven Pulley

Clean drive and driven pulleys sheaves with pulley flange cleaner (P/N 413 711 809).

Drive Belt

Inspect belt for cracks, fraying or abnormal wear. Replace if necessary.

Make sure to install the proper belt with arrow printed on belt pointing front of vehicle.

Brake

Brake Fluid

Check brake fluid in reservoir for proper level. Add fluid (DOT 4) as required.

CAUTION: Use only DOT 4 brake fluid from a sealed container. An opened container may be contaminated or may have absorbed moisture from the air.

Brake Hose, Pads and Disk

Inspect brake hose for wear, deterioration or damage, replace if necessary.

Inspect brake pads for proper thickness. Refer to *BRAKE*.

Remove any rust built-up on braking surfaces. Clean brake disk braking surfaces with pulley flange cleaner (P/N 413 711 809).

Track

Verify track tension and alignment, refer to *TRACK*.

NOTE: Track tension and alignment are interrelated. Do not adjust one without checking the other. Track tension procedure must be carried out prior to track alignment.

TECHNICAL GUIDELINES

The following chart is provided to help diagnose the probable source of troubles. It should be used as a guideline. Some causes or corrections may not apply to a specific model.

ENGINE

Symptom: ENGINE BACKFIRES

1. **Check spark plugs.**
   - *Defective spark plug(s). Install new recommended spark plug(s).*
2. **Check ignition timing.**
   - *Timing is too advanced. Set timing according to specifications (refer to TECHNICAL SPECIFICATIONS).*
3. **Check for erratic sparks.**
   - *Poor electrical connections. Repair.*
   - *Faulty ignition component. Replace defective part.*
4. **Check carburetors.**
   - *Fuel passages obstructed. Clean carburetor and install new strainer.*

Symptom: ENGINE SUDDENLY TURNS OFF AT HIGH RPM

1. **Check spark plugs.**
   - *Non-resistor type spark plugs installed.*
2. **Check ECM ground.**
   - *Loose or corroded ground.*
3. **Check fuel pump.**
   - *Defective fuel pump or restricted fuel line or vent.*

Symptom: ENGINE SUDDENLY TURNS OFF

1. **Perform engine leak test. Refer to *ENGINE LEAK TEST*.**
   - *Damaged gasket and/or seal. Replace defective parts.*
2. **"Four-corner" seizure of piston(s).**
   - *High acceleration when engine is cold. Piston expands faster than cylinder. Replace piston(s). Ask driver to refer to the VEHICLE WARM-UP PROCEDURE in the OPERATOR'S GUIDE.*

Symptom: **ENGINE SUDDENLY TURNS OFF** (cont'd)

3. **Piston(s) seizure on exhaust side (color on piston dome is correct).**
   - *Kinked fuel tank vent tube. Relocate fuel tank vent tube.*
   - *Leaks at fuel line connections or damaged fuel lines. Replace defective lines.*
   - *Fuel does not flow through carburetor(s) (foreign particles in needle area and/or varnish formation in carburetor(s)). Clean carburetor(s) and install new strainer or filter.*
   - *Spark plug heat range is too warm. Install spark plugs with appropriate heat range (refer to TECHNICAL SPECIFICATIONS).*
   - *Improper ignition timing. Adjust according to specifications (refer to TECHNICAL SPECIFICATIONS).*
   - *Restriction in exhaust system. Replace.*
   - *Compression ratio is too high. Install genuine parts.*
   - *Too low fuel octane number. Use proper fuel octane number.*
   - *Carburetor calibration is too lean. Adjust according to specifications (refer to TECHNICAL SPECIFICATIONS).*
   - *Improper reed valve adjustment or damage. Adjust according to specifications (refer to appropriate ENGINE subsection) and/or install BRPs recommended reed valve.*
   - *Poor quality oil. Use proper BRP XP-S injection oil.*
   - *Leaks at air intake silencer. Replace air intake silencer grommets.*
   - *Excessive wear of piston rings. Replace piston rings.*
4. **Melted and/or perforated piston dome; melted section at ring end gap.**
   - *When piston reaches TDC, mixture is ignited by heated areas in combustion chamber. This is due to an incomplete combustion of a poor quality oil. Clean residue accumulation in combustion chamber and replace piston(s). Use proper BRP XP-S injection oil.*
   - *Spark plug heat range is too high. Install recommended spark plugs (refer to TECHNICAL SPECIFICATIONS).*
   - *Ignition timing is too advanced. Adjust according to specifications (refer to TECHNICAL SPECIFICATIONS).*
   - *Inadequate fuel quality. Use appropriate fuel.*
   - *Carburetion is too lean. Adjust according to specifications (refer to TECHNICAL SPECIFICATIONS).*
5. **Seized piston all around the circumference (dry surface).**
   - *Lack of oil, damaged oil line or defective injection pump. Replace defective part(s).*
6. **Grooves on intake side of piston only.**
   - *Oil film eliminated by water (snow infiltration in engine). This can also be caused by running engine on choke for too long. Excessive fuel will remove the oil film on the piston and make marks. Replace piston(s) and check if intake system leaks.*
7. **Piston color is dark due to seizure on intake and exhaust sides.**
   - *Cooling system leaks and lowers coolant level. Proceed with a leakage test (refer to COOLING SYSTEM) and repair as required. Add coolant in cooling system until appropriate level is reached.*
   - *Accumulation of foreign particles in needle valve and/or main jet area. Clean carburetor(s).*
8. **Cracked or broken piston(s).**
   - *Cracked or broken piston(s) due to excessive piston/cylinder clearance or engine over-revving. Check piston/cylinder clearance (refer to TOP END). Replace piston(s).*
   - *Adjust drive pulley according to specifications (refer to TECHNICAL SPECIFICATIONS) and/or clean pulley sheaves if they are contaminated with greasy particles.*
9. **DPM manifold air vent is obstructed.**
   - *Carburetion is too lean. Ensure proper air vent.*

Symptom: **PISTON RING AND CYLINDER SURFACES ARE SCRATCHED**

1. **Check oil quality.**
   - *Poor quality oil. Use proper BRP XP-S injection oil.*
2. **Check injection pump and its hoses.**
   - *Inadequate injection pump adjustment and/or defective hoses. Adjust pump according to specifications (refer to LUBRICATION SYSTEM) and/or replace hoses.*

Symptom: **ENGINE DOES NOT OFFER MAXIMUM POWER AND/OR DOES NOT REACH MAXIMUM OPERATING RPM**

1. **Check spark plug condition.**
   - *Fouled spark plugs. Replace.*
2. **Check if there is water in fuel.**
   - *There is water in fuel. Drain fuel system, then fill with appropriate fuel.*
3. **Check proper operation of RAVE valves.**
   - *Refer to ENGINE DOES NOT REACH ITS FULL OPERATING RPM (500 TO 1000 RPM LOWER). Repair.*
4. **Check items listed in *ENGINE RUNS OUT OF FUEL* (refer to *FUEL AND OIL SYSTEMS* subsection).**
5. **Check carburetor adjustments and cleanliness.**
   - *Inadequate carburetor adjustments or dirt accumulation. Adjust according to specifications (refer to TECHNICAL SPECIFICATIONS) or clean.*
6. **Check drive belt.**
   - *Worn belt. Replace belt if width is 3 mm (1/8 in) less than nominal dimension (refer to TECHNICAL SPECIFICATIONS).*
7. **Check track adjustment.**
   - *Too much tension and/or improper alignment. Align track and adjust its tension to specifications (refer to TECHNICAL SPECIFICATIONS).*
8. **Check drive pulley.**
   - *Improper calibration screw adjustments (TRA pulley) and/or worn bushing(s). Adjust according to specifications (refer to TECHNICAL SPECIFICATIONS) and/or replace bushing(s).*
9. **Check driven pulley.**
   - *Worn bushing and/or spring tension. Replace spring and/or adjust its tension according to specifications (refer to TECHNICAL SPECIFICATIONS).*
10. **Check exhaust system.**
    - *Restriction or exhaust system leakage. Replace or reseal with Loctite 5920 RTV high temperature sealant (P/N 293 800 090).*
11. **Check ignition timing.**
    - *Decrease in power due to delayed ignition. Adjust according to specifications (refer to TECHNICAL SPECIFICATIONS).*
12. **Check engine compression.**
    - *Worn piston(s) and ring(s). Replace.*
13. **Check reed valve.**
    - *Improper tightness and/or opening. Replace or adjust. (Refer to proper ENGINE subsection).*

Symptom: **ENGINE DETONATION AT MAXIMUM RPM**

1. **Check which type of fuel is used.**
   - *Octane number is too low and/or alcohol level is too high. Use recommended fuel type.*
2. **Check spark plug type.**
   - *Improper spark plug heat range. Install recommended spark plugs (refer to TECHNICAL SPECIFICATIONS).*
3. **Check exhaust system.**
   - *Too much restriction. Replace.*
4. **Check ignition timing.**
   - *Timing is too advanced. Adjust according to specifications (refer to TECHNICAL SPECIFICATIONS).*
5. **Check if engine is overheating. (Refer to *HIGH ENGINE OPERATING TEMPERATURE.*)**
6. **Check carburetion.**
   - *Fouled and/or improper carburetor components. Clean or replace according to specifications (refer to TECHNICAL SPECIFICATIONS).*
7. **Check combustion chamber volume.**
   - *Compression ratio is too high. Install genuine parts.*

Symptom: **ENGINE TURNS OVER BUT FAILS TO START**

1. **Check switches.**
   - *Engine cut-out switch is in OFF position or tether cord cap (DESS key) away from post. Place engine cut-out switch in the ON position and install tether cord cap (DESS key) on post. If it still does not work, connect DESS switch BK/GN and BK/WH wires together (harness side).*
2. **Check fuel level.**
   - *Mixture too lean to start cold engine. Check fuel tank level and use choke.*
3. **Check spark plug.**
   - *Defective spark plug (no spark). Replace spark plugs.*
4. **Check fuel lines.**
   - *No fuel to the engine (spark plugs dry when removed). Check fuel tank level; check fuel filter and strainer, replace if clogged; check condition of fuel and impulse lines and their connections.*
5. **Check engine compression.**
   - *Insufficient engine compression. Replace defective part(s) (e.g.: piston(s), ring(s), etc.).*

Symptom: **IRREGULAR ENGINE IDLE (normal use after engine warm up)**

1. **Check choke.**
   - *Choke plunger may be partially opened. Readjust.*
2. **Check carburetor adapter(s)**
   - *Air enters through a crack. Replace.*
3. **Check air screw position.**
   - *Inadequate fuel/air mixture. Adjust according to specifications (refer to TECHNICAL SPECIFICATIONS).*
4. **Check reed valve.**
   - *Improper tightness and/or opening. Replace or adjust. Refer to proper ENGINE subsection.*
5. **Perform engine leak test.**
   - *Leaking gaskets allow air to enter in engine. Replace defective parts.*

Symptom: **IRREGULAR ENGINE IDLE (normal use after engine warm up)** (cont'd)

6. **DPM manifold air vent is obstructed.**
   - *Carburetion is too lean. Ensure proper air vent.*
7. **On models with carburetors, check throttle slide height.**
   - *Incorrect throttle slide height. Readjust according to specifications.*
8. **On SDI models, check cleanness of throttle body.**
   - *Deposits inside throttle body. Clean throttle body bores and plates.*

Symptom: **HIGH ENGINE OPERATING TEMPERATURE**

1. **Check coolant level and check if there is air infiltration in the system or if there are leaks in gasket areas.**
   - *Low coolant level or air in system. Add coolant until recommended level is reached, bleed system and/or tighten clamps.*
2. **Check temperature gauge sensor.**
   - *False reading. Check terminal connections. If problem persists, replace sensor.*
3. **Check if heat exchangers are clean.**
   - *Dirty heat exchangers. Clean heat exchangers.*
4. **Check if coolant flows through system properly.**
   - *Foreign particles and/or broken coolant pump impeller. Clean cooling system and/or replace coolant pump impeller.*
5. **Check antifreeze concentration.**
   - *Antifreeze concentration is too high. Adjust concentration according to BRP's recommendations.*
6. **Check thermostat.**
   - *Thermostat reacts slowly or not at all. Replace.*
7. **Check tank cap.**
   - *Cap does not hold pressure. Replace.*
8. **Check condition and heat range of spark plugs.**
   - *Melted spark plug tip or inadequate heat range. Replace.*
9. **Check carburetion.**
   - *Improperly adjusted or inadequate carburetor components. Adjust according to specifications (refer to TECHNICAL SPECIFICATIONS) or replace inadequate component(s).*
10. **Check ignition timing.**
    - *Ignition timing is too advanced. Adjust according to specifications (refer to TECHNICAL SPECIFICATIONS).*
11. **Check cylinder head gaskets.**
    - *Worn gaskets. Replace.*

Symptom: **ENGINE DOES NOT REACH ITS FULL OPERATING RPM (500 to 1000 RPM slower)**

1. **Check RAVE valve pistons.**
   - *Valve piston(s) is (are) not screwed to the bottom. Screw valve piston(s) to bottom.*
2. **Check that valve moves freely.**
   - *Valve stuck in closed position. Clean.*
3. **Check RAVE valve stems.**
   - *Bent RAVE valve stem(s). Replace.*

Symptom: **ENGINE DOES NOT REACH ITS FULL OPERATING RPM (500 to 1000 RPM slower)** (cont'd)

4. **Check RAVE valves.**
   - *Jammed valve(s). Clean.*
5. **Check RAVE pressure holes (except SDI and Power TEK).**
   - *Clogged holes. Clean.*
6. **Check clamps or sleeves.**
   - *Damaged clamp(s) or sleeve(s). Replace.*

Symptom: **ENGINE PINGING**

1. **Check for proper fuel octane number according to engine type.**
   - *Too low fuel octane number. Use appropriate fuel octane number (Refer to TECHNICAL SPECIFICATIONS).*
2. **Check fuel lines.**
   - *Bent fuel lines (preventing fuel from flowing through). Relocate or replace fuel lines.*
3. **Check if carburetors are clean.**
   - *Dirt prevents fuel from flowing through. Clean.*
4. **Check ignition timing.**
   - *Timing is too advanced. Adjust according to specifications (refer to TECHNICAL SPECIFICATIONS).*
5. **Check compression ratio.**
   - *Compression ratio is too high. Replace inadequate part(s) to obtain manufacturer's recommended compression ratio or use a higher grade fuel.*
6. **Check for carbon accumulation in combustion chamber and/or on piston dome.**
   - *Carbon accumulation. Remove carbon accumulation.*

FUEL AND OIL SYSTEMS

Symptom: **HIGH FUEL CONSUMPTION OR RICH MIXTURE (except SDI models)**

1. **Check choke adjustment.**
   - *Fuel flows through choke circuit while engine runs. Readjust choke.*
2. **Check needle valve on each carburetor.**
   - *Foreign particles prevent needle valve from closing and/or pounded seating area. Clean or replace needle valve, then clean seating area.*

Symptom: **FUEL LEAKS IN ENGINE BASE WHEN ENGINE IS STOPPED (except SDI models)**

1. **Check needle valve on each carburetor.**
   - *Foreign particles prevent needle valve from closing and/or pounded seating area. Clean or replace needle valve, then clean seating area.*
2. **Check fuel pump diaphragm.**
   - *Cracked diaphragm. Replace.*

Symptom: **ENGINE LACKS POWER OR STALLS AT HIGH RPM (except SDI models)**

1. **Check fuel tank vent hose.**
   - *Kinked or clogged hose. Relocate or replace.*
2. **Check in-tank fuel strainer.**
   - *Clogged filter. Replace.*
3. **Check fuel lines.**
   - *Kinked or clogged lines. Relocate or replace.*
4. **Check fuel pump flow.**
   - *Check impulse hose. Replace.*
   - *Dried diaphragm. Replace.*
5. **Check if carburetors are clean.**
   - *Varnish. Clean.*

Symptom: **HIGH INJECTION OIL CONSUMPTION**

1. **Check oil injection pump adjustment.**
   - *Oil injection pump adjusted too rich. Adjust.*
2. **Check injection oil lines and their fitting.**
   - *Leaking lines and/or cover. Replace defective part(s).*
3. **Check injection pump cover gasket.**
   - *Broken gasket. Replace.*
4. **Check nipple check valve.**
   - *Check valve stuck open. Replace.*
5. **Check pump.**
   - *Defective pump. Replace pump.*
6. **Test pump shaft gear reservoir for leaks.**
   - *Leaking seal(s). Replace seal(s).*

Symptom: **ENGINE LACKS FUEL (SDI models only)**

1. **Check in-line fuel filter.**
   - *Clogged filter. Replace fuel strainer or filter.*
2. **Check electric fuel pump pressure.**
   - *Electric fuel pump defective. Replace.*
   - *Regulator defective. Replace.*
3. **Check fuel injectors flow.**
   - *Dirty or defective injectors. Replace.*

Symptom: **ENGINE IS TOO RICH OR TOO LEAN (models with DPM system only)**

1. **Check electrical connections of DPM solenoid.**
   - *Corroded terminals. Clean or replace.*
2. **Check for DPM manifold leaking.**
   - *DPM manifold is leaking. Repair or replace.*

DRIVE SYSTEM

Symptom: THE SNOWMOBILE ACCELERATES SLOWLY, ESPECIALLY FROM A STANDING START

1. **Check drive belt condition.**
   - *Belt is too narrow (drive belt engagement is higher in drive pulley). Replace belt if width is less than specified in DRIVE BELT.*
2. **Check drive belt deflection.**
   - *Deflection is too high (drive belt engagement is higher in drive pulley). Adjust drive belt height according to specifications (refer to DRIVE BELT).*
3. **Check if driven pulley sliding sheave slides freely.**
   - *Jammed sliding sheave. Replace.*
4. **Check spring tension of driven pulley sliding sheave.**
   - *Sliding sheave rotation is accelerated when spring tension is too weak. Adjust according to specifications (refer to TECHNICAL SPECIFICATIONS) or replace.*
5. **Check drive pulley spring tension.**
   - *Spring tension is too weak. Replace.*

Symptom: ENGINE MAXIMUM RPM IS TOO HIGH AND TOP SPEED IS NOT REACHED

1. **Check items 1, 2 and 3 of THE SNOWMOBILE ACCELERATES SLOWLY, ESPECIALLY FROM A STANDING START.**
2. **Check driven pulley spring tension.**
   - *Spring tension is too stiff. Adjust according to specifications (refer to TECHNICAL SPECIFICATIONS).*
3. **Check position of the calibration screws. (TRA drive pulley).**
   - *Selected numbers are too high. Adjust according to specifications (refer to TECHNICAL SPECIFICATIONS) or replace spring.*
4. **Check the driven pulley.**
   - *Driven pulley does not open completely. Clean, readjust or replace driven pulley.*
5. **Check if levers of drive pulley move freely.**
   - *Stuck levers. Replace lever bushings.*

Symptom: LOOSE IN DRIVE SYSTEM WHEN ACCELERATING/DECELERATING

1. **Check drive chain tension.**
   - *Drive chain is too loose. Adjust.*

Symptom: PULLEYS DO NOT DOWN SHIFT PROPERLY

1. **Check drive pulley bushings (cleanliness, wear, etc.).**
   - *Bushings stick to fixed sheave pulley shaft. Clean or replace.*

Symptom: BELT TOO NARROW ON ONE SECTION

1. **Vehicle started with a frozen track.**
   - *Free track from ice before starting vehicle.*
2. **Vehicle ridden with parking brake engaged.**
   - *Release parking brake before riding vehicle.*
3. **Check track tension/alignment.**
   - *Track too tight. Adjust track tension and alignment.*

Symptom: **BELT TOO NARROW ON ONE SECTION** (cont'd)

4. **Check drive pulley.**
   - *Drive pulley does not operate properly. Repair or replace drive pulley.*
5. **Check belt height.**
   - *Belt height is incorrect. Adjust according to specifications.*

Symptom: **BELT GLAZED EXCESSIVELY OR HAVING BAKED APPEARANCE**

1. **Check if drive pulley bushings are worn.**
   - *Slipping due to insufficient pressure on belt sides. Replace bushing.*
2. **Check condition of drive pulley fixed sheave shaft.**
   - *Slipping due to rusted drive or driven pulley shafts. Clean shaft with fine steel wool.*
3. **Check if pulley sheaves are clean.**
   - *Slipping due to oily pulley surfaces. Clean pulley sheaves.*
4. **Check pulley calibration.**
   - *Slipping due to improper pulley calibration. Calibrate according to specifications.*

Symptom: **BELT WORN EXCESSIVELY IN TOP WIDTH**

1. **Check drive pulley.**
   - *Excessive slippage due to jamming of drive pulley. Inspect drive pulley.*
2. **Check drive belt identification number.**
   - *Improper belt angle (wrong type of belt). Replace belt with an appropriate drive belt.*
3. **Check drive belt width.**
   - *Considerable use. Replace belt if less than specified in DRIVE BELT.*

Symptom: **BELT SIDES WORN CONCAVE**

1. **Check pulley sheave surfaces.**
   - *Rough or scratched pulley sheave surfaces. Repair or replace.*
2. **Check drive belt identification number.**
   - *Wrong belt. Replace with an appropriate drive belt (refer to TECHNICAL SPECIFICATIONS).*

Symptom: **FATIGUE CRACKS BETWEEN COGS**

1. **Check drive belt condition.**
   - *Belt considerably worn, worn out. Replace.*
   - *Distortion of natural belt shape due to improper storage. Store properly.*

Symptom: **TOOTH CHUNK OUT**

1. **Check drive belt rotational direction.**
   - *Improper belt installation. Replace.*
2. **Check if drive belt rubs against components.**
   - *Belt rubs against fixed components. Relocate components.*
3. **Check drive pulley.**
   - *Violent engagement of drive pulley. Check drive pulley engagement speed, drive pulley bushings and components.*
4. **Check drive belt storage condition.**
   - *Improper storage procedure (excessive bend or twist).*

Symptom: **NOISE OR VIBRATION COMING FROM THE TRACK**

1. **Check track tension.**
   - *Track is too loose. Adjust to recommended tension.*
2. **Check condition of idler wheel(s).**
   - *Idler wheel rubber is damaged. Replace.*
3. **Check guide cleats.**
   - *Top portion of guide cleat(s) is bent. Replace.*
4. **Check sprockets.**
   - *One or several teeth of drive shaft sprockets are broken. Replace sprocket(s).*
5. **Check track rods and/or internal traction teeth.**
   - *One or several track rods and/or teeth are broken. Replace track.*

BRAKE SYSTEM

Symptom: **SPONGY BRAKE CONDITION**

1. **Brake pads worn.**
   - *Replace brake pads.*
2. **Air in brake system.**
   - *Bleed system.*
3. **Contaminated brake fluid.**
   - *Replace brake fluid and bleed system.*
4. **Leak in brake system.**
   - *Repair leak.*
5. **Master cylinder faulty.**
   - *Replace master cylinder.*
6. **Caliper piston seals worn or damaged.**
   - *Replace caliper.*

REAR SUSPENSION

Symptom: **SLIDER SHOES WEAR OUT PREMATURELY/OR TRACK CLEATS BECOME BLUE**

1. **Check track tension.**
   - *Pressure is too great on slider shoes. Adjust according to specifications (refer to TRACK). Replace defective parts.*
2. **Check idler wheel condition.**
   - *Stuck bearing, flat spot on wheel or damaged wheel. Replace defective parts.*
   - *Idler wheels too small for minimal snow or icy condition. Install bigger idle wheels.*
3. **Check snow conditions or lack of snow.**
   - *Lack of lubrication of slider shoes. Ask driver to ride in appropriate snow conditions (see OPERATOR'S GUIDE).*
4. **Check slider shoes and/or suspension retaining screws.**
   - *Twisted slider shoes or loose retaining screws. Replace defective parts and/or tighten loose screws.*

Symptom: **TRACK OVERHEATS OR SHOWS EXCESSIVE WEAR**

1. **Check track profiles.**
   - *Hi profile tracks is used on trails. Change track for smaller profile.*
2. **Check track width.**
   - *Track width exceeds 38 cm (15 in). Replace track.*

ELECTRICAL SYSTEM

Symptom: **ENGINE IS MISFIRING — ERRATIC SPARK AT SPARK PLUG**

1. **Check spark plugs. Proceed with spark plug analysis in order to identify source of problem.**
   - *Defective and/or worn spark plug(s) and/or cable(s) and/or cap(s). Replace defective part(s). Proceed with ignition system testing procedures.*

Symptom: **FOULED (BLACK) SPARK PLUG TIP**

1. **Check carburetors.**
   - *Carburetion is too rich. Adjust according to specifications (refer to TECHNICAL SPECIFICATIONS).*
2. **Check injection oil consumption.**
   - *Injection pump flow is too high. Adjust according to specifications or replace.*
3. **Check oil quality.**
   - *Poor quality oil (creation of deposits). Use appropriate BRP XP-S injection oil.*
4. **Check engine compression.**
   - *Leaking piston ring(s). Replace.*

Symptom: **SPARK PLUG TIP IS LIGHT GRAY**

1. **Refer to *ENGINE SLOWS DOWN OR STOPS AT HIGH RPM* and check items listed.**
2. **Check spark plug heat range.**
   - *Spark plug heat range is too high. Replace by BRP's recommended spark plug (refer to TECHNICAL SPECIFICATIONS).*
3. **Check if air intake silencer leaks.**
   - *Air surplus coming from opening(s) located between halves. Seal.*
4. **Check carburetor adapter collars.**
   - *Loose collar(s). Tighten.*
5. **Check carburetor adapter(s).**
   - *Cracked or deformed adapter(s). Replace.*
6. **Check if primary compression leaks.**
   - *Primary compression leaks. Perform leak down test and repair as necessary.*

Symptom: **RER (Rotax Electronic Reverse) DOES NOT WORK**

1. **Check idle speed.**
   - *Wrong idle speed. Adjust according to specification (refer to TECHNICAL SPECIFICATIONS).*
2. **Check spark plug.**
   - *Faulty spark plug. Replace.*
3. **Check engine compression.**
   - *Too low engine compression; engine stalls when pushing RER button. Rebuilt the engine.*

Symptom: **RER (Rotax Electronic Reverse) DOES NOT WORK** (cont'd)

4. **Check drive belt height.**
   - *Wrong belt height. Adjust according to specification (refer to DRIVE BELT).*
5. **Check START/RER switch electrical connections.**
   - *Bad electrical connections or damaged wires. Clean or replace.*

Symptom: **HEADLAMP DIMMING**

1. **Check voltage at headlamp at different speeds. Refer to *LIGHTS, INSTRUMENTS AND ACCESSORIES*.**
   - *Insufficient voltage in lighting circuit. Replace voltage regulator and retest.*
2. **Visually inspect wiring harness for damaged and/or melted wires and/or bad wire terminal crimping and/or connections.**
   - *Heating, rotating or sharp part in contact with harness. Improper harness routing. Repair/replace damaged wires and/or terminals. Reroute harness where necessary.*
3. **Verify regulator ground.**
   - *Rusted or loose retaining screws. Clean, apply lithium grease (LMZ1) and firmly tighten screws.*
4. **Check if optional electric accessories are overloading the magneto/generator.**
   - *Excessive electrical load to magneto/generator. Reduce the electrical load by removing excess accessories. Reconnect as recommended by manufacturer.*
5. **Hot grips brand: Verify if they were connected in parallel by mistake.**
   - *Excessive electrical load to magneto/generator. Reconnect as recommended by manufacturer.*
6. **BRP heating grips: Verify if the return wires of the elements were grounded to the chassis by mistake.**
   - *Faulty installation of optional equipment. Reconnect as recommended by manufacturer.*
7. **Check if heating grips installation overloads the magneto capacity.**
   - *Excessive electrical load to magneto/generator. Reduce the electrical load by removing accessories.*

Symptom: **HEAT GRIPS DO NOT WORK WHEN ENGINE IS ON IDLE**

1. **Normal**
   - *To reduce load on the electrical system, heat grips will start working when engine reach around 2000 RPM.*

Symptom: **BRAKE LIGHT REMAINS ON**

1. **Check if bulb is properly installed.**
   - *Bulb is not installed correctly (contact elements are reversed). Install bulb correctly.*
2. **Check brake switch.**
   - *Switch contact remains closed. Replace brake switch.*
3. **Check wiring harness.**
   - *Shorted wiring harness. Replace or repair wiring harness.*

STEERING SYSTEM

Symptom: WHEN HANDLEBAR IS TURNED, SNOWMOBILE UNDERSTEERS

1. **Check ski runner condition.**
   - *Worn ski runners. Replace.*
2. **Check front suspension spring preload.**
   - *Insufficient ski pressure on the ground. Increase spring preload.*
3. **Check if front arm stopper strap is too long (rear suspension).**
   - *Insufficient ski pressure on the ground. Shorten stopper strap.*
4. **Check front arm spring preload (rear suspension).**
   - *Insufficient ski pressure on the ground. Loosen spring tension.*

Symptom: HANDLEBAR IS DIFFICULT TO TURN

1. **Check if the handlebar turns freely when skis are off the ground.**
   - *Ball joints corrosion restrains movement. Lubricate or replace the ball joint.*
   - *Component need proper lubrication. Lubricate. Refer to STEERING AND HANDLEBAR.*
   - *Bent parts. Replace parts.*
2. **Check front suspension spring preload.**
   - *Too much preload. Reduce ski spring preload.*
3. **Check position of front arm spring adjustment cam.**
   - *When spring tension is weak, more weight is transferred to the skis. Increase spring preload.*
4. **Check position of stopper strap (rear suspension).**
   - *Too much weight when stopper strap is short. Lengthen front arm stopper strap.*

Symptom: THE SNOWMOBILE ZIGZAGS

1. **Check ski runner condition.**
   - *Worn or bent ski runners. Replace ski runners.*
2. **Check ski alignment.**
   - *Improper ski alignment. Align skis in order to obtain proper toe-out (opening), refer to SKIS AND STEERING ALIGNMENT.*
3. **Check if bushings are too loose in steering system.**
   - *Bushings are too loose. Replace.*
4. **Check ski pressure.**
   - *Too much pressure on skis. Increase center spring preload (rear suspension).*
5. **Check ski runners.**
   - *Wrong ski runner type. Replace.*

SUSPENSION

Symptom: SUSPENSION IS TOO LOW

1. **Check springs preload.**
   - *Low spring preload. Increase preload to the recommended position.*
2. **Check condition of springs.**
   - *Springs are weakened or broken. Replace springs.*
3. **Wrong springs.**
   - *Springs are too soft. Install optional stiffer springs.*
4. **Check condition of shock.**
   - *Shock frozen. Repair or replace shock.*

Symptom: REAR SUSPENSION BOTTOMS OUT

1. **Check springs preload.**
   - *Low spring preload. Increase preload to the recommended position.*
2. **Check condition of springs.**
   - *Springs are weakened or broken. Replace springs.*
3. **Wrong springs.**
   - *Springs are too soft. Install optional stiffer springs.*
4. **Check condition of the rear shock absorber.**
   - *Damaged rear shock absorber. Replace rear shock absorber.*
5. **Check gas pressure in HPG shock.**
   - *Low gas pressure. Add gas and check for leak.*

Symptom: REAR SUSPENSION IS TOO STIFF

1. **Check rear spring preload.**
   - *Too much preload. Adjust to a softer position.*
2. **Wrong springs.**
   - *Springs are too stiff. Install optional softer springs.*
3. **Check track tension.**
   - *Track is too tight. Adjust.*
4. **Check condition of the rear shock absorber.**
   - *Damaged rear shock absorber. Replace rear shock absorber.*

FLOW CHARTS

3D RAVE VALVE FLOW CHART

800R

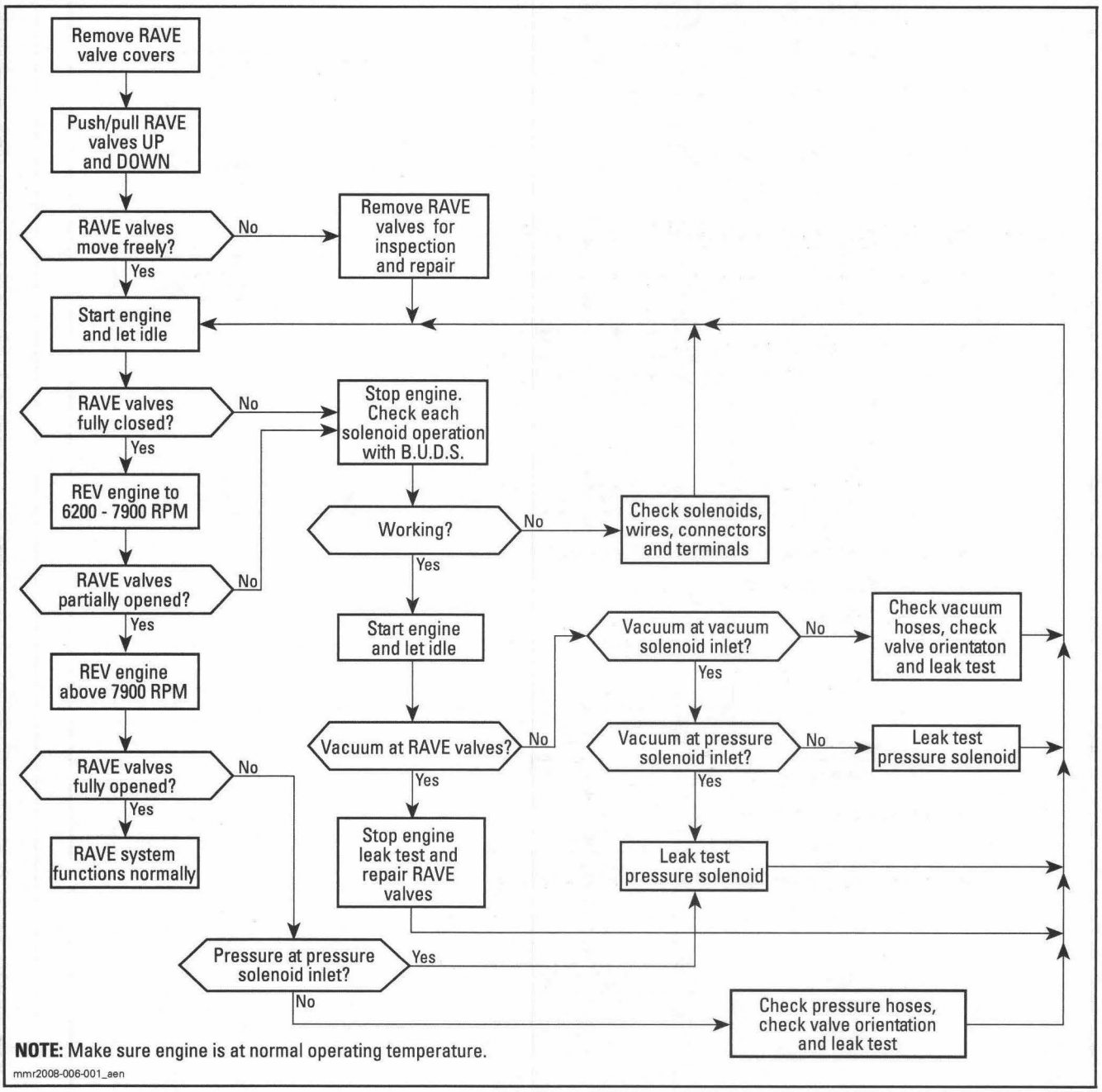

NOTE: Make sure engine is at normal operating temperature.

mmr2008-006-001_aen

ENGINE LEAK VERIFICATION FLOW CHART

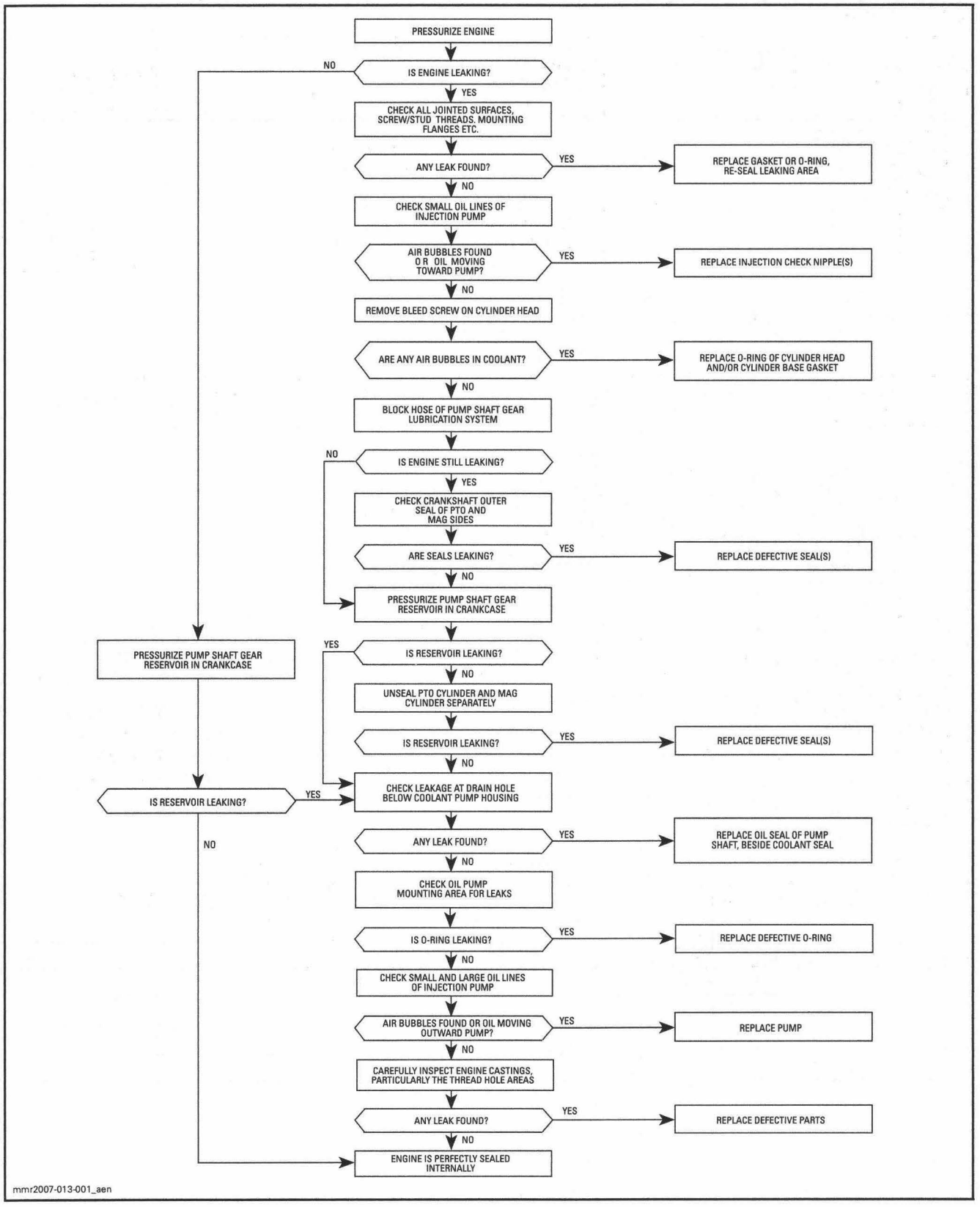

FUEL DELIVERY DIAGNOSTIC FLOW CHART

600 HO SDI

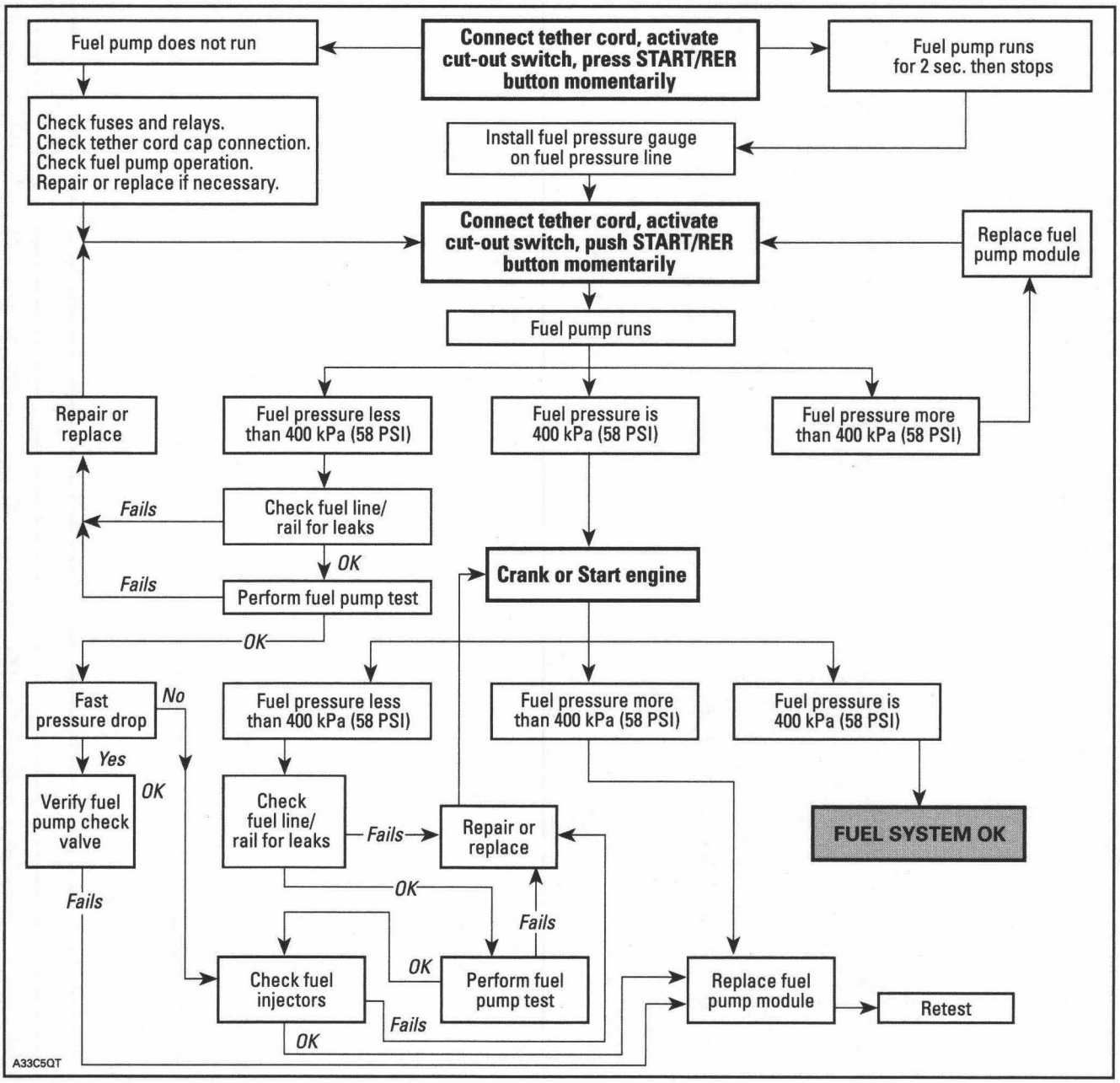

ENGINE REMOVAL/INSTALLATION

SERVICE TOOLS

Description	Part Number	Page
small hose pincher	295 000 076	31, 34
engine removal hook	529 035 829	33, 36–37
spark plug lift ring	529 035 830	33, 36–37

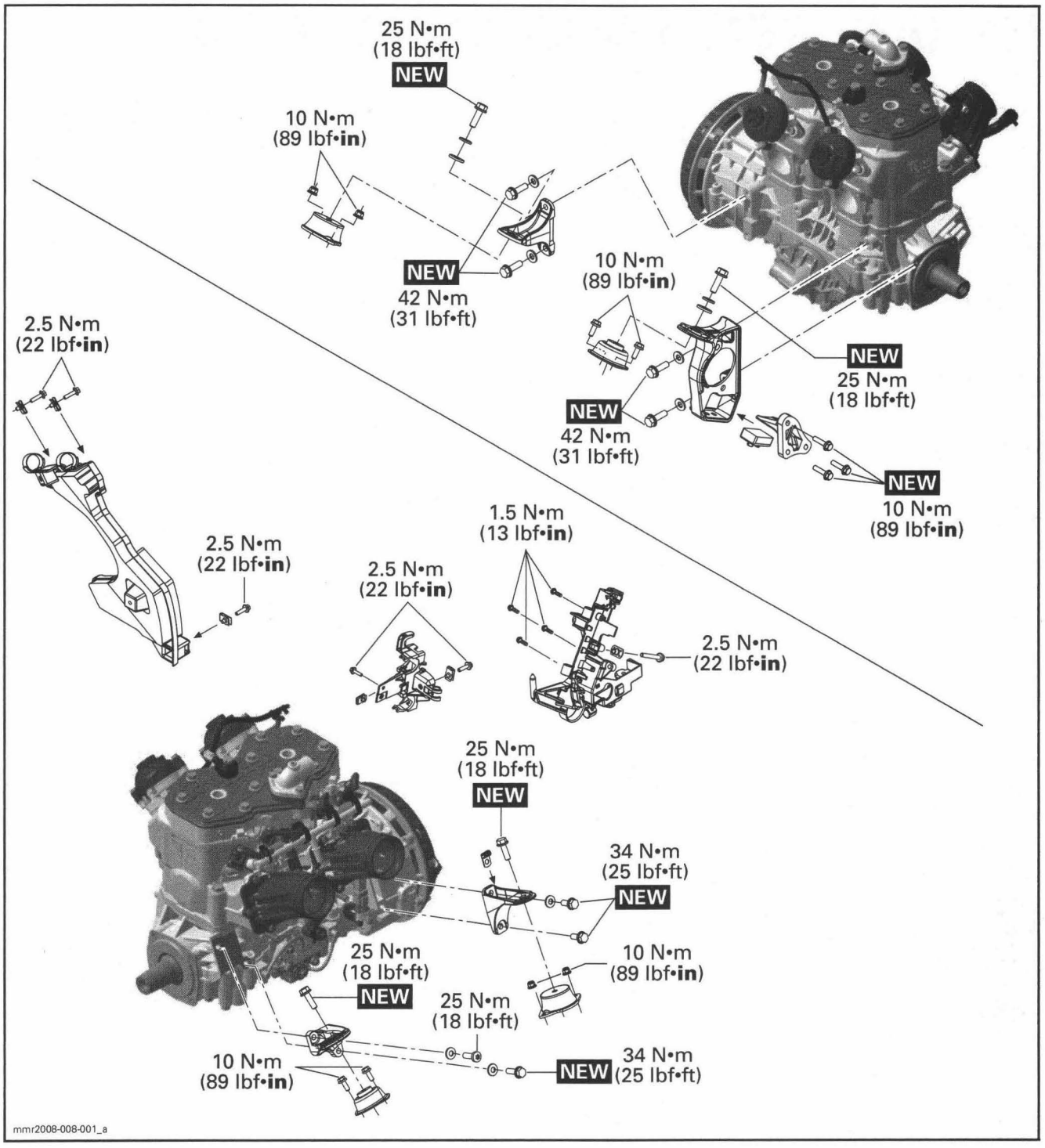
25 N•m
(18 lbf•ft)
NEW
10 N•m
(89 lbf•in)
NEW
42 N•m
(31 lbf•ft)
10 N•m
(89 lbf•in)
NEW
25 N•m
(18 lbf•ft)
NEW
42 N•m
(31 lbf•ft)
NEW
10 N•m
(89 lbf•in)
2.5 N•m
(22 lbf•in)
2.5 N•m
(22 lbf•in)
2.5 N•m
(22 lbf•in)
1.5 N•m
(13 lbf•in)
2.5 N•m
(22 lbf•in)
25 N•m
(18 lbf•ft)
NEW
34 N•m
(25 lbf•ft)
NEW
10 N•m
(89 lbf•in)
25 N•m
(18 lbf•ft)
NEW
25 N•m
(18 lbf•ft)
10 N•m
(89 lbf•in)
NEW
34 N•m
(25 lbf•ft)
mmr2008-008-001_a

GENERAL

During assembly/installation, use the torque values and service products as in the exploded view.

Clean threads before applying a threadlocker. Refer to *SELF-LOCKING FASTENERS* and *LOCTITE APPLICATION* at the beginning of this manual for complete procedure.

⚠ WARNING

Torque wrench tightening specifications must be strictly adhered to.
Locking devices (e.g.: locking tabs, elastic stop nuts, cotter pin, etc.) must be replaced with new ones.

PROCEDURES

ENGINE

Engine Removal

Place vehicle at workstation that will have access to an engine-lifting hoist.

Refer to *BODY* section and remove the following:
- LH and RH side panels
- Hood
- Front bottom pan cover.

On **600 HO SDI**, remove fuel pressure using B.U.D.S. software. Refer to *SEMI-DIRECT INJECTION (SDI)* section.

On **vehicle with electric starter** and on **all 600 HO SDI**, remove the negative cable (–) from battery.

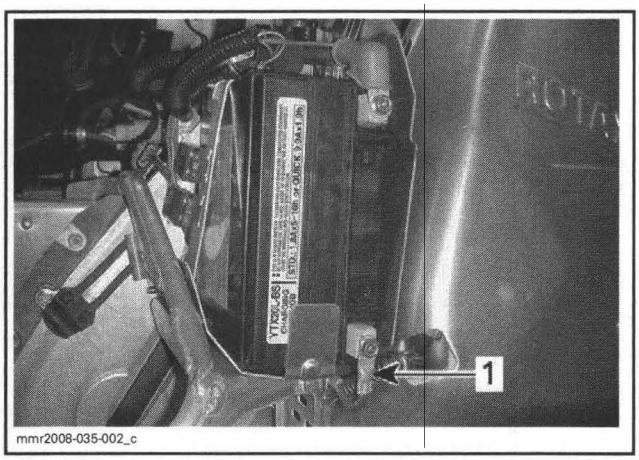

1. Negative cable

Remove muffler and tuned pipe. Refer to *EXHAUST SYSTEM* section.

Remove the driven pulley. Refer to *DRIVEN PULLEY AND COUNTERSHAFT* section.

On **vehicle with electric starter**, remove starter cable from starter.

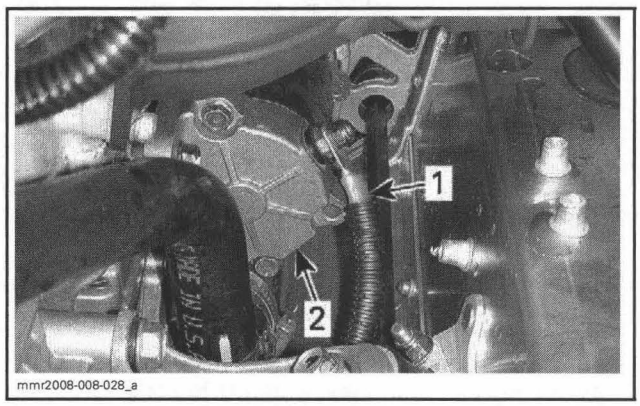

1. Starter cable
2. Starter

Disconnect water pump hose to drain engine.

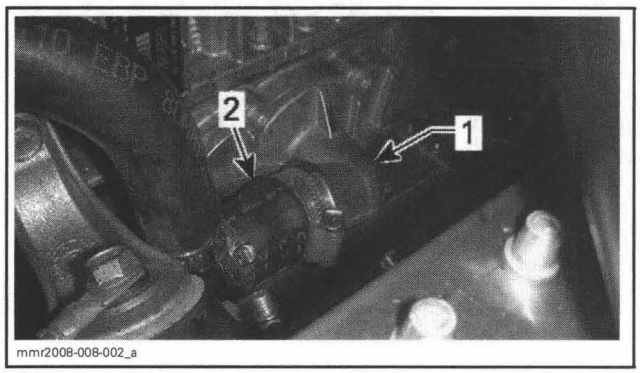

1. Water pump cover
2. Remove this hose

Remove the acoustic panel on the RH side of vehicle.

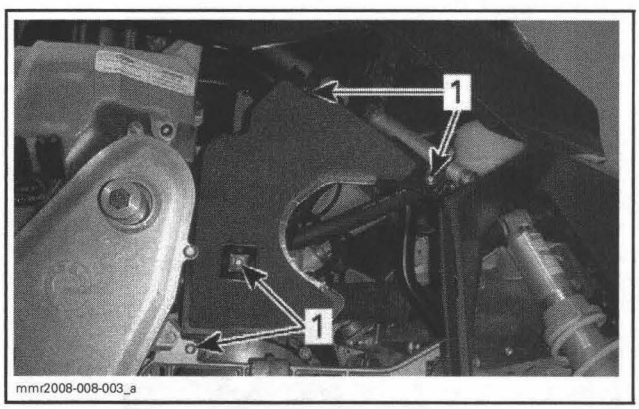

1. Acoustic panel screws

Remove rewind starter cover screws and place rewind starter housing aside.

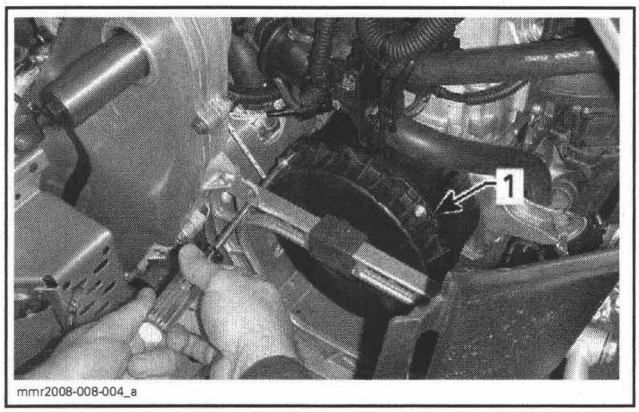

1. Rewind starter cover

Cut locking ties securing coolant hose and wiring harness to RAVE solenoid support.

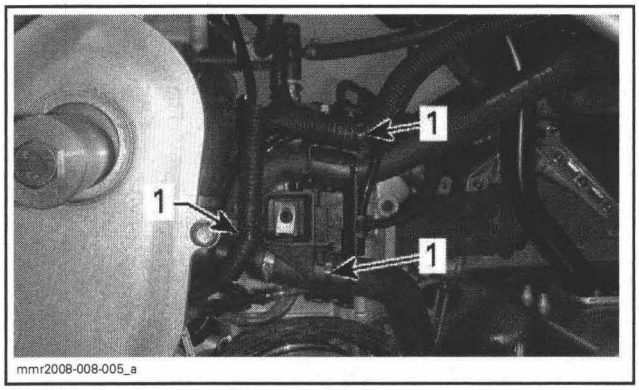

1. Locking ties to remove

Detach hoses from support.

800R

Unplug RAVE solenoid connector.

500SS and 800R

Unplug trigger coil and magneto connectors.

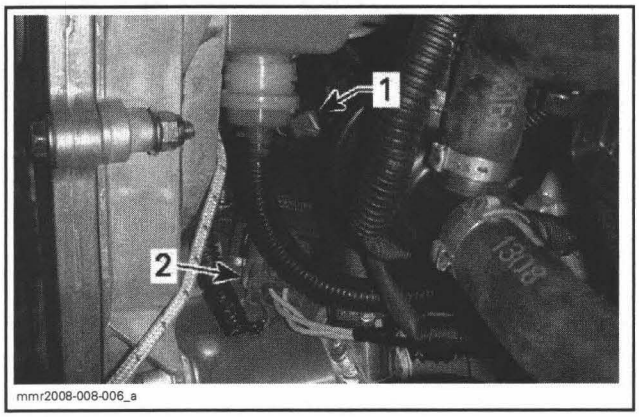

CONNECTORS LOCATED BEHIND CHAINCASE
1. Trigger coil connector
2. Magneto connector

Remove YELLOW wires from the magneto connector.

600 HO SDI

Unplug RAVE solenoid connector and RAVE solenoid heater connector.

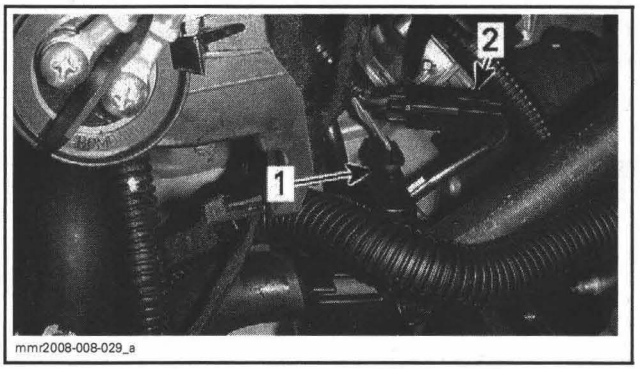

1. RAVE solenoid connector
2. Solenoid heater connector

Unplug magneto connector. The connector is located between fuel tank and engine.

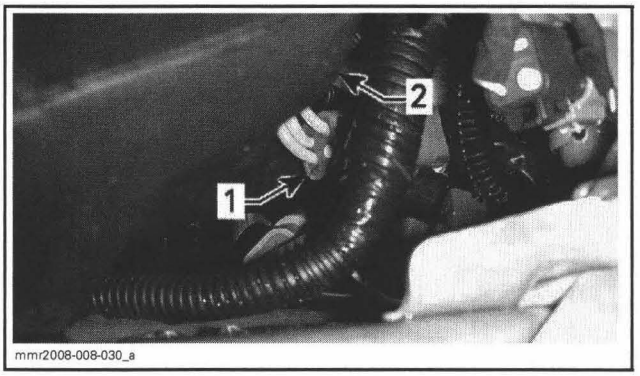

1. Magneto connector
2. front of fuel tank

All Models

Remove and discard screws securing MAG engine supports to front and rear rubber mounts.

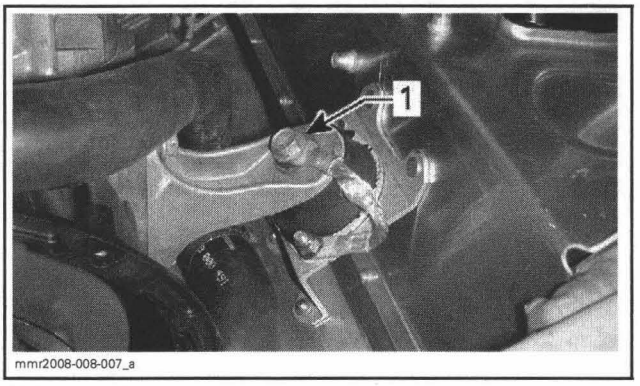

FRONT MAG SUPPORT
1. Front engine support screw

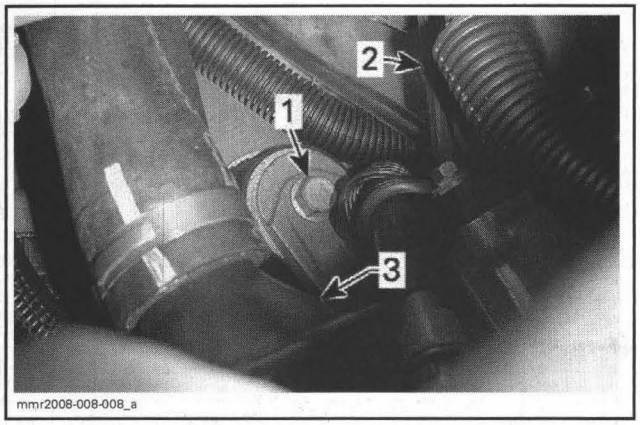

REAR MAG SUPPORT
1. *Rear engine support screw*
2. *Intake adapter*
3. *Thermostat housing*

Remove nuts securing the bottom of countershaft bearing support.

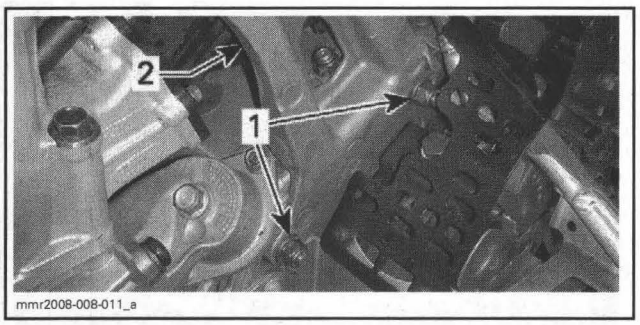

1. *Nuts to remove*
2. *Countershaft bearing support*

Remove bolt retaining the top of countershaft bearing support.

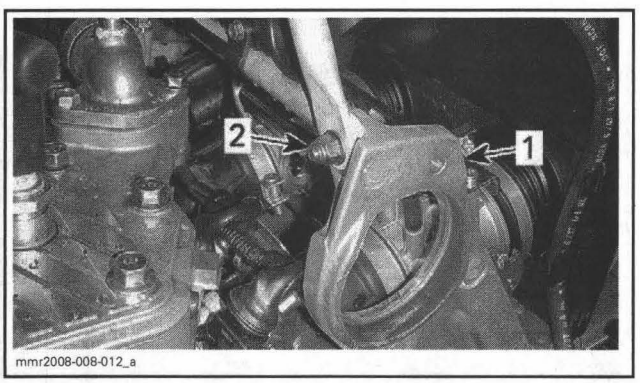

1. *Countershaft bearing support*
2. *Upper bolt*

Loosen lower nut located behind support.

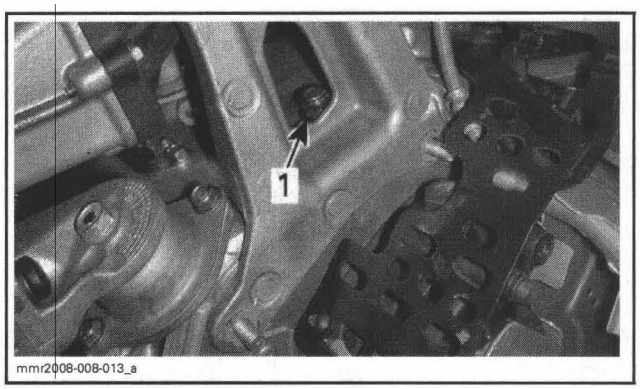

1. *Loosen this nut*

Remove the countershaft bearing support.

Remove the primary air intake silencer. Refer to *AIR INTAKE SYSTEM* section.

500SS and 800R

Install a small hose pincher (P/N 295 000 076) on heater hose.

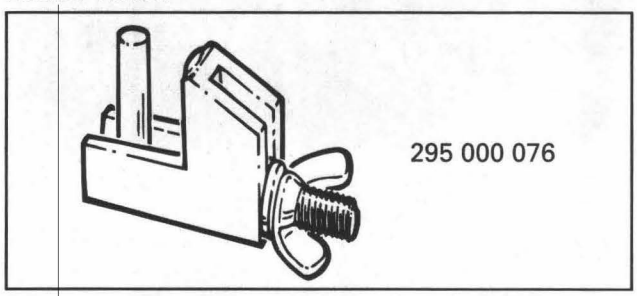

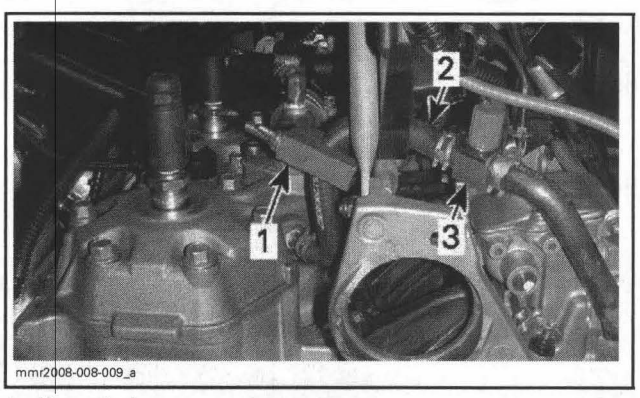

1. *Hose pincher*
2. *Heater hose*
3. *Heater valve*

Disconnect heater hose from heater valve.

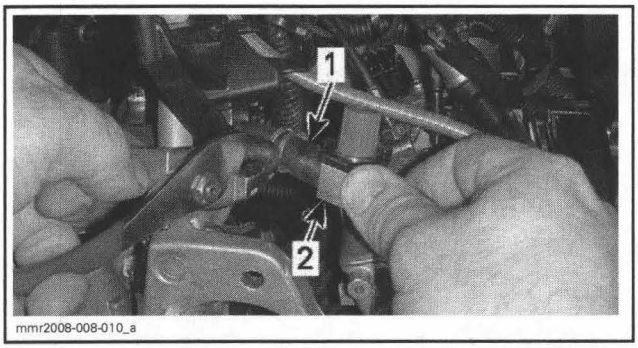

1. Heater hose
2. Heater valve

600 HO SDI

Remove the heater hose from the throttle body.

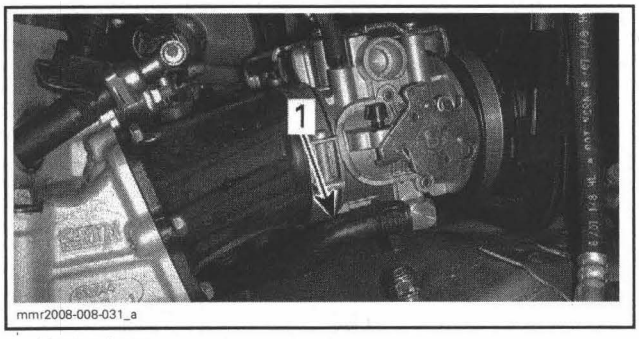

1. Heater hose

All Models

Unscrew clamps securing throttle body or carburetors to intake adapters.

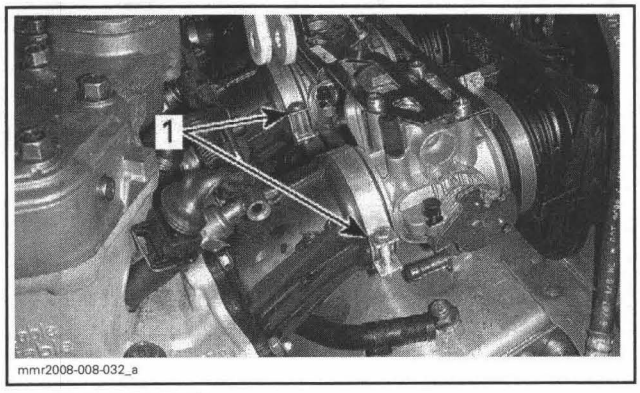

600 HO SDI SHOWN
1. Throttle body clamps

Move and attach throttle body or carburetors aside.

600 HO SDI

Unplug TPS connector from throttle body.

Disconnect fuel line from the fuel rail.

Unscrew fuel rail from cylinder.

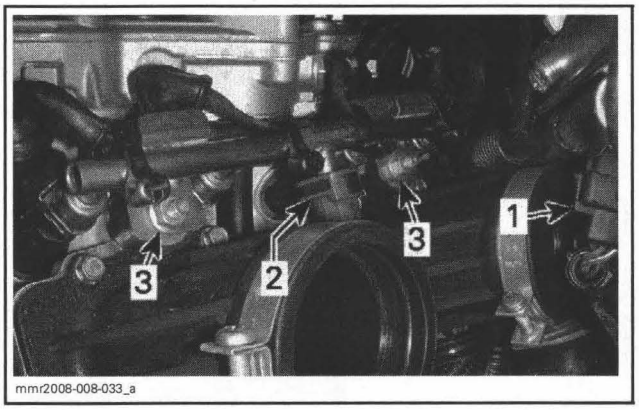

1. TPS connector
2. Fuel line
3. Fuel rail nuts

All Models

Unplug the coolant temperature sensor (CTS) connector.

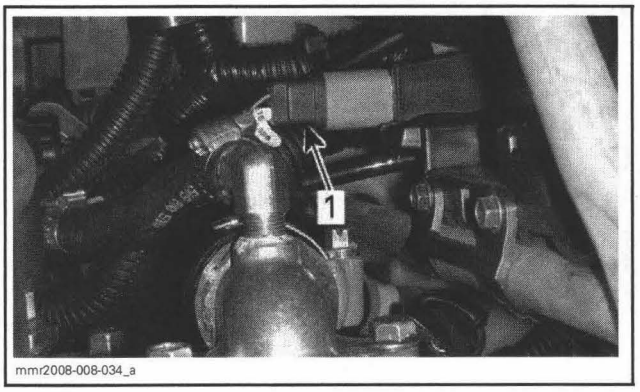

1. CTS connector

600 HO SDI and 800R

Remove the knock sensor.

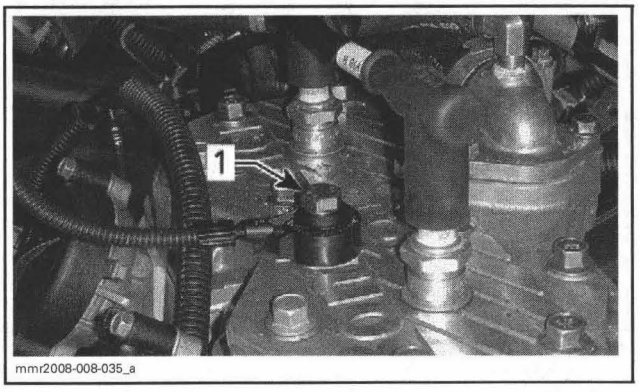

1. Knock sensor screw

All Models

Remove both spark plugs.

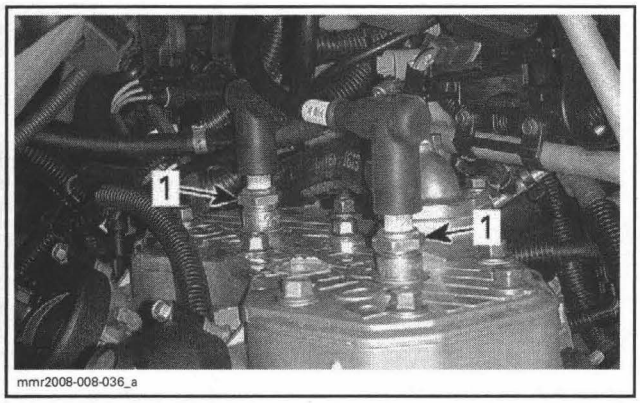

1. Spark plugs

Remove the elbow on cylinder head cover.

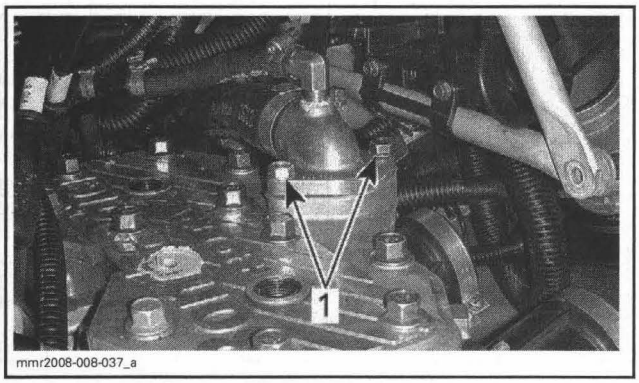

600 HO SDI SHOWN
1. Elbow screws

Install the spark plug lift ring (P/N 529 035 830) in spark plug hole (PTO side).

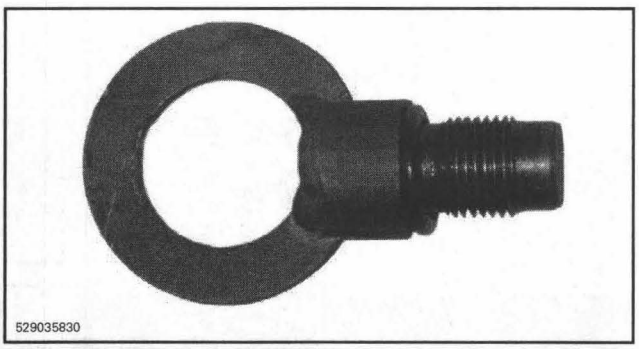

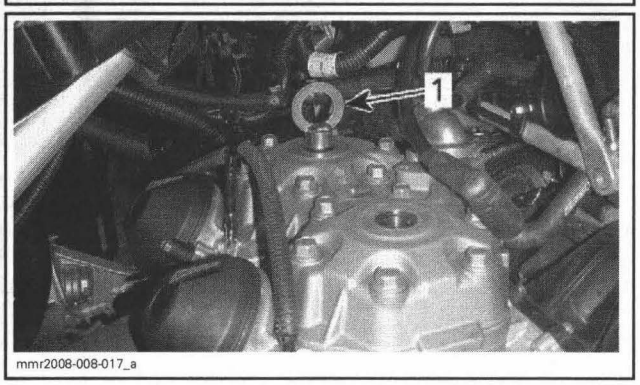

1. Spark plug lift ring

On **models equipped with a high windshield**, remove it to avoid scratches during engine removal.

Install the engine removal hook (P/N 529 035 829).

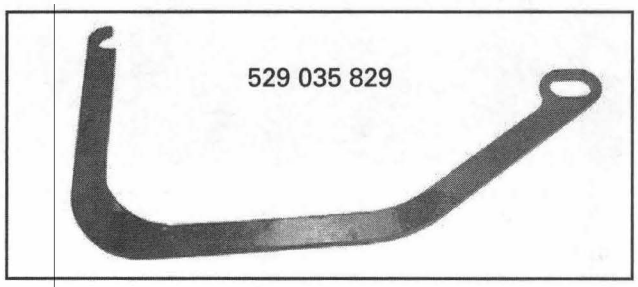

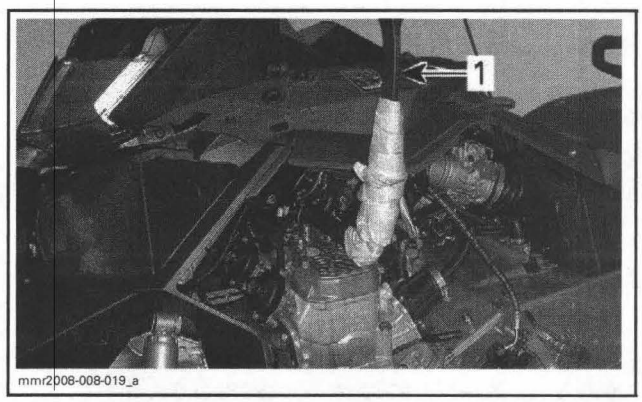

1. Engine removal hook

Remove and discard screws securing PTO engine supports to front and rear rubber mounts.

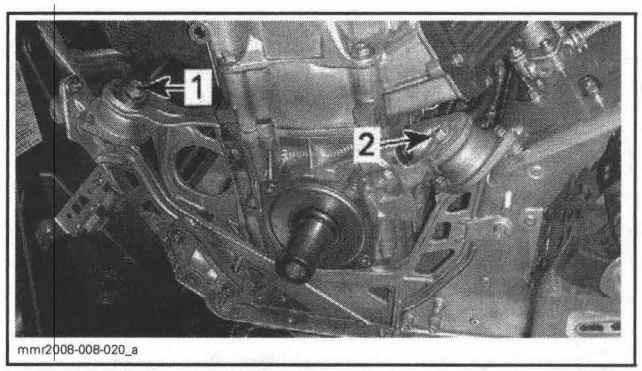

1. Front engine support screw
2. Rear engine support screw

Remove the engine stopper. Discard screws.

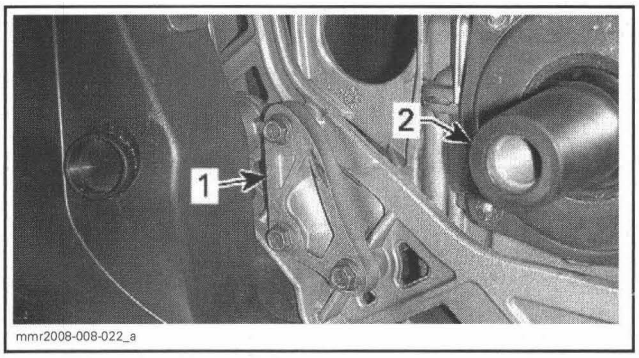

1. Engine stopper
2. Crankshaft

Lift the engine a little.

500SS and 800R

Remove pulse line from fuel pump.

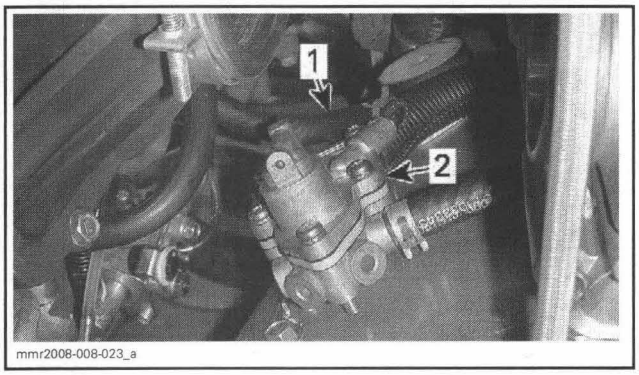

1. Pulse line
2. Fuel pump

600 HO SDI

Unplug the crankshaft position sensor connector.

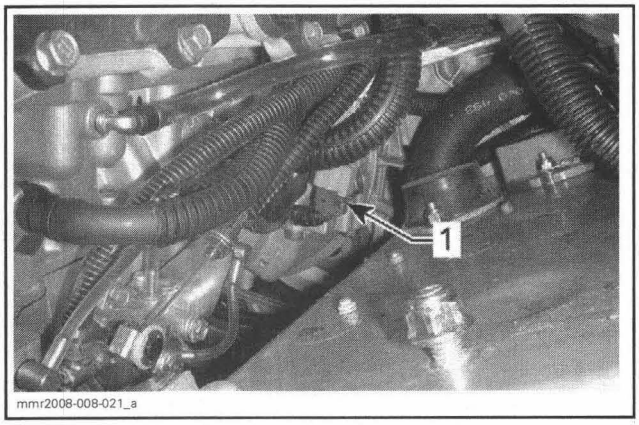

1. CPS connector

All Models

Detach oil pump cable from oil pump.

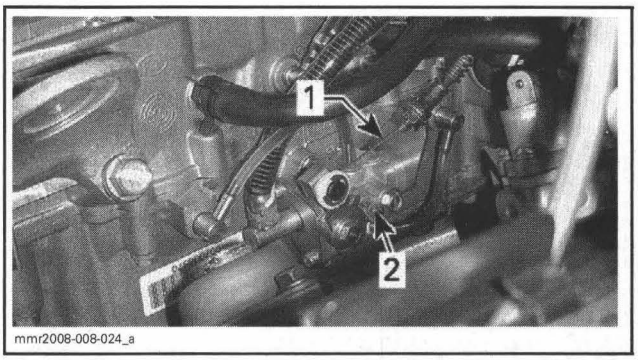

1. Oil pump cable
2. Oil pump

Unplug oil injection inlet hose (hose with a spring) and plug it with an extension (1/4" drive).

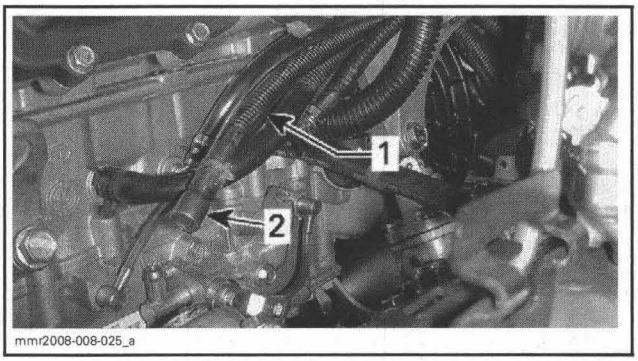

1. Inlet hose
2. Extension

Install a small hose pincher (P/N 295 000 076) on oil injection outlet hose.

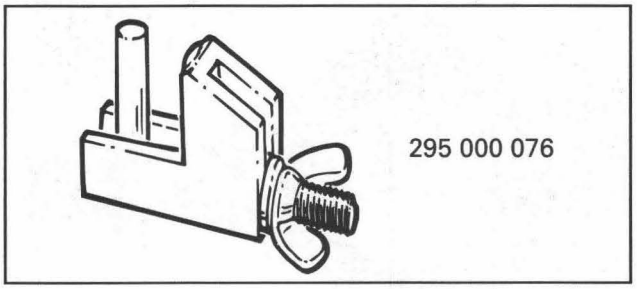

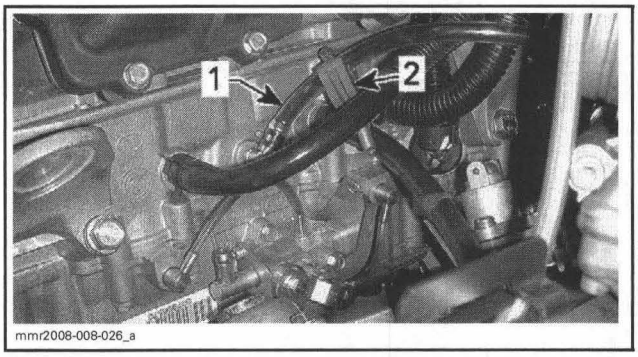

1. Outlet hose
2. Hose pincher

Disconnect the outlet hose.

Remove PTO rubber mounts.

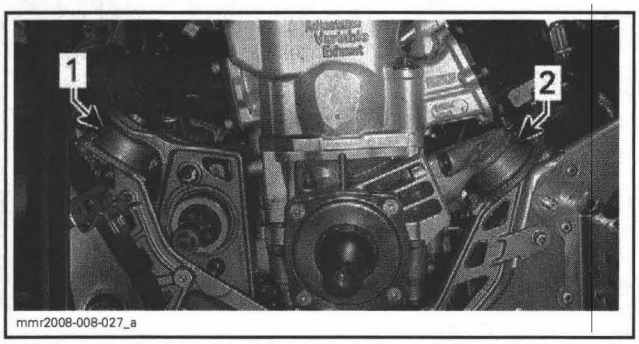

1. *Front rubber mount*
2. *Rear rubber mount*

Lift and slide out engine.

Engine Installation

To install the engine, reverse the removal procedure. However, pay attention to the following.

Install **NEW** self-locking screws where required, refer to exploded views at the beginning of this section.

Front engine supports (PTO and MAG sides) are secured using a conical washer and a flat washer.

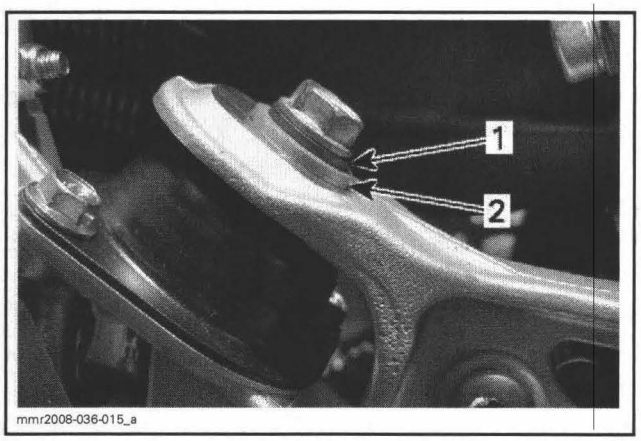

FRONT ENGINE MOUNT (PTO SIDE)
1. *Conical washer*
2. *Flat washer*

Use the following illustration to route hoses, cable and harness correctly.

500SS

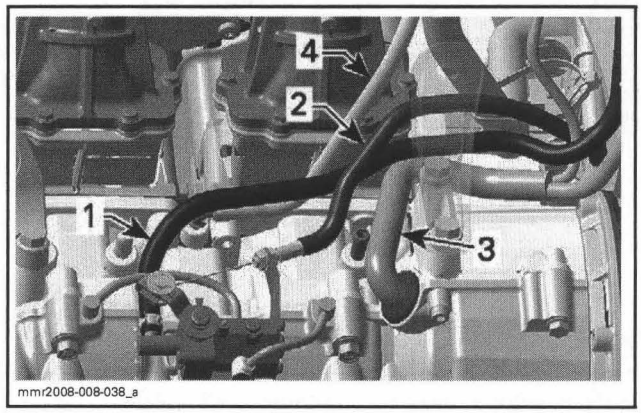

1. *Oil injection inlet hose*
2. *Oil injection pump cable*
3. *Magneto harness*
4. *Crankcase vent hose*

600 HO SDI

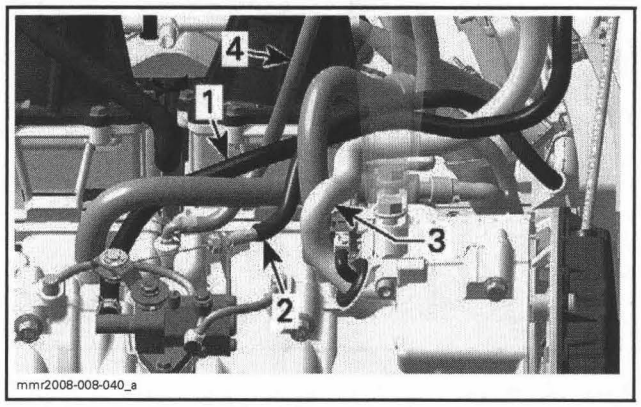

1. *Oil injection inlet hose*
2. *Oil injection pump cable*
3. *Magneto harness*
4. *Crankcase vent hose*

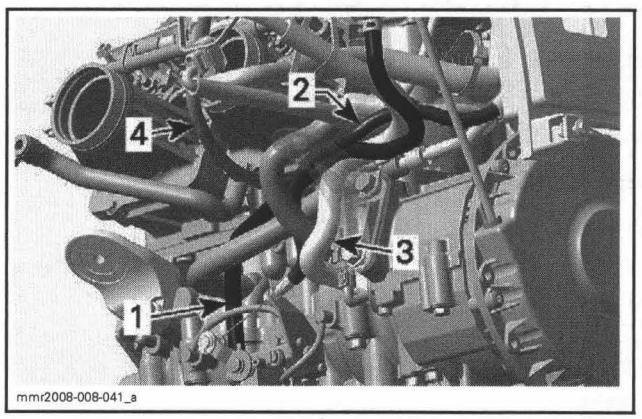

1. *Oil injection inlet hose*
2. *Oil injection pump cable*
3. *Magneto harness*
4. *Crankcase vent hose*

800R

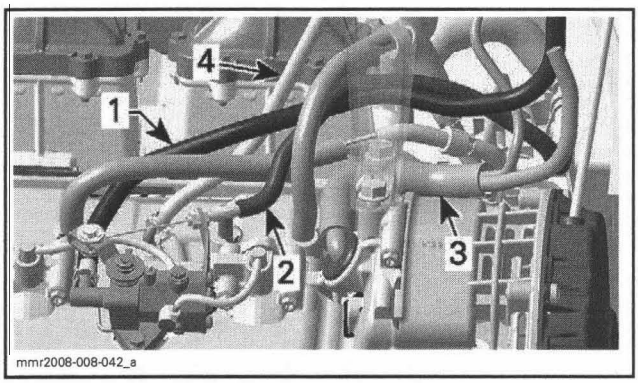

1. *Oil injection inlet hose*
2. *Oil injection pump cable*
3. *Magneto harness*
4. *Crankcase vent hose*

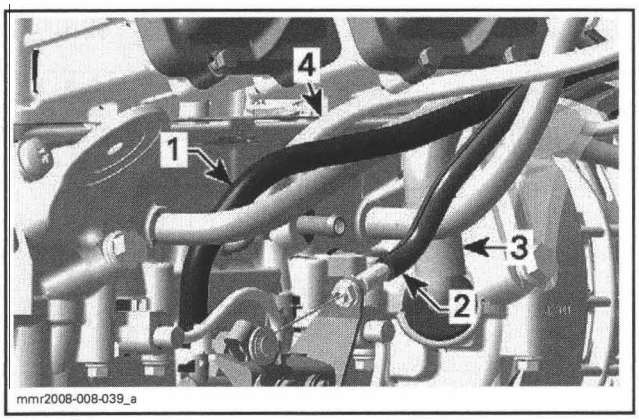

1. *Oil injection inlet hose*
2. *Oil injection pump cable*
3. *Magneto harness*
4. *Crankcase vent hose*

ENGINE SUPPORT

Engine Support Inspection

Check if engine supports are cracked, bent or damaged. Replace if necessary.

PTO Side Engine Support Removal (Engine not Removed)

NOTE: On **vehicle with electric starter**, remove the electric starter. Refer to *STARTING SYSTEM* section.

Remove drive pulley. Refer to *DRIVE PULLEY* section.

Remove the tuned pipe. Refer to *EXHAUST SYSTEM* section.

Remove and discard screws securing PTO engine supports to front and rear rubber mount adapters.

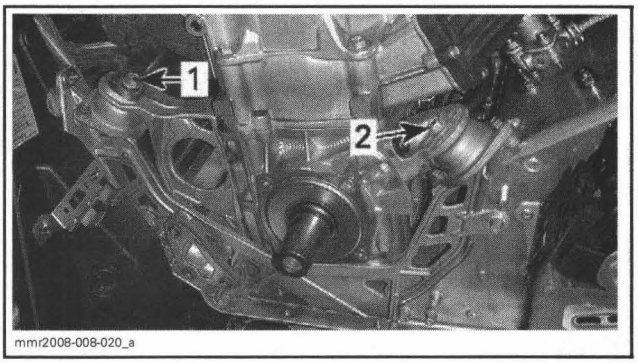

1. *Front engine support screw*
2. *Rear engine support screw*

Insert a pry bar over the LH frame member and gently raise the engine just enough to remove engine weight from support.

Remove and discard screws retaining engine support to engine.

Remove engine support.

MAG Side Engine Support Removal (Engine not Removed)

Remove muffler and tuned pipe. Refer to *EXHAUST SYSTEM* section.

Remove driven pulley. Refer to *DRIVEN PULLEY* section.

Remove the primary air intake silencer. Refer to *AIR INTAKE SYSTEM* section.

Unscrew clamps retaining throttle body or carburetors to intake adapters.

Move and attach throttle body or carburetors aside.

Remove spark plugs.

Install the spark plug lift ring (P/N 529 035 830) in spark plug hole (PTO side).

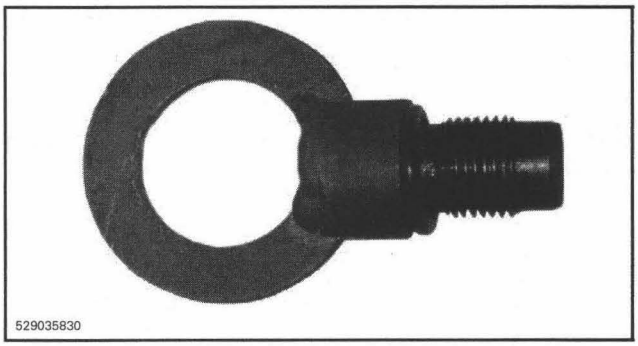

Install the engine removal hook (P/N 529 035 829).

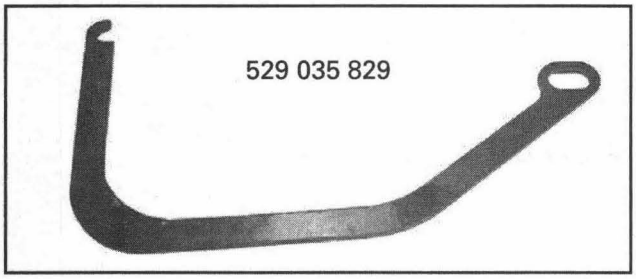

Remove and discard screws securing engine supports to rubber mount adapters.

Lift engine.

Remove and discard screws retaining engine support to engine.

Remove engine support.

Engine Support Installation

The installation is the reverse of the removal procedure.

ENGINE RUBBER MOUNT

Engine Rubber Mount Inspection

Check rubber mounts. Replace them if brittle, cracked or damaged.

Engine Rubber Mount Removal

Remove muffler and tuned pipe. Refer to *EXHAUST SYSTEM* section.

Remove driven pulley. Refer to *DRIVEN PULLEY* section.

Remove the primary air intake silencer. Refer to *AIR INTAKE SYSTEM* section.

Unscrew clamps retaining throttle body or carburetors to intake adapters.

Move and attach throttle body or carburetors aside.

Remove spark plugs.

Install the spark plug lift ring (P/N 529 035 830) in spark plug hole (PTO side).

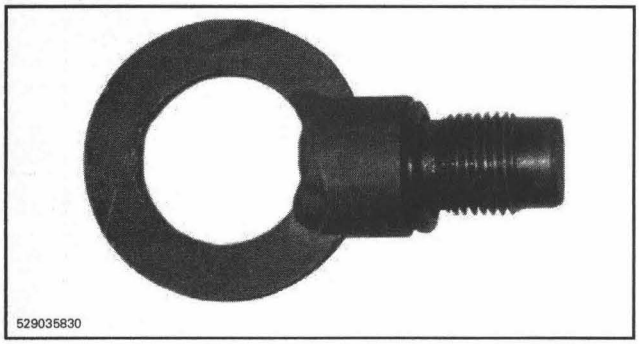

Install the engine removal hook (P/N 529 035 829).

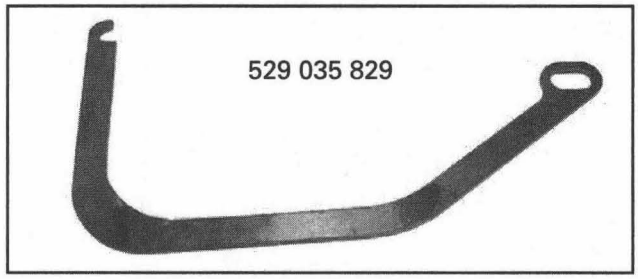

Remove and discard screws securing engine supports to rubber mount adapters.

Lift engine.

Unscrew bolts or nuts securing engine rubber mounts to frame.

Engine Rubber Mount Installation

The installation is the reverse of the removal procedure.

ENGINE LEAK TEST

SERVICE TOOLS

Description	Part Number	Page
small hose pinchers	295 000 076	39
vacuum/pressure pump	529 021 800	39
manifold plug	529 035 961	39
intake plug	529 036 128	39

Prior to take apart an engine, it is important to proceed with a leak test to diagnose engine problems. Whenever the engine is disassembled, a leak test should be performed after reassembly.

PREPARATION

Remove engine. Do not remove the exhaust manifold. Refer to *ENGINE REMOVAL AND INSTALLATION*.

Install manifold plug (P/N 529 035 961) over exhaust manifold and secure with a clamp.

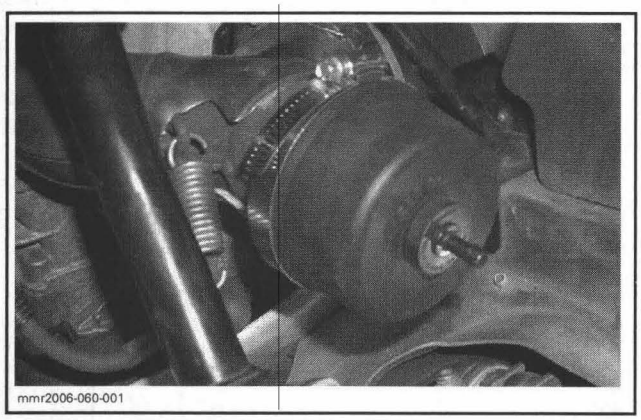

TYPICAL — ENGINE SHOWN IN VEHICLE

Insert an intake plug (P/N 529 036 128) in each intake adaptors. Tighten with existing clamps.

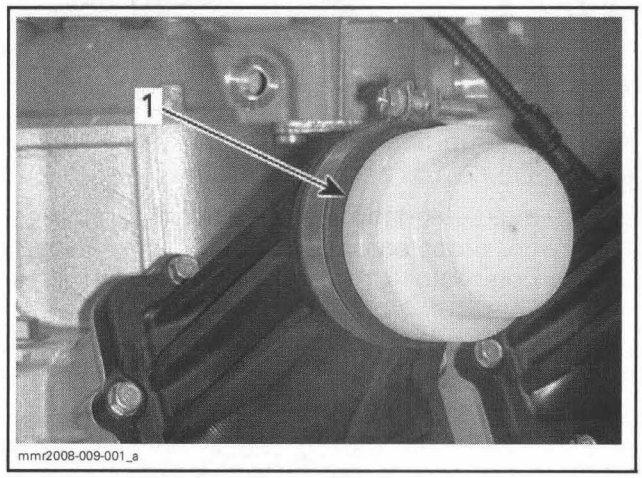

1. Intake plug

Using small hose pinchers (P/N 295 000 076), block impulse hose(s) as applicable.

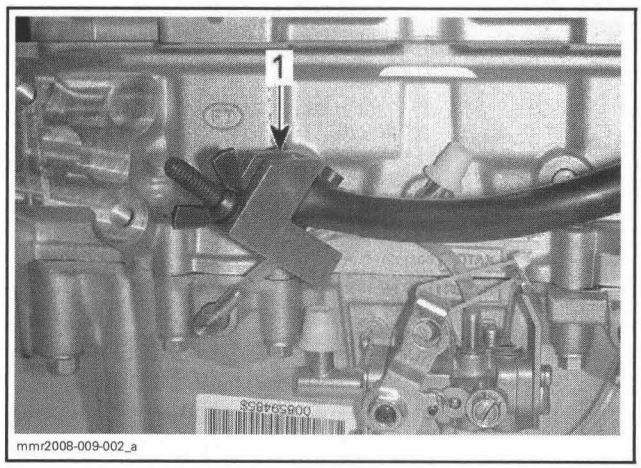

1. Small hose pincher

CAUTION: Pay attention not to squeeze hose nipples.

PROCEDURE

NOTE: A flow chart has been prepared as a visual reference. Refer to *FLOW CHARTS* section.

Install vacuum/pressure pump (P/N 529 021 800) on manifold plug.

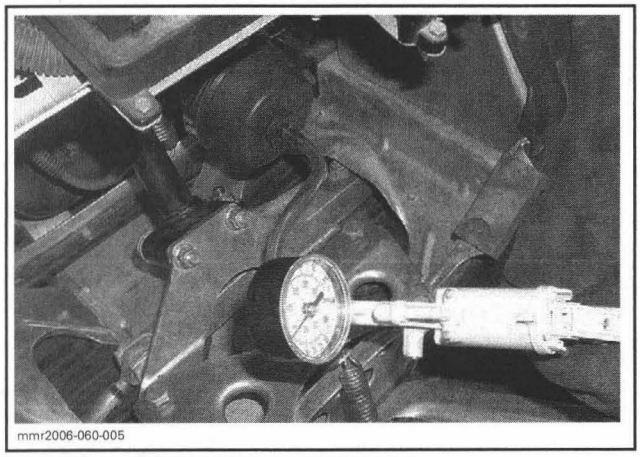

TYPICAL — ENGINE SHOWN IN VEHICLE

Activate pump and pressurize engine to 34 kPa (5 PSI). Do not exceed this pressure.

Engine must stand this pressure during 3 minutes. If pressure drops before 3 minutes, spray a soapy solution on tester kit (manifold and intake plugs, vacuum/pressure pump and its hose).

- If tester kit (manifold and intake plugs, hoses and pump) is leaking, bubbles will indicate where leak comes from.
- If tester kit is not leaking, check engine, see *ENGINE COMPONENTS TO BE VERIFIED* below.

Engine Components to be verified

- All jointed surfaces and screw/stud threads of engine:
  - spark plug base, insulator
  - cylinder head
  - RAVE valve bellows, piston and housing
  - cylinder
  - crankcase halves (joint)
  - oil injection pump mounting flange (O-ring)
  - coolant pump housing
  - bleed screws/plugs
  - Fuel injector O-rings (**600 HO SDI**).
- Small injection oil lines coming from pump. Air bubbles or oil column going toward pump, indicates a defective check valve in injection nipple.

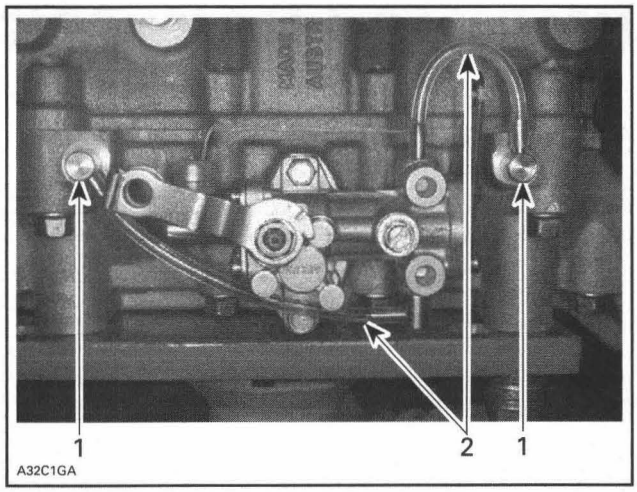

TYPICAL
1. *Injection nipples*
2. *Small injection oil lines*

- Air bubbles in antifreeze. It indicates defective cylinder head O-ring or cylinder base gasket.
- Crankshaft outer seals. One behind drive pulley and the other behind magneto.
- Pump shaft gear oil reservoir. See *PUMP SHAFT OIL GEAR RESERVOIR* further in this section.
- Leak indicator hole below coolant pump housing. If there is a leak, it indicates that a pump shaft is defective (oil seal behind coolant ceramic seal).

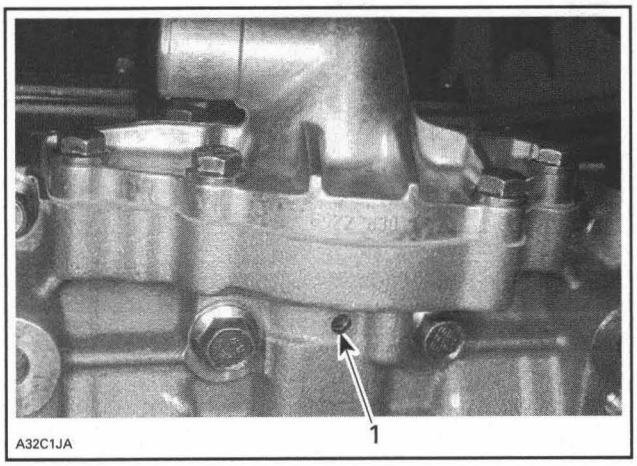

1. *Leak indicator hole*

- Leaks can also be on oil pump side. Check mounting area for leaks.

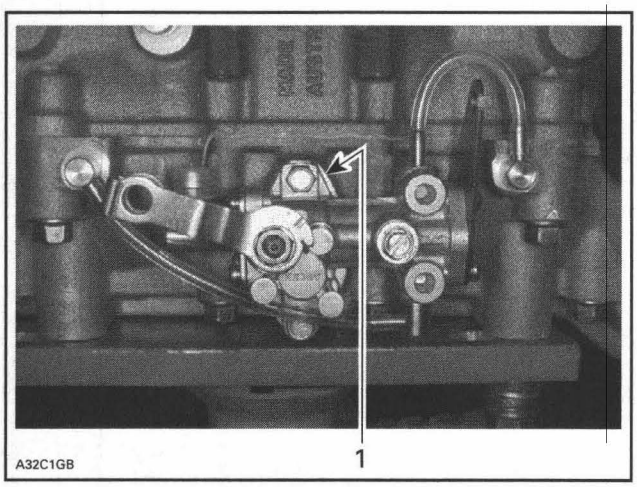

TYPICAL
1. *Check mounting area*

– If there is a leak at the tested location, it is recommended to continue testing next items before overhauling engine. There is a possibility of more than one leak.

If leak still persists, it indicates a defective casting somewhere in engine. Disassemble engine and carefully check for defects in castings. Pay attention to tapped holes which may go through engine sealed area and thus lead to leakage.

Pump Shaft Oil Gear Reservoir

Install air pump on reservoir fitting and pressurize engine to 34 kPa (5 PSI). Do not exceed this pressure.

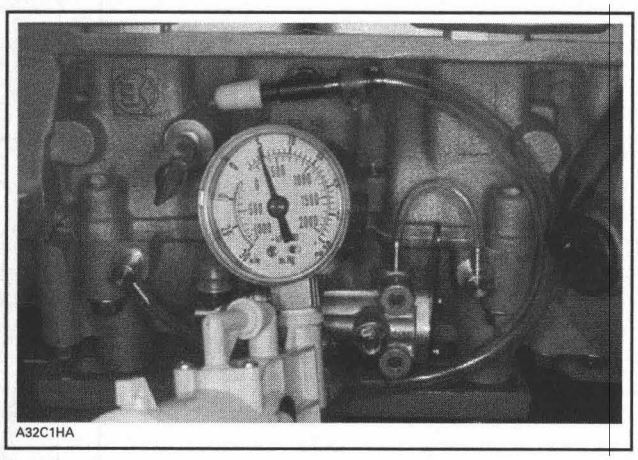

TYPICAL

If pressure drops, it indicates a defective crankshaft inner seal or a defective oil seal either on water pump side or oil pump side.

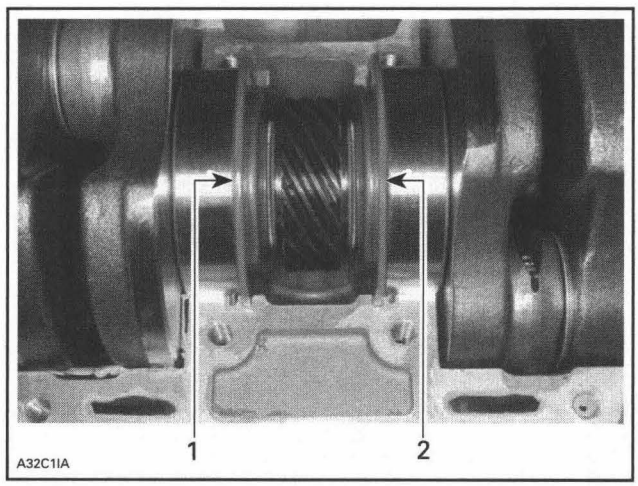

CRANKCASE INSIDE VIEW
1. *Leakage through inner seal on PTO side*
2. *Leakage through inner seal on MAG side*

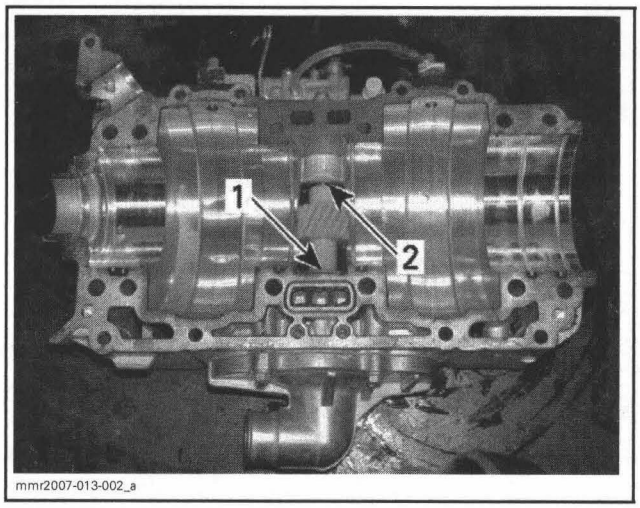

CRANKCASE INSIDE VIEW
1. *Leakage through water pump seal (reservoir side)*
2. *Leakage on oil pump side (seal or O-ring)*

ENGINE MEASUREMENT

SERVICE TOOLS

Description	Part Number	Page
dial indicator	414 104 700	47–48
degree wheel	529 035 607	48

NOTE: This subsection explains the procedures to correctly measure engine components. For the engine technical specifications, refer to *INSPECTION* in the appropriate *ENGINE* subsection.

CYLINDER HEAD WARPAGE

Check gasketed surface of the cylinder head with a straight edge and a feeler gauge. Make sure part is within the given specification. If cylinder head is out of specification, replace it. Verify combustion chamber volume to use the correct cylinder base gasket with the new part.

CYLINDER TAPER

Measure cylinder diameter in the following locations:

- Above exhaust port
- Below intake port.

Compare cylinder diameters. If the difference exceeds the specified dimension, the cylinder should be rebored and honed or should be replaced. Nikasil cylinder can be honed using diamond hone but can not be rebored.

NOTE: Be sure to restore the chamfer around all cylinder sleeve port openings.

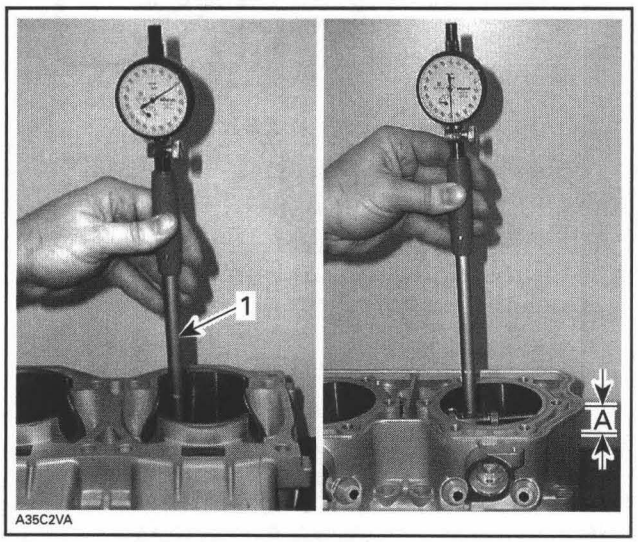

1. Below the intake port
A. Above exhaust port

CYLINDER OUT OF ROUND

Measuring above exhaust port with a cylinder gauge, check if the cylinder out of round is more than the specified dimension. If larger, cylinder should be rebored and honed or should be replaced. Nikasil cylinder can be honed using diamond hone but cannot be rebored.

NOTE: Be sure to restore the chamfer around all cylinder sleeve port openings.

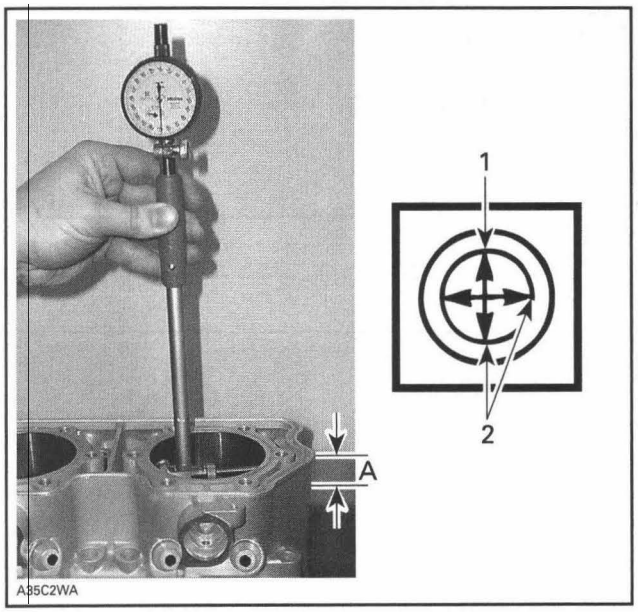

1. Piston pin position
2. Measures to be compared
A. Above exhaust port

CYLINDER/PISTON CLEARANCE

Procedure with a Used Piston

Using a micrometer, measure piston at "A" perpendicularly (90°) to piston pin.

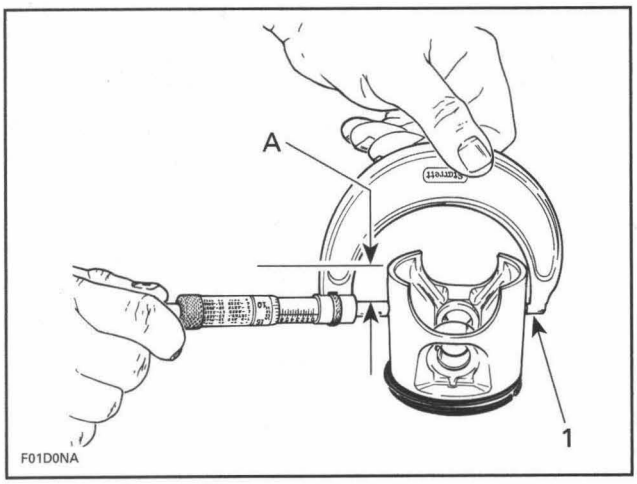

TYPICAL
1. Measuring perpendicularly (90°) to piston pin axis
A. 15 mm (.590 in)

The measured dimension must not be less than 0.15 mm (.006 in) of the one scribed on piston dome. Otherwise, install a new piston.

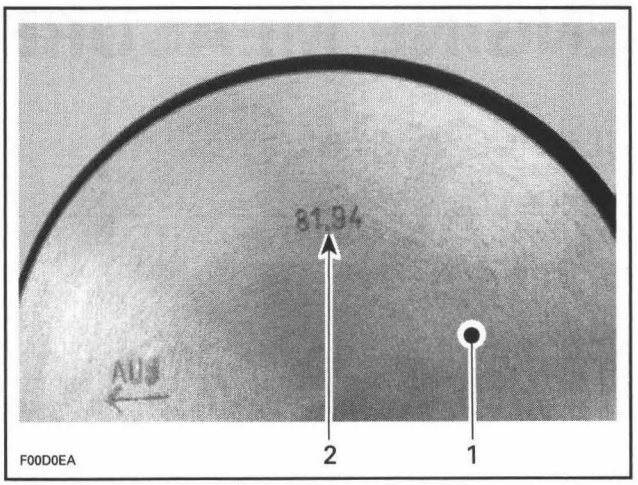

TYPICAL
1. Piston dome
2. Piston measurement

If piston is within tolerance, adjust and lock a micrometer to the piston dimension.

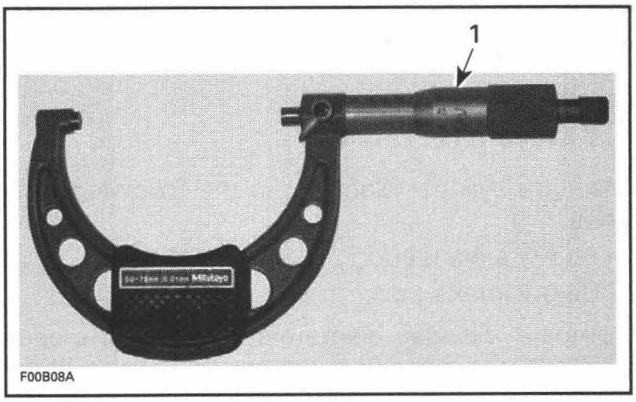

1. Micrometer set to the piston dimension

Refer to *PROCEDURE CONTINUATION WITH A NEW OR USED PISTON* further.

Procedure with a New Piston

Take the measurement on the piston dome.

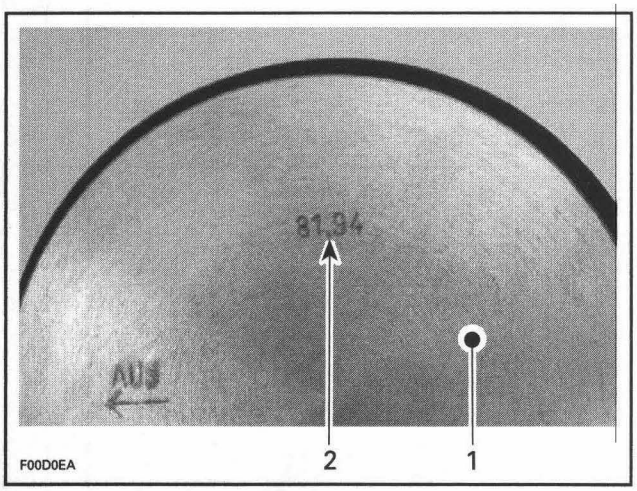

1. Piston dome
2. Piston measurement

Adjust and lock a micrometer to the specified value on the piston dome.

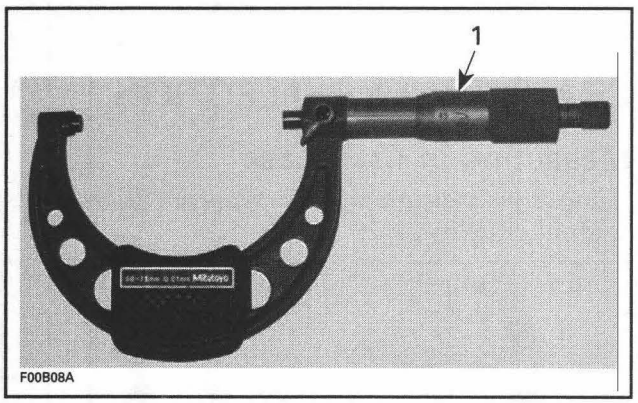

1. Micrometer set to the piston dimension

Procedure Continuation with a New or Used Piston

With the micrometer set to the piston dimension, adjust a cylinder bore gauge to the micrometer dimension and set the indicator to 0.

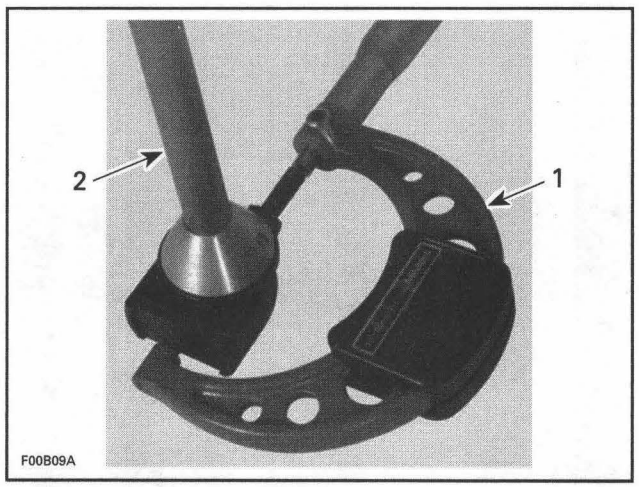

1. Use the micrometer to set the cylinder bore gauge
2. Dial bore gauge

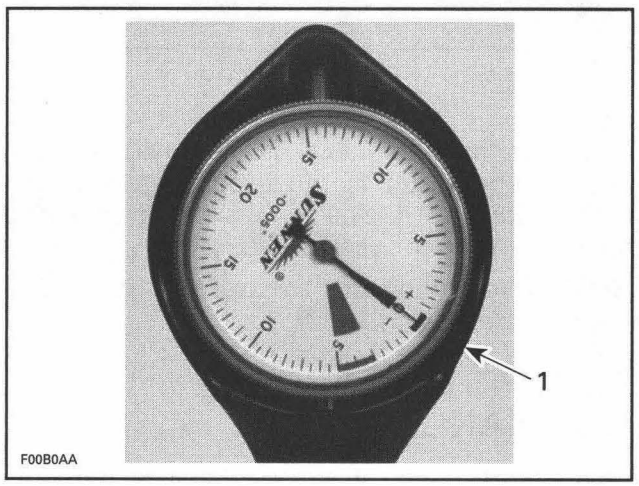

1. Indicator set to 0 (zero)

NOTE: Make sure the cylinder bore gauge indicator is set exactly at the same position as with the micrometer, otherwise the reading will be false.

Position the dial bore gauge above the exhaust port.

IMPORTANT: Always remove cylinder-block from crankcase before measuring.

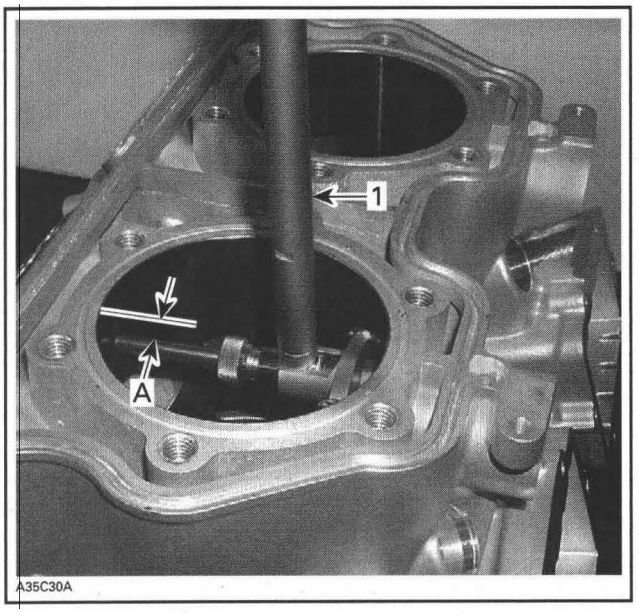

1. Measuring perpendicularly (90°) to piston pin axis
A. Above exhaust port

Read the measurement on the cylinder bore gauge. The result is the exact piston/cylinder wall clearance. If clearance exceeds specified tolerance, replace cylinder and piston.

NOTE: Oversize pistons are available for the 593 engine only.

RING/PISTON GROOVE CLEARANCE

Using a feeler gauge check clearance between rectangular ring and groove. Replace piston if clearance exceeds specified tolerance.

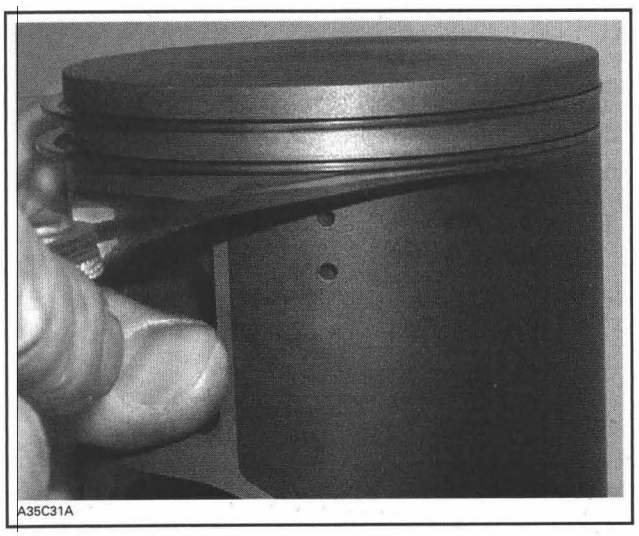

RING END GAP

Position ring halfway between transfer ports and intake port.

NOTE: In order to correctly position the ring in the cylinder, use piston as a pusher.

Using a feeler gauge, check ring end gap. Replace ring if gap exceeds specified tolerance.

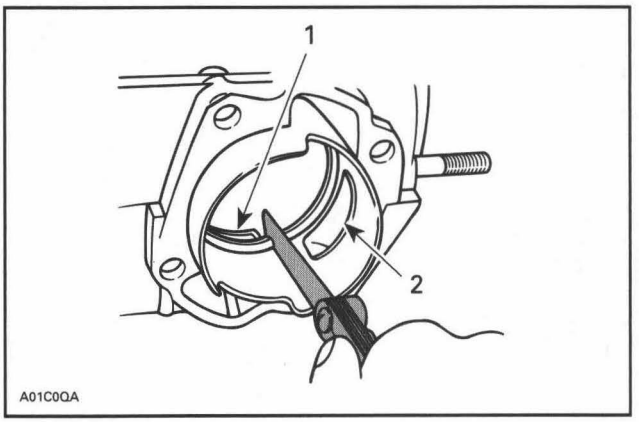

TYPICAL
1. Transfer port
2. Intake port

CRANKSHAFT DEFLECTION

Measuring in Crankcase

Using a dial indicator, check deflection with crankshaft in crankcase.

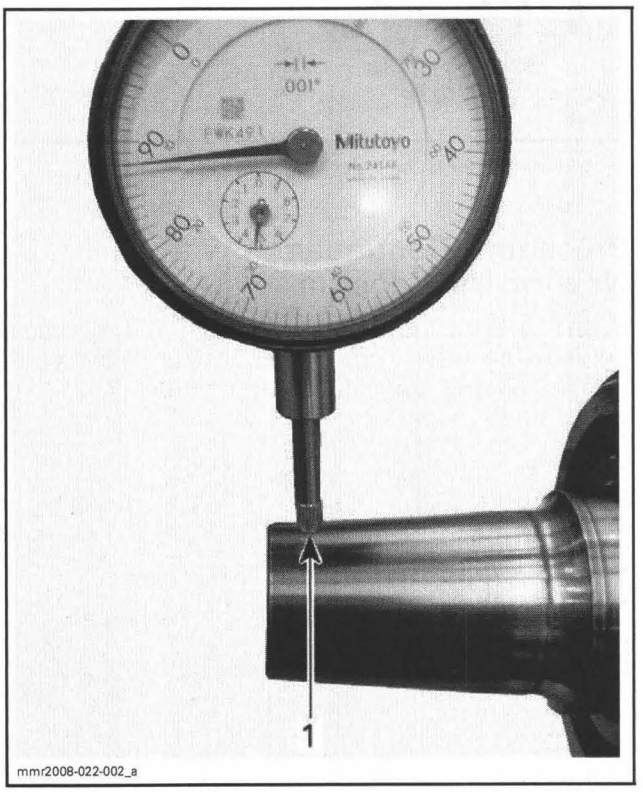

TYPICAL — PTO SIDE
1. Measure deflection 3 mm (1/8 in) from crankshaft end

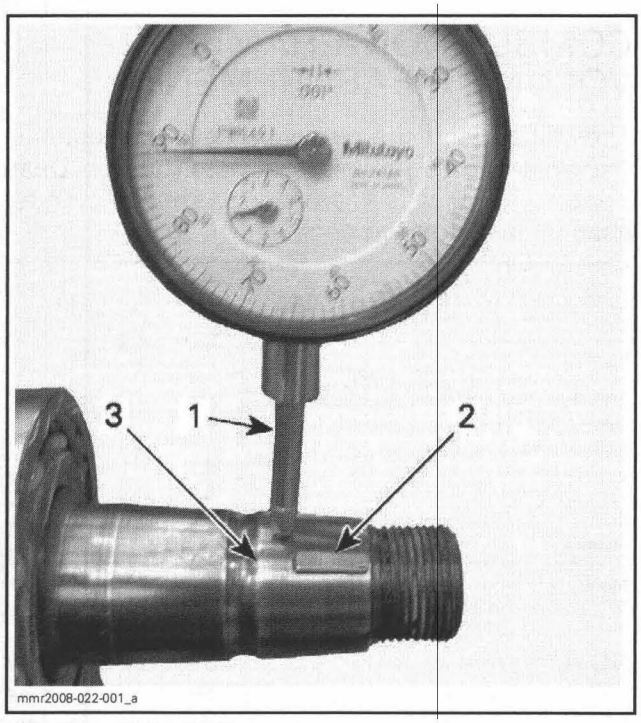

TYPICAL — MAG SIDE
1. *Measure deflection at mid point between key and groove*
2. *Key*
3. *Groove*

If deflection exceeds the specified tolerance, recheck deflection using V-shaped blocks to determine the defective part(s). See *MEASURING ON BENCH*.

Measuring on Bench

Once engine is disassembled, check crankshaft deflection on V-shaped blocks. If deflection exceeds the specified tolerance, it can be worn bearings or a bent crankshaft. Remove crankshaft bearings and check deflection again on V-shaped blocks to determine the defective part(s).

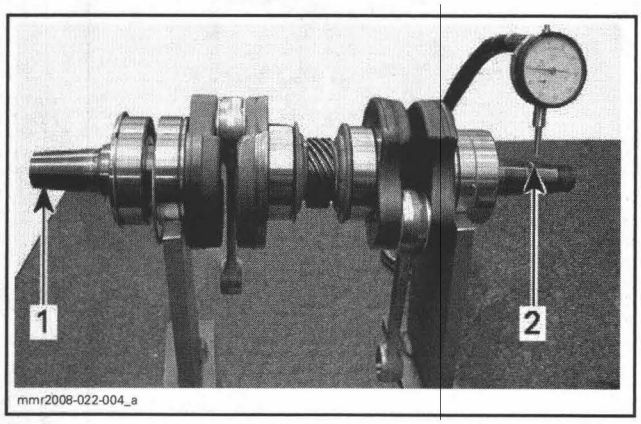

TYPICAL — V-SHAPED BLOCKS POSITION WITH BEARINGS
1. *Measure deflection 3 mm (1/8 in) from crankshaft end*
2. *Measure deflection at mid point between key and groove*

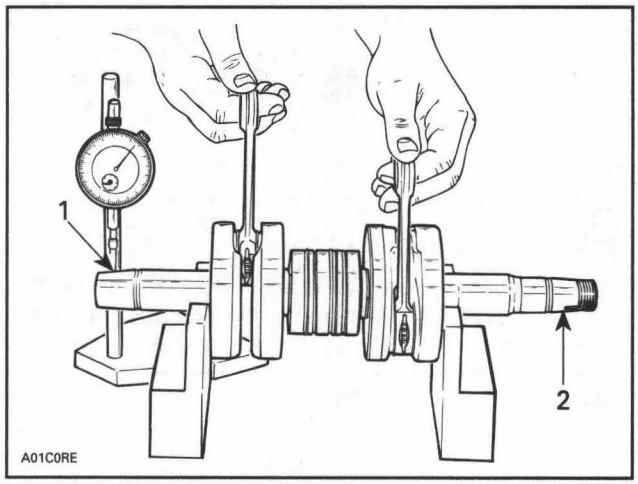

TYPICAL — V-SHAPED BLOCKS POSITION WITHOUT BEARINGS
1. *Measure deflection 3 mm (1/8 in) from crankshaft end*
2. *Measure deflection at mid point between key and groove*

NOTE: Crankshaft deflection cannot be correctly measured between centers of a lathe.

If the deflection exceeds the specified tolerance, crankshaft should be repaired or replaced.

CONNECTING ROD BIG END AXIAL PLAY

Using a feeler gauge, measure distance between thrust washer and crankshaft counterweight. If the distance exceeds specified tolerance, repair or replace the crankshaft.

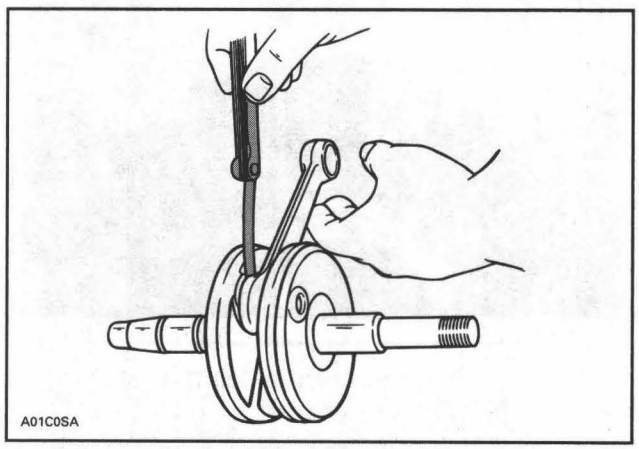

TYPICAL

CRANKSHAFT ALIGNMENT

Remove both spark plugs.

Install the dial indicator (P/N 414 104 700) in spark plug hole on MAG side.

414 104 700

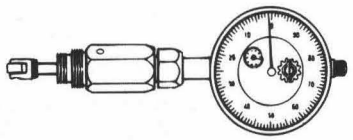

Bring MAG piston at top dead center.

Scribe a mark on crankcase.

Install degree wheel (P/N 529 035 607) on crankshaft end so that 360° mark aligns with the mark on crankcase. Do not rotate crankshaft.

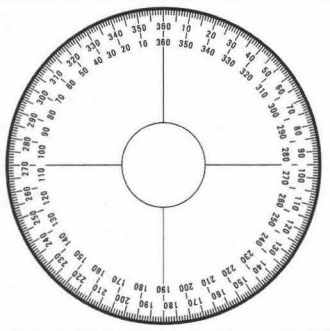

529 035 607

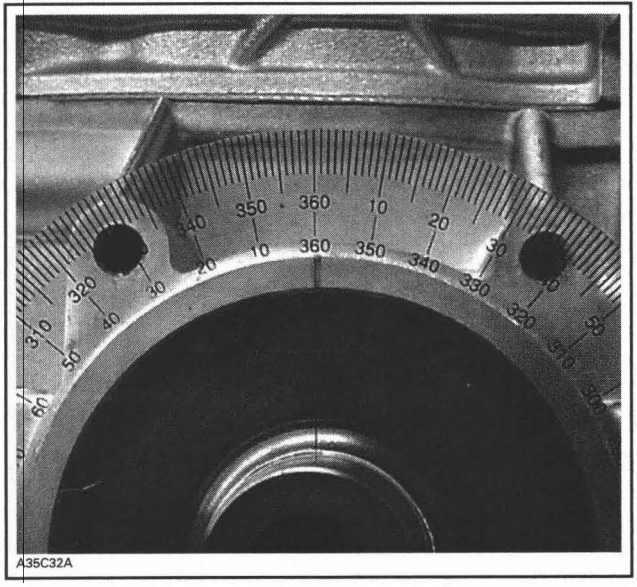

Remove dial indicator and install it in spark plug hole on PTO side.

Bring PTO piston to top dead center. Degree wheel must rotate with crankshaft.

Interval between cylinders must be 180° ± 0.5.

Any other reading indicates a misaligned (twisted) crankshaft.

COMBUSTION CHAMBER VOLUME MEASUREMENT

The combustion chamber volume is the region in the cylinder head above the piston at Top Dead Center (TDC). It is measured with the cylinder head installed on the engine.

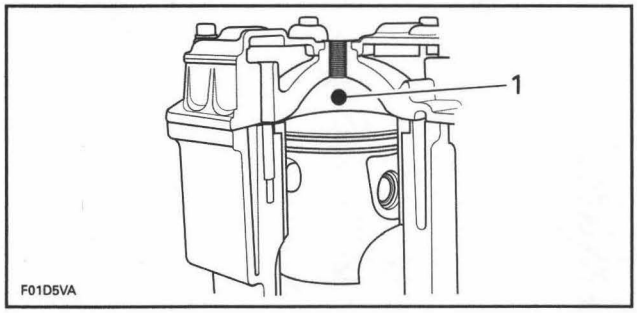

TYPICAL
1. Combustion chamber

NOTE: When checking the combustion chamber volume, engine must be cold, piston must be free of carbon deposits and cylinder head must be leveled.

- Remove cylinder head cover and apply on each piston ring end gap a dab of grease to seal it.
- Reinstall cylinder head cover, refer to *TOP END* in *ENGINE* section.
- Remove both spark plugs and bring one piston to Top Dead Center using the dial indicator (P/N 414 104 700).

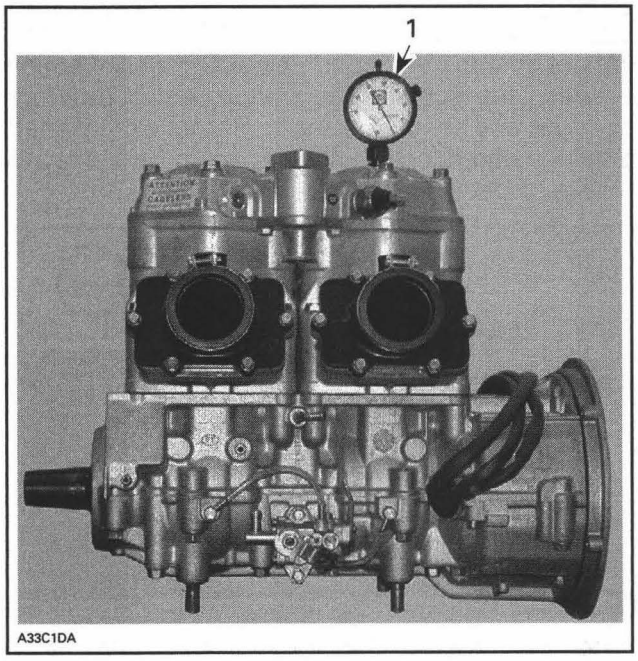

1. Bring piston to TDC

- Obtain a graduated burette (capacity 0 - 50 cc) and fill with mineral injection oil.

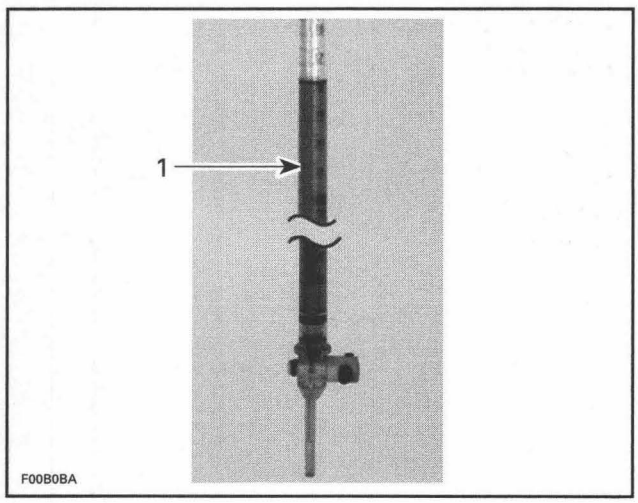

1. Graduated burette (0 - 50 cc)

- Open burette valve to fill its tip then close valve.
- Let oil settle in burette then add oil until level reaches 0 cc.
- Inject the burette content through the spark plug hole until oil touches the top spark plug hole then close burette valve.

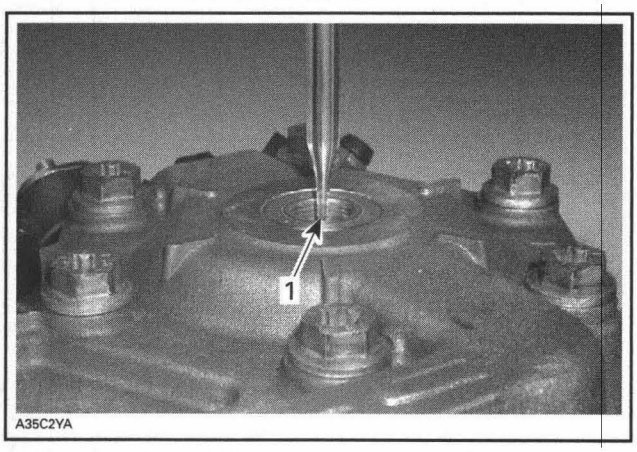

1. Top of spark plug hole

NOTE: The oil level in cylinder must not drop for a few seconds after filling. If so, there is a leak between piston and cylinder. The recorded volume would be false. Repair engine then repeat procedure.

- Let burette stand upward for about 10 minutes, until oil level is stabilized.
- Read the burette scale to obtain the quantity of oil injected in the combustion chamber.
- Deduct 2.25 cc from the value obtained on the burette, this amount corresponds to the cylinder head spark plug well.

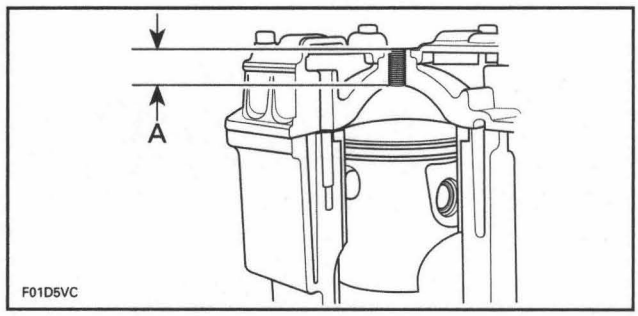

TYPICAL
A. Spark plug well

- Repeat procedure for the other cylinder.
- When completed, compare cylinders measurement with specified tolerances.
- If necessary, install a thicker or thinner cylinder/crankcase gasket in order to obtain the specified combustion chamber volume.
- Repeat procedure until specified tolerances are obtained.

AIR INTAKE SYSTEM

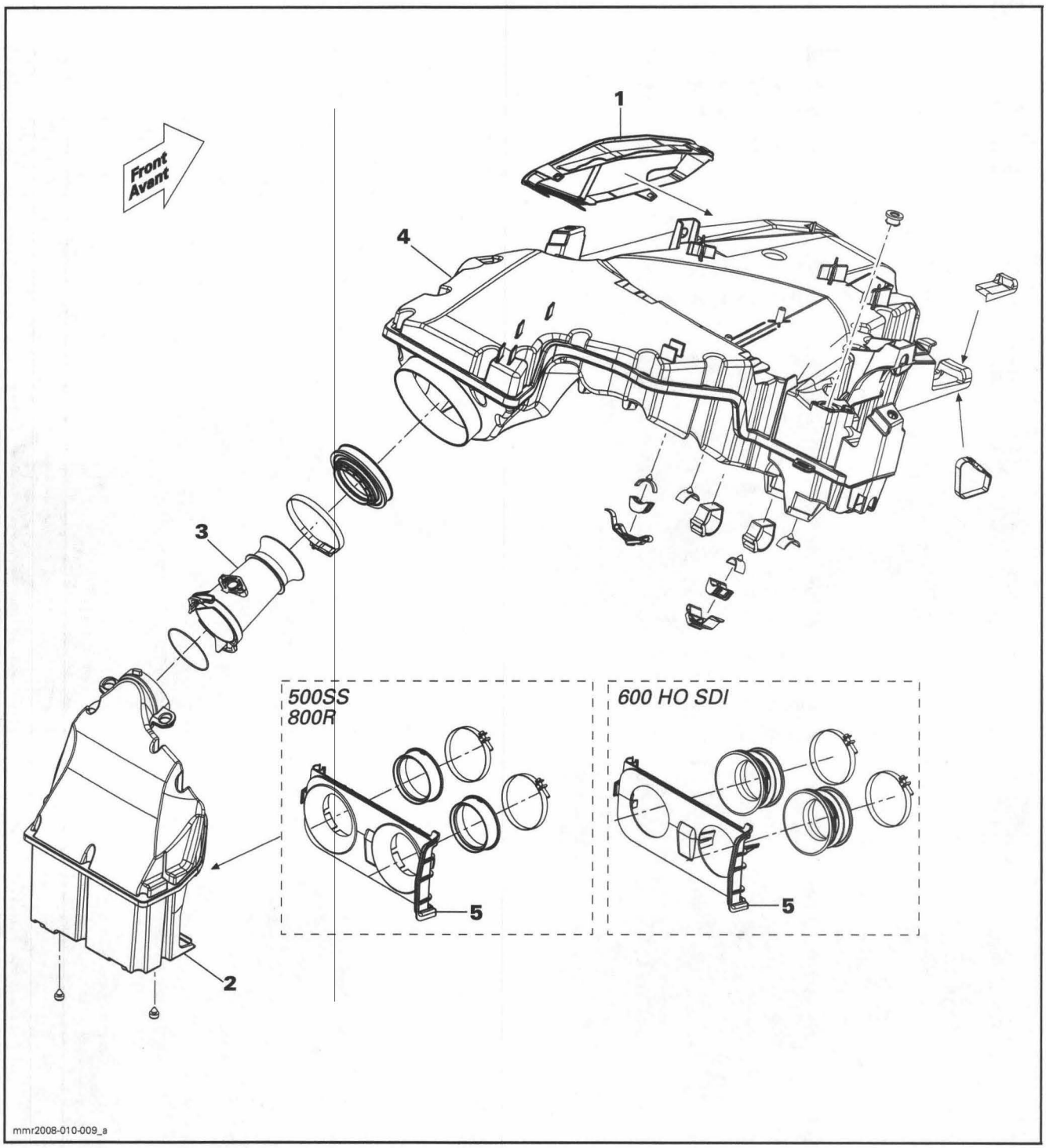

PROCEDURES

AIR FILTER

Air Filter Removal

The air filter **no. 1** is located on left hand side of secondary air intake silencer **no. 4**.

Refer to *BODY* and remove:
- Hood
- Bottom pan cover
- LH side panel.

Remove left upper console screw.

Pull off both front secondary air intake silencer Velcro straps.

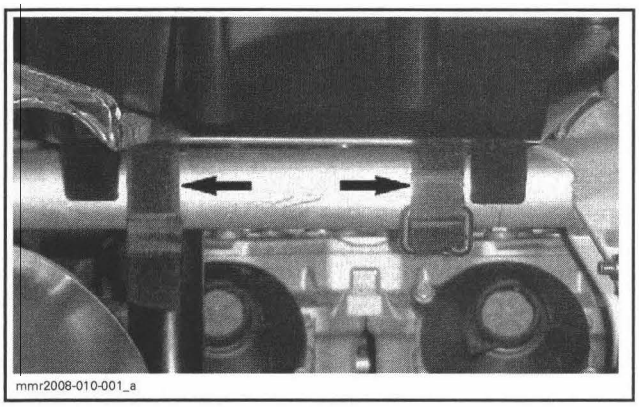

Gently pull upper section of bottom pan and lift front of secondary air intake silencer.

Unlatch all 5 air filter retaining tabs.

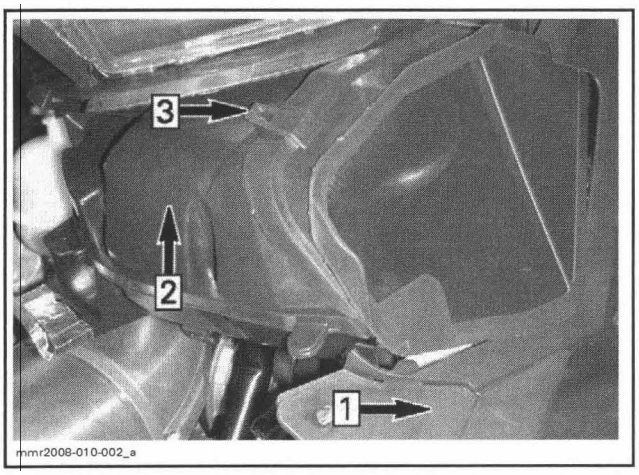

Step 1: Pull upper section of bottom pan
Step 2: Lift front of secondary air intake silencer
Step 3: Unlatch retaining tabs

Pull air filter out of secondary air intake silencer.

Air Filter Cleaning

Clean with fresh water and mild soap.

Replace air filter as required.

NOTE: If the filter is very dirty, clean the interior of secondary air intake silencer at the same time.

Air Filter Installation

The installation is the reverse of the removal procedure.

PRIMARY AIR INTAKE SILENCER

Primary Air Intake Silencer Removal

Remove LH side panel.

Remove drive belt guard, refer to *DRIVE BELT*.

Unlock connector tube **no. 3** as follows:
- Lift tab on rear section of connector tube.
- Twist tube counter clockwise and pull slightly forward.

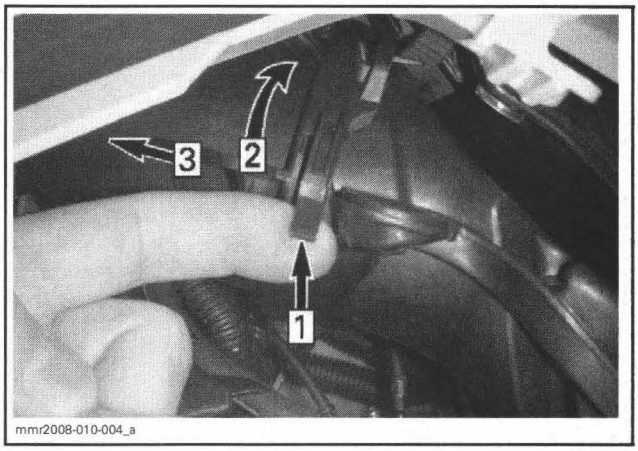

Step 1: Lift tab
Step 2: Twist tube
Step 3: Pull forward

Push securing tab of primary air intake silencer **no. 2** and pull silencer out of adapter plate **no. 5**.

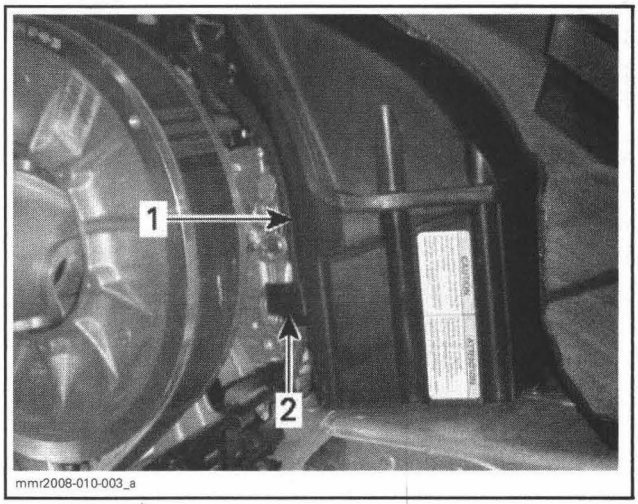

1. Primary air intake silencer
2. Securing tab

Primary Air Intake Silencer Installation

The installation is the reverse of the removal procedure. However, pay attention to guide the primary air intake silencer into the adapter plate's groove. Also make sure that the primary air silencer is pushed to the end of adapter plate and that the securing tab is fully engaged.

SECONDARY AIR INTAKE SILENCER

Secondary Air Intake Silencer Removal

Remove multifunction gauge, refer to *LIGHTS/GAUGE/ACCESSORIES*.

Refer to body and remove:
- Hood
- LH and RH side panels
- Bottom pan cover
- Gauge support and headights as a unit
- Slightly move console aside without disconnecting cables.

600 HO SDI Models

Disconnect air pressure sensor (APS) located on LH top of secondary air intake silencer.

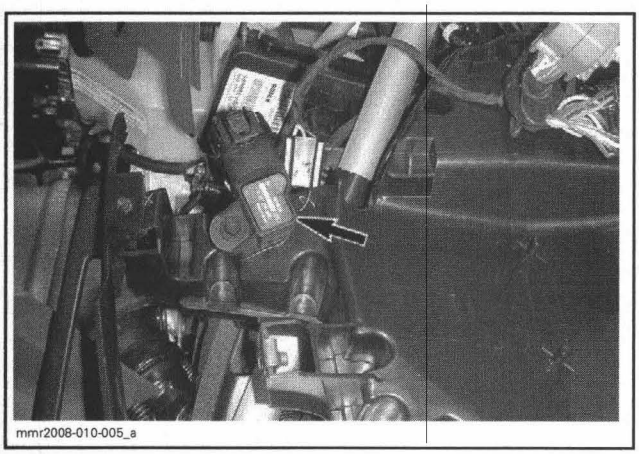
mmr2008-010-005_a

500SS and 800R Models

Unplug vent hose.

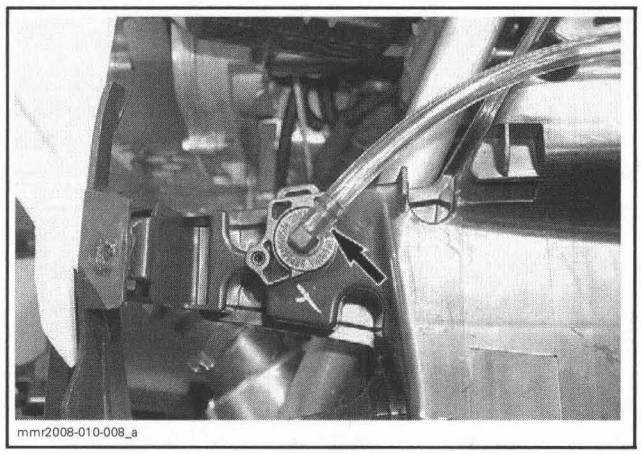
mmr2008-010-008_a

600 HO SDI and 800R Models

Disconnect air temperature sensor (ATS) located on top of connector tube.

All Models

Unlock connector tube as described in *PRIMARY AIR INTAKE SILENCER REMOVAL*.

Pull off all 4 Velcro straps located on the lower portion of the secondary air intake silencer.


mmr2008-010-006_a

TYPICAL — REAR VELCRO STRAP

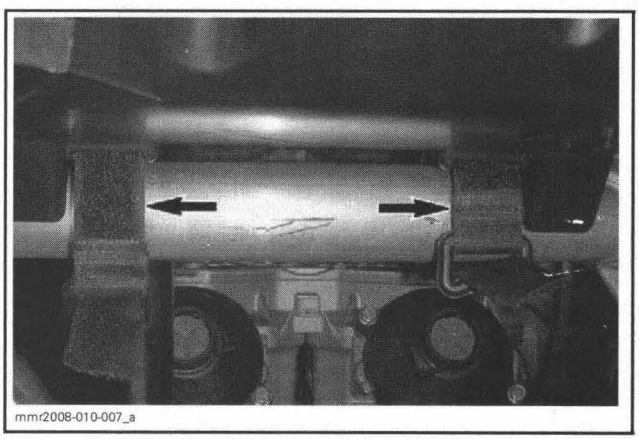
mmr2008-010-007_a

FRONT VELCRO STRAPS

Remove secondary air intake silencer.

Secondary Air Intake Silencer Installation

The installation is the reverse of the removal procedure. However, pay attention to the velcro straps routing for proper installation.

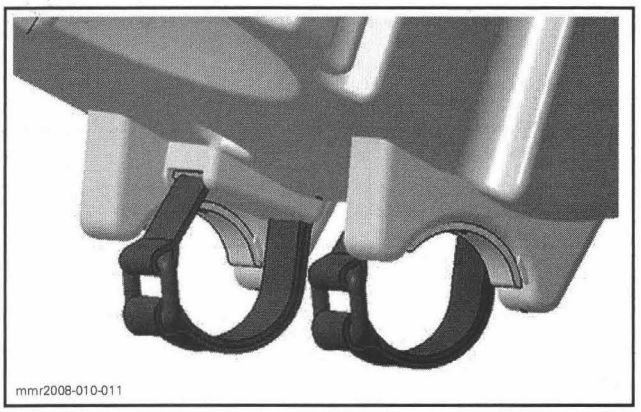

FRONT VELCRO STRAPS ROUTING

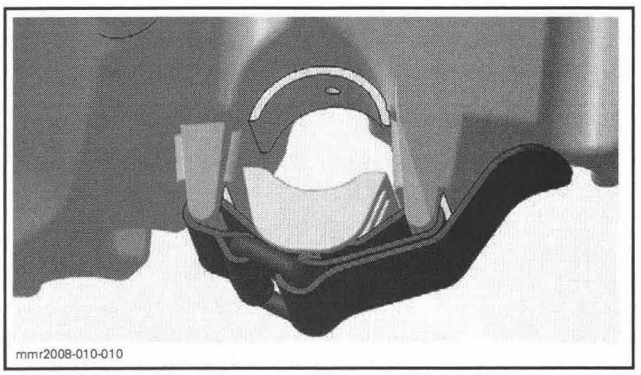

TYPICAL — REAR VELCRO STRAP ROUTING

IMPORTANT: Do not forget to reconnect the APS (or the vent hose) and the ATS where applicable.

EXHAUST SYSTEM

SERVICE TOOLS

Description	Part Number	Page
exhaust spring installer/remover	529 035 401	56–57

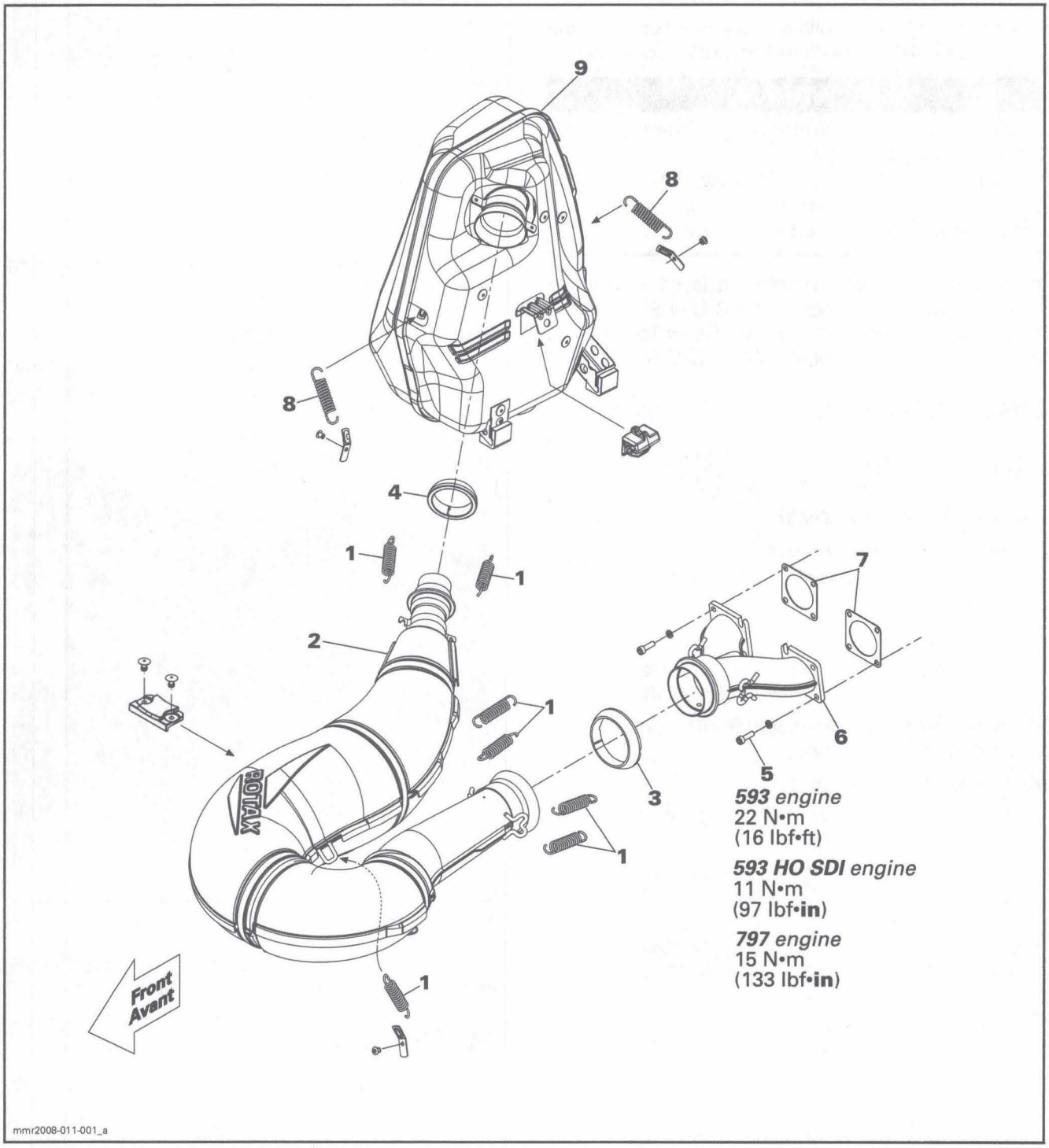

mmr2008-011-001_a

GENERAL

⚠ WARNING

To avoid potential burns, never touch exhaust system components immediately after the engine has been running because these components are very hot. Let engine and exhaust system cool down before performing any servicing.

During assembly/installation, use the torque value and service products as in the exploded view.

⚠ WARNING

Torque wrench tightening specifications must be strictly adhered to.
Locking devices (e.g.: locking tabs, elastic stop nuts, self-locking fasteners, cotter pins, etc.) must be replaced with new ones.

NOTE: On applicable models, it is good practice to check for fault codes using B.U.D.S. software as a first troubleshooting step. Refer to *EMS DIAGNOSTIC AND COMMUNICATION TOOLS*.

PROCEDURES

TUNED PIPE

Tuned Pipe Removal

Refer to *BODY* and remove:
- Right hand side panel
- Hood
- Bottom pan cover.

Remove exhaust springs **no. 1**. Use exhaust spring installer/remover (P/N 529 035 401).

Remove muffler **no. 9** (except 800R models). See procedure in this section.

Remove tuned pipe **no. 2**.

Remove exhaust gasket **no. 3** and **no. 4**.

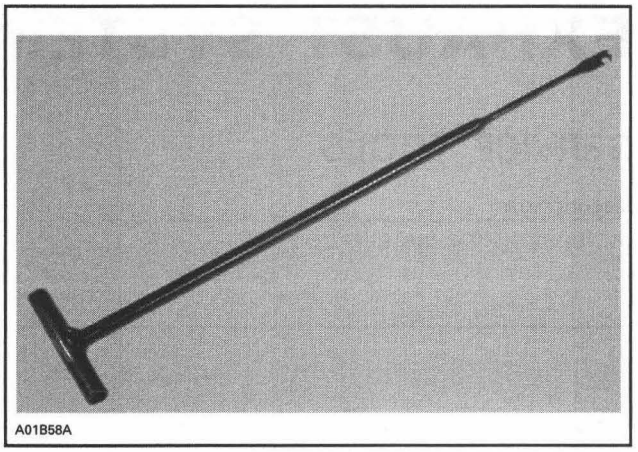

Tuned Pipe Inspection

Check tuned pipe and shields for:
- Damages
- Cracks.

Also inspect gaskets condition. Replace as required.

Tuned Pipe Installation

Install doughnut shaped exhaust gasket **no. 3** with both of its notches aligned with Y-manifold protrusions.

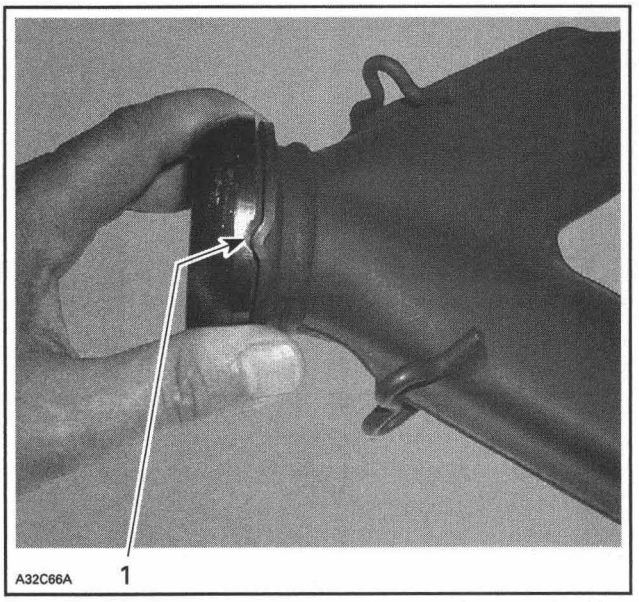

1. Align notches

Install all exhaust springs using exhaust spring installer/remover (P/N 529 035 401).

MANIFOLD

Manifold Removal

Remove muffler (except 800R models). See procedure in this section.

Remove tuned pipe. See procedure in this section.

Remove manifold screws **no. 5** and discard them.

NOTE: Take note of the respective position of the socket screws and the hexagonal screws for proper installation.

CAUTION: Heat screws for 30 seconds before loosening to prevent screw breakage.

Remove manifold.

Remove gaskets **no. 7**.

Manifold Inspection

Check if the manifold is cracked or damaged. Replace if necessary.

Manifold Installation

Install the manifold with new gaskets.

Install new manifold screws **no. 5** and torque them to specification.

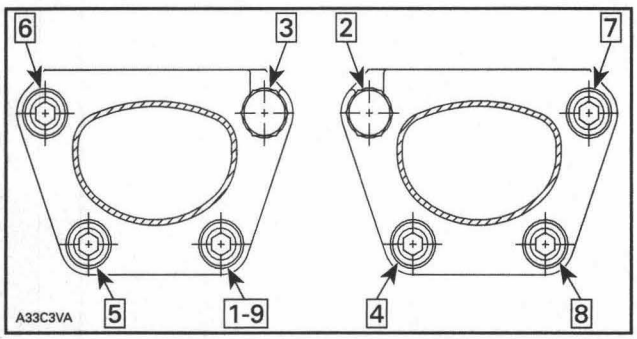

SEQUENCE

ENGINE	TORQUE
593	22 N•m (16 lbf•ft)
593 HO SDI	11 N•m (97 lbf•**in**)
797	15 N•m (132 lbf•**in**)

Install tuned pipe.

Install muffler.

MUFFLER

Muffler Removal

Remove right hand side panel.

Remove tuned pipe.

Disconnect the EGTS (Exhaust Gas Temperature Sensor) on **SDI models**.

Remove springs **no. 8** retaining the muffler. Use exhaust spring installer/remover (P/N 529 035 401).

Remove the muffler.

Muffler Inspection

Check the muffler for cracks or other damages.

Muffler Installation

For installation, reverse the removal procedure.

EXHAUST GAS TEMPERATURE SENSOR (EGTS)

Refer to *ELECTRONIC FUEL INJECTION (EFI)* section to verify or change the EGTS.

REWIND STARTER

SERVICE TOOLS

Description	Part Number	Page
small hose pincher	295 000 076	61

SERVICE PRODUCTS

Description	Part Number	Page
Molykote PG 54	420 899 763	62–63

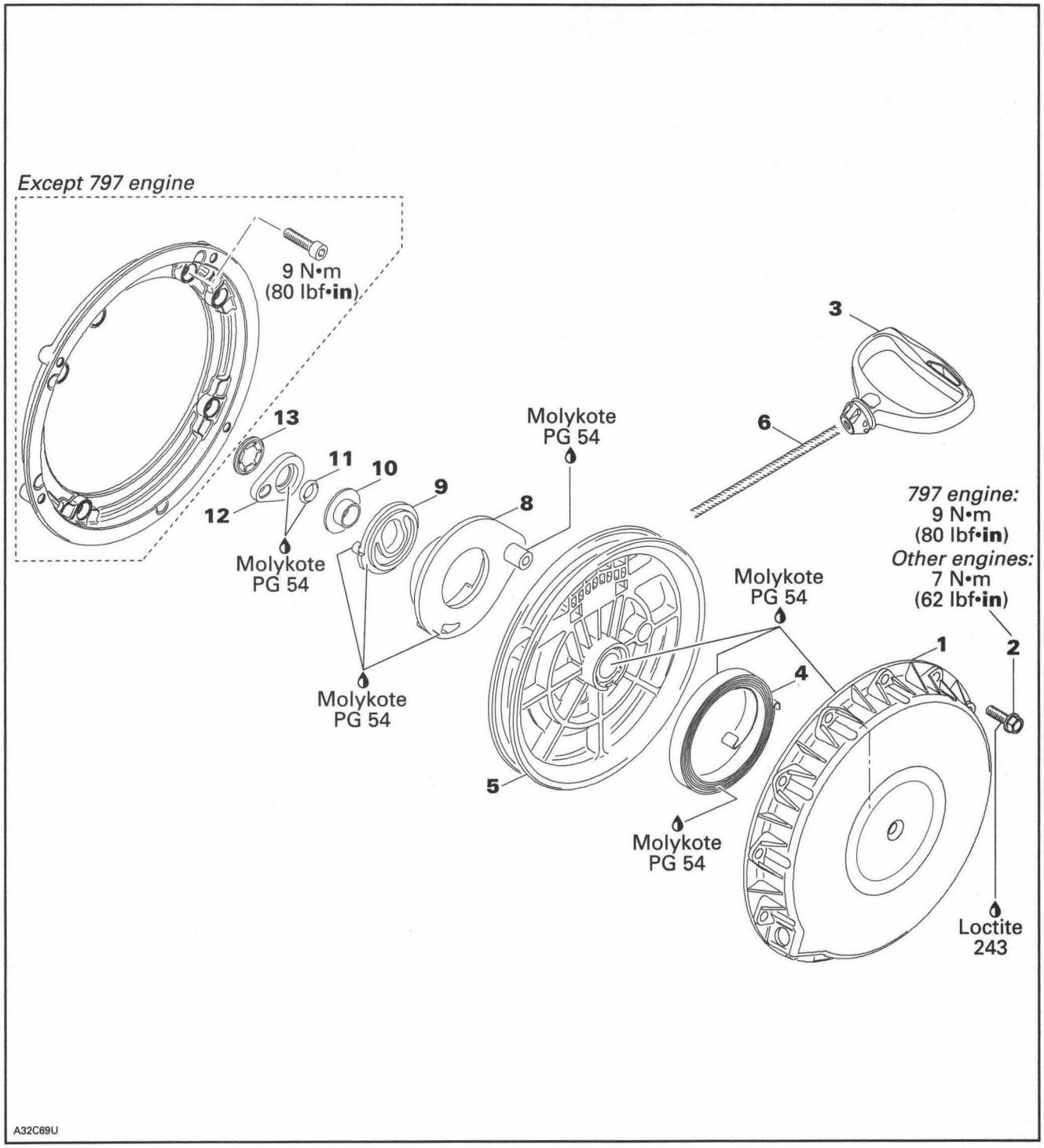
Except 797 engine
9 N•m
(80 lbf•**in**)
3
6
13
11
10
9
8
12
Molykote
PG 54
Molykote
PG 54
Molykote
PG 54
Molykote
PG 54
797 engine:
9 N•m
(80 lbf•**in**)
Other engines:
7 N•m
(62 lbf•**in**)
1
2
4
5
Molykote
PG 54
Loctite
243
A32C69U

GENERAL

NOTE: Due to dust accumulation, rewind starter must be periodically cleaned, inspected and relubricated.

CAUTION: It is of the utmost importance that the rewind starter spring be lubricated periodically using specific lubricant. Otherwise, rewind starter component life will be shortened and/or rewind starter will not operate properly under very cold temperatures.

Check if rope **no. 6** is fraying, replace if so.

When pulling starter grip, mechanism must engage within 30 cm (1 ft) of rope pulled. If not, disassemble rewind starter, clean and check for damaged plastic parts. Replace as required, lubricate, reassemble and recheck. Always replace O-ring **no. 11** every time rewind starter is disassembled.

When releasing starter grip, it must return to its stopper and stay against it. If not, check for proper spring preload or damages. Readjust or replace as required.

When pulling starter grip 10 times in a row, it must return freely. If not, check for damaged parts or lack of lubrication. Replace parts or lubricate accordingly.

PROCEDURES

REWIND STARTER HANDLE

Rewind Starter Handle Removal

Pull rope for 50 cm (20 in) approximately. Using a small hose pincher (P/N 295 000 076), lock rope near rewind starter.

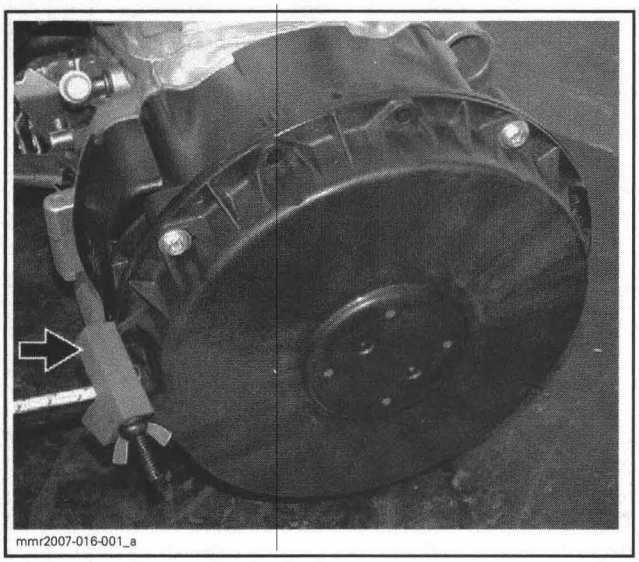
mmr2007-016-001_a

Using a small screwdriver, extract rope knot from stater handle **no. 3**. Cut rope close to knot.

Rewind Starter Handle Installation

Prior to installing starter handle on rope, it is first necessary to fuse the rope end with a lit match. Pass rope through starter handle and tie a knot in the rope end, see picture.

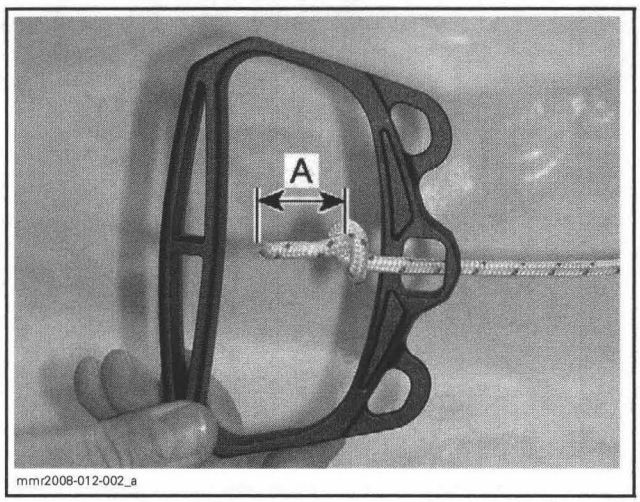

mmr2008-012-002_a

A. 30 ± 5 mm (1 ± 1/4 in)

Fuse the knot with a lit match then insert rope end down and pull the starter handle over the knot.

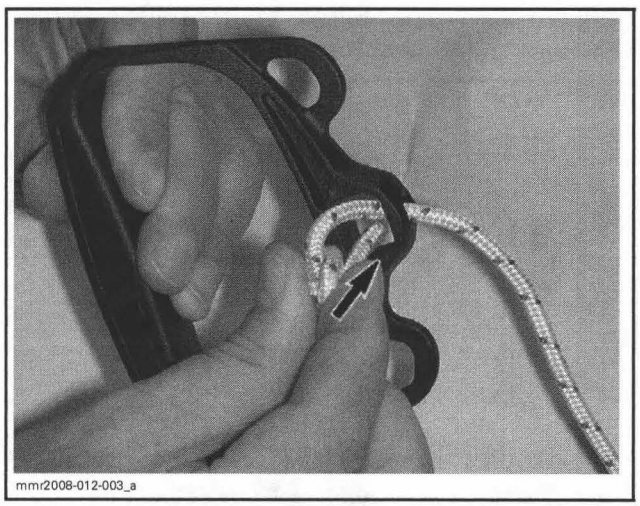
mmr2008-012-003_a

REWIND STARTER

Rewind Starter Removal

Remove the following parts:
- Muffler
- Acoustic panel.

Remove starter handle **no. 3**.

Remove screws **no. 2** securing rewind starter **no. 1** to engine then remove rewind starter.

Rewind Starter Disassembly

Remove the hose pincher previously installed on rope at rewind starter removal. Let sheave get free to release spring preload.

Cut push nut and discard.

Remove lock lever, O-ring **no. 11**, collar sleeve, pawl lock and pawl.

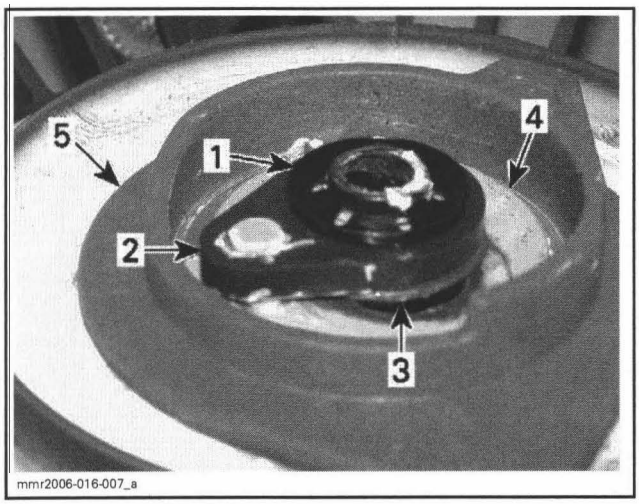

1. *Push nut*
2. *Lock lever*
3. *Collar sleeve*
4. *Pawl lock*
5. *Pawl*

Remove sheave **no. 5** from starter housing **no. 1**. Hold spring with a screwdriver.

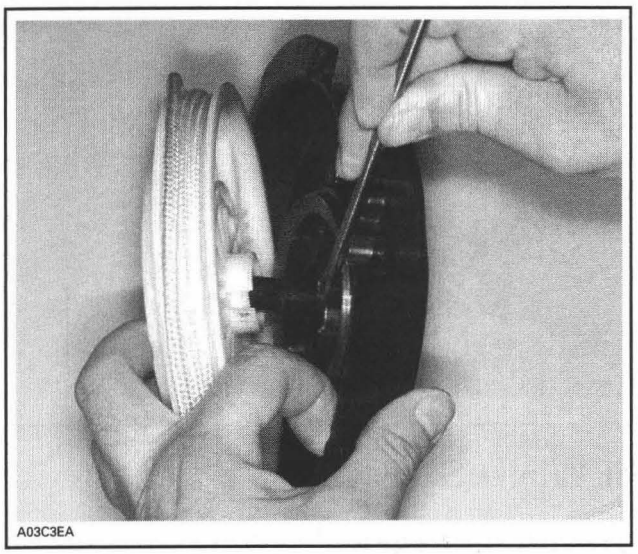

Take out the knot and then rope **no. 6**.

Rewind Starter Assembly

At assembly, position spring **no. 4** outer end into spring guide notch then wind the spring counterclockwise into guide.

⚠ WARNING

Since the spring is tightly wound inside the guide it may fly out when rewind is handled. Always handle with care.



TYPICAL
1. *Outer end into guide notch*

Lubricate spring assembly and 1 cm (1/2 in) wide on bottom of housing with Molykote PG 54 (P/N 420 899 763).

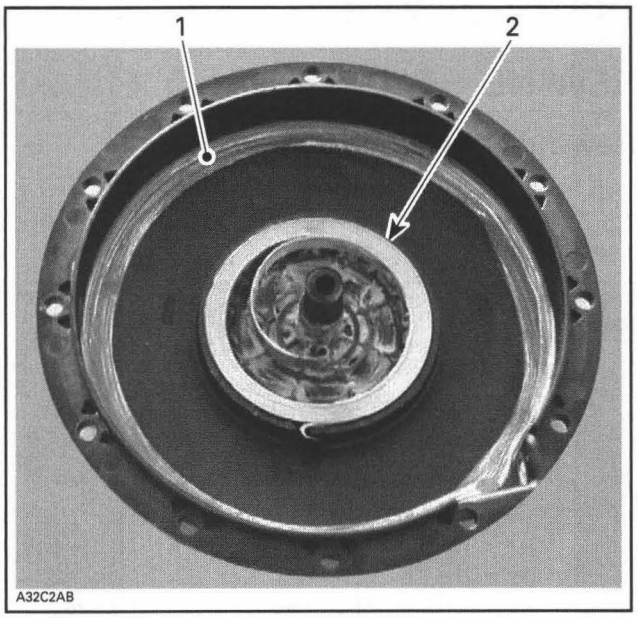

1. *Molykote PG 54 applied 1 cm (1/2 in) wide on bottom of housing*
2. *Molykote PG 54 inside spring guide*

CAUTION: It is of the utmost importance that the rewind starter spring be lubricated periodically using Molykote PG 54 (P/N 420 899 763). The use of standard multipurpose grease could result in rewind starter malfunction under very cold temperatures and components life will be shortened.

Lubricate housing post with silicone compound grease. Install sheave.

To adjust spring tension:

Wind rope on sheave and place rope sheave into starter housing making sure that the sheave hub notch engages in the rewind spring hook.

Rotate the sheave counterclockwise until rope end is accessible through rope exit hole. This will give 1/2 turn of preload.

Pull the rope out of the starter housing and temporarily make a knot to hold it.

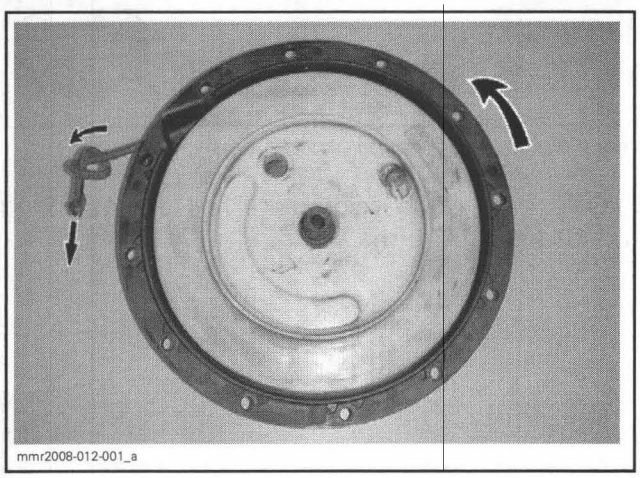

Lubricate pawl **no. 8** with Molykote PG 54 (P/N 420 899 763) then install over rope sheave.

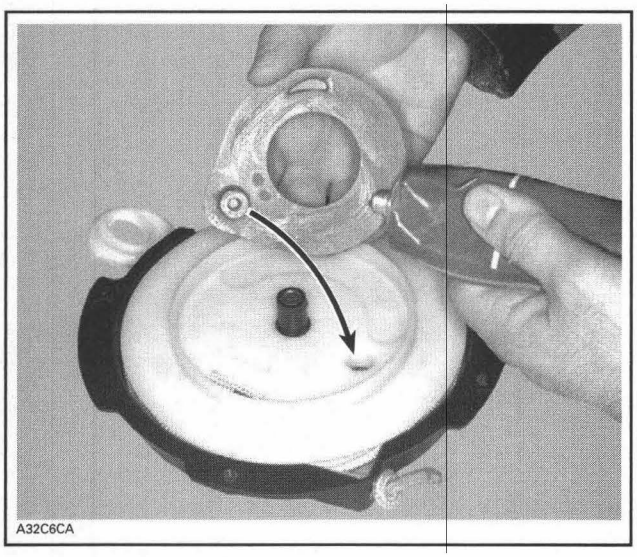

Lubricate pawl lock **no. 9** with Molykote PG 54 (P/N 420 899 763). Install over pawl.

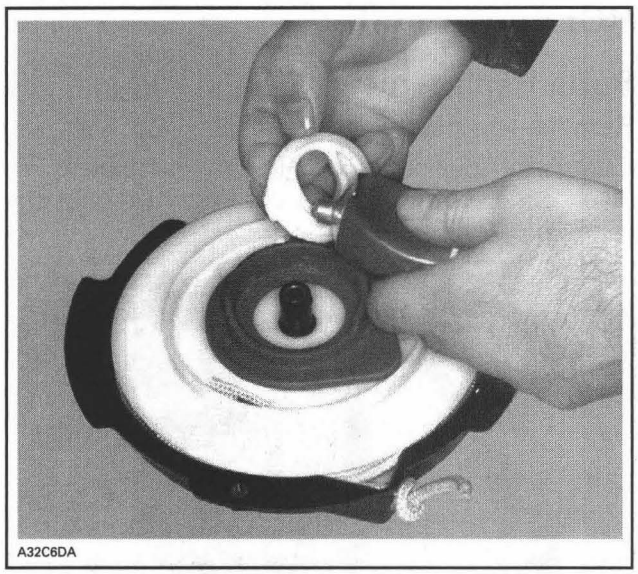

Install collar sleeve **no. 10** with its collar first. Lubricate a new O-ring **no. 11** and lock lever **no. 12** with Molykote PG 54 (P/N 420 899 763). Install over pawl lock.

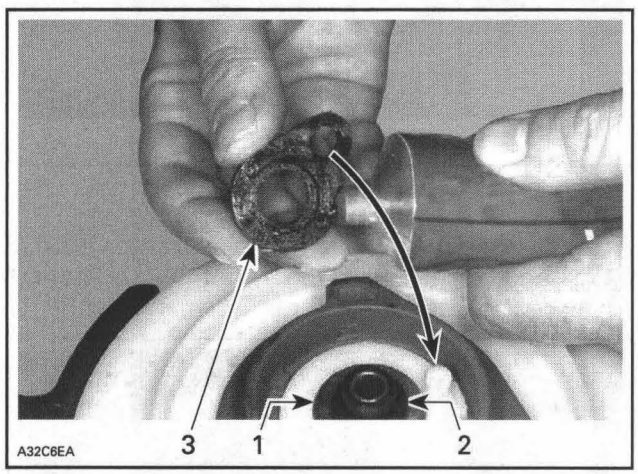

1. *Collar sleeve*
2. *O-ring*
3. *Lock lever*

Position a new push nut **no. 13**.

Rewind Starter Installation

Thread starter rope **no. 6** through console.

Install handle, refer to *STARTER HANDLE INSTALLATION*.

Reinstall rewind starter assembly on engine.

ROPE

Rope Replacement

Remove rewind starter.

Completely pull out rope. Hold rewind starter in a vise. Slide rope and untie the knot. Pull out the rope completely.

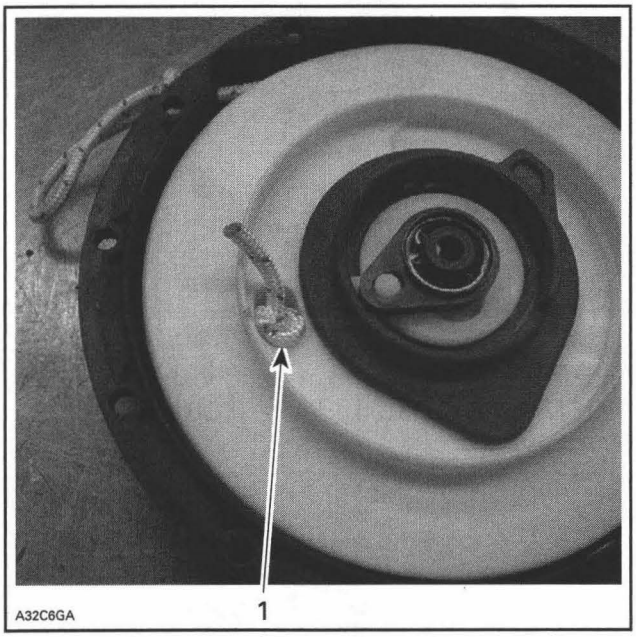

1. Knot to be untied

To install rope **no. 6**, insert rope into sheave **no. 5** orifice and lock it by making a knot, leaving behind a free portion of about 25 mm (1 in) in length.

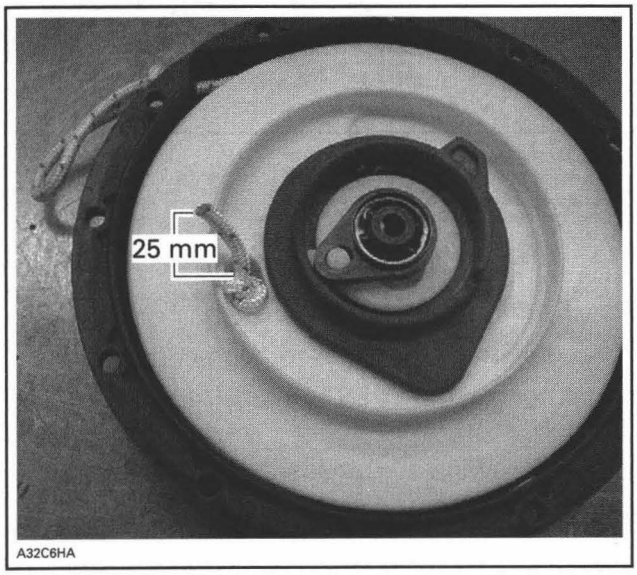

FREE PORTION

Fuse rope end with a lit match and insert it into sheave.

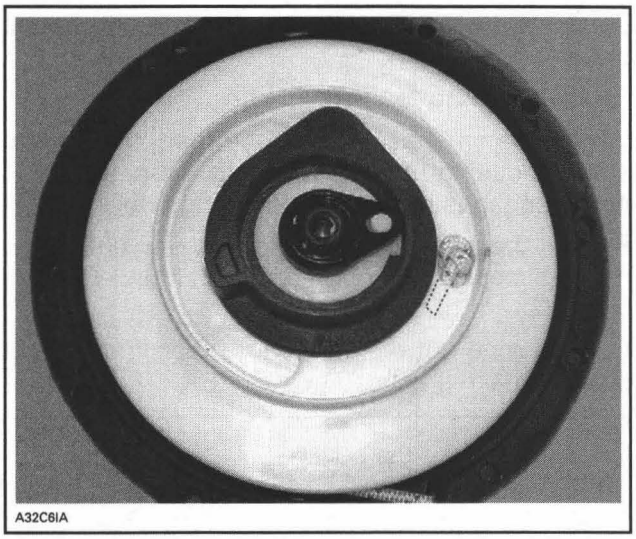

FREE PORTION INSERTED INTO SHEAVE

NOTE: When rope is completely pulled out, spring preload is 4-1/2 turns.

LUBRICATION SYSTEM

SERVICE TOOLS

Description	Part Number	Page
small hose pincher	295 000 076	68–69
vacuum/pressure pump	529 021 800	69, 75
leak testing kit	529 033 100	68
engine removal hook	529 035 829	73
spark plug lift ring	529 035 830	73
Fluke 111 multimeter	529 035 868	71
throttle free play wedge tool	529 036 042	74
oil pump cable adjuster	529 036 045	74

SERVICE PRODUCTS

Description	Part Number	Page
Loctite 243 (blue)	293 800 060	73
Loctite 648 (green)	413 711 400	76
pulley flange cleaner	413 711 809	76

OIL INJECTION RESERVOIR

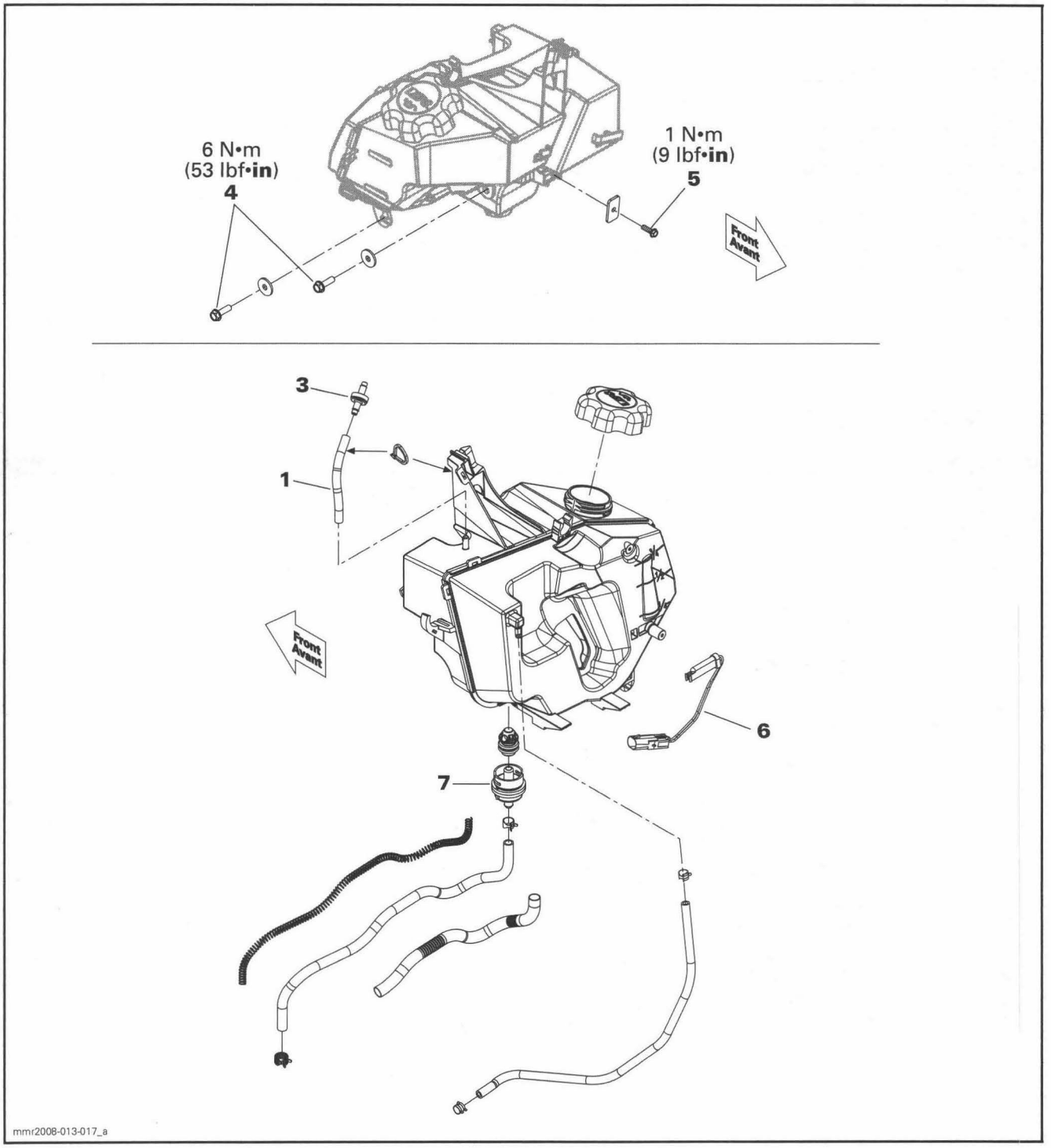

OIL INJECTION PUMP

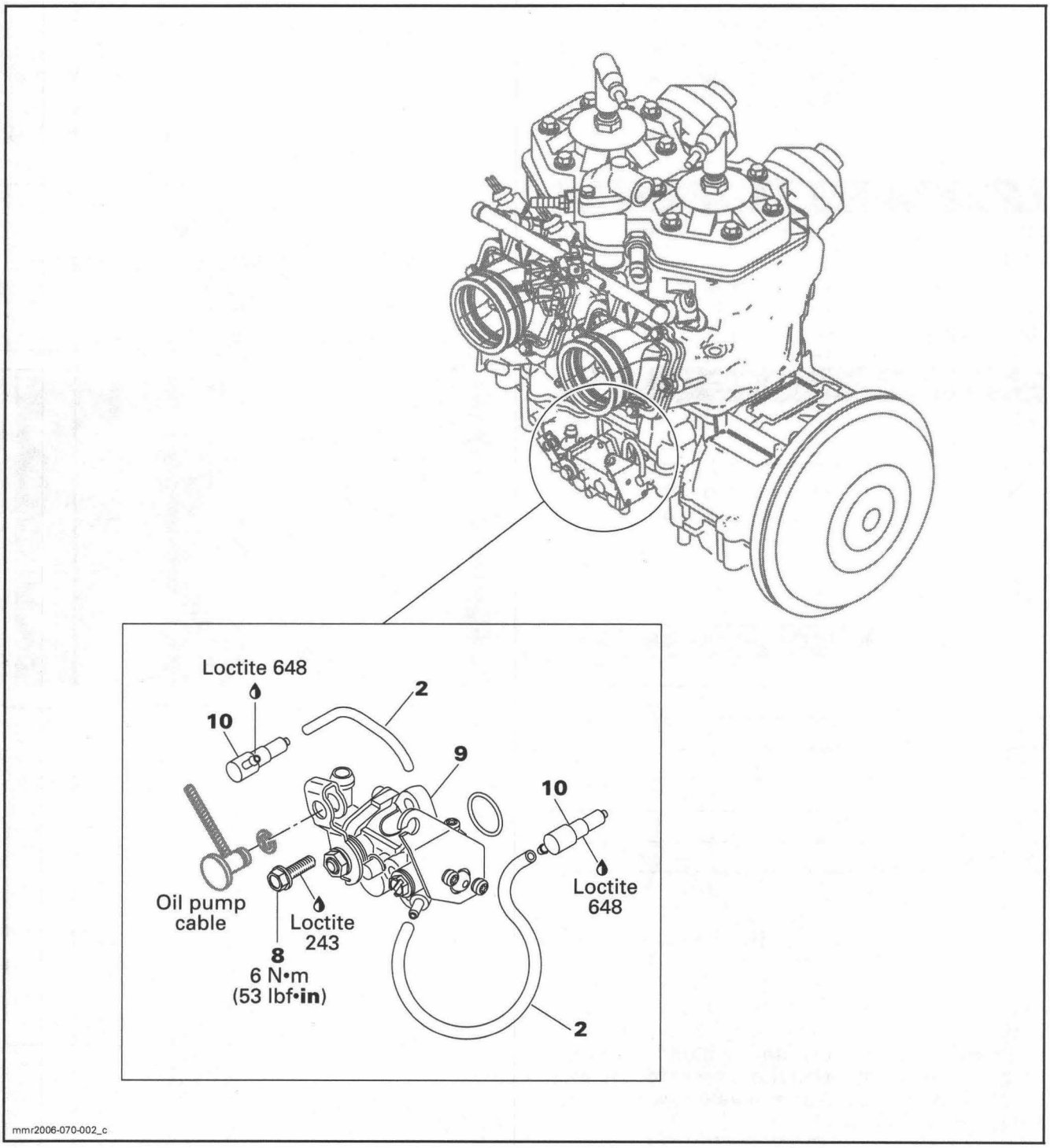

GENERAL

During assembly/installation, use the torque values and service products as in the exploded view.

Clean threads before applying a threadlocker. Refer to *SELF-LOCKING FASTENERS* and *LOCTITE APPLICATION* at the beginning of this manual for complete procedure.

⚠ WARNING

Torque wrench tightening specifications must be strictly adhered to.
Locking devices (e.g.: locking tabs, elastic stop nuts, self-locking fasteners, etc.) must be replaced with new ones

⚠ WARNING

Wipe off any oil spills. Oil is highly flammable.

CAUTION: Do not use a hose pincher on outlet hose. This would damage the spring inside hose.

OIL TYPE

RECOMMENDED INJECTION OIL			
XP-S synthetic oil (2) (3)			
XP-S synthetic blend (2) (3)			
XP-S mineral injection oil (4)			
ENGINES	▼	▼	▼
500SS	✓	✓	✓
600 HO SDI	—	✓ (1)	✓
800R Power TEK	—	✓ (1)	✓

(1) Prefered.

CAUTION: (2) XP-S synthetic oil and XP-S synthetic blend oil are specially formulated and tested for the severe requirements of these engines. Use of any other brand two-stroke oil may void the limited warranty. Use only XP-S synthetic oil or XP-S synthetic blend. There is no known equivalent on the market for the moment. If a high quality equivalent were available, it could be used.

(3) XP-S synthetic oil and XP-S synthetic blend injection oil are compatible, they can be mixed together.

(4) If not available, API TC high-quality low ash two-stroke injection oil may be used.

INSPECTION

OIL SYSTEM LEAK TEST

The following test will indicate any leak from oil injection system.

Install on oil reservoir special cap from the leak testing kit (P/N 529 033 100).

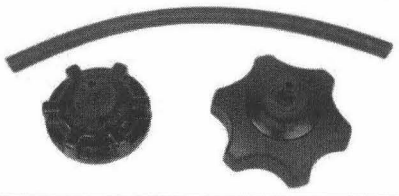

529 033 100

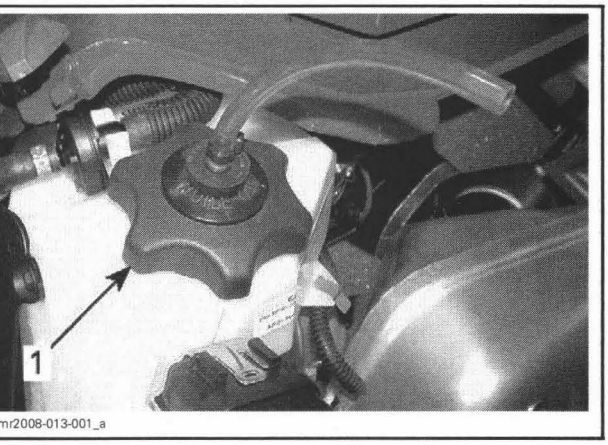

TYPICAL
1. Special cap on reservoir

Install a small hose pincher (P/N 295 000 076) on check valve outlet hose **no. 1**.

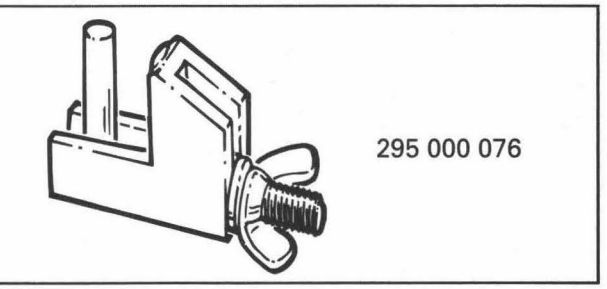

295 000 076

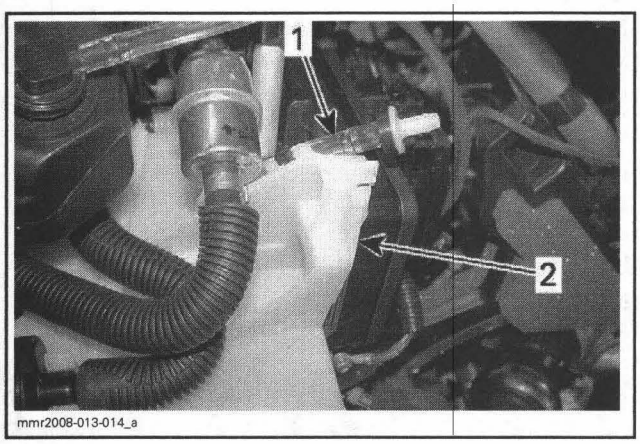

TYPICAL
1. *Check valve outlet hose*
2. *Oil reservoir*

To gain access to oil pump outlet hoses **no. 2**, engine must be lifted. Refer to *OIL INJECTION PUMP REMOVAL* in this section for procedure.

Install a small hose pincher (P/N 295 000 076) on each outlet hoses.

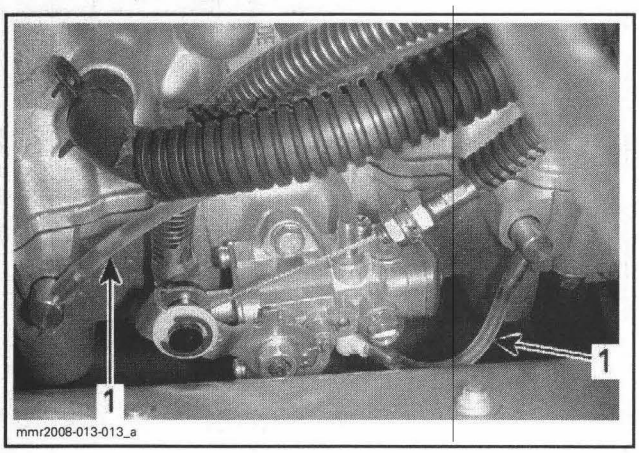

1. *Install hose pinchers here*

Connect the vacuum/pressure pump (P/N 529 021 800) to special cap.

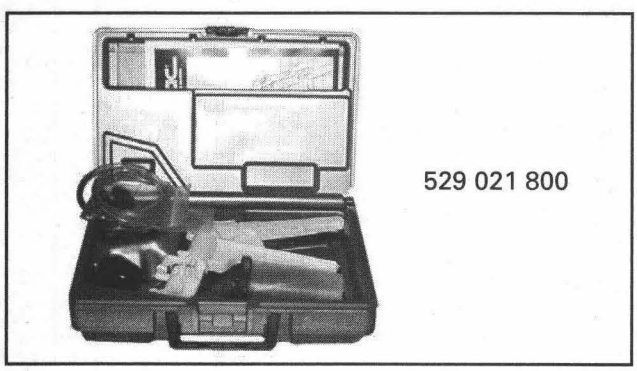

Pressurize oil system as follows.

PRESSURE	TIME TO HOLD PRESSURE
21 kPa (3 PSI)	3 minutes

If pressure drops, locate leak(s) and repair/replace leaking component(s).

NOTE: An oil pump shaft test must be done to complete the oil system leak test. Refer to *ENGINE LEAK TEST* section.

When leak test procedure is completed, reinstall all previously removed parts.

Check Valve Test

Check valve **no. 3** allows air to get into the reservoir.

To verify this one-way check valve, cut locking tie then remove it along with the hose. Make sure that it holds pressure and that it does not let air go through.

NOTE: Remember hose position.

CAUTION: If check valve does not allow air to enter, serious engine damage will occur.

When replacing/installing check valve, insert its black side into vent line.

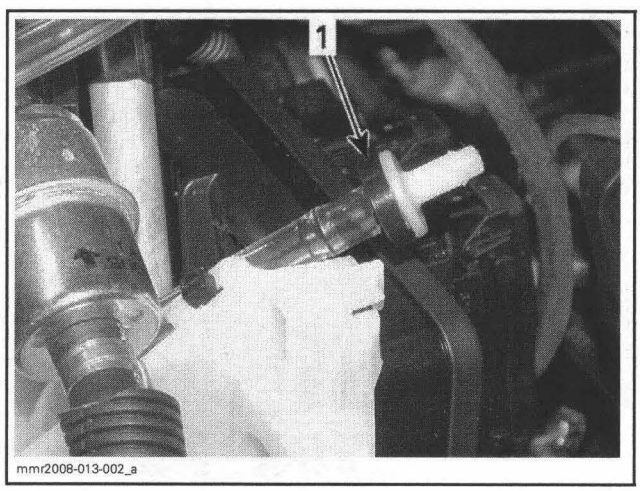

TYPICAL
1. *Black side here*

PROCEDURES

OIL RESERVOIR

Oil Reservoir Removal

Open and remove RH side panel.

Remove console. Refer to *BODY* system.

Empty oil reservoir by siphoning injection oil.

Unplug EGT sensor wire (600 HO SDI).

NOTE: Remember wire routing.

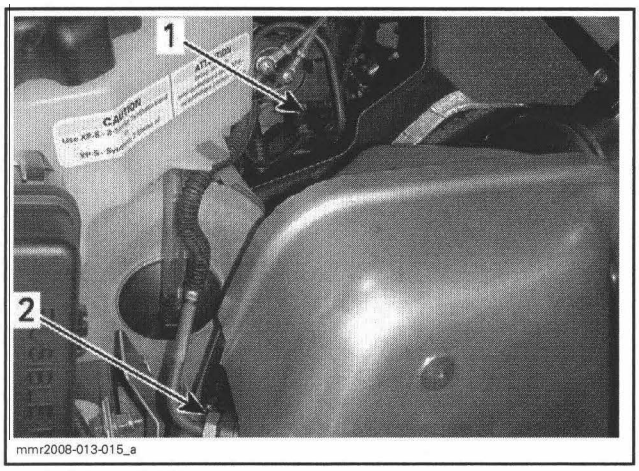

mmr2008-013-015_a

600 HO SDI ONLY
1. *connector*
2. *EGT sensor*

Remove muffler. Refer to *EXHAUST SYSTEM* section.

Detach from reservoir:
- Fuel regulator hose (top of reservoir) (600 HO SDI)
- Engine Control Module (ECM)

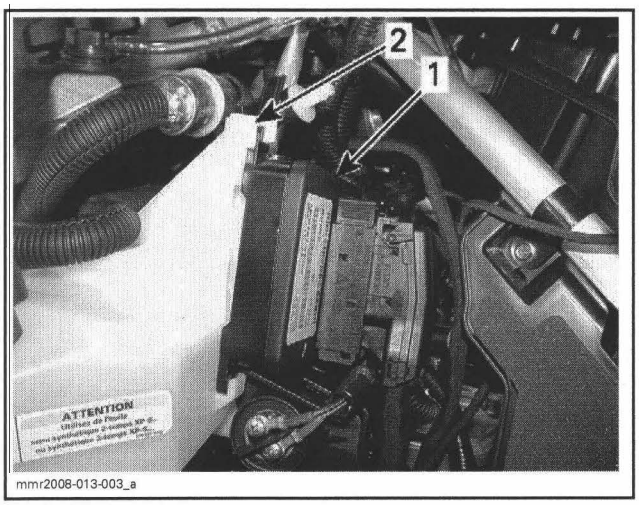

mmr2008-013-003_a

TYPICAL
1. *ECM*
2. *Push on tab to release*

- Fuses or fuse box (depending on model)



mmr2008-013-004_a

TYPICAL — 600 HO SDI ONLY
1. *Lift tab to release*

- Oil level sensor. See procedure further.

Remove upper column support behind reservoir.

NOTE: Remember parts position.

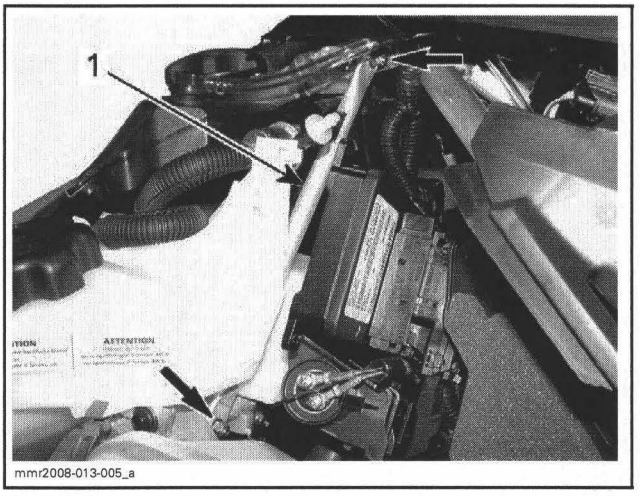

mmr2008-013-005_a

TYPICAL
1. *Support*

Remove rewind starter handle housing. Refer to *BODY* section.

Remove rewind starter handle. Refer to *REWIND STARTER* section.

Remove reservoir fasteners **no. 4** and **no. 5**.

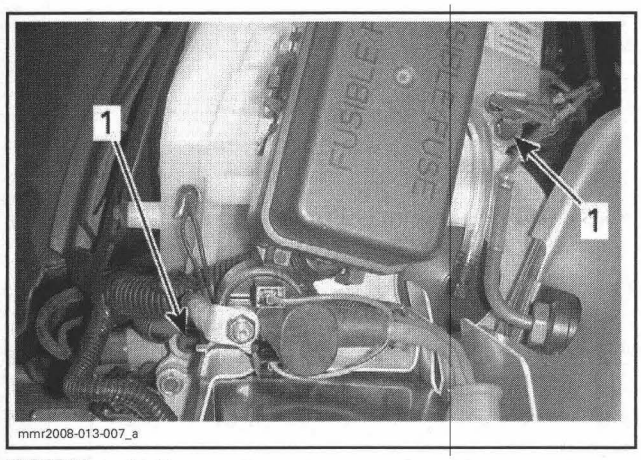

TYPICAL
1. Fasteners ***no. 4***

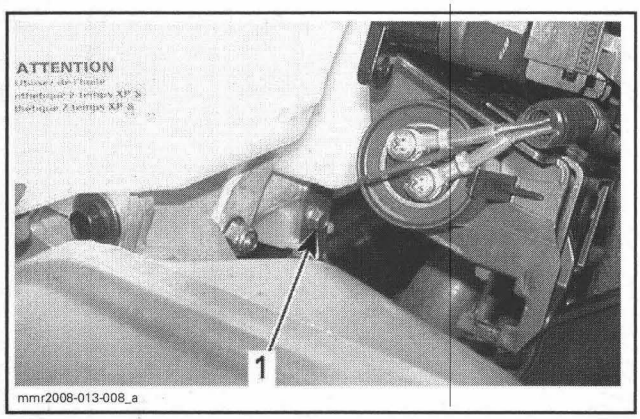

TYPICAL
1. Fastener ***no. 5***

Detach connectors from underneath reservoir.

Unhook harness behind reservoir.

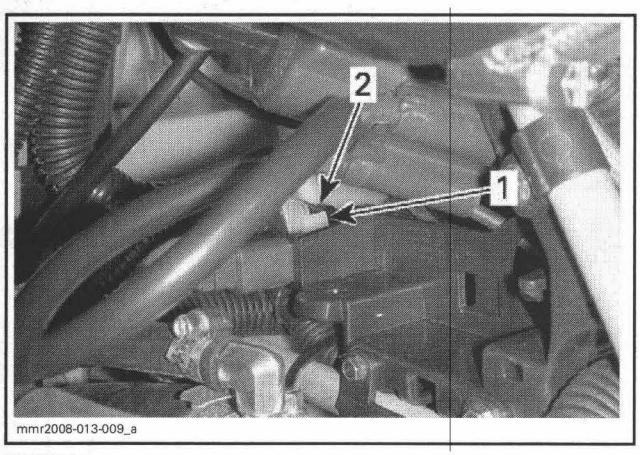

TYPICAL
1. Hook behind reservoir
2. Harness

Lift reservoir and unplug all hoses.

Remove reservoir from vehicle.

Oil Reservoir Installation

For installation, reverse the removal procedure. However, pay attention to the following details.

Torque upper column support bolts to 14 N•m (10 lbf•ft).

Bleed oil pump. See procedure further.

OIL LEVEL SENSOR

Oil Level Sensor Test

Measure resistance of the oil level sensor using a Fluke 111 multimeter (P/N 529 035 868).

SENSOR POSITION	RESISTANCE
Sensor exposed to air	High value or infinite (0L)
Sensor soaked in oil	0.2 Ω (closed)

If resistance test fails, replace sensor.

Oil Level Sensor Removal

Remove rewind starter handle housing. Refer to *BODY* section.

Unplug oil level sensor connector.

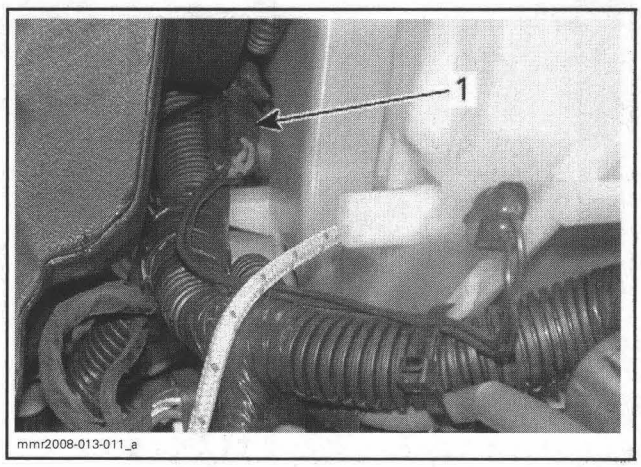

1. Connector

Using a small screwdriver, push and hold tab to release then pull on sensor **no. 6** to remove.

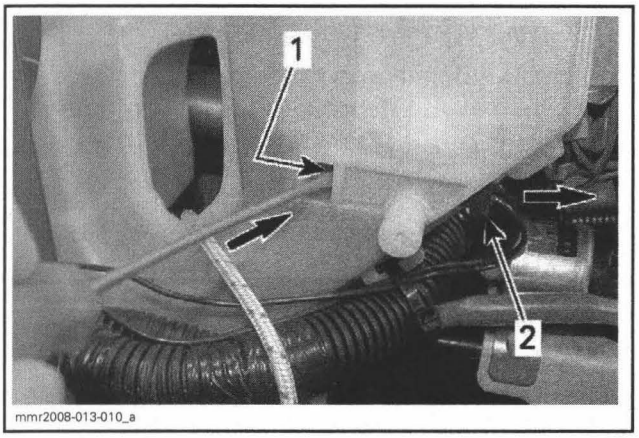

1. Tab
2. Sensor

Oil Level Sensor Installation

For installation, reverse the removal procedure. However, pay attention to the following.

Ensure sensor wire is secured with a locking tie. Ensure wire does not apply any tension on sensor. Wire must have a loop.

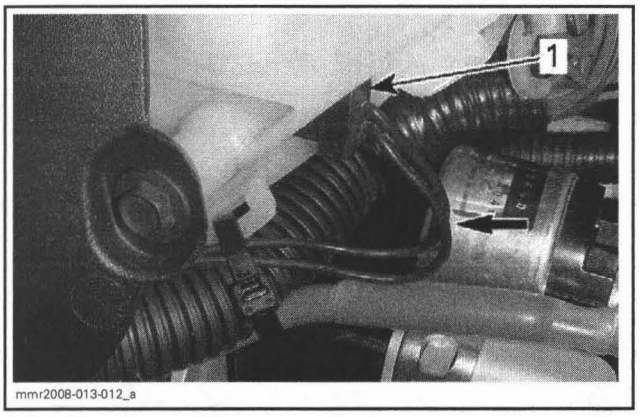

TYPICAL
1. Sensor

OIL FILTER

Oil Filter Removal

Remove oil reservoir. Refer to *OIL RESERVOIR REMOVAL* in this section.

To remove oil filter **no. 7** from reservoir, turn clockwise and pull.

Oil Filter Installation

For installation, reverse the removal procedure. However, pay attention to the following.

Bleed oil pump. See procedure further.

OIL INJECTION PUMP

Oil Injection Pump Verification

NOTE: Since pump is a piston type, it works when engine rotates in both forward and reverse.

Remove oil pump **no. 9** from engine. Refer to *OIL INJECTION PUMP REMOVAL* in this section.

Connect a hose filled with injection oil to main line fitting. Insert other hoses end in an injection oil container. Using a clockwise rotating drill, rotate pump shaft. Oil must drip from hoses while holding lever in a fully open position. If not replace pump.

Oil Injection Pump Removal

To gain access to oil pump **no. 9**, perform the following.

Remove:
- Muffler
- Engine stopper support
- Primary air intake silencer.

Refer to *ENGINE* section.

Remove:
- Belt guard
- Drive belt
- Driven pulley.

Refer to *DRIVE SYSTEM/BRAKE* section.

Disconnect from carburetor or throttle body:
- Coolant inlet and outlet lines
- Fuel inlet line
- TPS sensor connector (800R models).

Refer to *FUEL SYSTEM*.

Detach carburetor or throttle body from engine.

Unscrew bolts retaining fuel pump to frame (500SS/800R).

Unscrew bolts retaining engine supports to rubber mounts.

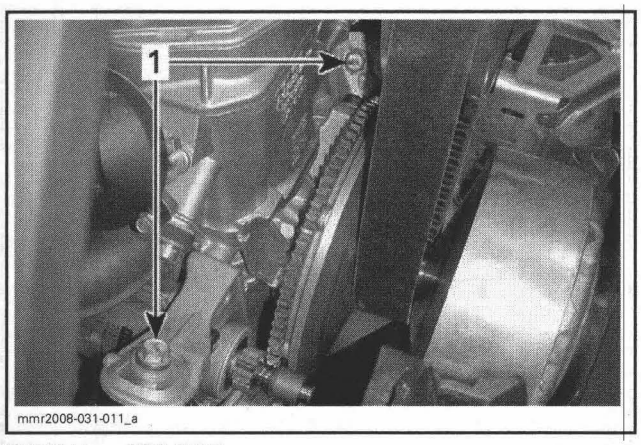

TYPICAL — PTO SIDE
1. Remove hexagonal bolts

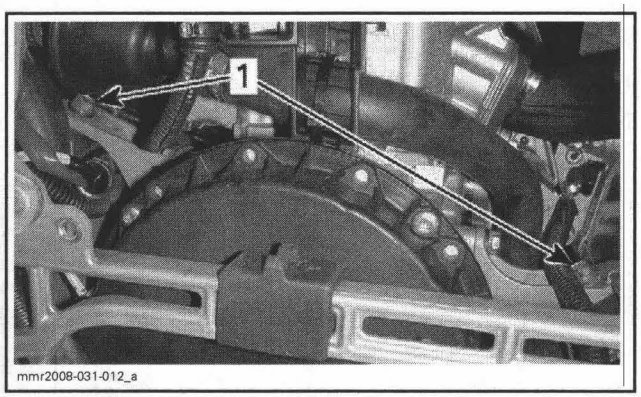

MAG SIDE
1. Remove hexagonal bolts

Remove spark plugs and install the spark plug lift ring (P/N 529 035 830) at the farthest spark plug hole.

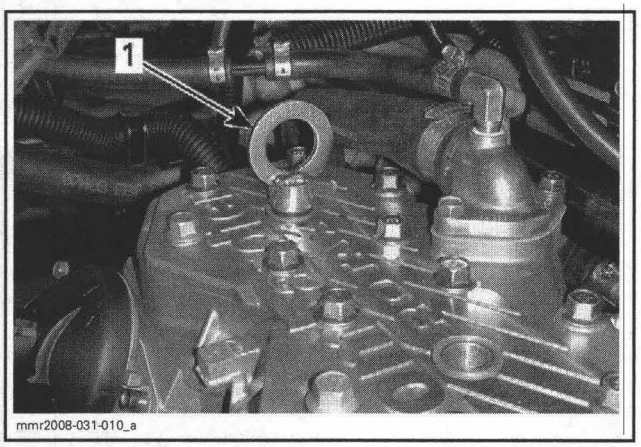

1. Spark plug lift ring

Install the engine removal hook (P/N 529 035 829).

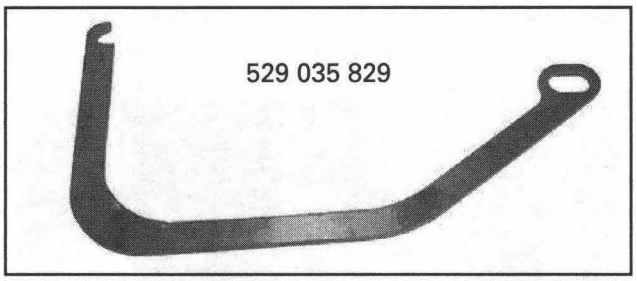

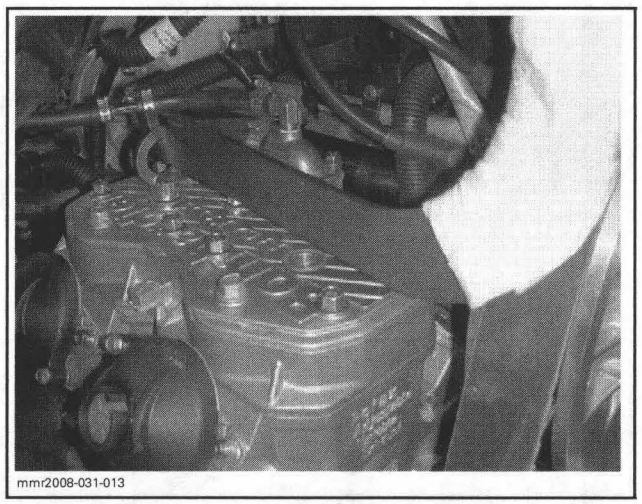

Lift engine enough to gain access to oil pump.

Remove screws **no. 8** retaining oil pump to engine.

Unplug hoses **no. 2** connected to oil pump **no. 9**.

NOTE: Mark hose locations for installation.

Disconnect oil pump cable.

Oil Injection Pump Cleaning

Clean all metal components in a non-ferrous metal cleaner.

Oil Injection Pump Installation

For installation, reverse the removal procedure. However, pay attention to the following.

During installation, always check for spring clip tightness on pump inlet hose.

Apply Loctite 243 (blue) (P/N 293 800 060) on threads of screws **no. 8** and torque them to 6 N•m (53 lbf•**in**).

Make sure cable barrel is well seated in oil pump lever.

Secure barrel with plastic washer and circlip.

Install cable lock washer on left side of support.

Bleed oil pump. See procedure further.

CAUTION: Always bleed oil pump when the system has been opened.

Torque fuel pump screw to 5 N•m (44 lbf•**in**).

Torque engine supports hexagonal bolt to 25 N•m (18 lbf•ft) and in the following sequence.

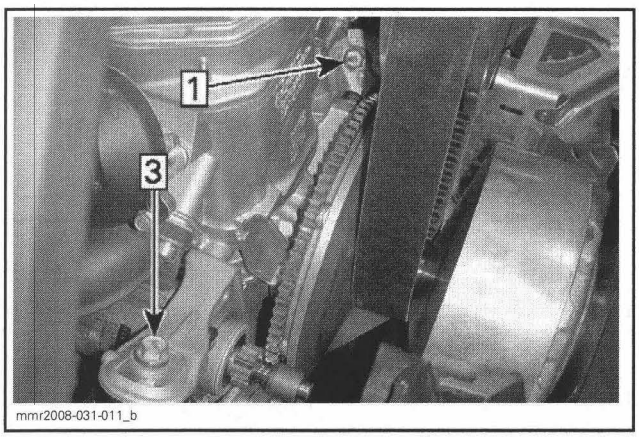

TYPICAL — PTO SIDE
Step 1
Step 3

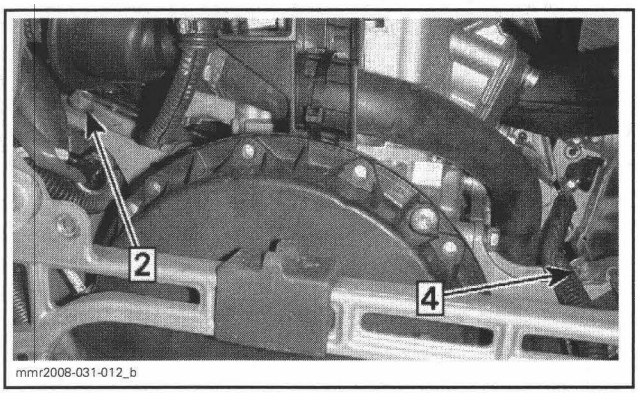

TYPICAL — PTO SIDE
Step 2
Step 4

Adjust oil pump cable. See procedure further.

Oil Injection Pump Adjustment

Slightly press on throttle lever to eliminate throttle cable free play.

Insert the throttle free play wedge tool (P/N 529 036 042), between throttle lever and housing as shown.

Slide tool up and down until all free-play is recovered. Stop recovering free-play before throttle cam just begins to move at carburetor/throttle body.

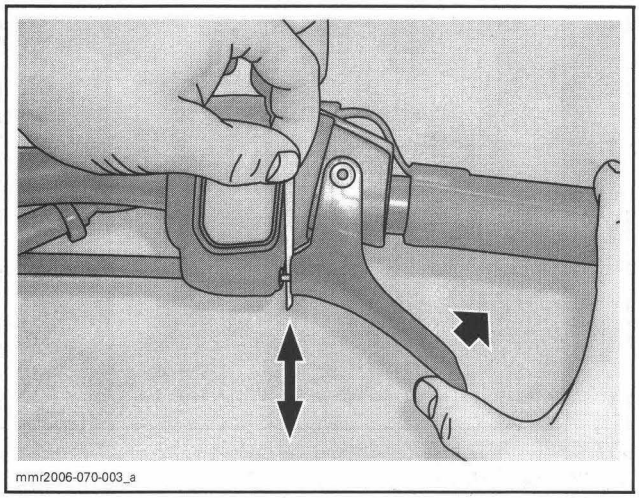

TYPICAL

CAUTION: Throttle slides must not move and remain in idle position.

Move adjuster boot away and stretch oil pump cable at adjuster.

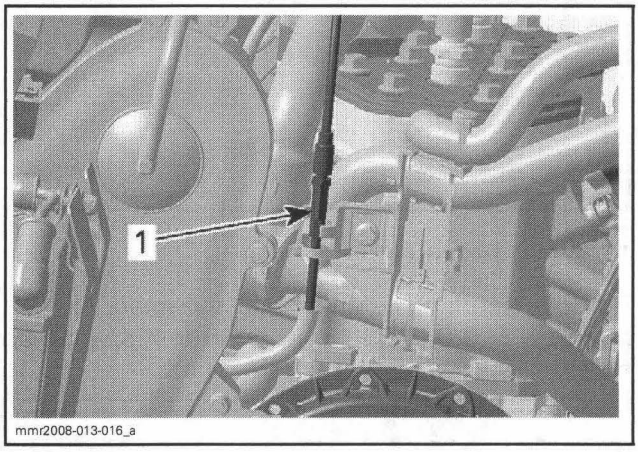

TYPICAL
1. Oil pump cable adjuster

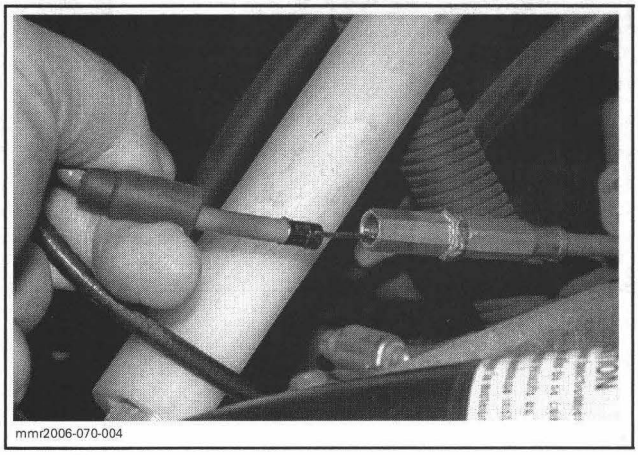

TYPICAL

Insert cable in the appropriate slot of the oil pump cable adjuster (P/N 529 036 045).

MODEL	ADJUSTMENT SPECIFICATION
500SS 800R	16.5 mm (.650 in) 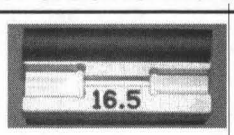
600 HO SDI	20.0 mm (.787 in) 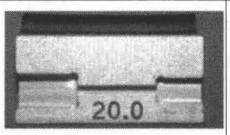

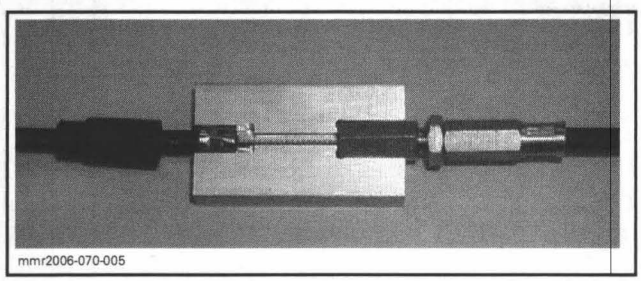

NOTE: If tool cannot be inserted, turn cable adjuster to "shorten" cable.

Pull cable with a force of 34 N (7.6 lbf) to recover all play in cable.

While still pulling, check if there is a gap as shown.

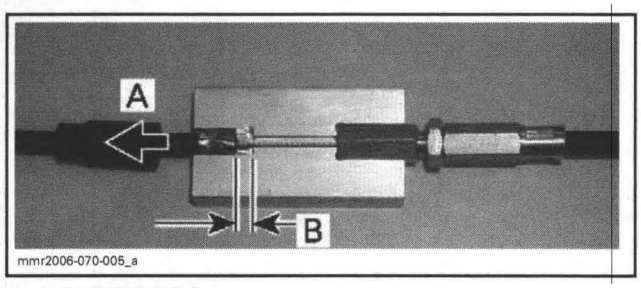

A. Pull 34 N (7.6 lbf)
B. Remove gap here

Turn cable adjuster to recover that gap.

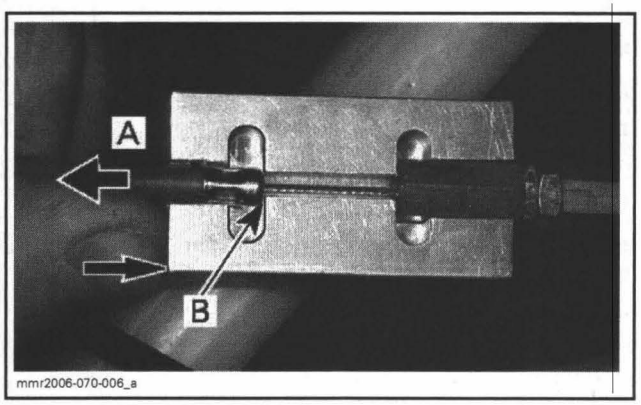

FINAL ADJUSTMENT WITHOUT GAP
A. Pull 34 N (7.6 lbf)
B. No gap

Secure adjustment in place with lock nut.

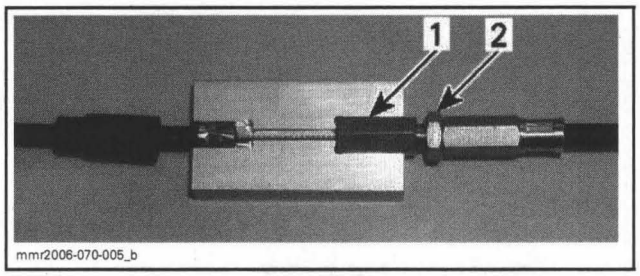

1. Cable adjuster
2. Lock nut

Remove the throttle free play wedge tool, push back cable in adjuster and slide adjuster boot in place.

Oil Injection Pump Bleeding

Bleed main oil line (between reservoir and pump) by loosening the bleeder screw until air has escaped from the line. Add injection oil as required.

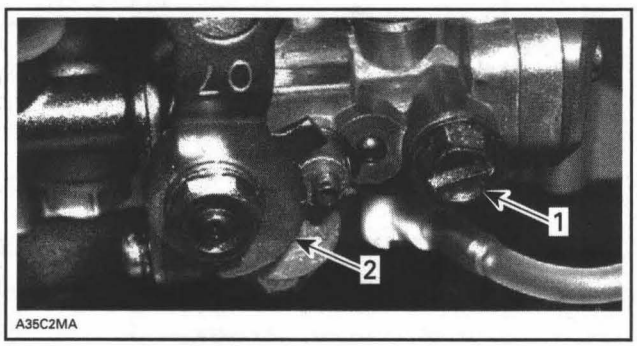

TYPICAL
1. Bleeder screw
2. Oil pump lever

Ensure there are no air bubbles in small oil lines between pump and engine. If so, inject oil using a syringe into lines before connecting them to engine.

INJECTION NOZZLE

Injection Nozzle Inspection

CAUTION: Do not remove injection nozzle needlessly. It is likely to be damaged.

Use the vacuum/pressure pump (P/N 529 021 800).

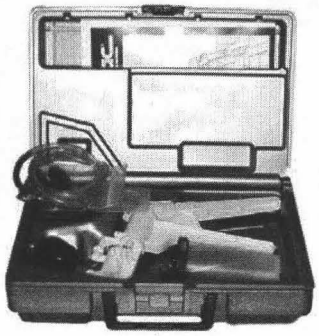

529 021 800

Connect pump to injection nozzle **no. 10**.

Test check valve of injection nozzle as follows.

PUMP SETTING	Set to VACUUM	Set to PRESSURE
TO DO	Activate pump several times	Slowly activate pump and listen to check valve
RESULT	Air must not flow through check valve	You should hear it release pressure at approx. 20.7 kPa (3 PSI)
ACTION	**Success:** Perform next test	**Success:** Check valve is good
	Failed: Replace injection nozzle	**Failed:** Replace injection nozzle

Injection Nozzle Removal

Remove engine from vehicle. Refer to *ENGINE* section.

Clean injection nozzle area to remove oil or dirt.

Heat injection nozzle **no. 10** then pull it out of crankcase.

Injection Nozzle Installation

Prior to coating it with Loctite, make sure check valve body is clean and dry. Clean from dirt or oil, if any, with pulley flange cleaner (P/N 413 711 809).

Apply Loctite 648 (green) (P/N 413 711 400) on the outer diameter of the check valve (machined section). Take care that Loctite is ONLY in this area.

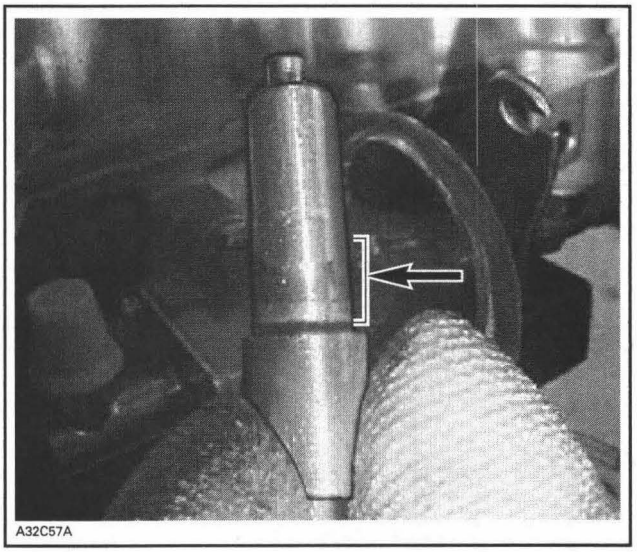

A32C57A

APPLY LOCTITE ON THIS AREA ONLY

Install the check valve in the correct position as described on next photos into the crankcase lower side.

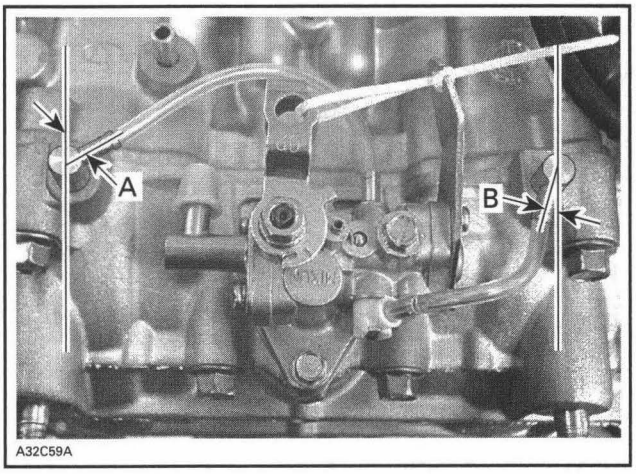

A32C59A

TYPICAL
A. PTO side 45° ± 5° from cylinder axis to the top
B. MAG side 20° ± 5° from cylinder axis to the bottom

Punch in the injection nozzle carefully with a plastic hammer.

Clean the crankcase from surplus of Loctite 648 with a rag.

Reinstall engine into vehicle. Refer to *ENGINE* section.

COOLING SYSTEM

SERVICE TOOLS

Description	Part Number	Page
small hose pincher	295 000 076	79
vacuum/pressure pump	529 021 800	79
Supertanium™ bit	529 031 800	81
large hose pincher	529 032 500	79
suction pump	529 035 880	80
test cap	529 035 991	79

SERVICE PRODUCTS

Description	Part Number	Page
BRP premixed coolant	219 700 362	80

797 Engine Shown

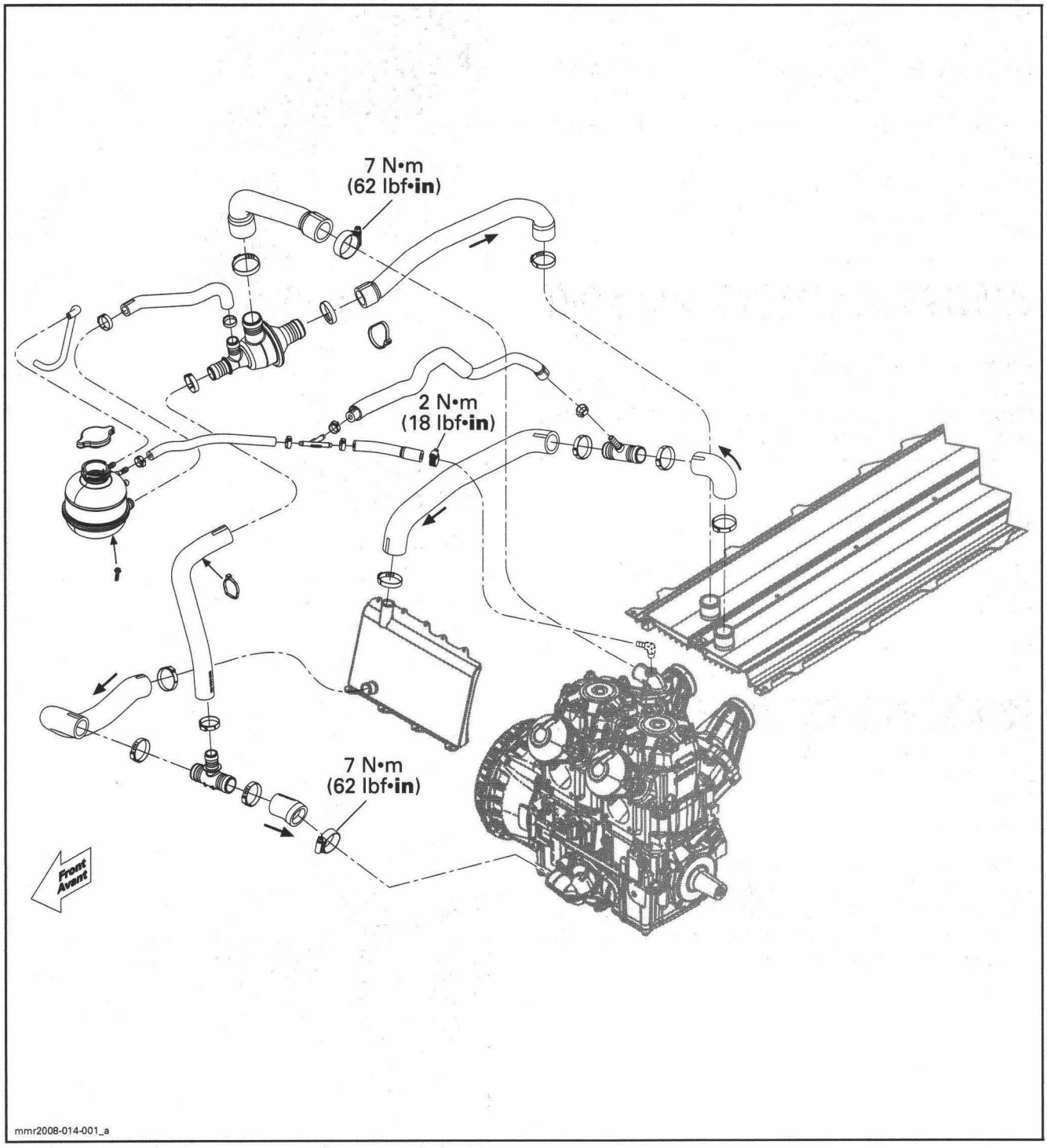

GENERAL

NOTE: On applicable models, it is good practice to check for fault codes using B.U.D.S. software as a first troubleshooting step. Refer to the *COMMUNICATION TOOLS/B.U.D.S SOFTWARE* section.

During assembly/installation, use torque values and as in the exploded views.

Clean threads before applying a threadlocker. Refer to *SELF-LOCKING FASTENERS* and *LOCTITE APPLICATION* at the beginning of this manual for complete procedure.

⚠ WARNING

Torque wrench tightening specifications must be strictly adhered to.
Locking devices (e.g.: locking tabs, elastic stop nuts, self-locking fasteners, cotter pins, etc.) must be replaced with new ones.

INSPECTION

VEHICLE COOLING SYSTEM LEAK TEST

NOTE: This test confirms if there is no leak in the cooling system, including the engine.

⚠ WARNING

To prevent potential burns, do not remove the radiator cap if the engine is hot.

Remove hood.

Install the test cap (P/N 529 035 991) on coolant tank. Install a small hose pincher (P/N 295 000 076) on overflow hose. Using the vacuum/pressure pump (P/N 529 021 800) pressurize system through coolant reservoir to 100 kPa (15 PSI).


mmr2008-014-005

If pressure drops, check all hoses and engine for coolant leaks. Spray a soap/water solution and look for air bubbles.

ENGINE COOLING SYSTEM LEAK TEST

800R Engine

NOTE: An engine leak test should be performed prior to install engine in vehicle each time the engine is disassembled.

On the water pump side, install a suitable hose on the water pump housing and block it with a large hose pincher (P/N 529 032 500).

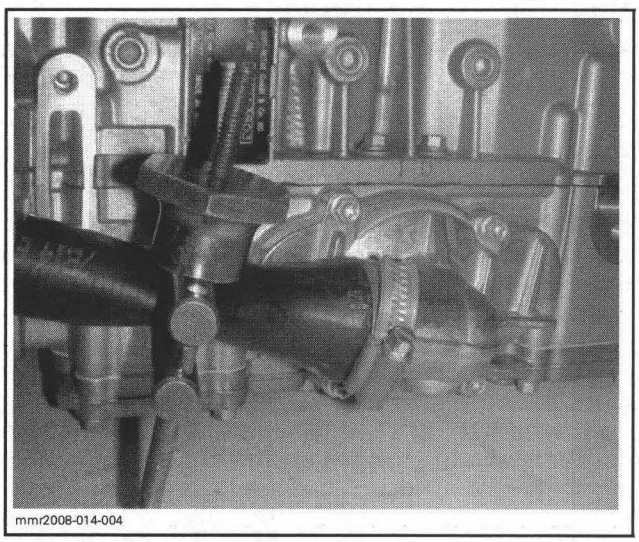
mmr2008-014-004

Install a hose on the the straight fitting on cylinder head and secure it with a clamp. Install a small hose pincher (P/N 295 000 076) to block the hose.

Install a hose on the water outlet housing and secure it with a clamp. Install a large hose pincher (P/N 529 032 500) to block this hose.

Install the vacuum/pressure pump (P/N 529 021 800) on the small elbow fitting.

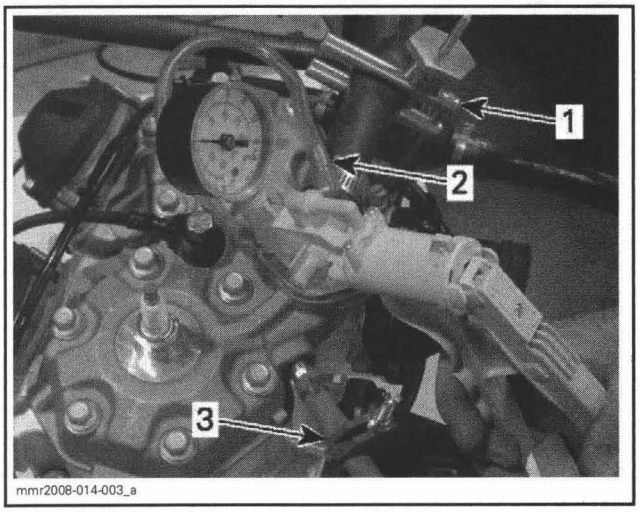

1. *Hose blocked on water outlet housing*
2. *Small elbow fitting*
3. *Hose blocked on staight fiting*

Pressurize the engine to 100 kPa (15 PSI).

If pressure drops, spray a soap/water solution onto engine jointed surfaces and look for air bubbles.

MAINTENANCE

COOLANT REPLACEMENT

Recommended Coolant

Use BRP premixed coolant (P/N 219 700 362) or a blend of 50% antifreeze with 50% distilled water.

To prevent antifreeze deterioration, always use same brand. Never mix different brands unless cooling system is completely flushed and refilled.

CAUTION: To prevent rust formation or freezing condition, always replenish the system with the BRP premixed coolant or with 50% antifreeze and 50% water. Do not use tap water, straight antifreeze or straight water in the system. Tap water contains minerals and impurities which build up in the system. During cold weather, straight water causes the system to freeze while straight antifreeze thickens (like slush ice) and does not have the same efficiency. Always use ethylene glycol antifreeze containing corrosion inhibitors specifically recommended for aluminum engines.

Cooling System Draining

⚠ WARNING

Never drain or refill the cooling system when engine is hot.

To drain the cooling system, siphon the coolant mixture from the coolant tank using the suction pump (P/N 529 035 880).

Place a large drain pan under the vehicle's bottom pan.

Unplug the coolant hose at water pump to drain coolant.

When the coolant level is low enough, lift the rear of vehicle to drain the radiators.

Cooling System Refill and Bleeding

Lift front of vehicle at least 60 cm (24 in) and support it safely.

With engine cold, refill coolant tank up to COLD LEVEL line. Start engine. Refill up to line while engine is idling until rear radiators are warm to the touch (about 4 to 5 minutes). Always monitor coolant level while filling tank to avoid emptying. Install pressure cap.

Lower vehicle back on the ground.

Lift rear of vehicle and support it safely.

Activate throttle lever 3 - 4 times to bring engine speed to 7000 RPM.

Apply the brake.

Lower vehicle back on ground and add coolant up to 15 mm (1/2 in) above the COLD LEVEL line.

When engine has completely cooled down, recheck coolant level in coolant tank and refill up to line if needed.

Check for coolant mixture freezing point. Specification is - 37°C (- 35°F). Adjust as necessary.

PROCEDURES

THERMOSTAT

Thermostat Removal

For removal of thermostat, block all four thermostat hoses with hose pinchers or drain the cooling system (see above).

Remove muffler, refer to the *EXHAUST SYSTEM* section.

Remove acoustic panel.

Cut Oetiker clamps, unplug hoses and remove thermostat housing.

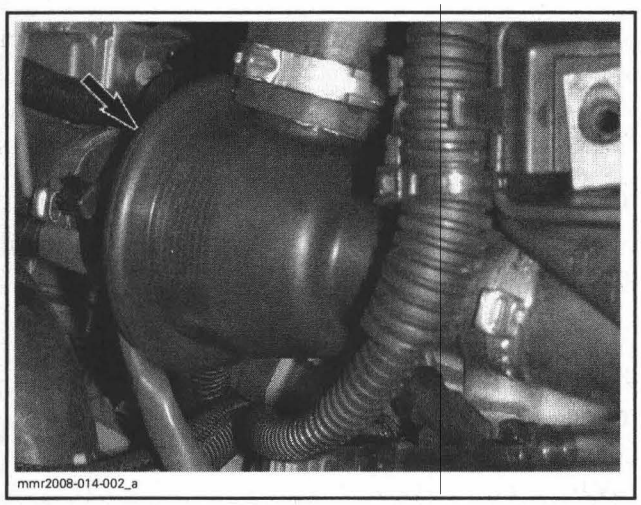
mmr2008-014-002_a

THERMOSTAT HOUSING

Thermostat Test

To check thermostat, put in water and heat water. Thermostat should start to open when water temperature reaches the following degree.

ENGINE	TEMPERATURE
All	37°C (99°F)

It will be almost fully open at 55°C (122°F).

Thermostat Installation

For installation, reverse the removal procedure.

Refill coolant system as described in this section.

RADIATOR CAP

Using a pressure cap tester, check the efficiency of radiator cap. If the efficiency is feeble, install a new 90 kPa (13 PSI) cap (do not exceed this pressure).

FRONT RADIATOR

Front Radiator Cleaning and Inspection

Remove all debris between radiator fins. A clean radiator is more efficient than a dirty one.

Check if the radiator fins are damaged. Replace the front radiator if necessary.

NOTE: A radiator with many broken fins does not work properly.

Front Radiator Removal

Drain cooling system.

Using a Supertanium™ bit (P/N 529 031 800), drill all four lower rivets retaining the front radiator under the frame or grind the rivets with a grinding disk.

500SS/800R

Remove carburetors, refer to the *TM CARBURETORS* section.

600 HO SDI

Remove throttle body, refer to the *SEMI-DIRECT INJECTION (SDI)* section.

All Models

Remove muffler, refer to the *EXHAUST SYSTEM* section.

Remove the two radiator protector front rivets and slightly bend it towards rear.

Remove the three upper rivets retaining the front radiator to the frame (a zip gun may be used).

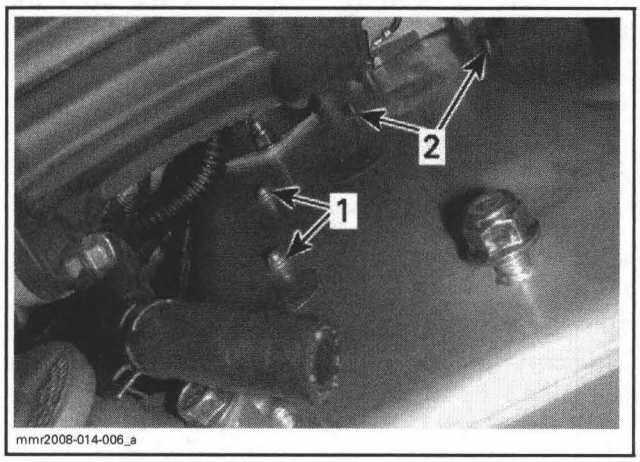

mmr2008-014-006_a

RIVETS SHOWN WITHOUT COUNTERSHAFT FOR MORE CLARITY
1. *Upper radiator rivets*
2. *Front protector rivets*

Remove the rear engine mount nuts.

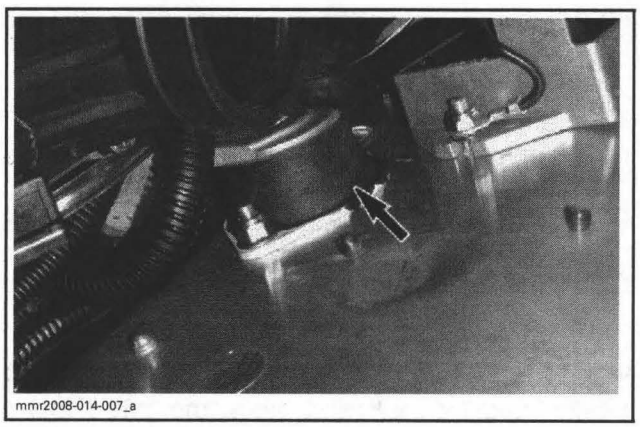
mmr2008-014-007_a

ENGINE MOUNT SHOWN WITHOUT COUNTERSHAFT FOR MORE CLARITY

Remove the Oetiker clamps securing coolant hoses and remove radiator.

Front Radiator Installation

For installation, reverse the removal procedure.

Refill coolant system as described in this section.

REAR RADIATOR

Rear Radiator Cleaning and Inspection

Remove all debris between radiator fins. A clean radiator is more efficient than a dirty one.

Check if the radiator fins are damaged. Replace the rear radiator if necessary.

NOTE: A radiator with many broken fins does not work properly.

Rear Radiator Removal

Drain cooling system, see *COOLING SYSTEM DRAINING* in this section.

Remove rear suspension. Refer to the *REAR SUSPENSION* section.

Remove fuel tank. Refer to *FUEL TANK/FUEL PUMP*.

Remove snow guard.

Using a grinding disk, grind all rivets retaining rear radiator to frame.

NOTE: When pushing the cut rivets out, support the frame around the hole with a socket on the opposite side to avoid warpage.

Unplug coolant hoses from rear radiator then remove radiator from vehicle.

Rear Radiator Installation

The installation is the reverse of the removal procedure.

NOTE: If traction enhancing products (studs) are used on vehicle, install the appropriate radiator protector. Refer to *TRACK* to choose the proper protectors kit.

Refill coolant system as described in this section.

COOLANT TANK

Coolant Tank Removal

Remove hood.

Open RH side panel.

Siphon coolant tank and block the three lower hoses with pinchers.

Cut Oetiker clamps and remove all hoses from coolant tank.

Remove retaining screws to disengage coolant tank from frame.

Coolant Tank Inspection

Check if the tank is cracked or melted. Replace if necessary.

Coolant Tank Installation

For installation, reverse the removal procedure.

Refill coolant system as described in this section.

WATER PUMP

Refer to *BOTTOM END* section of the appropriate engine.

COOLANT TEMPERATURE SENSOR (CTS)

500SS/800R

NOTE: For the **600 HO SDI** models, Refer to the *SEMI-DIRECT INJECTION (600 HO SDI)* section.

General

When measuring the resistance with an ohmmeter, value is given for a temperature of 20°C (68°F). The value of a resistor varies with the temperature. The value for common resistor **increases** as the temperature increases. However, our temperature sensors are NTC types (Negative Temperature Coefficient) and work the opposite which means that the value **decreases** as the temperature increases. Use the table for sensor resistive values at given temperature.

The resistive value of a temperature sensor may test good at a certain temperature but it might be defective at other temperatures. If in doubt, try a new sensor.

Also remember this validates the operation of the sensor at room temperature. It does not validate the over temperature functionality.

To test it, the sensor could be removed and heated with a heat gun (ensure not to heat excessively) while it is still connected to the harness to see if the ECM will detect the high temperature condition and generate a fault code.

A good test would be to put sensor in a container filled with ice and water and measure resistance. Then, boil water and read resistance again. According to the table above, a value would be approximately 5705 Ω with ice/water (0°C (32°F)) and 182.1 Ω with boiling water (100°C (212°F)).

CTS Dynamic Test

Use B.U.D.S. software.

Look engine temperature in **Monitoring** tab of B.U.D.S. It should show the coolant temperature. Otherwise, perform the following test.

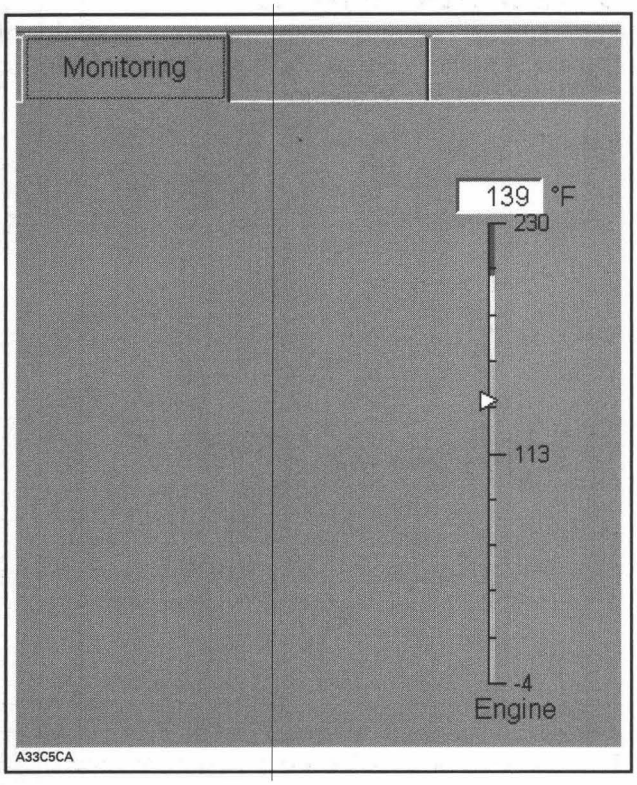

CTS Resistance Test

Remove pulley guard. Refer to *DRIVE SYSTEM/ BRAKE.*

Disconnect CTS sensor connector.

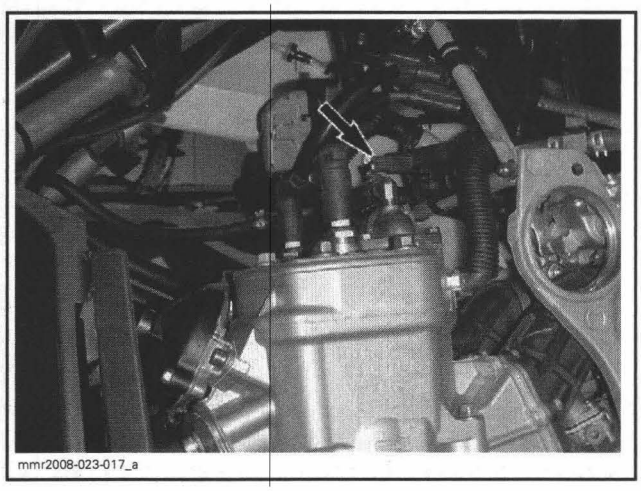

Use a multimeter and set it to Ω.

Measure resistance between sensor terminals.

CTS		RESISTANCE
Pin 1	Pin 2	Refer to *CTS SENSOR TEMPERATURE TABLE*

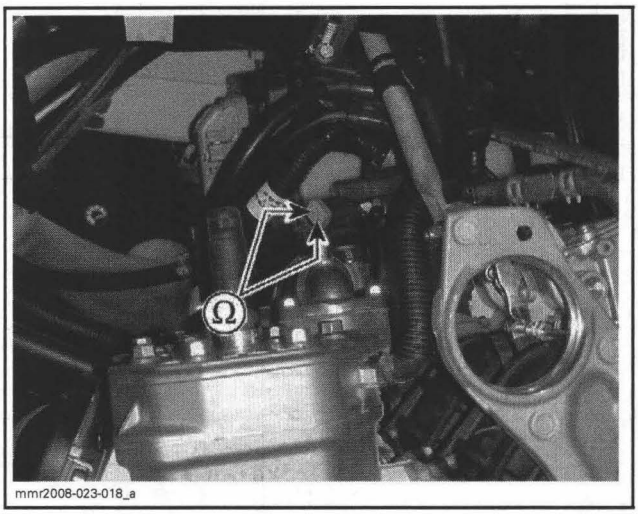

CTS SENSOR TEMPERATURE TABLE

UNIT		RESISTANCE (Ω)
°C	°F	CTS
- 40	- 40	43610
- 30	- 22	25090
- 20	- 4	14900
- 10	14	9102
0	32	5705
10	50	3680
20	68	2436
25	77	2000
30	86	1651
40	104	1144
50	122	807.6
60	140	580.3
70	158	424.4
80	176	315.5
90	194	238
100	212	182.1
110	230	141.1
120	248	110.6
130	266	87.8
140	284	70.4
150	302	57.1

CTS SENSOR TEMPERATURE TABLE		
UNIT		RESISTANCE (Ω)
°C	°F	CTS
160	320	46.7
170	338	38.5
180	356	32
190	374	26.8
200	392	22.7

If resistance is out of specifications, replace sensor.

If resistance tests good, **reconnect** the CTS.

Disconnect the ECM connector.

Measure resistance as follows.

ECM CONNECTOR		RESISTANCE
Pin 1	Pin 21	Refer to *CTS SENSOR TEMPERATURE TABLE*

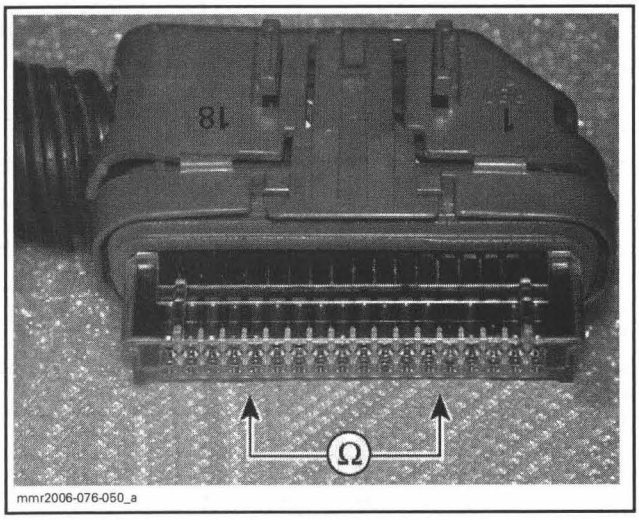

mmr2006-076-050_a

If resistance value is correct, sensor and wiring/connectors are good.

If resistance value is incorrect, repair/replace wiring/connectors between ECM and CTS.

CTS Replacement

Remove pulley guard. Refer to *DRIVE SYSTEM/ BRAKE.*

Remove primary air intake silencer. Refer to *AIR INTAKE SYSTEM.*

Remove driven pulley. Refer to *DRIVE SYSTEM/ BRAKE.*

Lift rear of vehicle to reduce coolant spillage.

Disconnect CTS connector.

Remove CTS.

Install the new CTS and torque to 12 N•m (106 lbf•**in**).

Reinstall removed parts.

Refill engine coolant. If an important quantity of coolant is spilled, bleed cooling system. Refer to *COOLING SYSTEM* section.

MAGNETO SYSTEM

SERVICE TOOLS

Description	Part Number	Page
puller ring	420 876 081	90
crankshaft protector	420 876 557	90
magneto puller	529 035 547	90

SERVICE PRODUCTS

Description	Part Number	Page
Loctite 243 (blue)	293 800 060	91–92
Loctite 5910	293 800 081	93
Loctite 648	413 711 400	91

500SS

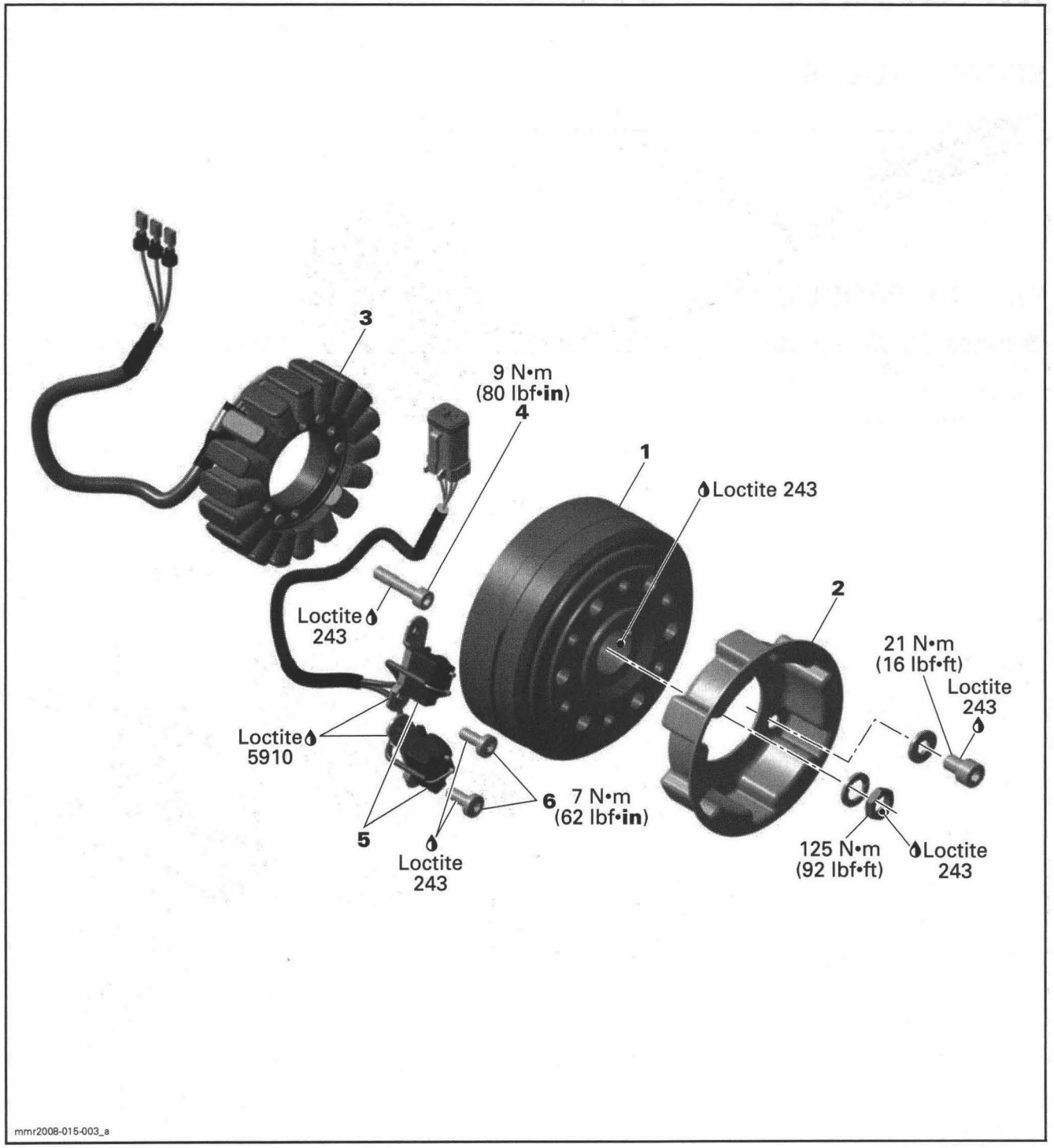
3
9 N•m
(80 lbf•in)
4
1
Loctite 243
2
Loctite
243
21 N•m
(16 lbf•ft)
Loctite
243
Loctite
5910
6
7 N•m
(62 lbf•in)
5
Loctite
243
125 N•m
(92 lbf•ft)
Loctite
243
mmr2008-015-003_a

600 HO SDI

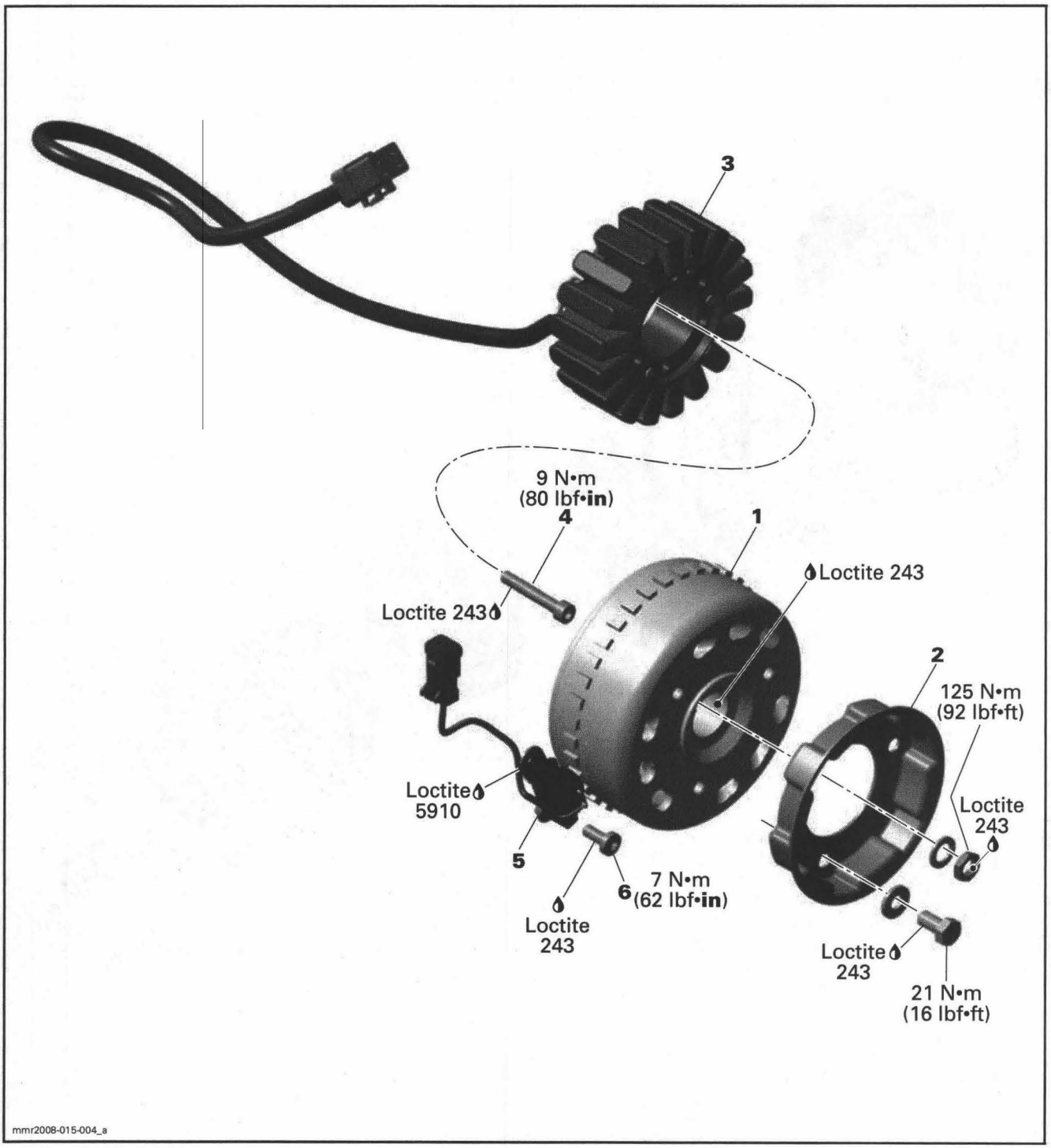
3
9 N•m
(80 lbf•in)
4
1
Loctite 243
Loctite 243
2
125 N•m
(92 lbf•ft)
Loctite
5910
Loctite
243
5
7 N•m
(62 lbf•in)
6
Loctite
243
Loctite
243
21 N•m
(16 lbf•ft)
mmr2008-015-004_a

800R

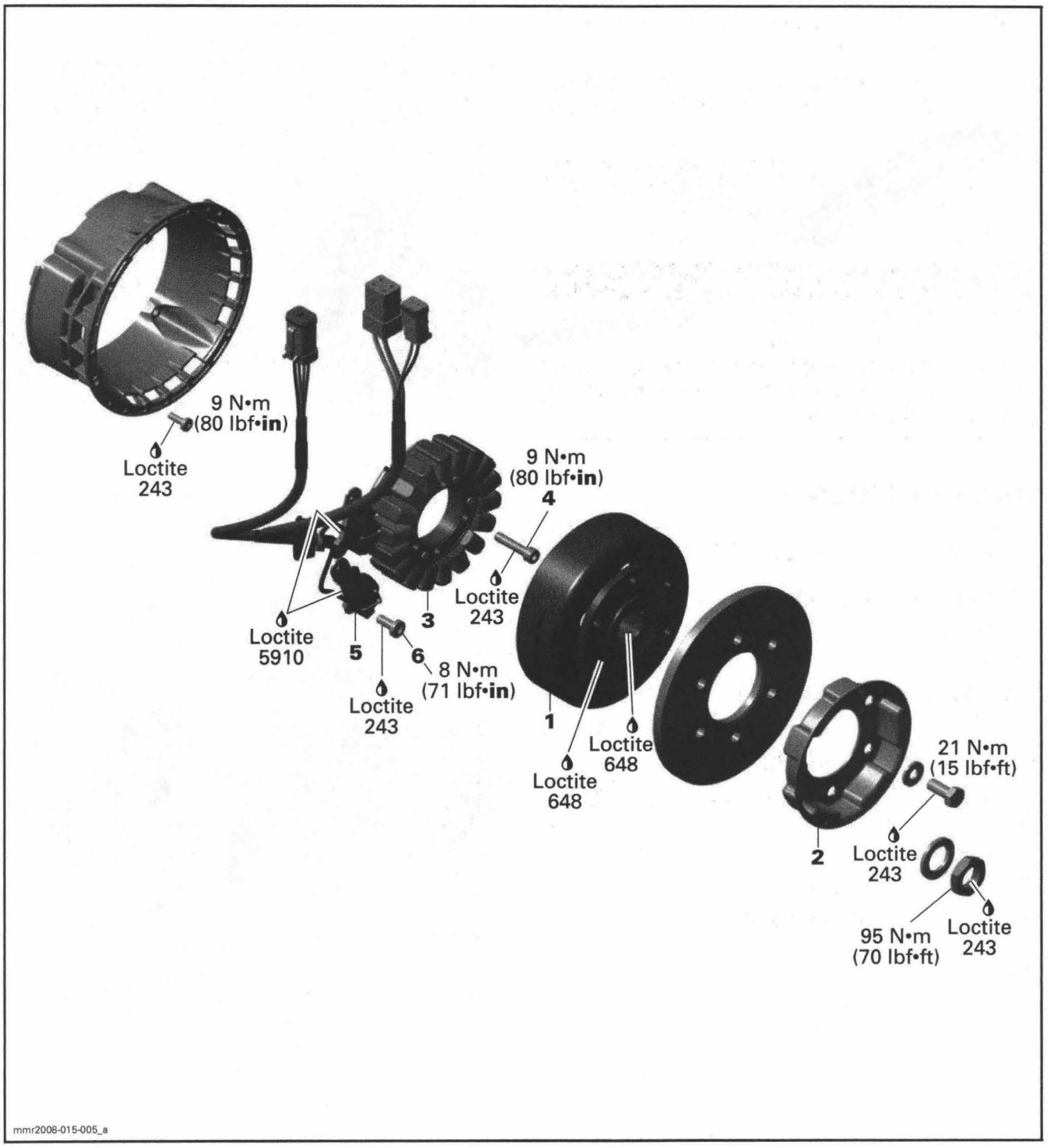
9 N•m
(80 lbf•in)
Loctite
243
9 N•m
(80 lbf•in)
4
Loctite
243
Loctite
5910
3
5
6
8 N•m
(71 lbf•in)
Loctite
243
1
Loctite
648
Loctite
648
21 N•m
(15 lbf•ft)
2
Loctite
243
95 N•m
(70 lbf•ft)
Loctite
243
mmr2008-015-005_a

GENERAL

NOTE: The following procedures can be done without removing the engine.

During assembly/installation, use the torque values and service products as in the exploded views.

Clean threads before applying a threadlocker. Refer to the *SELF-LOCKING FASTENERS* and *LOCTITE APPLICATION* sections at the beginning of this manual for complete procedure.

⚠ WARNING

Torque wrench tightening specifications must be strictly adhered to.
Locking devices (e.g.: locking tabs, elastic stop nuts, self-locking fasteners, etc.) must be replaced with new ones.

PROCEDURES

MAGNETO FLYWHEEL

Magneto Flywheel Cleaning

Clean all metal components in a non-ferrous metal cleaner.

CAUTION: Clean magneto flywheel using only a clean cloth.

Magneto Flywheel Removal

Remove muffler, refer to the *EXHAUST SYSTEM* section.

Remove acoustic panel.

Remove rewind starter.

Remove starting pulley **no. 2**.

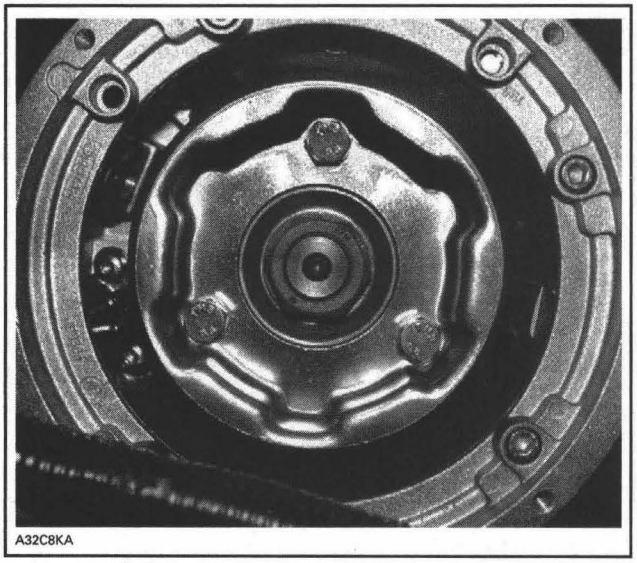
A32C8KA

TYPICAL

NOTE: To remove starting pulley bolts, hold magneto flywheel with a socket as shown.

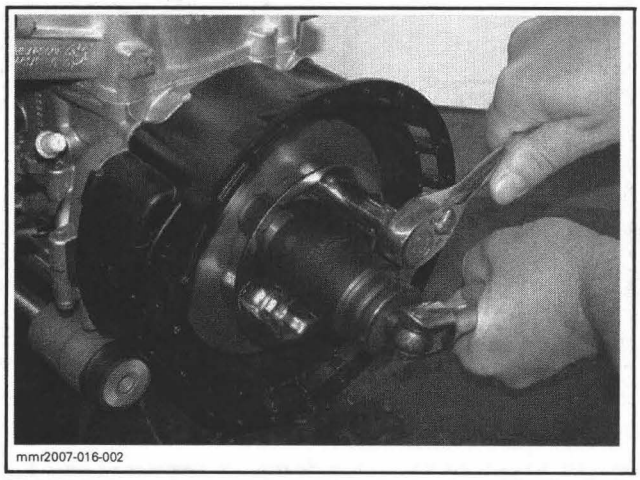
mmr2007-016-002

TYPICAL

500SS and 600 HO SDI

Remove the connecting flange retaining the rewind starter to the engine housing.

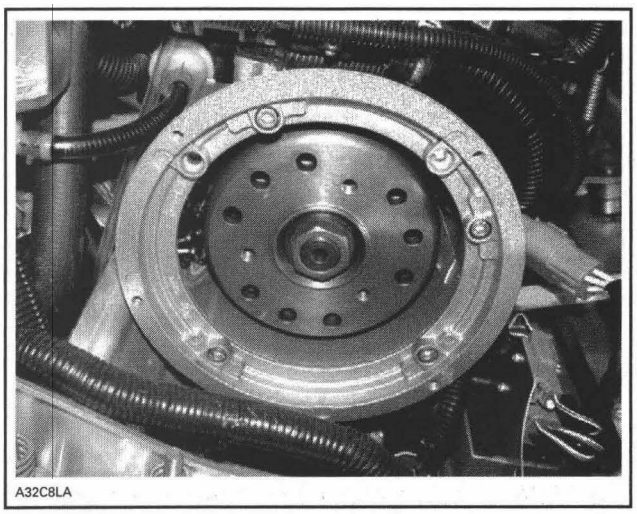

TYPICAL

All Engines

Install the puller ring (P/N 420 876 081) on magneto flywheel (or counterweight on 800R engine).

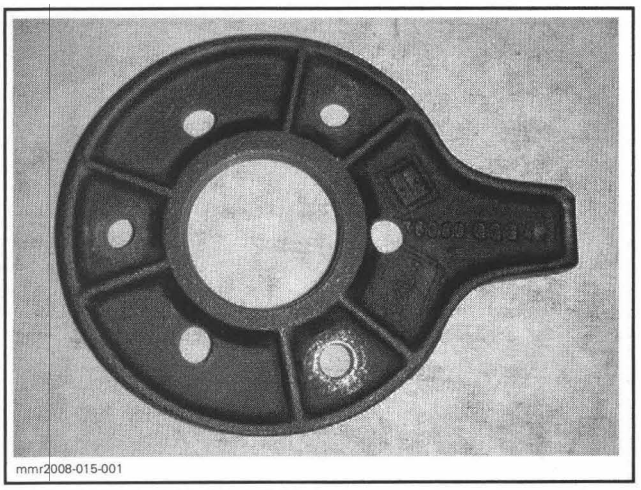

PULLER RING (P/N 420 876 081)

CAUTION: Use only the following screw length to bolt puller to magneto flywheel. Otherwise damage to stator behind magneto flywheel could occur.

ENGINE	SCREW LENGTH
500SS	M8 x 20 mm
600 HO SDI	M8 x 25 mm
800R	M8 x 30 mm (COUNTERWEIGHT INSTALLED)

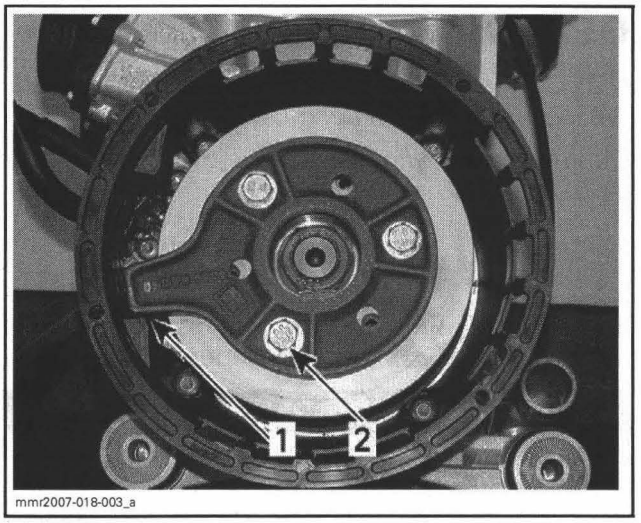

TYPICAL
1. Tab in magneto housing opening
2. M8 screws of appropriate length

Remove magneto flywheel nut, using a 30 mm socket with the outside diameter machined to 40 mm (1.580 in) by 16 mm (5/8 in) long.

NOTE: To correctly remove a threadlocked fastener, first tap on the fastener to break threadlocker bond. This will avoid thread breakage.

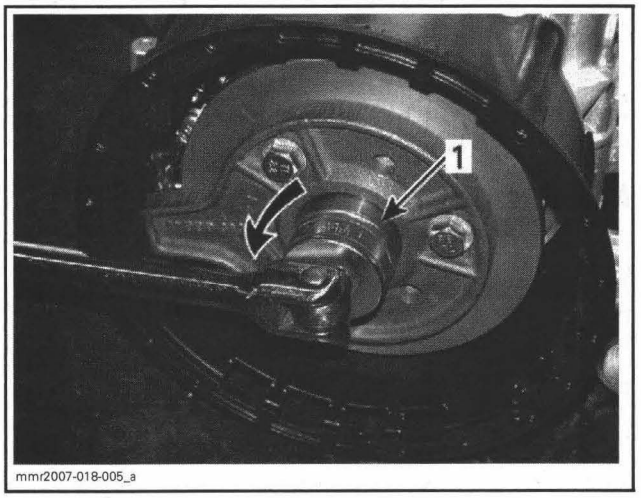

TYPICAL
1. Machined 30 mm socket

Install the crankshaft protector (P/N 420 876 557) on crankshaft end.

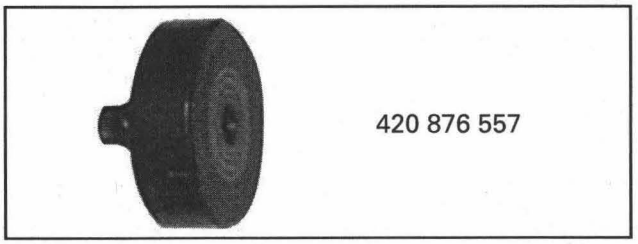

Screw the magneto puller (P/N 529 035 547) into puller ring.

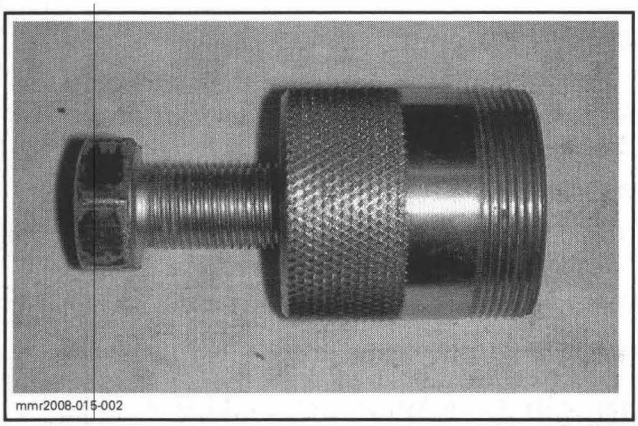

MAGNETO PULLER (P/N 529 035 547)

Tighten puller bolt and at the same time, tap on bolt head using a hammer to release magneto flywheel from its taper.

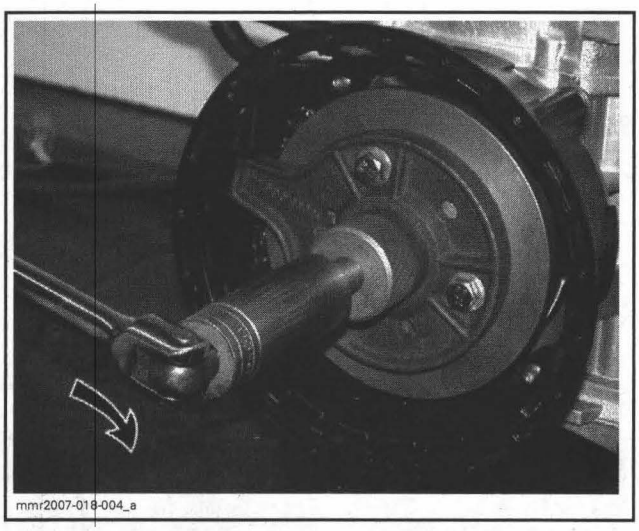

Magneto Flywheel Installation

Clean crankshaft extension (taper) and apply specified product on taper surface (see table below), then position Woodruff key, magneto flywheel **no. 1** and lock washer on crankshaft.

ENGINE	PRODUCT
500SS/600 HO SDI	Loctite 243 (P/N 293 800 060)
800R	Loctite 648 (P/N 413 711 400)

Clean magneto flywheel nut threads and apply Loctite 243 (blue) (P/N 293 800 060) then tighten nut.

ENGINE	TORQUE
500SS/600 HO SDI	125 N•m (92 lbf•ft)
800R	95 N•m (70 lbf•ft)

CAUTION: Do not apply silicone dielectric grease or any other product on Deutsch waterproof housings otherwise housing seal will be damaged.

STATOR

Stator Inspection

Always check stator **no. 3** before changing it. Refer to the *CHARGING SYSTEM* section.

Stator Cleaning

Clean all metal components in a non-ferrous metal cleaner.

CAUTION: Clean stator using only a clean cloth.

Stator Removal

Remove magneto flywheel **no. 1**.

Remove all Allen socket screws **no. 4** retaining stator to magneto housing.

Remove grommet from crankcase where CPS/trigger coils **no. 5** and stator wires exit magneto housing.

Unplug the CPS/trigger coil connectors and pull the wires through the grommet location.

NOTE: On 600 HO SDI models, it is necessary to lift engine to reach CPS connector, refer to *SEMI-DIRECT INJECTION (SDI)* section for procedure.

NOTE: To pass the stator connector into the grommet location it is necessary to pass the CPS/trigger coil connector first.

Unplug the stator connector and remove the stator **no. 3**.

Stator Installation

Insert the stator connector into crankcase grommet then the CPS/trigger coil connector(s).

Install the grommet on crankcase.

Position stator **no. 3** so that its wire protectors are over crankcase recess.

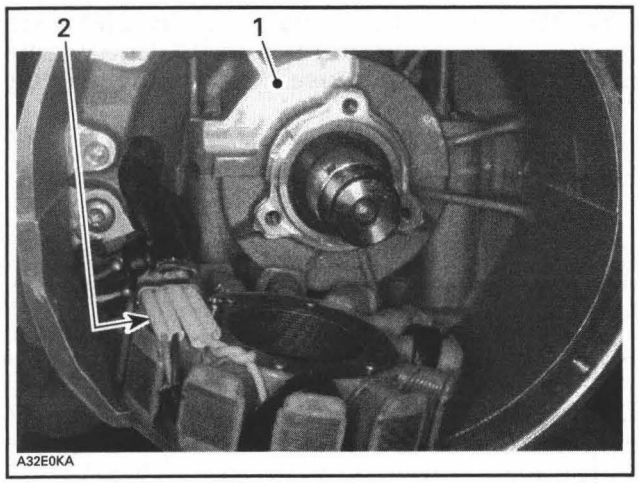

1. Crankcase recess
2. Wire protectors

NOTE: During installation, make sure the stator harness is located on the left side.

Apply Loctite 243 (blue) (P/N 293 800 060) on threads of stator screws then torque them to 9 N•m (80 lbf•**in**).

Reinstall all other removed parts.

CRANKSHAFT POSITION SENSOR (CPS)

600 HO SDI

CPS Test

Refer to *SEMI-DIRECT INJECTION (SDI)* section.

CPS Replacement

Refer to *TRIGGER COIL* for procedure.

TRIGGER COIL

Trigger Coil Inspection

500SS and 800R

For trigger coil inspection, refer to the *IGNITION SYSTEM* section.

Trigger Coil Removal

To replace the trigger coil(s) **no. 5**, remove or disconnect the following:

Remove magneto flywheel **no. 1**.

500SS and 800R

The trigger coil connector is located behind the oil filter (below oil reservoir).

600 HO SDI

Lift engine to have access to the connector. Refer to *SEMI-DIRECT INJECTION (SDI)* section for procedure.

All Models

Remove grommet from crankcase where trigger coil wire(s) exit(s) magneto housing.

Remove retaining screws **no. 6**.

Remove trigger coil(s) and carefully pull wires.

Trigger Coil Installation

For installation, reverse the removal procedure.

NOTE: It is important to remove the old silicon at trigger coil location then apply new silicon. Screw trigger coil then stick the trigger coil wires in the silicon.

MAGNETO HOUSING

800R Only

Magneto Housing Inspection

Inspect housing for cracks or other apparent damage. Replace as necessary.

Magneto Housing Removal

Remove magneto flywheel.

Remove magneto housing retaining screws.

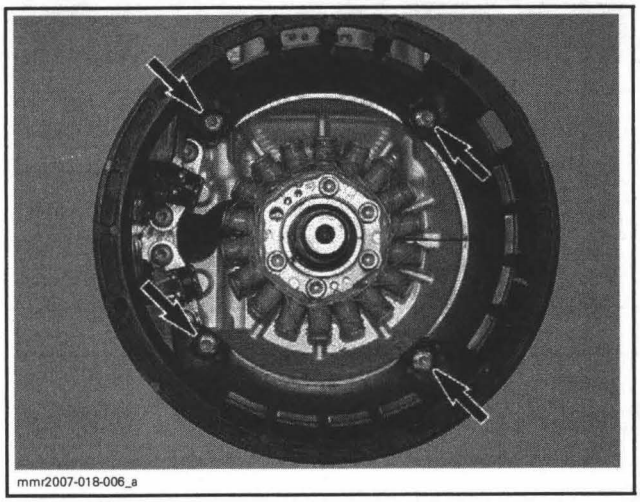

Remove trigger coil retaining screws.

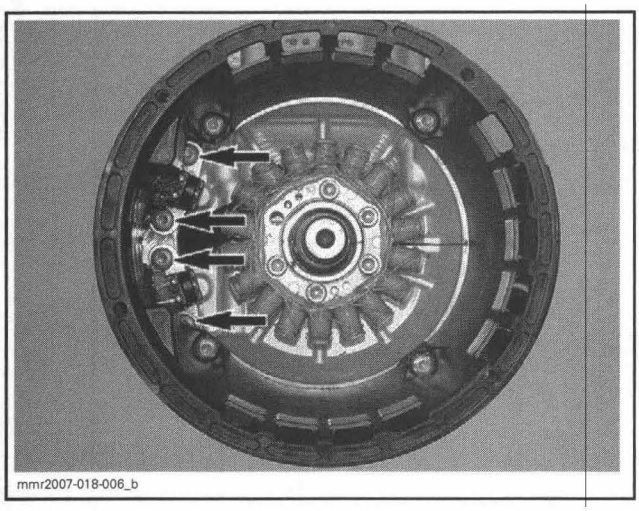
mmr2007-018-006_b

Remove grommet from crankcase.

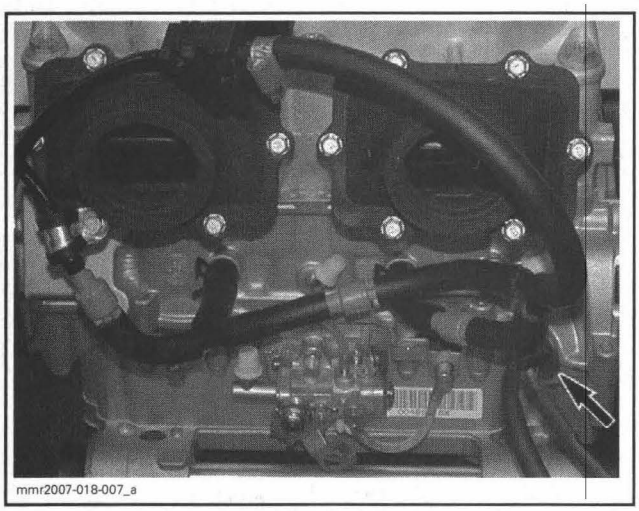
mmr2007-018-007_a

TYPICAL

Slightly pull magneto housing and cut silicone from trigger coils/crankcase.

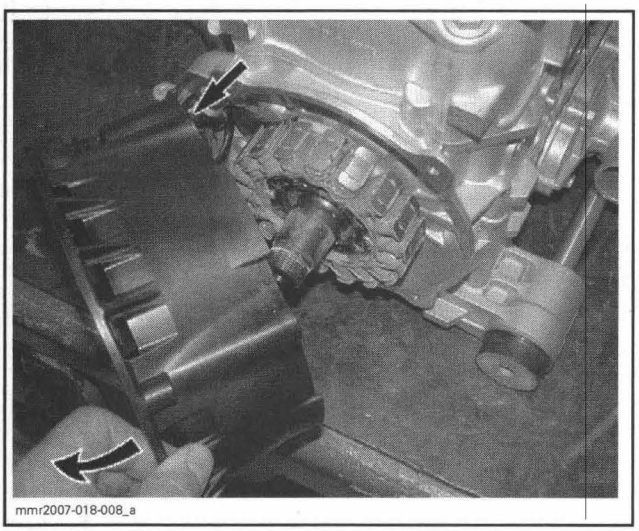
mmr2007-018-008_a

TYPICAL

Pull out magneto housing with trigger coils.

Unglue trigger coils from housing.

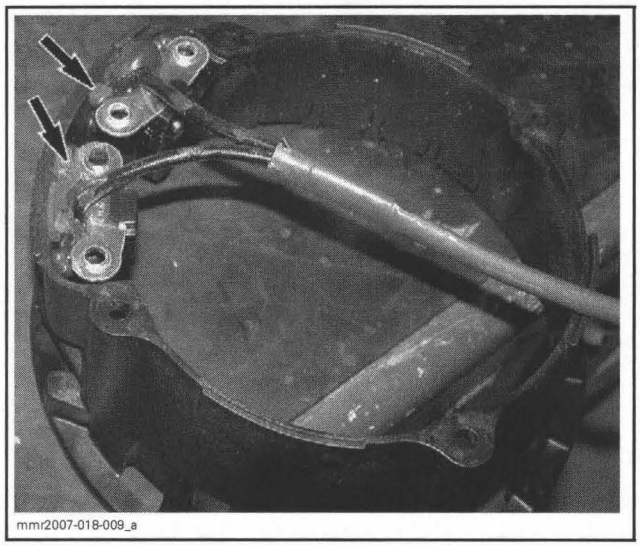
mmr2007-018-009_a

Magneto Housing Installation

For installation, reverse the removal procedure. Pay attention to the following.

Apply new silicone Loctite 5910 (P/N 293 800 081) and screw trigger coils. Then, stick the trigger coil wires in the silicone.

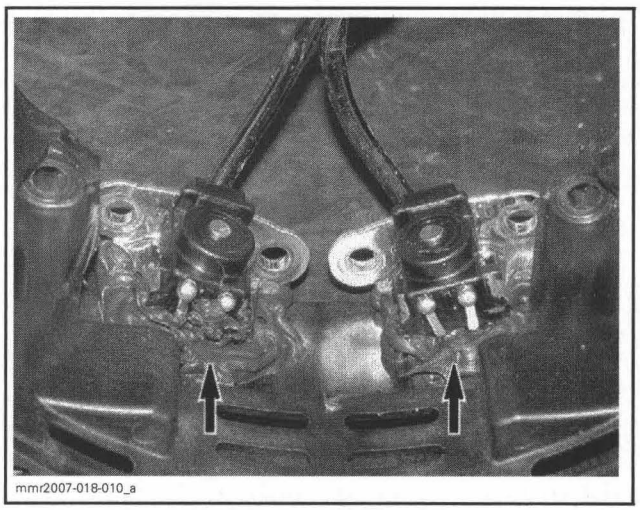
mmr2007-018-010_a

Reinstall magneto housing and properly torque screws.

TOP END (593)

SERVICE TOOLS

Description	Part Number	Page
vacuum/pressure pump	529 021 800	100
rubber pad	529 023 400	109
Piston circlip installer	529 035 686	110
supply harness	529 035 869	100, 103

SERVICE PRODUCTS

Description	Part Number	Page
Loctite 243 (blue)	293 800 060	107
Loctite Chisel	413 708 500	99
Drei Bond sealing compound	420 297 906	106

593 Engine

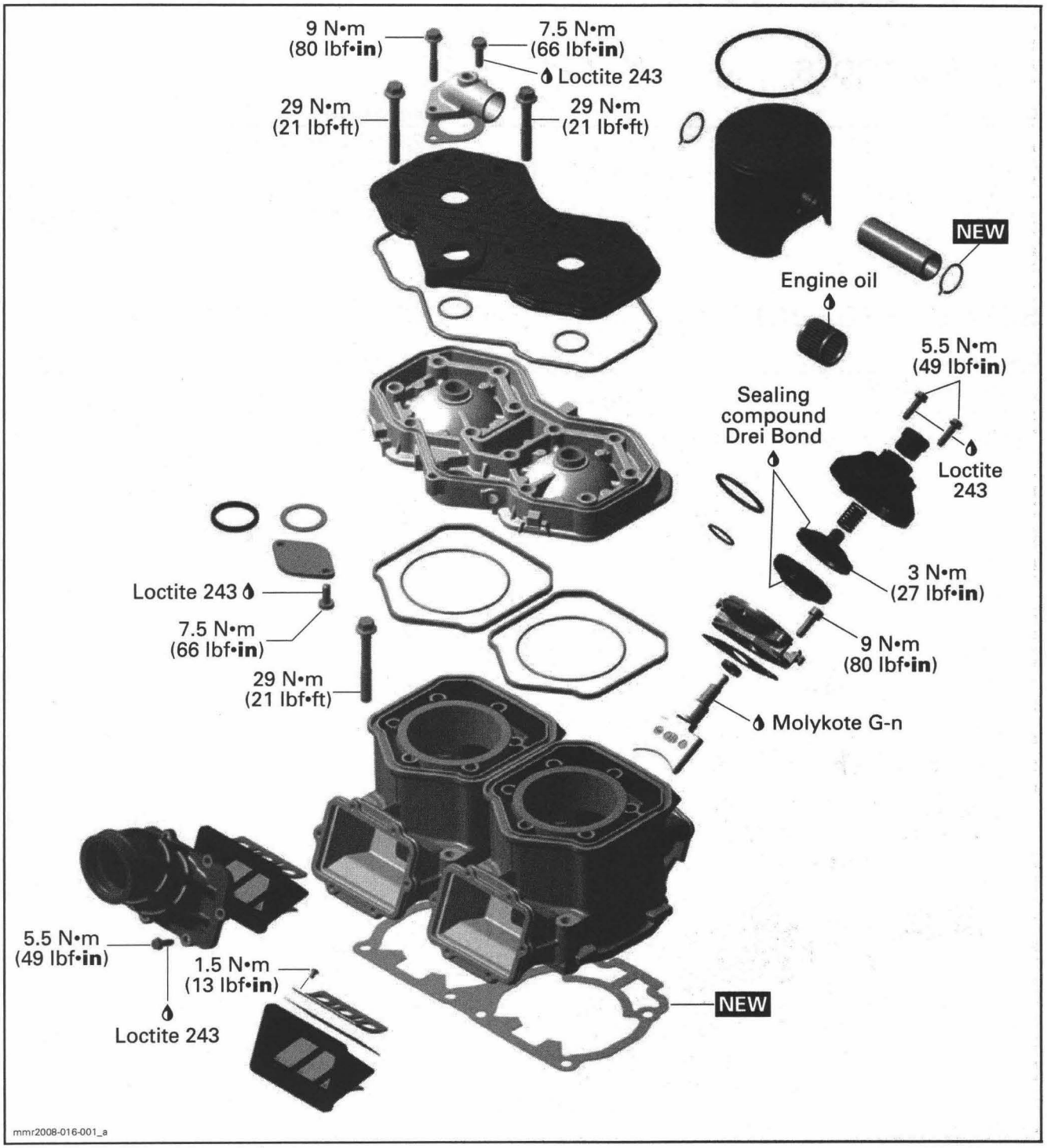
9 N•m
(80 lbf•in)
7.5 N•m
(66 lbf•in)
Loctite 243
29 N•m
(21 lbf•ft)
29 N•m
(21 lbf•ft)
NEW
Engine oil
5.5 N•m
(49 lbf•in)
Sealing
compound
Drei Bond
Loctite
243
3 N•m
(27 lbf•in)
9 N•m
(80 lbf•in)
Molykote G-n
Loctite 243
7.5 N•m
(66 lbf•in)
29 N•m
(21 lbf•ft)
5.5 N•m
(49 lbf•in)
1.5 N•m
(13 lbf•in)
Loctite 243
NEW
mmr2008-016-001_a

593 HO SDI Engine

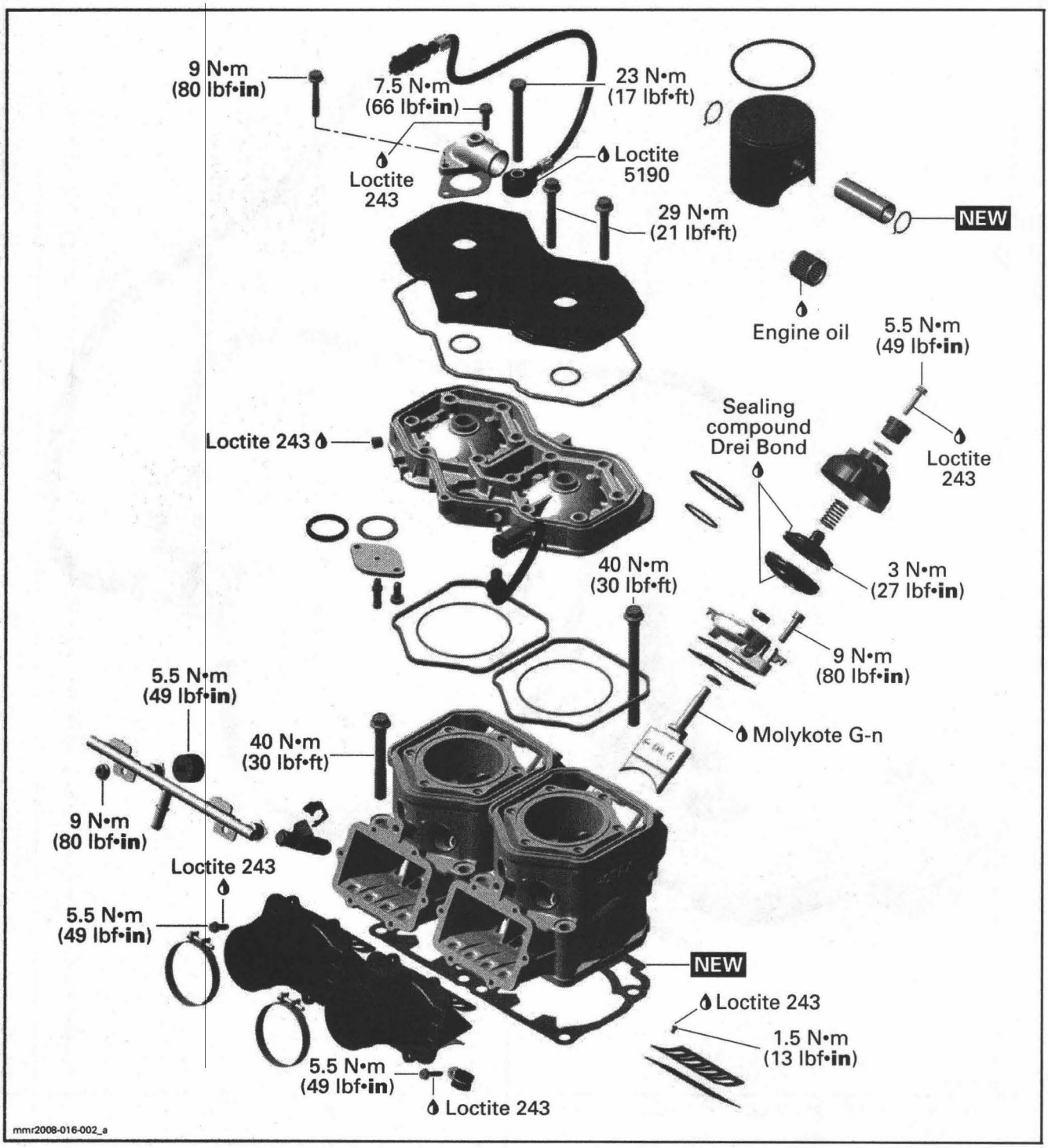

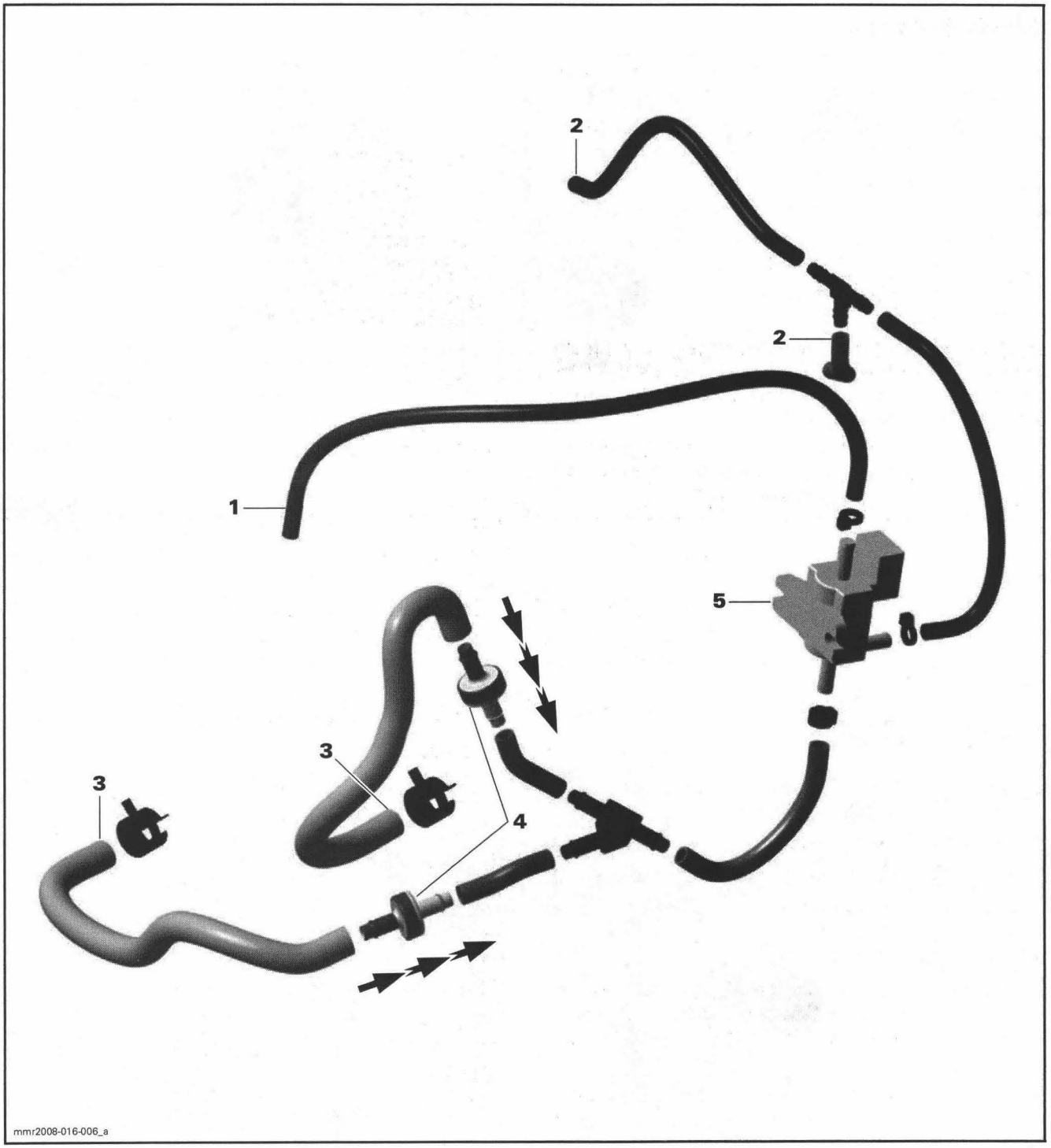

E-RAVE VALVES — HOSES, SOLENOID AND CHECK VALVE ARRANGEMENT (600 HO SDI ENGINE)
1. *To thottle body*
2. *To RAVE valves*
3. *To crankcase*
4. *Check valves*
5. *Solenoid*

GENERAL

Before completely disassembling the engine, check airtightness. Refer to *LEAK TEST*.

To measure internal parts, refer to *ENGINE MEASUREMENT* section.

During assembly/installation, use torque values and service products as in the exploded view.

Clean threads before applying a threadlocker. Refer to *SELF-LOCKING FASTENERS* and *LOCTITE APPLICATION* at the beginning of this manual for complete procedure.

⚠ WARNING

Torque wrench tightening specifications must be strictly adhered to.
Locking devices (e.g.: locking tabs, elastic stop nuts, self-locking fasteners, cotter pins, etc.) must be replaced with new ones.

Cleaning

Discard all gaskets and O-rings. Use Loctite Chisel (P/N 413 708 500) to clean mating surfaces.

Clean all metal components in a non-ferrous metal cleaner.

PROCEDURES

REED VALVE

Reed Valve Removal

Carburetors, refer to *FUEL SYSTEM* section.

Remove intake adapters, then reed valves.

Reed Valve Inspection

Check reed valve for proper tightness. There must not be any play between blade and valve body when exerting a finger pressure on blade at blade stopper location.

In case of a play, turn blade upside down and recheck. If there is still a play, replace blade and/or valve body.

NOTE: Blades have a curved shape. Install with their curve facing reed block.

Check distance from blade stopper outer edge and distance from center of reed valve block.

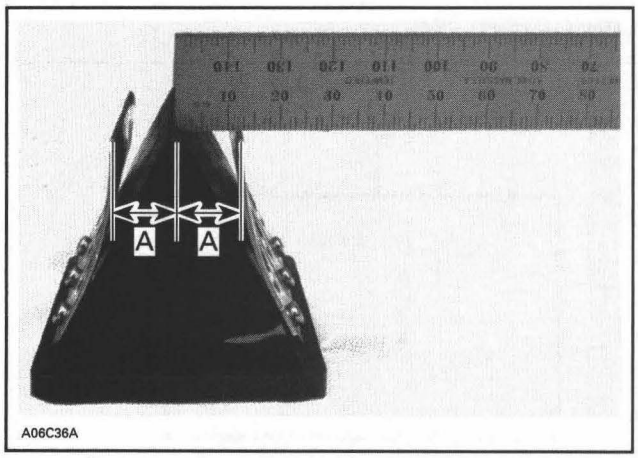

A06C36A

TYPICAL
A. 593 engine: 14.75 - 0, + 0.75 mm (.580 - 0, + .030 in)
593 HO SDI engine: 17.5 - 0, + 0.75 mm (.689 - 0, + .030 in)

Bent blade stopper as required to obtain the proper distance.

Reed Valve Installation

The installation is the reverse of the removal procedure.

NOTE: Blade stoppers may slightly interfere with cylinder during installation. Adjusted distance will be reduced automatically upon installation.

E-RAVE SOLENOID

600 HO SDI

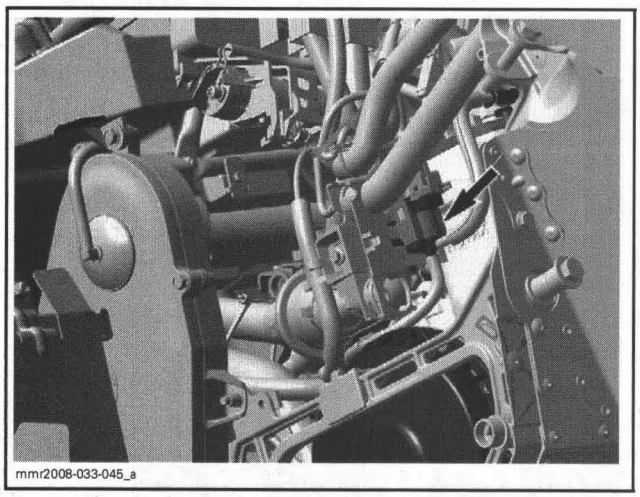

mmr2008-033-045_a

Operation Test

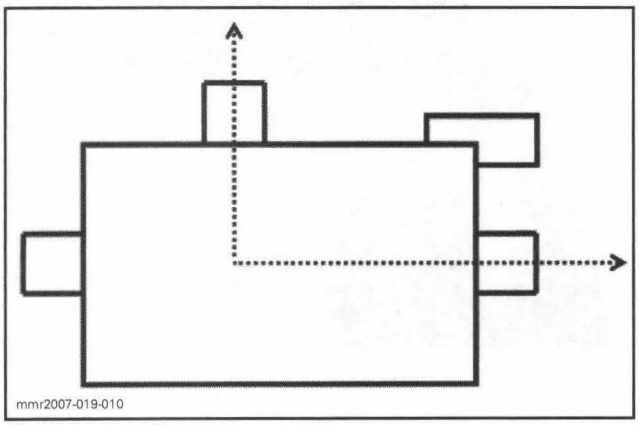

SOLENOID OPERATION (OFF)

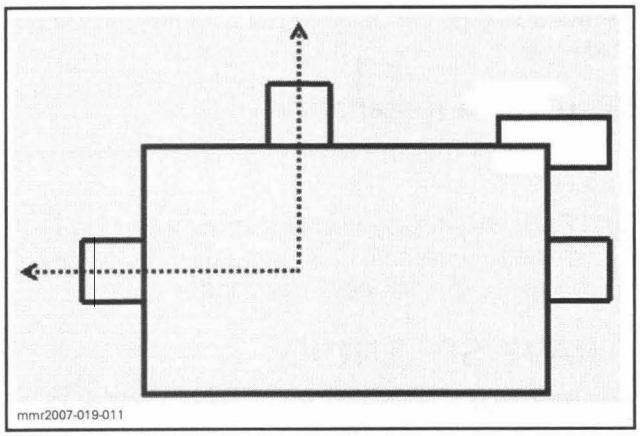

SOLENOID OPERATION (ON)

Connect supply harness (P/N 529 035 869) to the 6-pin diagnostic connector of vehicle.

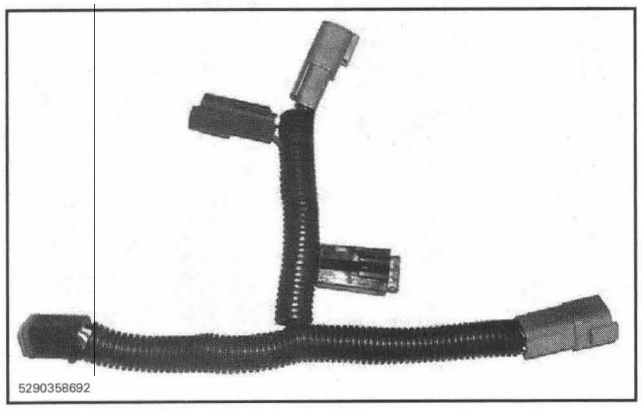



Use B.U.D.S. software.

Energize the E-RAVE solenoid in **Activation** tab.

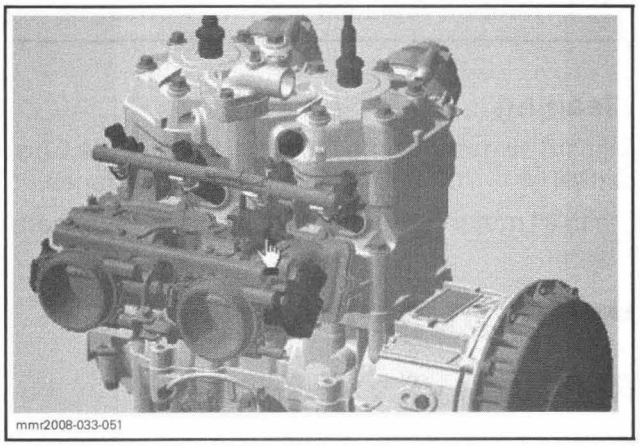

If solenoid does not click, carry out the electrical tests.

If solenoid clicks, this validates the electrical operation of the solenoid. Continue testing to validate the valve operation.

The following tests assume the following is in good condition. In doubt, check their operation.

- There is no leak in the RAVE valve system.
- The RAVE valves bellows are properly working.
- The RAVE valves are not stuck and are mechanically working.
- RAVE valve return springs are properly working.

NOTE: At the end of all other tests, remember to ensure the check valves are properly working in the circuit.

Unplug supply hose from solenoid.

Use the vacuum/pressure pump (P/N 529 021 800).

Install test pump on supply nipple of solenoid.

Pressurize solenoid.

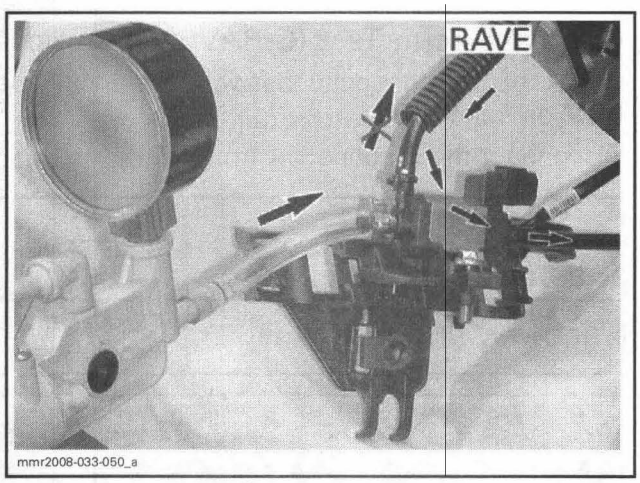

TEST PRESSURE
69 - 103 kPa (10 - 15 PSI)

Wait some time to see if pressure drops:
- If pressure does not build up or drops, replace solenoid.
- If pressure is maintained, continue testing.

Use B.U.D.S. software.

Energize the E-RAVE solenoid in **Activation** tab.

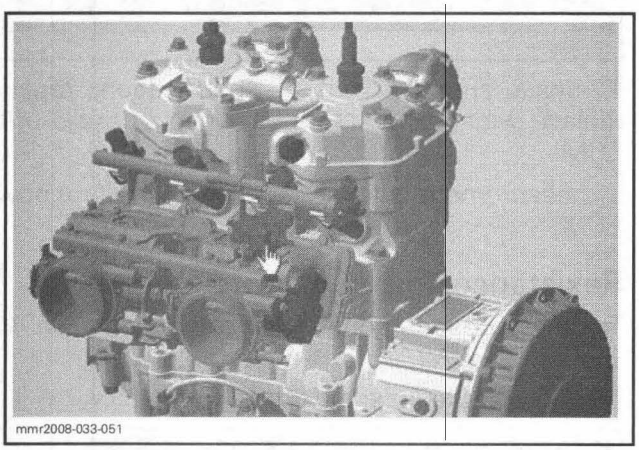

Pressure should flow to the RAVE valves. You should see the RAVE valves open.

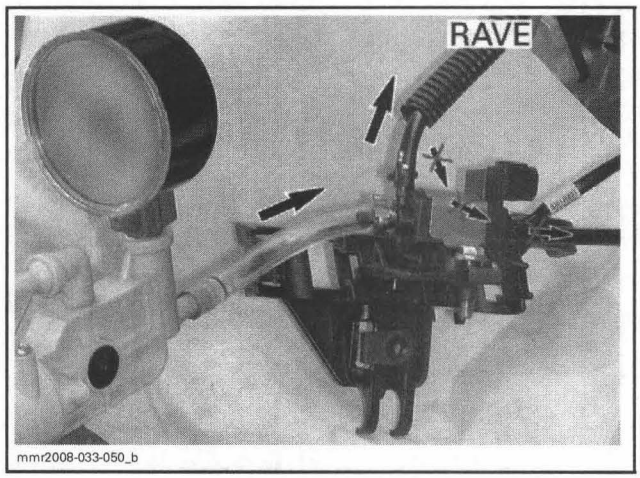

If solenoid did not click, carry out the electrical tests.

If solenoid turned on but RAVE valves do not open, replace solenoid.

When solenoid is turned off, RAVE valves should go down. Otherwise, replace solenoid.

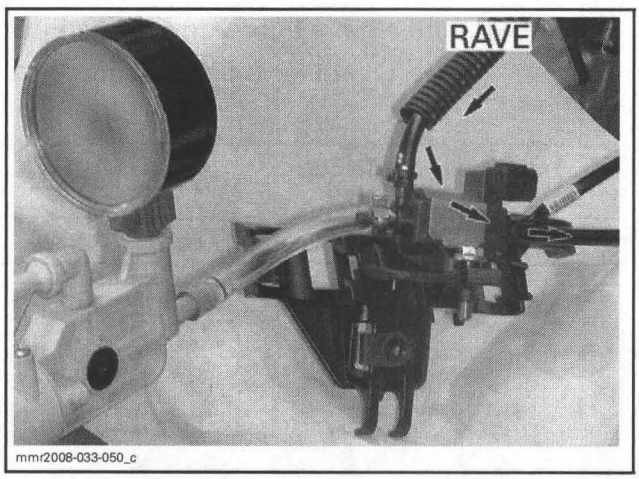

Resistance Test (RAVE Solenoid)

To gain access to connector, refer to *SOLENOID REPLACEMENT.*

Disconnect the solenoid connector.

Check resistive value of the solenoid as follows.

SOLENOID CONNECTOR		RESISTANCE @ 20°C (68°F)
Pin 1	Pin 2	Approx. 30 Ω

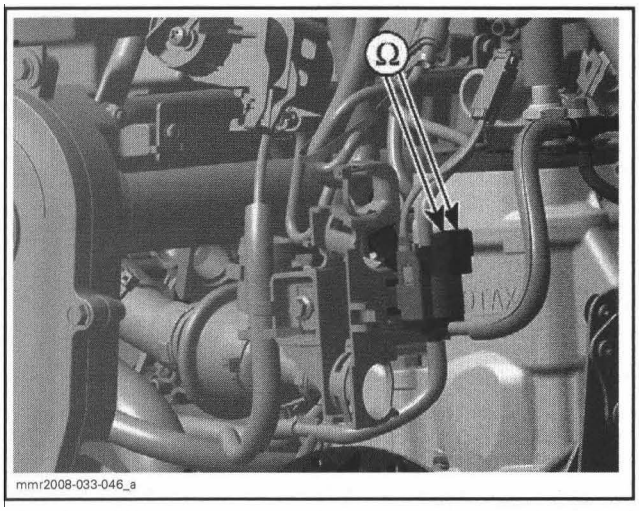

If solenoid is out of specification, replace it.

If solenoid is as per specification, proceed with the following tests.

Voltage Test (RAVE Solenoid)

Install the tether cord cap and push the START/RER button momentarily to activate ECM.

Measure voltage on solenoid harness connector as follows.

SOLENOID HARNESS CONNECTOR		MEASUREMENT
RED/GREY	Battery ground	Battery voltage

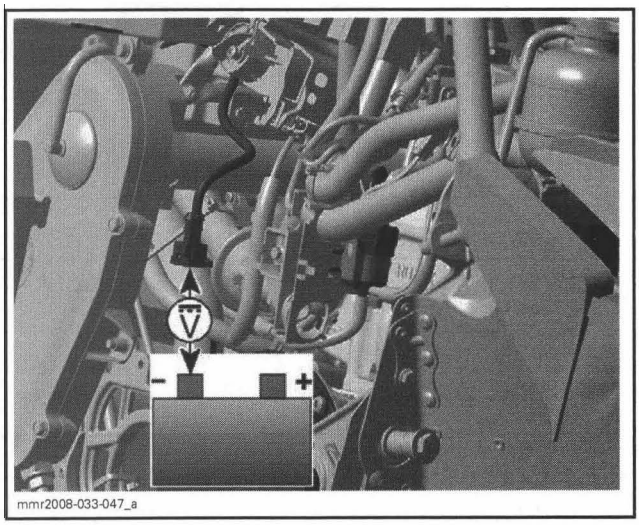

If voltage is out of specification, check the following.

- Fuse F4
- Supply circuit from to solenoid. Refer to *WIRING DIAGRAM.*

If voltage is as per specification, check control circuit.

Control Circuit Test (E-RAVE Solenoid)

Check wiring continuity between solenoid and ECM as follows.

Disconnect the B connector from ECM.

SOLENOID HARNESS CONNECTOR	ECM CONNECTOR	RESISTANCE
BROWN/WHITE	B-15	Close to 0 Ω (continuity)

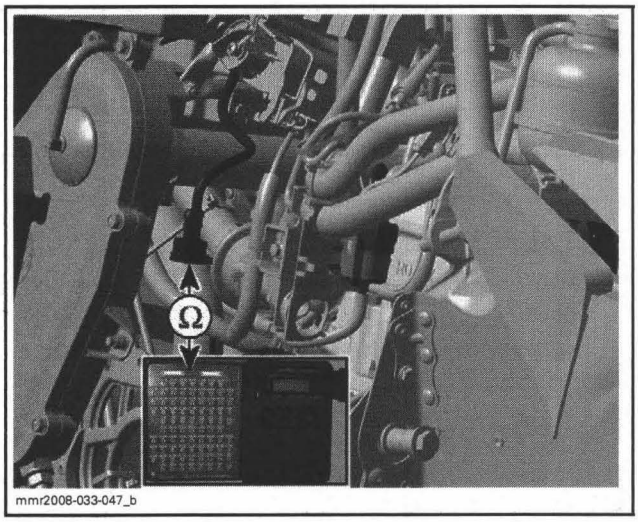

If measurement is out of specification, repair/replace wiring/connectors between solenoid and ECM.

If measurement is as per specification, try a new ECM.

Resistance Test (Solenoid Heater)

To gain access to connector, refer to *SOLENOID REPLACEMENT.*

Disconnect the solenoid heater connector.

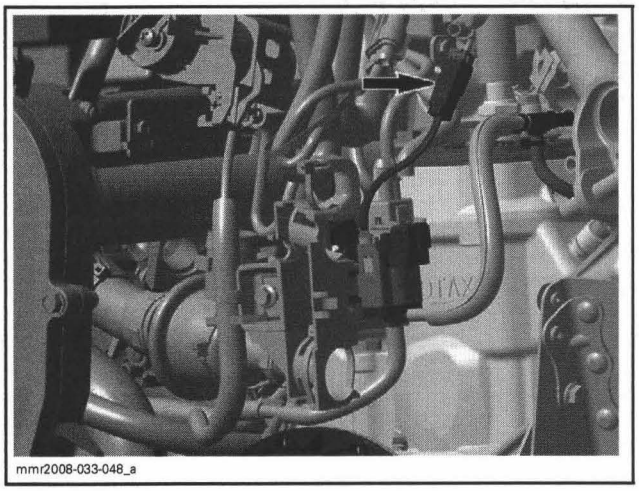

Check resistive value of the solenoid heater as follows.

NOTE: Resistance value greatly increases when heater is hot. A quick test can be done by plugging the supply harness and putting your finger against the heater. You should feel the warmth if heater works.

SOLENOID HEATER CONNECTOR		RESISTANCE @ 20°C (68°F)
Pin 1	Pin 2	Approx. 2.4 Ω

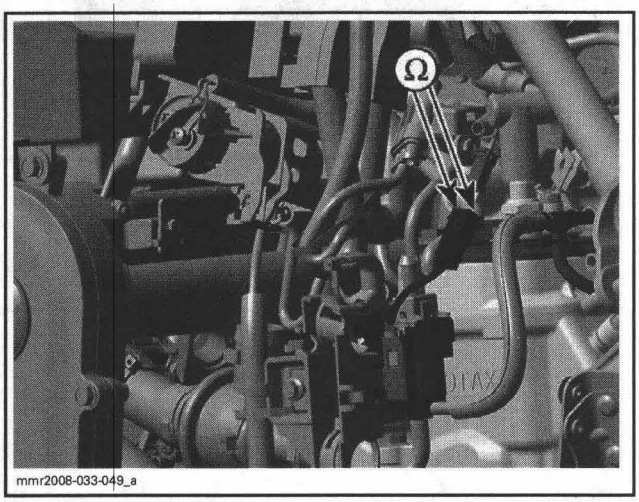

mmr2008-033-049_a

If solenoid heater is out of specification, replace it.

If solenoid heater is as per specification, proceed with the following tests.

Voltage Test (Solenoid Heater)

Connect supply harness (P/N 529 035 869) to the 6-pin diagnostic connector of vehicle.

Measure voltage on harness connector of solenoid heater as follows.

HARNESS CONNECTOR OF SOLENOID HEATER		MEASUREMENT
RED/YELLOW	BLACK	Battery voltage

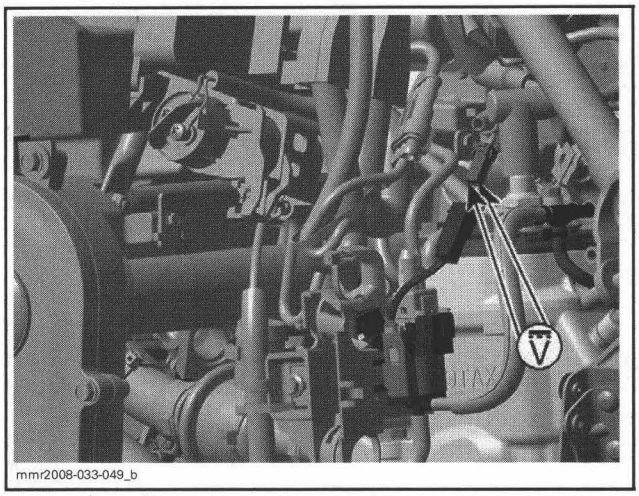

mmr2008-033-049_b

If voltage is as per specification, solenoid heater circuit is good.

If voltage is out of specification, recheck as follows.

HARNESS CONNECTOR OF SOLENOID HEATER		MEASUREMENT
RED/YELLOW	Battery ground	Battery voltage

If voltage is now as per specification, check control circuit.

If voltage is out of specification, check the following.

- Fuse F6
- Supply circuit from relay 3 to solenoid heater. Refer to *WIRING DIAGRAM.*

Control Circuit Test (Solenoid Heater)

Check wiring continuity between solenoid heater and battery groun as follows.

HARNESS CONNECTOR OF SOLENOID HEATER	RESISTANCE
BLACK with battery ground	Close to 0 Ω (continuity)

If measurement is out of specification, check battery and engine grounds. If grounds are good, repair/replace wiring/connectors between solenoid heater and battery ground.

Solenoid Replacement

Remove muffler. Refer to *EXHAUST SYSTEM.*

Remove acoustic panel.

Unplug the solenoid connector and all hoses.

NOTE: Mark hose locations for installation.

Remove solenoid screw then the solenoid.

For installation, reverse the removal procedure.

RAVE AND E-RAVE VALVES

Rave Valves Basic Operation

NOTE: RAVE stands for Rotax Adjustable Variable Exhaust.

The RAVE valves change the height of the exhaust port to enhance the engine powerband and torque according to the engine RPM and throttle position (e-RAVE on the SDI engine).

593 Engine

Exhaust pressure is used to inflate the bellows and open the RAVE valves at the proper engine RPM.

593 HO SDI Engine

The electronically controlled RAVE (e-RAVE) offers two performance enhancements to conventional RAVE system.

- The opening and closing of the valve is activated electronically. The ECM monitors altitude, engine temperature, throttle position and RPM, and operates the solenoid in optimal conditions.
- The valve is opened by crankcase pressure. The greater and more constant pressure from the crankcase opens the valve more crisply. Both RAVE valves operate at the same time.

To close the RAVE valves, the ECM deactivates the solenoid. A return spring assisted by the crankcase vacuum close the valve.

NOTE: An electric heating element has been added to the RAVE solenoid to ensure proper function in very cold weather.

Rave Valves Removal and Disassembly

Remove LH side cover.

Remove tool kit support located on drive pulley guard.

Remove RAVE valve cover by removing screws.

⚠ WARNING

Firmly hold cover to valve base. The compression spring inside the valve is applying pressure against the cover.

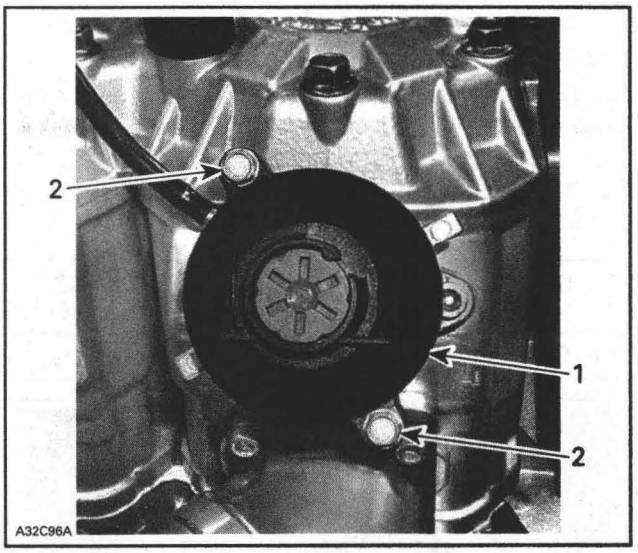

TYPICAL
1. Cover
2. Retaining screws

Remove the compression spring.

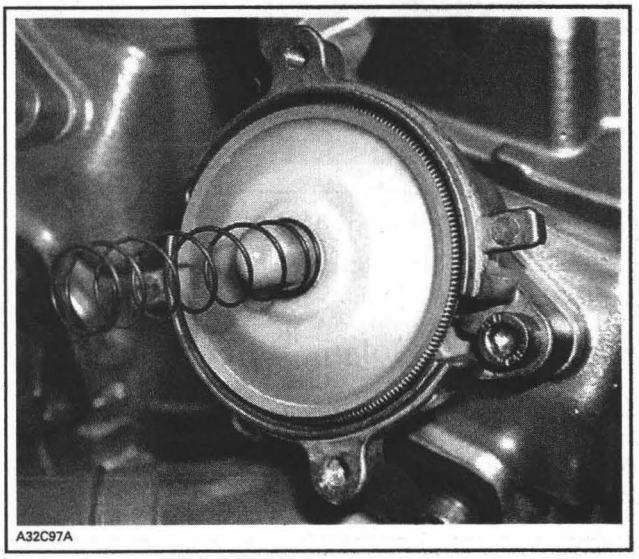

TYPICAL

Unscrew the Allen socket screw then remove the RAVE valve base.

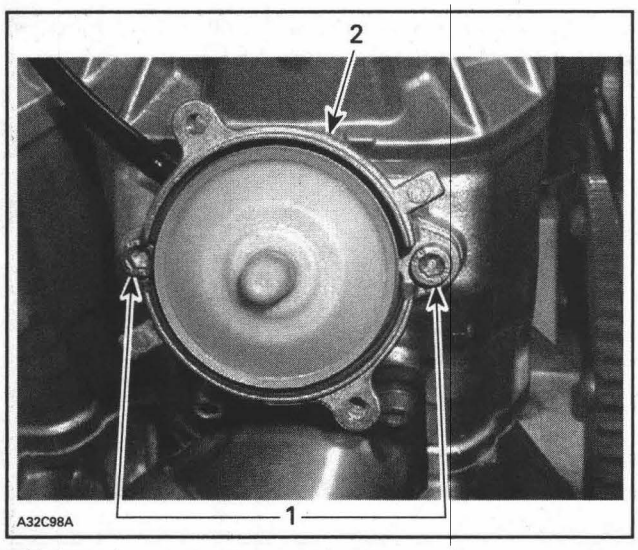

TYPICAL
1. *Allen socket screws*
2. *RAVE valve base*

Unscrew and remove the guillotine from the valve piston than remove the gasket.

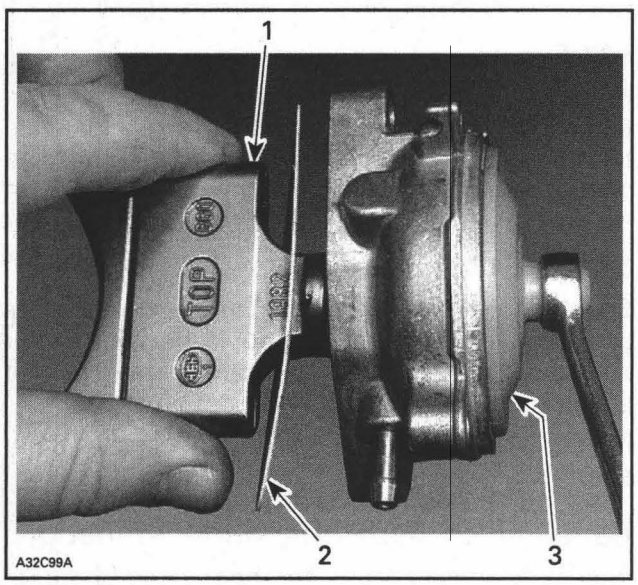

TYPICAL
1. *Guillotine*
2. *Gasket*
3. *Valve piston*

Remove spring retaining bellows to valve piston.

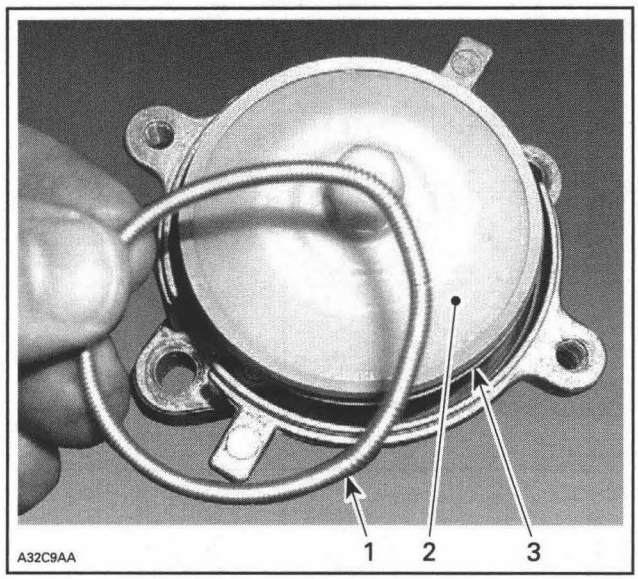

TYPICAL
1. *Spring*
2. *Valve piston*
3. *Bellows*

Remove valve piston.

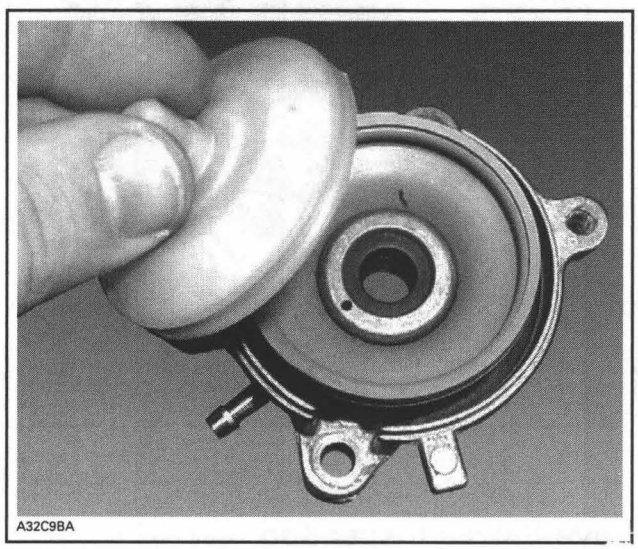

TYPICAL

Remove the small spring retaining bellows to valve base.

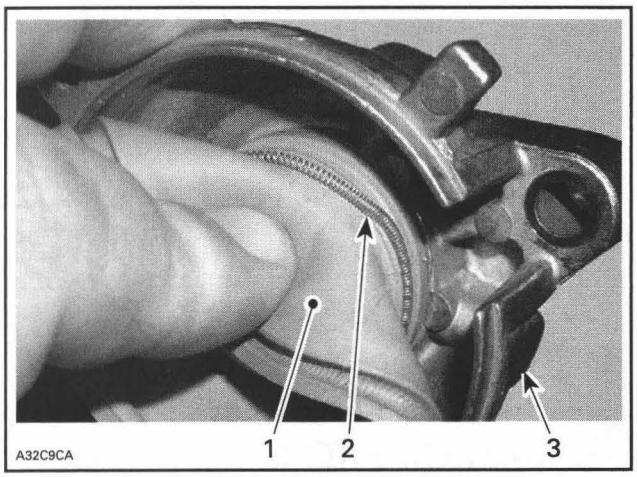

TYPICAL
1. *Bellows*
2. *Small spring*
3. *Valve base*

Remove bellows from valve base.

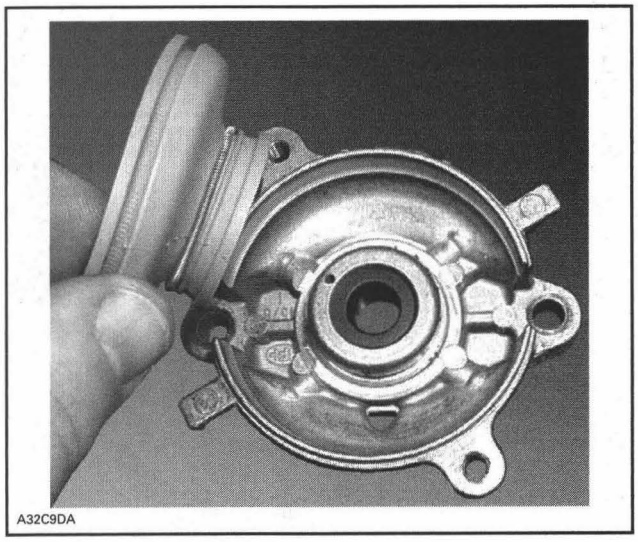

TYPICAL

Rave Valves Inspection

NOTE: If there is oil in the valve base, replace seal.

There are no wear parts anywhere in the system and there are no adjustments to be periodically checked. The only possible maintenance required would be cleaning of carbon deposits from the guillotine slide. Cleaning intervals would depend upon the user's riding style and the quality of the oil used.

BRP suggests annual cleaning of the valve. If a customer uses lower quality oil, than recommended, more frequent cleaning may be required.

No special solvents or cleaners are required when cleaning the valve.

Check valve rod housing and cylinder for clogged passages **(all models except SDI)**.

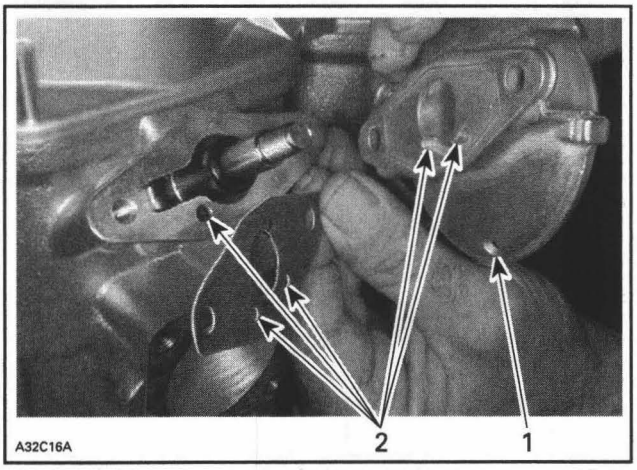

1. Draining hole
2. Passages

NOTE: Oil dripping from draining hole indicates a loosen spring or damaged bellows.

Check for cracked, dried or perforated bellows.

593 Engine

In its stock configuration, the RAVE valve guillotine has a minimum of 0.5 mm (.020 in) clearance to the cylinder bore measured at the center line of the cylinder. This is the minimum production clearance.

593 HO SDI Engine

Check if solenoid heating element is still functional once a year, the element should be warm after one minute of riding. At the same time, check if crankcase check valve is still functional.

NOTE: Make sure hoses are not kinked or damaged.

Rave Valves Assembly and Installation

Assembly and intallation are the reverse of the removal, however, pay attention to the following.

Apply Drei Bond sealing compound (P/N 420 297 906) on the bellow lower rib and in the valve piston groove.

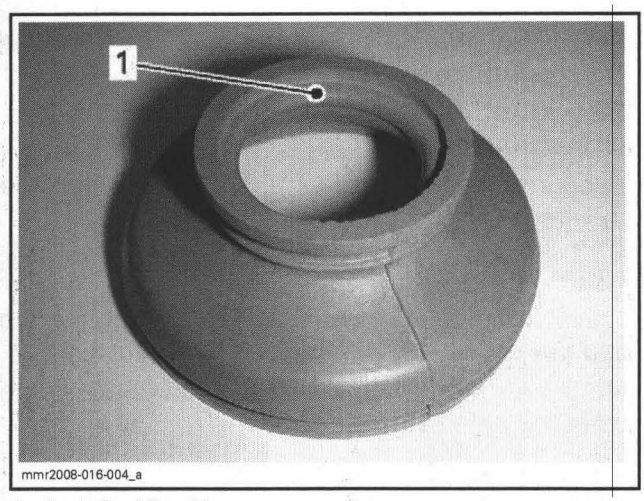

1. Apply Drei Bond here

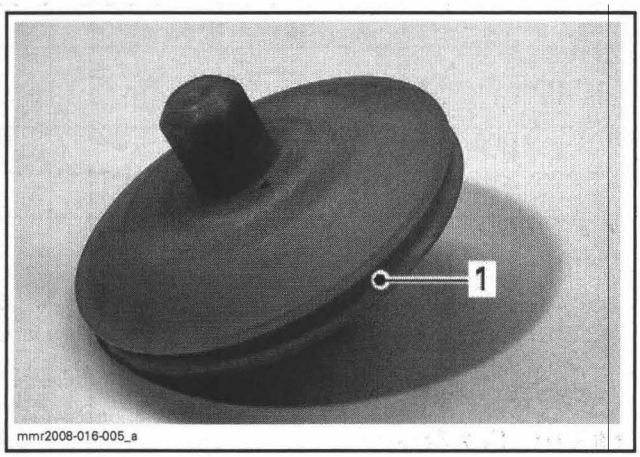

1. Apply Drei Bond here

Install RAVE valve with its mention TOP as illustrated in the following photo.

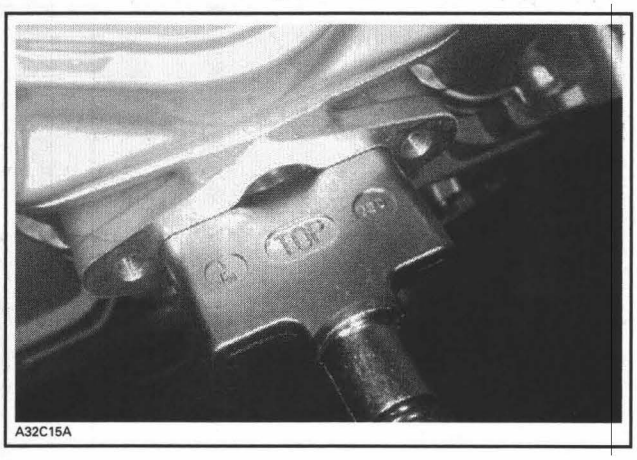

CYLINDER HEAD COVER

Cylinder Head Cover Removal

Remove LH side cover.

Remove tool kit support and drive belt cover.

Drain coolant, refer to *COOLING SYSTEM*.

Remove spark plugs.

On **SDI models**, remove the knock sensor.

Unplug coolant hoses from upper coolant socket.

Unscrew all cylinder head cover screws and the rear upper coolant socket screw.

Cylinder Head Cover Inspection

Check cylinder head cover for cracks, warp or other damages. Replace if necessary.

Cylinder Head Cover Installation

Torque screws to 29 N•m (21 lbf•ft) in the following illustrated sequence.

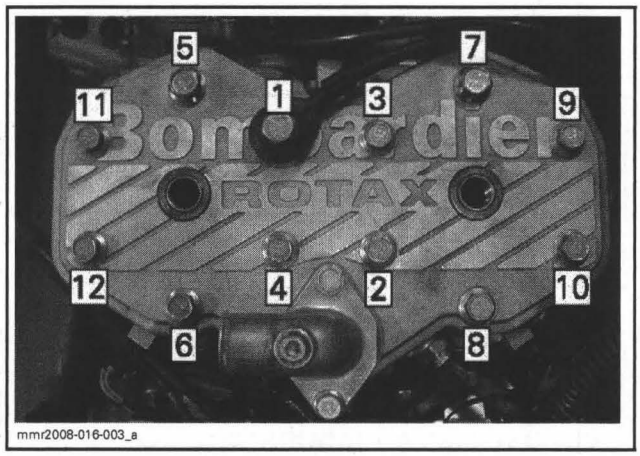

TYPICAL

Apply Loctite 243 (blue) (P/N 293 800 060) on the upper socket screw threads. Position the longer screw outwards (rear of engine).

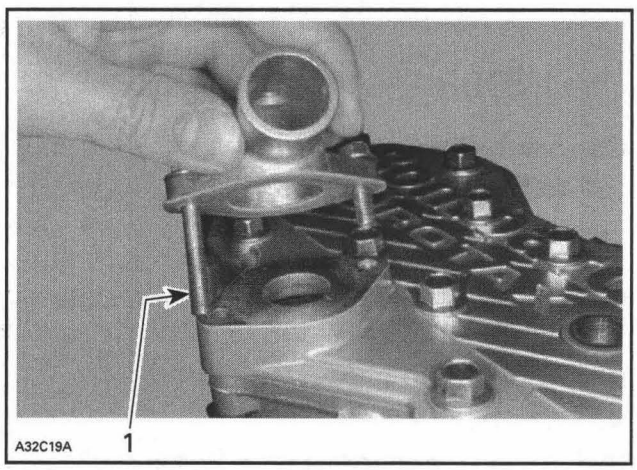

TYPICAL
1. Longer screw

593 HO SDI Engine

Install knock sensor. Refer to *ENGINE MANAGEMENT (600 HO SDI)* section.

CYLINDER HEAD

Cylinder Head Removal

Remove the cylinder head cover as explained above.

Disconnect the temperature sensor connector.

Disconnect the carburetor or throttle body heater inlet hose at cylinder head.

Remove the cylinder head.

Cylinder Head Inspection

Check cylinder head for cracks, warp or other damages. Replace if necessary.

Cylinder Head Warpage

NOTE: Refer to *ENGINE MEASUREMENT* for the measurement procedures.

ENGINE	MAXIMUM
593	0.05 mm (.002 in) per 50 mm (2 in) of surface
	0.5 mm (.020 in) for total length of cylinder head

Cylinder Head Cleaning

Scrape off carbon formation from cylinder head.

Cylinder Head Installation

Install new rubber ring and round O-rings on each cylinder.

Replace O-rings around spark plug holes and on cylinder head border.

Install cylinder head cover as described above.

CYLINDER

Cylinder Removal

593 HO SDI Engine

Release the fuel pressure of the system using B.U.D.S. Look in the **activation** tab.

Unplug fuel injector connectors then remove the fuel rail. Refer to *FUEL SYSTEM*.

Unplug RAVE valve hose from solenoid.

All 593 Engines

Remove cylinder head as explained above.

Remove muffler, tune pipe and exhaust manifold. Refer to *EXHAUST SYSTEM*.

Remove acoustic panel.

Remove driven pulley and the countershaft bearing support, refer to *DRIVE SYSTEM/BRAKE*.

Disconnect carburetors or throttle body from intake adapters and set aside.

Unscrew cylinder screws and then remove the cylinder(s).

Cylinder Inspection

Check cylinders for cracks and scoring on the top and bottom of cylinders. Replace if necessary.

NOTE: Refer to *ENGINE MEASUREMENT* for the measurement procedures.

Cylinder Taper

ENGINE	MAXIMUM
All 593	0.10 mm (.004 in)

Cylinder Out of Round

ENGINE	MAXIMUM
All 593	0.08 mm (.003 in)

Cylinder Cleaning

Scrape off carbon formation from cylinder exhaust port.

Cylinder Installation

Install new base gasket of the same thickness as the old one.

Identify gasket thickness by the identification holes on the gasket surface.

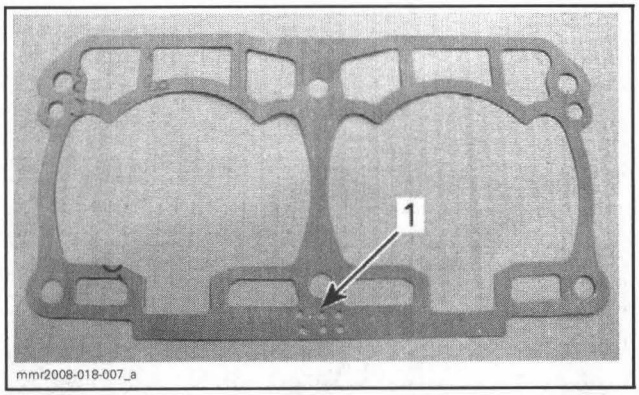

TYPICAL
1. Identification holes

NOTE: The general procedure is to install a new gasket of the same thickness. However if you do not know the thickness of the gasket that was on the engine or if a crankcase and/or crankshaft repair was involved, measure the combustion chamber volume to choose the right gasket, refer to *ENGINE MEASUREMENT*.

CAUTION: Always install a gasket of the proper thickness. Failure to do so may cause detonation and severe engine damage.

Before inserting piston in cylinder, lubricate the cylinder with new injection oil or equivalent.

Install cylinders. Do not tighten.

Install new rubber ring and round O-rings on each cylinder.

NOTE: Carefully clean screws before reinstallation, specifically under screw head.

Install exhaust manifold with gaskets. Do not tighten yet.

Torque cylinder screws in a crisscross sequence as per the following table.

M8	29 N•m (21 lbf•ft)
M10	40 N•m (30 lbf•ft)

Install all other removed parts.

PISTON

Piston Removal

Remove cylinders, as explained above.

Place a clean cloth or rubber pad (P/N 529 023 400) over crankcase. Then with a pointed tool inserted in piston notch, remove both circlips from piston.

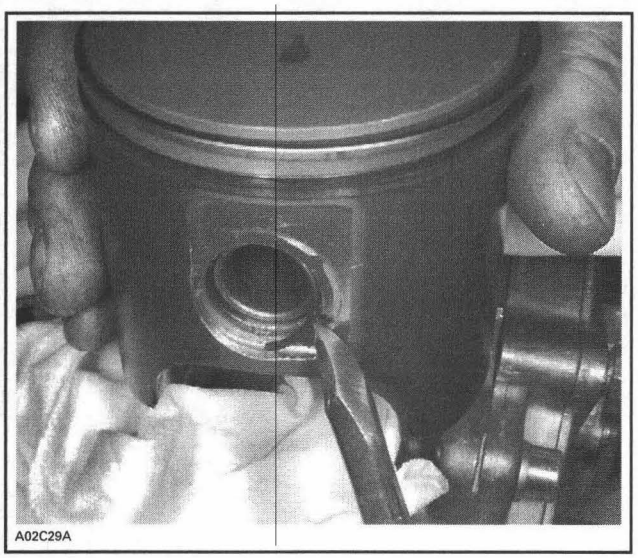

TYPICAL

Push piston pin out of piston.

Remove piston.

Remove bearing.

Piston Inspection

For dimension measurement procedures, refer to *ENGINE MEASUREMENT*.

Piston Cleaning

Scrape off carbon formation from piston dome.

NOTE: The arrow on the piston dome must be visible after cleaning.

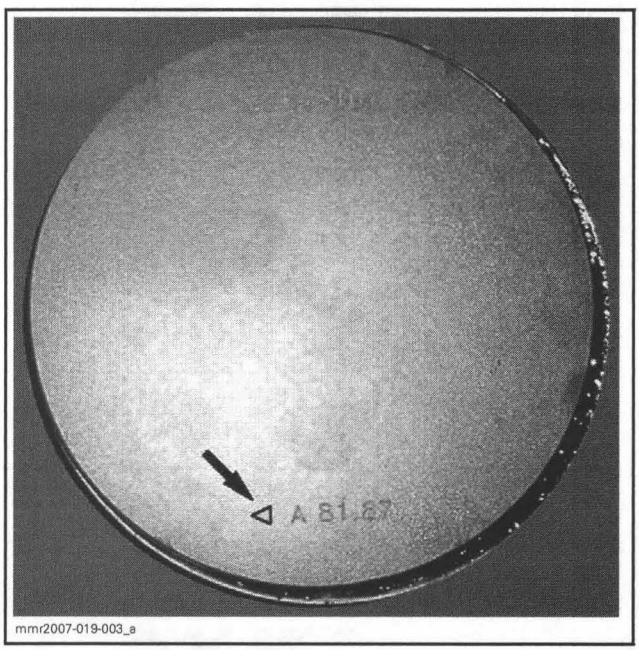

Clean the piston ring groove with a groove cleaner tool or with a piece of broken ring.

Piston Installation

Lubricate needle bearing with injection oil.

Insert bearing into connecting rod.

At assembly, place the pistons over the connecting rods with the letters "AUS" (over an arrow on the piston dome) facing towards the exhaust port.

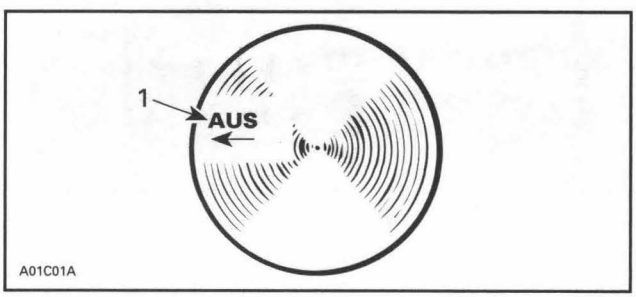

1. Exhaust

Push piston pin trough piston.

CAUTION: Always install new circlips.

Use appropriate piston circlip installer to install mono-hook circlips.

ENGINE	TOOL
All 593	Piston circlip installer (P/N 529 035 686)

Insert circlip into support so that, when installed in piston groove, the gap will be below the tab (see piston picture below).

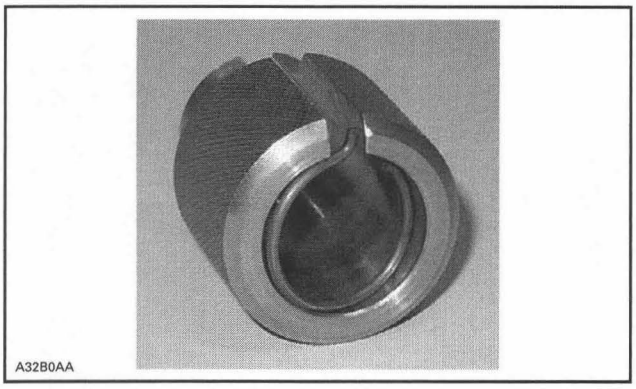
A32B0AA

With round end of pusher, position circlip perpendicularly to the support axis.

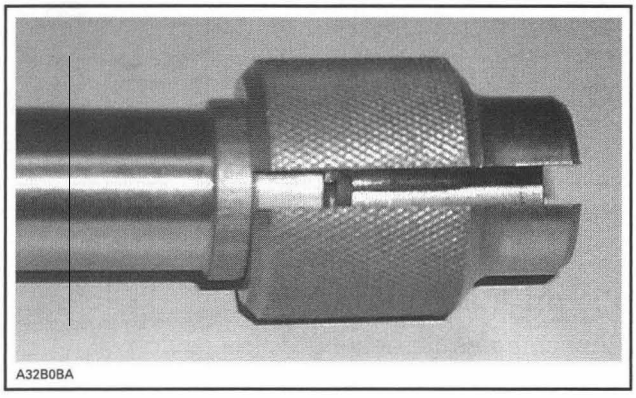
A32B0BA

With the other end of the pusher, push circlip into the support groove.

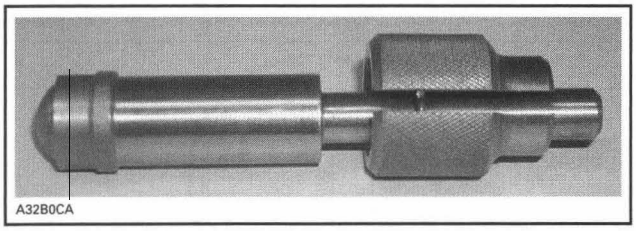
A32B0CA

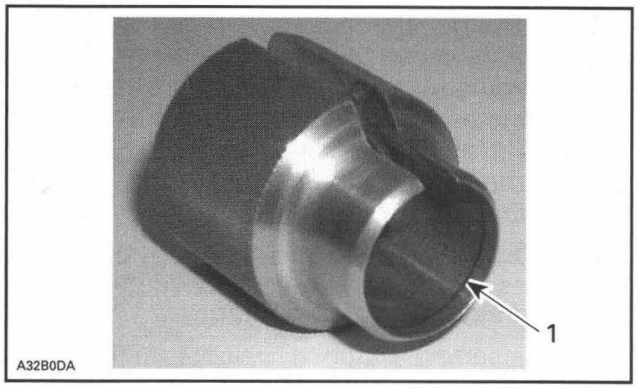

A32B0DA

1. Groove

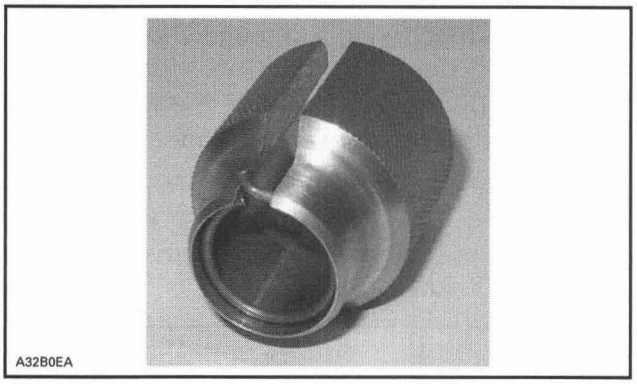
A32B0EA

CIRCLIP READY TO BE INSTALLED ON PISTON

Using a plastic hammer, tap pusher to put circlip in place.

NOTE: Make sure to install new circlips with the gap below the tab exactly as shown on the following photo.

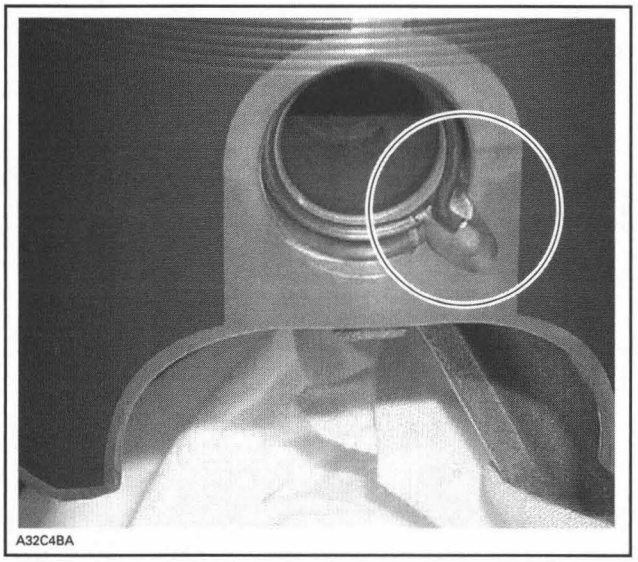
A32C4BA

GAP BELOW THE TAB

CAUTION: Always install new mono-hook circlips. If circlip installation fails at the first attempt, always retry with a new one because, on a second attempt, the circlip will lose its normal retaining capabilities.

CAUTION: Circlips must not move freely after installation; if so, replace them.

Install all other removed parts.

TOP END (797)

SERVICE TOOLS

Description	Part Number	Page
vacuum/pressure pump	529 021 800	122
rubber pad	529 023 400	133
Piston circlip installer	529 035 563	134

SERVICE PRODUCTS

Description	Part Number	Page
Loctite Chisel	413 708 500	116
Molykote G-n	420 297 433	126
Drei Bond sealing compound	420 297 906	126

TOP END

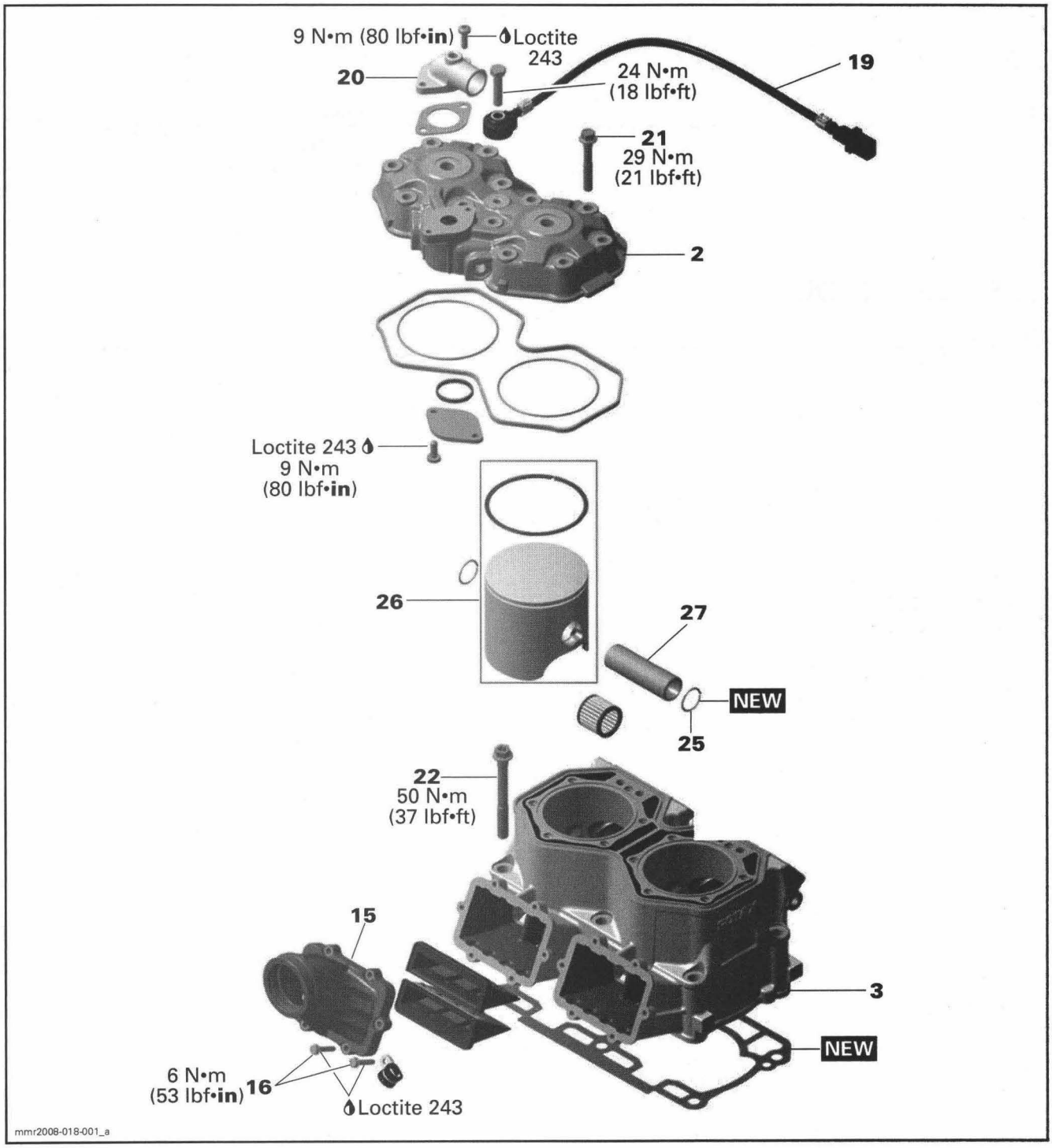
9 N•m (80 lbf•in)
Loctite 243
20
24 N•m (18 lbf•ft)
19
21
29 N•m (21 lbf•ft)
2
Loctite 243
9 N•m (80 lbf•in)
26
27
NEW
25
22
50 N•m (37 lbf•ft)
15
3
NEW
6 N•m (53 lbf•in)
16
Loctite 243
mmr2008-018-001_a

RAVE VALVE

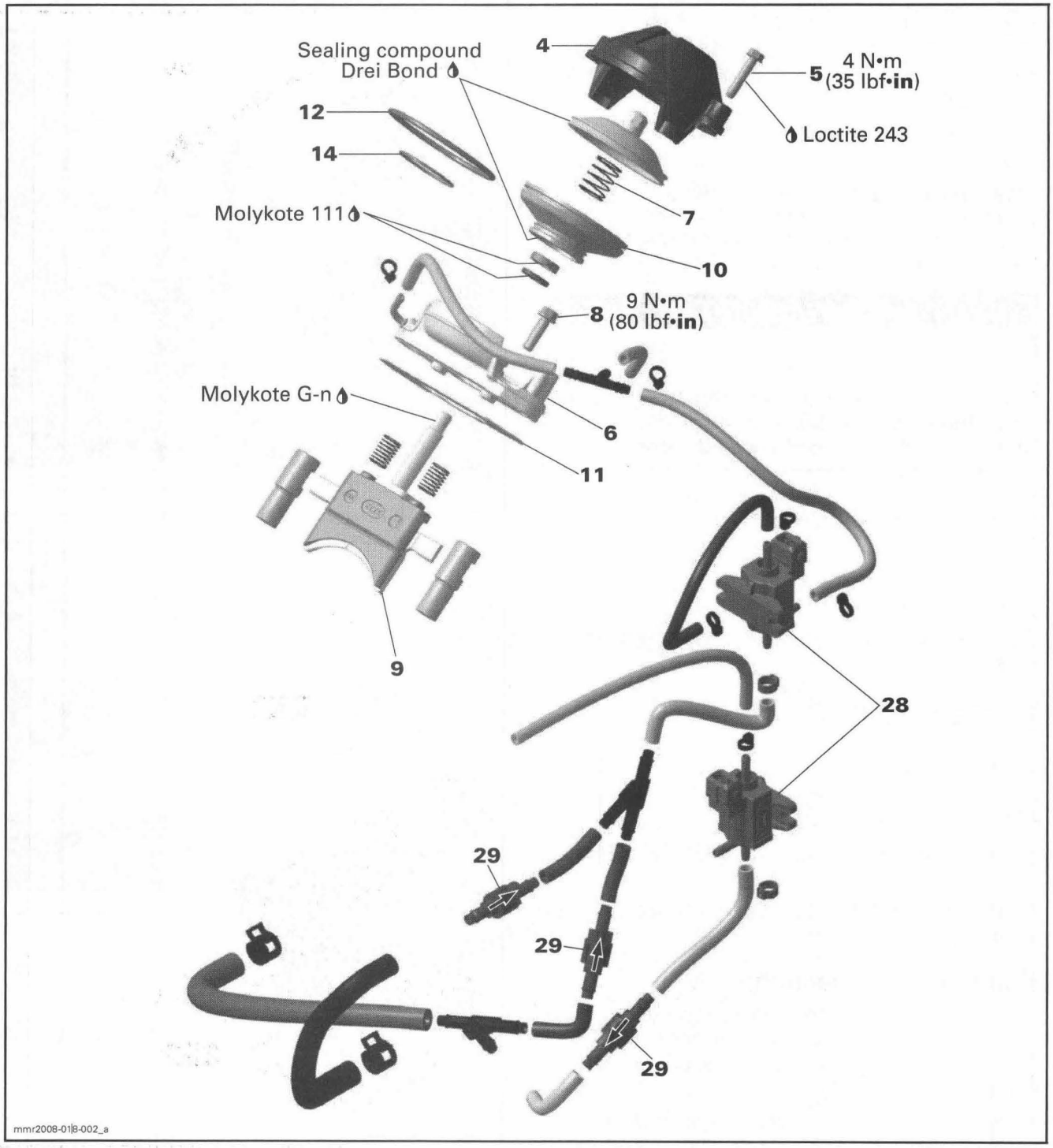
Sealing compound
Drei Bond
4
4 N•m
5 (35 lbf•in)
Loctite 243
12
14
7
Molykote 111
10
9 N•m
8 (80 lbf•in)
Molykote G-n
6
11
9
28
29
29
29
mmr2008-018-002_a

GENERAL

Before completely disassembling the engine, check airtightness. Refer to *ENGINE LEAK TEST*.

To measure internal parts, refer to *ENGINE MEASUREMENT* section.

During assembly/installation, use torque values and service products as in the exploded view.

Clean threads before applying a threadlocker. Refer to *SELF-LOCKING FASTENERS PROCEDURE* and *LOCTITE APPLICATION PROCEDURE* at the beginning of this manual for complete procedure.

⚠ WARNING

Torque wrench tightening specifications must be strictly adhered to.
Locking devices (e.g.: locking tabs, elastic stop nuts, self-locking fasteners, cotter pins, etc.) must be replaced with new ones.

Cleaning Procedures

Discard all gaskets and O-rings. Use Loctite Chisel (P/N 413 708 500) to clean mating surfaces.

Clean all metal components in a non-ferrous metal cleaner.

PROCEDURES

REED VALVE

Reed Valve Removal

Remove carburetors, refer to *FUEL SYSTEM* section.

Unscrew screws **no. 16** retaining intake adapters then remove reed valves.

Reed Valve Inspection

Check reed valve for proper tightness. There must not be any play between blade and valve body when exerting a finger pressure on blade at blade stopper location.

In case of a play, turn blade upside down and recheck. If there is still a play, replace blade and/or valve body.

NOTE: Blades have a curved shape. Install with their curve facing reed block.

Reed Valve Installation

The installation is the reverse of the removal procedure. Pay attention to the following.

Ensure to position reed valves so that they rest flat in intake opening.

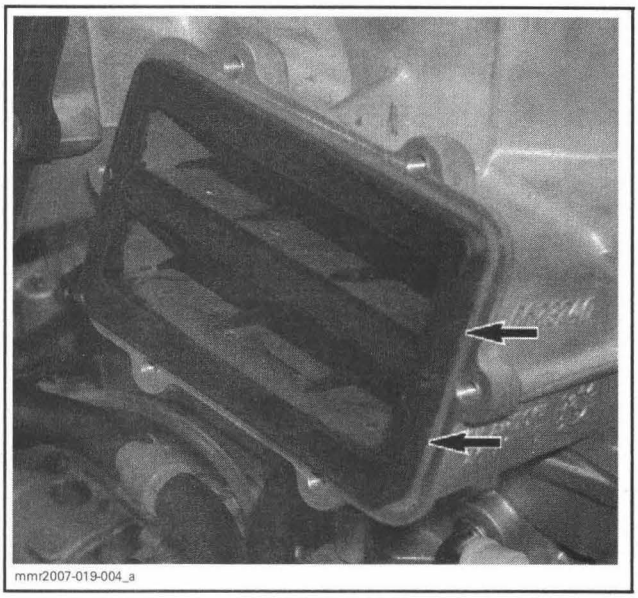
mmr2007-019-004_a

Ensure to position intake adapter as shown.

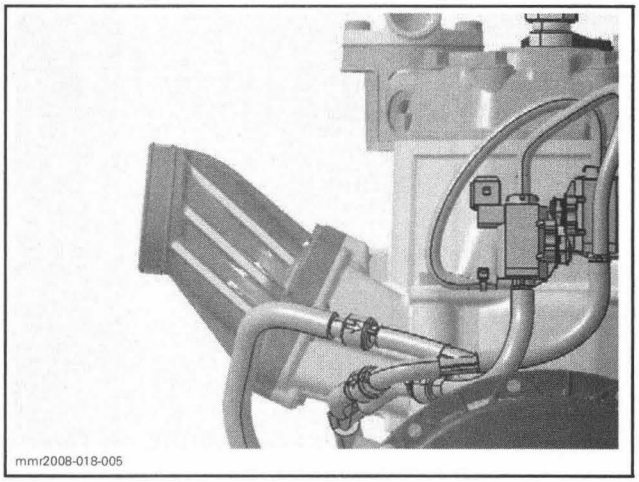
mmr2008-018-005

3D RAVE VALVE

3D RAVE Basic Operation

3-step RAVE valves are used. Their positions vary according to engine operating condition.

The RAVE valve steps are:
- Fully closed
- Partially opened
- Fully opened.

RAVE valves are activated by 2 solenoids that are controlled by the ECM through mappings.

Many different mappings are used by the ECM to control the 3D RAVE valves. The mappings are based on current engine RPM, crankshaft rate of acceleration or deceleration and the following inputs: intake temperature, TPS, knock sensor, engine coolant temperature and APS.

NOTE: 3D RAVE valves may go through all 3 positions or skip the partially open position and go directly to either the fully open or closed positions depending how quickly the throttle is depressed and the engine load.

Solenoids use crankcase pulses (pressure and vacuum) to open or close the valves:

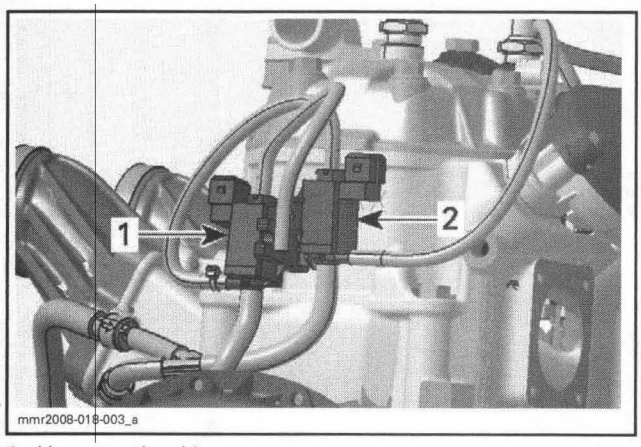

1. Vacuum solenoid
2. Pressure solenoid

An arrangement of check valves and Y-fittings allows to separate the crankcase vacuum pulses from the pressure pulses.

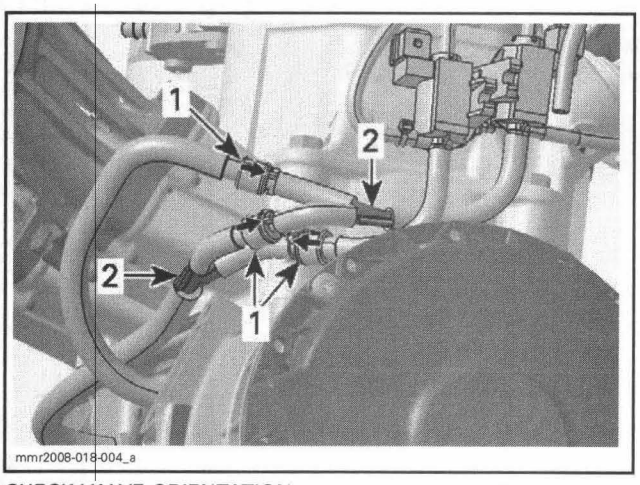

CHECK VALVE ORIENTATION
1. Arrows on check valves
2. Arrows on Y-fittings

3D RAVE Position According to Engine Operation

ENGINE OPERATION	RAVE VALVE POSITION MEASURED FROM TOP OF GREEN BELLOW TO EDGE OF RAVE HOUSING	
Engine stopped	Partially open	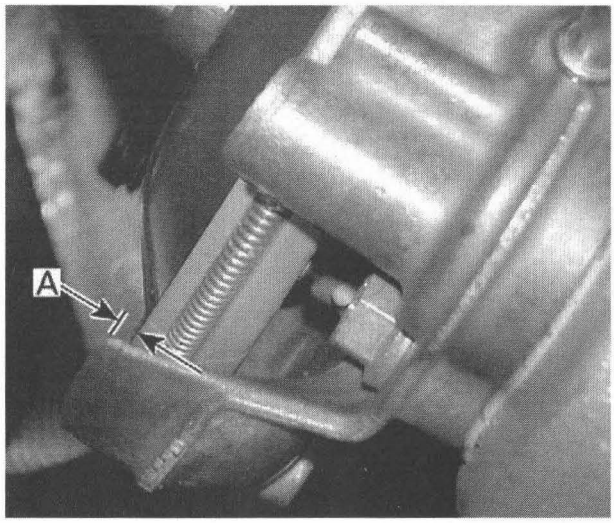 mbs2007-015-002_a A: Approx. 1 mm (1/32 in) down
Idle to approx. 6200 RPM	Fully closed	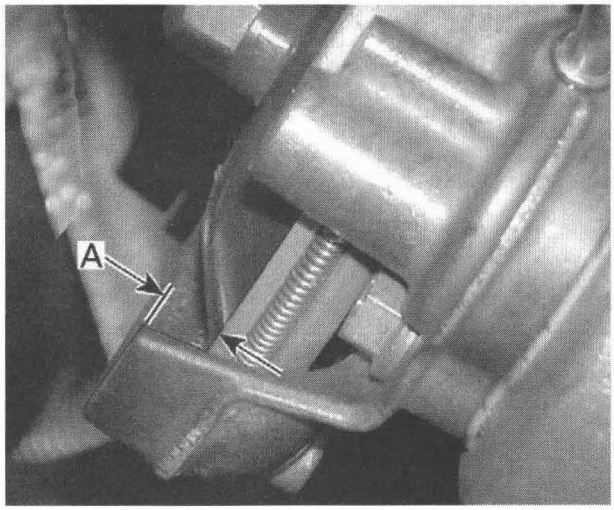 mbs2007-015-001_a A: Approx. 6 mm (1/4 in) down

ENGINE OPERATION	RAVE VALVE POSITION MEASURED FROM TOP OF GREEN BELLOW TO EDGE OF RAVE HOUSING	
Approx. 6200 to 7900 RPM (typical trail riding)	Partially opened	NOTE: Same as engine stopped position. 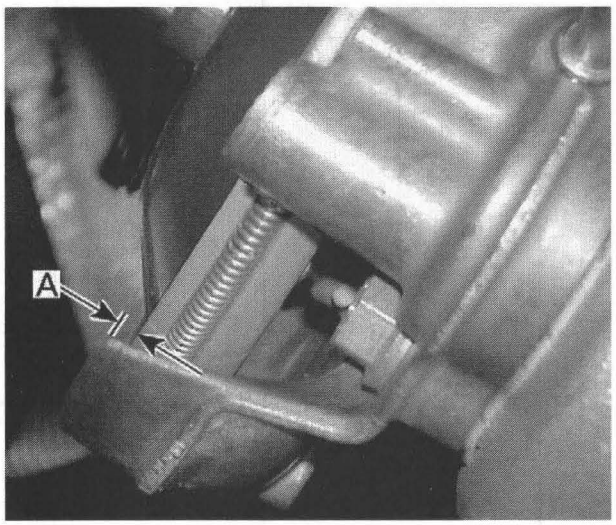 mbs2007-015-002_a A: Approx. 1 mm (1/32 in) down
Approx. 7900 RPM to top RPM	Fully opened	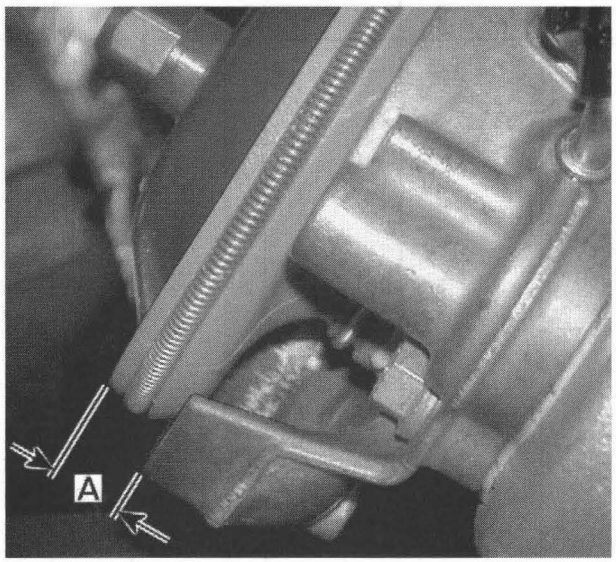 mbs2007-015-003_a A: Approx. 8 mm (5/16 in) up

Solenoid State According to Engine Operation

ENGINE OPERATION	VACUUM SOLENOID	PRESSURE SOLENOID	DIAGRAM
Engine stopped	OFF	OFF	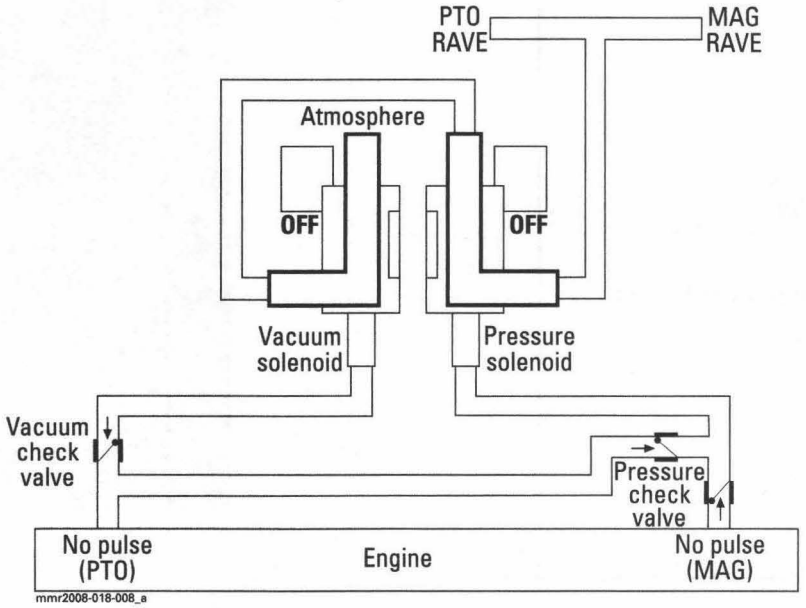
Idle to approx. 6200 RPM	ON	OFF	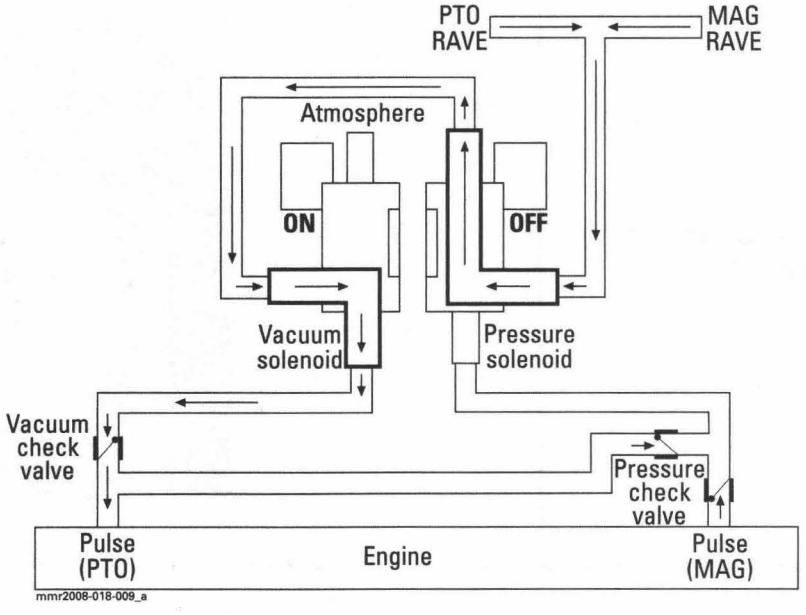

ENGINE OPERATION	VACUUM SOLENOID	PRESSURE SOLENOID	DIAGRAM
Approx. 6200 to 7900 RPM (typical trail riding)	OFF	OFF	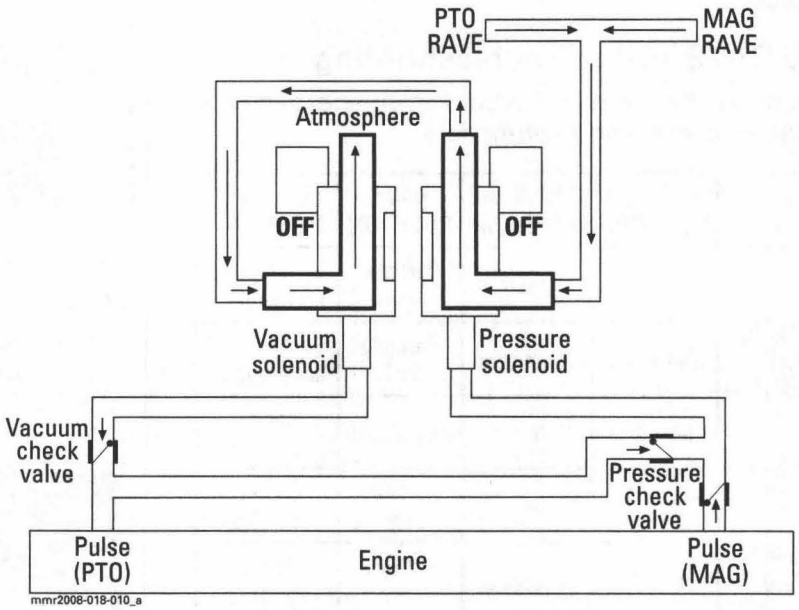
Approx. 7900 RPMto top RPM	ON	ON	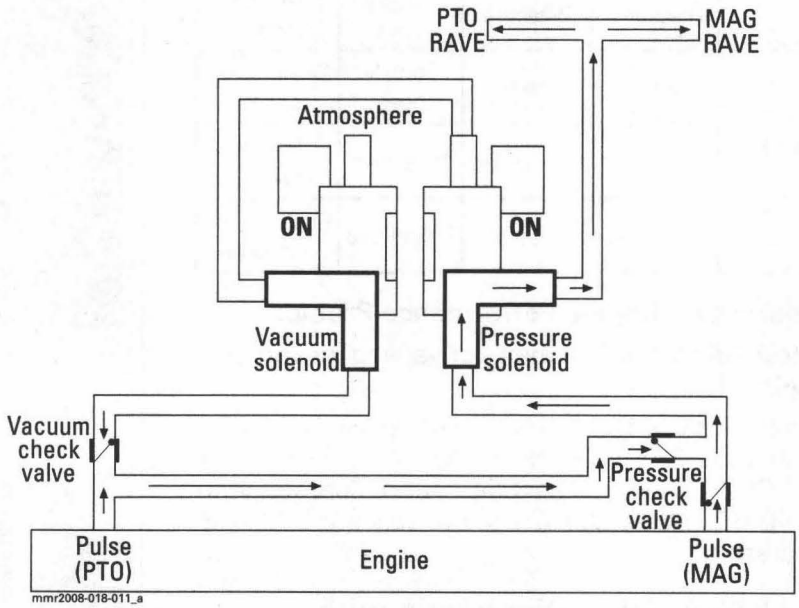

3D RAVE Valve Adjustment

There are no adjustments to be periodically checked.

3D RAVE Valve Troubleshooting

Refer to the following table for engine behavior related to solenoid malfunction.

ENGINE RPM	VACUUM SOLENOID	PRESSURE SOLENOID	RAVE POSITION	ENGINE BEHAVIOR
Idle to approx. 6200 RPM	Defective	Defective	Partially open	Poor acceleration
	Defective	Functional	Partially open	Poor acceleration
	Functional	Defective	Fully closed	Normal operation
Approx. 6200 to 7900 RPM	Defective	Defective	Partially open	Normal operation
	Defective	Functional	Partialy open	Normal operation
	Functional	Defective	Partialy open	Normal operation
Approx. 7900 RPM to top RPM	Defective	Defective	Partialy open	Cannot reach top RPM
	Defective	Functional	Fully open	Normal operation
	Functional	Defective	Fully closed	Cannot reach top RPM

Intermittent Engine Performance Problem

Check transmission (belt, drive and driven pulleys).

If engine does not always reach maximum RPM: Check 3D RAVE valves as per *3D RAVE VALVE INSPECTION* in this section. Then, proceed with *DIAGNOSTIC FLOW CHART* to validate 3D RAVE operation.

3D RAVE Valve Diagnostic with Flow Chart

Install B.U.D.S. and ensure there are no fault codes (active or occured).

A flow chart in the *TROUBLESHOOTING* section of this manual will validate proper operation of 3D RAVE valves or assist when troubleshooting a malfunctioning 3D RAVE valves system.

3D RAVE Valve Leak Test

NOTE: Test each RAVE individually.

Use the vacuum/pressure pump (P/N 529 021 800).



529 021 800

Unplug the RAVE inlet hose.

Install test pump on nipple and apply pressure. Piston should fully rise. Otherwise or if it lowers rather quickly, check bellow and seals inside RAVE valve.

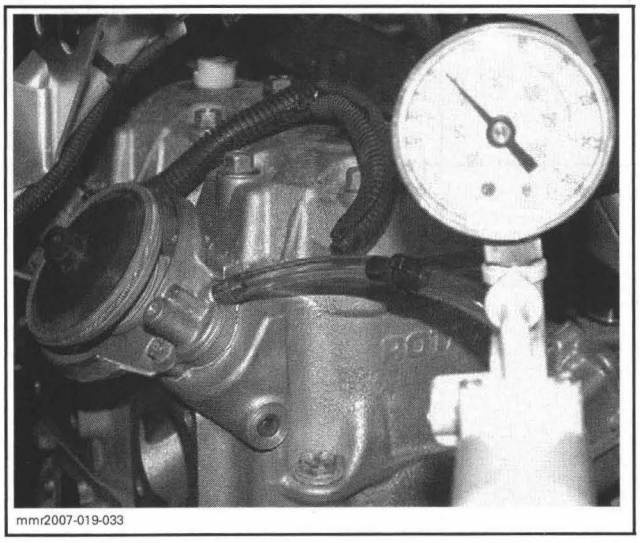

mmr2007-019-033

Then, apply vacuum. Piston should fully lower. Otherwise or if it rises rather quickly, check bellow and seals inside RAVE valve.

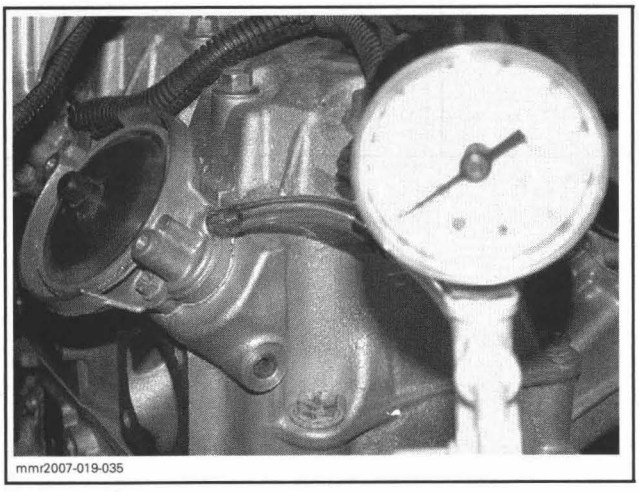

mmr2007-019-035

For check valves and solenoids leak tests, refer to *3D SOLENOIDS AND CHECK VALVES* in this section.

3D RAVE Valves Removal

Remove LH side panel.

Remove tool kit support located on drive belt guard.

Remove 3D RAVE valve cover **no. 4** by removing screws **no. 5**.

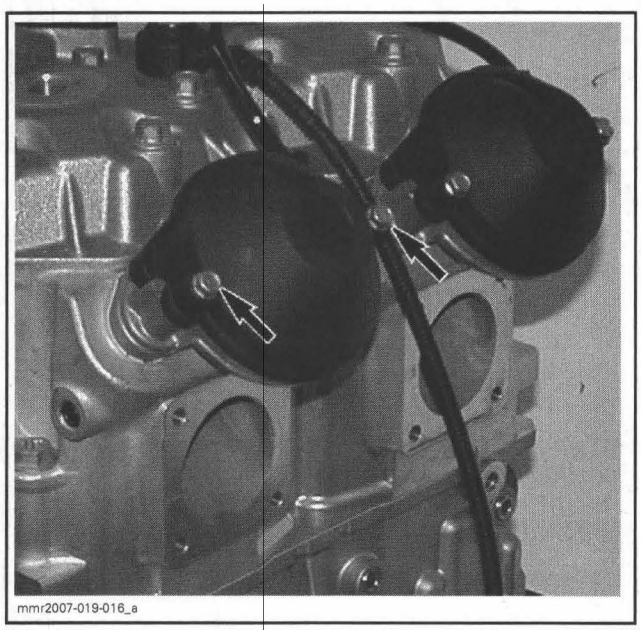
mmr2007-019-016_a

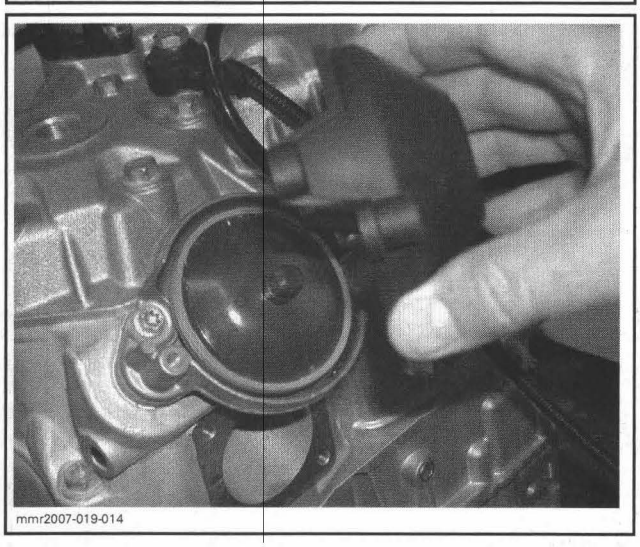
mmr2007-019-014

Remove screws **no. 8**.

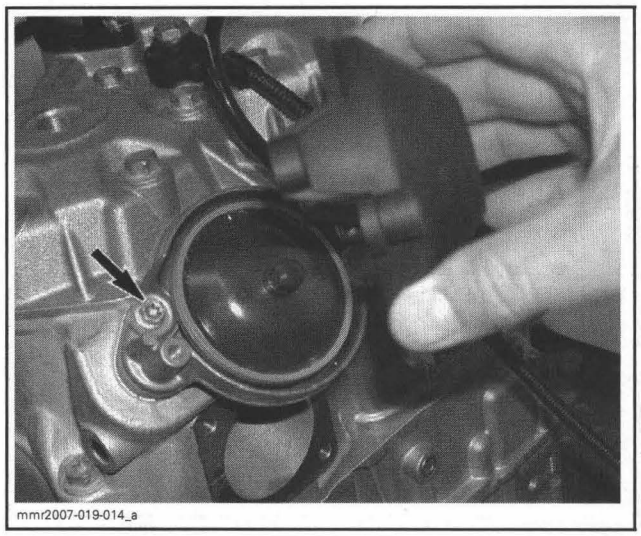
mmr2007-019-014_a

Pull valve assembly out.

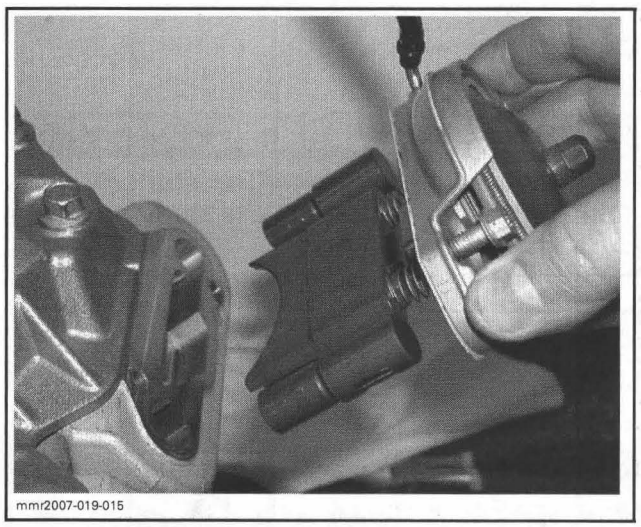
mmr2007-019-015

NOTE: Be careful not to loose springs underneath housing.

3D RAVE Valve Disassembly

Carefully remove spring **no. 12** retaining bellow **no. 10** to valve piston.


mmr2007-019-026

TYPICAL

Free bellow from valve piston.

Carefully unscrew valve piston then remove compression spring.

⚠ WARNING

Firmly hold valve piston. The compression spring no. 7 inside the valve is applying pressure against the piston.

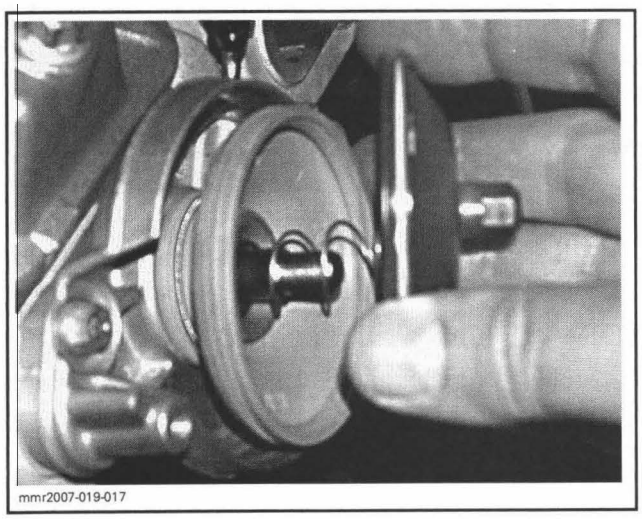
mmr2007-019-017

TYPICAL

Carefully remove bellow **no. 10** from valve housing **no. 6**.

If oil is found in housing area, replace seals.

Extract RAVE valve from housing.

To remove seals, carefully pry them out.

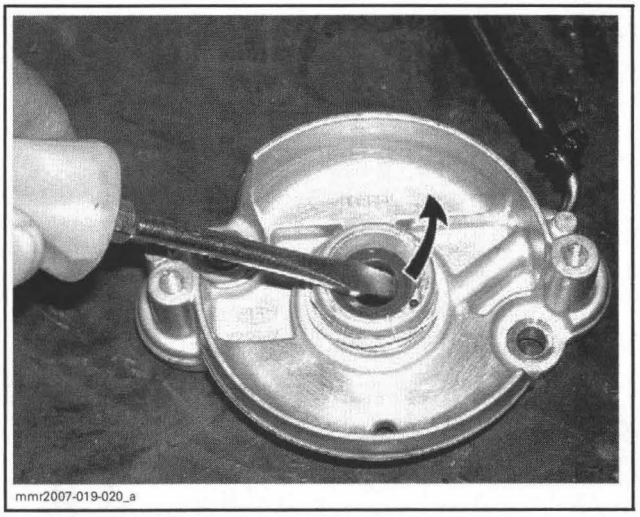
mmr2007-019-020_a

3D RAVE Valve Cleaning

Clean carbon deposits. Cleaning intervals depend upon the user's riding style and the quality of the oil used.

BRP suggests annual cleaning of the valve. If a customer uses lower quality oil than recommended, more frequent cleaning may be required.

No special solvents or cleaners are required when cleaning the valve.

3D RAVE Valve Inspection

Check valves for breakage.

Check valves for wear at sliding points and straightness.

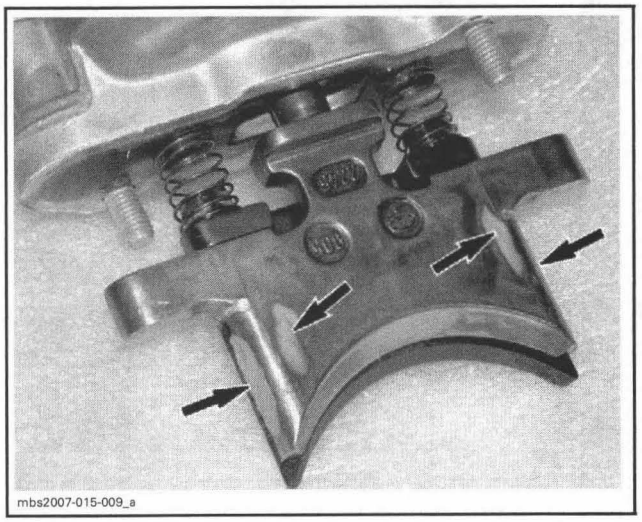
mbs2007-015-009_a

SIGNS OF WEAR

Check spring condition and straightness.

NOTE: Oil dripping from draining hole indicates a loosen spring or damaged bellows.

Check for cracked, dried or perforated bellows **no. 10**.

NOTE: Make sure hoses are not leaking, kinked or damaged.

3D RAVE Valve Assembly

Position parts as per illustrations.

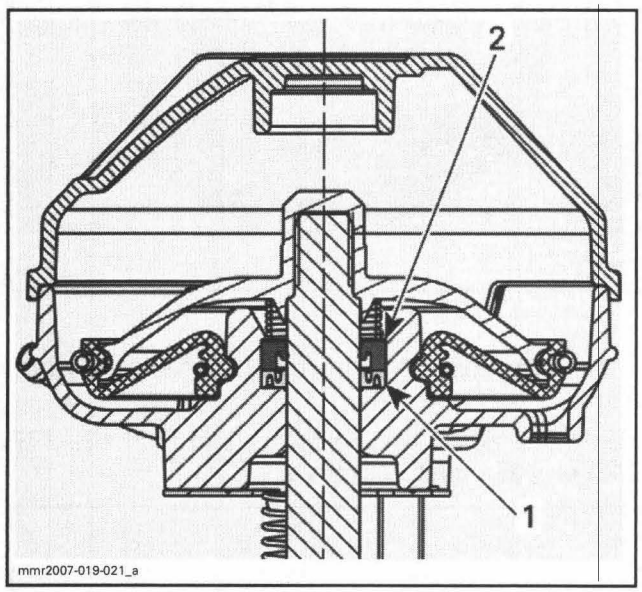

1. *Oil seal*
2. *Gasket ring*

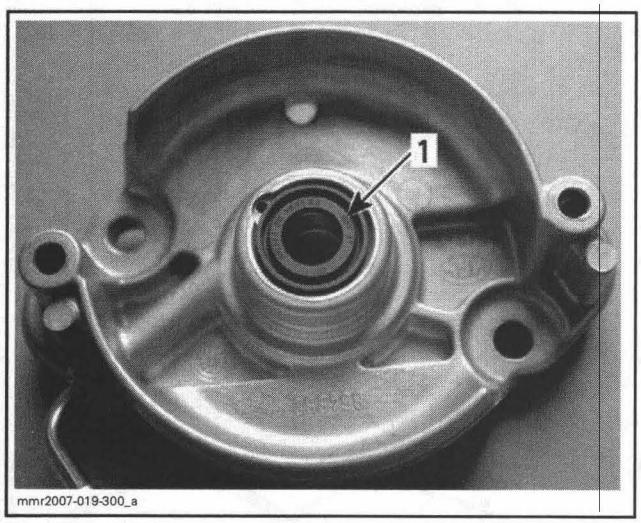

1. *Lettering of oil seal on top*

Use an appropriate pusher to reinstall seals.

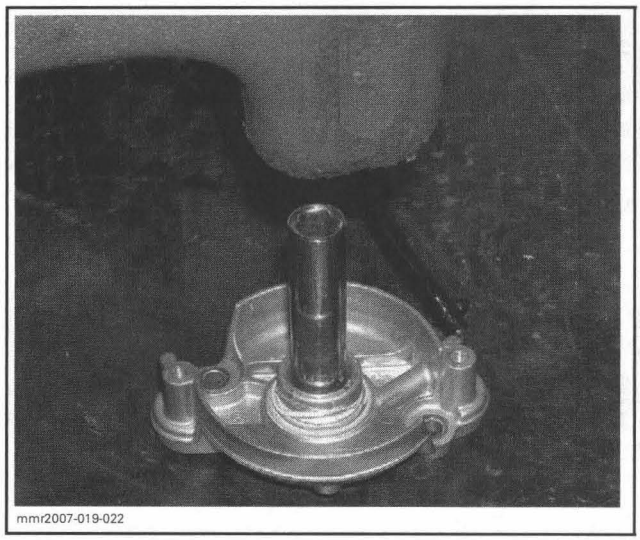

Assemble together the main and side valves.

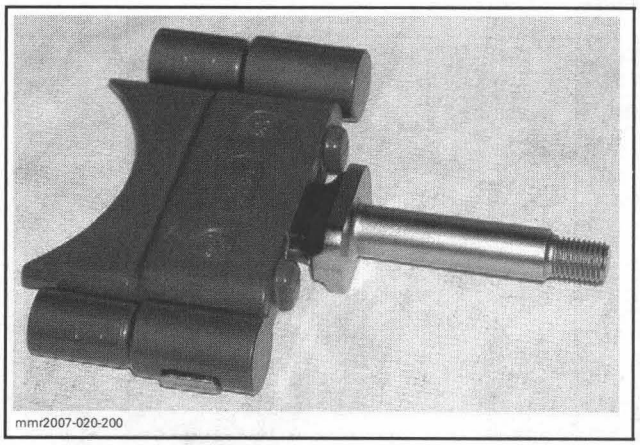

Insert valves together in cylinder. Install gasket.

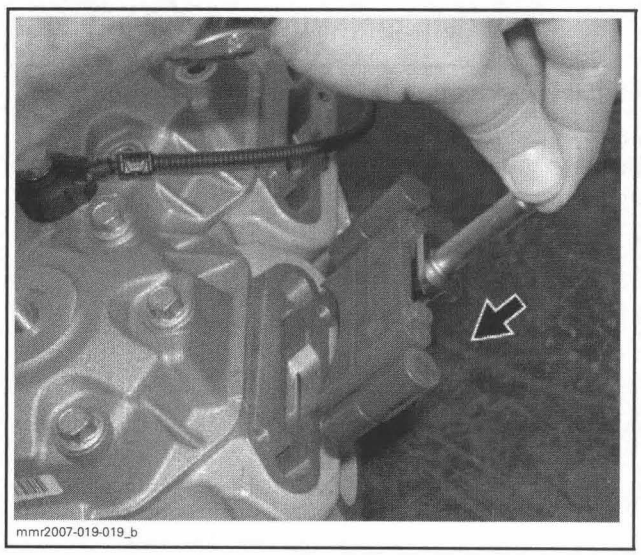

Align springs on stud ends of valves.

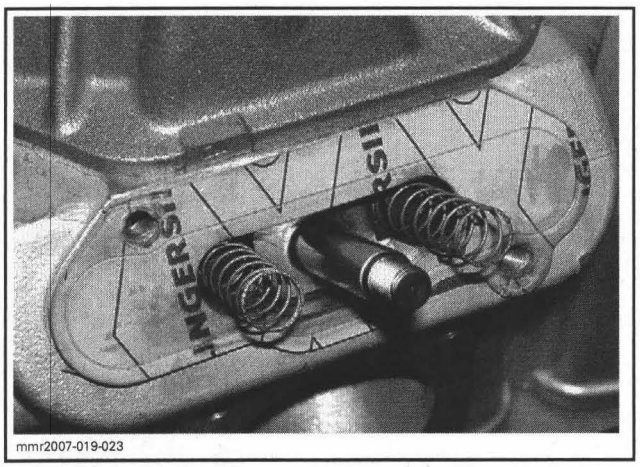
mmr2007-019-023

Apply Molykote G-n (P/N 420 297 433) to valve shaft and on seals in housing.

Install housing and carefully align springs on stud ends of housing.

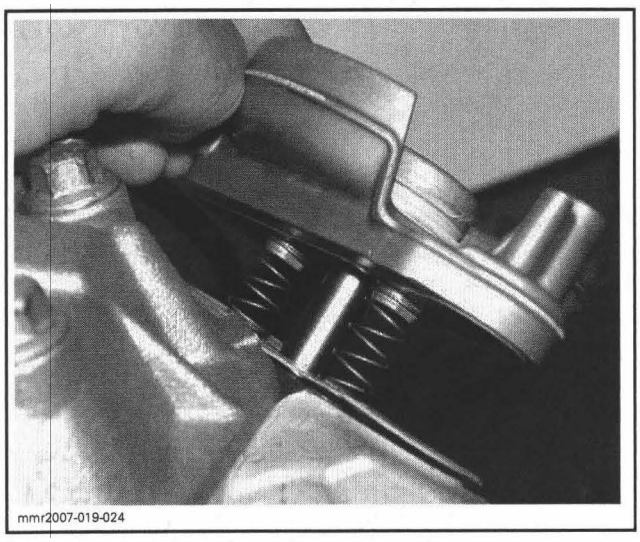
mmr2007-019-024

Install lower spring **no. 14** on bellow.

Apply Drei Bond sealing compound (P/N 420 297 906) on the bellow lower rib, then install bellow and spring.

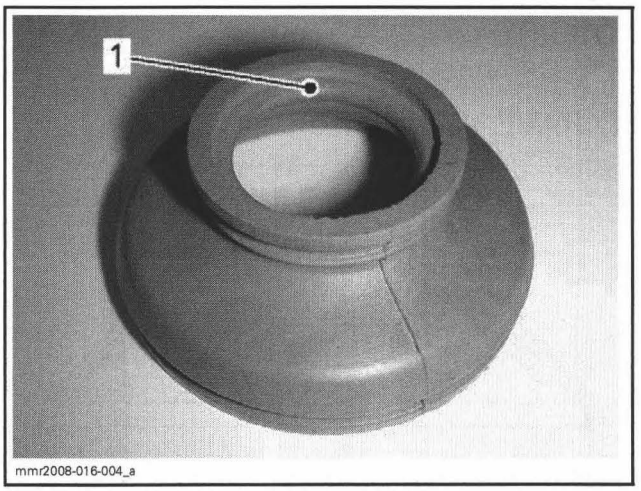

mmr2008-016-004_a

1. Apply Drei Bond here

Install compression spring **no. 7** then tighten valve piston.

Apply Drei Bond sealing compound (P/N 420 297 906) on valve piston groove.

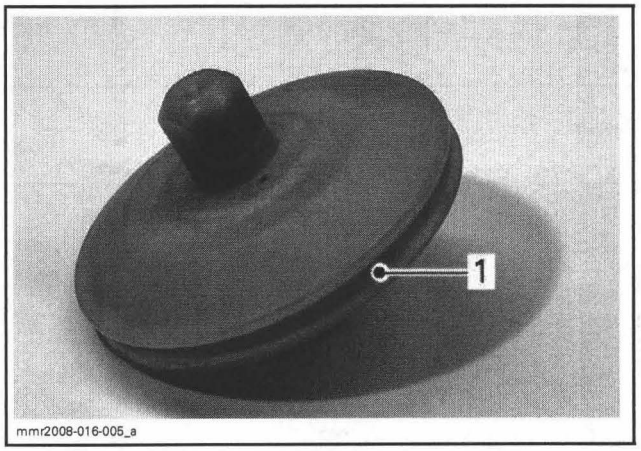

mmr2008-016-005_a

1. Apply Drei Bond here

position bellow on valve piston then secure top spring **no. 12** as follows.

Attach a locking tie to spring.

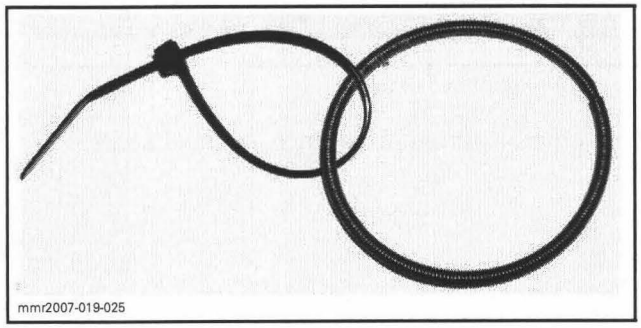
mmr2007-019-025

Block valve piston with a suitable socket.

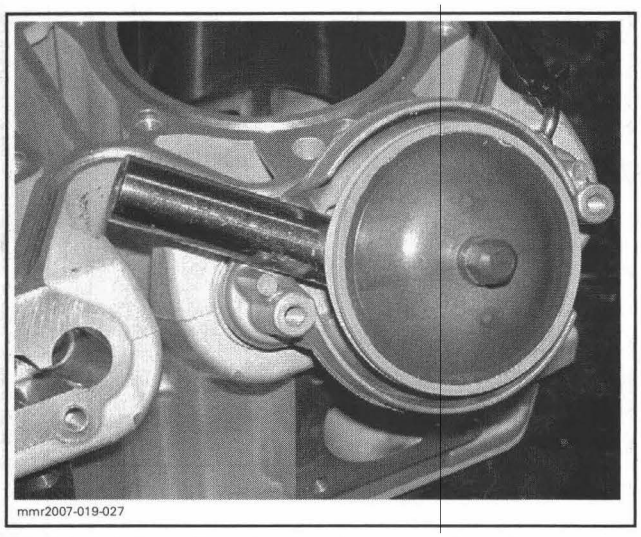
mmr2007-019-027

Position joint of spring under your thumb.

Hold spring with your thumb while sliding spring on the other side using the locking tie.

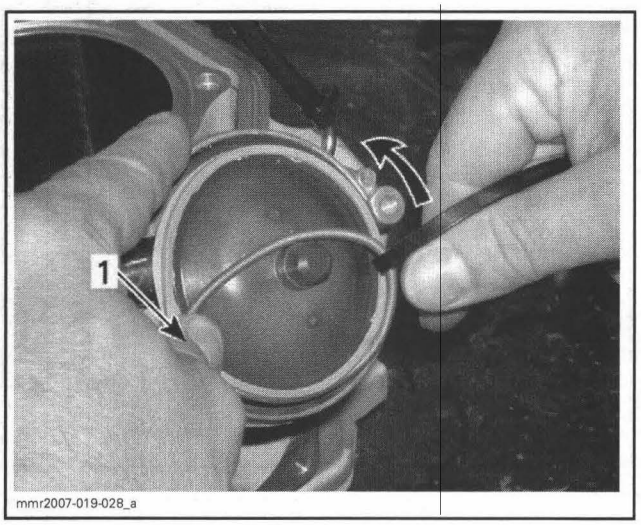

mmr2007-019-028_a

1. Joint of spring under thumb

Continue sliding locking tie all around the edge of valve piston.

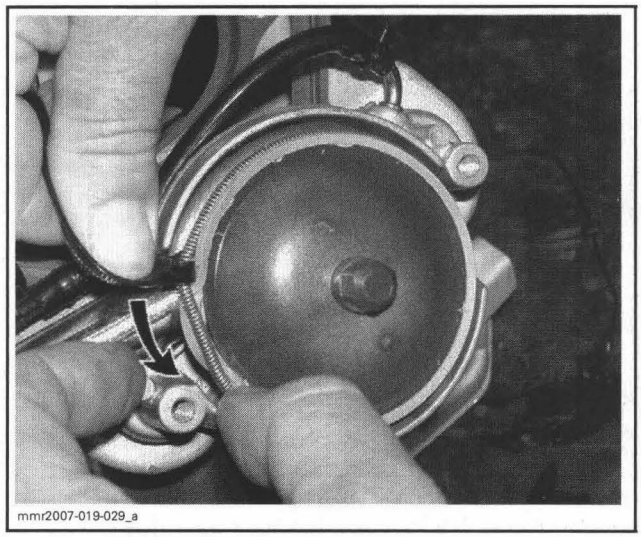
mmr2007-019-029_a

NOTE: Take care there is no strain in the bellow that could apply some bending force or torsion to the 3D RAVE valve. That may contribute to a RAVE valve jam.

Push and pull valve piston to make sure it moves freely.

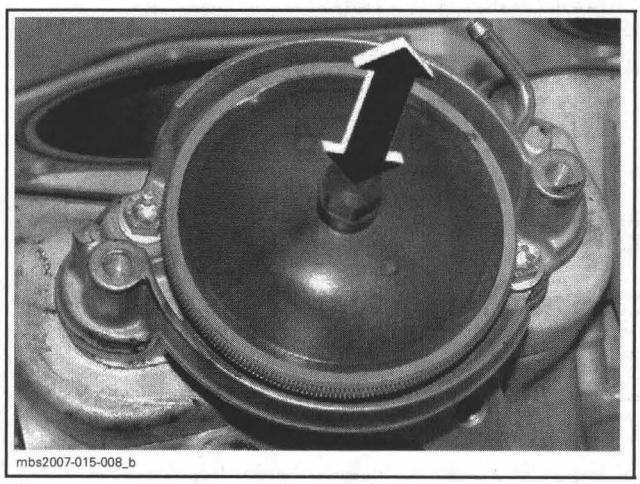
mbs2007-015-008_b

When installing valve assembly in its housing, center valve horizontally and longitudinally then hand tighten screws.

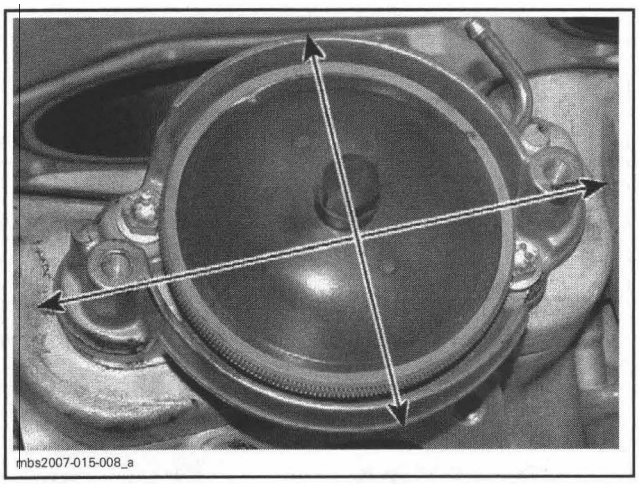

Tighten screws and check valve for free movement again. If some friction is felt, slightly loosen screws and readjust housing then retighten screws.

Repeat the process until a free movement is obtained.

Start engine and recheck RAVE system operation.

Reinstall remaining parts.

CHECK VALVES (3D RAVE VALVES)

Check Valve Leak Test

Disconnect check valve.

Install test pump as shown.

Pressurize check valve to 5 PSI (34 kPa).

– Valve should stand pressure.

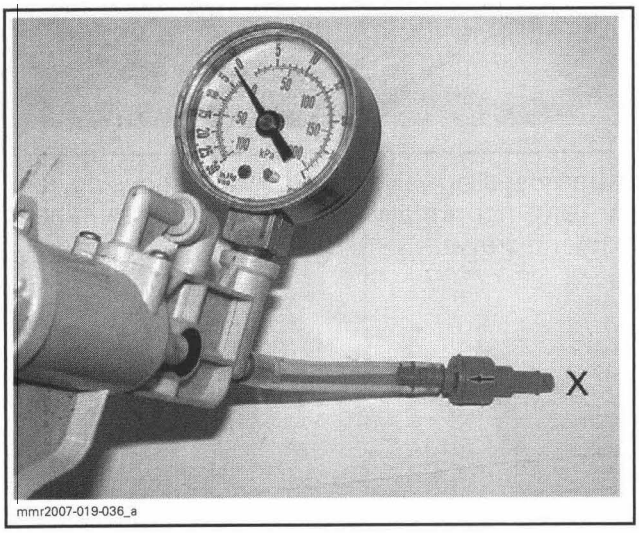

Install test pump in the opposite side.

Pressurize check valve.

– Air should flow freely.

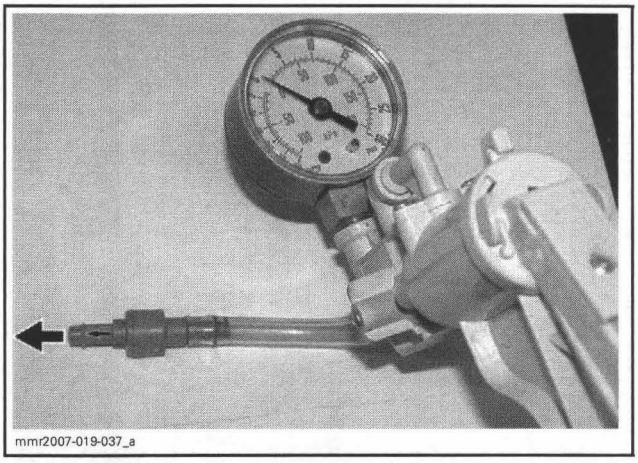

Replace valve if any test failed.

Check Valve Installation

Ensure to reinstall all check valves in the proper direction.

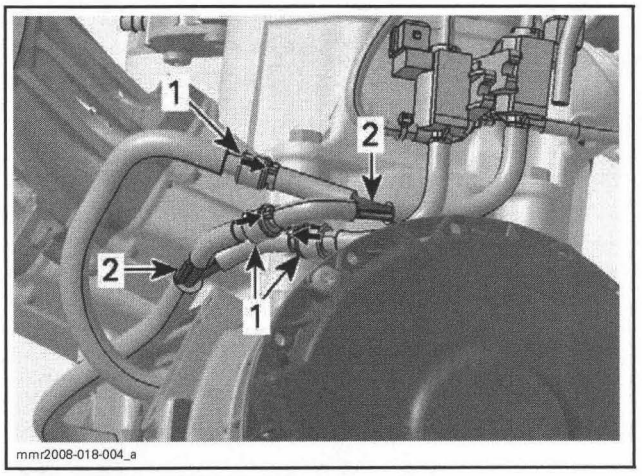

CHECK VALVE ORIENTATION
1. *Arrows on check valves*
2. *Arrows on Y-fittings*

SOLENOIDS (3D RAVE VALVES)

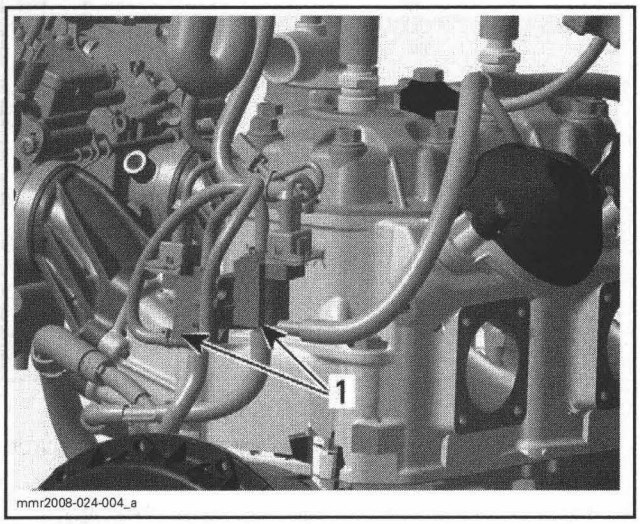

TYPICAL
1. RAVE solenoids

NOTE: First ensure the problem is not related with tubes connection and RAVE valves themselves.

Solenoid Test with B.U.D.S.

Refer to *COMMUNICATION TOOLS/B.U.D.S. SOFTWARE* for proper connection to vehicle.

Using B.U.D.S. software, energize **RAVE solenoids** from **Activation** tab.

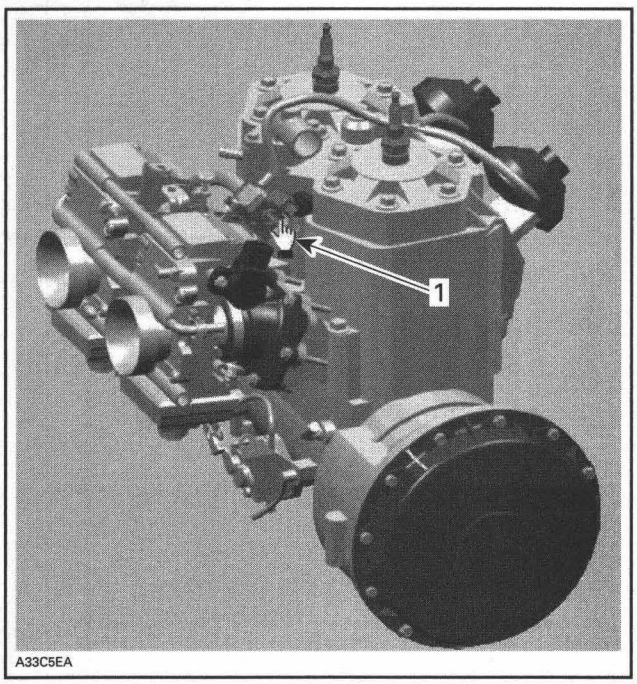

TYPICAL
1. Activate here

This will validate the RAVE solenoid mechanical and electrical operation.

If the solenoid does not work, proceed with the voltage test.

Solenoid Leak Test

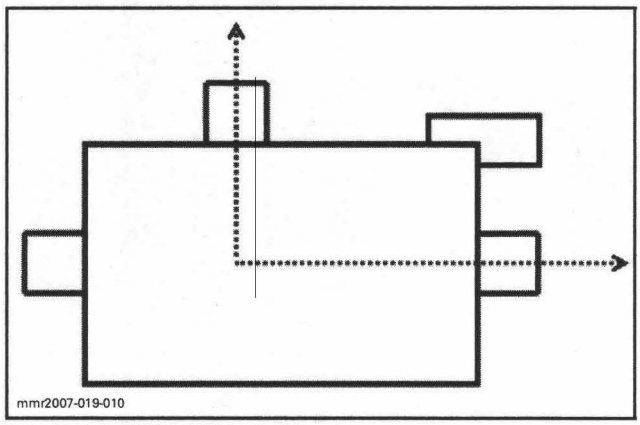

SOLENOID OPERATION (OFF)

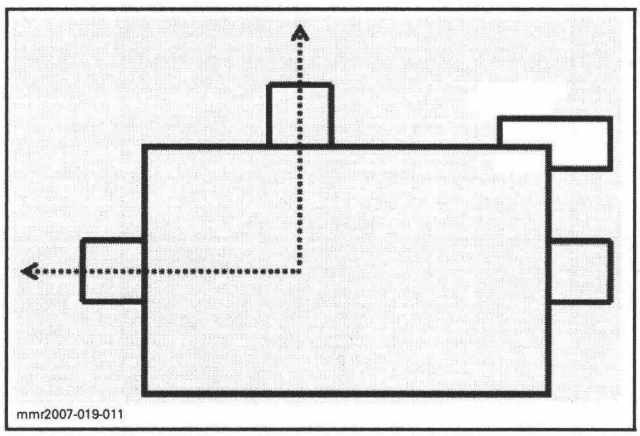

SOLENOID OPERATION (ON)

NOTE: Test each solenoid individually.

Unplug supply hose from solenoid.

Install test pump on solenoid nipple.

Supply 12 Vdc to solenoid terminals. Ensure to respect polarity.

Pressurize solenoid.

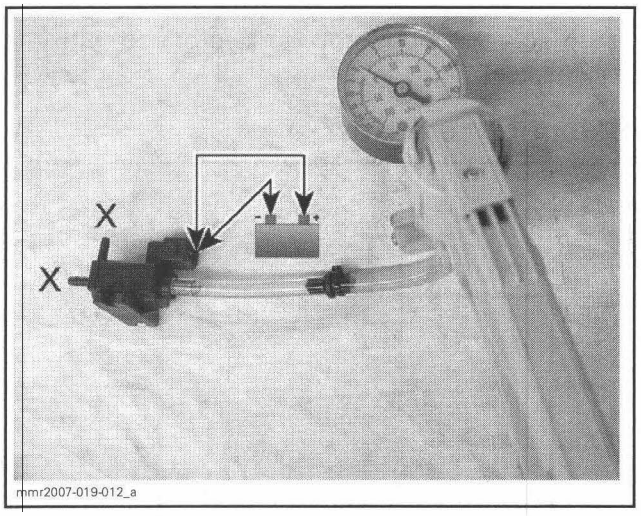

mmr2007-019-012_a

TEST PRESSURE
69 - 103 kPa (10 - 15 PSI)

Wait some time to see if pressure drops:
- If pressure does not build up or drops, replace solenoid.
- If pressure is maintained, continue testing.

Disconnect solenoid. Pressure should evacuate through upper nipple.

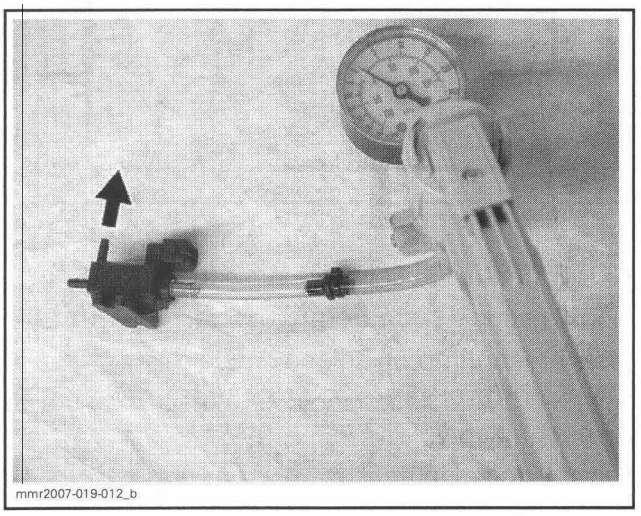
mmr2007-019-012_b

Unplug outlet hose from solenoid.

Install test pump on solenoid nipple. Pressurize to the same pressure as before.

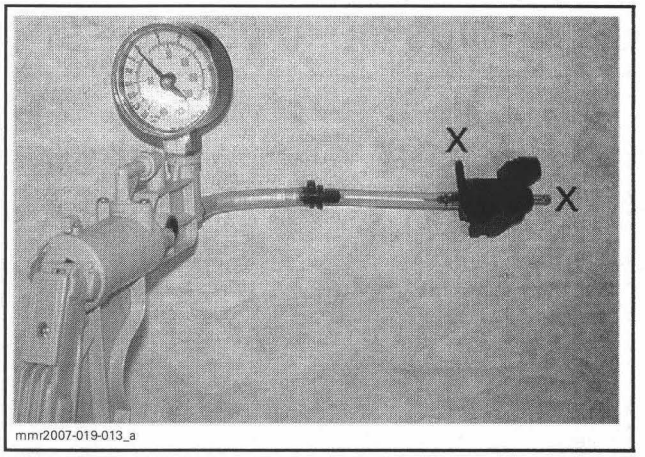

mmr2007-019-013_a

Wait some time to see if pressure drops:
- If pressure does not build up or drops, replace solenoid.
- If pressure is maintained, continue testing.

Supply 12 Vdc to solenoid terminals. Ensure to respect polarity.

Pressure should evacuate through upper nipple.

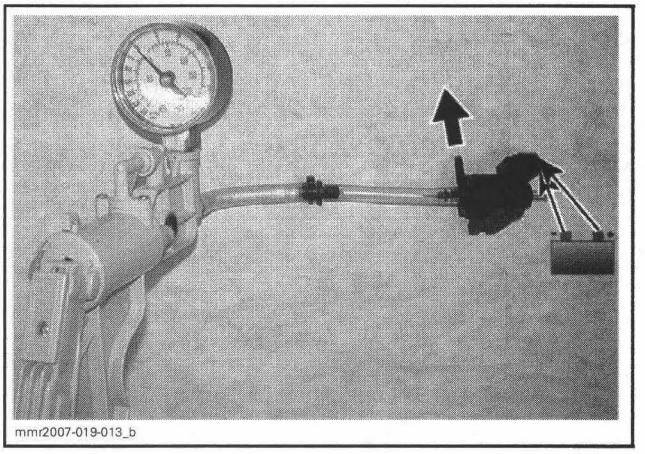
mmr2007-019-013_b

If any test failed, replace solenoid.

Solenoid Input Voltage Test

Remove muffler. Refer to *EXHAUST SYSTEM.*

Remove the acoustic panel.

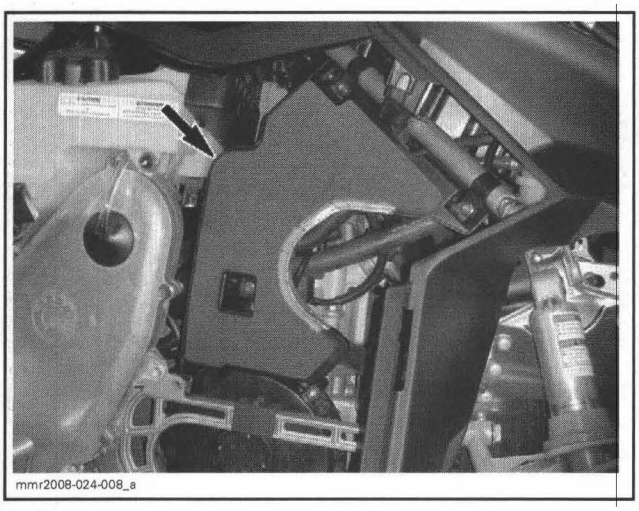
mmr2008-024-008_a

Disconnect the connector from the solenoid.

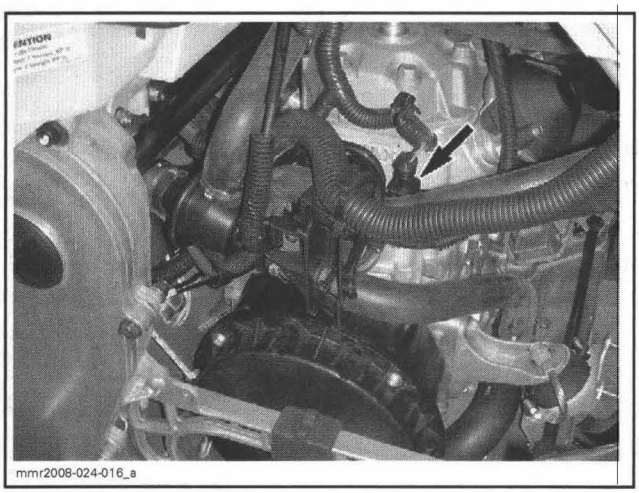
mmr2008-024-016_a

Measure voltage on connector as follows.

TEST PROBE		MEASUREMENT
Pin 2 (solenoid connector)	Engine ground	Battery voltage

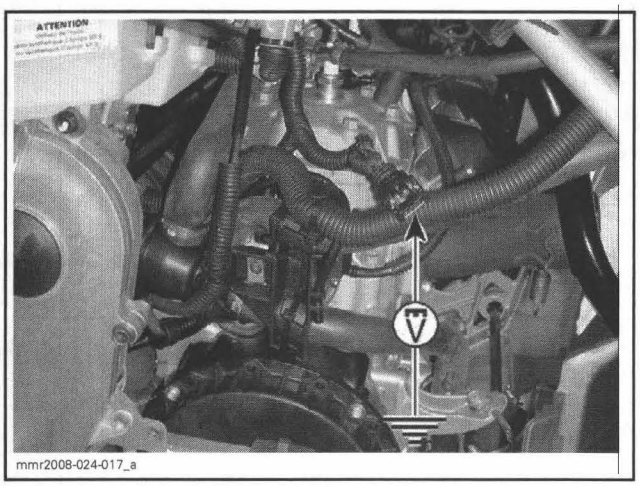
mmr2008-024-017_a

If reading is not as per specification perform the *SOLENOID CIRCUIT TEST.*

Solenoid Circuit Test

Disconnect ECM connector.

Measure wiring resistance as follows.

SOLENOID	SOLENOID CONNECTOR PIN	ECM CONNECTOR PIN	RESISTANCE
VACUUM	1	DA-13	Close to 0 Ω
PRESSURE	1	DA-30	Close to 0 Ω

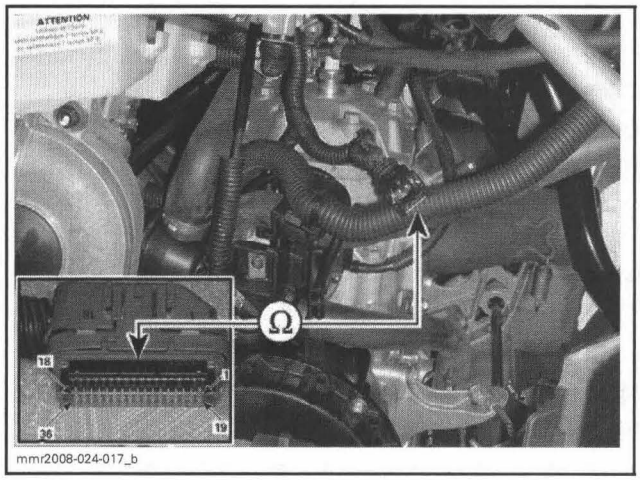
mmr2008-024-017_b

If the solenoid circuit test failed, repair/replace wiring/connectors.

Solenoid Replacement

Remove muffler. Refer to *EXHAUST SYSTEM.*

Remove the acoustic panel.

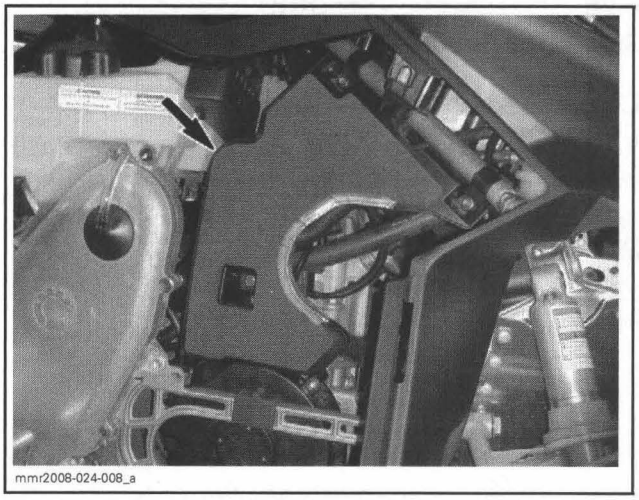
mmr2008-024-008_a

To replace the RAVE solenoid, do the following:

NOTE: Mark hose locations of RAVE solenoid for reinstallation.

- Disconnect solenoid.
- Remove solenoid screws and solenoid.

For installation, reverse the removal procedure.

CYLINDER HEAD

Cylinder Head Removal

Remove Tool kit support and drive belt guard.

Drain coolant, refer to *COOLING SYSTEM*.

Remove spark plugs.

Remove the knock sensor **no. 19**.

Disconnect the temperature sensor connector.

Unplug coolant hoses from upper coolant socket **no. 20**.

Unplug carburetor heater inlet hose from cylinder head.

Unscrew all cylinder head screws **no. 21**.

Remove the cylinder head **no. 2**.

Cylinder Head Inspection

Check cylinder head **no. 2** for cracks or other damages. Replace if necessary.

Cylinder Head Warpage

NOTE: Refer to *ENGINE MEASUREMENT* for the measurement procedures.

ENGINE	MAXIMUM
797	0.05 mm (.002 in) per 50 mm (2 in) of surface
	0.5 mm (.020 in) for total length of cylinder head

Cylinder Head Cleaning

Scrape off carbon formation from cylinder head.

Cylinder Head Installation

Install new rubber ring and round O-rings on each cylinder.

As a first step, torque screws **no. 21** following the illustrated sequence to 15 N•m (133 lbf•**in**).

Then, torque screws **no. 21** following the same sequence to 29 N•m (21 lbf•ft).

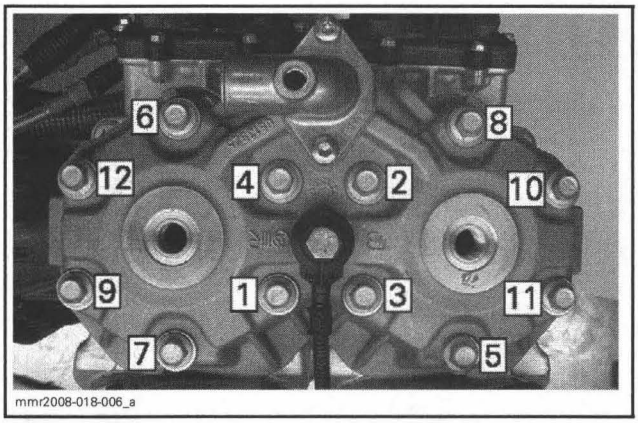

NOTE: Reinstall knock sensor. Refer to *ENGINE MANAGEMENT (800R)* section.

CYLINDER BLOCK

Cylinder Block Removal

Remove cylinder head **no. 2** as explained above.

Remove muffler, tune pipe and exhaust manifold, refer to *EXHAUST SYSTEM*.

Remove acoustic panel.

Remove driven pulley and the counter shaft bearing support, refer to *DRIVE SYSTEM/BRAKE*.

Disconnect carburetors from intake adapters and set aside.

Remove the clamp that supports the RAVE valve hose to the intake adapter on MAG side.

Unplug RAVE valve hose from pressure solenoid.

Unscrew cylinder screws **no. 22** and **no. 23** then remove the cylinder block **no. 3**.

Cylinder Block Inspection

Remove RAVE valves, refer to *3D RAVE VALVES REMOVAL* in this section.

Remove reed valves, refer to *REED VALVES REMOVAL* in this section.

Check cylinders for cracks and scoring on the top and bottom of cylinders. Replace if necessary.

NOTE: Refer to *ENGINE MEASUREMENT* for the measurement procedures.

Cylinder Taper

ENGINE	MAXIMUM
797	0.05 mm (.002 in)

Cylinder Out of Round

ENGINE	MAXIMUM
797	0.08 mm (.003 in)

Cylinder Block Cleaning

Scrape off carbon formation from exhaust ports.

Cylinder Block Installation

Install dowel pins in crankcase holes.

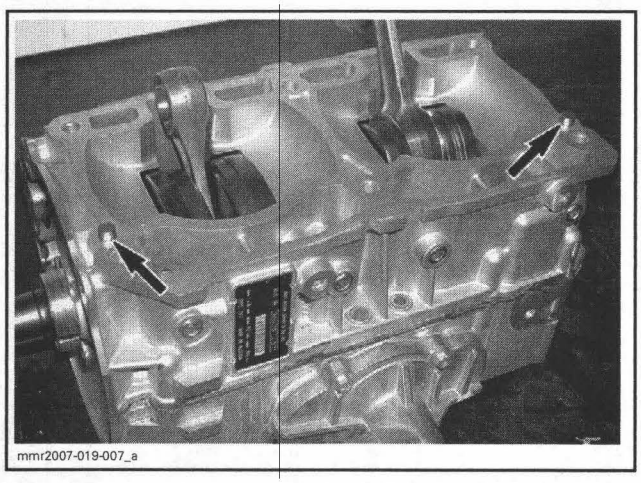
mmr2007-019-007_a

Install a new base gasket of the same thickness as the old one.

Identify gasket thickness by the identification holes on the gasket surface.

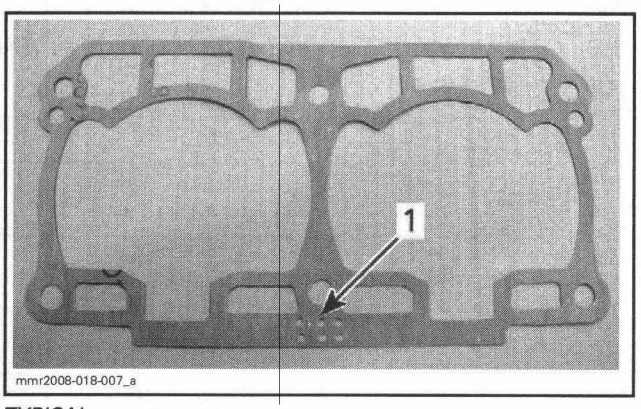

mmr2008-018-007_a

TYPICAL
1. Identification holes

NOTE: The general procedure is to install a new gasket of the same thickness. However if you do not know the thickness of the gasket that was on the engine or if a crankcase and/or crankshaft repair was involved, measure the combustion chamber volume to choose the right gasket, refer to *ENGINE MEASUREMENT*.

CAUTION: Always install a gasket of the proper thickness. Failure to do so may cause detonation and severe engine damage.

Install pistons as explained below.

Before inserting piston in cylinder, lubricate the cylinder with new injection oil or equivalent.

Carefully slide cylinder block down while squeezing piston rings to allow cylinder insertion. Proceed one piston at a time, the help of an assistant may be required. Do not tighten cylinder block yet.

NOTE: Carefully clean screws before reinstallation, specifically under screw head.

As a first step, torque screws **no. 22** following the illustrated sequence to 25 N•m (18 lbf•ft).

Then, torque screws **no. 22** following the same sequence to 50 N•m (37 lbf•ft).

NOTE: When a torquing sequence is done, re-torque the middle screws.

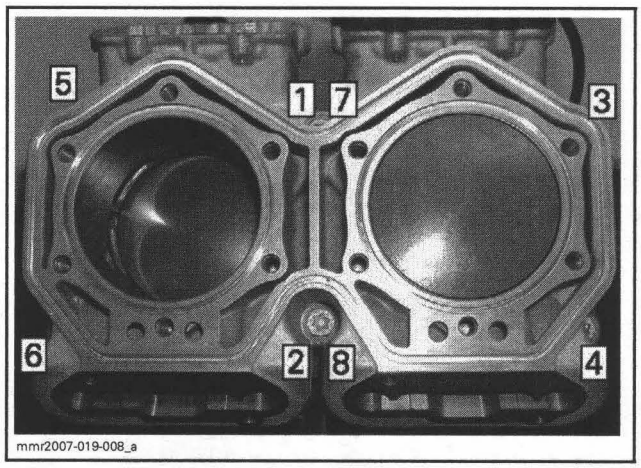

mmr2007-019-008_a

Install all other removed parts.

PISTON

Piston Removal

Remove cylinder block, as explained above.

Place a clean cloth or rubber pad (P/N 529 023 400) over crankcase. Then with a pointed tool inserted in piston notch, remove both circlips **no. 25** from piston **no. 26**.

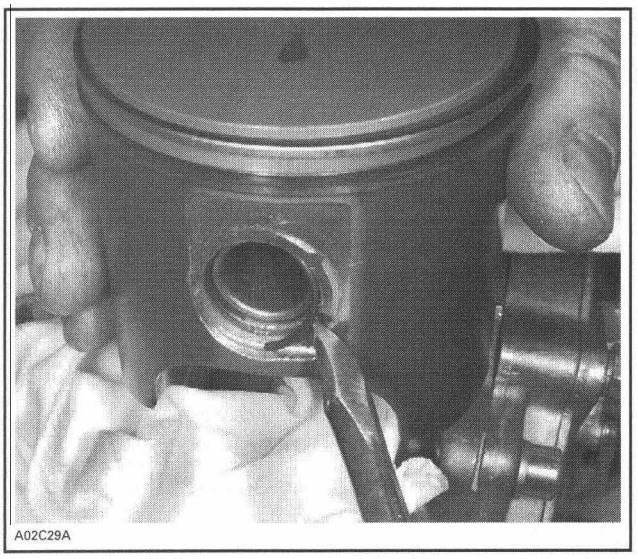
A02C29A

TYPICAL

Push piston pin out of piston.

Remove piston.

Remove bearing.

Piston Inspection

For dimension measurement procedures, refer to *ENGINE MEASUREMENT*.

Piston Cleaning

Scrape off carbon formation from piston dome.

NOTE: The arrow on the piston dome must be visible after cleaning.

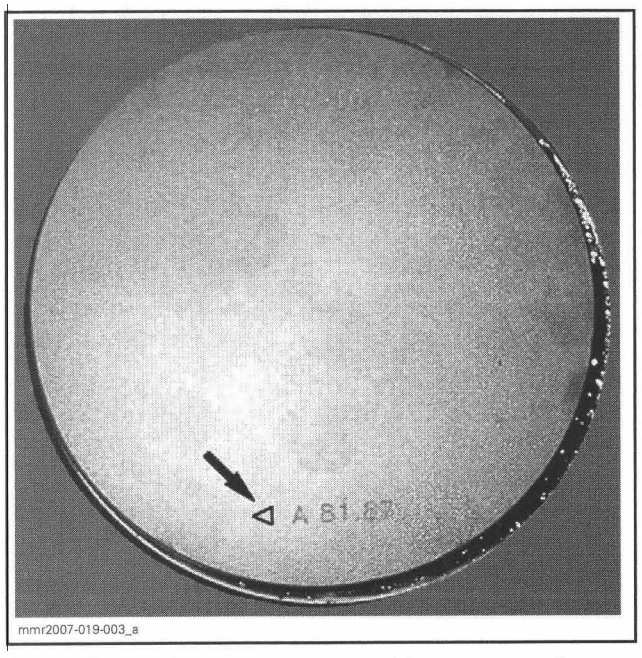
mmr2007-019-003_a

Clean the piston ring groove with a groove cleaner tool or with a piece of broken ring.

Piston Installation

Lubricate needle bearing with injection oil.

Insert bearing into connecting rod.

At assembly, place the pistons over the connecting rods with the arrow on the piston dome facing towards the exhaust port.

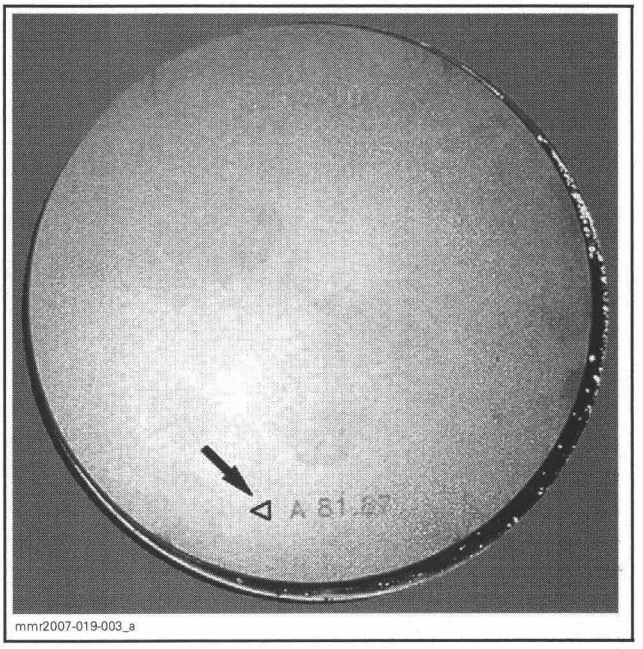
mmr2007-019-003_a

EXHAUST DIRECTION INDICATION

Install piston pin in piston.

CAUTION: Always install new circlips.

Use appropriate piston circlip installer to install mono-hook circlips **no. 25**.

ENGINE	TOOL
797	Piston circlip installer (P/N 529 035 563)

Insert circlip into support so that, when installed in piston groove, the gap will be below the tab (see piston picture below).

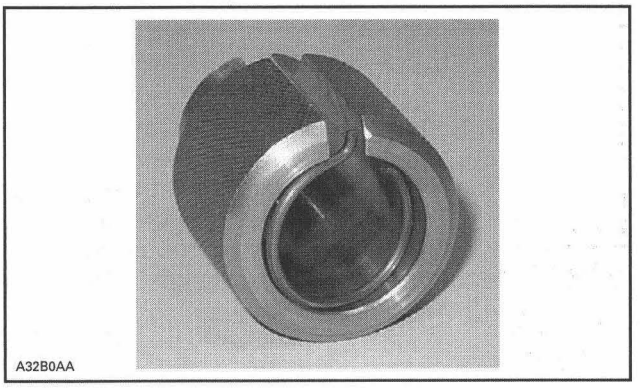
A32B0AA

With round end of pusher, position circlip perpendicularly to the support axis.

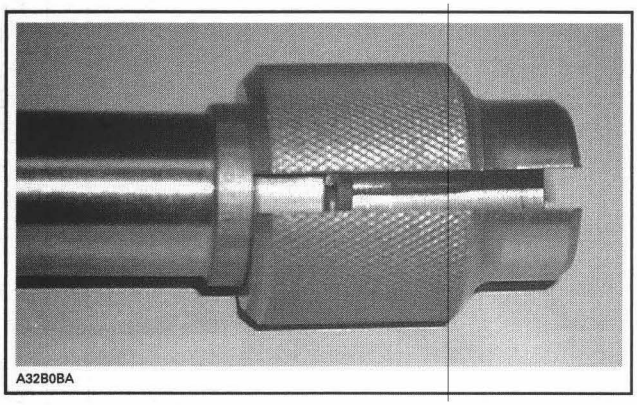

With the other end of the pusher, push circlip into the support groove.

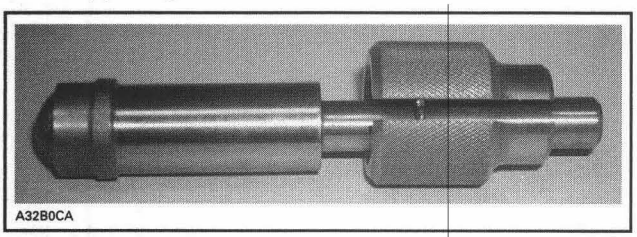

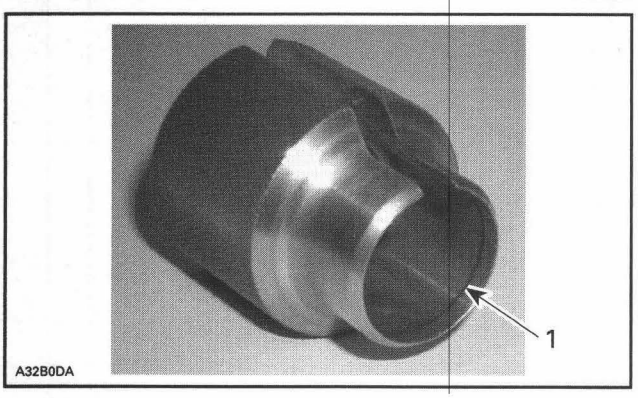

1. Groove

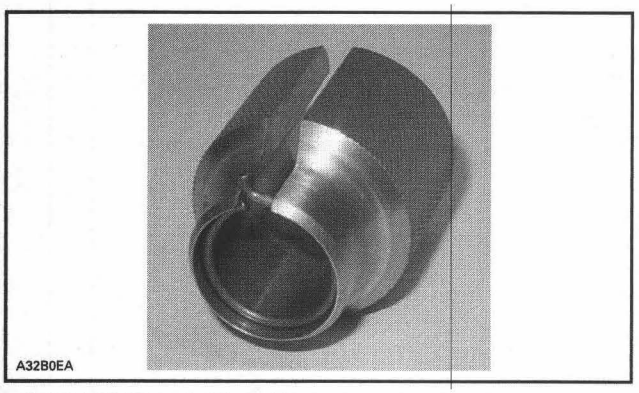

CIRCLIP READY TO BE INSTALLED ON PISTON

Using a plastic hammer, tap pusher to put the new circlip in place.

NOTE: Make sure to install new circlips with the gap below the tab exactly as shown on the following photo.

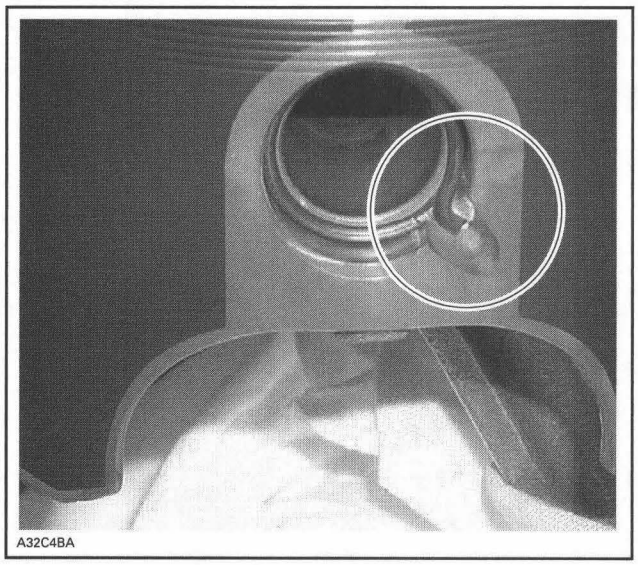

TAB TOWARD TOP

CAUTION: Always install new mono-hook circlips. If circlip installation fails at the first attempt, always retry with a new one.

CAUTION: Circlips must not move freely after installation; if so, replace them.

Install all other removed parts.

BOTTOM END (593)

SERVICE TOOLS

Description	Part Number	Page
bearing installer	259 035 980	149
bearing installer	259 035 990	148
screws	420 840 681	146
crankshaft protector	420 876 552	146
crankshaft protector	420 876 557	146
bearing puller	420 877 635	146
half rings	420 977 479	146
puller ring	420 977 494	146
oil seal pusher	529 035 757	142
oil seal protector	529 035 822	143
Distance gauge	529 035 966	149
Distance gauge	529 035 968	149
bearing heater	529 035 969	147
indicator stick	529 035 970	148
support plate	529 035 976	148
ceramic seal installer	529 036 014	143

SERVICE TOOLS – OTHER SUPPLIER

Description	Part Number	Page
SPX/OTC bearing separator	1124	147
Snap-on bearing separator	CJ 951	147

SERVICE PRODUCTS

Description	Part Number	Page
Isoflex grease	293 550 021	150
XP-S Lube	293 600 016	146
Loctite 767 (antiseize lubricant)	293 800 070	147
Loctite 5910	293 800 081	144
Loctite Chisel	413 708 500	144
pulley flange cleaner	413 711 809	147

593 Engine

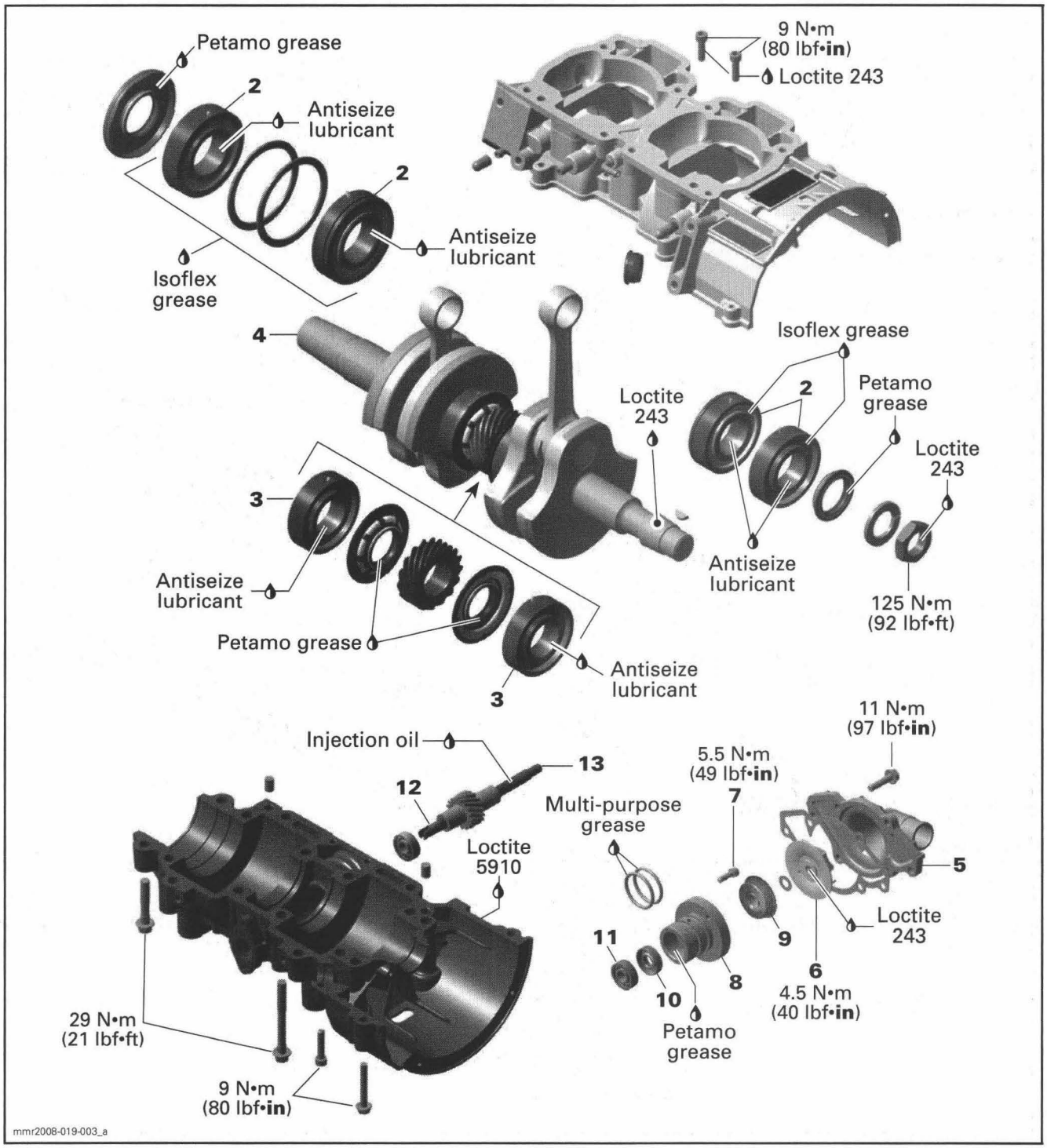
Petamo grease
2
Antiseize lubricant
2
Antiseize lubricant
Isoflex grease
9 N•m (80 lbf•in)
Loctite 243
4
Loctite 243
Isoflex grease
2
Petamo grease
Loctite 243
3
Antiseize lubricant
Antiseize lubricant
125 N•m (92 lbf•ft)
Petamo grease
Antiseize lubricant
3
Injection oil
13
12
Loctite 5910
Multi-purpose grease
5.5 N•m (49 lbf•in)
7
11 N•m (97 lbf•in)
5
Loctite 243
11
10
8
9
6
4.5 N•m (40 lbf•in)
Petamo grease
29 N•m (21 lbf•ft)
9 N•m (80 lbf•in)
mmr2008-019-003_a

593 HO SDI Engine

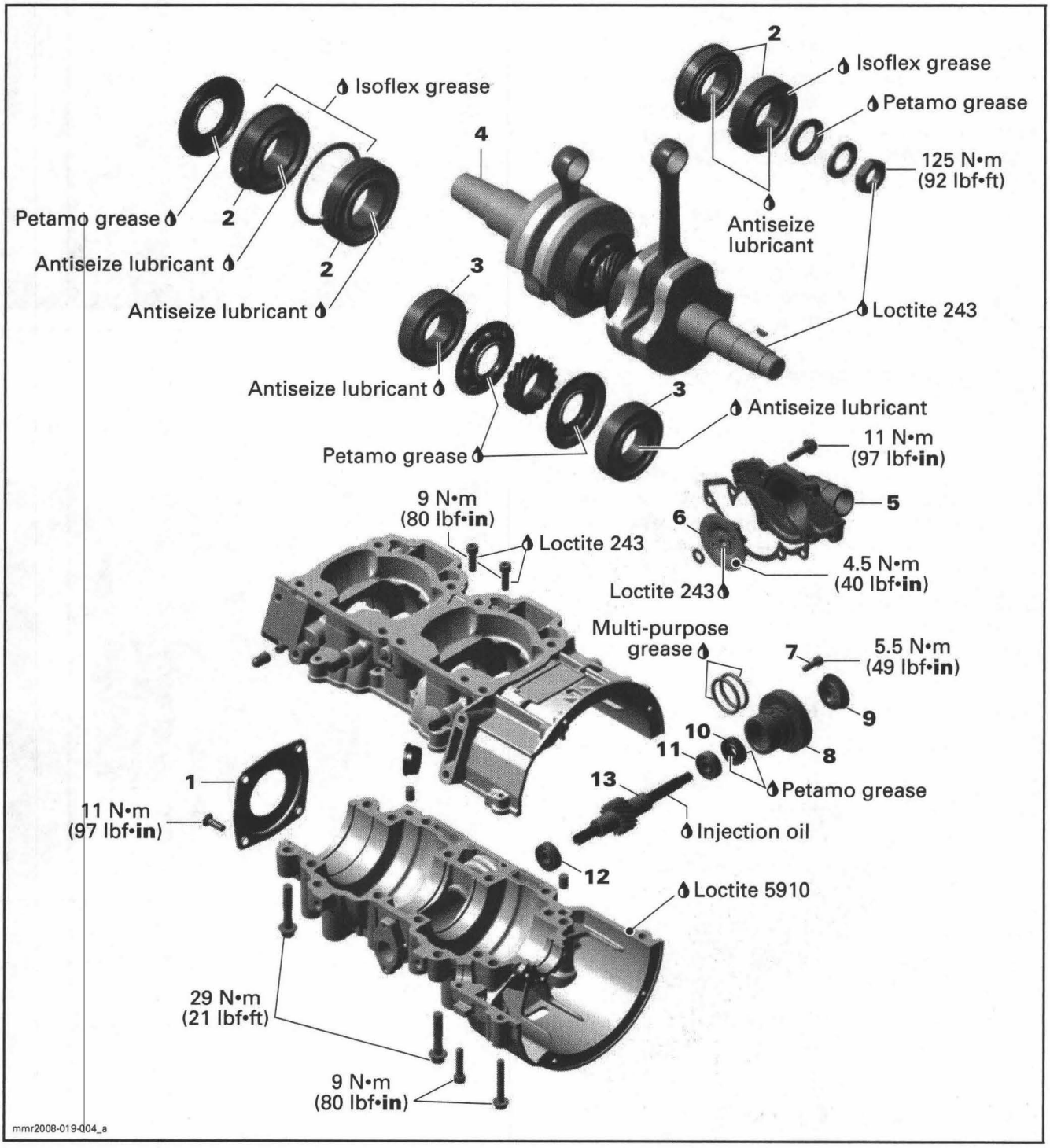

GENERAL

Before completely disassembling the engine, check airtightness. Refer to *ENGINE LEAK TEST.*

All oil seals and gaskets must be discarded and replaced with new ones when crankcase is split.

CAUTION: After rebuilding an engine always observe a break-in period as described in *OPERATOR'S GUIDE.*

During assembly/installation, use torque values and service products as in the exploded view.

Clean threads before applying a threadlocker. Refer to *SELF-LOCKING FASTENERS* and *LOCTITE APPLICATION* at the beginning of this manual for complete procedure.

⚠ WARNING

Torque wrench tightening specifications must be strictly adhered to.
Locking devices (e.g.: locking tabs, elastic stop nuts, self-locking fasteners, cotter pins, etc.) must be replaced with new ones.

PROCEDURES

WATER PUMP

Water Pump Impeller Removal

Engine In Vehicle

Remove hood, bottom pan cover and RH panel refer to the *BODY* section.

Remove tune pipe and muffler, refer to *EXHAUST SYSTEM.*

Remove acoustic panel.

Put a large drain pan under vehicle's bottom pan.

Remove starter, refer to the *STARTING SYSTEM* section.

Refer to *ENGINE OUT OF VEHICLE* to complete procedure.

Engine Out of Vehicle

Remove pump housing **no. 5**.

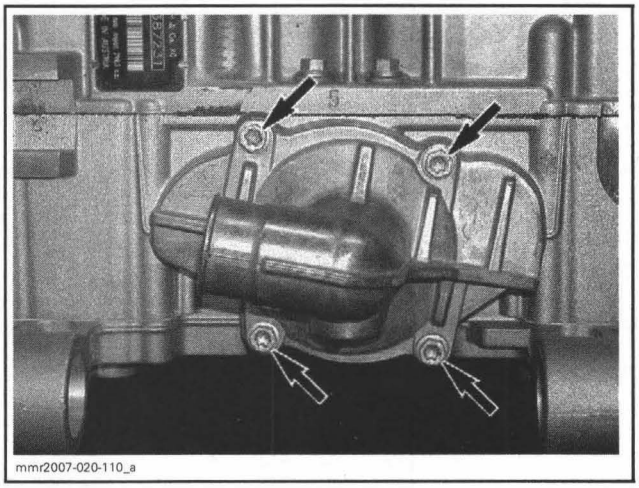
mmr2007-020-110_a

TYPICAL

Remove impeller **no. 6**.

CAUTION: Be careful not to damage impeller fins.

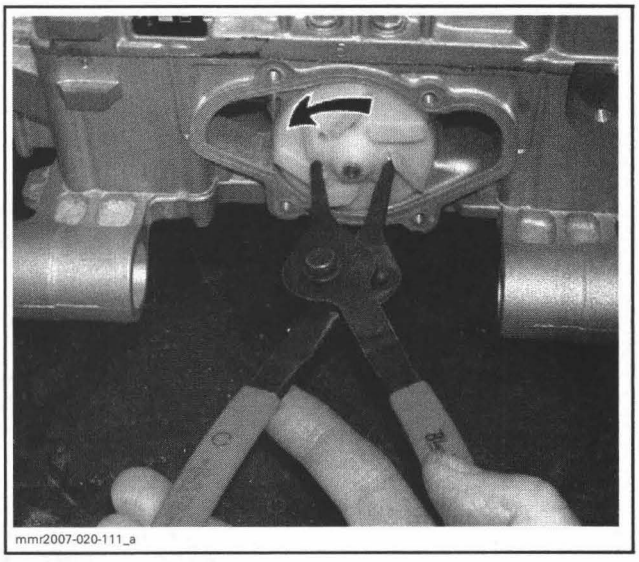
mmr2007-020-111_a

TYPICAL

Clean gasket surfaces of pump housing and crankcase.

Water Pump Impeller Installation

Install a new gasket.

Reverse removal procedure.

Ceramic Seal Replacement

The water/oil pump shaft must be removed to replace the ceramic seal. Refer to *WATER/OIL PUMP SHAFT.*

WATER/OIL PUMP SHAFT

Water/Oil Pump Shaft Removal

NOTE: It is not necessary to split crankcase to pull out shaft.

Remove engine, refer to *ENGINE REMOVAL AND INSTALLATION* section.

Remove oil injection pump.

Remove water pump housing and impeller. Refer to *WATER PUMP*.

Remove bearing housing screws **no. 7**.

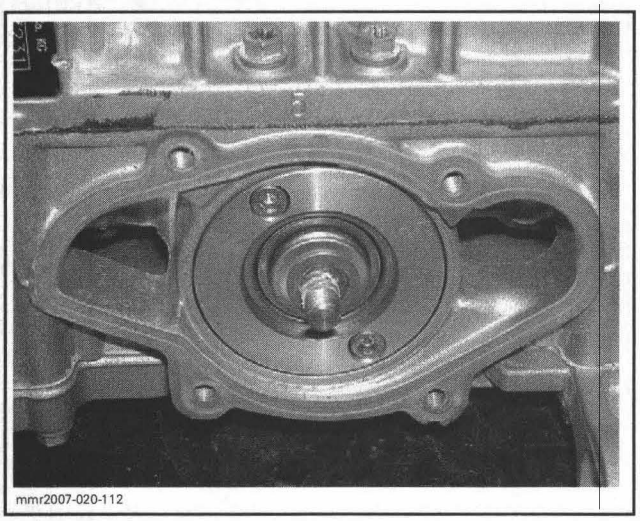
mmr2007-020-112

TYPICAL

From injection oil pump side, push shaft out while turning shaft to release it from worm gear.

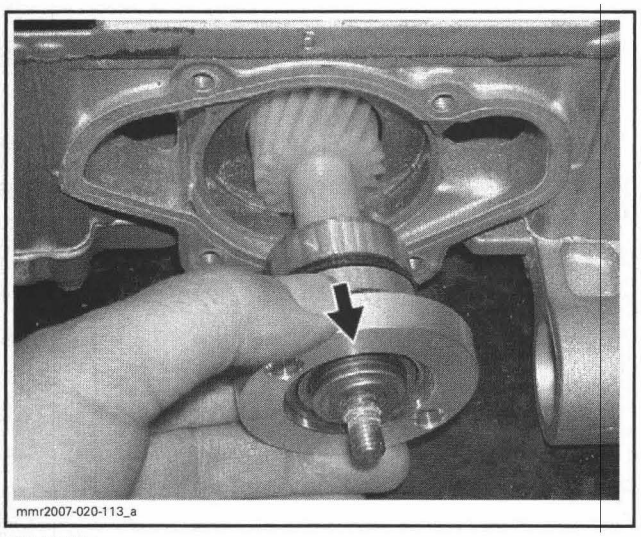
mmr2007-020-113_a

TYPICAL

Water/Oil Pump Shaft Disassembly

CAUTION: Pay attention not to damage the bearing housing no. 8 during disassembly. Marks or other damages will lead to coolant and/or oil leaking.

NOTE: For disassembly/assembly procedure a press is required.

Protect the threads of shaft with a suitable M8 nut. Properly support bearing housing and push shaft out.

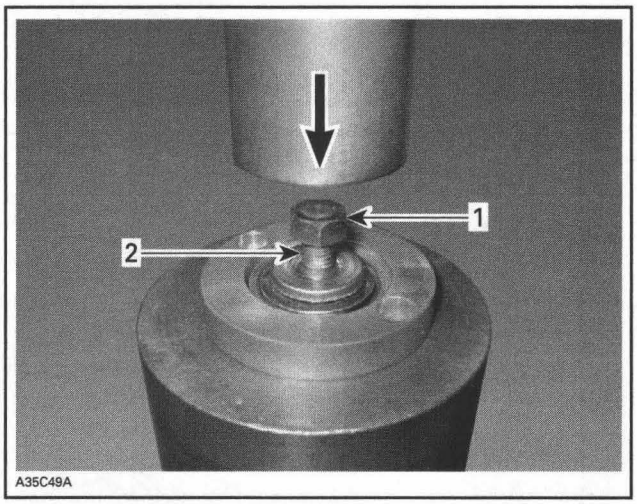

A35C49A

1. *M8 nut*
2. *Shaft*

CAUTION: When removing water/oil pump shaft, always replace ceramic seal no. 9 and oil seal no. 10. Ceramic seal cannot be removed without damage.

Pry inner part of ceramic seal **no. 9** out.

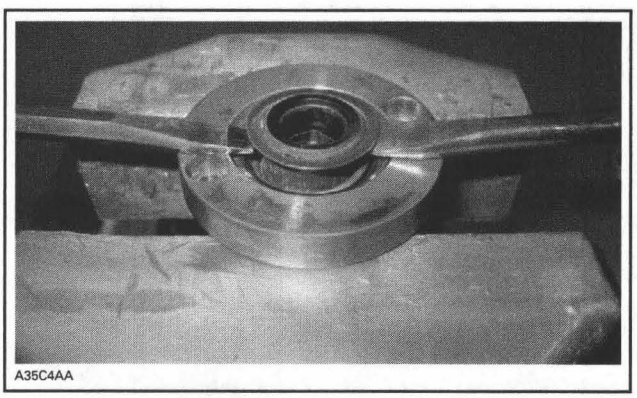
A35C4AA

Extract bearing **no. 11** from the bearing housing using an appropriate pusher.

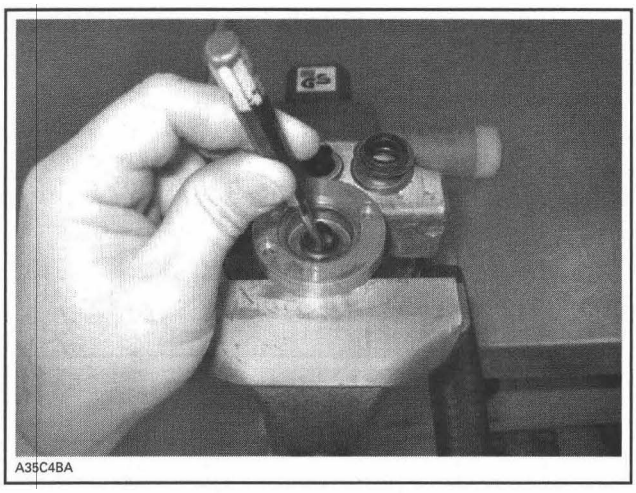
A35C4BA

Push oil seal **no. 10** out.

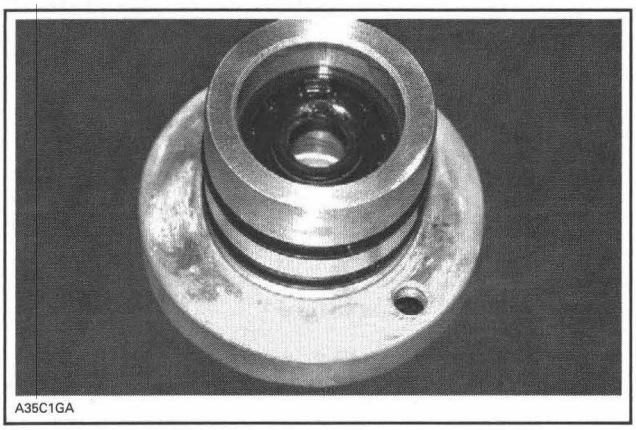
A35C1GA

Carefully press the outer part of ceramic seal out.

NOTE: Use a mandrel with diameter of approximately 16 mm (.63 in).

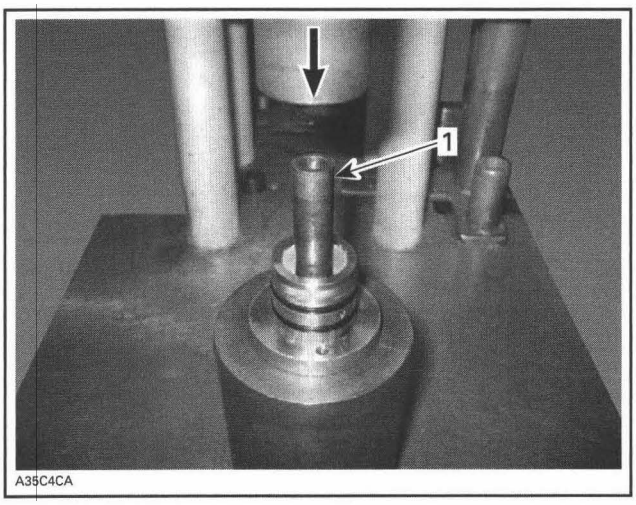

A35C4CA

1. 16 mm (.63 in) mandrel

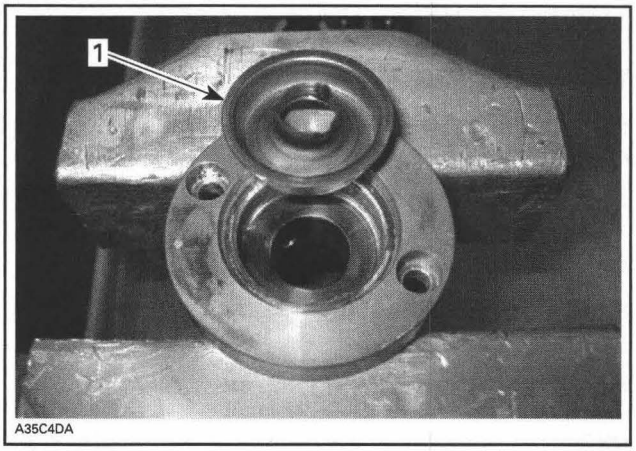

A35C4DA

1. Outer part of ceramic seal

Remove sealant from bearing housing with sand paper no. 180.

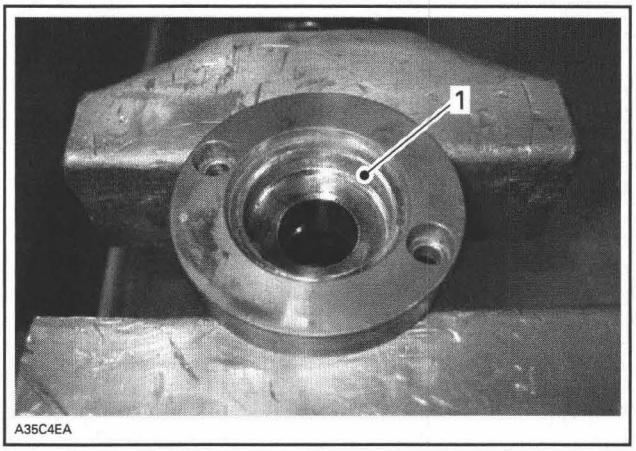

A35C4EA

1. Remove sealant

To extract bearing **no. 12** either use a hammer puller or an appropriate pusher.

Water/Oil Pump Shaft Assembly

Reverse disassembly procedure and pay attention to the following.

NOTE: Never put oil in the press fit area of the oil seal and ceramic seal.

Push the new oil seal **no. 10** in bearing housing using the oil seal pusher (P/N 529 035 757).

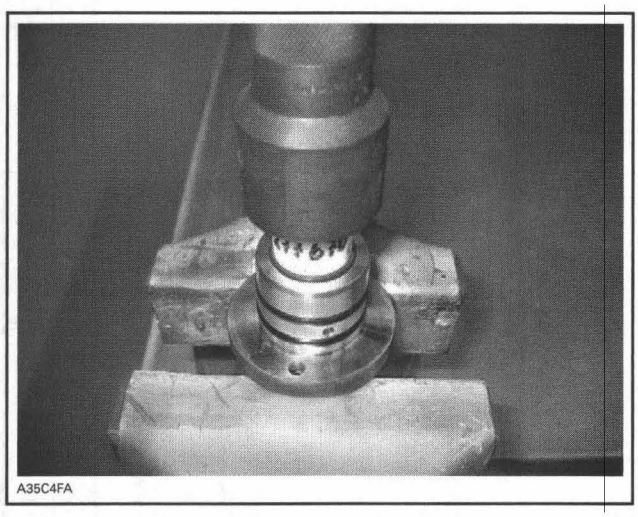
A35C4FA

Press bearing **no. 11** into bearing housing **no. 8**.

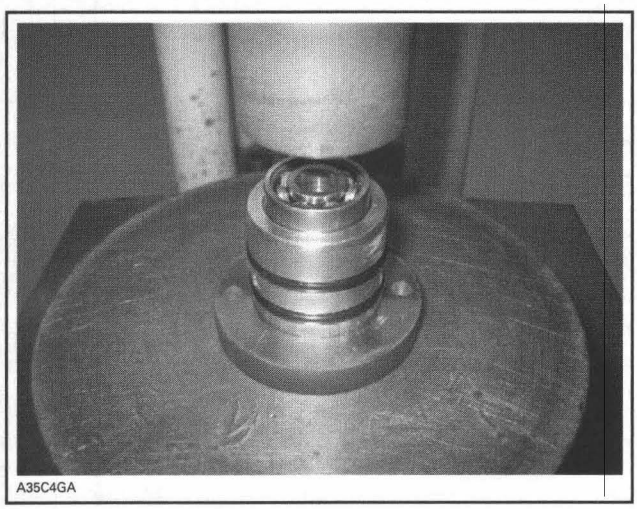
A35C4GA

Push the new ceramic seal **no. 9** in bearing housing **no. 8** using the ceramic seal installer (P/N 529 036 014).

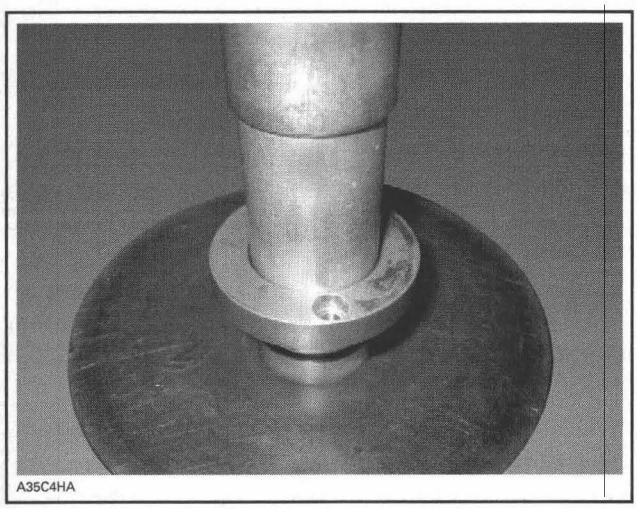
A35C4HA

CAUTION: Never use a hammer for the ceramic seal installation. Only use a press to avoid damaging the ceramic component.

Put oil seal protector (P/N 529 035 822) on water/oil pump shaft **no. 13**.

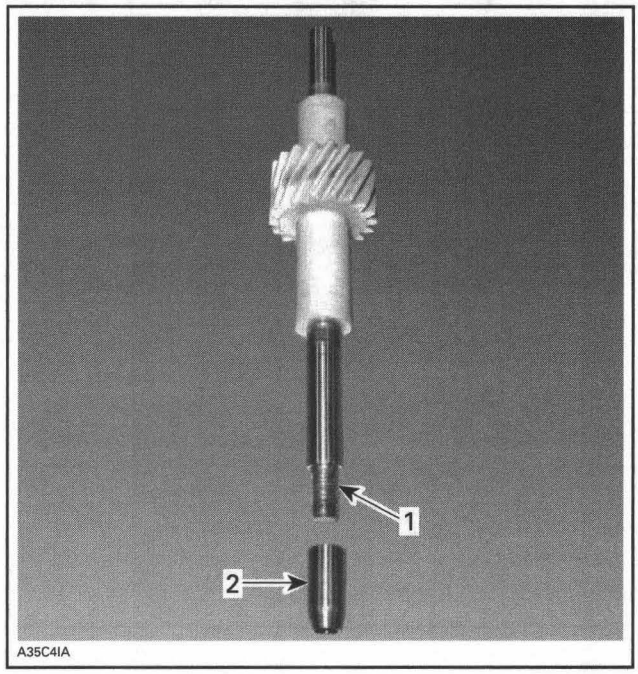

A35C4IA

1. *Water/oil pump shaft*
2. *Oil seal protector*

Press water/oil pump shaft **no. 13** into the bearing housing **no. 8** with appropriate force.

CAUTION: Inadequate force will damage the oil seal no. 10 and bearing no. 11.

NOTE: During installation support the ceramic seal using the ceramic seal installer (P/N 529 036 014) as shown on the following illustration.

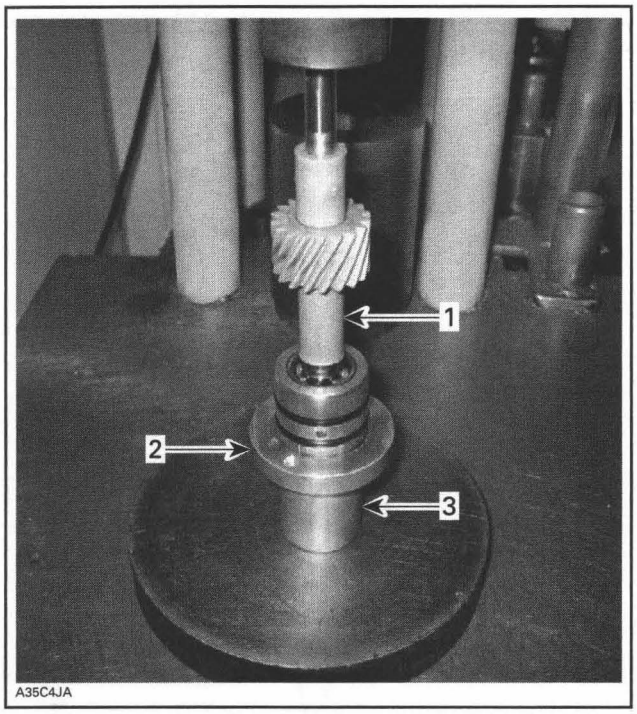

1. *Water/oil pump shaft*
2. *Bearing housing*
3. *Ceramic seal installer*

Remove oil seal protector from water/oil pump shaft.

Water/Oil Pump Shaft Installation

Clean gasket surfaces of pump housing and crankcase.

Pour 50 mL (2 U.S. oz) of injection oil in the cavity under worm gear to lubricate pump gearing.

Install water/oil pump shaft assembly in crankcase half while turning shaft to mesh gears.

Torque bearing housing screws **no. 7**.

After impeller installation, ensure shaft turns properly.

Install a new pump housing gasket.

Torque water pump housing screws in a criss-cross sequence.

Reinstall oil injection pump.

CRANKCASE

Crankcase Disassembly

Remove engine, refer to *ENGINE REMOVAL AND INSTALLATION*.

Remove cylinder head and cylinders. Refer to *TOP END (593)*.

Remove rewind starter. Refer to *REWIND STARTER*.

Remove trigger coils, magneto flywheel and stator. Refer to *MAGNETO SYSTEM*.

Remove front engine supports.

Remove PTO oil seal cover **no. 1**.

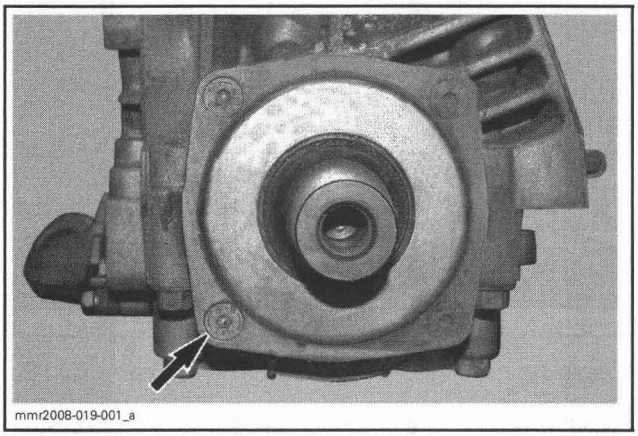

TYPICAL

Remove all screws that retain both housing together.

Split crankcase and remove crankshaft.

Clean all metal components in a non-ferrous metal cleaner. Use Loctite Chisel (P/N 413 708 500) accordingly.

CAUTION: Never use a sharp object to scrape away old sealant as score marks incurred are harmful to crankcase sealing.

Crankcase Inspection

Check crankcase for cracks or other damages. Replace if necessary.

Crankcase Assembly

Install crankshaft in lower crankcase. See *CRANKSHAFT* for procedure.

Apply Loctite 5910 (P/N 293 800 081) on crankcase halves. Proceed as follows.

IMPORTANT: The total assembly sequence, including sealing compound application and crankcase torquing, must be performed within 10 minutes.

Use a plexiglass plate and apply some sealant on it. Use a 50 - 75 mm (2 - 3 in) soft rubber roller and spread the sealant to get a thin uniform coat on the plate (spread as necessary).

When ready, apply the sealant on crankcase mating surfaces.

NOTE: If you do not use the roller method, you may use your finger to uniformly distribute the sealant.

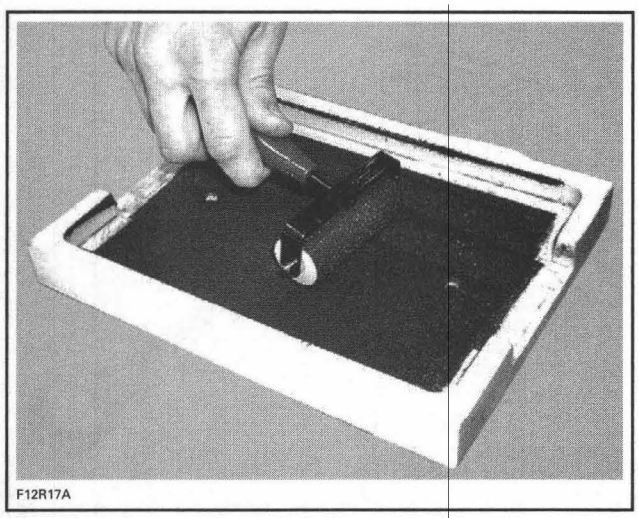
F12R17A

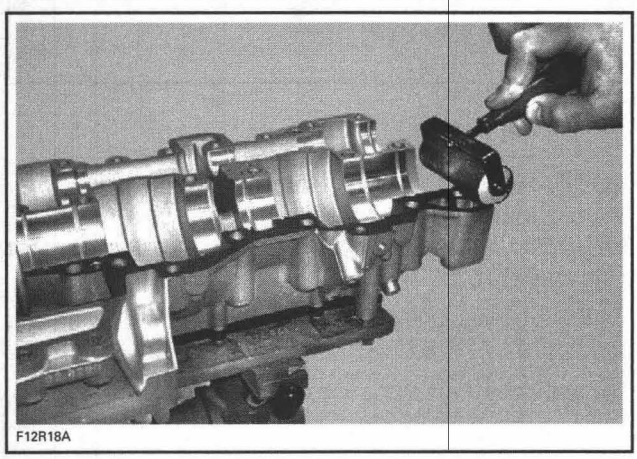
F12R18A

Assemble both crankcase halves.

As a first step, torque screws to 18 N•m (159 lbf•**in**) as per following illustrated sequence.

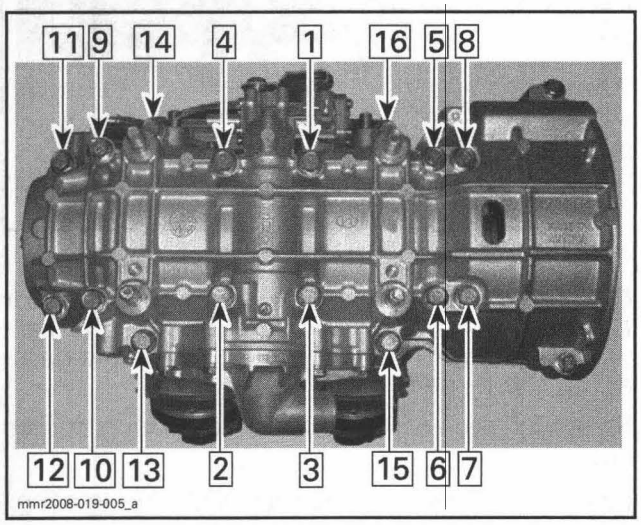

mmr2008-019-005_a

Repeat torquing sequence and this time torque screws to 29 N•m (21 lbf ft).

Finish by torquing the following crankcase screws to 9 N•m (80 lbf•**in**).

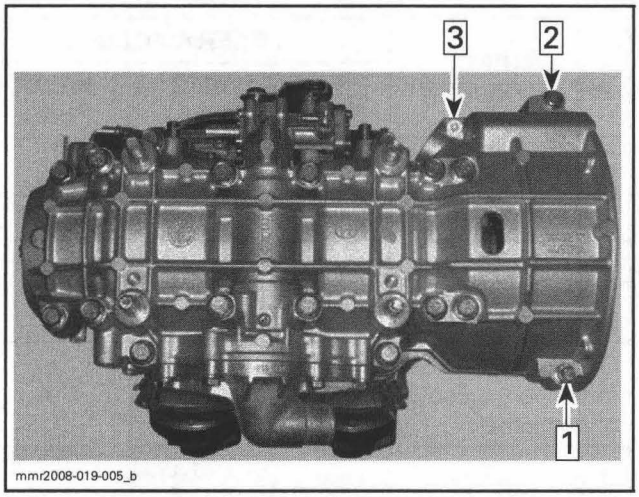

mmr2008-019-005_b

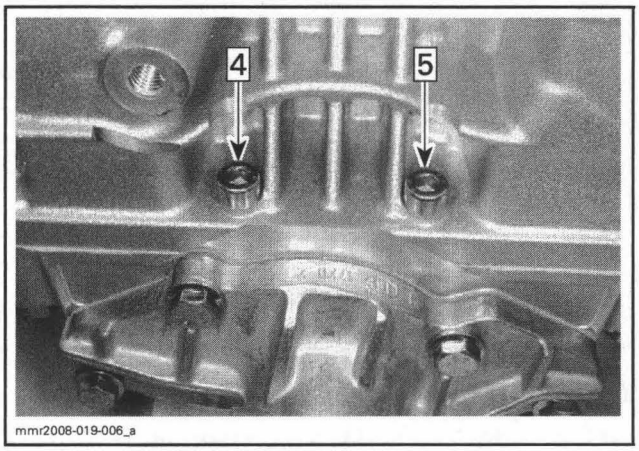

mmr2008-019-006_a

Install PTO oil seal cover (593 HO SDI engine).

CRANKSHAFT

Crankshaft Removal

To remove crankshaft, use crankcase disassembly procedure.

Crankshaft Inspection

Check crankshaft bearings. They must turn smoothly and without noise. Replace as required.

Refer to table below to find crankshaft dimension specifications. For dimension measurement procedures, refer to *ENGINE MEASUREMENT*.

ENGINE MEASUREMENT	TOLERANCES		
	NEW PARTS (min.)	(max.)	WEAR LIMIT
Crankshaft deflection on PTO side	N.A.	0.06 mm (.0024 in)	N.A.
Crankshaft deflection on MAG side	N.A.	0.05 mm (.002 in)	N.A.
Crankshaft deflection in center of crankshaft	N.A.	0.08 mm (.0031 in)	N.A.
Connecting rod big end axial play	593 ENGINE		
	0.39 mm (.015 in)	0.74 mm (.029 in)	1.20 mm (.047 in)
	593 HO SDI ENGINE		
	0.31 mm (.012 in)	0.6801 mm (.0268 in)	1.20 mm (.047 in)
Crankshaft end-play	0.10 mm (.004 in)	0.30 mm (.0118 in)	N.A.

Crankshaft Bearing Removal

NOTE: Normally it takes approximately 10 minutes to heat up a bearing so in the event of replacing bearing, it's recommended to start the bearing heating process prior to removal operation. See procedure further.

To remove bearings **no. 2** and **no. 3** from crankshaft **no. 4**, install half rings (P/N 420 977 479) and puller ring (P/N 420 977 494) on the outer bearing.

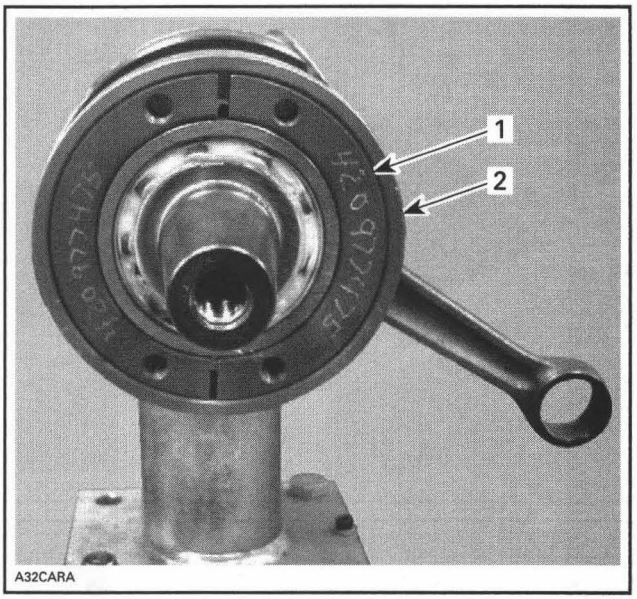

1. Half ring
2. Puller ring

NOTE: Apply grease on crankshaft end in order to hold in place the crankshaft protector (P/N 420 876 552) on PTO side and crankshaft protector (P/N 420 876 557) on MAG side.

Using screws (P/N 420 840 681), install bearing puller (P/N 420 877 635) on the half rings.

Secure the bearing puller in a vise by one of its rib.

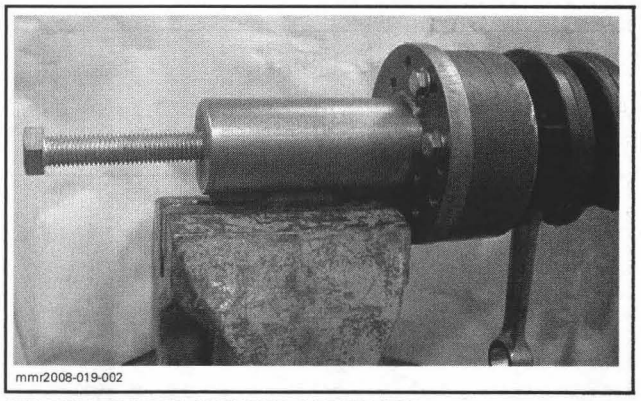

BEARING PULLER SECURED IN THE VISE

CAUTION: Never use any air impact tool for tightening the puller bolt. Lubricate the bolt with XP-S Lube (P/N 293 600 016) to avoid damaging the threads.

Screw in the puller bolt until the bearing comes out.

Follow the same procedure for the inner bearing.

NOTE: In the case of damaged bearing or less clearance between crankshaft counterbalance and the bearing or on the MAG side bearing, use Snap-on bearing separator (P/N CJ 951) or SPX/OTC bearing separator (P/N 1124) to facilitate the removal.

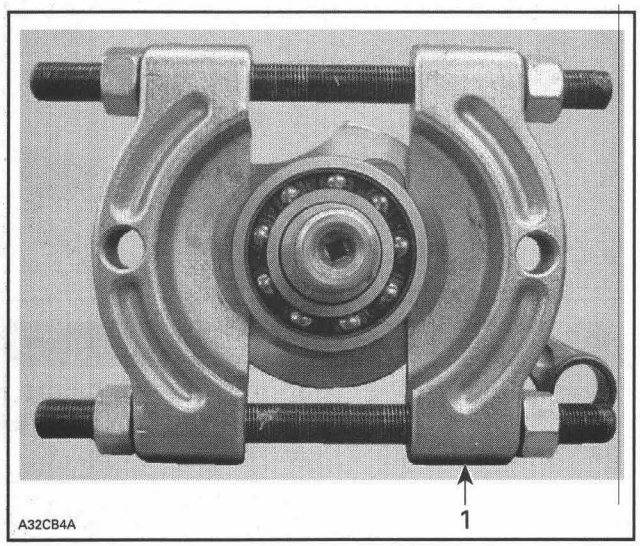

1. Bearing separator

Crankshaft Bearing Installation

Inspect crankshaft ends for damage.

Clean crankshaft ends with sand paper no. 180 to remove possible seal marks and debris.

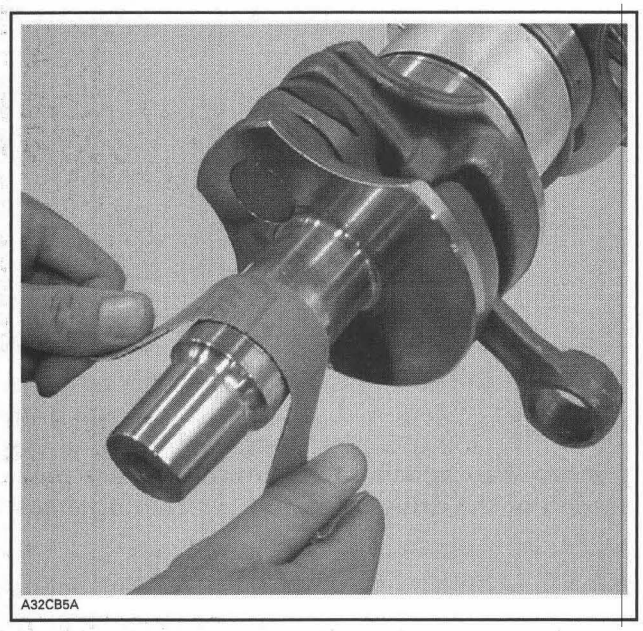

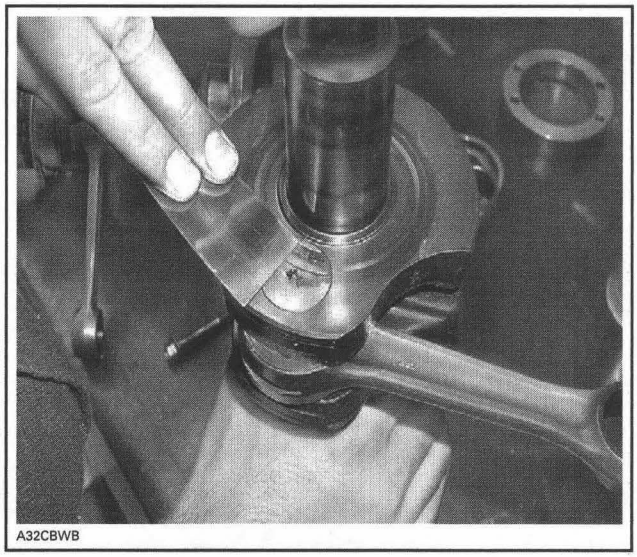

Remove all residue using pulley flange cleaner (P/N 413 711 809).

Smear Loctite 767 (antiseize lubricant) (P/N 293 800 070) on part of crankshaft where bearing fits.

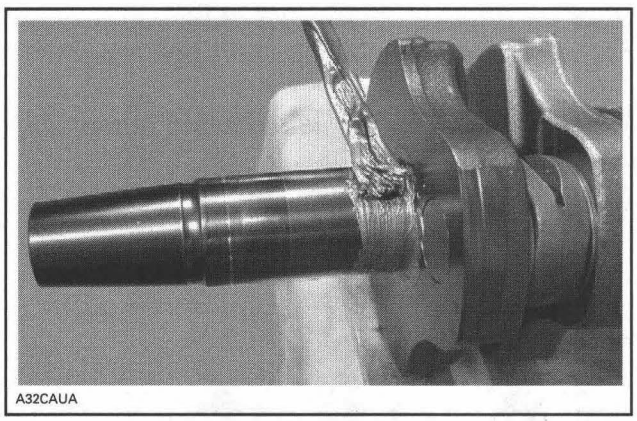

Heat up the bearing(s) using bearing heater (P/N 529 035 969). This will expand bearings and ease installation. If required, put a suitable plate or shim to avoid the direct contact between integrated seal with the heating surface.

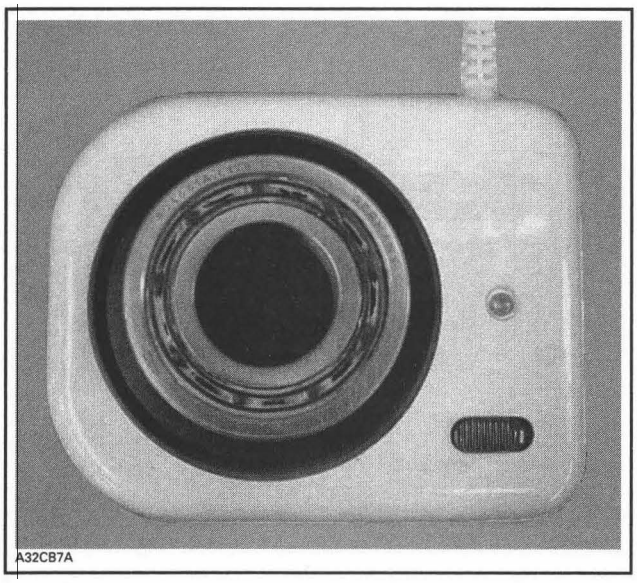
A32CB7A

CAUTION: Bearing(s) should not be heated to more than 80°C (176°F). Do not heat bearing(s) on direct flame, or with a heat gun or in an oil bath. Inappropriate bearing(s) heating may result in inner seals or cage failure.

For even heat distribution, turn bearing several times during heating process.

NOTE: Two bearings can be heated at the same time on one bearing heater.

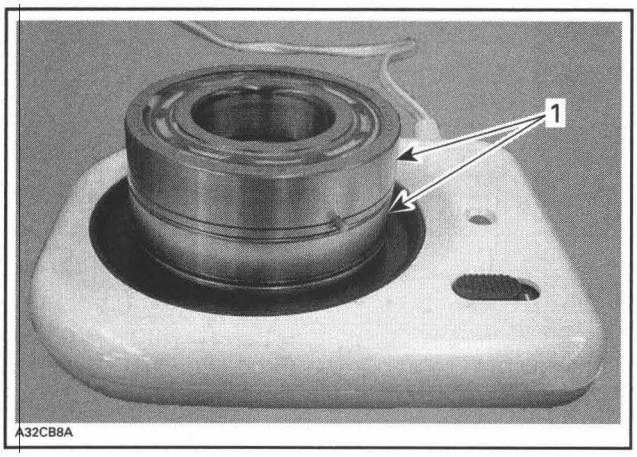

A32CB8A

1. Bearings

Probe the inner race of the bearing with the temperature indicator stick (P/N 529 035 970). Stick will liquefy when the bearing reach the proper temperature.

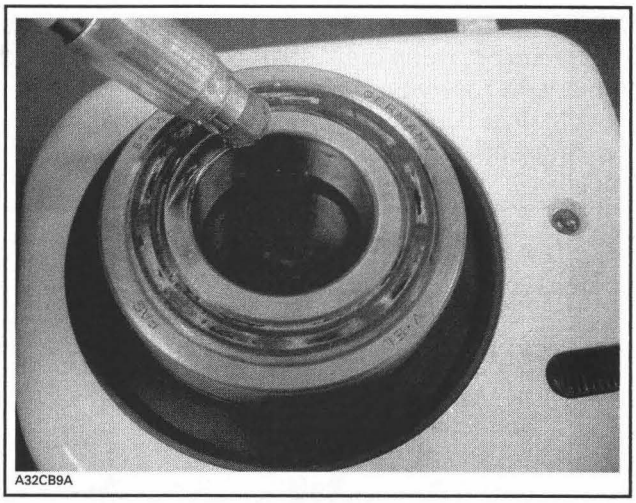
A32CB9A

⚠ WARNING

Do not touch heated bearing with bare hands. Always wear heat resisting gloves before handling the heated bearing(s).

CAUTION: Never reinstall a bearing that has been removed.

Slide in the inner PTO bearing with the integrated seal facing crankshaft. Push bearing to end position.

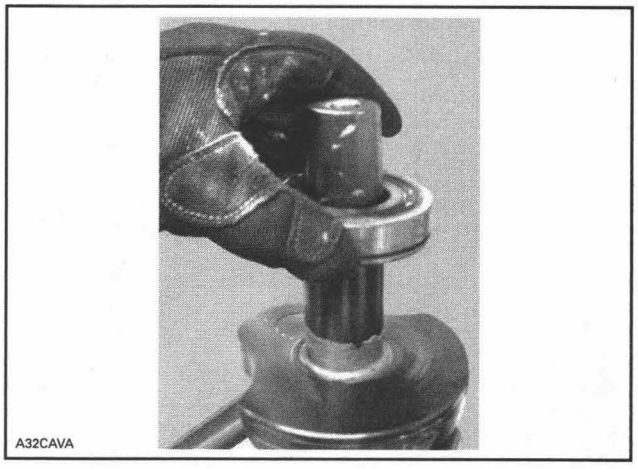
A32CAVA

NOTE: Heated bearing should slide easily onto the crankshaft. If required, push with a bearing installer (P/N 259 035 990) on the inner ring of the bearing. **Pay special attention to correct positioning of the drive pins and/or retaining discs.**

Install retaining discs.

Install support plate (P/N 529 035 976) with appropriate distance gauge; refer to following table.

TOOL	ENGINE
Distance gauge (P/N 529 035 966)	593
Distance gauge (P/N 529 035 968)	593 HO SDI

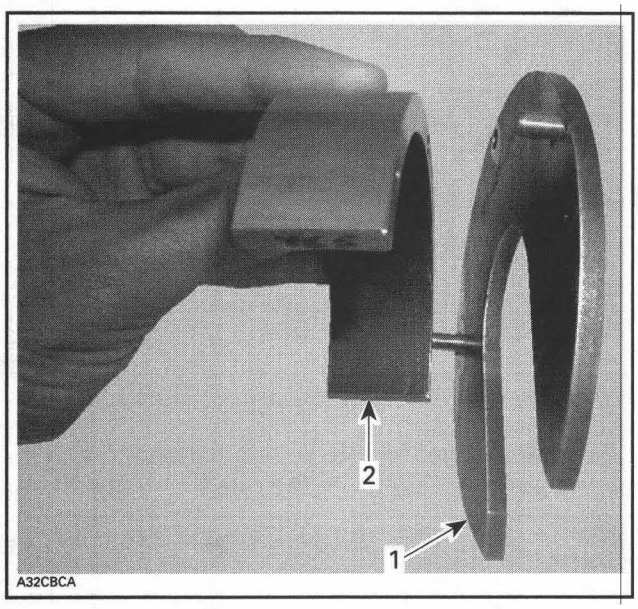

1. Support plate
2. Distance gauge

Install bearing locator tool.

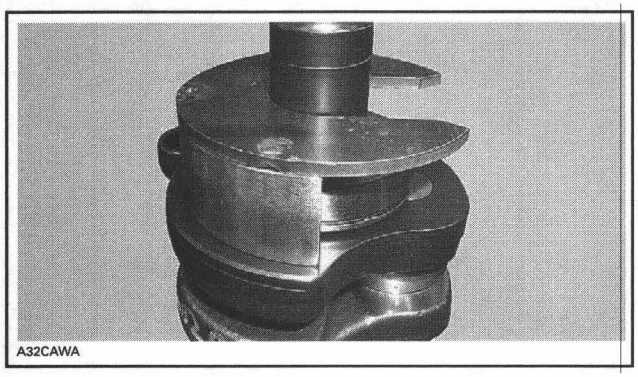

Slide the heated outer PTO bearing onto the crankshaft until it contacts the distance gauge.

Slide the first MAG bearing **with the integrated seal facing crankshaft** until it bottoms on crankshaft shoulder.

NOTE: Heated bearing should slide easily onto the crankshaft. If required, push with a bearing installer (P/N 259 035 980) on the inner ring of the bearing.

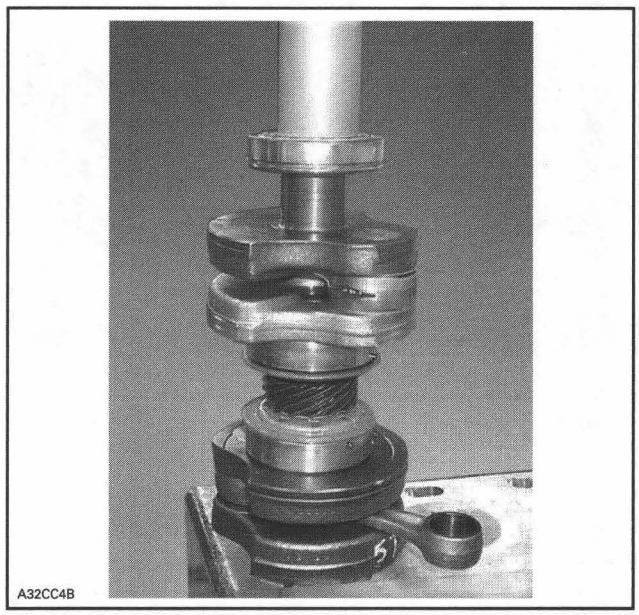

Slide-in the second bearing until it contacts the first one.

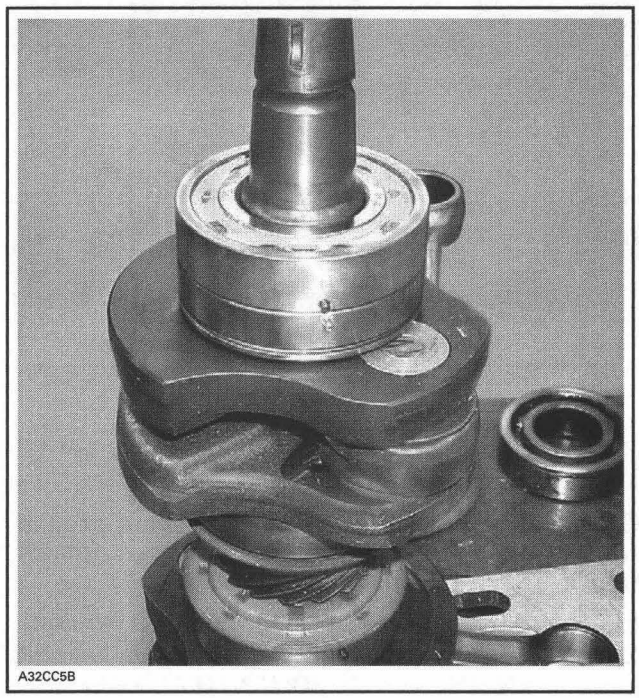

Crankshaft Installation

At crankshaft installation, position drive pins as illustrated.

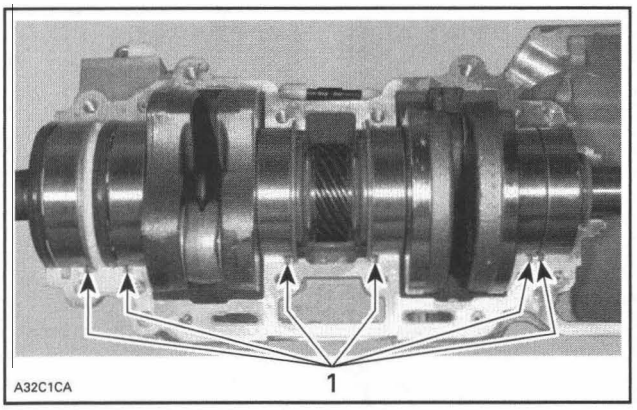

TYPICAL
1. Position pins

Pour 50 mL (2 U.S. oz) of injection oil in the pan under central gear to lubricate pump gearing as per photo.

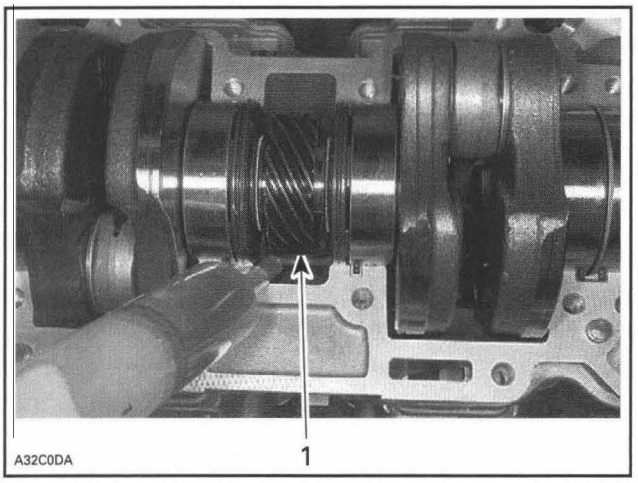

1. Oil bath

Apply Isoflex grease (P/N 293 550 021) as per following procedure:

CAUTION: Use only the recommended grease. Make sure not to push grease between outside bearing race and half crankcase.

Put the following quantity of grease in a syringe.

ENGINE	QUANTITY OF GREASE
593	42 ± 5 mL
593 HO SDI	30 ± 5 mL

NOTE: The 50 g tube corresponds to 50 mL of grease.

CAUTION: Do not exceed the recommended amount of grease.

Fill inner side of PTO side bearing with grease (about 10 mL).

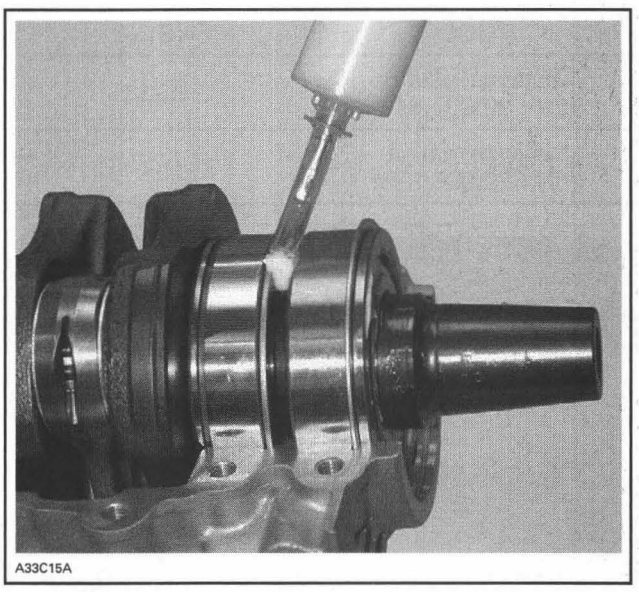

PTO SIDE BEARING FILLED WITH GREASE

With the syringe, fill the outer ball bearing and inner side of outer seal with the remaining of grease.

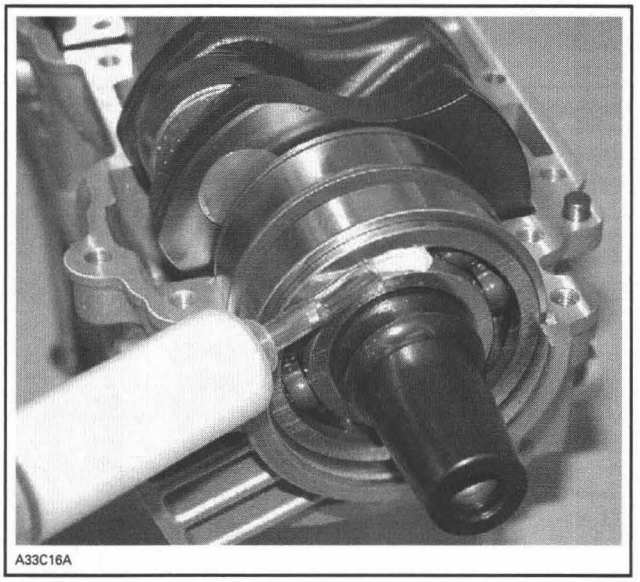

BALLS COATED WITH A SEAM OF GREASE

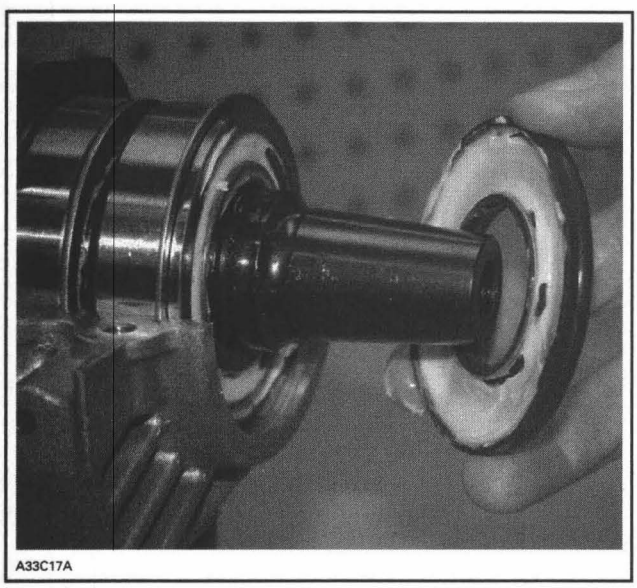

TYPICAL — FILL WITH GREASE AND SET IN PLACE

Apply 6 mL of grease to MAG side outer bearing.

NOTE: If replaced with new bearing, do not apply grease as new bearings come with grease already applied.

BOTTOM END (797)

SERVICE TOOLS

Description	Part Number	Page
screws	420 840 681	163
oil seal pusher	529 035 757	157
oil seal protector	529 035 822	158
bearing heater	529 035 969	164
indicator stick	529 035 970	164
bearing puller	529 036 004	163
ceramic seal installer	529 036 014	158
distance gauge	529 036 060	165

SERVICE TOOLS – OTHER SUPPLIER

Description	Part Number	Page
SPX/OTC bearing separator	1124	163
Snap-on bearing separator	CJ 951	163

SERVICE PRODUCTS

Description	Part Number	Page
Isoflex grease	293 550 021	167
XP-S Lube	293 600 016	163
Loctite 767 (antiseize lubricant)	293 800 070	164
Loctite 5910	293 800 081	160
Loctite Chisel	413 708 500	160
pulley flange cleaner	413 711 809	164

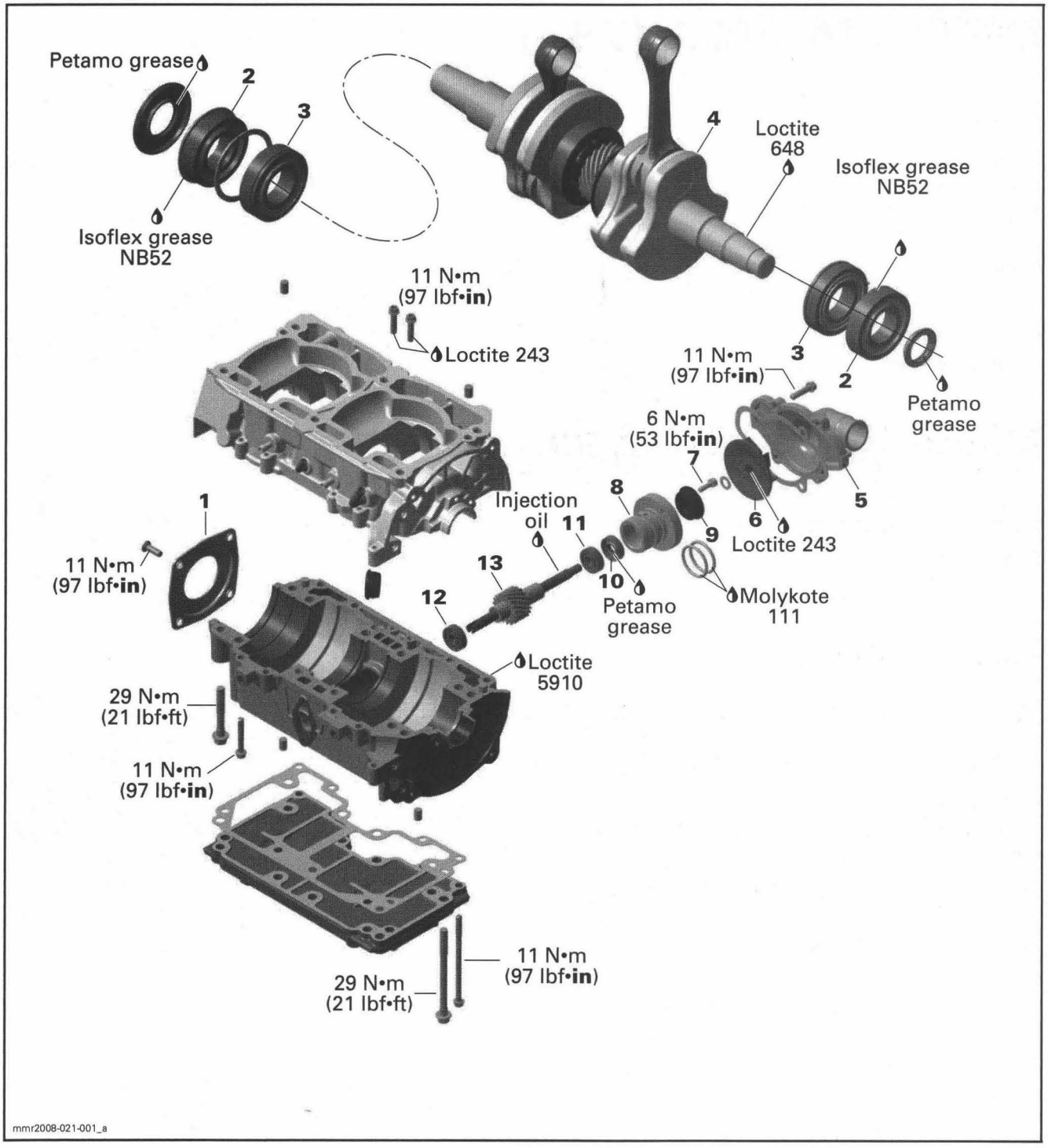
Petamo grease
2
3
Isoflex grease NB52
4
Loctite 648
Isoflex grease NB52
11 N•m (97 lbf•in)
Loctite 243
11 N•m (97 lbf•in)
3
2
Petamo grease
6 N•m (53 lbf•in)
7
8
5
6
Loctite 243
9
Molykote 111
1
11 N•m (97 lbf•in)
Injection oil
11
13
12
10
Petamo grease
Loctite 5910
29 N•m (21 lbf•ft)
11 N•m (97 lbf•in)
11 N•m (97 lbf•in)
29 N•m (21 lbf•ft)
mmr2008-021-001_a

GENERAL

Before completely disassembling the engine, check airtightness. Refer to *LEAK TEST*.

All oil seals and gaskets must be discarded and replaced with new ones when crankcase is split.

CAUTION: After rebuilding an engine always observe a break-in period as described in *OPERATOR'S GUIDE*.

During assembly/installation, use torque values and service products as in the exploded view.

Clean threads before applying a threadlocker. Refer to *SELF-LOCKING FASTENERS* and *LOCTITE APPLICATION* at the beginning of this manual for complete procedure.

⚠ WARNING

Torque wrench tightening specifications must be strictly adhered to.
Locking devices (e.g.: locking tabs, elastic stop nuts, self-locking fasteners, cotter pins, etc.) must be replaced with new ones.

PROCEDURES

WATER PUMP

Water Pump Impeller Removal

Engine In Vehicle

Remove Hood, bottom pan cover and RH panel refer to the *BODY* section.

Remove tune pipe and muffler, refer to *EXHAUST SYSTEM*.

Remove acoustic panel.

Put a large drain pan under vehicle's bottom pan.

Remove starter, refer to the *STARTING SYSTEM* section.

Refer to *ENGINE OUT OF VEHICLE* to complete procedure.

Engine Out of Vehicle

Remove pump housing **no. 5**.

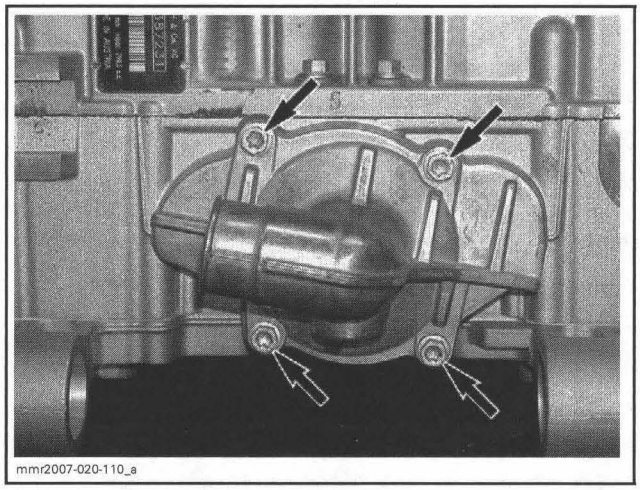
mmr2007-020-110_a

TYPICAL

Remove impeller **no. 6**.

CAUTION: Be careful not to damage impeller fins.

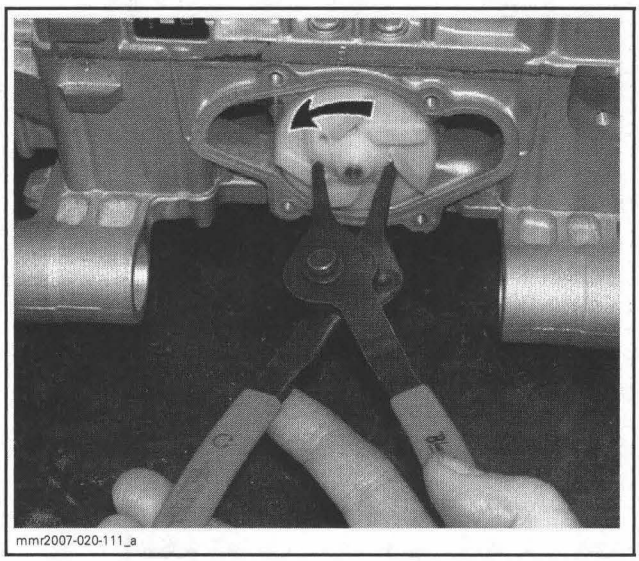
mmr2007-020-111_a

TYPICAL

Clean gasket surfaces of pump housing and crankcase.

Water Pump Impeller Installation

Install a new gasket.

Reverse removal procedure.

Ceramic Seal Replacement

The water/oil pump shaft must be removed to replace the ceramic seal. Refer to *WATER/OIL PUMP SHAFT*.

WATER/OIL PUMP SHAFT

Water/Oil Pump Shaft Removal

NOTE: It is not necessary to split crankcase to pull out shaft.

Remove engine, refer to *ENGINE REMOVAL AND INSTALLATION* section.

Remove oil injection pump.

Remove water pump housing and impeller. Refer to *WATER PUMP*.

Remove bearing housing screws **no. 7**.

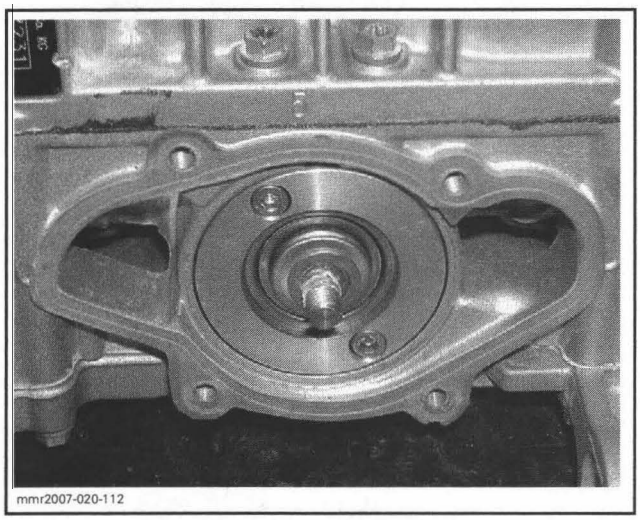

TYPICAL

From injection oil pump side, push shaft out while turning shaft to release it from worm gear.

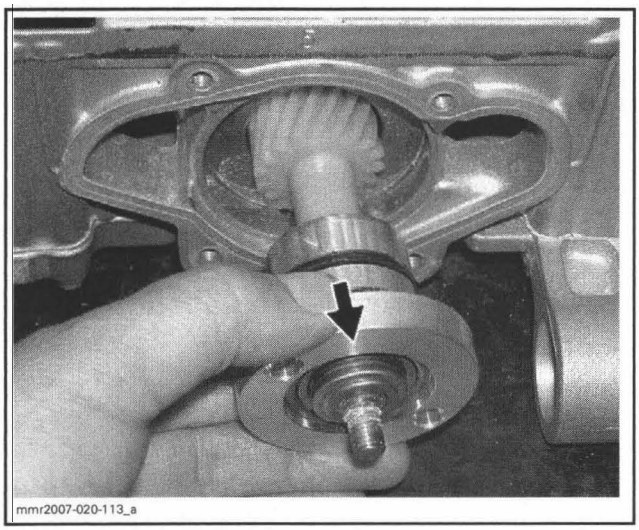

TYPICAL

Water/Oil Pump Shaft Disassembly

CAUTION: Pay attention not to damage the bearing housing no. 8 during disassembly. Marks or other damages will lead to coolant and/or oil leaking.

NOTE: For disassembly/assembly procedure a press is required.

Protect the threads of shaft with a suitable M8 nut. Properly support bearing housing and push shaft out.

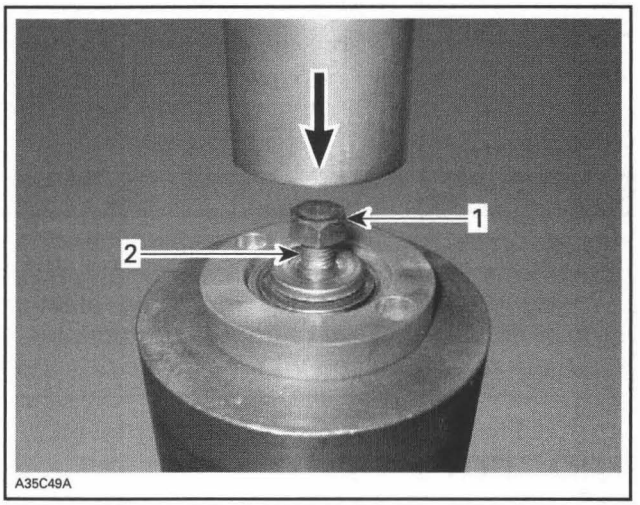

1. *M8 nut*
2. *Shaft*

CAUTION: When removing water/oil pump shaft, always replace ceramic seal no. 9 and oil seal no. 10. Ceramic seal cannot be removed without damage.

Pry inner part of ceramic seal **no. 9** out.

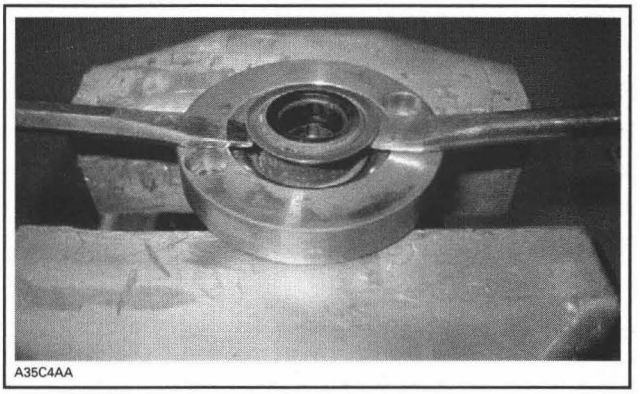

Extract bearing **no. 11** from the bearing housing using an appropriate pusher.

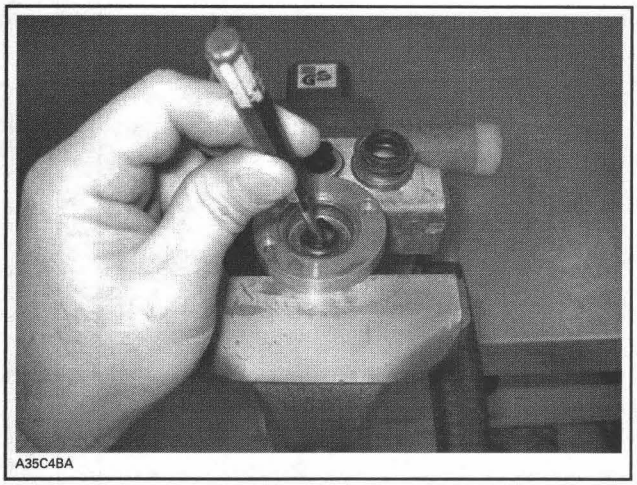
A35C4BA

Push oil seal **no. 10** out.

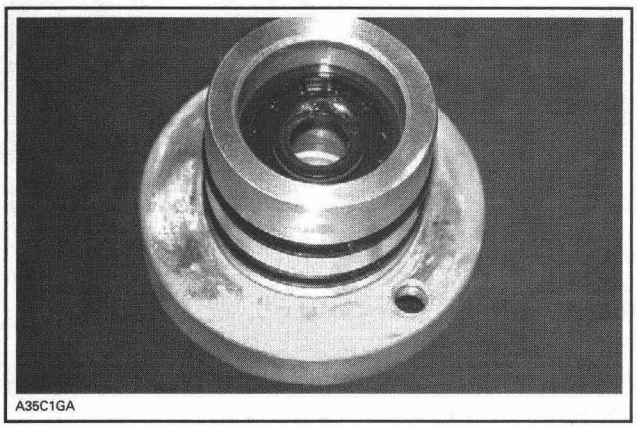
A35C1GA

Carefully press the outer part of ceramic seal out.

NOTE: Use a mandrel with diameter of approximately 16 mm (.63 in).

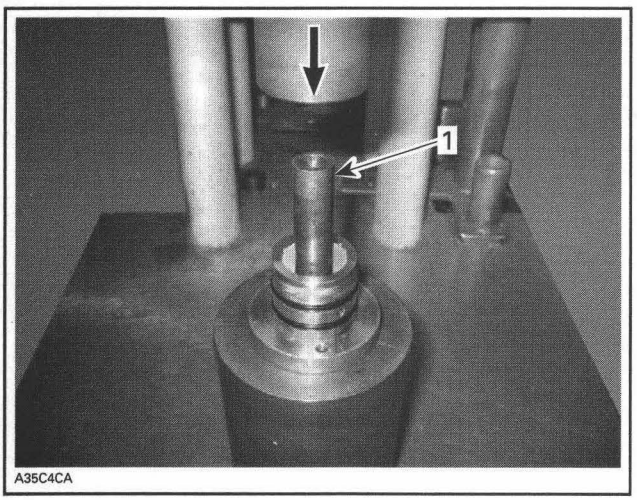

A35C4CA

1. 16 mm (.63 in) mandrel

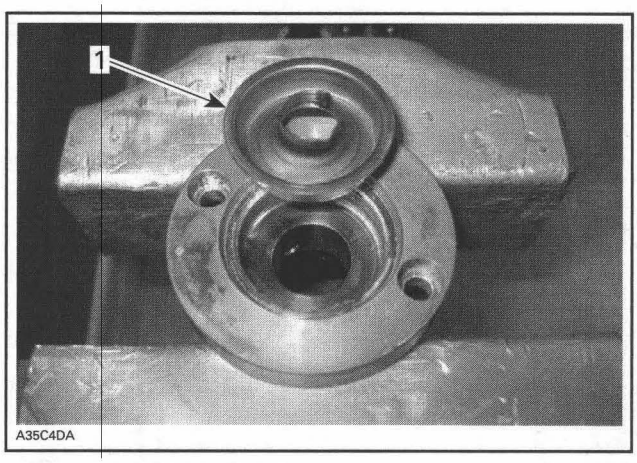

A35C4DA

1. Outer part of ceramic seal

Remove sealant from bearing housing with sand paper no. 180.

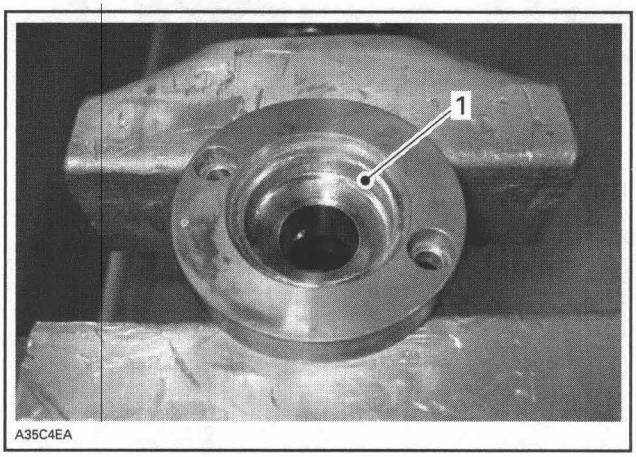

A35C4EA

1. Remove sealant

To extract bearing **no. 12** either use a hammer puller or an appropriate pusher.

Water/Oil Pump Shaft Assembly

Reverse disassembly procedure and pay attention to the following.

NOTE: Never put oil in the press fit area of the oil seal and ceramic seal.

Push the new oil seal **no. 10** in bearing housing using the oil seal pusher (P/N 529 035 757).

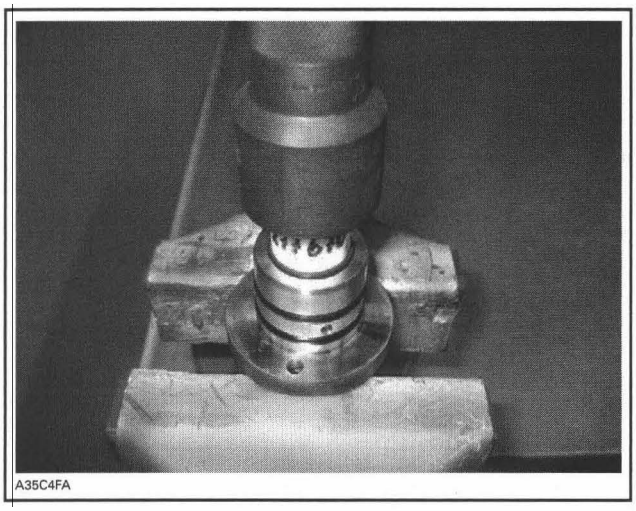
A35C4FA

Press bearing **no. 11** into bearing housing **no. 8**.

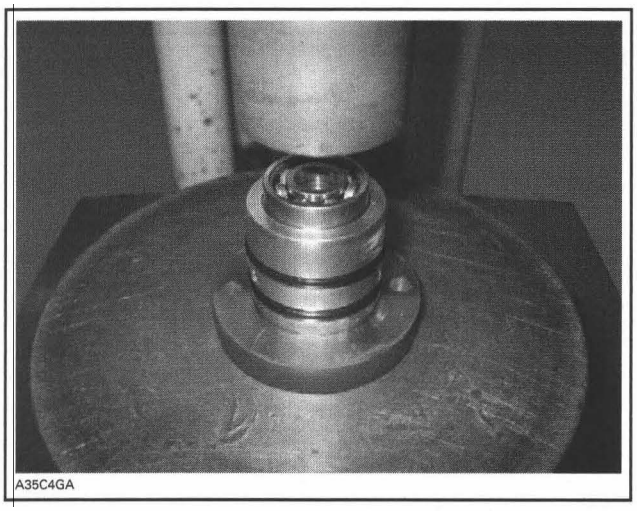
A35C4GA

Push the new ceramic seal **no. 9** in bearing housing **no. 8** using the ceramic seal installer (P/N 529 036 014).

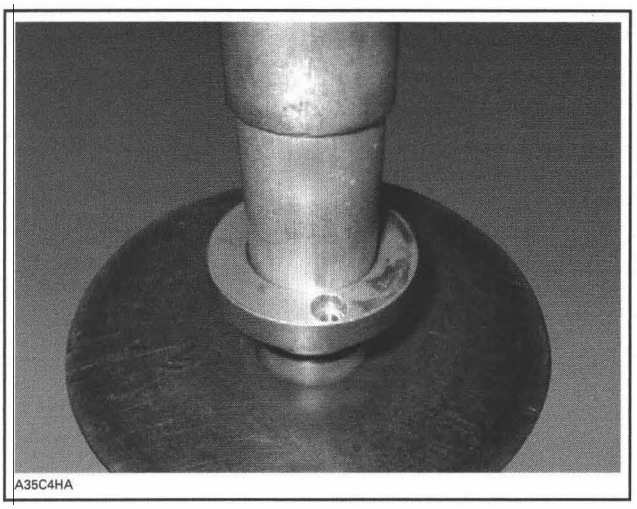
A35C4HA

CAUTION: Never use a hammer for the ceramic seal installation. Only use a press to avoid damaging the ceramic component.

Put oil seal protector (P/N 529 035 822) on water/oil pump shaft **no. 13**.

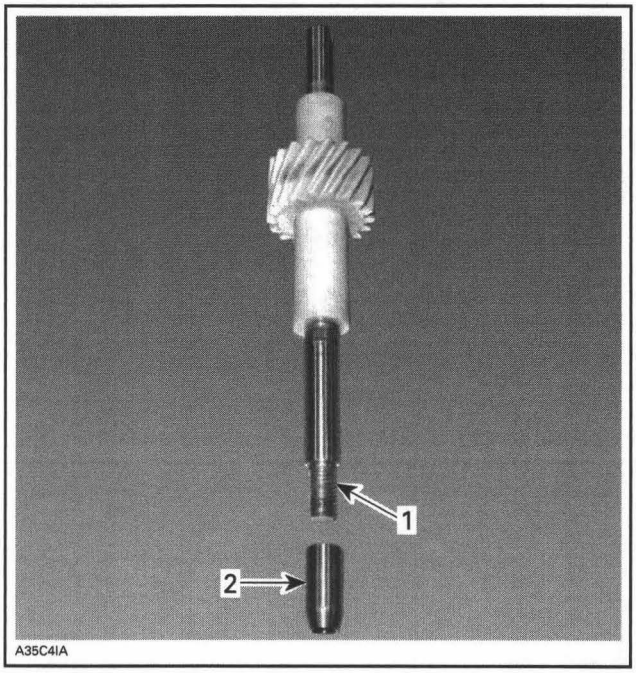

A35C4IA

1. Water/oil pump shaft
2. Oil seal protector

Press water/oil pump shaft **no. 13** into the bearing housing **no. 8** with appropriate force.

CAUTION: Inadequate force will damage the oil seal no. 10 and bearing no. 11.

NOTE: During installation support the ceramic seal using the ceramic seal installer (P/N 529 036 014) as shown on the following illustration.

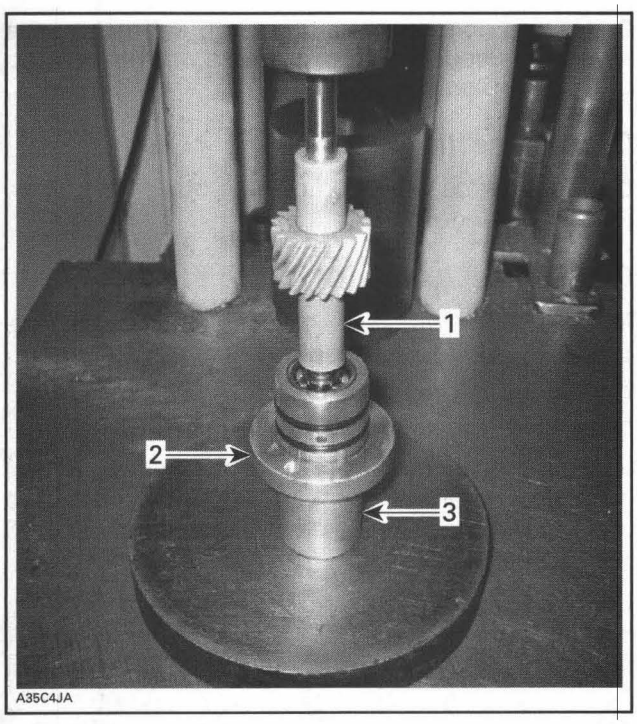

1. *Water/oil pump shaft*
2. *Bearing housing*
3. *Ceramic seal installer*

Remove oil seal protector from water/oil pump shaft.

Water/Oil Pump Shaft Installation

Pour 50 mL (2 U.S. oz) of injection oil in the pan under worm gear to lubricate pump gearing.

Install water/oil pump shaft assembly in crankcase half while turning shaft to mesh gears.

Torque bearing housing screws **no. 7**.

NOTE: The washer behind the impeller is thicker than on other engines. Ensure to use the 1 mm (.039 in) thick washer.

After impeller installation, ensure shaft turns properly.

Torque water pump housing screws in a criss-cross sequence.

Reinstall oil injection pump.

CRANKCASE

Crankcase Disassembly

Remove engine, refer to *ENGINE REMOVAL AND INSTALLATION* section.

Remove cylinder head and cylinder-block. Refer to *TOP END (797)* section.

Remove magneto housing. Refer to *MAGNETO SYSTEM* section.

Remove PTO oil seal cover **no. 1**.

NOTE: Tap screw heads to break the Loctite bond.

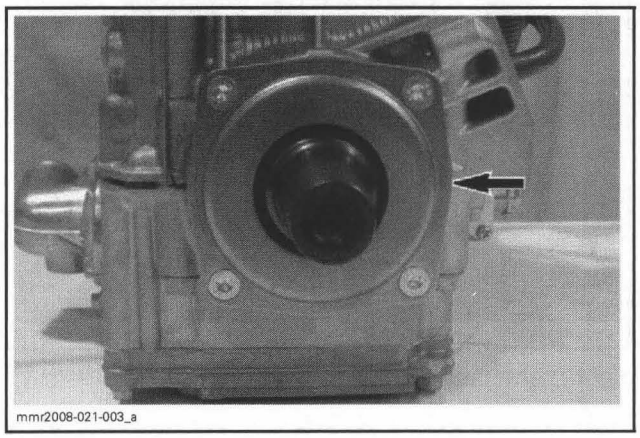

Remove base plate.

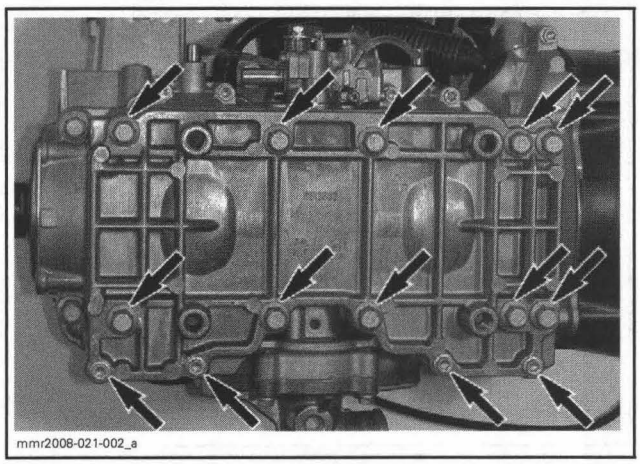

Remove engine front supports.

Remove all crankcase screws.

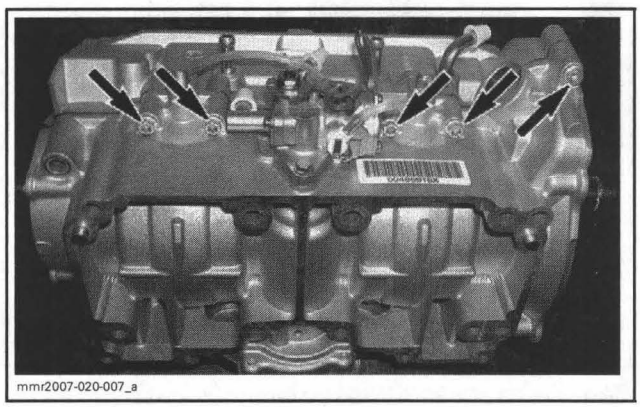

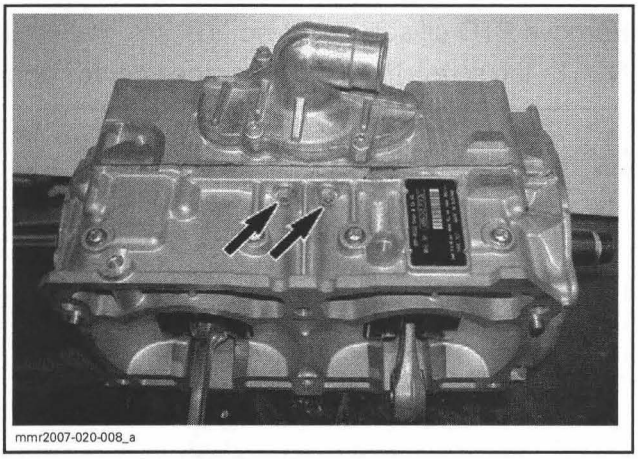
mmr2007-020-008_a

Split crankcase.

NOTE: To prevent damage to crankcase mating surfaces, use prying lugs to "unstick" crankcase.

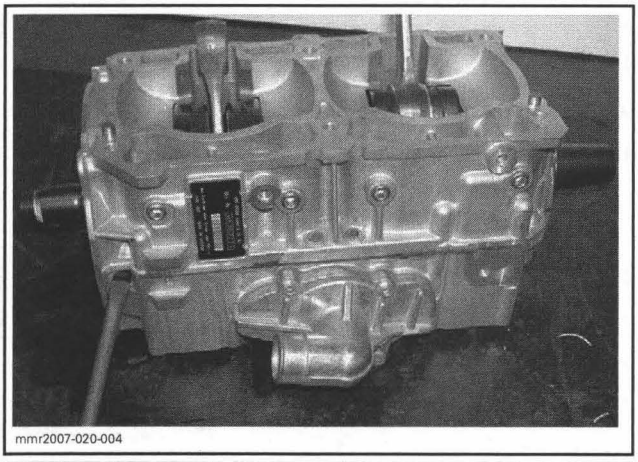
mmr2007-020-004

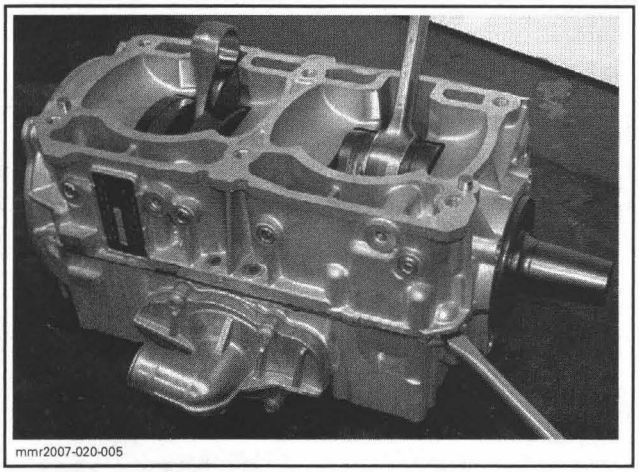
mmr2007-020-005

Remove crankshaft assembly.

Crankcase Cleaning

Clean all metal components in a non-ferrous metal cleaner. Use Loctite Chisel (P/N 413 708 500) accordingly.

CAUTION: Never use a sharp object to remove sealant as score marks incurred are harmful to crankcase sealing.

Crankcase Inspection

Check crankcase for cracks or other damages. Replace if necessary.

Crankcase Assembly

Install crankshaft in lower crankcase. See *CRANKSHAFT* for procedure.

Apply Loctite 5910 (P/N 293 800 081) on crankcase halves as per following procedure.

IMPORTANT: The total assembly sequence, including sealing compound application and crankcase torquing, must be performed within 10 minutes.

Use a plexiglass plate and apply some sealant on it. Use a 50 - 75 mm (2 - 3 in) soft rubber roller and spread the sealant to get a thin uniform coat on the plate (spread as necessary). When ready, apply the sealant on crankcase mating surfaces.

NOTE: If you do not use the roller method, you may use your finger to uniformly distribute the sealant.

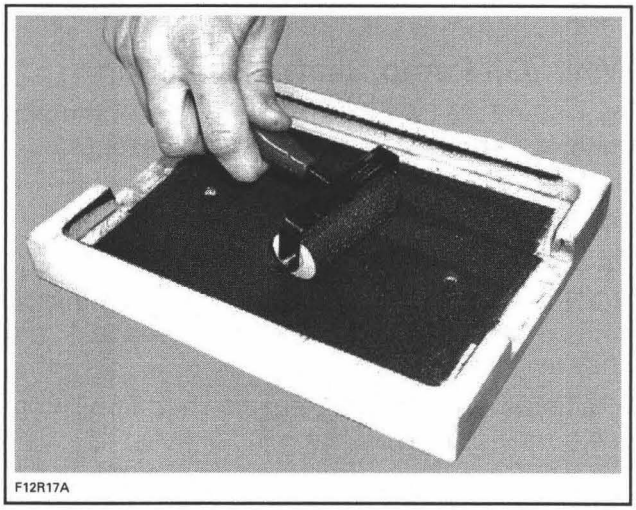
F12R17A

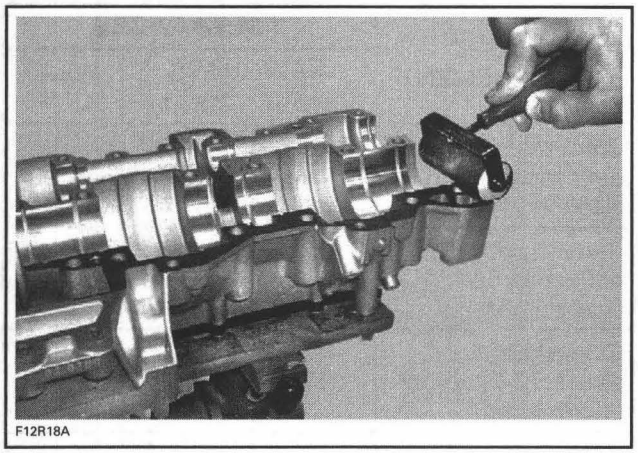
F12R18A

TYPICAL

Spread a small bead of sealant around the water passage groove as illustrated.

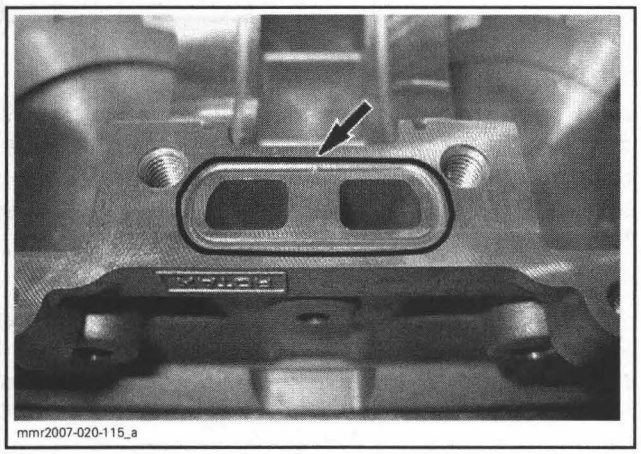
mmr2007-020-115_a

Ensure dowel pins are in their holes.

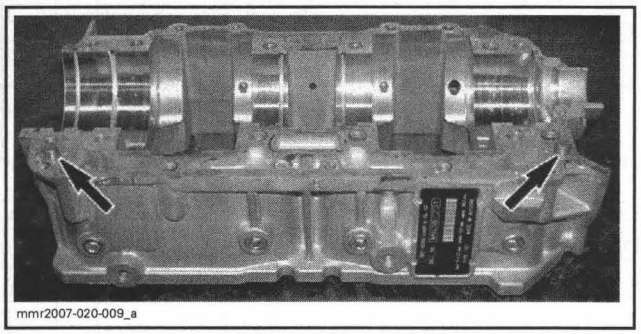
mmr2007-020-009_a

Assemble both crankcase halves.

Install M6 screws in crankcase. Torque to 11 N•m (97 lbf•**in**) as per illustrated sequence.

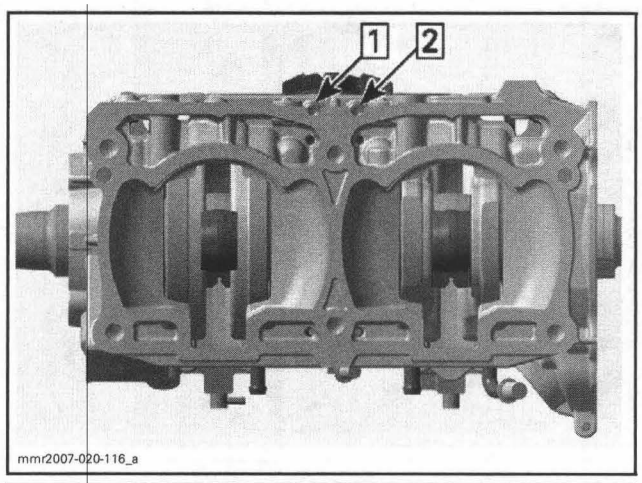

mmr2007-020-116_a

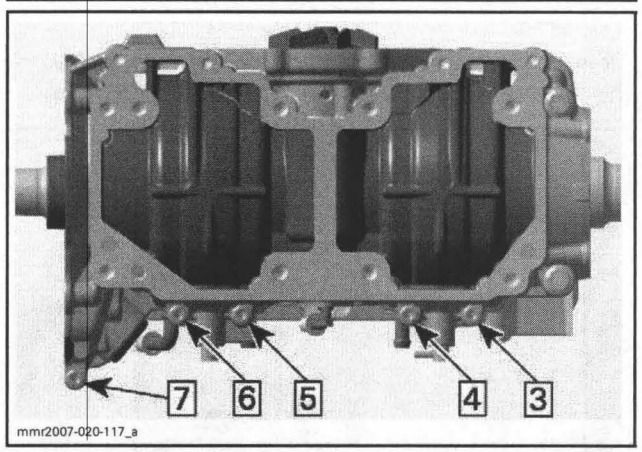

mmr2007-020-117_a

Ensure dowel pins are in their holes.

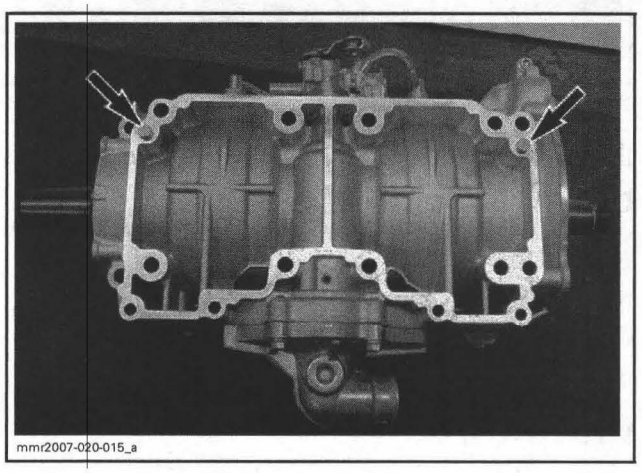
mmr2007-020-015_a

Install engine support.

NOTE: Ensure to install a new gasket.

Install M8 screws in crankcase.

As a first step, torque M8 screws following the illustrated sequence to14 N•m (124 lbf•**in**).

Then, torque M8 screws following the same sequence to 29 N•m (21 lbf•ft).

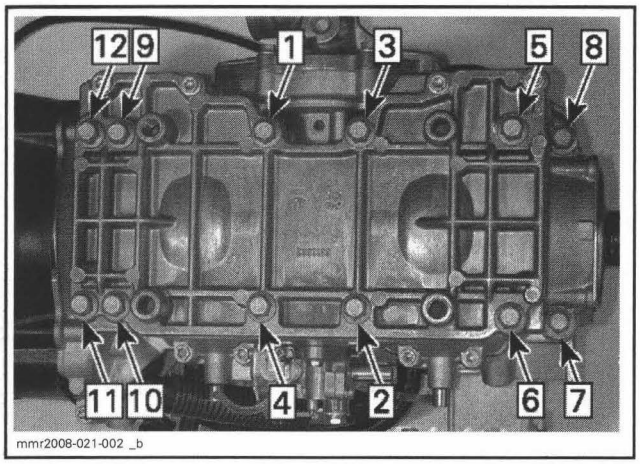

TORQUE TO 29 N•M (21 LBF•FT) IN 2 STEPS

Finish by torquing crankcase M6 screws following the illustrated sequence to 11 N•m (97 lbf•**in**).

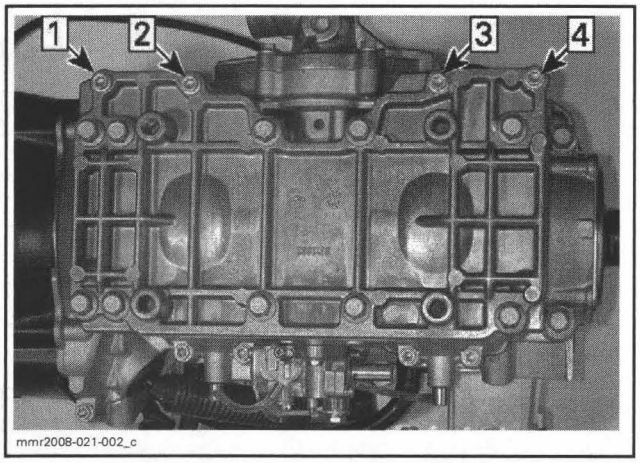

*TORQUE TO 11 N•M (97 LBF•**IN**)*

Install PTO oil seal cover **no. 1**.

CAUTION: After rebuilding an engine always observe a break-in period as described in *OPERATOR'S GUIDE*.

NOTE: It is recommended to test engine cooling system for leak after engine assembly, before installation in vehicle. Refer to *COOLING SYSTEM*.

CRANKSHAFT

Crankshaft Removal

To remove crankshaft, use crankcase disassembly procedure.

Crankshaft Inspection

Refer to table below to find bottom end engine dimension specifications. For dimension measurement procedures, refer to *ENGINE MEASUREMENT*.

ENGINE MEASUREMENT	TOLERANCES		
	NEW PARTS (min.)	(max.)	WEAR LIMIT
Crankshaft deflection on PTO side	N.A.	0.06 mm (.0024 in)	N.A.
Crankshaft deflection on MAG side	N.A.	0.05 mm (.002 in)	N.A.
Crankshaft deflection in center of crankshaft	N.A.	0.04 mm (.0016 in)	N.A.
Connecting rod big end axial play	0.23 mm (.0091 in)	0.617 mm (.0242 in)	1.20 mm (.047 in)
Crankshaft end-play	0.10 mm (.004 in)	0.30 mm (.012 in)	N.A.

Crankshaft Bearing Removal

NOTE: 10 minutes is required to heat up a new bearing for its installation, To save time, it is recommended to start the heating process prior to bearing removal operation. See procedure further.

To remove bearings **no. 2** and **no. 3** from crankshaft **no. 4**, install proper half rings and puller ring on the outer bearing.

NOTE: On MAG side, position tools on inner bearing and pull out both bearings together.

PART	MAG SIDE	PTO SIDE
Half rings	420 977 475	420 977 479
Puller ring	420 977 490	420 977 494
Crankshaft protector	420 876 557	420 877 414

Ensure to position bearing pin between half ring gap.

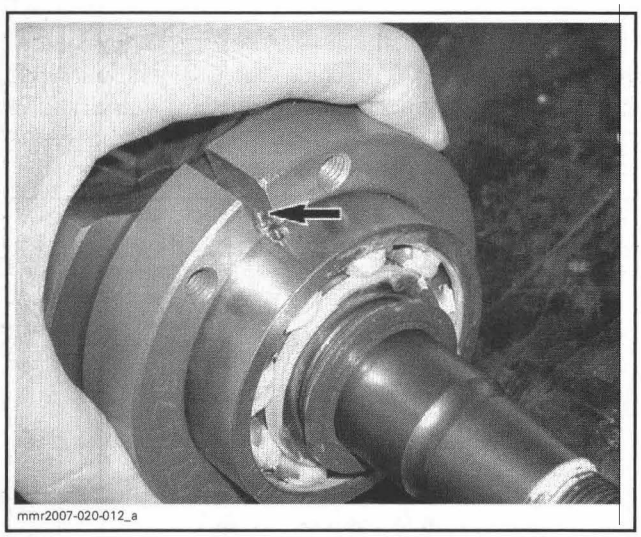

MAG SIDE

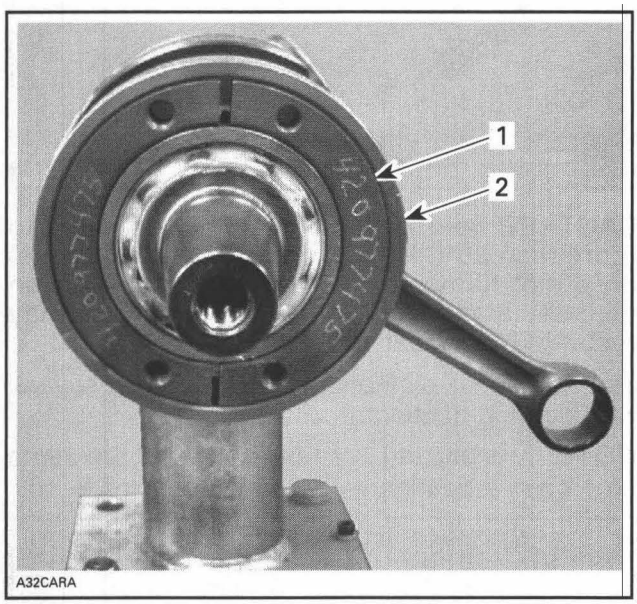

PTO SIDE
1. *Half ring*
2. *Puller ring*

NOTE: Apply grease on crankshaft end in order to hold in place the proper crankshaft protector.

Using screws (P/N 420 840 681), install bearing puller (P/N 529 036 004) on the half rings.

Secure the bearing puller in a vise by one of its rib.

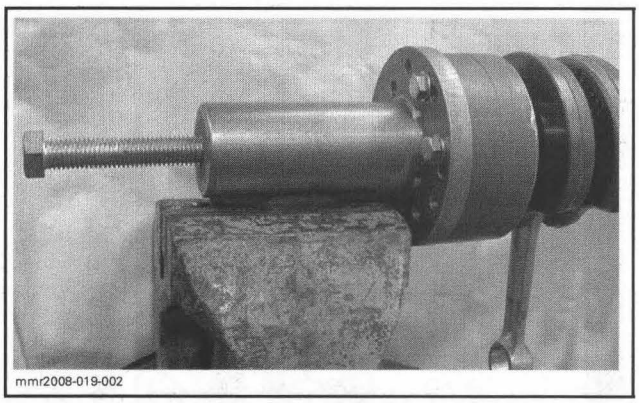

BEARING PULLER SECURED IN THE VISE

CAUTION: Never use any air impact tool for tightening the puller bolt. Lubricate the bolt with XP-S Lube (P/N 293 600 016) to avoid damaging the threads.

Screw in the puller bolt until the bearing comes out.

Follow the same procedure for the inner bearing (PTO side).

NOTE: As an alternate method to remove bearings, use Snap-on bearing separator (P/N CJ 951) or SPX/OTC bearing separator (P/N 1124). Use a press to remove bearings.

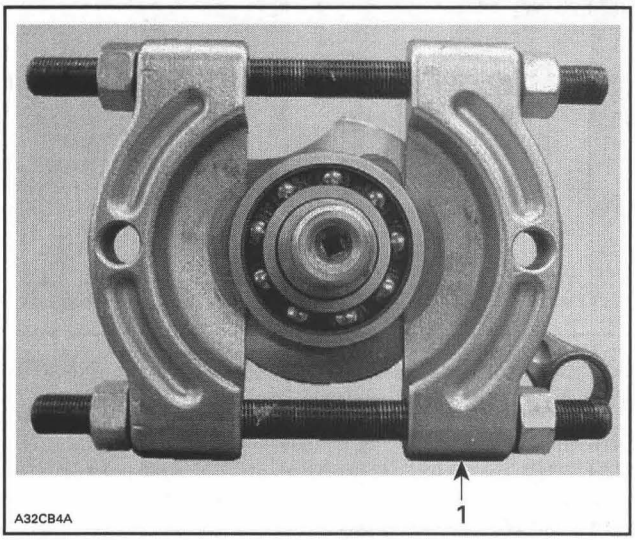

1. *Bearing separator*

Crankshaft Bearing Installation

Inspect crankshaft ends for damage.

Clean crankshaft ends with sand paper no. 180 to remove possible seal marks and debris.

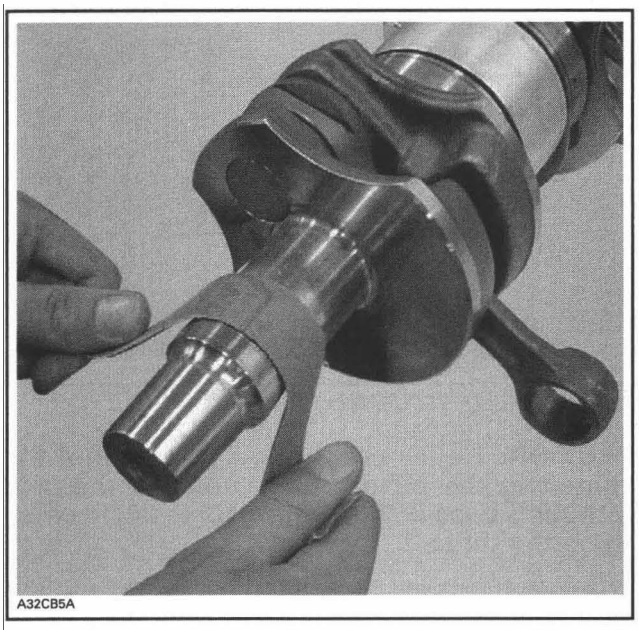
A32CB5A

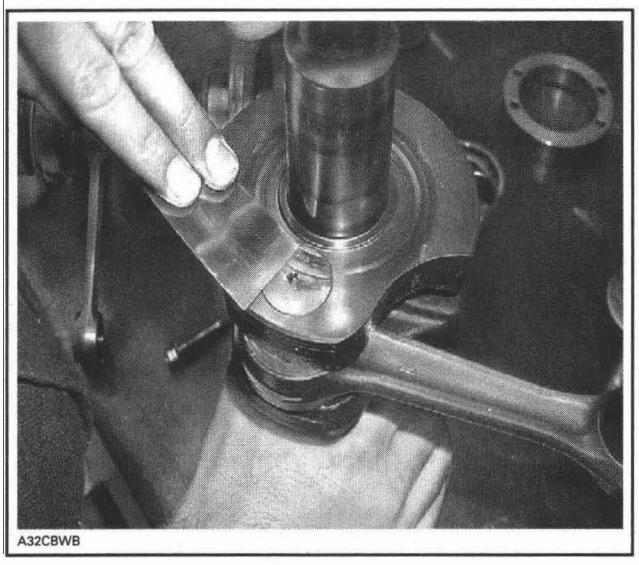
A32CBWB

Remove all residue using pulley flange cleaner (P/N 413 711 809).

Smear Loctite 767 (antiseize lubricant) (P/N 293 800 070) on part of crankshaft where bearing is installed.

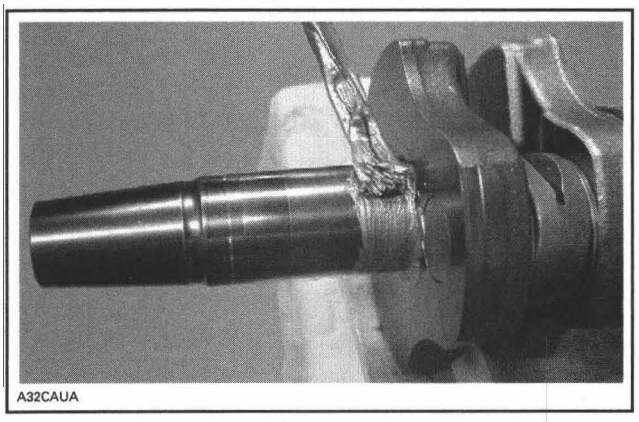
A32CAUA

Heat up the bearing(s) using bearing heater (P/N 529 035 969). This will expand bearings and ease installation. If required, put a suitable plate or shim to avoid the direct contact between integrated seal with the heating surface.

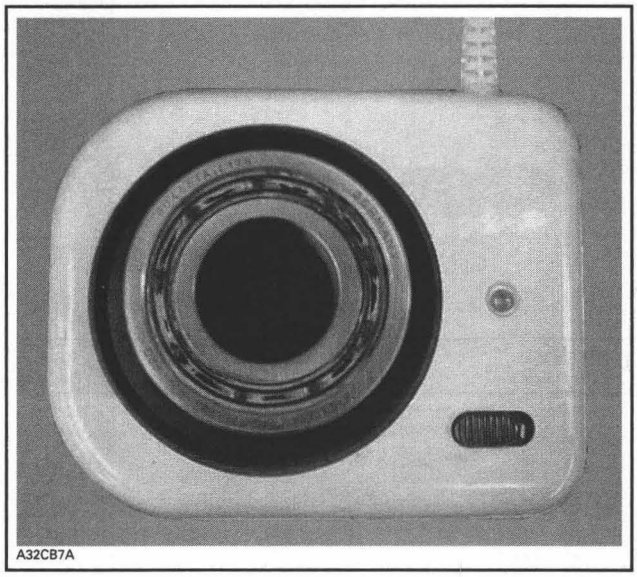
A32CB7A

CAUTION: Bearing(s) should not be heated to more than 80°C (176°F). Do not heat bearing(s) on direct flame, or with a heat gun or in an oil bath. Inappropriate bearing(s) heating may result in inner seals or cage failure.

For even heat distribution, turn bearing several times during heating process.

NOTE: Two bearings can be heated at the same time on one bearing heater.

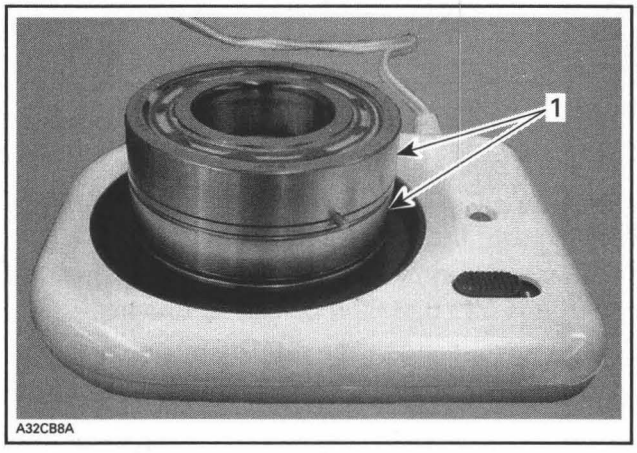

A32CB8A

1. Bearings

Probe the inner race of the bearing with the temperature indicator stick (P/N 529 035 970). Stick will liquefy when the bearing reaches the proper temperature.

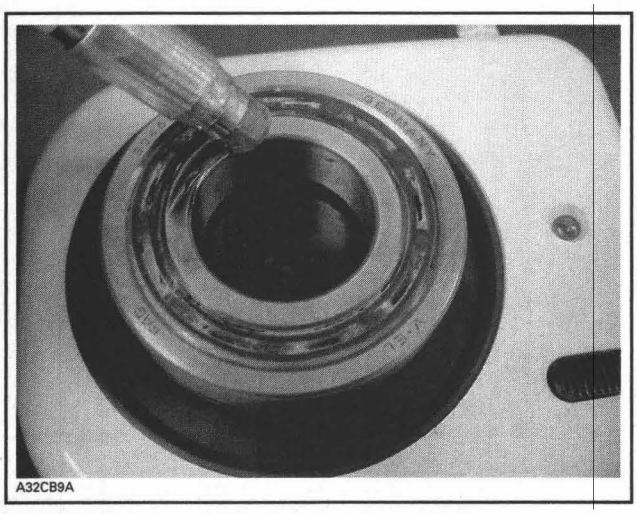
A32CB9A

⚠ WARNING

Do not touch heated bearing with bare hands. Always wear heat resisting gloves before handling the heated bearing(s).

CAUTION: Never reinstall a bearing that has been removed.

NOTE: Install PTO bearings on crankshaft so that locating pins will be positioned as shown.

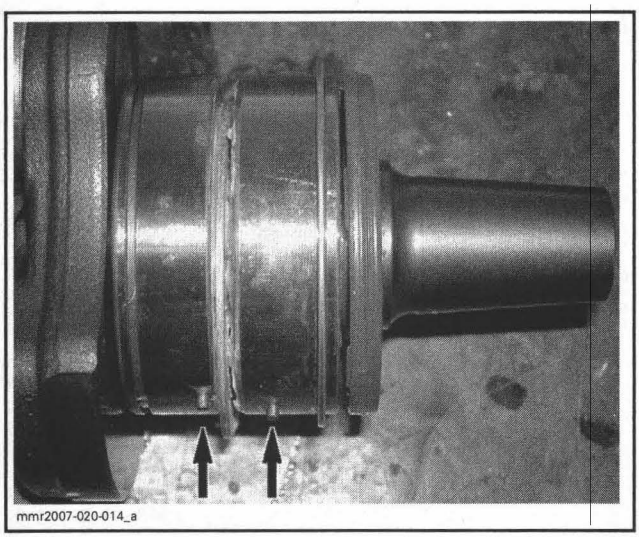
mmr2007-020-014_a

PTO SIDE

Slide the heated inner PTO bearing on crankshaft until it bottoms on crankshaft shoulder.

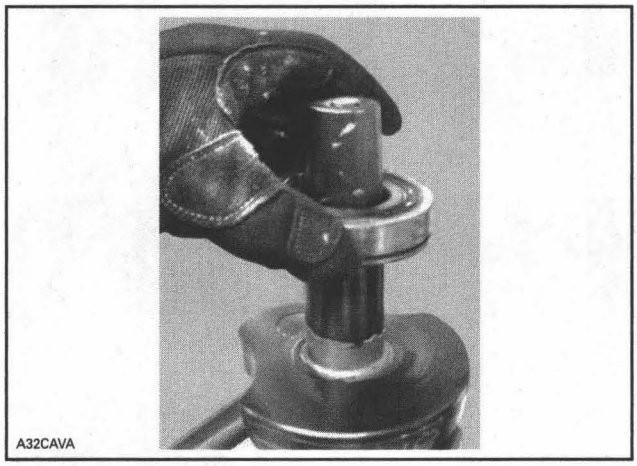
A32CAVA

NOTE: Heated bearing should slide easily onto the crankshaft. If required, push with a steel tube on the inner race of the bearing.

Install retaining disc.

Install distance gauge (P/N 529 036 060) as shown.

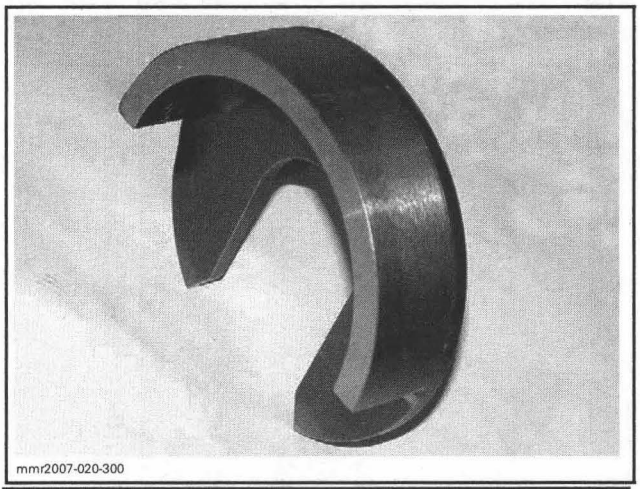
mmr2007-020-300

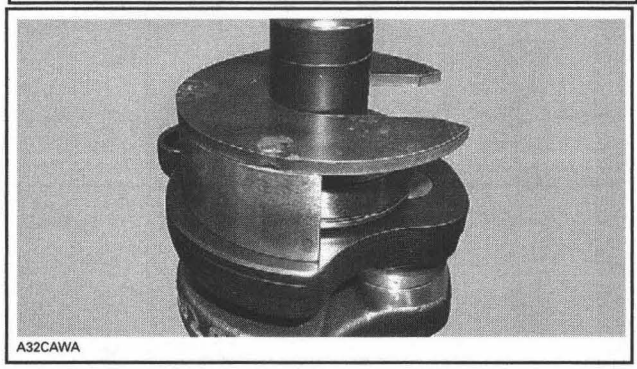
A32CAWA

TYPICAL

Slide the heated outer PTO bearing onto the crankshaft until it contacts the distance gauge.

NOTE: Install MAG bearings on crankshaft so that locating pins will be positioned as shown.

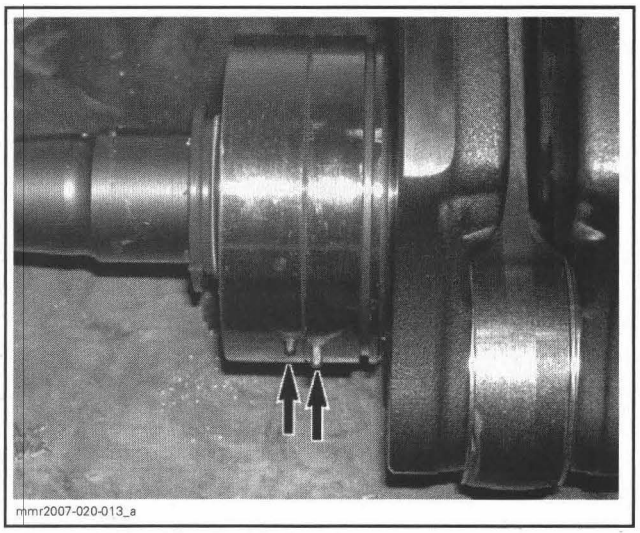

MAG SIDE

Slide the inner MAG bearing until it bottoms on crankshaft shoulder.

NOTE: Heated bearing should slide easily onto the crankshaft. If required, push with a steel tube on the inner race of the bearing.

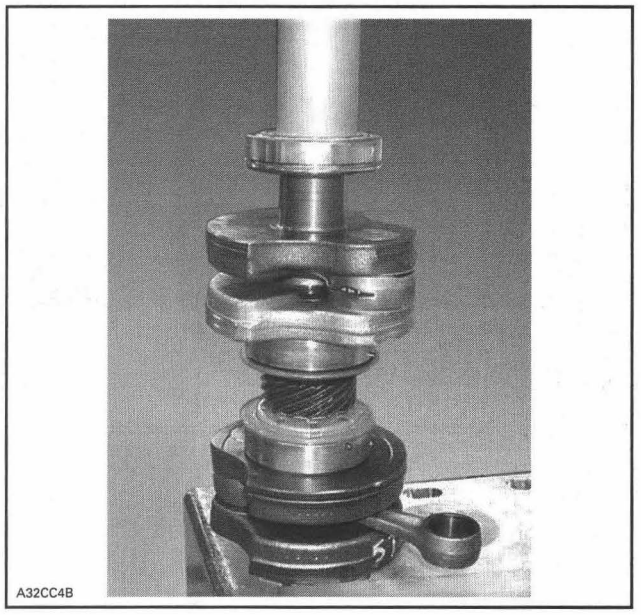

Slide the outer bearing until it sits on inner bearing.

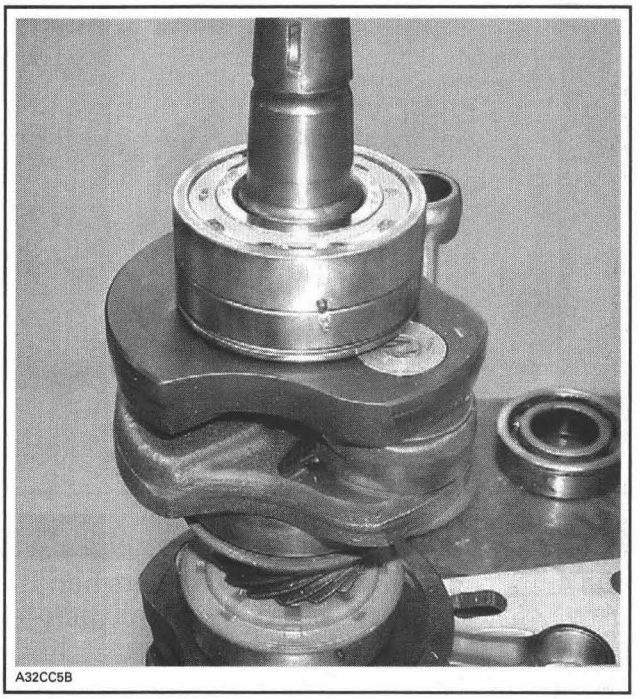

Crankshaft Installation

At crankshaft installation, position drive pins in their recess as illustrated.

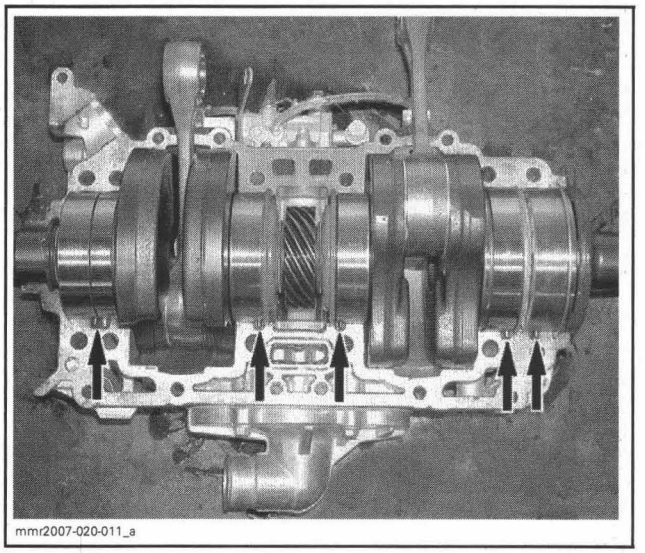

Pay attention to properly locate MAG seal in its groove.

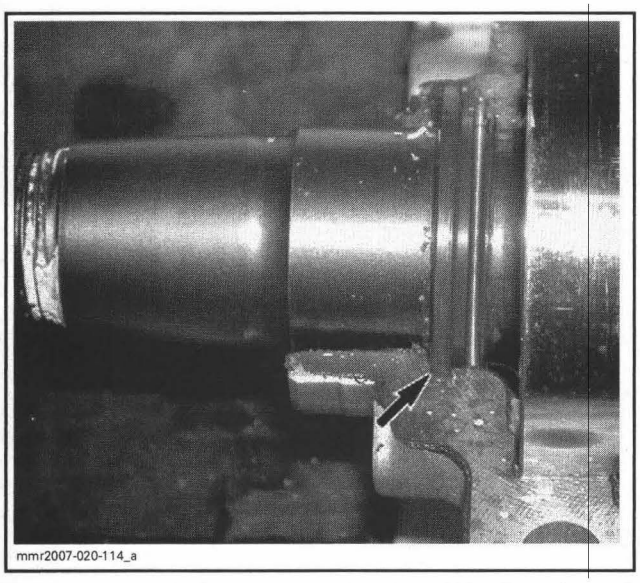

Pour 50 mL (2 U.S. oz) of injection oil in the oil bath under central gear as shown.

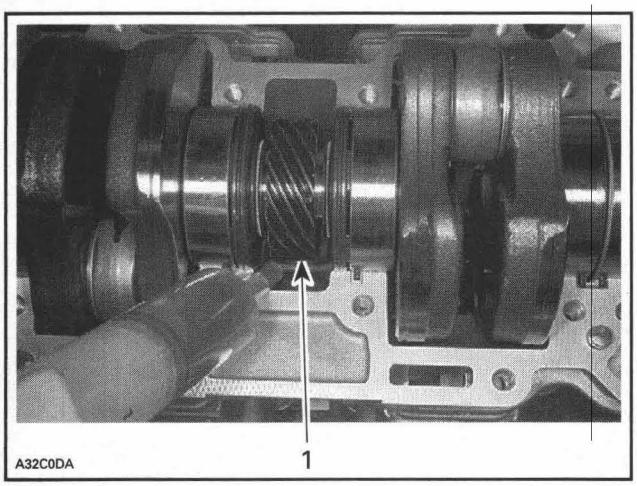

TYPICAL
1. Oil bath

Apply Isoflex grease (P/N 293 550 021) as per following procedure:

CAUTION: Use only the recommended grease. Make sure not to push grease between outside bearing race and half crankcase.

Put approximately 25 mL of grease in a syringe.

NOTE: The 50 g tube corresponds to 50 mL of grease.

CAUTION: Do not exceed the recommended amount of grease.

With the syringe, fill the PTO side outer bearing with 19 mL of grease.

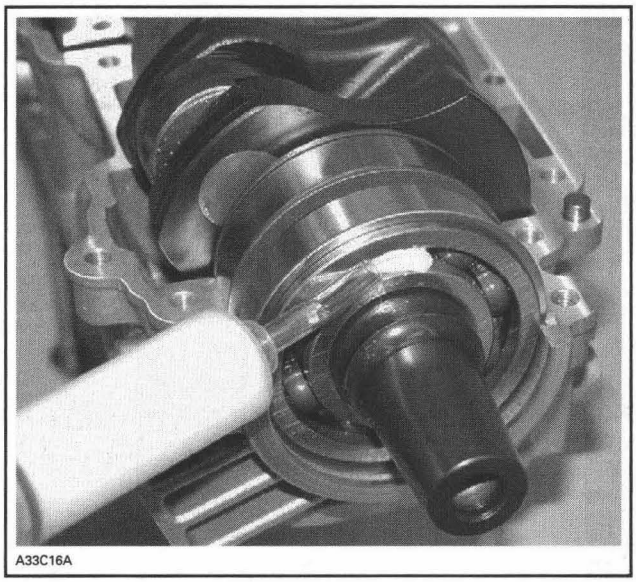

NOTE: Inner PTO bearing is already filled with grease (about 8 mL).

Apply 5 mL of grease to MAG side outer bearing.

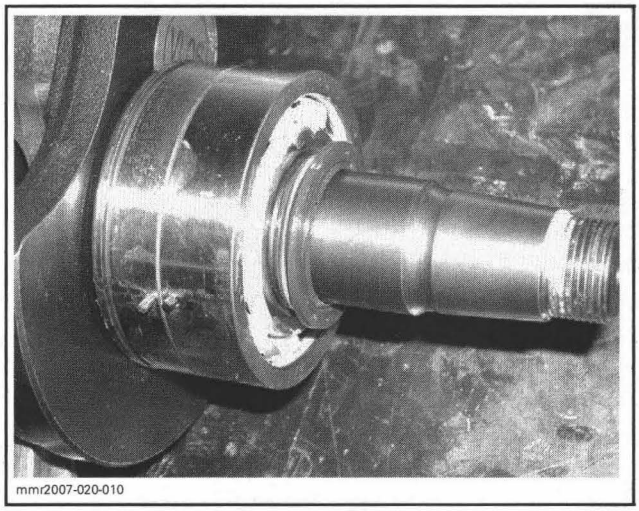

NOTE: Inner MAG bearing is already filled with grease (about 5 mL).

Install MAG seal.

ENGINE MANAGEMENT (500SS)

OVERVIEW

The engine management system (EMS) controls the following main systems:

- Ignition system
- Rotax Electronic Reverse (RER)
- Starting system (electric start models)
- Digitally Encoded Security System (DESS).

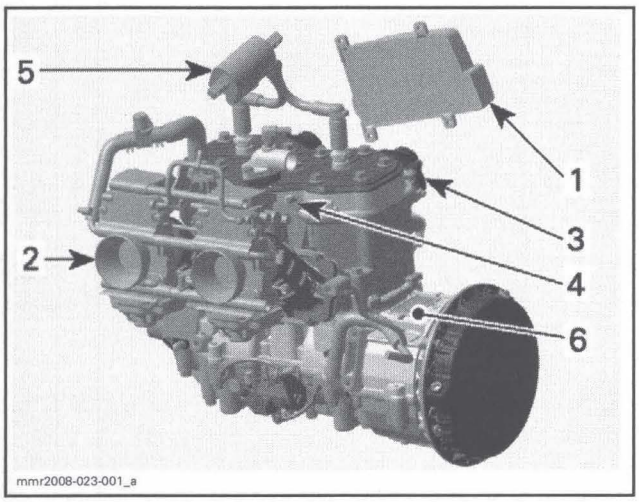

1. *Engine control module (ECM)*
2. *TM carburetors*
3. *RAVE valves*
4. *Coolant temperature sensor (CTS)*
5. *Ignition coil*
6. *Trigger coils (2)*

The EMS also offers a monitoring system and diagnostic mode to help troubleshooting some problems. Refer to *MONITORING SYSTEM/FAULT CODES* section.

ENGINE CONTROL MODULE (ECM)

The ECM and the multifunction gauge communicate together through the CAN lines (Controller Area Network).

The engine control module (ECM) is the brain of the engine management system.

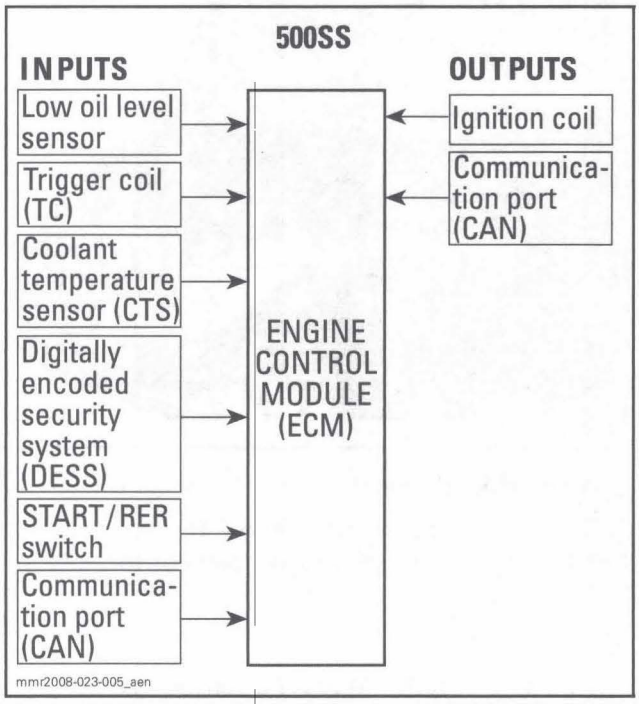

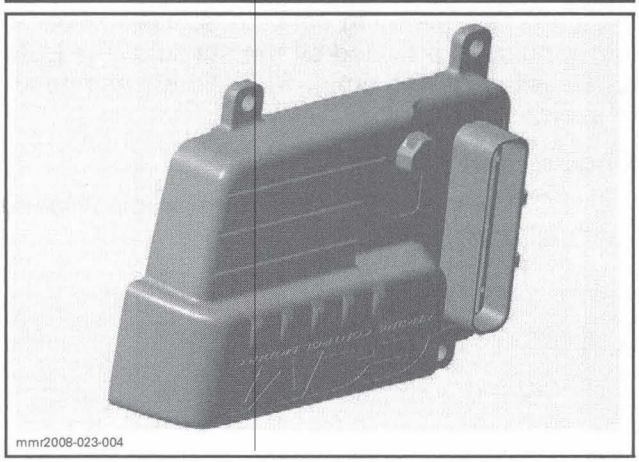

ECM

NOTE: To test the ECM, refer to *IGNITION SYSTEM*.

Midwest Manuals
sales@midwestmanuals.com
www.midwestmanuals.com

The ECM is located under the hood.

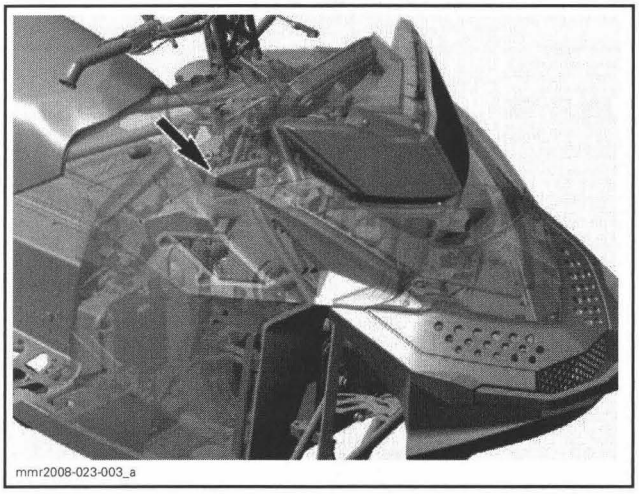
mmr2008-023-003_a

Ignition System

A CDI ignition system is used. The ECM sends the current to the primary winding of the ignition coil.

Ignition Timing

The ECM is programmed for optimum ignition timing under all operating conditions. Using operating conditions provided by the sensors, the ECM controls the ignition timing for optimum engine operation.

Engine RPM Limiter

The ECM will limit the maximum engine speed (approximately 8600 RPM).

ENGINE MANAGEMENT (800R)

OVERVIEW

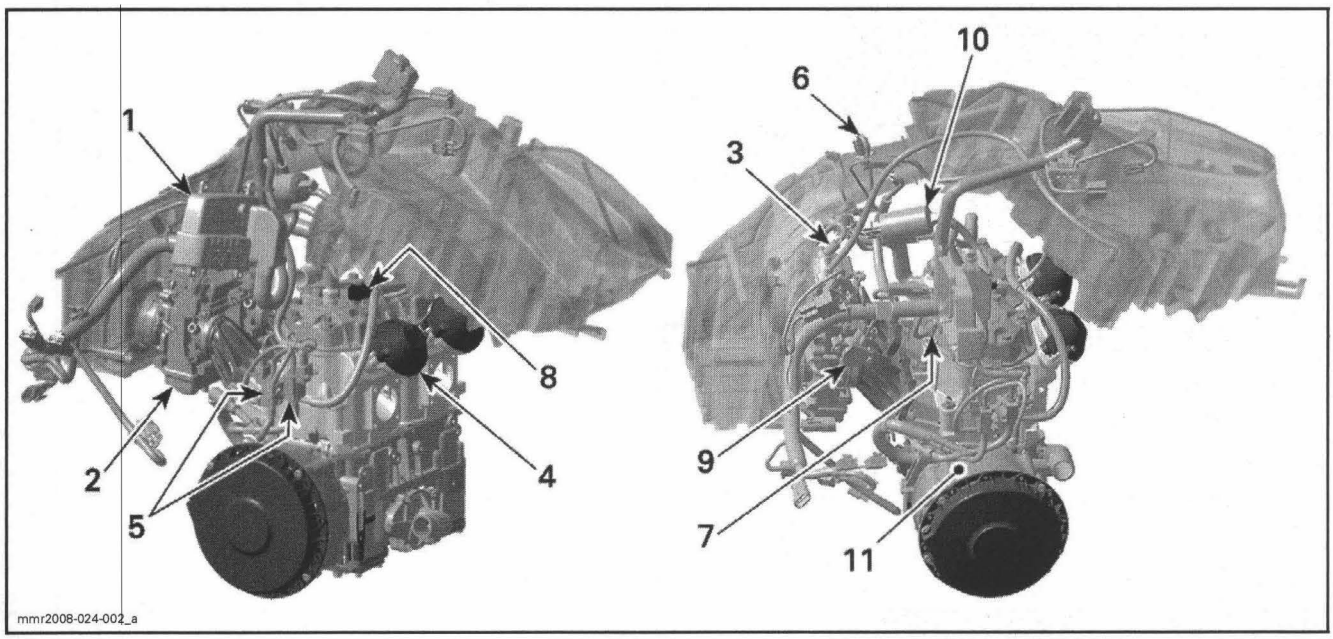

1. *Engine control module (ECM) including air pressure sensor (APS)*
2. *TM carburetors*
3. *DPM manifold*
4. *RAVE valves*
5. *RAVE valve solenoid*
6. *Air temperature sensor (ATS)*
7. *Coolant temperature sensor (CTS)*
8. *Knock sensor (KS)*
9. *Throttle position sensor (TPS)*
10. *Ignition coil*
11. *Trigger coil*

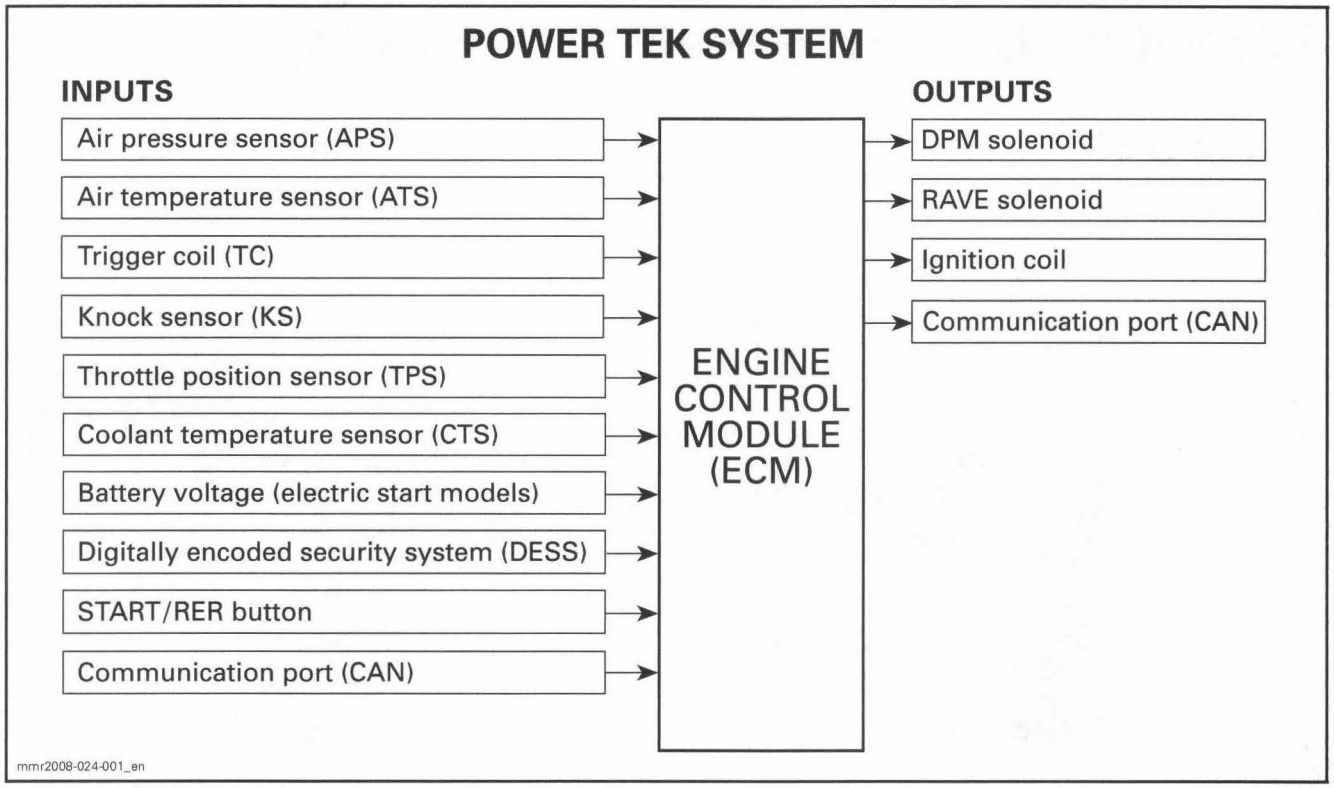

The acronym Power TEK refers to the following technologies found on this engine:

Throttle position sensor

Electronic RAVE

Knock sensor.

For this 800R Power TEK, a TPS and a knock sensor have been added to provide inputs to the ECM. The ECM electronically controls the electric RAVE valve solenoid and the DPM solenoid. This achieves an improved fuel economy, a cleaner engine for emission requirements and improved engine protection (against seizure).

The use of a TPS along with the trigger coils (engine RPM) allows the ECM to recognize the engine load and thus using 3D DPM and ignition maps.

The engine management system (EMS) controls the following main systems:

- Ignition system
- 3D RAVE system
- Digital Performance Management (DPM)
- Rotax Electronic Reverse (RER)
- Digitally Encoded Security System (DESS)
- Starting system (electric start models).

The EMS also offers a monitoring system and diagnostic mode to help troubleshooting some problems. Refer to *MONITORING SYSTEM/FAULT CODES* section for more details.

The engine warm up is electronically controlled. The ignition timing, fuel delivery and 3-D RAVE opening are varied to limit power output on a cold engine to reduce the chance of engine damage. This type of limitation is RPM-related and the warm-up period should be seamless.

NOTE: When engine coolant temperature is below 5°C (41°F), the RAVE valves will be kept closed.

ENGINE CONTROL MODULE (ECM)

The engine control module (ECM) is the brain of the engine management system.

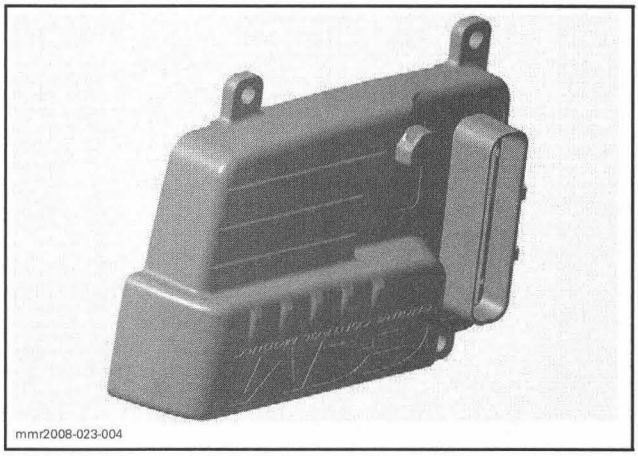

ECM

The ECM applies the proper ignition and DPM maps for optimum engine operation in all riding conditions.

The ECM and the multifunction gauge communicate together through the CAN lines (Controller Area Network).

The ECM is located under the hood.

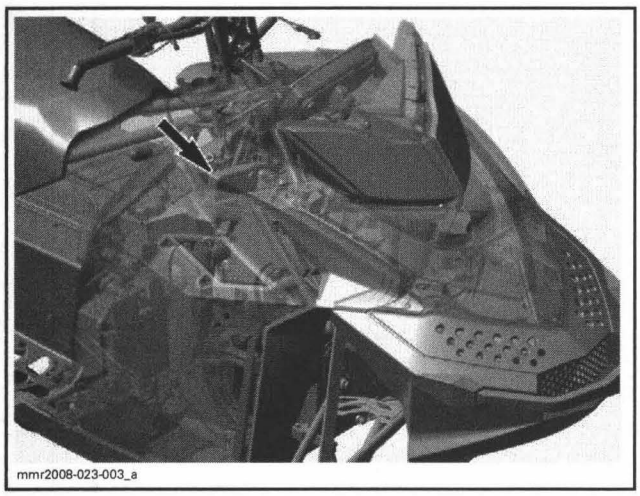
mmr2008-023-003_a

Ignition System

A CDI ignition system is used. The ECM sends the current to the primary winding of the ignition coil.

NOTE: To test the ECM, refer to *IGNITION SYSTEM*.

Ignition Timing

The ECM is programmed for optimum ignition timing under all operating conditions. Using operating conditions provided by the sensors, the ECM controls the ignition timing for optimum engine operation.

Knock Sensor

A knock sensor is mounted on top of the cylinder head. It detects specific vibration that would be typically generated by engine detonation.

When knocking occurs, the ECM temporarily retards ignition timing and enrichens fuel mixture until knocking disappears. Then, previous parameters automatically resume as required. Refer to *COMMUNICATION TOOLS AND B.U.D.S. SOFTWARE*.

NOTE: Occasional knocking will not generate a fault code. If knocking occurrence goes over a certain threshold, a fault code will be generated.

Refer to *IGNITION SYSTEM* to test the knock sensor.

Engine RPM Limiter

The ECM will limit the maximum engine speed (approximately 8600 RPM).

Digital Performance Management (DPM)

To test the air temperature sensor (ATS) and the air pressure sensor (APS), refer to *DIGITAL PERFORMANCE MANAGEMENT (DPM)* section.

ENGINE MANAGEMENT (600 HO SDI)

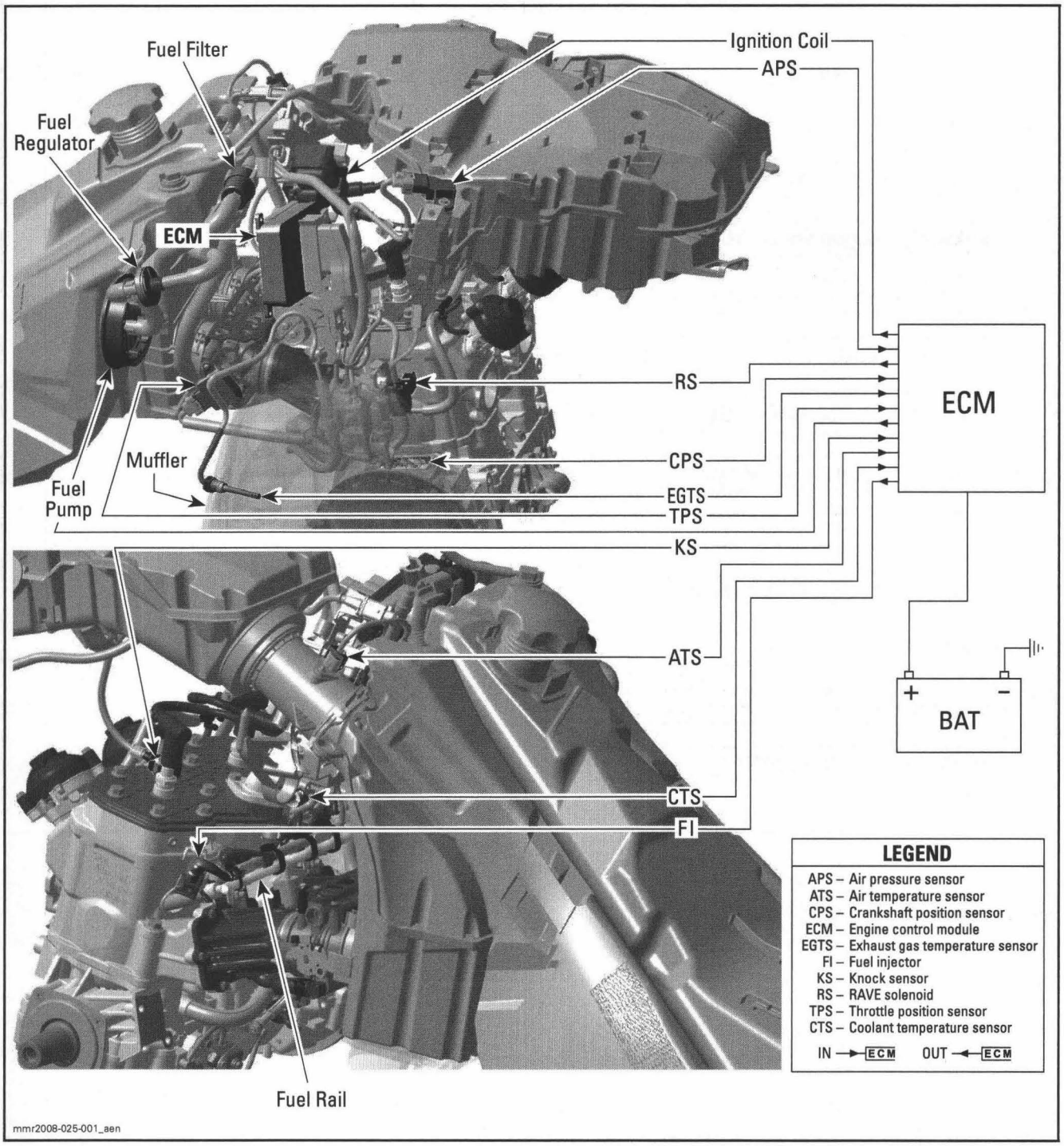

ENGINE MANAGEMENT SYSTEM FUNCTIONS

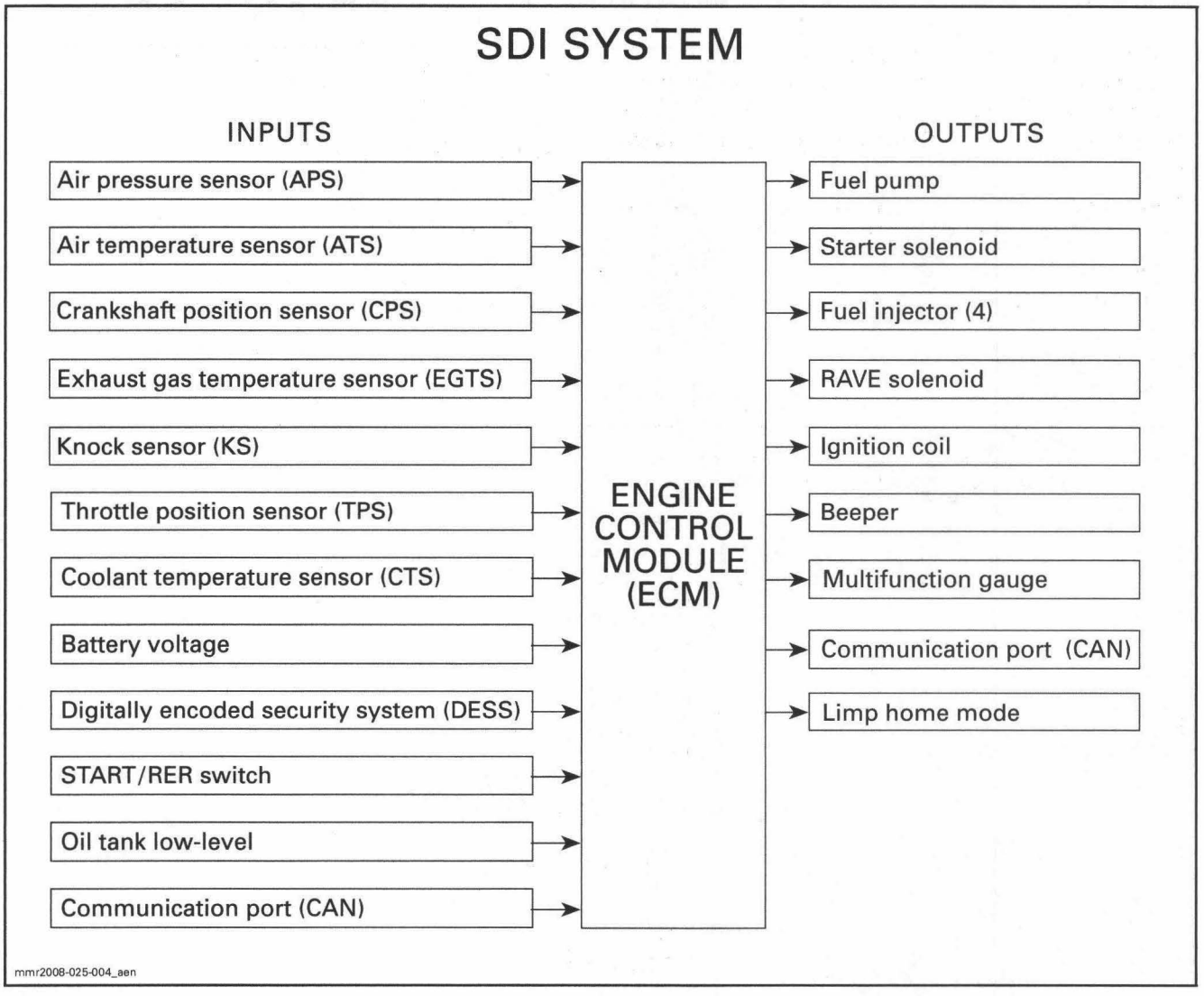

OVERVIEW

For this SDI 2-stroke engine, an Engine Management System (EMS) has been used to ensure a high power output combined with cleaner combustion. An Engine Control Module (ECM) calculates the proper air/fuel mixture, ignition timing for each cylinder separately.

There are 6 main systems that are controlled by the engine management system (EMS):

- Semi-direct injection
- Ignition system
- Starting system
- E-Rave
- DESS (Digitally Encoded Security System)
- RER (Rotax Electronic Reverse).

The EMS features a monitoring system that self-diagnose its electronic components. Refer to *MONITORING SYSTEM/FAULT CODES* section for more details.

Power Distribution

The system uses 3 relays:

- R1: capacitor circuit
- R2: ignition coils electric fuel pump, starting solenoid, RAVE solenoid, multifunction gauge and relay 1
- R3: lighting system, heaters and the accessories.

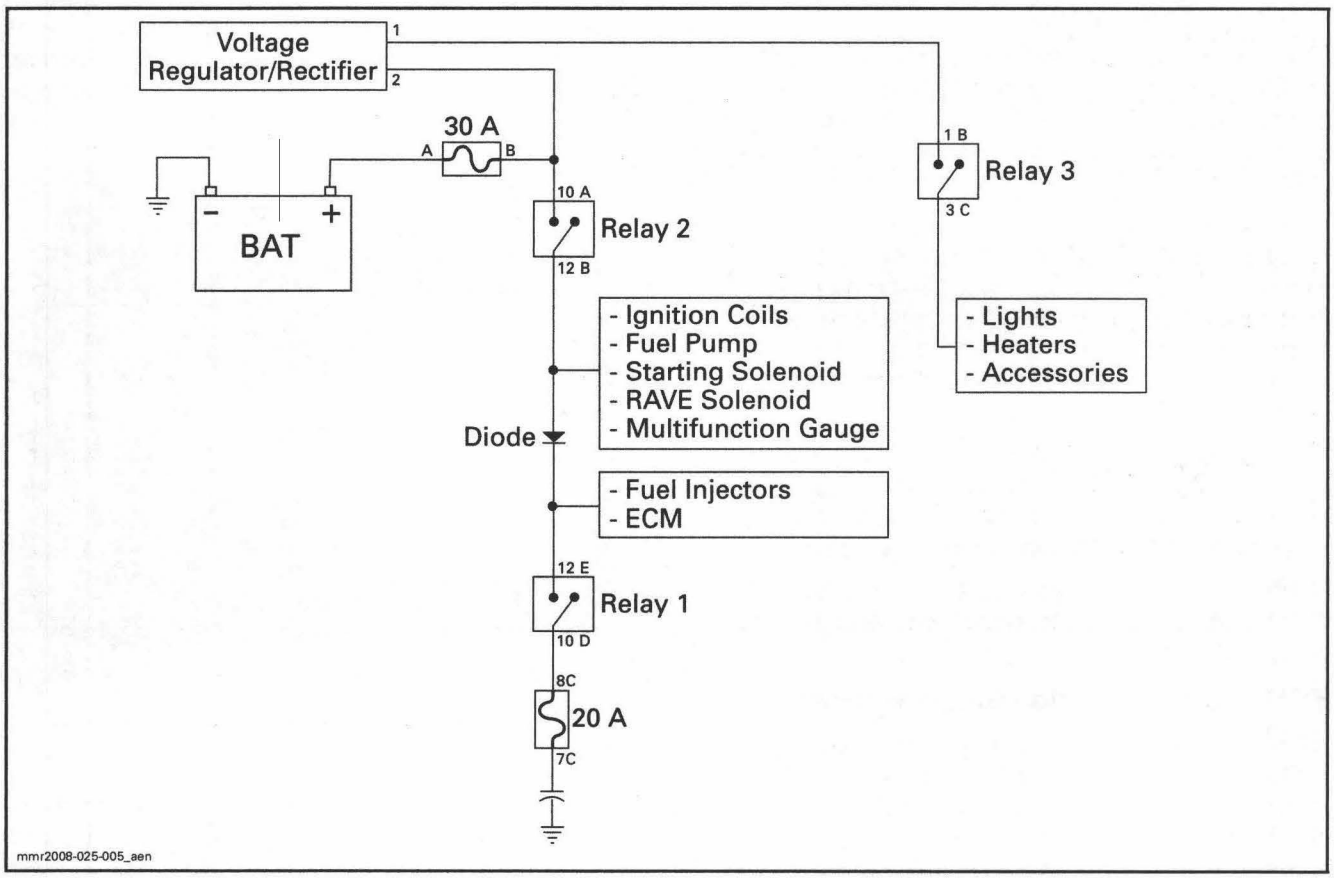

While cranking, the magneto sends AC current to the voltage regulator/rectifier that in turn, sends a signal to the ECM. This wakes up the Engine Management System and activates the relay (R1) and the relay (R2). Just a small rotation of the engine is needed to wake-up the ECM.

IMPORTANT: Engine-related actuators and injectors are continuously powered from the battery when ECM is woken up. **The ECM switches the ground to complete the electrical circuits it controls.** Take this into account when troubleshooting the electrical system.

The RER switch may also be used to wake-up the Engine Management System.

Waking-up the EMS before doing a start attempt result in faster start-up.

The battery is required to supply voltage to the ECM and to the fuel pump to allow a fuel pressure buildup. An easy way to acknowledge if the Engine Management System is woken-up, verify if multifunction gauge is on.

The capacitor has two functions. It is used to stabilize battery voltage when the regulator/rectifier is charging the battery. It also gives the possibility to be able to start the engine even if the battery is very low. In this case, starting the engine may be more difficult and will require the very complete stroke of the starting rope.

The capacitor relay prevents the capacitor to be connected to the battery when the engine is not running to allow safe vehicle maintenance (disconnection and reconnection of the capacitor).

When engine reaches approximately 800 RPM, the ECM activates the headlights and accessory relay (R3).

ECM and Multifunction Gauge Voltage Supply

ECM and multifunction auge are supplied with voltage for 30 seconds when connecting the tether cord cap on its post and momentarily pressing the START/RER switch.

NOTE: On electric start models, setting engine cut-out switch to OFF will prevent engine starting.

NOTE: Each time the tether cord cap is connected to the post and START/RER switch is depressed, the fuel pump is activated for 2 seconds to build up pressure in the fuel injection system.

Automatic Power Shut-Down

The ECM is equipped with an automatic power shut-down. This feature prevents the battery from losing its charge if the tether cord cap is left on the post when the engine is not running for more then 30 seconds. The ECM will remain offline until the START/RER switch or the rewind starter is activated. The ECM will shut down all outputs after 5 seconds when the tether cord cap is removed.

ENGINE CONTROL MODULE (ECM)

The Engine Control Module (ECM) is the central part of the engine management system. It reads the inputs, makes computations, uses pre-determined parameters and sends the proper signals to the outputs for proper engine management.

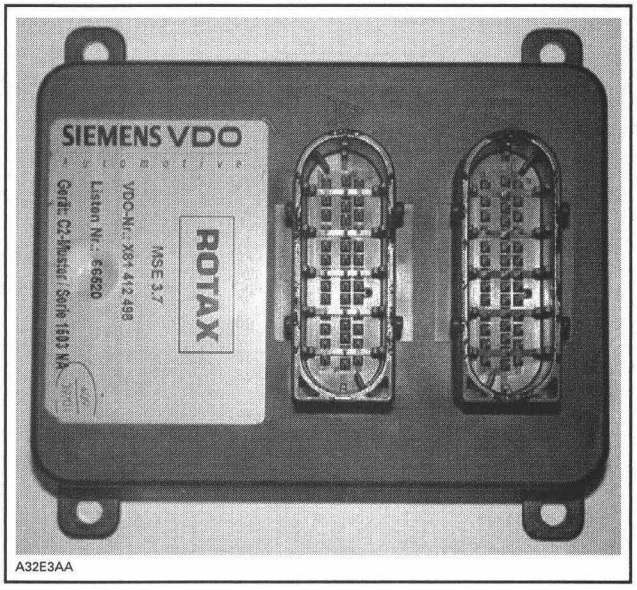

TYPICAL — ECM

The ECM features a permanent memory that will keep the programmed tether cord cap(s) code, fault codes and other vehicle information, even when the battery is removed from the vehicle.

Refer to *SEMI-DIRECT INJECTION (SDI)* for troubleshooting the ECM.

Semi-Direct Injection (SDI)

Refer to *SEMI-DIRECT INJECTION (SDI)* section for more details.

Ignition System

Ignition Timing

The ECM is programmed with data (it contains ignition mappings) for optimum ignition timing under all operating conditions. Using engine operating conditions provided by the sensors, the ECM controls the ignition timing for optimum engine operation.

Knock Sensor

A knock sensor is mounted on top of the cylinder head. It detects specific vibration that would be typically generated by engine detonation. If detonation occurs, the knock sensor detects it and the ECMs retards the ignition advance and extend the injection period temporarily (it goes in a specific mode) until detonation stops.

NOTE: To test the knock sensor, refer to *SEMI-DIRECT INJECTION (SDI)* section.

Engine RPM Limiter

The ECM will limit the maximum engine speed.

COMMUNICATION TOOLS/B.U.D.S. SOFTWARE

SERVICE TOOLS

Description	Part Number	Page
9 V battery supply cable	529 035 675	182–183, 186, 188
Optional extension cable	529 035 697	185
Optional extension cable	529 035 703	181
Supply T-harness	529 035 869	182–183, 186–187
Communication kit	529 035 981	181
12 V battery supply cable	529 035 997	182–183, 186, 188
MPI-2	529 036 018	185, 187–188
DESS post interface	529 036 019	186–187
Diagnostic cable	710 000 851	185, 188

Two different MPI (Multi-Purpose Interface) can be used with B.U.D.S. software to communicate with the engine management system: MPI or MPI-2.

MULTI-PURPOSE INTERFACE (MPI)

PART REQUIRED	OPERATION		MODEL
	– PROGRAMMING KEY(S) – ENTERING CUSTOMER INFORMATION – SETTING IGNITION TIMING/CLOSED TPS – READING FAULT CODES	– ACTIVATION OF COMPONENTS (IGNITION COIL, FUEL PUMP ETC.)	
PC computer	X	X	All
B.U.D.S. software Use latest version available on BOSSWeb	X	X	All
Communication kit (P/N 529 035 981) 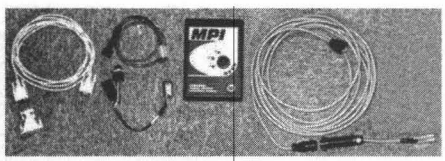	X	X	All
Optional extension cable (P/N 529 035 703) 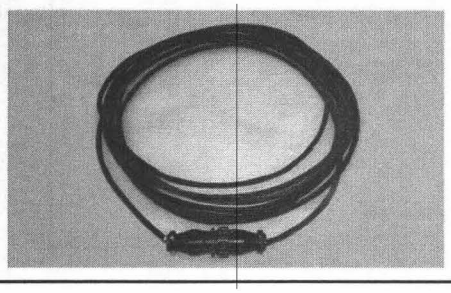	X	X	All

PART REQUIRED	OPERATION		MODEL
	– PROGRAMMING KEY(S) – ENTERING CUSTOMER INFORMATION – SETTING IGNITION TIMING/CLOSED TPS – READING FAULT CODES	– ACTIVATION OF COMPONENTS (IGNITION COIL, FUEL PUMP ETC.)	
Supply T-harness (P/N 529 035 869) 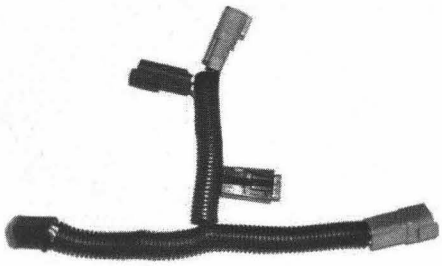	X	X	All
9 V battery supply cable (P/N 529 035 675) 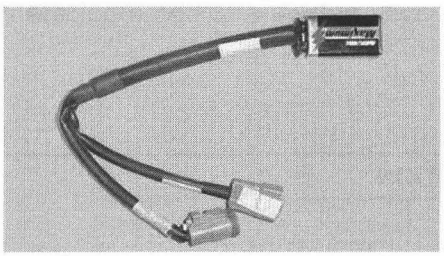	X		500SS 800R
12 V battery supply cable (P/N 529 035 997) 		X	500SS 800R

MPI Supply

The MPI can use the vehicle power for its supply. Four AA batteries or an AC/DC power supply can also be used. Make sure to respect MPI specification if a power supply is used.

MPI Connections with Vehicle

Remove the 6-pin connector from the protective cap on the right side of the vehicle.

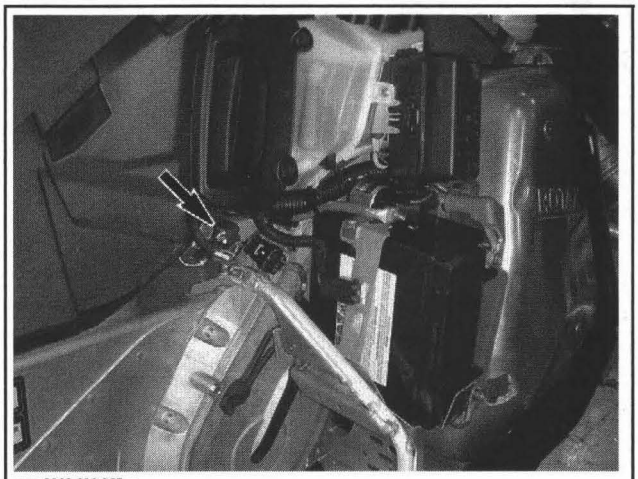

mmr2008-033-065_a

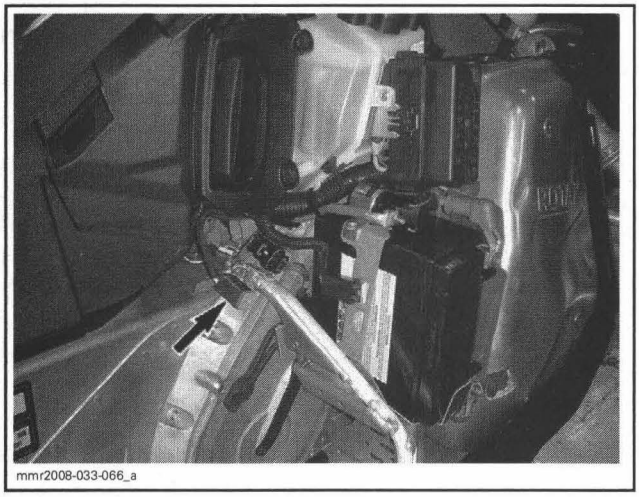
mmr2008-033-066_a

Connect supply T-harness (P/N 529 035 869), to vehicle 6-pin connector.

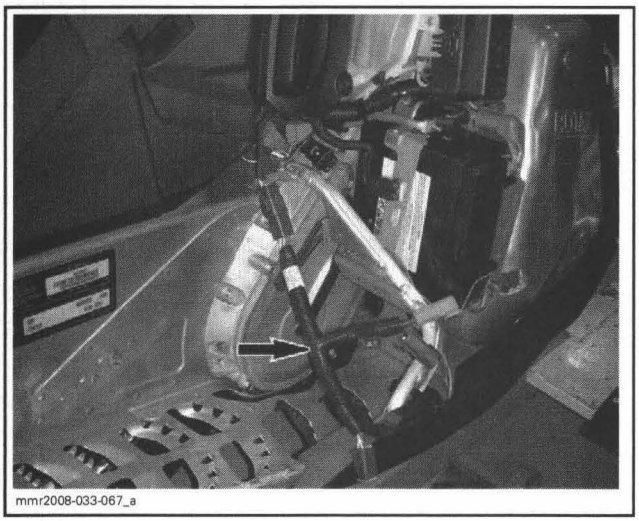
mmr2008-033-067_a

Connect the 6 pin diagnostic cable from MPI to supply T-harness.

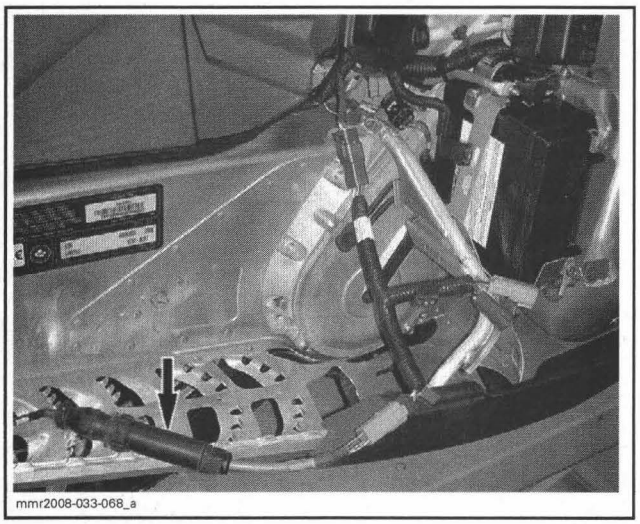
mmr2008-033-068_a

CAUTION: Connecting MPI directly to vehicle connector (without supply T-harness) may prevent proper communication. Always use the proper supply T-harness.

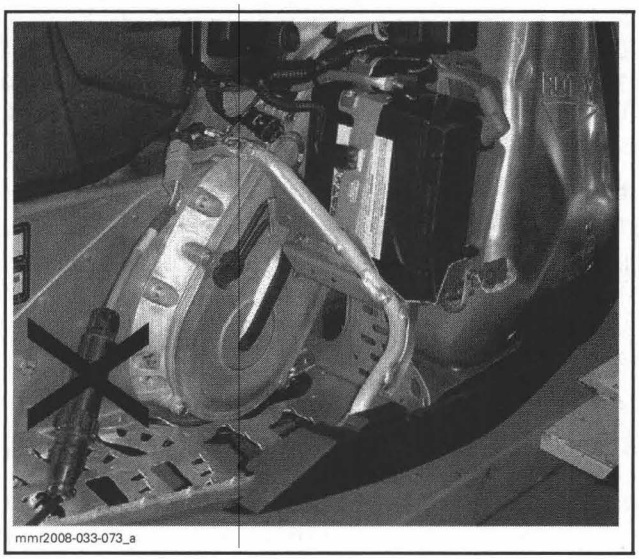
mmr2008-033-073_a

500SS/800R

Connect supply T-harness to a 12 V battery, using 12 V battery supply cable (P/N 529 035 997); or to a 9 V battery, using 9 V battery supply cable (P/N 529 035 675).

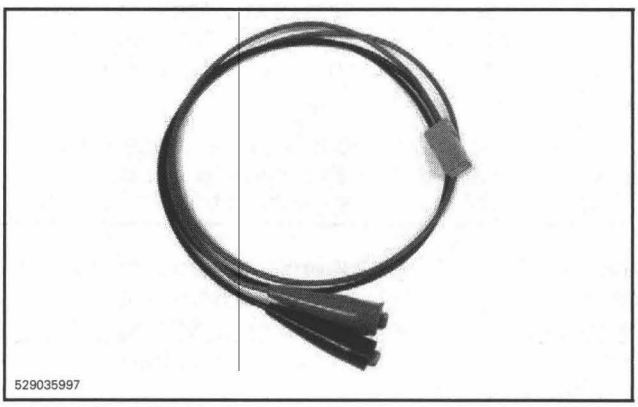
529035997

12 V BATTERY SUPPLY CABLE

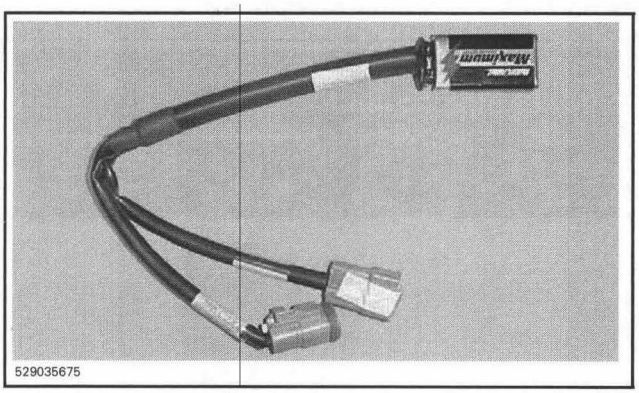
529035675

9 V BATTERY SUPPLY CABLE

NOTE: The 9 V battery allows programming keys, setting ignition timing, reset closed throttle, etc. The 12 V battery allows to activate solenoids, spark plugs, etc., from B.U.D.S. **Activation** tab. In this case, all sensors and actuators will be continuously supplied from the battery. The ECM will switch the circuit to the ground when activated through B.U.D.S. If engine starting is required, disconnect clips from battery.

600 HO SDI

These models do not need any external 9 V or 12 V power to allow programming and troubleshooting. The use of the supply T-harness will keep the ECM ON. Not using it will make the ECM shuts-off after a few seconds.

All Models

CAUTION: Always use the proper supply T-harness and cables. Ensure to respect polarity when connecting cable clips to battery. Match RED cables together.

NOTE (500SS/800R)

It is suggested to disconnect headlights fuse and to turn off heated grips to reduce battery discharge rate.

On manual start models, it is necessary to use an external 12 V battery and to connect the supply cable clips on it to supply ECM and sensors/actuators.

On electric start models, it is necessary to connect the supply cable clips to the battery to supply ECM and sensors/actuators.

NOTE: Some components will generate heat when leaving vehicle in diagnostic mode for a long period. Always disconnect MPI supply harness and supply cable from vehicle/battery when not working on vehicle.

Connect remaining MPI connector to the serial port of a PC (personal computer).

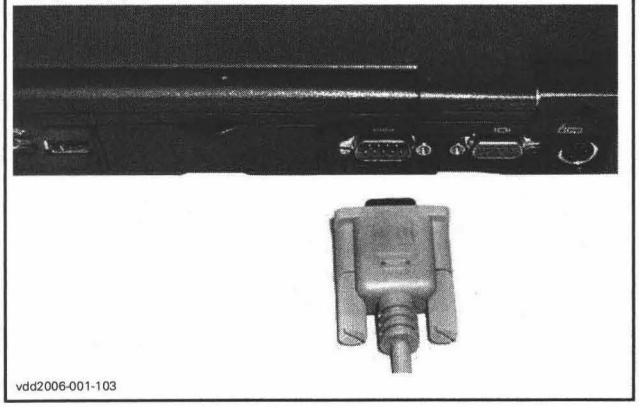

vdd2006-001-103

Use B.U.D.S. software as described further in *B.U.D.S. SOFTWARE*.

MULTI-PURPOSE INTERFACE-2 (MPI-2)

PART REQUIRED	OPERATION		MODEL
	– PROGRAMMING KEY(S) – ENTERING CUSTOMER INFORMATION – SETTING IGNITION TIMING/CLOSED TPS – READING FAULT CODES	– ACTIVATION OF COMPONENTS (IGNITION COIL, FUEL PUMP ETC.)	
PC computer	X	X	All
B.U.D.S. software Use latest version available on BOSSWeb	X	X	All
MPI-2 (P/N 529 036 018) 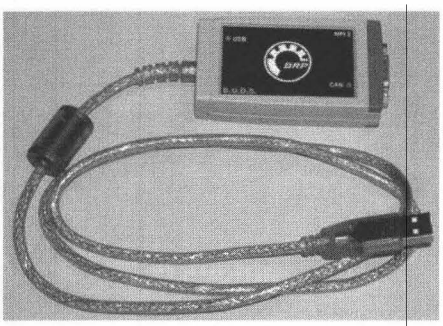	X	X	All
Optional extension cable (P/N 529 035 697) 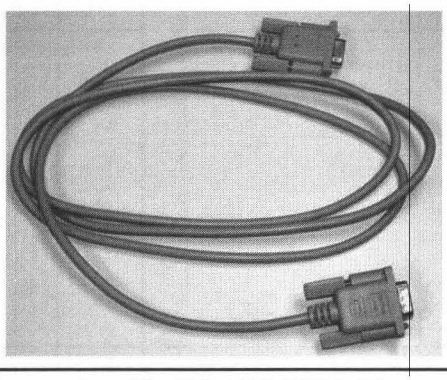	X	X	All
Diagnostic cable (P/N 710 000 851) 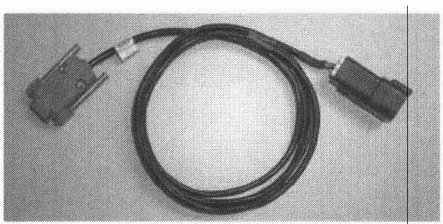	X	X	500SS 800R

PART REQUIRED	OPERATION		MODEL
	– PROGRAMMING KEY(S) – ENTERING CUSTOMER INFORMATION – SETTING IGNITION TIMING/CLOSED TPS – READING FAULT CODES	– ACTIVATION OF COMPONENTS (IGNITION COIL, FUEL PUMP ETC.)	
DESS post interface (P/N 529 036 019) 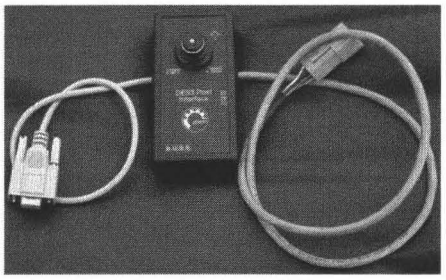	X	X	600 HO SDI
Supply T-harness (P/N 529 035 869) 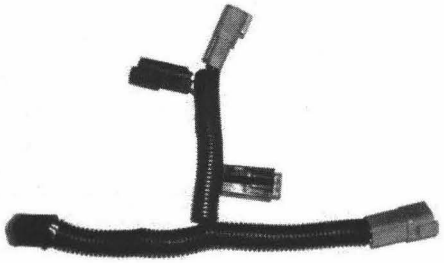	X	X	All
9 V battery supply cable (P/N 529 035 675) 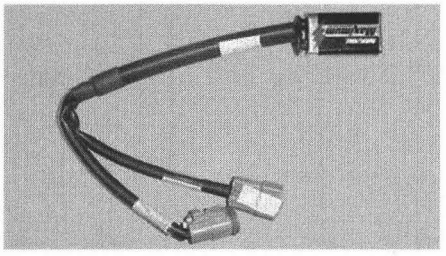	X		500SS 800R
12 V battery supply cable (P/N 529 035 997) 		X	500SS 800R

MPI-2 Power Supply

MPI-2

The MPI-2 uses the PC computer USB port for its power supply.

DESS Post Interface

The DESS post interface can use the vehicle power for its supply. Two AA batteries or an AC/DC power supply can also be used. Make sure to respect the interface specification if a power supply is used.

MPI-2 Connections with Vehicle

Remove the 6 pin connector from the protective cap on the right side of the vehicle.

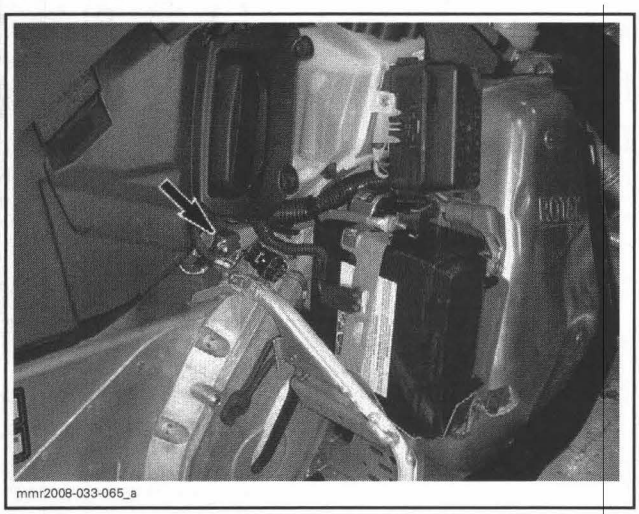
mmr2008-033-065_a

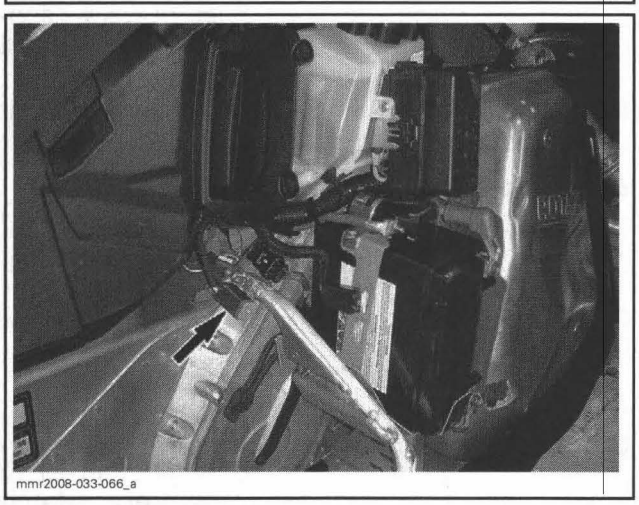
mmr2008-033-066_a

Connect supply T-harness (P/N 529 035 869), to vehicle 6-pin connector.

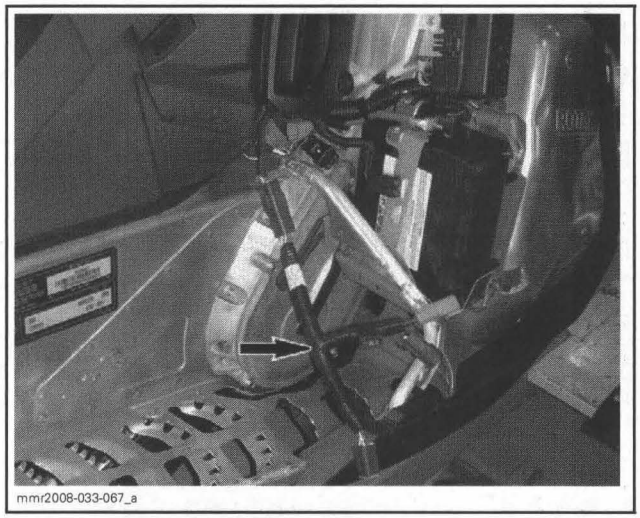
mmr2008-033-067_a

600 HO SDI

Connect DESS post interface (P/N 529 036 019), to supply T-harness connector.

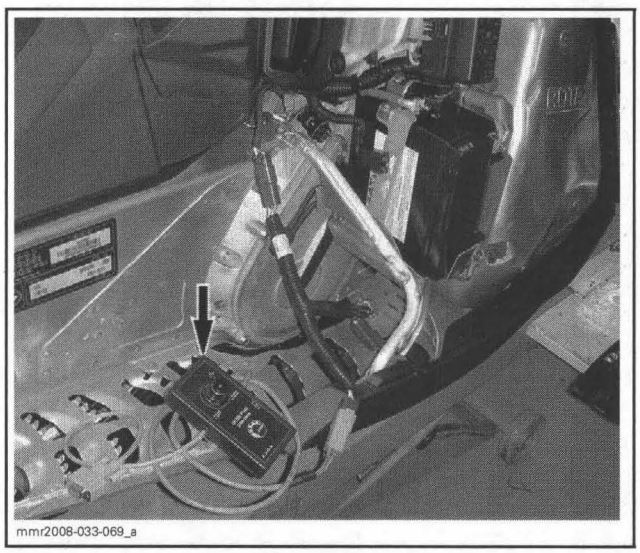
mmr2008-033-069_a

Connect MPI-2 (P/N 529 036 018) to DESS post interface.


mmr2008-033-070_a

500SS/800R

Connect diagnostic cable (P/N 710 000 851) to supply T-harness connector.


mmr2008-033-071_a

Connect MPI-2 (P/N 529 036 018) to diagnostic cable.

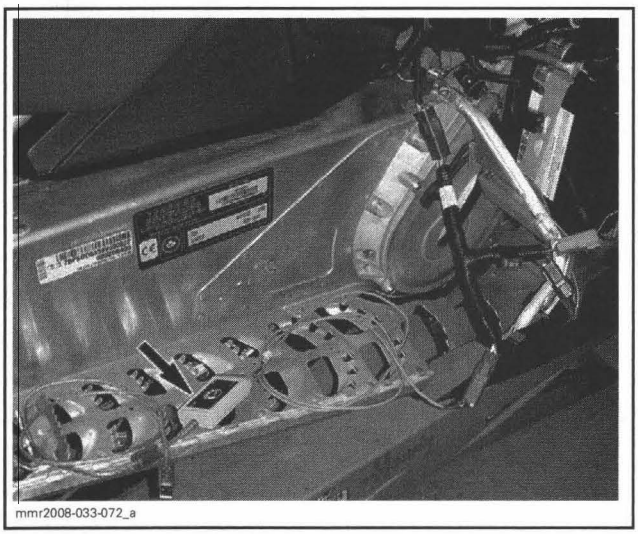
mmr2008-033-072_a

CAUTION: Connecting MPI-2 directly to vehicle connector (without supply T-harness) may prevent proper communication. Always use the proper supply T-harness.

Connect supply T-harness to a 12 V battery, using 12 V battery supply cable (P/N 529 035 997); or to a 9 V battery, using 9 V battery supply cable (P/N 529 035 675).

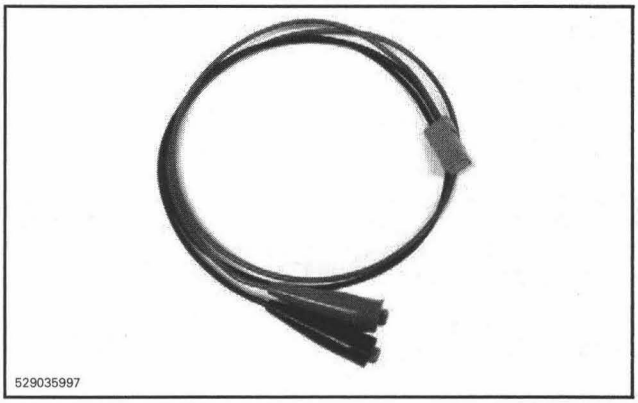
529035997

12 V BATTERY SUPPLY CABLE

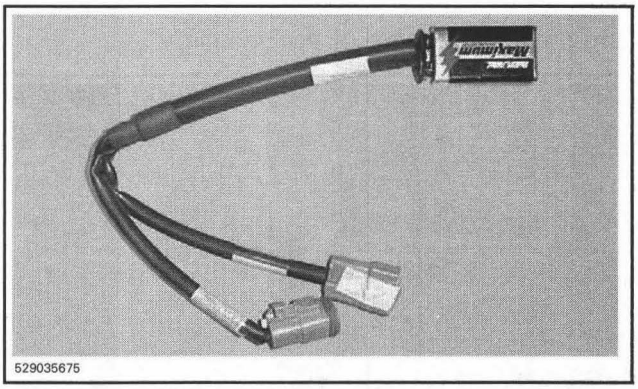
529035675

9 V BATTERY SUPPLY CABLE

NOTE: The 9 V battery allows programming keys, setting ignition timing, reset closed throttle, etc. The 12 V battery allows to activate solenoids, spark plugs, etc., from B.U.D.S. **Activation** tab. In this case, all sensors and actuators will be continuously supplied from the battery. The ECM will switch the circuit to the ground when activated through B.U.D.S. If engine starting is required, disconnect clips from battery.

600 HO SDI

These models do not need any external 9 V or 12 V power to allow programming and troubleshooting. The use of the supply T-harness will keep the ECM ON. Not using it will make the ECM shuts-off after a few seconds.

All Models

CAUTION: Always use the proper supply harness and cables. Ensure to respect polarity when connecting cable clips to battery. Match RED cables together.

NOTE (500SS/800R)

It is suggested to disconnect headlights fuse and to turn off heated grips to reduce battery discharge rate.

On manual start models, it is necessary to use an external 12 V battery and to connect the supply cable clips on it to supply ECM and sensors/actuators.

On electric start models, it is necessary to connect the supply cable clips to the battery to supply ECM and sensors/actuators.

NOTE: Some components will generate heat when leaving vehicle in diagnostic mode for a long period. Always disconnect MPI supply harness and supply cable from vehicle/battery when not working on vehicle.

Connect remaining MPI-2 connector to the USB port of a PC (personal computer).

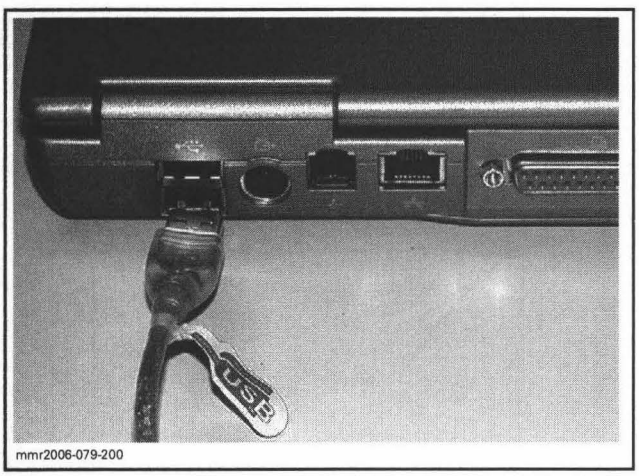
mmr2006-079-200

B.U.D.S. SOFTWARE

B.U.D.S. (Bombardier Utility and Diagnostic Software) is designed to allow electrical component inspection, diagnostic options and adjustments such as the closed throttle.

For more information pertaining to the use of the B.U.D.S. software, use its help which contains detailed information on its functions.

When using the service action suggested in the **Fault** section of B.U.D.S., for instance, a system circuit referred to as DA-35, means connector "A" on the ECM and the contact 35.

When using the B.U.D.S. software:

- Ensure that the protocol "kW2000" is properly selected in **MPI** under **Choose protocol**.

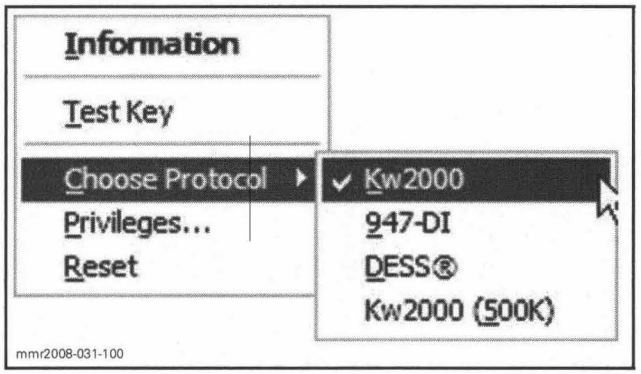

mmr2008-031-100

- Ensure that 115200 speed is properly selected in **MPI** under **Choose speed.**

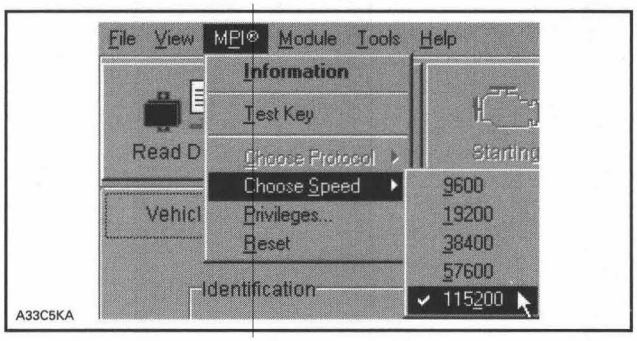

NOTE: If you are using an old PC computer, it may be necessary to use a slower speed so that the communication works.

- Ensure the status bar shows the kW2000 and the number 2 to the right.

Number 2 indicates that the ECM and the multifunction gauge are recognized by the MPI.

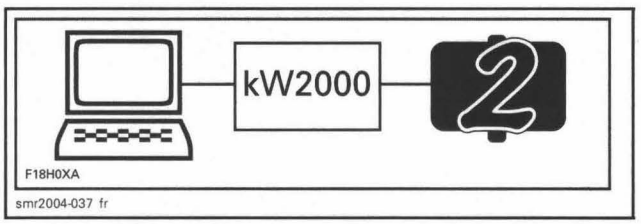

smr2004-037 fr

CONNECTION SUCCESSFUL

If an "X" is shown, this means that no communication between the MPI and the ECM is possible. In this case possible causes are:

- ECM is not powered-up
- Wrong protocol is used
- Bad connection between MPI and ECM.

When finished, ensure to vehicle harness reconnect in protective cap.

NOTE: There is a 120 Ω resistor in protective cap.

MONITORING SYSTEM/FAULT CODES

MONITORING SYSTEM

The EMS features a monitoring system that self-diagnose its electronic components.

When a predefined condition (engine overheat for example) or a fault occurs, the ECM sends a signal to the multifunction gauge and/or audible signals to a beeper to inform you of this particular condition.

The ECM monitors the following functions and components.

500SS

COMPONENT
DESS
RER
Low oil level
Engine RPM
Hi engine temperature (turns on @ 80°C (176°F) then turns off @ 75°C (167°F)
CAN
ECM
CTS
Main relay

800R

COMPONENT
EMS (TPS, knock sensor, 3D RAVE valve solenoids, DPM, APS and ATS)
DESS
RER
Low oil level
Engine RPM
Hi engine temperature (turns on @ 85°C (185°F) then turns off @ 80°C (176°F)
CAN
ECM
CTS
Main relay

600 HO SDI

COMPONENT
EMS (TPS, CPS, knock sensor, e-RAVE valve solenoids, APS, ATS, EGTS and fuel injectors)
DESS
RER
Low oil level
Engine RPM
Hi engine temperature (turns on @ 95°C (203°F) then turns off @ 90°C (194°F)
CAN
ECM
CTS
Starter solenoid
Fuel pump
All relays

Limp Home Mode

The ECM may automatically set default parameters to ensure the adequate operation of the vehicle if a component of the engine management system is not operating properly.

NOTE: Sensor failures will not lead automatically to a limp home mode. The check engine LED will turn on and in some cases the beeper.

The engine RPM may be limited if some critical components fail. In this case, releasing throttle and letting the engine returning to idle speed may allow normal operation to come back. If it does not work, try removing and reinstalling the tether cord cap on DESS post.

These performance-reduced modes allow the rider to go back home which would not be possible without this advanced system.

Pilot Lamps

Warning lights in multifunction gauge and/or a beeper provide signals as vehicle operation feedback or to indicate a problem.

Pilot lamp can flash alone or in combination with another lamp.

Beeper codes will be heard and messages (depending on gauge model) will be displayed to catch your attention.

NOTE: Message display is not available on all gauges.

500SS/800R

PILOT LAMP(S) ON	BEEPER	MESSAGE DISPLAY	DESCRIPTION
	Fast short beeps	ENGINE	Engine is overheating.
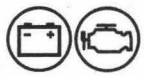	4 short beeps every 2 minutes	LOW BAT	Indicate a low or high battery voltage condition.
		HIGH BAT	
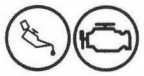	Fast short beeps	LOW OIL	Critical low injection oil level.
	4 short beeps	CHECK ENGINE	Engine fault.
	4 short beeps every 2 minutes	KNOCK	– Ensure recommended fuel is used. – Check fuel quality, replace if necessary.
	Continuously beeps	SHUTDOWN	Shutdown procedure in force due to engine overheating problem.
	4 short beeps every 2 minutes	LOW OIL	Injection oil level is low.
	Slow long beeps	REVERSE	Electronic reverse is selected.
	3 short beeps	REV. FAIL	Engine rotation did not change after reverse try, try again.
DESS	Refer to *DESS WARNING SIGNALS* below.		

600 HO SDI

PILOT LAMP(S) ON OR FLASHING	BEEPER	MESSAGE DISPLAY	DESCRIPTION
	4 short beeps	ENGINE or MUFFLER	Engine or muffler is overheating.
	Fast short beeps repetitive	ENGINE	Engine is overheating.
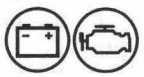	4 short beeps every 2 minutes	LOW BAT	Indicate a low or high battery voltage condition.
		HIGH BAT	
	4 short beeps	CHECK ENGINE	Engine management fault.
	4 short beeps every 2 minutes	KNOCK	– Ensure recommended fuel is used. – Check fuel quality, replace if necessary.
	3 short beeps	DRW MODE	Engine is in drown mode. Fuel injection and ignition are cut.
	4 short beeps every 2 minutes	LOW OIL	Injection oil level is low.
DESS	Refer to *DIGITALLY ENCODED SECURITY SYSTEM (DESS)* section.		

FAULT CODES

A fault code is an indication that a glitch or malfunction is detected by the monitoring system of the vehicle.

When there is a problem, the EMS (engine management system) can provide fault codes to ease the troubleshooting.

The faults registered in the ECM (engine control module) are kept when the battery is disconnected.

Many fault codes at the same time is likely to be burnt fuse(s) or a faulty relay.

How to Read Fault Codes Using B.U.D.S. Software

Refer to *COMMUNICATION TOOLS/B.U.D.S. SOFTWARE* section.

For more information pertaining to the faults code status and report, refer to B.U.D.S. online help or to the EMS fault code tables.

How to Read Fault Codes on the Premium Multifunction Gauge

Fault codes can also be displayed in the premium multifunction gauge. Refer to *LIGHTS, GAUGE AND ACCESSORIES*.

SPECIFIC FAULT CODES

The following gives additional information related to specific fault codes.

Fault Code P0336

This code occurs when engine RPM goes too high which could happen under some mechanical-related circumstances and is not necessarily related to a problem with the engine management system.

Fault Code P1102 (TPS offset out of range)

800R

POSSIBLE CAUSE	ACTION TO PERFORM
Wrong carburetor mechanical position during reset of closed TPS.	– Check cable adjustment. – Check idle stop for wear. – Make sure throttle plate is against throttle stop. – Reset **Closed Throttle**. – Adjust idle throttle angle as specified. – Make sure the TPS body is not loose.
No initialisation of ECM after its replacement.	
TPS sensor has moved from its original position.	

Fault Code P1104 (TPS offset not programmed)

800R

POSSIBLE CAUSE	ACTION TO PERFORM
No initialisation of ECM after its replacement.	Reset **Closed Throttle**.

TPS (Throttle Position Sensor) Faults

600 HO SDI

TPS Faults which are reported in B.U.D.S. fall into two groups; out of range and adaptation failure faults.

TPS "OUT OF RANGE" Fault

It is caused by the sensor reading going out of its allowable range. This fault can occur during the whole range of movement of the throttle.

To diagnose this fully, it is recommended to operate the throttle through its full range. It is also recommended to release the throttle quickly as this may also reveal a fault that is intermittent.

POSSIBLE CAUSES	ACTION
Check if connector is disconnected from TPS	Reconnect.
Check if sensor is loose	Tighten sensor and reset **Closed Throttle**.
Inspect sensor for damage or corrosion	Replace sensor and reset **Closed Throttle**.
Inspect wiring (voltage test)	Repair.
Inspect wiring and sensor (resistance test)	If bad wiring, repair. If bad TPS, replace and reset **Closed Throttle**.
Test sensor operation (wear test)	Replace sensor and reset **Closed Throttle**.

TPS "ADAPTATION FAILURE" Fault

It is caused by the idle position moving out of an acceptable range.

Following problems can be caused by a TPS "Adaptation Failure":

- Idle speed is out of range.
- Engine stops, when throttle is released quickly.
- Engine runs inconsistent in low partload or low RPM.

POSSIBLE CAUSES	ACTION
Sensor has been replaced and TPS closed position not reset	Reset **Closed Throttle**.
Throttle body has been replaced and TPS closed position not reset	Reset **Closed Throttle**.
ECM has been replaced and TPS closed position not reset	Reset **Closed Throttle**.
Throttle cable too tight	Adjust cable and reset **Closed Throttle**.
Sensor is loose	Tighten sensor and reset **Closed Throttle**.
Throttle bracket is loose	Fix and reset **Closed Throttle**.
Adjustment screw worn or loose	Adjust idle speed screw using B.U.D.S.

FAULT CODE TABLES

IMPORTANT: After a problem has been solved, ensure to clear the fault(s) in the ECM using the B.U.D.S. software. This will properly reset their states.

500SS/800R

FAULT CODE	DESCRIPTION
P0079	RAVE solenoid 1 output fault (open circuit/shorted to ground)
P0080	RAVE solenoid 1 output fault (shorted to battery)
P0085	RAVE solenoid 2 output fault (open circuit/shorted to ground)
P0086	RAVE solenoid 2 output fault (shorted to battery)
P0107	Air Pressure Sensor fault (voltage too low)
P0108	Air Pressure Sensor fault (voltage too high)
P0112	Air Temperature Sensor fault (voltage too low)
P0113	Air Temperature Sensor fault (voltage too high)
P0117	Engine Temperature Sensor fault (voltage too low)
P0118	Engine Temperature Sensor fault (voltage too high)
P0122	Throttle Position Sensor fault (voltage too low)
P0123	Throttle Position Sensor fault (voltage too high)
P0326	Knock sensor reference signal fault (voltage too low)
P0336	High engine RPM detected
P0605	System fault (Calibration checksum error)
P1102	System fault (Throttle Position Sensor offset out of range)
P1104	System fault (Throttle Position Sensor offset not programmed)
P1217	Overheat shutdown occurred
P1261	HAC solenoid output fault (open circuit/shorted to ground)
P1262	HAC solenoid output fault (shorted to battery)
P1656	DESS communication link fault (shorted to ground)
P1675	Relay output fault (open circuit/shorted to ground)
P1676	Relay output fault (shorted to battery)
P1520	Critical low oil level detected
P0217	Critical engine temperature detected
P1326	Critical detonation level detected
P0600	CAN Message Missing

600 HO SDI

FAULT CODE	DESCRIPTION
P0117	Engine temperature sensor voltage too low
P0118	Engine temperature sensor voltage too high
P0116	Engine temperature sensor functional problem
P0112	Air temperature sensor voltage too low
P0113	Air temperature sensor voltage too high
P0111	Air temperature sensor functional problem
P0562	Battery voltage too low
P0563	Battery voltage too high
P0336	High engine RPM detected
P0339	Crankshaft signal fault
P0427	Exhaust temperature sensor voltage too low
P0428	Exhaust temperature sensor voltage too high
P0426	Exhaust temperature sensor functional problem
P0107	Air pressure sensor voltage too low
P0108	Air pressure sensor voltage too high
P0608	Sensor's power supply voltage too low
P0608	Sensor's power supply voltage too low
P0232	Fuel pump shorted to battery
P0231	Fuel pump open circuit or shorted to ground
P0617	Starter relay shorted to battery
P0616	Starter relay open circuit or shorted to ground
P0080	RAVE selenoid shorted to battery
P0079	RAVE selenoid open circuit or shorted to ground
P1675	Relay 2 shorted to battery
P1676	Relay 2 open circuit or shorted to ground
P0326	Knock sensor below minimum noise
P1502	TOPS functional problem
P0351	No Ignition Output Cylinder #1 (MAG for 2 cyl. Engine)
P0352	No Ignition Output Cylinder #2 (PTO for 2 cyl. Engine)
P0262	Injector Cyl. #1 OR Outer MAG injector (2 cyl.), shorted to battery
P0261	Injector Cyl. #1 OR Outer MAG injector (2 cyl.), open circuit or shorted to ground
P0265	Injector Cyl. #2 OR Outer PTO injector (2 cyl.), shorted to battery
P0264	Injector Cyl. #2 OR Outer PTO injector (2 cyl.), open circuit or shorted to ground
P0268	Injector Cyl. #3 OR Inner MAG injector (2 cyl.), shorted to battery
P0267	Injector Cyl. #3 OR Inner MAG injector (2 cyl.), open circuit or shorted to ground
P0271	Inner PTO injector shorted to battery

FAULT CODE	DESCRIPTION
P0270	Inner PTO injector open circuit or shorted to ground
P0122	Throttle position sensor voltage too low
P0123	Throttle position sensor voltage too high
P0601	Module call monitoring
P1102	Throttle position sensor adaptation failure
P1104	Throttle position sensor adaptation canceled
P1148	Safety fuel cut off detected
P1655	DESS shorted to battery
P1656	DESS line shorted to ground
P0604	RAM fault
P0605	EEPROM fault
P0601	Module call monitoring
P0602	MPEM not coded
P0605	EEPROM fault
P1549	Very high exhaust temperature detecte

FUEL TANK/FUEL PUMP

SERVICE TOOLS

Description	Part Number	Page
pliers Oetiker 1099	295 000 070	218
small hose pincher	295 000 076	202, 204, 216
vacuum/pressure pump	529 021 800	202–203
pressure gauge	529 035 709	204
Fluke 111 multimeter	529 035 868	205
pressure test fuel cap	529 035 870	202
fuel tank nut wrench	529 035 891	214
T-fitting	529 036 023	204
fuel pump nut tool	529 036 118	207, 210

SERVICE TOOLS – OTHER SUPPLIER

Description	Part Number	Page
Fluke rigid back probes	TP88	205

SERVICE PRODUCTS

Description	Part Number	Page
dielectric grease	293 550 004	214

500SS/800R

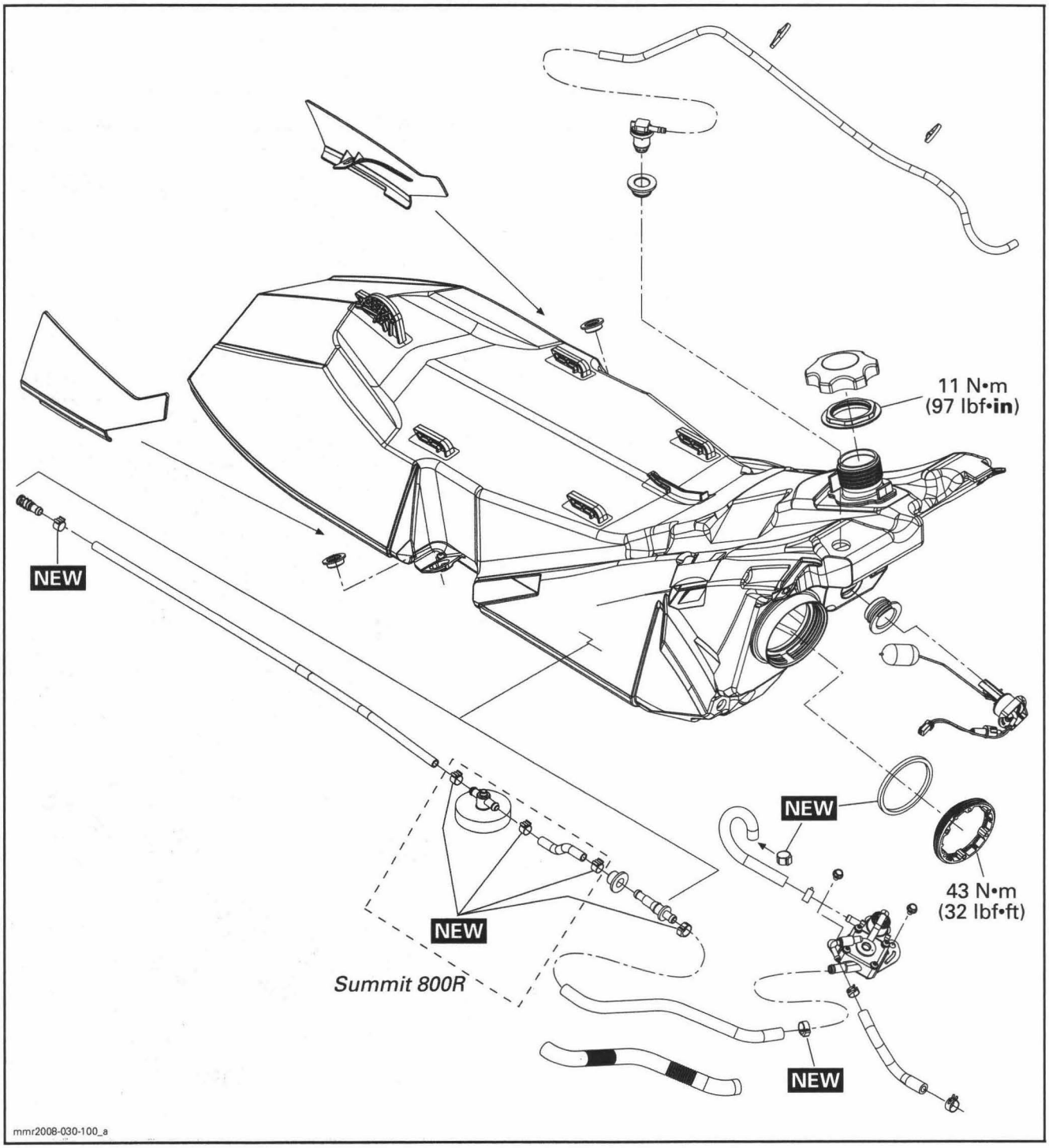
11 N•m
(97 lbf•in)
NEW
NEW
43 N•m
(32 lbf•ft)
NEW
Summit 800R
NEW
mmr2008-030-100_a

600 HO SDI

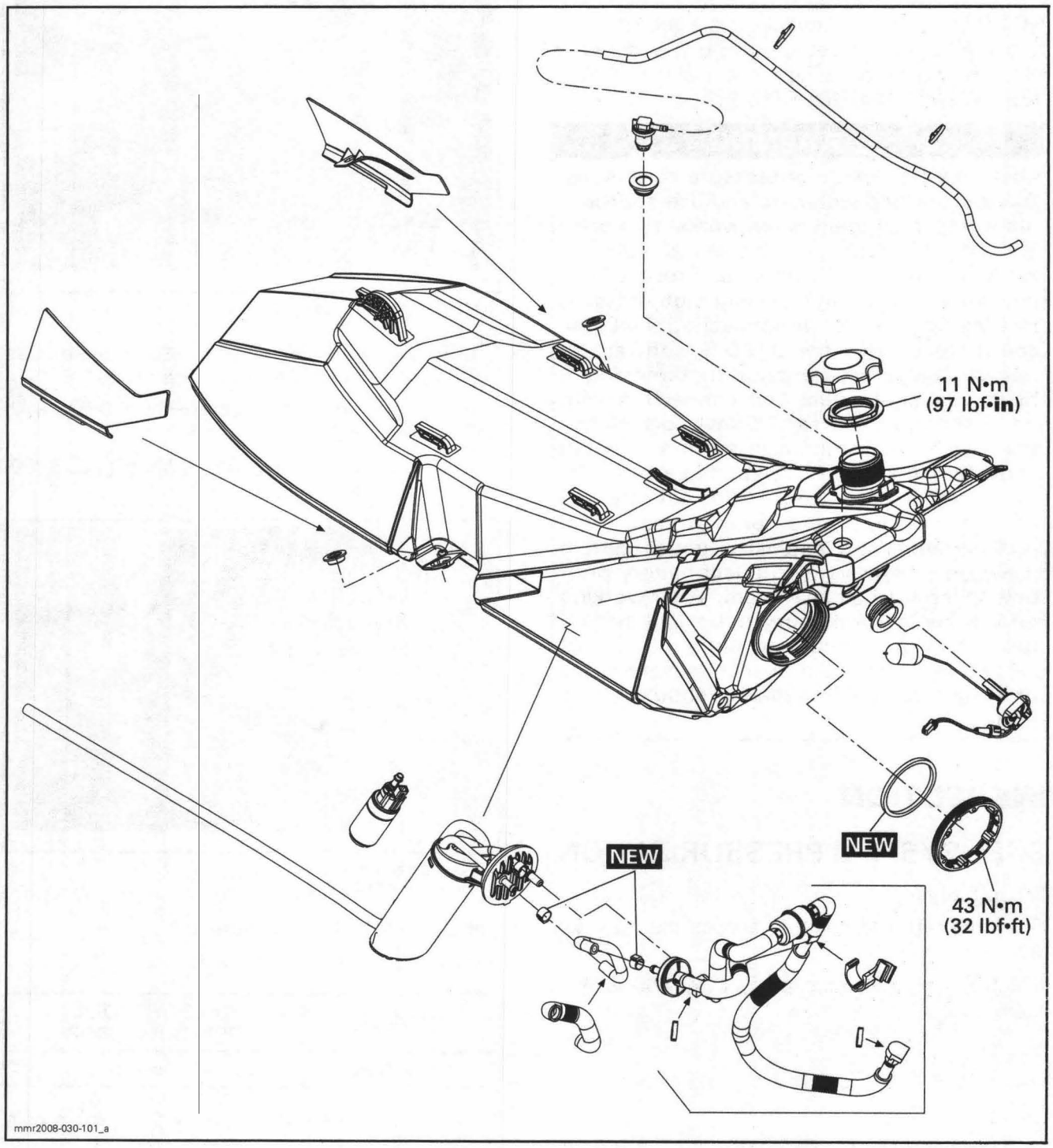

GENERAL

NOTE: On applicable models, it is a good practice to check for fault codes using B.U.D.S. software as a first troubleshooting step. Refer to *MONITORING SYSTEM/FAULT CODES*.

⚠ WARNING

Fuel lines remain under pressure at all times. Always proceed with care and use appropriate safety equipment when working on pressurized fuel system. Wear safety glasses and work in a well ventilated area. Proceed with care when removing/installing high pressure test equipment or disconnecting fuel line connections. Use the B.U.D.S. software to release fuel pressure prior to removing a hose. Cover the fuel line connection with an absorbent shop rag. Slowly disconnect the fuel hose to minimize spilling. Do not allow fuel to spill on hot engine parts and/or on electrical connectors. Wipe off any fuel spillage in the engine compartment. Fuel is flammable and explosive under certain conditions. Always disconnect battery prior to working on the fuel system. After working on the fuel system, carry out a fuel system pressurization. Failure to carry out a fuel system leak test could result in severe injury or a life threatening situation should a leak occur.

INSPECTION

FUEL SYSTEM PRESSURIZATION

Fill up fuel tank.

Open the left side panel to access the fuel vent line.

Install a small hose pincher (P/N 295 000 076) on the vent line.

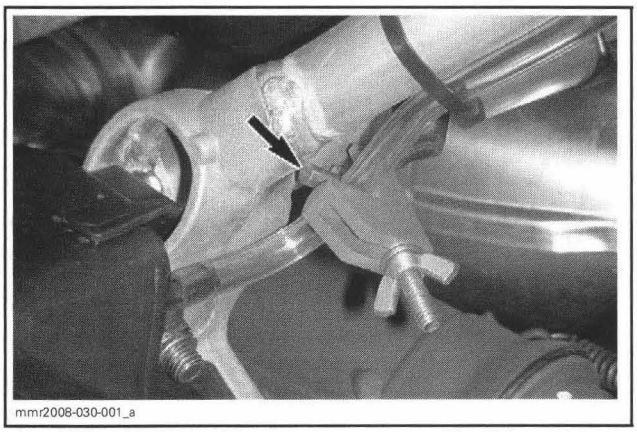

HOSE PINCHER ON FUEL VENT LINE

On **500SS** and **800R** models, also install a hose pincher on the carburetor fuel feed line.

Install a pressure test fuel cap (P/N 529 035 870) on fuel tank inlet.

Install vacuum/pressure pump (P/N 529 021 800) on pressure test fuel cap.

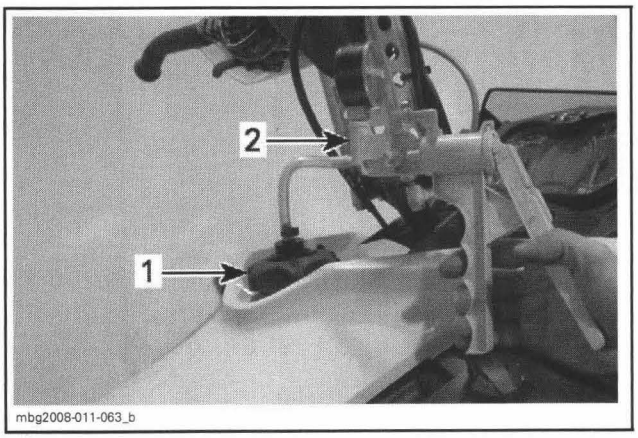

1. *Pressure test fuel cap*
2. *Vacuum/pressure pump*

Set pump selector to **pressure**.

Pressurize fuel tank as follows.

PRESSURE	TIME WITHOUT PRESSURE DROP
21 kPa (3 PSI)	3 minutes

If pressure drops, locate fuel leak(s) and repair/replace leaking component(s).

To ease locating leak(s), spray soapy water on components; bubbles will indicate leak location(s).

Fuel Tank Check Valve Test

Check Valve Operation

The check valve on the fuel tank vent is a combination type valve, it acts as both a check valve and a pressure relief valve.

Air can enter the fuel tank at all times through the check valve. As fuel is consumed by the engine, a negative press would occur in the fuel tank. This could eventually prevent the engine from receiving proper fuel press. The check valve prevents this as the **negative pressure relieve function** of the valve opens the valve and allows outside air pressure in.

If pressure in the fuel tank builds up and exceeds 2.0 to 4.8 kPa (.3 to .7 PSI), the **positive pressure relief function** opens the valve and lets excess pressure out of the tank.

The **check valve** also prevents fuel from flowing out of the fuel tank.

Check Valve Test

While the fuel tank is still pressurized as in the previous test, carry out the following:

Place a finger over the vent hose outlet.

When removing hose pincher, alternately touch and release vent hose outlet. You should feel pressurized air flowing out indicating the pressure relief valve function is working.

Release any remaining pressure in the fuel tank by slowly unscrewing fuel tank cap.

Remove the pressure test fuel cap (P/N 529 021 800).

Remove the fuel tank vent line from its fitting on the lower left front body panel.

Install the vacuum/pressure pump (P/N 529 021 800) on the vent line and apply air pressure through check valve. Air must flow freely towards the fuel tank neck.

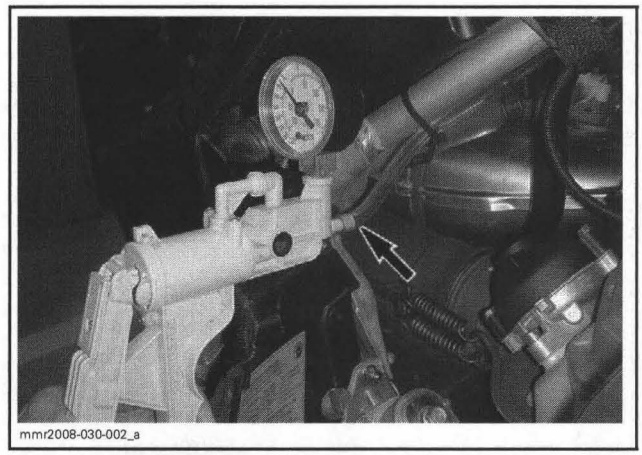

VACUUM/PRESSURE PUMP ON VENT LINE

NOTE: If fuel vent check valve does not function as indicated in test, replace check valve.

Remove vacuum/pressure pump.

Install vent line on its fitting.

Install normal fuel tank cap.

HIGH PRESSURE LEAK TEST (electric fuel pump circuit)

600 HO SDI

Install DESS cap on DESS post. Push the engine cut-out switch to OFF position. Press on the start button to activate fuel pump.

Check for any leakage at fuel rail, injectors, in-line fuel filter, in-line fuel pressure regulator, and fuel hoses.

FUEL PUMP PRESSURE TEST

600 HO SDI

The pressure test will show the available pressure at the fuel pump outlet. It validates the pressure regulator and the fuel pump.

Ensure there is no fuel leaking from hoses and fittings. Repair any leak.

Ensure there is enough gas in fuel tank.

Before carrying out the fuel pump pressure test, ensure the battery is fully charged. Battery voltage must be over 12 volts.

Refer to the *COMMUNICATION TOOLS/B.U.D.S. SOFTWARE* section.

Release the fuel pressure in the system using B.U.D.S., refer to the **Activation** tab.

Remove the primary air inlet silencer.

Disconnect the throttle body assembly from the air adapters.

Disconnect the fuel pump pressure hose at the fuel rail.

Install the fuel T-fitting (P/N 529 036 023) and pressure gauge (P/N 529 035 709) between disconnected hoses (in-line installation).

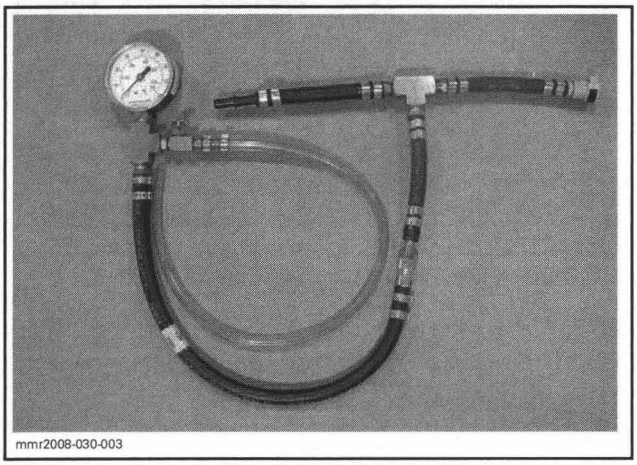
mmr2008-030-003

PRESSURE GAUGE WITH "T" FITTING ADAPTER

Remove the DESS cap. Depress the START/RER button and observe fuel pressure. **Do not crank engine.** Repeat twice. Release pressure using B.U.D.S. between tests so that the gauge is "reset" to zero (0).

FUEL PRESSURE (when depressing START/RER button)
400 kPa (58 PSI)

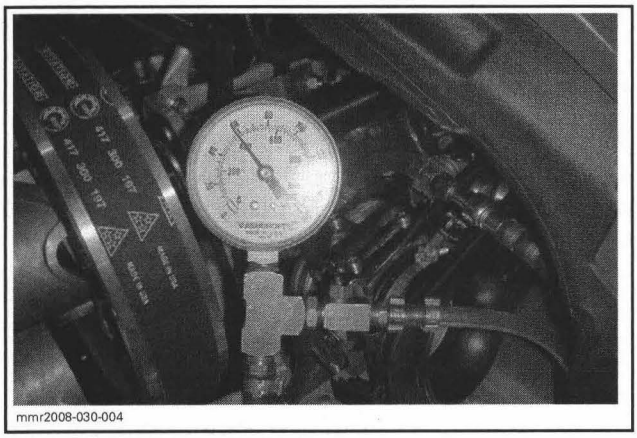
mmr2008-030-004

FUEL PUMP PRESSURE TEST

Crank engine in flooded mode (throttle full open) and observe fuel pressure. The fuel pressure should be the same as above.

If pressure is within limits, fuel pump and pressure regulator are working correctly.

NOTE: If pressure is not adequate, refer to *FUEL DELIVERY DIAGNOSTIC FLOW CHART* in the *TROUBLESHOOTING* section.

A rapid pressure drop indicates leakage either from the fuel rail or from the fuel pump check valve. Check fuel rail for leaks. If it is not leaking then replace fuel pump.

A slow pressure drop indicates leakage either from the fuel injector or from the fuel pressure regulator. Check fuel injector for leaks (see below). If it is not leaking then replace fuel pressure regulator.

Release fuel pressure using B.U.D.S.

Bleed away any remaining fuel in the pressure gauge and T-fitting adapter.

Remove pressure gauge and T-fitting.

Reinstall fuel hose.

Carry out a high pressure leak test, refer to *HIGH PRESSURE LEAK TEST (ELECTRIC FUEL PUMP CIRCUIT)* in this section.

Reinstall removed parts.

PROCEDURES

DIAPHRAGM FUEL PUMP

500SS/800R

Fuel Pump Verification

Check fuel pump valves operation as follows:

Empty fuel tank.

NOTE: For the following test, ensure hoses have a tight fit.

Disconnect outlet hose from fuel tank.

Alternately apply pressure and vacuum with pump from leak test kit to disconnected hose. The inlet valve should release with pressure and hold under vacuum.

Disconnect inlet hose from carburetor.

Repeat the same procedure to disconnected hose. This time the outlet valve should hold with pressure and release under vacuum.

Fuel Pump Removal

Remove the primary air intake silencer.

NOTE: Do not disconnect cables from carburetors.

On **800R** models, disconnect the TPS connector.

Install a small hose pincher (P/N 295 000 076) on the fuel supply line close to pump inlet.

Remove the Norma spring clamp and disconnect the carburetors fuel supply line at fuel pump outlet. Use a rag and a container to contain fuel flowing from the disconnected hose.

Install larger pinchers on the carburetor(s) coolant lines.

Remove Norma spring clamp and disconnect the impulse (vacuum) line at fuel pump.

Disconnect carburetors from engine and move them aside for access to the fuel pump.

Remove screws securing fuel pump to chassis.

Fuel Pump Installation

Reverse the removal procedure.

Carry out a fuel system pressurization test to ensure there isn't a leak in the fuel system.

ELECTRIC FUEL PUMP

600 HO SDI

Fuel Pump Quick Test

Remove key from post.

Set RUN/STOP switch to STOP.

Press the START/RER button.

You should obtain the following results:

- Multifunction gauge should come "ON", then go off after about 5 seconds.
- The electric fuel pump should function briefly.

If the fuel pump is functioning, check the fuel pressure. Refer to *FUEL PUMP PRESSURE TEST*.

If the fuel pump is not functioning, but the multifunction gauge functions, carry out a fuel pump input voltage test.

Fuel Pump Test With B.U.D.S.

Connect B.U.D.S. Refer to *COMMUNICATION TOOLS/B.U.D.S. SOFTWARE*.

In B.U.D.S., select the **Activation** tab, then the **Fuel Pump** activation button.

Listen for fuel pump operation.

If you did not here the pump come "ON", select the **FAULTS** tab and check for fault codes.

Repair or replace pump, wiring or connections as required.

Fuel Pump Input Voltage Test

Remove back panel of starter rewind handle.

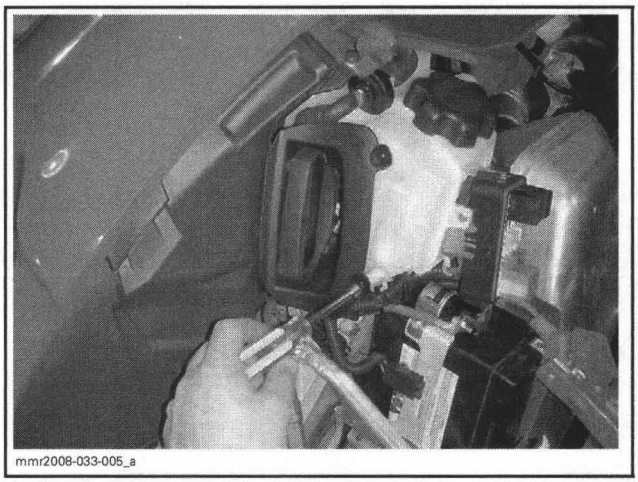
mmr2008-033-005_a

Disconnect fuel pump connector.

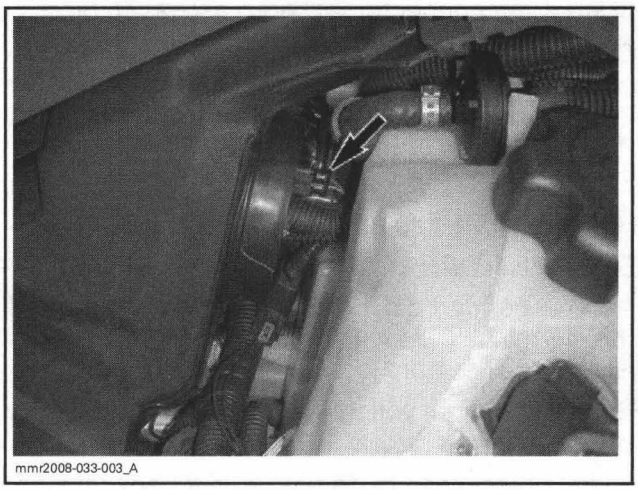
mmr2008-033-003_A

To perform test, use the Fluke 111 multimeter (P/N 529 035 868).

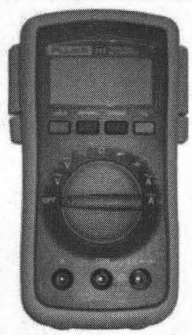
529 035 868

To probe female wire terminals, use the Fluke rigid back probes (P/N TP88) or equivalent. They can be inserted at the end of the standard probes of the Fluke 111 multimeter.

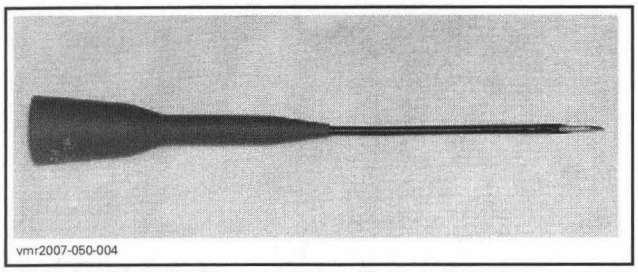
vmr2007-050-004

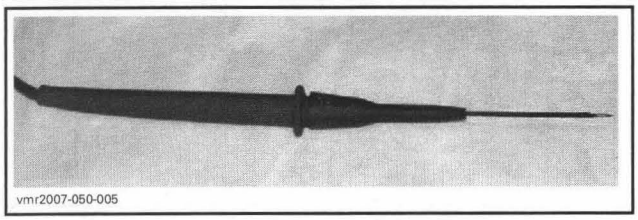
vmr2007-050-005

NOTE: Removing the red plastic pin lock on the front of the connector will ease access to pins.

CAUTION: Probes are round and terminals are rectangular. Do not force probes into female terminals as this could enlarge or damage terminals resulting in a pour connection.

Set multimeter to Vdc.

Remove DESS cap from DESS post.

Set RUN/STOP switch to STOP.

As you gently hold both probes in the ends of the terminals, have someone else press the START/RER button.

Read pump input voltage. You should read battery voltage (approximately 12.8 Vdc).

If you did not read battery voltage, check fuse F5. If fuse is in good condition, carry out a continuity check of the circuit. Refer to the *WIRING DIAGRAM*.

Reinstall plastic pin lock.

Install connector on fuel pump.

Install remaining parts in reverse order of removal.

Fuel Pump Pressure Test

Refer to *INSPECTION* in this section.

Fuel Pump Removal

Use B.U.D.S. to release fuel pressure. Refer to *COMMUNICATION TOOLS/B.U.D.S. SOFTWARE* section.

Drain fuel tank as much as possible.

Follow procedures for removing fuel tank and move fuel tank back for access to fuel pump, refer to *FUEL TANK REMOVAL* in this section.

Disconnect fuel pump electrical connector.

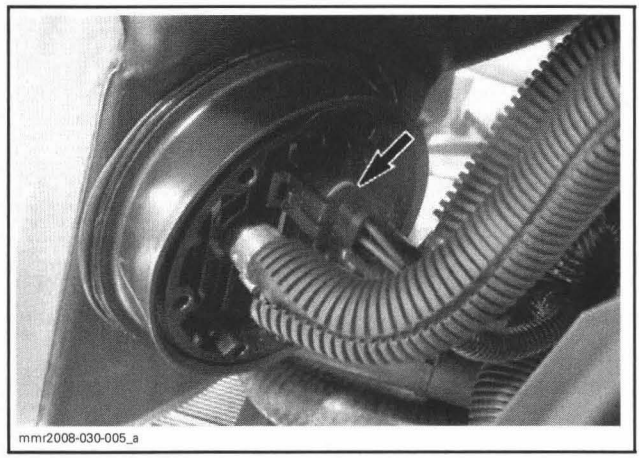
mmr2008-030-005_a

DISCONNECT FUEL PUMP CONNECTOR

Disconnect fuel supply hose from fuel pump assembly at quick disconnect.

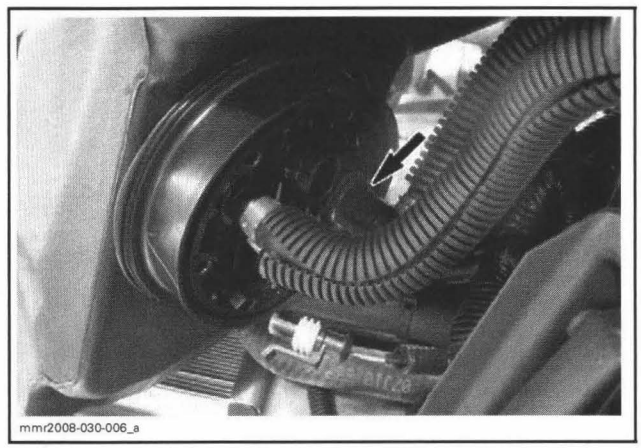
mmr2008-030-006_a

DISCONNECT FUEL SUPPLY LINE

NOTE: Always wipe off all fuel which drained from fuel line, or fuel pump.

Unhook Oetiker clamp on the fuel regulator return hose to fuel pump.

Put a rag over the pressure regulator fitting and remove regulator return hose from pump.

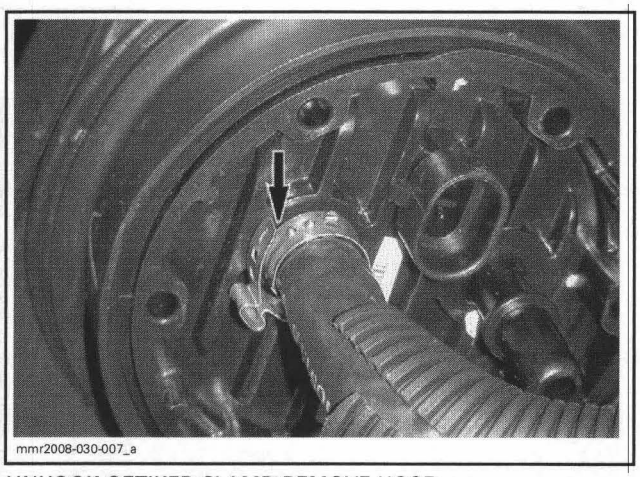

UNHOOK OETIKER CLAMP, REMOVE HOSE

Using fuel pump nut tool (P/N 529 036 118), remove fuel pump spanner nut.

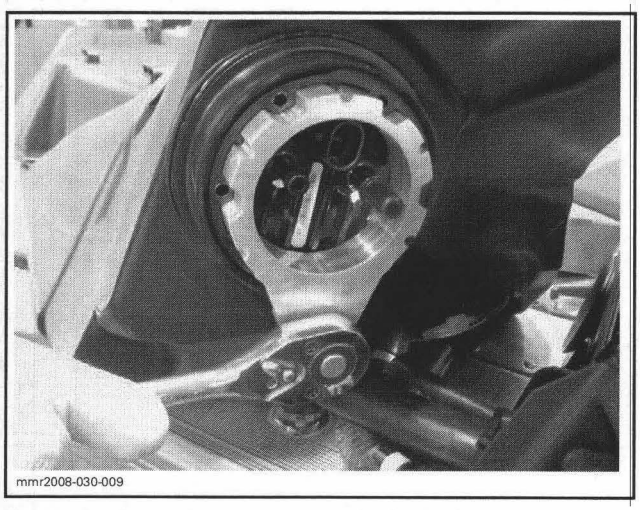

Remove fuel pump assembly from fuel tank.

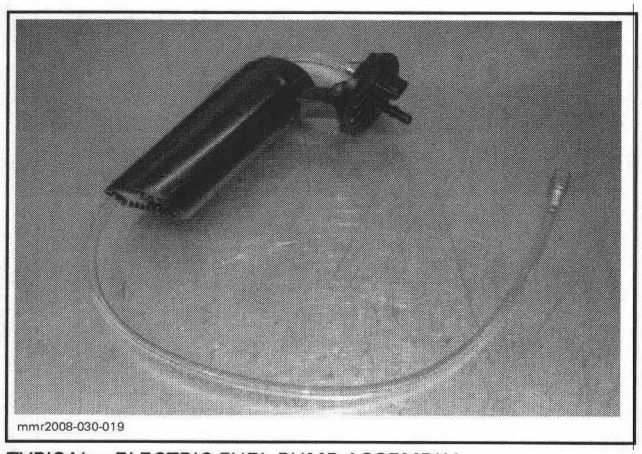

TYPICAL – ELECTRIC FUEL PUMP ASSEMBLY

Remove and discard fuel pump gasket.

Fuel Pump Installation

For installation, reverse the removal procedure but pay attention to the following.

Install a new gasket on the fuel pump prior to installing the pump in the tank.

NOTE: The gasket must be installed on the fuel tank side so it is located between the pump and the fuel tank.

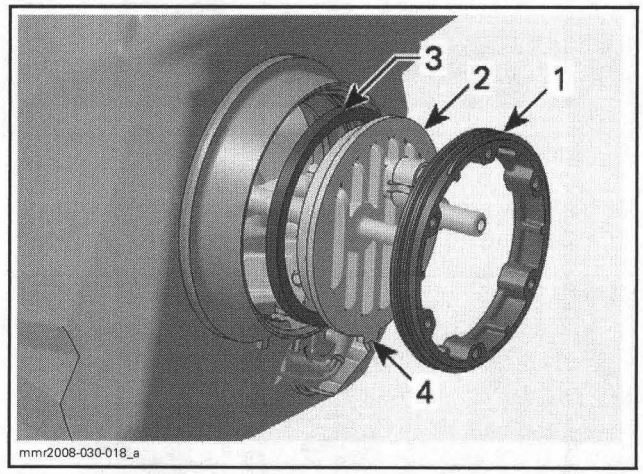

FUEL PUMP INSTALLATION
1. *Fuel pump spanner nut*
2. *Fuel pump face plate*
3. *Fuel pump gasket*
4. *Pump alignment tab*

Protruding tab on the lower portion of fuel pump face plate must engage in fuel tank pump alignment keyway.

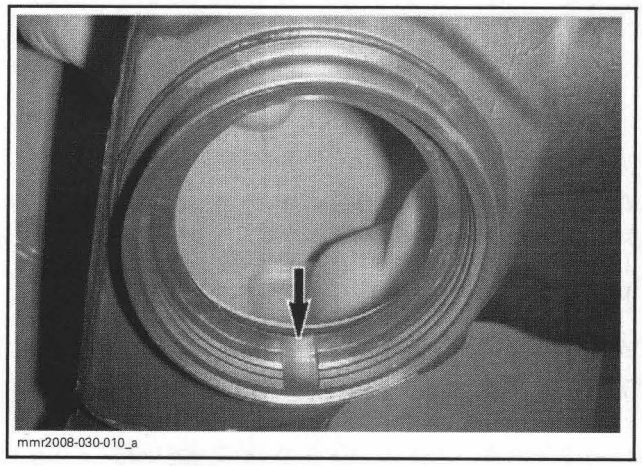

FUEL PUMP ALIGNMENT KEYWAY

Install a torque wrench perpendicularly (90°) to fuel pump nut wrench (P/N 529 036 118). Torque fuel pump spanner nut to 43 N•m (32 lbf•ft).

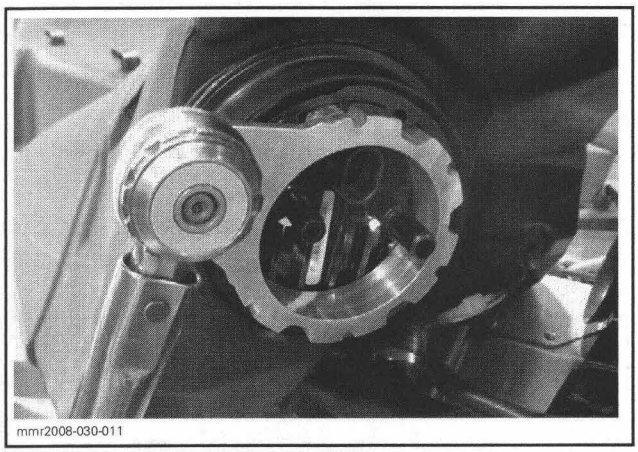
mmr2008-030-011

TORQUE WRENCH AT 90°

Use a new clamp to secure pressure regulator return hose to fuel pump fitting.

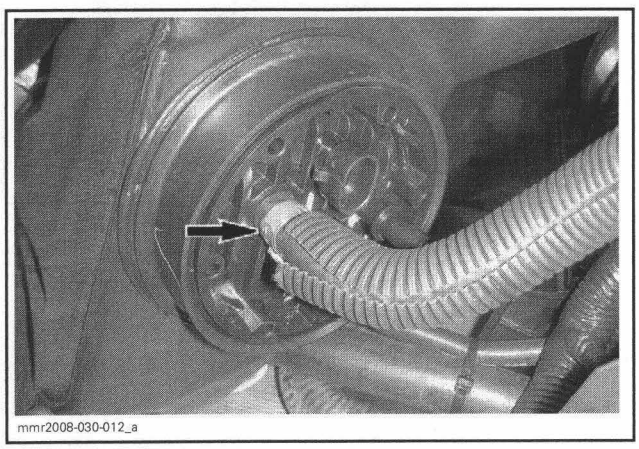
mmr2008-030-012_a

NEW OETIKER CLAMP

Carry out a fuel system leak test and a high pressure leak test, refer to *FUEL SYSTEM PRESSURIZATION* and *HIGH PRESSURE LEAK TEST (ELECTRIC FUEL PUMP CIRCUIT)* in this section.

CAUTION: Ensure hose clamps are tight and that hoses cannot turn on their fittings.

FUEL PRESSURE REGULATOR

600 HO SDI

The fuel pressure regulator is an in-line type and comes as an assembly with the fuel filter, fuel pump outlet pressure hose and regulator return hose.

Fuel Pressure Regulator Removal

Use B.U.D.S. to release fuel pressure. Refer to the *COMMUNICATION TOOLS AND B.U.D.S. SOFTWARE* section.

Obtain access to fuel tank disconnects, refer to *FUEL TANK REMOVAL* in this section.

Remove fuel pressure regulator from holder on oil tank.

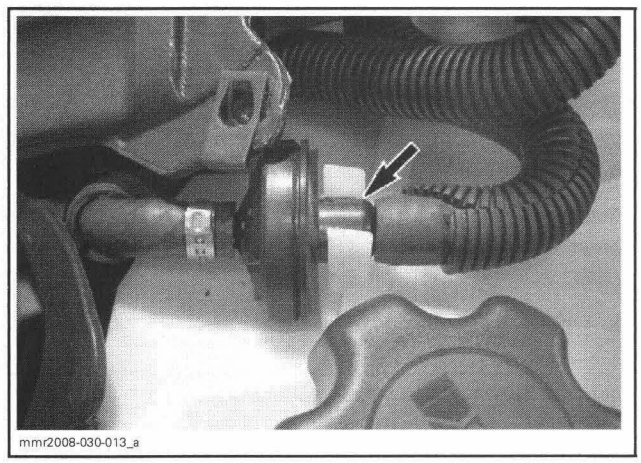
mmr2008-030-013_a

REMOVE FROM HOLDER

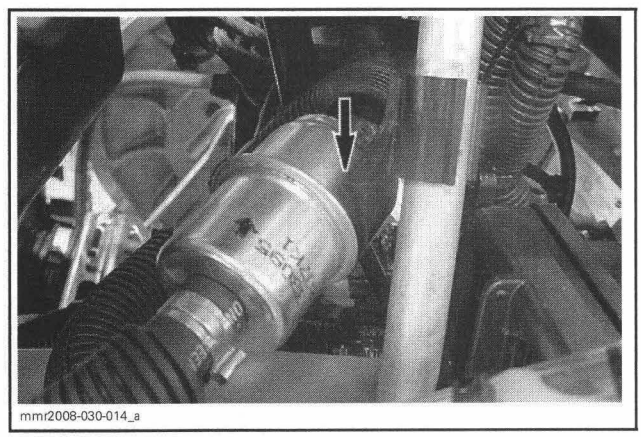
mmr2008-030-014_a

REMOVE FROM CLIP

Remove fuel filter from retaining clip.

Move fuel tank backwards enough to access fuel tank disconnects.

Unhook and remove Oetiker clamp on the fuel regulator return hose (to fuel pump).

Place a rag over the pressure regulator return hose fitting, and remove the regulator hose from the fuel pump.

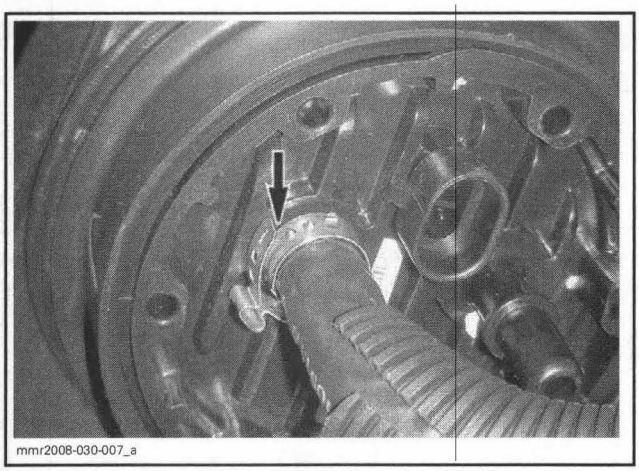

UNHOOK OETIKER CLAMP, REMOVE HOSE

Place a rag over the fuel pump supply line quick disconnect, release the locking clip, and disconnect it from the pump.

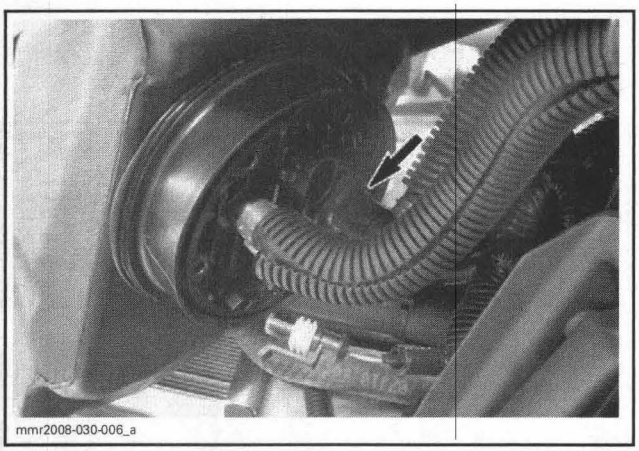

DISCONNECT FUEL SUPPLY LINE

Remove primary air intake silencer.

Disconnect throttle body assembly from air adapters.

Disconnect fuel pressure line at the fuel rail, place a rag over the quick disconnect as you remove it.

Remove hose assembly from vehicle.

Fuel Pressure Regulator Installation

Reverse the removal procedures for installation.

Install a new Oetiker clamp on the regulator hose.

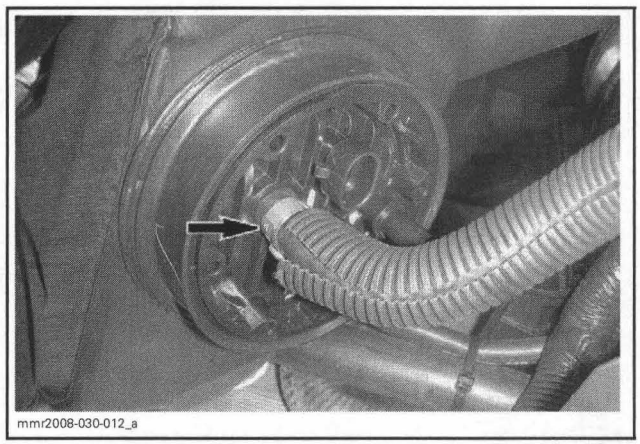

NEW OETIKER CLAMP

When installation is complete, carry out a high pressure leak test, refer to *HIGH PRESSURE LEAK TEST (ELECTRIC FUEL PUMP CIRCUIT)* in this section.

CAUTION: Ensure hose clamps are tight and that hoses cannot turn on their fittings.

IN-TANK FUEL STRAINER

500SS/800R

Strainer Removal

Drain fuel tank.

Move fuel tank back for access to fuel tank outlet hose, refer to *FUEL TANK REMOVAL* in this section.

Install a hose pincher on the outlet line.

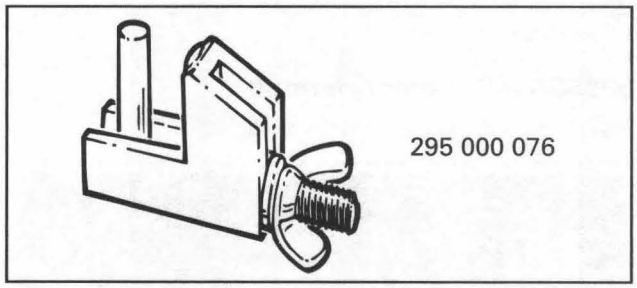

Pull out fuel tank outlet hose fitting from grommet to small part of fitting so that it is loose in the grommet.

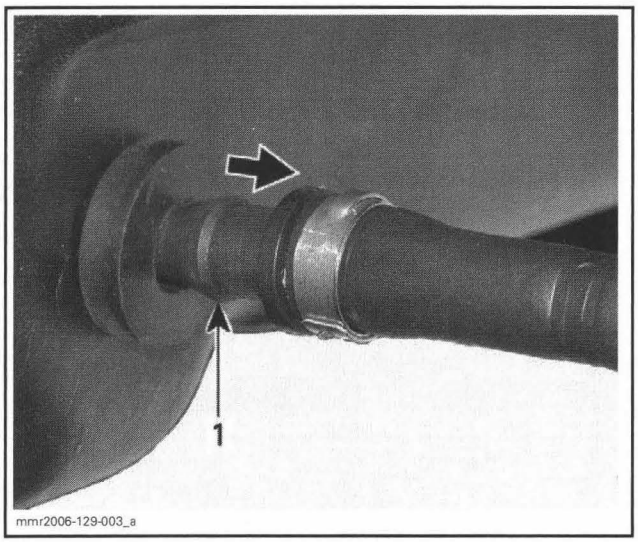

1. Fuel tank fitting

Pull out grommet from fuel tank.

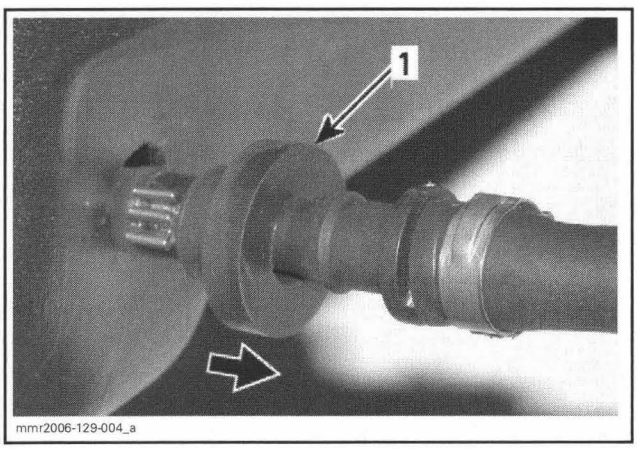

1. Grommet

500SS/800R except Summit

Pull out pick-up hose with strainer.

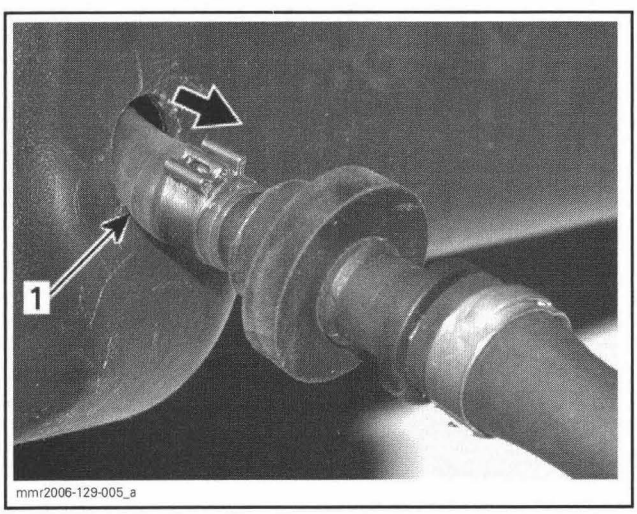

1. Pick-up hose

Summit 800R (Dual Pick-ups)

Drain fuel tank.

Move fuel tank back for access to fuel tank outlet hose, refer to *FUEL TANK REMOVAL* in this section.

Install a hose pincher on the outlet line.

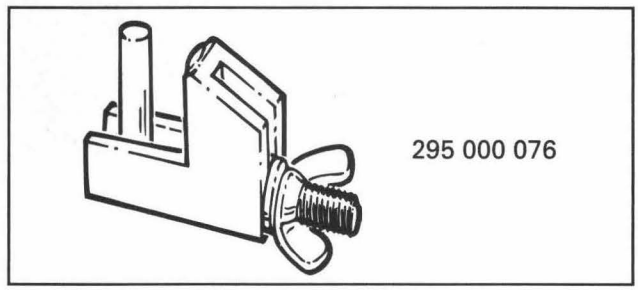

Pull out fuel tank outlet fitting from grommet to small part of fitting so that it is loose in grommet.

Pull grommet out of fuel tank.

Open Norma spring clamp using Oetiker pliers and separate hose from fuel tank fitting.

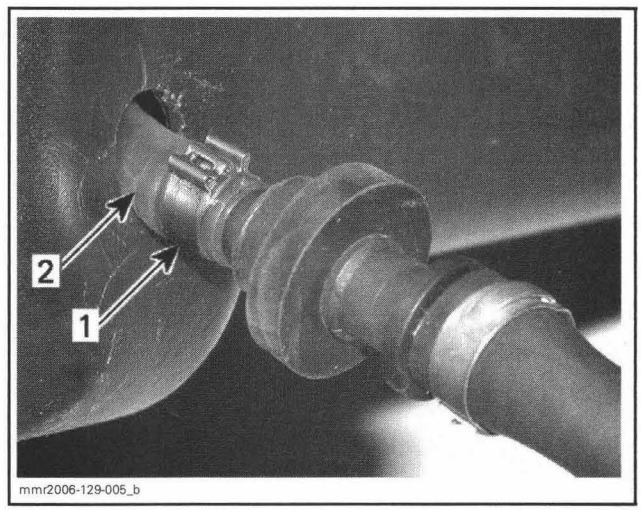

1. Open Norma spring clamp
2. Separate hose from fuel tank fitting

Discard Norma clamp.

Using the fuel pump nut tool (P/N 529 036 118), remove the fuel pickup cover.

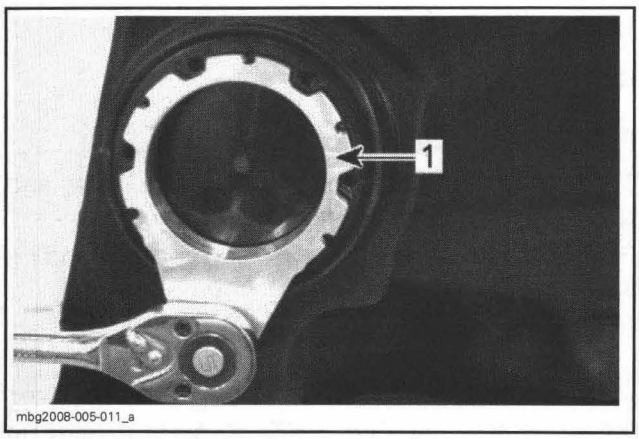

1. Fuel pump nut tool

Push back hose inside fuel tank.

Pull out fuel pickups from fuel tank opening.

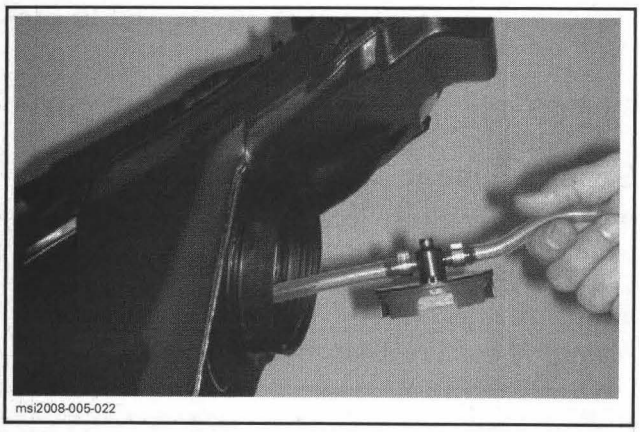

Replace strainer or pick-up if clogged.

Strainer Installation

Installation is the reverse of the removal procedure. Pay attention to the following details.

500SS/800R except Summit

Reverse the removal procedure.

Install grommet on fuel tank then push fuel tank fitting through grommet.

NOTE: To facilitate installation of the grommet in the fuel tank, it should be on the smaller portion of the fuel tank fitting.

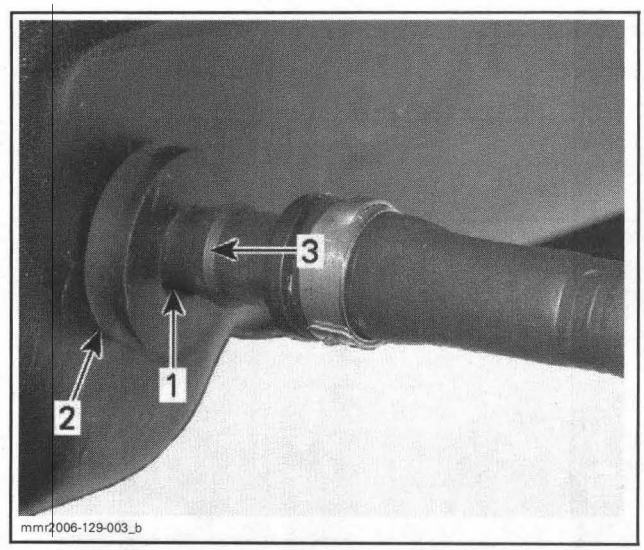

1. Small portion of fuel tank fitting
2. Grommet inserted in fuel tank
3. Push fitting in grommet

Carry out a fuel system leak test, refer to *FUEL SYSTEM PRESSURIZATION* in this section.

Summit 800R (Dual Pick-ups)

Insert the new fuel pick-up assembly through fuel tank opening.

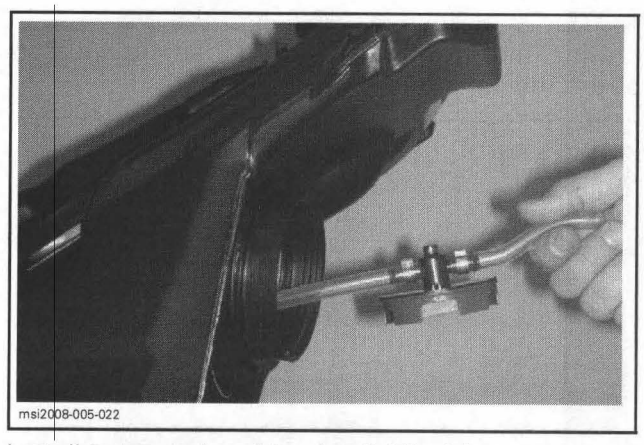

Install hose and multi-point (MP) pick-up.

CAUTION: Position the MP pick-up as illustrated. Pay particular attention to the MP pick-up position (facing down in fuel tank).

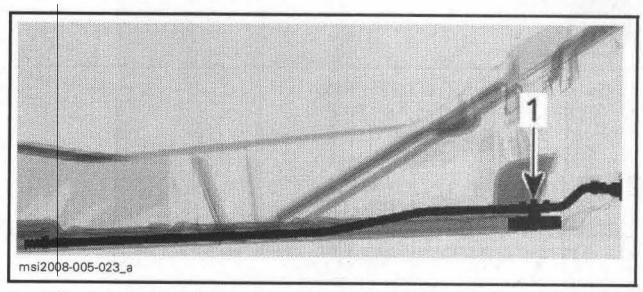

1. MP pick-up location

Run fuel pickup assembly hose through fuel tank access hole.

Install fuel pickup assembly hose on tank outlet fitting.

Secure with a new Norma spring clamp.

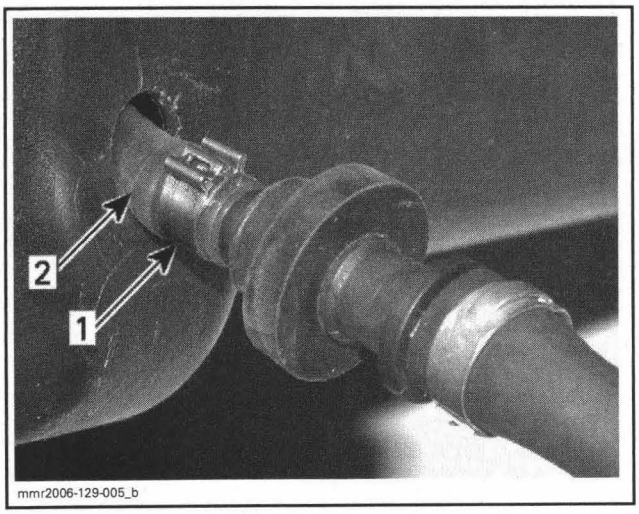

1. *New Norma spring clamp*
2. *Pick-up hose installed on fitting*

Install grommet in fuel tank.

NOTE: To facilitate installation of the grommet in the fuel tank, it should be on the smaller portion of the fuel tank fitting.

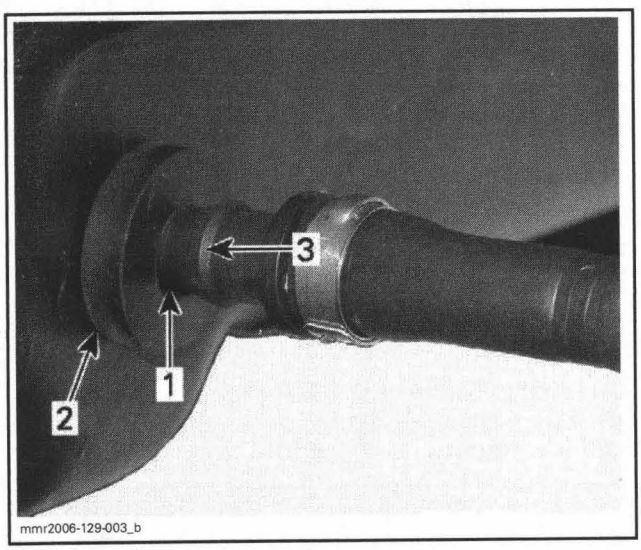

1. *Small portion of fuel tank fitting*
2. *Grommet inserted in fuel tank*
3. *Push fitting in grommet*

Push fitting in grommet.

Carry out a fuel system leak test, refer to *FUEL SYSTEM PRESSURIZATION* in this section.

IN-LINE FUEL FILTER

600 HO SDI

Filter Replacement

The fuel filter, fuel pressure regulator, inlet and outlet hoses come as an assembly.

Follow the same procedures for removing and installing the fuel pressure regulator.

Pay particular attention to the following.

When installation is complete, carry out a high pressure leak test, refer to *HIGH PRESSURE LEAK TEST (ELECTRIC FUEL PUMP CIRCUIT)* in this section.

CAUTION: Ensure hose clamps are tight and that hoses cannot turn on their fittings. Also ensure fuel pump pressure hose quick-disconnects are firmly pushed in and locked to prevent leakage.

ELECTRIC FUEL LEVEL SENSOR

Sensor Fuse Inspection

A 0.25 A in line fuse located near the sensor protects the fuel level sensor circuit. Check fuse to see if it is blown.

If fuse is blown, test circuit for a short to ground. Also carry out a resistance test of the sensor.

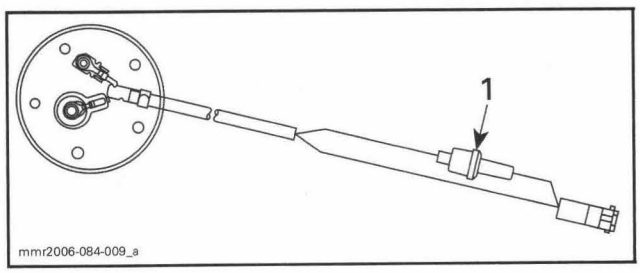

TYPICAL
1. *In-line fuse*

Fuel Level Sensor Removal

Drain fuel tank.

Move fuel tank back enough to access fuel sensor and connector. Refer to *FUEL TANK REMOVAL* in this section.

NOTE: It is not necessary to disconnect fuel pump.

Disconnect fuel sensor connector.

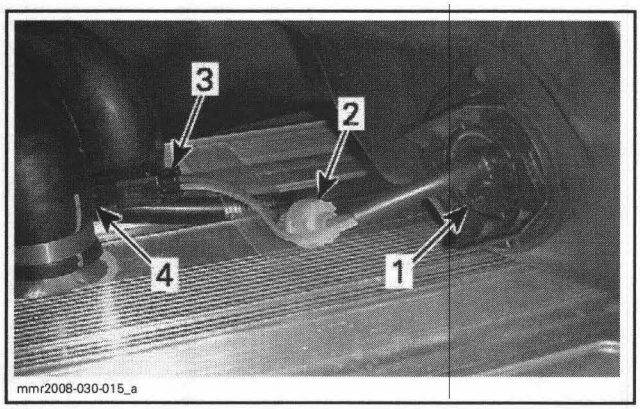

1. *Fuel sensor*
2. *In-line fuse*
3. *Connector*
4. *Connector routing*

NOTE: Take note of connector and wiring harness routing between the two coolant hoses. They must be rerouted this way on installation.

Insert a screwdriver between grommet and sensor face plate. Gently pry sensor loose in grommet.

NOTE: Do not try to remove sensor from grommet at this time.

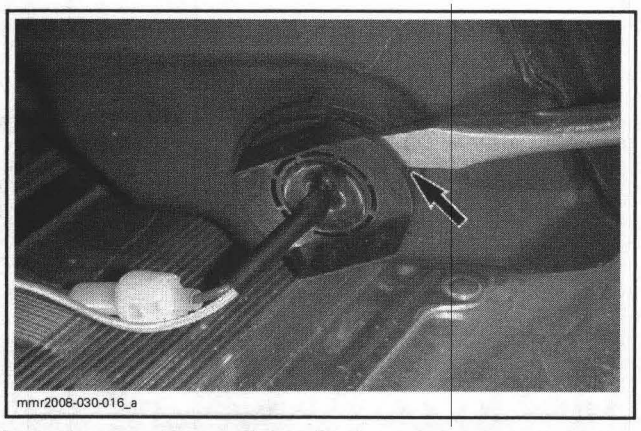

Remove grommet from fuel tank.

Carefully rotate sensor as you pull it out of fuel tank.

CAUTION: Float arm is precisely bent and must not be altered on removal or installation.

Fuel Level Sensor Installation

Fuel level sensor installation is the reverse of removal procedure. Pay attention to the following.

500SS/800R

Carry out a resistance test of sensor before installation, refer to *FUEL LEVEL SENSOR RESISTANCE TEST* in this section.

600 HO SDI

On these models, it is possible to connect sensor to harness, set cut-out switch to OFF, press start button and check fuel gauge indication before sensor is installed in fuel tank.

All Models

Carefully insert float sensor through hole in tank gently rotating it in position.

NOTE: Ensure the arrow on face of sensor is pointing upwards.

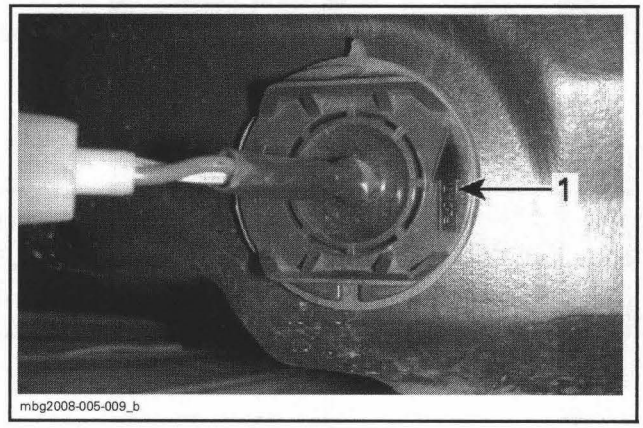

1. *Arrow facing up*

Push grommet flush in tank with grommet alignment indicator in line with the two notches on the fuel tank.

Align top flat portion of sensor with alignment boss on grommet and push it in until it bottoms out.

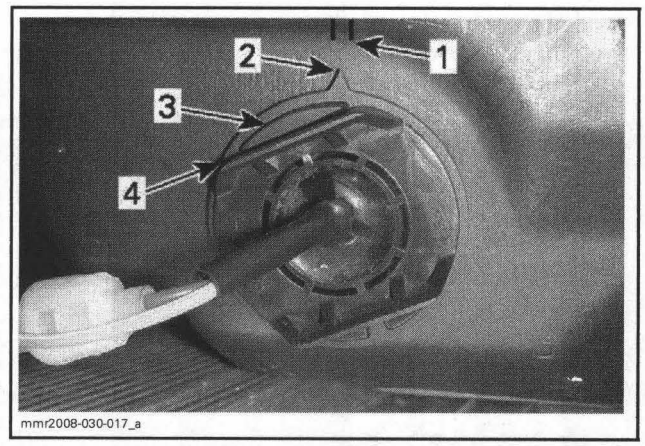

1. *Alignment notches in tank*
2. *Grommet alignment indicator*
3. *Alignment boss*
4. *Sensor aligned to grommet boss*

NOTE: Note the angle at which the fuel level sensor is positioned. This is critical for proper operation.

Use dielectric grease (P/N 293 550 004) in connector to prevent corrosion.

Carry out a fuel system leak test, refer to *FUEL SYSTEM PRESSURIZATION* in this section.

Test fuel level indication as you fill fuel tank before you complete reassembly of vehicle.

Fuel Level Sensor Resistance Test

Obtain access to fuel level sensor connector, refer to *FUEL TANK REMOVAL* in this section.

Disconnect fuel level sensor.

Connect a multimeter set to Ω between the two pins in the sensor connector.

Test resistance of sensor as follows.

FUEL LEVEL SENSOR RESISTANCE TEST	
Full level resistance value	10 Ω +0 / – 6
Empty level resistance value	90 Ω +10 / – 0

Replace sensor if not as specified in table.

FUEL TANK

Fuel Tank Removal

500SS/800R

Remove the following, refer to *BODY*:
- Seat
- Both side panels
- Hood.

Remove Torx screws securing front section of console (one each side).

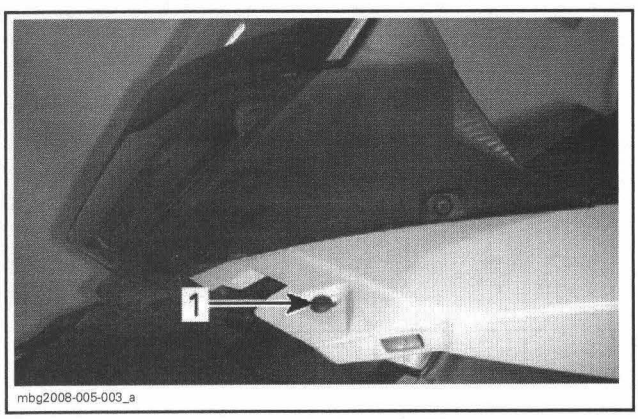

1. Front console retaining screw (one each side)

Remove Torx screws securing rear section of console (one each side).

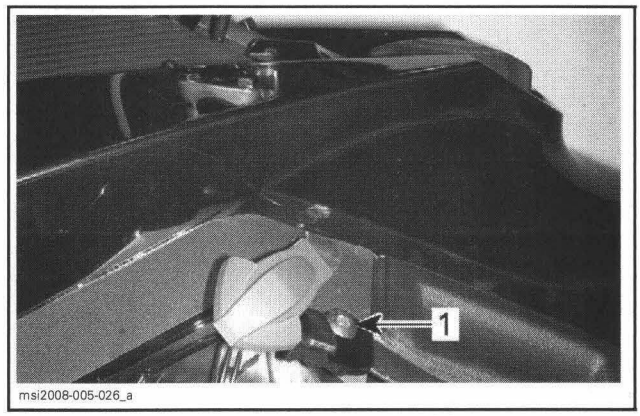

1. Rear Torx screws on console (one each side)

Remove the Torx screws securing gauge support (one each side).

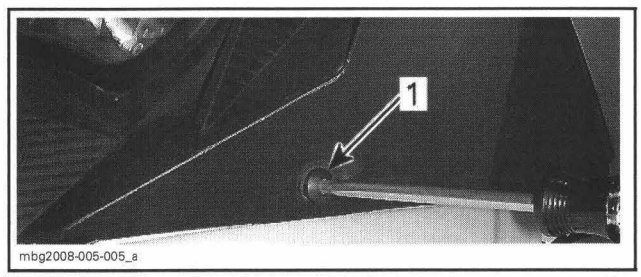

1. Gauge support Torx screws (one each side)

Remove choke lever nut.

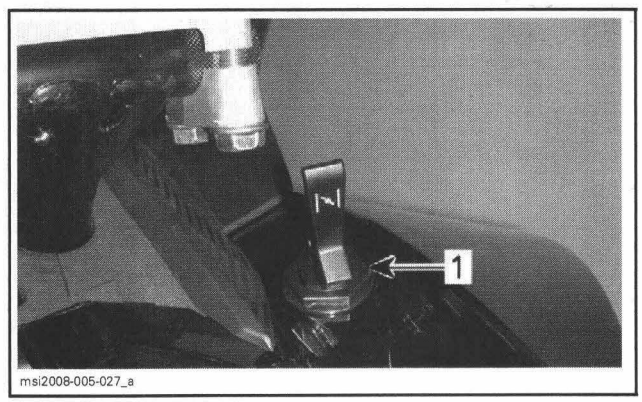

1. Choke lever nut

Push back the choke lever inside its hole.

Remove fuel tank cap and syphon fuel tank.

Remove filler neck retaining nut using the fuel tank nut wrench (P/N 529 035 891).

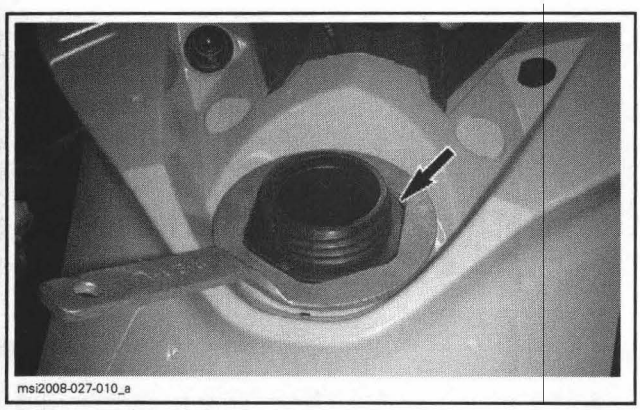

FILLER NECK RETAINING NUT

Install fuel tank cap as a precaution.

Pull up on aft section of console to release aft mounting tabs from under side frame members, and to clear fuel tank filler neck. Carefully and slowly pull back on console until you can see the DESS post connector.

NOTE: Pay particular attention to the console front mounting tabs. The metal retainers (nuts) on these tabs could easily scratch the console or other trim panels.

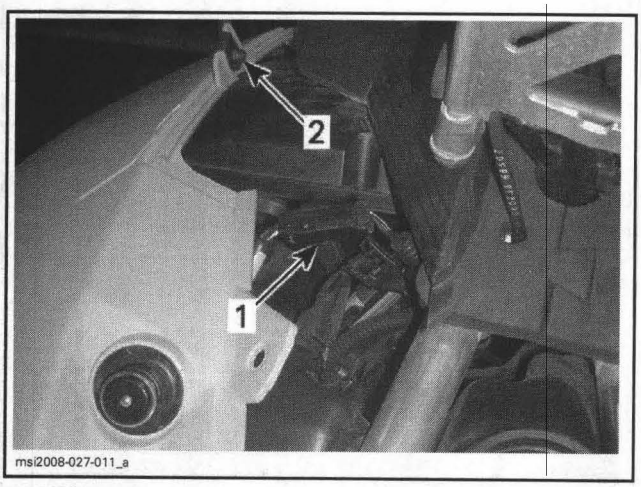

1. *DESS post connector*
2. *Metal retainers (nuts)*

Disconnect the DESS post connector, then carefully pull back on the console to remove it from vehicle.

Gently lift up on the rear section of the gauge support to gain access to the front mounting bolts of the rear frame members.

Remove the forward mounting bolt on the rear frame member, and the upper column support mounting bolts as indicated on the illustration. Discard the elastic nuts.

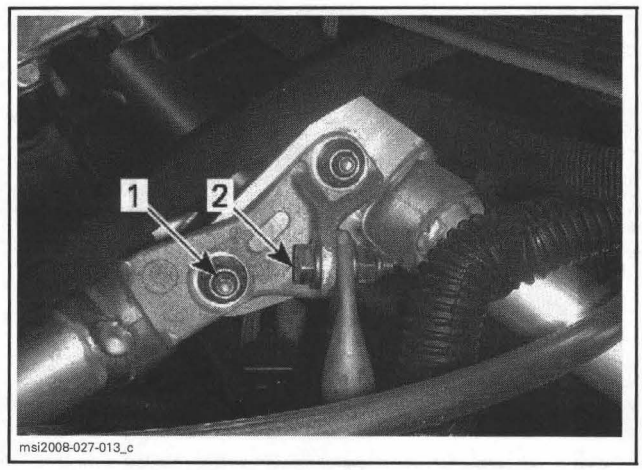

RIGHT SIDE SHOWN
1. *Forward mounting bolt, rear frame member*
2. *Mounting bolts (one each side), upper column support*

NOTE: Note position of brake hose retaining clamp on LH side mounting bolt of the upper column support as indicated in the following illustration.

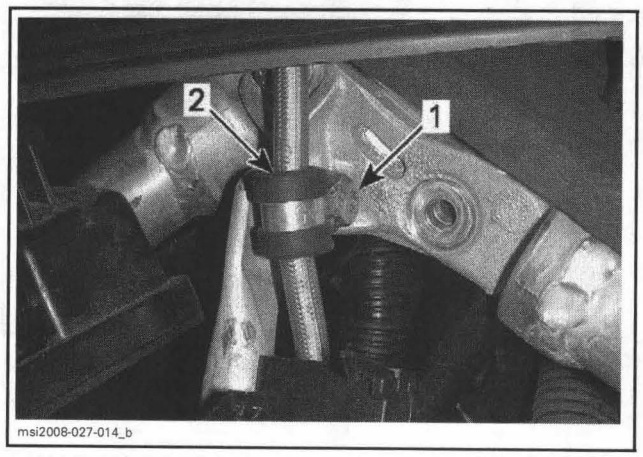

1. *LH mounting bolt, upper column support*
2. *Brake hose retaining clamp*

Release the torque applied to the mounting bolt of the front frame member, but do not remove bolt and elastic nut.

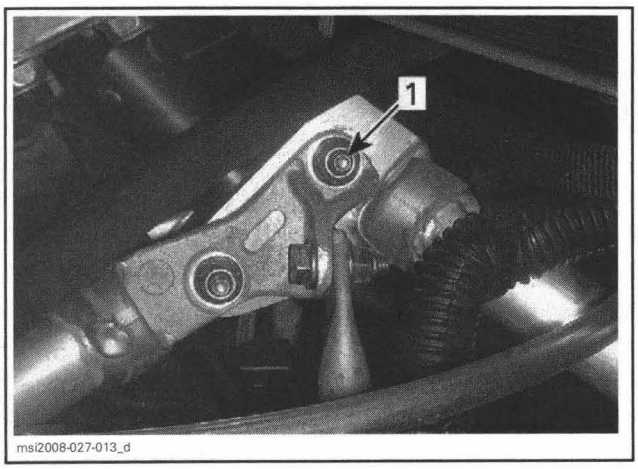

1. Mounting bolt, front frame member

Remove trim panels covering the aft end of the side frame members by pulling upward then pulling out (one each side).

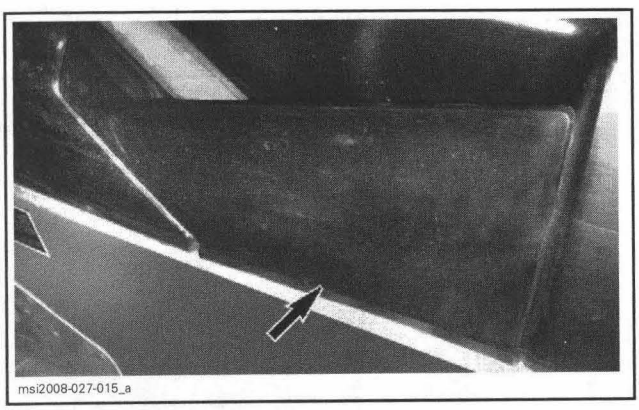

Remove elastic nut and shoulder bushing retaining the rear frame members (one each side) to the tunnel (discard nuts, keep shoulder bushings).

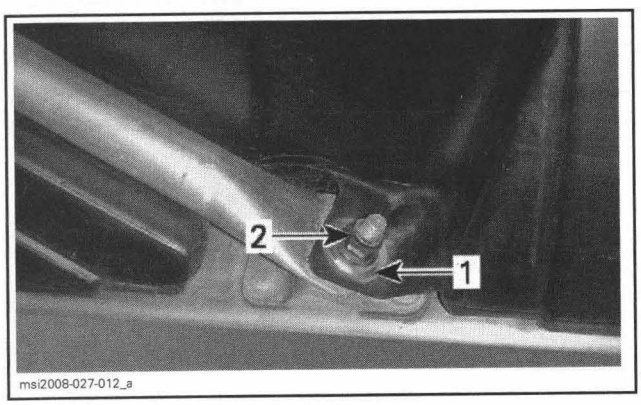

1. Shoulder bushing
2. Elastic nut

Disconnect fuel tank vent line at check valve.

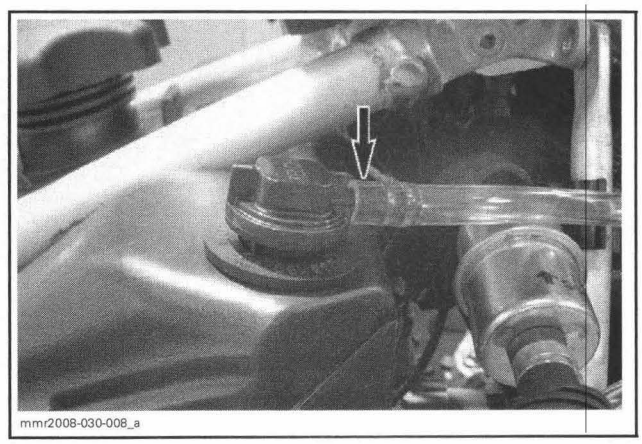

DISCONNECT FUEL VENT LINE

Install a small hose pincher (P/N 295 000 076) on the fuel tank outlet hose.

Disconnect the fuel line by cutting the Oetiker clamp and pulling the hose off the fitting.

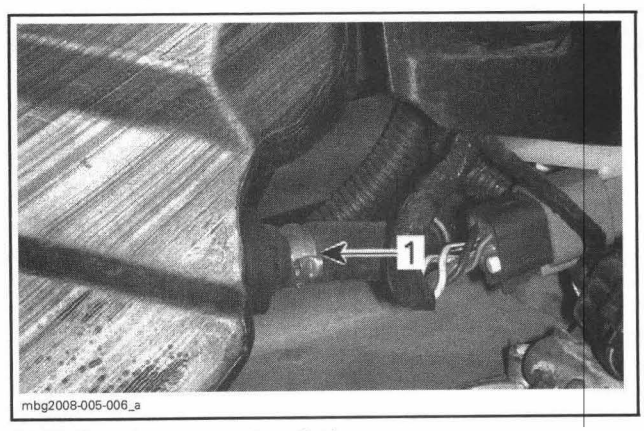

1. Oetiker clamp, fuel tank outlet hose

Unplug the fuel level sensor connector.

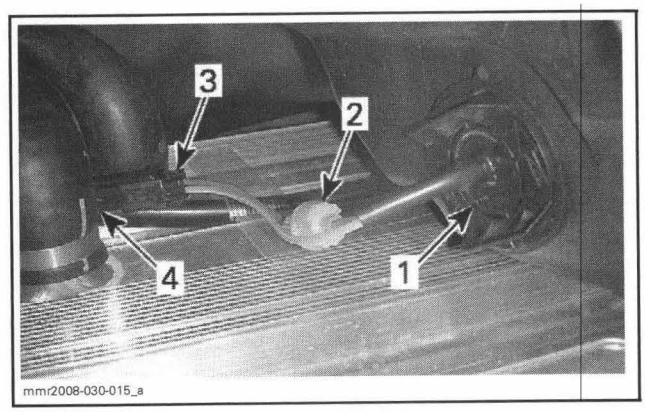

1. Fuel level sensor
2. In-line fuse
3. Connector
4. Connector routing

Carefully and slowly lift the end of the fuel tank and remove it from vehicle.

600 HO SDI

Fuel tank removal procedure is the same as for the **500SS** and **800R** models except for the following:

- No choke lever to remove.
- Release fuel pressure in the system, refer to the *COMMUNICATION TOOLS AND B.U.D.S. SOFTWARE* section.
- Disconnect electric fuel pump as per the *FUEL PUMP REMOVAL* procedure in this section.

Fuel Tank Installation

Installation procedures are the reverse of removal procedures. However, pay attention to the following.

⚠ WARNING

Make sure vent tube is not kinked or pinched.

Install shoulder bushings and NEW M8 elastic nuts on the rear frame members (one each side).

Torque to 33 N•m (24 lbf•ft).

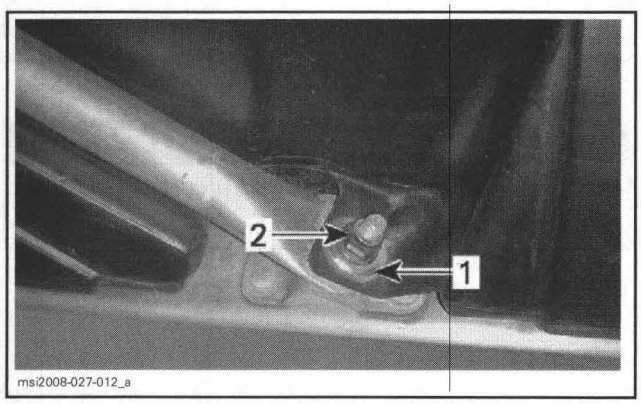

1. Shoulder bushing
2. Elastic nut

Insert the forward mounting bolt on the rear frame member, and the two bolts on the upper column support. Secure with new elastic nuts.

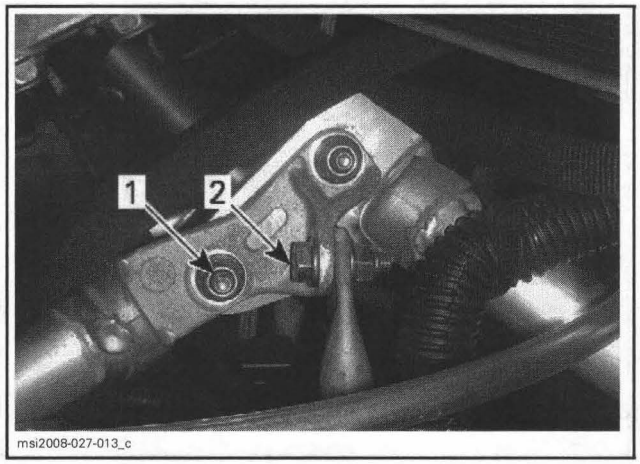

RIGHT SIDE SHOWN
1. Forward mounting bolt, rear frame member
2. Mounting bolts (one each side), upper column support

NOTE: Note position of brake hose retaining clamp on LH side mounting bolt of the upper column support as indicated in the following illustration.

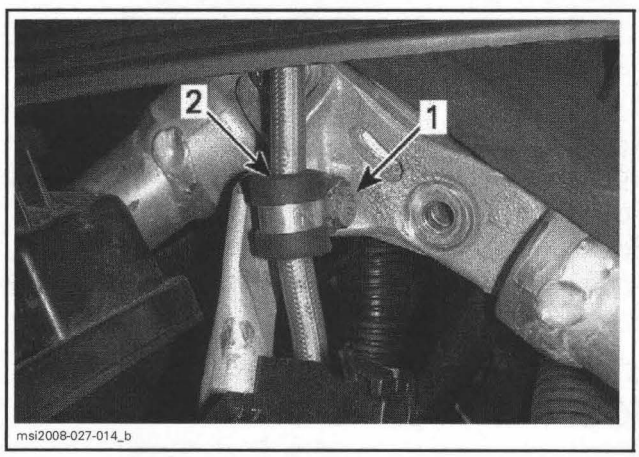

1. LH mounting bolt, upper column support
2. Brake hose retaining clamp

Torque forward nut on rear frame members and nuts on upper column supports to 18 N•m (159 lbf•**in**).

Torque elastic nut on the front frame member mounting bolt to 18 N•m (159 lbf•**in**).

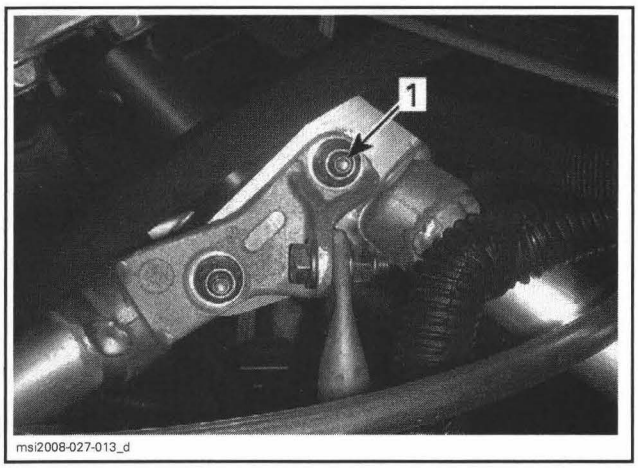

1. Mounting bolt, front frame member

Torque the fuel tank filler neck nut to 11 N•m (97 lbf•**in**).

Carry out a fuel system leak test, refer to *FUEL SYSTEM PRESSURIZATION* in this section.

600 HO SDI

The installation procedure is the same as **500SS** and **800R** models except for the following:

- No choke lever to install.
- Electric fuel pump connection.

Refer to the *FUEL PUMP INSTALLATION* procedure in this section.

Carry out a fuel system leak test and a high pressure leak test, refer to *FUEL SYSTEM PRESSURIZATION* and *HIGH PRESSURE LEAK TEST (ELECTRIC FUEL PUMP CIRCUIT)* in this section.

OETIKER CLAMPS

To secure or cut Oetiker clamps on fuel lines, use pliers Oetiker 1099 (P/N 295 000 070).

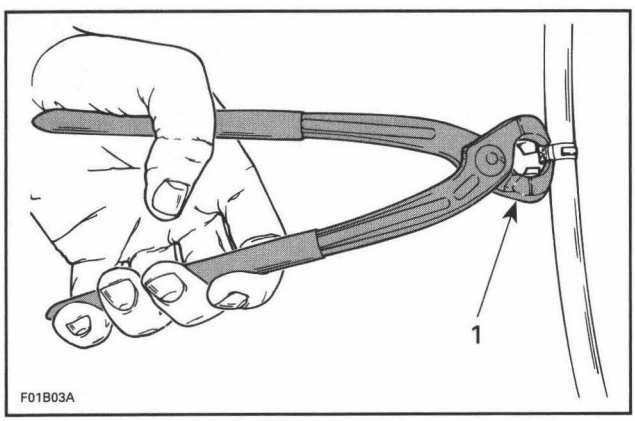

1. Cutting clamp

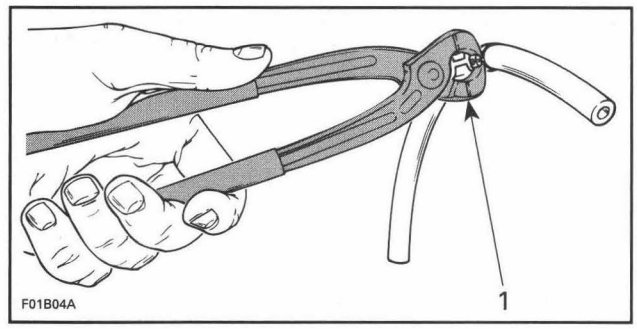

1. Securing clamp

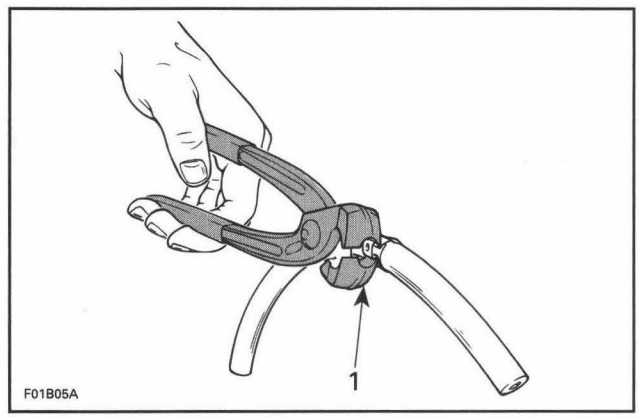

1. Securing clamp in limited access

⚠ WARNING

Use of improper fuel lines could compromise fuel system integrity.

TM CARBURETORS

SERVICE TOOLS

Description	Part Number	Page
small hose pinchers	295 000 076	230
carburetor tool kit	404 112 000	223
digital inductive type tachometer	529 014 500	227
supply harness	529 035 869	230
supply cable	529 035 997	230

SERVICE PRODUCTS

Description	Part Number	Page
dielectric grease	293 550 004	232
Loctite 243 (blue)	293 800 060	225

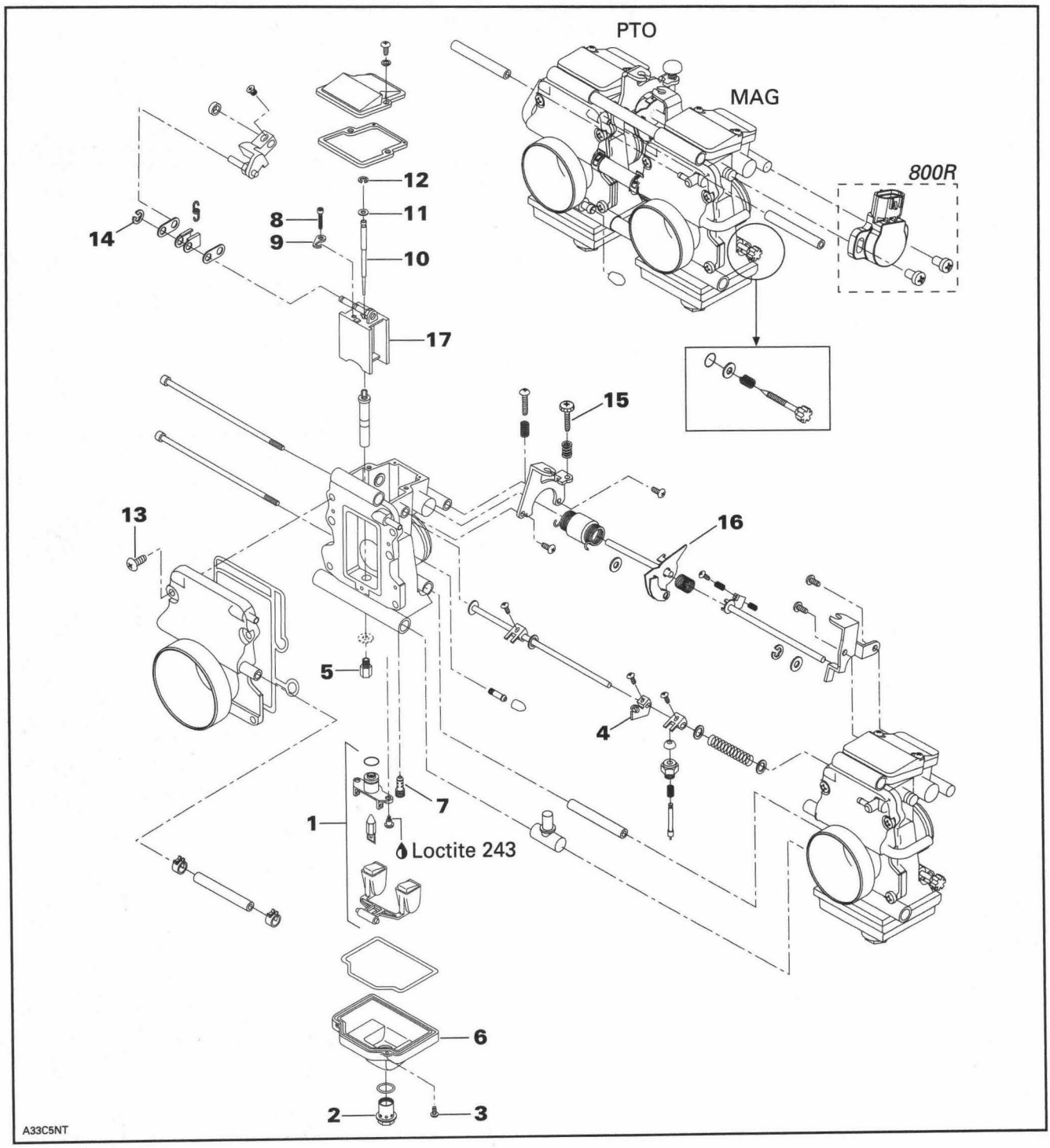
PTO
MAG
800R
12
11
8
9
10
14
17
15
13
16
5
4
7
1
Loctite 243
6
2
3
A33C5NT

PROCEDURES

CARBURETOR

General

NOTE: On **800R** models, it is a good practice to check for fault codes using B.U.D.S. software as a first troubleshooting step. Refer to *MONITORING SYSTEM/FAULT CODES*.

Carburetor Identification

TM type dual carburetor assembly is identified on PTO side carburetor body.

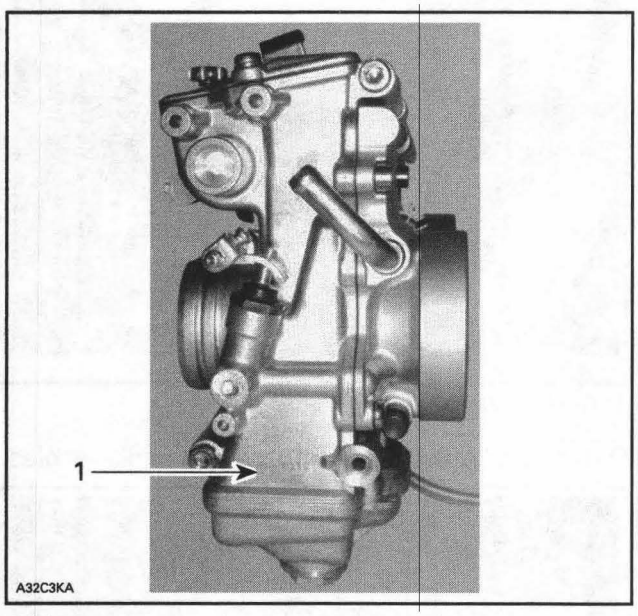

TYPICAL
1. Identification: TM 40-B322

Carburetor Removal

Remove LH side panel.

Remove belt guard. Refer to *DRIVE SYSTEM/BRAKE* section.

Remove primary air intake silencer. Refer to *ENGINE* section.

500SS

Disconnect vent hose.

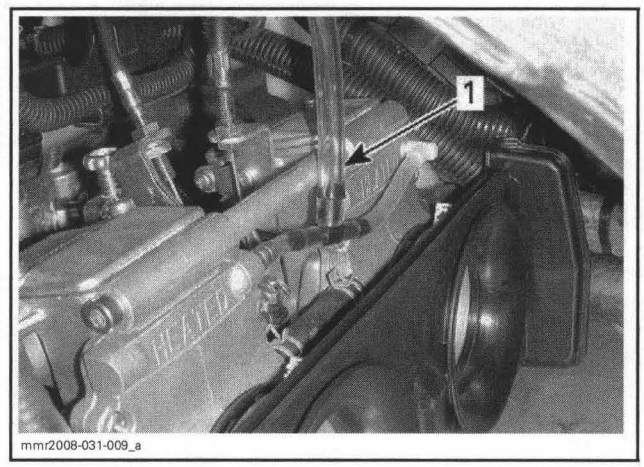

1. Hose

800R

Disconnect DPM manifold top hose and connector.

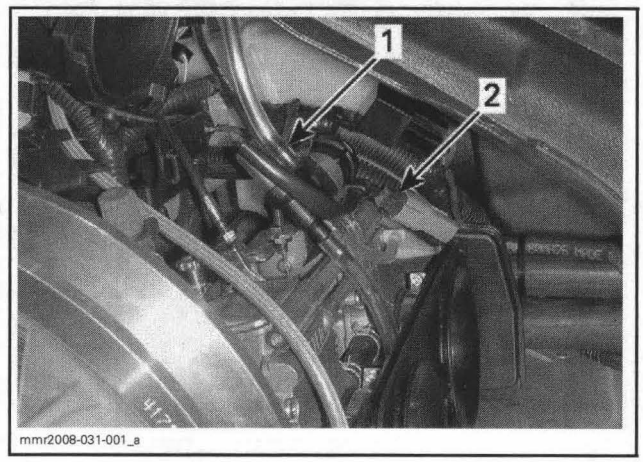

1. Hose
2. Connector

500SS/800R

Turn heated carburetor coolant inlet line valve to OFF position.

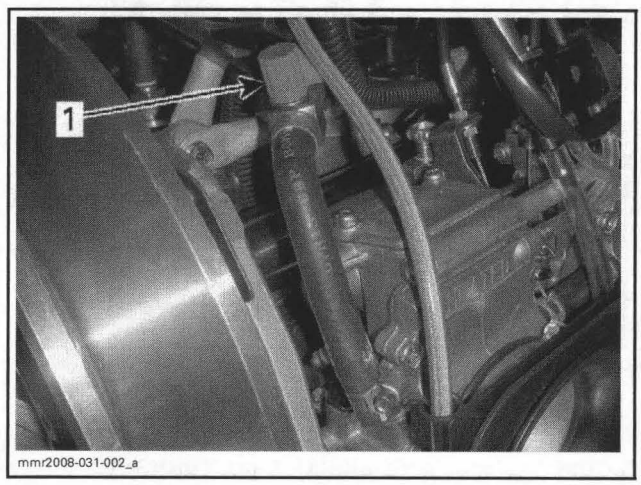

1. Inlet line valve

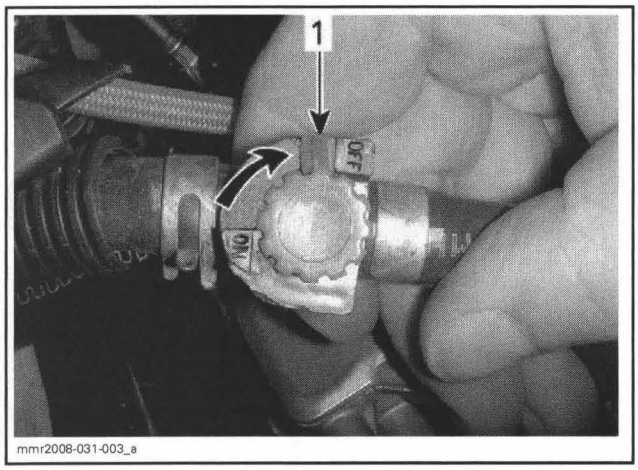

1. OFF position

Disconnect **inlet** line from carburetor taking care to recuperate coolant.

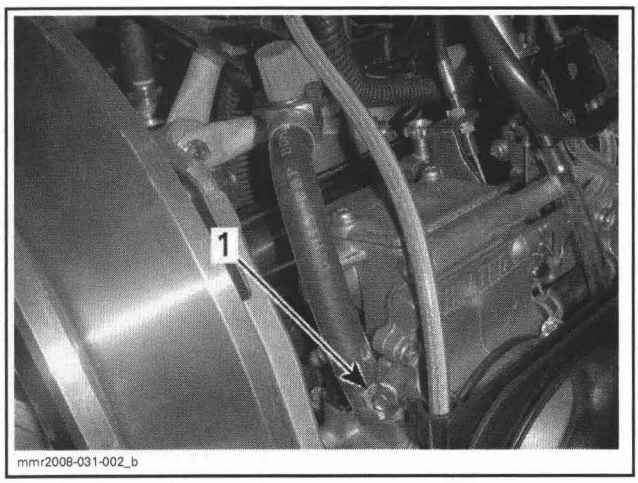

1. Disconnect here

Detach brake hose from adapter plate.

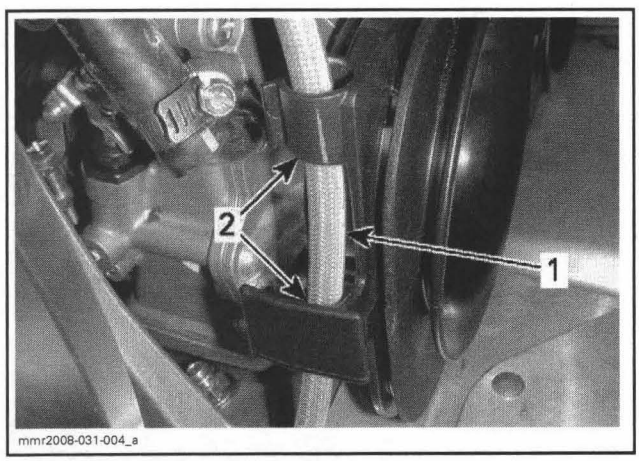

TYPICAL
1. Hose
2. Release from adapter plate

Loosen clamps retaining carburetors to intake adapters.

Detach carburetors from intake adapters.

Lift carburetors then disconnect fuel line from fuel pump. Take care to recuperate fuel.

⚠ WARNING

Fuel is flammable and explosive under certain conditions. Always wipe off any fuel or oil spillage from the vehicle. Ensure work area is well ventilated. Do not smoke or allow open flames or sparks in the vicinity.

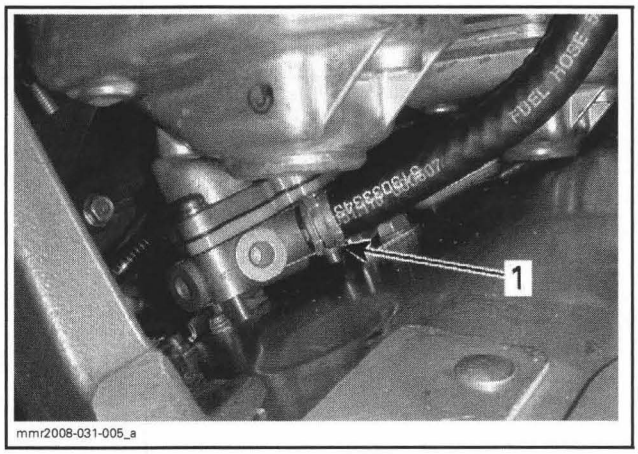

1. Disconnect here

Detach and disconnect throttle and choke cables.

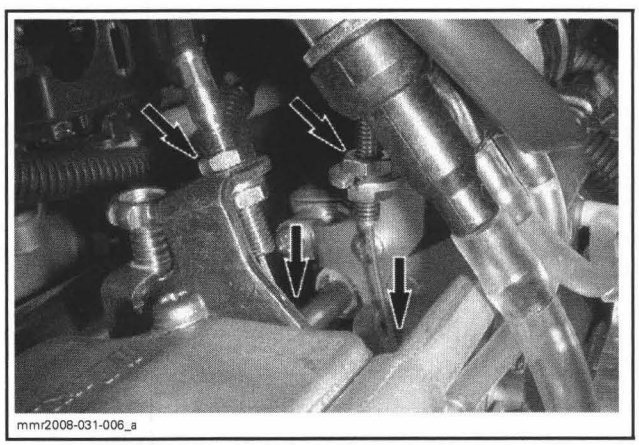

THROTTLE AND CHOKE CABLES

800R

Disconnect TPS connector.

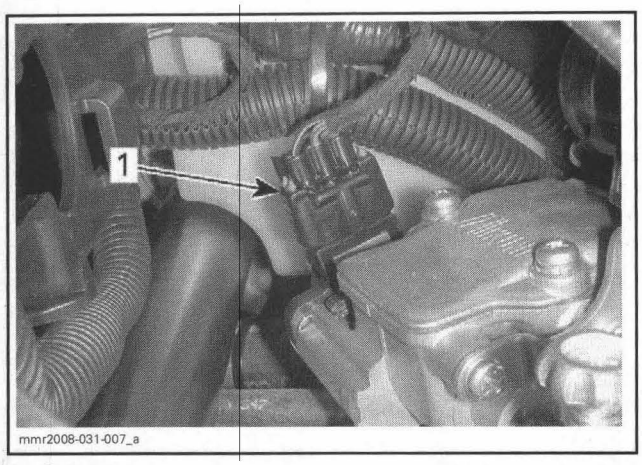

1. Connector

500SS/800R

Pinch and disconnect heated carburetor **outlet** line taking care to recuperate coolant.

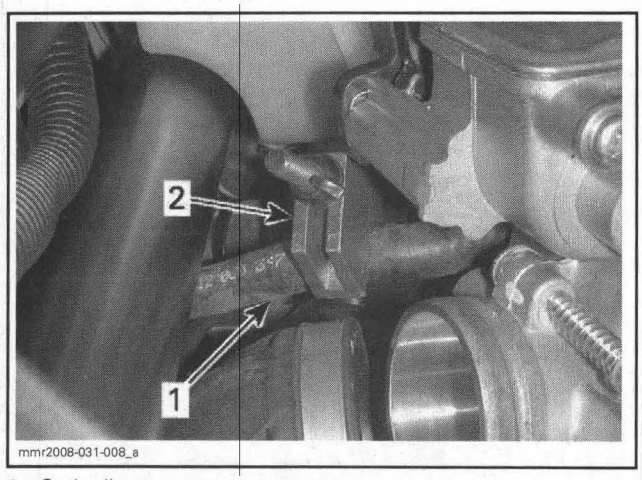

1. Outlet line
2. Hose pincher

Remove carburetors.

Carburetor Disassembly

NOTE: To ease the carburetor disassembly and assembly procedures, it is recommended to use carburetor tool kit (P/N 404 112 000).

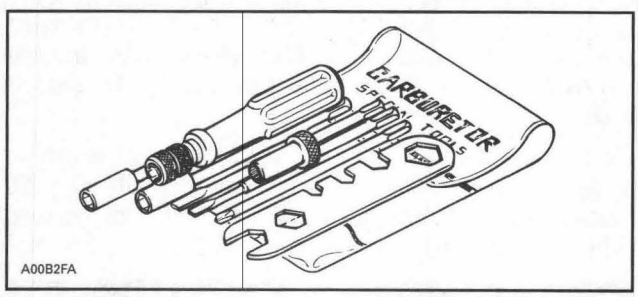

Float Bowl

Unscrew drain plug **no. 2** and screws **no. 3**. Remove float bowl **no. 6**.

Float and Needle Valve Assembly

Unfasten both screws then, pull out float and needle valve assembly **no. 1**.

Main Jet

The main jet **no. 5** installed in the carburetor has been selected for a temperature of - 20°C (0°F) at sea level. Different jetting can be installed to suit temperature and/or altitude changes. A Service Bulletin gives information about calibration according to altitude and temperature.

Main jet **no. 5** may be removed without removing float bowl **no. 6** by first removing drain plug **no. 2**.

Pilot Jet

Use narrow screwdriver from carburetor tool kit (P/N 404 112 000) to unscrew pilot jet **no. 7**.

Throttle Slide

⚠ WARNING

It is critical to the free operation of the throttle slide that the 2 connecting plates as assembled in one carburetor be of the exact same length. Always replace the connecting plates by a pair of new ones that were matched at the factory for length and discard the old ones. Simultaneously replace all the plates of the carburetors of a same rack.

Do not disassemble throttle slide **no. 17** needlessly.

CAUTION: After throttle slide reassembly, proceed with a leak test. See below for procedure.

Disassemble both carburetors at the same time. Coolant hose between carburetor throttle slide covers must remain in place during the complete disassembly and assembly.

Remove carburetor cover.

Loosen needle retainer screw **no. 8**.

Fully open throttle and hold in this position for the following step.

Move aside needle retainer **no. 9**.

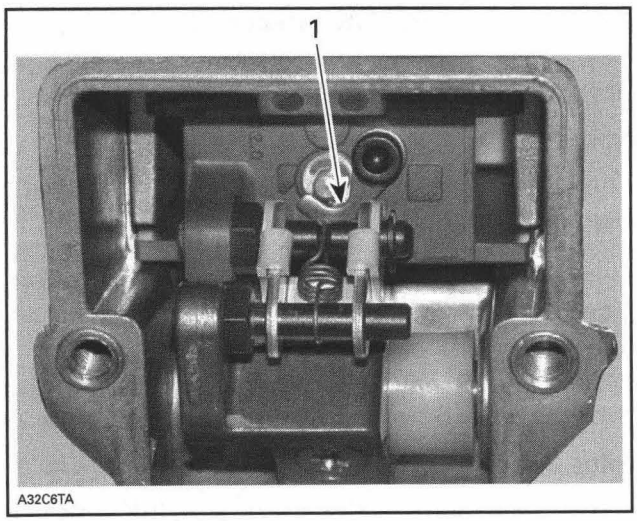

1. Needle retainer moved aside

Turn dual carburetor assembly upside down to free needle **no. 10**. Take care not to loose plastic washer **no. 11** under needle circlip **no. 12**.

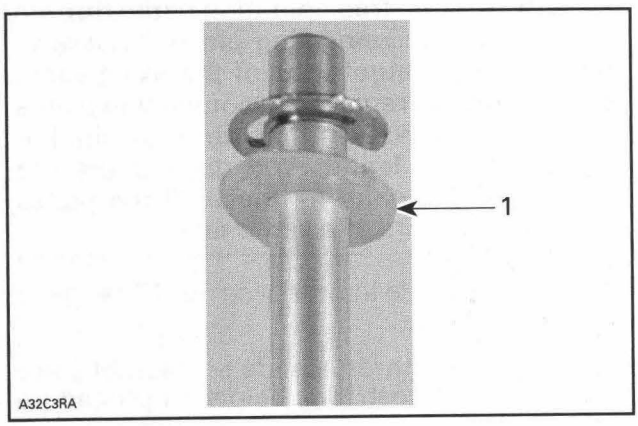

1. Plastic washer

Unscrew throttle slide cover screws **no. 13**.

Open throttle 3/4 wide and keep that opening.

Lift throttle slide covers bottom first until they are free from carburetor bodies. Then, slide them out.

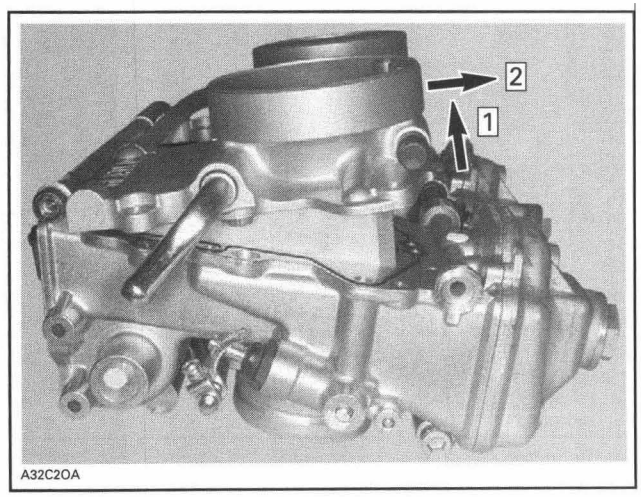

Step 1: Lift bottom first
Step 2: Slide out

Remove circlip **no. 14** retaining throttle slide.

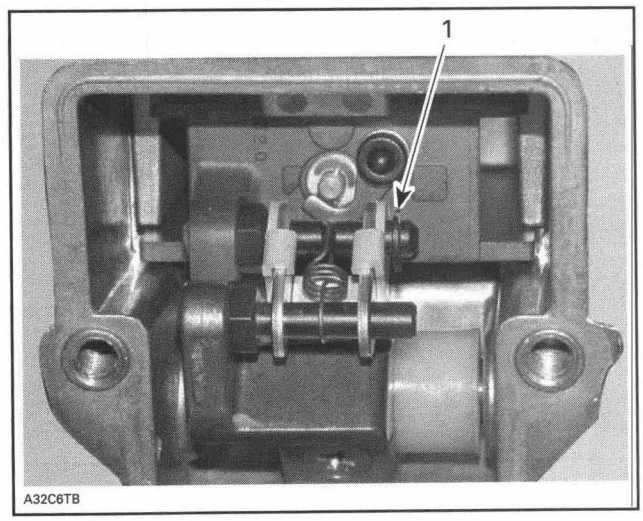

1. Circlip

Carburetor Cleaning

The entire carburetor should be cleaned with a general solvent and dried with compressed air.

CAUTION: Heavy duty carburetor cleaner may be harmful to the float material and to the rubber parts, O-rings, etc. Therefore, it is recommended to remove those parts prior to cleaning.

Carburetor body and jets should be cleaned in a carburetor cleaner following manufacturer's instructions. When jets are very dirty or coated with varnish and gum, replace them.

⚠ WARNING

Solvent with a low flash point such as gasoline, naphtha, benzol, etc., should not be used as they are flammable and explosive.

Carburetor Inspection

Check throttle slide for wear. Replace as necessary.

Check for fuel soaked into float **no. 1**; replace as necessary.

Check float for cracks or other damages affecting free movement; replace as necessary.

Carburetor Assembly

The assembly is the reverse of the disassembly procedure. Pay attention to the following.

Float and Needle Valve Assembly

Apply Loctite 243 (blue) (P/N 293 800 060) on screw threads.

Throttle Slide

At throttle slide assembly, needle retainer must face carburetor body.

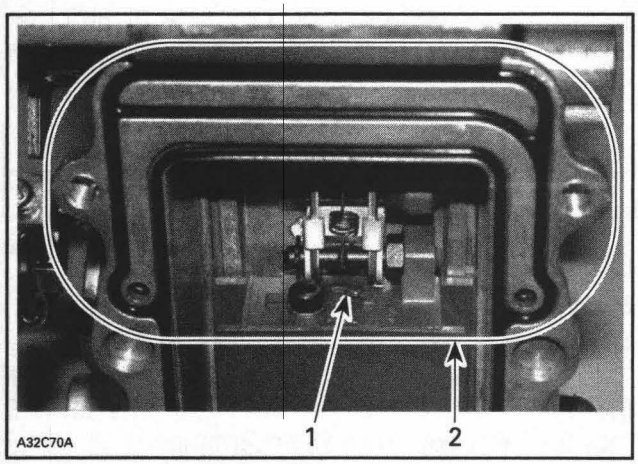

1. Needle retainer
2. Ensure O-ring gasket is properly seated in nipple area

After inserting throttle slide cover in place and before installing screws, ensure O-ring gasket is properly seated in its groove especially in the area around vent nipple. See illustration above.

Carburetor Installation

The installation is the reverse of the removal procedure. However, pay attention to the following.

If carburetors were disassembled, adjustments should be performed following this sequence:

1. Carburetor synchronization
2. Pilot screw adjustment
3. Closed throttle reset (TPS) (800R)
4. Throttle cable adjustment
5. Idle speed adjustment
6. Choke cable adjustment.

Refer to procedures in this section in regards with these adjustments.

Carburetor Synchronization

To ensure throttle cable does not pull on throttle slide, do the following:

- Loosen throttle cable housing adjusting and locking nuts.

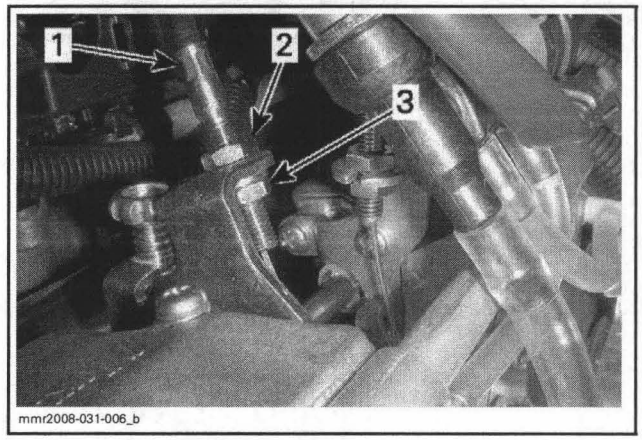

1. Throttle cable
2. Adjusting nut
3. Locking nut

- Unscrew idle speed screw until there is a gap between tip of screw and throttle lever stopper.

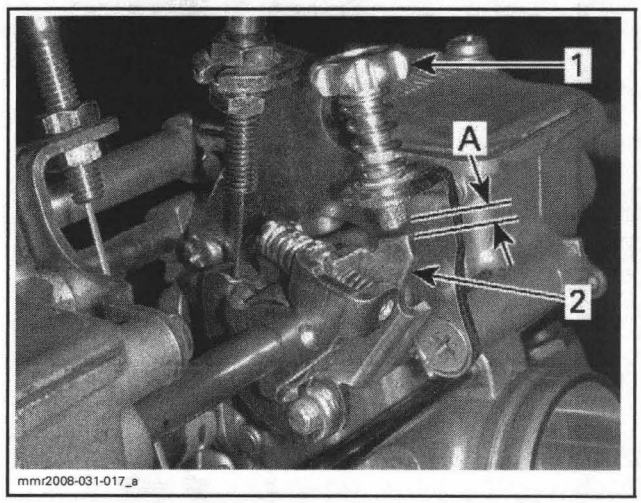

1. Idle screw
2. Throttle lever stopper
A. Gap required here

To perform carburetor synchronization, first proceed on PTO carburetor.

Use a drill bit to measure flat slide height (see following table) on **outlet** side of carburetor (engine side).

Adjust by turning idle speed screw **no. 15**.

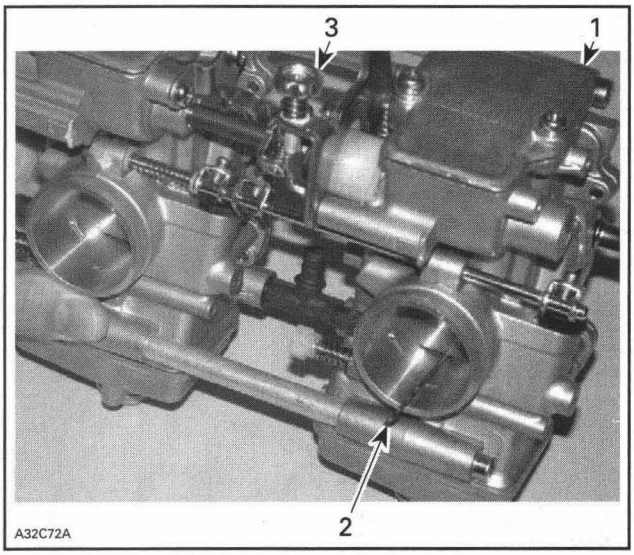

1. *Adjust PTO carburetor first*
2. *Drill bit used as a gauge to measure flat slide height*
3. *Idle speed screw*

For MAG carburetor use synchronization screw. Use same drill bit as for PTO carburetor to measure flat slide height. Turn synchronization screw to adjust.

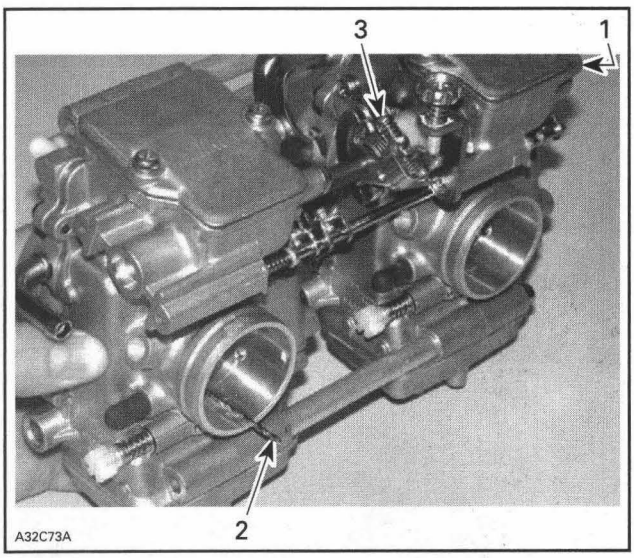

1. *PTO carburetor adjusted first*
2. *Drill bit used as a gauge to measure flat slide height*
3. *Synchronization screw*

MODEL	FLAT SLIDE HEIGHT (DRILL BIT SIZE) ± 0.1 MM (± .004 IN)
500SS	1.5 (.059)
800R	SUMMIT: 2.0 (.079) Others: 1.6 (0.063)

Pilot Screw Adjustment

Completely close the pilot screw (until a slight seating resistance is felt) then back off as specified.

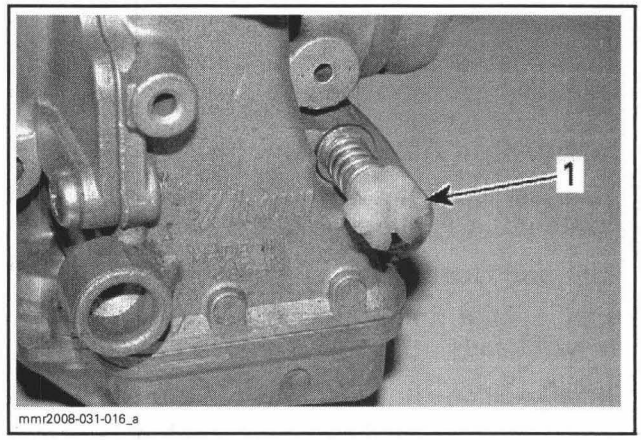

1. *Pilot screw (one on each carburetor)*

Turning screw in clockwise leans mixture and conversely, turning it out counterclockwise enriches mixture.

ENGINE	TURNS
500SS/800R	1.5

Closed Throttle Reset (TPS)

800R

This reset is very important. The setting of the TPS will determine the basic parameters for all fuel and ignition mappings. An improperly set TPS may lead to poor engine performance.

Reset must be done each time one of the following conditions is met:

- Throttle position sensor (TPS) is loosened or removed.
- Carburetor is replaced.
- ECM is replaced.

Refer to *THROTTLE POSITION SENSOR (TPS)* in this section.

Idle Speed Adjustment

CAUTION: Before starting engine for the idle adjustment, make sure that oil pump is adjusted. The oil pump adjustment must be checked after each time carburetor idle is adjusted. Refer to *LUBRICATION SYSTEM.*

Start engine and allow it to warm.

Adjust idle speed to specifications by turning idle speed screw clockwise to increase engine speed or counterclockwise to decrease it.

Use a digital inductive type tachometer (P/N 529 014 500) to set idle speed.

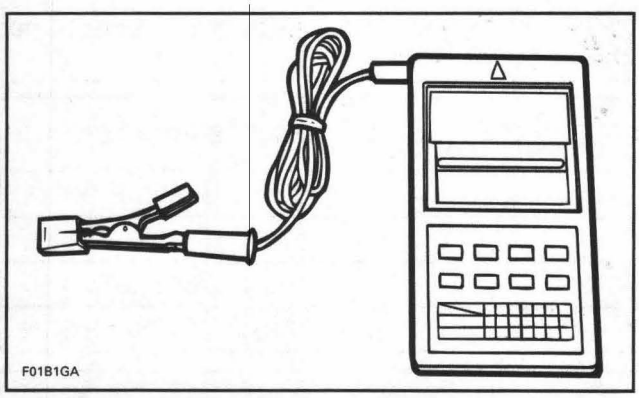

TACHOMETER

CAUTION: Do not attempt to set the idle speed by using the pilot screw. Severe engine damage can occur.

MODEL	IDLE SPEED (RPM ± 200)
500SS	1600
800R	SUMMIT: 1900 Others: 1600

THROTTLE POSITION SENSOR (TPS)

800R

General

The throttle position sensor (TPS) is a potentiometer that sends a signal to the ECM which is proportional to the throttle opening.

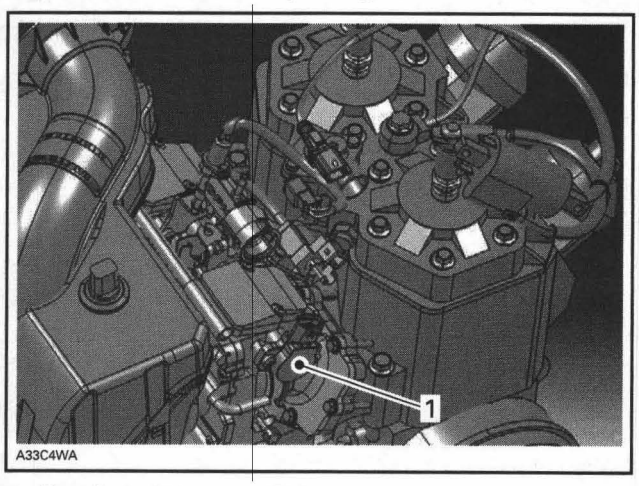

1. Throttle position sensor (TPS)

Before replacing the TPS, check the following as these could be causing the fault.

- Throttle cable adjustment too tight or there is not enough free-play. Not returning fully to idle stop.
- Throttle idle set screw is loose or worn.
- TPS is loose.
- Corroded or damaged wiring or connectors.
- Carburetors have been replaced and the **Closed Throttle** reset has not been performed.
- ECM has been replaced and the **Closed Throttle** reset has not been performed.

The ECM may generate several fault codes pertaining to the TPS. Refer to *MONITORING SYSTEM/FAULT CODES* section for more information.

Closed Throttle Reset (TPS)

This reset is very important. The setting of the TPS will determine the basic parameters for all fuel and ignition mappings. An improperly set TPS may lead to poor engine performance.

Reset must be done each time one of the following conditions is met:

- Throttle position sensor (TPS) is loosened or removed.
- Carburetor is replaced.
- ECM is replaced.

Unscrew idle speed screw until there is a gap between tip of screw and throttle lever stopper.

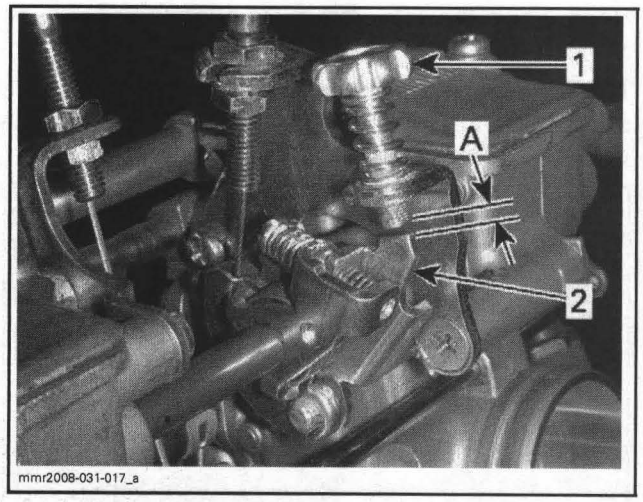

1. Idle screw
2. Throttle lever stopper
A. Gap required here

Use B.U.D.S. software.

Push the **Reset** button in the **Setting** tab of B.U.D.S.

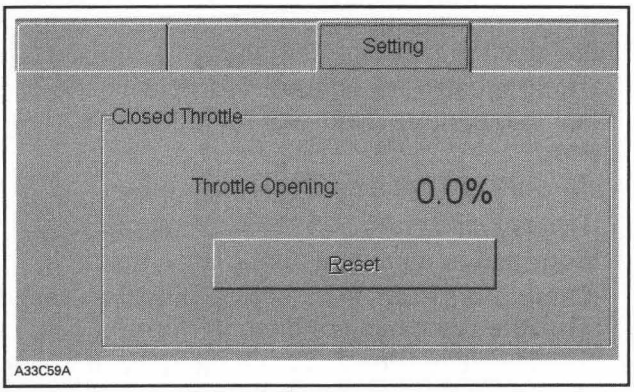

SETTING TAB

If TPS is not within the allowed range while resetting the **Closed Throttle**, the ECM will generate a fault code and will not accept the setting. Verify the following:

- Ensure throttle cable has enough free-play (flat slides must be closed).
- Throttle position sensor (TPS).

If reset is successful, check throttle cable adjustment.

Adjust idle speed.

TPS Resistance Test

Disconnect ECM connector.

Unscrew idle speed screw until there is a gap with the throttle lever stopper.

IMPORTANT: Remember to perform the **Closed Throttle Reset** procedure when all tests will be done since the idle screw was loosened for the test.

NOTE: The gap between idle speed screw and stopper is important to ensure throttle slide is completely closed to read TPS resistance values.

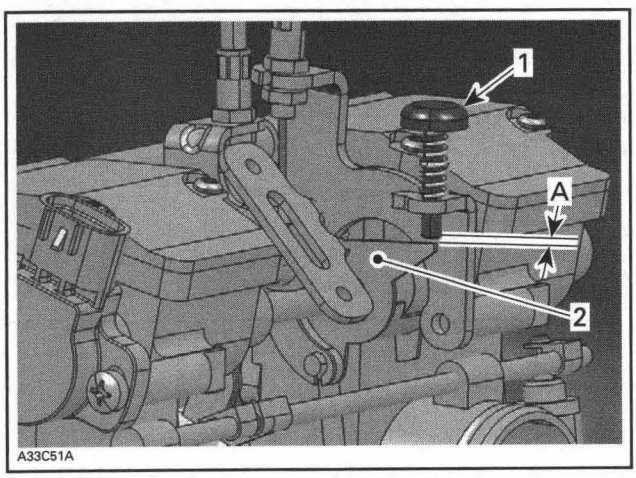

1. *Idle screw*
2. *Throttle lever stopper*

A. Gap required here

Activate throttle lever 2 - 3 times to make sure throttle slides are fully closed.

Using a multimeter, check resistance values as per the following table.

ECM CONNECTOR		THROTTLE POSITION	
PIN		IDLE	WIDE OPEN
22	4	3680 - 5520 Ω	480 - 720 Ω
22	1	4000 - 6000 Ω	
4	1	480 - 720 Ω	3680 - 5520 Ω

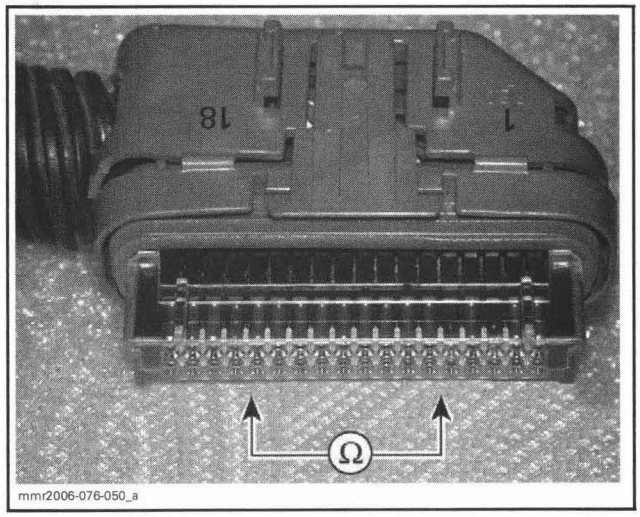

NOTE: The resistance value should change smoothly and proportionally to the throttle movement. Otherwise, replace TPS.

If resistance values are good, perform wear test and voltage test.

If resistance test fails, perform the following continuity test.

CTS Continuity Test

Disconnect TPS connector.

NOTE: To disconnect TPS connector, firmly press locking tab on top outer side of connector to release it.

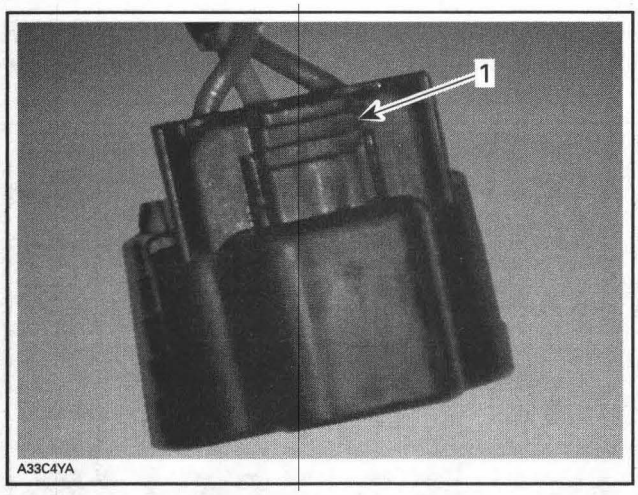

1. Firmly squeeze here

Disconnect ECM connector and check continuity of wires between TPS connector and ECM connector.

TPS CONNECTOR	ECM CONNECTOR	RESULT
Pin 1	DA-22	Close to 0 Ω
Pin 2	DA-4	
Pin 3	DA-1	

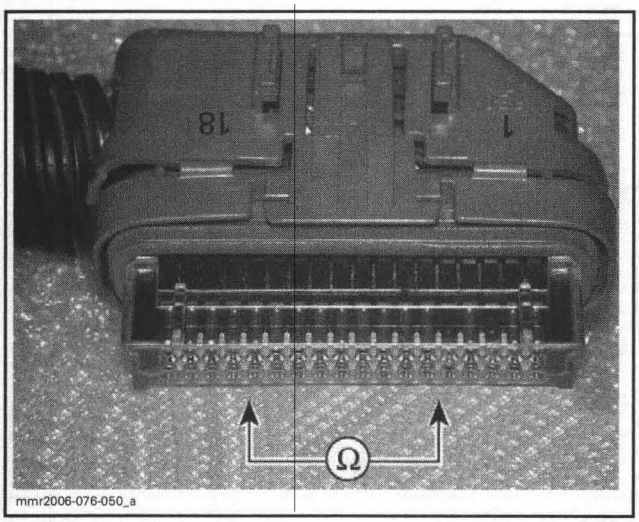

ECM CONNECTOR

If test fails, repair/replace wiring harness.

If test succeeds, check for short-circuit of ECM wiring to ground as follows.

ECM CONNECTOR		RESULT
DA-22	With chassis ground	Open circuit (0L)
DA-4		
DA-1		

If test fails, repair/replace wiring harness.

If test succeeds, perform wear test and voltage test.

TPS Wear Test

While engine is not running, activate throttle and pay attention for smooth operation without physical stops of the cable.

Use B.U.D.S. software.

Use the **Throttle Opening** display under **Monitoring**.

Slowly and regularly depress the throttle. Observe the needle movement. It must change gradually and regularly as you move the throttle. If the needle "sticks", bounces, suddenly drops or if any discrepancy between the throttle movement and the needle movement is noticed, it indicates a worn TPS that needs to be replaced.

TPS Voltage Test

Preparation

To gain access to TPS, do the following:

- Remove pulley guard. Refer to *DRIVE SYSTEM/BRAKE.*
- Remove primary air intake silencer. Refer to *AIR INTAKE SYSTEM.*

Test

Ensure ECM connectors are connected.

Disconnect TPS connector.

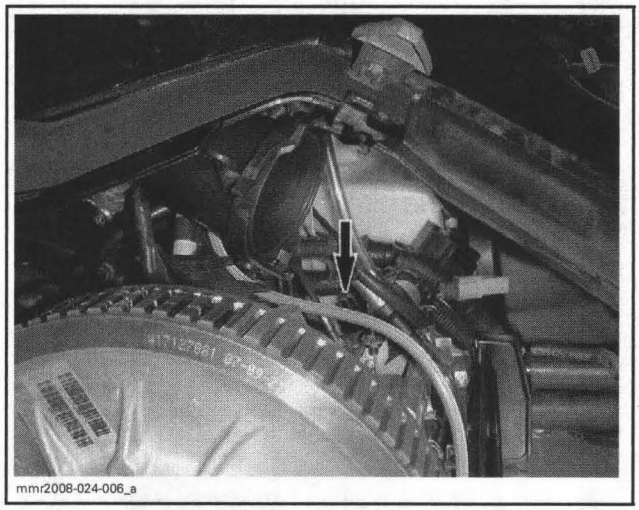

Check the voltage readings from harness connector as follows.

Connect supply harness (P/N 529 035 869) to the 6-pin diagnostic connector of vehicle. Connect supply cable (P/N 529 035 997) to supply harness. Connect clips to vehicle battery. Ensure to match RED wires together and BLACK wires together.

NOTE: On manual start models, use an external 12 V battery.

TPS CONNECTOR	VOLTAGE
Pin 1 with pin 3	5.0 Vdc

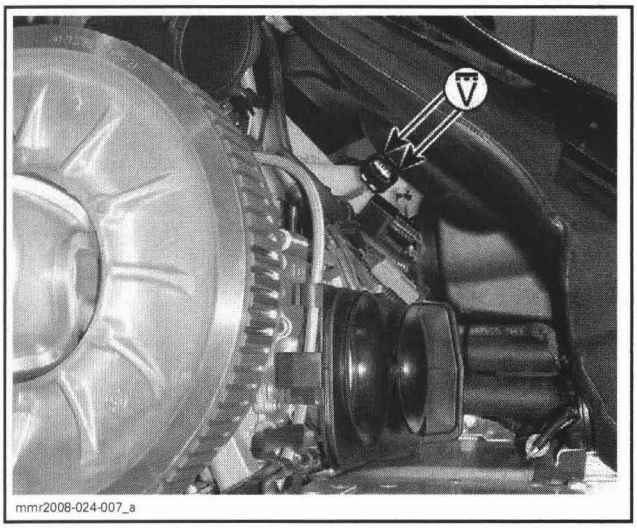

mmr2008-024-007_a

If voltage is not as per specification and all other resistance test were done, try a new ECM.

TPS Replacement

- Remove pulley guard. Refer to *DRIVE SYSTEM/BRAKE.*
- Remove primary air intake silencer. Refer to *AIR INTAKE SYSTEM.*
- Remove adapter plate from carburetors.

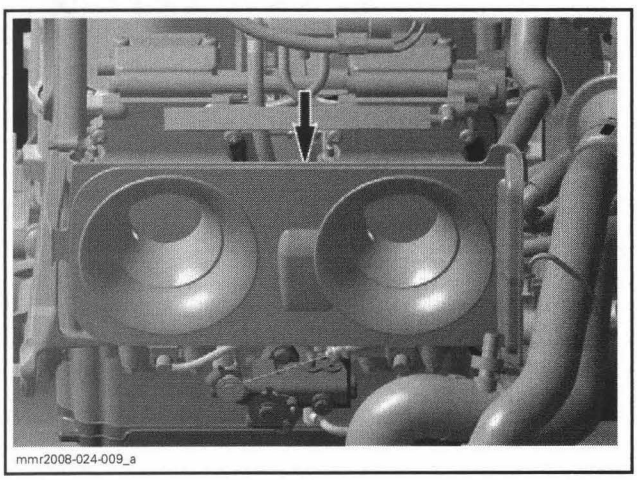
mmr2008-024-009_a

- Loosen carburetor clamps.
- Install small hose pinchers (P/N 295 000 076) on inlet and outlet coolant hoses connected to carburetors.

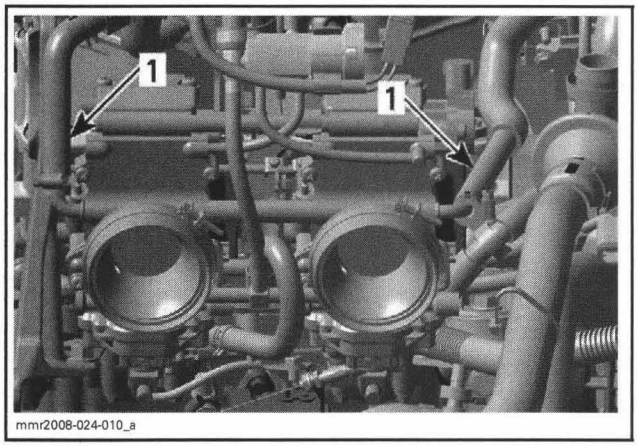

mmr2008-024-010_a

1. Install hose pinchers

- Disconnect inlet and outlet coolant hoses from carburetors.

NOTE: Keep throttle cable installed to avoid further adjustment.

- Properly rotate and slightly pull out carburetors to gain access to TPS.

Loosen two screws retaining the TPS.

Remove TPS.

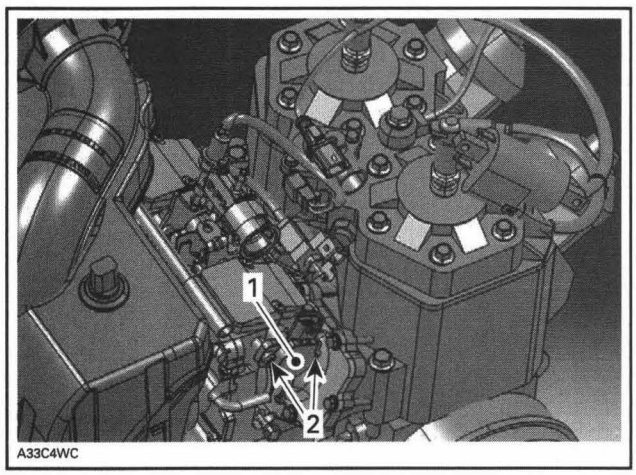

A33C4WC

CARBURETOR
1. Throttle position sensor (TPS)
2. Screws

Install the new TPS.

Apply Loctite 243 on the TPS retaining screws, then torque to 3 N•m (27 lbf•**in**).

Reinstall remaining removed parts.

Proceed with the **Closed Throttle Reset**.

THROTTLE CABLE

Throttle Cable Removal

NOTE: To be able to disconnect cable end from oil pump, engine must be lifted.

Remove applicable parts to ensure access to oil pump. Refer to *OIL INJECTION PUMP REMOVAL* section for procedures.

NOTE: Before removing the cable from vehicle, note its routing for installation.

Remove steering cover.

Using long nose pliers to hold the cable, push the end of cable out of its location.

Remove the retaining circlip, keep circlip for re-use.

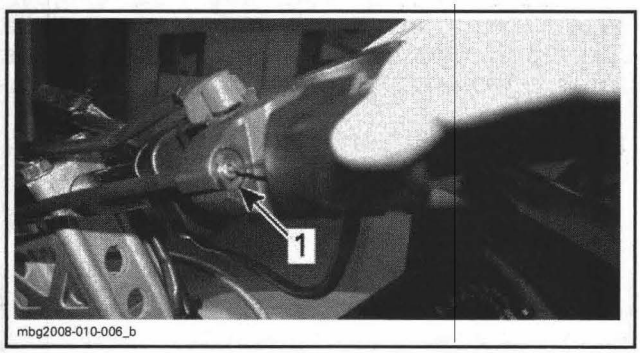

TYPICAL
1. Circlip

Unhook cable sheath then remove cable from handle.

Disconnect cable and cable end from carburetors.

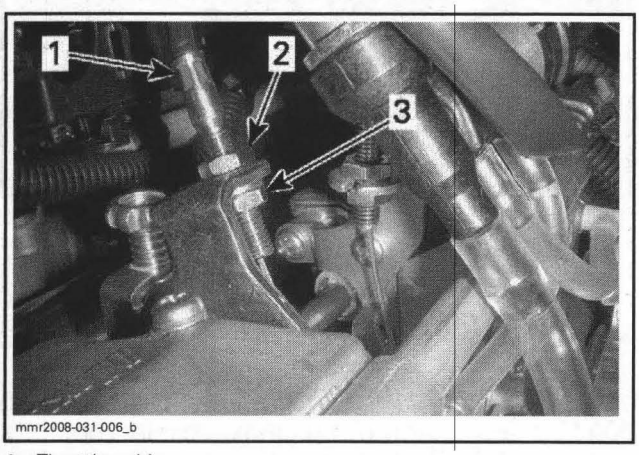

1. Throttle cable
2. Adjusting nut
3. Locking nut

Disconnect cable from oil pump then remove cable.

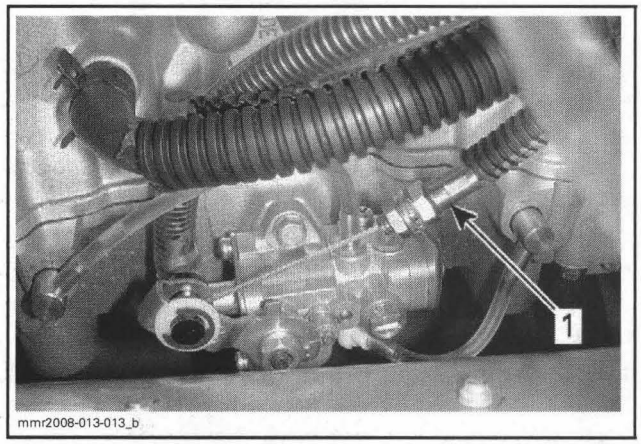

1. Throttle cable

Throttle Cable Inspection

Inspect throttle cable and housing for any damage. Replace as necessary.

Throttle Cable Installation

The installation is the reverse of the removal procedure.

CAUTION: Check that throttle cable is routed away from sharp edges, hot or vibrating parts.

Throttle Cable Adjustment

⚠ WARNING

Ensure the engine is turned OFF, prior to performing the throttle cable adjustment.

Engine must be set in its position, carburetors installed on engine and throttle cable properly routed.

Loosen throttle cable housing adjusting and locking nuts.

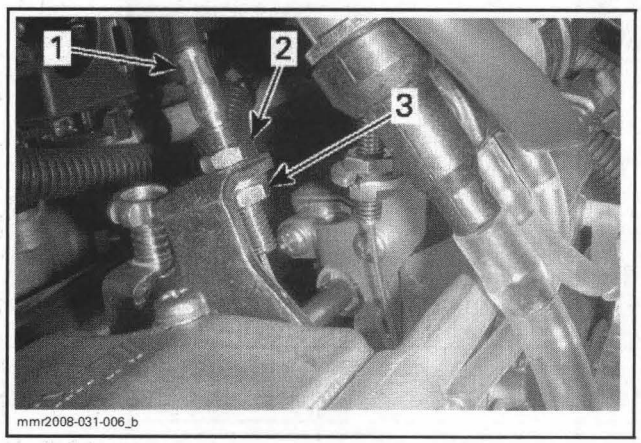

1. Throttle cable
2. Adjusting nut
3. Locking nut

500SS

While holding throttle lever in wide open throttle position, use your finger to validate flat side lower edge position inside venturi bore. A small play should be felt. If not, adjust throttle cable accordingly.

Also ensure that, when throttle is released to idle position, the idle adjusting screw end touches its stopper. No tension should be applied to throttle cable.

Adjust oil pump cable, refer to *LUBRICATION SYSTEM*.

CAUTION: Oil pump cable must be readjusted whenever throttle cable adjustment or idle speed are changed, otherwise serious engine damage may occur.

800R

Perform the wide open throttle position verification as follows.

Use B.U.D.S. software.

In **Monitoring** tab of B.U.D.S., check if throttle opening is within 95 and 100% when throttle lever is fully depressed.



MONITORING TAB

Adjust throttle cable as required to be within this value.

Validate the idle position as follows.

Ensure that some free-play remains in the throttle cable at idle position.

Tighten idle screw until the specified % appears under **Throttle opening** in **Setting** tab of B.U.D.S.

MODEL	THROTTLE OPENING IN B.U.D.S.
MX Z (800R) and GSX (800R)	4%
SUMMIT (800R)	5%

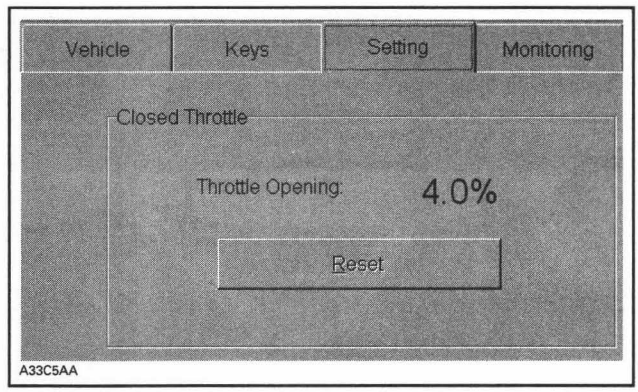

TYPICAL — SETTING TAB

Adjust oil pump cable, refer to *LUBRICATION SYSTEM*.

CAUTION: Oil pump cable must be readjusted whenever throttle cable adjustment or idle speed are changed, otherwise serious engine damage may occur.

Throttle Cable Lubrication

Lubricate exposed portion of cable with dielectric grease (P/N 293 550 004) when throttle handle is at full throttle.

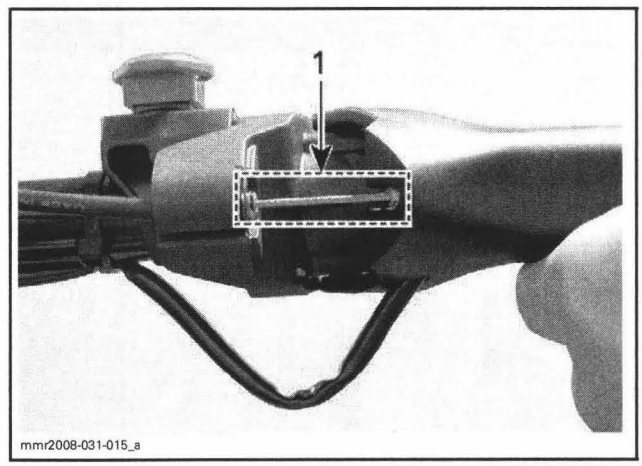

TYPICAL
1. Lubricate

CHOKE CABLE

Choke Cable Removal

NOTE: Before removing choke cable, note its routing for installation.

Remove choke cable nut and pull cable underneath console.

Loosen choke cable housing adjusting and locking nuts.

Remove cable from support.

Disconnect cable barrel from carburetor choke lever.

Cut all locking ties retaining cable and remove it from vehicle.

Choke Cable Installation

The installation is the reverse of the removal procedure.

Choke Cable Adjustment

Adjust choke cable as per following procedure:

Loosen choke cable housing adjusting and locking nuts.

While choke lever is fully open, pull choke cable until cam lever reaches the stopper. Tighten cable housing adjusting and locking nuts in this position.

As a confirmation, the gap between the stopper and the cam lever should be within 0 and 0.5 mm (0 and 1/64 in).

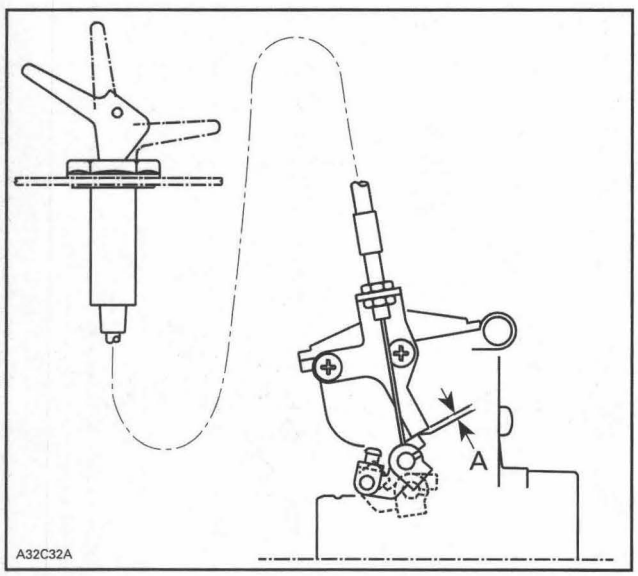

A. Within 0 and 0.5 mm (0 and 1/64 in)

DPM SYSTEM (800R)

SERVICE TOOLS

Description	Part Number	Page
Vacuum/pressure pump	529 021 800	241

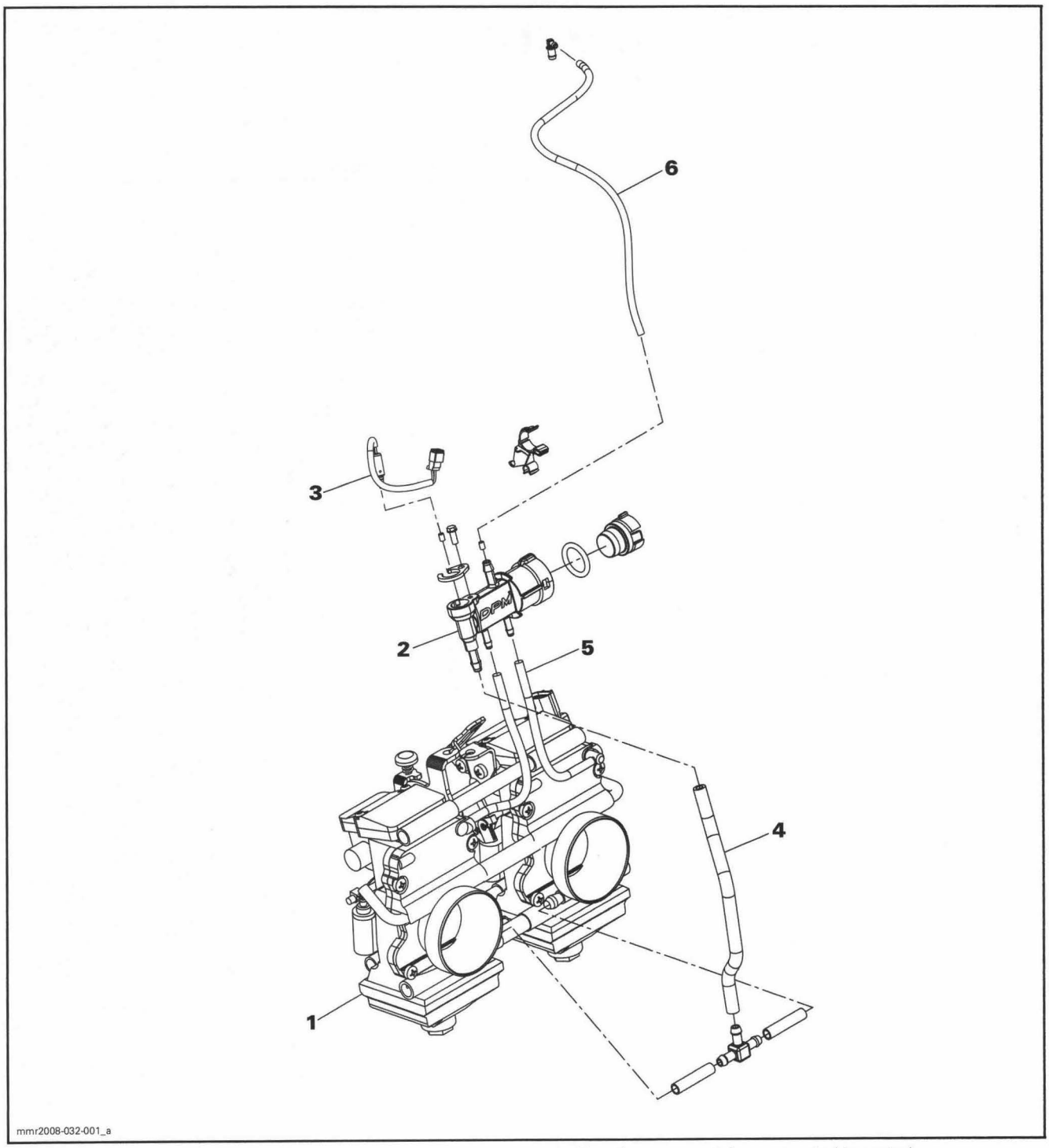

1. *TM carburetor*
2. *DPM manifold*
3. *DPM solenoid*
4. *Negative pressure tubes connected to venturi*
5. *Float bowl tubes*
6. *Vent tube connected to air intake silencer*

OVERVIEW

The DPM receives negative pressure created in the carburetor venturi. A solenoid (controlled by ECM) opens the passage, when activated, to decrease the pressure in the carburetor bowls which in turn, lean the fuel mixture.

NOTE: For engine starting and warm-up, the required richer mixture is supplied by a conventional choke (enricher type).

The carburetors are calibrated with the richest jetting required to fulfil the worse operating conditions.

Using predefined maps, the ECM is constantly activating (duty cycle) the DPM solenoid to optimize the air/fuel mixture.

The ECM receives the signals from different sensors which indicate engine operating conditions at millisecond intervals.

The engine RPM (through the trigger coils) and TPS are the primary sensors used to control the DPM. Other sensors (air pressure, air and coolant temperature) are used as secondary inputs.

As air temperature and altitude change, the ECM uses its 3D mapping to maintain the air/fuel mixture at an optimum.

The ECM begins to lean fuel mixture when engine RPM is above approximately 3500 RPM.

PROCEDURES

NOTE: It is a good practice to check for fault codes using B.U.D.S. software as a first troubleshooting step. Refer to *MONITORING SYSTEM/FAULT CODES*.

AIR TEMPERATURE SENSOR (ATS)

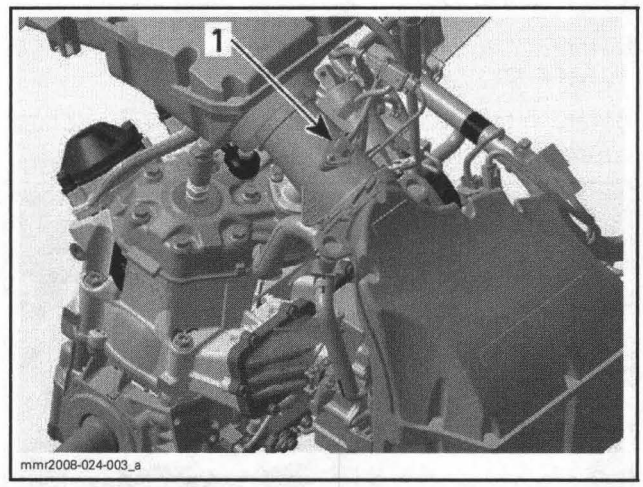

1. Air temperature sensor (ATS)

ATS Dynamic Test

Use B.U.D.S. software.

Look **Intake Air** in **Monitoring** tab of B.U.D.S. It should show the ambient temperature. Otherwise, perform the following test.

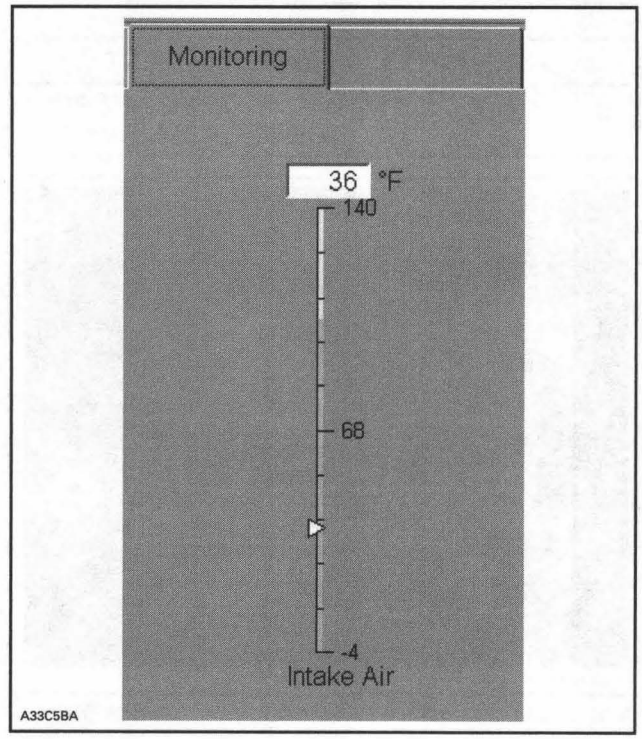

ATS Resistance Test

Remove pulley guard. Refer to *DRIVE SYSTEM/BRAKE.*

Remove primary air intake silencer. Refer to *AIR INTAKE SYSTEM.*

Rotate intake adapter to disconnect ATS sensor connector.

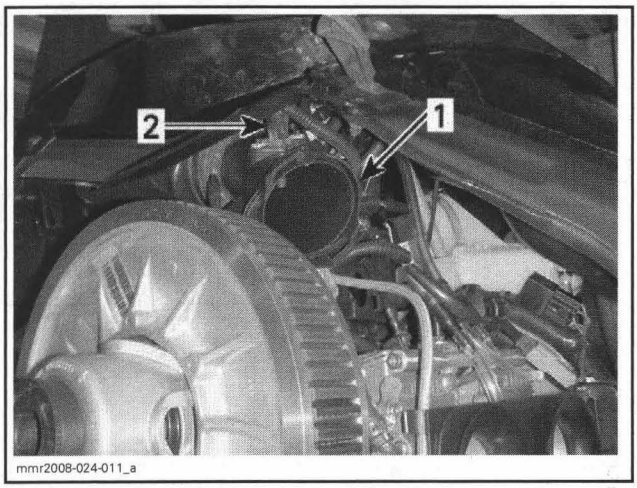

1. *Rotate intake adapter*
2. *Disconnect sensor connector*

Measure sensor resistance.

ATS		MEASUREMENT
Pin 1	Pin 2	Refer to *TEMPERATURE SENSOR TABLE* below.

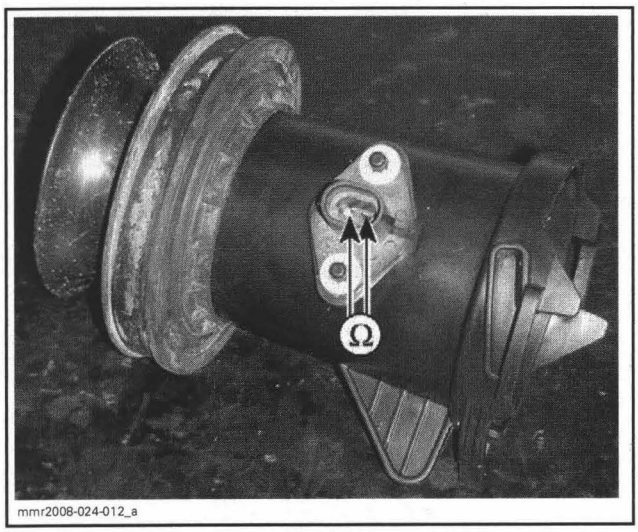

INTAKE ADAPTER REMOVED FOR CLARITY PURPOSE ONLY

ATS SENSOR TEMPERATURE TABLE		MEASUREMENT
°C	°F	RESISTANCE (Ω)
- 30	- 22	28000
- 20	- 4	14500
0	32	5500
20	68	2500
40	104	1200
60	140	600
80	176	320
100	212	180
130	266	90

If out of specifications, replace sensor.

If resistance tests good, **Reconnect** the ATS and disconnect the ECM connector.

Using a multimeter, measure resistance value as follows.

ECM CONNECTOR		MEASUREMENT
DA-1	DA-19	Refer to *TEMPERATURE SENSOR TABLE* above.

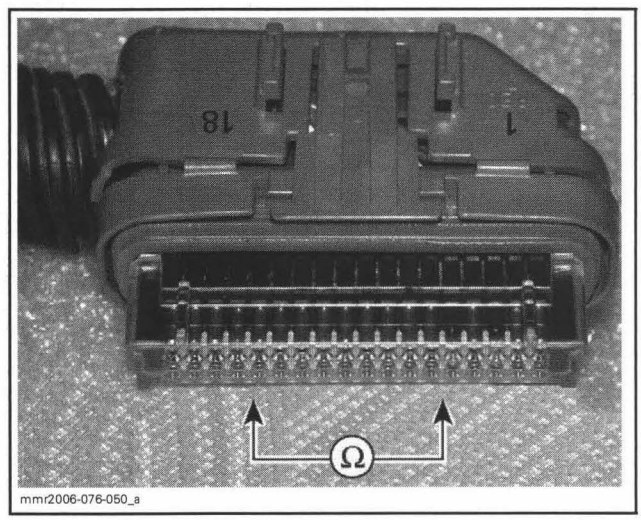

ECM CONNECTOR

If resistance value is incorrect, repair the connectors or replace the wiring harness between ECM connector and the ATS.

Reinstall removed parts. Ensure intake adapter boot is properly installed on the adapter. See below in *ATS REPLACEMENT.*

ATS Replacement

See procedures above to reach sensor.

Slacken boot clamp.

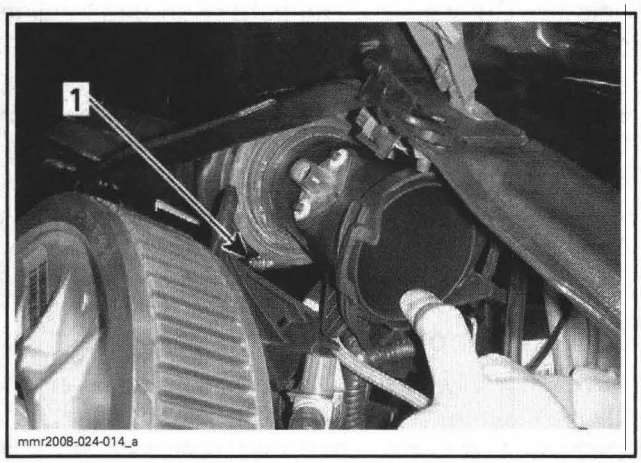

1. Boot clamp

Unplug ATS connector.

Pull out intake adapter.

Remove sensor push nuts.

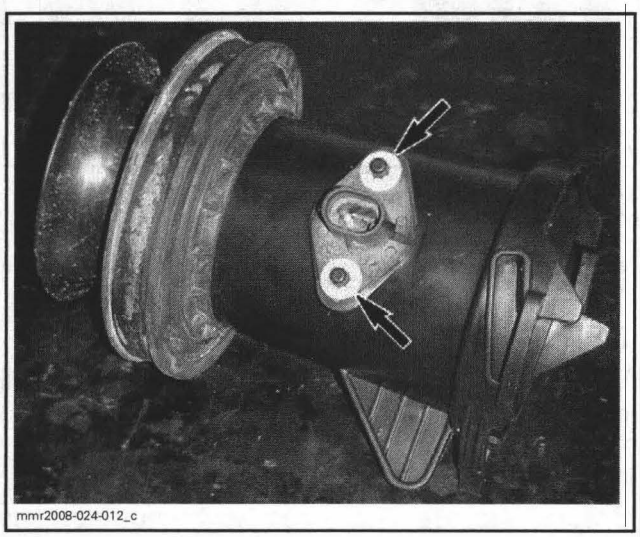

Pull out sensor.

Use new push nuts and secure the new sensor to adapter.

Reconnect ATS.

Ensure adapter boot is properly installed as shown.

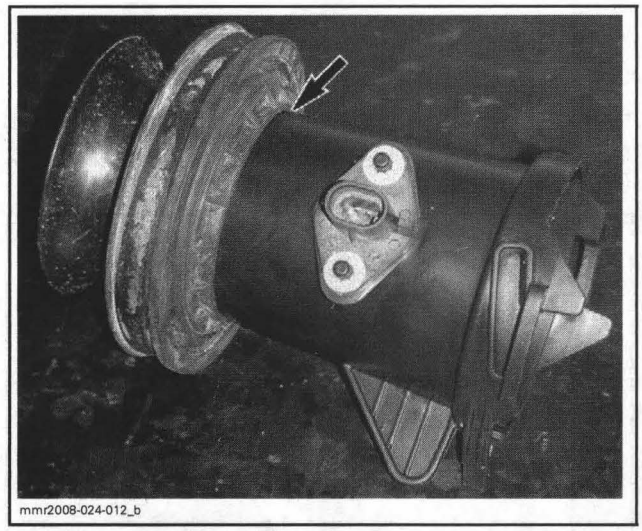

CORRECT BOOT INSTALLATION

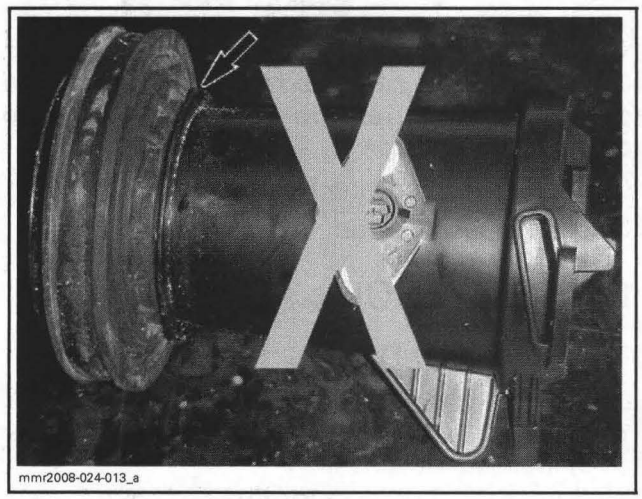

WRONG BOOT INSTALLATION

Reinstall removed parts.

AIR PRESSURE SENSOR (APS)

Sensor is integrated in ECM.

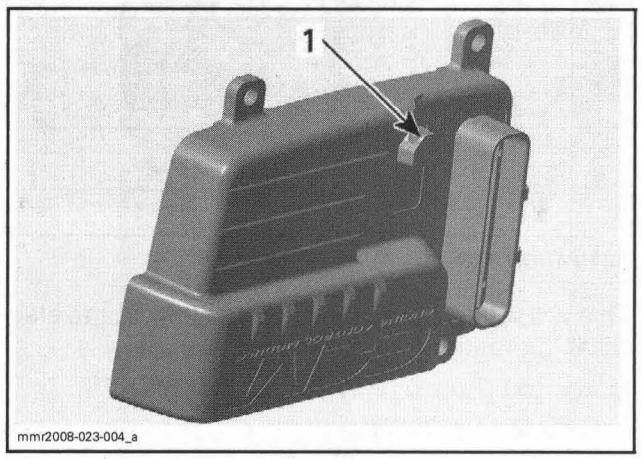

1. Air pressure sensor (APS)

APS Dynamic Test

Use B.U.D.S. software.

Look **Atmospheric Pressure** in **Monitoring** tab of B.U.D.S. It should show the actual pressure. Otherwise, perform the following.

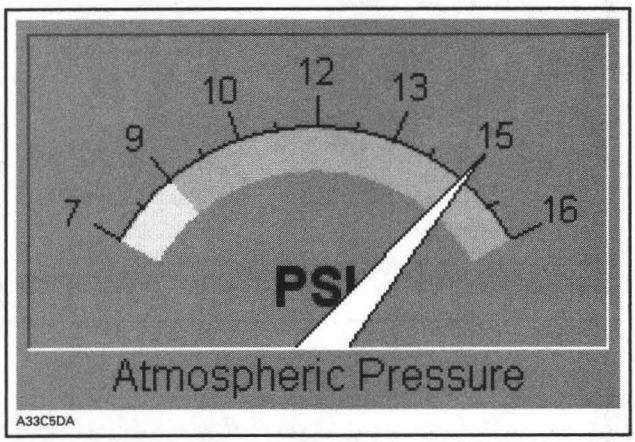

Ensure pressure orifice is free of snow, ice and dirt. Temporarily remove the orifice filter and clean the area.

Check for fault codes in B.U.D.S.

If sensor does not work replace ECM.

DPM SOLENOID

Test with B.U.D.S.

Connect B.U.D.S. software. Refer to *COMMUNICATION TOOLS/B.U.D.S. SOFTWARE* for proper connection instructions.

Energize **Leaning valve** (DPM solenoid) from **Activation** tab.

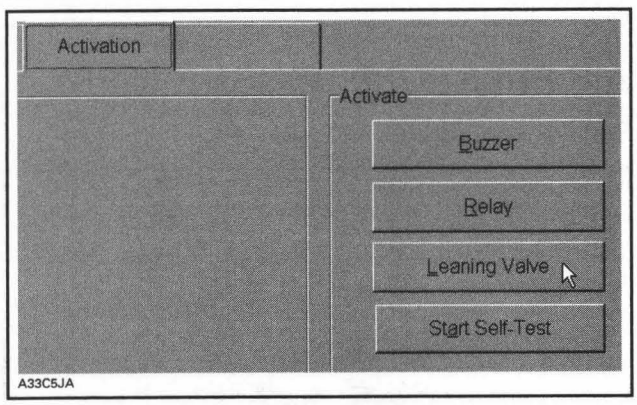

ACTIVATION TAB

This will validate the solenoid mechanical and electrical operation.

Listen to or touch relay to feel it clicks.

If the solenoid does not work, check the input voltage at the solenoid connector.

DPM Solenoid Input Voltage Test

Disconnect the connector from the solenoid.

Measure voltage between pin 2 of DPM solenoid on harness side, and battery ground (engine ground on manual start models).

If 12 V is read, disconnect connector from the ECM and check continuity of circuit between pin DA-29 and pin 1. If wire/connector tests good, try a new ECM.

If it does not read 12 V, check the corresponding fuse(s), relay and continuity of circuit DP-2. If continuity is faulty, repair/replace wire/connector.

DPM Solenoid Replacement

At reassembly, ensure that solenoid seals are in place.

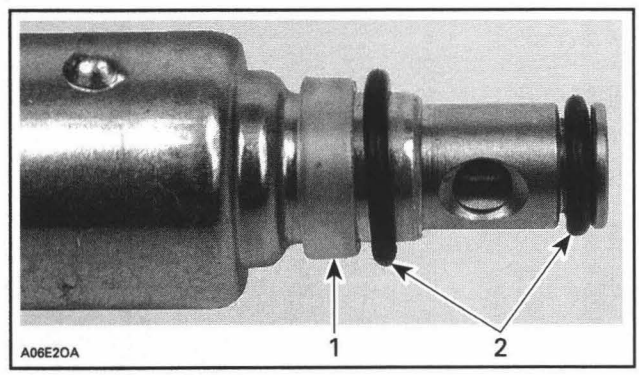

1. *Plastic seal*
2. *O-rings*

DPM MANIFOLD

DPM Manifold Visual Inspection

With DPM manifold removed from vehicle and all hoses disconnected from DPM manifold, inspect for any broken fittings or missing dust caps. If any part is broken, replace DPM manifold.

Ensure jets are positioned with the taper as shown.

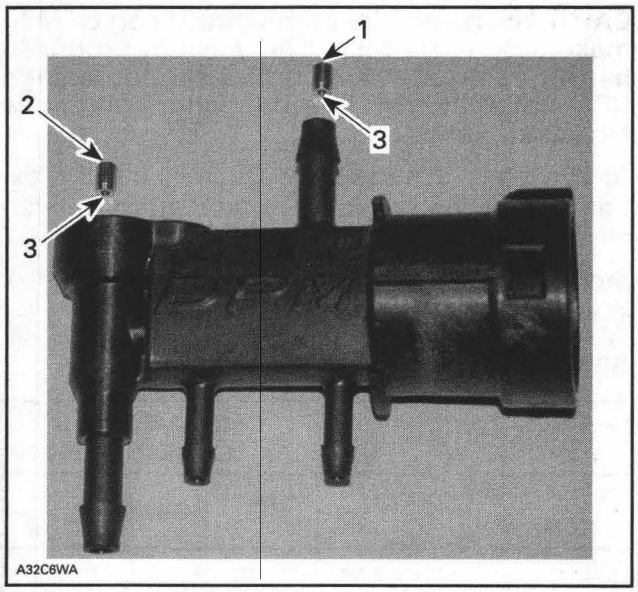

1. Vent jet
2. Lean jet
3. Taper end here

Pay also attention not to mix jets. Refer to the following table for the proper inner diameter size. Refer to the illustration above for the jet location.

MODEL	INSIDE DIAMETER mm (in)	
	VENT JET	LEAN JET
800R	1.2 (.047)	2.0 (.079)

Ensure DPM cap O-ring is in good condition. To install cap, firmly push until tabs click and lock on both sides in DPM.

Leak test the DPM manifold.

DPM Manifold Leak Test

Required Items

The following items will be required:

- Water column with at least 350 mm (13-3/4 in) in height
- Vacuum/pressure pump (P/N 529 021 800)

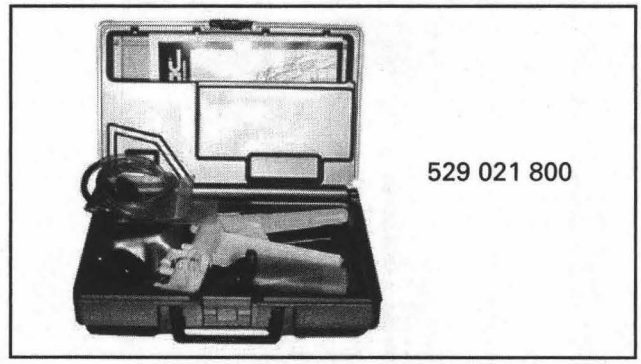

- 4.8 mm (3/16 in) T-fitting
- 6 mm (15/64 in) T-fitting
- 3.5 mm (9/64 in) ID x 100 mm (4 in) hose
- 6 mm (15/64 in) ID x 300 mm (12 in) hose.

DPM Manifold Preparation

Connect hoses as shown.

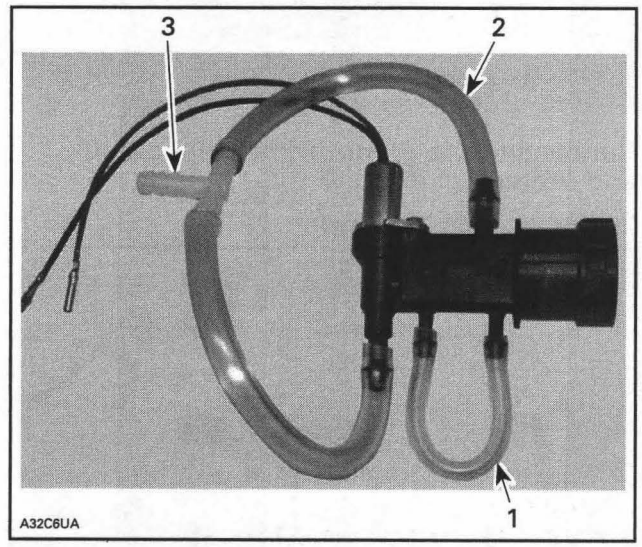

1. 3.5 mm (9/64 in) ID hose
2. 6.0 mm (15/64 in) ID hose
3. 6.0 mm (15/64 in) T-fitting

Water Column Preparation

Mount water column vertically and secure it to a wall or workbench.

Fill water column to center line (at least 175 mm (6-7/8 in)) in height. Refer to following photo.

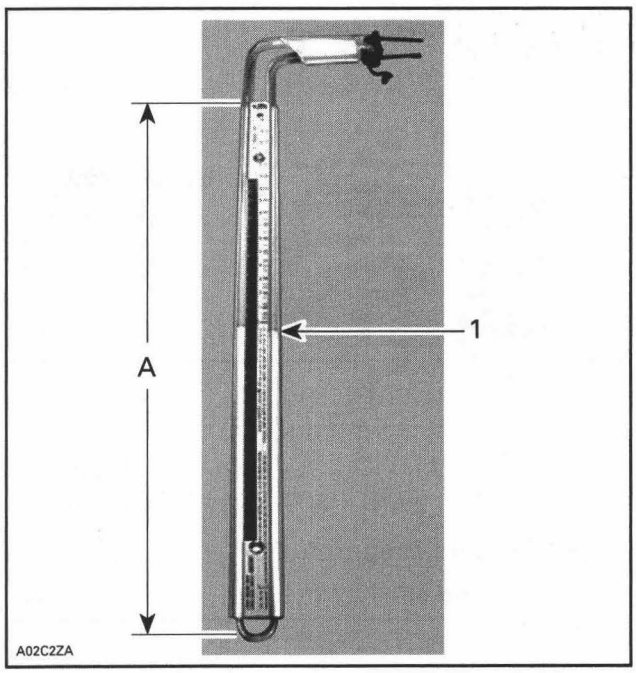

1. Center line at 175 mm (6-7/8 in)
A. 350 mm (13-3/4 in)

Connecting the Pump, DPM Manifold and Water Column

Connect hoses as shown.

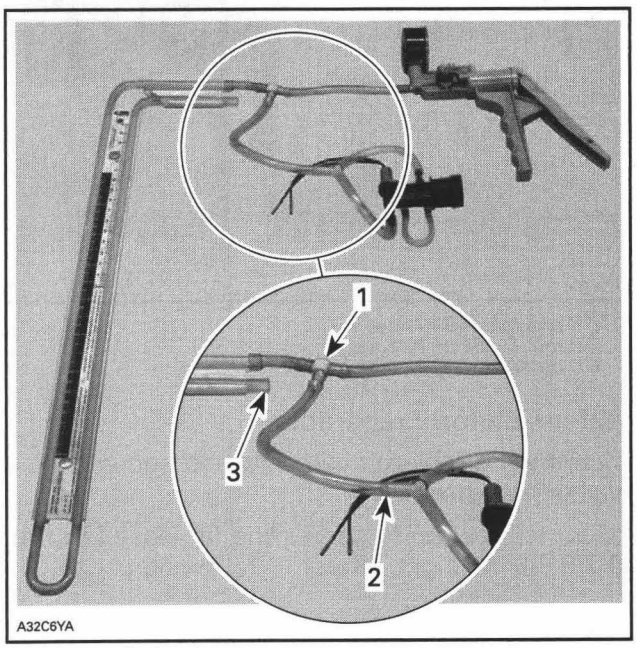

1. 4.8 mm (3/16 in) T-fitting
2. T-fitting
3. Vented to atmosphere

Collect hose into one of the water column tubes, leave the other tube at atmospheric pressure.

Testing

Set pump to «vacuum».

CAUTION: Never use pump directly on DPM to make a pressure test. The vacuum produced by the pump is too high and would damage DPM components. Use the water column as explained above.

Apply negative pressure (vacuum) until the extremities of the water in the tube attain a difference of 350 mm (13-3/4 in).

Stop pumping and allow water levels to stabilize in tube.

Analysis

RESULT	DPM MANIFOLD CONDITION
Water level remains unchanged	Good
Water level drops slowly to return to an even level in **more than** 10 seconds	Defective
Unable to create any vacuum (water level increases and decreases immediately in tube)	Check your set-up and re-do the test. If still not able to create any vacuum, manifold is defective

If DPM manifold is defective, replace its parts (refer to *PARTS CATALOG*) and retest. If test fails again, replace DPM manifold.

SEMI-DIRECT INJECTION (SDI)

SERVICE TOOLS

Description	Part Number	Page
hose pinchers	295 000 076	262
ECM adapter	420 277 010	246
engine removal hook	529 035 829	267
spark plug lift ring	529 035 830	267
Fluke 111 multimeter	529 035 868	246, 259, 277

SERVICE TOOLS – OTHER SUPPLIER

Description	Part Number	Page
Pyrex® burette	3075	251
Fluke rigid back probes	TP88	246

SERVICE PRODUCTS

Description	Part Number	Page
dielectric grease	293 550 004	254
anti-seize lubricant	293 800 070	273
Loctite 5910	293 800 081	268
pulley flange cleaner	413 711 809	263

OVERVIEW

The ECM receives the signals from different sensors which indicate engine operating conditions at milli-second intervals.

Signals from sensors are used by the ECM to determine the injection parameters (fuel maps) required for optimum air-fuel ratio.

The CPS and TPS are the primary sensors used to control the injection. Other sensors are used for secondary input.

Air Induction

Air flows through a filter in the secondary air silencer mounted top of engine. Air pressure is measured at this point. Then, air flows through primary air silencer where its temperature is measured. Then, air is drawn through two throttle bodies mounted on the engine intake side. The air flow is controlled by two throttle plates. Fitted on this dual throttle body, there is a TPS (Throttle Position Sensor) that sends position information to the ECM.

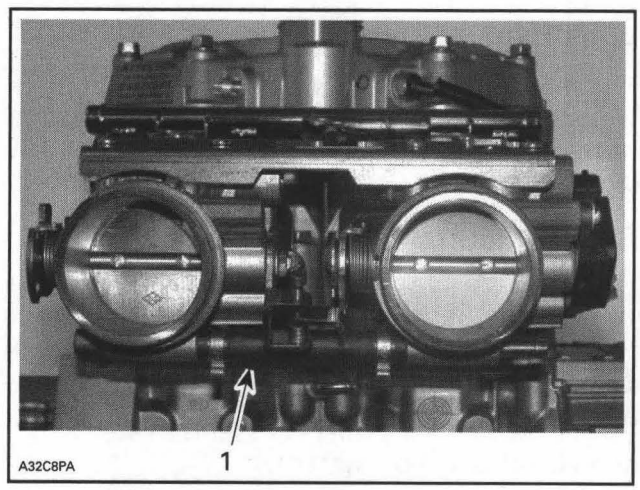

THROTTLE BODY ASSEMBLY
1. Coolant-heated line

The air continues through the reed valves into the cylinder base then the crankcase.

Electric Fuel Pump and Fuel Pressure Regulator

They provide constant fuel pressure to the fuel rail.

The fuel pump module is located inside the fuel tank.

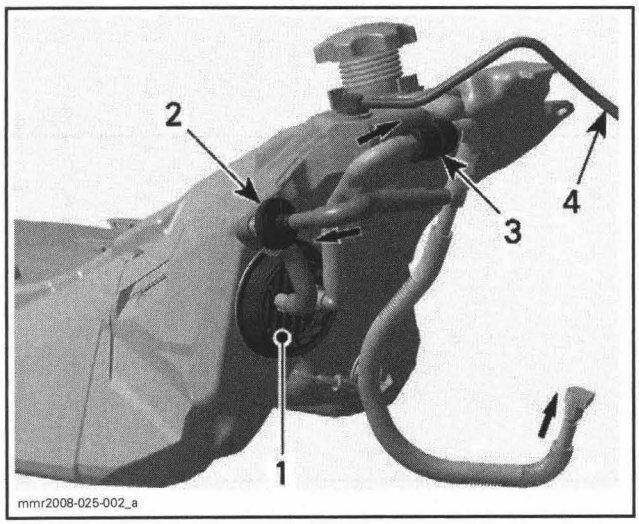

1. *Electric fuel pump*
2. *Fuel pressure regulator*
3. *In-line fuel filter*
4. *Fuel tank vent*

The fuel pressure regulator controls the pressure in the system and allows the excess of fuel to return to the fuel tank. The fuel pressure regulator regulates the fuel pressure at 400 kPa (58 PSI).

In-Line Fuel Filter

The in-line 10 micron fuel filter is fastened under the steering console. It should be replaced as recommended in *MAINTENANCE CHART*.

Fuel Rail

The fuel rail is a small tube on which the four injectors are mounted. It provides fuel at constant pressure to the fuel injectors. The fuel rail is fed by the fuel pump module.

Fuel Injectors

Fuel injectors (two per cylinder) are used to inject fuel into the transfer port of cylinder.

GENERAL PRECAUTIONS

Engine problems are not necessarily related to the semi-direct injection system.

It is important to ensure that the mechanical integrity of the engine and drive system are present:

- Good transmission system operation
- Good engine compression and properly operating mechanical components, no leaks etc.

Check the chart in *TROUBLESHOOTING* section to have an overview of problems and suggested solutions.

When replacing a component, always check its operation after installation.

FUEL SYSTEM

⚠ WARNING

The fuel system of a fuel injection system holds much more pressure than that of a carbureted snowmobile. Prior to disconnecting a hose or to removing a component from the fuel system, follow the recommendation described here.

Use the latest B.U.D.S. software available from BOSSWeb. Refer to *COMMUNICATION TOOLS/B.U.D.S. SOFTWARE* for proper connection instructions.

Use B.U.D.S. to release the fuel pressure in the system. Look in the **Activation** section.

⚠ WARNING

Fuel lines remain under pressure at all times. Always proceed with care and use appropriate safety equipment when working on pressurized fuel system. Wear safety glasses and work in a well ventilated area. Proceed with care when removing/installing high pressure test equipment or disconnecting fuel line connections. Use the B.U.D.S. software to release fuel pressure prior to removing a hose. Cover the fuel line connection with an absorbent shop rag. Slowly disconnect the fuel hose to minimize spilling. Do not allow fuel to spill on hot engine parts and/or on electrical connectors. Wipe off any fuel spillage in the engine compartment. Fuel is flammable and explosive under certain conditions. Always disconnect battery or remove 30 A fuse prior to working on the fuel system. After performing a pressure test, release the pressure.

Always disconnect battery properly or remove 30 A fuse prior to working on the fuel system. Refer to *BATTERY* section.

Fuel Rail and Hose

Pressure at fuel rail is supplied and controlled by the electric fuel pump.

When a repair is completed, ensure that hose between fuel rail and fuel pump is properly secured in the supports. Then, perform a fuel pressure test. Refer to *FUEL SYSTEM*.

To remove fuel rail, refer to *FUEL INJECTORS* in this section.

⚠ WARNING

Ensure to verify fuel line connections for damage and that NO fuel line is disconnected prior to installing the tether cord cap on the DESS post. Always perform the high pressure test if any component has been removed. The fuel pump is started and pressure quickly builds-up each time the tether cord cap is installed and the START/RER button is depressed (or rewind starter is pulled).

⚠ WARNING

Never use a hose pincher on injection system high pressure hoses.

Drowned Mode (Flooded Engine)

Electric Start Models Only

If the engine does not start and is fuel-flooded, the drowned mode can be activated to prevent fuel injection and to cut ignition while cranking.

Proceed as follows:

With tether cord cap on its post while engine is stopped, press completely and HOLD throttle lever.

Press the START/RER button.

⚠ WARNING

Do not attempt to use the rewind starter. The drowned mode is active only by using the electric starter.

The engine should be cranked for 20 seconds. Release START/RER button and throttle lever.

Restart engine normally.

NOTE: If the engine does not start, it may be necessary to replace the spark plugs.

ELECTRICAL SYSTEM

It is important to check that the electrical system is functioning properly:

- Battery
- Capacitor
- Fuses
- Relays
- DESS
- Ignition (spark)
- Ground connections
- Wiring connectors.

It is possible that a component seems to operate in static condition but in fact, it is defective. In this case, the best way to solve this problem is to remove the original part and replace it with one which is in good condition.

Never use a battery charger to substitute temporarily the battery, as it may cause the ECM (engine control module) to work erratically or not to work at all. Check related-circuit fuse solidity and condition with an ohmmeter. Visual inspection could lead to false results.

⚠ WARNING

All electrical actuators (injectors, fuel pump, ignition coils and starter solenoid) are continuously supplied by the battery when the start button is depressed or if engine is rotated (with the rewind starter). Always disconnect the tether cord cap and the battery prior to disconnecting any electric or electronic parts.

Pay particular attention to ensure that pins are not out of their connectors or out of shape. The troubleshooting procedures cover problems not resulting from one of these causes.

CAUTION: Ensure all terminals are properly crimped on wires and connector housings are properly fastened.

Before replacing an ECM, always check electrical connections. Make sure that they are very tight and they make good contact and that they are corrosion-free. Check if wiring harness shows any signs of scoring. Particularly check ECM ground connections. Ensure that contacts are good and clean. A "defective module" could possibly be repaired simply by unplugging and replugging the ECM. The voltage and current might be too weak to go through dirty wire pins. Check carefully if pins show signs of moisture, corrosion or if they look dull. Clean pins properly and then coat them prior to assembling as follows:

NOTE: Do not apply dielectric grease or other lubricant on the ECM connectors.

If the newly replaced ECM works, try the old one and recheck if it works.

Ensure that all electronic components are genuine — any modification on the wiring harness may lead to generate fault codes or bad operation.

NOTE: For diagnostics purposes, use the latest B.U.D.S. software available from BOSSWeb. Refer to *COMMUNICATION TOOLS/B.U.D.S. SOFTWARE* for proper connection instructions.

Diagnostic Tools

To perform verifications, use the Fluke 111 multimeter (P/N 529 035 868) should be used.



To easily probe wire terminals through the back of their connectors, use Fluke rigid back probes (P/N TP88) or equivalent. They can be inserted at the end of the standard probes of the Fluke 111 multimeter.

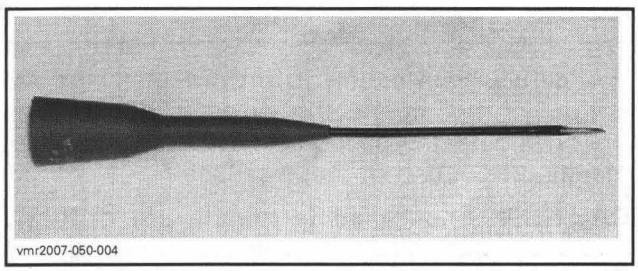
vmr2007-050-004

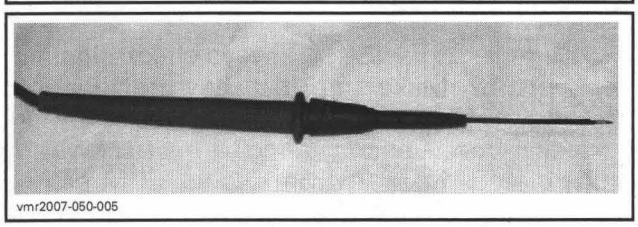
vmr2007-050-005

The most recommended and safest method to probe ECM connector terminals is to use the ECM adapter (P/N 420 277 010). This tool will prevent deforming or enlarging terminals which would lead to bad ECM terminal contact creating intermittent or permanent problems.

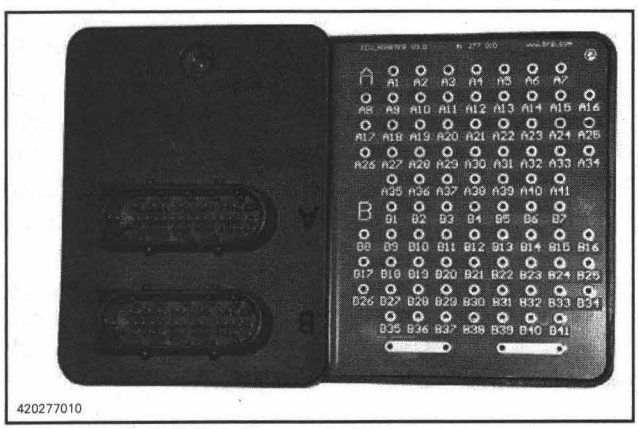
420277010

Disconnect the desired connector from ECM and reconnect on the tool connector. Probe required terminals directly in the tool holes.

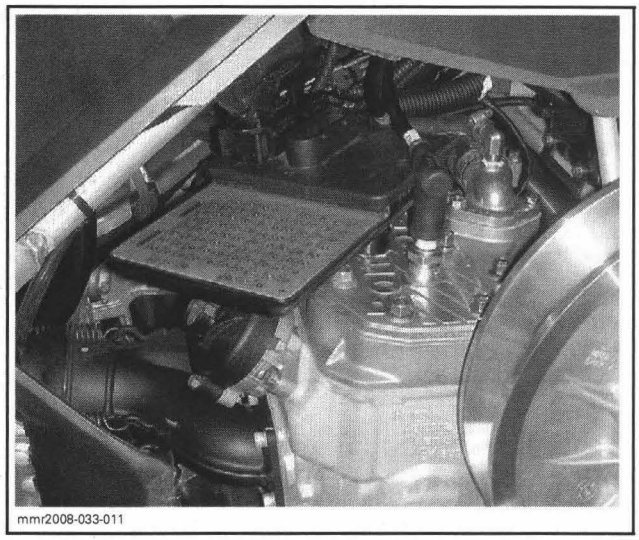
mmr2008-033-011

Resistance Measurement

When measuring the resistance with an ohmmeter, all values are given for a temperature of 20°C (68°F). The value of a resistor varies with the temperature. The value for common resistor or windings (such as solenoid) **increases** as the temperature increases. However, our temperature sensors are NTC types (Negative Temperature Coefficient) and work the opposite which means that the value **decreases** as the temperature increases. Use this table for sensor resistive values at given temperature.

TEMPERATURE SENSOR TABLE			
TEMPERATURE		RESISTANCE (OHMS)	
°C	°F	ATS	CTS
- 40	- 40	43610	72412
- 30	- 22	25090	38681
- 20	- 4	14900	21529
- 10	14	9102	12431
0	32	5705	7418
10	50	3680	4582
20	68	2436	2919
25	77	2000	—
30	86	1651	1912
40	104	1144	1284
50	122	808	883
60	140	580	622
70	158	424	448
80	176	316	328
90	194	238	245
100	212	182	186
110	230	141	143
120	248	111	112
130	266	88	88
135	275	—	79
140	284	70	71
145	293	—	64
150	302	57	57
160	320	47	—
170	338	39	—
180	356	32	—
190	374	27	—
200	392	23	—

TEMPERATURE SENSOR TABLE		
TEMPERATURE		RESISTANCE (OHMS)
°C	°F	EGTS
- 40	- 40	170
- 20	- 4	185
0	32	201
25	77	220
50	122	239
100	212	276
150	302	313
200	392	349
250	482	385
300	572	420
350	662	454
400	752	488
450	842	521
500	932	554
600	1112	618
700	1292	679
800	1472	738
900	1652	795
1000	1832	849

The resistive value of a temperature sensor may test good at a certain temperature but it might be defective at other temperatures. If in doubt, try a new sensor.

Also remember this validates the operation of the sensor at room temperature. It does not validate the over temperature functionality. To test it, the sensor could be removed from the engine/air silencer and heated with a heat gun (ensure not to heat excessively) while it is still connected to the harness to see if the ECM will detect the high temperature condition and generate a fault code.

A good test would be to put sensor in a container filled with ice and water and measure resistance. Then, boil water and read resistance again. According to the table above, an ATS value would be approximately 5705 Ω with ice/water (0°C (32°F)) and 182 Ω with boiling water (100°C (212°F)).

ECM Connector

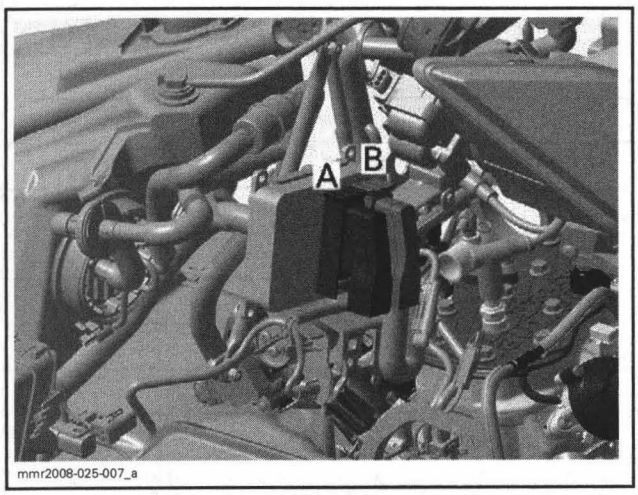

ECM "A" AND "B" CONNECTORS

To reach ECM connector:
- Open LH panel.
- Remove pulley guard. Refer to *DRIVE SYSTEM/BRAKE.*

BASIC ADJUSTMENTS

NOTE: These adjustments are not routine maintenance. They should be performed only to solve problems when recommended in procedures of this manual.

IDLE SPEED

Idle speed is controlled by the EMS (Engine Management System) and is **not adjustable**.

If idle speed is not as per specification (refer to *TECHNICAL SPECIFICATIONS*), perform the *CLOSED THROTTLE RESET.*

CLOSED THROTTLE RESET (TPS)

General

This operation performs a reset of the TPS values in the ECM. This reset is very important as the setting of the TPS will determine the basic parameters for all fuel mapping and several ECM calculations for idle speed control of the engine.

TPS reset must be done if:
- TPS is loosen, remove or replaced.
- Throttle body is replaced.
- ECM is replaced.

CAUTION: An improperly set TPS may lead to poor engine performance.

TPS Reset

Excessively unscrew idle set screw until there is a contact between stop lever and **zero position screw** (capped).

CAUTION: Do not alter setting of the zero position screw, otherwise throttle body must be replaced.

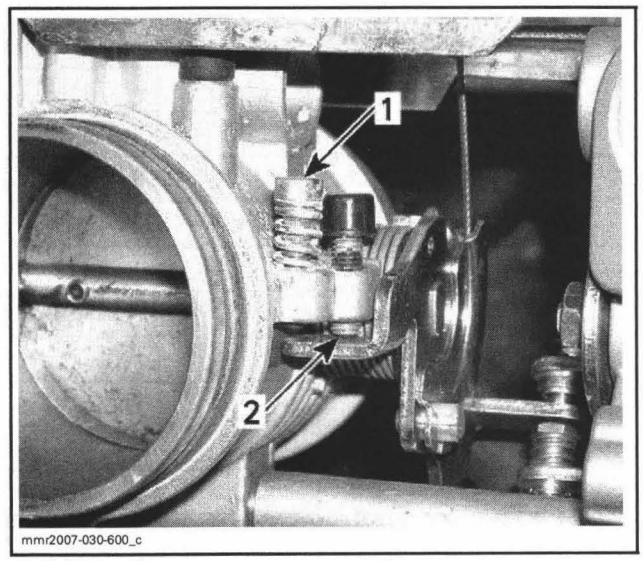

VIEW BETWEEN THROTTLE BODIES
1. *Unscrew idle set screw* ***(zero position screw)***
2. *Contact here*

NOTE: If contact cannot be reached, loosen throttle cable. See *THROTTLE CABLE* further.

Push throttle lever approximately one quarter then quickly release. Repeat 2 - 3 times to settle throttle plates.

Use the B.U.D.S. software.

The throttle opening displayed in **Setting** tab of B.U.D.S. must be within the following specification.

THROTTLE OPENING
0.0 - 0.1

Press **Reset** button in **Closed Throttle**. See illustration.

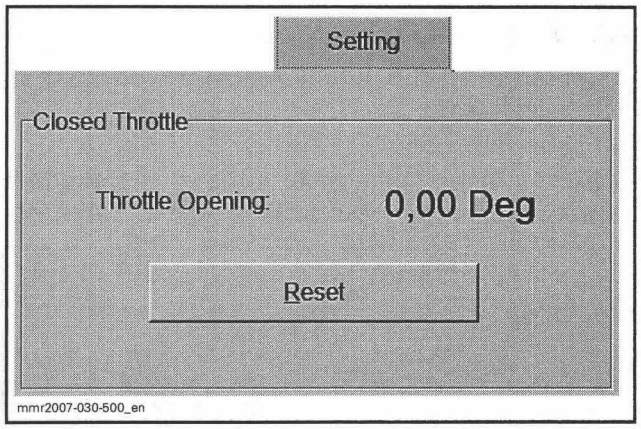

NOTE: If TPS is not within the allowed range, the ECM will generate a fault code and will not accept the setting. Check if stop lever rest against the zero position screw as mentioned above. If so, verify the throttle position sensor (TPS).

CAUTION: Do not alter setting of the zero position screw, otherwise throttle body must be replaced.

After reset has been accepted, turn in idle set screw until throttle opening value in B.U.D.S. is within the following specification.

THROTTLE OPENING (IDLE SET SCREW)	
Sea level: below 1800 m (6000 ft)	4.95 - 5.05
High altitude: above 1800 m (6000 ft)	

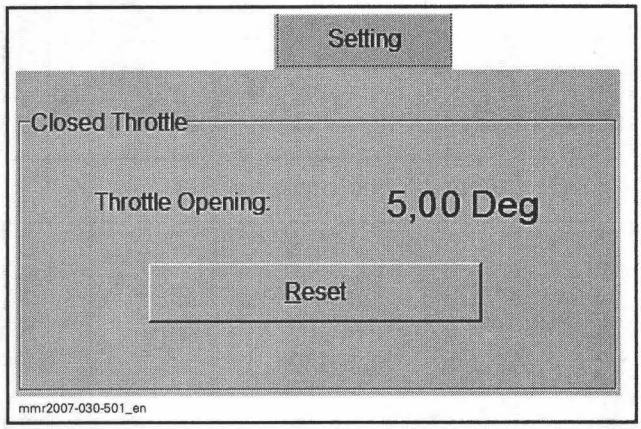

Procedure is completed.

Verify throttle cable adjustment.

THROTTLE CABLE

CAUTION: Do not alter throttle cable routing. It may cause poor startability and erratic idling.

Handlebar and throttle cable must be at their normal position.

With throttle lever released, ensure there is some free-play in throttle cable to allow a contact between stop lever and **idle set screw**.

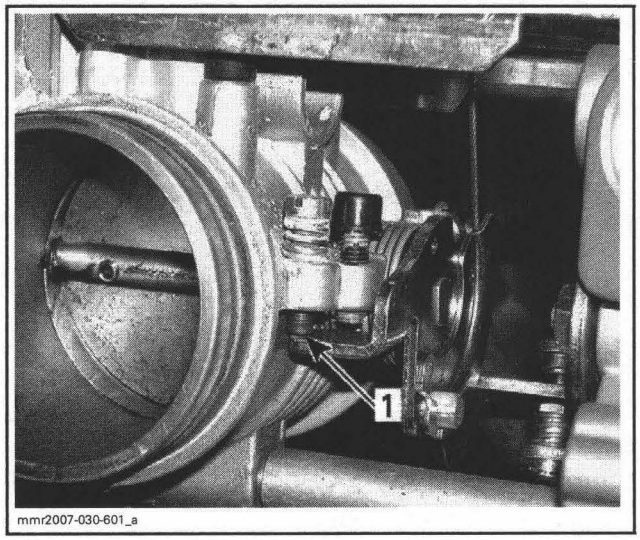

VIEW BETWEEN THROTTLE BODIES
*1. Contact here (**idle set screw**)*

Otherwise, loosen throttle cable.

Set cable adjuster nuts accordingly.

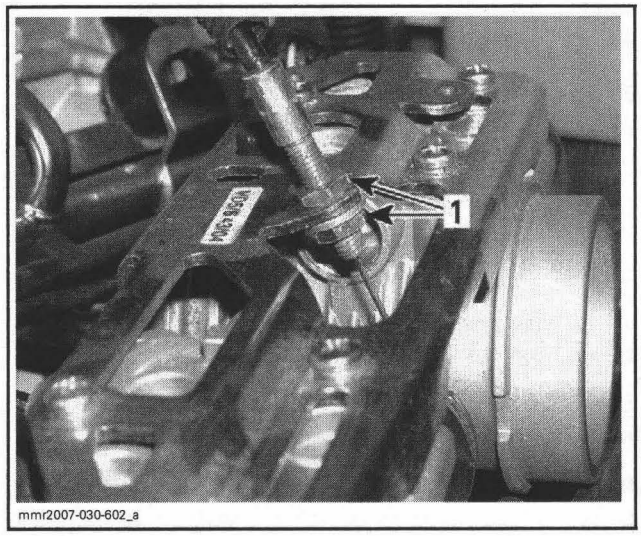

1. Cable adjuster nuts

Push throttle lever approximately one quarter then quickly release. Repeat 2 - 3 times to settle throttle plate. Recheck adjustment.

Use B.U.D.S. software.

Perform the wide open throttle (WOT) verification.

The throttle opening displayed in **Setting** tab of B.U.D.S. must be within the following specification.

THROTTLE OPENING (WIDE OPEN THROTTLE)
82 - 86

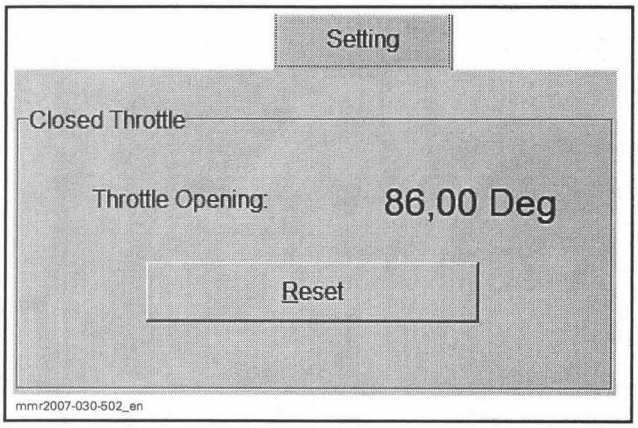

NOTE: If value is below the minimum, tighten throttle cable. If value is above the maximum value, loosen throttle cable.

PROCEDURES

FUEL INJECTORS

Injector Leakage Test and Fuel Flow Measurement

Preparation

First ensure fuel pressure is within specifications.

Remove injectors and fuel rail together from the engine. Refer to *FUEL INJECTOR REPLACEMENT* further in this section as necessary.

NOTE: Do not remove injectors from the fuel rail.

To ensure continuous fuel availability for the test, fill up fuel tank.

Leakage Test

Place each injector in a clean bowl.

Install the tether cord cap on the DESS post and press the engine START/RER button to activate the fuel pump.

Check for fuel leakage from the injector nozzle.

FUEL INJECTOR LEAKAGE	
TEST DURATION	SPECIFICATION
2 minutes	0 - 1 drop per minute

If not within specification, replace the fuel injector(s).

Fuel Injector Flow Measurement

To ensure continuous fuel availability for the test, do the following:

- Fill up fuel tank.
- Build a fused test supply harness as shown. It will be used to continuously feed the fuel pump.

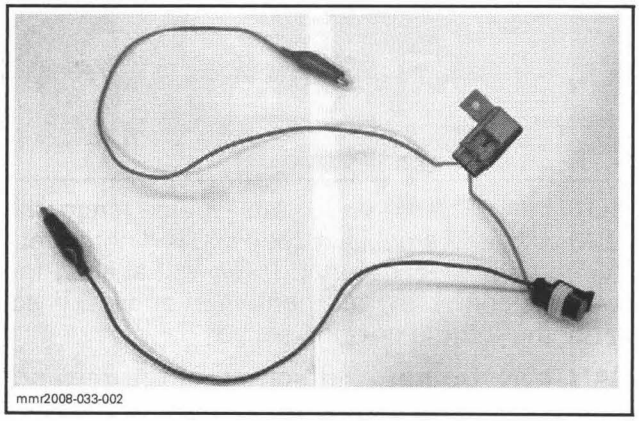

- Remove back panel of starter rewind handle.

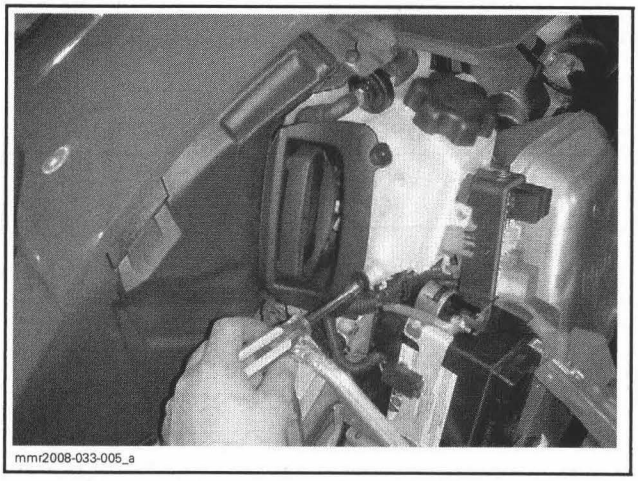

- Disconnect fuel pump connector.

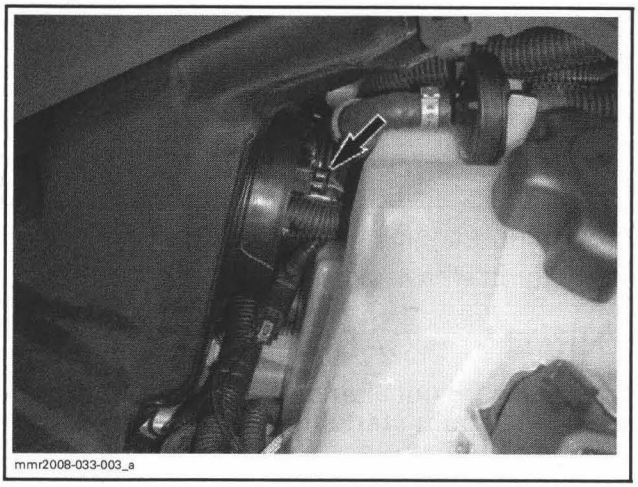

Use a Pyrex® burette (P/N 3075) graduated for 25 mL (.85 U.S. oz).

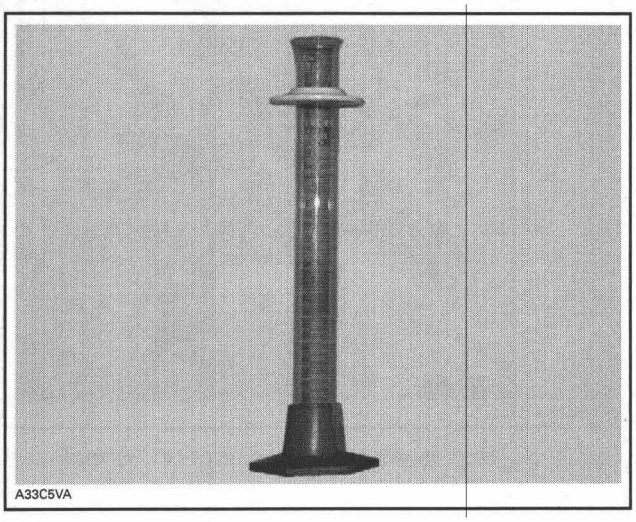
A33C5VA

Place injector inside top of burette.

NOTE: Disconnect fuel supply tube from fuel rail. Temporarily route tube to move injectors so that the burette can be installed. Reconnect fuel tube to fuel rail.

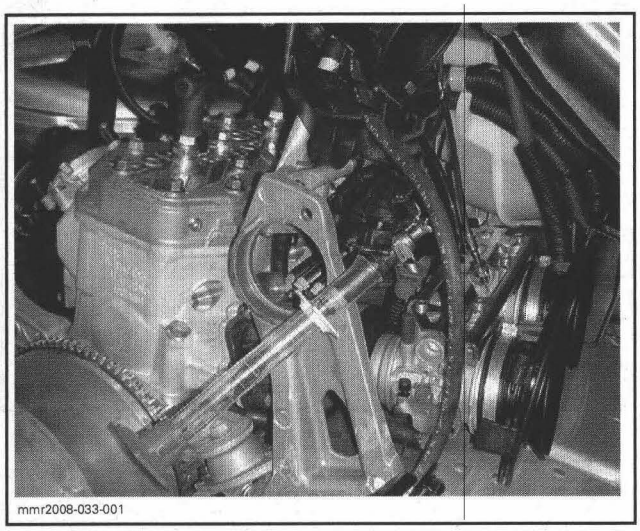
mmr2008-033-001

Install the tether cord cap on the DESS post and press the engine START/RER button to wake up the ECM.

Connect the test supply harness between pump and an external battery. Ensure to respect connections polarity.

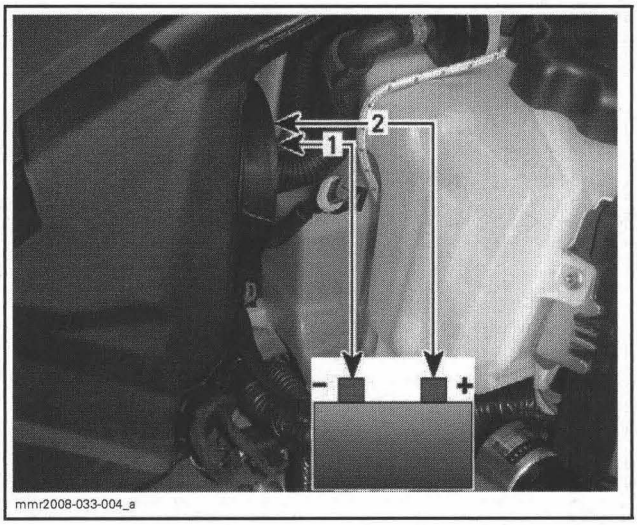

mmr2008-033-004_a

Use B.U.D.S and energize the appropriate injector under **Injector Flow Measurement** in **Activation** tab.

Measure the fuel volume injected.

Quantity of fuel must be within the following specifications.

INJECTOR	VOLUME of FUEL mL (U.S. oz)
BLUE	16 ± 1 (.54 ±.03)

If an injector is out of specification, retest it 2 - 3 times. If it still fails, replace it.

NOTE: If all injectors fail the test, it is unlikely a failure of injectors. First ensure your reading from the burette is appropriate (pay attention to the division lines). Ensure fuel tank is full. Test for leaks in fuel system, fuel pump pressure and in-line filter condition.

Properly reinstall parts.

Injector Test with B.U.D.S.

Tether cord cap must be on DESS post.

Energize the fuel injector from the **Activation** section.

If the injector does not work, check the input voltage to the injector.

Injector Input Voltage Test

To access injector connector, refer to *INJECTOR REPLACEMENT* procedure further in this section.

Disconnect the connector from the injector.

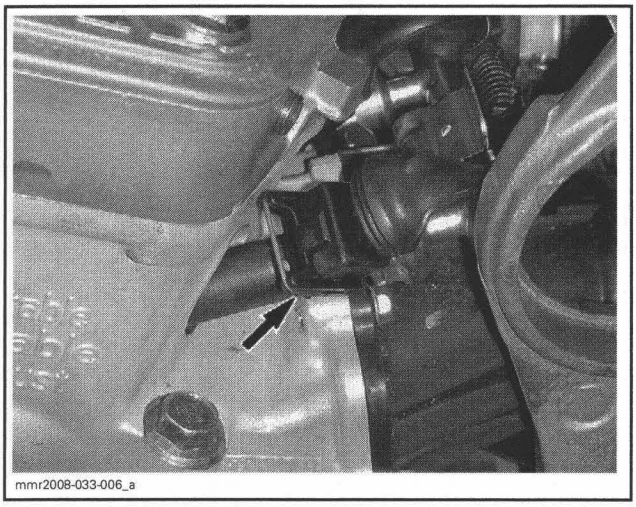
mmr2008-033-006_a

NOTE: To disconnect the inner injectors, use a small screwdriver and pry out the clip around connector.


mmr2008-033-008_a

Wake up ECM using START button.

Measure voltage as follows.

INJECTOR CONNECTOR (HARNESS SIDE)		MEASUREMENT
PIN		
1	Battery ground	Battery voltage

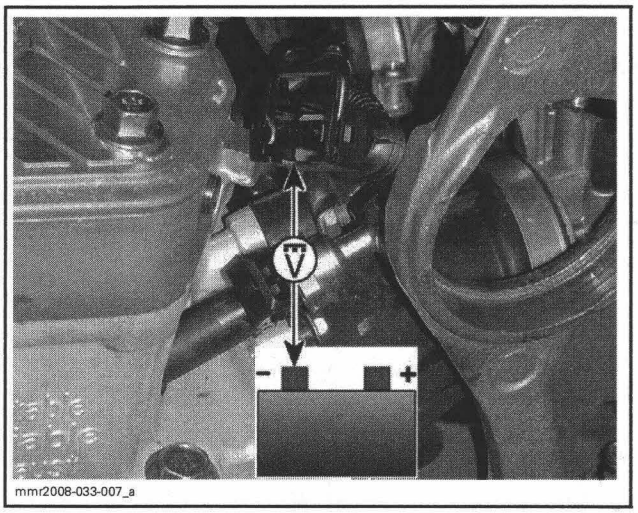
mmr2008-033-007_a

If voltage test is as per specification, check the injector control circuit.

If voltage test is not as per specification, check the corresponding fuse(s), relay 2, diode D1 and continuity of circuit.

Injector Control Circuit Test

Disconnect connector "A" from the ECM and check continuity of control circuit as per following table.

ECM CONNECTOR PIN	INJECTOR	INJECTOR CONNECTOR (HARNESS SIDE)	MEASUREMENT
A-15	MAG outer	Pin 2	Close to 0 Ω (continuity)
A-33	PTO outer		
A-14	MAG inner		
A-30	PTO inner		

If continuity is faulty, repair wiring harness.

If continuity is good, try a new ECM.

Injector Resistance Test

Remove fuse F1 to check outer injectors.

Remove fuse F2 to check inner injectors.

Disconnect "A" connector from ECM.

Ensure injector connector is plugged to injector.

Check injector resistance as follows.

ECM CONNECTOR PIN	INJECTOR	FUSE BOX TERMINAL	MEASUREMENT
A-15	MAG outer	Fuse F1 coordinates: 4E	Approximately 14.5 Ω
A-33	PTO outer		
A-14	MAG inner	Fuse F2 coordinates: 4D	
A-30	PTO inner		

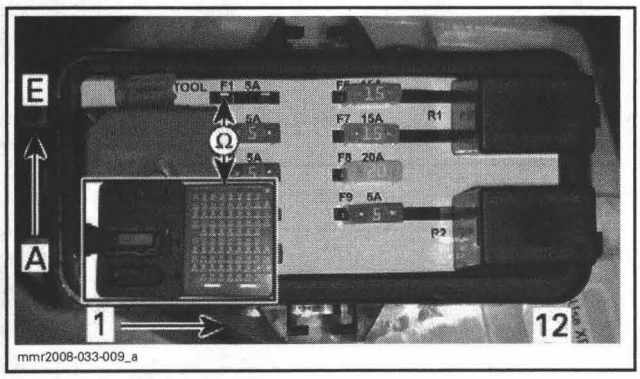

mmr2008-033-009_a

OUTER INJECTORS

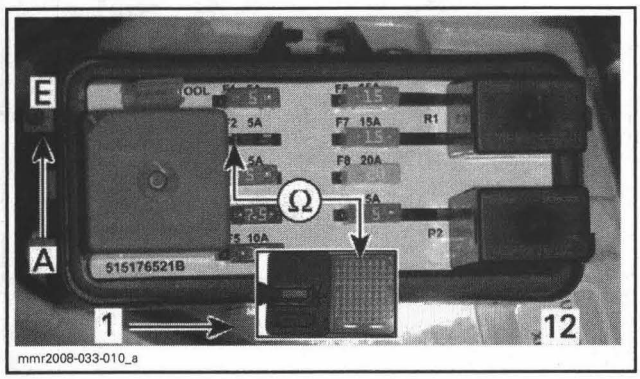

mmr2008-033-010_a

INNER INJECTORS

If measurement is as per specification, injector resistance is good as well as wiring/connectors.

If measurement is out of specification, disconnect injector connector and measure injector resistance on its terminals.

INJECTOR TERMINAL		MEASUREMENT
PIN		
1	2	Approximately 14.5 Ω

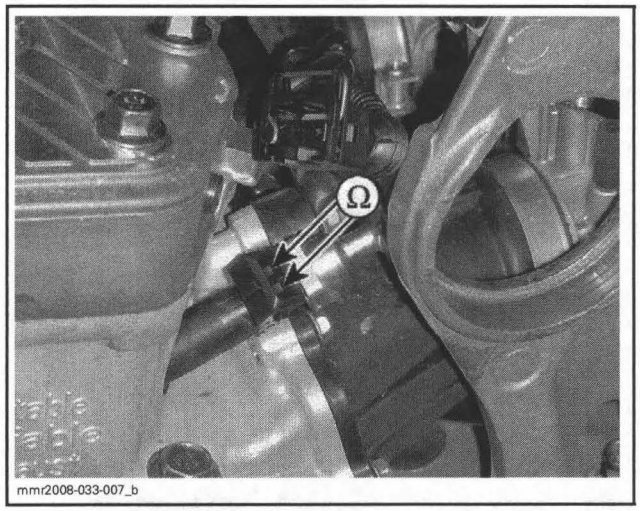
mmr2008-033-007_b

If measurement is as per specification repair/replace injector wiring/connectors.

If measurement is out of specification, replace injector.

If everything tested good and injector does not work, try a new ECM.

Fuel Injector Replacement

Fuel Injector Removal

Release the fuel pressure in the system using B.U.D.S. Look in the **Activation** tab.

Remove pulley guard. Refer to *DRIVE SYSTEM/BRAKE.*

Remove primary air intake silencer. Refer to *AIR INTAKE SYSTEM.*

Remove driven pulley. Refer to *DRIVE SYSTEM/BRAKE.*

Disconnect fuel hose at the fuel rail connector.

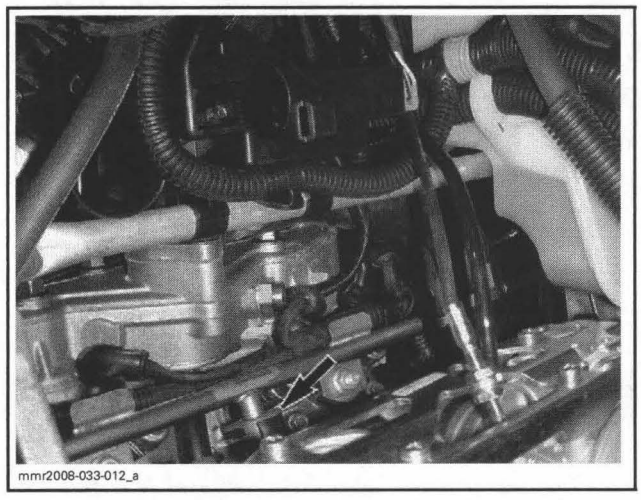
mmr2008-033-012_a

Wrap a rag around the hose end to prevent rail draining.

Disconnect injector connectors.

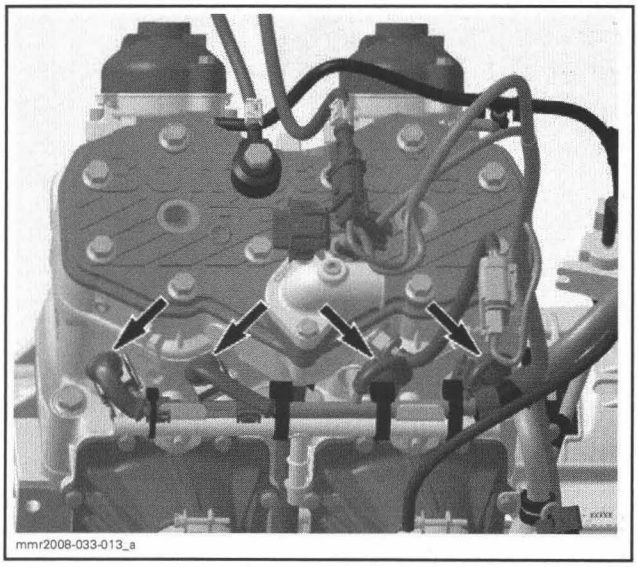
mmr2008-033-013_a

Cut tie raps and remove the wiring harness from the fuel rail.

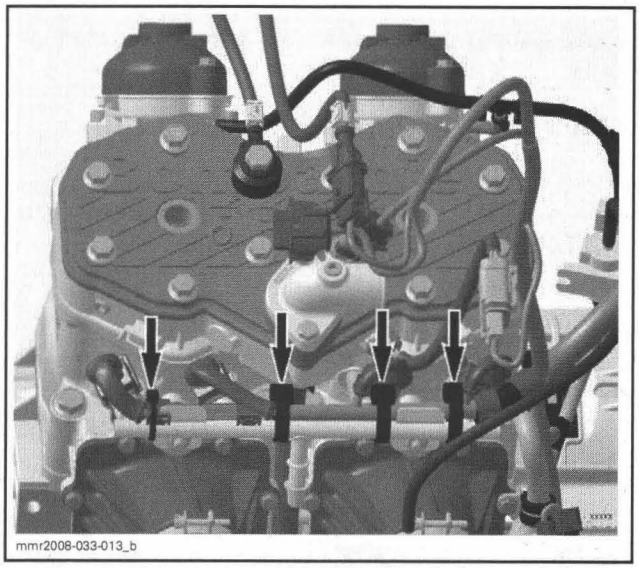
mmr2008-033-013_b

Unscrew rail retaining nuts.

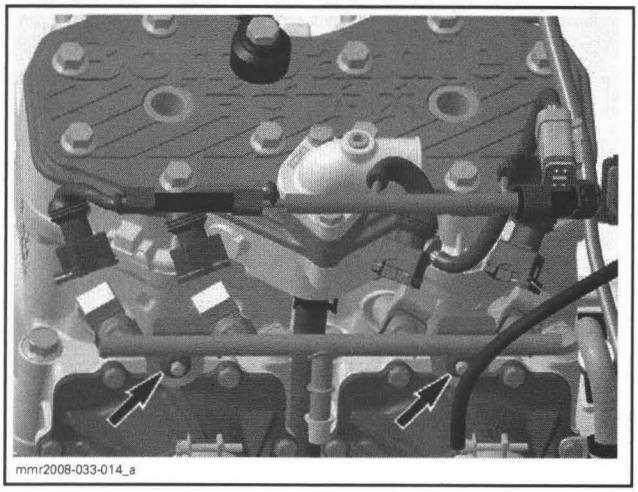
mmr2008-033-014_a

Gently pull rail up by hand, working each side slightly at a time.

Pull rail out with fuel injectors.

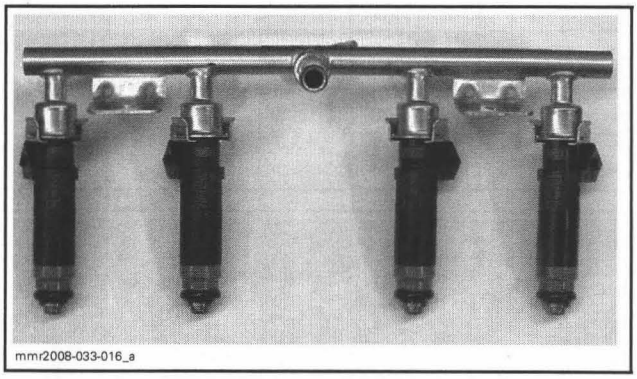
mmr2008-033-016_a

Remove the injector clip.


mmr2008-033-015_a

Pull out fuel injector out of the fuel rail.

Fuel Injector Installation

For the installation, reverse the removal procedure. Pay attention to the following details.

Replace O-rings with new ones.

Apply a thin film of engine oil to O-rings to ease insertion in rail and cylinders.

Insert injectors with your hand. Do not use any tool. Ensure clip and injector are properly installed.

Ensure injectors are not forced against engine.

Torque rail retaining nuts to 10 N•m (89 lbf•**in**).

When installing fuel line connector to the fuel rail, put some oil on the O-ring to ease installation.

Add dielectric grease (P/N 293 550 004) to injector electrical connector.

Reconnect fuel injector connectors.

Ensure to position injector wires against fuel rail support tabs shown.

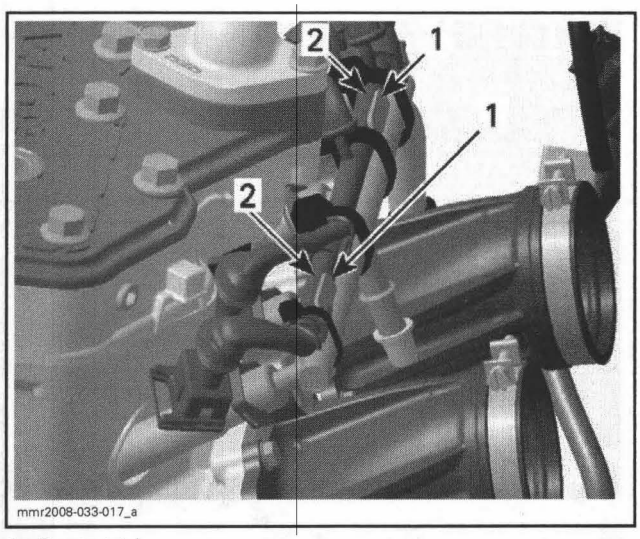

1. Support tab
2. Injector wires on this side

Attach injector wires with locking ties as shown in following photo.

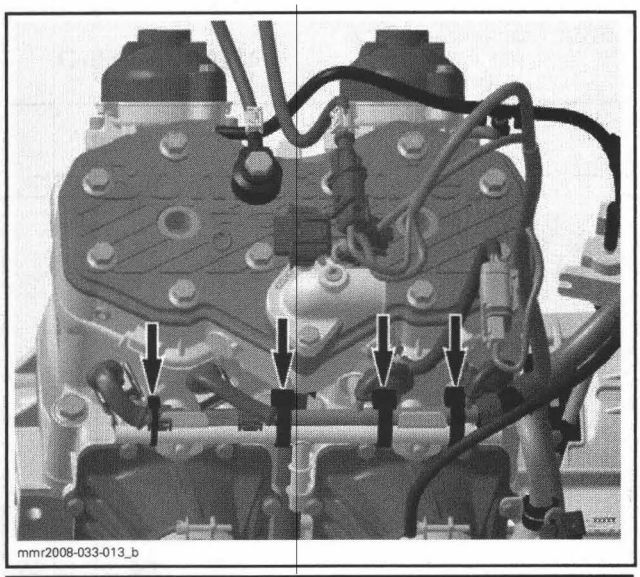

⚠ WARNING

Ensure wiring harness is away from countershaft.

⚠ WARNING

Perform a fuel pressure test and ensure that there is no leak. Refer to *FUEL SYSTEM*. Run engine and check for leaks.

ENGINE CONTROL MODULE (ECM)

NOTE: Prior to replacing an ECM, ensure to conduct all testing procedures.

Power Supply to ECM

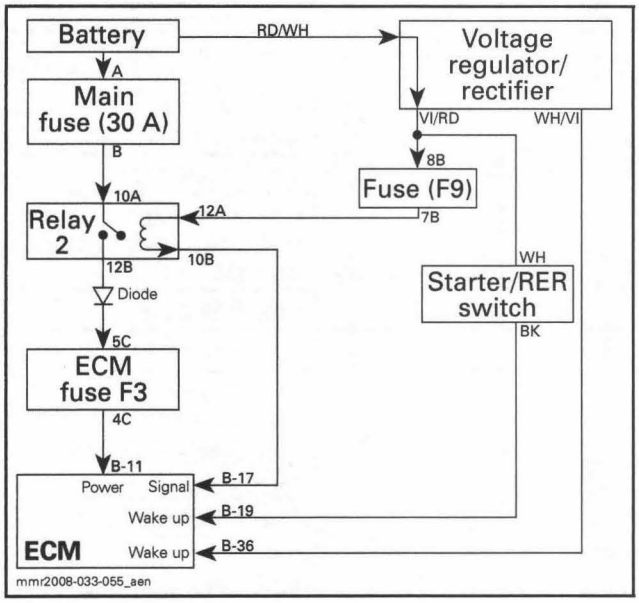

ECM POWER SUPPLY PINOUT	
FUNCTION	PIN
Power (Vdc)	11
Signal from voltage regulator to wake up ECM at cranking	36
Ground	1, 2, 9, 32, 41

ECM Power Supply Troubleshooting

TEST	OBSERVATION
Press start/RER button (tether cord on DESS post and cut-out switch in RUN)	Fuel pump turns on for a few seconds
	Multifunction gauge turns on

If components turn on, the ECM is powered.

If the components do not turn on, refer to the following table. Refer to *WIRING DIAGRAMS* to follow circuit descriptions.

TESTS SUMMARY		
CIRCUIT	PROBLEM	ACTION
ECM power circuit	No power to pin B-11 of ECM	Check main fuse
		Check fuse F3 and F9
		Check relay 1
		Check diode D1
		Check wiring/ connectors from battery to ECM
		Check ECM grounds
Relay control circuit	Control signal from ECM pin B-17 is not working	Check relay 1
		Check wiring/ connectors from voltage regulator/rectifier to ECM
		Check ECM grounds
ECM wake up circuit (1) (from voltage regulator/ rectifier)	No power to pin B-36 of ECM when engine is turning	Check DC output from voltage regulator/ rectifier
		Check wiring/connectors from voltage regulator/ rectifier to ECM
ECM wake up circuit (2) (from START/ RER switch)	No power to pin B-19 of ECM when pressing START/RER button	Check fuse F9
		Check start/RER switch. Refer to *STARTING SYSTEM*
		Check wiring/connectors from voltage regulator/ rectifier to ECM

(1) This circuit is used to wake up the ECM when engine is started manually.

(2) This circuit is used to wake up the ECM when START/RER button is used.

ECM Power Circuit Test

Disconnect ECM connector "B".

Remove relay 2 from fuse box.

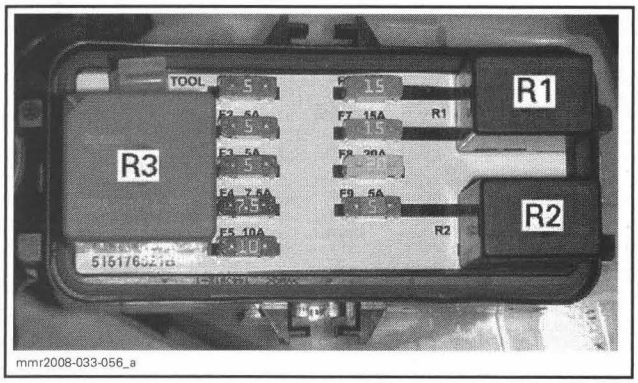

mmr2008-033-056_a

Install an appropriate jumper between terminals as per table.

FUSE BOX TERMINAL COORDINATES	
10A	12B

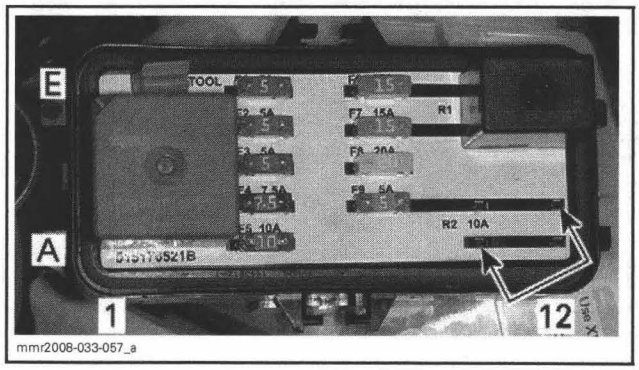

mmr2008-033-057_a

Use a multimeter and set to Vdc.

Read voltage.

ECM CONNECTOR "B"		MEASUREMENT
PIN		
B-11	Battery ground	Battery voltage

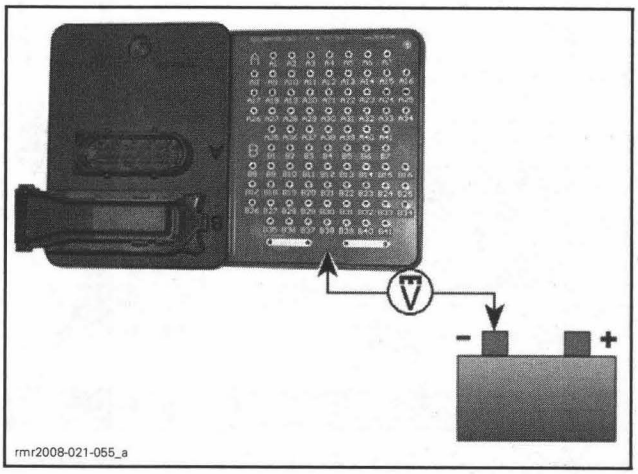

rmr2008-021-055_a

If voltage is out of specification, check wiring/ connectors from battery to ECM.

If voltage is as per specification, check ECM grounds.

Remove jumper and reinstall relay.

Relay 1 Control Circuit Test

Disconnect ECM connector "B".

Install an appropriate jumper as per table.

ECM CONNECTOR "B"	
B-17	Battery ground

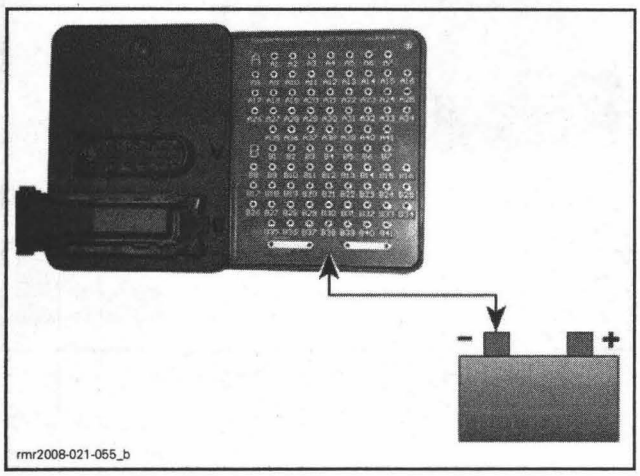

If relay does not click, check wiring/connectors of relay control circuit from voltage regulator/rectifier to ECM.

If relay clicks and works, check ECM grounds.

ECM Wake up Circuit Test (from voltage regulator/rectifier)

Disconnect "B" connector from ECM.

Use a multimeter and set to Vdc.

While cranking, read voltage as follows.

ECM CONNECTOR "B"		MEASUREMENT
PIN		
B-36	Battery ground	Battery voltage

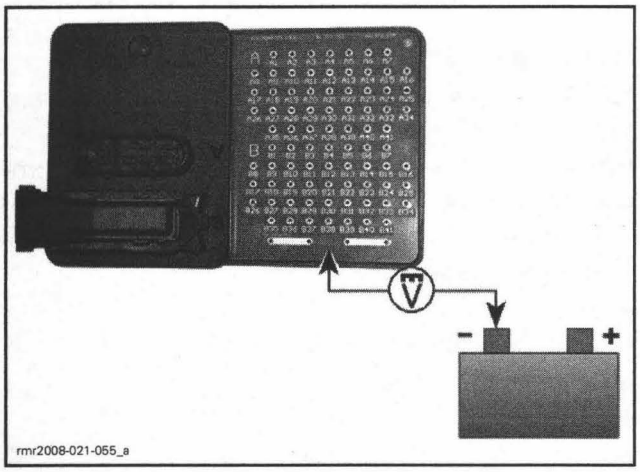

If voltage is out of specification, check the output voltage from the regulator/rectifier as follows:

Remove pulley guard. Refer to *DRIVE SYSTEM/ BRAKE.*

Remove primary air intake silencer. Refer to *AIR INTAKE SYSTEM.*

Disconnect the DC output 2-pin connector from voltage regulator/rectifier.

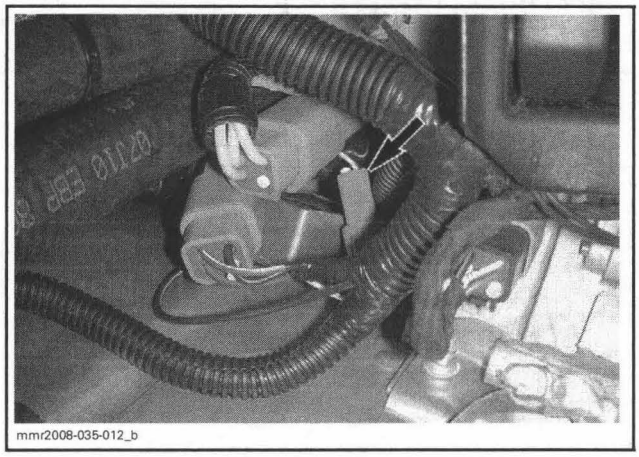

While cranking, read voltage from voltage regulator/rectifier as follows.

VOLTAGE REGULATOR/RECTIFIER CONNECTOR		MEASUREMENT
WIRE		
WHITE/VIOLET	Battery ground	Battery voltage

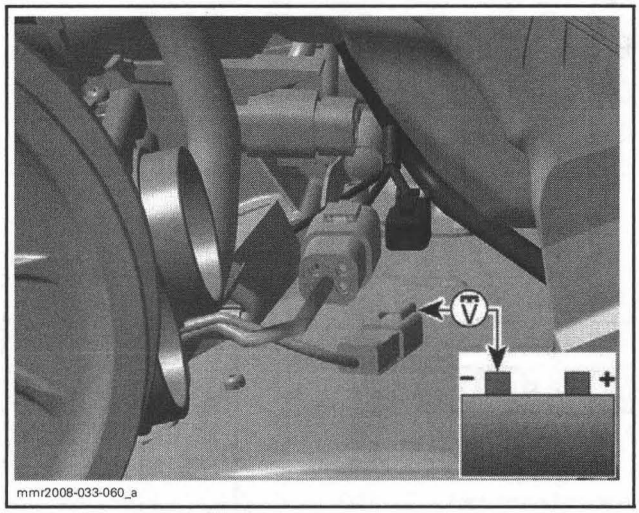

If voltage is as per specification, check wiring/ connectors from voltage regulator/rectifier to ECM.

If voltage is out of specification, replace voltage regulator/rectifier.

Reinstall removed parts.

ECM Wake up Circuit Test (from START/RER switch)

Disconnect "B" connector from ECM.

Use a multimeter and set to Vdc.

While pressing START/RER button, read voltage as follows.

ECM CONNECTOR "B"		MEASUREMENT
PIN		
B-19	Battery ground	Battery voltage

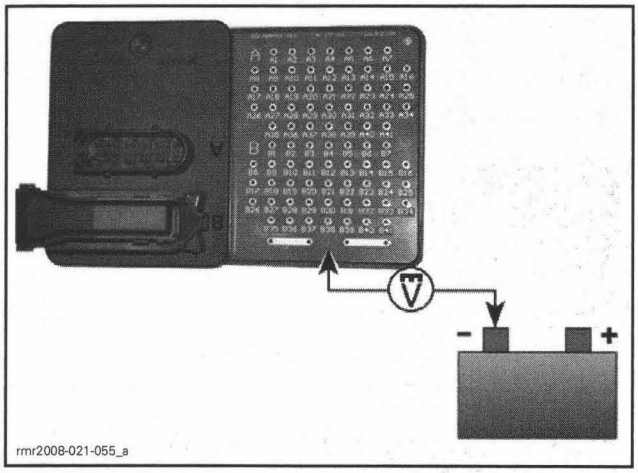

If voltage is out of specification, check START/RER switch (refer to *STARTING SYSTEM.* If switch tested good, check wiring/connectors from voltage regulator/rectifier to ECM.

ECM Grounds Test

Disconnect "B" connector from ECM.

Check continuity of wiring as follows.

ECM CONNECTOR PIN	BATTERY	MEASUREMENT
B-1	Battery ground	Close to 0 Ω (continuity)
B-2		
B-9		
B-32		
B-34		
B-41		

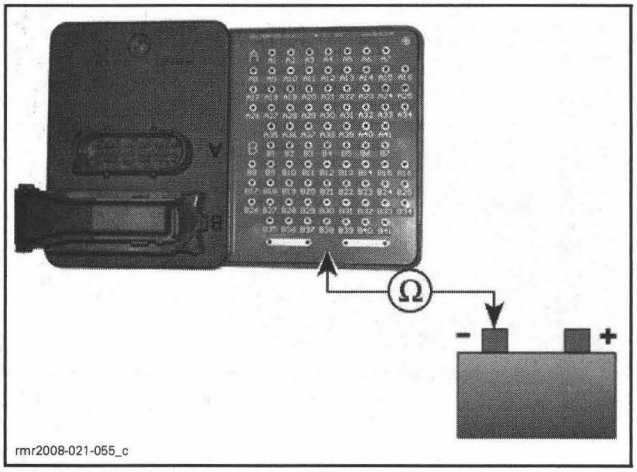

If test succeeded, ECM grounds are adequate.

If test failed, check ECM ground to frame at voltage regulator/rectifier and battery ground.

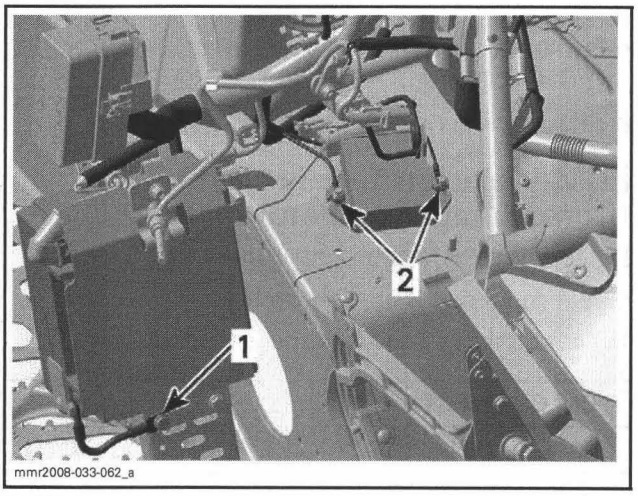

1. Battery ground
2. ECM ground (main harness)

Relay 2 Test

NOTE: Relays 1 and 2 work together. They are wired in palallel.

When relay 2 is not working, the following components will not be powered:

- Fuel injectors
- Ignition system
- ECM
- e-RAVE solenoid
- Multifunction gauge
- Fuel pump
- Starter solenoid control
- Relay 3 control and therefore lights and accessories.

Remove relay 2 from fuse box.

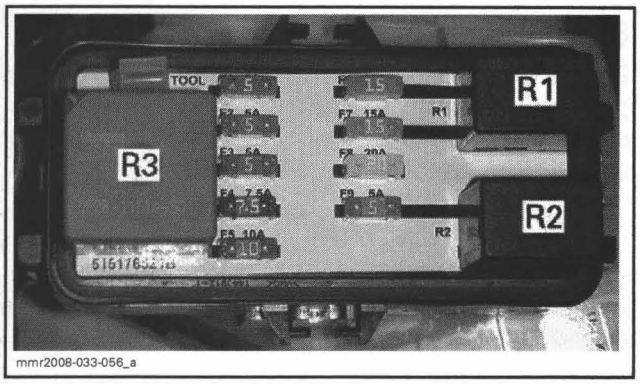

mmr2008-033-056_a

Use the Fluke 111 multimeter (P/N 529 035 868), and select the Ω position.

Probe relay as follows.

TERMINAL		RESIGTANCE
30	87	Open circuit (0L)

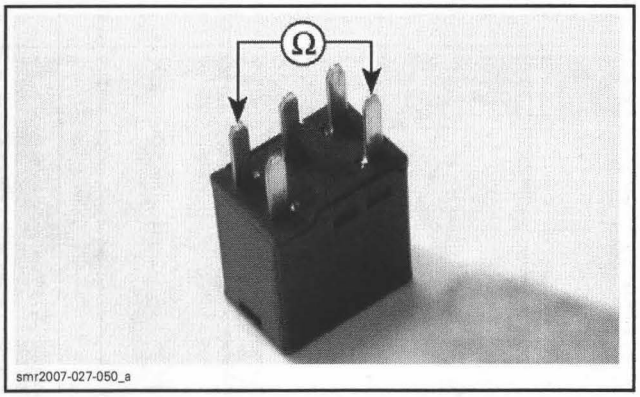

smr2007-027-050_a

Connect battery as shown and probe relay again as follows.

TERMINAL		RESISTANCE
30	87	0.5 Ω max. (continuity)

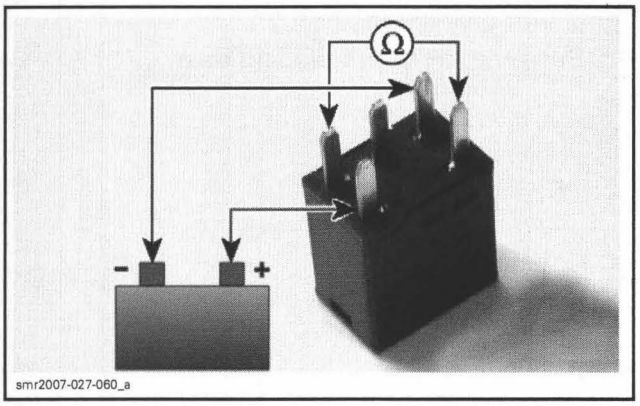

smr2007-027-060_a

If relay failed any test, replace it.

Diode D1 Test

An open circuit failure of the diode will prevent the ECM to be powered. To quickly troubleshoot an open circuit failure, do the following:

- Press START/RER button. Multifunction gauge will turn on.
- If gauge turn off as soon as START/RER button is released, diode is likely to be defective.

A short circuit failure of the diode may increase fuel consumption and might cause the capacitor failure. Also, engine may run rougher at idle and midrange RPM.

Remove relay 2, fuses F3 and F4.

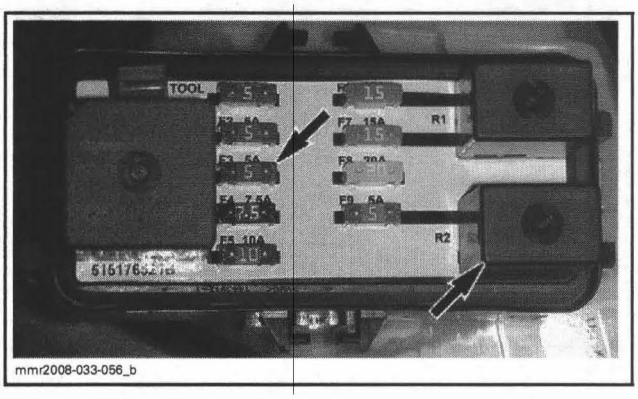

mmr2008-033-056_b

Set multimeter as shown.

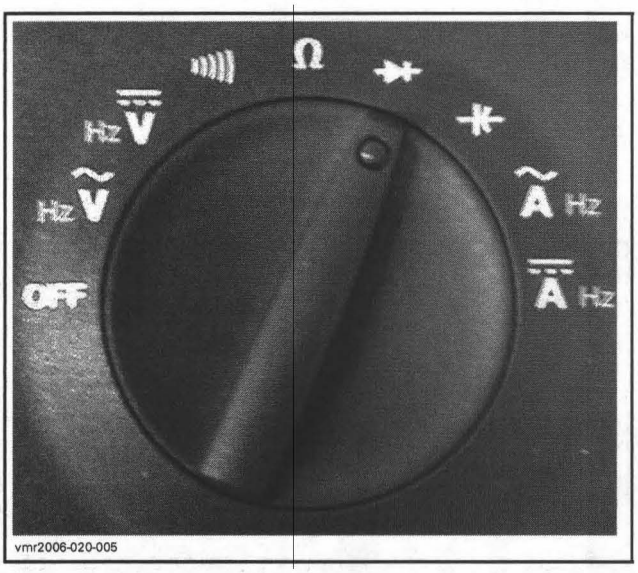

vmr2006-020-005

Probe fuse box terminals paying attention to proper polarity.

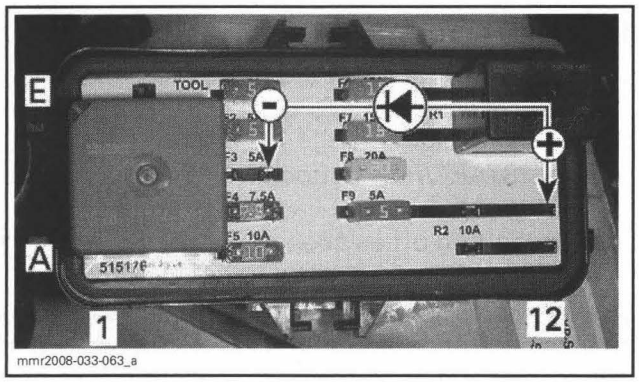

mmr2008-033-063_a

MUST BE AROUND 0.5 V

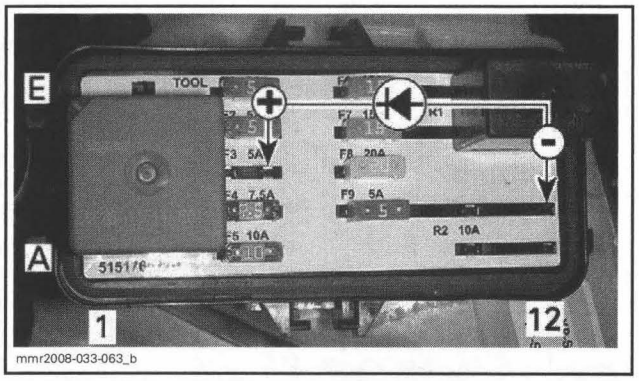

mmr2008-033-063_b

MUST BE OPEN CIRCUIT

If diode fail any test, replace it.

Diode is located on main harness between injection oil reservoir and throttle body.

Remove pulley guard. Refer to *DRIVE SYSTEM/ BRAKE.*

Remove primary air intake silencer. Refer to *AIR INTAKE SYSTEM.*

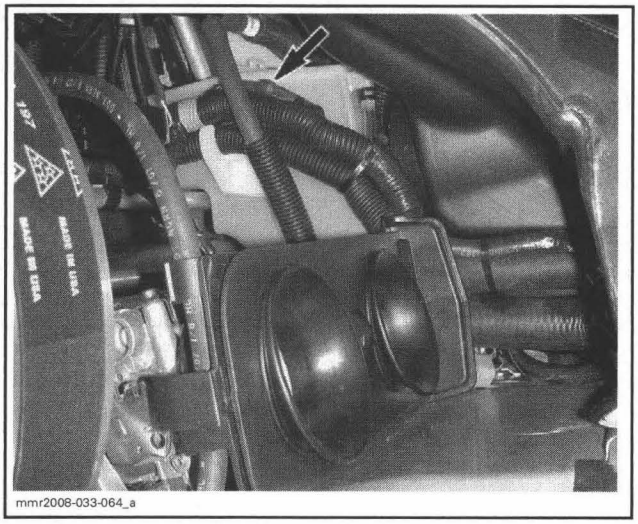
mmr2008-033-064_a

DIODE LOCATION

Reinstall removed parts.

ECM Replacement

Prior to replacing a possibly faulty ECM, ensure that all the tests have been carried out. Also, check ECM power supply and all grounds for proper contact/cleanliness and tightness.

To allow transferring the previous recorded information (if the defective ECM can be read) to the new ECM, use the B.U.D.S. software. Use **Replace ECM** in the **ECM** menu. Follow instructions provided by the help system.

ECM Removal

Disconnect battery cables.

⚠ WARNING

Battery BLACK (-) cable must always be disconnected first and connected last.

Remove muffler. Refer to *EXHAUST SYSTEM.*

Remove the acoustic panel.

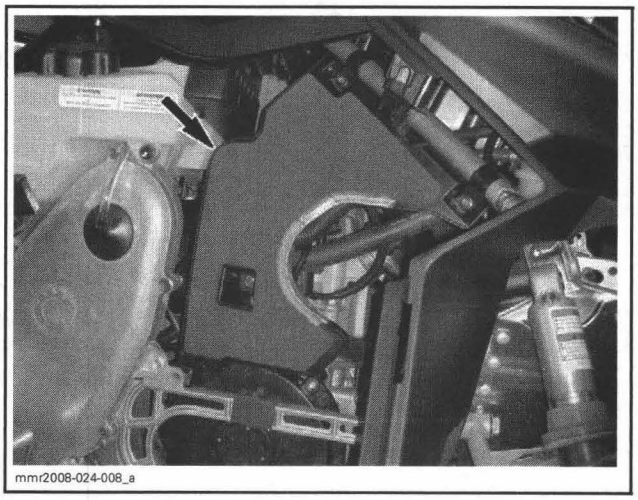
mmr2008-024-008_a

Disconnect ECM connectors.

Cut locking ties as necessary.

Remove ECM as follows.

1. Push the LH upper tab and hold.

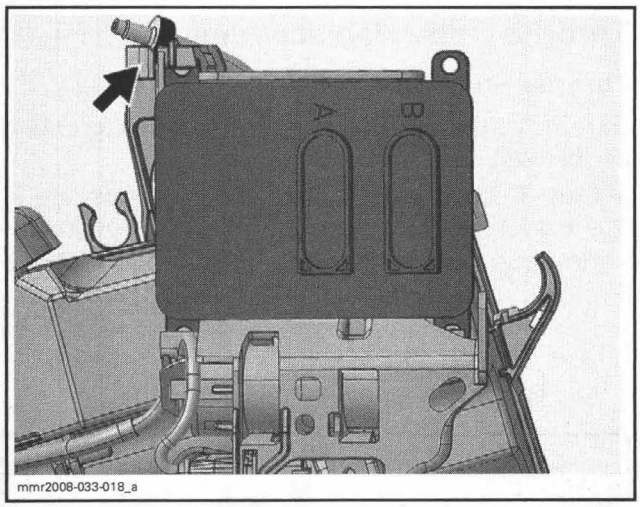

2. Rotate ECM counterclockwise.

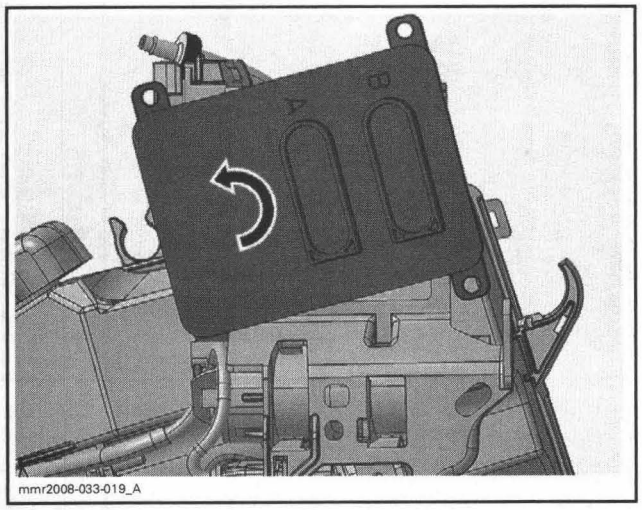

3. Pull out ECM.

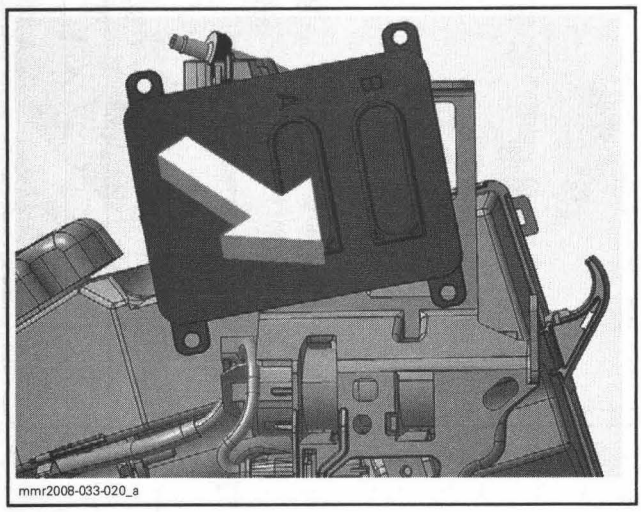

ECM Installation

Install ECM as follows.

1. Install capacitor retaining bracket.

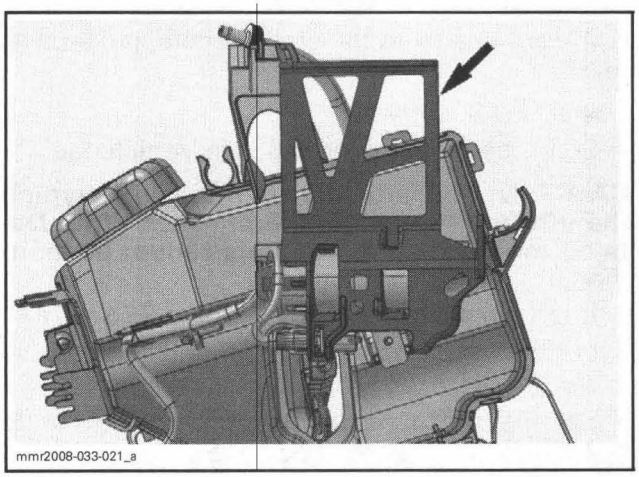

2. Insert the LH bottom tab of ECM first.

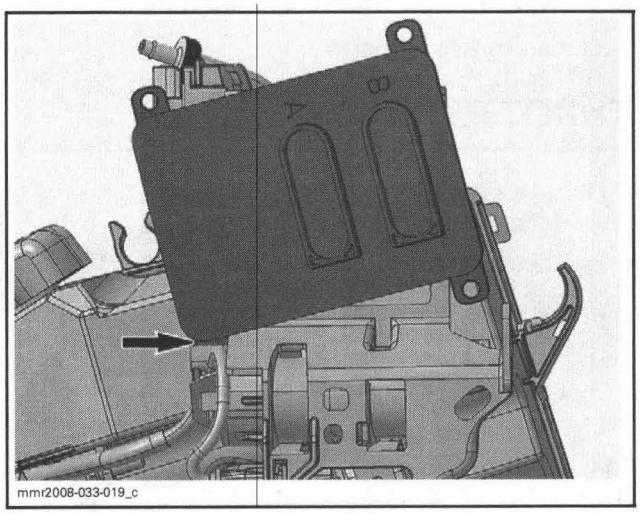

3. Rotate ECM clockwise until the other tabs are engaged and ECM locks in position.

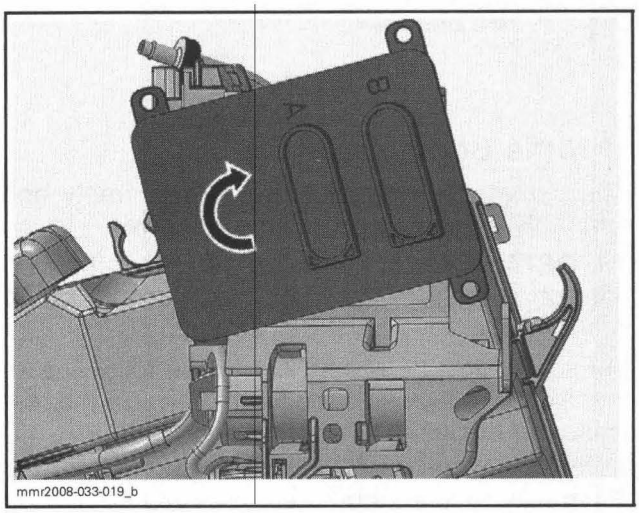

Reconnect ECM connectors to ECM, and then battery cables.

Transfer the data from the previous ECM to the new one using B.U.D.S.

If you are unable to transfer the data, proceed as follows.

Use B.U.D.S. software:

- Enter the proper information in **Vehicle** tab.

CAUTION: Pay particular attention when typing the VIN and model numbers. Once Write Data button is pressed, numbers cannot be modified.

- Reprogram DESS key. Refer to *DESS SYSTEM.*
- Perform the closed throttle reset. Refer to *CLOSED THROTTLE RESET* above.
- Set the multifunction gauge units. Refer to *LIGHTS/GAUGE/ACCESSORIES.*

Start the engine and increase engine speed above 6000 RPM to be sure no fault appears.

Reinstall removed parts.

THROTTLE BODY

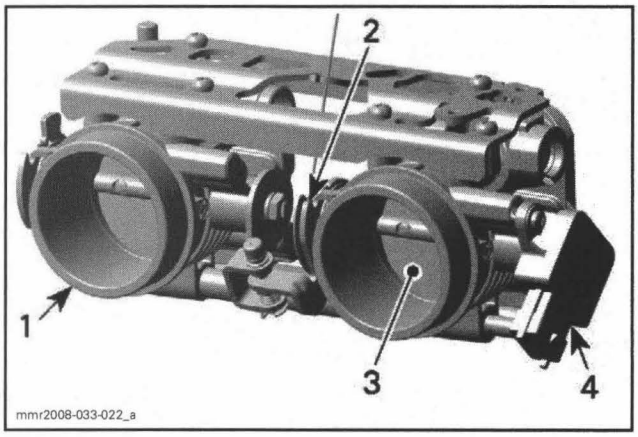

1. *Throttle body*
2. *Throttle cable attachment*
3. *Throttle plate*
4. *TPS*

Throttle Body Inspection

Check that the throttle plate moves freely and smoothly when depressing throttle lever.

IMPORTANT: Do not alter the setting of the zero position screws or synchronization screw, otherwise throttle body must be replaced.

Before replacing any part, check the following as these could be causing the fault. Perform the test while the engine is not running.

- Throttle cable adjustment too tight. Not returning fully to idle stop.
- Throttle body idle set screw is loose or worn.
- TPS is loose.
- Corroded or damaged wiring or connectors.
- Throttle body or ECM has been replaced and the **Closed Throttle** reset has not been performed.

Throttle Body Replacement

Throttle Body Removal

To remove the throttle body from engine, proceed as follows:

- Use B.U.D.S. and release the fuel pressure in the system. Look in the **Activation** section.
- Remove pulley guard. Refer to *DRIVE SYSTEM/BRAKE.*
- Remove primary air intake silencer. Refer to *AIR INTAKE SYSTEM.*
- Slacken retaining clamps of throttle body.

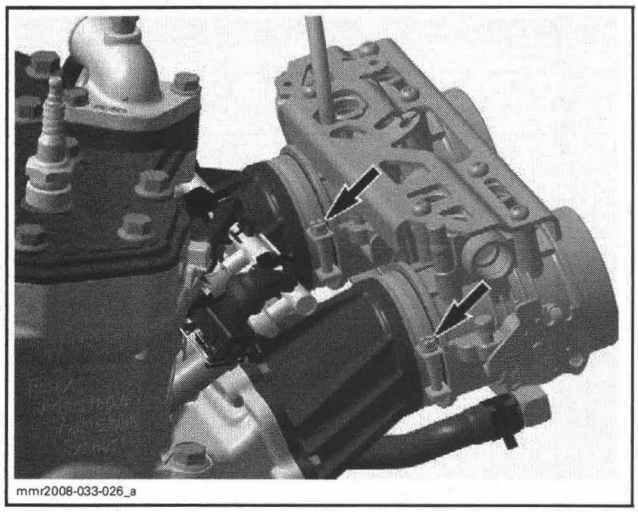

- Pull throttle body enough to reach coolant hoses and TPS connector.
- Disconnect TPS connector.

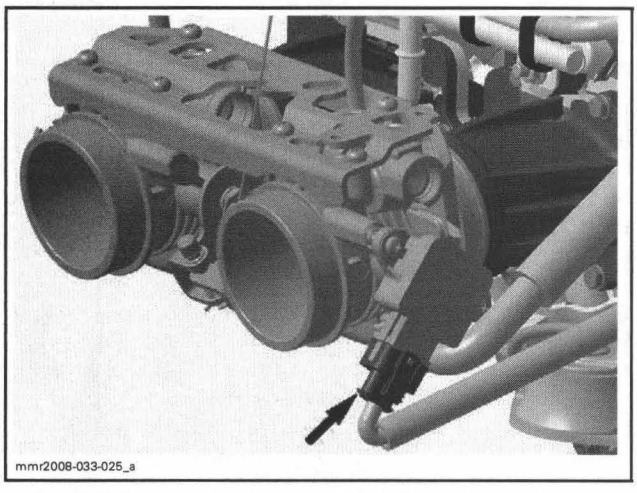

- Install hose pinchers (P/N 295 000 076) on coolant hoses connected to throttle body.

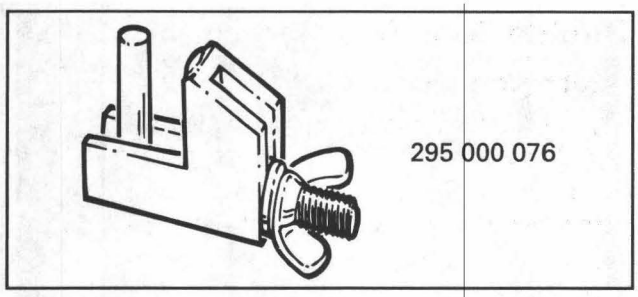

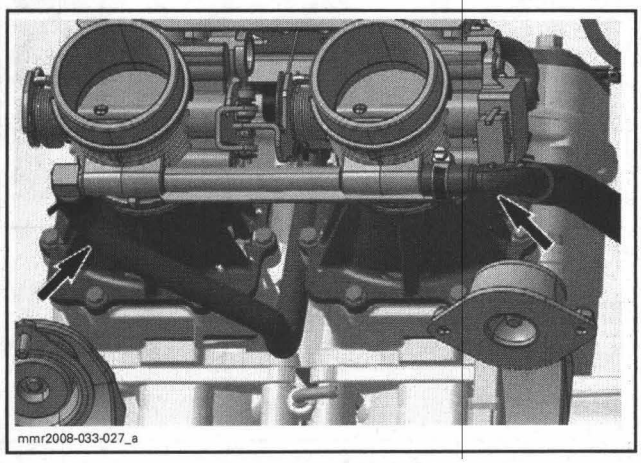

- Detach coolant hoses for throttle body.
- Disconnect throttle cable.
- Pull throttle body out.

Throttle Body Installation

Installation of the new throttle body is the reverse of the removal procedure. Pay attention to the following details.

Before installation, clean throttle plates and bores with pulley flange cleaner (P/N 413 711 809).

Refill engine coolant. If an important quantity of coolant was spilled, bleed cooling system. Refer to *COOLING SYSTEM* section.

Throttle Body Synchronization

No synchronization is required as it has already been done at the factory.

CAUTION: Do not alter setting synchronization screw. Otherwise throttle body must be replaced.

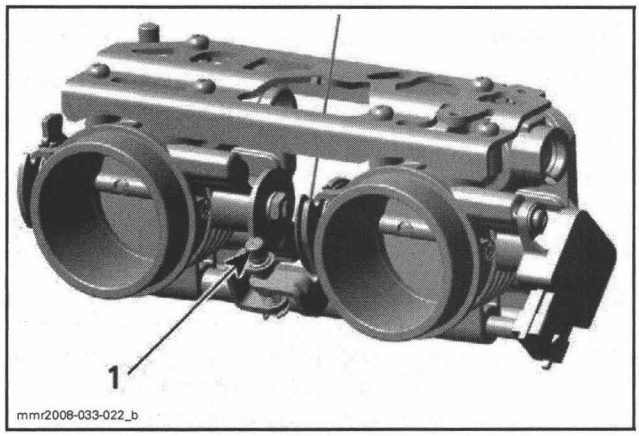

TYPICAL THROTTLE BODY
1. Synchronization screw

THROTTLE POSITION SENSOR (TPS)

General

NOTE: Before replacing a TPS, ensure there is not too much pull on the wires and they are not chaffed or cuts.

The throttle position sensor (TPS) is a potentiometer that sends a signal to the ECM which is proportional to the throttle shaft angle.

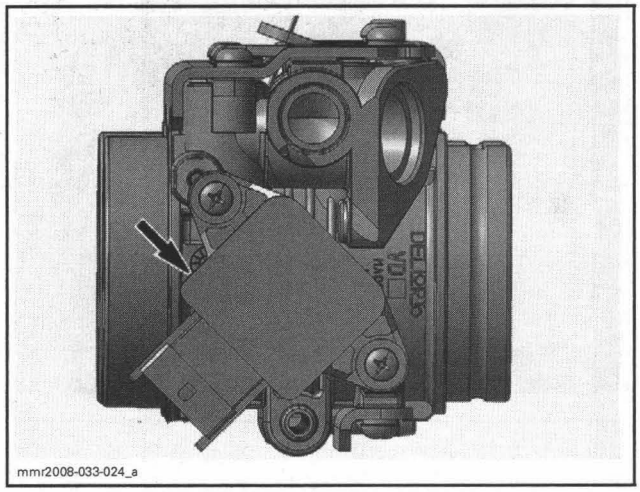

THROTTLE POSITION SENSOR (TPS)

IMPORTANT: Prior to testing the TPS, ensure that mechanical components/adjustments are adequate according to *THROTTLE BODY* in this section.

The ECM may generate several fault codes pertaining to the TPS. Refer to *MONITORING SYSTEM/FAULT CODES* section for more information.

TPS Wear Test

While engine is not running, activate throttle and pay attention for smooth operation without physical stops of the cable.

Use B.U.D.S. software.

Use the **Throttle Opening** display under **Monitoring**.

Slowly and regularly depress the throttle. Observe the needle movement. It must change gradually and regularly as you move the throttle. If the needle "sticks", bounces, suddenly drops or if any discrepancy between the throttle movement and the needle movement is noticed, it indicates a worn TPS that needs to be replaced.

TPS Input Voltage Test

Check the voltage output from ECM to the throttle position sensor.

Remove pulley guard. Refer to *DRIVE SYSTEM/ BRAKE.*

Remove primary air intake silencer. Refer to *AIR INTAKE SYSTEM.*

Disconnect TPS connector.

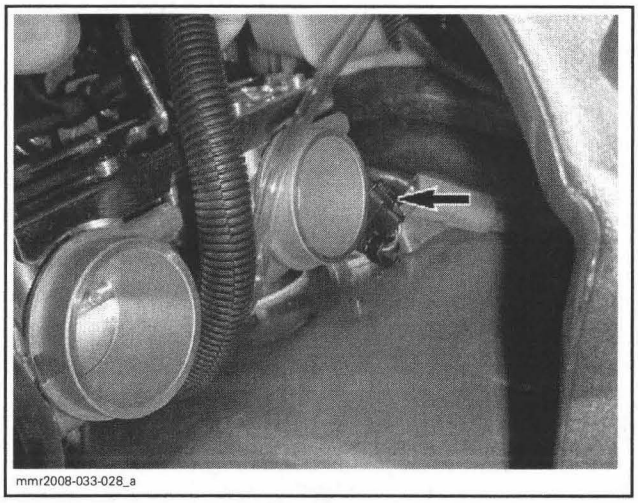
mmr2008-033-028_a

NOTE: To unlock connector, insert a small screwdriver between the folded tab. To see the connector pin-out and its pin numbers, temporarily remove the connector shield joining the harness.

Install the tether cord cap, turn OFF engine cut-out switch and push START/RER button momentarily to activate the ECM.

Read voltage at TPS harness connector as follows.

TPS HARNESS CONNECTOR		VOLTAGE
Pin 1	Pin 2	5.0 Vdc

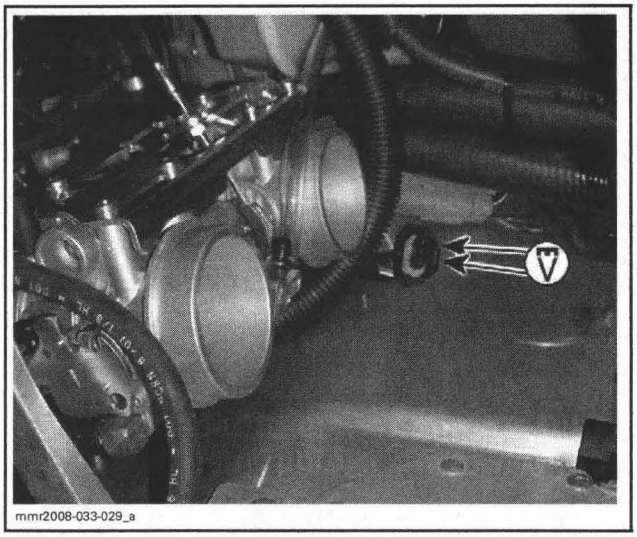
mmr2008-033-029_a

If voltage is good, check the TPS signal wire.

TPS Signal Wire Test

Disconnect "A" connector from ECM.

Check the wiring continuity as follows

TPS HARNESS CONNECTOR	ECM "A" CONNECTOR	RESISTANCE
Pin 3	Pin 24	Close to 0 Ω (continuity)

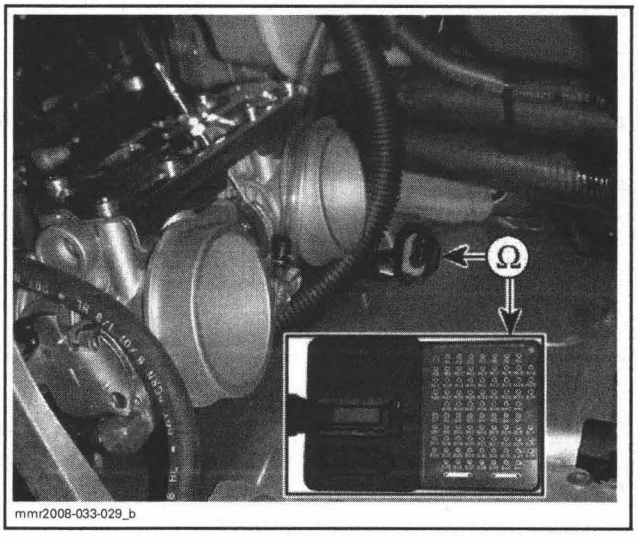
mmr2008-033-029_b

If tests are good, replace the TPS.

If tests are not good, continue to check the resistance of the rest of the TPS circuit.

TPS Resistance Test

Reconnect the TPS.

Disconnect the connector "A" from the ECM.

Using a multimeter, check resistive value as per the following table.

ECM CONNECTOR		THROTTLE IDLE POSITION	WIDE OPEN THROTTLE POSITION
PIN	PIN	RESISTANCE Ω	
A-24	A-25	2500	1000
A-25	A-39	1600 - 2400	1600 - 2400
A-24	A-39	1000	2500

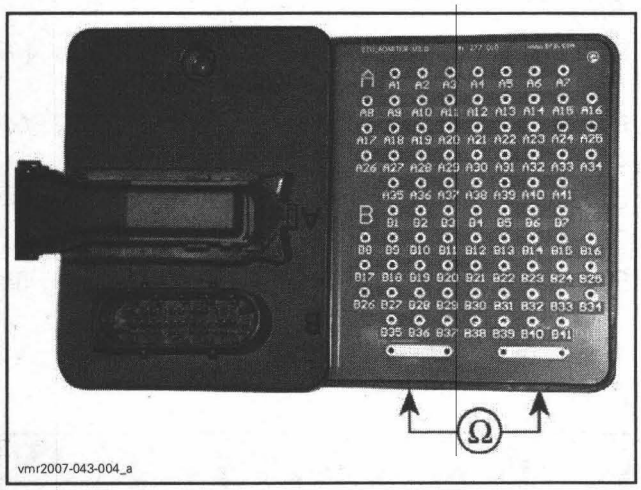

NOTE: The resistive value should change smoothly and proportionally to the throttle movement. Otherwise, replace TPS.

If resistive values are correct, try a new ECM. Refer to *ENGINE CONTROL MODULE (ECM)* elsewhere in this section.

If resistive values are incorrect, repair/replace wiring/connectors. If they are good, replace TPS.

TPS Replacement

Remove the throttle body as described above.

Loosen two screws retaining the TPS.

Remove TPS.

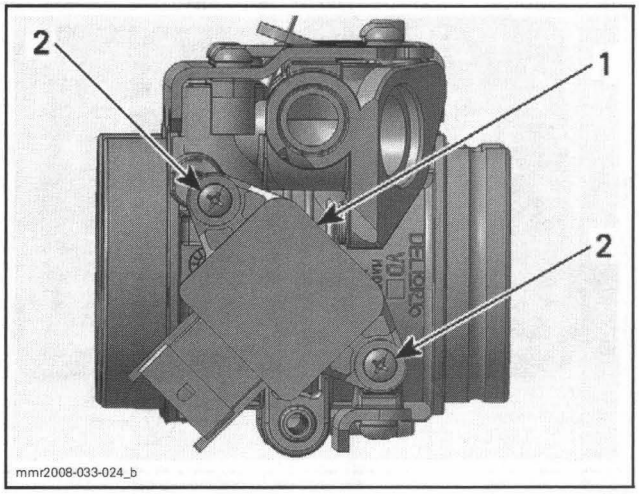

1. Throttle position sensor (TPS)
2. Screws

Install the new TPS.

Apply Loctite 243 on the TPS retaining screws, then torque to 3 N•m (27 lbf•**in**).

Reinstall remaining removed parts.

Proceed with the **Closed Throttle Reset**.

CRANKSHAFT POSITION SENSOR (CPS)

NOTE: The CPS is used for forward and reverse.

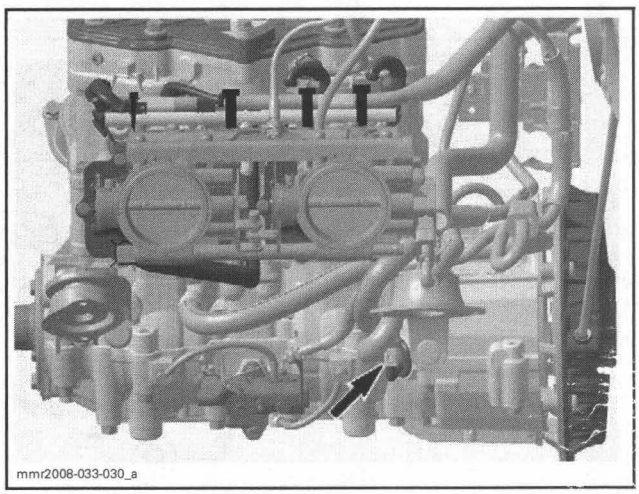

CPS CONNECTOR

CPS Output Voltage Test

Disconnect connector "A" from ECM.

Probe terminals coming from CPS while cranking engine.

ECM "A" CONNECTOR		VOLTAGE
Pin 5	Pin 19	1 - 2 Vac

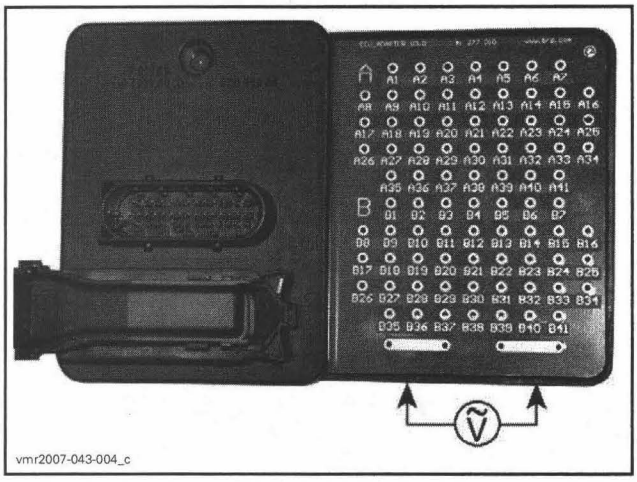

If voltage is out of specification, inspect wiring/connectors. Replace CPS if wiring is good.

NOTE: To gain access to CPS connector, refer to *CPS REPLACEMENT.*

CPS Resistance Test

Disconnect connector "A" from ECM.

Measure the resistance of the sensor itself.

ECM "A" CONNECTOR		RESISTANCE @ 20°C (68°F)
Pin 5	Pin 19	190 - 300 Ω

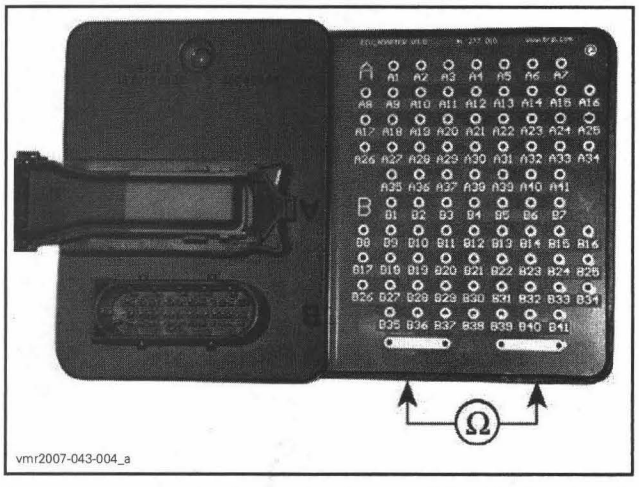

If measurement is out of specification, check wiring continuity between ECM and CPS. If continuity is good, replace CPS.

Also check for a bad ground connection as follows.

ECM "A" CONNECTOR		RESISTANCE @ 20°C (68°F)
Pin 5	Engine ground	Open circuit (0L)
Pin 19	Engine ground	

If measurement is out of specification, check wiring between ECM and CPS.

CPS Replacement

To Disconnect CPS Connector:

Use B.U.D.S. and release fuel pressure. Look in the **Activation** section.

Remove pulley guard. Refer to *DRIVE SYSTEM/ BRAKE.*

Remove primary air intake silencer. Refer to *AIR INTAKE SYSTEM.*

Remove driven pulley. Refer to *DRIVE SYSTEM/ BRAKE.*

Detach throttle body from engine.

Disconnect TPS connector.

Raise throttle body and secure with a locking tie to keep it away.

Disconnect fuel supply hose.

Remove MAG intake adapter.

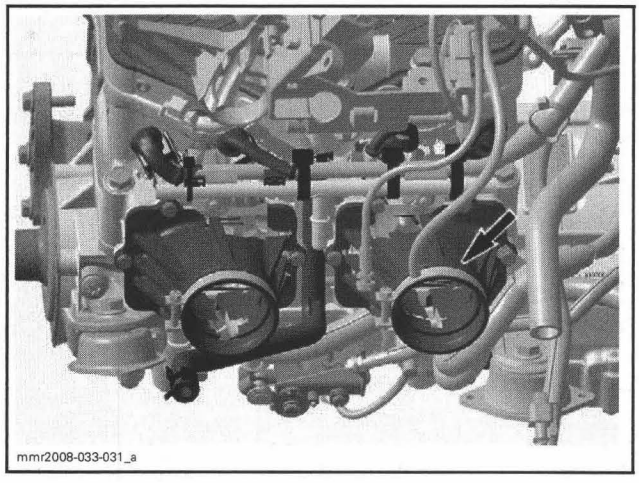

Remove engine mount screws.

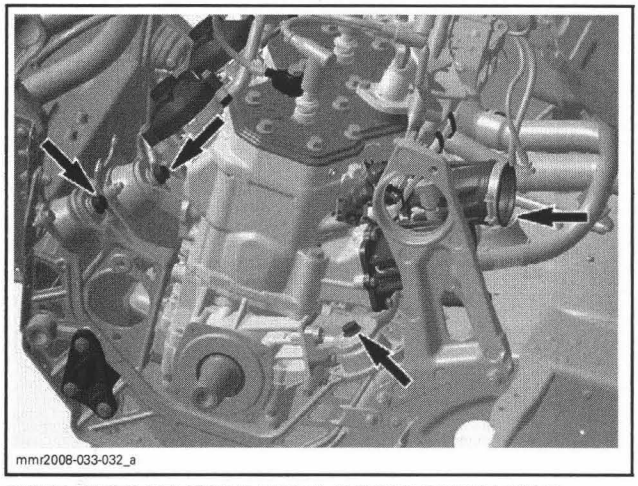

SOME PARTS REMOVED FOR CLARITY PURPOSE ONLY

Remove engine torque support.

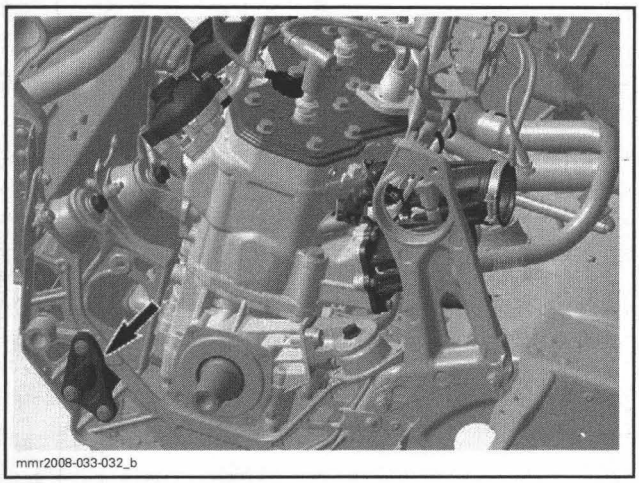
mmr2008-033-032_b

SOME PARTS REMOVED FOR CLARITY PURPOSE ONLY

Remove spark plugs and install spark plug lift ring (P/N 529 035 830) in MAG side hole.

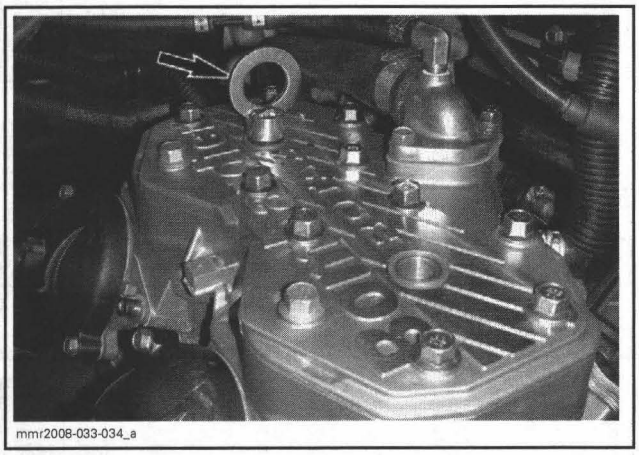
mmr2008-033-034_a

TYPICAL

Install the engine removal hook (P/N 529 035 829) on spark plug lift ring.

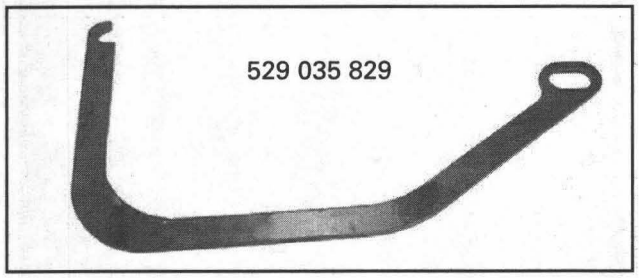

Lift engine as much as you can.

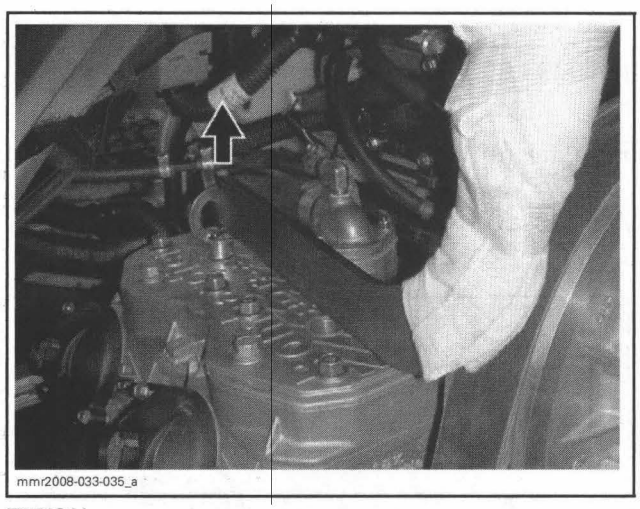
mmr2008-033-035_a

TYPICAL

Disconnect CPS connector.

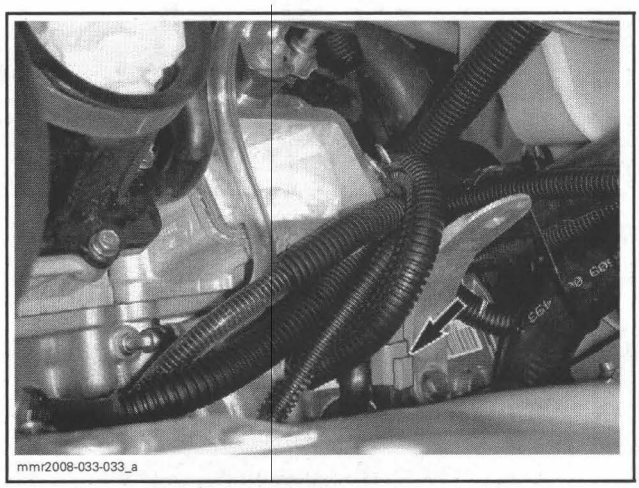
mmr2008-033-033_a

To Replace CPS:

Remove magneto flywheel. Refer to *MAGNETO SYSTEM*.

Remove CPS.

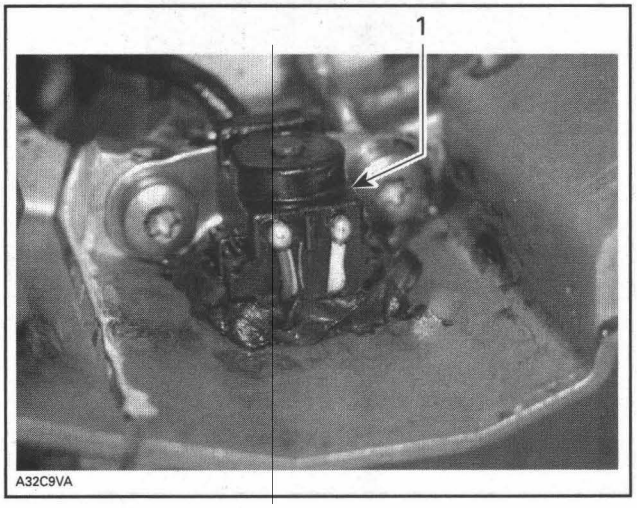

A32C9VA

1. CPS inside crankcase

When installing new CPS apply Loctite 5910 (P/N 293 800 081) between CPS and crankcase.

Torque to 8 N•m (71 lbf•**in**).

Reinstall remaining removed parts.

AIR TEMPERATURE SENSOR (ATS)


mmr2008-033-036_a

ATS Test with B.U.D.S.

Use B.U.D.S. software.

Look **Intake Air** in **Monitoring** tab of B.U.D.S. It should show the ambient temperature. Otherwise, perform the following test.

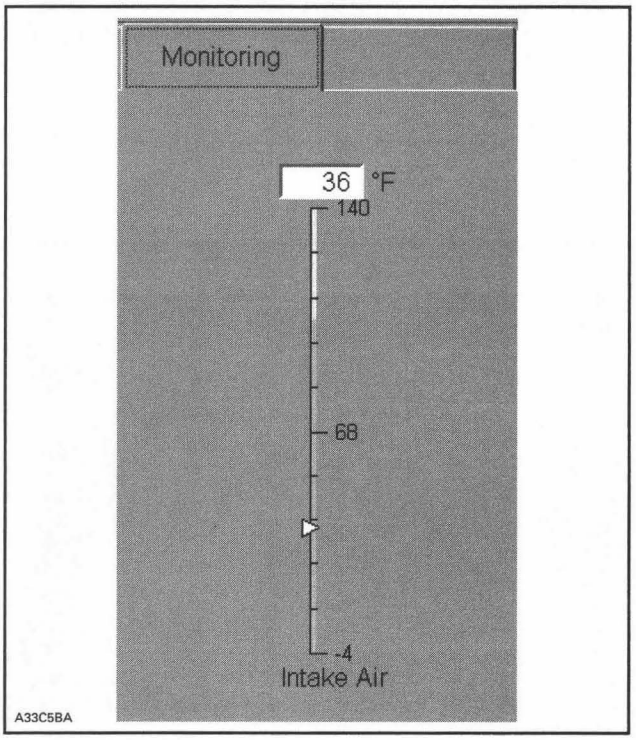

ATS Resistance Test

Remove pulley guard. Refer to *DRIVE SYSTEM/ BRAKE.*

Remove primary air intake silencer. Refer to *AIR INTAKE SYSTEM.*

Rotate intake adapter to disconnect ATS sensor connector.

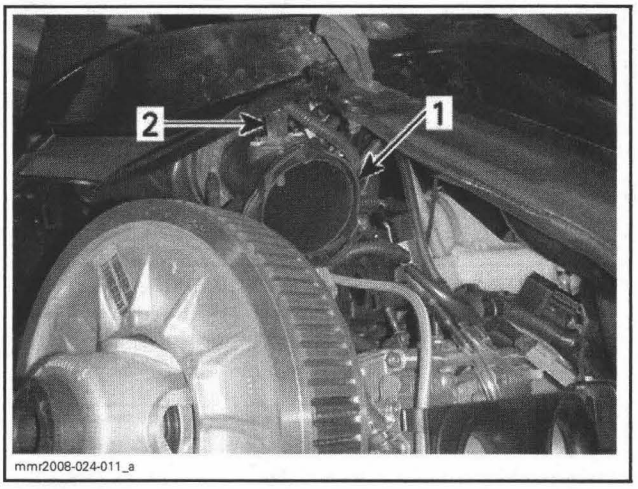

mmr2008-024-011_a

TYPICAL
1. *Rotate intake adapter*
2. *Disconnect sensor connector*

Measure sensor resistance.

ATS		MEASUREMENT
Pin 1	Pin 2	Refer to *TEMPERATURE SENSOR TABLE* above

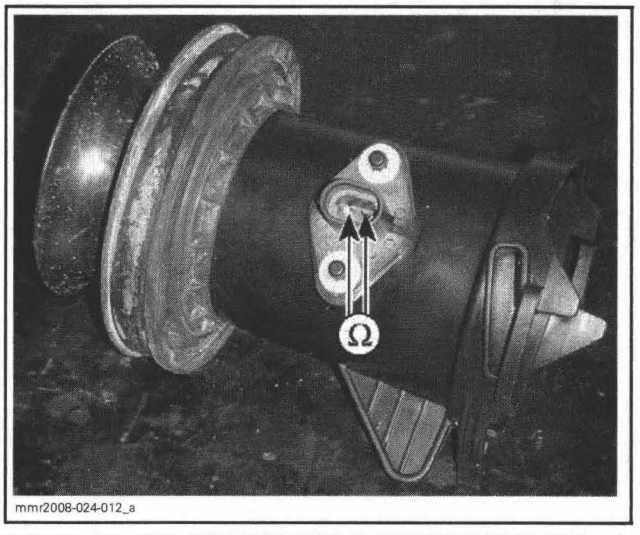

mmr2008-024-012_a

INTAKE ADAPTER REMOVED FOR CLARITY PURPOSE ONLY

If out of specifications, replace sensor.

If resistance tests good, **reconnect** the ATS and disconnect the ECM connector.

Using a multimeter, measure resistance value as follows.

ECM CONNECTOR		MEASUREMENT
Pin A-7	Pin A-21	Refer to *TEMPERATURE SENSOR TABLE* above

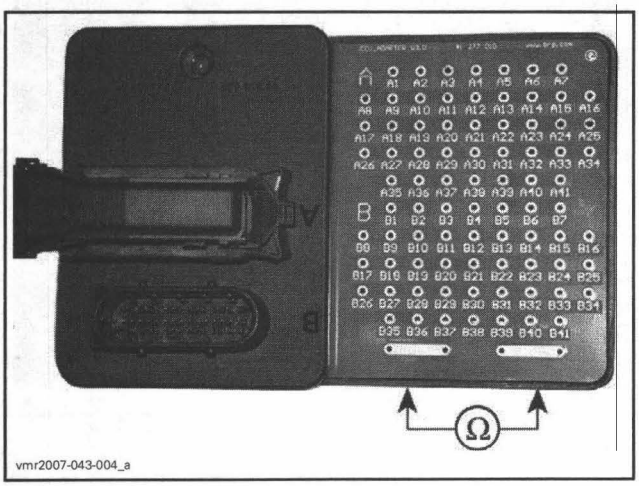

vmr2007-043-004_a

If resistance value is incorrect, repair the connectors or replace the wiring harness between ECM connector and the ATS.

Reinstall removed parts. Ensure intake adapter boot is properly installed on the adapter. See below in *ATS REPLACEMENT.*

ATS Replacement

See procedures above to reach sensor.

Slacken boot clamp.

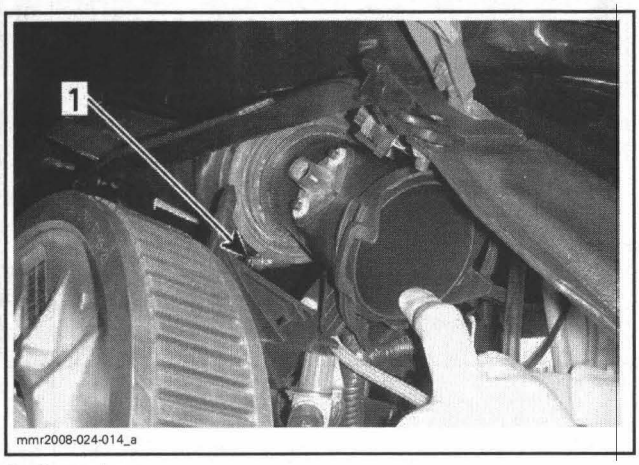

mmr2008-024-014_a

1. Boot clamp

Unplug ATS connector.

Pull out intake adapter.

Remove sensor push nuts.

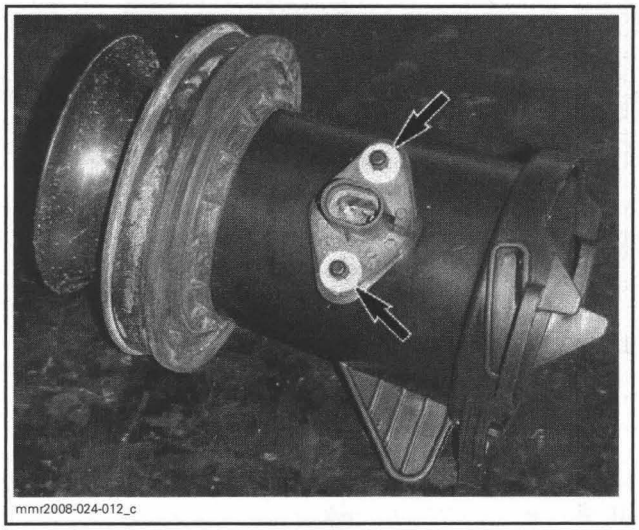
mmr2008-024-012_c

Pull out sensor.

Use new push nuts and secure the new sensor to adapter.

Reconnect ATS.

Ensure adapter boot is properly installed as shown.

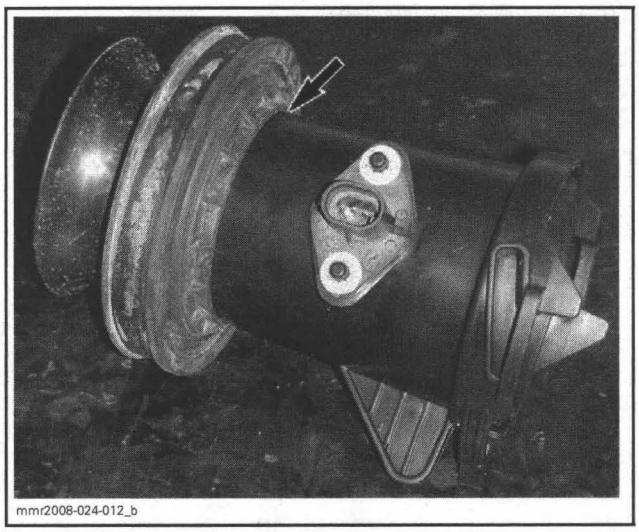
mmr2008-024-012_b

CORRECT BOOT INSTALLATION

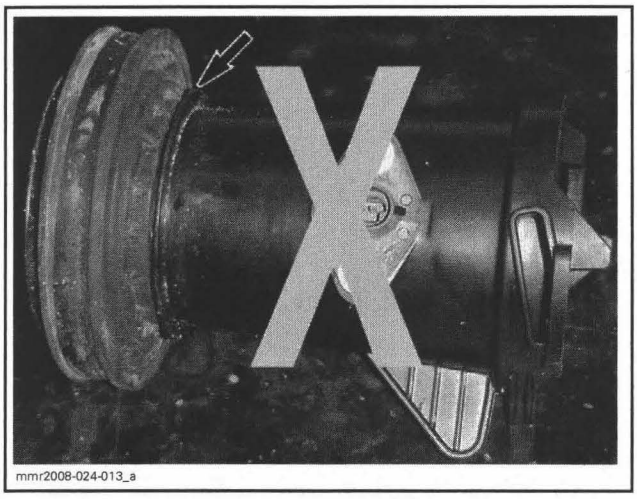

WRONG BOOT INSTALLATION

Reinstall removed parts.

COOLANT TEMPERATURE SENSOR (CTS)

CTS Test with B.U.D.S.

Use B.U.D.S. software.

Look engine temperature in **Monitoring** tab of B.U.D.S. It should show the coolant temperature. Otherwise, perform the following test.

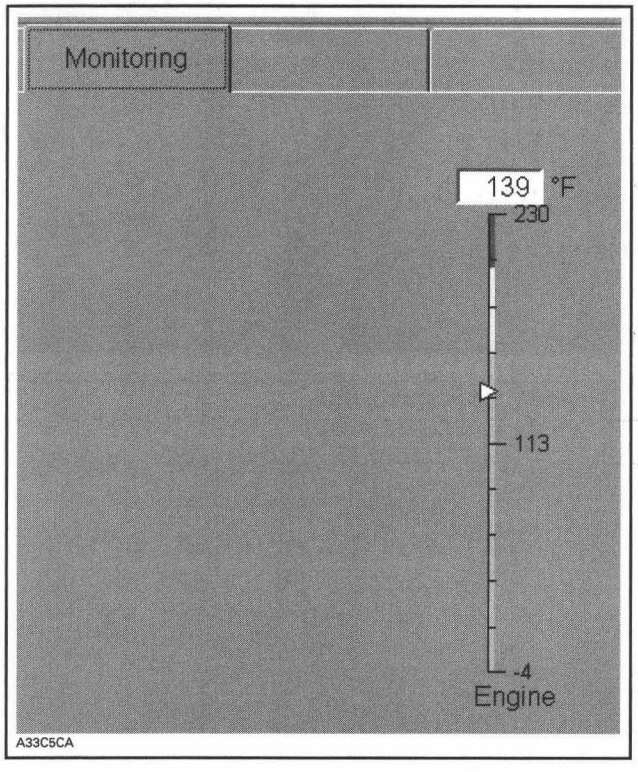

CTS Resistance Test

Remove pulley guard. Refer to *DRIVE SYSTEM/ BRAKE.*

Disconnect CTS sensor connector.

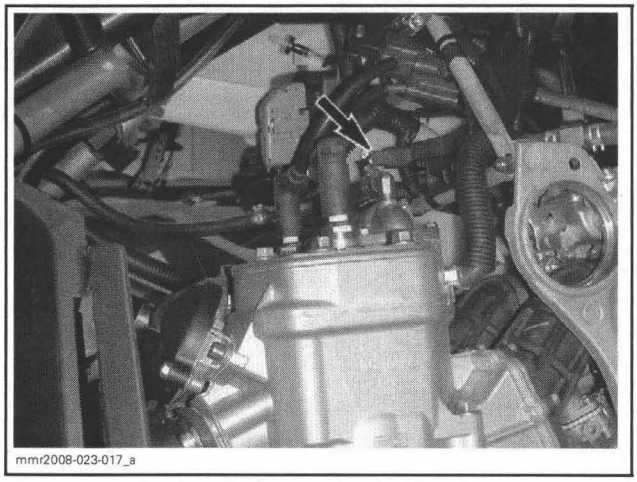

TYPICAL

Use a multimeter and set it to Ω.

Measure resistance between sensor terminals.

CTS		MEASUREMENT
Pin 1	Pin 2	Refer to *TEMPERATURE SENSOR TABLE* above

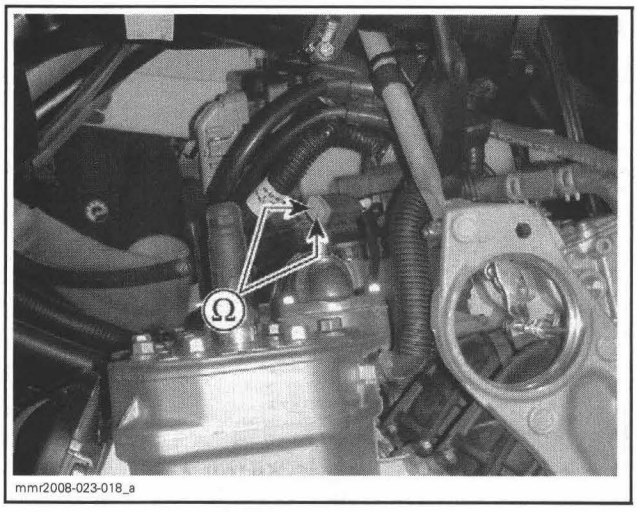

TYPICAL

If resistance is out of specifications, replace CTS.

If resistance tests good, **reconnect** the CTS.

Disconnect the "A" connector from ECM.

Measure resistance as follows.

ECM CONNECTOR		MEASUREMENT
Pin 11	Pin 27	Refer to *TEMPERATURE SENSOR TABLE* above

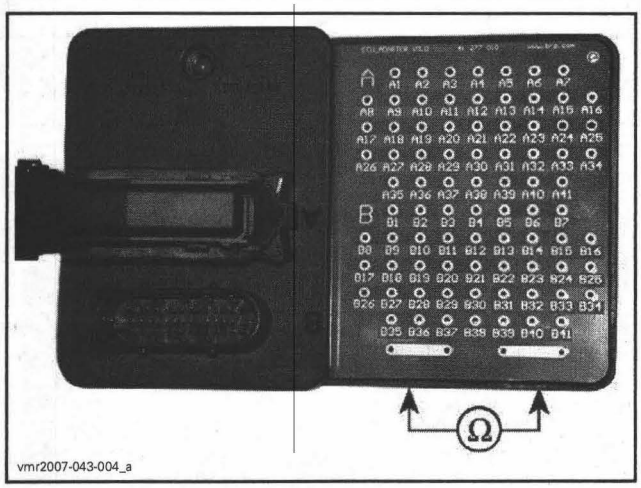

If resistance value is correct, sensor and wiring/connectors are good.

If resistance value is incorrect, repair/replace wiring/connectors between ECM and CTS.

CTS Replacement

Remove pulley guard. Refer to *DRIVE SYSTEM/ BRAKE.*

Remove primary air intake silencer. Refer to *AIR INTAKE SYSTEM.*

Remove driven pulley. Refer to *DRIVE SYSTEM/ BRAKE.*

Lift rear of vehicle to minimize coolant spillage.

Disconnect CTS connector.

Remove CTS.

Install the new CTS and torque to 12 N•m (106 lbf•**in**).

Reinstall removed parts.

Refill engine coolant. If an important quantity of coolant spilled, bleed cooling system. Refer to *COOLING SYSTEM* section.

AIR PRESSURE SENSOR (APS)

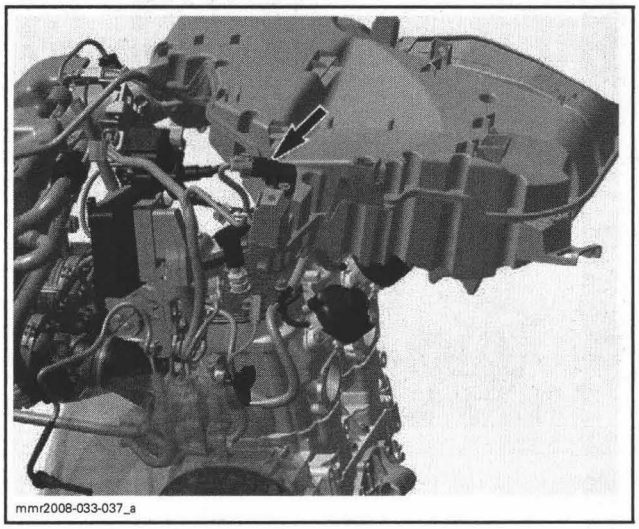

APS Inspection

Refer to *BODY* and remove:
- RH side panel
- Hood.

Ensure sensor is correctly installed on secondary air intake silencer. Otherwise, the APS could generate a fault code.

Remove sensor and check for oil or dirt on its end and if problem persists, check the wiring harness. Perform the following tests.

APS Voltage Test

Check the voltage output from ECM to the APS.

Install the tether cord cap, turn OFF engine cut-out switch and push START/RER button momentarily to activate the ECM.

Disconnect connector from APS.

Read voltage as follows.

APS CONNECTOR		VOLTAGE
Pin 1	Pin 3	5 Vdc

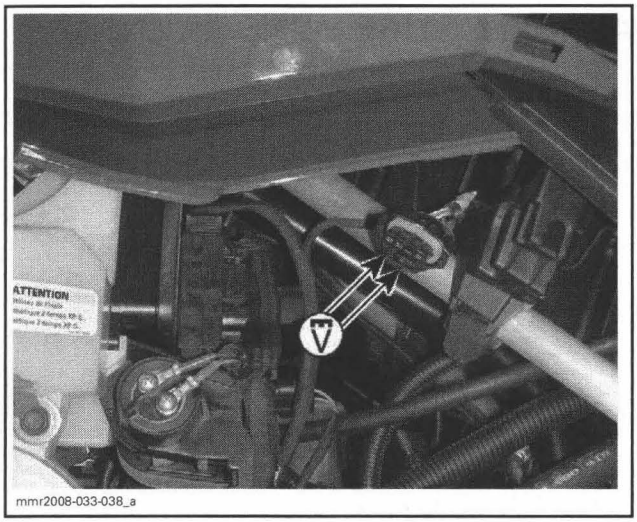

mmr2008-033-038_a

Disconnect "A" connector from ECM.

Check the wiring continuity between ECM and APS as follows.

APS HARNESS CONNECTOR	ECM "A" CONNECTOR	RESISTANCE
Pin 4	Pin 18	Close to 0 Ω (continuity)

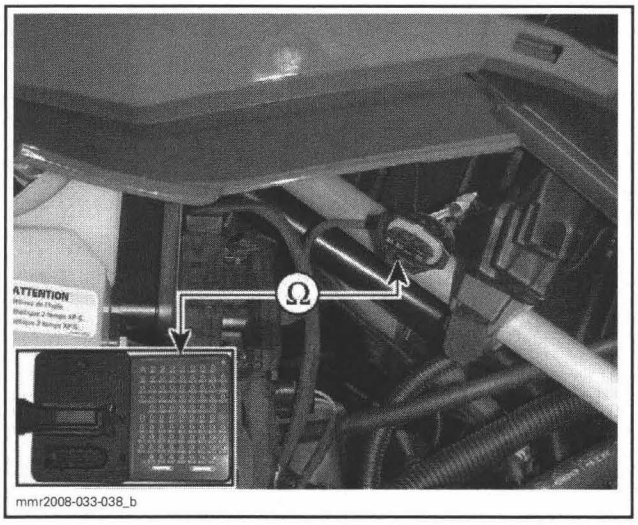

mmr2008-033-038_b

If tests are good, replace the APS.

If tests are not good, continue to check the continuity of the rest of the APS circuit on the harness.

Disconnect the connector "A" from the ECM.

Using a multimeter, check continuity of circuits as per following table.

CIRCUIT NUMBER (ECM CONNECTOR "A")	APS CONNECTOR	RESISTANCE
A-4	Pin 1	Close to 0 Ω (continuity)
A-18	Pin 4	

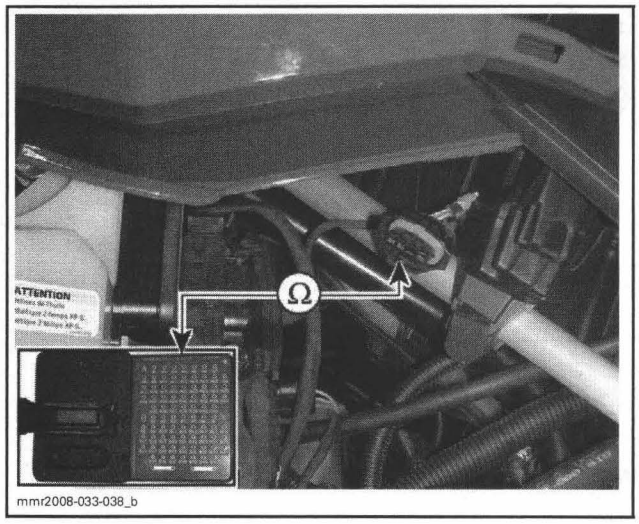

mmr2008-033-038_b

If wiring harness is good, try a new ECM. Refer to *ENGINE CONTROL MODULE (ECM)* elsewhere in this section.

If resistance is bad, repair the connectors or replace the wiring harness between ECM connector and the APS.

APS Replacement

Disconnect APS connector and remove the APS. The APS is retained with a screw.

Install the new APS.

EXHAUST GAS TEMPERATURE SENSOR (EGTS)

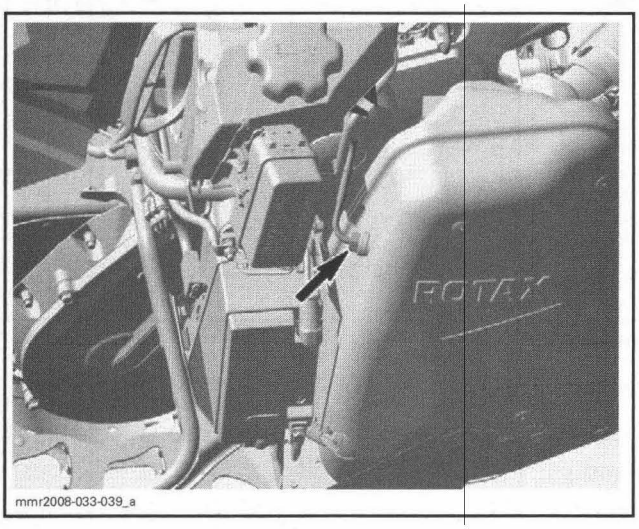

mmr2008-033-039_a

EGTS Resistance Test

Disconnect EGTS connector.

Measure sensor resistance.

EGTS		MEASUREMENT
Pin 1	Pin 2	Refer to *TEMPERATURE SENSOR TABLE* above

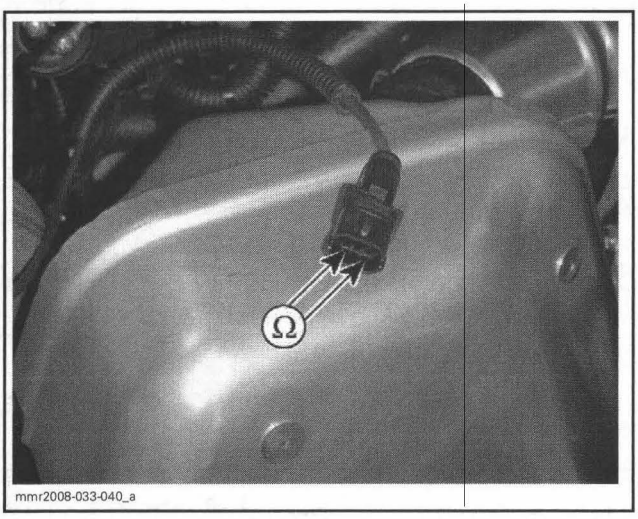

mmr2008-033-040_a

If resistance is out of specification, replace the sensor.

If resistance is as per specification, **reconnect** the EGTS.

Disconnect the "A" connector from ECM.

Measure resistance as follows.

ECM CONNECTOR		MEASUREMENT
Pin 10	Pin 26	Refer to *TEMPERATURE SENSOR TABLE* above

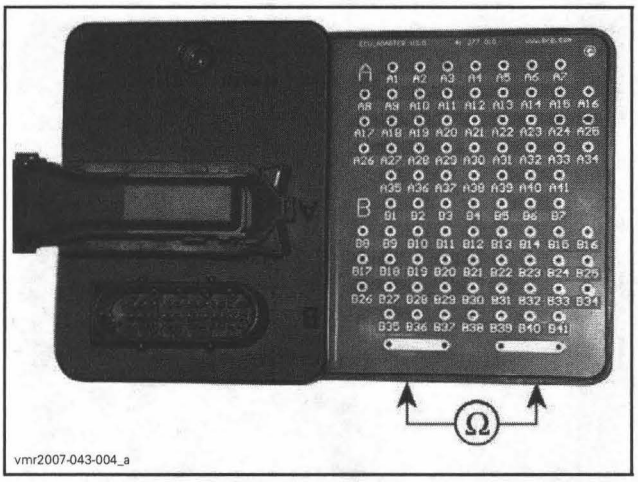

vmr2007-043-004_a

If resistive value is correct, try a new ECM. Refer to *ENGINE CONTROL MODULE (ECM)* elsewhere in this section.

If resistive value is incorrect, repair the connector or replace the wiring harness between ECM connector and the EGTS.

EGTS Removal

Disconnect EGTS connector.

Remove muffler. Refer to *EXHAUST SYSTEM.*

Remove EGTS.

EGTS Installation

NOTE: New sensors have paraffin wax on their tip to protect the sensor for shipping. Paraffin will melt at first engine operation.

CAUTION: Do not drop or use a sensor that has been dropped. Do not use an impact wrench to install sensor.

Apply anti-seize lubricant (P/N 293 800 070) over the EGTS threads to prevent possible seizure.

Install sensor and turn it so that it goes as close to chaincase as possible without touching it.

CAUTION: Sensor wires must not contact chaincase.

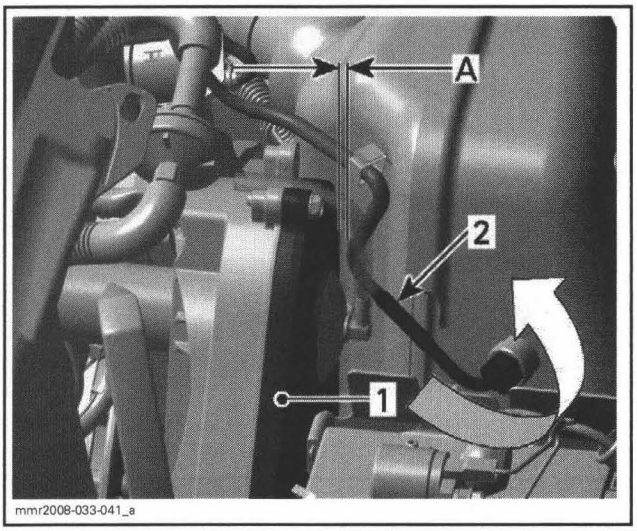

mmr2008-033-041_a

1. Chaincase
2. EGTS
A. The closest to chaincase without touching

NOTE: The sensor needs to be oriented in this specific position for optimum efficiency.

Torque the EGTS to 45 N•m (33 lbf•ft) while preventing sensor to turn.

Install remaining components.

KNOCK SENSOR (KS)

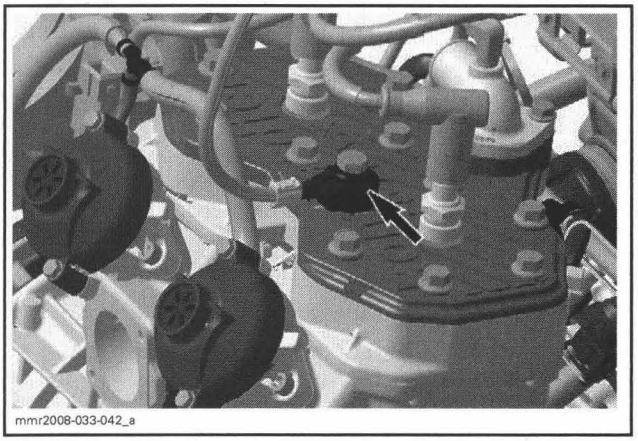
mmr2008-033-042_a

KS Test with B.U.D.S.

Lift rear of vehicle off the ground and support it with a wide-base mechanical stand.

Use B.U.D.S. software.

Monitor the knock sensor using the **Knock Sensor Signal** in **Monitoring** section in B.U.D.S.

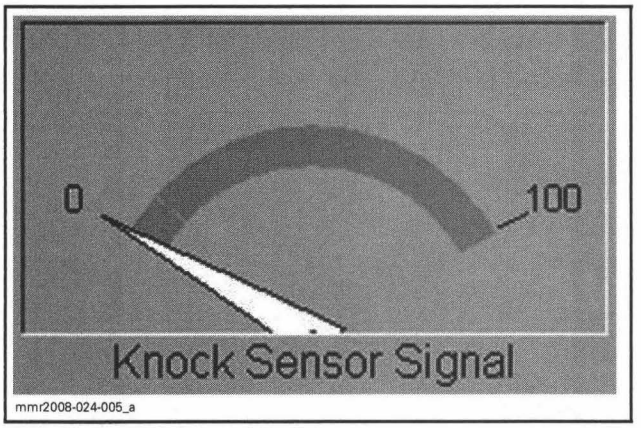

mmr2008-024-005_a

MONITORING TAB

Start the engine.

Bring engine speed above 5200 RPM and vary engine RPM above 5200 RPM.

Needle of knock sensor signal should move between 0 and 100. The needle movement pattern is of no importance as long as it moves indicating the engine vibrations the knock sensor senses. If needle "sticks" either to 0 or 100, there is a problem.

If needle moves as described, the knock sensor should be good.

NOTE: Ensure ignition coil cables are not close to knock sensor harness. This might generate a false fault code.

Verify knock sensor circuit as follows.

KS Circuit Continuity Test

Ensure sensor and head contact surfaces are clean and mounting bolt and washer are correct and properly torqued down.

Disconnect knock sensor connector. Refer to *KNOCK SENSOR REPLACEMENT.*

Disconnect ECM connector.

Check wire continuity of circuit as per following table.

ECM CONNECTOR	KS CONNECTOR	MEASUREMENT
A-22	Pin 1	Close to 0 Ω (continuity)
A-8	Pin 2	

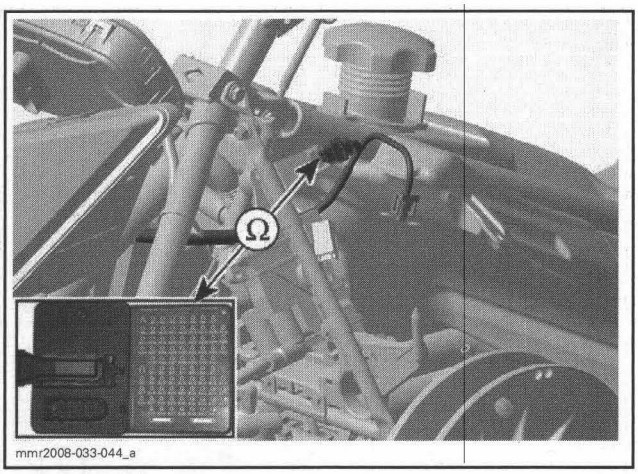

ECM CONNECTOR

If test is not good, repair/replace wiring/connectors between ECM and knock sensor.

If test is good, try a new knock sensor.

KS Replacement

Unscrew and remove knock sensor from cylinder head.

Remove pulley guard. Refer to *DRIVE SYSTEM/BRAKE.*

Remove primary air intake silencer. Refer to *AIR INTAKE SYSTEM.*

Unplug knock sensor connector above ATS.

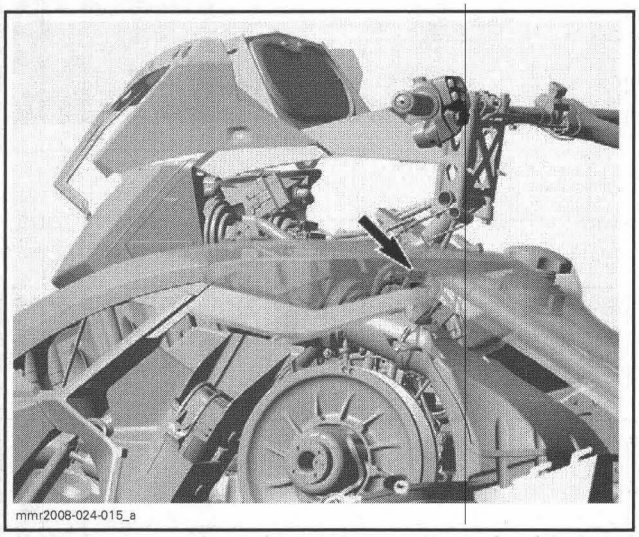

Clean contact surface, then install the new knock sensor.

Torque screw to 29 N•m (21 lbf•ft).

CAUTION: Improper torque might prevent sensor to work properly and lead engine to severe damage of internal components.

Reconnect connector.

Reinstall remaining parts.

CAPACITOR

Discharging Capacitor Prior to Servicing

⚠ WARNING

Capacitor remains charged some time after tether cord was removed. A high voltage could be suddenly discharged if capacitor terminals were shorted. Always discharge capacitor before servicing.

To properly discharge capacitor, carefully connect a 12 V test lamp to capacitor terminals during 1 minute to properly discharge capacitor.

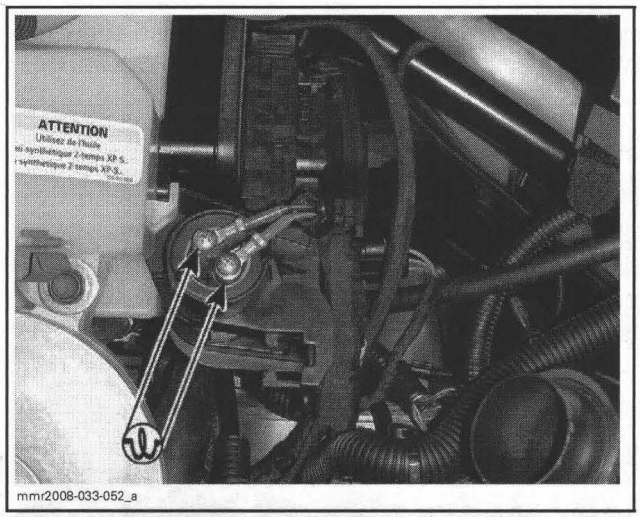

⚠ WARNING

Never short-circuit capacitor terminals to discharge capacitor.

Capacitor Inspection

NOTE: Inspection is easier to do when capacitor is installed on vehicle.

Visual Inspection

Check for pin holes on top of capacitor. If any is present, replace capacitor.

Charge Hold Test

Discharge capacitor.

Press START/RER button to energize capacitor.

On manual start models, crank engine one time.

Use a multimeter and set it to Vdc.

Read battery voltage.

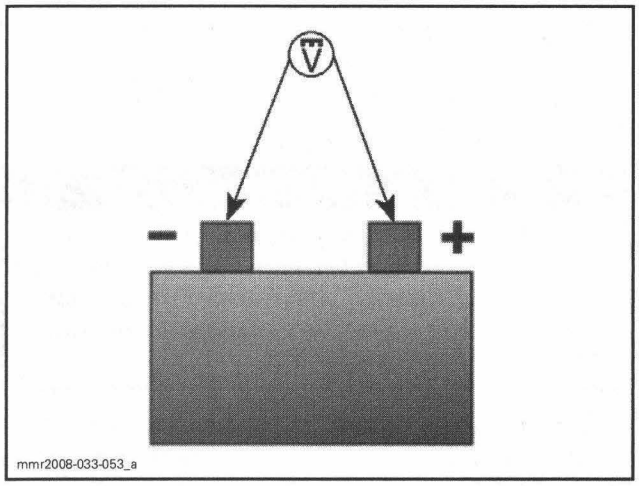

mmr2008-033-053_a

Wait 5 minutes.

Read capacitor voltage. Ensure to use the multimeter RED probe with the + terminal of capacitor.

CAPACITOR VOLTAGE
Must be within 1 Vdc of battery voltage

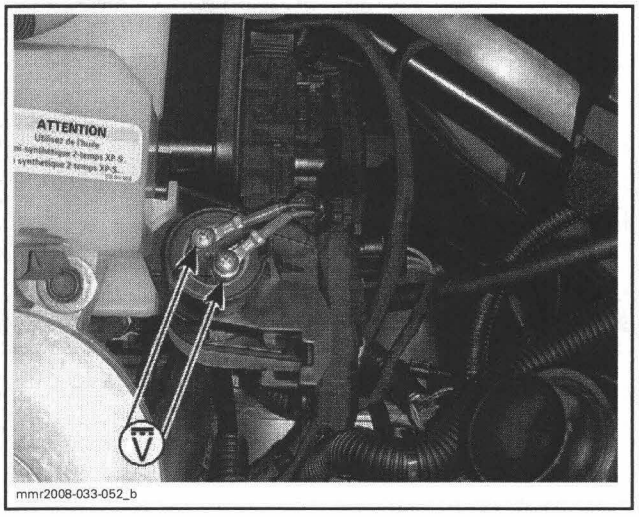

mmr2008-033-052_b

If measurement is out of specification, check capacitor relay and fuse F8. If it is good, replace capacitor.

If in doubt, proceed with the following residual voltage test.

Residual Voltage Test

Discharge capacitor.

Press START/RER button to energize capacitor.

On manual start models, crank engine one time.

Connect a switch (in OFF position) and a 300 Ω 5 W resistor to the capacitor.

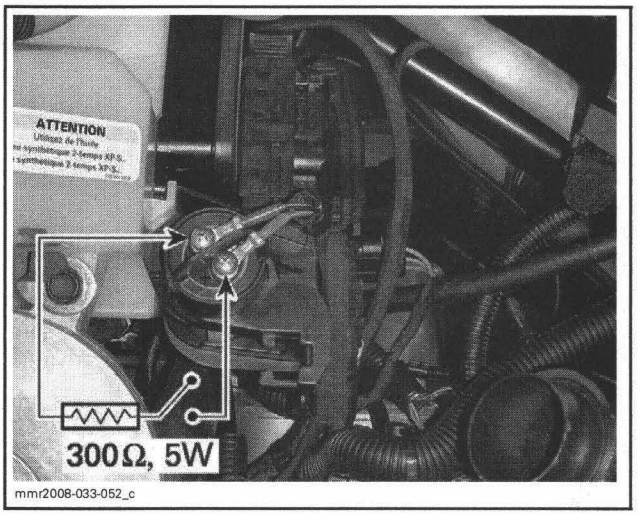

mmr2008-033-052_c

Turn on the switch for 12 seconds ± 1 second of discharge.

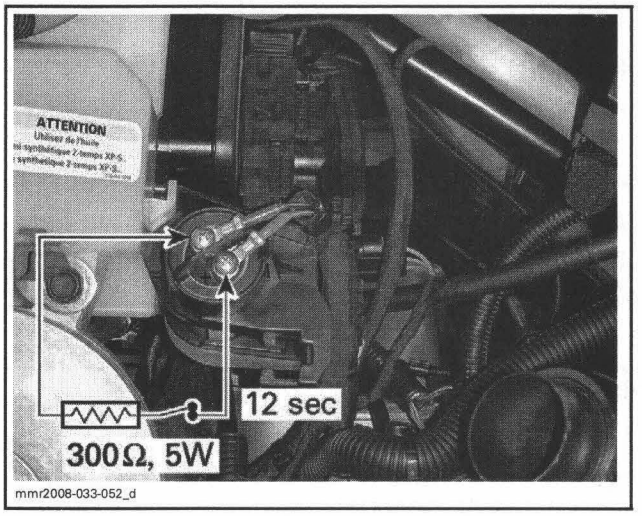

mmr2008-033-052_d

Use a multimeter and set it to Vdc.

Read capacitor voltage. Ensure to use the multimeter RED probe with the + terminal of capacitor.

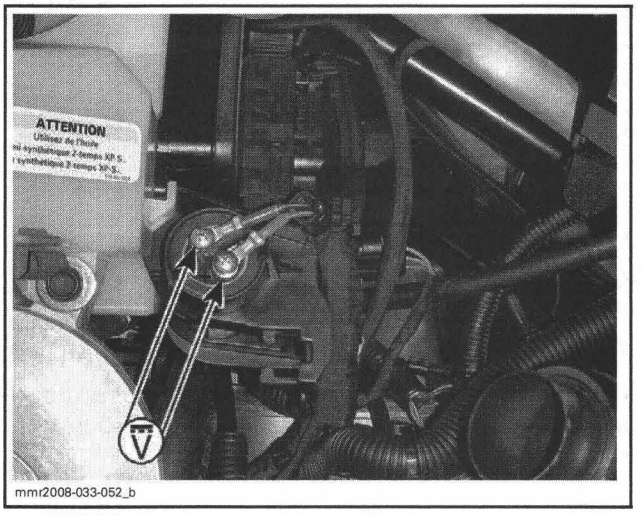

mmr2008-033-052_b

CAPACITOR RESIDUAL VOLTAGE
Must be above 5 Vdc

If measurement is out of specification, replace capacitor.

Capacitor Removal

Remove tether cord from its post.

Discharge capacitor.

Disconnect capacitor terminals and unfasten capacitor.

Capacitor Installation

Discharge capacitor.

Install the capacitor.

Make sure to connect BLACK wire to negative terminal and RED/WHITE to positive terminal.

⚠ WARNING

Always respect the polarity when connecting the capacitor.

Capacitor Relay (R1) Continuity Test

NOTE: The capacitor relay prevents the capacitor to be connected to the battery when the engine is not running to allow safe vehicle maintenance (disconnection and reconnection of the capacitor).

NOTE: Relays 1 and 2 work together. They are wired in palallel.

Remove relay 1 from fuse box.

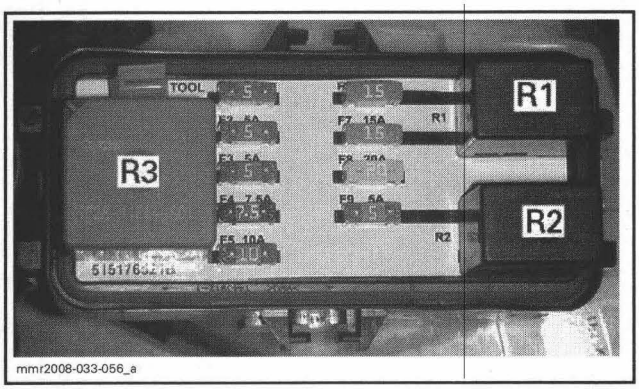

mmr2008-033-056_a

Use the Fluke 111 multimeter (P/N 529 035 868), and select the Ω position.

Probe relay as follows.

TERMINAL		RESISTANCE
30	87	Open circuit (0L)

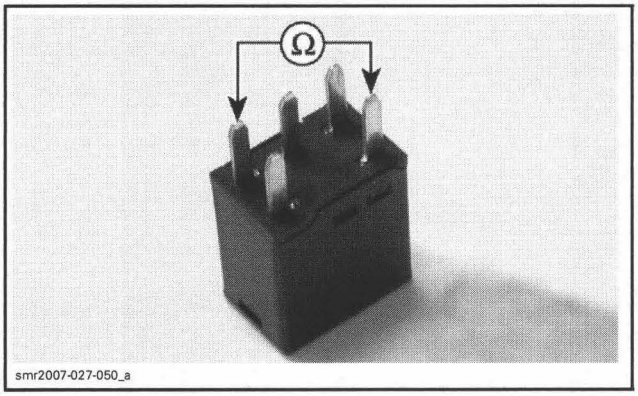

smr2007-027-050_a

Connect battery as shown and probe relay again as follows.

TERMINAL		RESISTANCE
30	87	0.5 Ω max. (continuity)

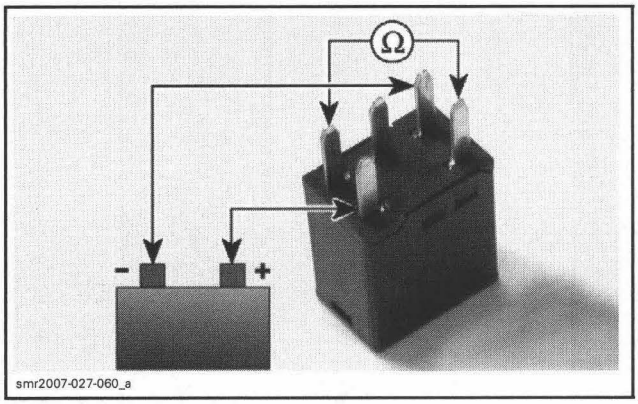

smr2007-027-060_a

If relay failed any test, replace it.

IGNITION SYSTEM

SERVICE TOOLS

Description	Part Number	Page
ECM troubleshooting tool	420 277 010	287
digital inductive type tachometer	529 014 500	282
Fluke 111 multimeter	529 035 868	280
supply harness	529 035 869	291
supply cable	529 035 997	291
ignition timing tool	529 036 129	280

SERVICE PRODUCTS

Description	Part Number	Page
Loctite 767 (antiseize lubricant)	293 800 070	283

GENERAL

NOTE: On applicable models, it is good practice to check for fault codes using B.U.D.S. software as a first troubleshooting step. Refer to *MONITORING SYSTEM/FAULT CODES*.

It is important to check that the electrical system is not at fault:

- Fuses
- Power relay
- Ground connections
- Wiring connectors.

Check related-circuit fuse solidity and condition with an ohmmeter. Visual inspection could lead to false results.

Ensure that all electronic components are genuine.

Electrical Connections

Always check electrical connections. Make sure that they are very tight and they make good contact and that they are corrosion-free.

Check ECM ground and battery connections. Ensure that contacts are good and clean.

A "defective module" could possibly be repaired simply by unplugging and re-plugging the ECM. The voltage and current might be too weak to go through dirty wire pins. Check carefully if pins show signs of moisture, corrosion or if they look dull. Pay particular attention to ensure that pins are not out of their connectors or out of shape. The troubleshooting procedures cover problems not resulting from one of these causes.

NOTE: Ensure all terminals are properly crimped on wires and connector housings are properly fastened. Check if wiring harness shows any signs of scoring.

IGNITION SYSTEM TESTING SEQUENCE

In the case of ignition problems, check the following in the prescribed order until the problem can be solved.

1. Spark plug
2. Wiring harness/electrical connectors
3. DESS post
4. Engine cut-out switch
5. Ignition coil
6. Trigger coil (**500SS/800R**)
7. CPS (**600 HO SDI**)
8. ECM (Engine Control Module).

Testing Conditions

Component temperature must be approximately 20°C (68°F) (room temperature), otherwise readings could be erroneous.

Tool

For best results, use the Fluke 111 multimeter (P/N 529 035 868).

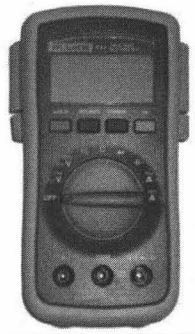

529 035 868

Analysis of Readings

Resistance Readings

Readings must be within the indicated range. Otherwise, repair or replace the component.

Intermittent Ignition Problems

It is difficult to make a diagnostic in the case of intermittent ignition problems. Thus, problems occurring only when the engine operating temperature is normal must be checked in similar conditions.

In most cases when problems are caused by temperature or vibrations, these can only be solved by replacing components. Many problems cannot be detected when the engine is stopped.

Multiple Problems

More than one component can be defective. As a result, if the problem remains although a component has been replaced, the entire testing procedure must be started over again from the beginning in order to identify the other defective component.

ADJUSTMENT

IGNITION TIMING

Normally, ignition timing adjustment should not be required. It has been set at factory and it should remain correctly adjusted since every part is fixed and not adjustable.

The only time the ignition timing might have to be changed would be when removing and reinstalling the magneto housing, replacing the crankshaft, the magneto flywheel, the trigger coil or the ECM. If the ignition timing is found incorrect, first check for proper crankshaft alignment. This might be the indication of a twisted crankshaft. Refer to *ENGINE MEASUREMENT* section.

PROCEDURE OVERVIEW
Scribe a timing mark
Check ignition timing with a timing light
Adjust timing if necessary using B.U.D.S. software

Scribing a Timing Mark

Ignition Timing Tool Installation

Remove the LH front engine mounting screw.

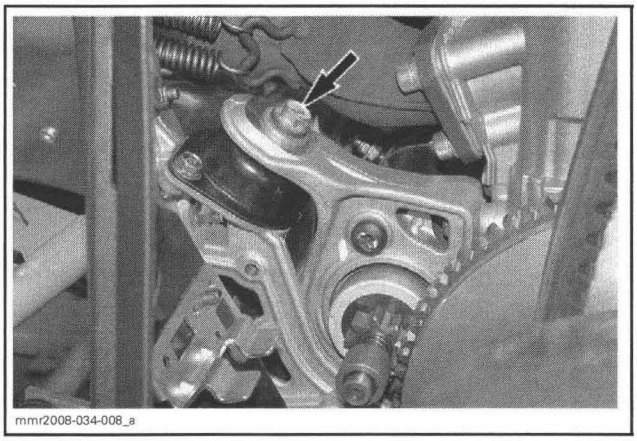

LH FRONT ENGINE MOUNT SCREW

NOTE: Note position of washers for installation.

Install the ignition timing tool (P/N 529 036 129) on the LH front engine mount.

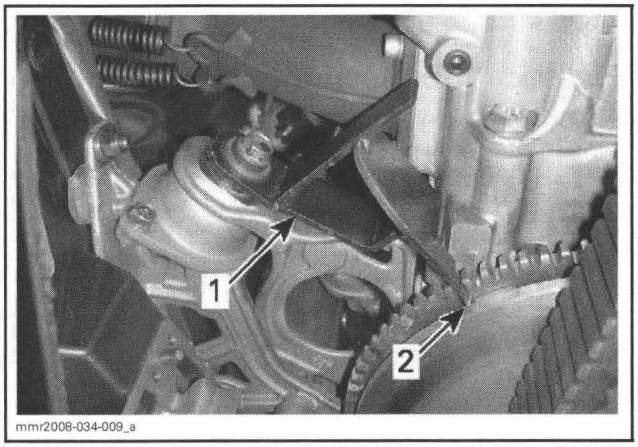

1. *Ignition timing tool*
2. *Pointer*

TDC Gauge Installation

Clean the area around the MAG spark plug, and remove it.

Install the TDC gauge in the spark plug hole, (magneto side) and adjust as follows:

- Position the MAG piston at approximately TDC.

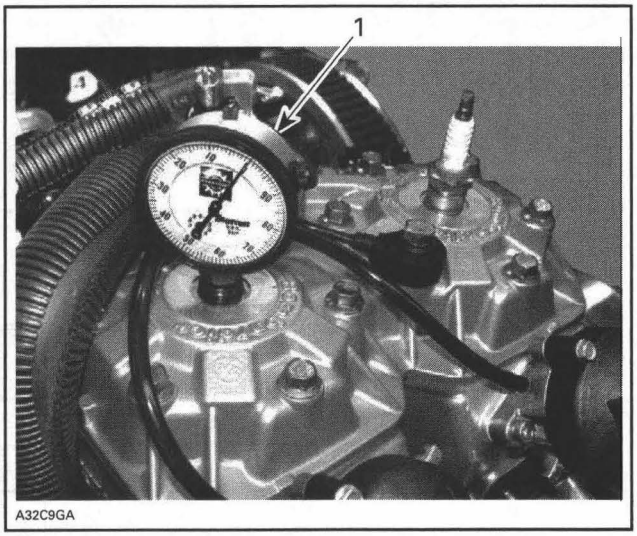

TYPICAL
1. TDC gauge on MAG side

- Assemble the gauge to the adaptor and tighten the roller lock nut. Do not tighten the adaptor lock nut.
- Screw the adaptor into the spark plug hole and tighten to prevent movement in the plug hole.
- Position the dial face toward the PTO. Move the gauge down until the needle just begins to move, then move down a further 5 or 6 mm (approximately 1/4 in). Tighten adaptor lock nut by hand.

Locate the piston TDC position as follows:

- Slowly rotate the drive pulley back and forth across TDC while observing the needle. Note that the needle stops moving only as the piston is changing direction.
- Rotate the dial face so that "0" is in line with the needle when it stops moving.
- Again, slowly rotate the drive pulley back and forth across TDC and adjust the dial face to "0", until the needle always stops exactly at "0" before changing direction.
- "0" now indicates exact TDC.

Rotate the drive pulley clockwise, one-quarter turn then carefully rotate it counterclockwise until the needle indicates the specified measurement, indicated in *TECHNICAL SPECIFICATIONS*.

Scribing the Mark

With the TDC gauge indicating specified timing (refer to *TECHNICAL SPECIFICATIONS*, scribe a mark on drive pulley inner half in line with pointer end.

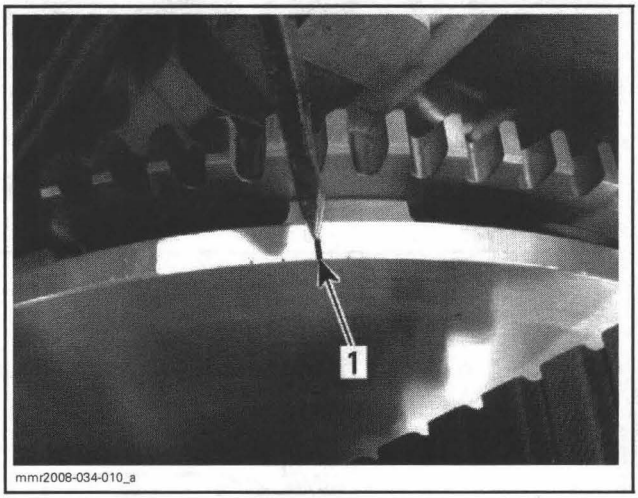

1. Timing mark in line with pointer end

Checking Ignition Timing

The ignition timing can be checked with either the engine hot or cold at the specified RPM.

ENGINE SPEED TO CHECK IGNITION TIMING	
MODELS	ENGINE RPM
500SS and 800R	3500 (1)
600 HO SDI	4000

(1) In the 3000 to 4000 RPM range, the spark advance does not change. Therefore, at 3500 RPM, a change in engine speed of ± 500 RPM will not affect the timing mark.

To check the ignition timing proceed as follows:

⚠ WARNING

Place ski tips against a wall, raise rear of vehicle on a stand, so that track does not contact the ground. Do not allow anyone in front of or behind the vehicle while engine is running. Keep clear of track and do not wear loose clothing which can get caught in moving parts.

NOTE: On **800R models**, unplug TPS connector.

Connect the timing light pick-up to the **MAG** side spark plug cable.

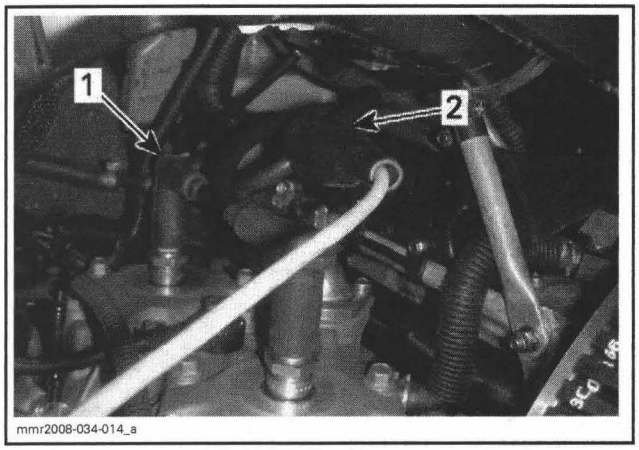

TIMING LIGHT CONNECTION
1. *MAG side spark plug*
2. *Timing light connection to MAG plug cable*

Connect the digital inductive type tachometer (P/N 529 014 500) to a spark plug cable.

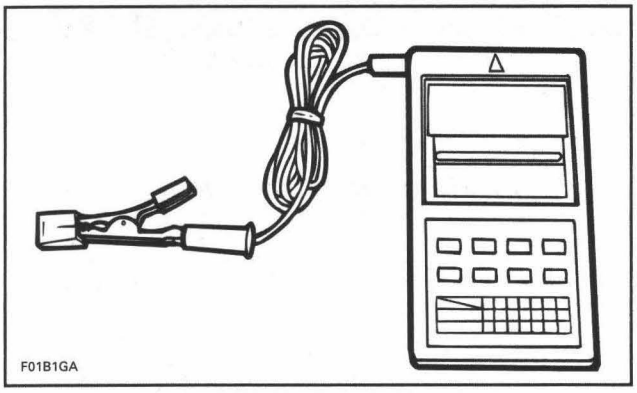

TACHOMETER

CAUTION: Before starting engine, check cable routing of test equipment to make sure it cannot come into contact with rotating parts or with the exhaust manifold.

Start the engine and point timing light on timing mark. Bring engine to the specified RPM for a brief instant.

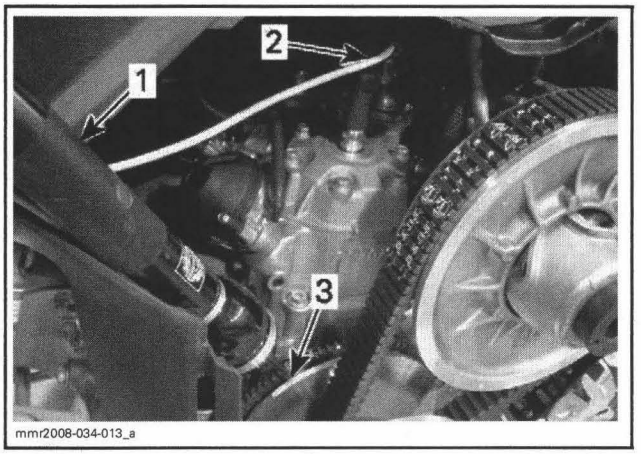

1. *Inductive timing light*
2. *Timing light cable to MAG plug*
3. *Timing mark/pointer alignment*

The timing mark must be aligned with the pointer end within the specified tolerance.

MODEL	TOLERANCE
500SS, 800R	± 1°
600 HO SDI	± 0.5°

If marks are aligned, no adjustment is required.

If marks are not aligned, note if timing is retarded or advanced as shown. Then, adjust timing as described below.

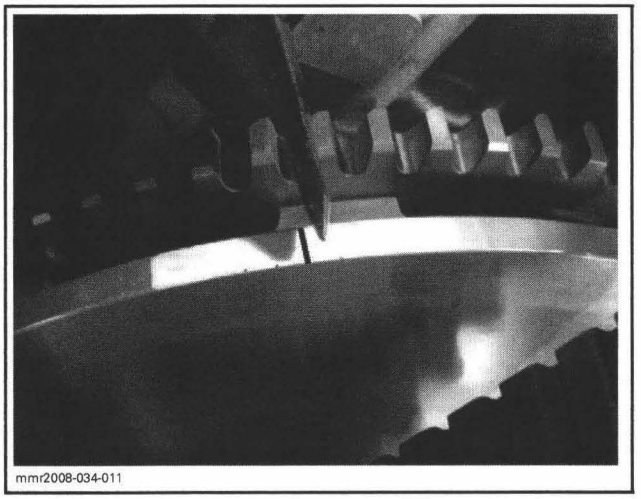

TIMING RETARDED BY ABOUT 1°

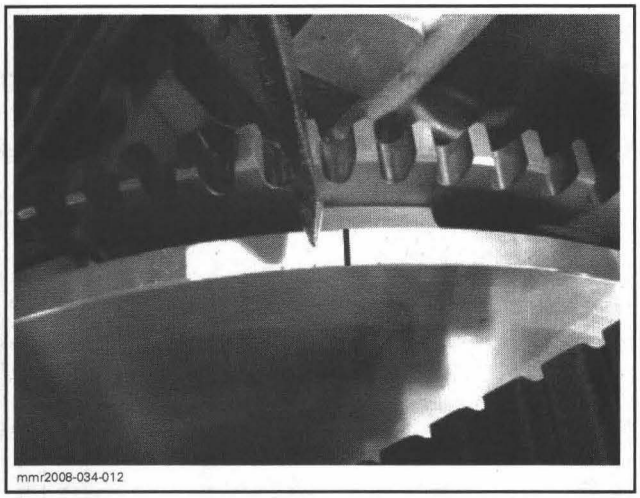

TIMING ADVANCED BY ABOUT 2°

Adjusting Timing

Use the latest B.U.D.S. software available from BOSSWeb. Refer to *COMMUNICATION TOOLS/B.U.D.S. SOFTWARE* section.

Uses the **Setting** tab to change the ignition timing.

Detailed information about the B.U.D.S. software and its usage is available under its **Help** section.

NOTE: On **800R models**, ensure to reconnect TPS connector.

Parts Reinstallation

When ignition timing procedure is completed, remove all tools.

Install engine mounting bolt and torque to 25 N•m (18 lbf•ft).

NOTE: Install the flat washer first then the conical washer.

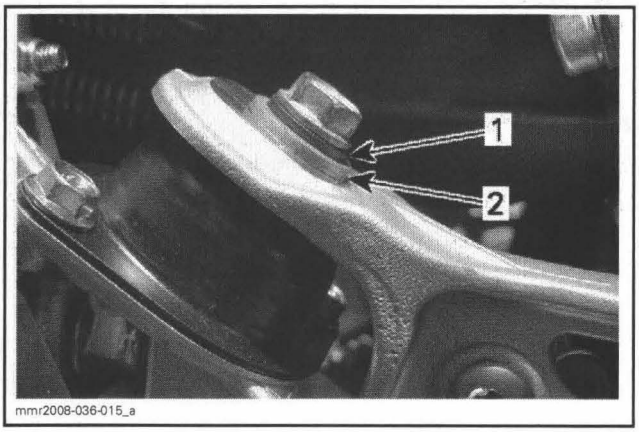

1. *Conical washer*
2. *Flat washer*

PROCEDURES

SPARK PLUG

Spark Plug Removal

First unscrew the spark plug 1 turn.

Clean the spark plug and cylinder head with pressurized air, then completely unscrew and remove spark plug.

⚠ WARNING

Whenever using compressed air, always wear protective eye wear.

Spark Testing

Use the spark plug installed in the snowmobile engine and not a new one. Bring the plug in contact with the engine. Pull rewind starter. If no spark is produced, replace the spark plug with a new one and redo the test again.

If there is still no spark, continue testing.

Spark Plug Installation

Prior to installation make sure that contact surfaces of the cylinder head and spark plug are free of grime.

Using a feeler gauge, set electrode gap (except if spark plug is an ECS type) as per *TECHNICAL SPECIFICATIONS*.

1. Apply Loctite 767 (antiseize lubricant) (P/N 293 800 070) over the spark plug threads to prevent possible seizure.
2. Hand screw spark plug into cylinder head and tighten with a torque wrench and a proper socket.

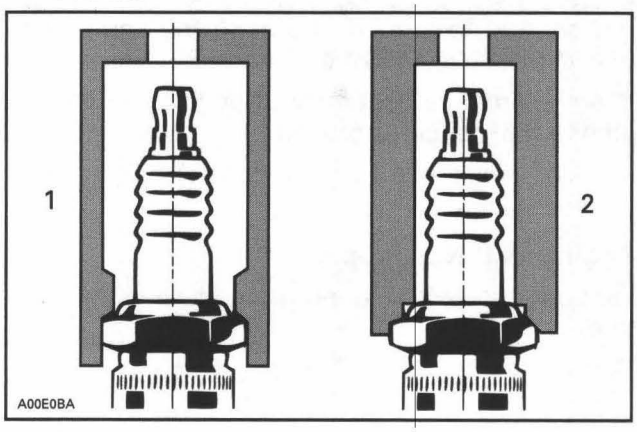

TYPICAL
1. *Proper socket*
2. *Improper socket*

Use the following table to torque the spark plug.

MODEL	SPARK PLUG	TORQUE N•m (lbf•ft)
All	NGK	27 (20)

DESS POST

Refer to *DIGITALLY ENCODED SECURITY SYSTEM (DESS)*.

ENGINE CUT-OUT SWITCH

Engine Cut-Out Switch Operation

The cut-out switch provides a ground signal to the ECM when STOP is selected.

500SS/800R

The ground signal is applied to the ECM connector pin 23, through the cut-out switch (STOP position).

600HO SDI

The ground signal is applied to the ECM connector "B" pin 21, through the cut-out switch (STOP position).

Refer to applicable *WIRING DIAGRAM* for details.

Cut-Out Switch Troubleshooting

Engine Will Not Start, No Spark

If the engine will not start and you do not have spark at the spark plugs, the cut-out switch wiring to the ECM may be shorted to ground.

Isolate (disconnect) the cut-out switch from the wiring harness and the applicable ECM connector.

Test the cut-out switch as per procedure in this section.

Test the wiring harness wire to the cut-out switch and the wire to the ECM to make sure they are not shorted to ground. Refer to the appropriate *WIRING DIAGRAM* for circuit details.

You should have continuity through the wire, but infinite resistance to ground.

If a low resistance to ground is found, repair or replace wiring.

Engine Will Not Stop

Test cut-out switch as per procedure in this section.

Test continuity of entire cut-out switch circuit from ECM to ground, refer to the appropriate *WIRING DIAGRAM* for circuit details.

If cut-out switch circuit is found to be open, repair or replace switch, wiring, or connections.

Engine Cut-Out Switch Resistance Test

To test the cut-out switch, carry out the following steps.

Disconnect the 6 pin connector under the steering cover.

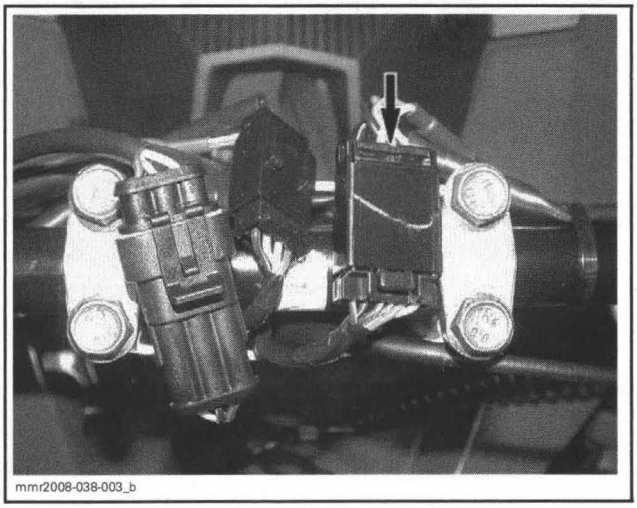

TYPICAL — SDI MODEL SHOWN

Set multimeter to Ω.

Measure the resistance between the BLACK wire and the BLACK/YELLOW wire as follows.

ENGINE CUT-OUT SWITCH TEST		
SWITCH POSITION	RUN	STOP
RESISTANCE BK to BK/YL	0L	0 to 0.5 Ω

If readings do not correspond to the above mentioned indications, check switch wires/connector and if good, replace switch.

IGNITION COIL

500SS/800R

The ECM energizes the primary side of the ignition coil.

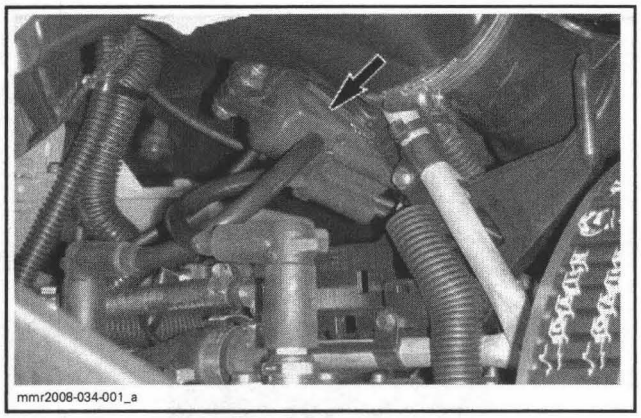

IGNITION COIL (LEFT FRONT VIEW)

600 HO SDI

Double ignition coil has two separate windings, one for each spark plug.

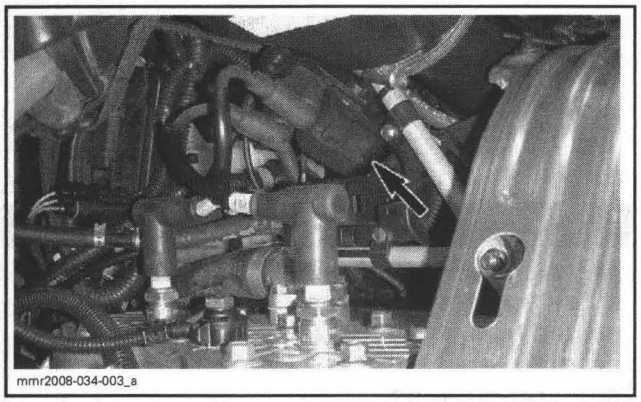

IGNITION COIL

Ignition coil induces voltage to a high level in the secondary windings to produce a spark at the spark plug.

This ignition system allows spark plugs to spark independently.

CAUTION: Do not interchange spark plug cables. Match reference (PTO or MAG printed on high tension cable yellow tag) with corresponding cylinder spark plug.

Two separate windings circuits are switched to ground through the ECM. Each winding induces high voltage to its corresponding secondary winding to produce a spark.

NOTE: The ECM energizes the primary winding of each ignition coil individually. It can detect if the double ignition coil is connected and display a trouble code in the multifunction display and a **CHECK ENGINE** upon engine starting.

Ignition Coil Test With B.U.D.S.

Use the latest B.U.D.S. software available from BOSSWeb. Refer to *COMMUNICATION TOOLS/B.U.D.S. SOFTWARE* section.

Energize each **ignition coil** from within the **Activation** tab.

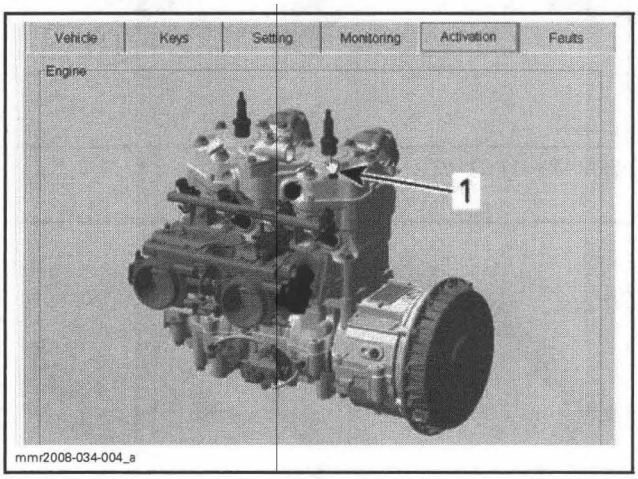

1. Activate here

You should hear the spark occurring. If in doubt, use an inductive spark tester.

Ignition Coil Resistance Test

500SS/800R

Disconnect primary winding terminals from ignition coil and spark plug cables from spark plugs.

Using a multimeter, check winding resistance as follows.

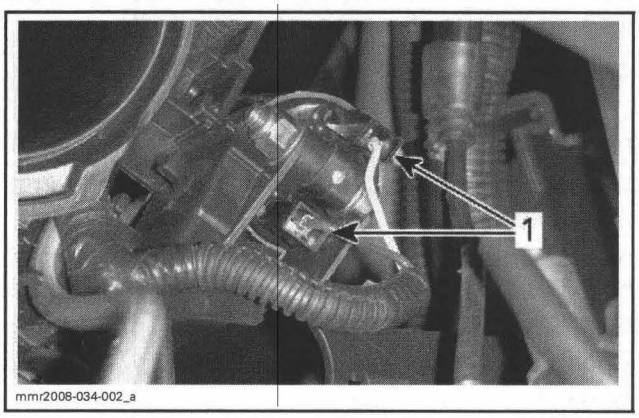

IGNITION COIL (SEEN FROM BEHIND)
1. Primary winding terminals

WINDING	RESISTANCE @ 20°C (68°F)
Primary	0.3 - .7 Ω
Secondary	18 kΩ - 26 kΩ with spark plug caps

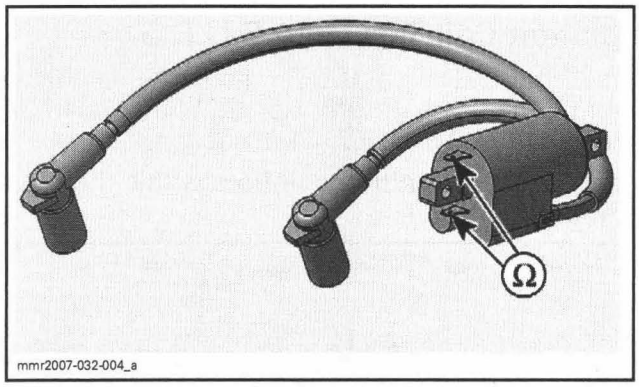

PRIMARY WINDING

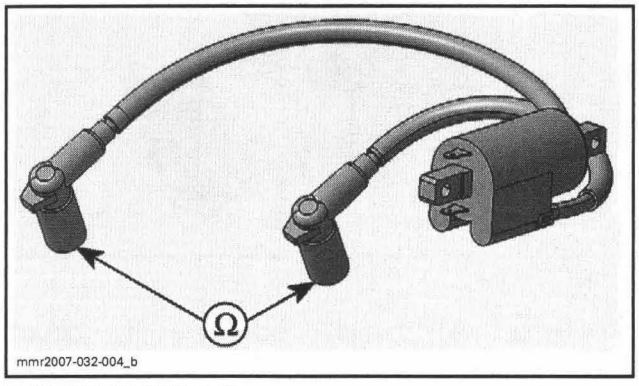

SECONDARY WINDING

If resistance readings are out of specification, replace ignition coil.

NOTE: Keep in mind that an ignition coil with good resistance measurements can still be faulty. Voltage leak can occur at high voltage levels which is not detectable with an ohmmeter. Replacing the ignition coil may be necessary as a test.

600 HO SDI

To ease access, remove ignition coil from vehicle, refer to *IGNITION COIL REMOVAL* in this section.

Using a multimeter, check the resistance of primary winding.

NOTE: The secondary winding can not be measured with an ohmmeter. Try a new double ignition coil if necessary.

Check the resistance of the primary winding as follows.

CYLINDER	IGNITION COIL TERMINAL	RESISTANCE @ 20°C (68°F)
1	15 and 1a	0.40 and 1.15 Ω
2	15 and 1b	

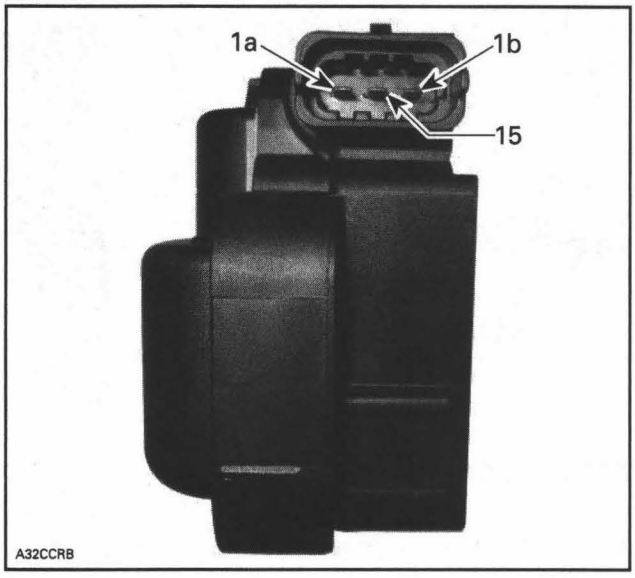

If any resistance is out of specification, replace the ignition coil.

If the windings test good, try a new ECM.

Reinstall coil assembly, refer to *IGNITION COIL INSTALLATION* in this section.

⚠ WARNING

Always reconnect ignition coil cables to the same spark plugs where they were disconnected from. Otherwise, severe backfire may occur with possible damage to exhaust system components.

Ignition Coil Input Voltage Test

600 HO SDI Electric Start

Disconnect the small connectors from the starter solenoid. This will prevent the starter from rotating the engine.

Remove the primary air intake silencer. Refer to *AIR INTAKE SYSTEM* section.

Disconnect the primary connector from the ignition coil.

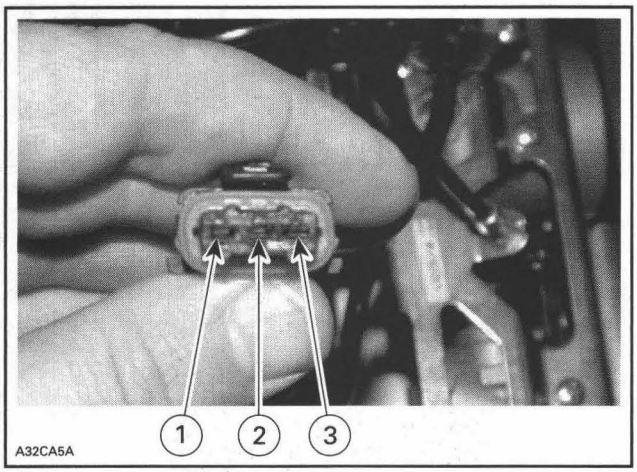

TYPICAL — IGNITION COIL CONNECTOR

Install the **tether cord cap** on the DESS post.

Press the START/RER button momentarily to activate the ECM.

Check voltage as follows.

TERMINAL		VOLTAGE (Vdc)
2	Battery ground	Battery voltage

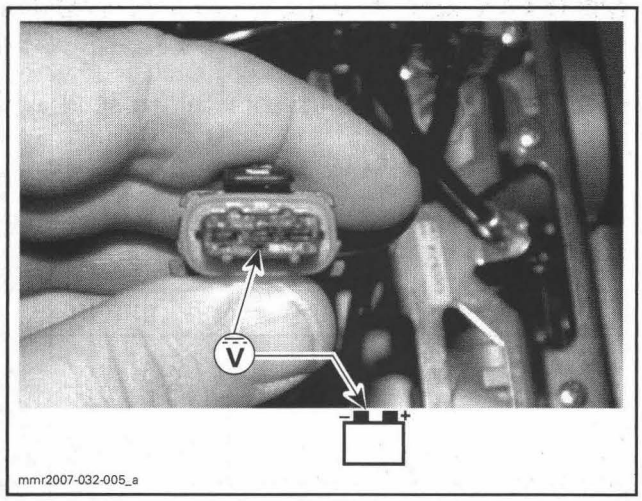

INPUT VOLTAGE TEST (PRIMARY COIL WINDING)

If battery voltage is NOT read, check continuity between terminal 2 of ignition coil and the corresponding fuse (F5). Repair or replace wiring as required.

If battery voltage is read, check the following:

- Ignition coil resistance test.
- Continuity test of primary coil winding circuit to ECM.

Reconnect connectors previously removed.

Continuity Test (Ignition Coil Control Circuit)

600 HO SDI Electric Start

Disconnect connector "A" from the ECM and install it on the ECM troubleshooting tool (P/N 420 277 010).

Test for continuity of the circuit between ECM connector and ignition coil connector as follows.

CYLINDER	CONNECTOR PIN		RESISTANCE
	ECM "A"	IGNITION COIL	
1	A-41	3	Close to 0 Ω (continuity)
2	A-1	1	

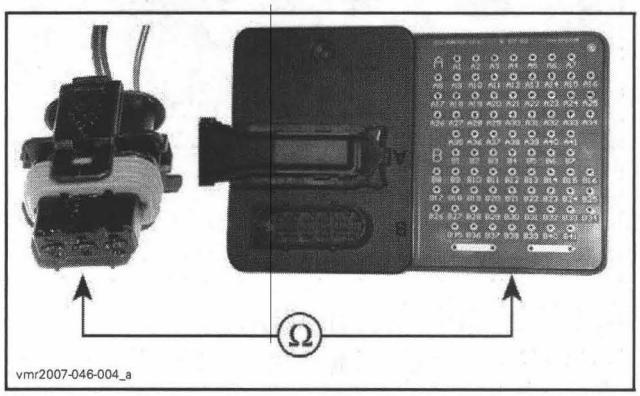

If wiring harness is defective, repair the connector or replace the wiring harness between ECM connector and the ignition coil.

If wiring harness is good, test resistance of primary winding of ignition coil.

Ignition Coil Removal

Note position of spark plug cables and remove them from the spark plugs.

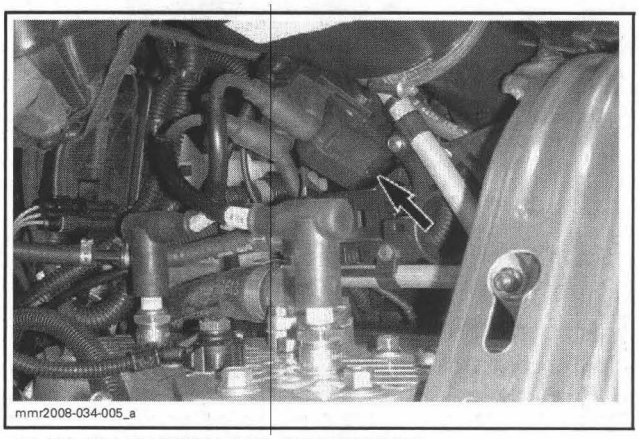

600 HO SDI IGNITION COIL (FRONT VIEW)

Remove primary air intake silencer. Refer to *AIR INTAKE SYSTEM* section.

Disconnect ignition coil primary winding connector.

Remove the coil retaining screw in the center of the two coils.

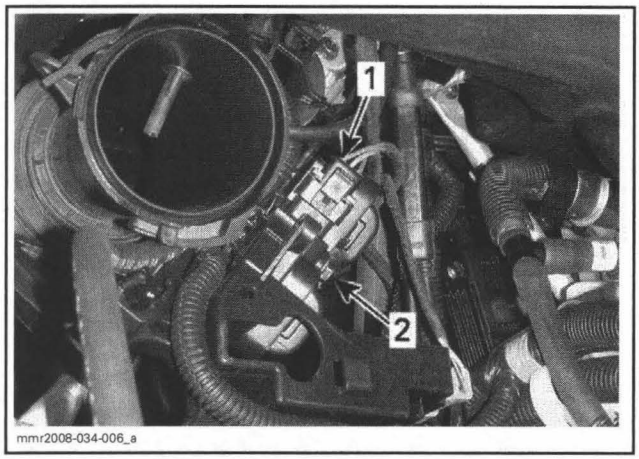

600 HO SDI IGNITION COIL (REAR VIEW)
1. *Primary winding connector*
2. *Coil retaining screw*

Remove coil from retaining bracket.

Ignition Coil Installation

Position coil as per illustration.

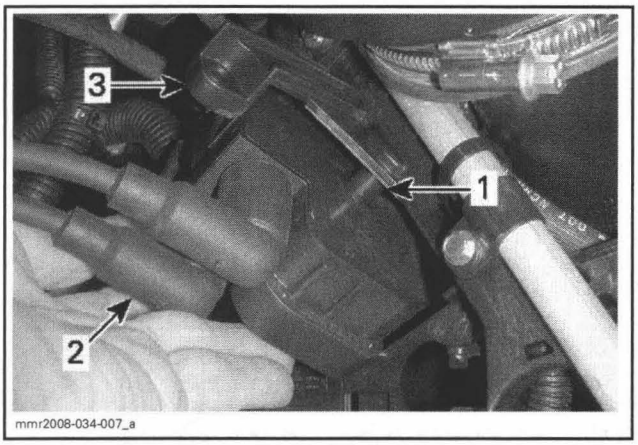

COIL INSTALLATION
1. *Retaining screw post*
2. *Spark plug cable position*
3. *Coil mounting bracket*

Install the retaining screw and torque to 10 N•m (89 lbf•**in**).

Reconnect the primary winding connector and the spark plug cables.

NOTE: Pay attention to the position of the spark plug cables when connecting them.

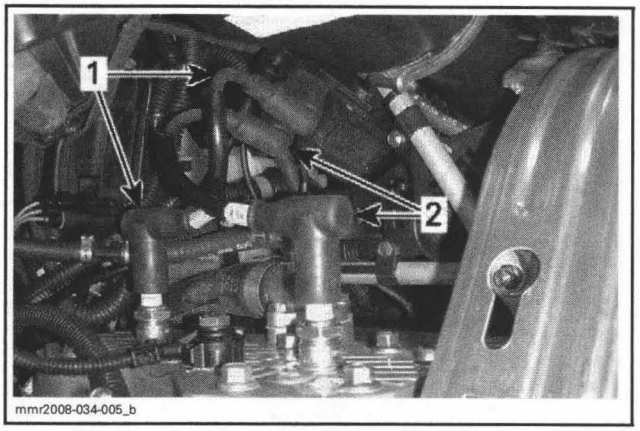

1. *MAG plug cable connection*
2. *PTO plug cable connection*

⚠ WARNING

Always reconnect ignition coil cables to the same spark plugs where they were disconnected from. Otherwise, severe backfire may occur with possible damage to exhaust system components.

TRIGGER COIL

500SS/800R

The ECM receives a signal from each of two trigger coils which it uses for establishing spark timing.

NOTE: Both trigger coils work all the time.

Check the resistance and the voltage for each trigger coil at the ECM connector.

TEST	CONTINUITY		OUTPUT	
TEST PROBES	Trigger coil #1	Trigger coil #2	Trigger coil #1	Trigger coil #2
	Pin 17 and 35	Pin 18 and 36	Pin 17 and 35	Pin 18 and 36
RESISTANCE	190 to 300 Ω	190 to 300 Ω	—	—
VOLTAGE	—	—	.200 to .350 Vac	.200 to .350 Vac
NOTE	—	—	While cranking engine	While cranking engine

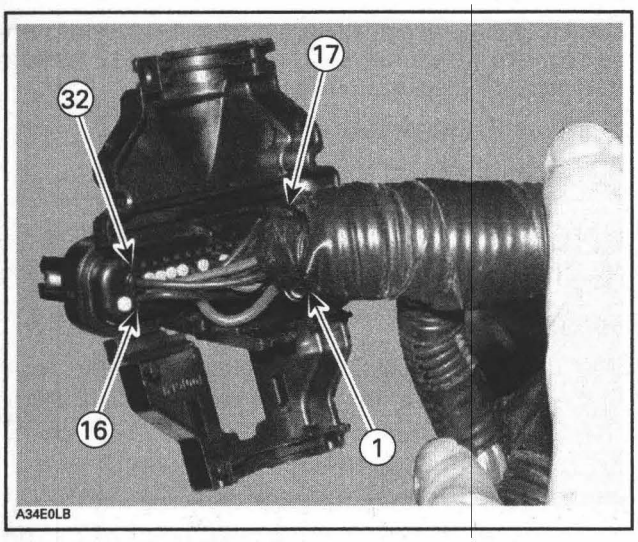

ECM CONNECTOR PINOUT

If a trigger coil is out of specification, replace it. Refer to the *MAGNETO SYSTEM* section.

CRANKSHAFT POSITION SENSOR (CPS)

600 HO SDI

To test CPS, Refer to *SEMI-DIRECT INJECTION (SDI)* section.

KNOCK SENSOR (KS)

800R

NOTE: For 600 HO SDI, refer to *SEMI-DIRECT INJECTION (SDI)* section.

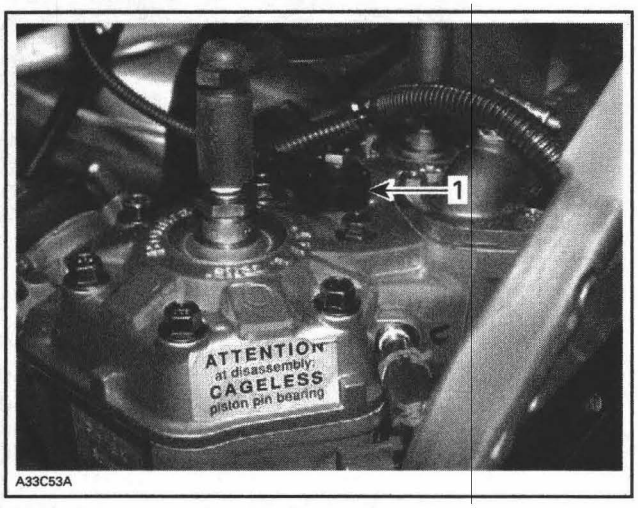

1. Knock sensor (KS)

KS Dynamic Test

Lift rear of vehicle off the ground and support it with a wide-base mechanical stand.

Use B.U.D.S. software.

Monitor the knock sensor using the **Knock sensor signal** in **Monitoring** section in B.U.D.S.

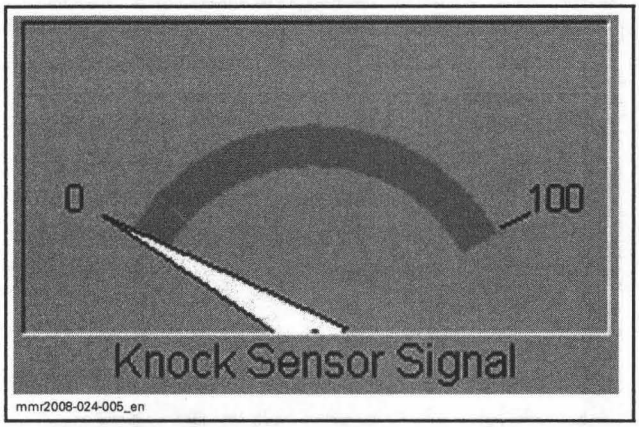

MONITORING TAB

Start the engine.

Bring engine speed above 5200 RPM and vary engine RPM above 5200 RPM.

Needle of knock sensor signal should move between 0 and 100. The needle movement pattern is of no importance as long as it moves indicating the engine vibrations the knock sensor senses. If needle "sticks" either to 0 or 100, there is a problem.

If needle moves as described, the knock sensor should be good.

Otherwise, do the following.

NOTE: Ensure ignition coil cables are not close to knock sensor harness. This might generate a false fault code.

NOTE: Fault code P1326 might occurs but it is not related with a knock sensor failure. If this code occurs, refer to B.U.D.S. for proper action to take.

Verify knock sensor circuit as follows.

KS Circuit Continuity Test

Ensure sensor and head contact surfaces are clean and mounting bolt and washer are correct and properly torqued down.

Check the knock sensor circuit on wiring harness.

Disconnect knock sensor connector. Refer to *KNOCK SENSOR REPLACEMENT.*

Disconnect ECM connector.

Check wire continuity of circuit as per following table.

CIRCUIT NUMBER (ECM CONNECTOR)	KS CONNECTOR
DA-2	Pin 1
DA-20	Pin 2

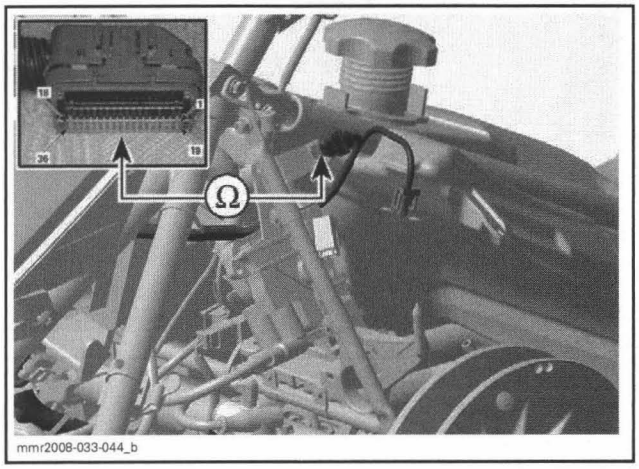

If test is not good, repair/replace wiring/connectors between ECM and knock sensor.

If test is good, try a new knock sensor.

KS Replacement

Unscrew and remove knock sensor from cylinder head.

Remove pulley guard. Refer to *DRIVE SYSTEM/ BRAKE.*

Remove primary air intake silencer. Refer to *AIR INTAKE SYSTEM.*

Unplug knock sensor connector above ATS.

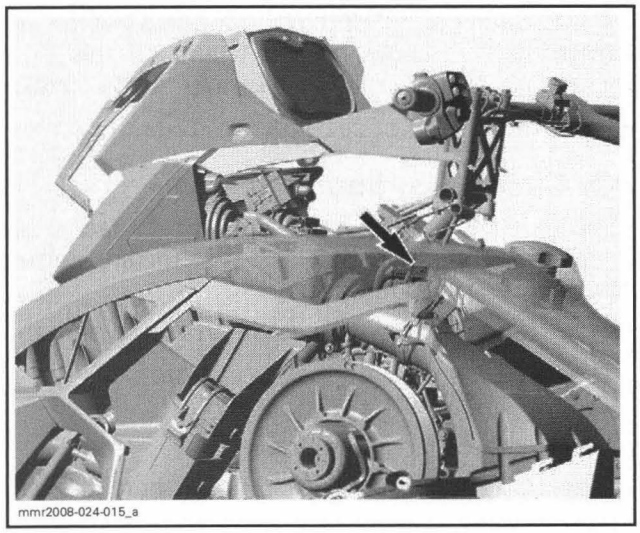

Clean contact surface, then install the new knock sensor.

Torque screw to 29 N•m (21 lbf•ft).

CAUTION: Improper torque might prevent sensor to work properly and lead engine to severe damage of internal components.

Reconnect connector.

Reinstall remaining parts.

ENGINE CONTROL MODULE (ECM)

500SS/800R

Use the latest B.U.D.S. software available from BOSSWeb for the following procedures. Refer to *COMMUNICATION TOOLS AND B.U.D.S. SOFTWARE* for proper connection instructions.

IMPORTANT: Engine-related sensors and actuators are continuously powered when engine runs. **The ECM switches the ground to complete the electrical circuits it controls.** Take this into account when troubleshooting the electrical system.

ECM Connector Pin Identification

Use the following illustration to locate the pin numbers on the ECM connector (wiring harness side) when performing tests.

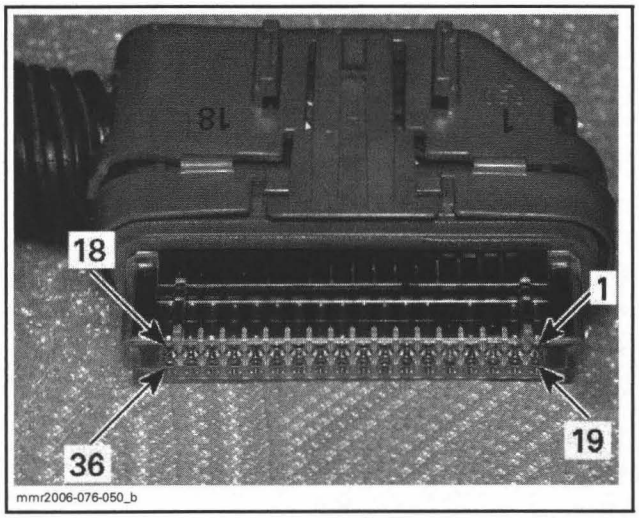

ECM Power

At cranking, the magneto sends AC current to the voltage regulator/rectifier that in turn, supplies the ECM with DC voltage. The ECM then supplies the ignition for engine starting.

When engine runs and reaches approximately 800 RPM, the ECM activates the power relay that in turn, supplies the electrical loads (lights, accessories etc).

ECM Power Supply

Power (Vdc)	Pin 14
Ground	Pin 16

ECM Power Supply Troubleshooting

Connect supply harness (P/N 529 035 869) to the 6-pin diagnostic connector of vehicle.

Connect supply cable (P/N 529 035 997) to supply harness.

Connect supply harness clips to vehicle battery. Ensure to match RED wires together and BLACK wires together.

NOTE: On manual start models, use an external 12 V battery.

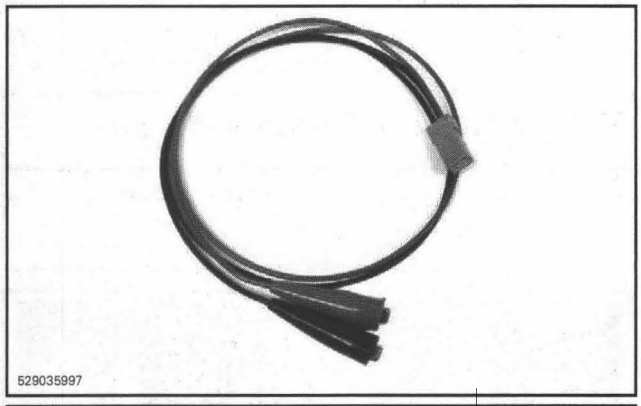
529035997

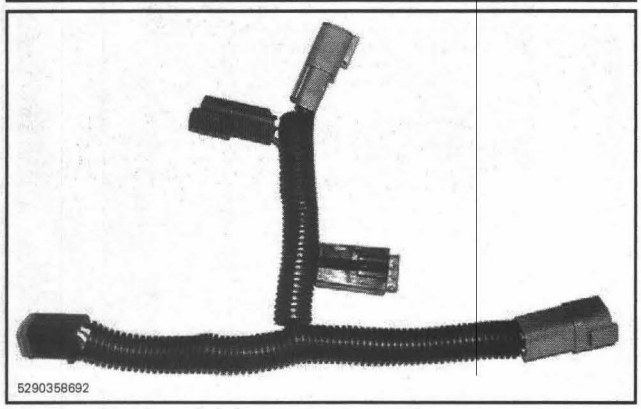
5290358692

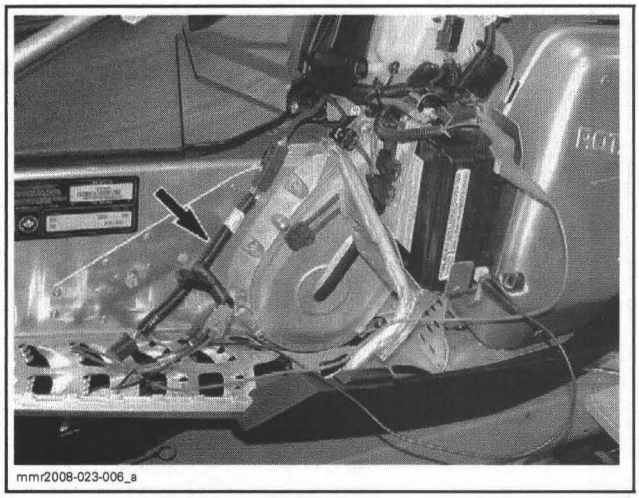
mmr2008-023-006_a

CAUTION: Always use the proper supply harness and cables. Ensure to respect polarity when connecting cable clips to battery. Match RED cables together.

NOTE: It is suggested to disconnect headlamp or to connect a battery charger to reduce battery discharge rate.

IMPORTANT: When using the supply harness, ignition is disabled. Therefore, no engine starting can take place.

Set engine cut-out to RUN.

Observe multifunction gauge and listen to the beeper. Use this table for the proper action to take.

OBSERVATION	ACTION TO TAKE
2 beeps were heard and the multifunction gauge turned on	Normal condition. ECM and multifunction gauge are properly powered.
No beeps were heard and the multifunction gauge did not turn on	Check DC voltage output from voltage regulator/rectifier. Refer to *CHARGING SYSTEM.*
Only 2 beeps were heard	Check multifunction gauge power supply. Refer to *LIGHTS/GAUGE/ ACCESSORIES.*
Only multifunction gauge turned on. Communication error was displayed in multifunction gauge.	Perform *ECM POWER SUPPLY TEST* described below.

Disconnect supply harness.

ECM Power Supply Test

Open RH side panel.

Pull out diagnostic connector.

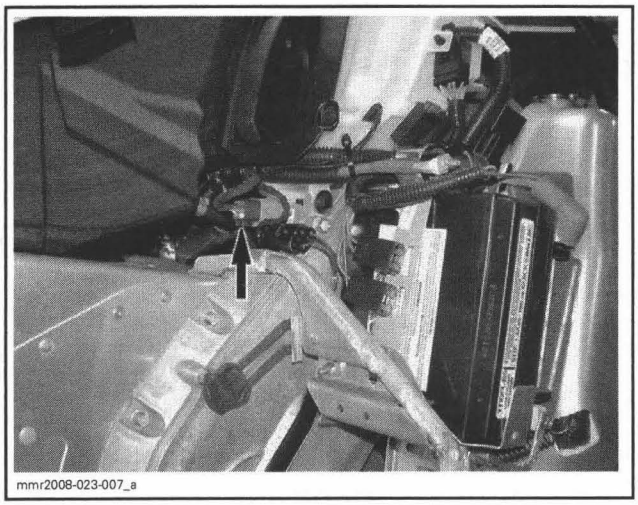
mmr2008-023-007_a

Use a multimeter and set it to Vdc.

Set engine cut-out switch to the STOP position.

500SS/800R Electric Start

Electric starter can be used for the test as follows.

Disconnect ORANGE/BLACK wire from starting solenoid.


mmr2008-023-008_a

Install a jumper wire between solenoid connector and battery ground.

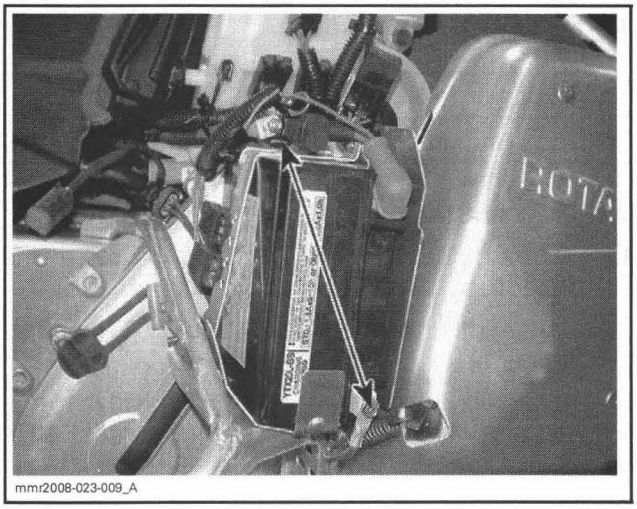
mmr2008-023-009_A

Press START/RER button to crank engine.

All 500SS/800R

While cranking engine, read voltage as follows.

MULTIMETER PROBES		VOLTAGE
Diagnostic connector pin 4	Chassis ground	Manual start: approx. 2-3 Vdc, electric start: approx. 6 Vdc

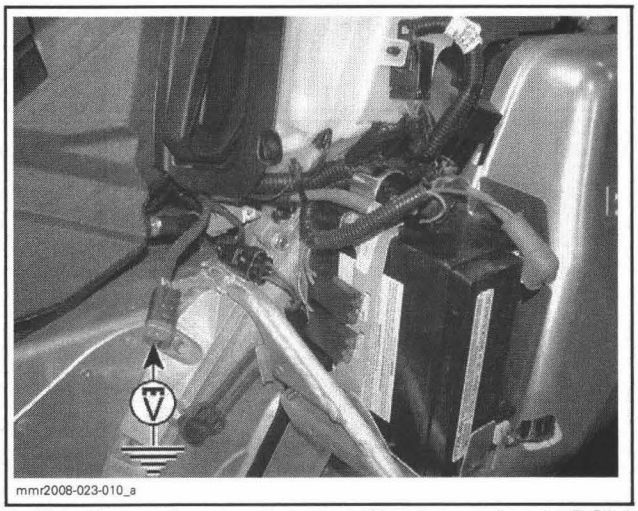
mmr2008-023-010_a

- If voltage is as per specification, check ECM Ground Circuit. Refer to *ECM GROUND CIRCUIT TEST.*
- If voltage is not as per specification, check ECM Power Circuit. Refer to *ECM POWER CIRCUIT CONTINUITY TEST.*

ECM Ground Circuit Test

Remove muffler. Refer to *EXHAUST SYSTEM.*

Remove the acoustic panel.

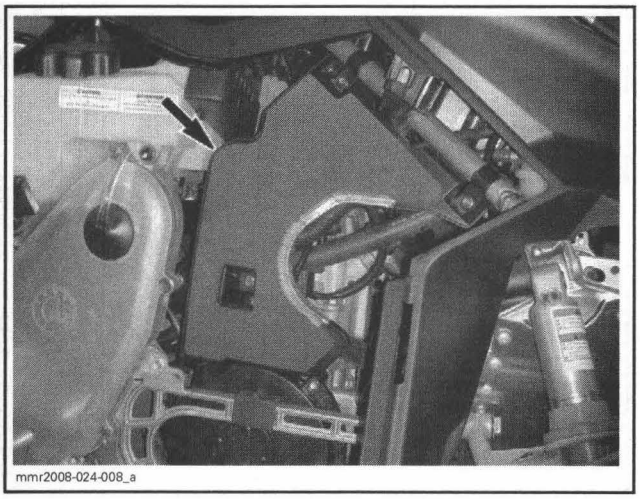
mmr2008-024-008_a

Disconnect ECM connector.

Set multimeter to Ω.

Read wiring resistance as follows.

ECM CONNECTOR	RESISTANCE
Pin 16 with frame ground	Close to 0 Ω

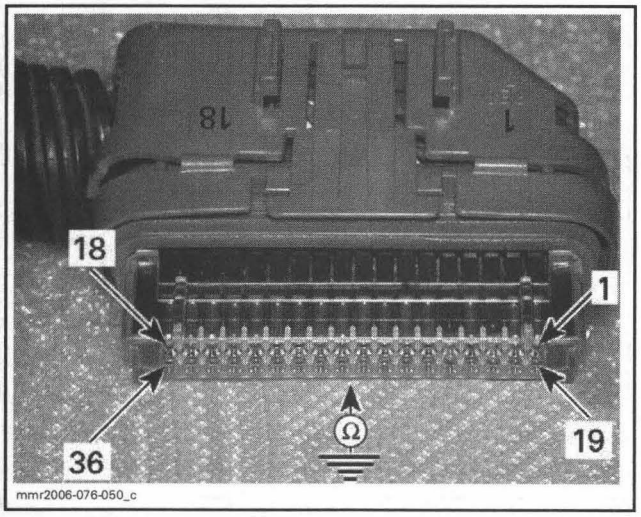

mmr2006-076-050_c

If reading is out of specification, check/repair wiring/connectors.

If reading is as per specification, ground circuit is good. check ECM Power Circuit. Refer to *ECM POWER CIRCUIT CONTINUITY TEST.*

ECM Power Circuit Continuity Test

IMPORTANT: Disconnecting ECM connector and reading voltage on connector terminal would give false results. ECM connector **must be connected to ECM** to be able to read the voltage. Since it cannot be easily achieved, a continuity test will be done instead.

Disconnect ECM connector.

Disconnect voltage regulator/rectifier connector.

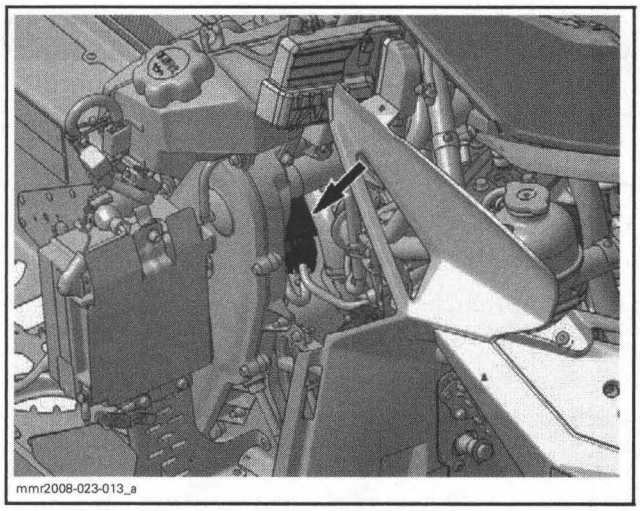
mmr2008-023-013_a

Set multimeter to Ω.

Read wiring resistance as follows.

ECM CONNECTOR	VOLTAGE REGULATOR	RESISTANCE
Pin 14	RED/BLUE	Close to 0 Ω

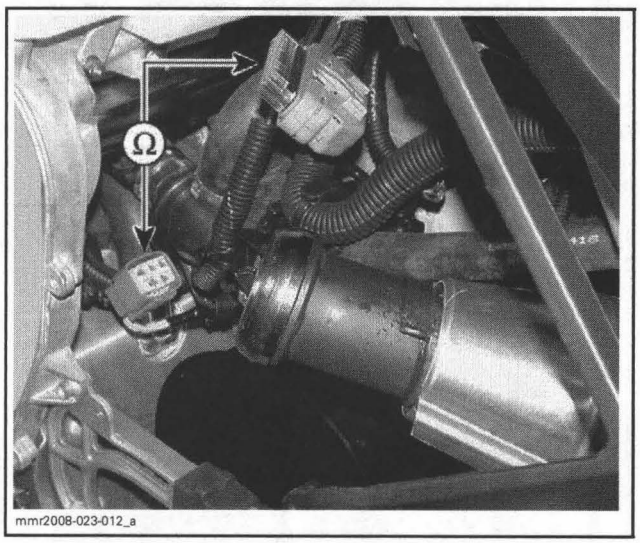

mmr2008-023-012_a

If reading is out of specification, check/repair wiring/connectors.

If reading is as per specification, check DC voltage output from voltage regulator/rectifier. Refer to *CHARGING SYSTEM.*

Reinstall removed parts.

ECM Replacement

ECM Removal

Disconnect battery cables on electric start models.

⚠ WARNING

Battery BLACK (-) cable must always be disconnected first and connected last.

Remove muffler. Refer to *EXHAUST SYSTEM.*

Remove the acoustic panel.

Cut locking ties as necessary.

Disconnect ECM connector.

Remove ECM as follows.

1. Push the LH upper tab and hold.

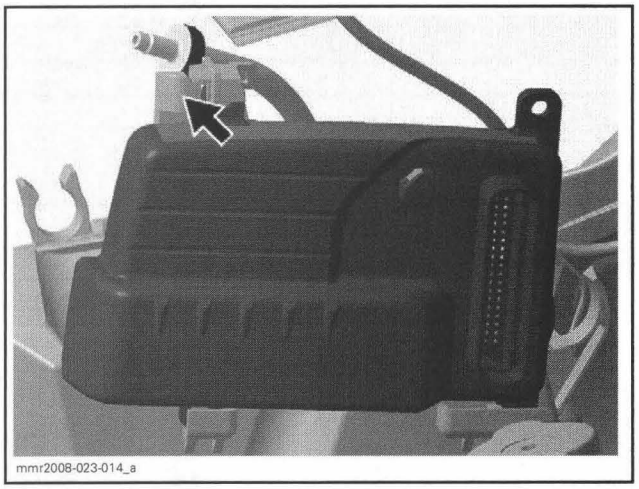
mmr2008-023-014_a

2. Rotate ECM counterclockwise.

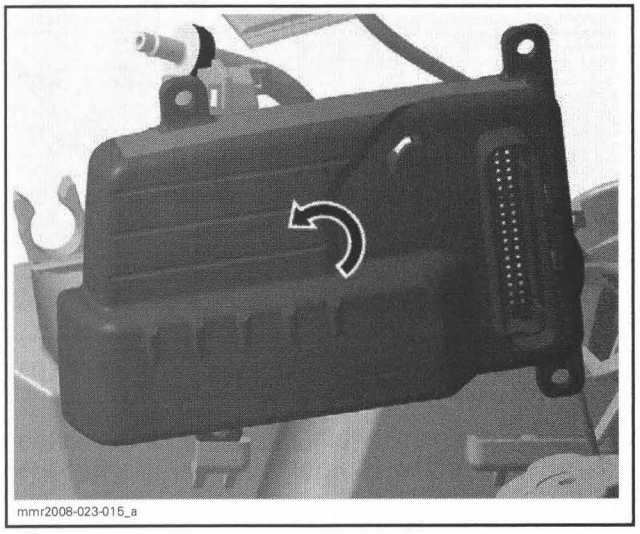
mmr2008-023-015_a

3. Pull out ECM.

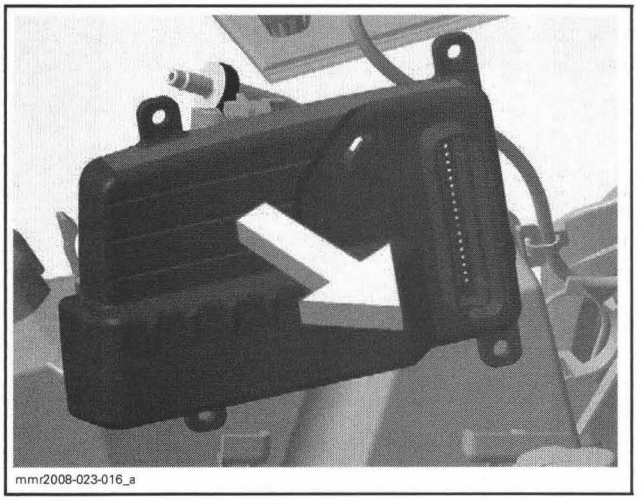
mmr2008-023-016_a

ECM Installation

Install ECM as follows.

1. Insert the LH bottom tab of ECM first.

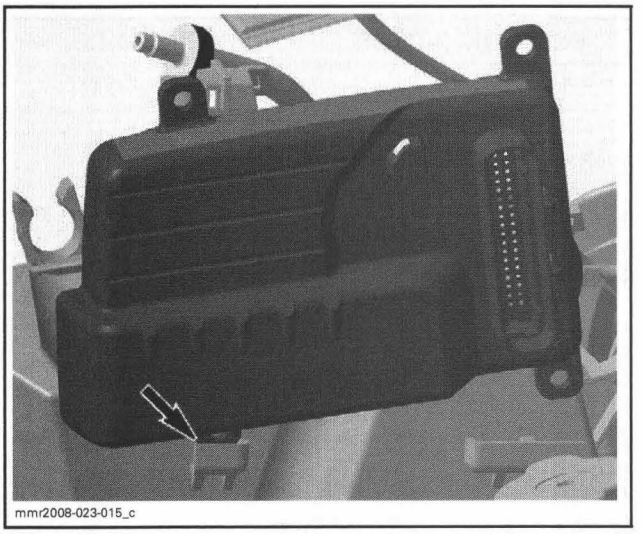
mmr2008-023-015_c

2. Rotate ECM clockwise until the other tabs are engaged and ECM locks in position.

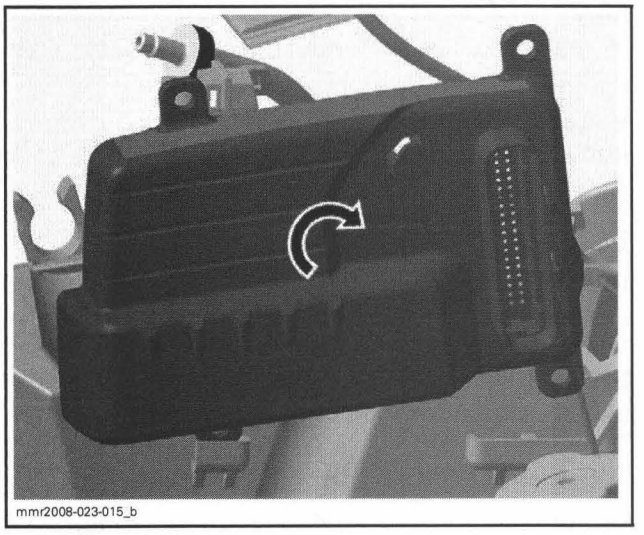
mmr2008-023-015_b

Reconnect ECM connector and then battery cables (if applicable).

Use B.U.D.S. software and do the following.

- Enter the proper information in **Vehicle** tab.

CAUTION: Pay particular attention when typing the VIN and model numbers. Once Write Data button is pressed, numbers cannot be modified.

- Reprogram DESS key. Refer to *DESS SYSTEM.*
- Set the ignition correction. Refer to *IGNITION SYSTEM.*
- Set the cluster units. Refer to *LIGHTS/GAUGE/ACCESSORIES.*

Start the engine to be sure no fault appears.

Reinstall removed parts.

CHARGING SYSTEM

SERVICE TOOLS

Description	Part Number	Page
Fluke 111 multimeter	529 035 868	297
4-pin magneto diagnostic harness	529036021	304

SERVICE TOOLS – OTHER SUPPLIER

Description	Part Number	Page
NAPA ULTRA PRO battery load tester	95260	305

SERVICE PRODUCTS

Description	Part Number	Page
silicone dielectric grease	293 550 004	307

GENERAL

NOTE: On applicable models, it is good practice to check for fault codes using B.U.D.S. software as a first troubleshooting step. Refer to *MONITORING SYSTEM/FAULT CODES*.

Component temperature must be approximately 20°C (68°F) (room temperature) when taking measurements, otherwise readings could be erroneous.

For best results, use the Fluke 111 multimeter (P/N 529 035 868).

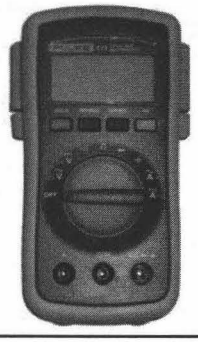

529 035 868

Magneto

A magneto provides the primary source of electrical energy. It transforms a magnetic field into an alternating current (AC).

The magneto is comprised of a 3 phase delta wound stator. It has a capacity of 480 watts for the **600 HO SDI models**, and 360 watts for the **500SS and 800R models**.

AC current is rectified and regulated by a voltage regulator between 13.4 and 15 volts DC for primary power to the vehicle electrical system, and to charge the battery on electric start models.

Battery

On electric start models, never use a battery charger to substitute temporarily the battery, as it may cause the ECM (engine control module) to work erratically or not to work at all.

500SS/800R

On these models, a battery is installed as a secondary power source. It is primarily used for energizing the starter on electric start models.

600 HO SDI (Manual Start)

These models are equipped with a small 3A battery. This battery is required to power up the ECM and the fuel pump on starting.

600 HO SDI (Electric Start)

These models are equipped with a 20 A battery. This battery is required to power up the ECM and the fuel pump on starting as well as provided power to the starter for cranking the engine.

PROCEDURES

CHARGING FUSE

500SS/800R Electric Start and 600 HO SDI Manual Start

Fuse Location

A 30 A charging system fuse is located on the LH side of the battery retaining strip.

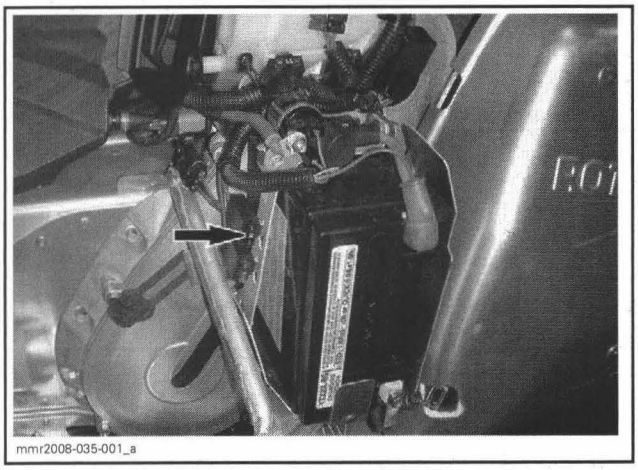

TYPICAL – CHARGING SYSTEM FUSE

NOTE: The voltage regulator could be the culprit of a blown charging system fuse. To check, simply disconnect the regulator from the circuit. If the fuse still burns, check for a defective wire.

CHARGING RELAY (R2)

500SS/800R

A charging relay (R2), completes the charging circuit between the voltage regulator output and the battery, at approximately 800 RPM. It receives its ground control signal from the ECM. Refer to *WIRING DIAGRAM* for more details.

Charging Relay Location

The charging relay is a plug-in relay located next to the battery on a harness connector.



TYPICAL – CHARGING RELAY R2

VOLTAGE REGULATOR

Voltage Regulator Continuity Test

Due to internal circuitry, there is no static test available to check continuity.



VOLTAGE REGULATOR (500SS/800R)

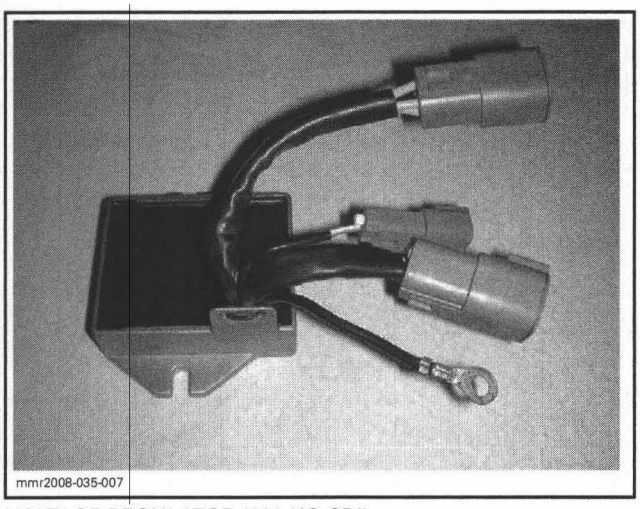
mmr2008-035-007

VOLTAGE REGULATOR (600 HO SDI)

DC Voltage Output Test (Voltage Regulator)

500SS/800R Manual Start

Proceed as follows:

Raise vehicle so that the track is off the ground and can turn freely.

⚠ WARNING

Ensure vehicle track is completely raised off ground. If track should come into contact with ground when engine is at 5000 RPM, equipment damage and severe injury may result.

Set multimeter to Vdc scale.

Disconnect the communication diagnostic connector.

Start engine and read voltage as follows.

TEST ENGINE SPEED	TEST PROBES		VOLTAGE
5000 RPM	Pin 4 (RD/BU wire) (diagnostic connector)	Chassis ground	15.1 Vdc ± 0.5

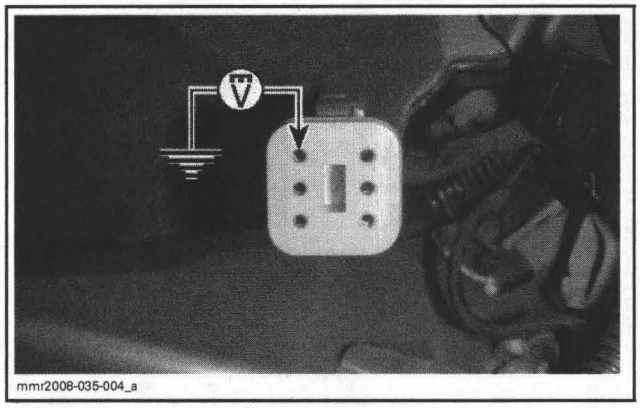
mmr2008-035-004_a

TYPICAL

If voltage is above specification, replace voltage regulator.

If voltage is below specification, check stator and wiring/connections. If good, try a new voltage regulator.

500SS/800R Electric Start and 600 HO SDI Manual Start

Proceed as follows:

Raise vehicle so that the track is off the ground and can turn freely.

⚠ WARNING

Ensure vehicle track is completely raised off ground. If track should come into contact with ground when engine is at 5000 RPM, equipment damage and severe injury may result.

Remove RED rubber boot protector from positive battery post.

Set multimeter to Vdc scale.

Connect multimeter to battery posts.

Start engine and read voltage as follows.

TEST ENGINE SPEED	TEST PROBES		VOLTAGE
5000 RPM	Battery (+)	Battery (-)	15.1 Vdc ± 0.5

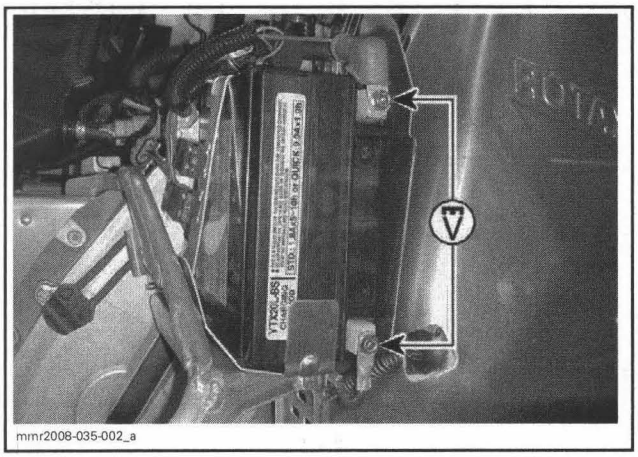

mmr2008-035-002_a

TYPICAL

If voltage is above specification, replace voltage regulator.

If voltage is below specification, check stator and wiring/connections.

Voltage Regulator Removal

500SS/800R

Disconnect battery (if so equipped).

The voltage regulator is located on the right side of the frame just ahead of the fuel tank, and under the oil tank.

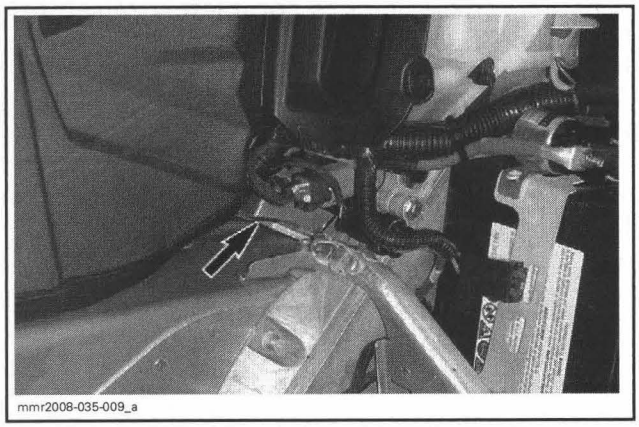
mmr2008-035-009_a

VOLTAGE REGULATOR

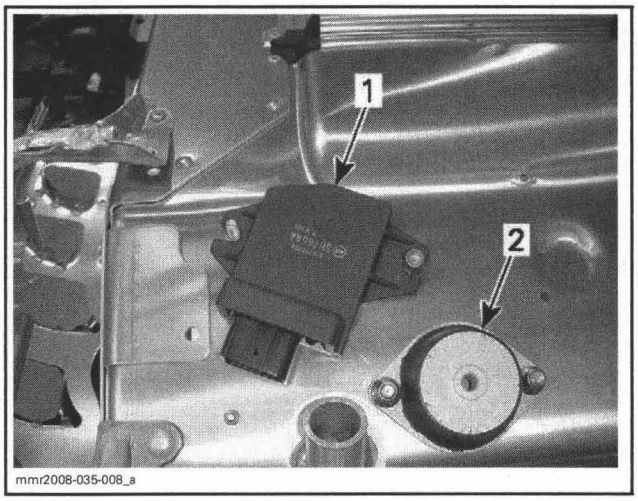

mmr2008-035-008_a

TYPICAL
1. *Voltage regulator*
2. *RH rear engine mount*

Remove the primary air intake silencer.

Disconnect the carburetors from the intake adapters.

Move fuel tank back, refer to *FUEL TANK/FUEL PUMP* section.

Disconnect the voltage regulator connector.

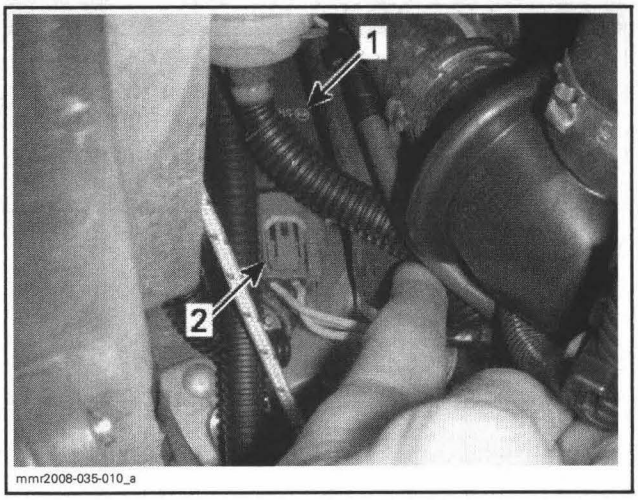

mmr2008-035-010_a

1. *Voltage regulator*
2. *Voltage regulator connector*

NOTE: The regulator connector can be accessed from the front right side, by removing the muffler and the accoustic panel.

Loosen the RH elastic nut.

Remove the LH elastic nut, star washer and flat washer.

NOTE: Note the position of the grounding wire, star washers and flat washers for installation.

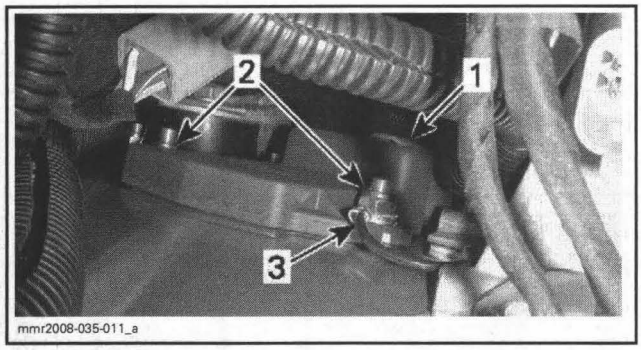

1. *Voltage regulator connector*
2. *Regulator mounting studs*
3. *Electrical harness grounding wire*

Remove the regulator from its mounting studs.

600 HO SDI

Disconnect battery.

The voltage regulator is located on the right side of the frame just ahead of the fuel tank, and under the oil tank.

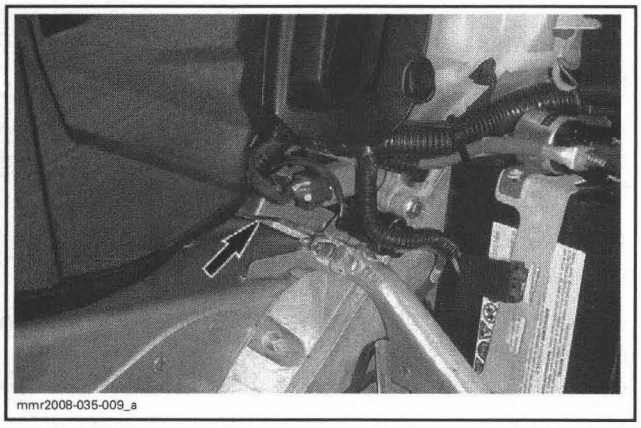

VOLTAGE REGULATOR

Remove the primary air intake silencer.

Disconnect the throttle body assembly from the intake adapters.

Move fuel tank back, refer to *FUEL TANK/FUEL PUMP* section.

Disconnect the voltage regulator connectors.

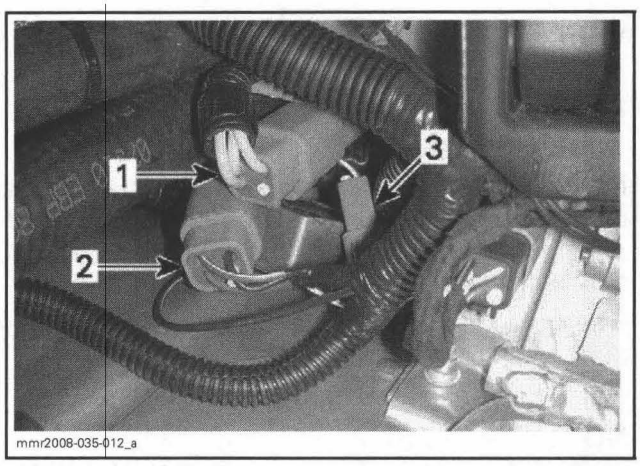

1. *Stator connector (MO)*
2. *Regulator connector (RE)*
3. *Regulator connector (MA)*

Loosen the RH elastic nut.

NOTE: Note the position of the grounding wires, star washers and flat washers (one ground on each stud).

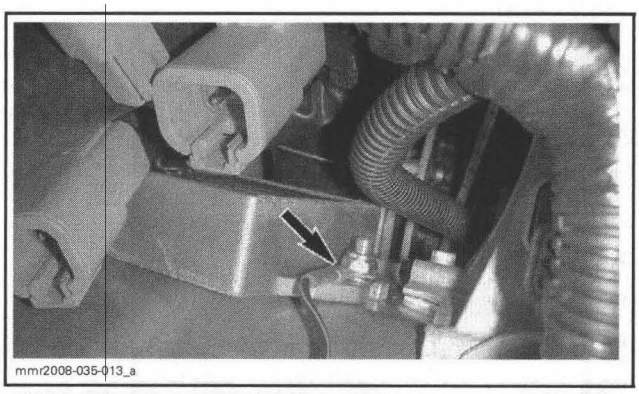

ELECTRICAL HARNESS GROUND WIRE, RH MOUNTING STUD

Remove the LH elastic nut, grounding wire, star washer and flat washer.

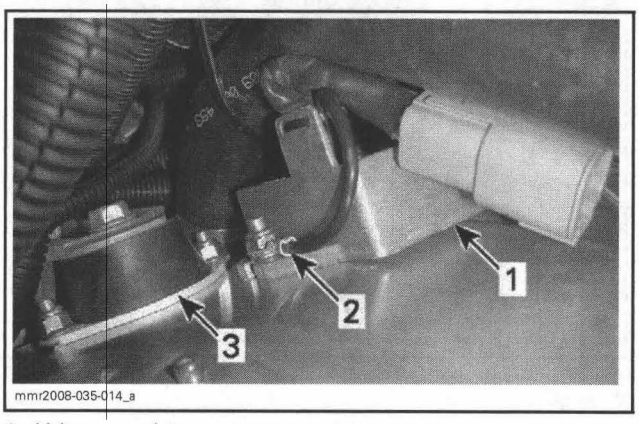

1. *Voltage regulator*
2. *Regulator grounding wire, LH mounting stud*
3. *RH rear engine mount*

Remove the regulator from its mounting studs.

Voltage Regulator Installation

Insert the right flange of the regulator on its mounting stud, under the elastic nut, grounding wire and washers.

NOTE: Make sure all the hardware is positioned over the regulator flange. On **600 HO SDI models**, connectors face rearward. All other models, connector faces forward.

Insert the LH side of the regulator on its mounting stud.

Install mounting stud hardware.

NOTE: Make sure the ground lug(s) and mounting hardware are positioned over the regulator flange as per disassembly. Be careful not to twist or break the wires and ground lugs when tightening each elastic nuts.

Complete the installation in the reverse order of the removal procedure.

Torque voltage regulator screws to 5 N•m (44 lbf•**in**).

STATOR

Stator Continuity Test

500SS/800R

Remove RH side panel.

Remove muffler.

Remove accoustic panel.

Disconnect connector from voltage regulator.

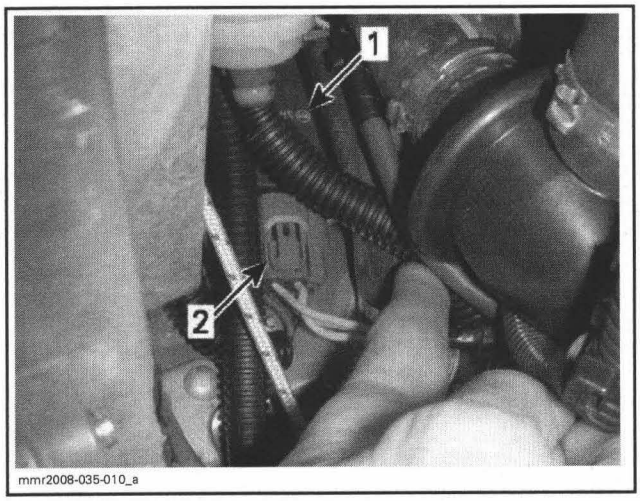

1. Voltage regulator
2. Regulator connector

Set multimeter to Ω.

Read the resistance between wires as follows.

TEST PROBES		RESISTANCE @ 20°C (69°F)
Any YELLOW wire	To another YELLOW wire	0 - 0.5 Ω

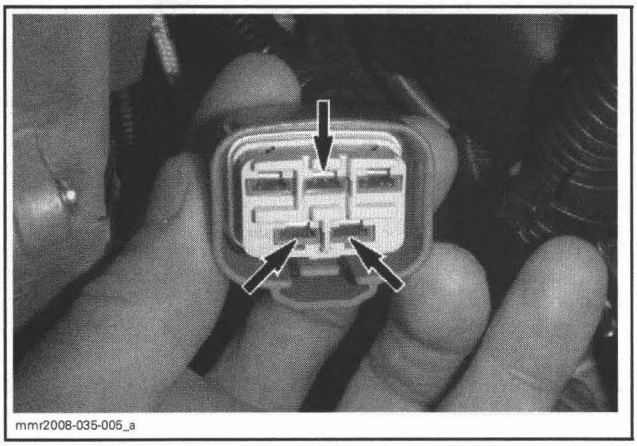

VOLTAGE REGULATOR CONNECTOR, YELLOW WIRES

Repeat test for every pair of YELLOW wires.

If resistance is out of specification, replace stator.

Install the connector and other parts in the reverse order of removal. Refer to appropriate sections for details.

600 HO SDI

Remove the primary air intake silencer.

Disconnect the throttle body assembly from the intake adapters.

Move fuel tank back, refer to *FUEL TANK/FUEL PUMP* section.

Remove the voltage regulator stator connector.

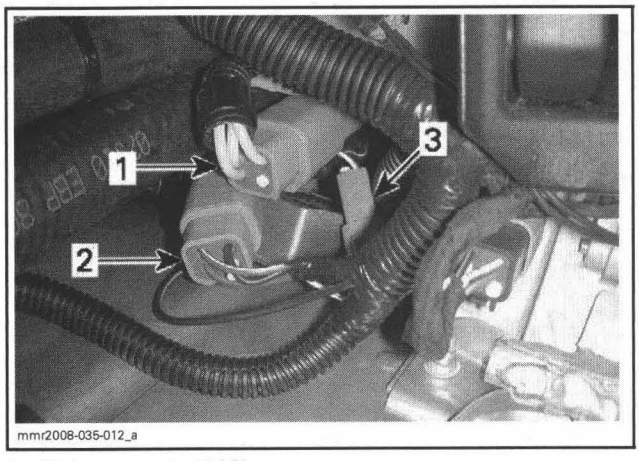

1. Stator connector (MO)
2. Regulator connector (RE)
3. Regulator connector (MA)

Set multimeter to Ω.

Read the resistance as follows.

TEST PROBES		RESISTANCE @ 20°C (69°F)
Any YELLOW wire	To another YELLOW	0 - 0.5 Ω

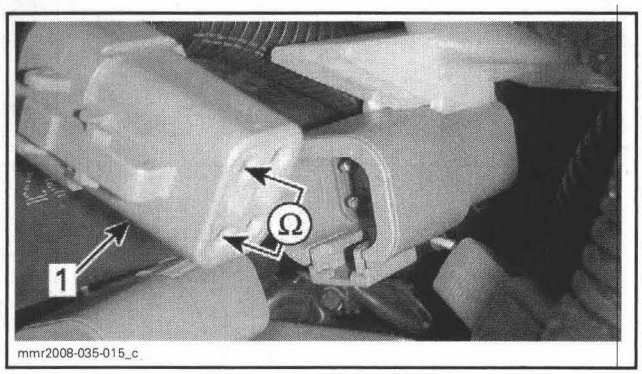

VOLTAGE REGULATOR CONNECTOR
1. Magneto stator connector

Repeat test for every pair of YELLOW wires.

If resistance is out of specification, replace stator.

Install the connector and other parts in the reverse order of removal. Refer to appropriate sections for details.

Stator Insulation Test

Refer to the applicable *STATOR CONTINUITY TEST* for instructions on how to access stator connector on voltage regulator.

Set multimeter to Ω.

Read resistance as follows.

TEST PROBES		RESISTANCE @ 20°C (69°F)
Any YELLOW wire	Engine ground	0L (open circuit)

If results are out of specification, the stator and/or the wiring need to be repaired/replaced.

Stator AC Voltage Output Test

500SS/800R

Remove RH side panel.

Remove muffler.

Remove accoustic panel.

Disconnect the voltage regulator connector.

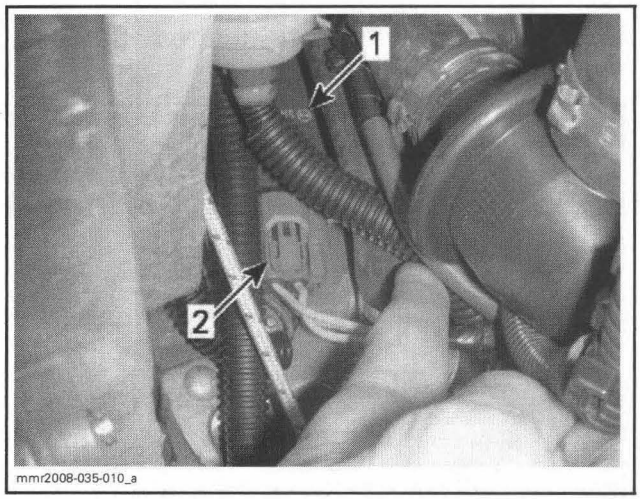

1. Voltage regulator
2. Regulator connector

Set multimeter to Vac scale.

Manually crank engine and read the voltage as follows. Repeat the test 3 times for each pair of YELLOW wires.

TEST PROBES		VOLTAGE
Any YELLOW wire	Any other YELLOW wire	3.5 - 7.5 Vac

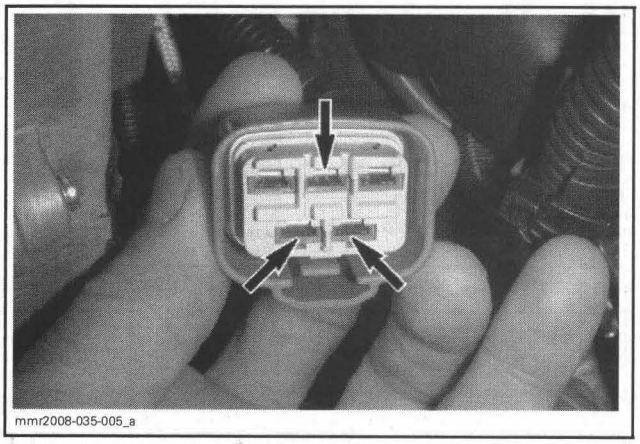

VOLTAGE REGULATOR CONNECTOR, YELLOW WIRES

If voltage is lower than specification, replace stator.

Install all removed parts.

600 HO SDI

Remove the primary air intake silencer.

Disconnect the throttle body assembly from the intake adapters.

Move fuel tank back, refer to *FUEL TANK/FUEL PUMP* section.

Disconnect the stator connector from the voltage regulator.

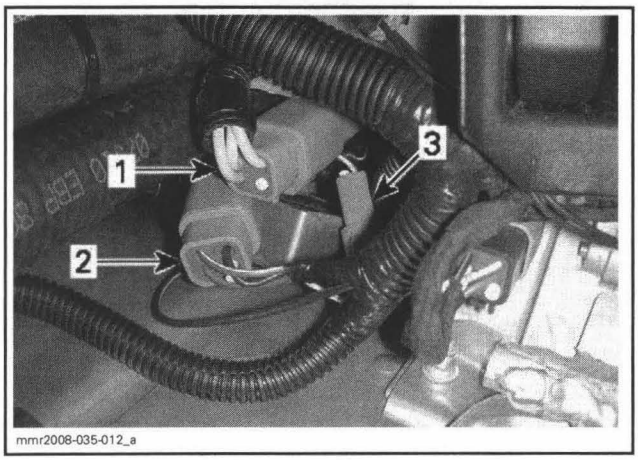

mmr2008-035-012_a

1. *Stator connector (MO)*
2. *Regulator connector (RE)*
3. *Regulator connector (MA)*

Set multimeter to Vac.

NOTE: To facilitate taking the voltage readings, use the 4-pin magneto diagnostic harness (P/N 529036021). Connect only the magneto side for this test.

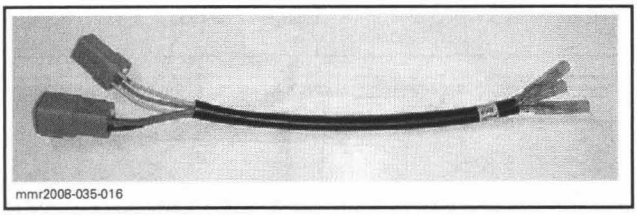
mmr2008-035-016

Manually crank engine and read the voltage as follows. Repeat the test 3 times for each pair of YELLOW wires.

TEST PROBES		VOLTAGE
Each YELLOW wire	Any other YELLOW wire	3.5 - 7.5 Vac

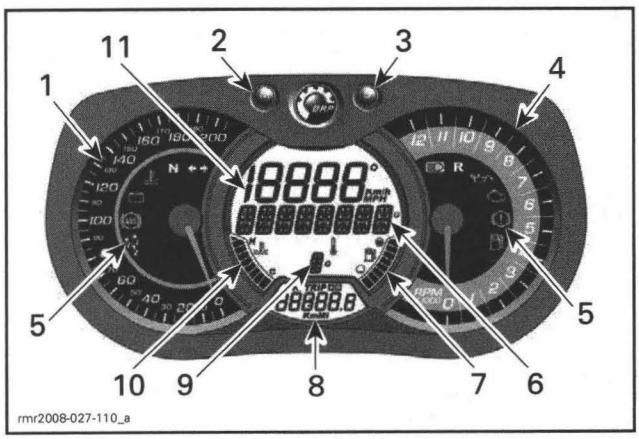

rmr2008-027-110_a

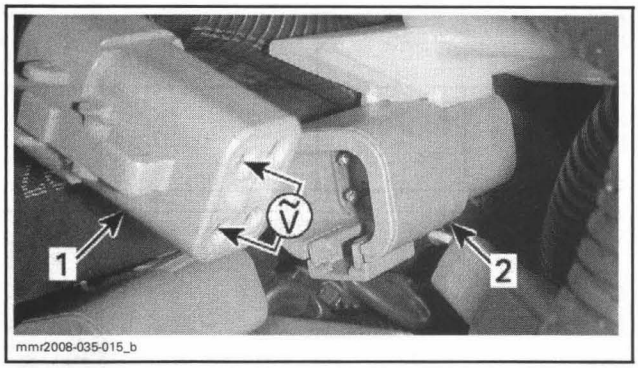

mmr2008-035-015_b

STATOR VOLTAGE OUTPUT TEST
1. *Voltage regulator connector*
2. *Stator connector*

If voltage is lower than specification, replace stator.

Install the connector and other parts in the reverse order of removal. Refer to appropriate sections for details.

BATTERY (YT4L-BS)

600 HO SDI Manual Start

These models are equipped with a YT4L-BS type battery that requires a specific charging procedure at predelivery.

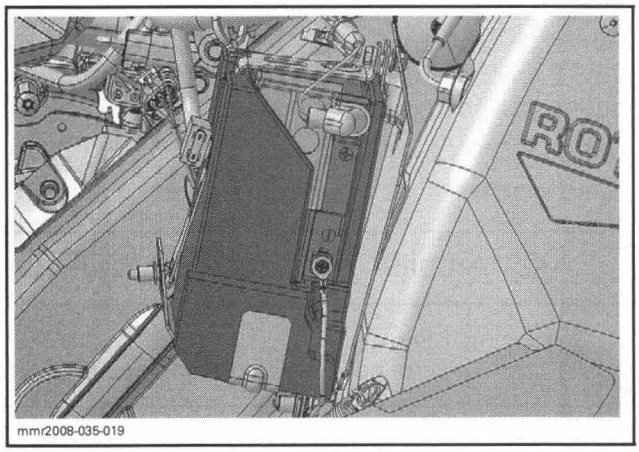
mmr2008-035-019

YT4L-BS BATTERY WITH ADAPTER

Battery Charge Testing

⚠ WARNING

Always wear safety glasses and charge in a ventilated area. Never charge or boost battery while installed on vehicle. Never open the sealed caps. Do not place battery near open flame.

These sealed batteries have to be tested with a voltmeter.

Batteries with a voltage of 12.8 volts and above, no charge is required.

Batteries with a voltage of 12.7 volts and below must be charged as follows:

BATTERY TYPE	STANDARD CHARGE	QUICK CHARGE
YT4L-BS	0.3 amps/hour for 5 to 10 hours	3.0 amps/hour for 30 min.

BATTERY (YTX20L-BS)

500SS/800R/600 HO SDI (Electric Start)

These models are equipped with a sealed valve regulated lead acid (VRLA) battery. They are non-spillable and maintenance reduced (no electrolyte level to be checked and readjusted). No ventilation tube is attached to the battery.

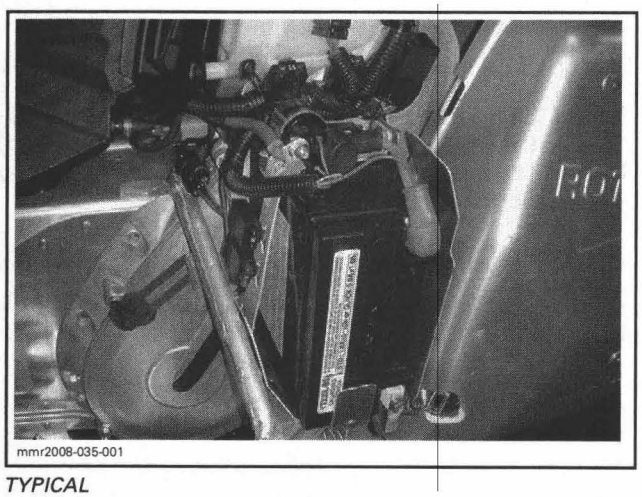
mmr2008-035-001

TYPICAL

Battery Charge Unloaded Test

Unloaded Voltmeter Test

NOTE: An unloaded test is carried out on a battery without discharging current. It is the simplest and most commonly used. However, be aware that a voltage test can indicate that the battery is in good condition even though the battery does not have enough power to crank the engine. A voltage reading provides an instant indication of the state of charge of the battery, not of it's current storage capacity. A battery load test gives a more accurate indication of the battery condition.

If the battery has just received a charge, allow it to rest for 1–2 hours before taking a voltage reading.

Set multimeter to Vdc and connect to battery terminals. Always respect polarity.

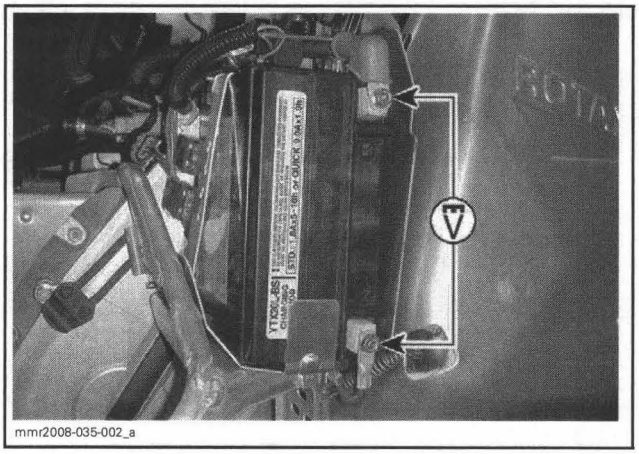
mmr2008-035-002_a

Batteries with a voltage above 12.8 V do not need to be charged.

Batteries with a voltage of 12.8 V and below need to be charged. Refer to *BATTERY CHARGING* in this section.

Battery Load Test

This is the best test to determine the battery condition. Use a load testing device such as the NAPA ULTRA PRO battery load tester (P/N 95260). It has a 500 Amp carbon pile adjustable load.

Battery should be fully charged.

If battery has just been recharged, allow battery to rest for at least one hour.

Follow battery load tester instructions.

If battery voltage has dropped below 10 Vdc (or voltage indicated on battery temperature compensation chart), battery storage capacity has decreased appreciably and should be replaced.

Battery Removal

⚠ WARNING

Battery BLACK (–) cable must always be disconnected first and connected last. Never charge or boost battery while installed on vehicle.

500SS/800R

Open right side panel of vehicle.

Disconnect BLACK (–) cable end from the terminal.

Slide off rubber boot from RED (+) cable and disconnect it.

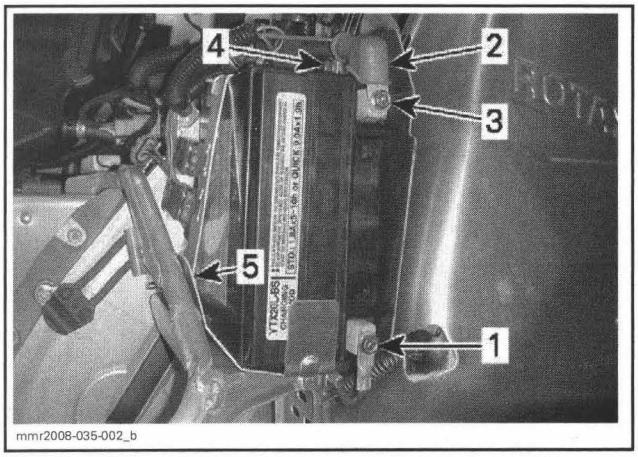

1. *Negative post (-)*
2. *Rubber boot*
3. *Positive terminal (+)*
4. *Battery retaining bolt and nut*
5. *Retaining strip hook*

Remove electrical harness from retaining clip.

Unclip both fuses from oil tank.

Remove the battery retaining strip nut and bolt.

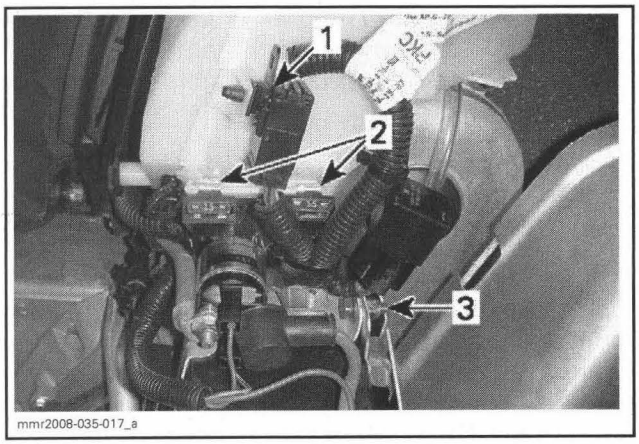

1. *Harness retaining clip*
2. *Fuse holder retaining clips*
3. *Battery retaining strip bolt*

Lift the retaining strip and unhook it from the battery support to remove it.

Move retaining strip aside.

Remove battery.

CAUTION: Should any electrolyte spillage occur, immediately wash off with a solution of baking soda and water to prevent damage to vehicle components.

600 HO SDI

Open right side panel of vehicle.

Disconnect BLACK (–) cable end from the terminal.

Slide off rubber boot from RED (+) cable and disconnect it.

Remove fuse box from its holder on oil tank by lifting the locking tab with a small screwdriver and pulling it off its holder.

Unscrew the battery retaining strip nut.

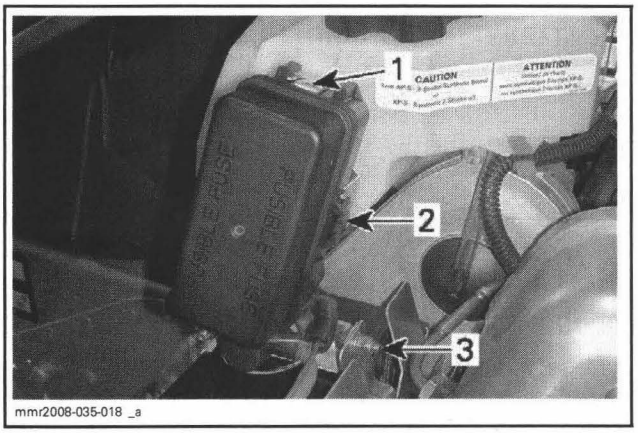

1. *Locking tab*
2. *Battery holder slides*
3. *Battery retaining strip bolt*

Move retaining strip and fuse box aside.

Remove battery.

CAUTION: Should any electrolyte spillage occur, immediately wash off with a solution of baking soda and water to prevent damage to vehicle components.

Battery Cleaning

Clean the battery, battery casing, cables and battery posts using a solution of baking soda and water.

Remove corrosion from battery cable terminals and battery posts using a firm wire brush. Battery top should be cleaned with a soft brush and any grease-cutting soap or baking soda solution.

Battery Inspection

Visually inspect battery casing for cracks, leaks or other possible damage. Discoloration, warping or raised top, indicates that battery has overheated or been overcharged. If casing is damaged, replace battery and thoroughly clean battery tray and surrounding area with a water and baking soda.

⚠ WARNING

Should the battery casing be damaged, wear a suitable pair of non-absorbent gloves when removing the battery by hand.

Inspect battery posts for security of mounting.

Battery Storage

CAUTION: A discharged battery will freeze and it may damage its casing. A damaged casing will allow electrolyte spillage that may damage surrounding parts.

Disconnect and remove battery from the vehicle.

The battery must always be stored in fully a charged condition.

Clean battery terminals and cable connections using a wire brush. Apply a light coat of silicone dielectric grease (P/N 293 550 004) or petroleum jelly on terminals.

Clean battery casing using a solution of baking soda and water. Rinse battery with clear water and dry thoroughly using a clean cloth.

Charge the battery every month if stored at a temperature **below** 15°C (60°F).

Charge the battery every two week if stored at a temperature **above** 15°C (60°F).

New Battery Activation

Refer to the instructions provided with the battery.

Battery Charging

⚠ WARNING

Always wear safety glasses and charge in a ventilated area. Never charge or boost battery while installed on vehicle. Do not open the sealed caps during charging. Do not place battery near open flame.

CAUTION: If battery becomes hot, stop charging and allow it to cool before continuing.

NOTE: Sealed VRLA batteries have an internal safety valve. If battery pressure increases due to overcharging, the valve opens to release excess pressure, preventing battery damage.

Perform *BATTERY CHARGE TESTING* above then proceed as described here.

An automatic charger is the fastest and most convenient way for error-proof charging.

When using a constant current charger, charge battery according to the chart below.

Battery Voltage Below 12.8 V and Above 11.5 V

STANDARD CHARGING (RECOMMENDED)		
BATTERY TYPE	TIME	CHARGE
YTX20L-BS	4-9 hours	2 A

QUICK CHARGING		
BATTERY TYPE	TIME	CHARGE
YTX20L-BS	50 minutes	10 A

Battery Voltage Below 11.5 V

Batteries with voltage below 11.5 V requires special procedures to recharge. In charging an over discharged battery, its internal resistance may be too high to charge at a normal charging voltage.

Set charger to 10 A charging rate and monitor charging current for approximately 30 minutes. If there is no change in charging currentor battery becomes abnormally hot, the battery is most likely at the end of its service life and should be replaced.

Battery Installation

Reinstall battery and secure retaining strip to support properly.

Install fuse box, fuse holders and harness as applicable to model.

Connect RED (+) cable it to positive battery terminal. Connect RED wire (coming from 30 A fuse).

Connect BLACK (–) cable LAST.

⚠ WARNING

Battery BLACK (–) cable must always be disconnected first and connected last. Never charge or boost battery while installed on vehicle.

Cover the RED (+) terminal with rubber boot.

Apply silicone dielectric grease (P/N 293 550 004) on battery posts and connectors.

STARTING SYSTEM

SERVICE TOOLS

Description	Part Number	Page
ECM adapter	420 277 010	316
Fluke 111 multimeter	529 035 868	311

SERVICE PRODUCTS

Description	Part Number	Page
ThermoLube synthetic grease	219 700 417	320, 322

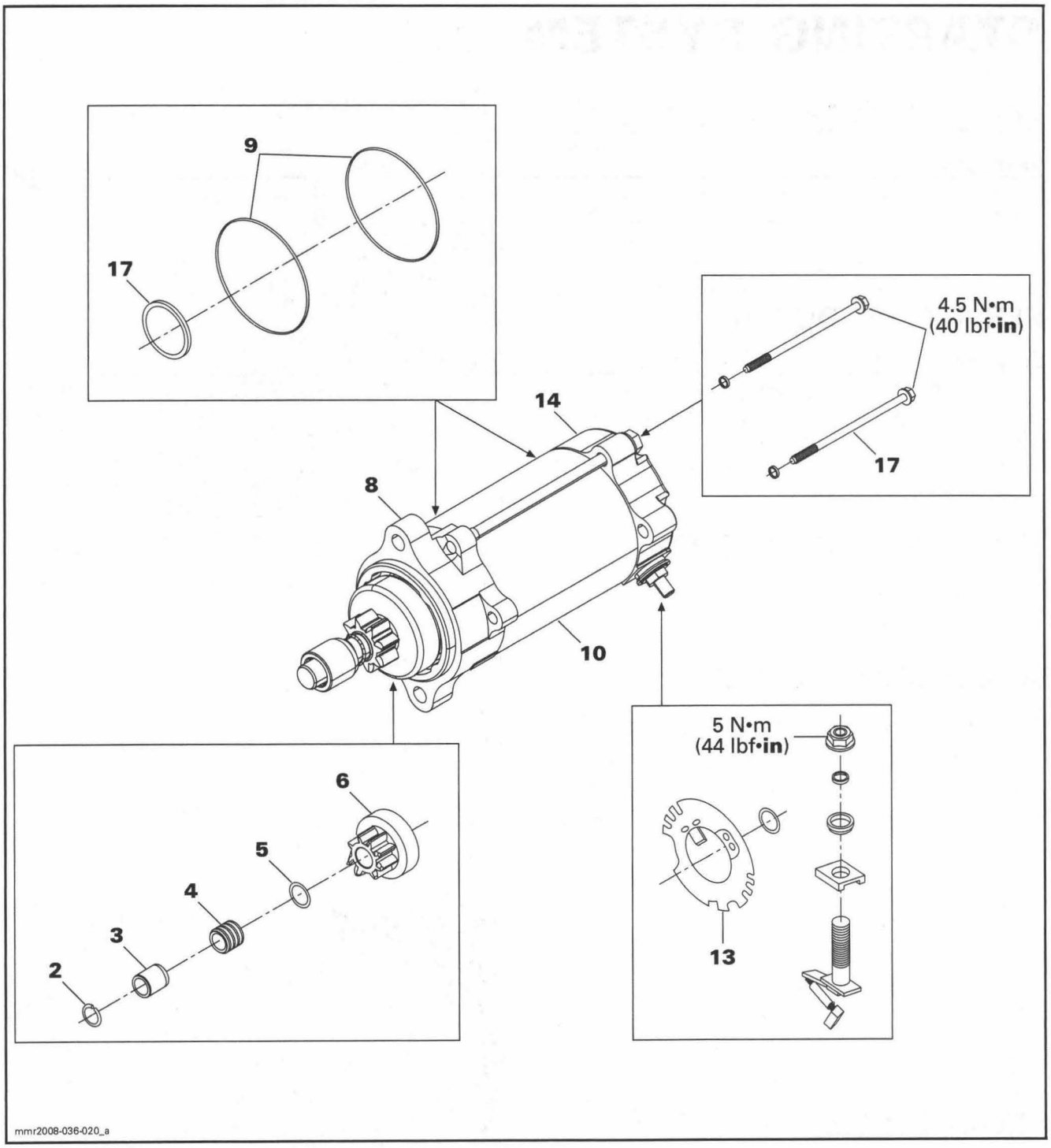
9
17
4.5 N•m
(40 lbf•in)
14
17
8
10
5 N•m
(44 lbf•in)
6
5
4
3
2
13
mmr2008-036-020_a

GENERAL

This section covers only electric start models.

NOTE: On applicable models, it is good practice to check for fault codes using B.U.D.S. software as a first troubleshooting step. Refer to *MONITORING SYSTEM/FAULT CODES*.

For best results, use the Fluke 111 multimeter (P/N 529 035 868).

In case of problems, first ensure the problem is not related to engine mechanical components. If not, test the starting system.

Basic Starting System Operation

When the START button is pressed, a signal is sent to the ECM which completes the starter solenoid circuit. The battery then supplies current to the starter through the starter solenoid to crank the engine.

Conditions for Engine Cranking

- RUN/STOP switch to RUN
- DESS cap installed
- Press START button.

TROUBLESHOOTING

Starter Will Not Crank Engine

If the engine starter will not crank the engine, try a pull start to see if the engine can be started.

If the engine cannot be started, the problem is not related to the starting system.

If engine can be started (pull START), check the following in this order:

- 30 A fuse (FA)
- 5 A fuse FB (500SS and 800R)
- 7.5 A fuse F4 (600 HO SDI)
- Battery (charge and connections)
- Starter solenoid
- START/RER switch.

PROCEDURES

START/RER FUSE

NOTE: When a burnt fuse is found, always identify the cause before replacing it.

Fuse Inspection

500SS/800R

The ECM power circuit used for the starting system passes through the 30 A battery charging fuse (FA).

The starting system is protected with a 5 A rated fuse (FB) on a separate circuit.

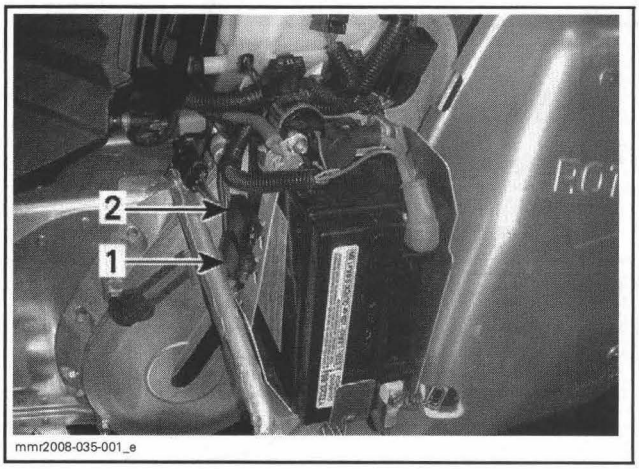

1. *Starting fuse*
2. *Charging fuse*

If no voltage is present at ECM or starter does not operate, check each fuse condition and replace it if necessary.

600 HO SDI

On 600 HO SDI, the ECM power circuit used for the starting system is protected with a 5 A fuse (F9) located in the fuse box. If no voltage is present at ECM or starter does not function, check fuse condition and replace it if necessary.

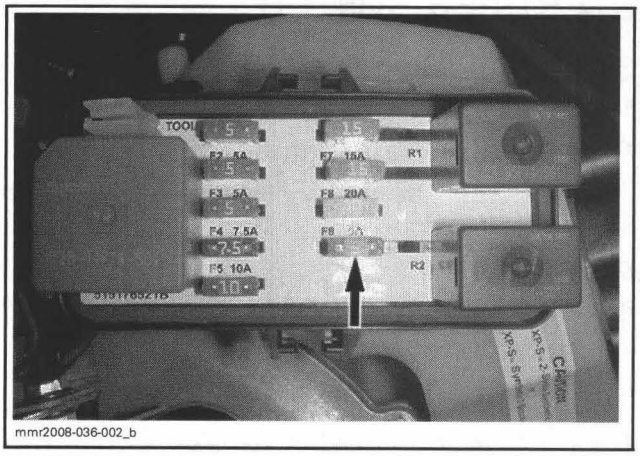

STARTING FUSE F9

Input Voltage Test to Fuse F9

600 HO SDI

Test for battery voltage at fuse contact 8B (VI/RO) supply wire coming from voltage regulator.

MODEL	F9 FUSE	BATTERY	VOLTAGE
600 HO SDI	Pin 8B (VI/RO)	Battery ground	Battery voltage

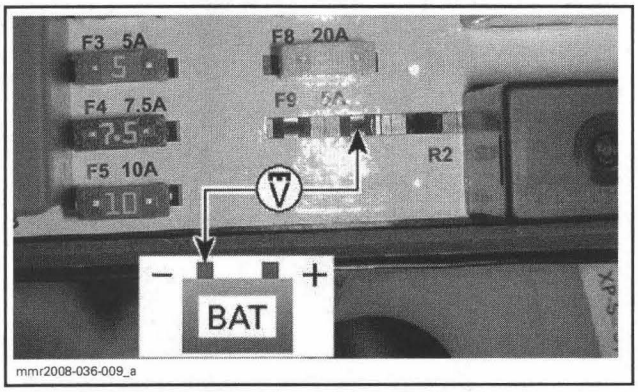

BATTERY VOLTAGE TEST, CONTACT 8B FUSE F9

If voltage is not adequate, check wire and voltage regulator.

BATTERY

Refer to *CHARGING SYSTEM* to check battery condition.

ENGINE CUT-OUT SWITCH

Refer to *IGNITION SYSTEM*.

START/RER SWITCH

START/RER Switch Quick Test

500SS/800R

There is no quick test for these models.

Proceed with the input voltage test of the START/RER switch.

600 HO SDI

Remove DESS cap from DESS post.

Set RUN/STOP switch to STOP.

Press the START button.

You should obtain the following results:

- Multifunction gauge should come ON, then go off after about 5 seconds.
- The electric fuel pump should function briefly.

If you obtained the above mentioned results, the START/RER switch functions normally.

START/RER Switch Test With B.U.D.S.

600 HO SDI

Use the latest B.U.D.S. software available from BOSSWeb. Refer to *COMMUNICATION TOOLS/B.U.D.S. SOFTWARE* for proper connection instructions.

A quick operational test can be carried out using the **Monitoring** section in B.U.D.S.

Set engine cut-off to ON and install DESS cap on DESS post.

Press the START/RER button and look at the **Start Button** LED in B.U.D.S.

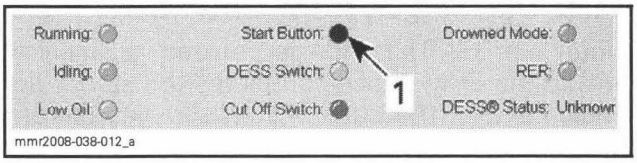

1. Should turn on (green)

- If the LED turns on, the starting system is functional on the input side of the starting system (START/RER button and ECM). Test the output side of the starting system (ECM output signal to starter solenoid, solenoid and starter.
- If the LED does not turn on, test the input side (START/RER button).

Input Voltage Test (START/RER Switch)

500SS/800R

Remove multifunction gauge. Refer to *BODY* section.

Disconnect the 13-pin connector on the steering harness.

Set multimeter to Vdc.

Measure voltage at battery terminals. It should be approximately 12.8 Vdc for a fully charged battery.

Measure the input voltage on the vehicle harness side of connector as follows.

VEHICLE CONNECTOR 5-HG		VOLTAGE
Pin 5 (RD/GY)	Battery ground	Battery voltage

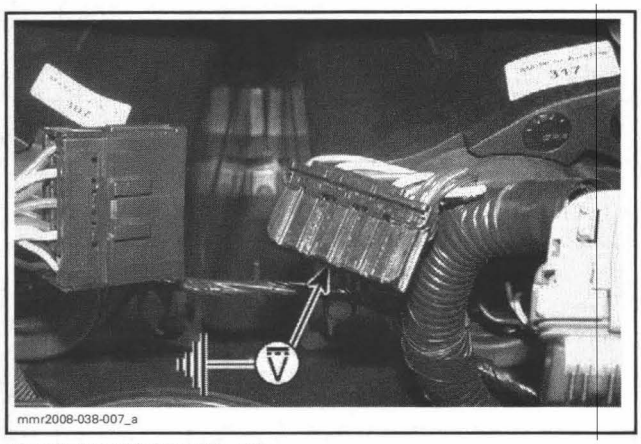
mmr2008-038-007_a

13-PIN CONNECTOR 5-HG

If you do not obtain battery voltage, check the following:
- 30 A battery charging fuse
- 5 A ECM fuse
- START/RER switch circuit continuity.

If voltage is good, carry out a continuity test of the following:
- START/RER switch wiring (steering harness)
- Start control wiring to ECM (vehicle harness)
- ECM ground circuit
- Starter and solenoid circuits.

600 HO SDI

Set multimeter to Vdc.

Measure voltage at battery terminals. It should be approximately 12.8 Vdc for a fully charged battery.

Disconnect the three pin connector on top of the handle bars from the steering harness.

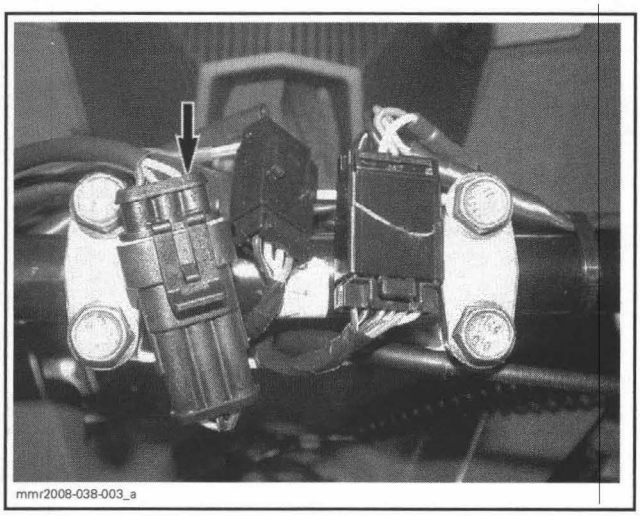
mmr2008-038-003_a

DISCONNECT 3-PIN CONNECTOR

Connect the multimeter between the steering harness pin 3 and battery ground.

MODEL	3-PIN (SB) CONNECTOR	BATTERY	VOLTAGE
600 HO SDI	Pin 3 (RD/BR)	Battery ground	Battery voltage

If battery voltage is obtained, carry out a continuity test of START/RER switch.

If battery voltage is not obtained, check 5 A fuse (F9), and wiring if required. Refer to *START/RER FUSE* in this section. If good, carry out a continuity test of wire harness from contact 7B of fuse F9 and steering harness 3-pin connector pin 3. Repair or replace wire harness.

Continuity Test (START/RER Switch)

500SS/800R

Remove multifunction gauge. Refer to *BODY* section.

Disconnect the 13-pin connector on the steering harness.

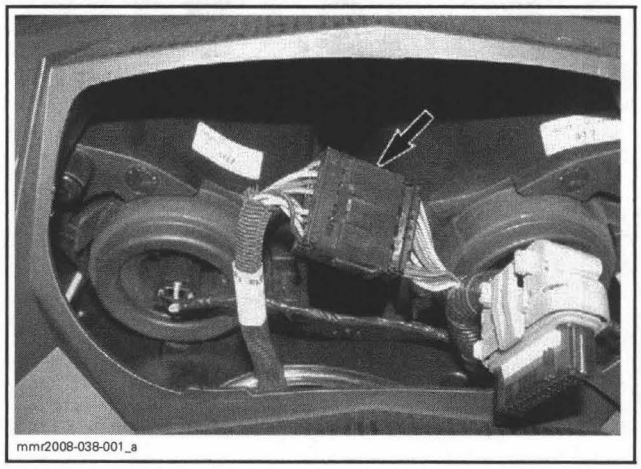
mmr2008-038-001_a

13-PIN CONNECTOR, STEERING HARNESS

Set multimeter to Ω.

Measure continuity of switch and harness wiring as follows.

SWITCH POSITION	13-PIN (HG) CONNECTOR		RESISTANCE
Released	Pin 5 (RD/GY)	Pin 8 (BE)	High value or infinite (0L)
Pressed and held			Continuity (0.2 Ω max.)

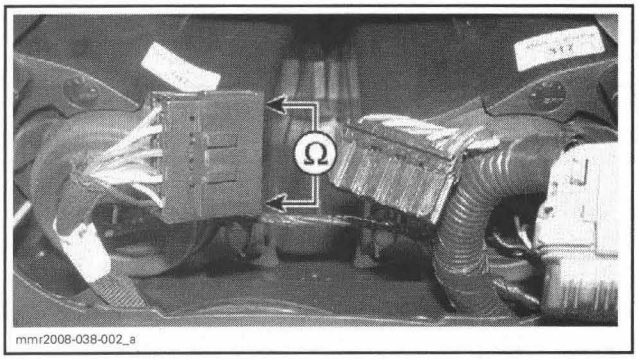

13-PIN STEERING CONNECTOR

If continuity test fails, repair or replace multifunction switch/wiring as applicable.

600 HO SDI

Disconnect the switch harness 3-pin connector on top of the handle bars.

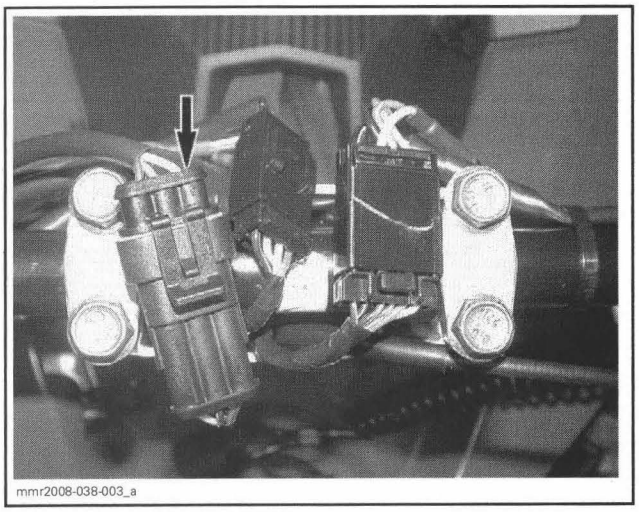

DISCONNECT 3-PIN CONNECTOR

Measure switch and harness continuity as follows.

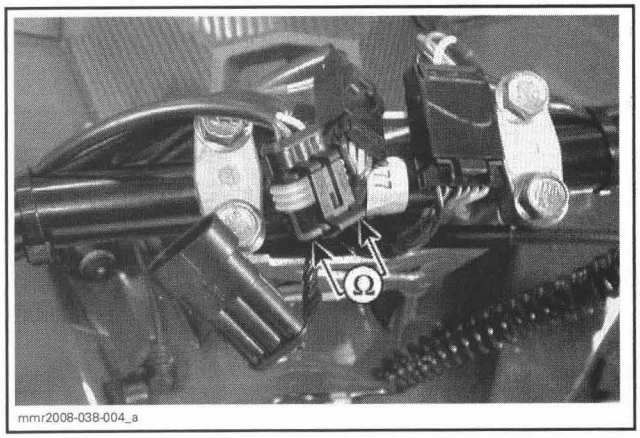

SWITCH POSITION	3-PIN (SB) CONNECTOR		RESISTANCE
Released	Pin 1 (BK)	Pin 2 (RD)	Continuity (0.2 Ω max)
	Pin 1 (BK)	Pin 3 (WH)	High value or infinite (0L)
Pressed and held	Pin 1 (BK)	Pin 2 (RD)	High value or infinite (0L)
	Pin 1 (BK)	Pin 3 (WH)	Continuity (0.2 Ω max)

If continuity test failed, repair or replace multifunction switch/wiring.

If continuity was good, reconnect 3-pin connector and recheck continuity as follows.

Disconnect steering 11-pin connector and the 8-pin connector under multifunction gauge.

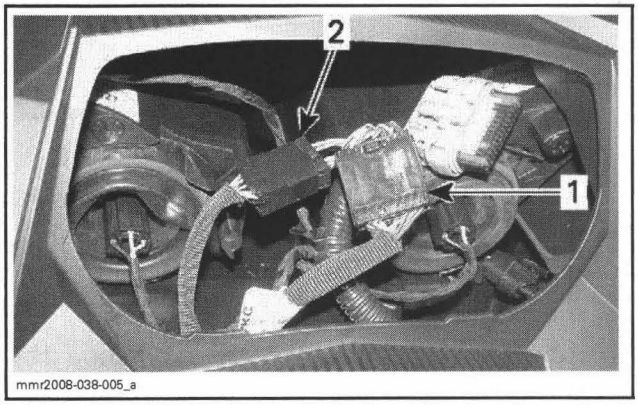

1. *Steering connector (11-pin)*
2. *8-pin connector*

Carry out the following continuity tests.

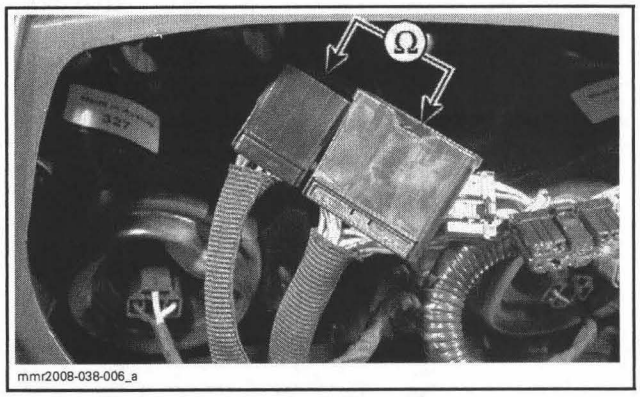

SWITCH POSITION	CONNECTORS		RESISTANCE
	11-PIN (HG)	8-PIN (AC)	
Released	Pin 1 (BK/BU)	Pin 3 (BE)	Continuity (0.2 Ω max.)
	Pin 6 (RD/BR)	Pin 3 (BE)	High value or infinite (0L)
Pressed and held	Pin 1 (BK/BU)	Pin 3 (BE)	High value or infinite (0L)
	Pin 6 (RD/BR)	Pin 3 (BE)	Continuity (0.2 Ω max.)

If continuity readings were not as specified, repair or replace steering harness.

Circuit Continuity Test (START/RER Switch)

500SS/800R

Disconnect battery or remove 5 A FB fuse (START/RER fuse).

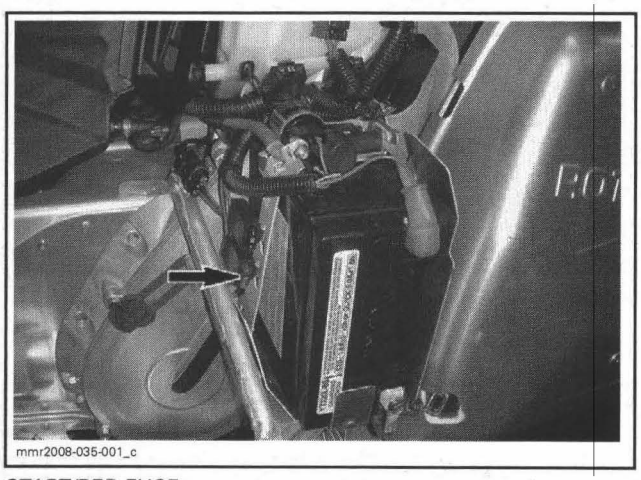

START/RER FUSE

Disconnect ECM connector and steering harness connector.

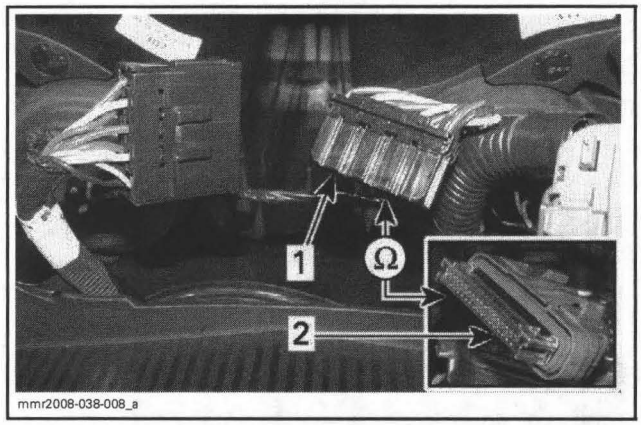

1. *Steering harness connector*
2. *ECM connector*

Test for continuity as follows.

MODEL	CONNECTORS		RESISTANCE
	STEERING (HG)	ECM	
500SS	Pin 8 (RD/GN)	Pin 8 (RD/GN)	Continuity (0.2 Ω max.)
	Pin 5 (RD/GY)	Pin 34 (RD/GY)	
800R	Pin 8 (RD/WH)	Pin 8 (RD/WH)	Continuity (0.2 Ω max.)
	Pin 5 (RD/GY)	Pin 34 (RD/GY)	

If the START/RER switch circuit tests are within specification, test START/RER switch continuity.

600 HO SDI

Remove multifunction gauge.

Disconnect the 11-pin (HG) and 8-pin (AC) steering connectors under the multifunction gauge.

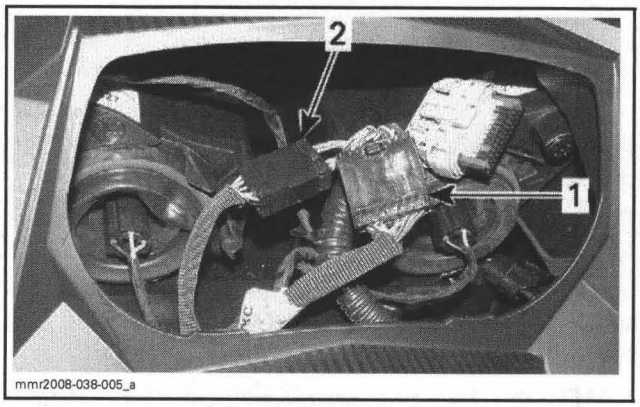

1. *Steering connector (11-pin)*
2. *8-pin connector*

Remove LH side panel, refer to *BODY* section.

Remove tool kit holder and drive belt guard.

Disconnect ECM connector B and install it on the ECM adapter (P/N 420 277 010).

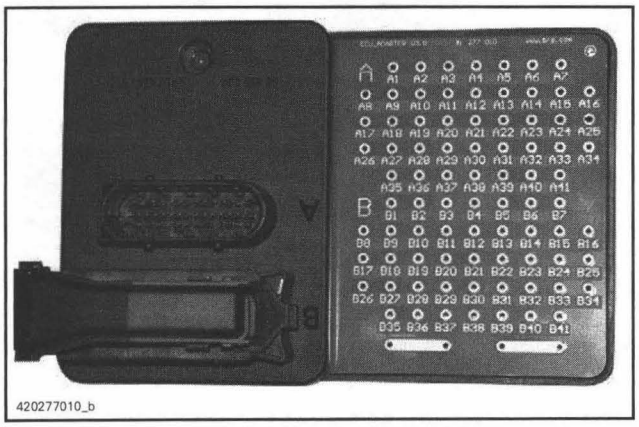

Remove and test fuse F9 and relay 2. Refer to *LIGHTS/GAUGE/ACCESSORIES* section.

Carry out the following continuity test between the 11-pin (HG) and 8-pin (AC) connectors.

CONNECTORS			RESISTANCE
1	(HG) Pin 6 (RD/BR)	Fuse F9 socket Pin 7B (RD/BR)	Close to 0 Ω
2	(AC) Pin 3 (BE)	ECM adapter B Pin 19 (BE)	Close to 0 Ω

If resistance is not within specification, repair or replace wire harness.

Reconnect all connectors and reinstall multifunction gauge.

STARTER SOLENOID

Solenoid Quick Test

Check battery voltage, it should be approximately 12.8 Vdc for a fully charged battery.

Disconnect the small positive connector (RED/GREEN wire) from the solenoid.

Install a jumper wire (with insulated clips) between the positive solenoid terminal and the positive battery terminal.

Disconnect the small negative connector (ORANGE/BLACK wire) on the starter solenoid.

Install a jumper wire on the negative solenoid terminal and momentarily touch the other end to battery ground.

CAUTION: The two small solenoid coil terminals are close to each other. When installing the two jumper wires, make sure the ends of the jumper wires are insulated and cannot come into contact with each other or a short circuit will occur.

If the starter engages, the solenoid, the starter, and the starter circuits function normally.

If the starter did not engage, carry out the other solenoid tests and starter test if required.

Input Voltage Test (Starter Solenoid)

500SS/800R

Disconnect the connector with the RED/GREEN wire from the solenoid.

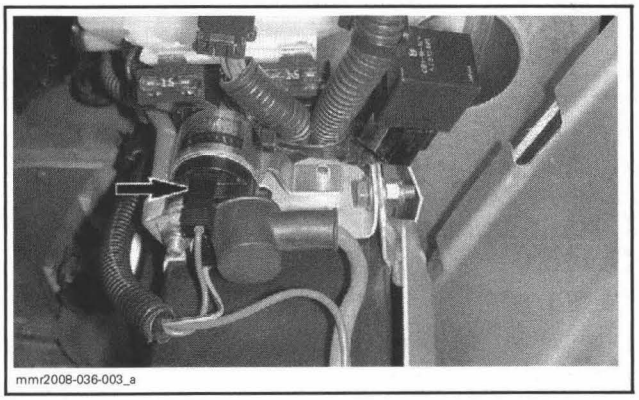

DISCONNECT RD/GN WIRE

Install DESS cap on the DESS post.

Set STOP switch to RUN.

Set multimeter to Vdc.

Test for input voltage to solenoid control winding as follows.

Press and hold the START/RER button as you take the measurement.

Read voltage.

MODEL	SOLENOID CONNECTOR (HARNESS SIDE)	VOLTAGE
500SS, 800R	RED/GREEN with battery ground	Battery voltage

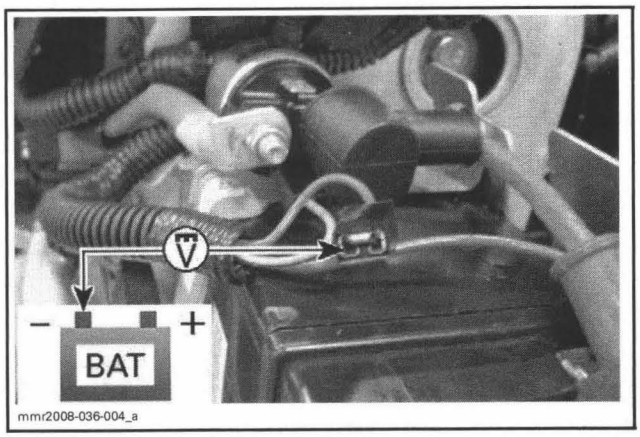

If voltage is not as specified, refer to *CIRCUIT CONTINUITY TEST (START/RER SWITCH)* in this section.

If the input voltage to the solenoid control winding was as specified, carry out the following test.

Reconnect RED/GREEN terminal to solenoid.

Disconnect ORANGE/BLACK terminal from solenoid (ground signal).

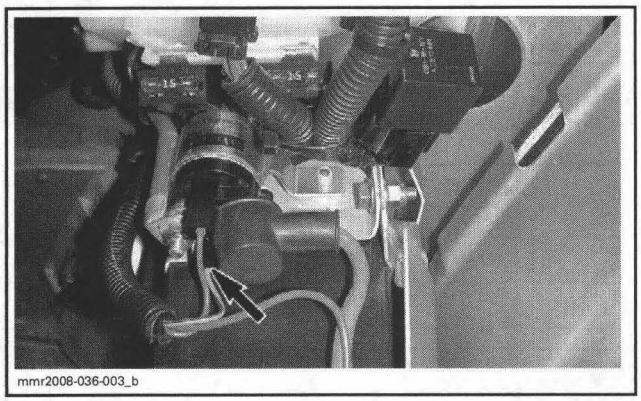
mmr2008-036-003_b

DISCONNECT OR/GN WIRE

Connect a jumper wire between solenoid negative terminal and battery ground.

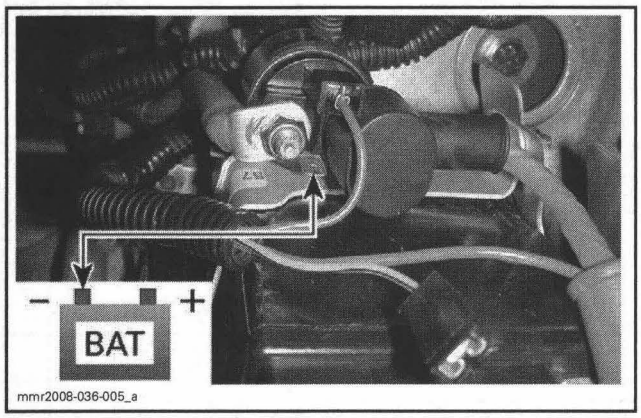

JUMPER NEGATIVE TO SOLENOID TERMINAL

Press START/RER button.

If solenoid does not function, test solenoid.

If solenoid functions normally, check wiring/connectors for continuity of ORANGE/BLACK wire to connector 3-CF (on front of oil tank), then to ECM connector pin 26.

NOTE: ECM provides ground signal to solenoid control winding through pin 26.

Repair or replace wiring.

Reconnect ORANGE/BLACK wire to solenoid.

600 HO SDI

Remove the DESS cap from the DESS post.

Set the RUN/STOP switch to STOP.

Disconnect the RED/GRAY wire from the starter solenoid.

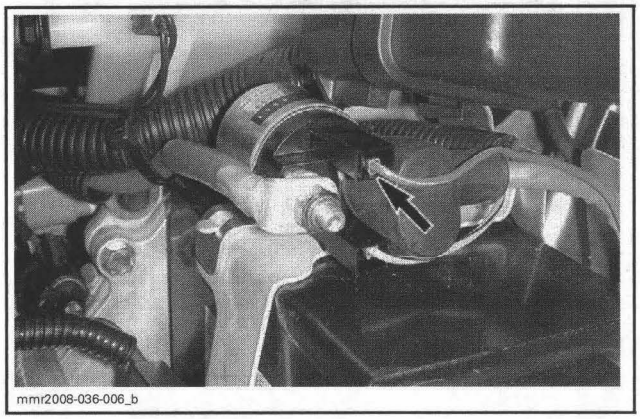
mmr2008-036-006_b

Set multimeter to Vdc and connect to vehicle as per table below.

Press the START/RER button as you take the measurement.

NOTE: The power signal to the solenoid will remain applied for approximately 5 seconds.

Read voltage.

MODEL	SOLENOID CONNECTOR (HARNESS SIDE)	VOLTAGE
600 HO SDI	RED/GREY with battery ground	Battery voltage

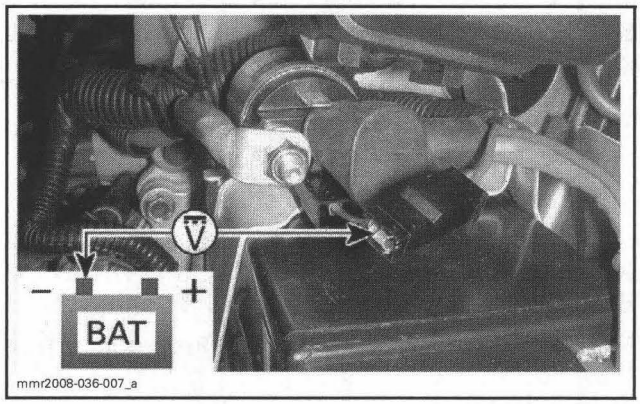

If voltage is not as specified, refer to *CIRCUIT CONTINUITY TEST (START/RER SWITCH)* in this section.

If the input voltage to the solenoid control winding was as specified, carry out the following test.

Reconnect RED/GREY wire to solenoid terminal.

Disconnect ORANGE/BLACK wire from solenoid terminal (ground signal).

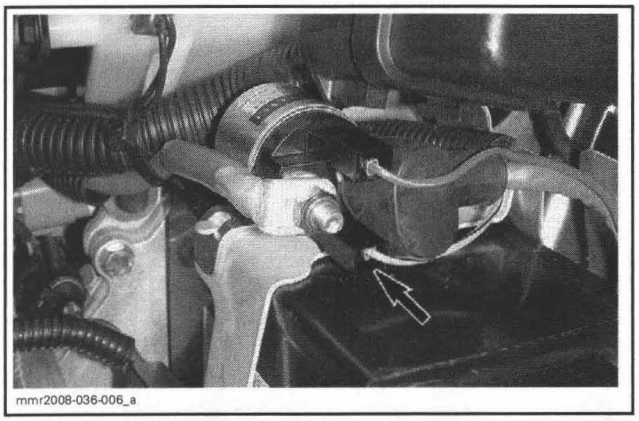
mmr2008-036-006_a

Connect an insulated jumper wire to the solenoid ground terminal.

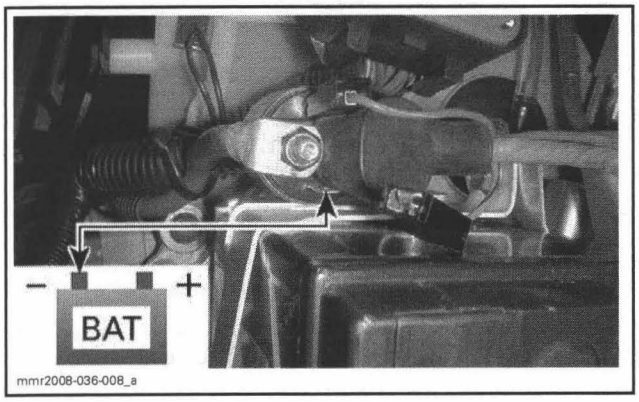

mmr2008-036-008_a

As you press the START/RER button, momentarily touch the other end of the jumper to ground, the solenoid should close and engage the starter.

NOTE: The starter should remain engaged for as long as you hold the jumper to ground, and disengage immediately when you remove the ground. The gauge will remain ON for 5 seconds after you remove the ground.

If solenoid does not function, test solenoid.

If the solenoid functioned normally, check wiring/connectors for continuity of ORANGE/BLACK wire to pin 31 of the ECM B connector.

NOTE: ECM provides ground signal required by the solenoid control winding through pin 31 of the ECM B connector.

Repair or replace wiring.

Reconnect ORANGE/BLACK wire to solenoid terminal.

Solenoid Static Test: Continuity

Disconnect the small terminals from the starter solenoid.

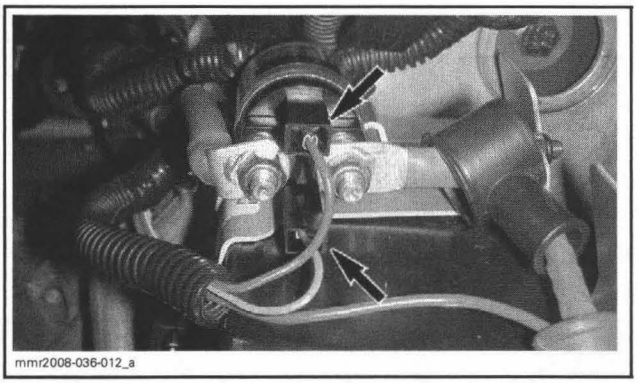
mmr2008-036-012_a

With a multimeter set to Ω, check control winding resistance as follows.

SOLENOID CONNECTOR		MEASUREMENT
TERMINAL		RESISTANCE @ 20°C (68°F)
A	B	Approximately 7.5 Ω

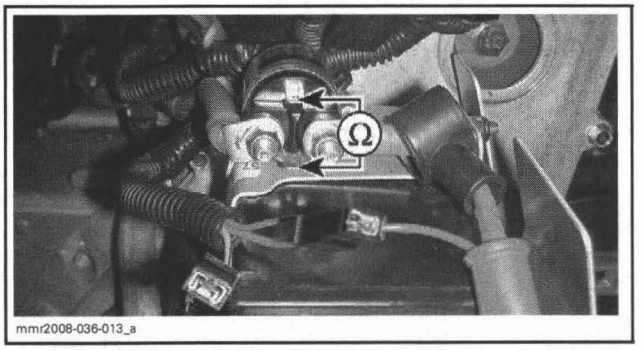

mmr2008-036-013_a

Check for stuck solenoid plunger. Disconnect battery ground cable and measure resistance as follows.

SOLENOID CONNECTOR		MEASUREMENT
Battery post	Starter post	Open circuit

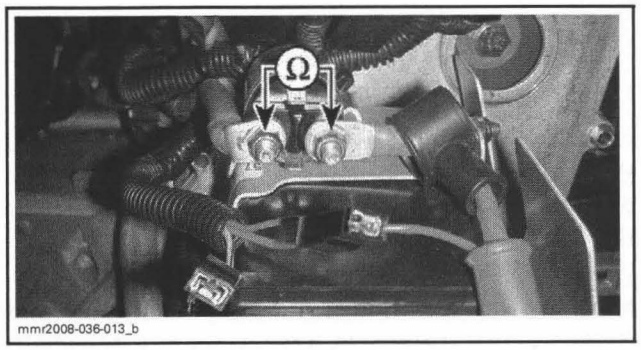

mmr2008-036-013_b

If any measurement is out of specification, replace solenoid.

Solenoid Dynamic Test

Reconnect battery ground cable and solenoid connectors.

Disconnect the ignition coil primary winding connector to prevent engine from starting.

Press START/RER button and hold. While engine is cranking, measure the voltage drop as follows.

SOLENOID CONNECTOR		VOLTAGE
Post coming from battery	Post going to starter	0.2 Vdc max.

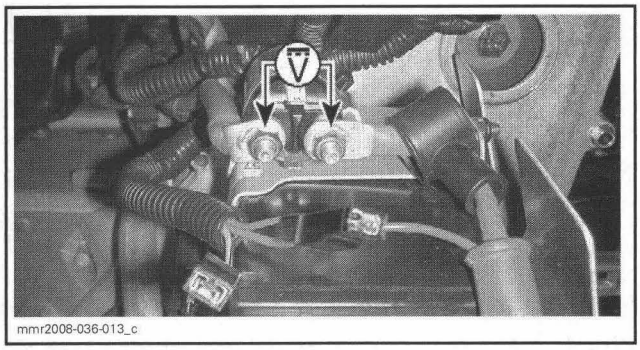

mmr2008-036-013_c

Reconnect spark plug cables.

If voltage is out of specification, replace solenoid.

If solenoid tests good, check the electric starter.

ELECTRIC STARTER

Starter Test

Either set engine cut-out switch to STOP or remove DESS cap to prevent engine from starting.

Remove the tuned pipe and disconnect spark plug cables.

⚠ WARNING

Do not touch spark plug or cables when cranking engine. High voltage would cause a powerful electrical shock if you touch them.

Using booster cable, carefully supply current from the battery directly to the starter. Connect the BLACK cable first. Connect the remaining booster cable from the battery then to the starter.

If the starter does not turn, check for mechanical problem in the starter.

Starter Removal

Remove both side panels and hood, refer to *BODY* section.

Disconnect BLACK (-) cable from battery.

Disconnect RED (+) cable from battery.

⚠ WARNING

Always disconnect BLACK (-) cable first and connect last.

Remove tool kit holder and drive belt guard.

Remove drive belt and drive pulley, refer to *ENGINE DRIVE SYSTEM* section.

Remove muffler and tuned pipe, refer to *EXHAUST SYSTEM* section.

Disconnect RED cable from starter.

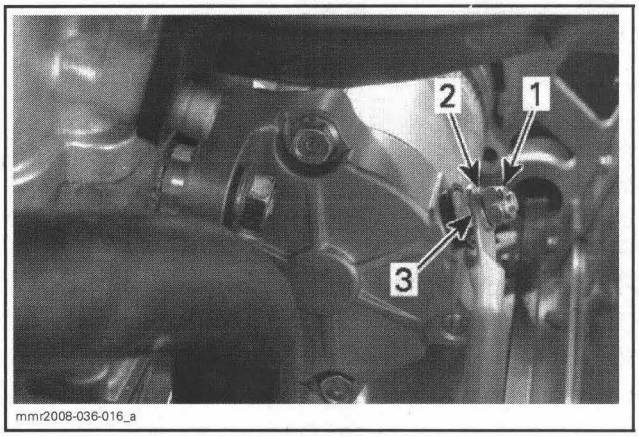

mmr2008-036-016_a

STARTER POWER CABLE
1. *Elastic nut*
2. *Washer*
3. *Power cable*

Remove the LH front and rear engine mounting hex screws (PTO side). Discard the screws.

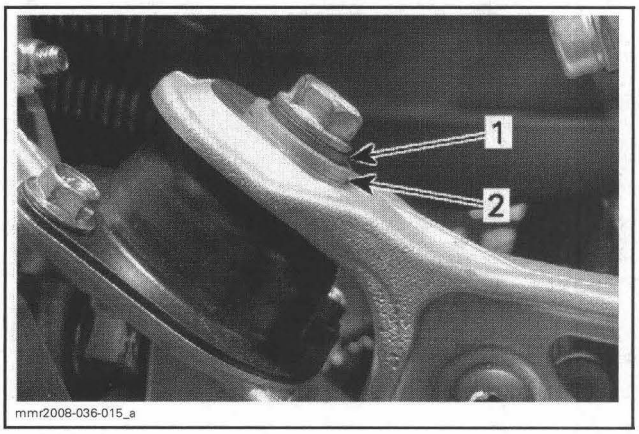

mmr2008-036-015_a

LH FRONT ENGINE MOUNT
1. *Conical washer*
2. *Flat washer*

NOTE: Pay attention to the washer positions for installation. The front mount screw has a conical spring washer under the head of the screw followed by a flat washer.

Remove and discard the three bolts retaining the engine torque stopper support.

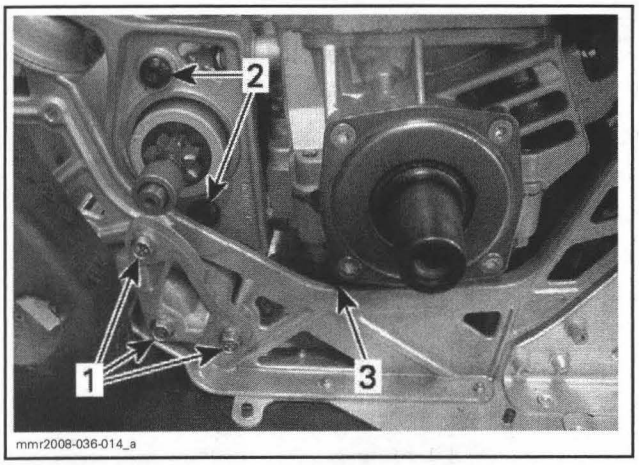

1. *Screws, torque stopper support*
2. *Starter screws*
3. *Pry bar position*

Insert a pry bar over the LH frame member and gently raise the engine just enough to access the lower mounting torx screw on the starter.

Remove and discard the lower mounting screw from the starter.

Remove the pry bar.

Remove and discard the upper mounting screw from the starter, discard screw.

Remove and discard the RH starter mounting screw from the front of the engine.

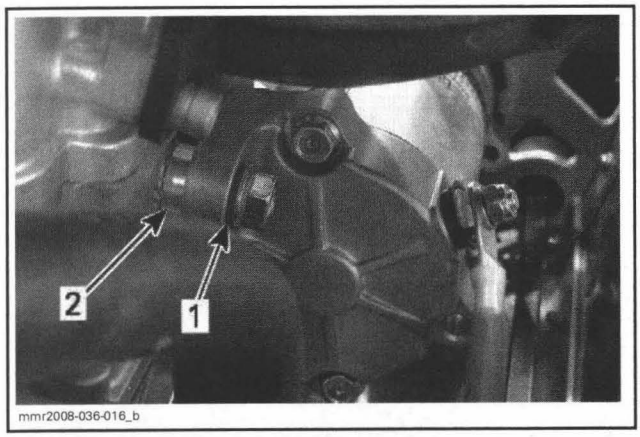

STARTER MOUNTING SCREW, RH
1. *Washer under screw head*
2. *Washer spacer between starter and engine*

NOTE: Pay attention to the spacer between engine and starter, and the washer under the screw head when removing the mounting screw on the RH side of the starter.

Starter Disassembly

Refer to the exploded view in the beginning of this section.

Before disassembling, trace index marks on starter housing **no. 10** and starter housing assembly **no. 8** and **no. 14** to ease assembly.

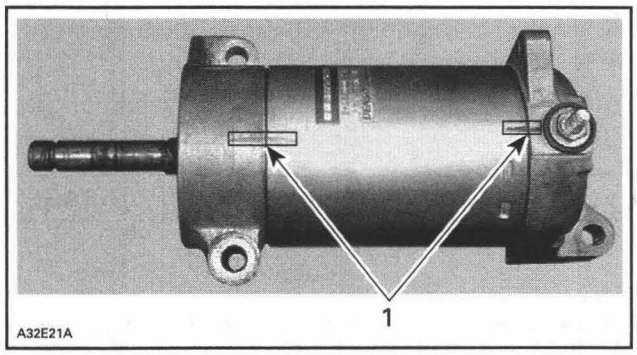

TYPICAL
1. *Alignment index marks for assembly*

Remove starter through bolts **no. 17**. Separate end frame housing **no. 14** from starter housing **no. 10**. Withdraw starter housing from armature.

Brush holder **no. 13** can be removed from end frame housing **no. 14** by disconnecting the end frame attached brush from brush holder **no. 13**.

Check the radial play between the armature shaft and end frame bearing. Replace the end frame bearing or replace starter. If parts are in good condition then coat with ThermoLube synthetic grease (P/N 219 700 417) before reinstalling them.

Push back the collar **no. 3** using a screwdriver.

Remove snap ring **no. 2**. Remove collar **no. 3** and spring **no. 4**.

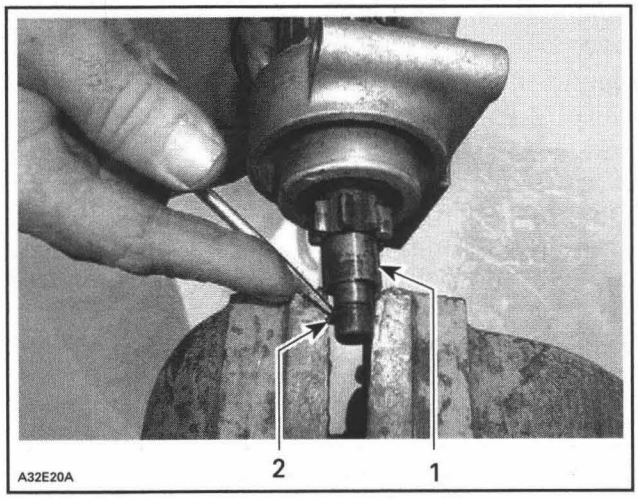

1. *Collar*
2. *Snap ring*

Turn starter clutch **no. 6** clockwise to remove it from armature assembly.

Pull housing from armature.

Starter Cleaning

CAUTION: Yoke assembly and drive unit assembly must not be immersed in cleaning solvent.

Clean brushes and holders with a clean cloth soaked in solvent. Brushes must be dried thoroughly with a clean cloth.

Blow brush holders clean using compressed air.

⚠ WARNING

Always wear safety glasses when using compressed air.

Remove dirt, oil or grease from commutator using a clean cloth soaked in suitable solvent. Dry well using a clean and dry cloth.

Clean engine ring gear teeth and drive unit (clutch).

NOTE: Bushings or bearings must not be cleaned with grease dissolving agents.

Immerse all metal components in cleaning solution. Dry using a clean and dry cloth.

Starter Inspection

Armature

NOTE: An ohmmeter may be used for the following testing procedures, except for the one concerning the shorted windings in the armature.

Check the commutator for roughness, burnt or scored surface. If necessary, turn the commutator on a lathe, enough to remove grime only.

Check the commutator for mica depth. If the depth is less than 0.20 mm (.008 in), undercut the mica. Be sure that no burrs are left and no copper dust remains between the segments after the undercutting operation is completed.

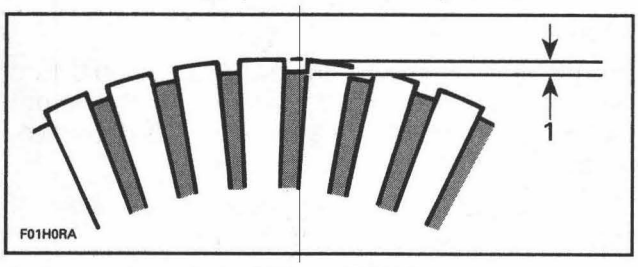

1. Commutator undercut 0.20 mm (.008 in)

Check the commutator out-of-round condition with V Blocks and an indicator. If the commutator out-of-round is more than 0.40 mm (.016 in), the commutator should be turned on a lathe.

Check commutator outer diameter. If less than specified value, replace starter.

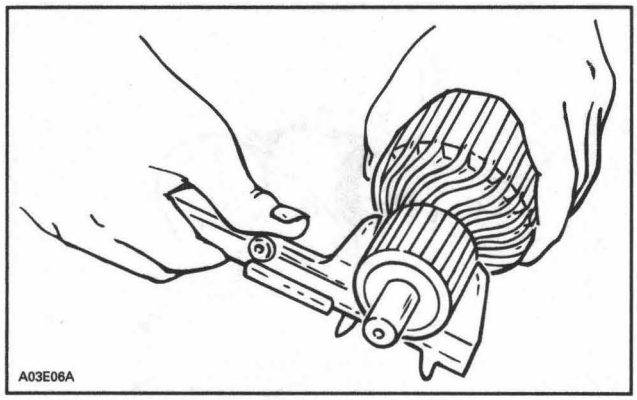

MODEL	WEAR LIMIT
All models	27 mm (1.063 in)

Test for Ground Circuit in the Armature

Use growler test probes. Check between armature core and the commutator bars. If growler lamp turns on, bars are grounded. If so, replace starter.

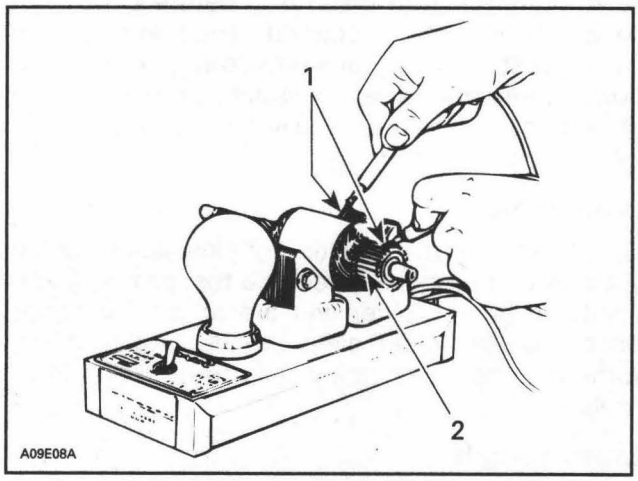

1. Test probes
2. Commutator bars

Test Armature for Shorted Winding

When the armature is rotated in the growler with a steel strip (hacksaw blade) held above it, the strip will vibrate over that area of the armature which has short circuit. Replace starter.

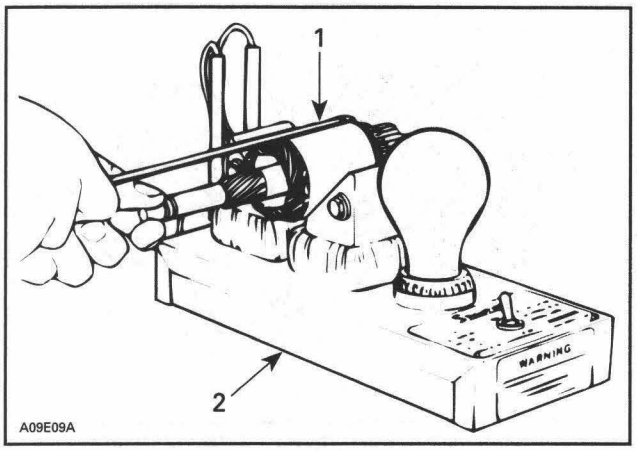

1. Steel strip (hack-saw blade)
2. Growler

Test the Armature for Open Circuit

Use growler test probes. Place one test probe on a commutator bar and the other test probe on the neighboring bar. Repeat this operation for all bars, moving one test probe at a time. If the growler lamp does not turn on, the armature circuit between these 2 bars is opened. The starter should be replaced; open circuits most often occur at the commutator riser where coils are soldered. (Burnt commutator bars are usually an indication of an open-circuit armature coil.)

Brush Holder

Check the brush holder for insulation using growler test probes. Place one test probe on the insulated brush holder and the other test probe on the brush holder plate. If the growler lamp turns on, the brush holder has to be repaired or replaced.

Brush Length

Measure brush length. If less than the specified value, replace them.

MODEL	LENGTH	
	NEW	WEAR LIMIT
All	10 mm (.400 in)	6 mm (.236 in)

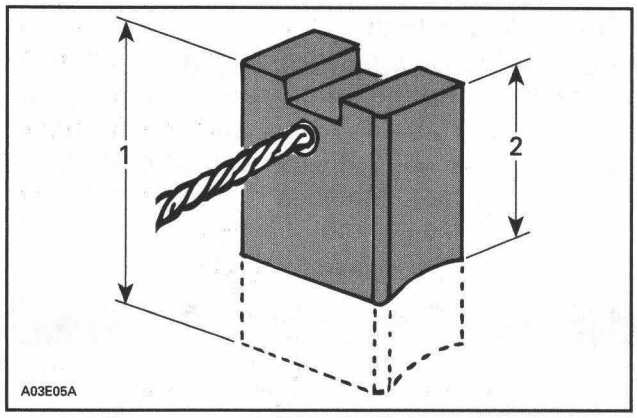

TYPICAL
1. New
2. Wear limit

End Housing

Check the mica insulation of the positive brush and also the roller bearing condition. Replace, if necessary.

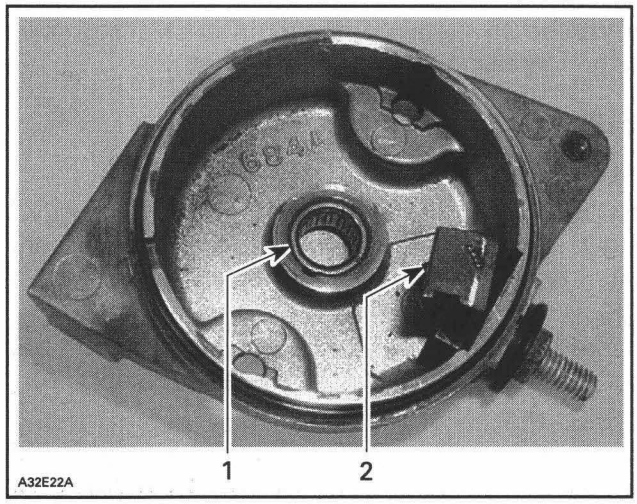

1. Roller bearing
2. Positive brush

Overrunning Clutch

The pinion of the overrunning clutch should turn smoothly in a clockwise direction, and should not slip in a counterclockwise direction. If defective, replace.

Check the pinion teeth for wear and damage. If defective, replace.

Starter Assembly

Reverse the order of disassembly to reassemble starter. However, attention should be paid to the following operations.

Prior to assembling, coat sliding surfaces on armature shaft splines, overrunning clutch and bushing with ThermoLube synthetic grease (P/N 219 700 417).

After placing collar **no. 3** on armature shaft , fit new snap ring **no. 2** on armature shaft, then make sure that it is properly secured.

Slide collar **no. 3** over snap ring **no. 2** and secure in place by punching it at two or three places.

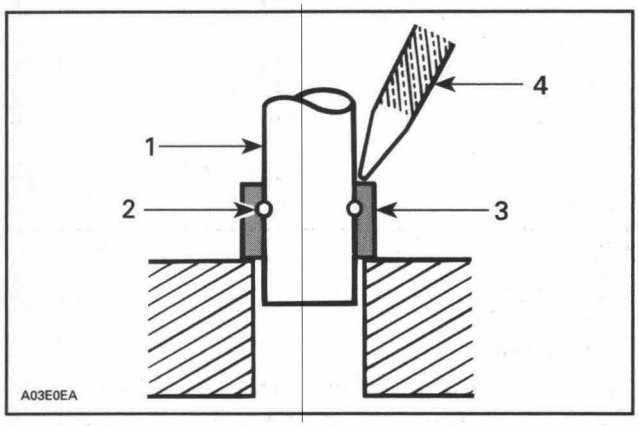

1. *Armature shaft*
2. *Snap ring*
3. *Collar*
4. *Punch*

Starter Housing Assembly and Starter Housing

Align previously traced indexing marks.

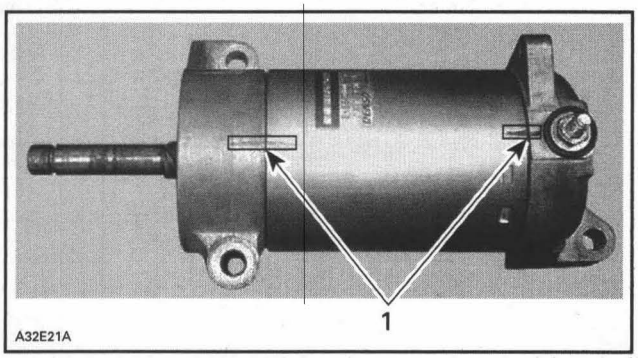

TYPICAL
1. *Aligned indexing marks*

Open brushes and slide over commutator.

Align end frame locating notch with yoke locating protrusion and properly sit brush holder **no. 13** into housing **no. 14**.

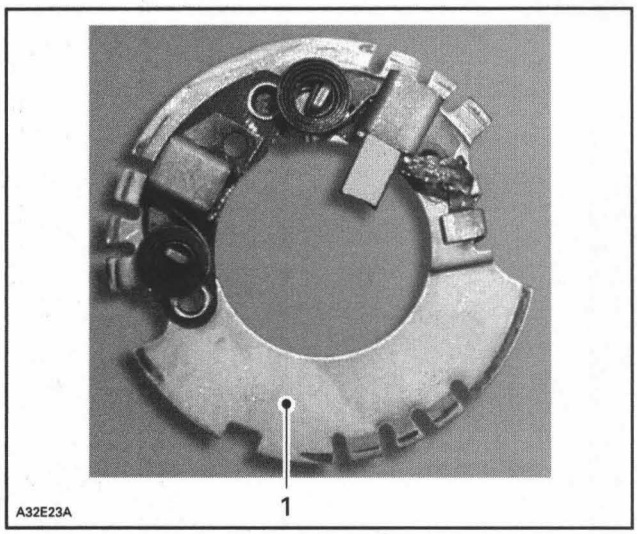

1. *Brush holder*

To ease end frame installation, retain brush holder with a small screwdriver while installing armature assembly.

CAUTION: Make sure to place two end housings on a flat surface before tightening the through bolts.

CAUTION: Make sure end frame fits perfectly on yoke.

Starter Installation

Install removed parts in the reverse order of removal, pay attention to the following.

Make sure that starter and engine mating surfaces are free of grime. Serious trouble may arise if starter is not properly aligned.

Replace all scotch grip screws.

For ease of installation, install the three new starter mounting screws loosely before torquing. Torque the two mounting torx screws first, then the hex screw to 28 N•m (20 lbf•ft).

Install engine mounting bolts and torque to 25 N•m (18 lbf•ft).

Install remaining engine components, refer to *ENGINE REMOVAL AND INSTALLATION* section.

Connect the RED wire to the large terminal of the starter.

⚠ WARNING

Always disconnect ground cable first and connect last.

Torque starter terminal nut to 7 N•m (62 lbf•**in**).

Install the positive battery cable, then the negative cable.

DIGITALLY ENCODED SECURITY SYSTEM (DESS)

SERVICE TOOLS

Description	Part Number	Page
FLUKE 111 multimeter	529 035 868	326
DESS post interface tool	529 036 019	326

GENERAL

The following components are specially designed for this system: ECM, DESS key and DESS post.

This system allows the engine to reach pulley engagement speed only if a programmed DESS key is installed on DESS post.

NOTE: Actually, it is the memory of the ECM which is programmed to recognize the digital code of the DESS key.

The DESS key contains a magnet and a ROM chip. The magnet actually closes the reed switch inside the post which is the equivalent of a mechanical ON/OFF switch. The chip has a unique digital code.

The DESS system is quite flexible. Up to 8 DESS keys may be programmed in the memory of the ECM. They can also be erased individually.

NOTE: If desired, a DESS key can be used on other vehicle equipped with the DESS. It only needs to be programmed for that vehicle.

Engine Starting

When starting the engine with a DESS key on the post, the DESS is activated and will emit audible signals:

- 2 short beeps indicate a working DESS key. Vehicle can be driven, it allows engine to rev above 3000 RPM.
- Repetitive short beeps indicates a wrong DESS key is being used or that something is defective. Vehicle can not be driven. Refer to table below.

DESS Beeper Codes

DESS SIGNAL		DESCRIPTION	
BEEPER	DISPLAY MESSAGE		
2 shorts	WELCOME... or SKI-DOO	Welcome message, good key	
Slow short repetitive beeps	CHECK KEY	Unable to read key (bad connection)	Make sure the key is free of dirt or snow. Reinstall key and restart engine. Vehicle can not be driven.
Fast short repetitive beeps	BAD KEY	Invalid key or key not programmed	Use the proper key for this vehicle or have the key programmed. Vehicle can not be driven.

PROCEDURES

DESS KEY

DESS Key Programming

Use the latest B.U.D.S. software available from BOSSWeb. Refer to *COMMUNICATION TOOLS/B.U.D.S. SOFTWARE* for proper connection instructions.

Read **ECM** using **Read Data** button.

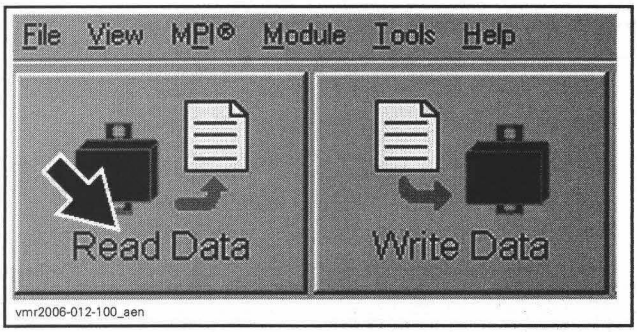

500SS/800R

Install the new key to be programmed on vehicle DESS post.

600 HO SDI

Install the new key to be programmed on DESS post interface tool (P/N 529 036 019).

All Models

Click on **Keys** tab.

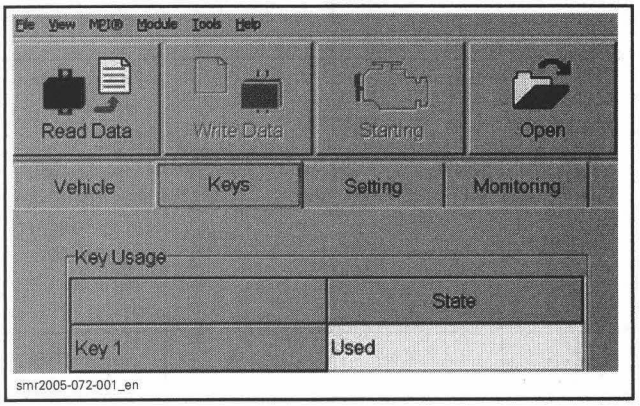

Click on **Add Key** button on bottom of screen.

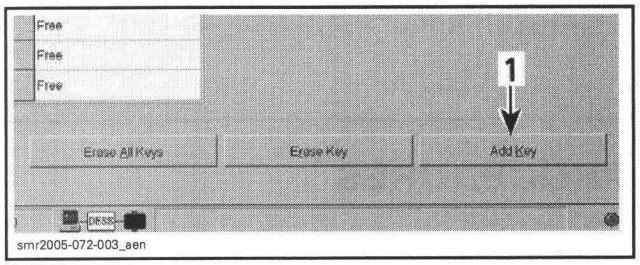

1. Click on this tab

A new key is now saved in the computer.

NOTE: To program other key(s), install a new key and click again on **Add Key** tab.

Ensure to save new data in **ECM** using **Write Data** button.

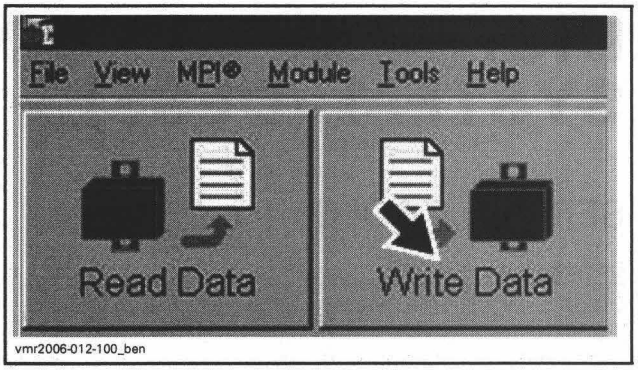

BEEPER

NOTE: The beeper is a built-in component of the multifunction display gauge and cannot be replaced alone.

DESS POST

DESS Post Continuity Test

The following continuity tests can be performed using the FLUKE 111 multimeter (P/N 529 035 868).

Disconnect DESS post wires.

DESS Key Removed from Post

Connect test probes to DESS post as per tables and measure resistance.

DESS POST		RESISTANCE Ω @ 20°C (68°F)
WIRE		
BLACK/ GREEN	BLACK/ WHITE	Open circuit

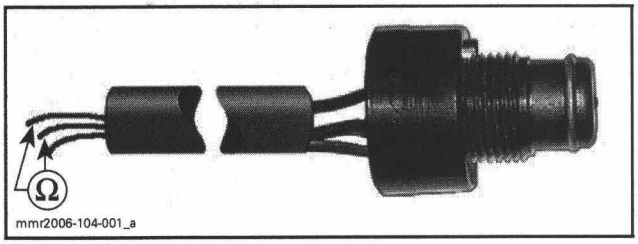

DESS POST		RESISTANCE Ω @ 20°C (68°F)
WIRE		
WHITE/ GRAY	Post terminal	Close to 0 Ω

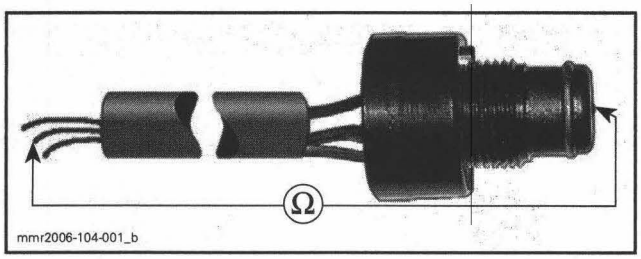

DESS POST WIRE		RESISTANCE Ω @ 20°C (68°F)
BLACK/ GREEN	Post ring	Close to 0 Ω

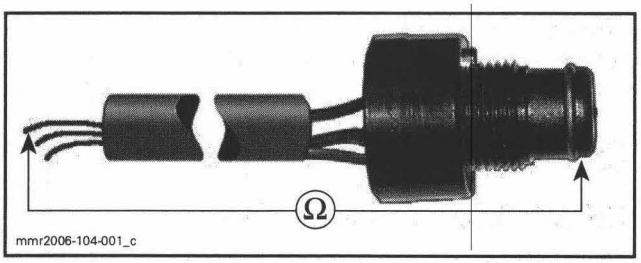

DESS Key on Post

Connect test probes to DESS post as per table and measure resistance.

DESS POST WIRE		RESISTANCE Ω @ 20°C (68°F)
BLACK/ GREEN	BLACK/ WHITE	Close to 0 Ω

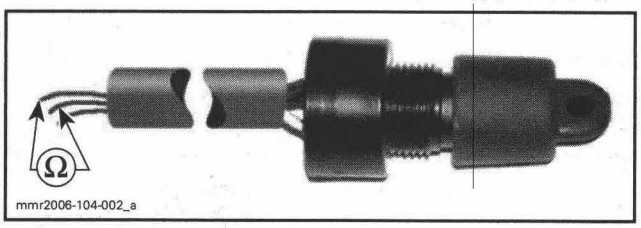

If any resistance test fails, replace DESS post.

ROTAX ELECTRONIC REVERSE

SERVICE TOOLS

Description	Part Number	Page
ECM adapter	420 277 010	332–333
FLUKE 111 multimeter	529 035 868	330
Supply T-harness	529 035 869	331
12 volts battery supply cable	529 035 997	331

GENERAL

There are 3 main components used for the RER system:

- RER switch
- ECM
- RER trigger coil.

The ECM receives signals from both trigger coils for forward and reverse engine rotation.

NOTE: Refer to *IGNITION SYSTEM* for trigger coils testing.

The ECM recognizes a signal sent by the RER switch.

On manual start models, when switch is activated and engine is not running, nothing takes place.

When switch is activated and engine is running, the ECM cuts off ignition. Therefore, engine RPM gradually drops. When engine reaches a low threshold RPM, the ECM sends an ignition spark at a great advance creating a thrust which reverses engine rotation.

Both trigger coil signals are used by the ECM for forward or reverse engine operation.

Under a threshold low RPM or above 4300 RPM, the RER function is disabled. Nothing takes place when pressing RER button.

TROUBLESHOOTING

RER Does Not Respond When Depressing RER Button

Check if engine RER switch works properly.

Check switch voltage input and output.

Engine Stops after Pressing RER Button

This confirms that RER switch works.

Check trigger coil.

RER Works Erratically

Check engine compression. A low compression engine may result in RER working erratically making you think the problem is an electronic problem.

Check piston condition. Verify piston condition through the intake and exhaust ports. Look for scoring on piston skirts. Scored piston skirts may result in RER working erratically making you think the problem is an electronic problem.

Check RER switch.

PROCEDURES

RER SWITCH

Testing Signal with B.U.D.S.

If Available

Use the latest B.U.D.S. software available from BOSSWeb. Refer to *COMMUNICATION TOOLS/B.U.D.S SOFTWARE* for proper connection instructions.

A quick operation test can be done using the **Monitoring** section in B.U.D.S.

Set engine cut-out to OFF.

Press vehicle START/RER button and look at the START button LED. It should turn on, indicating START/RER switch, ECM and wiring are working.

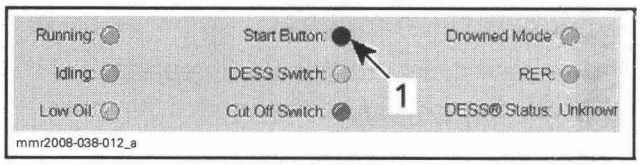

1. Should turn on (green)

If light turns on, check trigger coils. Refer to *IGNITION SYSTEM*.

If light does not turn on, check START/RER switch as follows.

RER Switch Continuity Test

500SS and 800R models

Remove multifunction gauge. Refer to *BODY*.

Disconnect 13-pin connector of the steering harness.

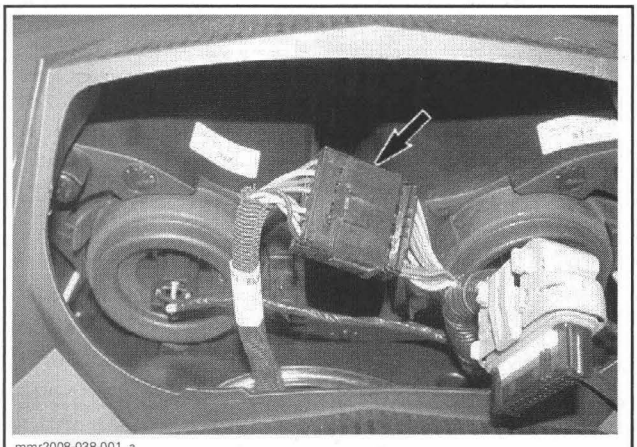
mmr2008-038-001_a

Measure switch continuity as follows using the FLUKE 111 multimeter (P/N 529 035 868).

SWITCH POSITION	WIRES		RESISTANCE
Released	RED/GREY	BEIGE	High value or infinite (0L)
Pressed and held			Continuity (0.2 Ω max.)

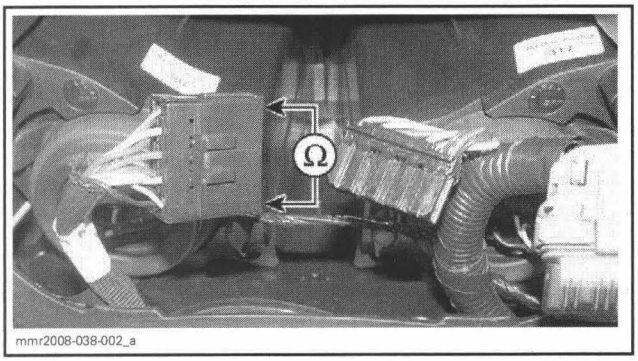

mmr2008-038-002_a

If continuity test fails, check wires/connectors going to START/RER switch.

If wires and connector are good, replace switch.

600 HO SDI Models

Disconnect the 3-pin connector of switch harness.

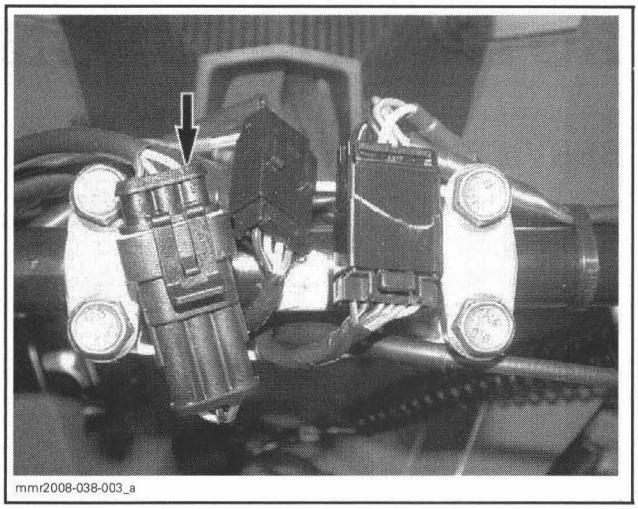
mmr2008-038-003_a

Measure continuity of switch as follows using the FLUKE 111 multimeter (P/N 529 035 868).

SWITCH POSITION	WIRES		RESISTANCE
Released	BLACK	RED	Continuity (0.2 Ω max.)
	BLACK	WHITE	High value or infinite (0L)
Pressed and held	BLACK	RED	High value or infinite (0L)
	BLACK	WHITE	Continuity (0.2 Ω max.)

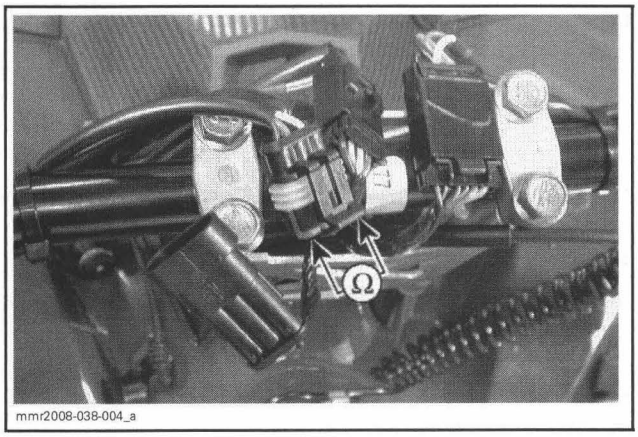

mmr2008-038-004_a

If continuity test fails, replace switch.

If continuity is good, reconnect 3-pin connector and recheck continuity as follows.

Remove multifunction gauge. Refer to *BODY*.

Disconnect steering connector (11-pin) and the 8-pin connector.

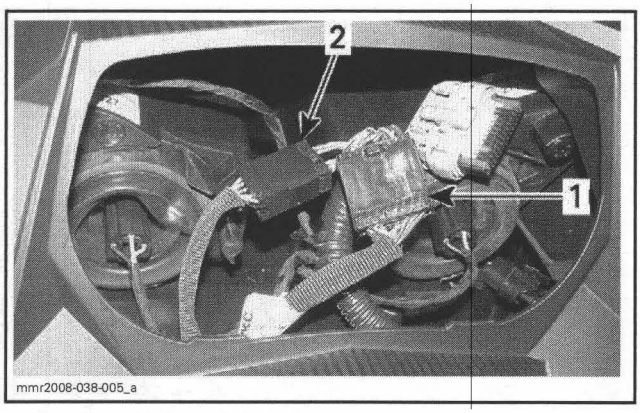

1. Steering connector (11-pin)
2. 8-pin connector

SWITCH POSITION	WIRES		RESISTANCE
Released	BLACK/BLUE 11-pin connector	BEIGE 8-pin connector	Continuity (0.2 Ω max.)
	BEIGE 8-pin connector	RED/ BROWN 11-pin connector	High value or infinite (OL)
Pressed and held	BLACK/BLUE 11-pin connector	BEIGE 8-pin connector	High value or infinite (OL)
	BEIGE 8-pin connector	RED/ BROWN 11-pin connector	Continuity (0.2 Ω max.)

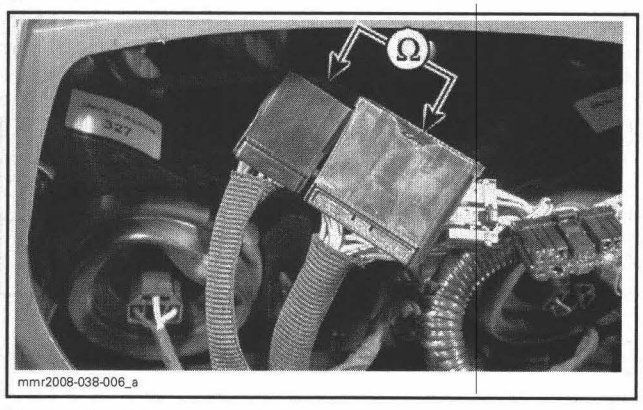

If continuity was not good, repair harness.

RER Switch Input Voltage Test

500SS and 800R

If continuity tests were good, measure voltage on harness side of connector as follows.

On manual start models, use the following tools to supply power to the ECM for this test.

- Supply T-harness (P/N 529 035 869)
- 12 volts battery supply cable (P/N 529 035 997)
- 12 volts battery.

Refer to *LIGHTS, INSTRUMENTS AND ACCESSORIES* for proper connections.

On electric start models, install DESS key on post.

MANUAL START		
WIRE		VOLTAGE
RED/GREY	Engine ground	12 Vdc
ELECTRIC START		
WIRE		VOLTAGE
RED/GREY	Battery ground	12 Vdc

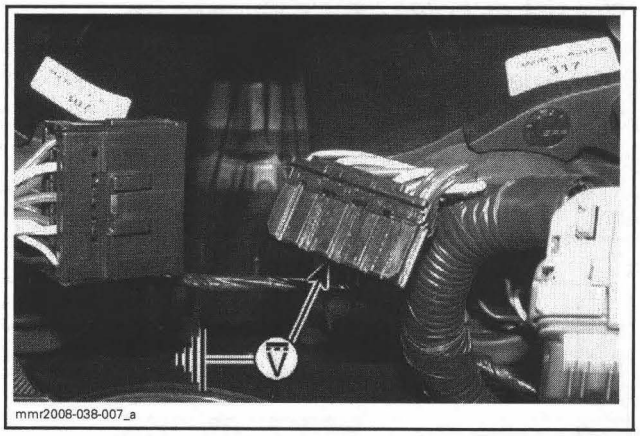

If voltage is not appropriate, check RED/GREY power wire coming from voltage regulator (from battery on electric start models). Also check the 5 A fuse on electric start models.

If voltage is good, disconnect ECM connector and check wire continuity between steering connector and ECM as follows.

ENGINE TYPE	STEERING CONNECTOR WIRE	ECM CONNECTOR WIRE	RESISTANCE
500SS	RED/GREEN	PIN 8	Continuity (0.2 Ω max.)
800R	RED/WHITE	PIN 8	Continuity (0.2 Ω max.)

If it tests good, try a new ECM.

If test fails, repair open circuit.

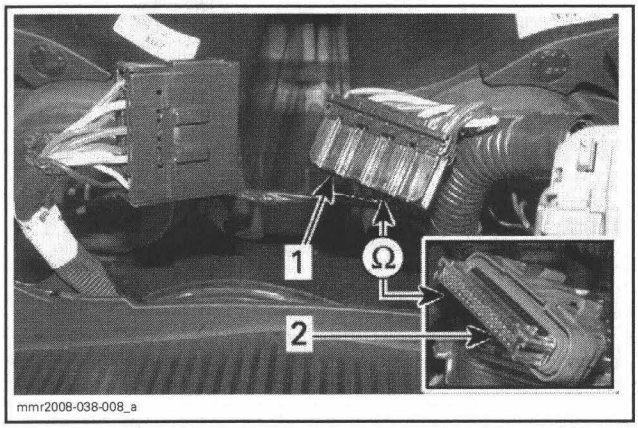

mmr2008-038-008_a

1. *Steering connector (main harness side)*
2. *ECM connector*

600 HO SDI Models

If continuity was good, measure voltage on harness side of steering 11-pin connector as follows.

On electric start models, install DESS key on post.

MANUAL START		
WIRE		VOLTAGE
RED/BROWN	Engine ground	12 Vdc
ELECTRIC START		
WIRE		VOLTAGE
RED/BROWN	Battery ground	12 Vdc

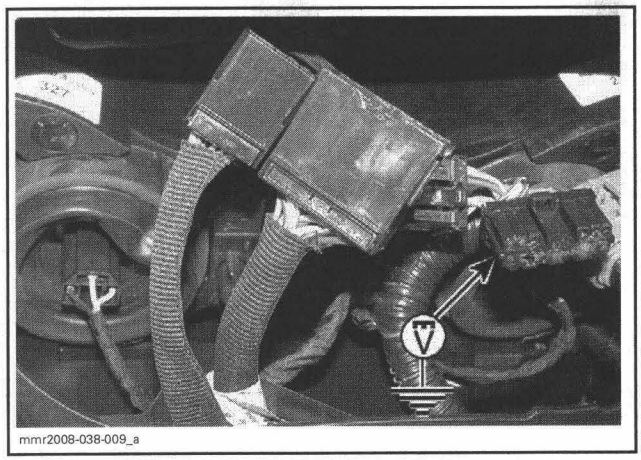

mmr2008-038-009_a

If voltage is not appropriate, check fuse (5 A) and RED/BROWN power wire coming from voltage regulator.

If voltage is good, check continuity of BLACK/BLUE wire from 3-pin connector to RH side connector then from RH side connector to engine ground. Repair/replace connector/wiring if test fails.

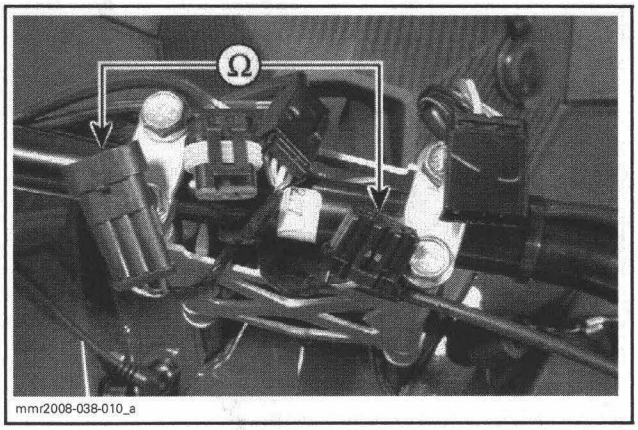

mmr2008-038-010_a

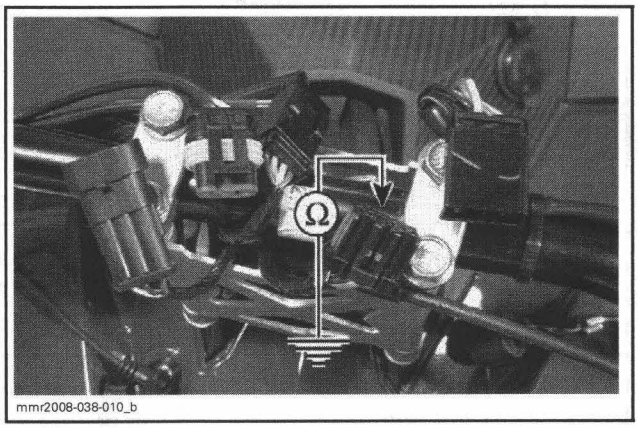

mmr2008-038-010_b

Also, if voltage is good, disconnect ECM connector B and connect to ECM adapter (P/N 420 277 010). Check wire between 8-pin connector and ECM adapter.

CAUTION: To prevent damage to female terminals, never probe directly into ECM connector. Always use ECM adapter (P/N 420 277 010) for this purpose.

8-CONNECTOR WIRE	ECM ADAPTER PIN	RESISTANCE
BEIGE	B 19	Continuity (0.2 Ω max.)

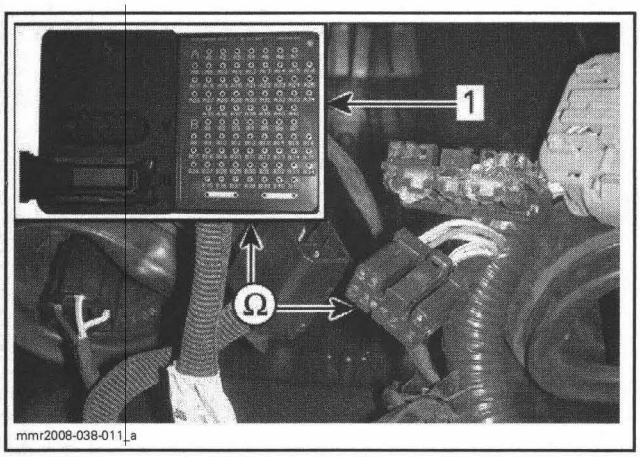

1. ECM Adapter (P/N 420 277 010)

If it tests good, try a new ECM.

If test fails, repair open circuit.

RER Switch Output Voltage Test

All Models

Measure switch voltage output from main harness side of steering connector as follows.

SWITCH POSITION	WIRES		RESISTANCE
Pressed and held	BEIGE	GROUND	Approximately 12 Vdc
Released	BEIGE	GROUND	Close to 0 Vdc

If test fails, replace switch.

BEEPER (REVERSE ALARM)

The reverse alarm (beeper) is integrated in the gauge cluster and is also used for emitting the vehicle beep codes. If the beeper does not function, you will have to change the gauge.

To test it, start vehicle. You should hear the beeper on start up. If you do not hear the beeper on start up, check for fault codes and refer to *MONITORING SYSTEM/FAULT CODES* section.

Press the Start/RER button to put the vehicle in reverse. You should hear slow long beeps advising you that you are in reverse.

If you hear 3 short beeps, the reverse selection failed. Try the procedure again.

LIGHTS/GAUGE/ACCESSORIES

SERVICE TOOLS

Description	Part Number	Page
ECM adapter	420 277 010	341
Fluke 111 multimeter	529 035 868	335, 340–341, 350
supply harness	529 035 869	336–337
supply cable	529 035 997	336

SERVICE TOOLS – OTHER SUPPLIER

Description	Part Number	Page
Fluke rigid back probes	TP88	335

GENERAL

NOTE: On applicable models, it is a good practice to check for fault codes using B.U.D.S. software as a first troubleshooting step. Refer to *MONITORING SYSTEM/FAULT CODES*.

CAUTION: The charging system fuse should always be removed before carrying out any maintenance on the vehicle to prevent any unexpected electrical activation. Removal of this fuse isolates the battery from the vehicle electrical system, except for the starter relay input terminal.

During assembly/installation, use the torque values and service products as in the exploded views.

Clean threads before applying a threadlocker. Refer to *SELF-LOCKING FASTENERS* and *LOCTITE APPLICATION* at the beginning of this manual for complete procedure.

⚠ WARNING

Torque wrench tightening specifications must be strictly adhered to. Locking devices (e.g.: locking tabs, elastic stop nuts, self-locking fasteners, cotter pins, etc.) must be replaced with new ones.

Diagnostic Tools

To perform verifications, use the Fluke 111 multimeter (P/N 529 035 868).

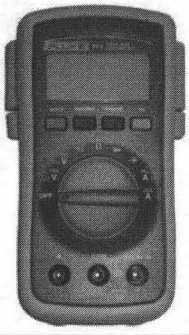

529 035 868

To easily probe wire terminals through the back of their connectors, use Fluke rigid back probes (P/N TP88) or equivalent. They can be inserted at the end of the standard probes of the Fluke 111 multimeter (P/N 529 035 868).

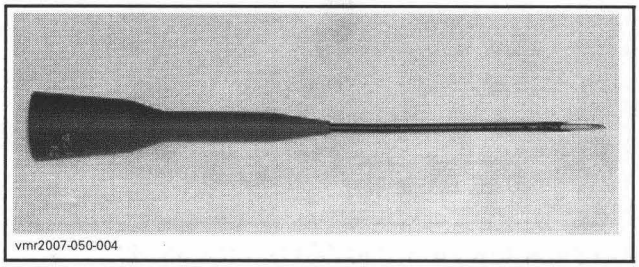

vmr2007-050-004

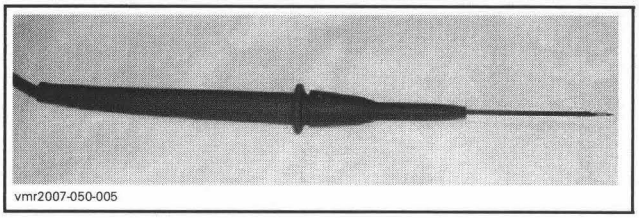

vmr2007-050-005

DIAGNOSTIC

LIGHTING AND ACCESSORIES SYSTEM TESTING

500SS/800R

To provide power to the lighting and accessories systems for testing, carry out the following steps.

Remove the 6-pin diagnostic connector from protective cap on vehicle.

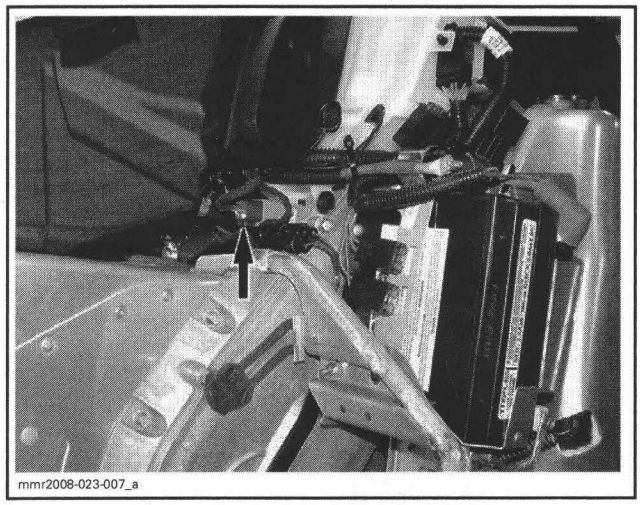

TYPICAL – REMOVE DIAGNOSTIC CONNECTOR

Connect supply harness (P/N 529 035 869) to the 6-pin connector of vehicle.

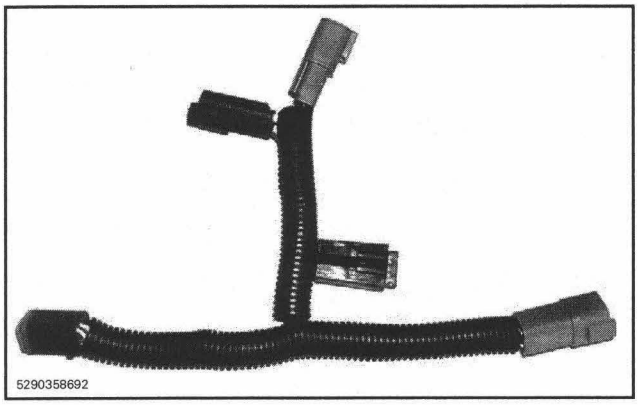

Connect supply cable (P/N 529 035 997) to the supply harness.

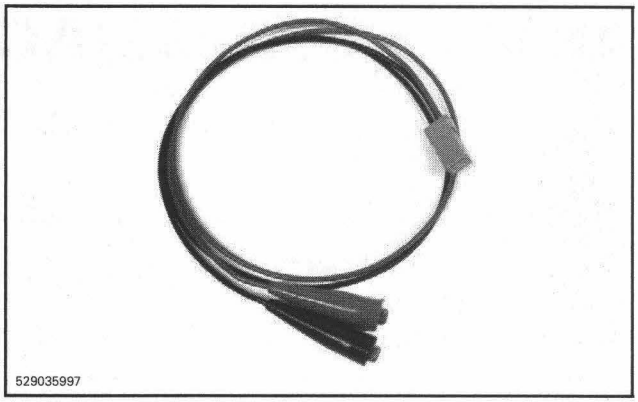

Connect supply cable clips to vehicle battery. Ensure to match RED wires together and BLACK wires together.

NOTE: On manual start models, use an external 12 V battery.

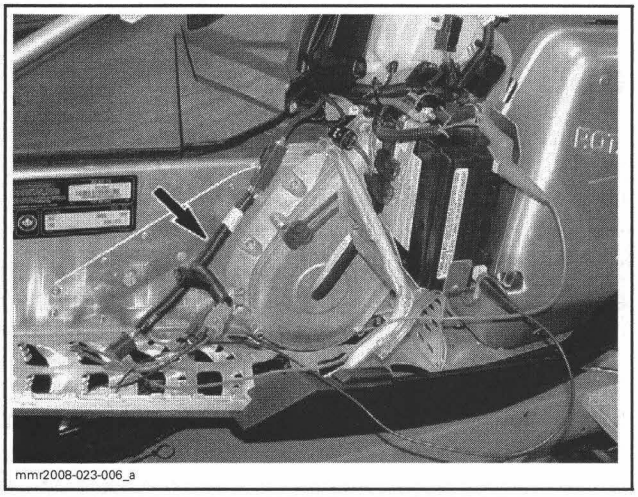

SUPPLY HARNESS CONNECTION TO DIAGNOSTIC CONNECTOR

NOTE: It is suggested to disconnect the headlights or to connect a battery charger to reduce battery discharge rate.

Refer to appropriate wiring diagram in *WIRING DIAGRAMS* section to troubleshoot lighting system.

CAUTION: Always use the proper supply harness and cables. Always respect polarity when connecting cable clips to battery. Match RED cables together.

When testing is completed, disconnect supply cable clips from battery, and remove supply harness and supply cable from vehicle. Reconnect the 6-pin diagnostic connector in its cap.

600 HO SDI

To provide power to lighting and accessories systems, carry out the following steps.

In the fuse box, remove the accessory relay (R3).

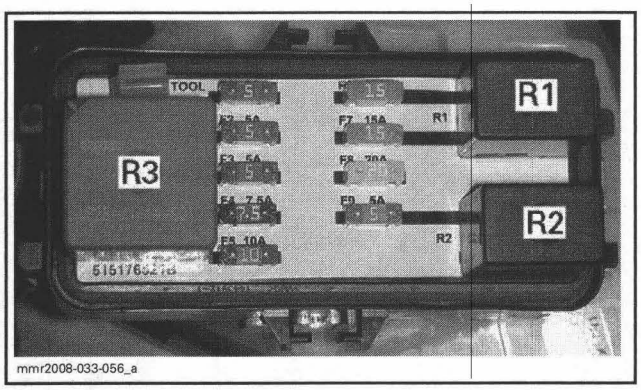

REMOVE R3

Install an appropriate insulated jumper between pins 1B and 3C. This will by-pass the relay and apply power to the accessory circuits once the ECM is awake.

Remove the 6-pin diagnostic connector from protective cap on vehicle.

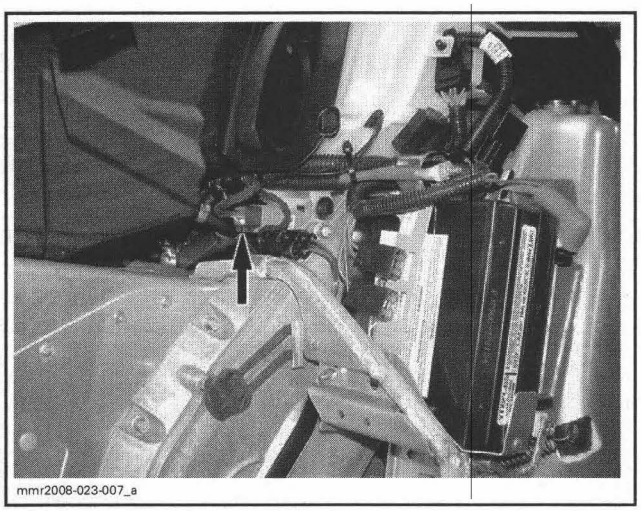

TYPICAL LOCATION— ALL MODELS

Connect supply harness (P/N 529 035 869) to the 6-pin connector of vehicle.

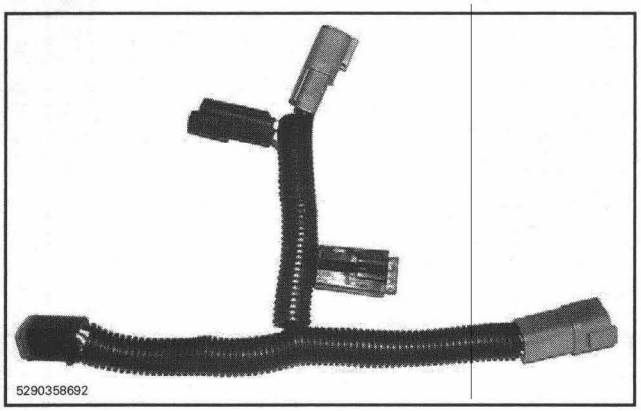

Connecting the supply harness will wake up the ECM and energize the circuits up to R3 without any other selection.

NOTE: It is suggested to disconnect the headlights or to connect a battery charger to reduce battery discharge rate.

NOTE: SDI models already have a 12 V battery; they do not need an external battery to allow troubleshooting. The use of the supply harness will keep the ECM ON to give you more time to work. Not using it will allow the ECM to shut-off after approximately 30 seconds.

Use the applicable wiring diagram in *WIRING DIAGRAMS* section to troubleshoot lighting and accessories systems.

Once testing is complete, disconnect supply harness from vehicle and reconnect the 6-pin diagnostic connector in its cap.

Remove jumper in fuse box and install R3 accessories relay.

Test with B.U.D.S.

The 600 HO SDI accessory circuits can be powered for testing using the B.U.D.S. software.

Using the latest B.U.D.S. software, energize **relay 3** from the **Activation** tab.

Headlights should turn on.

If the relay does not function, carry out an *R3 INPUT VOLTAGE TEST*. See procedure in this section.

PROCEDURES

FUSES

Fuse Inspection

Check if filament is melted. Replace as necessary.

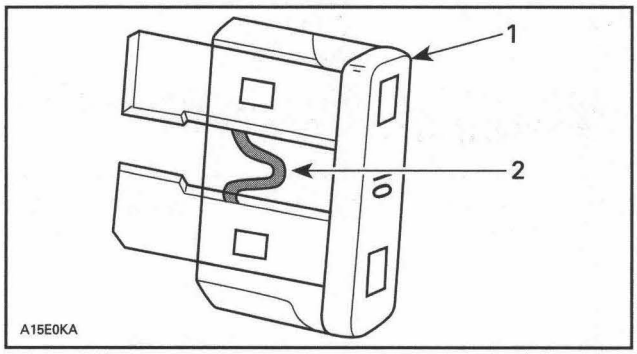

1. *Fuse*
2. *Check if melted*

CAUTION: Do not use a higher rated fuse as this can cause severe damage to electric components and/or a fire.

⚠ WARNING

If fuse has burnt out, the cause of the malfunction should be determined and corrected before restarting.

Fuse Location

500SS/800R

All the fuses except for the fuel level sensor fuse are located near the battery. The illustration below depicts the locations of the various fuses as in an electric start model. The fuses applicable to the manual start models (accessories and headlights fuses) will be in the same locations.

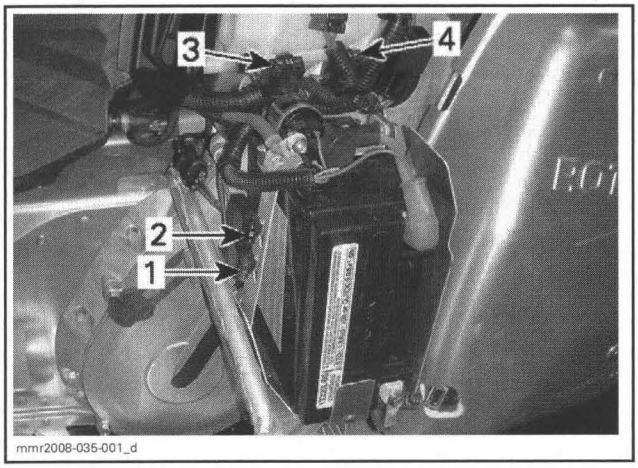

TYPICAL – FUSE LOCATIONS (ELECTRIC START MODEL SHOWN)
1. *Starting fuse*
2. *Charging system fuse*
3. *Accessories fuse*
4. *Headlights fuse*

600 HO SDI

Except for the charging system fuse and the fuel level sensor fuse, all fuses are located in a fuse box mounted on the oil tank.

The charging system fuse is located on the LH side of the battery support (when facing it).

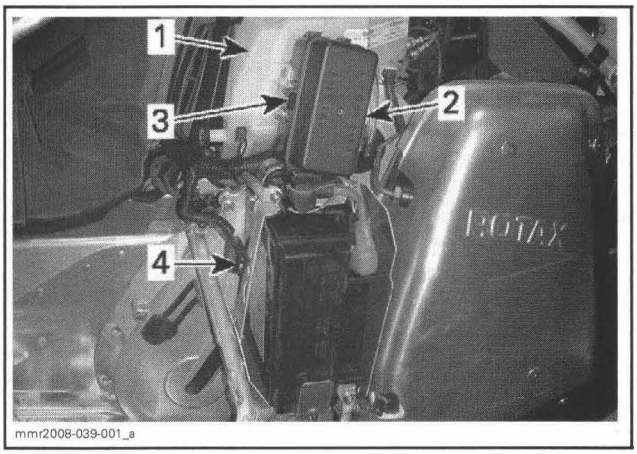

1. *Oil tank*
2. *Fuse box*
3. *Cover latch (one each side)*
4. *Charging system fuse*

All Models

Fuel Level Sensor Fuse

The fuel level sensor circuit is protected by an in line fuse located near the sensor. It is an integral part of the wiring that comes with the sensor assembly.

To access the fuel level sensor fuse, remove the primary silencer from the engine air inlet system.

NOTE: In the following illustration, the fuel tank was moved back for access and clarity of illustration.

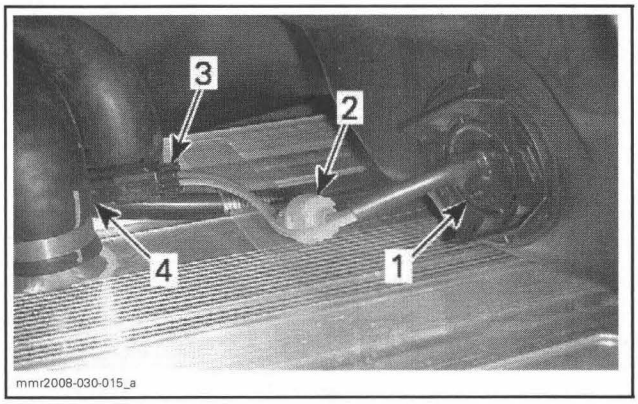

1. *Fuel level sensor*
2. *In-line fuse*
3. *Connector*
4. *Connector routing*

Fuse Description

500SS/800R

MODEL	FUSE	DESCRIPTION	LOCATION
Manual start	15 A	Headlight (FD)	Attached to oil tank
	15 A	Accessories (FC)	

MODEL	FUSE	DESCRIPTION	LOCATION
Electric start	5 A	Start (FB)	LH side of battery support
	15 A	Headlight (FD)	Attached to oil tank
	15 A	Accessories (FC)	
	30 A	Charging system (FA)	LH side of battery support
	0.25 A	Fuel level sensor (in-line type)	Behind primary air inlet silencer

600 HO SDI

MODEL	FUSE	DESCRIPTION	LOCATION
All 600 HO SDI	0.25 A	Fuel gauge (in-line type)	Behind primary air inlet silencer
	5 A	Outer injectors (F1)	Fuse box (above battery)
	5 A	Inner injectors (F2)	
	5 A	ECM (F3)	
	15 A	Gauge/accessories relay/start solenoid (F4)	
	5 A	Relay 1, 2/start button (F9)	
	10 A	Fuel pump/ignition coil (F5)	
	15 A	Headlights (F7)	
	15 A	Accessories (F6)	
	20 A	Capacitor (F8)	
	30 A	Charging system (FA)	Side of battery support

Fuses are identified on a decal on the face of the fuse box.

A variety of spare fuses are stored on the inside of the fuse box cover.

A fuse removal tool is located just above the large relay on the left side of the box.

The following illustration denotes the layout of the contacts in the fuse box , when referring to the wiring diagram contact numbers (IE. fuse F9 contact 8B).

Numbers 1 to 12 identifies the vertical rows while A to E identifies the horizontal rows.

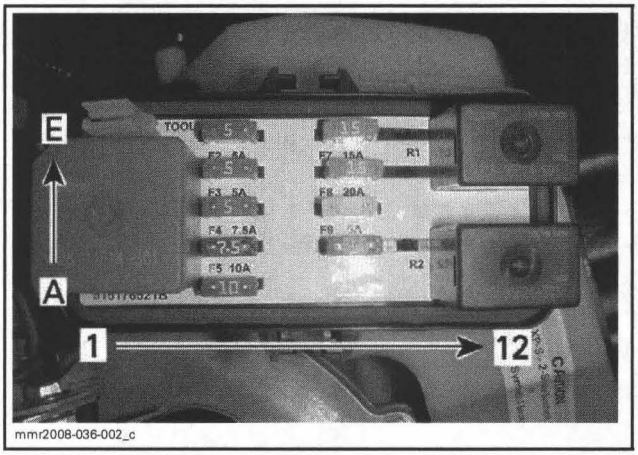

mmr2008-036-002_c

FUSE CONTACT LAYOUT

RELAY R1 (LIGHTS AND ACCESSORIES)

500SS/800R

R1 Description

The lights and accessories relay (R1) is attached to the vehicle main wire harness by its connector and a locking tie.

To access R1, remove the following:
- Left side panel
- Drive belt guard
- Primary silencer on the engine air inlet system.

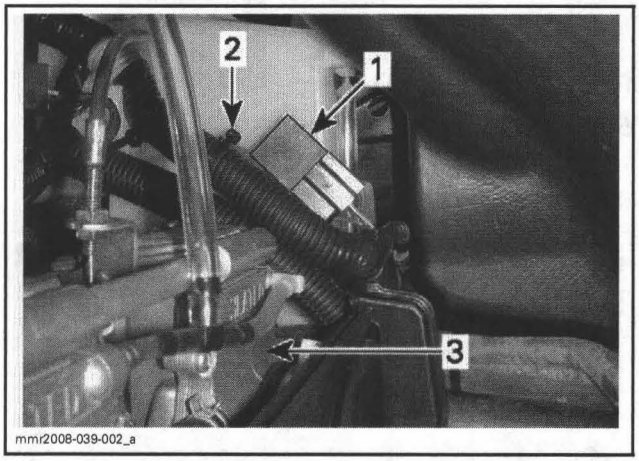

mmr2008-039-002_a

1. *Lights and accessories relay (R1)*
2. *R1 locking tie*
3. *Throttle bodies*

It receives power to its input contact (pin 30) and activation coil (pin 85) directly from the voltage regulator/rectifier when the engine is running. The ECM (pin 28) provides the ground signal to the coil (pin 86) when the engine reaches approximately 800 RPM.

Once closed, it supplies power to the lights and accessories:
- Headlights
- High beams indicator signal
- Tail/brake light
- Handle grips and throttle lever heaters
- 12 volt accessory connector.

R1 Input Voltage Test

Cut locking-tie securing relay to harness.

Remove R1 relay from its connector.

Start engine and test for power at the connector as follows.

RELAY R1	WIRE	VOLTAGE
Coil input	RD/BU and BK	10.5 to 13.5 Vdc
Contact input	RD/BU and ground	

NOTE: Engine idling (1500 to 1600 RPM).

If R1 input voltages are good, carry out a *RELAY CONTINUITY TEST*. See procedure in this section.

Also test continuity of ground signal circuit from ECM, OR/GN wire at relay connector to ECM connector pin 28.

If R1 input voltages are not as specified, test wiring/connections from voltage regulator/rectifier. Refer to *WIRING DIAGRAMS* for circuit details.

R1 Continuity Test

500SS/800R

Using the FLUKE 111 multimeter (P/N 529 035 868), select the beeper position.

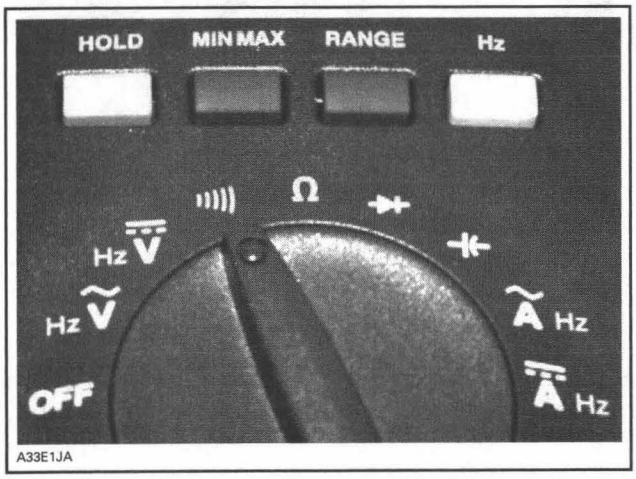

A33E1JA

Position the RED probe on the terminal 30 and the BLACK probe on the terminal 87a.

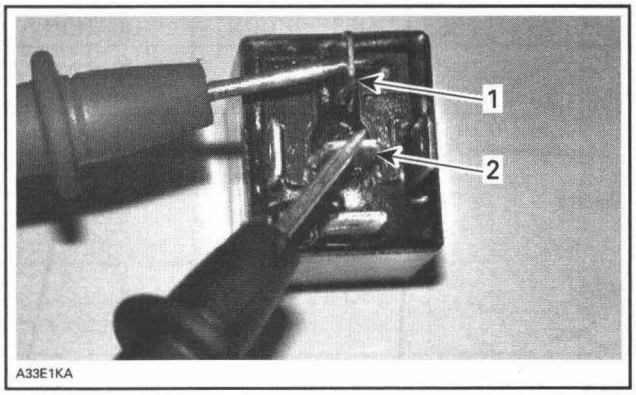

A33E1KA

1. Terminal 30
2. Terminal 87a

A continuous signal should be audible. If not, replace the relay.

If a signal is audible, apply 12 volts on terminals 85 and 86 then place the RED probe on terminal 30 and the BLACK on the terminal 87.

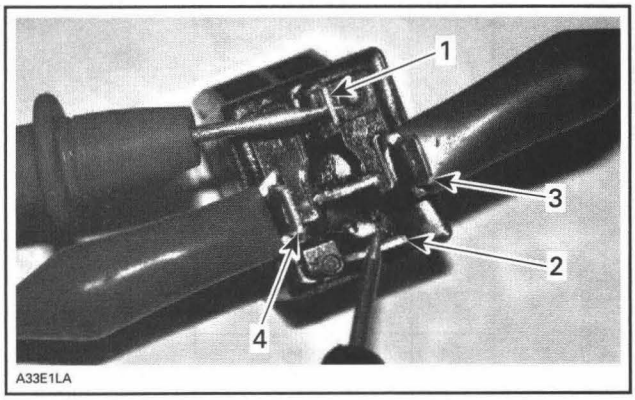

A33E1LA

1. Terminal 30
2. Terminal 87
3. Terminal 85
4. Terminal 86

The continuous signal should be audible. If not, replace the relay.

RELAY R3 (LIGHTS AND ACCESSORIES)

600 HO SDI

R3 Description

The lights and accessories relay (R3) is located in the fuse box on the LH side.

R3 is a plug-in relay that can be installed inverted by 180° and still function correctly.

It receives power to it's input contact (1B) directly from the voltage regulator/rectifier when the engine is running.

Power to R3 activation coil (pin 3B) comes through relay R2 and fuse F4.

The ECM (pin 17) provides the ground signal to the coil (pin 1C) when the engine reaches approximately 800 RPM.

Once closed, it supplies power to the following lights and accessories:

- Headlights
- High beams indicator signal
- Tail/brake light
- Visor outlet.

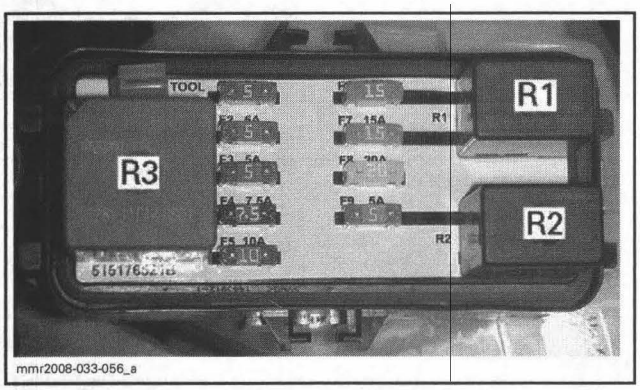

RELAY LOCATIONS

R3 Input Voltage Test

To test R3 input voltages, remove relay R3 from fuse box.

Use the Fluke 111 multimeter (P/N 529 035 868), and select the Vdc position.

Measure battery voltage at battery terminals.

Measure voltage at R3 fuse box contacts as follows.

RELAY R3	TEST PROBES	VOLTAGE
Coil	Pin 3B and ground	10.5 to 13.5 Vdc
Contact	Pin 1B and ground	

NOTE: Engine idling (1500 to 1600 RPM).

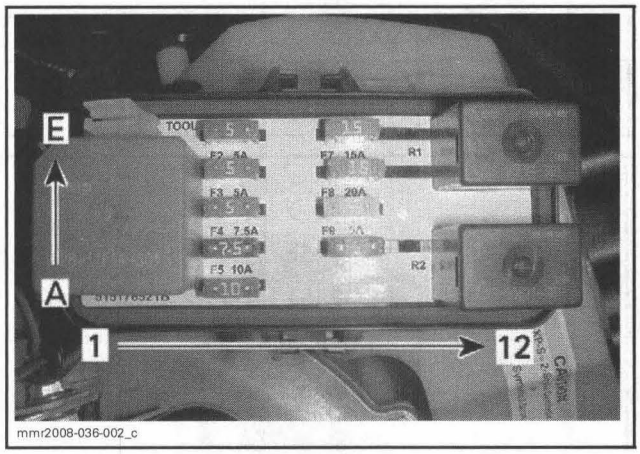

FUSE BOX CONTACT LAYOUT

If input voltages are good, carry out a *CONTINUITY TEST* of the relay. See procedure in this section.

Also test continuity of ground signal circuit from ECM, relay socket pin 1C to ECM connector pin 16.

NOTE: Use ECM adapter (P/N 420 277 010) when testing ground circuit to ECM.

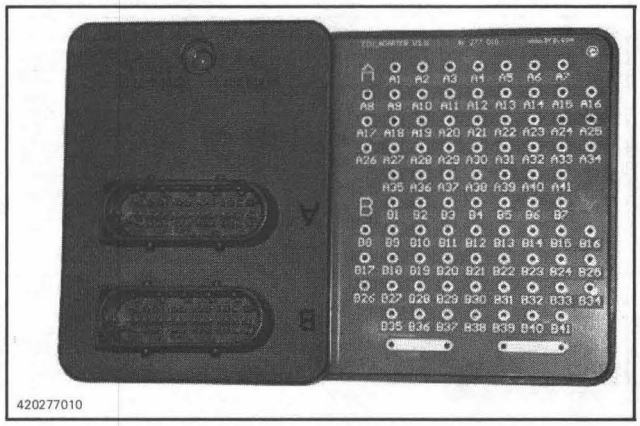

If voltage readings at relay input are not as specified, test Fuse F4 and wiring/connections from F4 to R3 input contacts. Refer to *WIRING DIAGRAMS* for circuit details.

NOTE: If the electric starter functions, all fuses and relay connections are good. Test wiring and connections from F4 to R3 input contacts.

Repair or replace as required.

R3 Continuity Test

To carry out a continuity test, remove relay from fuse box.

Use a FLUKE 111 multimeter (P/N 529 035 868) set to Ω position.

Measure the resistance across relay terminals 30 and 87.

TERMINAL		RESISTANCE
30	87	Open circuit (0L)

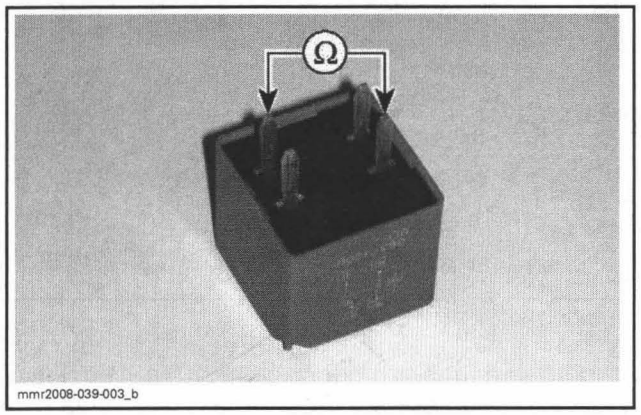

Connect a battery between terminals 85 and 86, and measure the resistance across terminals 30 and 87 as shown in illustration.

TERMINAL		RESISTANCE
30	87	0.5 Ω max. (continuity)

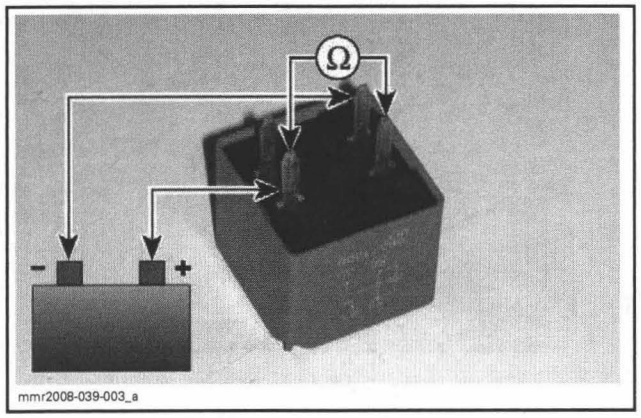

If the relay failed the test, replace it.

HEADLIGHT

Headlight Bulb Removal

If a headlight bulb is burnt, proceed as follows.

Remove GAUGE, see procedure in this section.

Unplug bulb connector.

Remove top and center portion of rubber boot from headlight assembly.

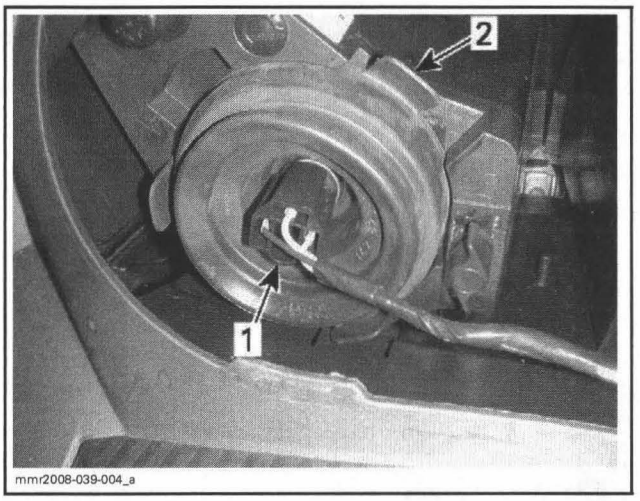

1. Remove headlight connector
2. Remove rubber boot

NOTE: It is not necessary to fully remove rubber boot.



Press both sides of the bulb holder (spring clip) inwards at the same time, and pull it out to release it from the bulb support.

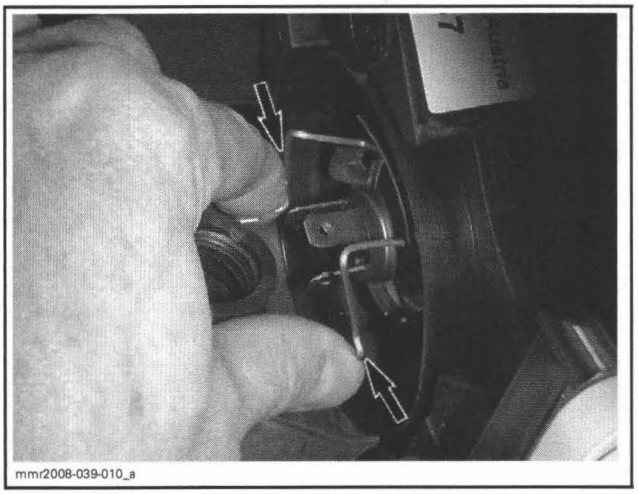

SQUEEZE INWARDS AND PULL OUT

Pull bulb from headlight assembly.

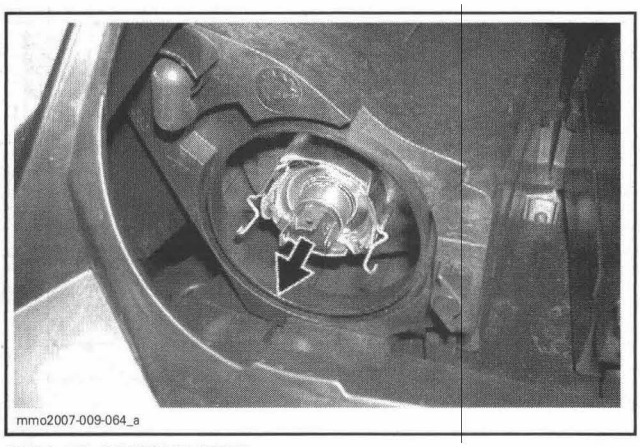

PULL TO REMOVE BULB

Headlight Bulb Installation

CAUTION: Never touch glass portion of a halogen bulb with bare fingers, it shortens its operating life. If glass is touched, clean it with isopropyl alcohol which will not leave a film on the bulb.

Insert bulb in light assembly.

NOTE: Widest alignment tab on bulb should be at top of assembly.

Insert top of bulb holder (spring clip) as you squeeze the two sides inwards. Release bulb holder so that it locks in the grooves on either side of headlight assembly.

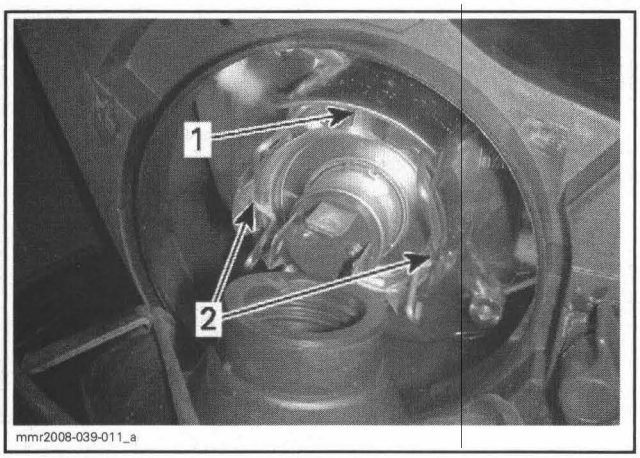

1. *Wide bulb tab*
2. *bulb holder locked*

Install rubber boot. Make sure cover is properly inserted in groove provided in the headlight assembly, and around the base of the bulb.

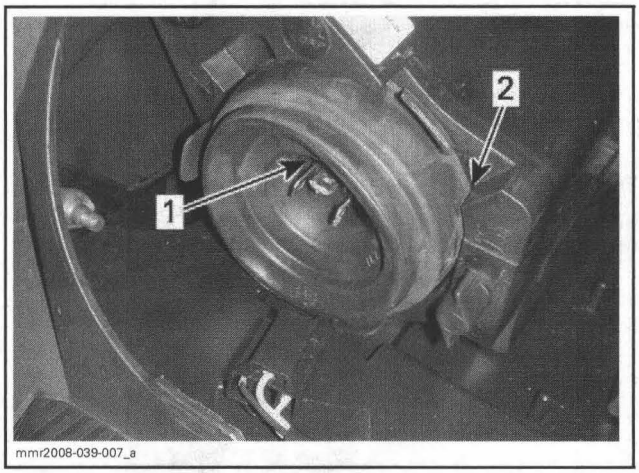

1. *Insert around bulb*
2. *Insert in groove provided*

Install light connector.

Always test light operation after bulb replacement.

Install gauge, see procedure in this section.

Headlight Test

If headlight(s) does not function, proceed as follows.

Remove gauge, see procedure in this section.

Disconnect headlight connector(s).

Apply electrical power to the headlights for testing. Refer to *LIGHTING AND ACCESSORIES SYSTEM TESTING* in this section for proper procedure.

Read voltage at headlight connector as follows.

SWITCH POSITION	WIRE COLOR (HEADLIGHT CONNECTOR)		VOLTAGE
LO beam	GY/VI	BK	Battery voltage (Vdc)
HI beam	GY	BK	

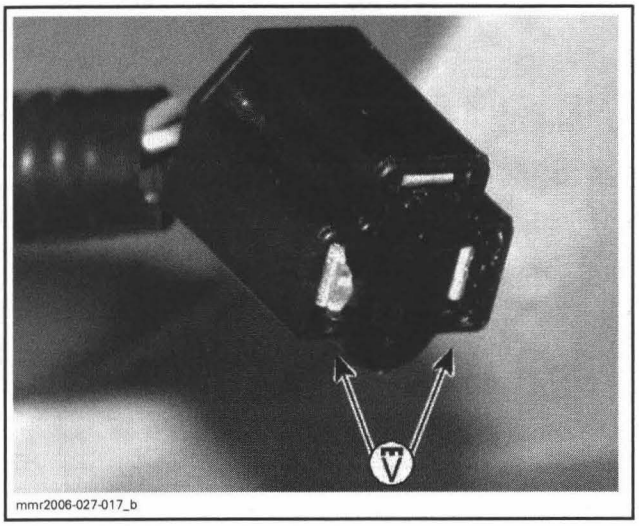
mmr2006-027-017_b

If voltage is inadequate, proceed as follows to find the source of the problem.

Check applicable fuse. Refer to *FUSES* in this section.

Test relay R1 (500SS/800R) or relay R3 (600 HO SDI).

Test headlight dimmer switch.

Test wiring harness and connectors.

Test voltage regulator/rectifier. Refer to *CHARGING SYSTEM*.

Headlight Beam Aiming

Beam aiming is correct when center of high beam is 25 mm (1 in) below the headlight horizontal center line, scribed on a test surface, 381 cm (12 ft 6 in) away.

Place the vehicle on a flat surface perpendicular to test surface (wall or screen) and 381 cm (12 ft 6 in) away from it.

Rider or equivalent weight must be on the vehicle.

Select **high** beam.

Measure headight center distance from ground. Scribe a line at this height on test surface (wall or screen). Light beam center should be 25 mm (1 in) below scribed line.

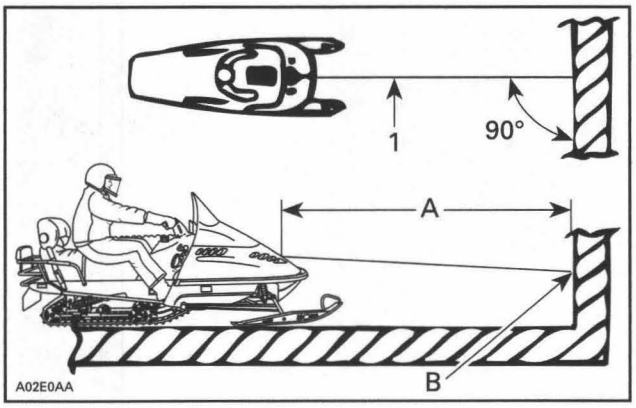

TYPICAL
1. Headlight center line
A. 381 cm (12 ft 6 in)
B. 25 mm (1 in) below center line

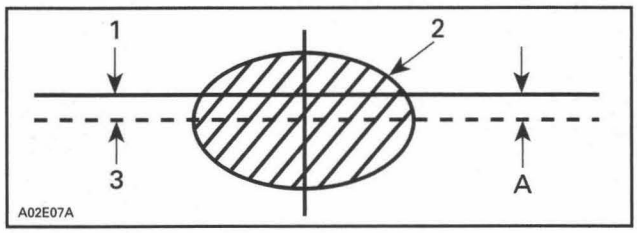

1. Headlight horizontal
2. Light beam (high beam) (projected on the wall)
3. Light beam center
A. 25 mm (1 in)

Beam Aiming Adjustment

Remove gauge.

Turn knob on light assembly to adjust beam height.

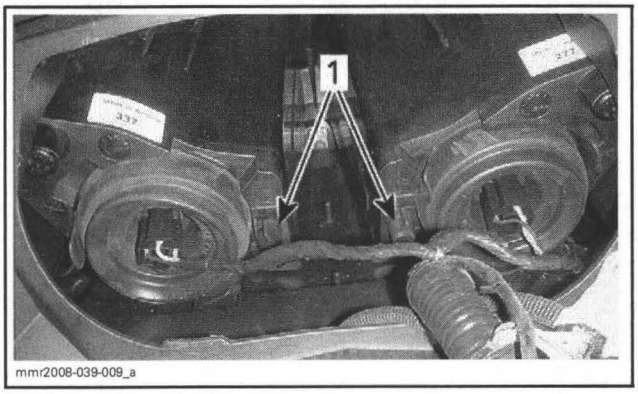

TYPICAL
1. Beam height adjustment knobs

TAILLIGHT

Taillight Bulb Replacement

Remove taillight lens by carefully pulling on lens at both ends.

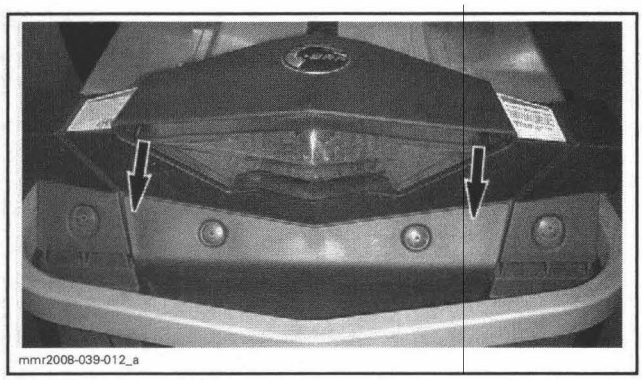
mmr2008-039-012_a

CAREFULLY PULL OUT AT CORNERS

CAUTION: Taillight lens is held in place by two plastic pins inserted in rubber grommets. If lens is forced too far sideways when removing, the lens mounting pins may break and lens will have to be replaced. Do not pull lens out too far to avoid damaging wiring.

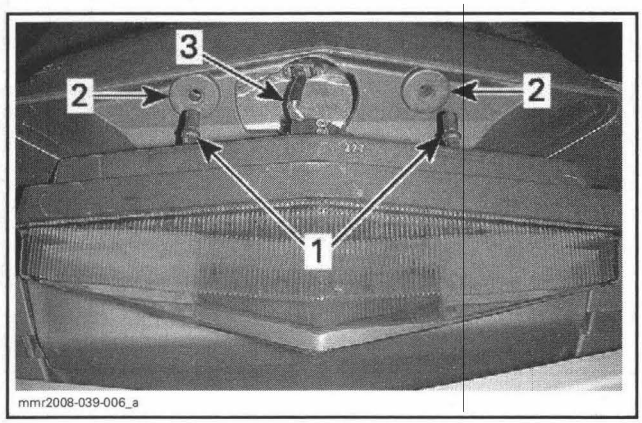

mmr2008-039-006_a

1. *Lens retaining pins*
2. *Retaining grommets*
3. *Light wire harness*

Rotate bulb holder counterclockwise to remove it from lens.

Push in and rotate bulb counterclockwise to remove it from its socket.

Install the new bulb by pushing it in the socket and turning it clockwise.

NOTE: Note position of bulb locking pins on its base, and bulb holder alignment key to lens.

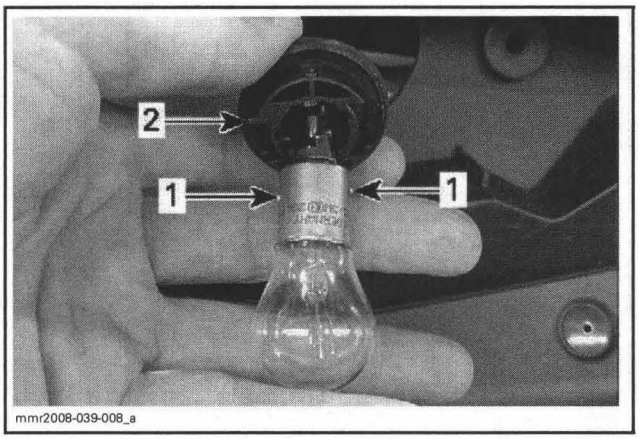

mmr2008-039-008_a

1. *Bulb locking pins*
2. *Bulb holder alignment key*

Taillight Assembly Replacement

If the taillight lens is broken, see the *TAILLIGHT BULB REPLACEMENT* procedure in this section.

The taillight housing is part of the snow guard. If it needs to be replaced, refer to *FRAME* section.

If the light bulb holder (socket) or wiring need to be replaced, you will have to lift up the rear of the fuel tank to access and disconnect the harness connector, refer to *FUEL TANK AND FUEL PUMP* section.

GAUGE

The REV XP platform uses two different type gauges which provides all indications in a single unit, an **analog/digital gauge** and a **multifunction analog/digital gauge (premium gauge)** used on X packages and GSX-limited models.

The premium gauge provides more functions and display features.

Both units can be set to indicate in metric or imperial units.

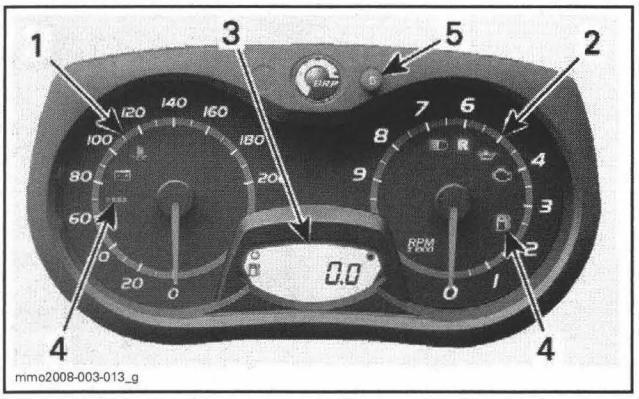

ANALOG/DIGITAL GAUGE
1. *Speedometer*
2. *Tachometer (RPM)*
3. *Gauge Digital Display*
4. *Gauge Pilot Lamps*
5. *Gauge SET "**S**" button*

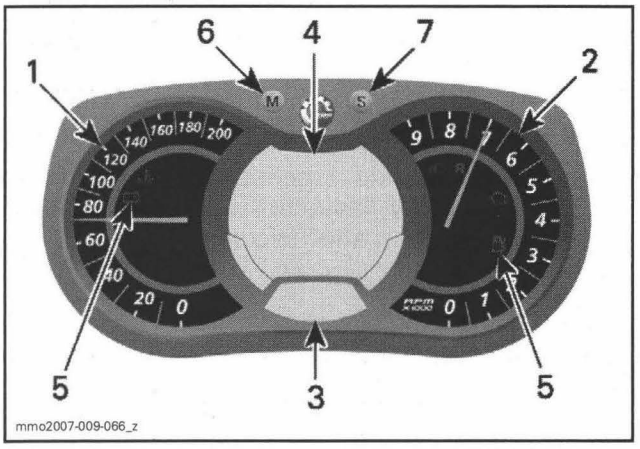

MULTIFUNCTION ANALOG/DIGITAL GAUGE (PREMIUM)
1. *Speedometer*
2. *Tachometer (RPM)*
3. *Gauge Digital Display*
4. *Gauge Multifunction Digital Display*
5. *Gauge Pilot Lamps*
6. *Gauge MODE "**M**" button*
7. *Gauge SET "**S**" button*

The premium gauge is also used to control 9 temperature settings for the heated hand grips and the heated throttle lever.

Refer to the operators manual for a full description of the indications and functions provided by each gauge.

Mode and Set Buttons

Analog/Digital Gauge

The standard gauge is equipped with a SET button only.

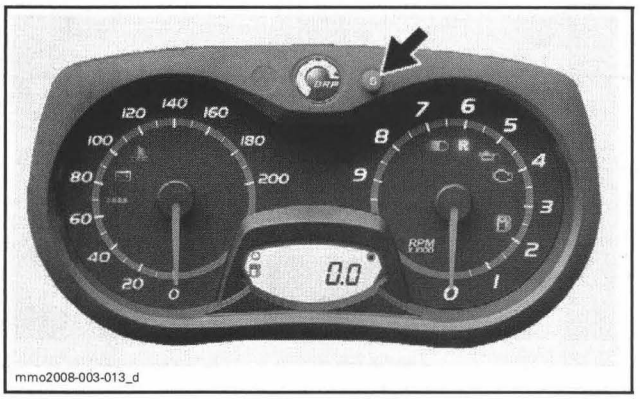

SET "S" BUTTON

Multifunction Analog/Digital Gauge (Premium)

Premium gauge is equipped with **MODE** and **SET** buttons at the top of the indicator.

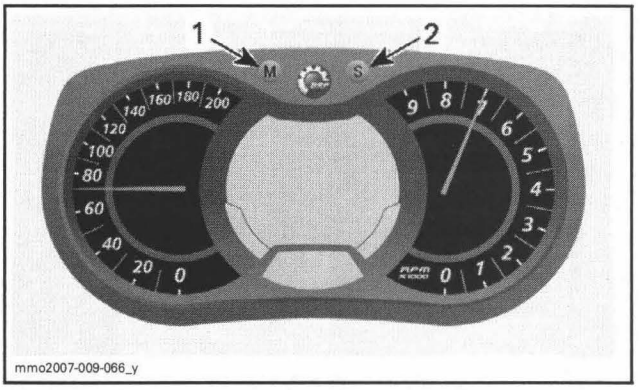

PREMIUM GAUGE
1. *MODE button*
2. *SET button*

These buttons allow you to toggle through the different functions and settings of the indicator.

The vehicles that are factory equipped with the premium gauge also come with a remote **M/S** button on the LH multifunction switch. It can be used instead of the buttons on the gauge simply by pressing the "**M**" for **MODE** and "**S**" for **SET**.

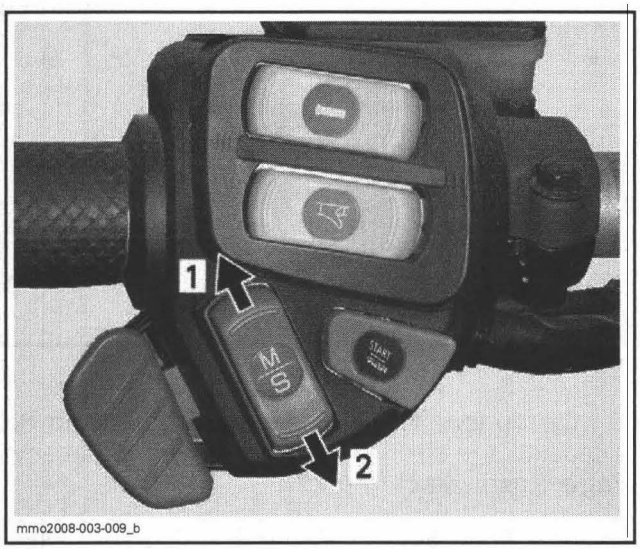

mmo2008-003-009_b

REMOTE M/S BUTTON
1. *MODE selection "M"*
2. *SET selection "S"*

Remote M/S Button Testing

If using the **M/S** button does not affect the indication, try using the buttons on the gauge. If they function, the remote **M/S** button circuit may be open.

Remove the gauge.

Disconnect the HG connector and the AC connector.

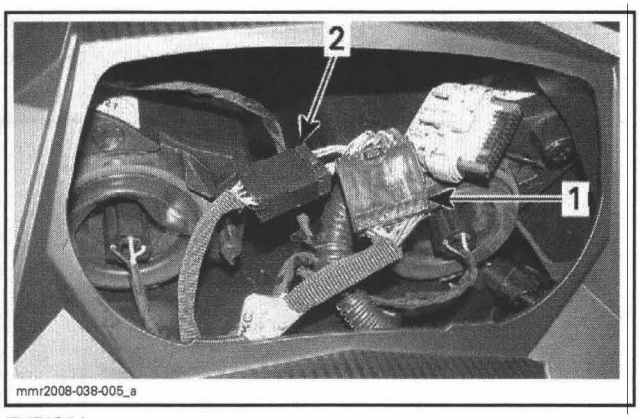

mmr2008-038-005_a

TYPICAL
1. *AC connector*
2. *HG connector*

Using a multimeter set to Ω, carry out the following continuity test.

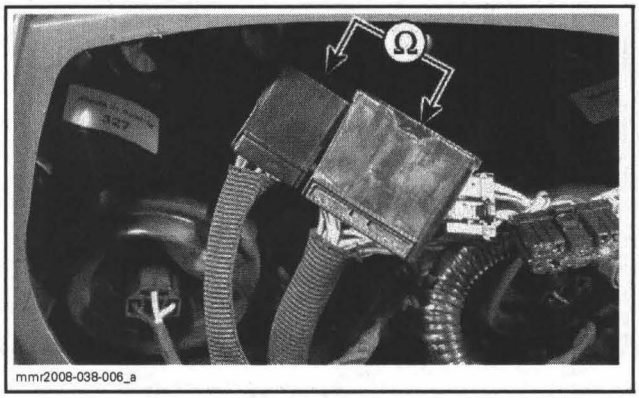

mmr2008-038-006_a

500SS/800R			
SWITCH SELECTION	AC CONNECTOR WIRE	HG CONNECTOR WIRE	RESISTANCE
Centered	YL/BR	BK	Infinite Ω
	YL/GN		
"M"	YL/BR	BK	Close to 0 Ω
"S"	YL/GN		

600 HO SDI			
SWITCH SELECTION	AC CONNECTOR WIRE	HG CONNECTOR WIRE	RESISTANCE
Centered	YL/BR	BK/BU	Infinite Ω
	YL/GN		
"M"	YL/BR	BK/BU	Close to 0 Ω
"S"	YL/GN		

If you do obtain the values as specified, repair or replace switch, wiring and connections.

Remote M/S Button Testing With B.U.D.S.

Using the B.U.D.S. software, select the **Monitoring** tab.

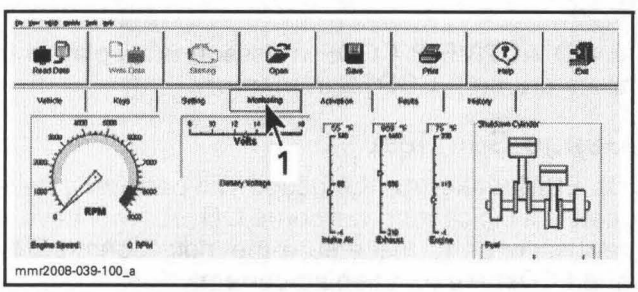

mmr2008-039-100_a

1. ***Monitoring** tab*

On the lower RH side of the monitoring page, click on the arrow next to the box that says **Page 1** and select **Page 2**.

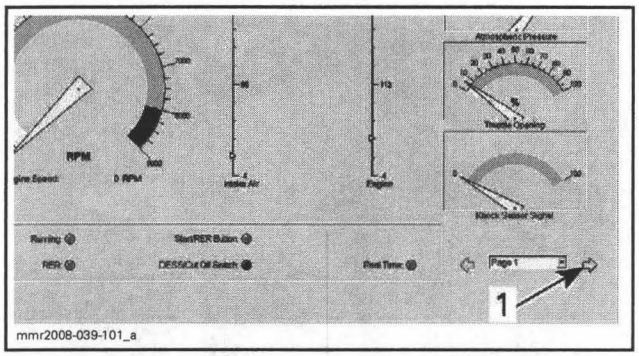

*1. Press here to select **Page 2***

Alternately press on the "**M**" and "**S**" and look for applicable indicator light in the **Switch inputs** box to turn green. If they do, the remote **M/S** button is functioning correctly.

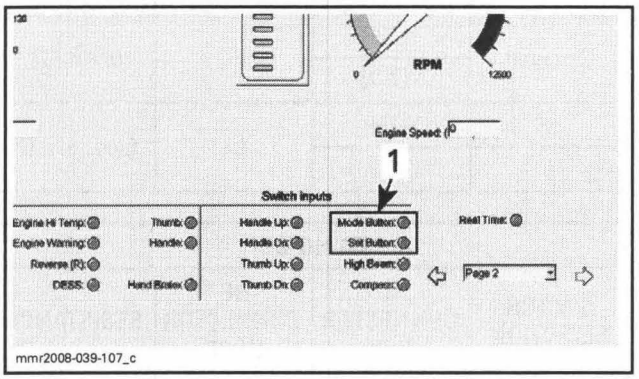

1. Indicator lights

How to Display "P" Codes

To activate **P CODE** mode, push and hold the "M" button for 2 seconds.

As you hold the "**M**" button, quickly turn ON and OFF the high beams a few times. The gauge should enter **P CODE** mode.

While in **P CODE** mode, use the "**M**" or "**S**" button to scroll over available failure codes.

Push and hold the "**M**" button to exit **P CODE** mode.

A **NO ACTIVE P CODE** message is displayed if there are no **P CODES** in memory.

Gauge Self Test

On **ECM wake-up**, the gauge will perform a self-test. All indications will come ON. You will have a few seconds to make sure the indications (**LEDs** and **LCDs**) are functioning correctly.

Gauge Test With B.U.D.S.

In B.U.D.S., choose the **Activation** tab.

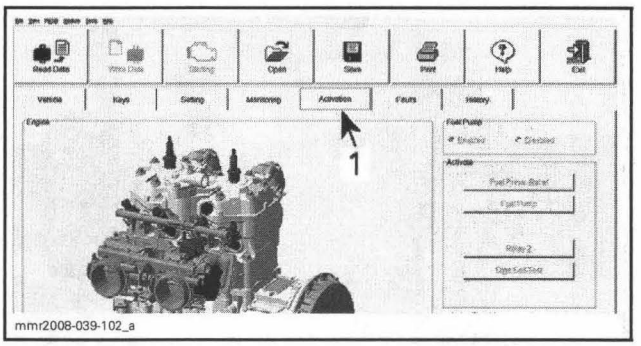

*1. **Activation** tab*

On the bottom of the activation page on the RH side, click the arrow next to the window that says **Page 1** and select **Page 2**.

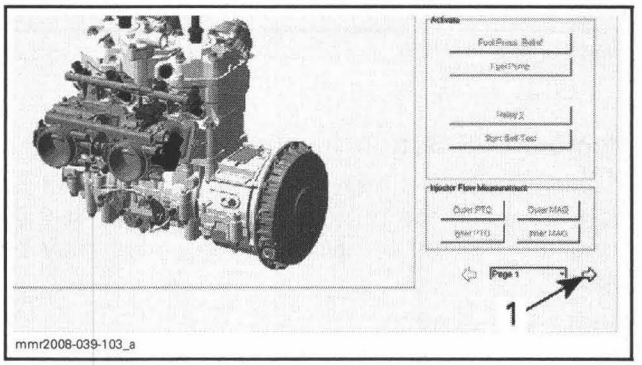

*1. Press here to select **Page 2***

On **Page 2**, select the **WOW Test** button. All indications will come ON and stay ON allowing the time required to verify each indication.

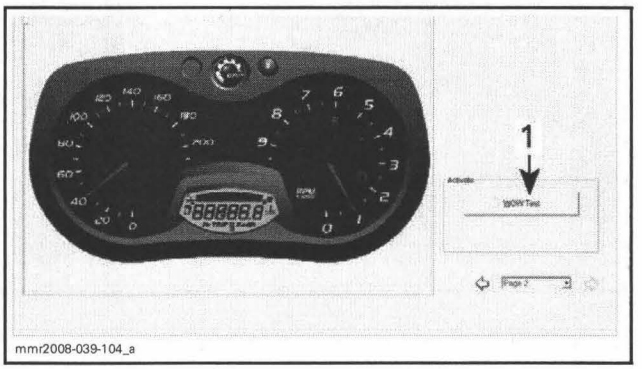

*1. Select **WOW Test** button*

NOTE: The **WOW Test** only test the gauges **LEDs** and **LCDs**. It does not test the actual circuit functions related to each indication.

Clock Activation (Premium Gauge)

The gauge has an internal clock that can display the time of day in the lower digital display (when selected). This clock requires power from the vehicle battery to maintain the proper time of day.

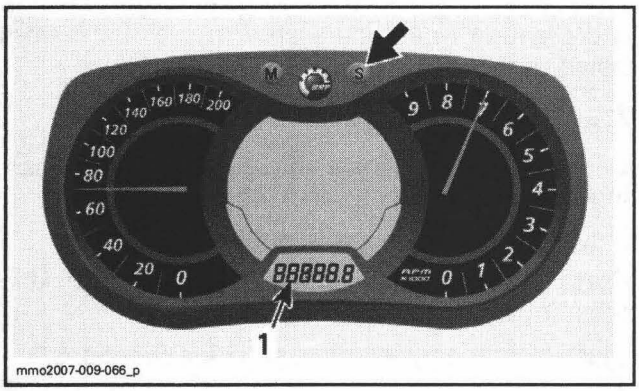

1. Clock displayed

Without battery power, this clock resets every time the vehicle is shut down, then restarted. It is then only used as a timer.

To activate the clock function in B.U.D.S., choose the **Setting** tab.

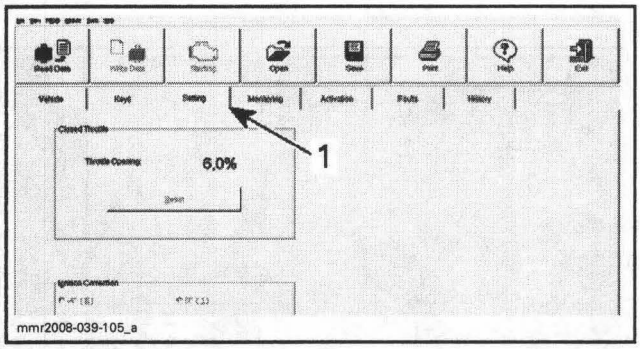

*1. Choose **Setting** tab*

On the bottom of the setting page on the RH side, click the arrow next to the window that says **Page 1** and select **Page 2**.

On **Page 2**, choose **Installed** in the **Battery** section if the vehicle is equipped with a battery. Choose **Not installed** if the vehicle does not have a battery.

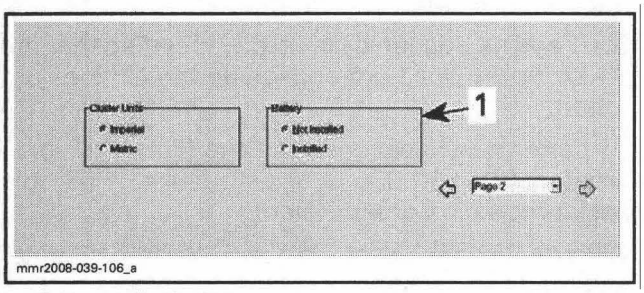

*1. **Battery** selection box*

Changing Units of Measurement

The gauges are factory preset to indicate in metric units and can be changed using the B.U.D.S. software.

To change the gauge units of measure in B.U.D.S., first choose the **Setting** tab.

On the bottom of the setting page on the RH side, click the arrow next to the window that says **Page 1** and select **Page 2**.

Then select **Imperial** or **Metric** in the **Cluster** units box.

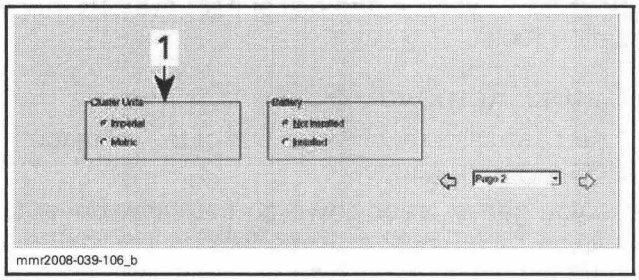

*1. **Cluster** units box*

NOTE: Speedometer, odometer and trip meter will have their units (kilometer or miles) changed all together.

Gauge Replacement

NOTE: If the gauge is **replaced**, the engine will start but will not reach the RPM at which the driven clutch engages because of the security exchange coding. The gauge will need to be matched to the ECM for the vehicle to function normally.

Connect B.U.D.S. Refer to the *COMMUNICATION TOOLS AND B.U.D.S. SOFTWARE* section.

Follow the instructions in the referenced section and in the software.

Once connected and activated, you will see a message similar to the following illustration.

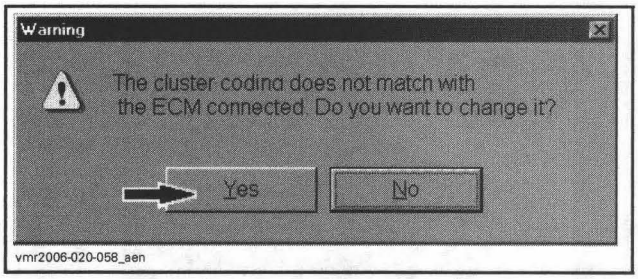

Make sure you have the right type and model gauge for the vehicle you are working on before answering **Yes**, otherwise it will not function properly.

Select **Yes** to continue.

Once the gauge has been matched to the ECM, you will need to set the units of measurement, Imperial or Metric, as well as the battery installed or not installed function for the clock. See procedures in this section.

Make sure the gauge functions properly and that all settings and indications are within parameters.

Shut down vehicle and disconnect the communication tools.

Gauge Removal

Insert a small screwdriver in one of the rectangular slots at top of gauge.

As you gently press down on the screwdriver to release multifunction gauge locking tab, pull out and hold gauge in position.

Insert screwdriver in second hole and press to release other tab.

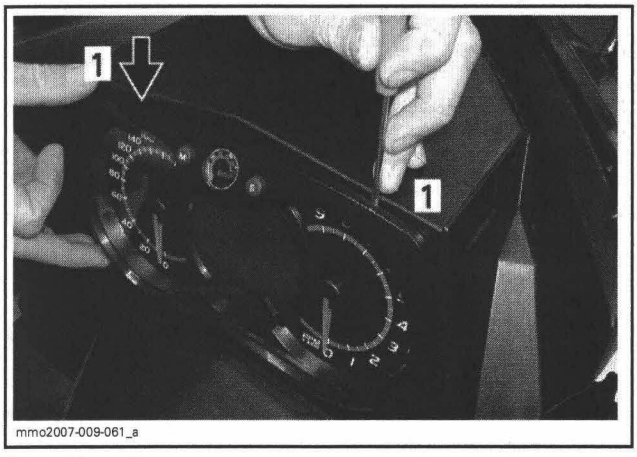

1. Locking tabs

Gently pull multifunction gauge from gauge support.

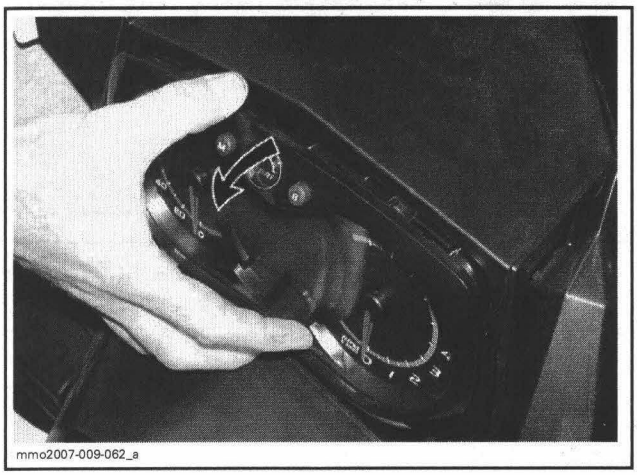

Press on connector locking tab and pull connector off gauge.

Store gauge in a secure area to prevent it from being damaged.

Gauge Installation

Carefully align and install gauge connector, pressing it in until connector lock engages.

Insert bottom of gauge in gauge holder.

Press top of gauge in holder until you feel locking tabs engage in holder.

Start vehicle engine and test gauge functions.

SPEED SENSOR

The speed sensor is mounted in the chain case cover. It is sealed in the chain case cover and is replaced with the cover.

Speed Sensor Static Test

Locate speed sensor connector.

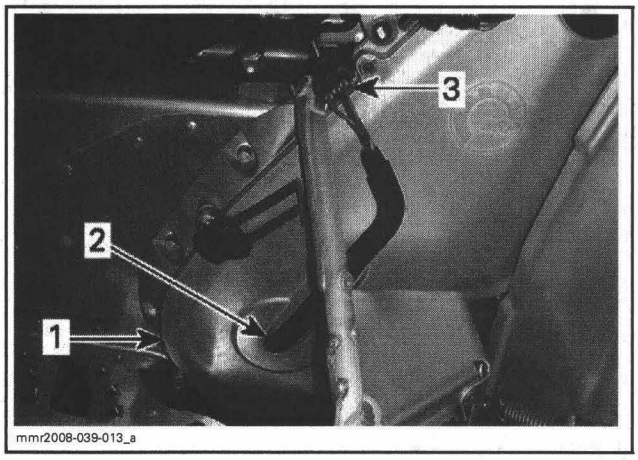

1. Chain case cover
2. Speed sensor
3. Speed sensor connector

Lift and support back end of vehicle so that the track is completely off the ground.

Start engine and let it run at idle speed so that the driven pulley does not engage and track does not rotate.

To perform verifications, use the Fluke 111 multimeter (P/N 529 035 868) with Fluke TP88 rigid back probe pins or equivalent.

With multimeter set to Vdc,back-probe connector and read sensor supply voltage as follows.

SPEED SENSOR CONNECTOR (SENSOR SIDE)		VOLTAGE
RD	BK	Approximatly 12 Vdc

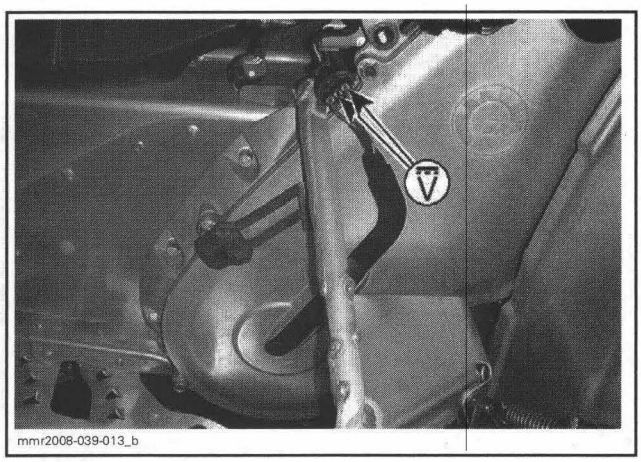

SENSOR INPUT VOLTAGE TEST

If you do not have proper supply voltage, shut down engine and carry out a continuity test of wiring from sensor to gauge. Refer to *WIRING DIAGRAMS* for circuit detail.

If supply voltage is good, measure the signal voltage as follows.

⚠ WARNING

Before accelerating engine to rotate track, ensure track is free of particles which could be thrown out while track is rotating. Keep hands, tools, feet and clothing clear of track. Ensure no one is standing in close proximity to the vehicle. Never rotate at high speed.

Slowly accelerate engine so that driven pulley engages and **track rotates SLOWLY**.

Back-probe connector between GREEN and BLACK wires, read voltage.

ROTATE TRACK	SPEED SENSOR CONNECTOR (SENSOR SIDE)		VOLTAGE
	GN	BK	Alternate 12 Vdc and 0 Vdc

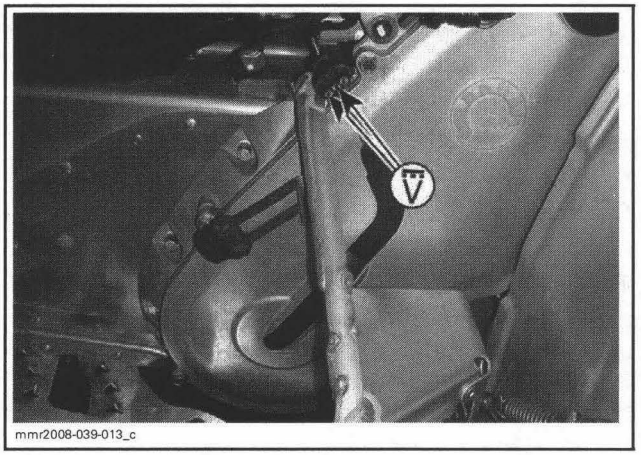

SENSOR SIGNAL VOLTAGE TEST

The signal voltage should alternate between approximately 12 Vdc and 0 Vdc.

NOTE: Since a pulsating voltage is measured, the numeric display will continuously change. The analog display may be easier to follow.

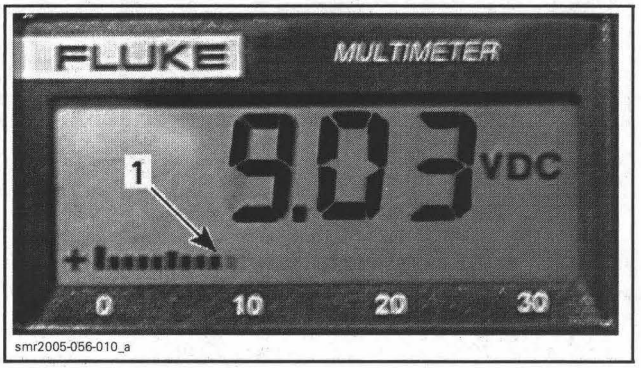

TYPICAL
1. Analog display

If voltage is as specified, repair or replace wiring/connectors between sensor and speedometer.

If wiring/connectors are good, try a new speedometer.

If signal voltage is not as specified, try a new sensor.

FUEL LEVEL SENSOR

A float type fuel level sensor equipped with an in-line fuse (0.25 A) is used to provide a signal to the gauge for indication. Refer to *FUEL TANK AND FUEL PUMP* for sensor testing.

HEATED THROTTLE LEVER

System Description

There are two types of throttle lever heating systems used on the REV XP platform.

The type of system used is determined by the gauge package installed at the factory, standard gauge or premium gauge.

Models with Standard Gauge

On vehicles equipped with a "Standard" gauge, the throttle lever heater is controlled by a toggle switch on the LH multifunction switch assembly.

The switch allows you to select **High**, center **Off**, and **Low** heat settings. The switch button will remain in the selected position until another selection is made.

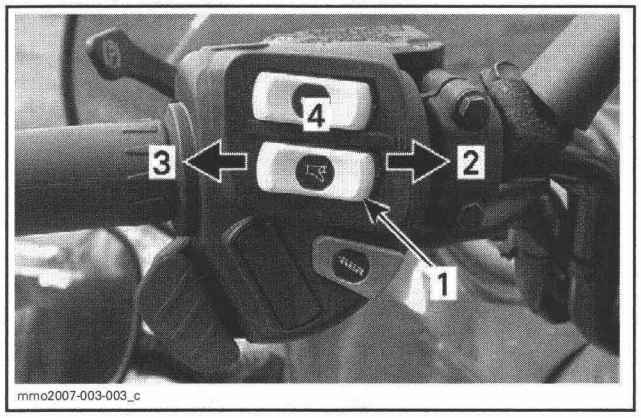

1. Throttle lever heat switch
2. High
3. Low
4. Heat OFF (center position)

Models with Premium Gauge

On vehicles factory equipped with a "Premium" gauge, the throttle lever heat is controlled through the gauge.

A three position switch on the LH multifunction switch assembly allows selection of 9 heat levels, which are displayed in the indicator.

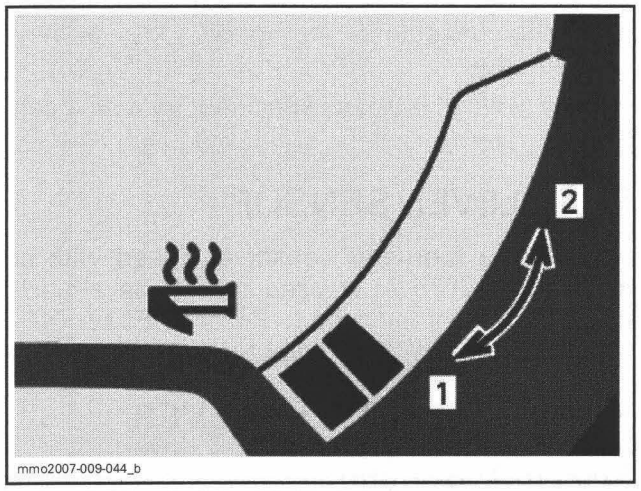

THROTTLE LEVER HEAT INDICATOR
1. Decrease heat
2. Increase heat

The switch selection sends a signal to the premium gauge to increase or decrease heat.

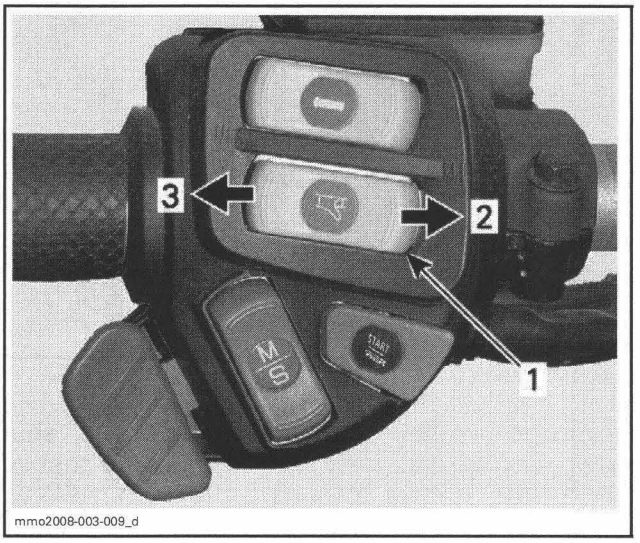

1. Throttle lever heat switch
2. Increase heat
3. Decrease heat

The gauge then applies the appropriate amount of current to the heater according to the selection.

To turn OFF the heaters, select heat down until there is no more indication on the bar graph.

When released, the switch springs back to the center neutral position.

Lever Heating Element Testing

Disconnect the RH steering connectors located under the steering cover.

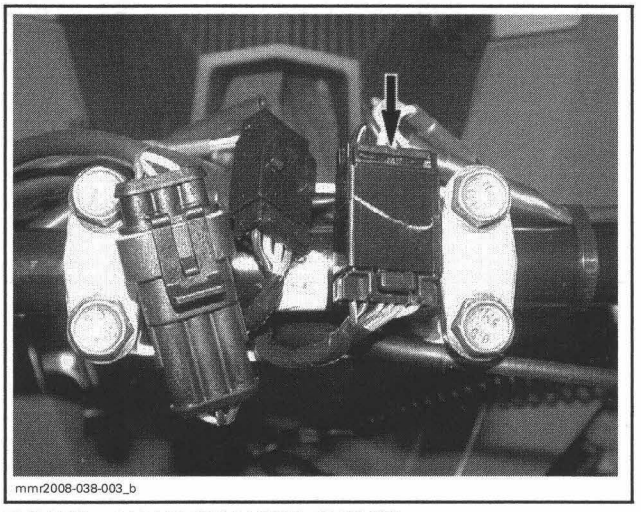

TYPICAL – 600 HO SDI MODEL SHOWN

Carry out a resistance check of the heating elements as follows.

NOTE: Resistance values are measured at temperatures between 20°C and 30°C.

STANDARD GAUGE			
INTENSITY	ELEMENT TERMINAL		RESISTANCE
LOW	BR/YL	YL/BK	5.73 to 18.54 Ω
HIGH	BR		1.73 to 4.22 Ω

PREMIUM GAUGE		
ELEMENT TERMINAL		RESISTANCE
BR	YL/BK	1.73 to 4.2 Ω

If readings are out of specifications, replace throttle lever.

If heating element readings are within specifications, carry out a switch continuity test. Refer to *WIRING DIAGRAMS* for wiring and connector details.

Reconnect connectors.

Heat Selector Switch Testing with B.U.D.S. (Premium gauge)

Using the B.U.D.S. software, select the **Monitoring** tab.

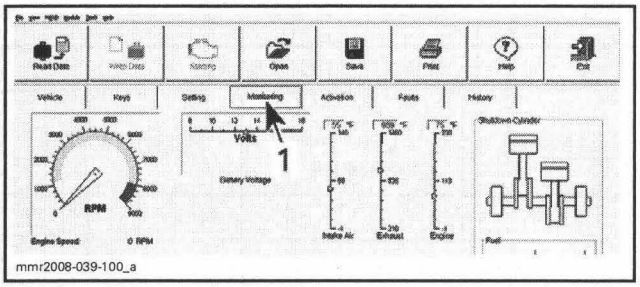

*1. **Monitoring** tab*

On the lower RH side of the **Monitoring** page, click on the arrow next to the box that says **Page 1** and select **Page 2**.

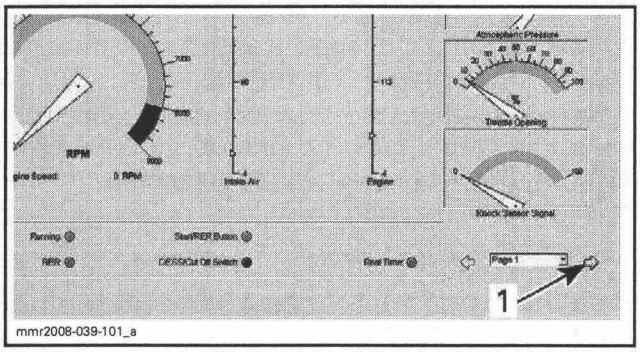

*1. Press here to select **Page 2***

Press on the lever heat selector switch to alternately increase or decrease heat.

In B.U.D.S., look for the applicable indicator light in the **Switch inputs** box to turn green (Thumb Up or Thumb Dn). If they do, the heat selector switch for the throttle lever is functioning correctly.

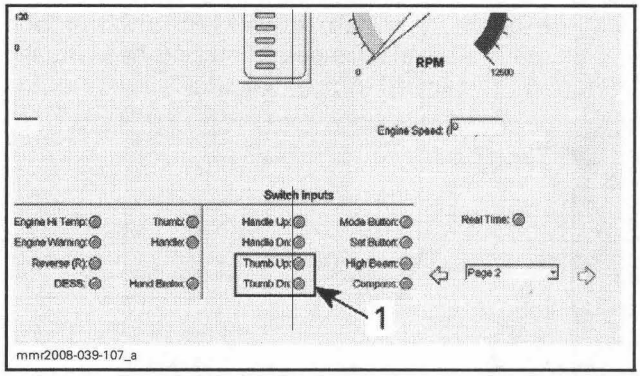

1. Indicator lights, throttle lever heat selection

If the selector switch and the heater test good, replace the gauge.

HEATED HANDLEBAR GRIPS

System Description

There are two types of grip heating systems used on the REV XP platform.

The type of system used is determined by the gauge package installed at the factory, standard gauge or premium gauge.

Models with Standard Gauge

On vehicles equipped with a "Standard" gauge, the grip heater is controlled by a toggle switch on the LH multifunction switch assembly.

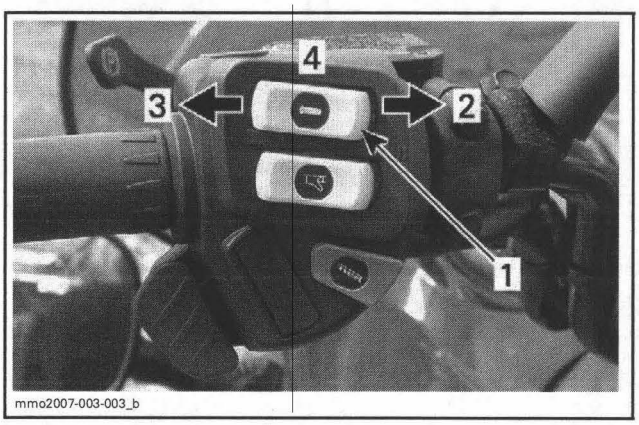

1. Grip heat control switch
2. High
3. Low
4. Heat OFF (center position)

The switch allows you to select **High**, center **Off**, and **Low** heat settings. The switch button will remain in the selected position until another selection is made.

Models with Premium Gauge

On vehicles factory equipped with a "Premium" gauge, the grip heat is controlled through the gauge.

A three position switch on the LH multifunction switch assembly allows selection of 9 heat levels, which are displayed in the indicator.

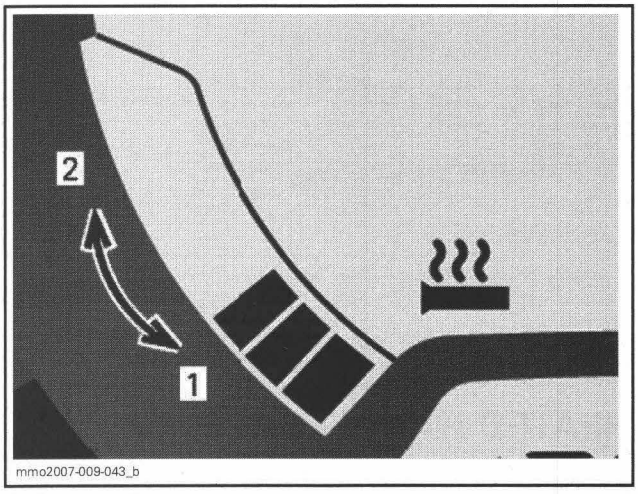

1. Decrease heat
2. Increase heat

The switch selection sends a signal to the premium gauge to increase or decrease heat.

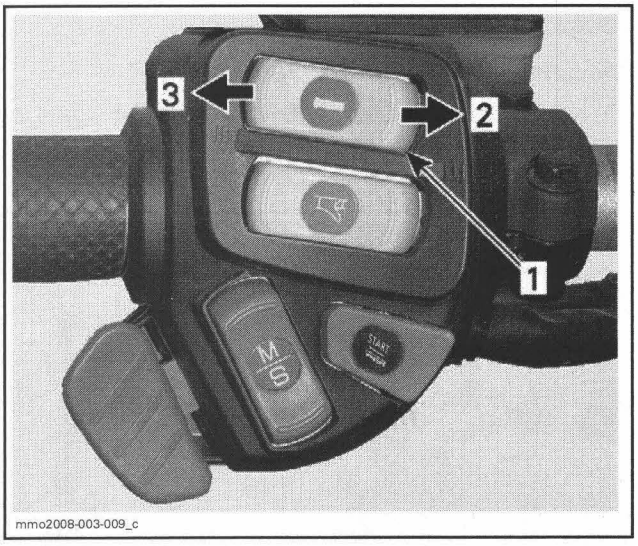

1. Grip heat control switch
2. Increase heat
3. Decrease heat

The gauge then applies the appropriate amount of current to the heater according to the selection.

To turn OFF the heaters, select heat down until there is no more indication on the bar graph.

When released, the switch springs back to the center neutral position.

Grip Heating Element Testing

Disconnect the two steering connectors located under the steering cover.

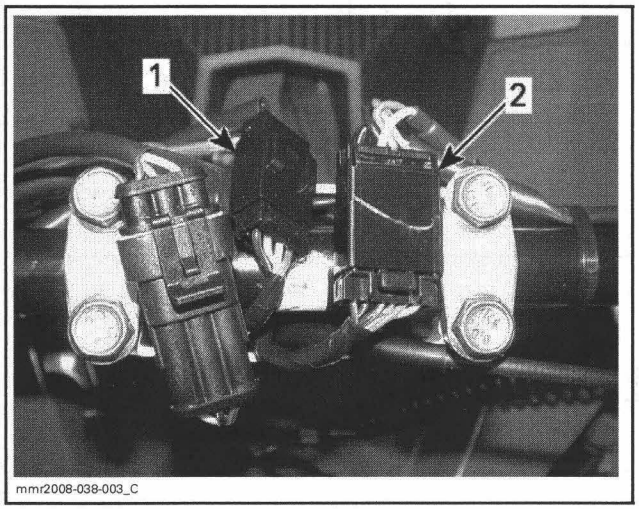

TYPICAL – 600 HO SDI MODEL SHOWN
1. LH steering connector
2. RH steering connector

Test heating elements on either side as follows.

NOTE: Resistance values are measured at temperatures between 20°C and 30°C.

STANDARD GAUGE			
INTENSITY	WIRE OF ELEMENT CONNECTOR		RESISTANCE
LOW	OR/VI	BK	10.71 to 13.09 Ω
HIGH	OR	BK	5.35 to 6.55 Ω

PREMIUM GAUGE		
ELEMENT TERMINAL		RESISTANCE
BR	YL/BK	1.73 to 4.2 Ω

If readings are out of specifications, replace applicable handle grip/heating element.

If heating element readings are within specifications, carry out a switch continuity test. Refer to *WIRING DIAGRAMS* for wiring and connector details.

Reconnect connectors.

Heat Selector Switch Testing with B.U.D.S. (Premium Gauge)

Using the B.U.D.S. software, select the **Monitoring** tab.

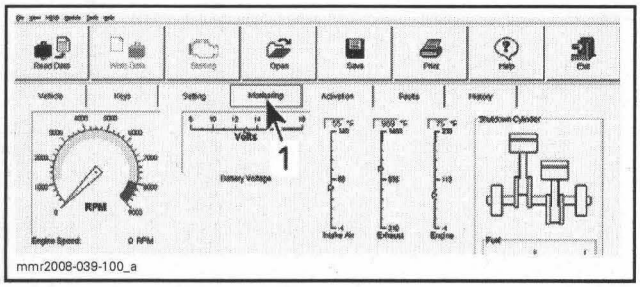

*1. **Monitoring** tab*

On the lower RH side of the monitoring page, click on the arrow next to the box that says **Page 1** and select **Page 2**.

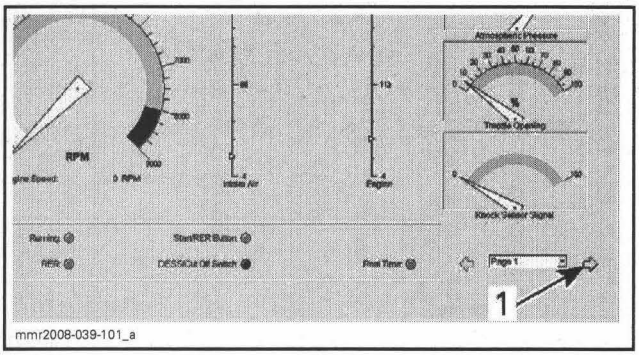

*1. Press here to select **Page 2***

Press on the hand grip selector switch to alternately increase or decrease heat.

In B.U.D.S., look for the applicable indicator light in the **Switch inputs** box to turn green (Handle Up or Handle Dn). If they do, the heat selector switch for the hand grips is functioning correctly.

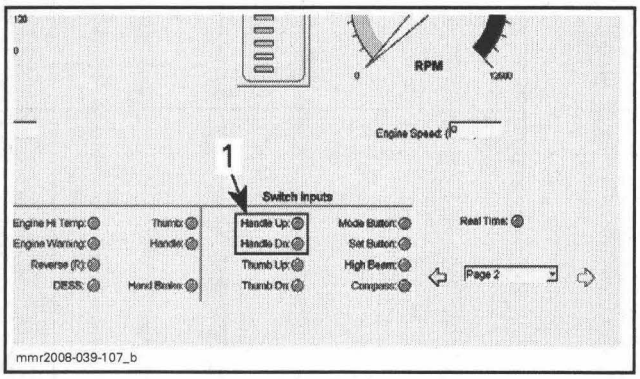

1. Indicator lights, grip heat selection

If the selector switch and the heaters test good, replace the gauge.

12-VOLT POWER OUTLET

Power Outlet Testing

First try another accessory, if it does not function, test outlet.

Remove console, refer to *BODY* section.

Unplug the power outlet connectors.

Apply power to the accessories circuits, see *LIGHTING AND ACCESSORIES SYSTEM TESTING* in this section.

Measure the voltage as follows.

WIRES		VOLTAGE
RD/YL	BK	Approximately 12 Vdc

If voltage reading is good, replace 12 Volt power outlet.

If you did not read any voltage, check the taillight. If it isn't functioning either, then test the following.

- Accessories fuse
- Accessories relay
- Connectors and wiring.

MODEL	ACCESSORIES FUSE	ACCESSORIES RELAY
500SS and 800R	FC	R1
600 HO SDI	F6	R3

Power Outlet Removal

Remove the console, refer to *BODY* section.

Remove connectors from the power outlet.

Unscrew the large nut then remove the power outlet.

Power Outlet Installation

The installation is the reverse of the removal procedure, refer to *BODY* section for console installation.

VISOR OUTLET

Visor Outlet Testing

First, try another accessory, if it does not function, test visor outlet.

Remove the console, refer to *BODY* section.

Unplug the visor connector.

Apply power to the accessories circuits, see *LIGHTING AND ACCESSORIES SYSTEM TESTING* in this section.

Check voltage as follows.

WIRES		VOLTAGE
RD/YL	BK	Approximately 12 Vdc

If voltage reading is good, replace visor outlet.

If you did not read any voltage, check the taillight. If it isn't functioning either, then test the following.

- Accessories fuse
- Accessory relay
- Wiring and connectors.

MODEL	ACCESSORIES FUSE	ACCESSORIES RELAY
500SS and 800R	FC	R1
600 HO SDI	F6	R3

Visor Outlet Removal

Remove the console, refer to *BODY* section.

Unplug the visor connector.

Unscrew visor outlet.

Visor Outlet Installation

The installation is the reverse of the removal procedure, refer to *BODY* section for console installation.

DRIVE BELT

SERVICE TOOLS

Description	Part Number	Page
belt tension tester	414 348 200	361
driven pulley opening tool	529 036 127	359–360

GENERAL

APPLICATION CHART

MODEL	DRIVE BELT (P/N)
500SS 600 HO SDI	417 300 197
800R	417 300 166

PROCEDURES

DRIVE BELT GUARD

Drive Belt Guard Removal

⚠ WARNING

NEVER operate the snowmobile without belt guard securely installed.

Open the LH side panel.

Remove the tool kit support by pressing the locking tab.

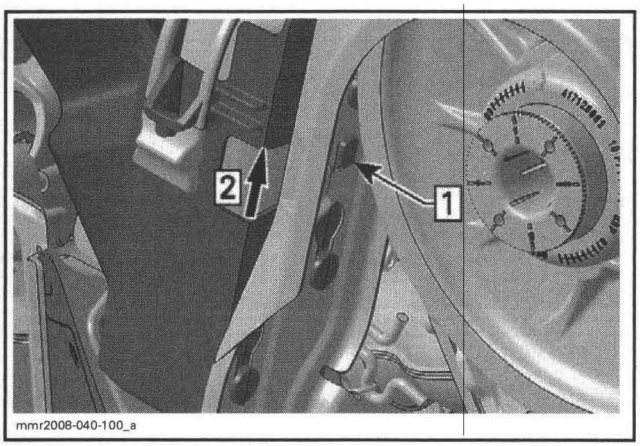

Step 1: Press tab
Step 2: Lift tool kit support

Remove retaining pin.

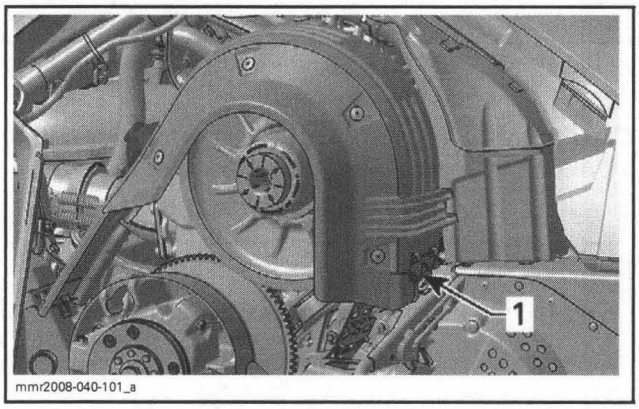

1. Retaining pin

Lift rear portion of guard then release from front tabs.

Drive Belt Guard Installation

Place belt guard slots over tabs.

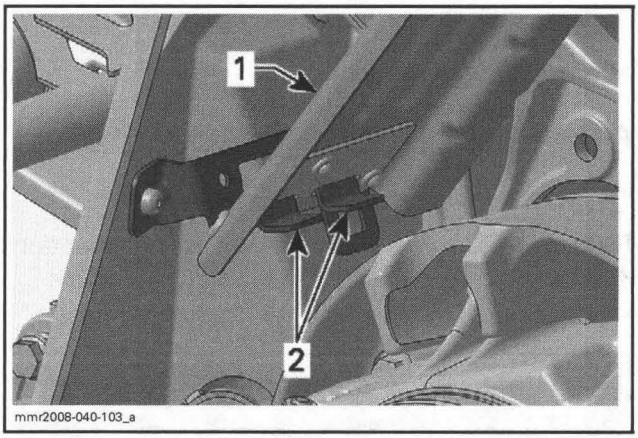

1. Belt guard
2. Tabs

Position top portion of belt guard over retaining pin.

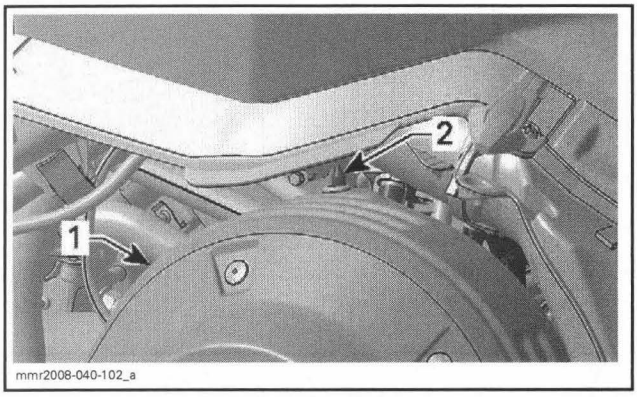

1. Belt guard
2. Retaining pin

CAUTION: Do not pry retaining pin excessively to avoid breaking it.

Secure belt guard using retaining pin.

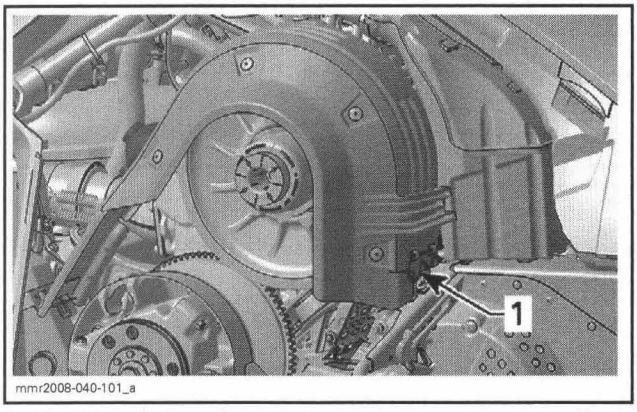

1. Retaining pin

Install the tool kit support.

DRIVE BELT GUARD SUPPORT

Guard Support Removal

Remove *DRIVE BELT GUARD*, see procedure above.

Remove screws securing the support to vehicle.

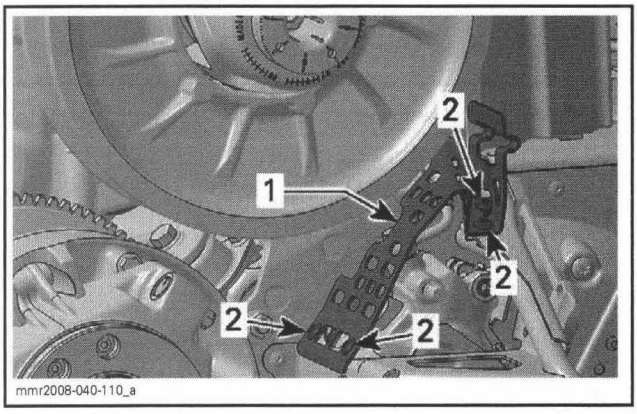

1. Drive belt guard support
2. Screws

Guard Support Installation

The installation is the reverse of the removal procedure.

Tighten screws to 5 N•m (44 lbf•**in**).

DRIVE BELT

Drive Belt Removal

Remove the *BELT GUARD*, see procedure above.

Using the spark plug tool (included in the tool kit) or an 11/16 in thin wall socket, loosen (± 4 turns) the adjustment ring adapter located inside adjustment ring.

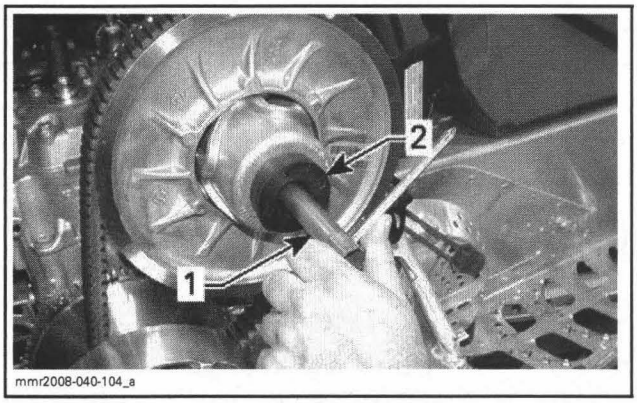

1. Spark plug tool
2. Driven pulley adjustment ring

To open the driven pulley, proceed as follows with one of the following tools.

Suspension Adjustment Tool

Using the suspension adjustment tool (included in the tool kit), open the driven pulley by turning the tool clockwise.

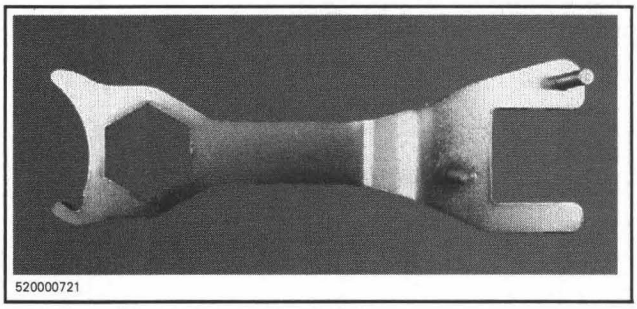

SUSPENSION ADJUSTMENT TOOL

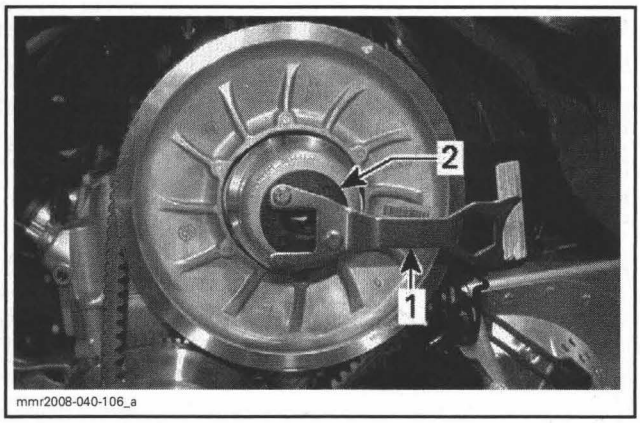

1. *Suspension adjustment tool*
2. *Driven pulley adjustment ring*

Driven Pulley Opening Tool

Using the driven pulley opening tool (P/N 529 036 127), open the driven pulley by turning the tool clockwise.

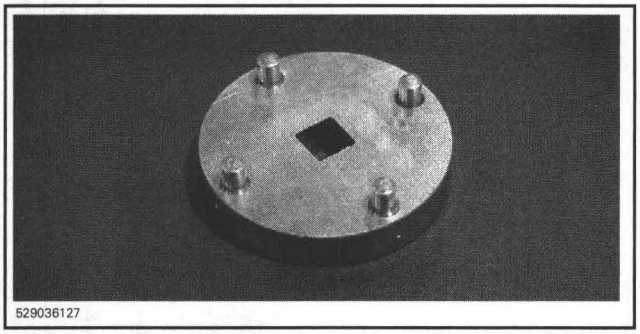

DRIVEN PULLEY OPENING TOOL (P/N 529 036 127)

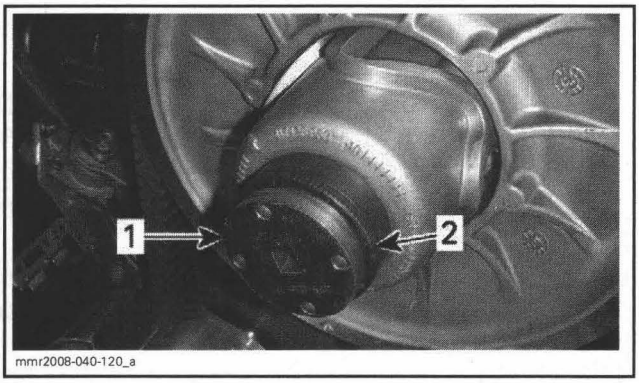

1. *Driven pulley opening tool*
2. *Driven pulley adjustment ring*

Belt Removal

To remove belt, slip the belt over the top of driven pulley.

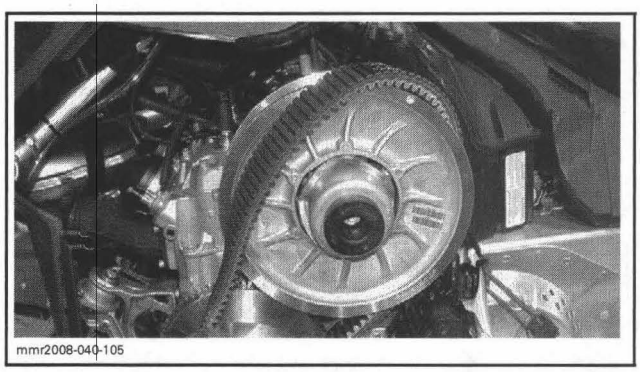

Drive Belt Inspection

Inspect belt for:
- Cracks
- Fraying
- Abnormal wear (uneven wear, wear on one side, missing cogs, cracked fabric).

If abnormal wear is noted, probable cause could be:
- Pulley misalignment
- Excessive RPM with frozen track
- Fast starts without warm-up period
- Scratched or rusty sheave
- Oil on belt
- Distorted spare belt.

Check drive belt width. Replace the drive belt if width is under minimum recommended width.

MODEL	MINIMUM WIDTH (wear limit)
500SS 600 HO SDI	34.9 mm (1-3/8 in)
800R	35.3 mm (1-13/32 in)

Drive Belt Installation

Install drive belt.

NOTE: The maximum drive belt life span is obtained when the arrows on the drive belt are directed toward the front of vehicle. This will ensure that correct direction of rotation is respected.

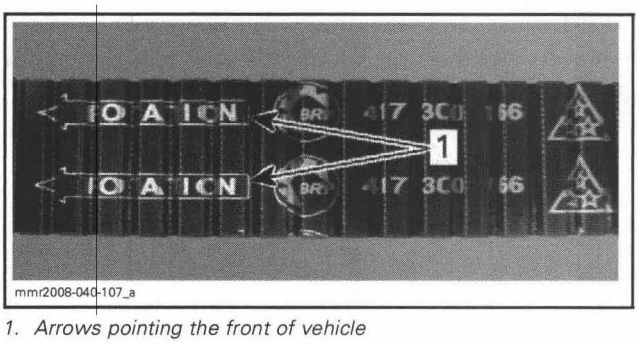

1. *Arrows pointing the front of vehicle*

Adjust drive belt height.

Drive Belt Height Adjustment

Using the suspension adjustment tool or the driven pulley opening tool (P/N 529 036 127), turn the driven pulley adjuster counterclockwise (± 1 turn).

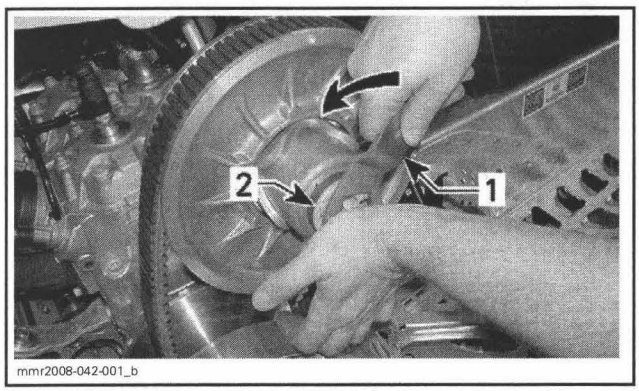

1. Suspension adjustment tool
2. Adjustment ring

Manually rotate drive belt to position it properly inside pulley sheaves.

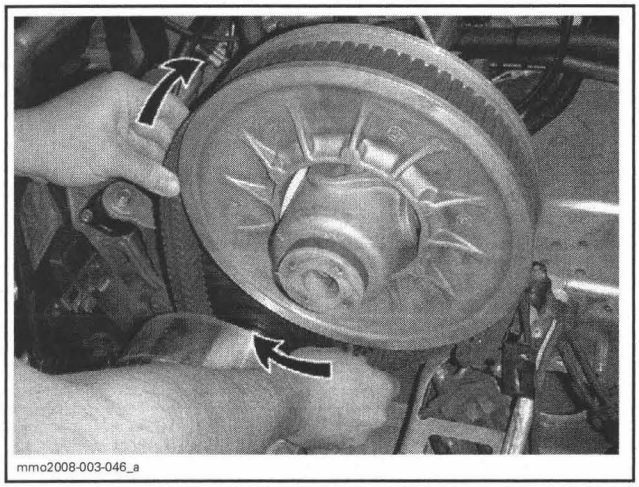

MANUALLY ROTATE DRIVE BELT

500SS/600 HO SDI

Repeat until drive belt reaches its highest position between pulley sheaves.

800R

Repeat until the bottom of grooves on the external side of drive belt reach the driven pulley edges.

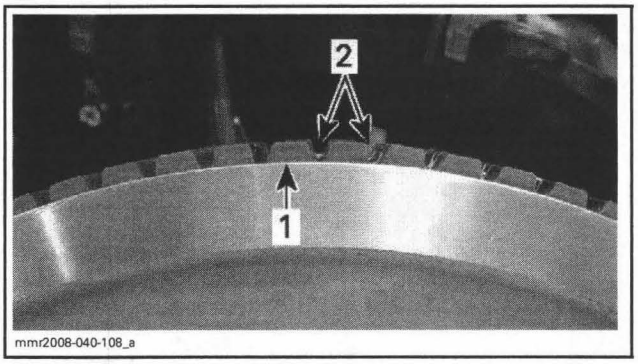

1. Driven pulley edge
2. External drive belt grooves

All Models

When the drive belt is properly positioned, ensure that the swivel ring leans against the driven pulley cam.

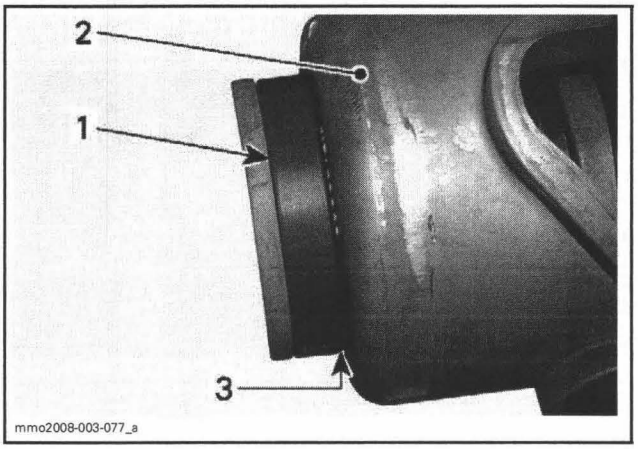

1. Swivel ring
2. Driven pulley cam
3. In contact with driven pulley

CAUTION: Overtightening swivel ring will modify drive belt adjustment and reduce drive belt life span.

Check drive belt deflection. See procedure further.

Using the spark plug tool (included in the tool kit) or an 11/16 in thin wall socket, snug up the locking nut (± 4 turns).

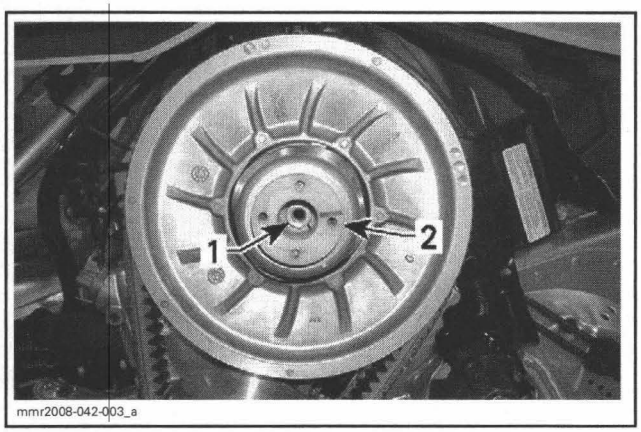

1. Locking nut
2. Adjustment ring

Reinstall belt guard.

Close LH side panel.

Drive Belt Deflection Verification

To adjust drive belt correctly and obtain maximum vehicle performance, it is recommended to perform the following steps in this order:

NOTE: Belt tension must be adjusted after the break-in period (i.e. after 50 km (30 miles)).

1. Install a proper drive belt, see *APPLICATION CHART* at the beginning of this section.
2. Adjust drive belt height, see procedure in *DRIVE BELT INSTALLATION*.
3. Check drive belt deflection using the following procedure.

Position a reference rule on drive belt.

Use the belt tension tester (P/N 414 348 200) as explained below.

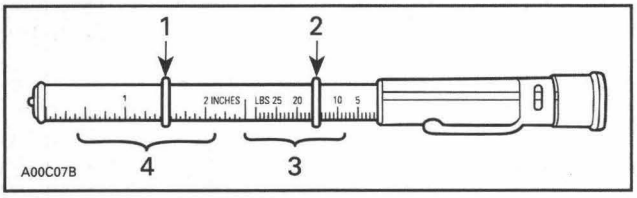

1. Lower O-ring
2. Upper O-ring
3. Force (read down)
4. Deflection (read up)

Slide lower O-ring of deflection scale to specified measure.

Slide upper O-ring to 0 (zero) on the force scale.

Apply pressure until lower O-ring is flush with edge of rule and read force on the upper scale at top edge of O-ring.

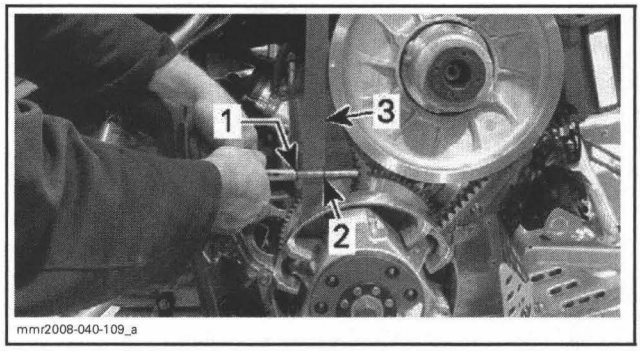

1. Upper O-ring — force
2. Lower O-ring — deflection
3. Reference rule

MODEL	DEFLECTION mm (in)	FORCE kg (lb)
500SS 600 HO SDI 800R	32 ± 5 (1.260 ± .197)	11.3 (25)

If the deflection is within specifications, drive belt adjustment is completed.

If the deflection is out of specifications, reposition drive belt. See *DRIVE BELT HEIGHT ADJUSTMENT* procedure in this section.

Recheck deflection.

If specification cannot be reached, try a new drive belt.

DRIVE PULLEY

SERVICE TOOLS

Description	Part Number	Page
slider shoe fork	529 005 500	367, 373
drive pulley puller	529 022 400	366
bushing remover/installer	529 031 200	370
drive pulley holder	529 035 674	366–367, 375
sliding sheave bushing remover/installer	529 035 931	370, 372
spring compressor	529 036 012	368, 370, 372–373

SERVICE PRODUCTS

Description	Part Number	Page
Loctite 680	293 800 114	372
pulley flange cleaner	413 711 809	370

TRA III

500SS and 600 HO SDI

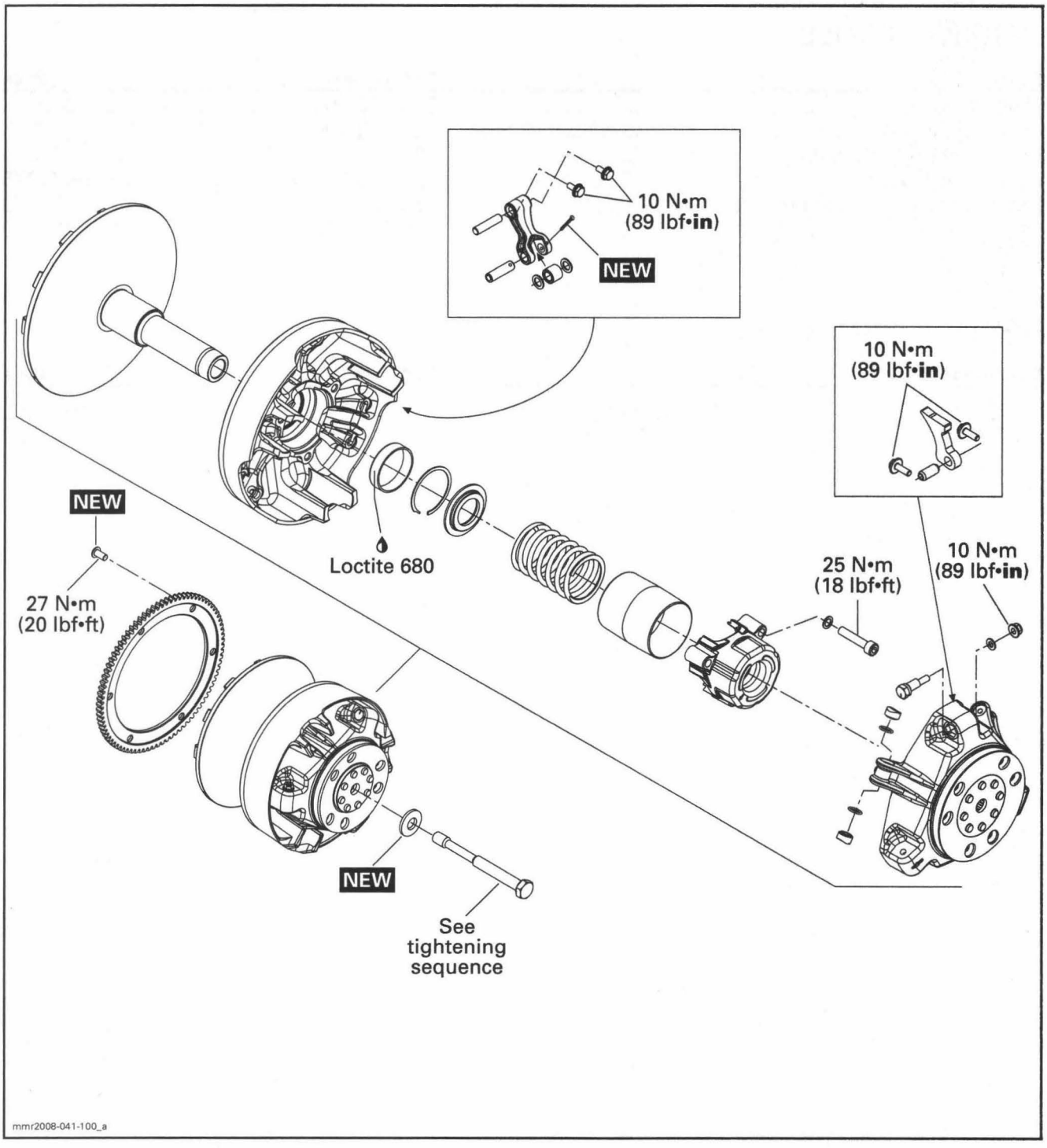

TRA VII

800R

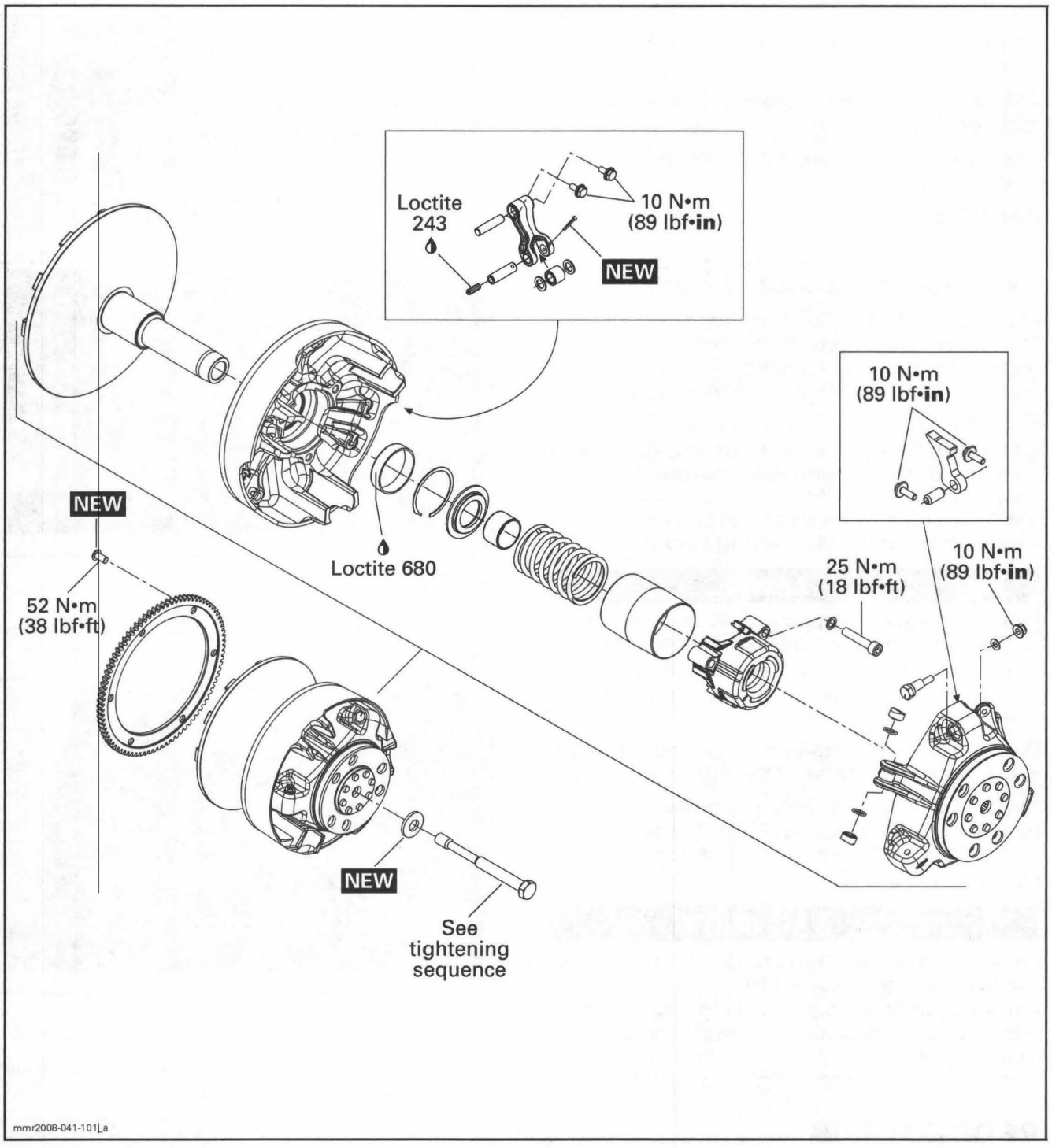
Loctite
243
10 N•m
(89 lbf•in)
NEW
10 N•m
(89 lbf•in)
NEW
Loctite 680
25 N•m
(18 lbf•ft)
10 N•m
(89 lbf•in)
52 N•m
(38 lbf•ft)
NEW
See
tightening
sequence
mmr2008-041-101_La

GENERAL

TRA drive pulley stands for **Total Range Adjustable** drive pulley.

These are lubrication free drive pulleys. Do not lubricate any component.

Always refer to appropriate *PARTS CATALOG* for replacement part.

Most parts of TRA III are not interchangeable with those of the TRA VII.

CAUTION: Never use any type of impact wrench at drive pulley removal and installation. The use of impact wrench could damage the drive pulley and modify the calibration.

Some drive pulley components (return spring, ramp) can be changed to improve vehicle performance in high altitude regions. A Service Bulletin gives information about calibration according to altitude.

CAUTION: Such modifications should only be performed by experienced mechanics since they can greatly affect vehicle performance. Verify spring specifications before installation. Do not only refer to the spring color code.

⚠ WARNING

Any drive pulley repairs must be performed by an authorized Ski-Doo dealer. Subcomponent installation and assembly tolerances require strict adherence to procedures detailed.

During assembly/installation, use torque values and service products as in the exploded views.

Clean threads before applying a threadlocker. Refer to *SELF-LOCKING FASTENERS* and *LOCTITE APPLICATION* at the beginning of this manual for complete procedure.

⚠ WARNING

Torque wrench tightening specifications must be strictly adhered to.
Locking devices (e.g.: locking tabs, elastic stop nuts, cotter pins, etc.) must be replaced with new ones.

PROCEDURES

DRIVE PULLEY

Drive Pulley Removal

Remove drive belt. Refer to *DRIVE BELT* section.

Secure drive pulley with the drive pulley holder (P/N 529 035 674). Install it over a sliding sheave tower.

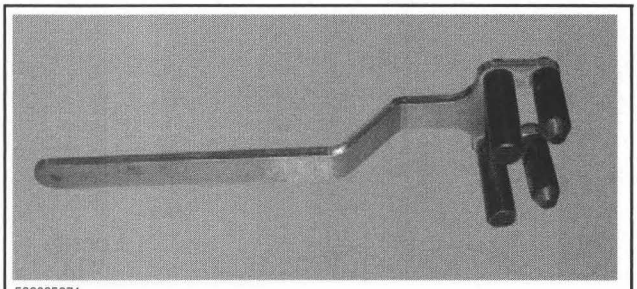

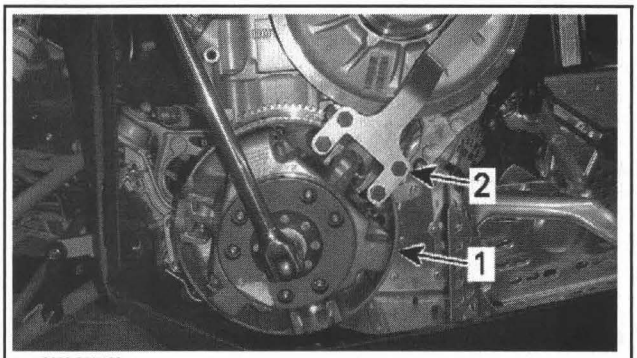

1. *Drive pulley*
2. *Drive pulley holder*

Remove the drive pulley bolt and its conical spring washer.

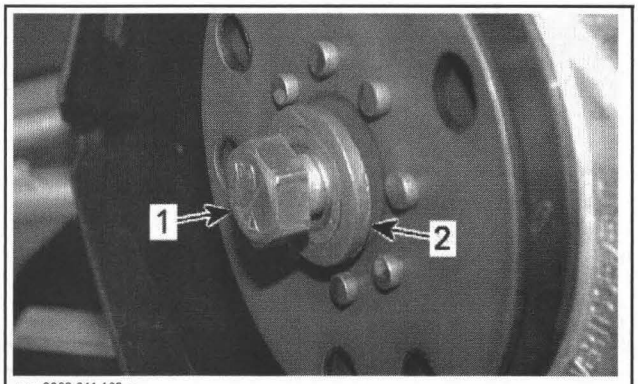

1. *Drive pulley bolt*
2. *Conical spring washer*

To remove drive pulley from engine, use the drive pulley puller (P/N 529 022 400).

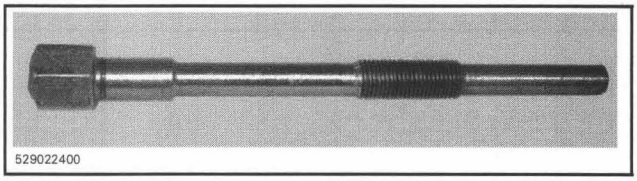

Retain drive pulley with the drive pulley holder (P/N 529 035 674), and install the puller in pulley shaft then tighten.

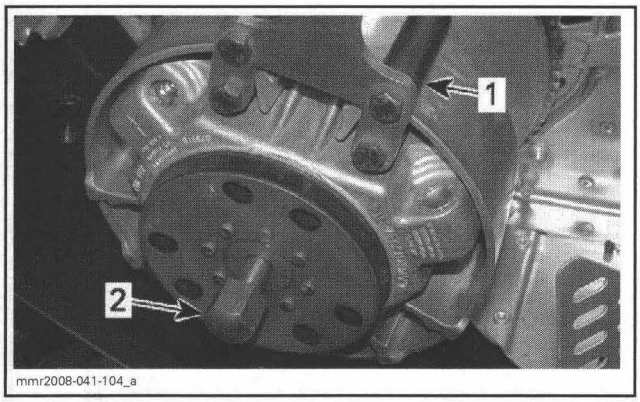

1. Drive pulley holder
2. Drive pulley puller

CAUTION: These pulleys have metric threads. Do not use imperial threads puller. Always tighten puller by hand to ensure that the drive pulley has the same type of threads (metric vs imperial) prior to fully tightening.

Drive Pulley Disassembly

CAUTION: NEVER tap on governor cup.

To separate fixed sheave from sliding sheave, screw puller into fixed sheave shaft about 13 mm (1/2 in). Raise drive pulley and hold it by the sliding sheave while knocking on puller head to disengage fixed sheave.

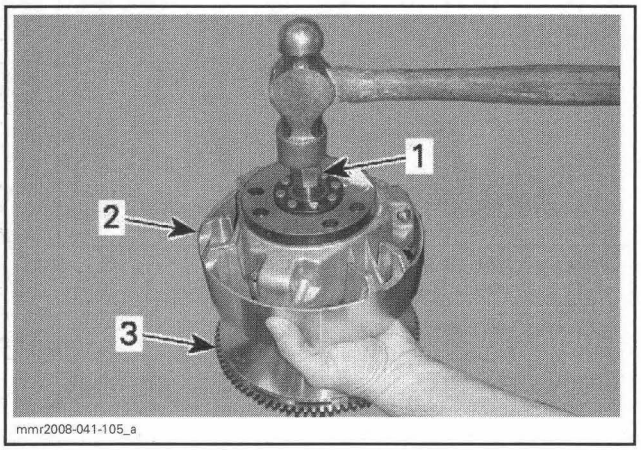

TYPICAL
1. Puller
2. Sliding sheave
3. Fixed sheave

NOTE: No components marking is required before disassembling this drive pulley since it has factory mark and arrows as indexing reference.

Ring Gear

To remove the ring gear, use a heat gun to break the threadlocker on ring gear screws. Discard the ring gear screws.

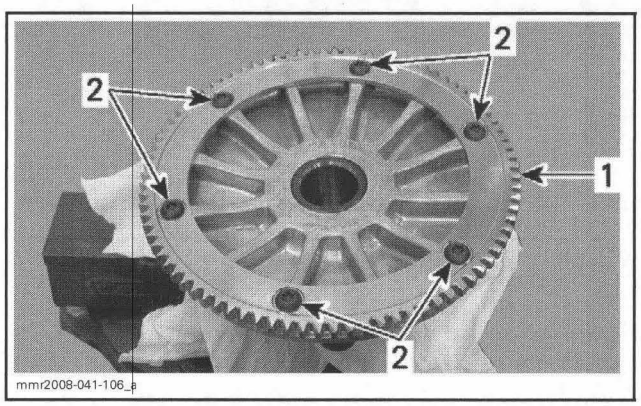

1. Ring gear
2. Ring gear screws

CAUTION: If another tool than a heat gun is used, do not exceed 150°C (300°F).

Slider Shoes and Governor Cup

Carefully lift governor cup until slider shoes come at their highest position into guides.

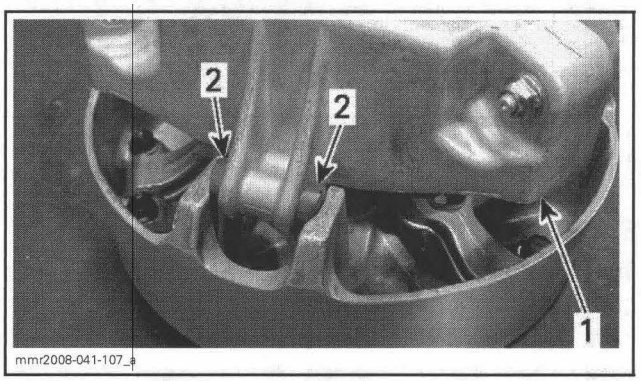

1. Governor cup
2. Slider shoes

Hold a slider shoe set then carefully lift its housing and install a slider shoe fork (P/N 529 005 500). Proceed the same way for other housings lifting one at a time.

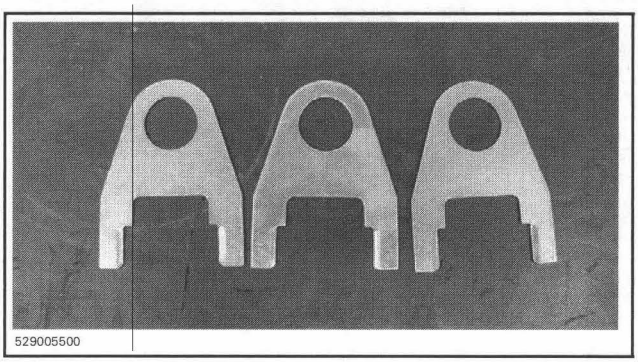

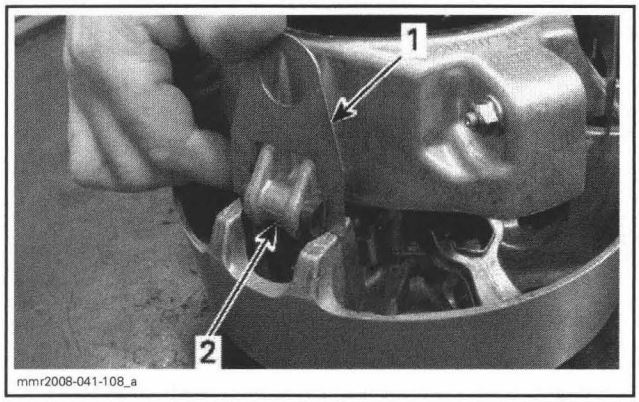

1. Governor cup
2. Slider shoe forks

When all slider shoes are held with the forks, remove the governor cup.

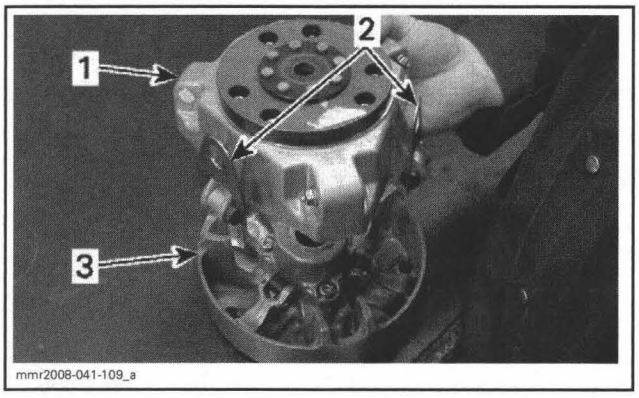

1. Governor cup
2. Slider shoe forks
3. Sliding sheave

Spring Cover

To remove the spring cover, always use the spring compressor (P/N 529 036 012). The spring cover is under high clutch spring preload.

⚠ WARNING

Clutch spring is very strong. Never attempt to remove spring cover without the recommended tools.

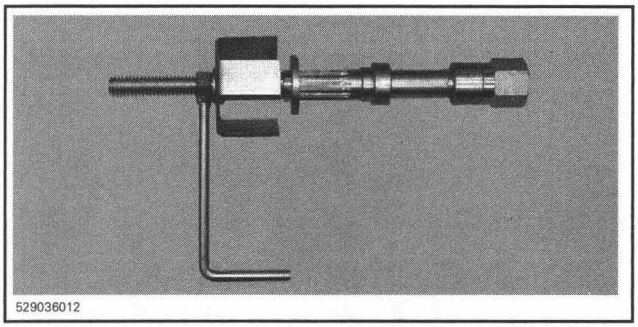

Install support guide of spring compressor in a vice.

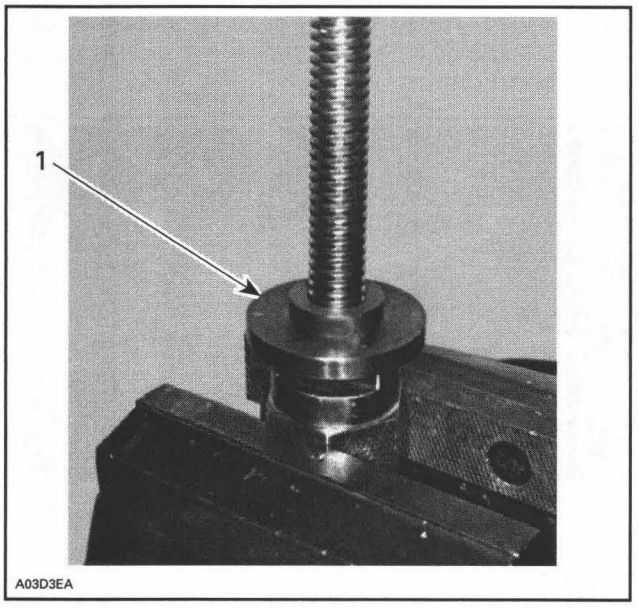

1. Support guide

NOTE: The support guide will prevent bushing damages.

Install sliding sheave then the support cup over spring cover.

Remove 3 Allen screws retaining spring cover then unscrew compressor.

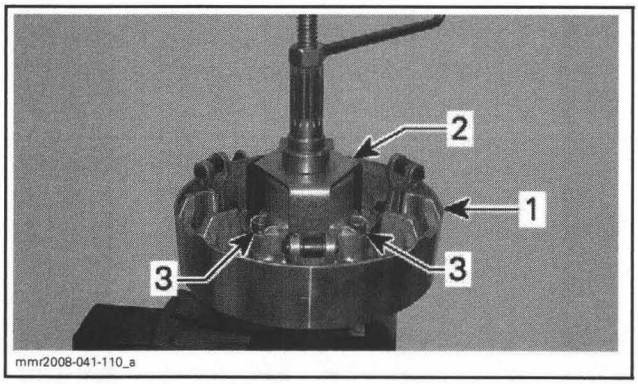

TYPICAL — TRA VII SHOWN
1. Sliding sheave
2. Support cup
3. Spring cover screws

Remove spring cover, spring and spring seat.

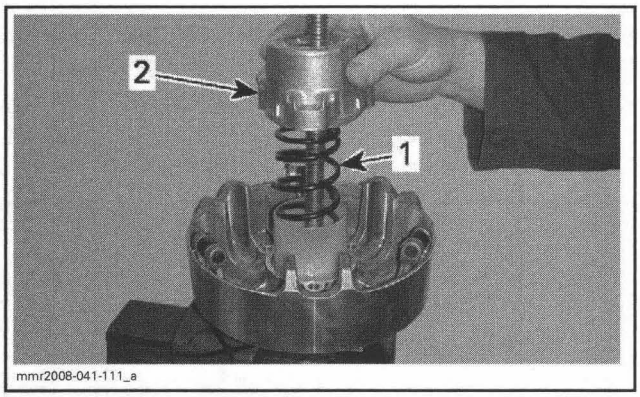

1. *Spring*
2. *Spring cover*

Lever, Roller and Pin

Remove lever screws.

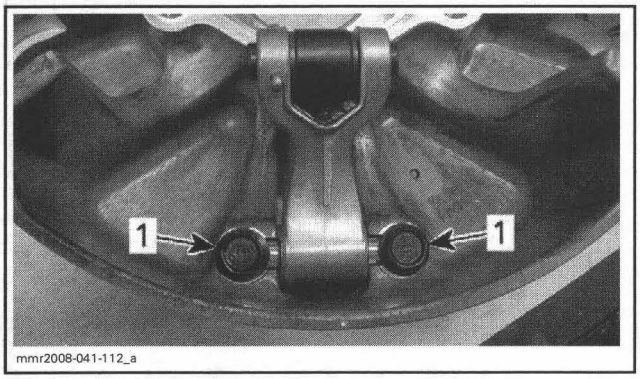

1. *Lever screws*

Pull lever to remove it from sliding sheave.

Remove and discard the cotter pin.

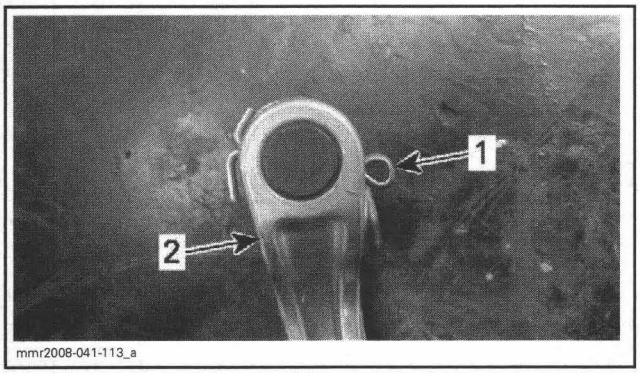

1. *Cotter pin*
2. *Lever*

Remove pin, thrust washers and roller.

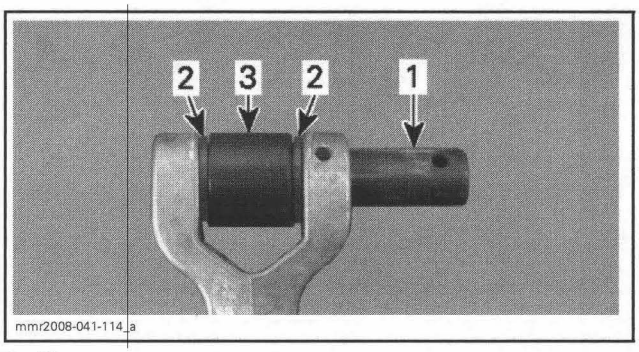

1. *Pin*
2. *Thrust washers*
3. *Roller*

Ramp

Turn the governor cup up side down.

Remove screws retaining ramp to governor cup.

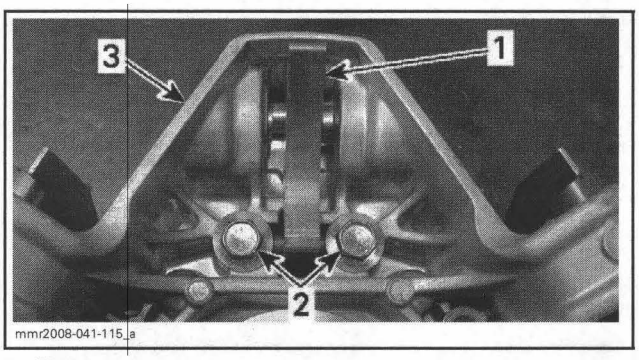

1. *Ramp*
2. *Ramp screws*
3. *Governor cup*

Calibration Screw

Unscrew the nut securing the calibration screw.

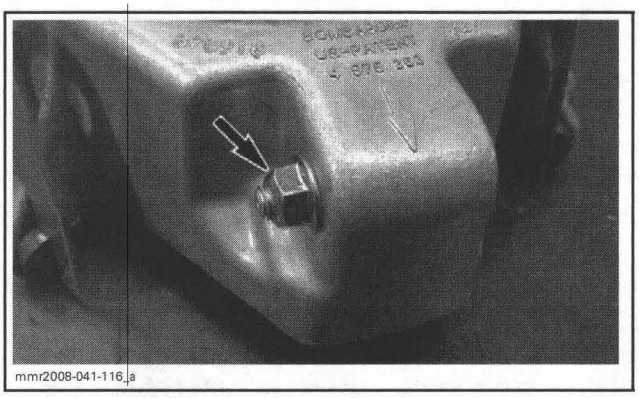

Remove calibration screw and its washer.

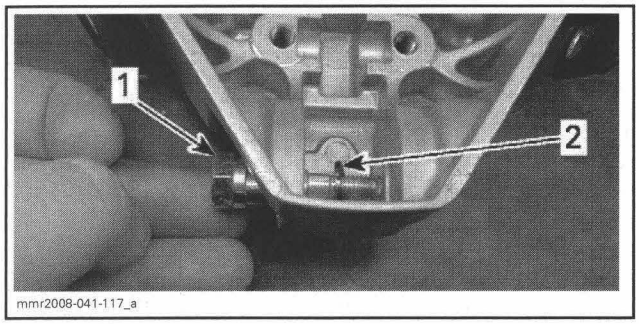

1. Calibration screw
2. Washer

Sliding Sheave Bushing Removal

NOTE: In case of worn out bushing, it is advisable to replace whole sliding sheave assembly as replacing just the bushing may reduce the drive pulley performance.

If bushing is out of specifications, remove it as follows:

- Remove circlip from the sliding sheave.

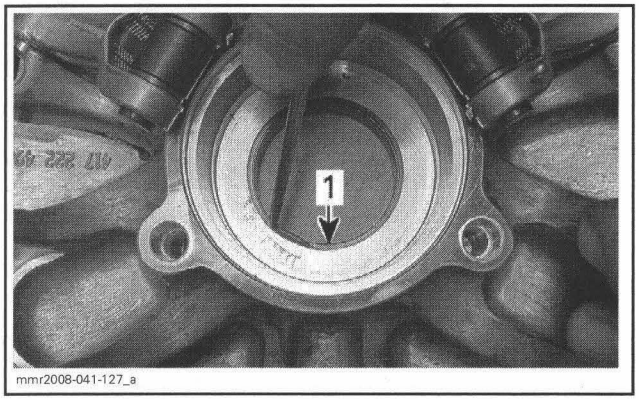

1. Circlip

- Secure the spring compressor (P/N 529 036 012) in a vice.
- Mount the bushing remover/installer (P/N 529 031 200) and the sliding sheave assembly on it.

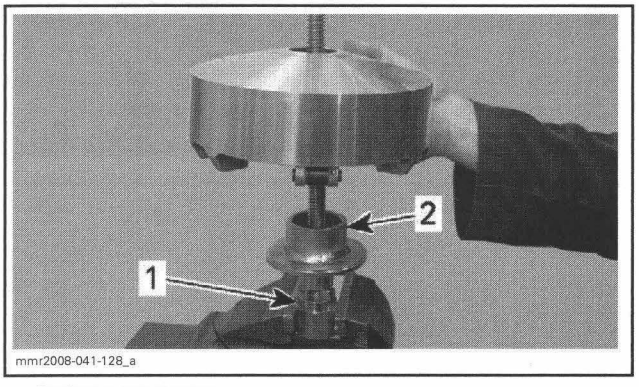

1. Spring compressor
2. Bushing remover/installer

- Use the sliding sheave bushing remover/installer (P/N 529 035 931) to press out old bushing.

NOTE: Make sure to use the tool as marked; to remove the bushing press using the side marked "OUT", as shown below in the picture.



- Use a soft sand paper to clean sliding sheave bushing mounting surface.

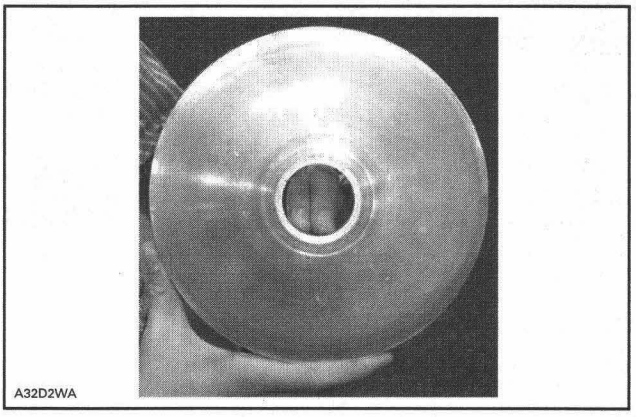

- Clean sliding sheave bushing mounting surface with pulley flange cleaner (P/N 413 711 809).
- Clean the circlip groove.

Drive Pulley Cleaning

Parts must be at room temperature before cleaning.

Clean pulley sheaves and shaft with fine steel wool and dry cloth.

Using a paper towel with pulley flange cleaner (P/N 413 711 809), clean crankshaft tapered end and the taper inside the fixed sheave of the drive pulley, crankshaft threads and retaining screw threads.

CAUTION: Avoid contact between cleaner and crankshaft seal because damage may occur.

Remove all hardened oil deposits that have baked on crankshaft and pulley tapered surfaces with coarse or medium steel wool and/or sand paper no. 600.

CAUTION: Do not use any other type of abrasive.

Reclean mounting surfaces with paper towel and cleaning solvent.

Wipe off the mounting surfaces with a clean, dry paper towel.

CAUTION: Mounting surfaces must be free of any oil, cleaner or towel residue.

Drive Pulley Inspection

NOTE: During inspection, replace any component if found defective or out of specifications.

Fixed Sheave and Governor Cup

Inspect fixed sheave for marks or scratches.

500SS and 600 HO SDI

Inspect splines and free play between both parts. Maximum free play is 0.5 mm (.020 in) measured at calibration screw radius.

Slider Shoes

Check slider shoes for wear. Replace if groove is not apparent on top.

Check if slider shoe O-rings are cracked, cut or crushed.

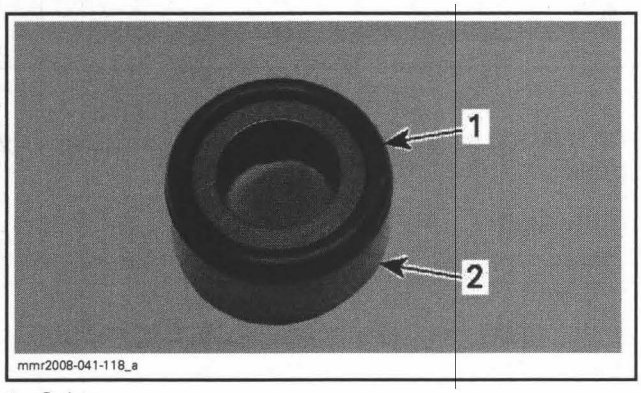

1. O-ring
2. Slider shoe

Sliding Sheave

Inspect pulley sheave for marks or scratches.

Visually inspect coating of bushings.

Using a bore gauge, measure the inner diameter of sliding sheave bushing. Measuring point must be at least 5 mm (1/4 in) from bushing edge.

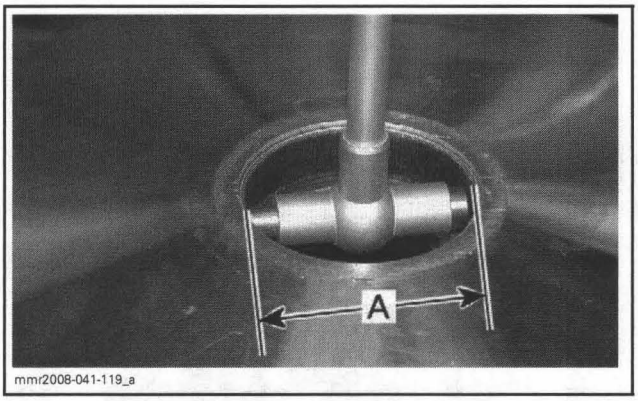

A. Inner diameter of sliding sheave bushing

BUSHING	SERVICE LIMIT
Sliding sheave bushing	40.30 mm (1.587 in)

Lever, Roller and Pin

Check levers for cracks, distortion or other damages.

Check lever pivot for wear.

Check lever flanged bushing for wear.

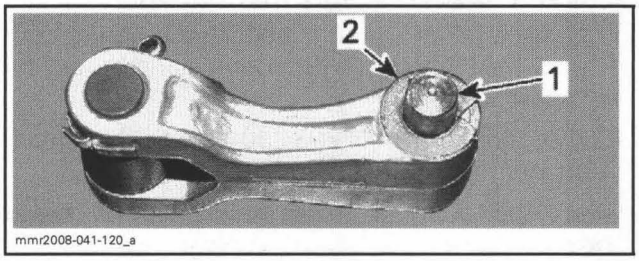

1. Lever pivot
2. Lever flanged bushing

Check rollers for roundness of external diameter.

Check thrust washers for thickness wear.

Check roller pins for wear.

Spring Cover

Check spring cover for cracks or wear.

Visually inspect the coating of spring cover bushing for wear.

Using a bore gauge, measure the inner diameter of spring cover bushing. Measuring point must be at least 5 mm (1/4 in) from bushing edge.

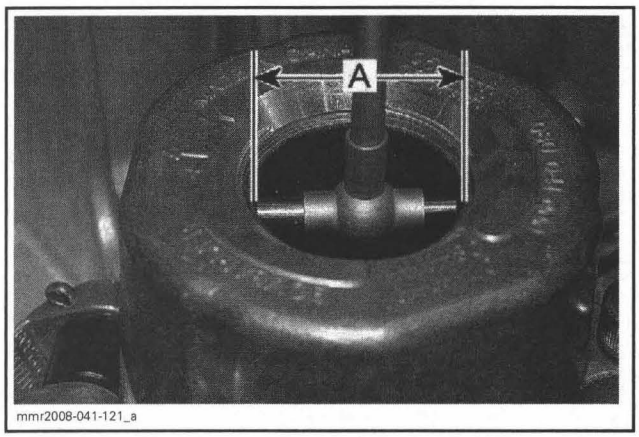

A. Inner diameter of spring cover bushing

BUSHING	SERVICE LIMIT
Spring cover bushing	30.40 mm (1.197 in)

Replace the spring cover if the inner diameter of bushing is out of specification.

Drive Pulley Assembly

Sliding Sheave Bushing Installation

To install a **NEW** bushing, secure the spring compressor (P/N 529 036 012) in a vice and mount the sliding sheave.

Apply Loctite 680 (P/N 293 800 114) on the outside of bushing face.

Insert the bushing from inner side of sliding sheave.

Mount the sliding sheave bushing remover/installer (P/N 529 035 931) with side marked "IN" to press in a new bushing.

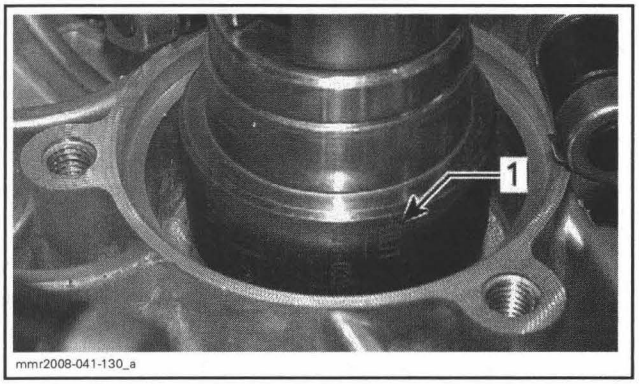

1. Mark "OUT" toward outside

NOTE: Make sure that the bushing is well seated on the sliding sheave.

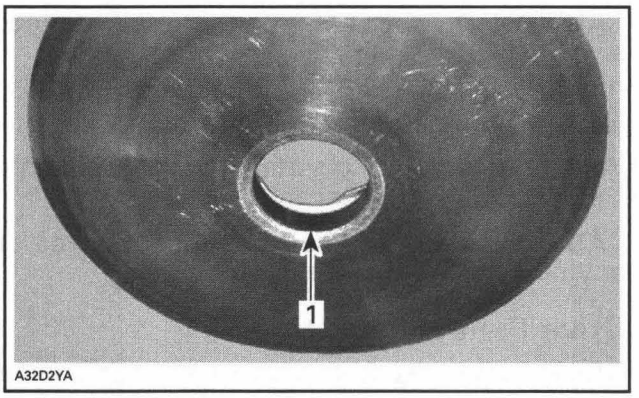

1. Bushing

Install the circlip.

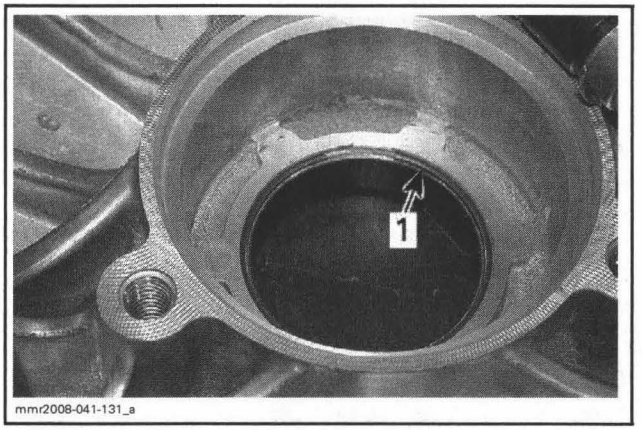

1. Circlip

CAUTION: Make sure that the circlip is properly position in its groove.

Ring Gear

Clean ring gear and the inner threads of fixed sheave.

Install **NEW** ring gear screws and torque them in accordance with the following chart.

RING GEAR SCREW TORQUE	
500SS 600 HO SDI	27 N•m (20 lbf•ft)
800R	52 N•m (38 lbf•ft)

Sliding Sheave, Slider Shoes and Governor Cup

Install an O-ring on each slider shoes.

Insert slider shoes into governor cup so that groove in each slider shoe is vertical to properly slide in guides.

Install a slider shoe fork (P/N 529 005 500) into slider shoe grooves to maintain them for governor cup installation. Proceed on 3 set of slider shoes.

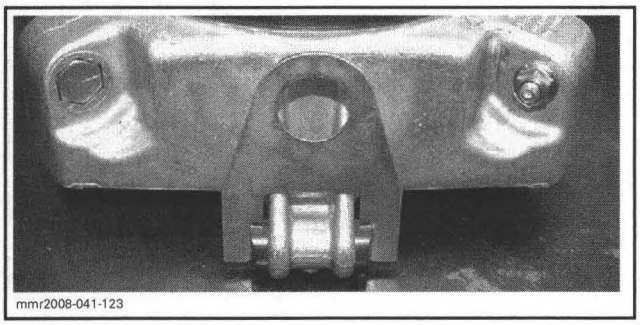
mmr2008-041-123

Make sure to align governor cup arrow with sliding sheave mark.

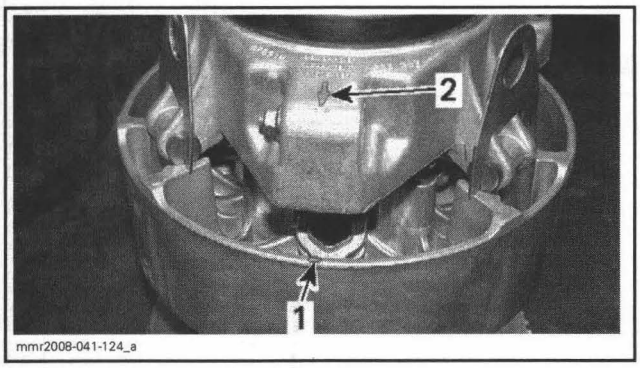

mmr2008-041-124_a

1. *Sliding sheave mark*
2. *Governor cup arrow*

Carefully slide governor cup into sliding sheave.

Remove forks and push governor cup.

Spring Cover

To install spring cover, use spring compressor (P/N 529 036 012).

Align spring cover arrow with sliding sheave mark.

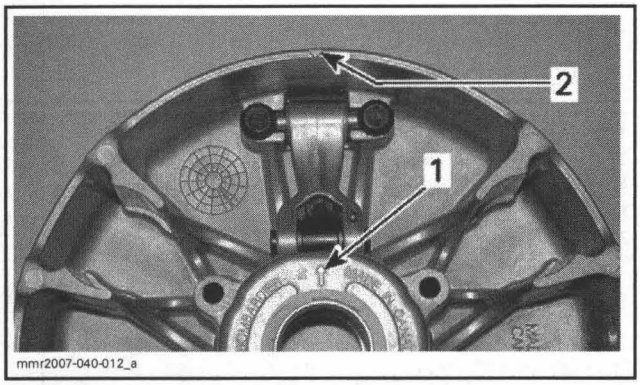

mmr2007-040-012_a

TYPICAL
1. *Spring cover arrow*
2. *Sliding sheave mark*

Tighten screws to 25 N•m (18 lbf•ft).

Lever, Roller and Pin

Always use the same type of pin as originally installed when servicing. Refer to *TECHNICAL SPECIFICATIONS*.

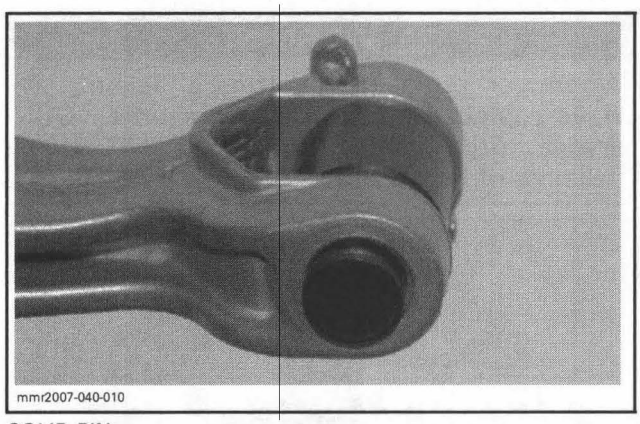
mmr2007-040-010

SOLID PIN

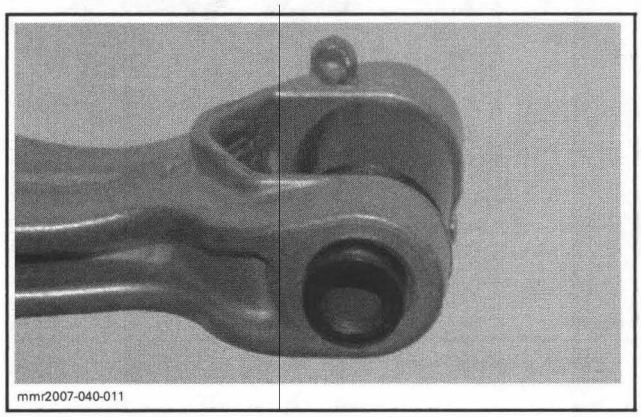
mmr2007-040-011

HOLLOW PIN

NOTE: Different types have different weights for calibration purpose. Refer to *HIGH ALTITUDE BULLETIN*.

While installing lever make sure that the curved sides of the levers are outwards as shown.

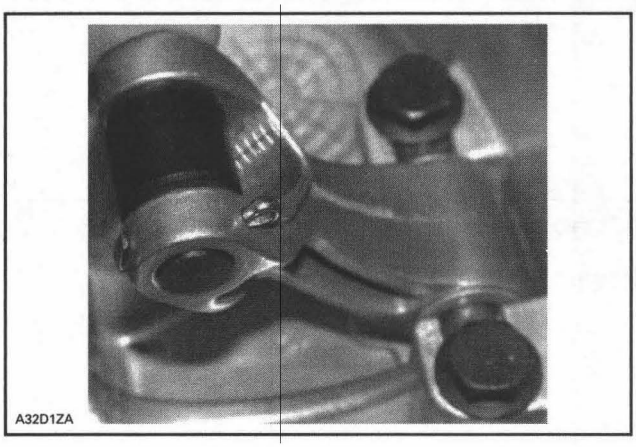
A32D1ZA

Always install lever assemblies so cotter pin heads are oriented on top when lever is set at the bottom of sliding sheave.

Bend cotter pin ends to sit perfectly against lever.

⚠ WARNING

Whenever replacing centrifugal levers, always replace all 3 at the same time. Otherwise, drive pulley unbalance will occur because of levers difference.

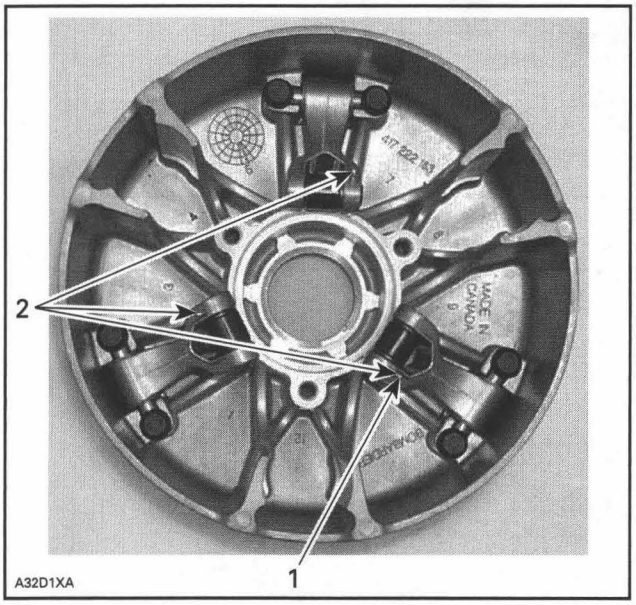

1. Cotter pin head on top
2. All on the same side

Torque lever screws to 10 N•m (89 lbf•**in**).

CAUSE: Levers and rollers must move easily after installation.

Ramp

Insert dowel tube from chamfered side.

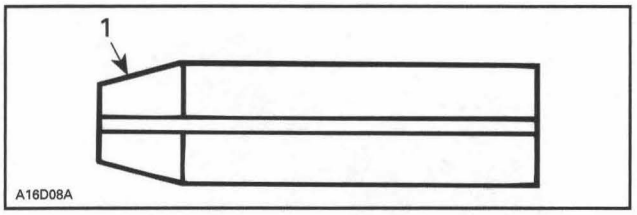

1. Chamfered side

Position dowel tube split at the angle "A".

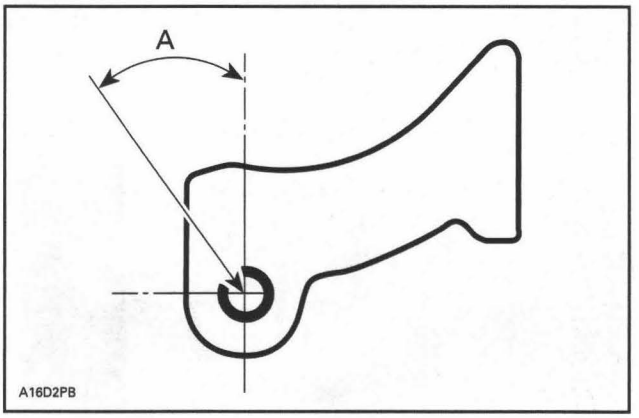

MODEL	ANGLE "A"
All	45 ± 3°

Make sure ramp is centered on dowel tube.

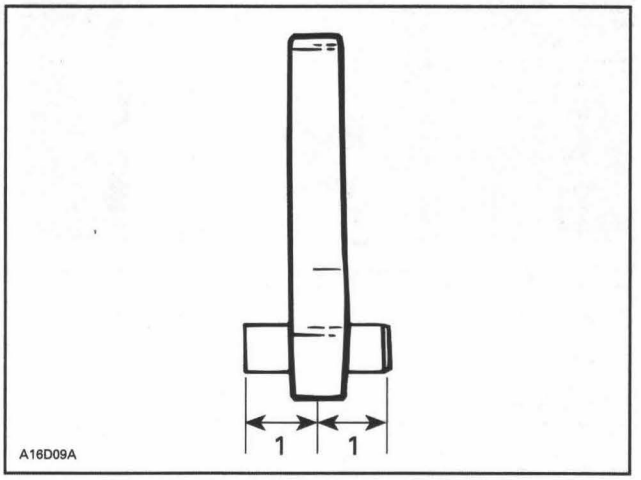

1. Equal distance

Torque ramp screws to 10 N•m (89 lbf•**in**).

Calibration Screw

When installing calibration screw, make sure to install washer as shown.

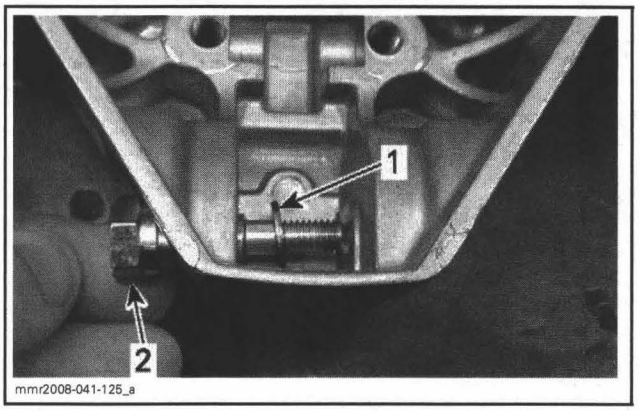

1. Washer
2. Calibration screw

NOTE: Refer to *DRIVE PULLEY ADJUSTMENT*, further in this section, to install the calibration screws in original setting.

Torque locking nut to 10 N•m (89 lbf•**in**).

Sliding Sheave and Fixed Sheave

To assemble the sliding sheave on the fixed sheave, align sliding sheave mark with the dot at the back of fixed sheave.

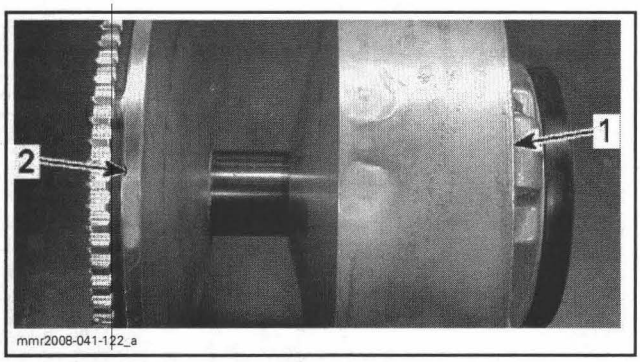

1. *Sliding sheave mark*
2. *Fixed sheave dot*

NOTE: On **500SS** and **600 HO SDI** models, push sliding sheave until governor cup splines are engaged on fixed sheave splines.

Drive Pulley Installation

Clean mounting surfaces as described in *DRIVE PULLEY CLEANING* above.

CAUTION: Do not apply antiseize or any lubricant on crankshaft and drive pulley tapers.

Install drive pulley on crankshaft extension.

Install a **NEW** conical spring washer with its concave side towards drive pulley then install drive pulley bolt.

CAUTION: Always use BRP genuine parts for conical spring washer and bolt.

Use the drive pulley holder (P/N 529 035 674) to retain drive pulley. See removal procedure.

Torque drive pulley bolt.

DRIVE PULLEY FIRST TORQUE	
500SS 600 HO SDI	90 N•m (66 lbf•ft)
800R	120 N•m (89 lbf•ft)

Before starting engine, perform drive pulley adjustment, see further in this section.

Install drive belt and guard.

Raise the rear of the vehicle and support it with a mechanical stand.

⚠ WARNING

Ensure that the track is free of particles which could be thrown out while track is rotating. Keep hands, tools, feet and clothing clear of track. Ensure nobody is standing near the vehicle.

Accelerate the vehicle at low speed (maximum 30 km/h (20 MPH)) and apply the brake, repeat 5 times.

Re-torque drive pulley bolt.

DRIVE PULLEY FINAL TORQUE	
500SS 600 HO SDI	95 N•m (70 lbf•ft)
800R	120 N•m (89 lbf•ft)

⚠ WARNING

After 10 hours of operation the transmission system of the vehicle must be inspected to ensure drive pulley bolt is properly torqued.

Drive Pulley Adjustment

The drive pulley is factory calibrated to transmit maximum engine power at a predefined RPM. Factors such as ambient temperature, altitude or surface condition may vary this critical engine RPM thus affecting snowmobile efficiency.

This adjustable drive pulley allows setting maximum engine RPM in the vehicle to maintain maximum power. Refer to *ENGINE MANAGEMENT SYSTEM* for engine RPM adjustment.

Calibration screws should be adjusted so that actual maximum engine RPM in vehicle matches the maximum horsepower RPM given in *TECHNICAL SPECIFICATIONS*.

NOTE: The adjustment has an effect on high RPM only.

To adjust, modify ramp end position by turning calibration screws.

Calibration screw has a notch on top of its head.

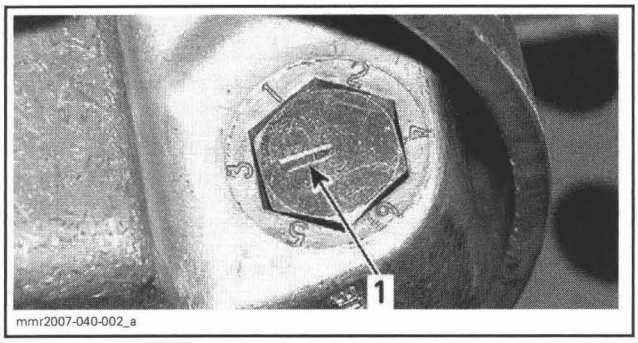

1. Notch

Governor cup has 6 positions numbered 1 to 6.

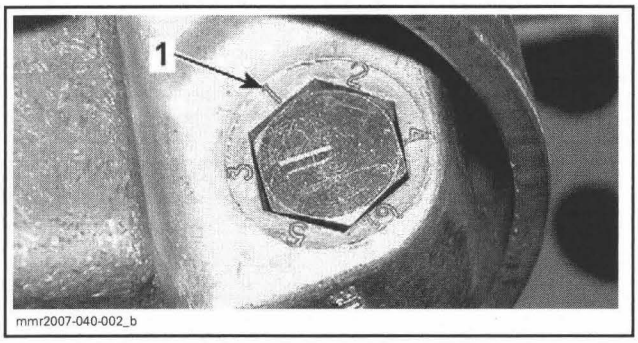

1. Position 1

See the following table for original setting.

CALIBRATION SCREW			
ENGINE	MODEL		POSITION
500SS	GSX	Sport	2
	MX Z	Trail and TNT	2
600 HO SDI	GSX	Limited and Limited Touring	3
	MX Z	Renegade, Renegade X and X	3
800R	GSX	Limited	3
	MX Z	Adrenaline, Renegade, Renegade X and X	3
	SUMMIT	X 154" (EUR)	3
		All other models	1

Each number modifies maximum engine RPM by about 200 RPM.

Lower numbers decrease engine RPM in steps of 200 RPM and higher numbers increase it in steps of 200 RPM.

Example:

Calibration screw is set at position 3 and is changed to position 5. So maximum engine RPM is increased by about 400 RPM.

To Adjust:

Just loosen locking nut enough to pull calibration screw **partially** out. Do not completely remove the locking nut.

CAUTION: Do not completely remove calibration screw otherwise its inside washer will fall off.

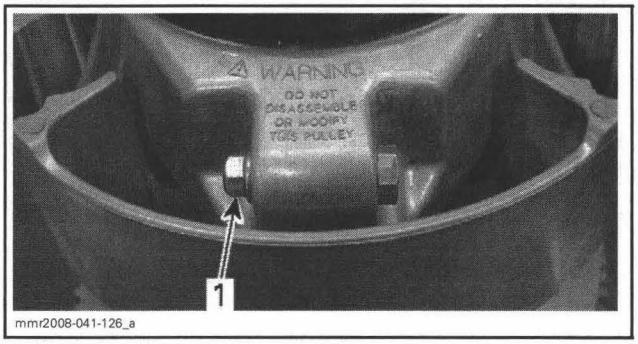

1. Loosen just enough to permit rotating of calibration screw

Adjust to desired position.

CAUTION: Always adjust all 3 calibration screws and make sure they are all set at the same number.

Torque locking nuts to 10 N•m (89 lbf•**in**).

DRIVEN PULLEY AND COUNTERSHAFT

SERVICE TOOLS

Description	Part Number	Page
driven spring compressor	529 036 064	380
countershaft bearing remover	529 036 065	384
countershaft bearing installer	529 036 066	385
countershaft support	529 036 067	384
upper gear retaining tool	529 036 110	379

SERVICE TOOLS – OTHER SUPPLIER

Description	Part Number	Page
rotor clip applicator	A-150	383

SERVICE PRODUCTS

Description	Part Number	Page
Loctite 767 (antiseize lubricant)	293 800 070	384
Loctite 609	413 703 100	385
pulley flange cleaner	413 711 809	382, 384

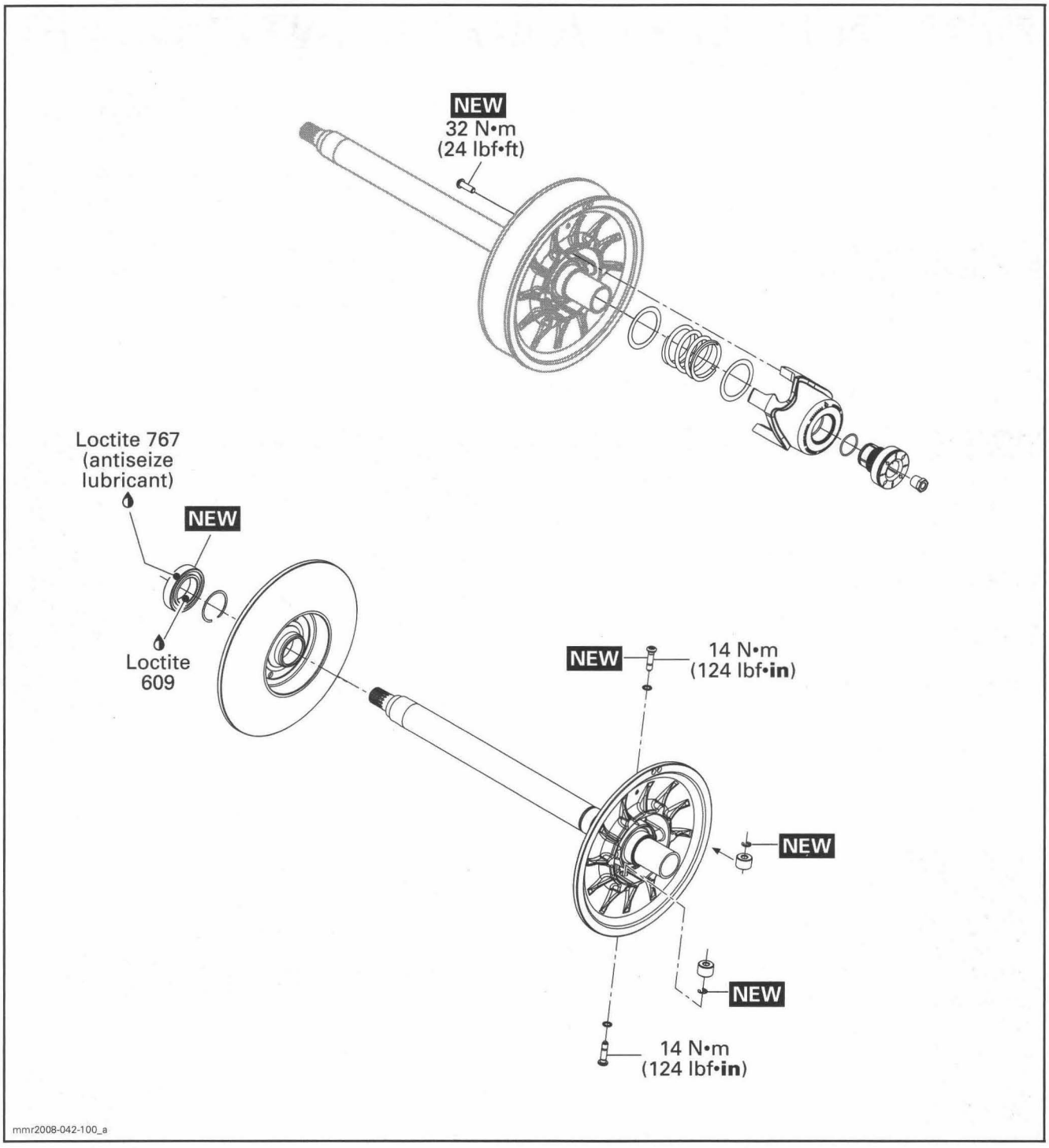
NEW
32 N•m
(24 lbf•ft)
Loctite 767
(antiseize
lubricant)
NEW
Loctite
609
NEW
14 N•m
(124 lbf•in)
NEW
NEW
14 N•m
(124 lbf•in)
mmr2008-042-100_a

GENERAL

During assembly/installation, use the torque values and the service products as in the exploded view.

Clean threads before applying a threadlocker. Refer to *SELF-LOCKING FASTENERS* and *LOCTITE APPLICATION* at the beginning of this manual for complete procedure.

⚠ WARNING

Torque wrench tightening specifications must be strictly adhered to.
Locking devices (e.g.: locking tabs, elastic stop nuts, cotter pins, etc.) must be replaced with new ones.

⚠ WARNING

Never start engine when the pulley guard is removed.

PROCEDURES

DRIVEN PULLEY

Driven Pulley Removal

Open left side panel.

Remove the muffler. Refer to *EXHAUST SYSTEM* section.

Remove the filling plug.

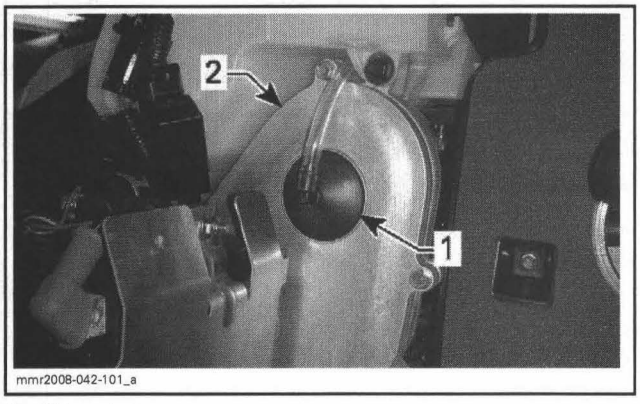

1. *Filling plug*
2. *Chaincase cover*

Release drive chain tension by unscrewing tensioner adjustment screw.

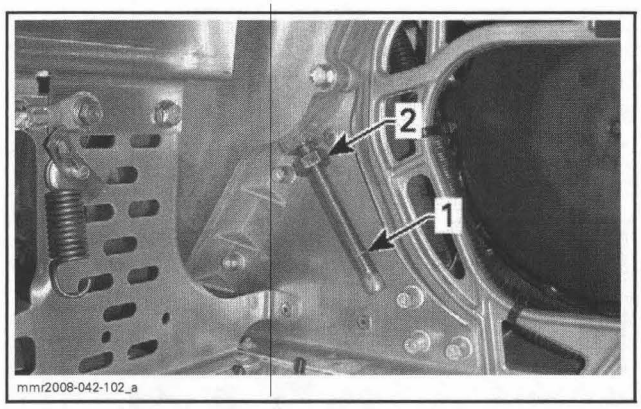

1. *Tensioner adjustment screw*
2. *Lock nut*

Remove the upper gear screw and the conical spring washer.

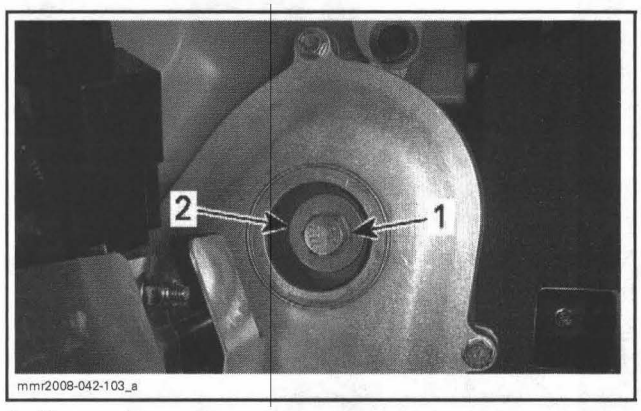

1. *Upper gear screw*
2. *Conical spring washer*

Install the upper gear retaining tool (P/N 529 036 110) on countershaft end.

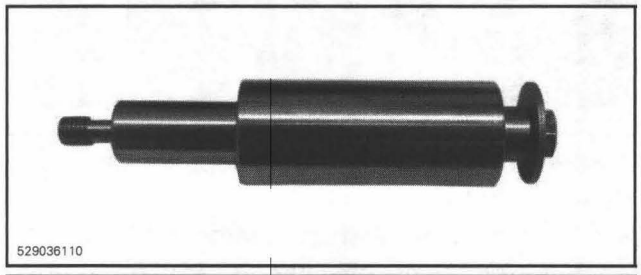

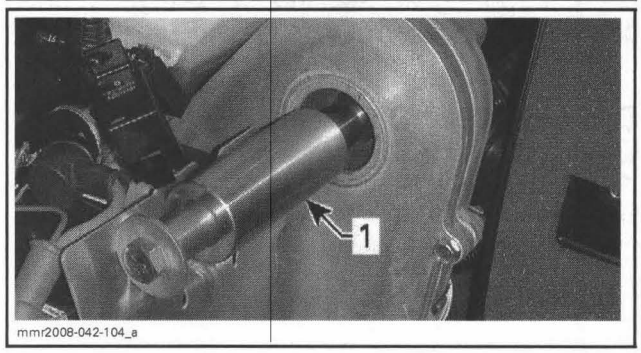

1. *Upper gear retaining tool*

Open right side panel.

Remove the drive belt. Refer to *DRIVE BELT* section.

Behind driven pulley, remove screw securing the countershaft bearing flange.

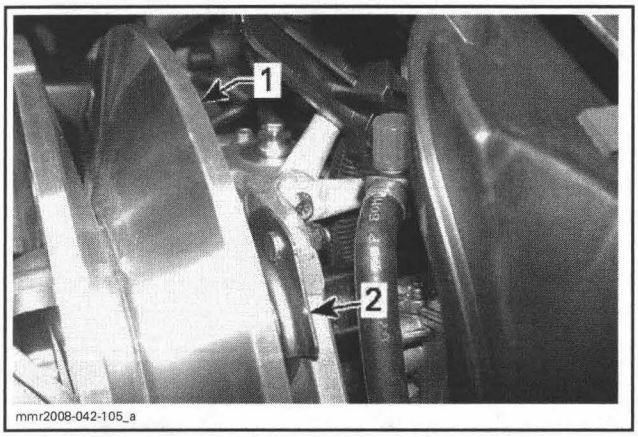

1. *Driven pulley*
2. *Countershaft bearing flange*

Pull the driven pulley to disengage countershaft and upper gear.

NOTE: If necessary, tap the upper gear retaining tool with a plastic hammer.

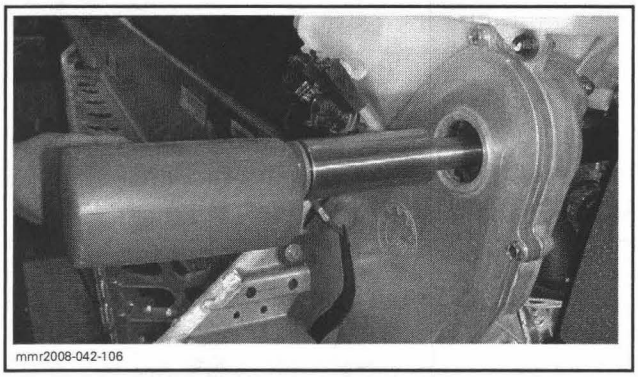

Unscrew countershaft from the upper gear retaining tool. Do not remove tool.

NOTE: While countershaft is removed from vehicle, the upper gear retaining tool keeps the drive chain and the upper gear in position inside chaincase.

Driven Pulley Disassembly

Cam and Spring

Unscrew and remove the adjustment ring.

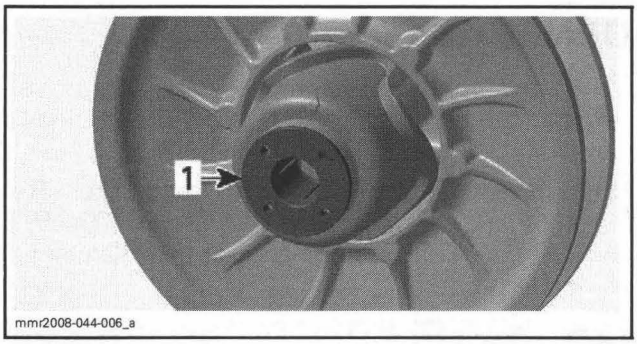

1. *Adjusting ring*

Install the threaded adapter of the driven spring compressor (P/N 529 036 064) at the end of driven pulley.

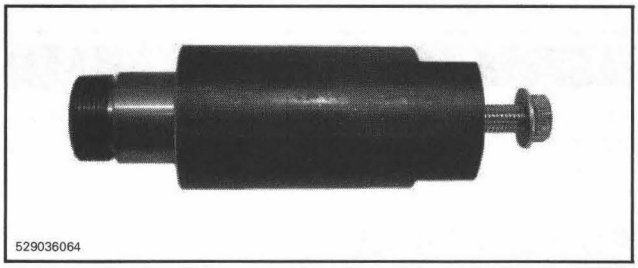

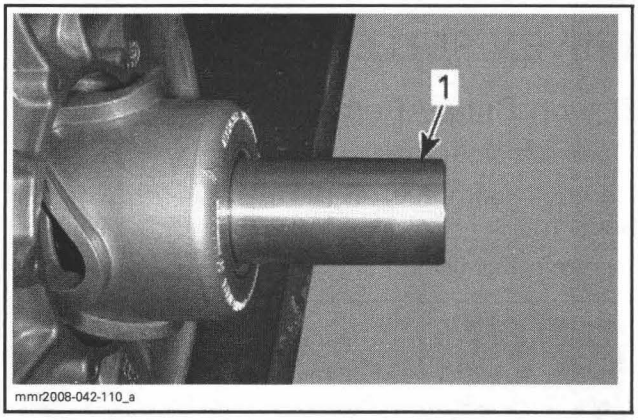

1. *Threaded adapter*

Install the external sleeve over the threaded adapter and secure sleeve with the driven spring compressor screw.

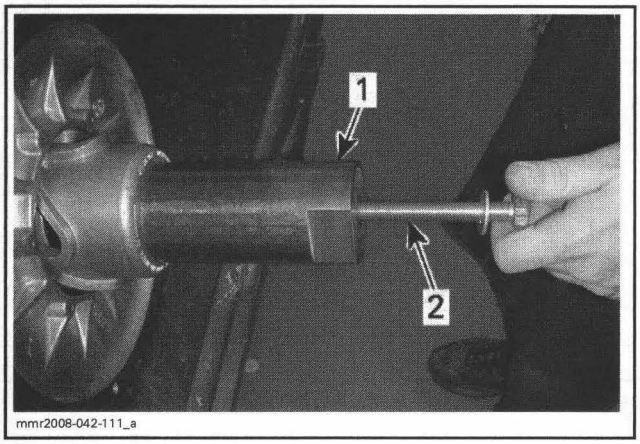

1. External sleeve
2. Driven spring compressor screw

Tighten the driven spring compressor screw to compress the cam.

Install the driven spring compressor in a vice.

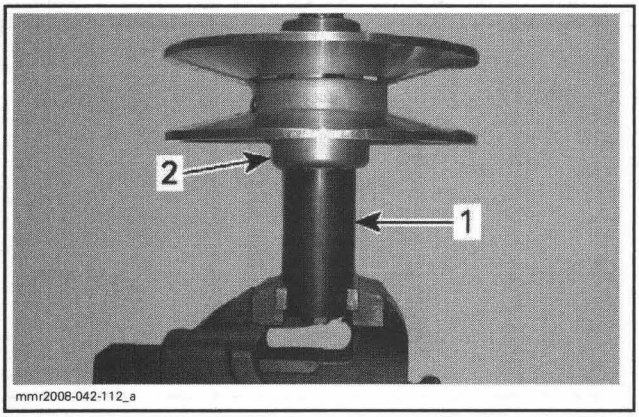

1. Driven spring compressor
2. Driven pulley

Using a heat gun, heat cam screws to break the thread locker.

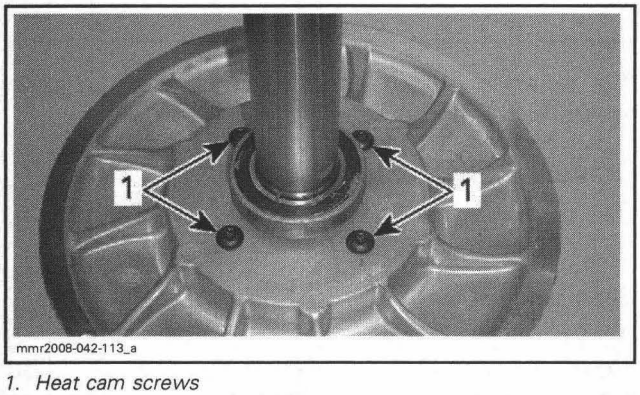

1. Heat cam screws

Remove and discard cam screws.

Unscrew the driven spring compressor screw completely. Remove cam and spring.

Sliding Sheave

Remove the cam and spring.

Remove the *COUNTERSHAFT BEARING*, see procedure in this section.

Remove sliding sheave.

Fixed Sheave

The fixed sheave and countershaft are sold as an assembly. They are not available separately.

Driven Pulley Rollers

Move apart sliding and fixed sheaves.

Remove and **discard** pivot screws.

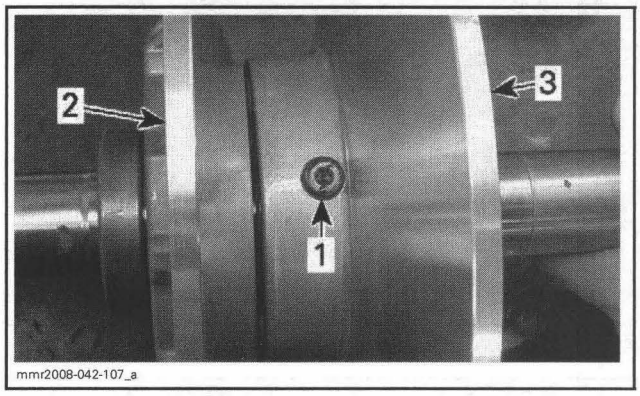

1. Pivot screw
2. Sliding sheave
3. Fixed sheave

Remove rollers.

Discard E-clips.

Driven Pulley Inspection

Cam and Spring

Verify contact surfaces of cam for visible damages. Replace cam if necessary.

Using a dial bore gauge, measure the inner diameter of cam bushing. Measuring point must be at least 5 mm (1/4 in) from bushing edge.

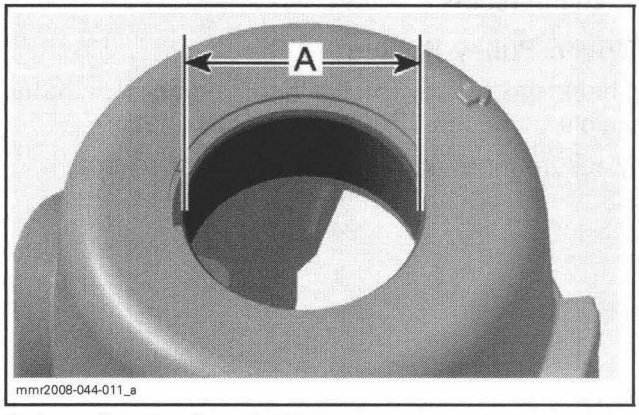

A. Inner diameter of cam bushing

BUSHING	SERVICE LIMIT
Cam bushing	41.5 mm (1.634 in)

Replace the cam if the inner diameter of bushing is out of specification.

Sliding Sheave

Inspect pulley sheave for marks or scratches.

Using a dial bore gauge, measure the inner diameter of sliding sheave bushing. Measuring point must be at least 5 mm (1/4 in) from bushing edge.

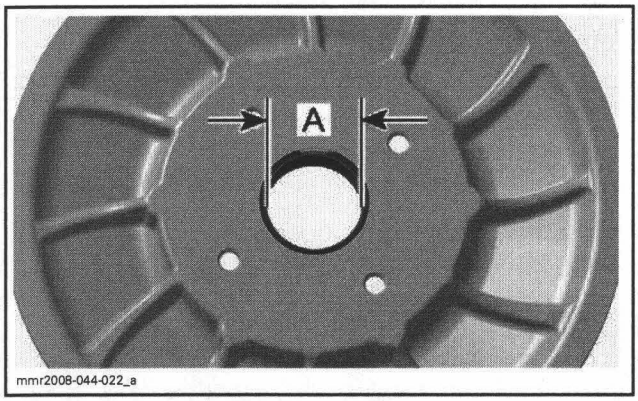

A. Inner diameter of sliding sheave bushing

BUSHING	SERVICE LIMIT
Sliding sheave bushing	41.5 mm (1.634 in)

Replace the sliding sheave if the inner diameter of bushing is out of specification.

Fixed Sheave

Replace fixed sheave and countershaft if one of the following problem is detected:

- Marks or scratches on pulley sheave
- Bent, twisted or otherwise damaged countershaft
- Defective splines and threads at the end of countershaft.

Driven Pulley Rollers

Check the rollers for flat spots, cracks or other visible damages. Replace if necessary.

Measure inner and outer diameter of rollers.

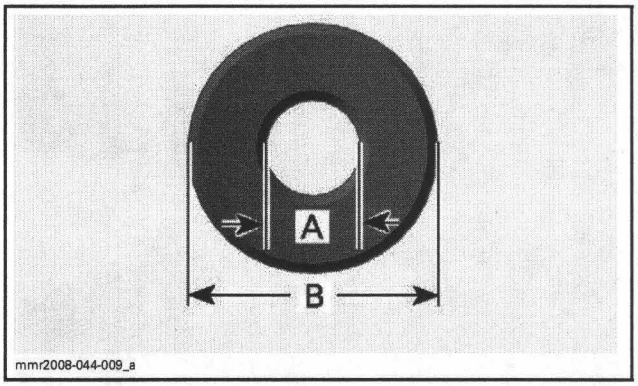

A. Inner diameter
B. Outer diameter

ROLLER DIAMETER	SERVICE LIMIT
Inner diameter	8.5 mm (.335 in)
Outer diameter	21.5 mm (.846 in)

Measure the roller thickness.

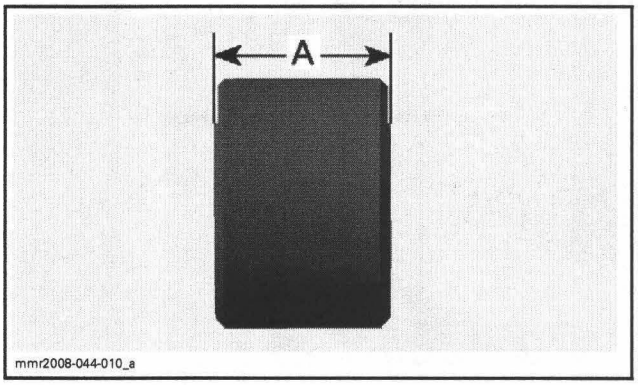

A. Thickness of roller

ROLLER THICKNESS	
SERVICE LIMIT	14.75 mm (.581 in)

If a roller is out of specifications, replace both rollers at the same time.

Driven Pulley Cleaning

Use the pulley flange cleaner (P/N 413 711 809) and a clean rag to clean pulley sheaves.

Cam and Spring

During break-in period, teflon from bushing moves to cam or countershaft surface. A teflon over teflon running condition occurs, leading to low friction. So it is normal to see gray teflon deposit on cam or countershaft. Do not remove this deposit.

When a dust deposit has to be removed from the cam or the countershaft, use dry cloth to avoid removing transferred teflon.

Driven Pulley Assembly

Driven Pulley Rollers

Using a screw tap, clean pivot screw threaded holes into fixed sheave.

Using **NEW** pivot screws, install rollers into fixed sheave.

CAUTION: Always use new pivot screws with pre-applied threadlocker.

Torque pivot screws to 14 N•m (124 lbf•**in**).

Using a rotor clip applicator (P/N A-150), install **NEW** E-clips to lock pivot screws.

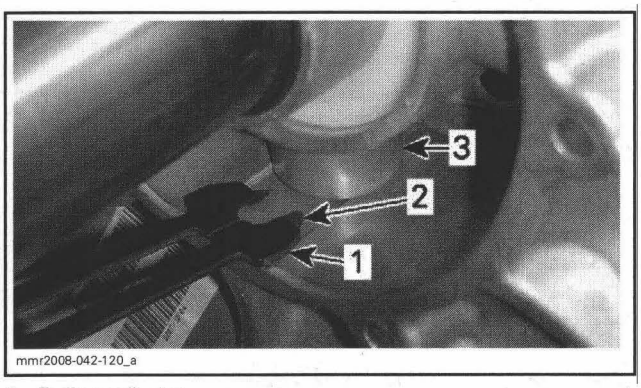

1. *E-clip applicator*
2. *E-clip*
3. *Roller*

Cam and Spring

Install a spring stopper, the spring, the other spring stopper and the cam.

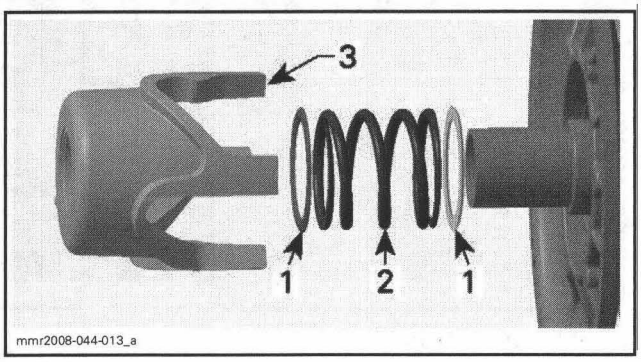

1. *Spring stopper*
2. *Spring*
3. *Cam*

Align the arrow on cam with the arrow on fixed sheave. At the end of cam installation, the arrow on the cam should be move clockwise (± 30°).

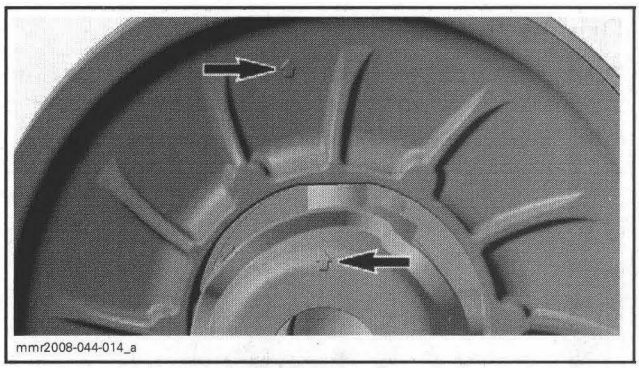

Install the driven spring compressor sleeve and tighten the driven spring compressor screw until cam is completely pressed against sliding sheave.

Behind sliding sheave, install 4 **NEW** cam screws.

Torque cam screws to 32 N•m (24 lbf•ft).

Remove the driven spring compressor.

Sliding Sheave

The assembly of sliding sheave is the reverse of the disassembly. However, pay attention to the following.

When installing sliding sheave, make sure to align its arrow with the arrow on cam.

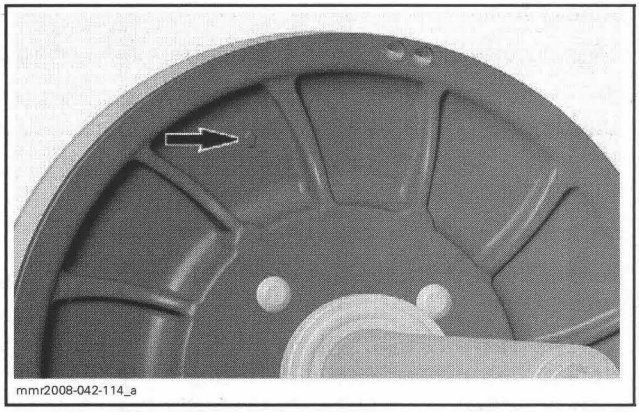

SLIDING SHEAVE ARROW

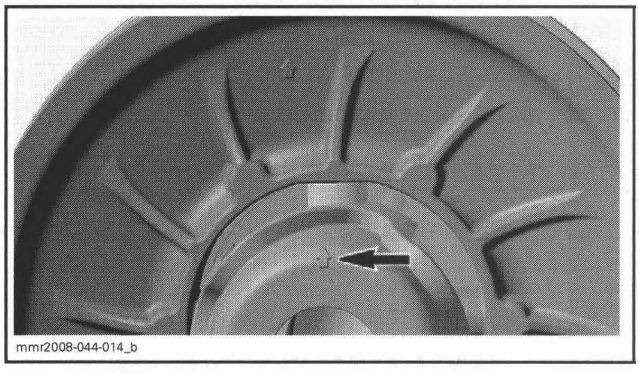

CAM ARROW

Driven Pulley Installation

Using sand paper (600-grit or 1000-grit) or steel wool, remove any rust on bearing shoulder of countershaft bearing support.

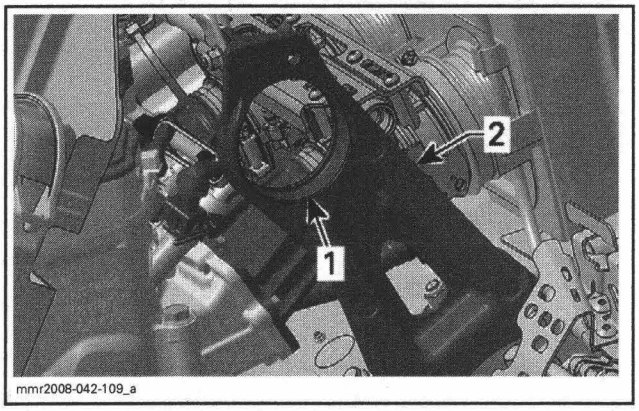

1. Bearing shoulder
2. Countershaft bearing support

Apply a thin layer of Loctite 767 (antiseize lubricant) (P/N 293 800 070) on bearing shoulder.

Insert countershaft through countershaft bearing support.

Fasten the end of countershaft to upper gear retaining tool.

Align countershaft splines with upper gear splines.

Using the upper gear retaining tool as a puller, install countershaft into upper gear. Ensure countershaft bearing is installed properly into countershaft bearing support.

Remove the upper gear retaining tool.

Install the upper gear screw and the conical spring washer.

NOTE: The conical spring washer must be installed with its concave side towards upper gear.

Tighten upper gear screw to 48 N•m (38 lbf•ft).

Install filling plug.

On LH side, install the bearing flange.

Tighten nut to 15 N•m (133 lbf•**in**).

Install all other removed parts.

COUNTERSHAFT

The countershaft and the fixed sheave are sold as an assembly. They are not available separately.

Countershaft Removal and Installation

Refer to *DRIVEN PULLEY* for the procedures.

COUNTERSHAFT BEARING

Countershaft Bearing Removal

Remove *DRIVEN PULLEY*, see procedure in this section.

Install the countershaft bearing remover (P/N 529 036 065) on countershaft.

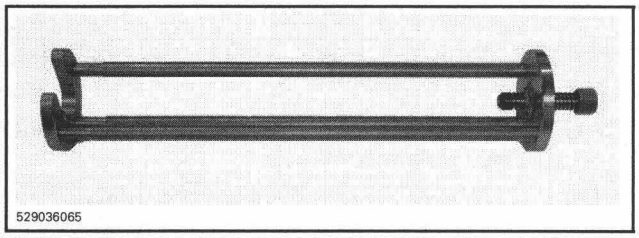

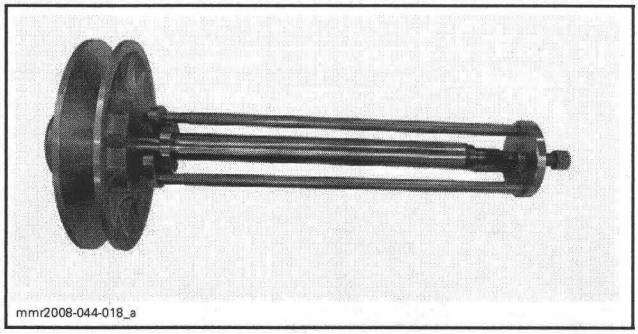

Tighten the screw at the end of tool to extract the bearing. Discard the bearing.

Countershaft Bearing Installation

Remove the adjustment ring on cam.

Insert the countershaft support (P/N 529 036 067) into countershaft.

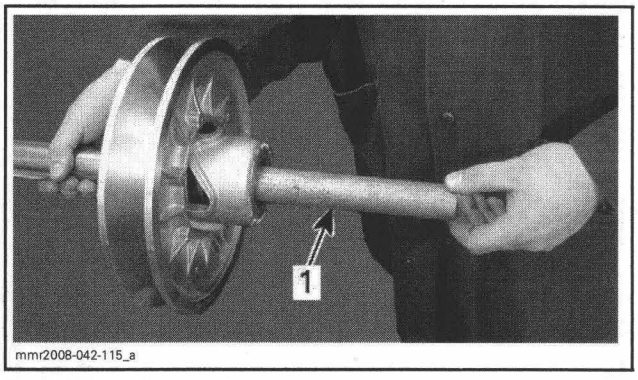

1. Countershaft support

CAUTION: The countershaft support is mandatory to avoid damaging the countershaft threaded end and the cam during bearing installation.

Using pulley flange cleaner (P/N 413 711 809), clean residues on countershaft bearing surface.

Check countershaft bearing surface for wear.

Apply Loctite 609 (P/N 413 703 100) on countershaft bearing surface.

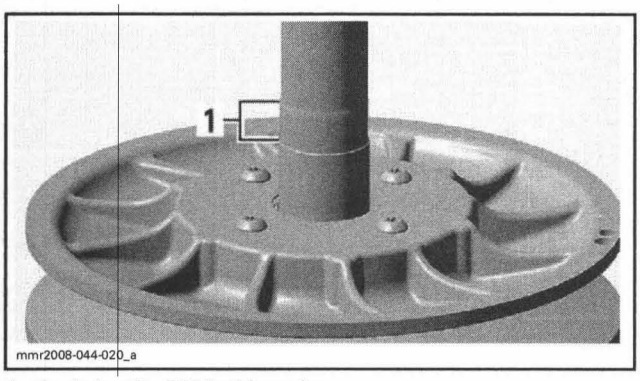

1. Apply Loctite 609 in this region

Using a press and the countershaft bearing installer (P/N 529 036 066), install the **NEW** bearing on countershaft.

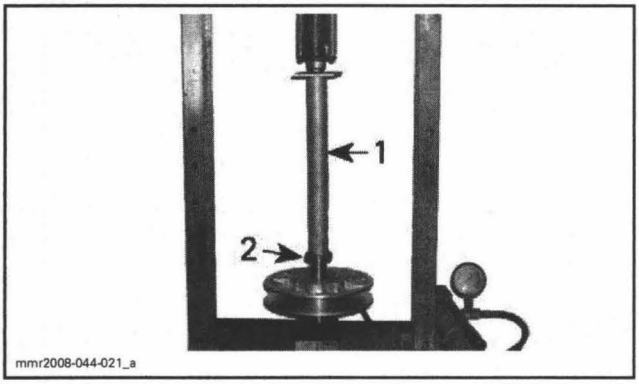

1. Countershaft bearing installer
2. NEW bearing

CAUTION: Use a press only, never tap on countershaft bearing installer with an hammer to avoid damaging bearing and countershaft.

Clean the surplus of Loctite with a rag to avoid having Loctite on sliding sheave bushing.

BRAKE

SERVICE PRODUCTS

Description	Part Number	Page
DOT 4 brake fluid GTLMA	293 600 062	388
Loctite 767 (antiseize lubricant)	293 800 070	391

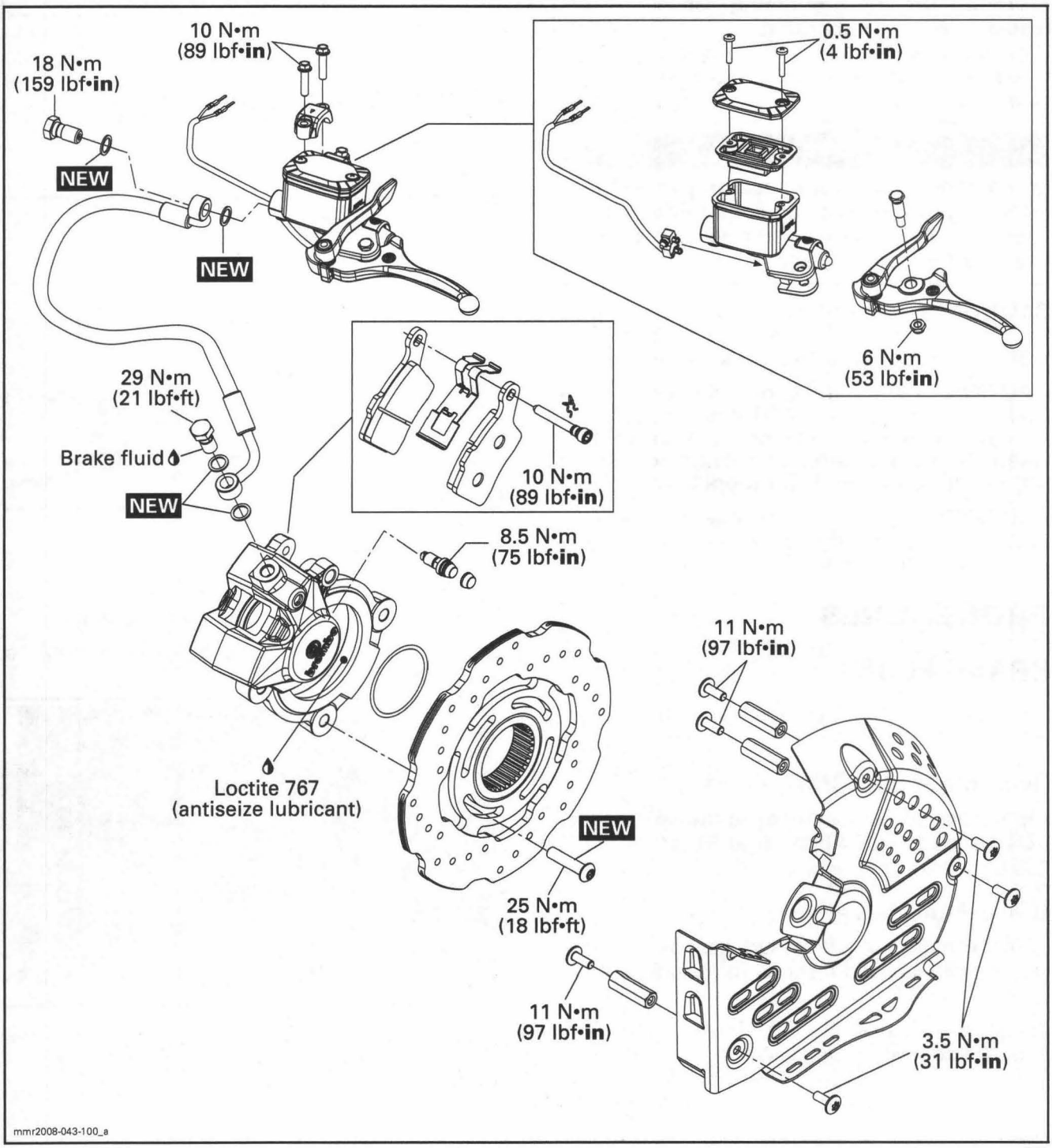

GENERAL

During assembly/installation, use torque values and service products as in the exploded view.

Clean threads before applying a threadlocker. Refer to *SELF-LOCKING FASTENERS* and *LOCTITE APPLICATION* at the beginning of this manual for complete procedure.

⚠ WARNING

Torque wrench tightening specifications must be strictly adhered to.
Locking devices (e.g.: locking tabs, elastic stop nuts, cotter pins, etc.) must be replaced with new ones.

⚠ WARNING

A contaminated brake disc or pad reduces stopping power. Discard contaminated pads and clean contaminated disc with a high quality brake degreasing agent.

CAUTION: Avoid spilling brake fluid on plastic, rubber or painted parts. Protect these parts with a rag when servicing brake system.

CAUTION: To avoid serious damage to the brake system, use only DOT 4 brake fluid from a sealed container. Do not use brake fluid taken from old or already opened containers, nor mix different fluids for topping off.

CAUTION: Sealing washers must be discarded and replaced with NEW ones every time a Banjo fitting is unscrewed.

PROCEDURES

BRAKE FLUID

The brake fluid must be changed in accordance with the maintenance chart.

Recommended Brake Fluid

Always use brake fluid meeting the specification DOT 4 such as DOT 4 brake fluid GTLMA (P/N 293 600 062) sold by BRP.

Brake Fluid Level

With the vehicle on a level surface, position steering in straight-ahead position to ensure reservoir is level.

Brake fluid must always be above the MIN line when brake lever is squeezed.

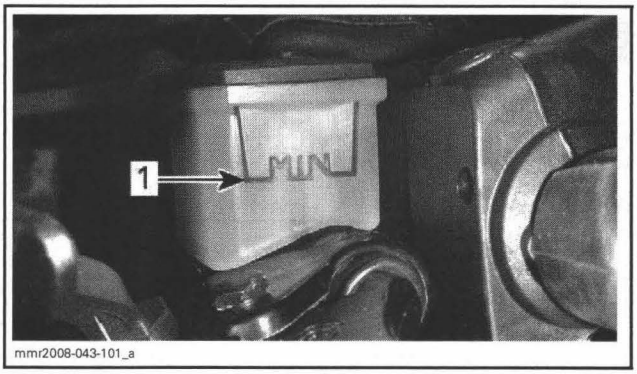

1. MINIMUM line

Brake Fluid Replacement

Draining

Remove reservoir cover with its diaphragm.

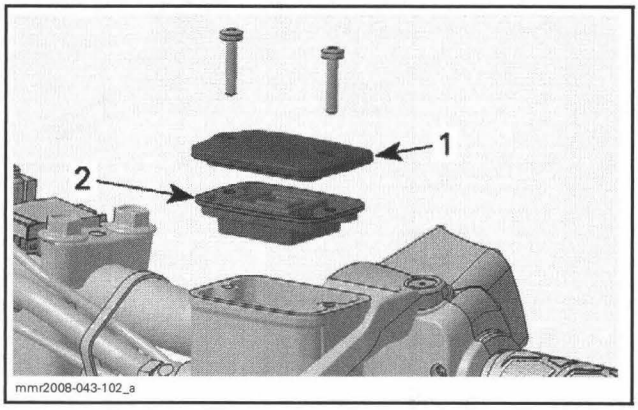

1. Reservoir cover
2. Diaphragm

Connect a clear hose to caliper bleeder.

Place the other end of hose in a container.

Loosen bleeder and pump brake lever until no more fluid flows out of bleeder.

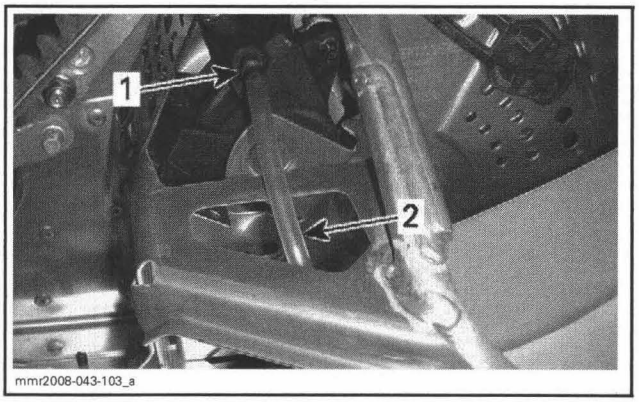

1. Bleeder
2. Clear hose to catch used brake fluid

Filling and Bleeding

To fill brake circuit when it is empty do the following:

- Ensure reservoir cover is removed.
- Using a big syringe, push brake fluid slowly into the caliper.

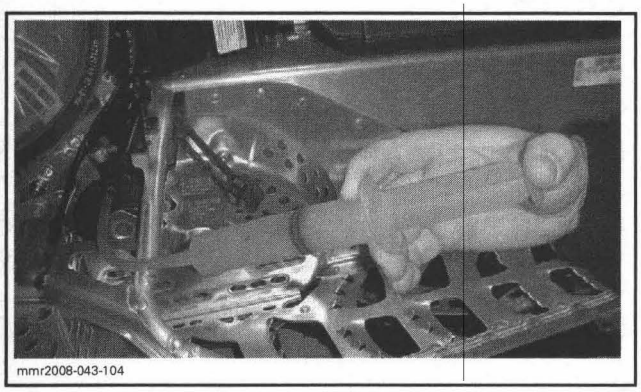
mmr2008-043-104

- Continue to push brake fluid until reservoir is half full.
- Close bleeder.
- Add brake fluid into reservoir.
- Squeeze brake lever. It should be firm.

If so, tighten bleeder to 8.5 N•m (75 lbf•**in**) and install cover on reservoir.

If not, bleed brake circuit as per the following procedure:

- Install a clear hose on bleeder.
- Pump up circuit pressure with brake lever until lever resistance is felt.
- Squeeze brake lever and open bleeder. When lever touches the handlebar, do not release lever and close bleeder.
- Release brake lever slowly.
- Repeat the procedure until no more air bubbles appear in hose and lever is firm.

NOTE: Check fluid level often to prevent air from being pumped into the circuit.

If the lever is still spongy, push back brake pads and squeeze brake lever before repeating the procedure.

- Repeat until brake lever is firm.
- Tighten bleeder to 8.5 N•m (75 lbf•**in**).
- Install diaphragm and cover on reservoir.

BRAKE PADS

Brake Pads Inspection

Measure brake pad lining thickness.

SERVICE LIMIT	
Brake pad thickness	1 mm (.04 in)

CAUTION: Brake pads must always be replaced in pairs.

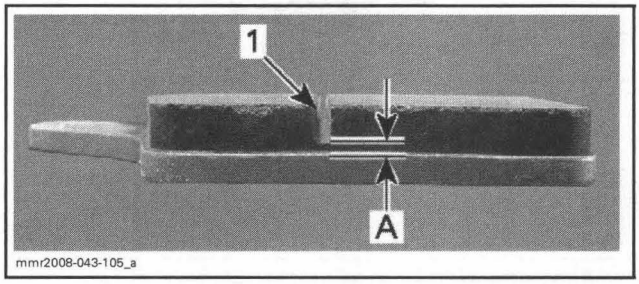

mmr2008-043-105_a

1. Groove on pad lining
A. Brake pad minimum thickness 1 mm (1/32 in)

Inspect brake disc at the same time.

Brake Pads Replacement

Remove the disc brake protective cover.

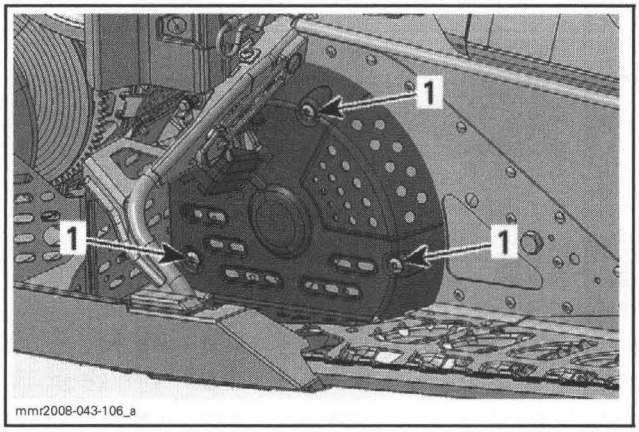

mmr2008-043-106_a

1. Screws

Remove the clip securing pad pin.

Unscrew and remove the pad pin.

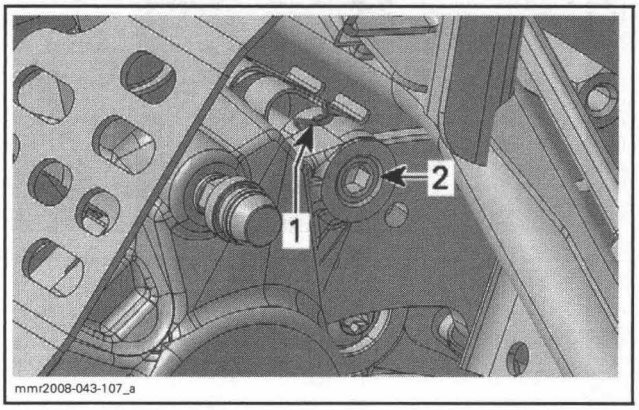

mmr2008-043-107_a

1. Clip
2. Brake pad pin

Remove reservoir cover with its diaphragm.

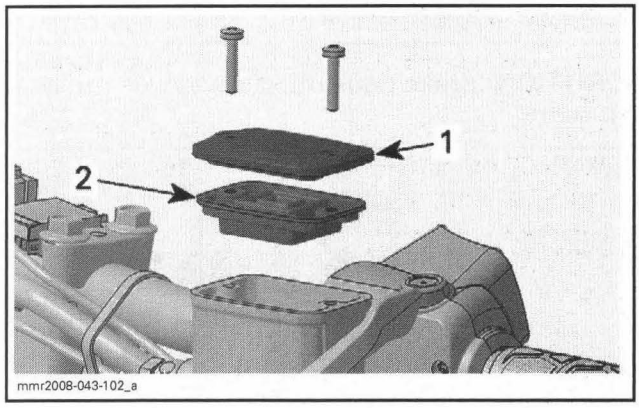

1. Reservoir cover
2. Diaphragm

Using a flat screwdriver, depress pistons into their bores.

CAUTION: Pay attention to avoid scratching brake disc.

Remove brake pads.

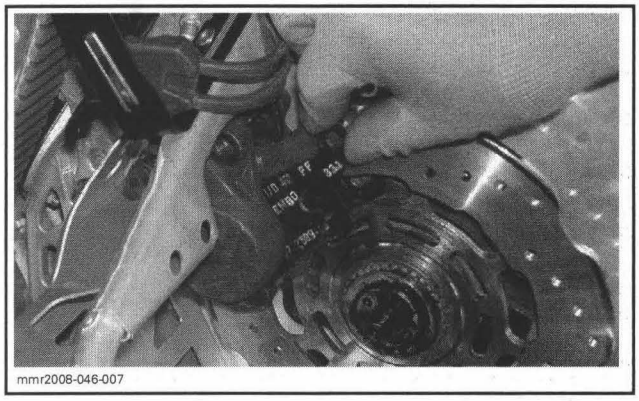

Install **NEW** brake pads with tabs upward.

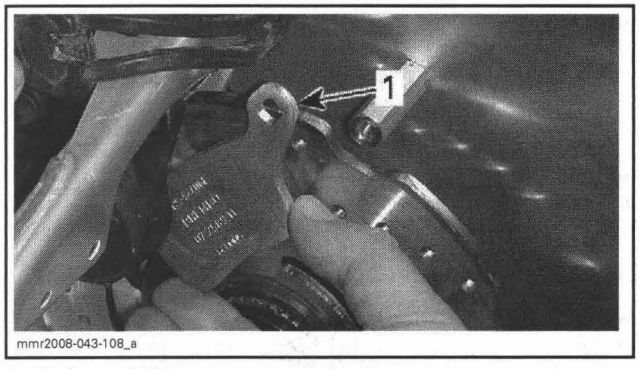

1. Brake pad tab

Install brake pad pin.

Tighten pin to 10 N•m (89 lbf•**in**).

Install clip on brake pad pin. If the clip seems loose, replace it with a new one.

Install the reservoir cover.

Depress brake lever to seat brake pads against disc brake.

Install the disc brake protective cover.

Ride the vehicle a few minutes to make sure the repair is successful.

CALIPER

Caliper Removal

Open RH side panel.

Remove drive belt guard support. Refer to *DRIVE BELT* section.

NOTE: If the caliper is not replaced, omit the next steps concerning the brake system draining and brake hose removal.

Drain the brake system, refer to *BRAKE FLUID REPLACEMENT* in this section.

Remove the Banjo fitting and discard the sealing washers.

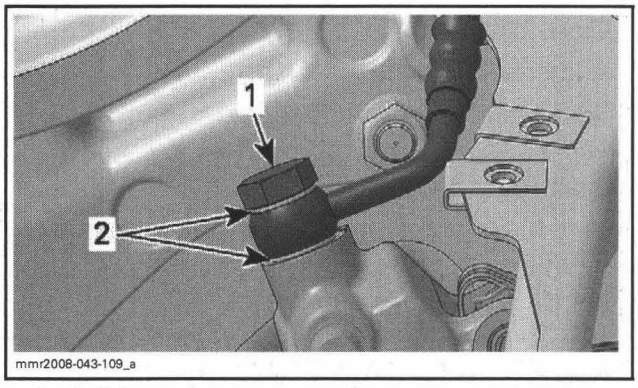

1. Banjo fitting
2. Sealing washers

Remove the brake disc protective cover.

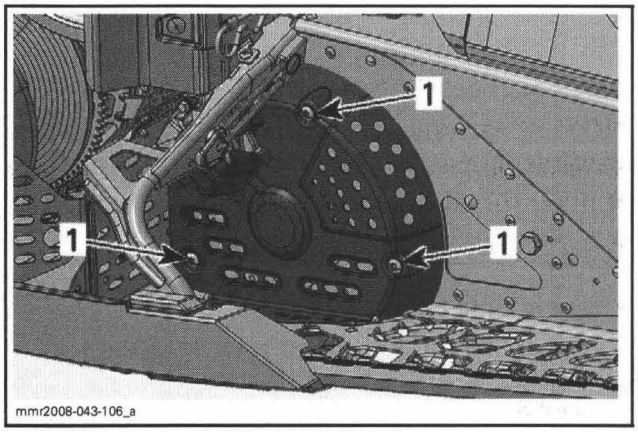

1. Screws

Lift the rear of vehicle and release track tension completely.

Turn driven pulley to align brake disc slots with caliper bracket screws.

Remove caliper screws (4) behind disc brake.

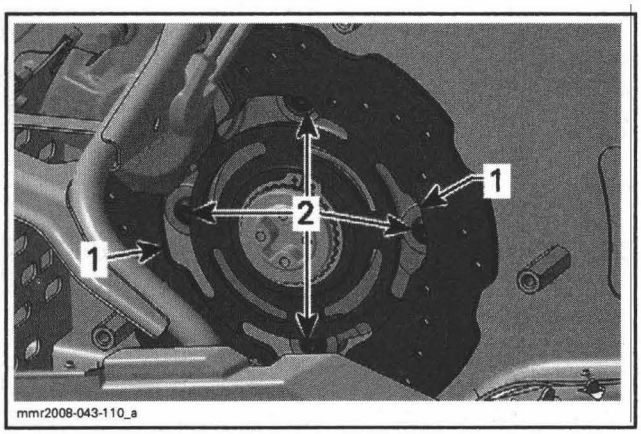

1. *Brake disc slots*
2. *Caliper screws behind disc brake*

Remove *BRAKE PADS*, see procedure in this section.

Remove the circlip securing disc brake to drive shaft.

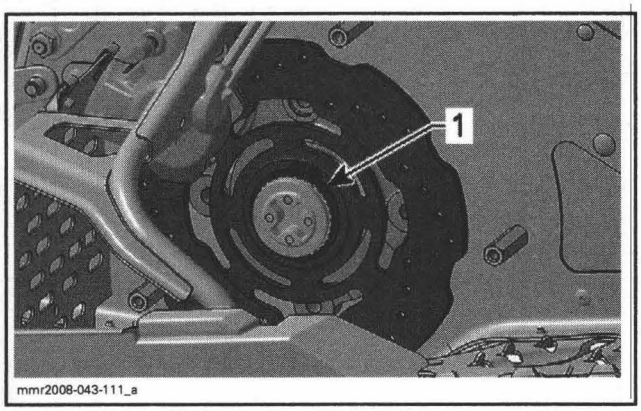

1. *Brake disc circlip*

Pull brake disc and caliper.

When brake disc is out of splines, remove it.

Remove caliper.

CAUTION: Do not let caliper hangs by the hose and do not stretch or twist the hose.

Caliper Inspection

Check pistons for:
- Rust
- Scratches
- Leaks.

Check caliper bracket for:
- Cracks
- Rust on bearing shoulder (clean with a steel wood).

Replace caliper if required.

Caliper Installation

Using a small piece of wood, push both pistons into their bores.

Apply Loctite 767 (antiseize lubricant) (P/N 293 800 070) on drive shaft splines and on caliper bracket bearing shoulder.

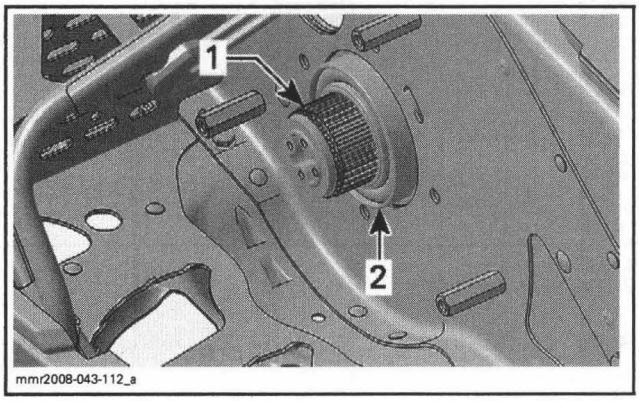

1. *Drive shaft splines*
2. *Drive shaft bearing*

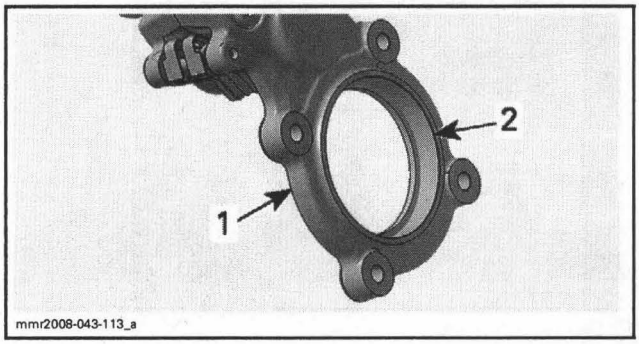

1. *Caliper bracket*
2. *Bearing shoulder*

Insert brake disc into caliper. The brake disc collar must pointed toward the frame.

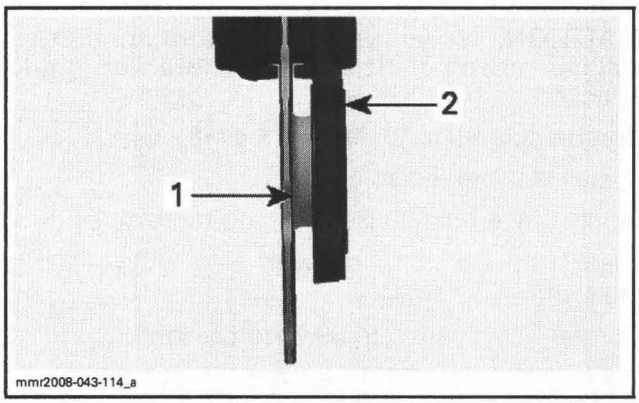

1. *Brake disc collar*
2. *Caliper bracket*

Align brake disc splines with drive shaft splines and push the disc on the shaft.

Push the caliper bracket over drive shaft bearing.

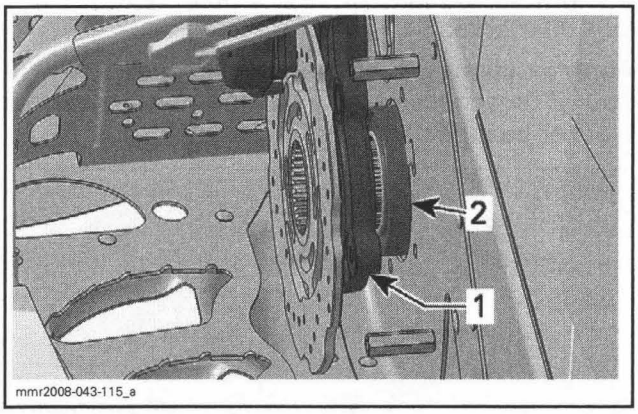

1. Caliper bracket
2. Drive shaft bearing

Align caliper bracket holes with bearing flange holes and install caliper screws.

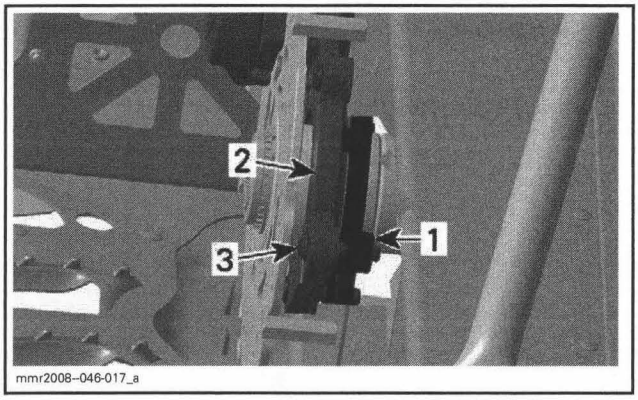

1. Bearing flange (inside frame)
2. Caliper bracket
3. Caliper screws

HAND TORQUE each caliper bracket screws in a criss-cross sequence until bracket is correctly positioned against frame.

CAUTION: Never use an air tool to tighten caliper screws. The caliper bracket could cracked.

Torque screws to 25 N•m (18 lbf•ft).

Install the brake disc circlip.

Apply brake fluid on Banjo fitting threads.

Install the Banjo fitting with two **NEW** sealing washers.

Torque Banjo fitting to 29 N•m (21 lbf•ft).

Fill and bleed the brake system. Refer to *BRAKE FLUID REPLACEMENT* in this section.

BRAKE DISC

Brake Disc Inspection

Prior Brake Disc Removal

Remove the disc brake protective cover.

Check for scoring, cracking or bending, replace as required.

Measure brake disc thickness. If the brake disc is out of specification, replace it with a new one.

CAUTION: Brake disc should never be machined.

BRAKE DISC THICKNESS	
Minimum thickness	4.5 mm (.177 in)

After Brake Disc Removal

Check brake disc splines and drive shaft splines for wear or other damages. Replace defective parts.

Brake Disc Removal and Installation

Use the same procedure as for the caliper.

MASTER CYLINDER

Master Cylinder Removal

NOTE: If the master cylinder is not replaced, omit the next steps concerning the brake system draining and brake hose removal.

Drain the brake system, refer to *BRAKE FLUID REPLACEMENT* at the beginning of this section.

Remove the Banjo fitting and discard the sealing washers.

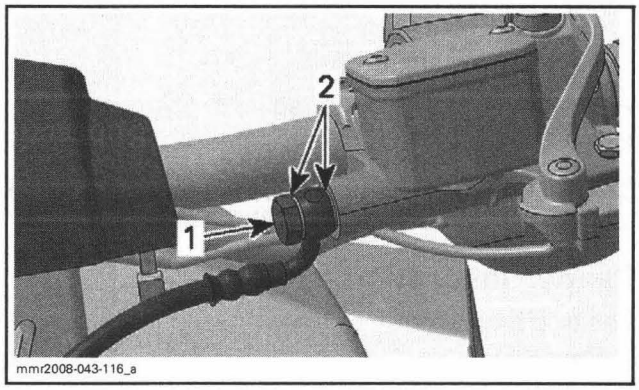

1. Banjo fitting
2. Sealing washers

Remove steering pad.

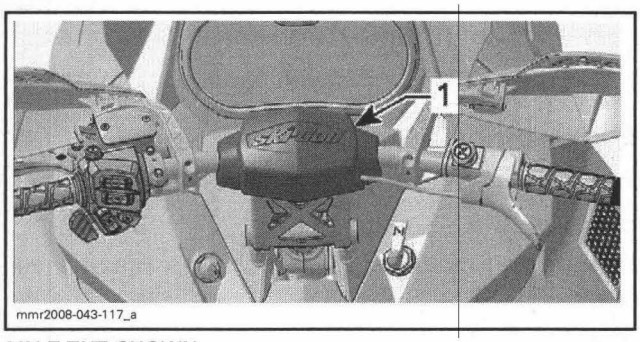

MX Z TNT SHOWN
1. Steering pad

Unplug the LH connector.

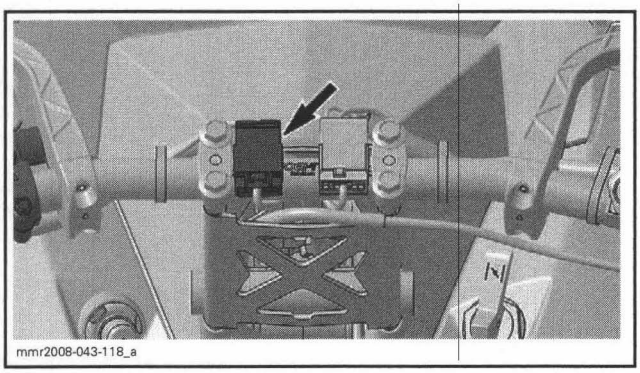

Cut locking tie securing brake light switch wiring to handlebar.

Remove screws and clamp securing master cylinder to handlebar.

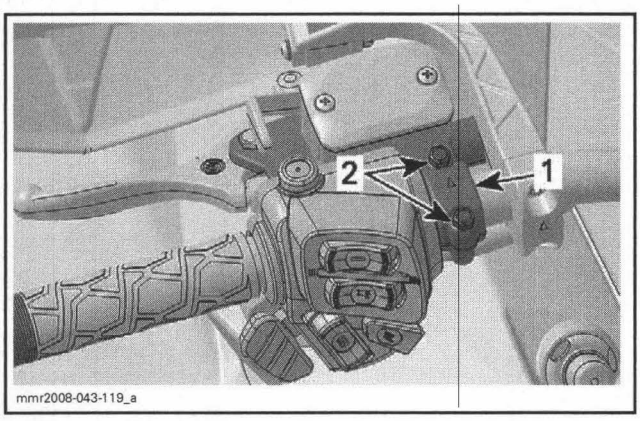

1. Master cylinder clamp
2. Master cylinder clamp screws

Remove master cylinder.

CAUTION: Do not let master cylinder hangs by the hose and do not stretch or twist the hose.

Master Cylinder Inspection

Discard all remaining fluid inside master cylinder reservoir.

Check if the seal of the reservoir cap is brittle, hard or damaged. Replace if necessary.

If the reservoir is damaged or leaking, replace master cylinder.

Check if brake lever is bent, cracked or otherwise damaged. Replace brake lever if required.

Master Cylinder Installation

Place the master cylinder on the handlebar.

Install master cylinder clamp with its arrow pointing toward the front of vehicle.

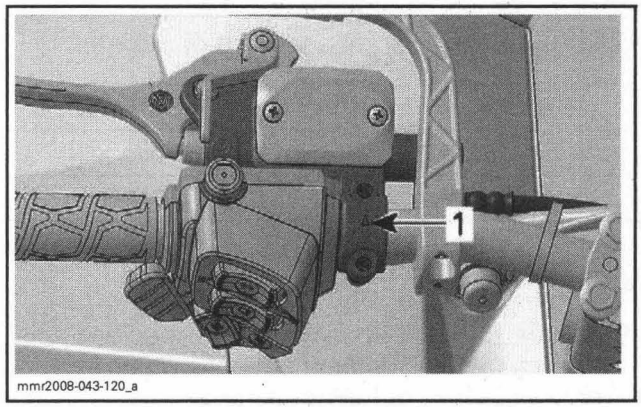

1. Arrow on clamp

Install master cylinder clamp screws and tighten loosely.

With the handlebar is straight ahead position, place the reservoir parallel to the ground.

Tighten brake lever clamp screws to 10 N•m (89 lbf•**in**).

Install the Banjo fitting with two **NEW** sealing washers.

Torque Banjo fitting to 18 N•m (159 lbf•**in**).

Fill and bleed the brake system. Refer to *BRAKE FLUID REPLACEMENT* at the beginning of this section.

Connect brake light switch connector.

Install steering cover.

BRAKE LIGHT SWITCH

Brake Light Switch Resistance Test

Remove steering cover and unplug the LH connector.

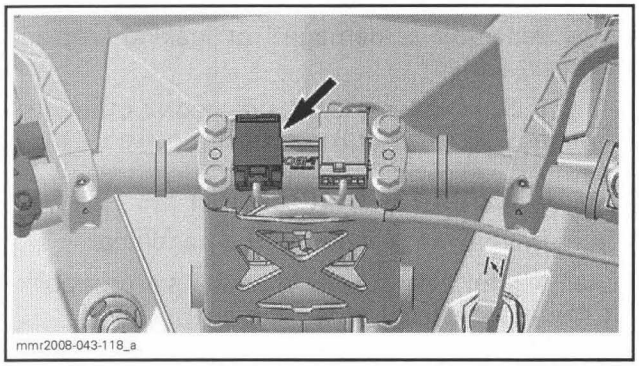
mmr2008-043-118_a

Validate switch operation with an ohmmeter.

SWITCH	WIRE	RESISTANCE
Released	Pin 3 and pin 4	Infinite (0L)
Pushed and held		0.2 Ω

If readings do not correspond to the above specifications, replace switch.

If readings correspond to the above specifications, check fuse and wiring/connectors going to switch. Repair or replace defective part(s).

Brake Light Switch Removal

Slip a small screwdriver between brake light switch and brake lever and separate them.

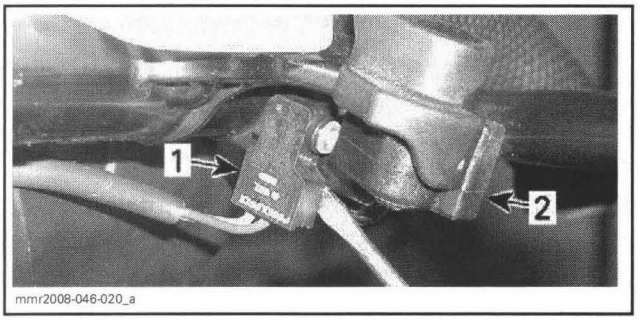

mmr2008-046-020_a

1. Brake light switch
2. Brake lever

Remove the steering cover and unplug the LH connector.

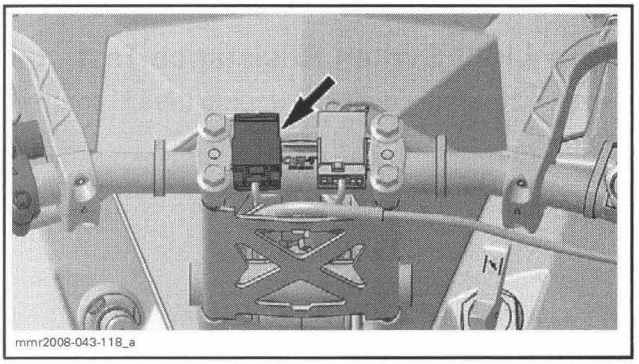
mmr2008-043-118_a

Cut all locking ties securing switch wires.

Remove switch wires from connector.

NOTE: Check wires location for reinstallation.

Brake Light Switch Installation

Plug switch wires into connector.

Squeeze brake lever.

Insert the both tabs of switch into brake lever body.

Plug the connector.

Check if switch is working properly.

Install new locking ties and the steering cover.

CHAINCASE

SERVICE TOOLS

Description	Part Number	Page
Chaincase bearing extractor/installer	529 036 111	402
Chaincase bearing extractor/installer	529 036 112	402

SERVICE TOOLS – OTHER SUPPLIER

Description	Part Number	Page
Snap-on seal puller	YA105	402

SERVICE PRODUCTS

Description	Part Number	Page
XP-S synthetic chaincase oil	413 803 300	397

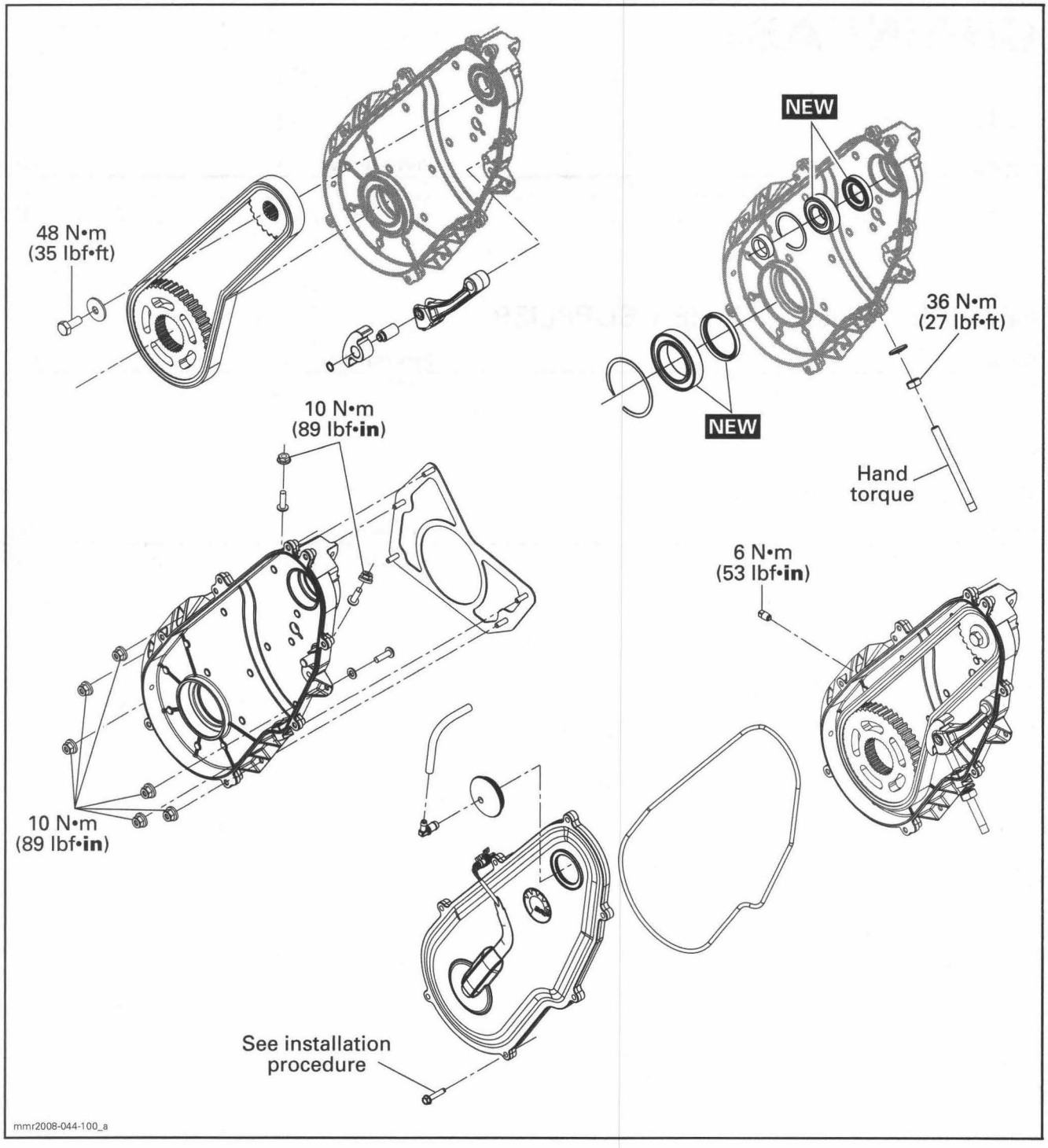
48 N•m
(35 lbf•ft)
NEW
36 N•m
(27 lbf•ft)
NEW
Hand
torque
10 N•m
(89 lbf•in)
6 N•m
(53 lbf•in)
10 N•m
(89 lbf•in)
See installation
procedure
mmr2008-044-100_a

GENERAL

During assembly/installation, use the torque values and service products as in the exploded view.

Clean threads before applying a threadlocker. Refer to *SELF-LOCKING FASTENERS* and *LOCTITE APPLICATION* at the beginning of this manual for complete procedure.

⚠ WARNING

Torque wrench tightening specifications must be strictly adhered to.
Locking devices (e.g.: locking tabs, elastic stop nuts, cotter pin, etc.) must be replaced with new ones.

MAINTENANCE

CHAINCASE OIL

Recommended Oil

Use XP-S synthetic chaincase oil (P/N 413 803 300).

CAUTION: Use only the recommended type oil when servicing. Do not mix synthetic oil with other types of oil.

Oil Level Verification

Place the vehicle on a level surface.

Remove the magnetic check plug on the left side of chaincase. Oil level must be equal with the lower edge.

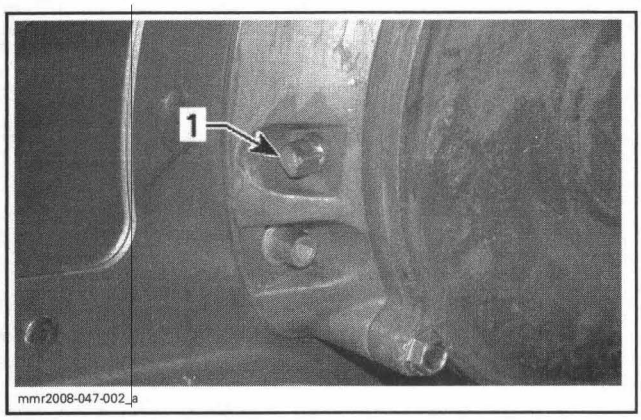

1. Magnetic check plug

Remove metal particles from magnetic check plug.

NOTE: It is normal to find metallic particles stuck to magnetic check plug. If bigger pieces of metal are found, remove the chaincase cover and inspect the chaincase parts.

To add oil, remove the filler cap on chaincase cover.

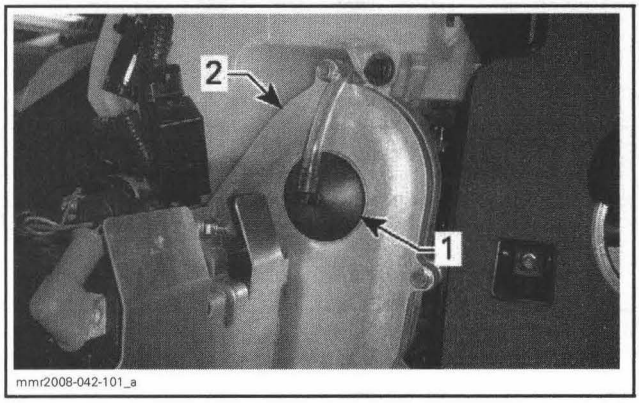

1. Filling plug
2. Chaincase cover

Pour recommended oil in chaincase by the filler hole until oil comes out by the magnetic check plug hole.

Reinstall magnetic check plug and torque it to 6 N•m (53 lbf•**in**).

Draining Procedure

Place a drain pan under chaincase drain plug area.

Loosen chaincase cover screws and pull cover.

Wait a while to allow oil to flow out of chaincase.

Filling Procedure

Place the vehicle on a level surface.

Make sure cover is tightened correctly. Refer to *CHAINCASE COVER INSTALLATION*.

Pour approximately 250 mL (8.5 oz. US) of recommended oil in chaincase by the filler hole until oil comes out by the magnetic check plug hole.

Reinstall magnetic check plug and torque it to 6 N•m (53 lbf•**in**).

DRIVE CHAIN ADJUSTMENT

Remove the muffler. Refer to *EXHAUST SYSTEM*.

Unscrew the lock nut on tensioner adjustment screw.

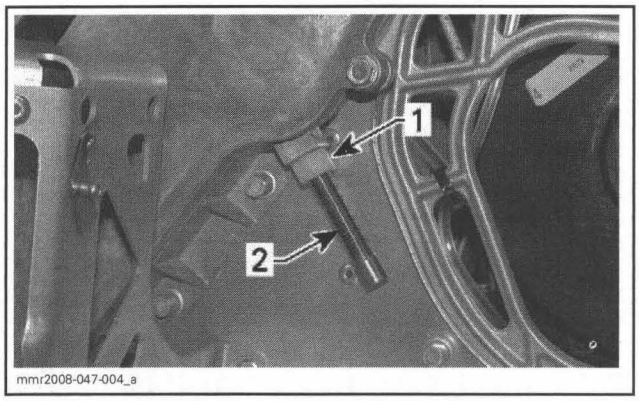

1. Lock nut
2. Tensioner adjustment screw

Push back washer with rubber surface.

Tighten tensioner adjustment screw **BY HAND**.

NOTE: Turn adjustment screw until resistance is strong enough that it can not be turned by hand.

Hold tensioner adjustment screw and tighten lock nut to 36 N•m (27 lbf•ft).

PROCEDURES

CHAINCASE COVER

Chaincase Cover Removal

Remove the muffler. Refer to *EXHAUST SYSTEM* section.

Remove battery and battery rack. Refer to *CHARGING SYSTEM* section.

Remove filling plug.

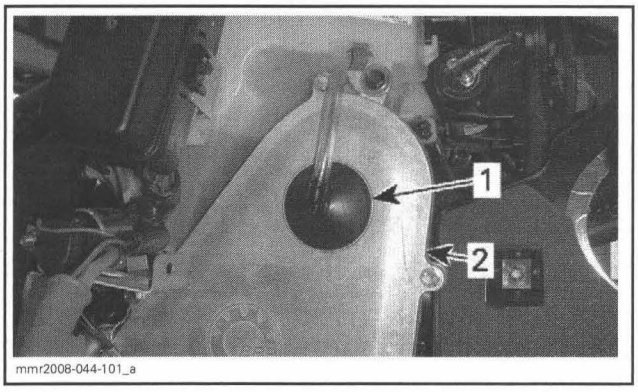

1. Filling plug
2. Chaincase cover

Disconnect the speed sensor connector.

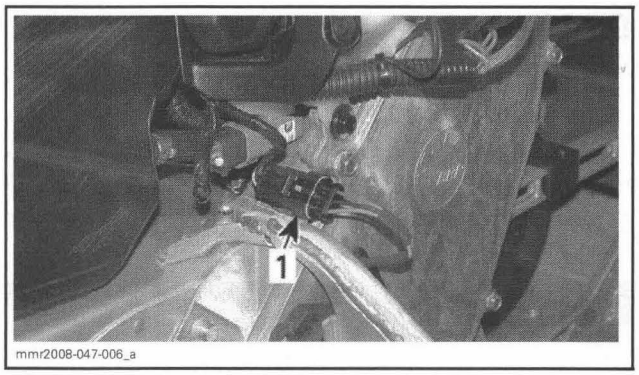

1. Speed sensor connector

Unscrew and remove chaincase cover screws.

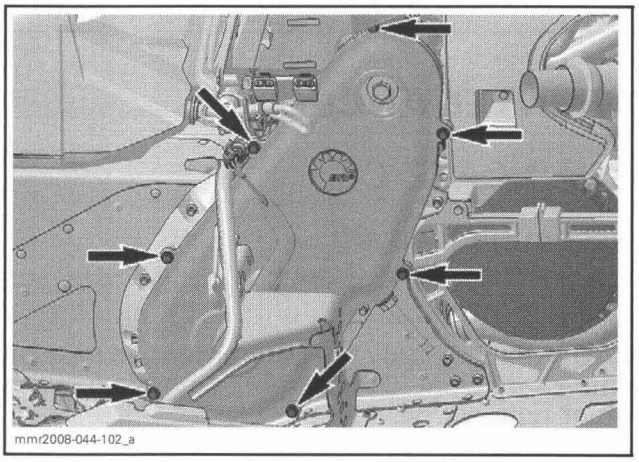

SCREWS LOCATION

Pull cover to remove it.

Chaincase Cover Inspection

Check the cover for cracks or other damages. Replace it if necessary.

Check if O-ring inside cover is brittle, hard or damaged. Replace it if necessary.

Chaincase Cover Installation

The installation is the reverse of the removal procedure. However, pay attention to the following:

Ensure O-ring is positioned correctly in its groove.

Tighten chaincase cover screws in accordance with the following sequence.

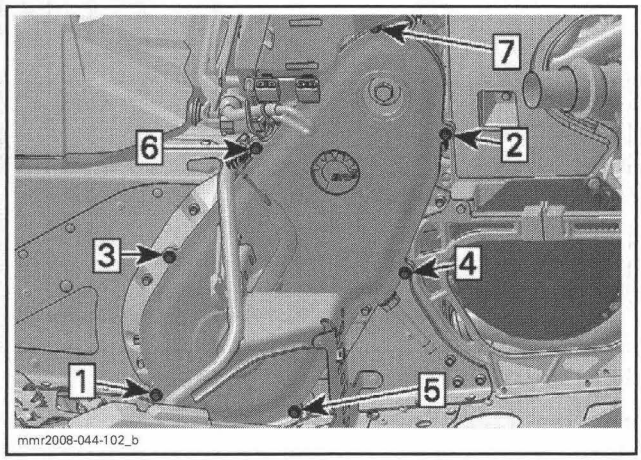

mmr2008-044-102_b

CHAINCASE COVER SCREWS TORQUE	
Same chaincase	10 N•m (89 lbf•**in**)
NEW chaincase	15 N•m (133 lbf•**in**)

CHAINCASE

Chaincase Removal

Apply parking brake.

Remove muffler. Refer to *EXHAUST SYSTEM* section.

Remove *CHAINCASE COVER*, see procedure in this section.

Remove the upper sprocket screw and its conical spring washer.

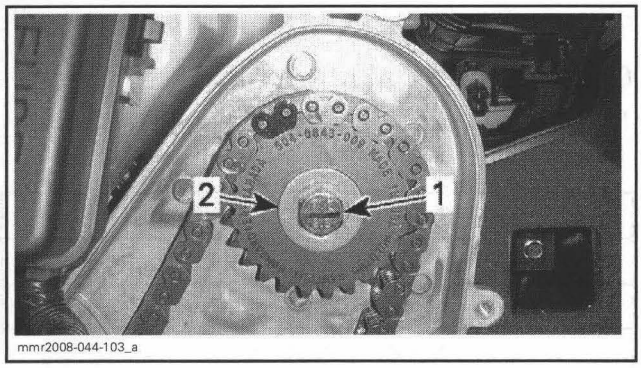

mmr2008-044-103_a

1. *Upper socket*
2. *Conical spring washer*

Release tension from drive chain by unscrewing the tensioner adjustment screw.

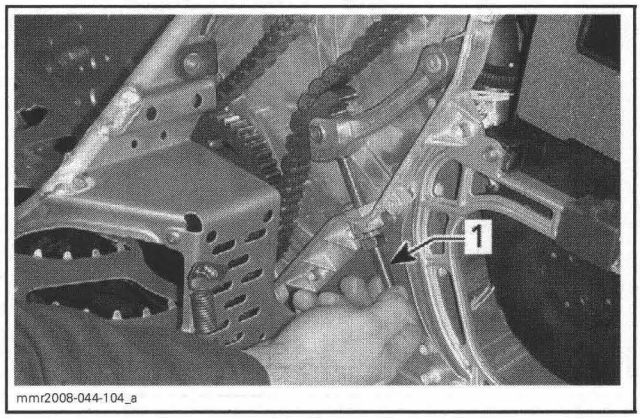

mmr2008-044-104_a

1. *Tensioner adjustment screw*

Remove tensioner arm.

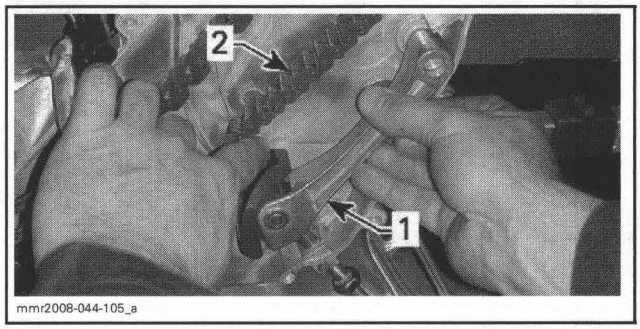

mmr2008-044-105_a

1. *Tensioner arm*
2. *Drive chain*

Remove the lower sprocket circlip.

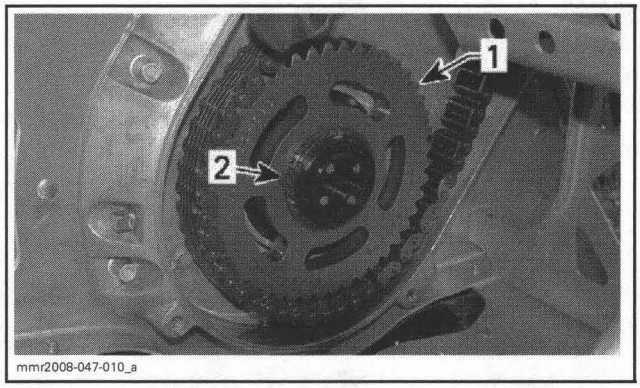

mmr2008-047-010_a

1. *Lower sprocket*
2. *Circlip*

Remove the upper sprocket, lower sprocket and drive chain simultaneously.

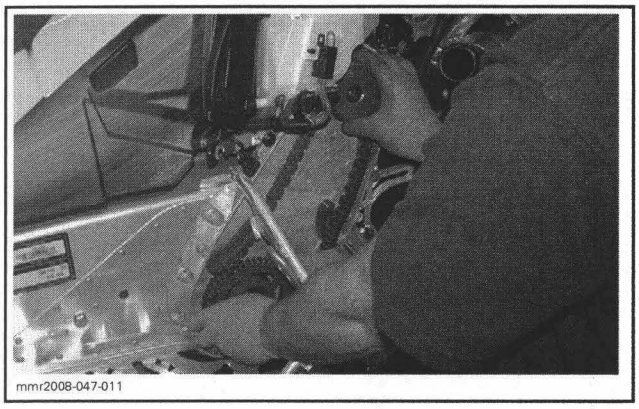
mmr2008-047-011

Remove the countershaft spacer.

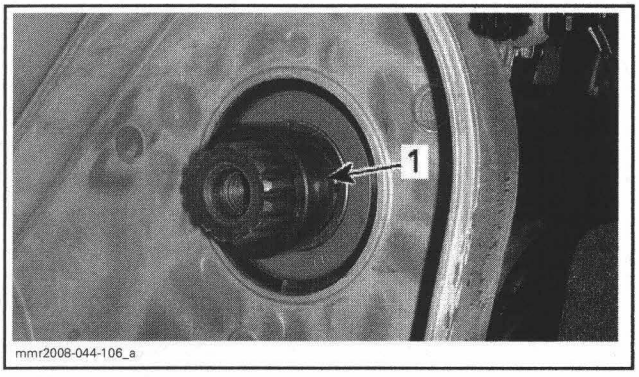

mmr2008-044-106_a

1. Countershaft spacer

Remove drive axle. Refer to *DRIVE AXLE* section.

Remove countershaft. Refer to *DRIVEN PULLEY AND COUNTERSHAFT* section.

Remove bolts securing the injection oil reservoir. Refer to *LUBRICATION SYSTEM* section.

Using a small angle grinder, remove the following rivet heads.

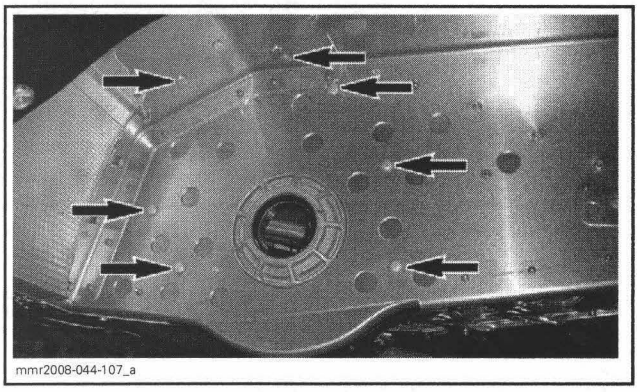
mmr2008-044-107_a

Using a 1/4 in dill bit, remove rivet located on right side of chaincase.

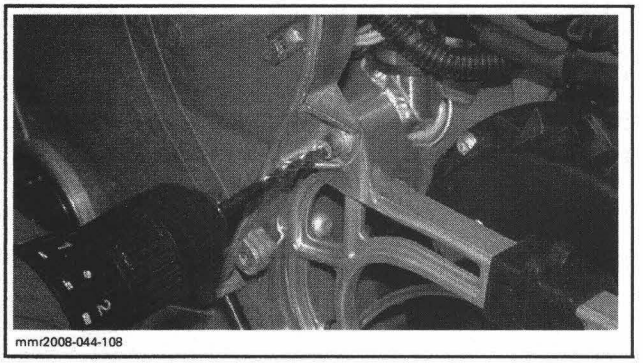
mmr2008-044-108

Unscrew bolt behind the top of chaincase.

Remove chaincase from vehicle.

Using 2 large prybars inserted between chaincase and frame, pry chaincase out of vehicle.

Chaincase Inspection

Visually inspect the chain and spockets for:
- Wear
- Cracks
- Damages teeth
- Missing links.

If a problem is detected, replace drive chain and sprockets as an assembly.

Check the drive chain deflection.

If the deflection is greater than 38 mm (1-1/2 in) without the chain tensioner, replace the chain.

Check for worn or defective bearings.

Check chain tensioner slider for wear or other damages.

Chaincase Installation

To install the chaincase, have the following parts in hands:

PARTS TO INSTALL CHAINCASE		
QTY	FASTENERS	P/N
1	Mounting plate	518 325 816
2	M6 x 20 hexagonal flanged bolt	207 662 034
7	M6 elastic flanged nut	233 261 434

Install the mounting plate.

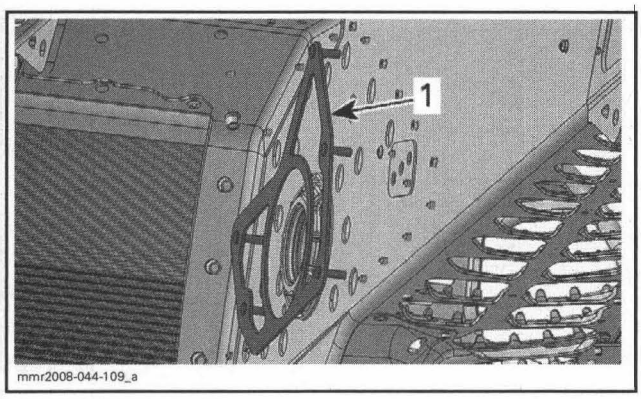

UNDERNEATH FRAME
1. Mounting plate

Install the chaincase.

Install 5 elastic flanged nuts to secure chaincase.

NOTE: Unless otherwise noted, bolts and nuts holding the chaincase must be installed loosely FIRST.

Install 2 flanged bolts and secure with elastic flanged nuts.

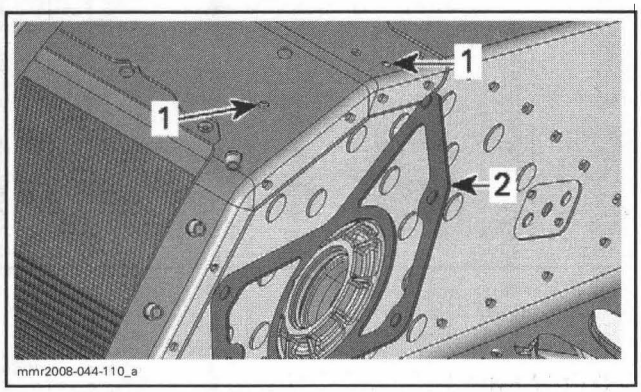

1. Install bolt here
2. Mounting plate

Install a flange bolt to securing chaincase to RH side member.

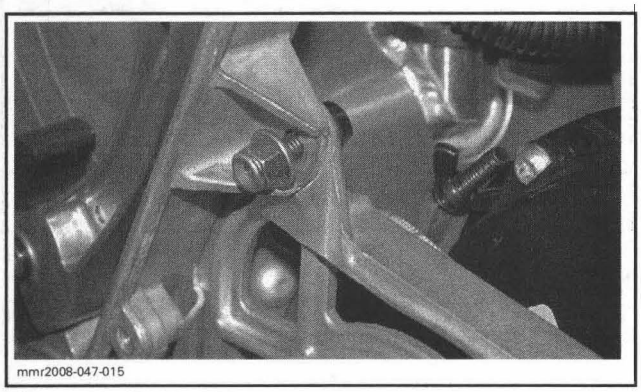

NUT LOCATED OUTSIDE

Install bolt behind the top of chaincase.

Using the following sequence, tighten all nuts to 10 N•m (89 lbf•**in**).

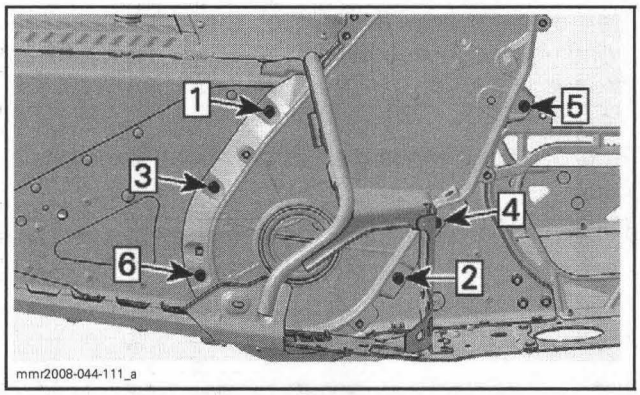

VIEW FROM THE SIDE

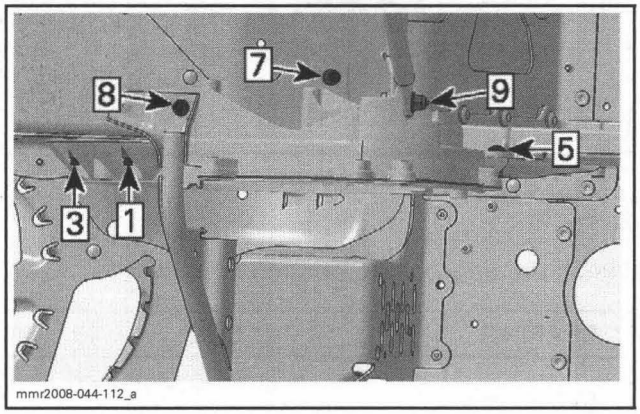

VIEW FROM THE TOP

Install all other removed parts.

Make sure to install sprockets with their inscriptions outward.

Install the conical spring washer on the upper socket with its concave side toward sprocket.

Torque upper sprocket screw to 48 N•m (35 lbf•ft).

Install the *CHAINCASE COVER*, see procedure in this section.

Refill the chaincase, refer to *CHAINCASE OIL* above in this section.

Adjust drive chain. Refer to *DRIVE CHAIN ADJUSTMENT* in this section.

CHAINCASE BEARING

NOTE: This procedure can be applied either for the countershaft bearing or the drive shaft bearing.

Chaincase Bearing Removal

Remove chaincase cover.

Remove both sprockets and drive chain. Refer to *CHAINCASE REMOVAL*.

Remove the countershaft or the drive axle, depending which bearing is replaced. Refer to appropriate section, *DRIVEN PULLEY AND COUNTERSHAFT* or *DRIVE AXLE*.

Remove the snap ring securing bearing into chaincase.

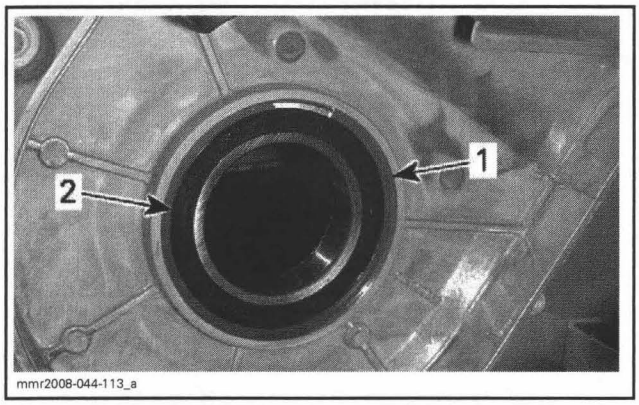

DRIVE AXLE BEARING SHOWN
1. *Snap ring*
2. *Bearing*

Install the appropriate bearing extractor:

BEARING	TOOL
Countershaft	Chaincase bearing extractor/installer (P/N 529 036 111)
Drive axle	Chaincase bearing extractor/installer (P/N 529 036 112)

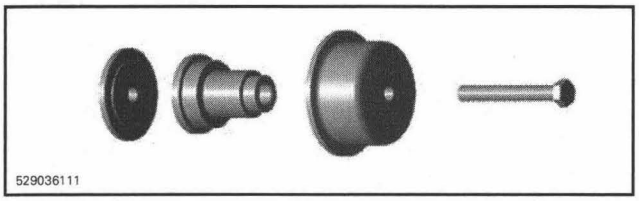

COUNTERSHAFT

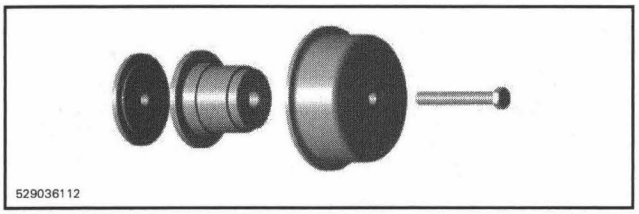

DRIVE AXLE

Install the extractor/installer tool behind the bearing.

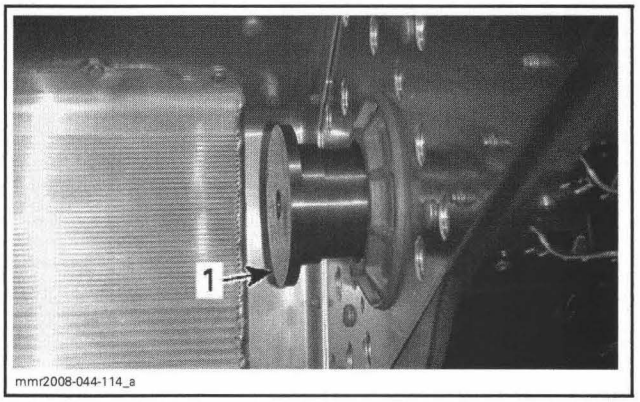

1. *Extractor/installer tool*

Install the extractor cup over bearing.

Tighten the extractor/installer tool screw to remove the bearing.

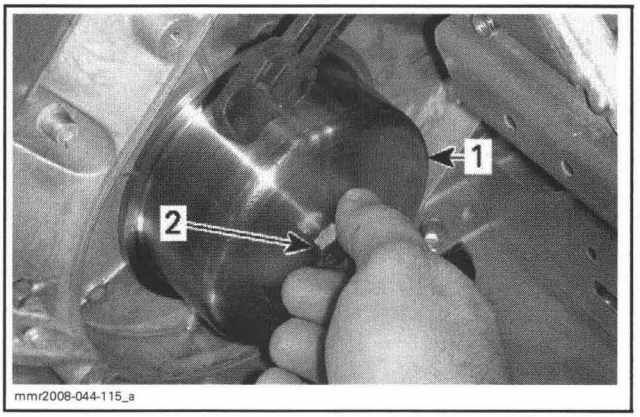

1. *Extractor cup*
2. *Tighten to remove bearing*

Using a seal puller such as the Snap-on seal puller (P/N YA105), remove and discard the oil seal.

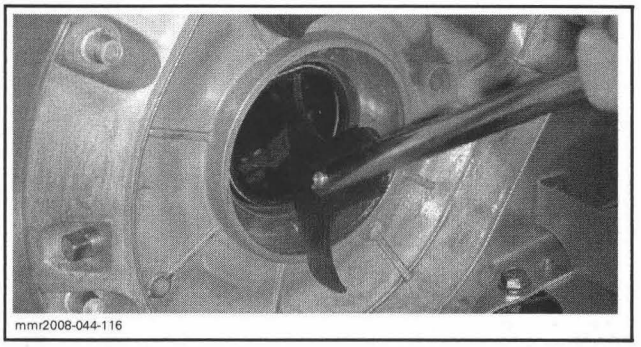

Chaincase Bearing Installation

Install the **NEW** oil seal on the extractor/installer tool. Position the lips toward bearing.

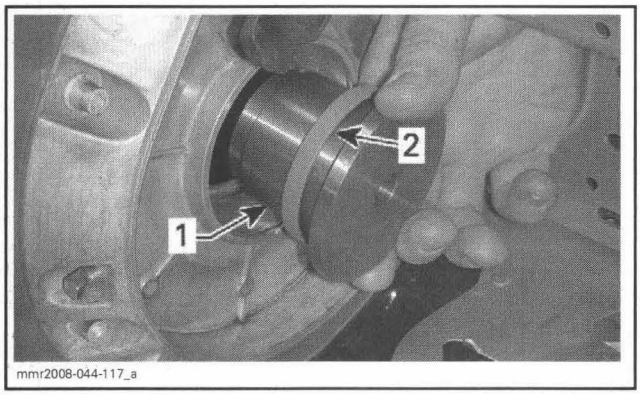

1. *Extractor/installer tool*
2. *Oil seal lips on this side*

Install the extractor cup inside frame.

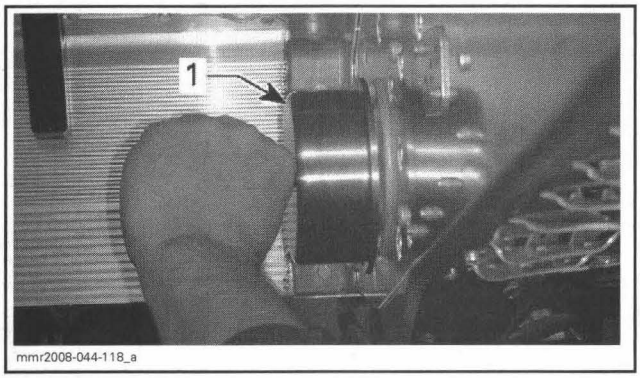

1. *Extractor cup*

Tighten the extractor/installer tool screw to install the oil seal.

Install the large washer and the extractor/installer tool screw inside frame.

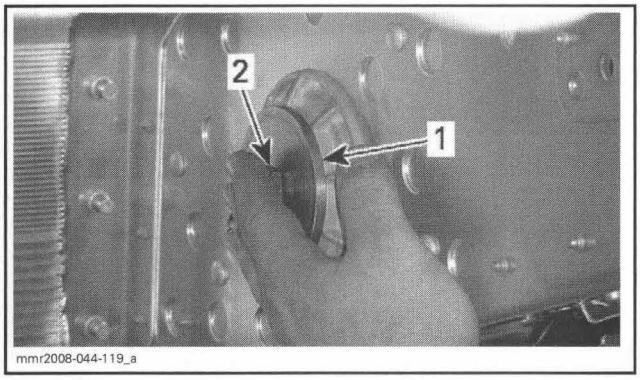

1. *Large washer*
2. *Extractor/installer tool screw*

In chaincase, install **NEW** bearing and the extractor/installer tool.

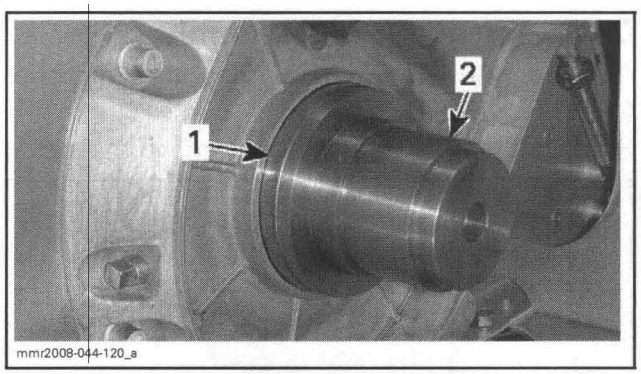

1. *Bearing*
2. *Extractor/installer tool*

Tighten the extractor/installer tool screw to install the bearing.

Remove tool.

Install all other removed parts.

CHAIN TENSIONER

Chain Tensioner Removal

Remove the *CHAINCASE COVER*, see procedure in this section.

Release tension from drive chain by unscrewing the tensioner adjustment screw.

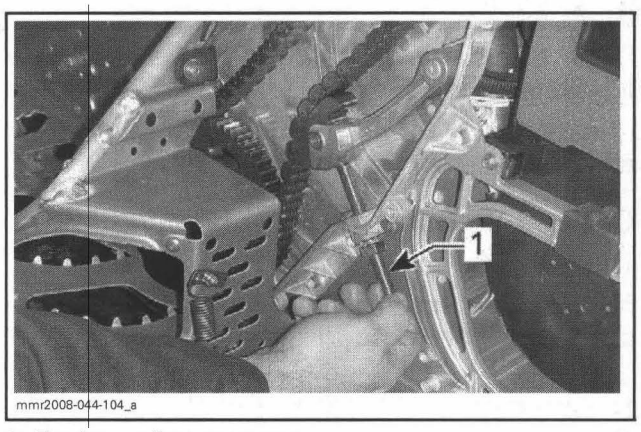

1. *Tensioner adjustment screw*

Remove tensioner arm.

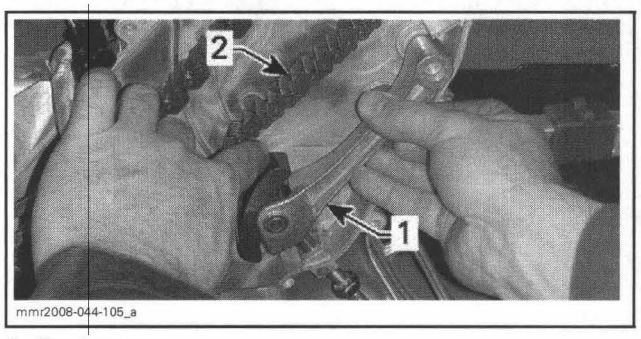

1. *Tensioner arm*
2. *Drive chain*

Chain Tensioner Disassembly

Remove the shaft ring securing the tensioner shaft to tensioner arm.

Remove the tensioner shaft to remove the slider.

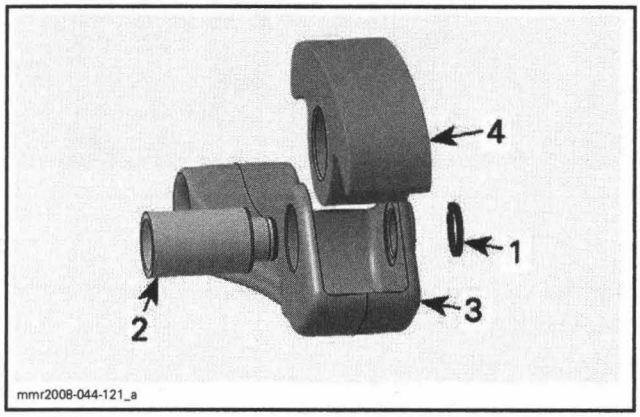

1. *Shaft ring*
2. *Tensioner shaft*
3. *Tensioner arm*
4. *Slider*

Chain Tensioner Inspection

Check chain tensioner slider for wear or other damages. Replace if necessary.

Check threads of tensioner adjustment screw for damages or wear.

Replace screw if necessary and check chaincase for damages.

Check rubber washer condition, replace as required.

Chain Tensioner Assembly

The assembly is the reverse of the disassembly.

NOTE: When assembly is completed, make sure circlip turns freely and slider moves easily.

Chain Tensioner Installation

The installation is the reverse of the removal procedure.

Adjust drive chain tension. Refer to *DRIVE CHAIN ADJUSTMENT* at the beginning of this section.

DRIVE AXLE

SERVICE PRODUCTS

Description	Part Number	Page
Thermo Lube synthetic grease	219 700 417	408

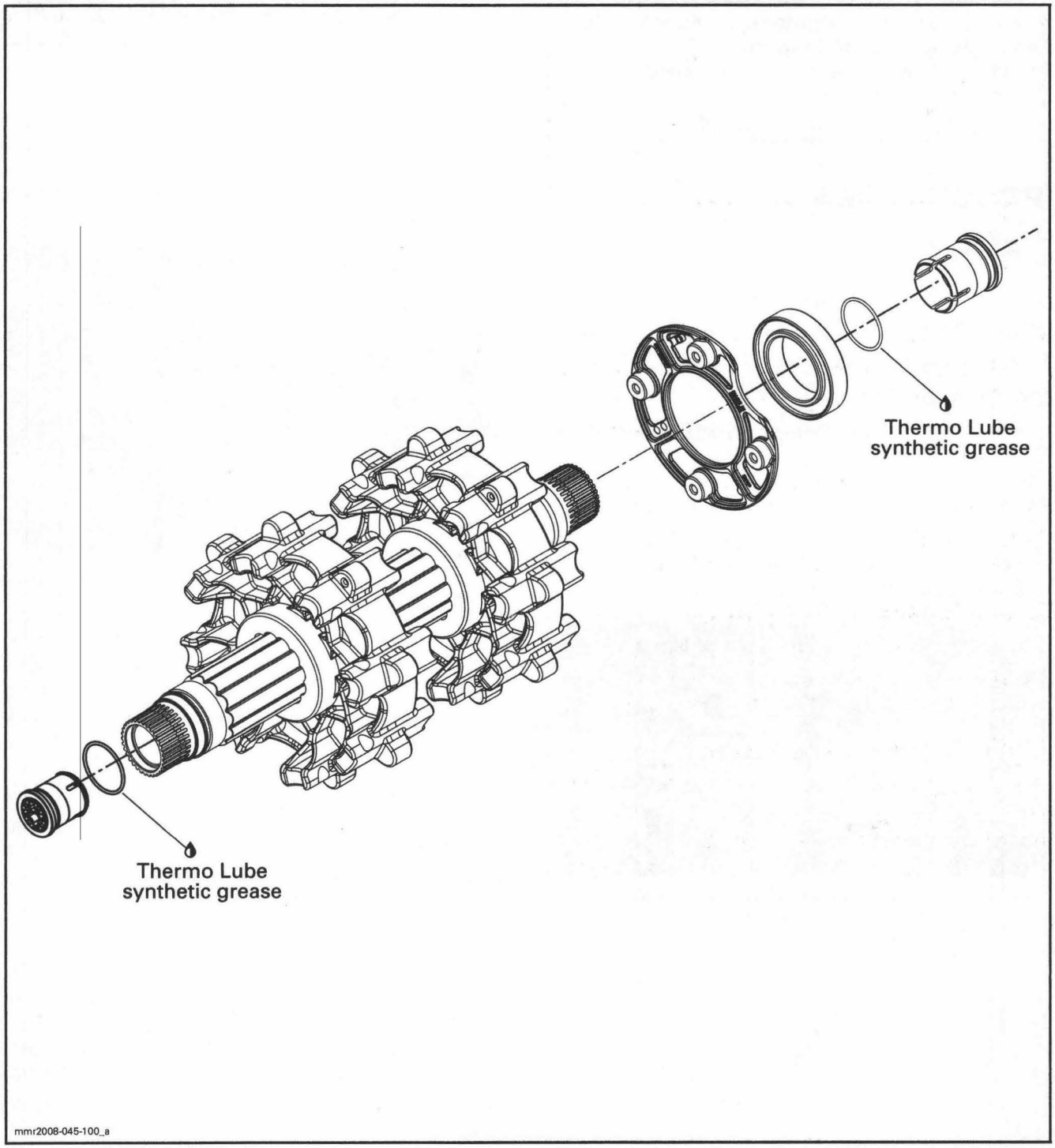

GENERAL

During assembly/installation, use torque values and service products as in the exploded view.

Clean threads before applying a threadlocker. Refer to *SELF-LOCKING FASTENERS* and *LOCTITE APPLICATION* at the beginning of this manual for complete procedure.

⚠ WARNING

Torque wrench tightening specifications must be strictly adhered to.
Locking devices (e.g.: locking tabs, elastic stop nuts, cotter pins, etc.) must be replaced with new ones.

PROCEDURES

DRIVE AXLE

Drive Axle Removal

Remove the rear suspension. Refer to *REAR SUSPENSION* section.

On LH Side

Remove the caliper. Refer to *BRAKE* section.

On RH Side

Remove the chaincase cover. Refer to *CHAINCASE* section.

Release tension from drive chain by unscrewing the tensioner adjustment screw.

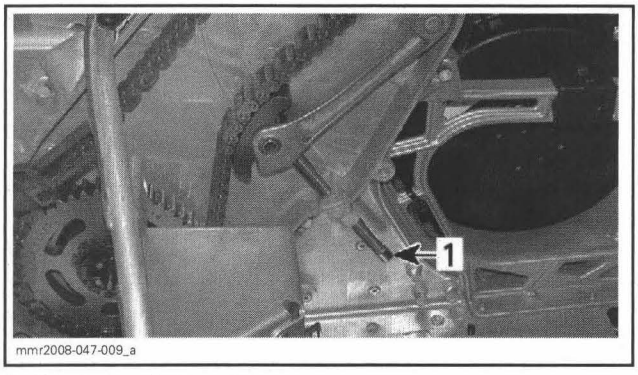

1. Tensioner adjustment screw

Remove the lower sprocket circlip.

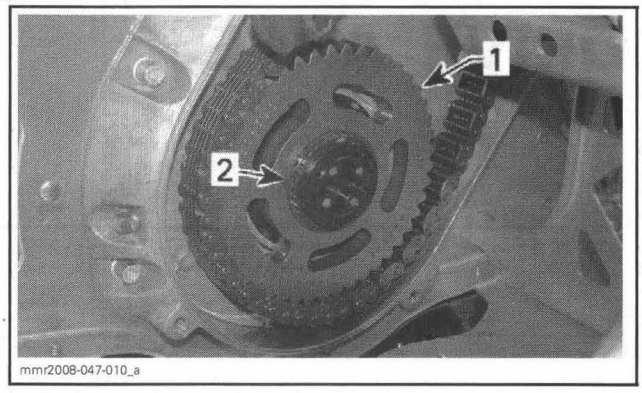

1. Lower sprocket
2. Circlip

Remove lower gear and drive chain.

Under Frame

Turn the LH bearing flange counterclockwise to unlock it from frame.

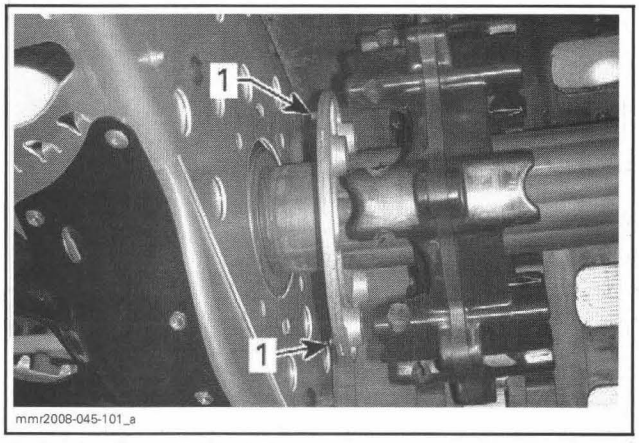

1. Bearing flange locking tabs

Release drive axle sprockets from track and at the same time, push the drive axle toward the **LEFT** side.

Move the drive axle towards the right side to remove it from vehicle.

Drive Axle Inspection

Replace drive axle if one of the following situations is detected:
- Cracked, worn or damaged drive axle
- Worn or damaged drive axle splines
- Worn or damaged sprockets
- Worn bearing journal.

Drive Axle Installation

The installation is the reverse of the removal procedure. However, pay attention to the following.

Install drive axle then lock the bearing flange on frame.

NOTE: Ensure bearing flange is properly locked. Tabs must be properly inserted in frame.

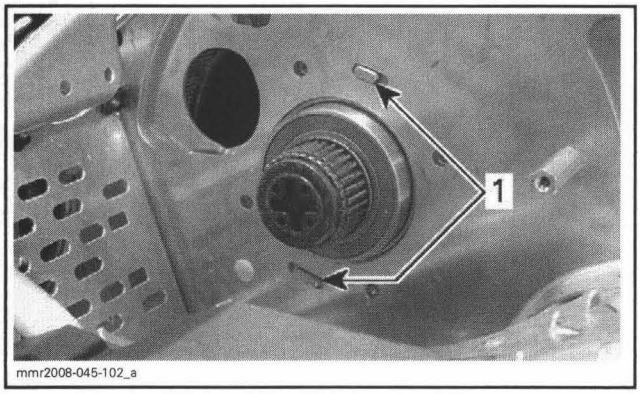

VIEW FROM OUTSIDE FRAME
1. Bearing flange locking tabs

To install the caliper and the disc brake, refer to *BRAKE* section for the specific procedure.

Install all other removed parts. Refer to the appropriate sections.

DRIVE AXLE BEARING

Drive Axle Bearing Inspection

Before removing bearing from drive axle, check if it turns smoothly and freely. Replace bearing if necessary.

Check if bearing seals are not damaged. Replace bearing if necessary.

Check if the bearing flange is cracked, bent or otherwise damaged. Replace it if required.

Drive Axle Bearing Removal

Remove *DRIVE AXLE*, see procedure above.

Remove the O-ring.

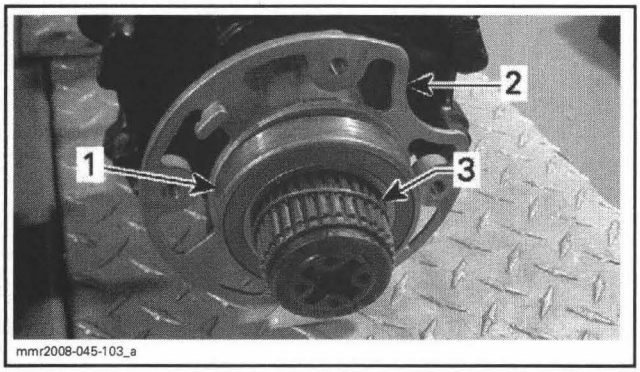

1. Drive axle bearing
2. Bearing flange
3. O-ring

Using a puller, remove the drive axle bearing.

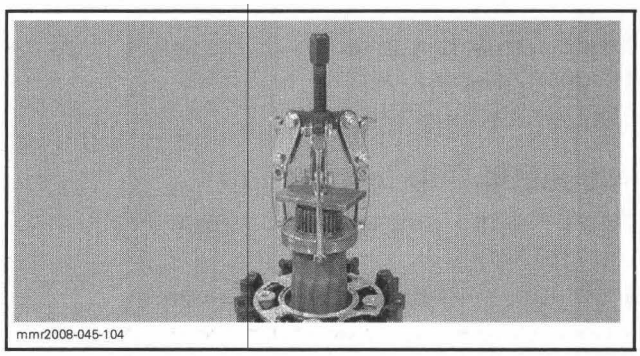

Remove the bearing flange.

Drive Axle Bearing Installation

Install bearing flange on drive axle.

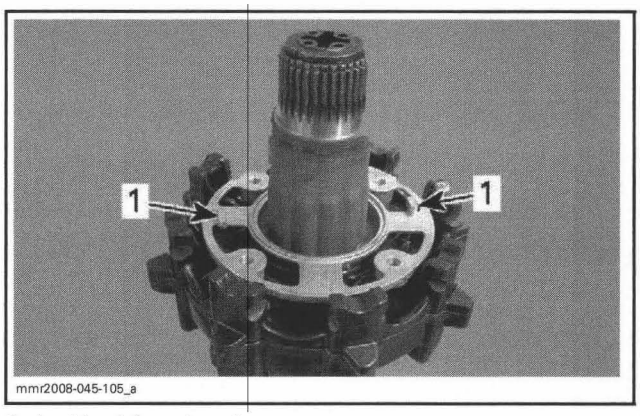

1. Locking tabs outwards

Using a press and a suitable pipe, push the bearing.

CAUTION: Always push the bearing by inner race.

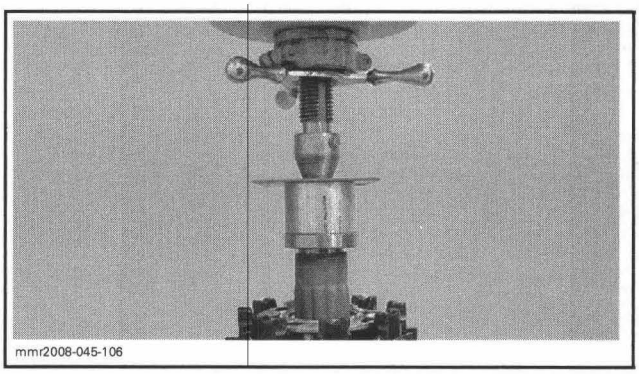

Install drive axle and all other removed parts.

MAGNETIC CAP

Magnetic Cap Removal

Remove brake disc protective cover. Refer to *BRAKE* section.

Remove the chaincase cover. Refer to *CHAINCASE* section.

Using two screwdrivers or pliers, pry or pull the magnetic cap out of drive axle end.

Discard the magnetic cap.

Magnetic Cap Installation

Apply Thermo Lube synthetic grease (P/N 219 700 417) on O-ring.

Insert the magnetic cap into drive axle.

Install all other removed parts.

TRACK

SERVICE TOOLS

Description	Part Number	Page
belt tension tester	414 348 200	410
narrow-cleat installer	529 036 044	409

TRACK

Track Inspection

Visually inspect track for:
- Cuts and abnormal wear
- Broken rods
- Broken or missing track cleats
- Perforations in the track
- Tears in the track (particularly around traction product holes)
- Lugs that are broken or torn off, exposing portion of rods
- Delamination of the rubber
- Broken studs
- Bent studs
- Studs that are torn off the track
- Missing track guide(s).

If track is damaged or rods are broken, replace track. For damaged or missing cleats, replace by new ones.

⚠ WARNING

Do not operate a snowmobile with a cut, torn or damaged track.

Track Cleat Replacement

Raise rear of vehicle off the ground.

Lift snow guard.

Rotate track to expose a cleat to be replaced.

Remove cleat from track using plastic hammer and a big screwdriver.

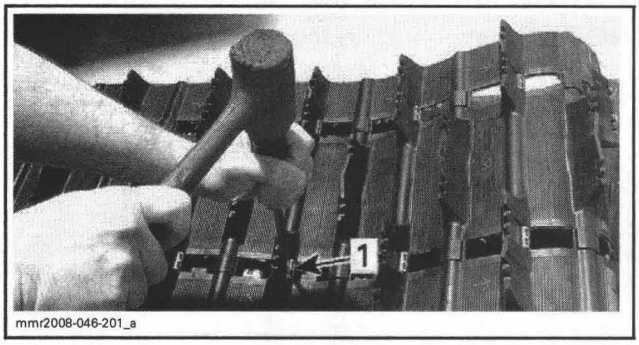

TYPICAL
1. Cleat

Place new cleat in position on the track.

Secure cleat using the narrow-cleat installer (P/N 529 036 044).

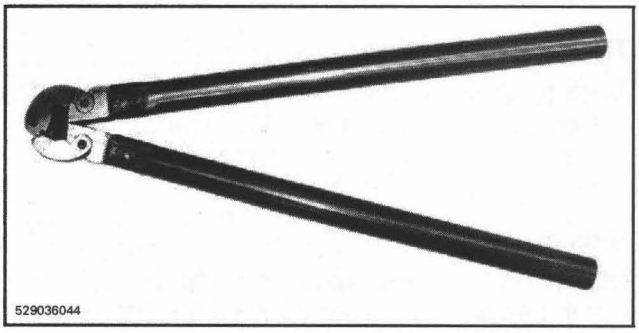

Bend cleat and push tabs into rubber.

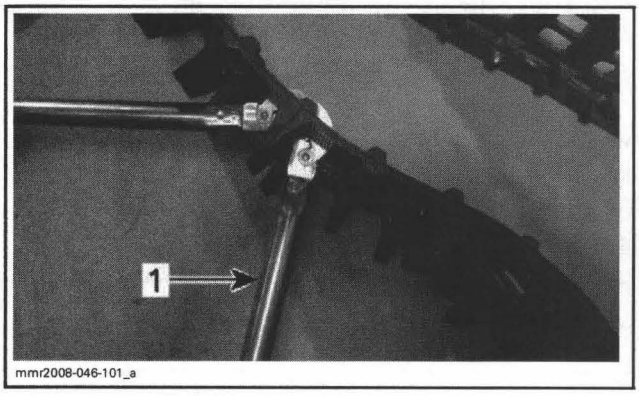

TYPICAL
1. Narrow-cleat installer

Reopen narrow-cleat installer.

Position cleat tabs on open end of tool.

Squeeze tabs until they are indented in rubber.

Track Removal

Remove rear suspension from vehicle. Refer to *REAR SUSPENSION*.

Remove track from rear suspension.

Track Installation

Reverse the removal procedure.

NOTE: When installing the track, respect rotation direction indicated by an arrow on track thread.

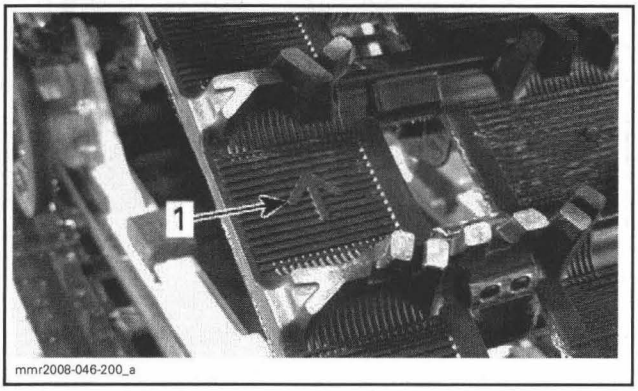

1. Arrow pointing forwards

Track Adjustment

Track tension and alignment are interrelated. Do not adjust one without checking the other. Track tension procedure must be carried out prior to track alignment.

Tension

NOTE: After track adjustment, ride the snowmobile in snow about 15 to 20 minutes and recheck track tension.

Lift snowmobile by a rope, chain or lift strap hooked to rear bumper.

Allow the rear suspension to fully extend and check gap halfway between front and rear idler wheels.

Measure between slider shoe bottom and inside of track. The gap should be as given in the following table.

TRACK ADJUSTMENT	
Track adjustment force	7.3 kgf (16 lbf)
Track deflection	30 to 35 mm (1.181 to 1.378 in)

The belt tension tester (P/N 414 348 200) may be used to measure deflection as well as force applied.

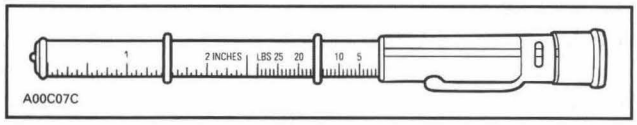

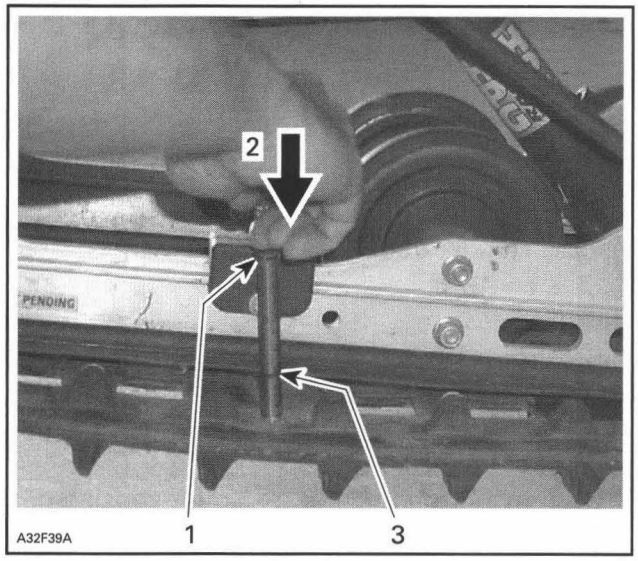

1. Tool top O-ring positioned at 7.3 kgf (16 lbf)
2. Apply pressure on tool until it contacts the upper O-ring
3. Measured track deflection

CAUTION: Too much tension will result in power loss and excessive stresses on suspension components.

To adjust tension, do the following:

- Lift rear of vehicle and support it off the ground.
- Remove rear idler wheel caps.

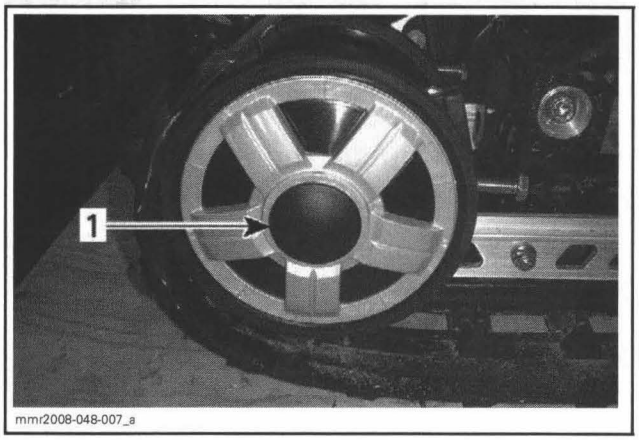

1. RH rear idler wheel cap

- Unscrew and remove rear axle screws (one each side).

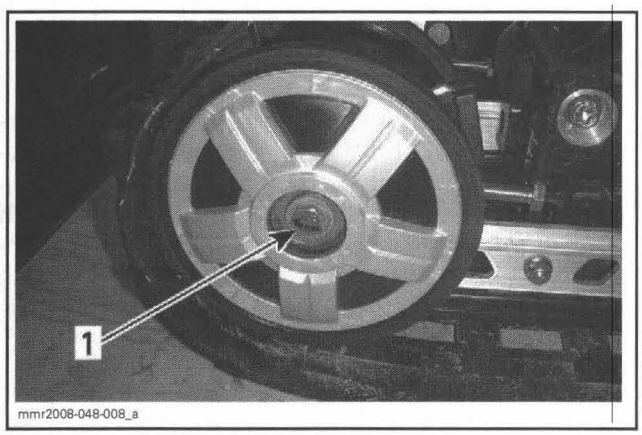

1. RH rear axle screw

- Tighten or loosen both adjustment screws to increase or decrease track tension.

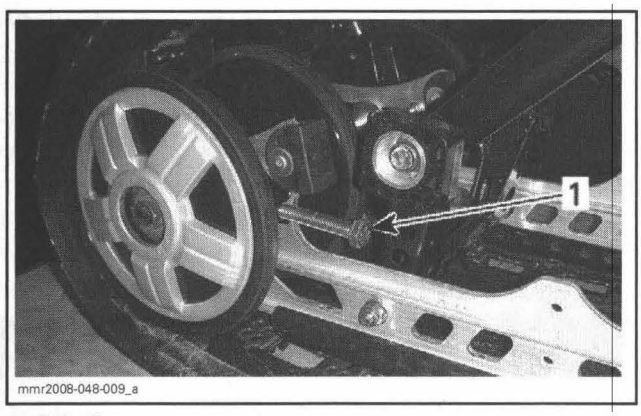

1. RH adjustment screw

Alignment

⚠ WARNING

Before checking track alignment, ensure that the track is free of all particles which could be thrown out while track is rotating. Keep hands, tools, feet and clothing clear of track. Ensure no one is standing in close proximity to the vehicle. Never rotate at high speed.

Start the engine and accelerate slightly so that track barely turns. This must be done in a short period of time (1 to 2 minutes).

Check that the track is well centered; equal distance on both sides between edges of track guides and slider shoes.

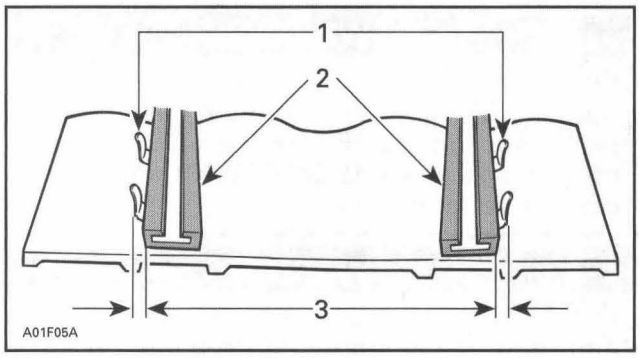

1. Guides
2. Slider shoes
3. Equal distance

To correct, stop engine, loosen rear wheel screws, then tighten the adjustment screw on side where the slider shoe is the farthest from the track insert guides.

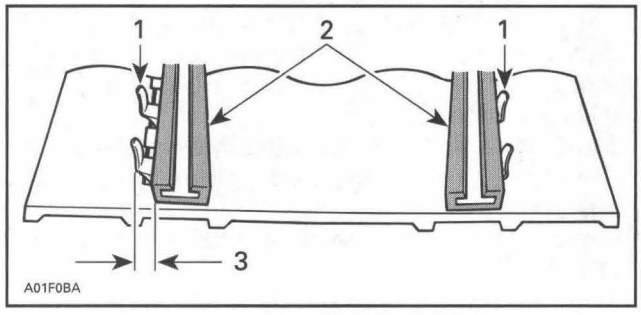

1. Guides
2. Slider shoes
3. Tighten on this side

Restart engine, rotate track slowly and recheck alignment.

If the satisfactory alignment is achieved, then tighten the idler wheel retaining screws to 48 N•m (35 lbf•ft).

Reinstall the wheel caps.

TRACTION ENHANCING PRODUCTS (STUDS)

Important Safety Rules

All REV-XP tracks use special single ply of fabric track to reduce weight and rolling resistance. The conventional track design is a 2 layers of fabric and one layer of high strength tensile cord. The new REV-XP tracks design is a single layer of fabric and one layer of tensile cord. This results in a thinner track and if studded, absolutely requires the use of the 286 Phantom series designed studs.

⚠ WARNING

REV-XP platform require special studs. Use only the 286 phantom series studs and support plates on the REV-XP tracks. The use of other kinds of studs on REV-XP tracks may cause risks of injuries.

⚠ WARNING

Installing an incorrect number of studs or an improper installation could reduce the track life and possibly resulting in serious injury or death.

⚠ WARNING

Never stud a track that has not been approved for studs. Installing studs on an unapproved track could increase the risk of the track tearing or severing, possibly resulting in serious injury or death. Approved tracks can be identified by a stud symbol molded into the track surface.
Studs should only be installed in the locations indicated by molded bulges in the track surface.
Never stud a track with a profile of 35 mm (1.375 in) or more.
The maximum allowable stud penetration range is 6.4 to 9.5 mm (1/4 to 3/8").
The number of studs installed must match the number of molded bulges in the track.
Strictly adhere to the specified tightening torque.

⚠ WARNING

To prevent serious injury to individuals near the snowmobile:
- NEVER stand behind or near a moving track.
- ALWAYS use a wide-base snowmobile stand with a rear deflector panel.
- When the track is raised off the ground, only run it at lowest possible speed.

Centrifugal force could cause debris, damaged or loose studs, pieces of torn track, or an entire severed track to be violently thrown backwards out of the tunnel with tremendous force, possibly resulting in the loss of a leg or other serious injury.

Effects of Studding on the Life of the Snowmobile

The use of traction enhancing products can increase the load and the stress on certain snowmobile components, as well as the vibration level. This can cause premature wear on parts such as belts, brake lining, bearings, chain, and chaincase sprockets, and shorten track life. For this reason, it is even more important to follow the detailed maintenance program given in the *MAINTENANCE CHART.*

Studs can also cause serious damage to the snowmobile if it is not equipped with the tunnel protectors designed for the particular model. Damage to the electrical wiring or perforation of the heat exchangers are potential hazards, that could cause the engine to overheat and be severely damaged.

Studs and Track Inspection

A visual inspection of the track should be performed before each use. Refer to *TRACK INSPECTION.*

Replace broken or damaged studs immediately. If the track shows signs of deterioration, it must be replaced immediately. In doubt, replace the track.

⚠ WARNING

Riding with a damaged track or studs could lead to loss of control, resulting in a risk of serious injury or death.

Stud Installation Tables

Use the following table for appropriate size and quantity of studs.

APPROVED STUDS ACCORDING TO TRACK LUG HEIGHT			
LUG HEIGHT	STUD SIZE	QTY OF STUDS FOR A 120" TRACK	QTY OF STUDS FOR A 137" TRACK
1.000"	1.075"	84	96
1.250"	1.325"	84	96

Use the following table for appropriate tunnel protector kits.

TUNNEL PROTECTOR KITS		
CHASSIS TYPE	TRACK DIMENSION	KIT P/N
REV-XP	All	860 200 068

Stud Installation Procedure

Refer to manufacturer's instruction for complete installation procedure.

FRONT SUSPENSION

SERVICE TOOLS

Description	Part Number	Page
ball joint remover	529 035 827	421
ball joint installer	529 035 975	424
spring compressor tool	529 036 007	419
ball joint remover	529 036 121	424



Midwest Manuals
sales@midwestmanuals.com
www.midwestmanuals.com

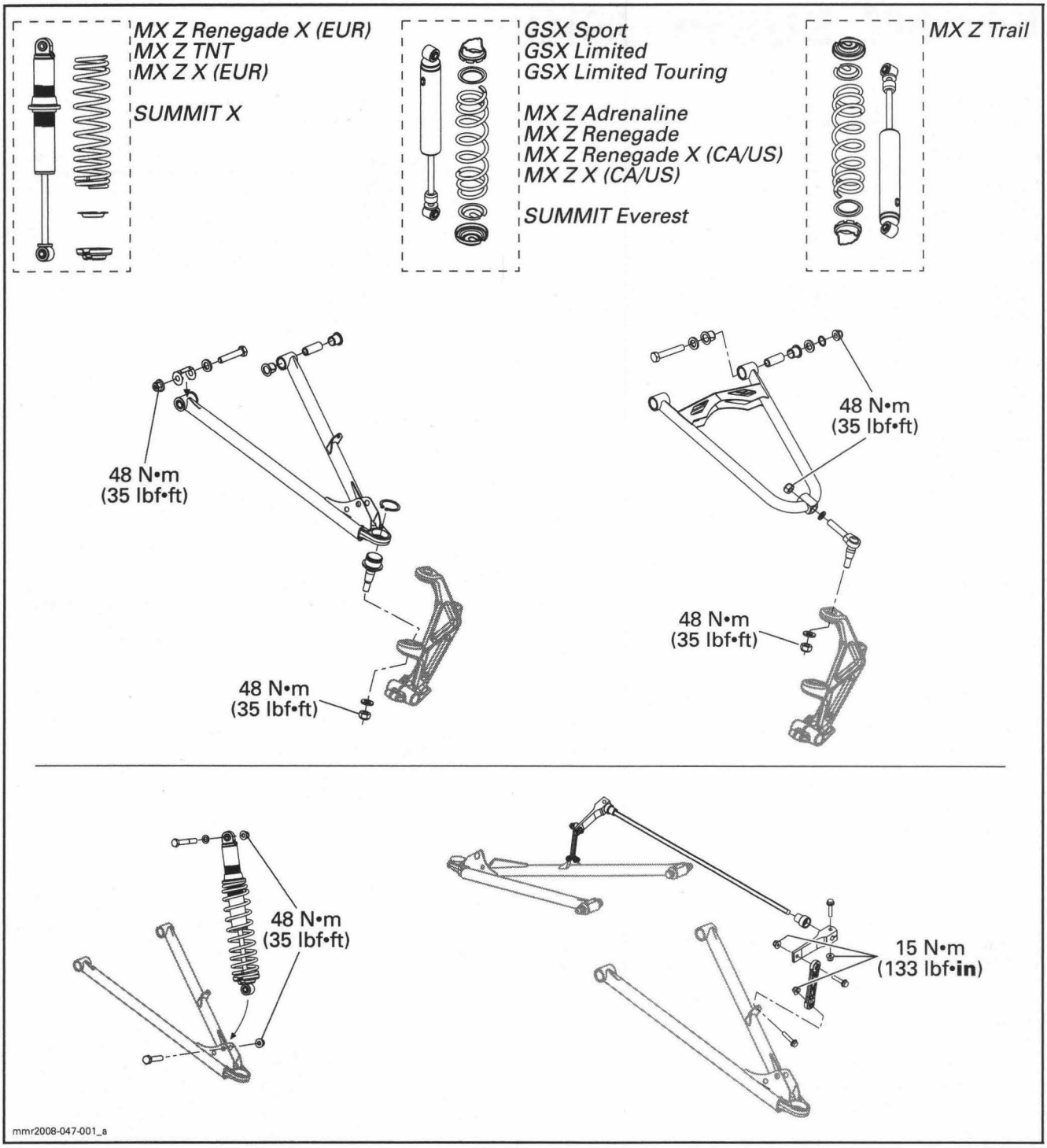
MX Z Renegade X (EUR)
MX Z TNT
MX Z X (EUR)
SUMMIT X
GSX Sport
GSX Limited
GSX Limited Touring
MX Z Adrenaline
MX Z Renegade
MX Z Renegade X (CA/US)
MX Z X (CA/US)
SUMMIT Everest
MX Z Trail
48 N•m
(35 lbf•ft)
48 N•m
(35 lbf•ft)
48 N•m
(35 lbf•ft)
48 N•m
(35 lbf•ft)
48 N•m
(35 lbf•ft)
15 N•m
(133 lbf•in)
mmr2008-047-001_a

GENERAL

The procedure explained below is the same for the RH and LH sides unless otherwise noted.

During assembly/installation, use torque values and service products as in the exploded view.

Clean threads before applying a threadlocker. Refer to *SELF-LOCKING FASTENERS* and *LOCTITE APPLICATION* at the beginning of this manual for complete procedure.

⚠ WARNING

Torque wrench tightening specifications must be strictly adhered to.
Locking devices (e.g.: locking tabs, elastic stop nuts, cotter pins, etc.) must be replaced with new ones.

Check for loose, bent, worn out, rusted or otherwise damaged components. Replace the faulty components.

ADJUSTMENT

SUSPENSION SPRING

SPRINGS ADJUSTMENT GUIDELINE		
HANDLING	STEERING	SOLUTION
Good	Comfortable	No adjustment required
Too soft	Too easy to turn	Increase spring preload
Too hard	Hard to turn	Decrease spring preload

⚠ WARNING

Adjust both springs to the same load. Uneven adjustment can cause poor handling and loss of stability, and/or control, and increase the risk of an accident.

Spring Preload Adjustment

Models with Cam

Using the suspension adjustment tool (included in the tool kit), turn the cam to increase or decrease spring preload.

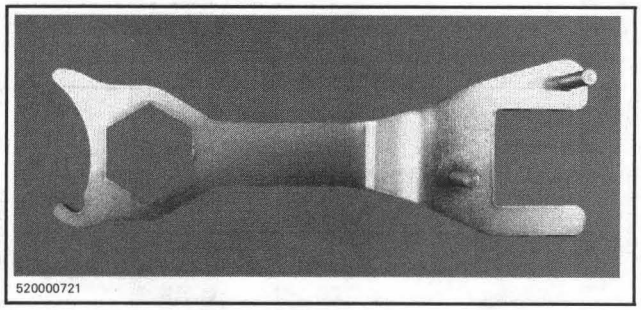

SUSPENSION ADJUSTMENT TOOL

Models with Adjustment Ring

Grab and turn the spring to increase or decrease spring preload.

Screw Type Adjustment

MX Z (Renegade X (Eur), TNT, X (Eur)) and SUMMIT (X)

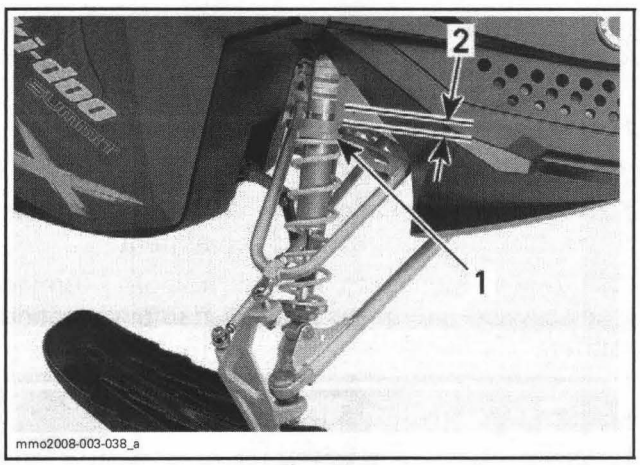

1. *Adjustment ring*
2. *Ring positions*

Cam Type Adjustment

MX Z (Renegade X (CA/US), X (CA/US))

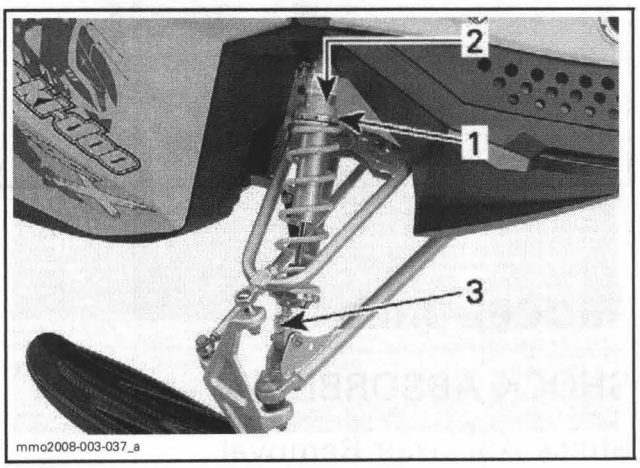

1. *Adjustment cam*
2. *Cam positions*
3. *Compression/rebound adjustment*

GSX Series, MX Z (Adrenaline, Renegade, Trail) and SUMMIT (Everest)

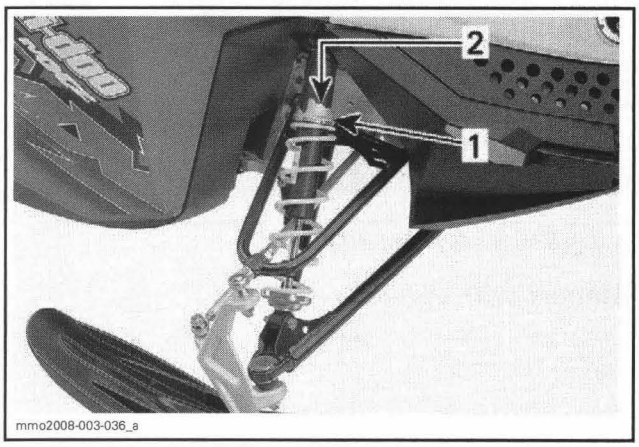

1. Adjustment cam
2. Cam positions

SHOCK ABSORBER

Compression/Rebound Adjustment

All X Package — CA/US Only

Front shock on the above mentioned models feature a compression/rebound adjustment.

Turn the damping adjuster accordingly. Turning it clockwise increases shock damping action

To remove the RH shock absorber, remove the muffler. Refer to *EXHAUST SYSTEM* section.

To remove the LH shock absorber, remove the tool kit support by pressing the locking tab.

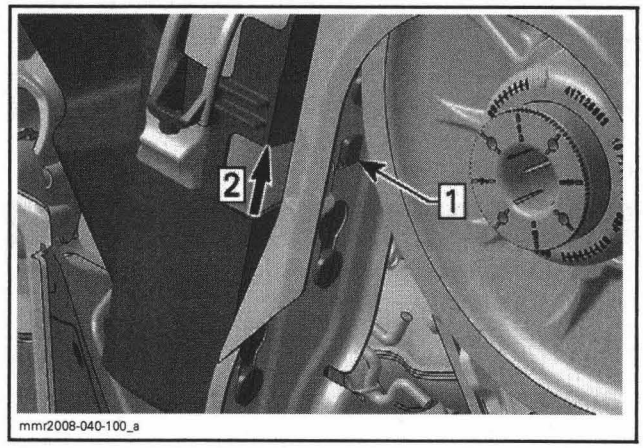

Step 1: Press tab
Step 2: Lift tool kit support

Lift the front of vehicle until skis are off the ground.

Remove the shock absorber upper bolt.

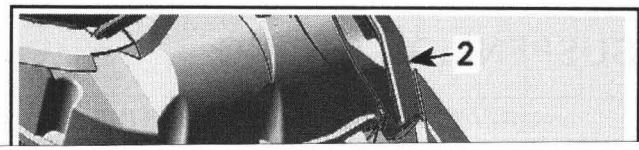

Section 08 CHASSIS
Subsection 01 (FRONT SUSPENSION)

Check the following conditions that will denote a defective shock:

- A skip or a hang back when reversing stroke at mid travel.
- Seizing or binding condition except at extreme end of either stroke.
- Oil leakage.
- A gurgling noise, after completing one full compression and extension strokes.

If suspecting a shock is freezing, place it in a freezer (temperature below 0°C (32°F)) for 4 hours.

Push down on rod and note its resistance. If shock is frozen it will be much more difficult to compress than one in normal condition.

Renew if any faults are present.

Gas Shock except Variable Rate

Because of gas pressure, strong resistance is felt when compressing shock.

When released, the shock should extend unassisted. The rod speed coming out will go slow - faster and slow again due to the VR zone.

If suspecting a shock is freezing, place it in a freezer (temperature below 0°C (32°F)) for 4 hours.

Push down on rod and note its resistance. If shock is frozen it will be much more difficult to compress than one in normal condition.

Refer to *REAR SUSPENSION* for servicing procedure.

Shock Absorber Assembly and Installation

For assembly and installation, reverse the disassembly and removal procedures.

NOTE: Always install shock valve outwards when applicable.

UPPER SUSPENSION ARM

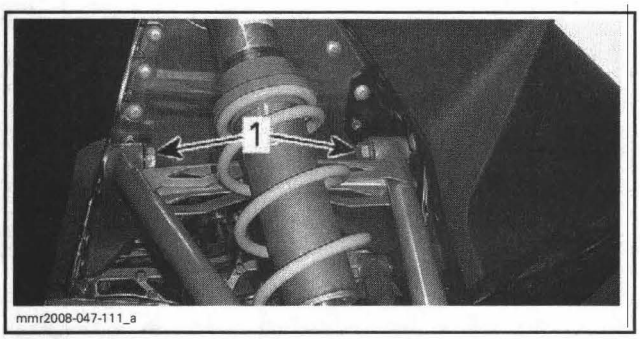

1. Upper suspension arm bolts

Remove ball joint from ski leg. See procedure in *UPPER BALL JOINT REMOVAL* in this section.

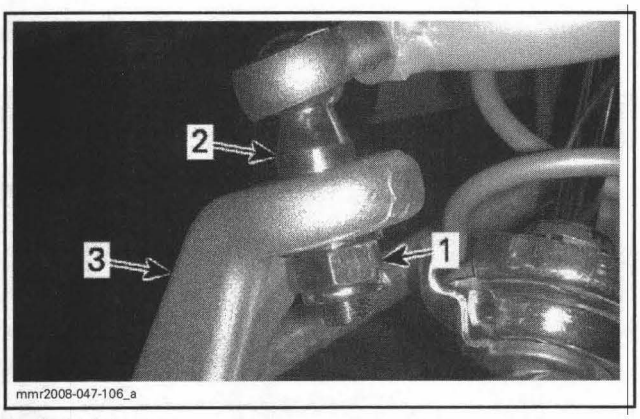

1. Ball joint nut
2. Ball joint
3. Ski leg

Remove upper suspension arm.

Upper Suspension Arm Installation

The installation is the reverse of the removal procedure.

UPPER BALL JOINT

Upper Ball Joint Inspection

Check both upper ball joints for damage, pitting, looseness and roughness. If so, replace with a new one.

Upper Ball Joint Removal

Position upper suspension arm so that ball joint becomes parallel with ski leg.

Detach tie-rod end from ski leg.

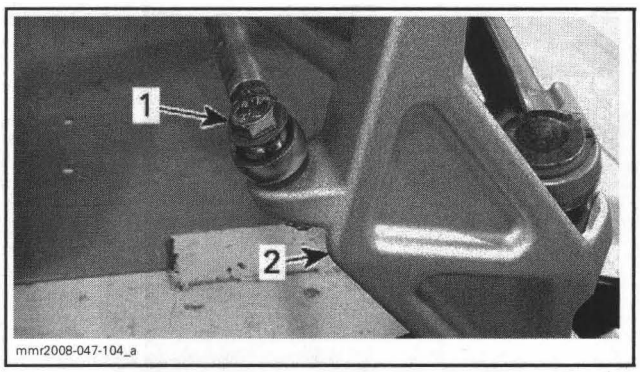

1. Tie-rod end bolt
2. Ski leg

Unscrew nut retaining ball joint housing to upper suspension arm.

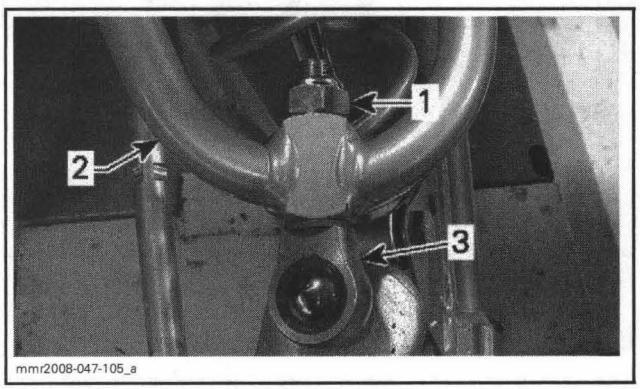

1. Ball joint housing nut
2. Upper suspension arm
3. Ball joint housing

Remove nut securing ball joint to ski leg.

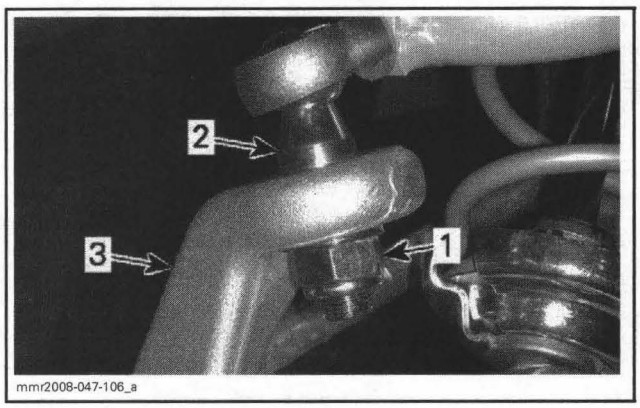

1. Ball joint nut
2. Ball joint
3. Ski leg

Install the ball joint remover (P/N 529 035 827) and detach ball joint from ski leg.

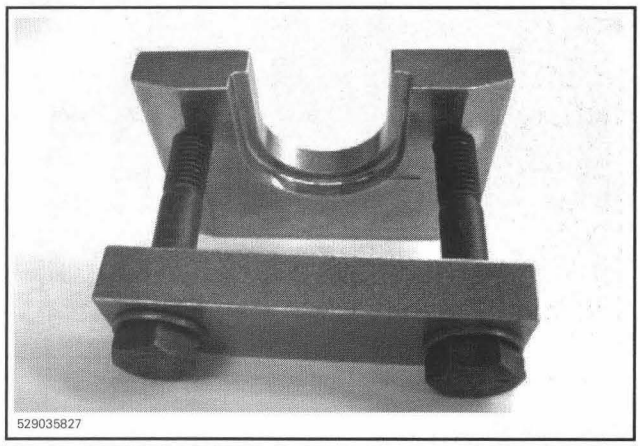
529035827

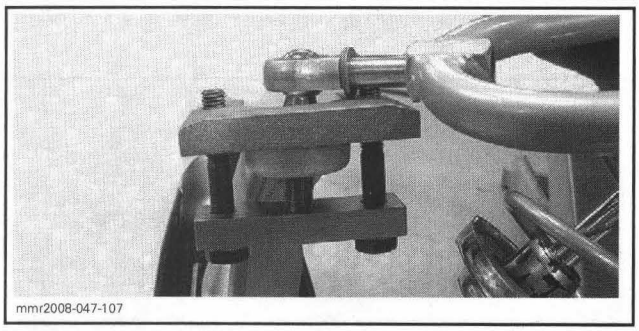
mmr2008-047-107

Remove ball joint.

Upper Ball Joint Installation

The installation is the reverse of the removal procedure. However, pay attention to the following.

When installing upper ball joint, ensure to tilt it with the proper angle as shown. The ball joint housing must be parallel to ski leg tab. This mounting position corresponds to 10° ± 3° angle from upper arm.

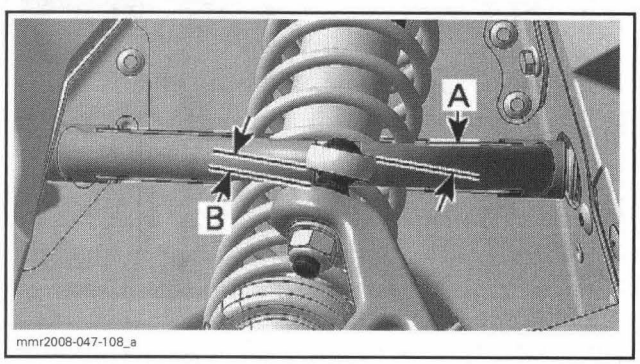

mmr2008-047-108_a

A. 10° ± 3°
B. Parallel

Install ball joint washers as shown.

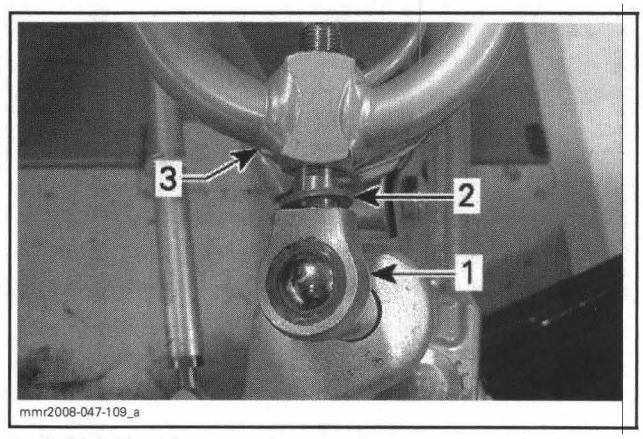

mmr2008-047-109_a

1. *Ball joint housing*
2. *Washer*
3. *Upper suspension arm*

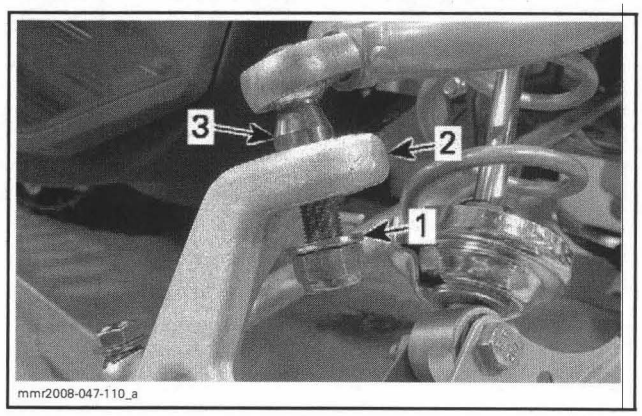

mmr2008-047-110_a

1. *Washer*
2. *Ski leg*
3. *Ball joint*

Tighten nuts to 48 N•m (35 lbf•ft).

LOWER SUSPENSION ARM

Lower Suspension Arm Inspection

Check suspension arm for distortion or damage. Replace if necessary.

Detach shock absorber and stabilizer bar from lower suspension arm. Move suspension arm from side to side then up and down. There should be no noticeable loose. Replace bushings and/or sleeves if necessary.

NOTE: A play of 2 mm (.079 in) is acceptable when the suspension arm is moved forward and backward.

Check sleeves inside suspension arm attachments for wear or damage.

Lower Suspension Arm Removal

Lift the front of vehicle until skis are off the ground.

Remove shock absorber lower bolt.

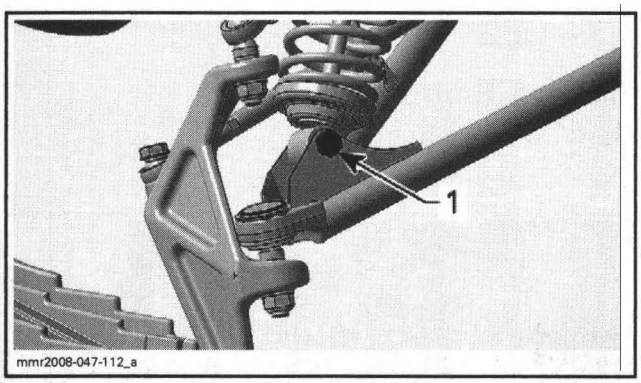

1. Shock absorber lower bolt

Detach stabilizer link from lower suspension arm. Refer to *STABILIZER BAR* further in this section.

Remove lower ball joint nuts.

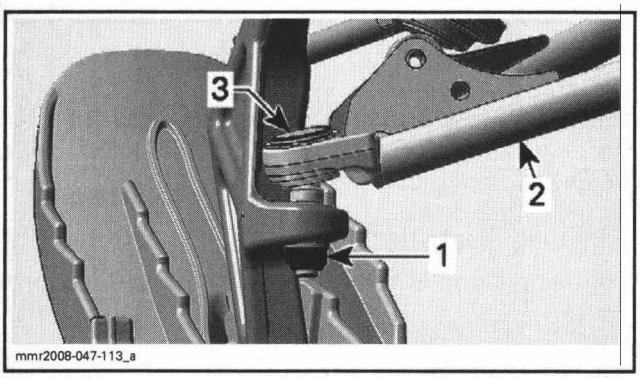

1. Ball joint nut
2. Lower suspension arm
3. Lower ball joint

Using a suitable ball joint remover, detach lower ball joint from ski leg.

Remove suspension arm bolts.

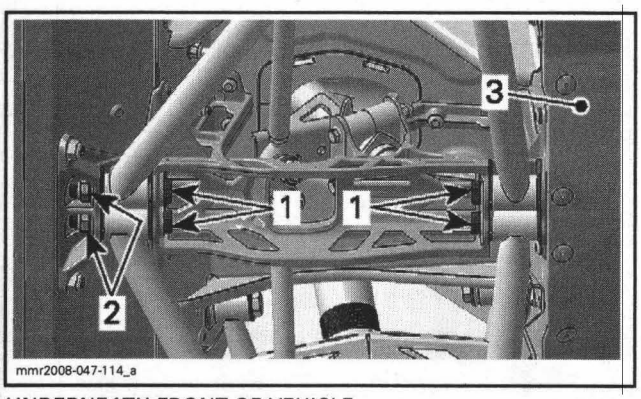

UNDERNEATH FRONT OF VEHICLE
1. Suspension arm bolts
2. Rear nuts
3. Bottom pan

NOTE: To hold rear nuts, modify a 15 mm opened wrench as shown.

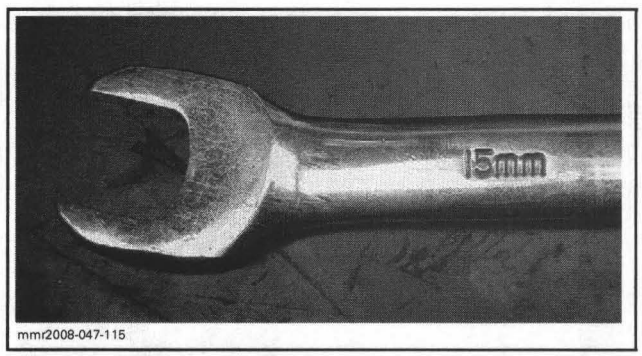

Remove lower suspension arm from vehicle.

Lower Suspension Arm Installation

The installation is the reverse of the removal procedure. However, pay attention to the following.

Install a wear plate over bushings.

Position the wear plate on top.

Fold all tabs against bushings.

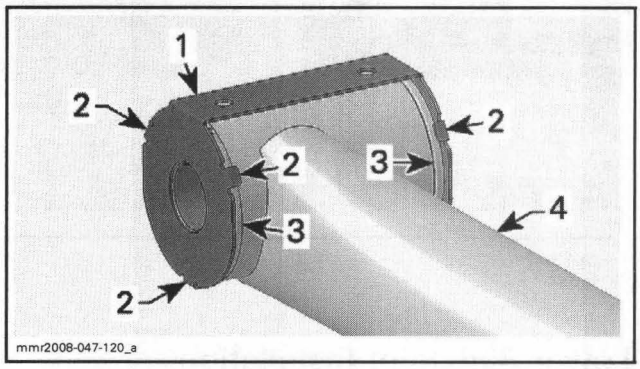

1. Wear plate
2. Wear plate tabs
3. Bushings
4. Lower suspension arm

LOWER BALL JOINT

Lower Ball Joint Inspection

Inspect ball joint end for damage. Ensure it's moving freely without play. Replace ball joints as required.

Lower Ball Joint Removal

Remove the *LOWER SUSPENSION ARM*, see procedure in this section.

Remove circlip securing ball joint to suspension arm.

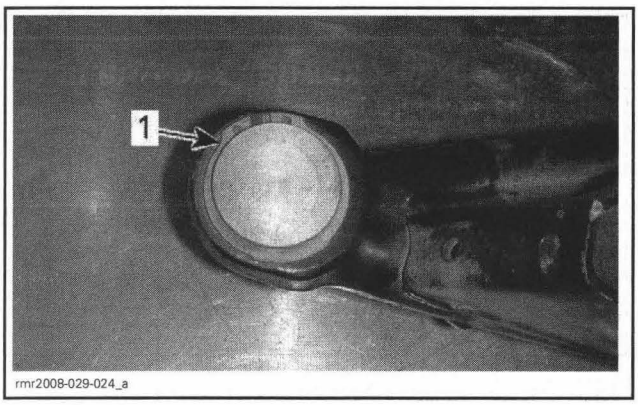

1. Circlip

Using a press and the ball joint remover (P/N 529 036 121), press ball joint out of the lower suspension arm.

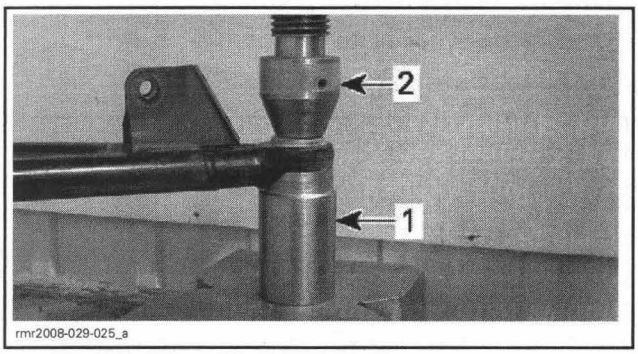

1. Ball joint remover
2. Press

Lower Ball Joint Installation

Using a press, the ball joint remover (P/N 529 036 121) and the ball joint installer (P/N 529 035 975), press ball joint into the suspension arm end.

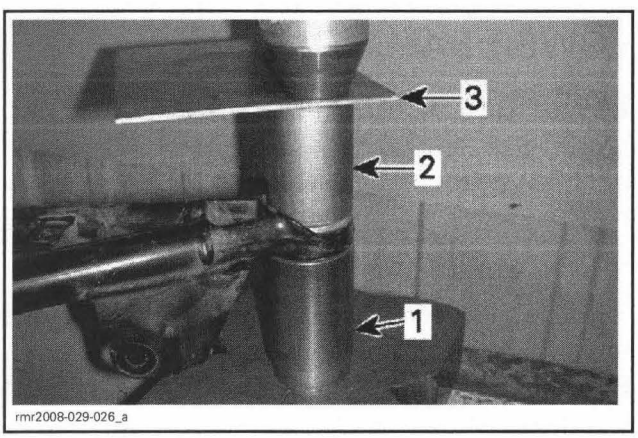

1. Ball joint remover support
2. Ball joint installer
3. Steel plate

Install the *LOWER SUSPENSION ARM* on vehicle, see procedure in this section.

SKI LEG

Ski Leg Removal

Remove ski from ski leg.

Detach tie-rod end from ski leg.

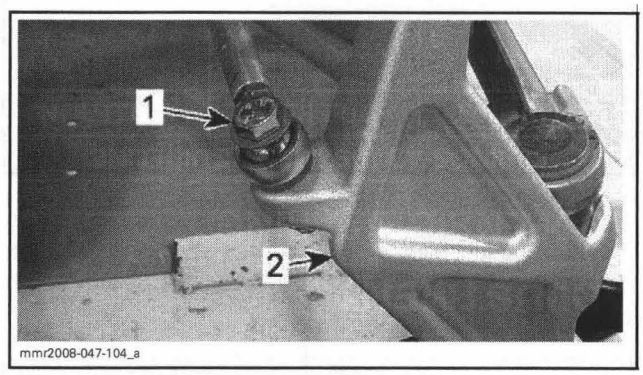

1. Tie-rod end bolt
2. Ski leg

Remove upper and lower ball joints from ski leg. Refer to *UPPER BALL JOINT* and *LOWER BALL JOINT* in this section.

Ski Leg Installation

The installation is the reverse of the removal procedure.

STABILIZER BAR

Stabilizer Bar Removal

Remove the RH side panel. Refer to *BODY* section.

Remove the muffler. Refer to *EXHAUST SYSTEM* section.

Remove the cap at the bottom of the RH side bottom pan.

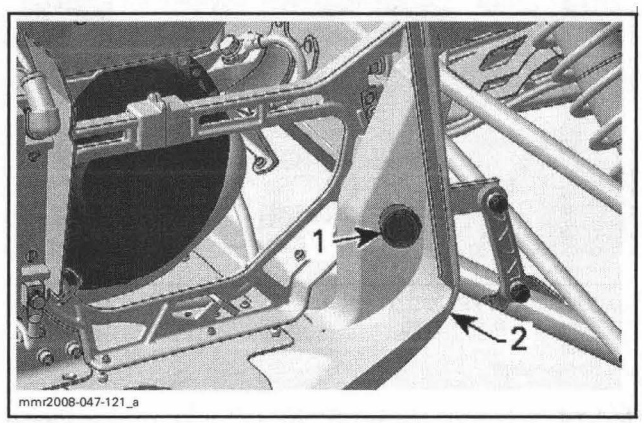

1. Stabilizer bar cap
2. RH side bottom pan

Remove bolts securing stabilizer links to lower suspension arms.

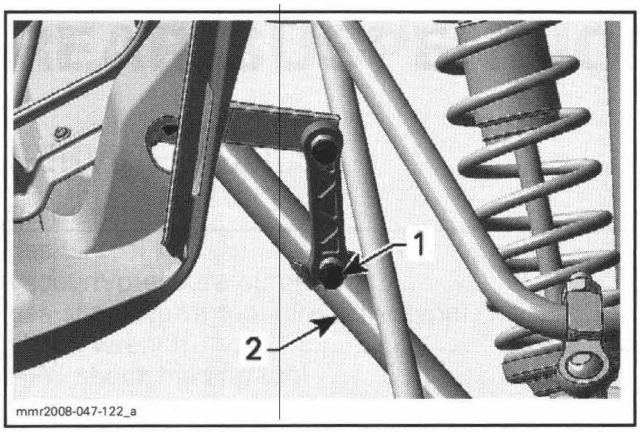

RH SIDE SHOWN
1. *Stabilizer link bolt*
2. *Lower suspension arm*

Unscrew stabilizer lever bolts.

Remove stabilizer levers from stabilizer bar.

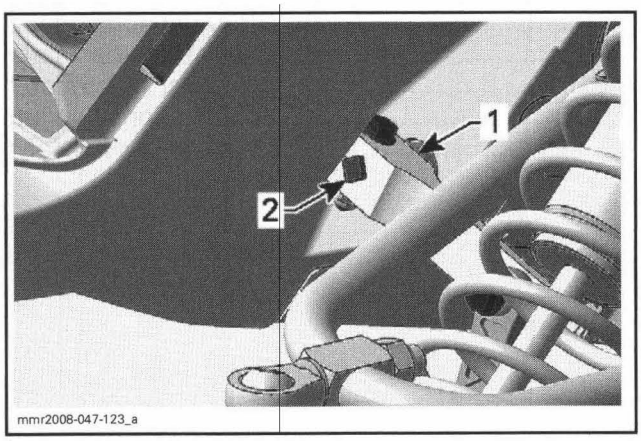

RH SIDE SHOWN
1. *Stabilizer lever*
2. *Stabilizer bar*

Slide stabilizer bar out of vehicle.

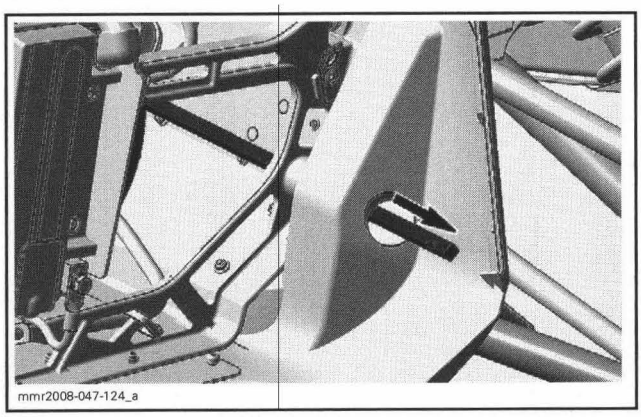

Stabilizer Bar Installation

The installation is the reverse of the removal procedure.

RAILS AND IDLERS WHEELS

GSX Series and MX Z (Adrenaline, Renegade, Renegade X and Trail)

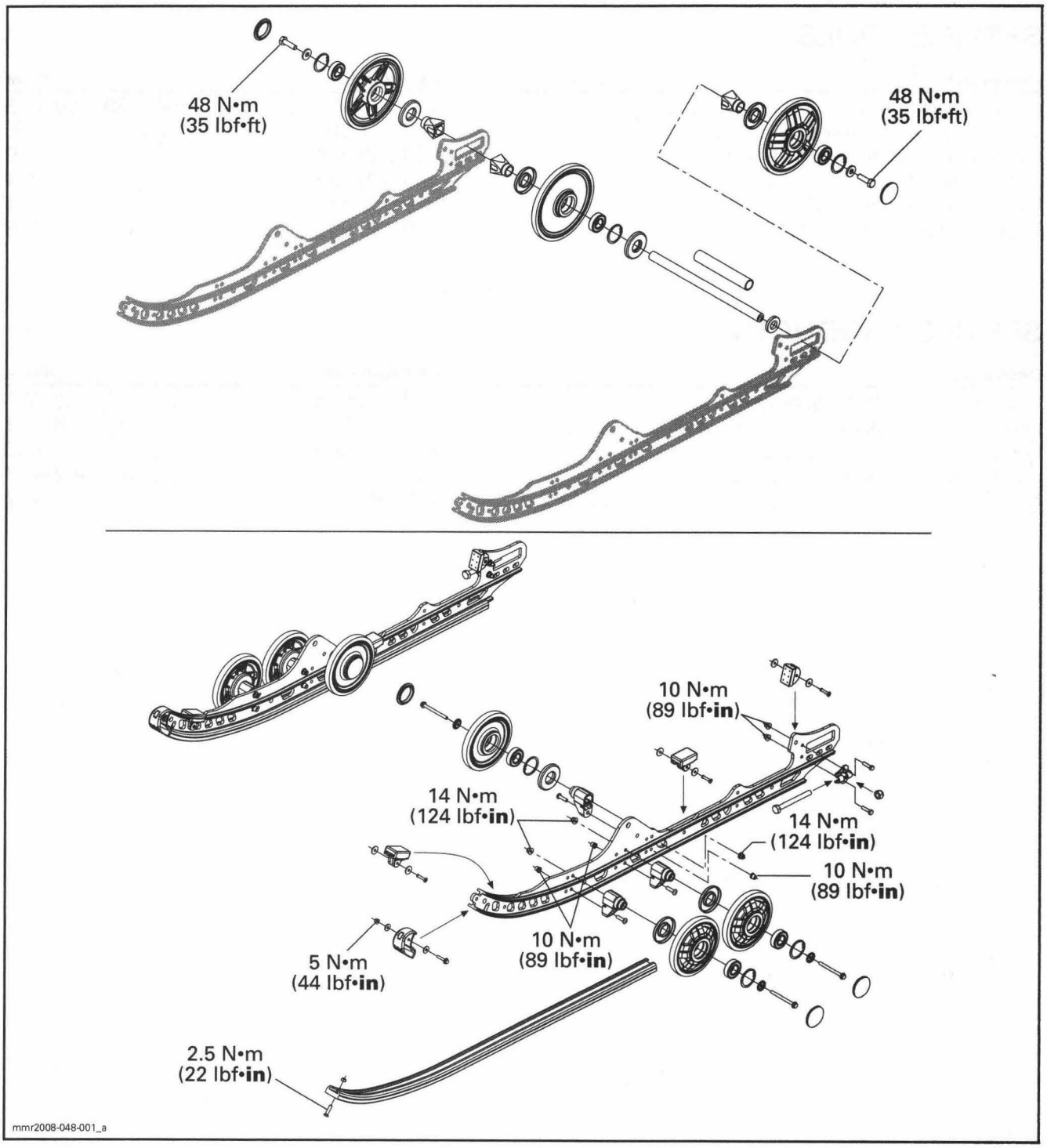

MX Z (TNT and X)

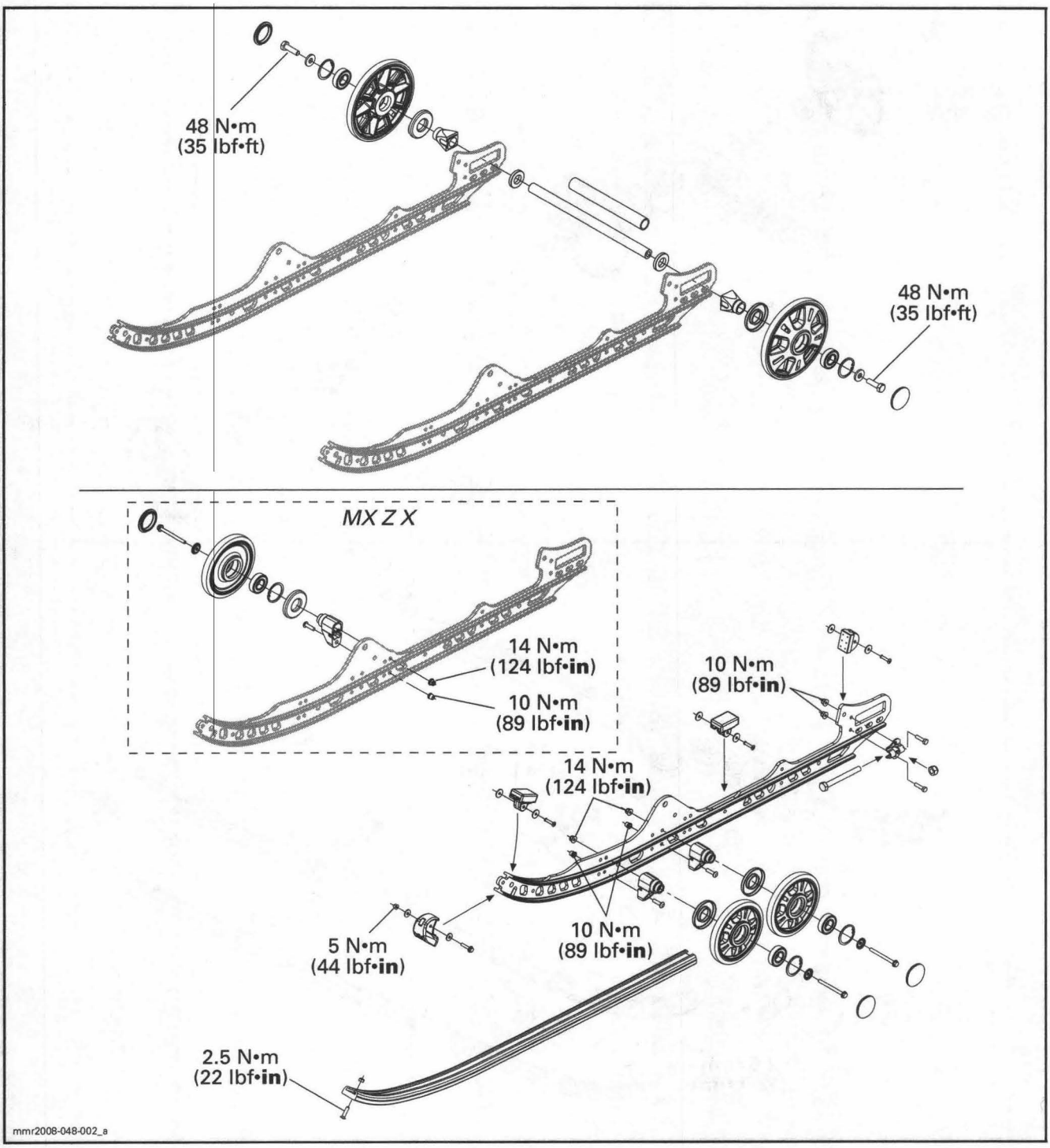
48 N•m
(35 lbf•ft)
48 N•m
(35 lbf•ft)
MX Z X
14 N•m
(124 lbf•in)
10 N•m
(89 lbf•in)
10 N•m
(89 lbf•in)
14 N•m
(124 lbf•in)
5 N•m
(44 lbf•in)
10 N•m
(89 lbf•in)
2.5 N•m
(22 lbf•in)
mmr2008-048-002_a

SUMMIT Series

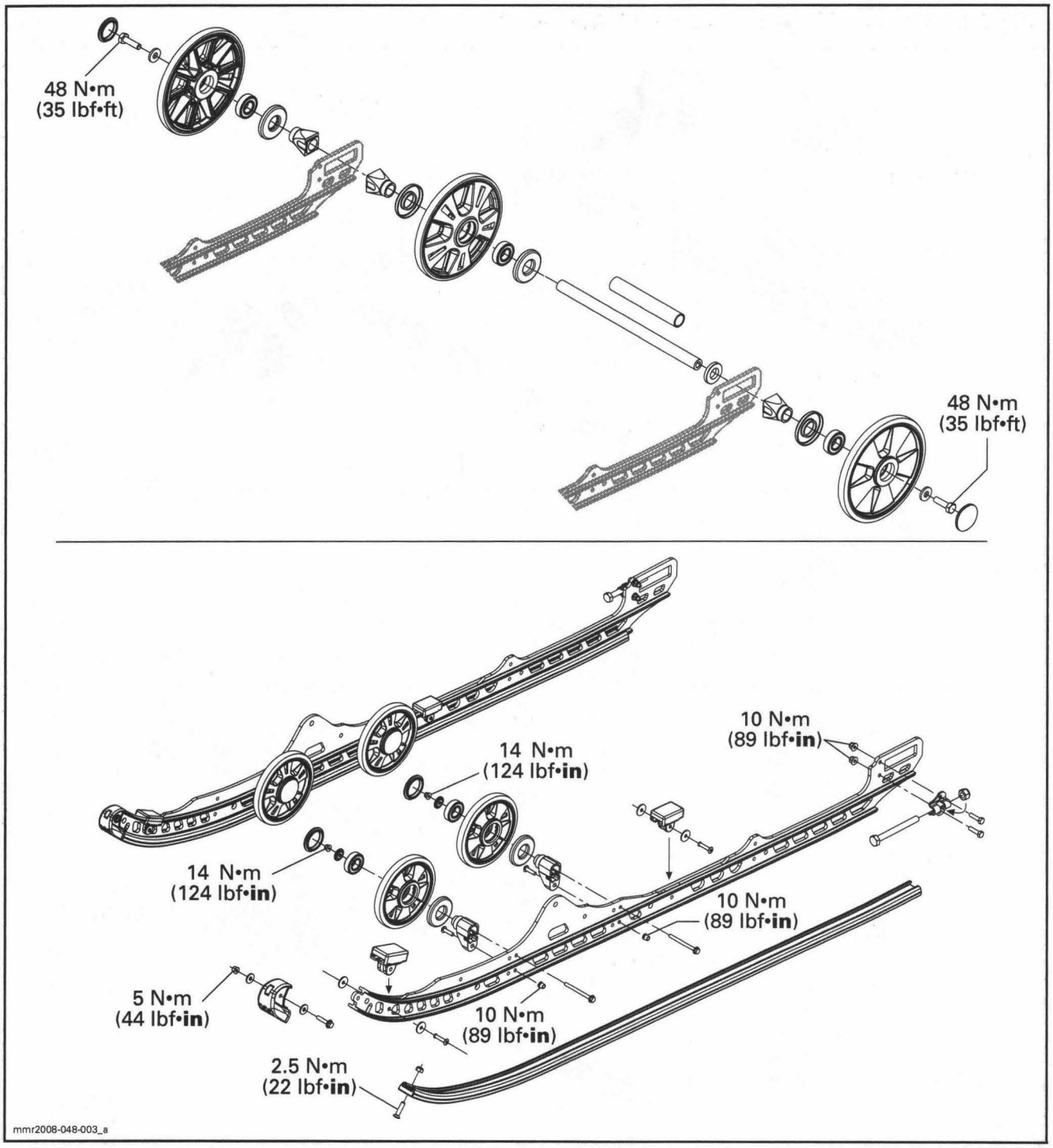

FRONT ARM

GSX Series and MX Z (Adrenaline, TNT, Trail and X)

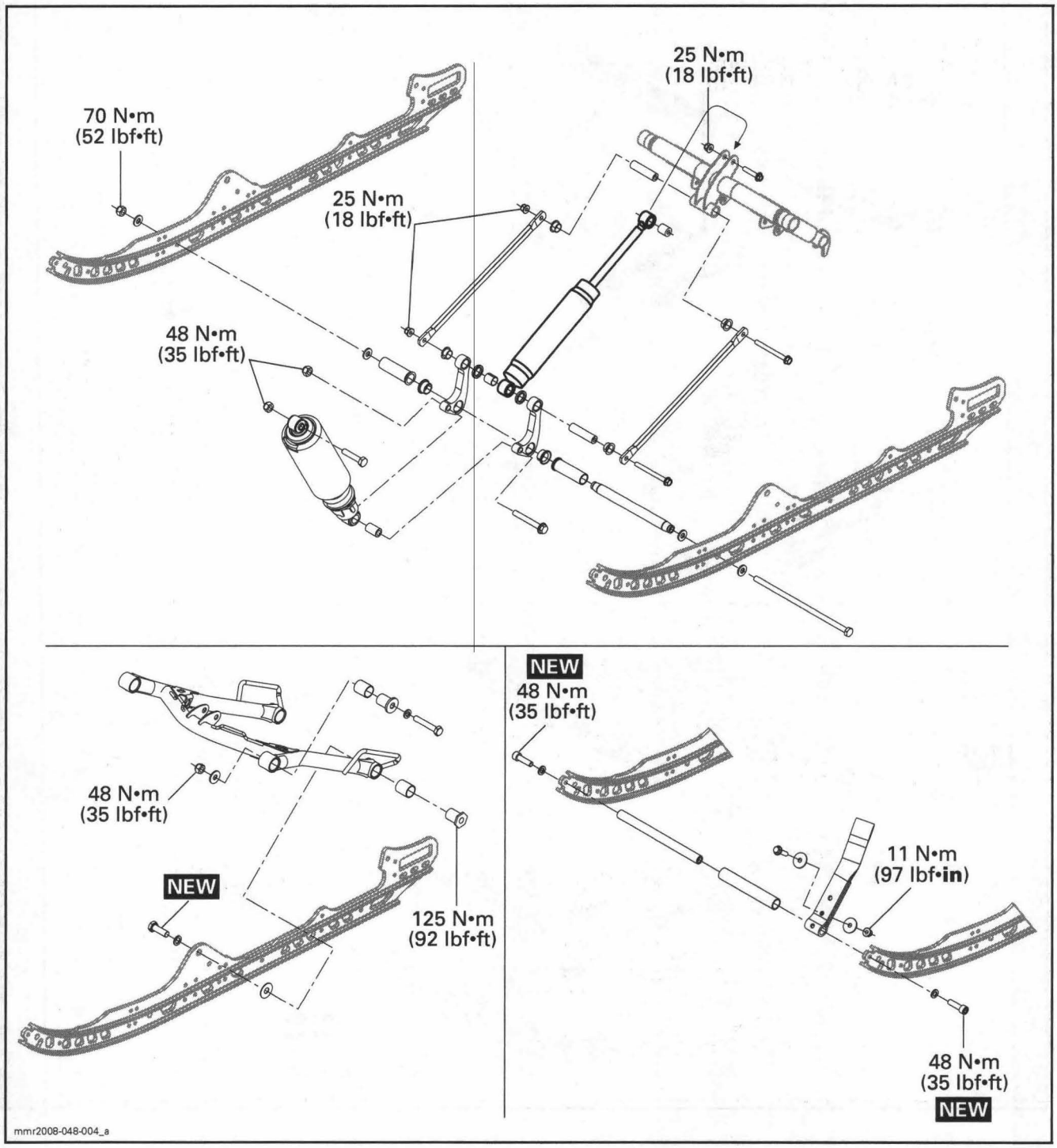

MX Z (Renegade and Renegade X)

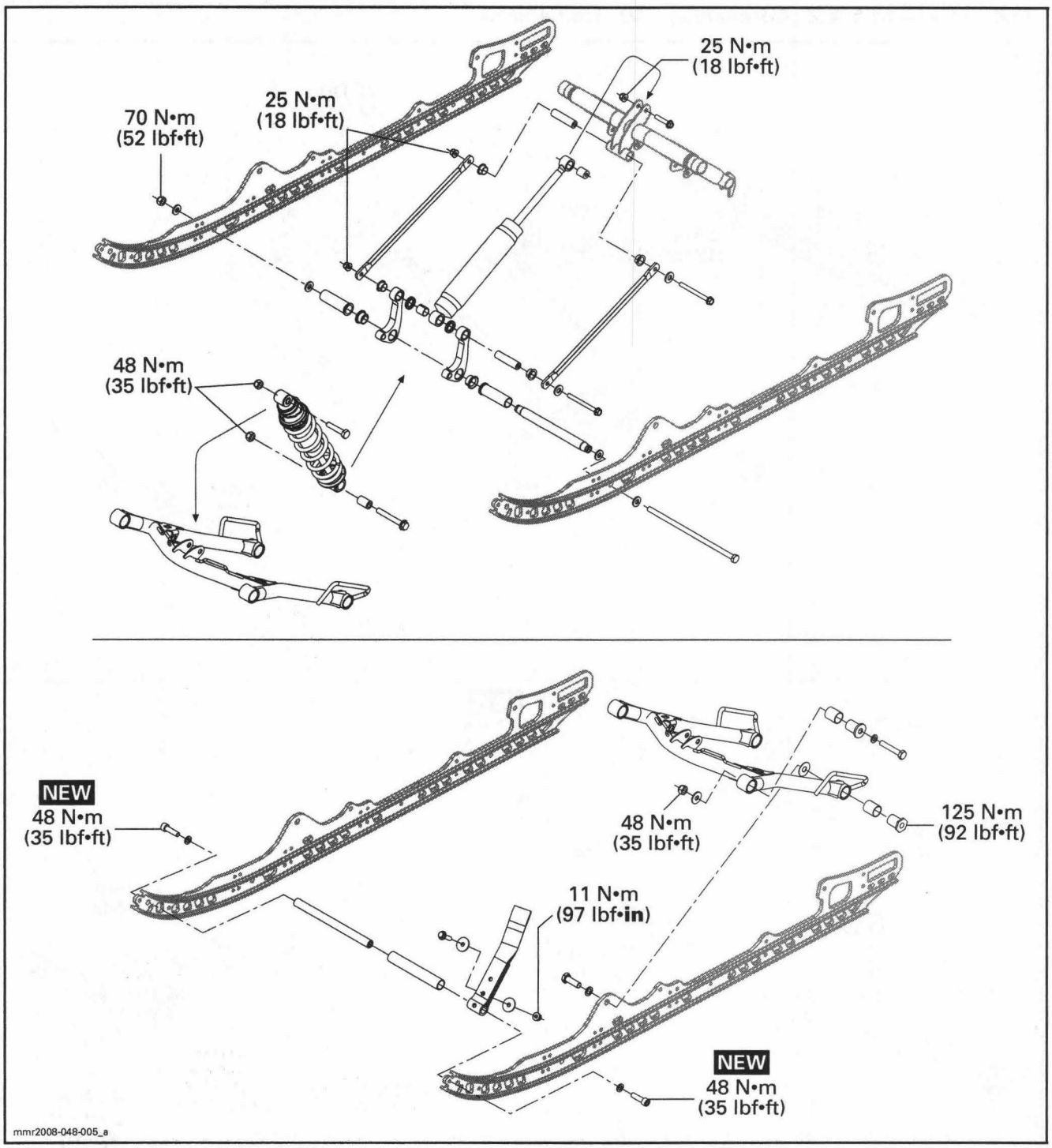

SUMMIT Series

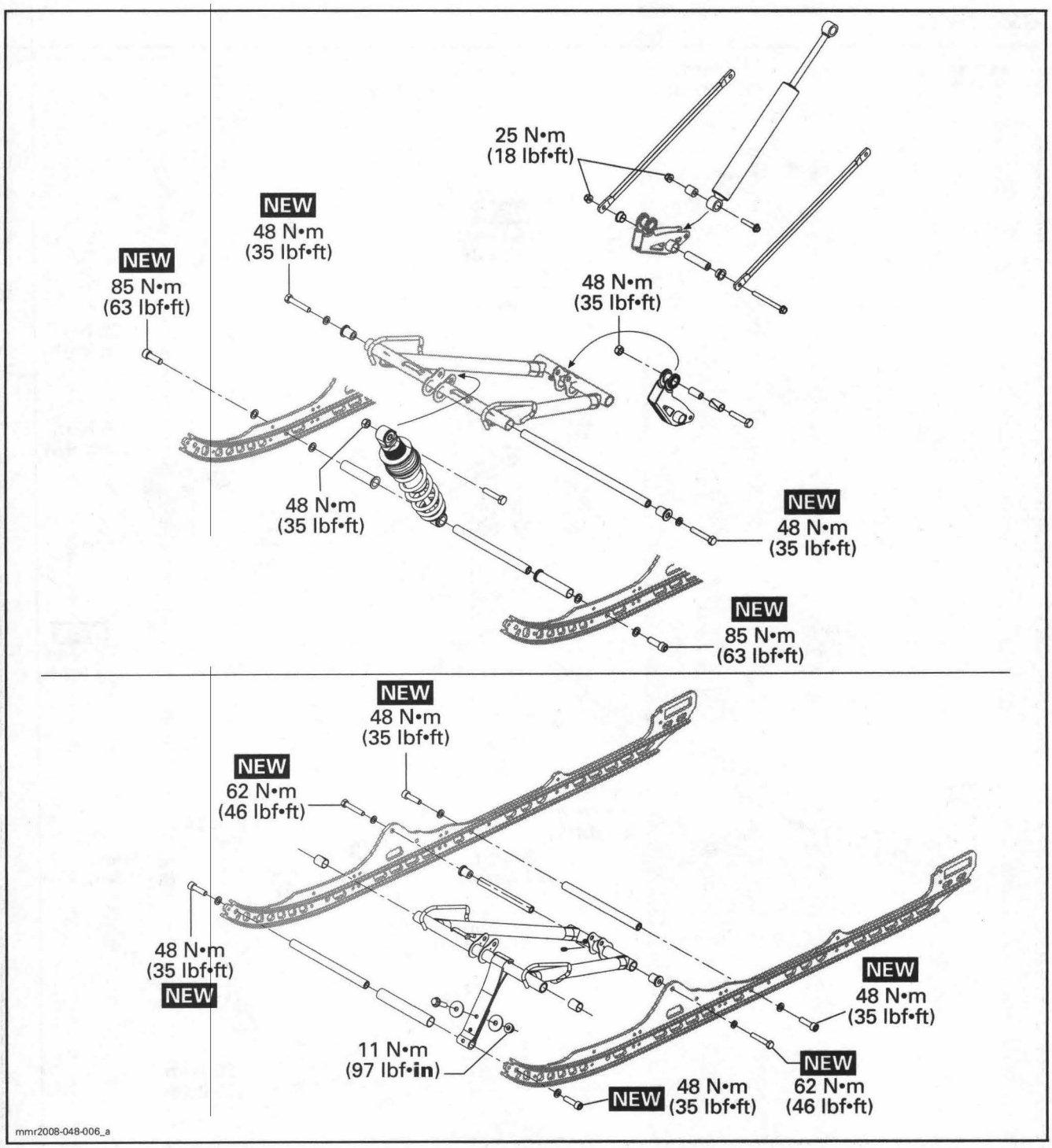

REAR ARM

GSX Series

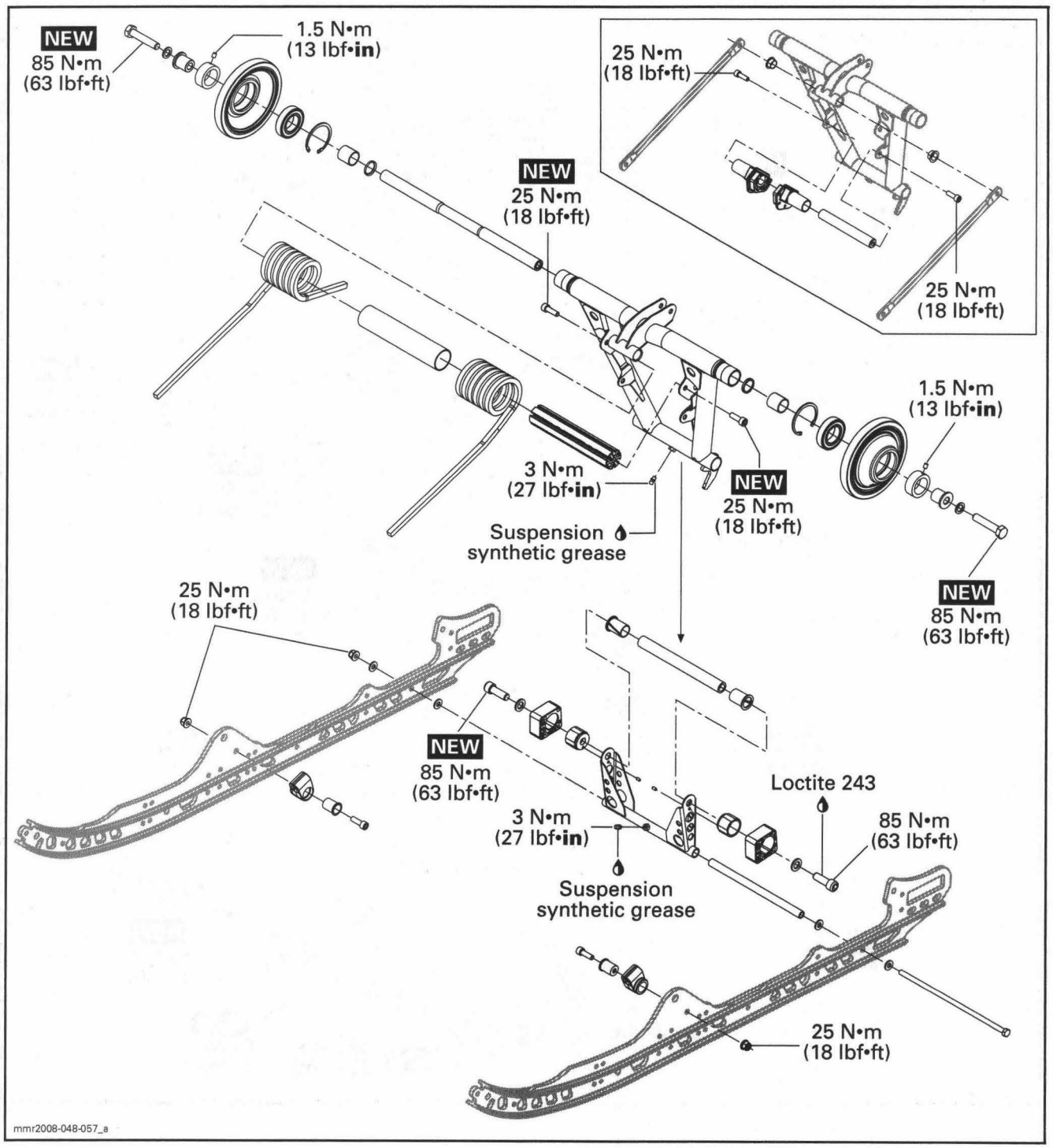

MX Z Series

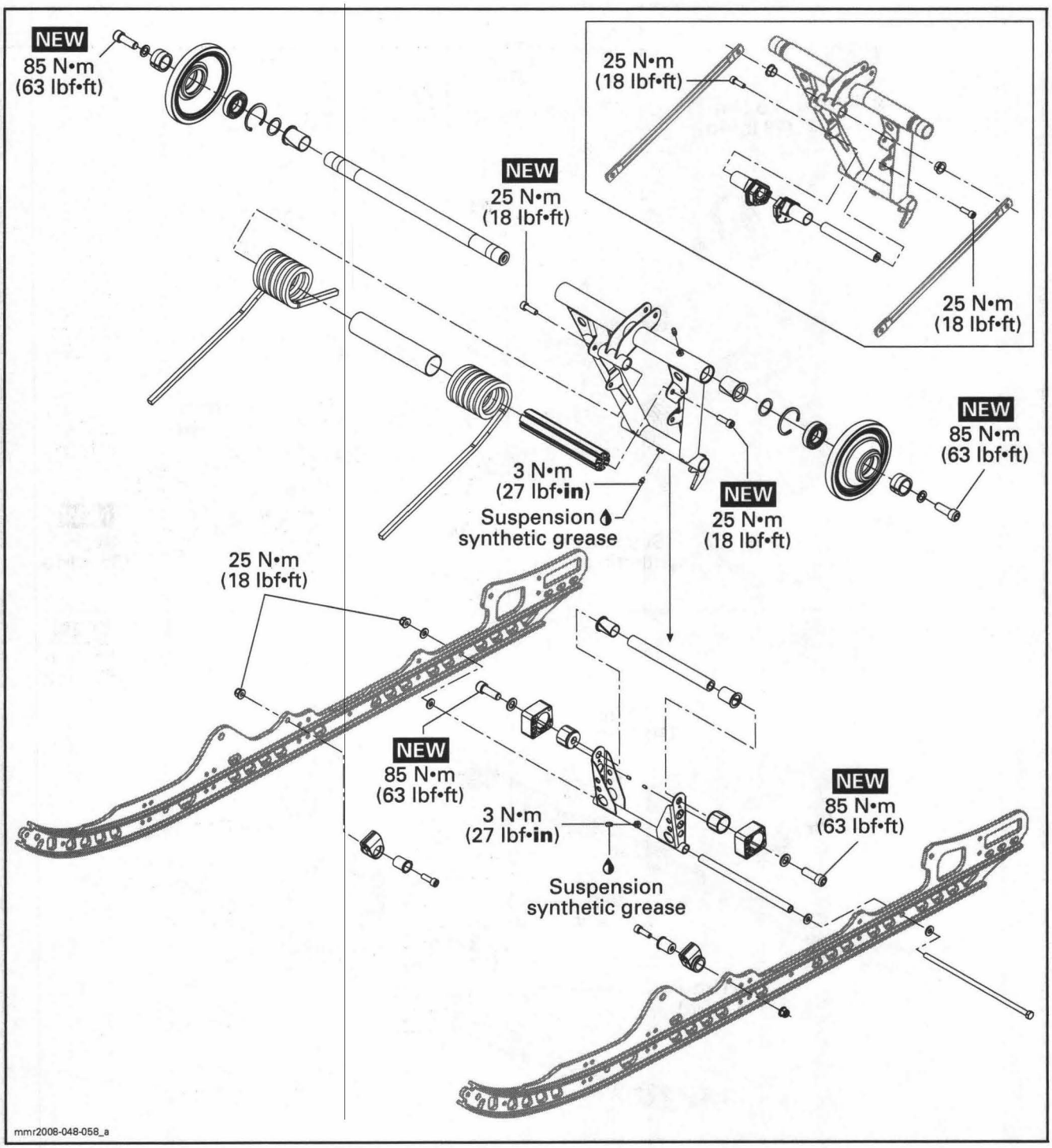
NEW
85 N•m
(63 lbf•ft)
NEW
25 N•m
(18 lbf•ft)
25 N•m
(18 lbf•ft)
25 N•m
(18 lbf•ft)
NEW
85 N•m
(63 lbf•ft)
3 N•m
(27 lbf•in)
Suspension
synthetic grease
NEW
25 N•m
(18 lbf•ft)
25 N•m
(18 lbf•ft)
NEW
85 N•m
(63 lbf•ft)
3 N•m
(27 lbf•in)
Suspension
synthetic grease
NEW
85 N•m
(63 lbf•ft)
mmr2008-048-058_a

SUMMIT Series

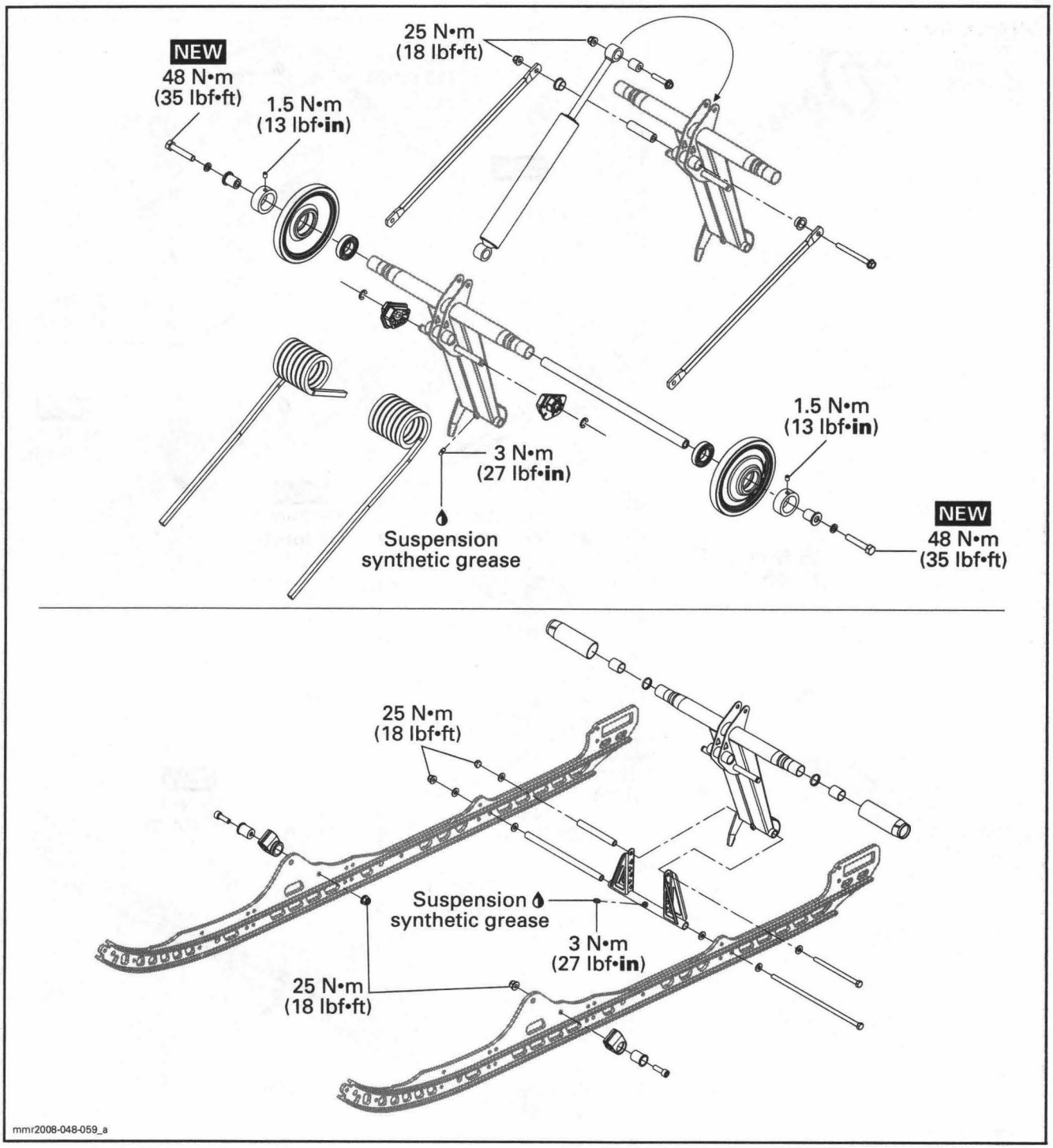

SHOCK ABSORBERS

GSX Series and MX Z Series

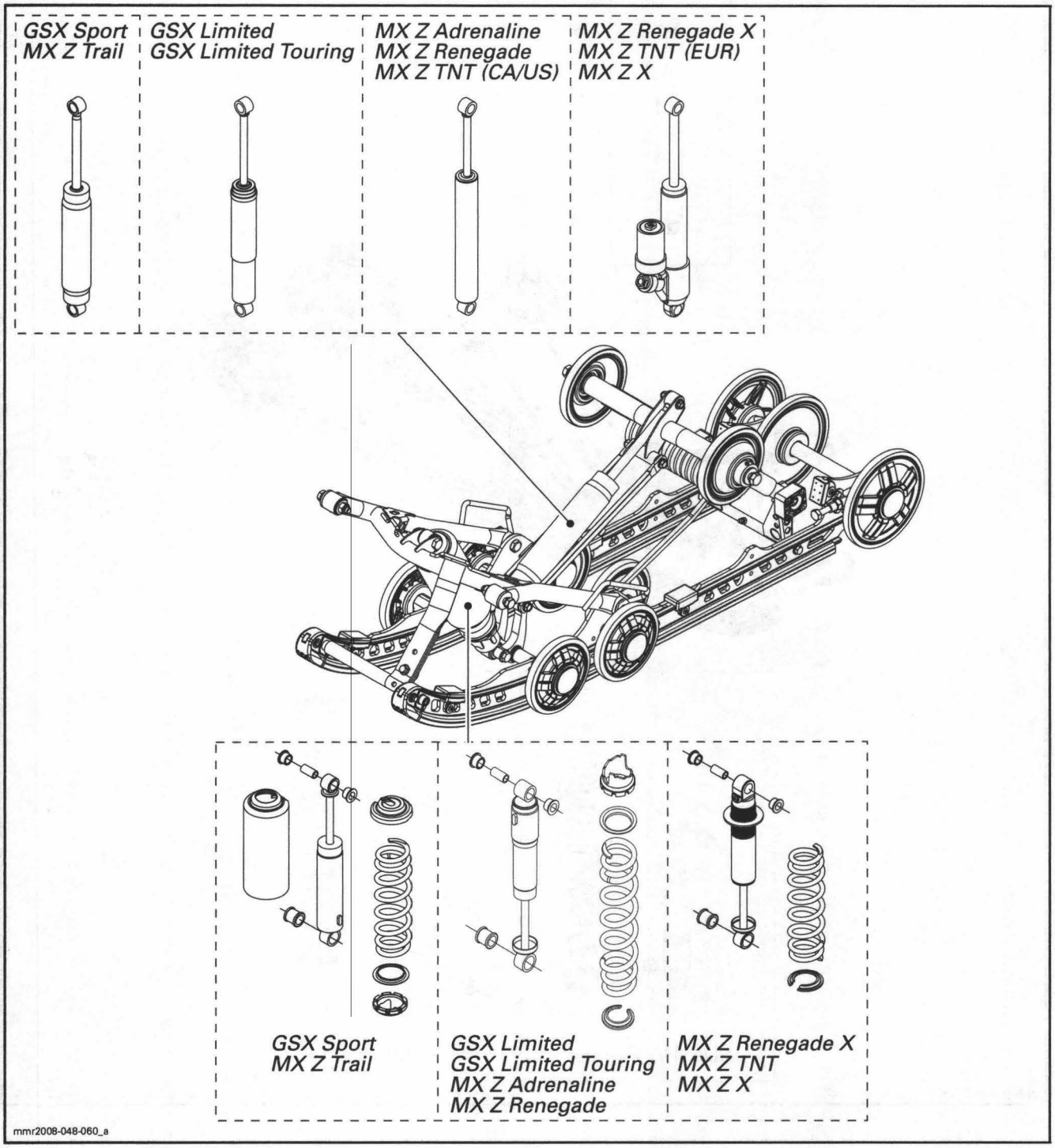

SUMMIT Series

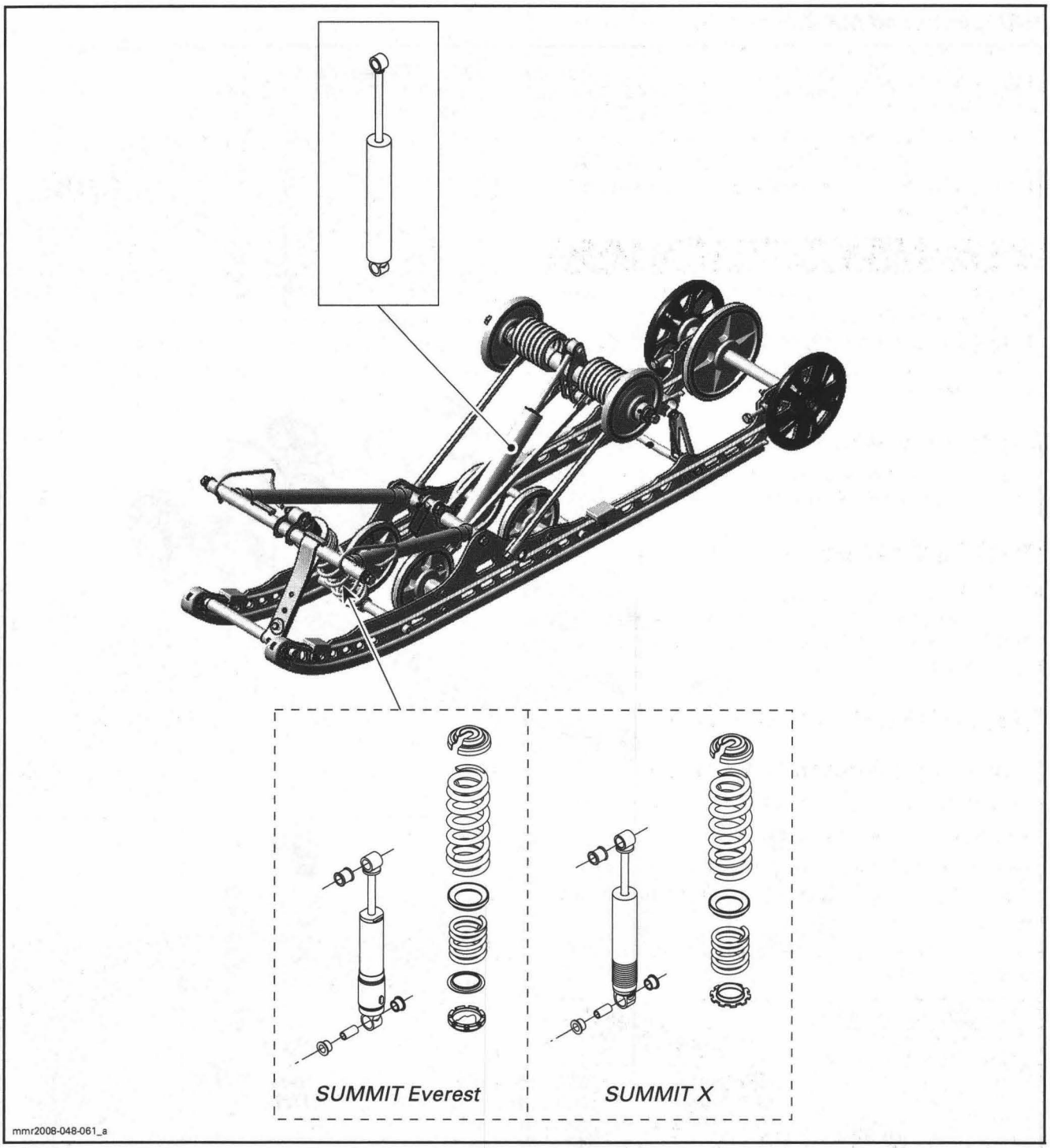

GENERAL

NOTE: Refer to *TECHNICAL SPECIFICATIONS* to identify the snowmobile suspension type.

During assembly/installation, use torque values and service products as in the exploded view.

Clean threads before applying a threadlocker. Refer to *SELF-LOCKING FASTENERS* and *LOCTITE APPLICATION* at the beginning of this manual for complete procedure.

⚠ WARNING

Torque wrench tightening specifications must be strictly adhered to.
Locking devices (e.g.: locking tabs, cotter pins, etc.) must replaced with new ones.

Suspension Adjustment

To adjust the rear suspension, refer to the appropriate *OPERATOR'S GUIDE*.

PROCEDURES

NOTE: Many parts can be changed with rear suspension in place. When specified, refer to *SUSPENSION ASSEMBLY* to remove rear suspension from vehicle.

SUSPENSION ASSEMBLY

Suspension Assembly Removal

Lift rear of vehicle and support it off the ground.

Completely loosen track tension.

Remove and discard rear arm bolts from chassis. Use the following procedure to remove bolts easily.

- Unscrew one of the socket screws securing the rear arm to frame.

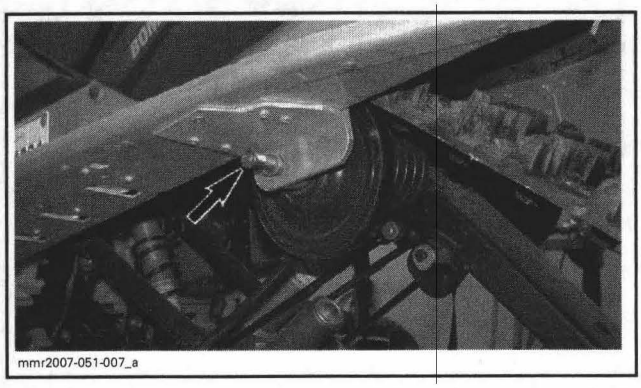
mmr2007-051-007_a

- Replace this socket screw with an hexagonal bolt (longer than socket screw) and a nut.
- Screw the hexagonal bolt completely and lock it with the nut.

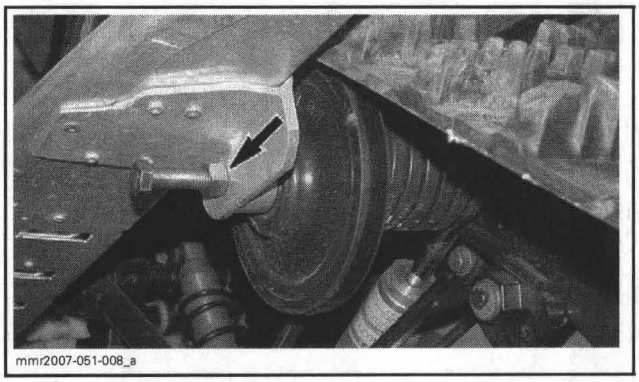
mmr2007-051-008_a

- Unscrew the socket screw on the other side then unlock nut and remove the hexagonal bolt.

Remove bolts retaining front arm to tunnel.

NOTE: On **SUMMIT models**, discard the front arm bolts.

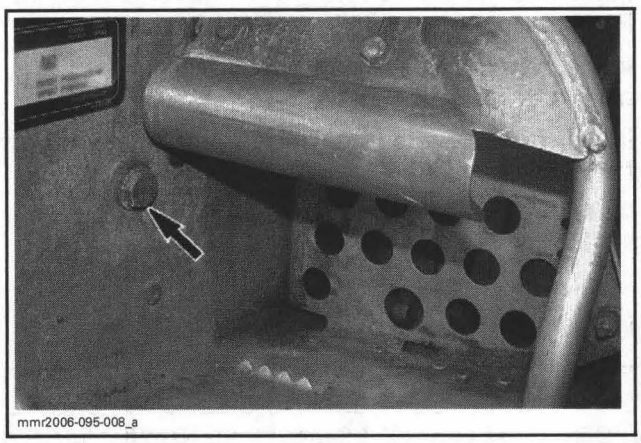
mmr2006-095-008_a

TYPICAL

Lift rear of vehicle until front arm as enough clearance to pass underneath tunnel.

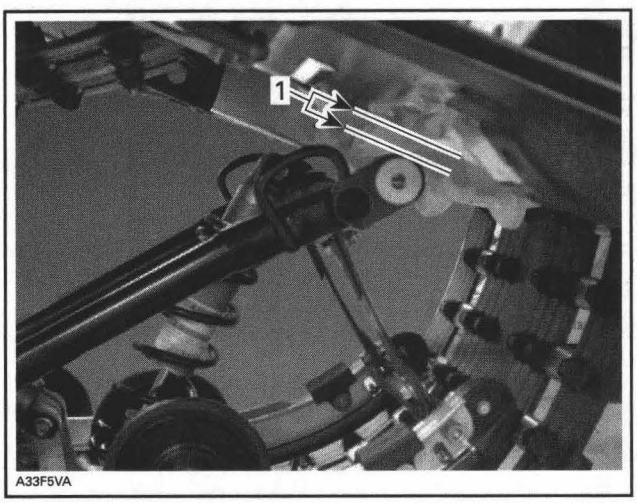

A33F5VA

TYPICAL
1. Enough clearance

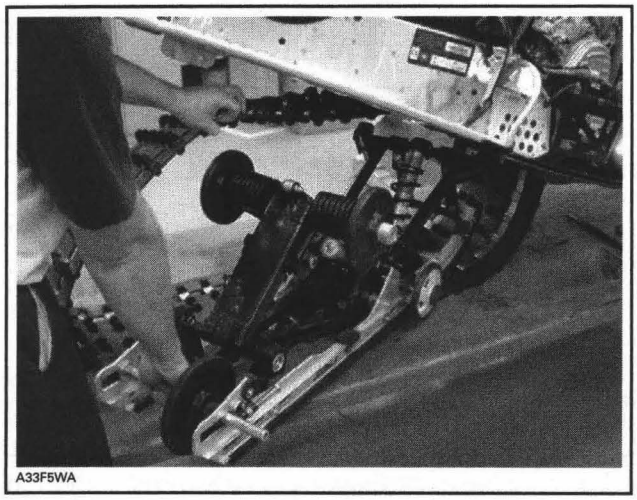

TYPICAL — REMOVE SUSPENSION

Suspension Assembly Installation

Installation is the reverse of removal procedure. Pay attention to the following details.

Inspect track thoroughly before reinstalling suspension. Refer to *TRACK*.

Install suspension into track with front portion first.

Install front arm bolts. On **SUMMIT models**, install NEW bolts.

Torque them to 48 N•m (35 lbf•ft).

Install **NEW** rear arm bolts and tighten them.

REAR ARM BOLTS TIGHTENING	
GSX Series and MX Z Series	85 N•m (63 lbf•ft)
SUMMIT Series	48 N•m (35 lbf•ft)

Adjust track tension.

REAR AXLE

Rear Axle Removal

Lift rear of vehicle and support it off the ground.

Remove rear idler wheel caps.

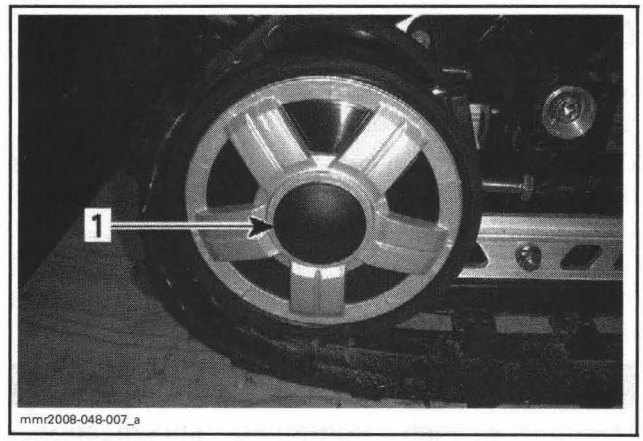

1. RH rear idler wheel cap

Unscrew and remove rear axle screws (one each side).

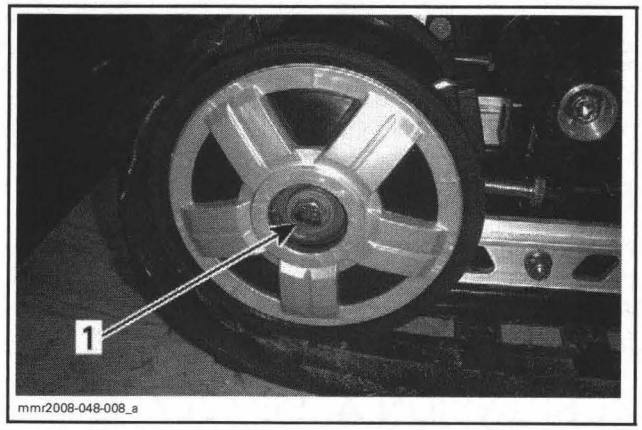

1. RH rear axle screw

Completely loosen track tension by unscrewing both adjustment screws.

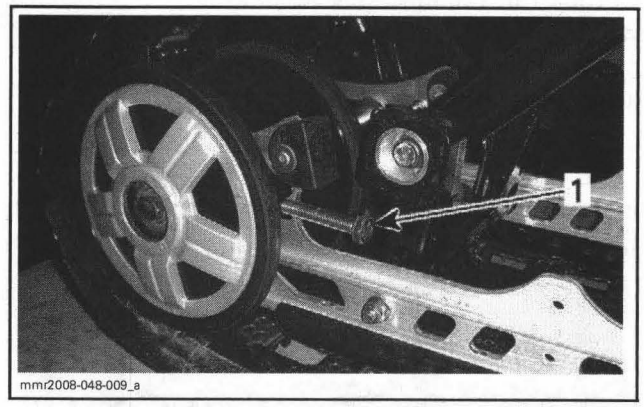

1. RH adjustment screw

Remove rear idler wheels, seals and wheel spacers.

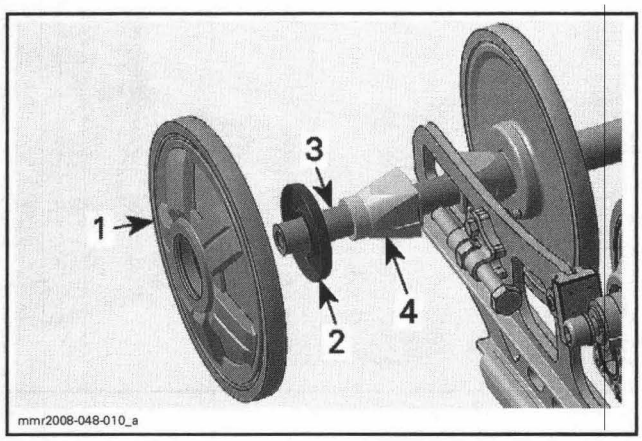

RH SIDE SHOWN
1. *Rear idler wheel*
2. *Seal*
3. *Rear axle*
4. *Wheel spacer*

Pull out the rear axle.

Rear Axle Installation

Installation is reverse of removal procedure. However, pay attention to the following.

Position all parts correctly.

Position wheel spacers with a flat side up and a groove in front of tensioner screw.

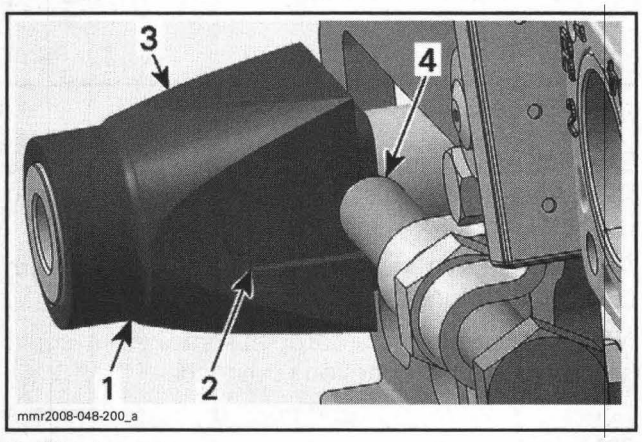

1. *Wheel spacer*
2. *Groove*
3. *Flat side*
4. *Tensioner screw*

NOTE: When tightening rear axle, make sure each wheel spacer protuberance is engaged into runner slot.

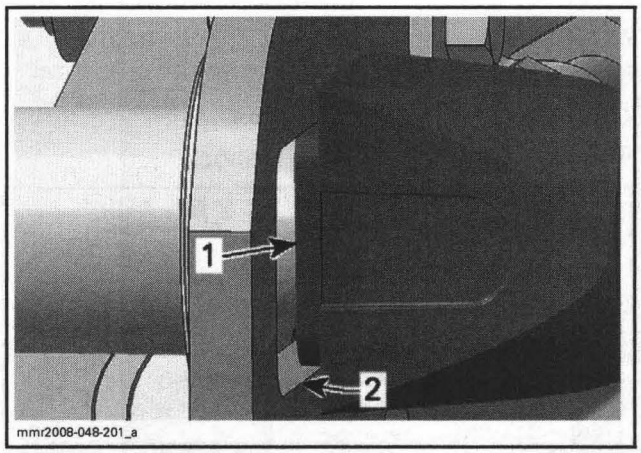

1. *Wheel spacer protuberance*
2. *Runner slot*

MX Z (TNT and X)

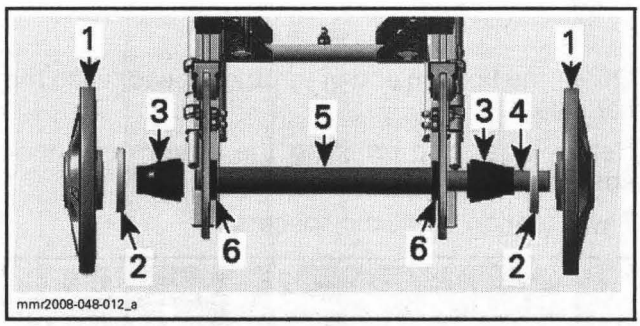

1. *Idler wheels*
2. *Seals*
3. *Wheel spacers*
4. *Rear axle*
5. *Rear axle spacer*
6. *Washers*

All Other Models

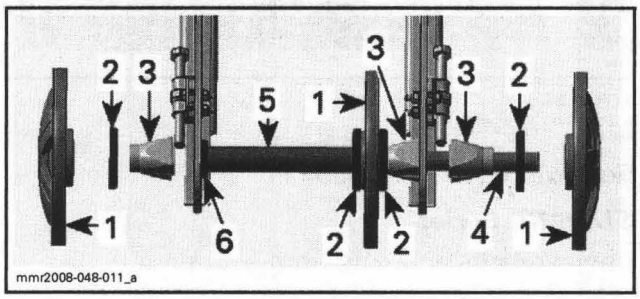

1. *Idler wheels*
2. *Seals*
3. *Wheel spacers*
4. *Rear axle*
5. *Rear axle spacer*
6. *Washer*

Adjust track tension. Refer to *TRACK* section.

REAR SHOCK ABSORBER

Rear Shock Absorber Removal

Lift rear of vehicle and support it off the ground.

NOTE: If necessary, to ease shock removal, unfasten stopper strap to release shock pressure.

GSX Series and MX Z Series

Remove bolts and nuts from shock.

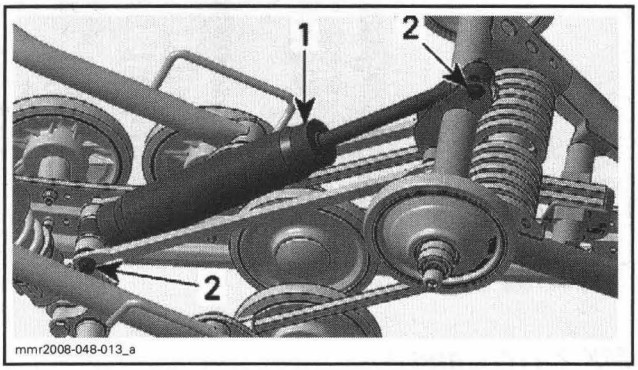

1. Rear shock absorber
2. Remove bolts and nuts

Lower the bottom end of throttle rods to reach the bar axle.

Remove bar axle retaining the bottom of shock absorber.

Pay attention to plastic spacers.

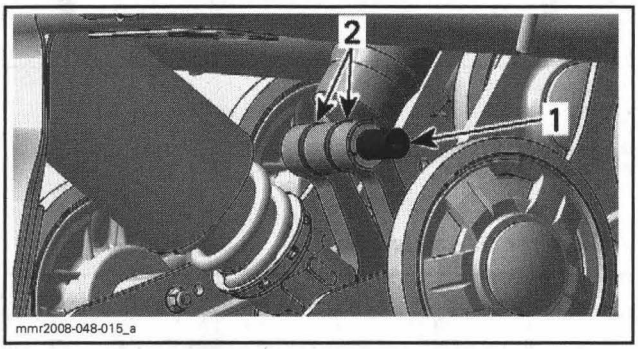

1. Bar axle
2. Plastic spacers

Remove rear shock absorber.

SUMMIT Series

Remove bolts and nuts from shock.

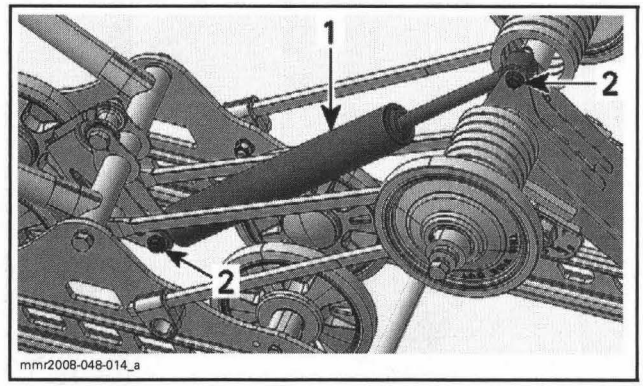

1. Rear shock absorber
2. Remove bolts and nuts

Rear Shock Absorber Inspection

Hydraulic Shock

Secure the shock body end in a vise with its rod upward.

CAUTION: Do not clamp directly on shock body.

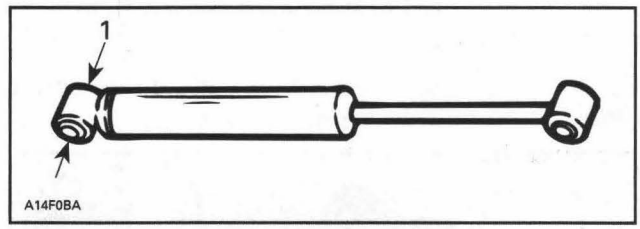

1. Clamp

Examine shock for leaks. Extend and compress the piston at least 5 complete strokes with its rod upward.

After, check that shock moves smoothly and with uniform resistance over its entire stroke.

NOTE: For the first 5 complete strokes, it could be normal to note uneven resistance.

Check the following conditions that will denote a defective shock:

- A skip or a hang back when reversing stroke at mid travel.
- Seizing or binding condition except at extreme end of either stroke.
- Oil leakage.
- A gurgling noise, after completing one full compression and extension strokes.

If suspecting a shock is freezing, place shock in a freezer (temperature below 0°C (32°F)) for 4 hours.

Push down on rod and note its resistance. If shock is frozen it will be much more difficult to compress than one in normal condition.

Renew if any faults are present.

Gas Shock except Variable Rate

Because of gas pressure, strong resistance is felt when compressing shock.

To inspect shock operation, or if suspecting an internal leak between oil chamber and gas chamber, check shock as follows:

Install shock in a vise clamping on its bottom eyelet with its rod upward. Verify the compression stroke when the rod is fully extended.

Completely push down the shock rod then release.

The shock should extend unassisted. Rod must come out at a steady speed. If speed suddenly increases particularly at end of extension, replace shock.

If suspecting a shock is freezing, place shock in a freezer (temperature below 0°C (32°F)) for 4 hours.

Push down on rod and note its resistance. If shock is frozen it will be much more difficult to compress than one in normal condition.

Renew if any faults are present.

Variable Rate Gas Shock

Because of gas pressure, strong resistance is felt when compressing shock.

To inspect shock operation, or if suspecting an internal leak between oil chamber and gas chamber, check shock as follows:

Install shock in a vise clamping on its bottom eyelet with its rod upward. Verify the compression stroke when the rod is fully extended.

Push down the shock rod. The feeling should be stiff for around the first 25 mm (1 in), then softer from 25 up to 50 mm (1 to 2 in) and stiffer again after that. This stiff/soft/stiff phenomenon shows the normal operation of shock.

When released, the shock should extend unassisted. The rod speed coming out will go slow - faster and slow again due to the VR zone.

If suspecting a shock is freezing, place shock in a freezer (temperature below 0°C (32°F)) for 4 hours.

Push down on rod and note its resistance. If shock is frozen it will be much more difficult to compress than one in normal condition.

Renew if any faults are present.

HPG T/A Shock

Because of gas pressure, strong resistance is felt when compressing shock.

To inspect shock operation, or if suspecting an internal leak between oil chamber and gas chamber, check shock as follows:

Install shock in a vise clamping on its bottom eyelet with its rod upward. Verify the compression stroke when the rod is fully extended.

Completely push down the shock rod then release.

The shock should extend unassisted. Rod must come out at a steady speed. If speed suddenly increases particularly at end of extension, replace shock.

If suspecting a shock is freezing, place shock in a freezer (temperature below 0°C (32°F)) for 4 hours.

Push down on rod and note its resistance. If shock is frozen it will be much more difficult to compress than one in normal condition.

Repair or replace if any faults are present. Refer to *SHOCK ABSORBER REBUILT PROCEDURE* at the end of this section.

Rear Shock Absorber Installation

Installation is reverse of removal procedure. Pay attention to the following.

To ease shock installation, secure upper shock first.

GSX Series and MX Z Series

If the shock absorber has a remote reservoir, make sure to install the shock so that reservoir is facing down.

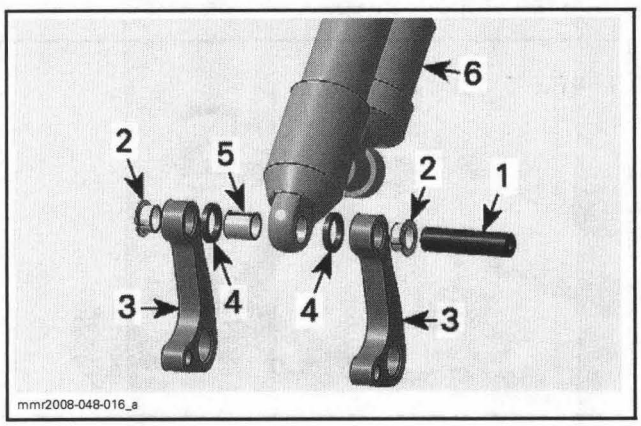

1. *Bar axle*
2. *Bushings*
3. *Rocker arms*
4. *Plastic spacers*
5. *Inner sleeve*
6. *Reservoir position*

FRONT SHOCK ABSORBER

Front Shock Absorber Removal

Lift rear of vehicle and support it off the ground.

GSX Series and MX Z Series

Unfasten stopper strap.

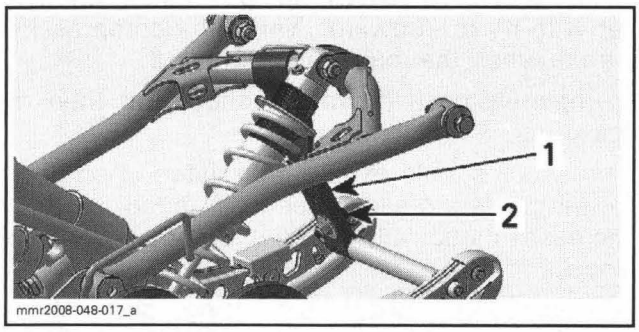

1. Stopper strap
2. Stopper strap bolt

Remove bolts and nuts from shock.

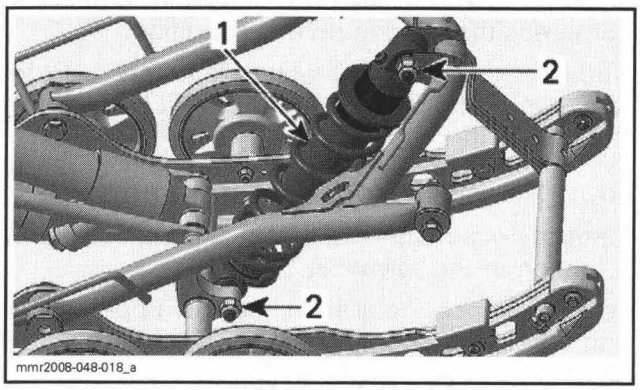

1. Front shock absorber
2. Remove bolts and nuts

SUMMIT Series

Unfasten stopper strap.

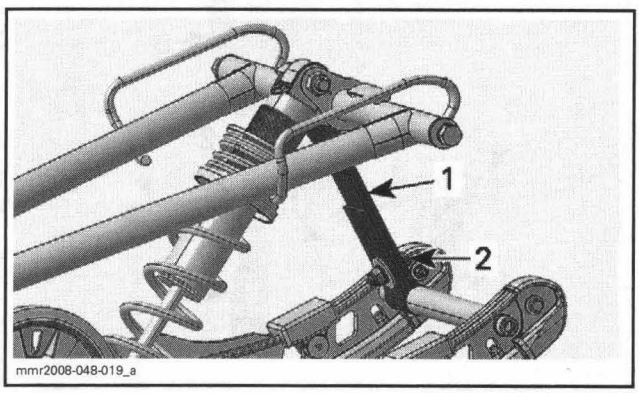

1. Stopper strap
2. Stopper strap bolt

Remove upper shock absorber bolt.

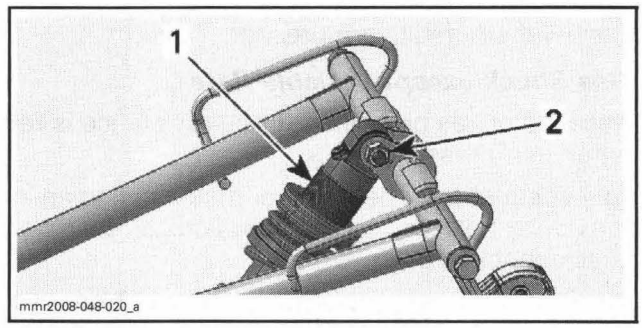

1. Front shock absorber
2. Remove bolt and nut

Remove socket screws (one each side) securing shock shaft.

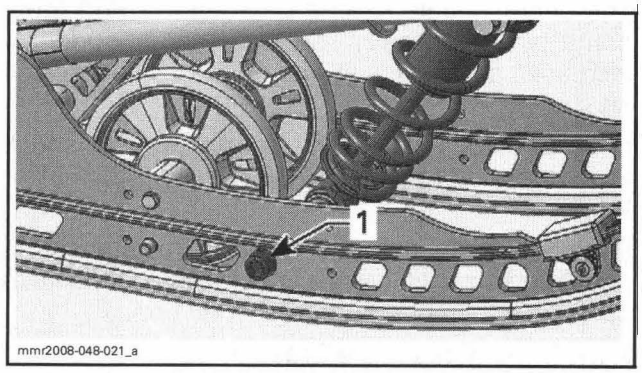

1. RH socket screw

Remove shock absorber from vehicle.

Remove bushings and shock shaft from shock absorber.

Front Shock Absorber Installation

Installation is reverse of removal procedure. Pay attention to the following details.

GSX (Sport) and MX Z (Trail)

Position the cam downwards.

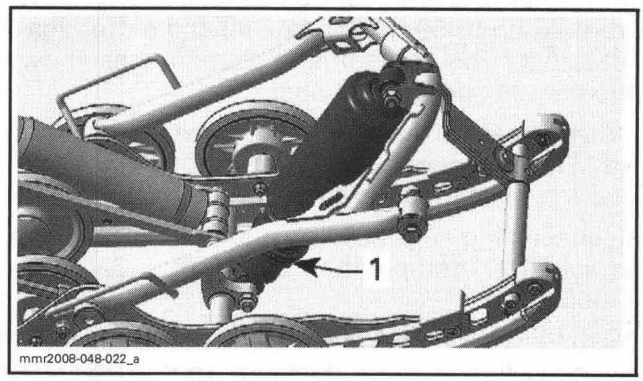

1. Cam

All Other Models

Position the adjustment ring or the cam upwards and the valve towards the tunnel.

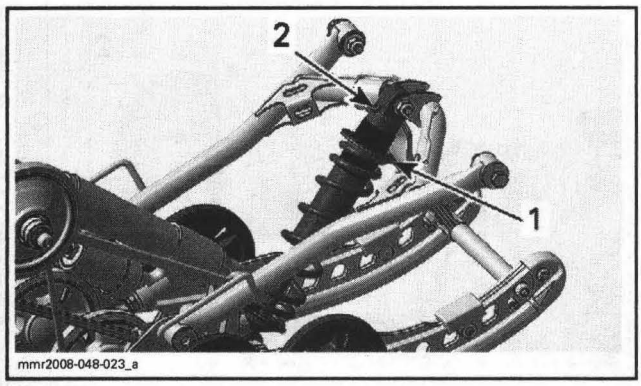

TYPICAL
1. *Adjustment ring*
2. *Valve*

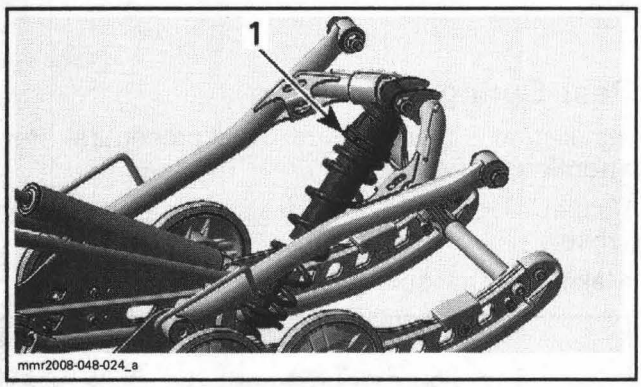

TYPICAL
1. *Cam*

SUMMIT Series

Position washers in proper position.

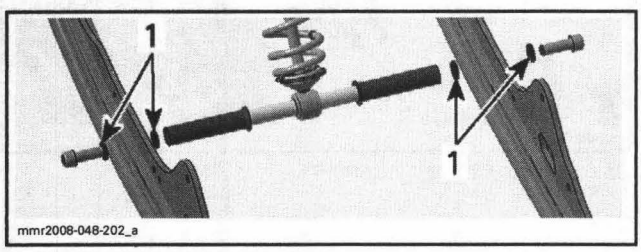

BOTTOM OF SHOCK ABSORBER
1. *Washers location*

REAR SPRING

Rear Spring Removal

Lift rear of vehicle and support it off the ground.

GSX Series and MX Z Series

Decrease springs preload by turning cams accordingly.

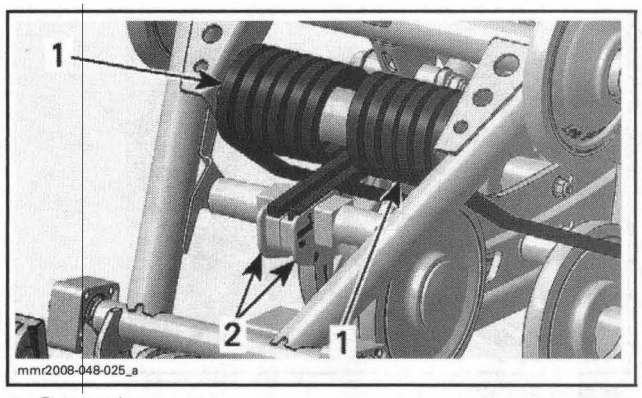

1. *Rear springs*
2. *Cams*

Remove idler wheels to have access to spring support screws.

Remove spring supports.

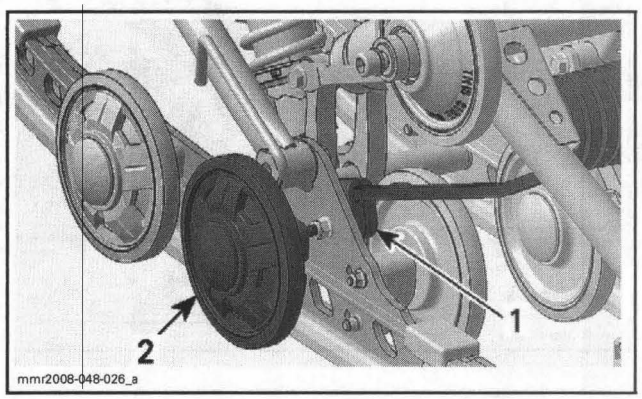

1. *LH spring support*
2. *Idler wheel*

Remove spring axle screws (one each side).

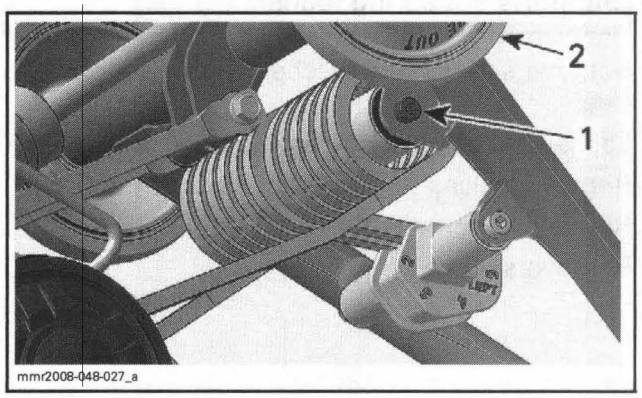

1. *Spring axle screw*
2. *Upper idler wheel*

Remove springs and spring axle.

SUMMIT Series

Completely loosen track tension by unscrewing both adjustment screws.

Decrease springs preload by turning cams accordingly.

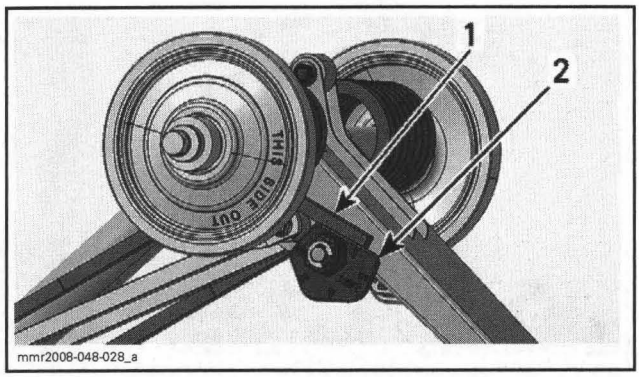

LH SIDE SHOWN
1. *Rear spring*
2. *Cam*

Unscrew spring supports (one each side).

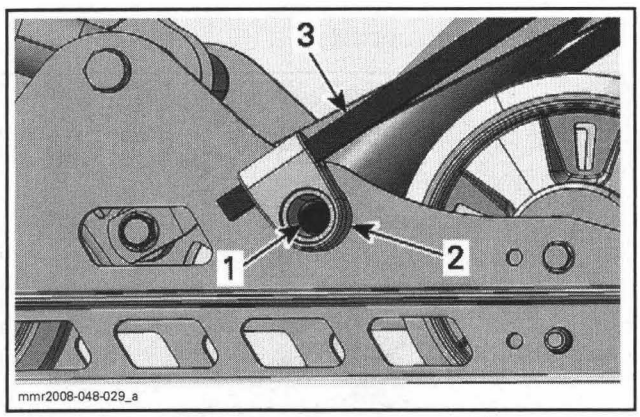

1. *Spring support bolt*
2. *Spring support*
3. *Spring*

⚠ WARNING

Supports are spring loaded.

Remove screws and washers from rear arm top axle.

Loosen set screw from locking rings.

Remove locking rings.

Remove upper idler wheels.

Remove springs.

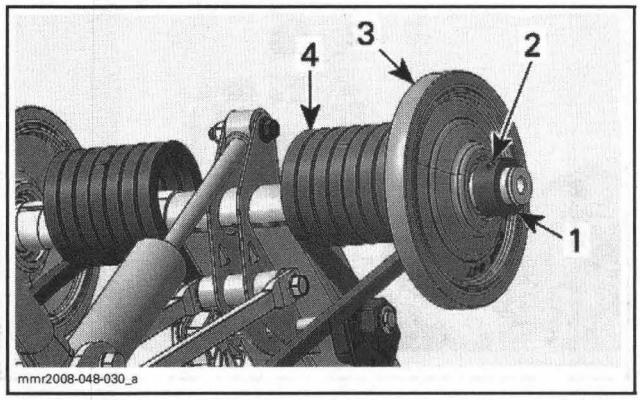

LH SIDE SHOWN
1. *Locking ring*
2. *Set screw*
3. *Upper idler wheel*
4. *Rear spring*

Rear Spring Installation

Installation is reverse of removal procedure. Pay attention to the following.

Respect THIS SIDE OUT inscription on top idler wheels.

Make sure that spring end is in cam adjuster.

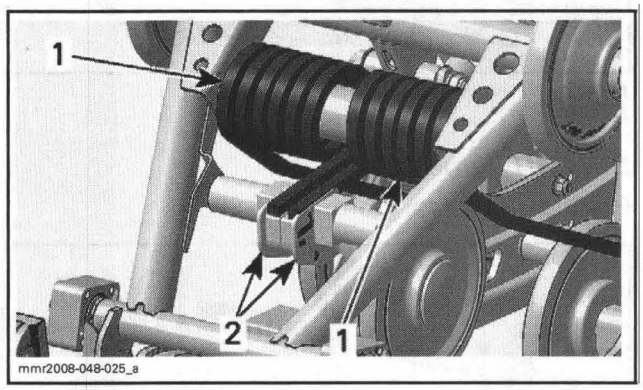

GSX SERIES AND MX Z SERIES
1. *Rear springs*
2. *Cams*

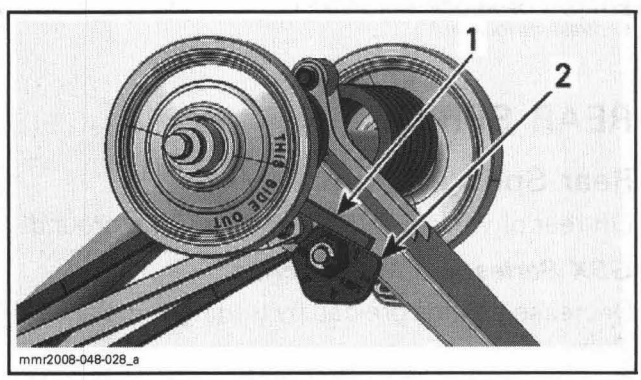

SUMMIT SERIES — LH SIDE SHOWN
1. *Spring end*
2. *Cam*

Install spring supports upwards.

MX Z (Renegade and Renegade X)

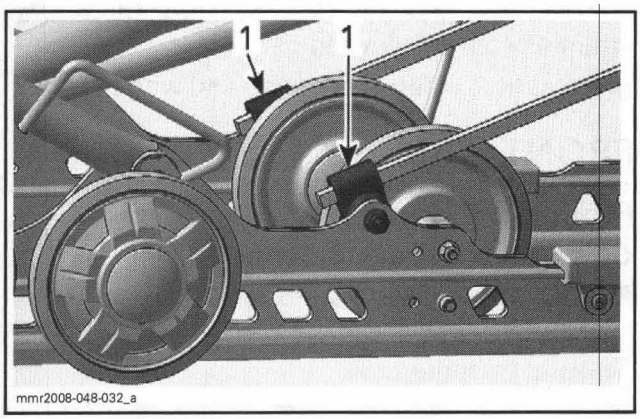

1. Spring supports upwards

GSX Series and MX Z (Adrenaline, TNT, Trail and X)

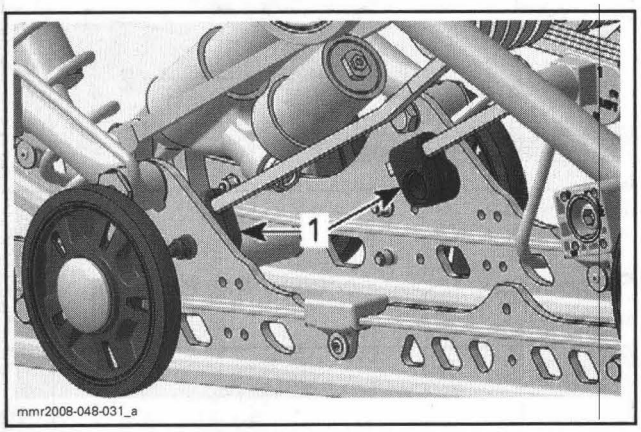

1. Spring supports upwards

SUMMIT Series

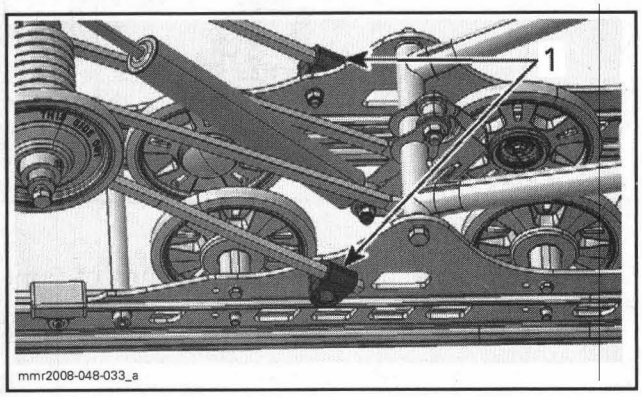

1. Spring supports upwards

SLIDER SHOE

Slider Shoe Inspection

Replace slider shoes when the wear reach 1 - 2 mm (.040 - .079 in) beyond the moulding line.

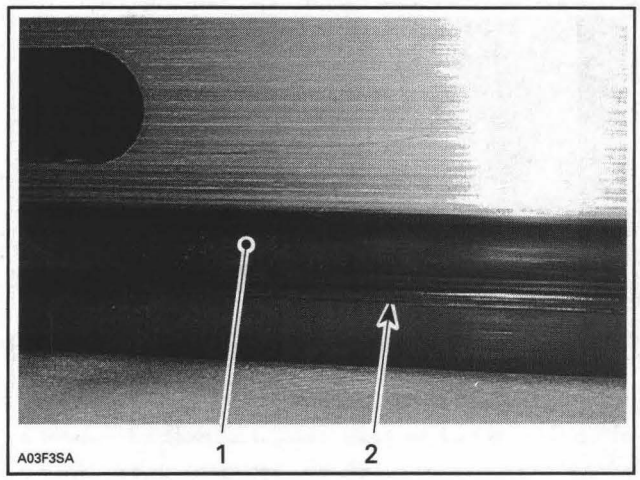

TYPICAL
1. Slider shoe
2. Molding line

CAUTION: Slider shoes must always be replaced in pairs.

Slider Shoe Removal

Lift rear of vehicle and support it off the ground.

Completely loosen track tension.

Remove nut and screw of each runner.

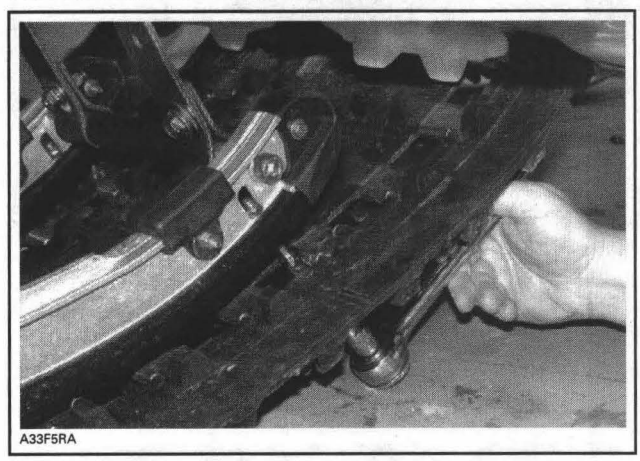

REMOVE NUT AND SCREW OF EACH RUNNER

Align track window with slider shoe.

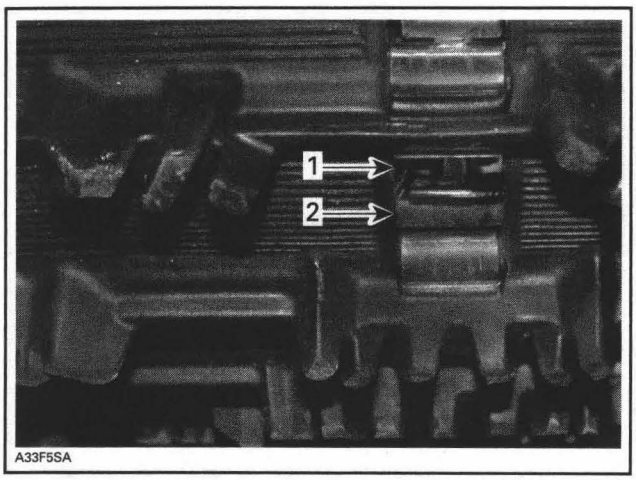

TYPICAL
1. *Track window*
2. *Slider shoe*

Using a pry bar or screw driver, push slider shoe until it comes in contact with track.

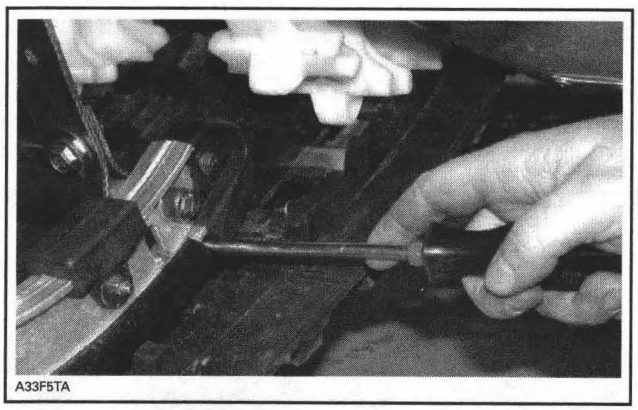

PUSH ON SLIDER SHOE

Using locking pliers, pull slider shoe through track window to remove.

NOTE: If necessary, lubricate track window to facilitate slider shoe removal.

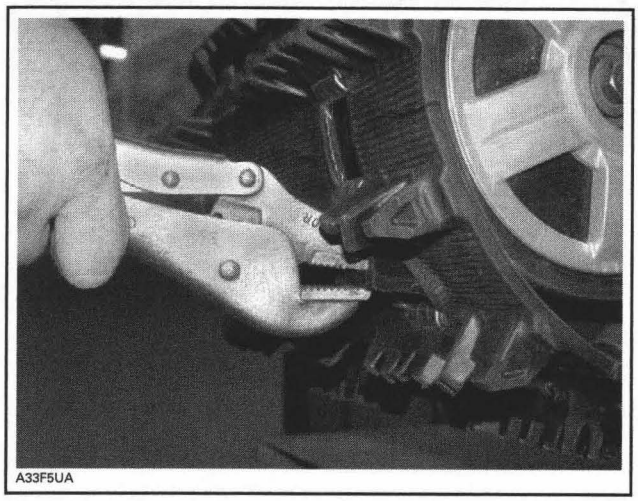

PULL ON SLIDER SHOE TO REMOVE

Slider Shoe Installation

Installation is reverse of removal procedure. Pay attention to the following detail.

Make sure to insert slider shoe end with hole first.

FRONT ARM

Front Arm Removal

GSX Series and MX Z Series

Remove *SUSPENSION ASSEMBLY*, see procedure in this section.

Unfasten stopper strap.

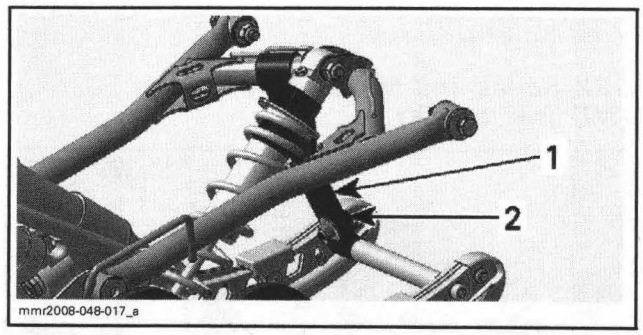

1. *Stopper strap*
2. *Stopper strap bolt*

Remove upper bolt securing the front shock absorber.

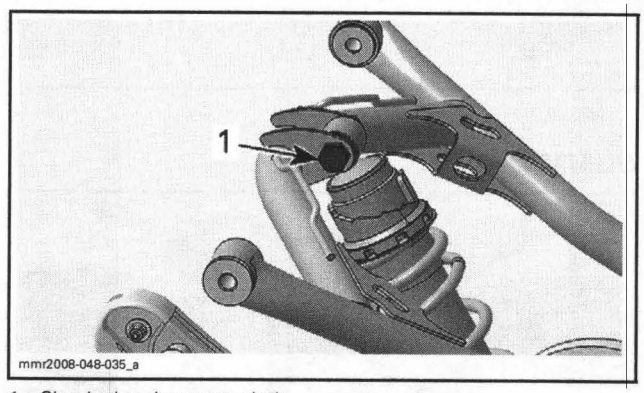

1. *Shock absorber upper bolt*

Unscrew bolts securing the bottom ends of front arm.

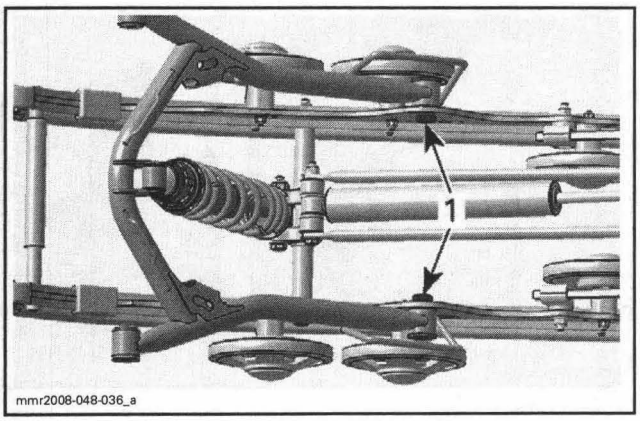

1. Front arm lower bolts

SUMMIT Series

Lift rear of vehicle and support it off the ground.

Remove bolt securing rocker to front arm.

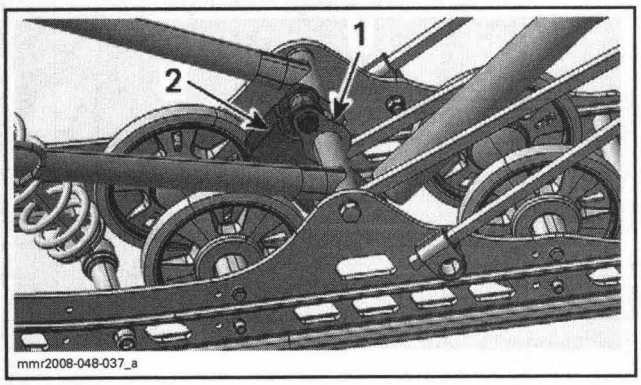

1. Front arm
2. Rocker

Unscrew and remove the front arm lower bolts and washers.

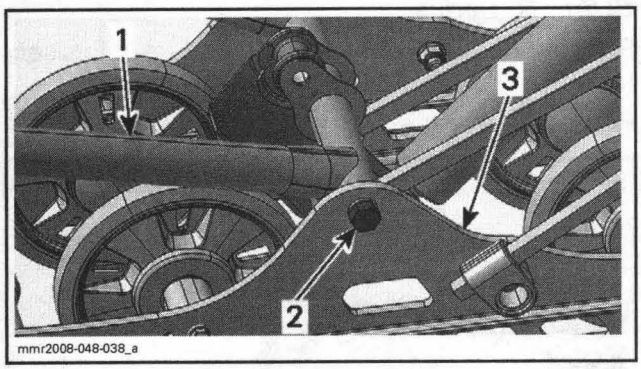

1. Front arm
2. Lower bolt
3. LH runner

Remove the shock absorber upper bolt.

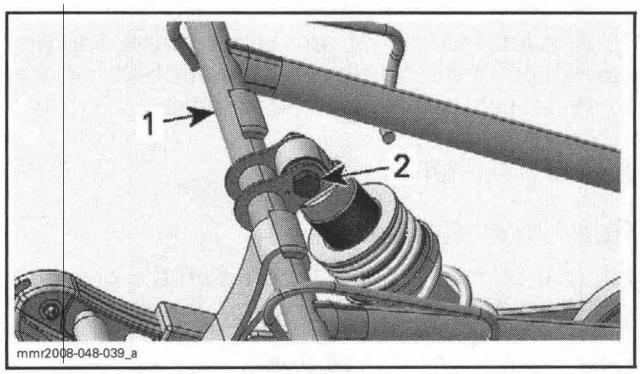

1. Front arm
2. Shock absorber upper bolt

Unfasten stopper strap.

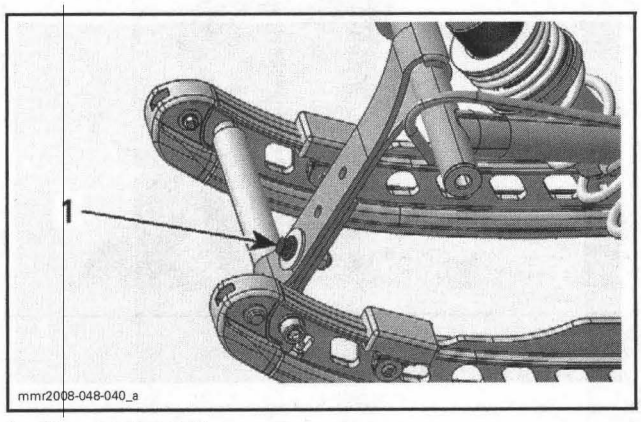

1. Stopper strap bolt

Remove and discard front arm upper bolts.

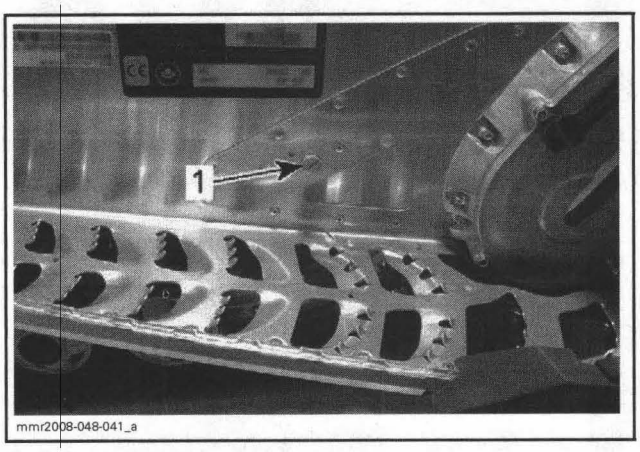

1. Bolt

Remove front arm.

Front Arm Installation

Installation is reverse of removal procedure. Pay attention to the following details.

Install front arm bolts. On **SUMMIT models**, install NEW bolts.

Torque them to 48 N•m (35 lbf•ft).

To properly hold front arm axles when applying tightening torque to front arm lower bolts, it may be necessary to remove idle wheels.

REAR ARM

Rear Arm Removal

Lift rear of vehicle and support it off the ground.

Completely loosen track tension.

GSX Series and MX Z Series

Remove rear shock absorber upper bolt.

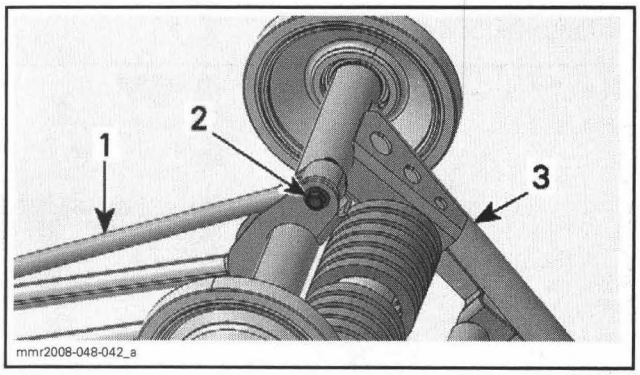

1. *Rear shock absorber*
2. *Shock absorber bolt*
3. *Rear arm*

Remove bolt securing throttle rods to rear arm.

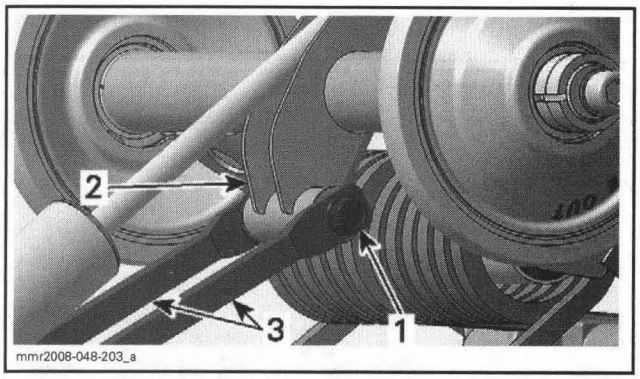

1. *Throttle rod bolt*
2. *Rear arm*
3. *Throttle rods*

Remove *REAR SPRING*, see procedure in this section.

Loosen coupling block screws securing rear arm to pivot arm.

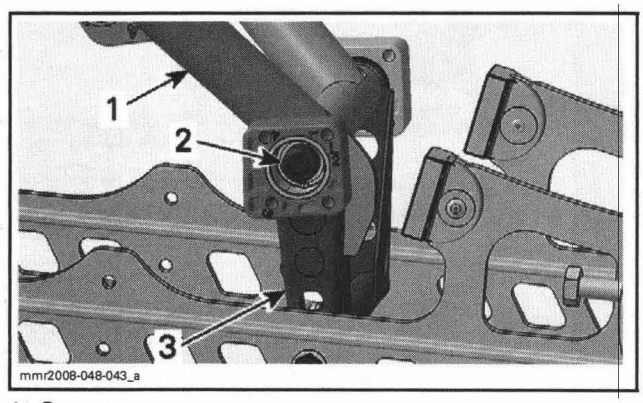

1. *Rear arm*
2. *LH coupling block bolt*
3. *Pivot arm*

Remove bolts and washers holding pivot arm to runners.

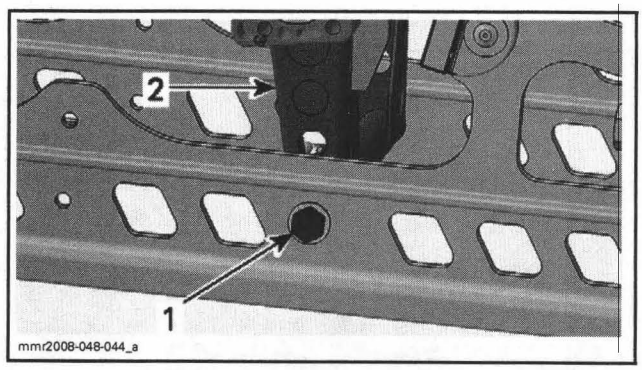

1. *LH pivot arm bolt*
2. *Pivot arm*

Remove rear arm.

Separate pivot arm from rear arm. Discard coupling block screws.

SUMMIT Series

Remove *REAR SPRING*, see procedure in this section.

Remove the rear shock absorber upper bolt.

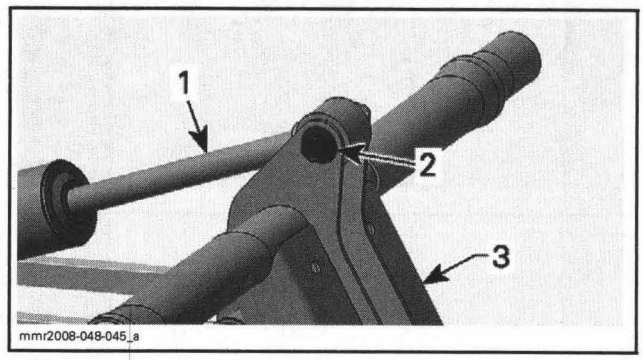

1. *Rear shock absorber*
2. *Shock absorber bolt*
3. *Rear arm*

Remove throttle rods from rear arm.

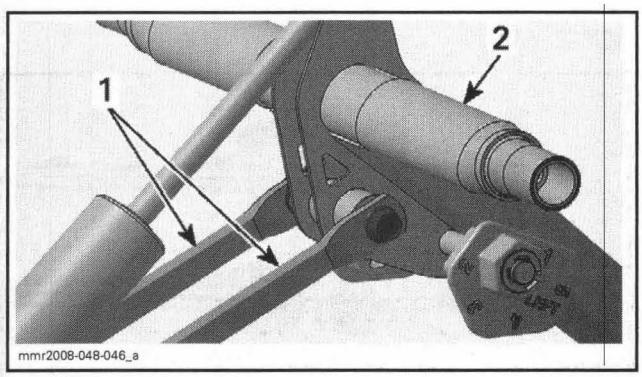

1. *Throttle rods*
2. *Rear arm*

Remove bolts and washers holding rear arm to pivot arm.

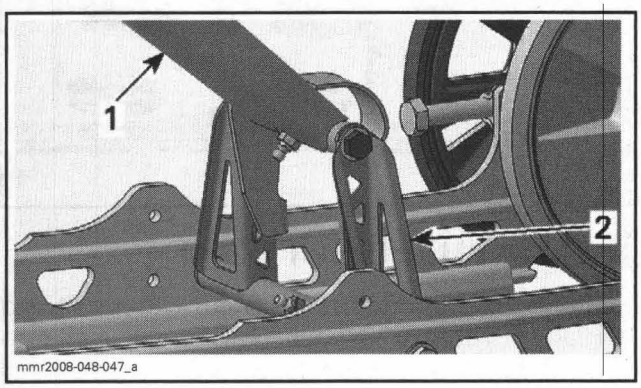

1. *Rear arm*
2. *Pivot arm*

Rear Arm Installation

Installation is reverse of removal procedure. Pay attention to the following details.

Pivot arm grease fitting must be towards the front of the vehicle.

At installation, rear arm stroke limiter must be on rear side.

GSX Series and MX Z Series

Install coupling block with **NEW** socket screws.

All Models

Install **NEW** rear arm bolts and tighten them.

REAR ARM BOLTS TIGHTENING	
GSX Series and MX Z Series	85 N•m (63 lbf•ft)
SUMMIT Series	48 N•m (35 lbf•ft)

Rear Arm Lubrication

Lubricate pivot arm and rear arm at grease fittings using suspension synthetic grease (P/N 293 550 033).

GSX Series

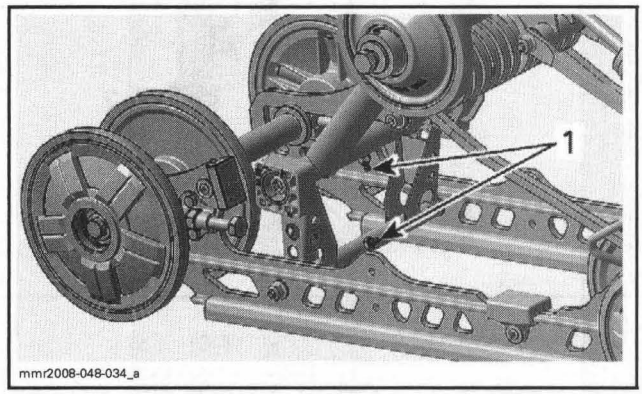

1. *Grease fittings*

MX Z Series

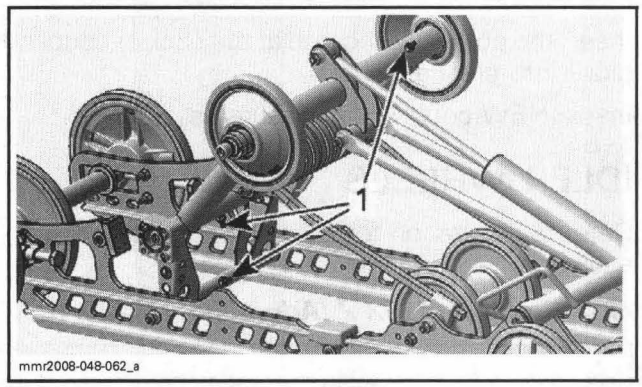

1. *Grease fittings*

SUMMIT Series

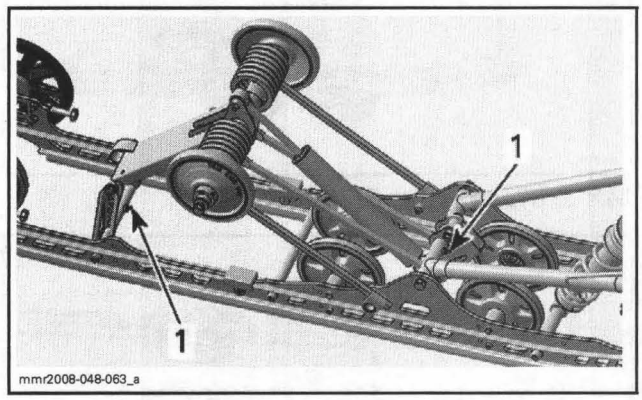

1. *Grease fittings*

COUPLING BLOCK

GSX Series and MX Z Series

Both coupling blocks are identified "R" or "L" (right or left) and have position number (from 1 to 4). At installation make sure to install proper block on proper side with the same adjustment position on both sides.

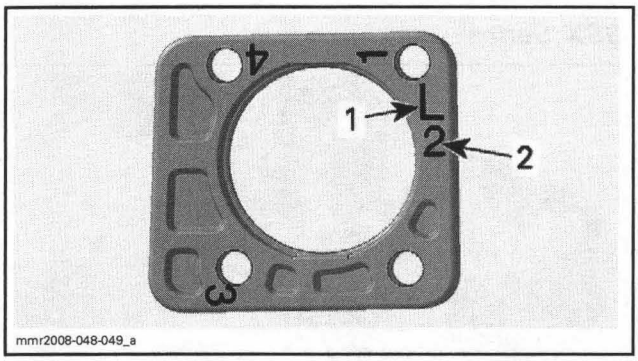

TYPICAL
1. *Blocks are identified "R" or "L" (right or left)*
2. *Blocks position number (from 1 to 4)*

MODELS	BLOCK POSITION
All models	1

Insert the dowel pin located at the back of coupling block into pivot arm hole.

Install **NEW** coupling block screws.

IDLER WHEELS

Refer to illustration for idler wheels position at installation.

GSX Series and MX Z (Adrenaline, Trail and X)

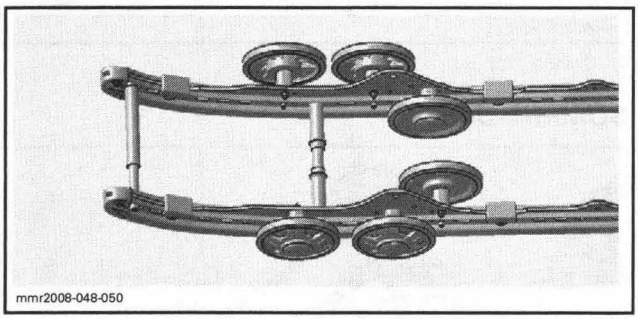

MX Z (Renegade, Renegade X)

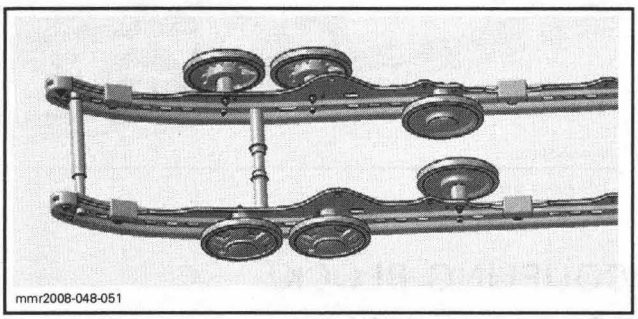

MX Z (TNT)

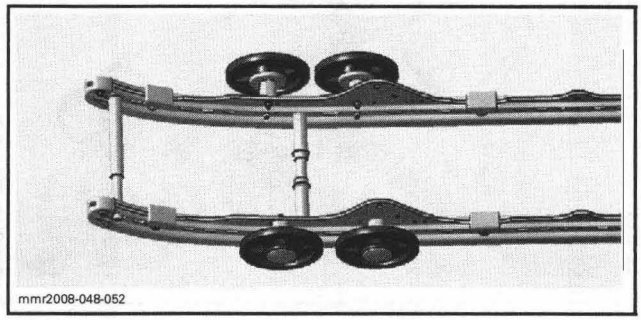

SUMMIT Series

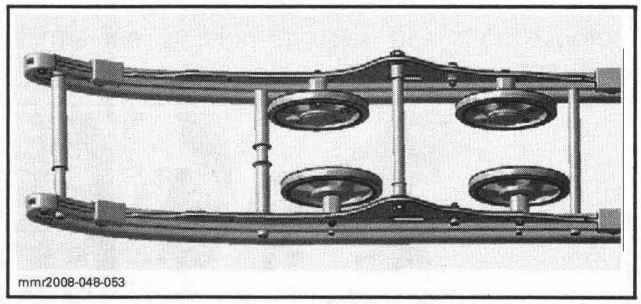

IDLER WHEEL SUPPORT

Idler wheel supports are retained with a bolt and a HUCK rivet. To remove HUCK rivet, refer to *FRAME* for proper procedure.

Replace the HUCK rivets by the following fasteners.

NEW FASTENERS	
Hexagonal flanged bolt M6 x 25	(P/N 207 662 544)
Hexagonal flanged elastic stop nut M6	(P/N 233 261 414)

STOPPER STRAP

Inspect strap for wear or cracks, bolt and nut for tightness. If loose, inspect hole for deformation. Replace as required.

Make sure it is attached through proper hole from the end.

Torque nut to 11 N•m (97 lbf•**in**).

GSX (Limited, Sport) and MX Z Series

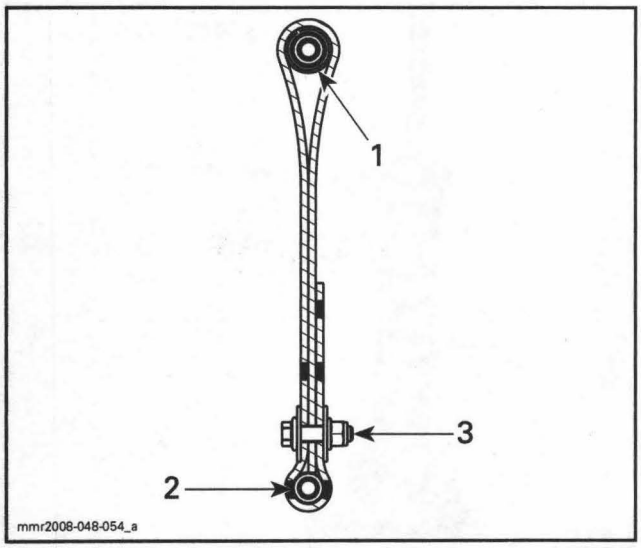

POSITION 3
1. *Front arm (top)*
2. *Front axle*
3. *Towards the rear of vehicle*

GSX (Limited Touring)

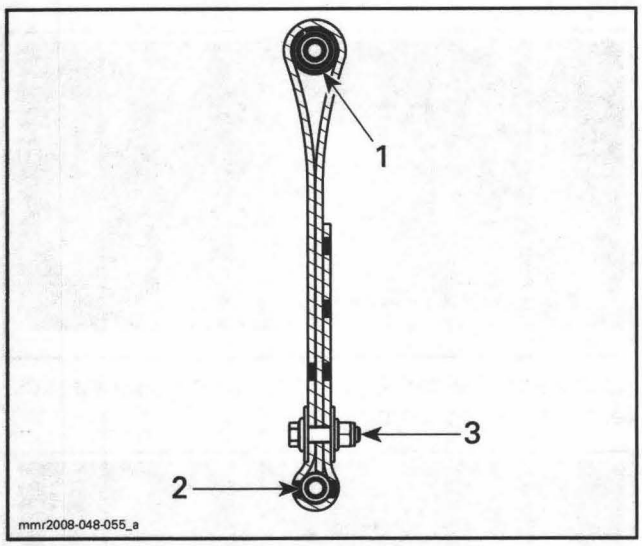

POSITION 4
1. *Front arm (top)*
2. *Front axle*
3. *Towards the rear of vehicle*

SUMMIT Series

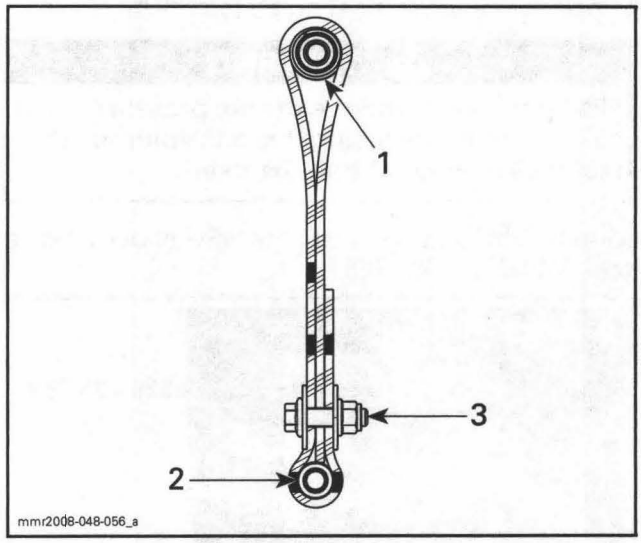

POSITION 2
1. *Front arm (top)*
2. *Front axle*
3. *Towards the rear of vehicle*

REPAIR

SHOCK ABSORBER REBUILT PROCEDURE

HPG T/A Rebuilt Procedure

There are two types of high pressure gas take apart (HPG T/A) shock. One type has a tire valve and the other has a needle valve.

SHOCK TYPE	INFLATION TOOL
Tire valve type	529 035 570
Needle valve type	503 190 102

HPG T/A shocks come in two sizes. C-36 shock is 36 mm (1.417 in) in diameter and C-46 shock is 46 mm (1.811 in).

SHOCK SIZE	SERVICING TOOL	P/N
C-36	Piston guide	529 026 600
	Seal guide	529 026 500
	Shock wrench	529 035 727
C-46	Piston guide	529 035 608
	Seal guide	529 035 728
	Shock wrench	529 035 727

Release nitrogen (N) pressure on any HPG T/A shock with internal floating piston (IFP).

⚠ WARNING

Nitrogen gas is under extreme pressure. Use caution when releasing this gas volume. Protective eye wear should be used.

Mount shock in a vise with the HPG shock holding tool (P/N 529 035 769).

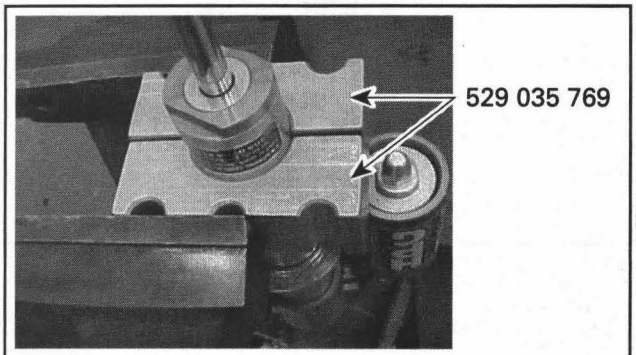

Remove screw on top of valve. Place the needle guide of gas fill tool kit (P/N 503 190 102) on the shock valve. Press the detent pin and push forward the needle assembly very slowly towards rubber of needle valve. Push on shock tool valve center rod to release gas pressure.

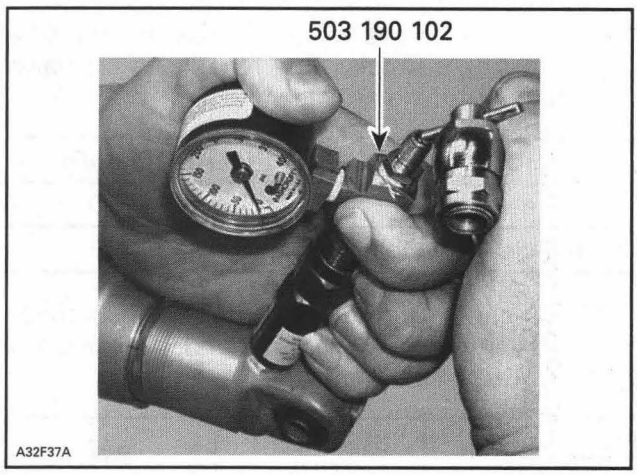

Remove tool from shock.

Screw Cap Type HPG T/A Shock

Using the shock wrench (P/N 529 035 727), unscrew seal carrier.

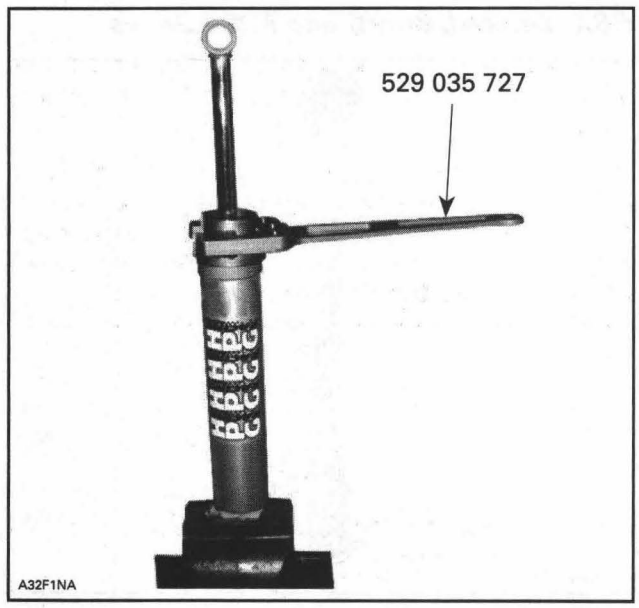

TYPICAL

Snap Ring Cap Type HPG T/A Shock

Using a flat tool (small screwdriver or small chisel), pop-out the cap.

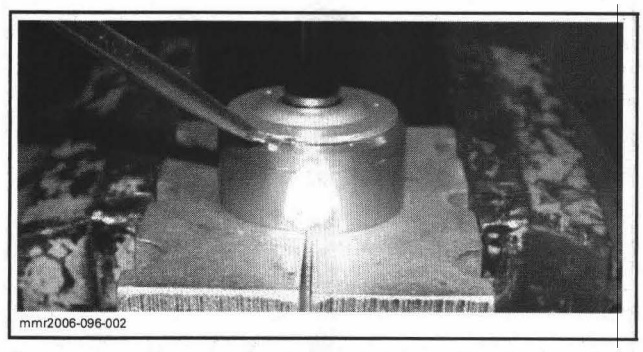

Compress the carrier to access and using a pick, remove the snap ring.

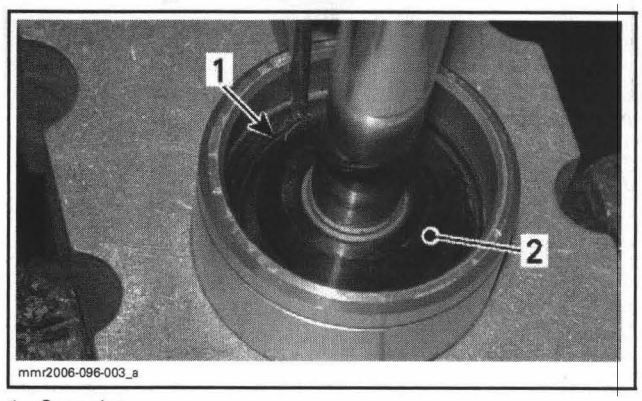

1. *Snap ring*
2. *Carrier*

All HPG T/A Shocks

With the seal carrier removed, slowly lift and remove damper rod assembly from the damper body.

NOTE: Remove damper rod assembly slowly to reduce oil spillage and prevent piston seal damage by damper body threads. Wrap the damper body with a shop cloth to capture possible overflow oil while removing the damper piston.

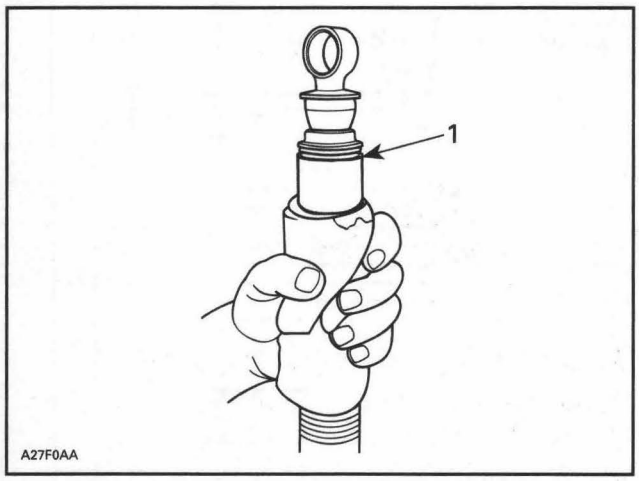

1. Oil flows

Discard old oil into storage container. Never reuse damper oil during shock rebuild.

HPG T/A Shock without Remote Reservoir

Remove valve core. Using compressed air pressure, carefully remove floating piston from damper body. Hold shop cloth over damper body opening to catch released floating piston. Allow room for floating piston to leave damper body.

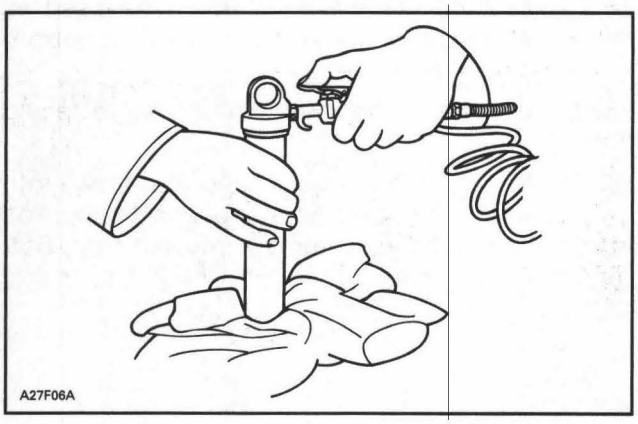

TYPICAL

HPG T/A Shock with Remote Reservoir

Install the floating piston remover tool (P/N 529 035 907) on shock absorber, as shown below.

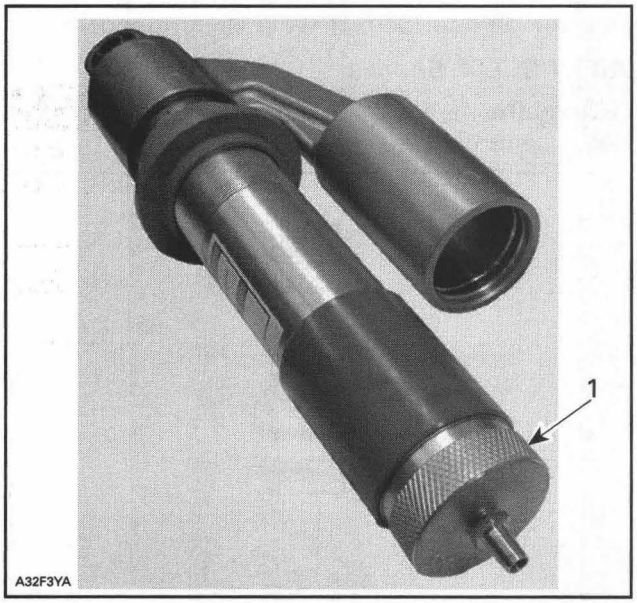

1. Floating piston remover tool

Place shock absorber in a position where remote gas reservoir opened extremity is blocked. Refer to following photo.

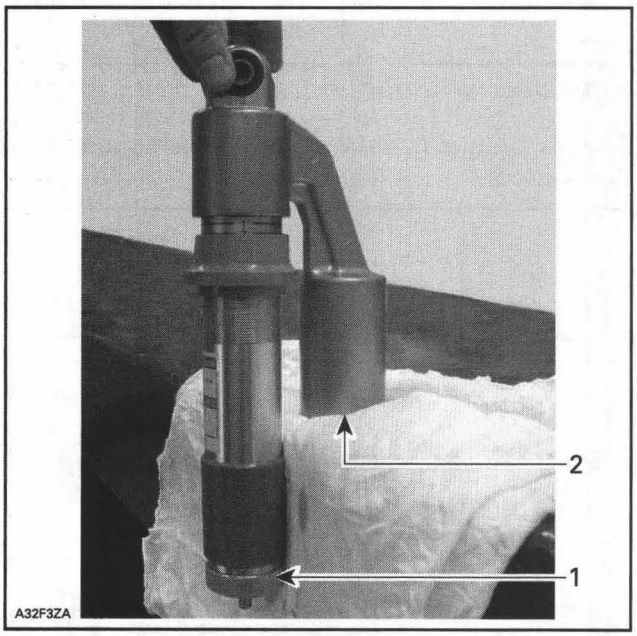

1. Tool
2. Reservoir opened extremity blocked by leaning on work bench

With the vacuum/pressure pump (P/N 529 021 800), pressurize shock absorber until remote reservoir piston pops-out.

NOTE: Use towels to prevent damaging remote reservoir piston when it pops-out.

Thoroughly clean, with a typical cleaning solution, and blow dry using low pressure air. Carefully inspect the damper body for any imperfections or signs of wear in the damper bore.

Replace damper body if wear is identified.

All HPG T/A Shocks

Holding the damper rod assembly in a bench vise, begin piston and valve removal.

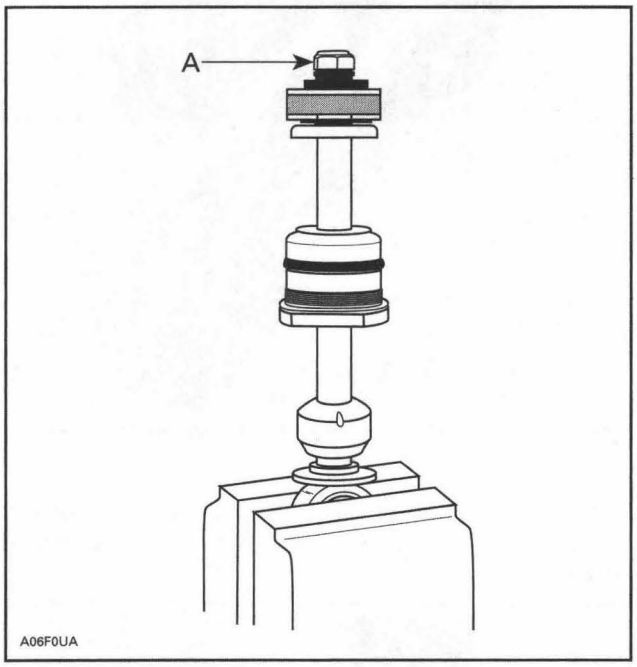

A. Remove damper rod nut

Always arrange parts removed in the sequence of disassembly.

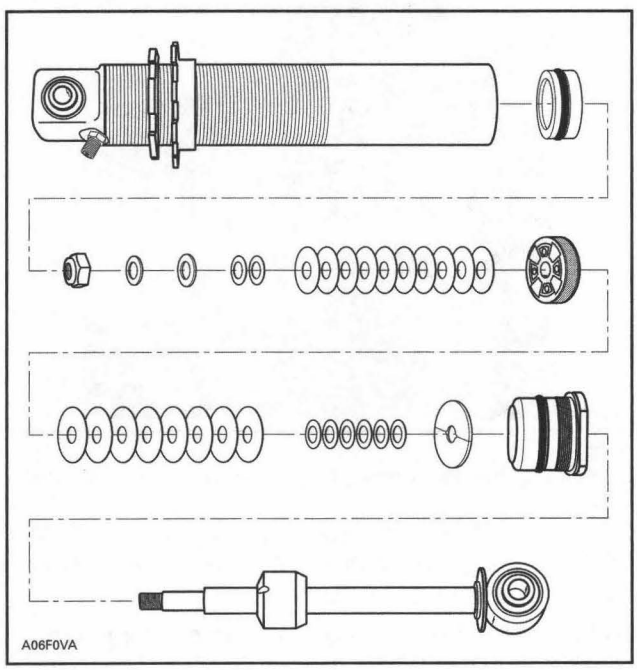

If revalving is to be done, it is imperative that you identify the original shim pack (size and number of shims). There is no need to remove seal carrier if only revalving is to be done.

Shims can be measured by using a vernier caliper or a micrometer.

NOTE: All shims should be carefully inspected and any bent or broken shims must be replaced for the shock to function properly.

After the new or replacement shim pack has been selected, reassemble in the reverse order of disassembly. Torque damper rod nut to 18 N•m (159 lbf•**in**).

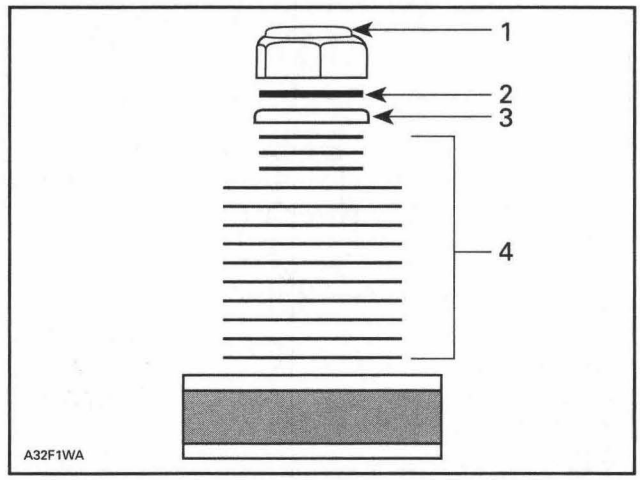

1. *Damper rod nut*
2. *Spacer*
3. *Stopper with its round edge facing nut*
4. *Shim pack*

As a general rule, we suggest replacing the damper rod nut after 4 rebuilds to ensure proper locking friction and the use of Loctite 271 (red) (P/N 293 800 005) each time.

CAUTION: Do not substitute the damper rod nut for non - O.E.M.

This (these) spacer washer(s) must be used as shown to ensure damper rod nut does not bottom out or contact shaft threads.

Rebound valve stopper with round edge facing nut.

NOTE: Rebound shim stack must not reach into threads of damper rod. Spacer under damper rod nut is used to prevent damper rod nut from bottoming on threads.

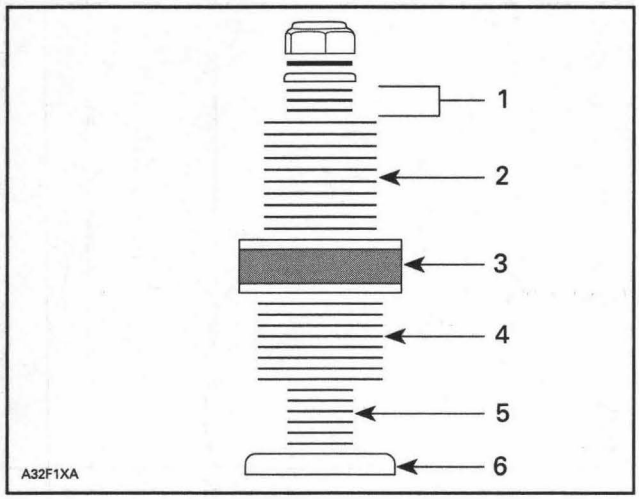

1. *Rebound dampening shim pack*
2. *Rebound dampening shim pack*
3. *Piston*
4. *Compression dampening shim pack*
5. *Compression dampening shim pack*
6. *Stopper*

If the seal carrier assembly is replaced, use seal pilot to guide seal over damper rod. Lubricate seal carrier guide pilot before use.

CAUTION: Failure to use seal pilot will result in seal damage.

Reassemble damper rod assembly, taking care to properly assemble shim packs as required for your dampening needs. Ensure that the shaft piston is installed with the slits/larger intake holes facing the rebound shim stack.

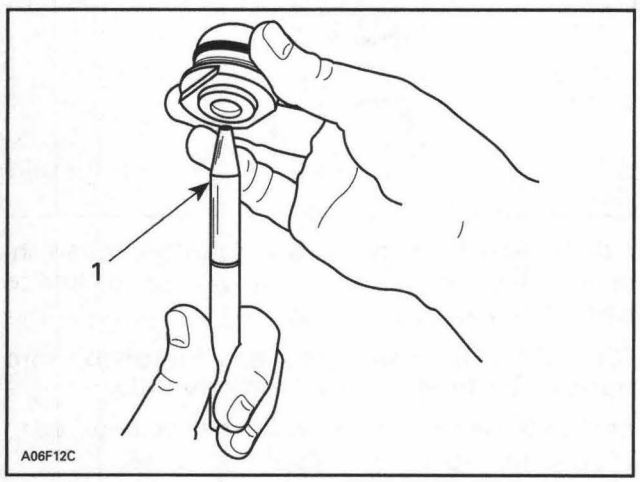

1. *Seal guide*

If internal floating piston has been removed, reinstall it into damper body (ensure that valve core has been removed). Use Molykote G-n (P/N 420 297 433) to ease O-ring past damper body threads with floating piston guide.

CAUTION: Failure to install internal floating piston correctly could result in shock damage.

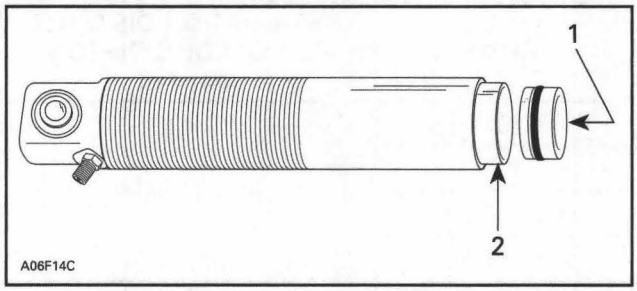

1. *Push (slowly) by hand*
2. *Floating piston guide*

Lubricate inside of piston guide with Molykote G-n (P/N 420 297 433).

Install floating piston to the proper depth refer to following the table.

On all HPG T/A shocks, the floating piston is installed hollow side up.

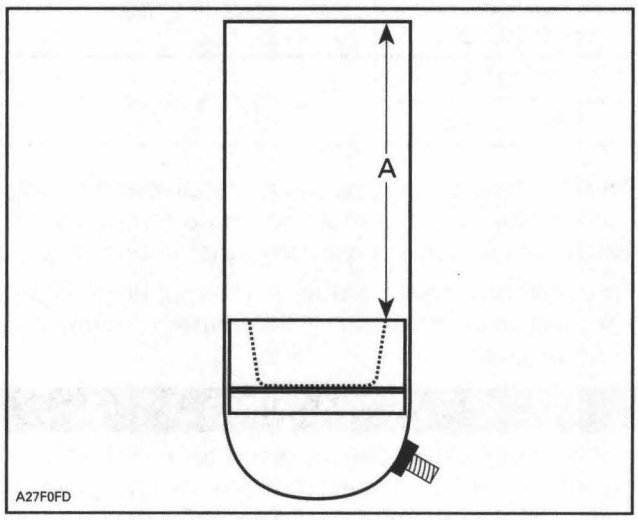

A. Installation distance for floating piston installation

SHOCK P/N	INSTALLATION DISTANCE OF FLOATING PISTON mm (in)
503 191 585	54.5 (2-9/64)
503 191 586	
503 191 814	
503 191 816	
503 191 532	119.5 (4-45/64)
503 191 791	
503 191 797	
503 191 812	
505 072 381	160 (6-19/64)
505 072 262	164 (6-15/32)
505 071 991	167 (6-37/64)
505 072 232	
503 191 534	171.5 (6-3/4)
503 191 801	

NOTE: If the floating piston is installed too far into the damper body, light air pressure through valve (with core removed) will move piston outward.

Reinstall tire valve core after internal floating piston has been installed at the correct height and before adding oil.

⚠ WARNING

Whenever using compressed air exercise extreme caution, cover damper opening with shop cloth to reduce chance of possible injury.

CAUTION: Moisture laden compressed air will contaminate the gas chamber and rust floating piston.

Fill the shock with shock absorber oil (P/N 293 600 035) to approximately 10 mm (3/8 in), from the base of seal carrier threads.

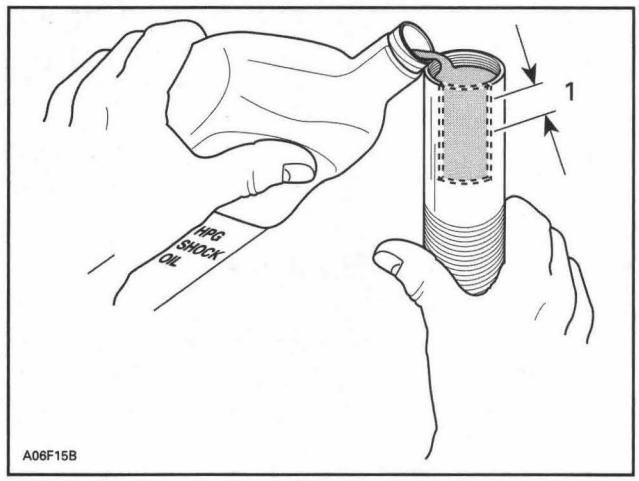

1. Fill to 10 mm (3/8 in)

NOTE: Although we do not measure the exact amount of oil added to the damper, approximately 252 mL (8.52 oz. U.S.) will be used.

Carefully insert damper rod into the damper body. Lightly oil damper piston seal ring with shock oil to ease installation.

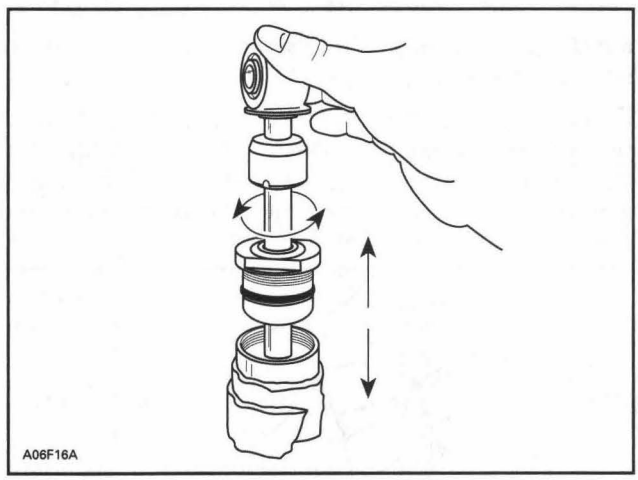

NOTE: Some shock oil will overflow when installing damper. Wrap damper with shop cloth to catch possible overflow oil.

CAUTION: Use care when passing piston into damper body at damper body threads.

Slight oscillation of damper rod may be required to allow piston to enter damper body bore.

Slowly push piston into damper body. Slight up and down movement may be required on short stroke to allow all air to pass through piston assembly. The gentle tapping of a small wrench, on the shock eye, may help dislodge air trapped in the submersed piston. Be careful not to drive the shaft any deeper into the oil than is necessary to just cover the shim stack.

NOTE: Fast installation of the damper rod may displace the floating piston from its original position. This must not occur if the damper is expected to perform as designed.

With damper rod piston into oil, TOP OFF damper oil volume. Oil level should be to damper body thread base.

Screw Cap Type HPG T/A Shock

Seal carrier assembly can now be threaded into damper body. This should be done slowly to allow weapage of oil and to minimize internal floating piston displacement. Torque seal carrier to 65 N•m (48 lbf•ft).

Snap Ring Cap Type HPG T/A Shock

Seal carrier assembly can now be pushed into damper body to pass snap ring groove. Install snap ring into groove.

Tap the cap on the shock body.

All HPG T/A Shocks

After the seal carrier is fully in place avoid pushing the shaft into the body until the nitrogen charge is added.

When removing and retightening the tire valve acorn nut use minimal torque. When the cap is over tightened and subsequently removed it may prematurely break the seal of the tire valve to the shock body and cause a loss of nitrogen charge without being noticed. If you suspect this has happened then recharge the shock as a precaution. Inspect the tire valve cap before installation to ensure that the internal rubber gasket is in its proper position.

Nitrogen (N) can now be added to damper body.

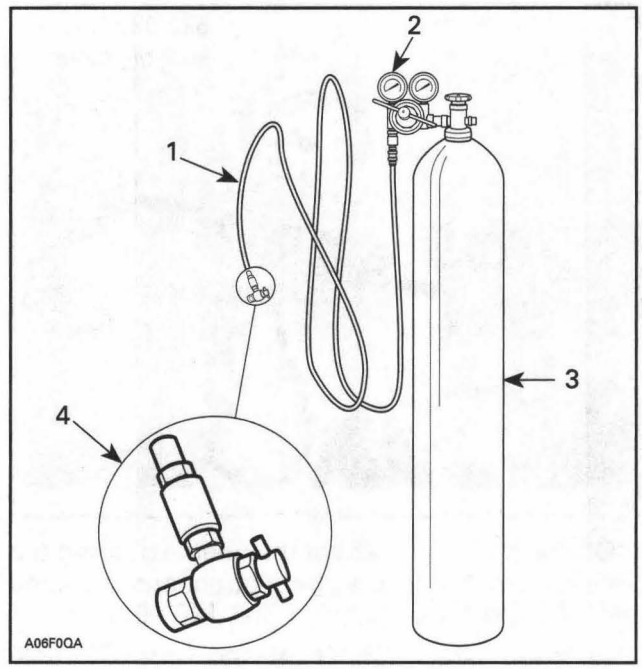

1. *High pressure hose*
2. *Stage regulator, delivery pressure range 2070 kPa (300 PSI)*
3. *High pressure cylinder filled with industrial grade nitrogen*
4. *Valve tip (P/N 529 035 570) permanently installed*

NOTE: Never substitute another gas for nitrogen. Nitrogen has been selected for its inert qualities and will not contaminate the gas chamber of the shock.

Preset your pressure regulator to 2070 kPa (300 PSI) nitrogen (N), this gas pressure will restore the correct pressure for your damper.

CAUTION: Do not exceed the recommended pressure values.

⚠ WARNING

Whenever working with high pressure gas, use eye wear protection. Never direct gas pressure toward anybody.

Install the gas fill tool kit (P/N 503 190 102) on gas shock valve tool (tire valve type) (P/N 529 035 570). Set the regulator pressure on the nitrogen cylinder as per the shock requirement.

Mount the shock on vise. Remove screw on top of valve. Place the needle guide of gas refill tool on the shock valve. While depressing the detent pin of the gas refill tool and pushing forward the needle assembly, insert the needle through the rubber core of the pressure valve assembly of the shock.

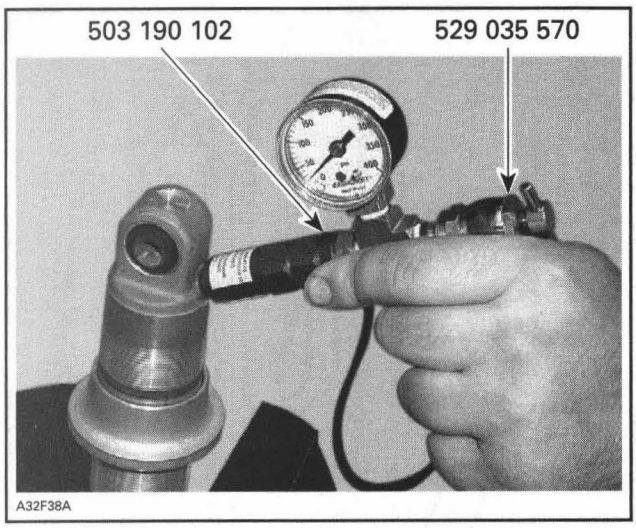

NOTE: For replacement of the needle or filling the shock, carefully follow the instructions provided with the gas fill tool kit (P/N 503 190 102).

On some models, rubber may pop out of needle valve when inserting tool needle. If so, remove valve core and rubber then, reinstall rubber with its larger diameter last.

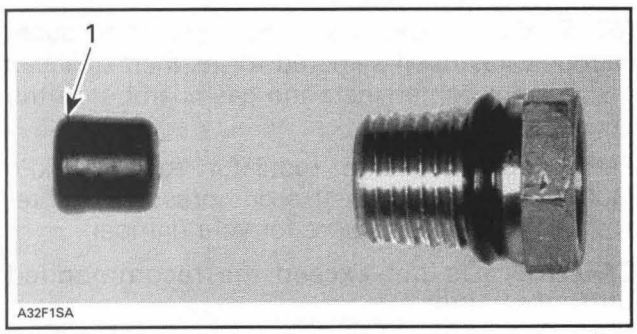

1. Larger diameter

Carefully inspect damper for gas or oil leaks. Any leaks must be corrected before continuing. If no leak is detected, install the screw on top of the valve and clean the shock with the pulley flange cleaner (P/N 413 711 809).

Damper gas pressure cannot be confirmed by using a pressure gauge. The volume of gas in the shock is very small, and the amount lost during gauge installation will lower the pressure too much and require refilling.

After recharging is complete the rebuilt shock should be bench-tested. Stroke the shock to ensure full travel and smooth compression and rebound action. If the shaft moves in or out erratically this could indicate too much air is trapped inside. If the shaft will not move or has partial travel then it may be hydraulically locked. In either event the shock must be rebuilt again. Pay particular attention to the placement of the IFP, quantity of oil and shim stack/piston assembly.

HPG T/A Racing Clicker Rebuild Procedure

Tightly secure the shock base in vise. DO NOT CLAMP ONTO SHOCK BODY.

Using a 12 mm wrench, slowly remove air inlet valve, allowing the gas inside the reservoir to escape.

Remove top shock cover using a 36 mm wrench. Pull shock rod out of main shock body.

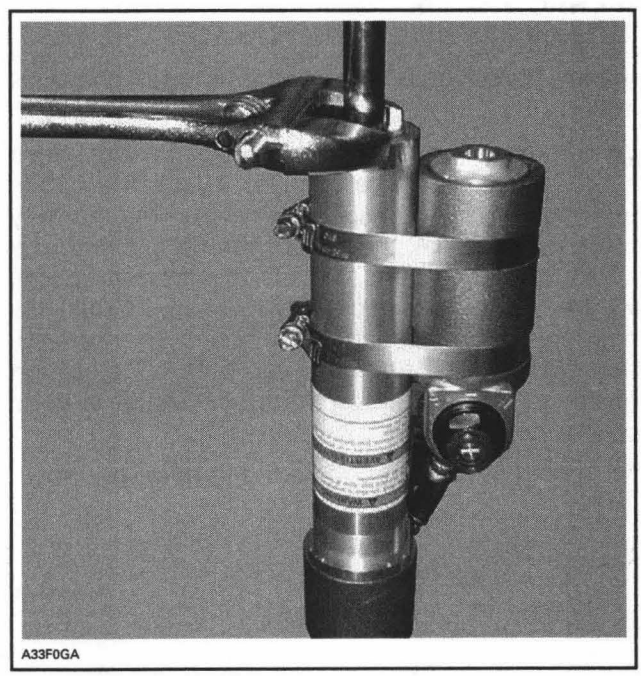

Drain oil from the shock body. Dispose of used oil properly.

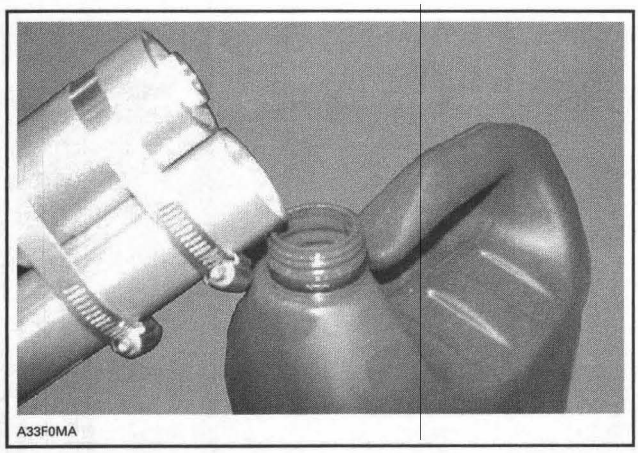
A33F0MA

Push down the remote reservoir cover to remove the retaining circlip.

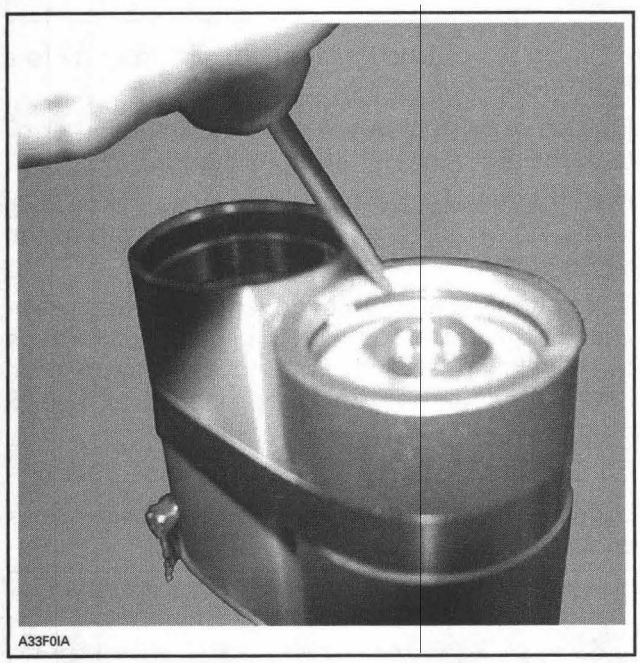
A33F0IA

Remove the remote reservoir cover.

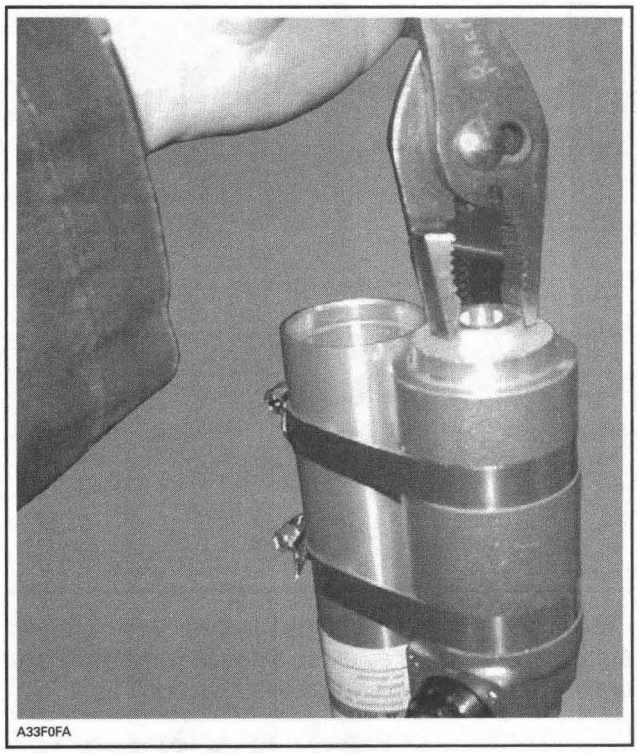
A33F0FA

Remove the floating piston inside the remote reservoir.


A33F0JA

Remove the lock nut using a 14 mm wrench securing shims, washers and piston to rod.

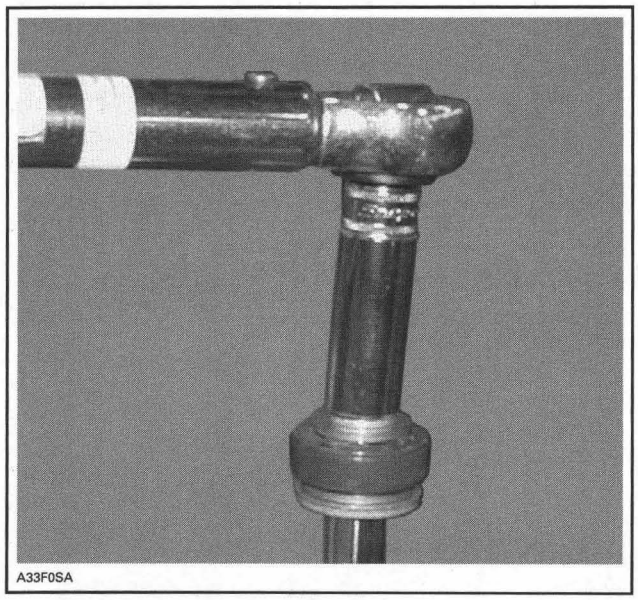
A33F0SA

Carefully remove and layout shims, washers and piston from rod. Play close attention to shims and washers sequence and piston position.

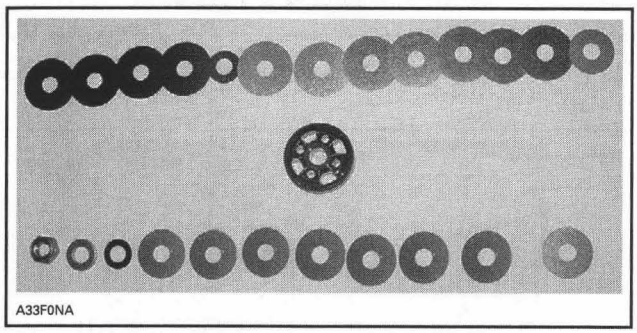
A33F0NA

TYPICAL

Clean all shock components using pulley flange cleaner (P/N 413 711 809). DO NOT MIX SHIMS AND WASHERS TOGETHER.

Assemble valve shims, washers and piston in proper order and place them back onto shock rod.

Torque the rod nut at 18 N•m (159 lbf•**in**).

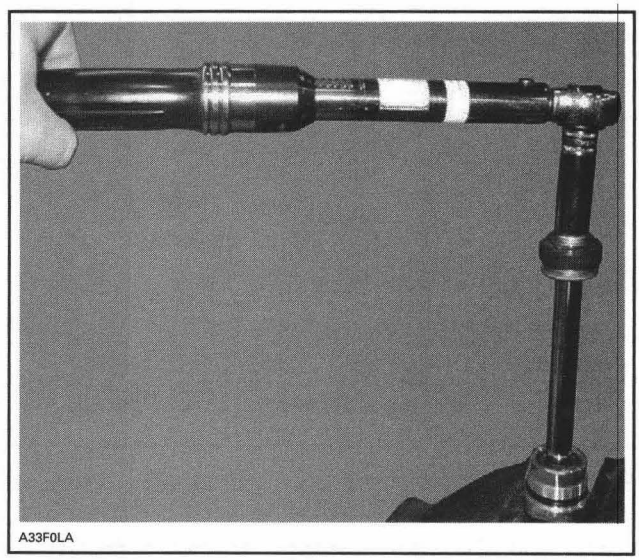
A33F0LA

Fill main shock body with shock absorber oil to a level of half full.

Fill also remote reservoir with shock absorber oil to within 6.4 mm (1/4 in) from the top.

Hold the remote reservoir in a way so the oil level in the shock and the remote reservoir are at the same height.

Cup your hand and place it over the remote reservoir. Pump with your hand to circulate oil through the shock and reservoir to remove any trapped air. Low speed adjuster must be open 1 turn minimum.

Fill the remote reservoir with shock absorber oil.

Lubricate the O-ring on floating piston with shock oil and install it.

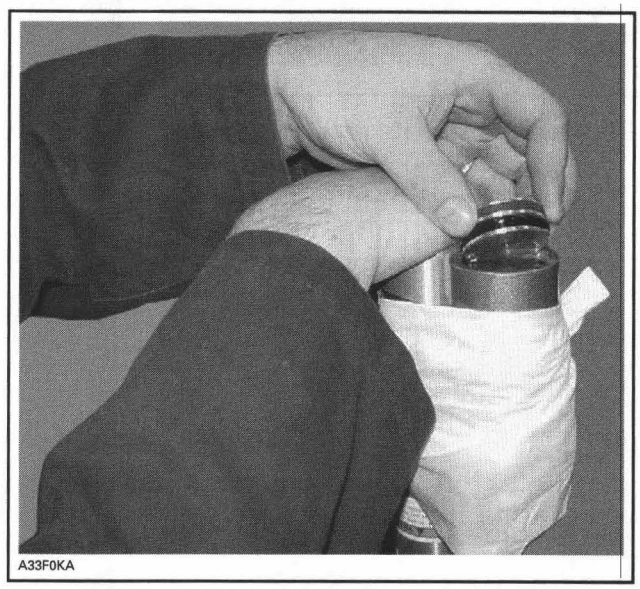
A33F0KA

NOTE: The key to good shock performance is to remove all the air from shock body and reservoir.

Push the floating piston to the bottom of the remote reservoir. Oil will rise in the main shock body almost to the top.

Fill the shock body with shock absorber oil (P/N 293 600 035) until level with bottom of threads.

Lubricate seal around piston and valve stack and gently push into main shock body.

Stroke the piston and valve stack slowly to remove any trapped air. Using a small hammer or wrench, gently tap on the rod mounting eyelet to help remove air.

Again, push the floating piston to the bottom of the remote reservoir.

Pull shock rod as far out as possible and replace the shock cover and torque to 65 N•m (48 lbf•ft). Oil must spill from the shock body before the seal cover O-ring seals the shock.

Lubricate the O-ring on floating piston with shock oil and install the remote reservoir cover.

Push down the cover and install the retaining circlip.

Pull the cover to seat it against the retaining circlip.

⚠ WARNING

Make sure the cover is firmly seated against the retaining circlip before filling with gas.

Install the air inlet valve.

Pressurize the shock at 2070 kPa (300 PSI) with nitrogen (N). Use the correct gas fill tool kit (P/N 503 190 102).

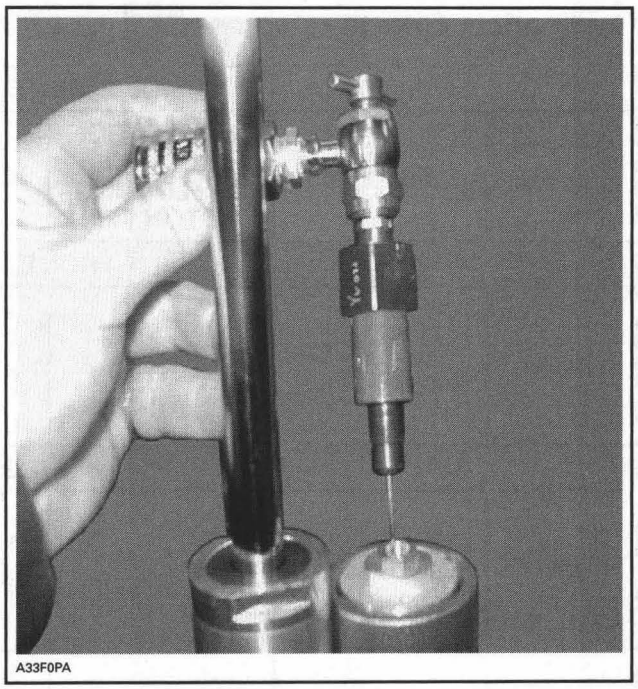

A33F0PA

Carefully inspect damper for gas or oil leaks. Any leaks must be corrected before continuing. If no leak is detected, install the safety screw into the air inlet valve and clean the shock with the pulley flange cleaner (P/N 413 711 809).

After recharging is complete, the rebuilt shock should be bench-tested. Stroke the shock to ensure full travel, smooth compression and rebound action. If the damper rod moves in or out erratically this could indicate air is trapped inside. If the damper rod will not move or has partial travel then it may be hydraulically locked. In either event the shock must be taken apart.

Calibration Charts

MX Z RENEGADE X (CA/US)						
	BRP P/N	**INSTALLATION DISTANCE OF FLOATING PISTON (IFP)**	**COMPRESSION**	**REBOUND**	**SLIT**	**PRESSURE**
FRONT SUSPENSION						
FRONT	505 072 262 (Kayaba shock)	164 mm (6-15/32 in)	1 x 30 x .203 1 x 14 x .152 4 x 30 x .152 1 x 28 x .114 1 x 16 x .152	3 x 26 x .203 1 x 15 x .254	No slit	2070 kPa (300 PSI)
REAR SUSPENSION						
FRONT	503 191 797 (C-36 Kayaba shock)	119.5 mm (4-45/64 in)	2 x 30 x .203 1 x 17 x .152 10 x 30 x .152 1 x 26 x .114 1 x 22 x .114	1 x 26 x .203 1 x 15 x .114 3 x 26 x .254 1 x 16 x .203	1	2070 kPa (300 PSI)
REAR	503 191 585 (C-36 Kayaba shock)	54.5 mm (2-9/64 in)	2 x 30 x .203 1 x 17 x .152 6 x 30 x .203 1 x 28 x .114 1 x 20 x .114	1 x 26 x .254 1 x 17 x .114 6 x 26 x .254 1 x 17 x .203	1	2070 kPa (300 PSI)

MX Z RENEGADE X (EUR)						
	BRP P/N	**INSTALLATION DISTANCE OF FLOATING PISTON (IFP)**	**COMPRESSION**	**REBOUND**	**SLIT**	**PRESSURE**
FRONT SUSPENSION						
FRONT	505 072 381 (Kayaba shock)	160 mm (6-19/64 in)	1 x 30 x .203 1 x 14 x .152 4 x 30 x .152 1 x 28 x .114 1 x 16 x .152	1 x 26 x .203 1 x 15 x .114 4 x 26 x .152 1 x 16 x .254	No slit	2070 kPa (300 PSI)
REAR SUSPENSION						
FRONT	503 191 812 (C-36 Kayaba shock)	119.5 mm (4-45/64 in)	1 x 30 x .203 1 x 18 x .114 5 x 30 x .203 1 x 26 x .114 1 x 20 x .114	1 x 26 x .254 1 x 18 x .114 5 x 26 x .254 1 x 20 x .203	1	2070 kPa (300 PSI)
REAR	503 191 816 (C-36 Kayaba shock)	54.5 mm (2-9/64 in)	3 x 30 x .203 1 x 18 x .152 6 x 30 x .203 1 x 24 x .114 1 x 20 x .114	2 x 26 x .203 1 x 20 x .114 5 x 26 x .203 1 x 17 x .254	1	2070 kPa (300 PSI)

MX Z TNT (CA/US)						
	BRP P/N	**INSTALLATION DISTANCE OF FLOATING PISTON (IFP)**	**COMPRESSION**	**REBOUND**	**SLIT**	**PRESSURE**
FRONT SUSPENSION						
FRONT	505 071 991 (Kayaba shock)	167 mm (6-37/64 in)	1 x 30 x .203 1 x 14 x .152 4 x 30 x .152 1 x 28 x .114 1 x 16 x .152	1 x 26 x .203 1 x 15 x .114 4 x 26 x .152 1 x 16 x .254	1	2070 kPa (300 PSI)
REAR SUSPENSION						
FRONT	503 191 791 (C-36 Kayaba shock)	119.5 mm (4-45/64 in)	2 x 30 x .203 1 x 14 x .152 6 x 30 x .152 1 x 26 x .114 1 x 18 x .114	1 x 26 x .203 1 x 15 x .114 3 x 26 x .254 1 x 16 x .203	1	2070 kPa (300 PSI)
REAR	503 191 801 (C-36 Kayaba shock)	171.5 mm (6-3/4 in)	2 x 30 x .203 1 x 14 x .152 6 x 30 x .203 1 x 28 x .114 1 x 18 x .114	1 x 26 x .254 1 x 16 x .114 6 x 26 x .254 1 x 16 x .203	1	2070 kPa (300 PSI)

MX Z TNT (EUR)						
	BRP P/N	**INSTALLATION DISTANCE OF FLOATING PISTON (IFP)**	**COMPRESSION**	**REBOUND**	**SLIT**	**PRESSURE**
FRONT SUSPENSION						
FRONT	505 072 381 (Kayaba shock)	160 mm (6-19/64 in)	1 x 30 x .203 1 x 14 x .152 4 x 30 x .152 1 x 28 x .114 1 x 16 x .152	1 x 26 x .203 1 x 15 x .114 4 x 26 x .152 1 x 16 x .254	No slit	2070 kPa (300 PSI)
REAR SUSPENSION						
FRONT	503 191 812 (C-36 Kayaba shock)	119.5 mm (4-45/64 in)	1 x 30 x .203 1 x 18 x .114 5 x 30 x .203 1 x 26 x .114 1 x 20 x .114	1 x 26 x .254 1 x 18 x .114 5 x 26 x .254 1 x 20 x .203	1	2070 kPa (300 PSI)
REAR	503 191 814 (C-36 Kayaba shock)	54.5 mm (2-9/64 in)	3 x 30 x .203 1 x 18 x .114 6 x 30 x .203 1 x 24 x .114 1 x 20 x .114	2 x 26 x .203 1 x 20 x .114 5 x 26 x .203 1 x 17 x .254	1	2070 kPa (300 PSI)

MX Z X (CA/US)						
	BRP P/N	**INSTALLATION DISTANCE OF FLOATING PISTON (IFP)**	**COMPRESSION**	**REBOUND**	**SLIT**	**PRESSURE**
FRONT SUSPENSION						
FRONT	505 072 262 (Kayaba shock)	164 mm (6-15/32 in)	1 x 30 x .203 1 x 14 x .152 4 x 30 x .152 1 x 28 x .114 1 x 16 x .152	3 x 26 x .203 1 x 15 x .254	No slit	2070 kPa (300 PSI)
REAR SUSPENSION						
FRONT	503 191 791 (C-36 Kayaba shock)	119.5 mm (4-45/64 in)	2 x 30 x .203 1 x 14 x .152 6 x 30 x .152 1 x 26 x .114 1 x 18 x .114	1 x 26 x .203 1 x 15 x .114 3 x 26 x .254 1 x 16 x .203	1	2070 kPa (300 PSI)
REAR	503 191 586 (C-36 Kayaba shock)	54.5 mm (2-9/64 in	1 x 30 x .203 1 x 15 x .152 3 x 30 x .203 1 x 26 x .114 1 x 18 x .114	1 x 26 x .254 1 x 16 x .114 6 x 26 x .254 1 x 17 x .203	1	2070 kPa (300 PSI)

MX Z X (EUR)						
	BRP P/N	**INSTALLATION DISTANCE OF FLOATING PISTON (IFP)**	**COMPRESSION**	**REBOUND**	**SLIT**	**PRESSURE**
FRONT SUSPENSION						
FRONT	505 072 381 (Kayaba shock)	160 mm (6-19/64 in)	1 x 30 x .203 1 x 14 x .152 4 x 30 x .152 1 x 28 x .114 1 x 16 x .152	1 x 26 x .203 1 x 15 x .114 4 x 26 x .152 1 x 16 x .254	No slit	2070 kPa (300 PSI)
REAR SUSPENSION						
FRONT	503 191 812 (C-36 Kayaba shock)	119.5 mm (4-45/64 in)	1 x 30 x .203 1 x 18 x .114 5 x 30 x .203 1 x 26 x .114 1 x 20 x .114	1 x 26 x .254 1 x 18 x .114 5 x 26 x .254 1 x 20 x .203	1	2070 kPa (300 PSI)
REAR	503 191 814 (C-36 Kayaba shock)	54.5 mm (2-9/64 in)	3 x 30 x .203 1 x 18 x .114 6 x 30 x .203 1 x 24 x .114 1 x 20 x .114	2 x 26 x .203 1 x 20 x .114 5 x 26 x .203 1 x 17 x .254	1	2070 kPa (300 PSI)

SUMMIT X						
	BRP P/N	**INSTALLATION DISTANCE OF FLOATING PISTON (IFP)**	**COMPRESSION**	**REBOUND**	**SLIT**	**PRESSURE**
FRONT SUSPENSION						
FRONT	505 072 232 (Kayaba shock)	167 mm (6-37/64 in)	1 x 30 x .152 1 x 14 x .152 6 x 30 x .152 1 x 16 x .152	1 x 26 x .203 1 x 15 x .114 4 x 26 x .152 1 x 16 x .203	1	2070 kPa (300 PSI)
REAR SUSPENSION						
FRONT	503 191 532 (C-36 Kayaba shock)	119.5 mm (4-45/64 in)	1 x 30 x .203 1 x 14 x .152 5 x 30 x .203 1 x 28 x .114 1 x 24 x .114	1 x 26 x .254 1 x 15 x .114 4 x 26 x .254 1 x 16 x .203	1	2070 kPa (300 PSI)
REAR	503 191 534 (C-36 Kayaba shock)	171.5 mm (6-3/4 in)	1 x 30 x .203 1 x 14 x .152 4 x 30 x .203 1 x 28 x .114 1 x 18 x .114	5 x 26 x .203 1 x 16 x .203	1	2070 kPa (300 PSI)

STEERING SYSTEM

SERVICE TOOLS

Description	Part Number	Page
heated grip installer	529 035 897	477

SERVICE TOOLS – OTHER SUPPLIER

Description	Part Number	Page
multilock-terminal housing extraction tool AMP	755430-2	476–477

SERVICE PRODUCTS

Description	Part Number	Page
ThermoLube synthetic grease	219 700 417	481

SKIS

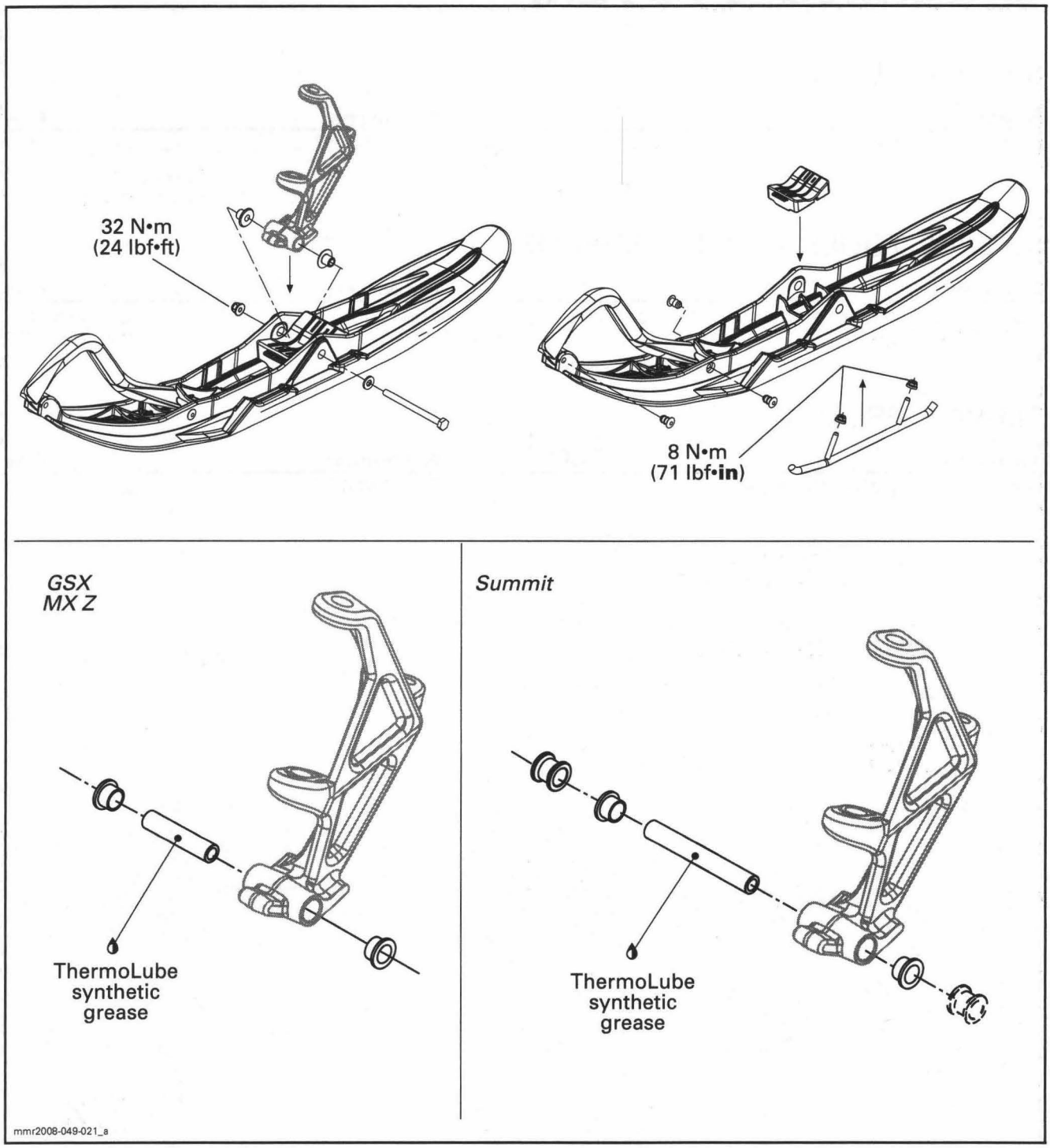
32 N•m
(24 lbf•ft)
8 N•m
(71 lbf•in)
GSX
MX Z
ThermoLube
synthetic
grease
Summit
ThermoLube
synthetic
grease
mmr2008-049-021_a

STEERING COLUMN AND TIE-RODS

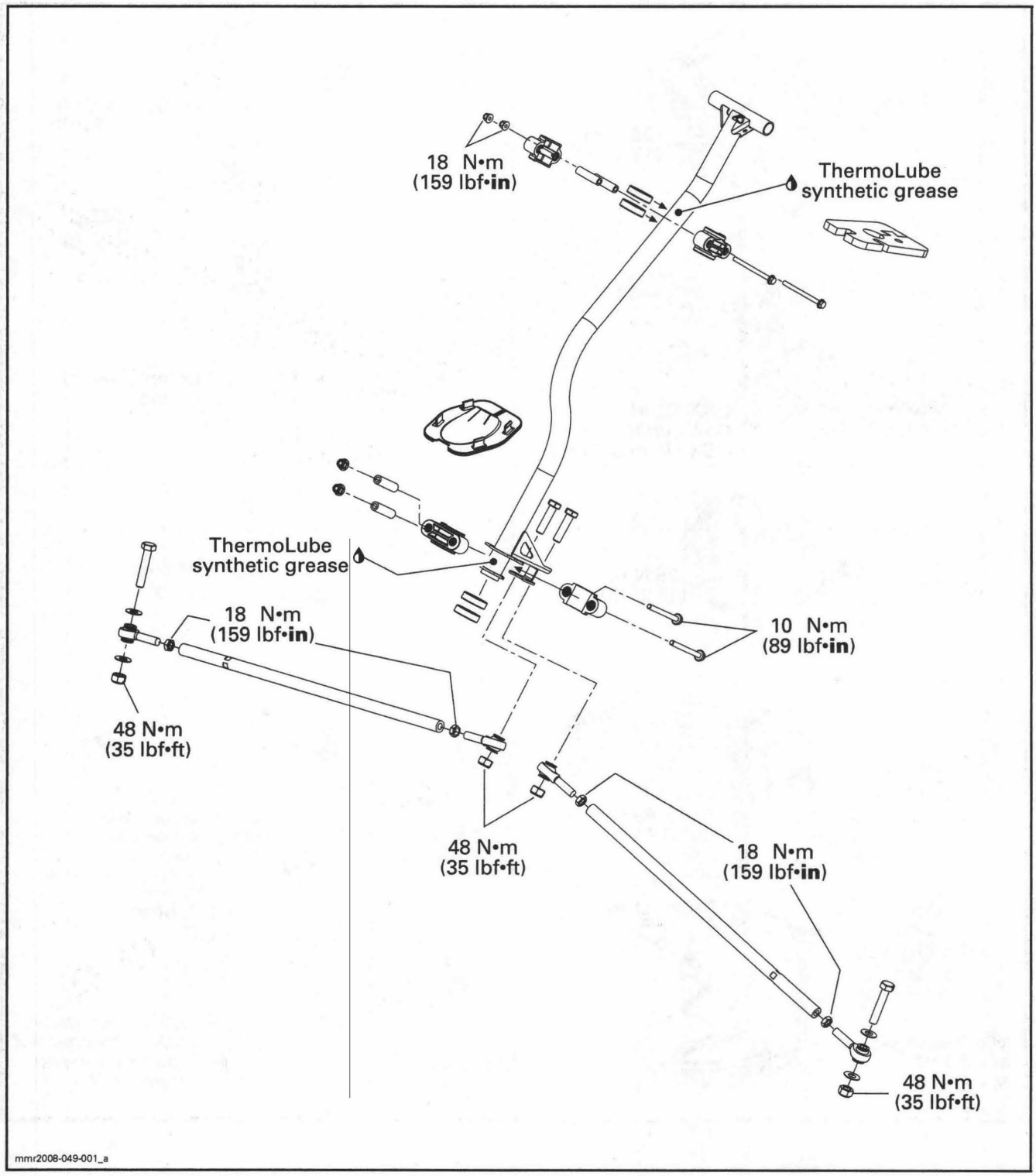

HANDLEBAR

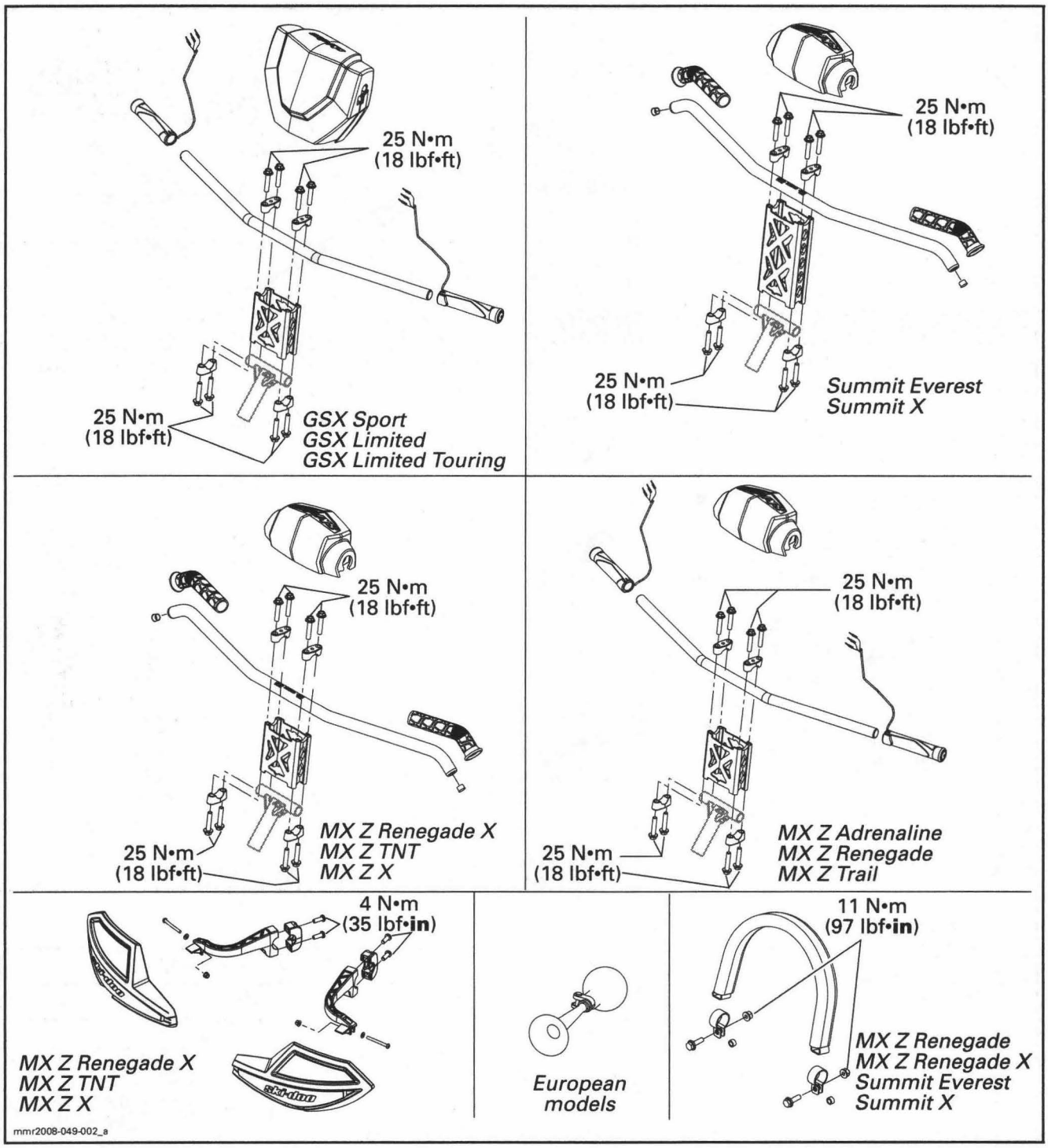
25 N•m
(18 lbf•ft)
25 N•m
(18 lbf•ft)
GSX Sport
GSX Limited
GSX Limited Touring
25 N•m
(18 lbf•ft)
25 N•m
(18 lbf•ft)
Summit Everest
Summit X
25 N•m
(18 lbf•ft)
25 N•m
(18 lbf•ft)
MX Z Renegade X
MX Z TNT
MX Z X
25 N•m
(18 lbf•ft)
25 N•m
(18 lbf•ft)
MX Z Adrenaline
MX Z Renegade
MX Z Trail
4 N•m
(35 lbf•in)
MX Z Renegade X
MX Z TNT
MX Z X
European
models
11 N•m
(97 lbf•in)
MX Z Renegade
MX Z Renegade X
Summit Everest
Summit X
mmr2008-049-002_a

GENERAL

When removing or replacing a part of steering system (except handle grips and handlebar), perform the steering alignment, refer to *STEERING ALIGNMENT* in this section.

During assembly/installation, use the torque values and service products as in the exploded views.

Clean threads before applying a threadlocker. Refer to *SELF-LOCKING FASTENERS* and *LOCTITE APPLICATION* at the beginning of this manual for complete procedure.

⚠ WARNING

Torque wrench tightening specifications must be strictly adhered to.
Locking devices (e.g.: locking tabs, elastic stop nuts, cotter pins, etc.) must be replaced with a new ones.

ADJUSTMENT

STEERING ALIGNMENT

Ski alignment is performed by adjusting length of left and right tie-rods. To do this, use the following procedure:

- Leave the vehicle on the ground on its own weight.
- Attach ski handles together with a bungee cord.

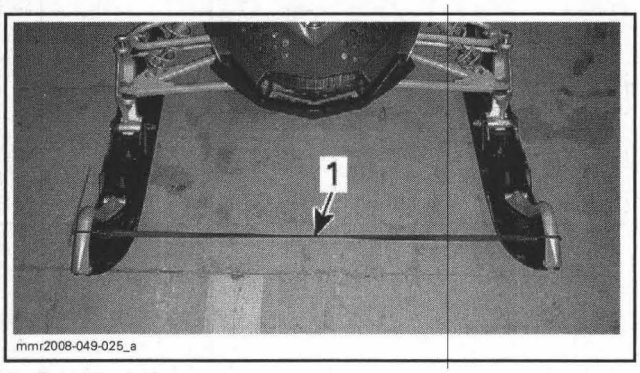

1. Bungee cord

- Position handlebar so that it is straight ahead position by measuring from the extremities of the grips to the rear most edge of the tunnel, as shown.

NOTE: The reference point must be the same to each side.

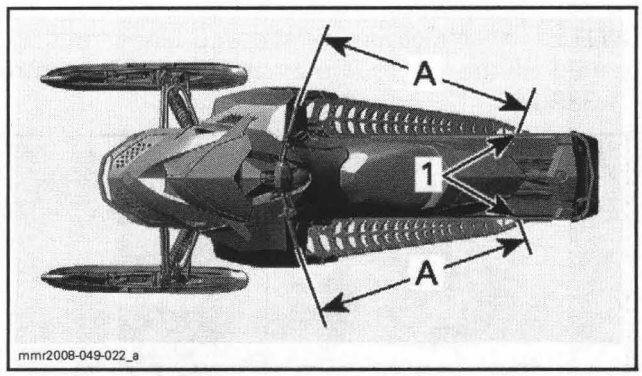

1. Same reference point
A. Equal distance on each side

- Verify if skis are in straight-ahead position by placing a straight edge against adjusted track and measuring distance between front and rear ski recesses and straight edge.
- When skis are in straight ahead position, adjust the toe-out.
- Measure the distance between front and rear ski recesses.
- Use the following illustration and this equation to determine the perfect steering adjustment.

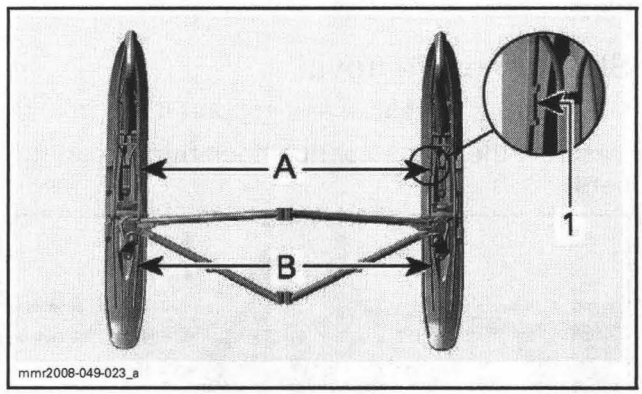

1. Recesses
A – B = 5 MM (.197 IN)

STEERING ALIGNMENT	
Toe-out	5 mm (.197 in)

- If adjustment is needed, loosen tie-rod jam nuts then turn tie-rods to change their length.
- Tighten jam nuts and torque them to 18 N•m (159 lbf•**in**).

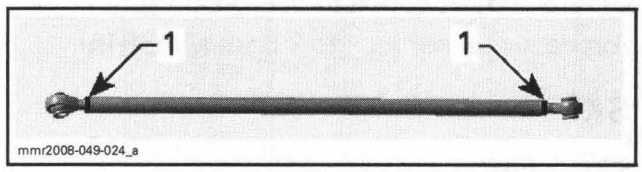

1. Jam nut

NOTE: The maximum tie-rod end length not engaged in the tie rod must not exceed 34 mm (1.339 in).

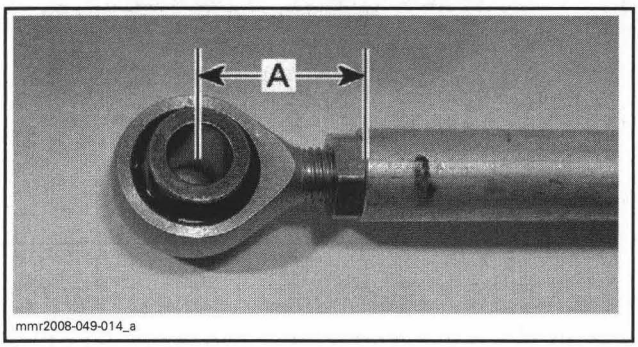

A. 34 mm (1.339 in) maximum

PROCEDURES

SKI RUNNER

Ski Runner Inspection

Lift the front of vehicle and check ski runners for wear or damages (missing or broken carbide). Replace if necessary.

Ski Runner Removal

Lift the front of vehicle and support it off ground.

Unscrew the ski runner nuts then remove ski runners.

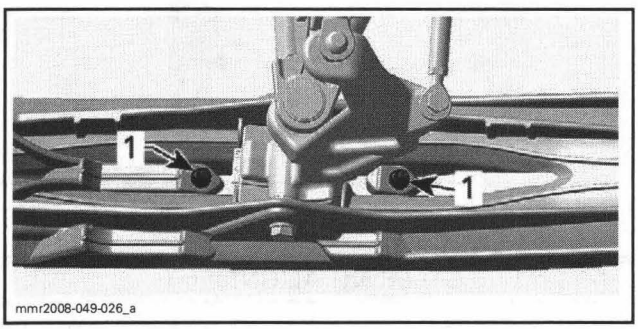

TYPICAL — SKI PILOT 5.7 (LEFT SIDE) SHOWN
1. Ski runner nuts

Ski Runner Installation

The installation is the reverse of the removal procedure. Pay attention to the following.

Torque ski runner nuts to 8 N•m (71 lbf•**in**).

SKI

Ski Inspection

Inspect ski for excessive wear or other damage. Replace if necessary.

Ski Removal

Lift front of vehicle and support it off ground.

Unscrew nut then pull ski bolt out.

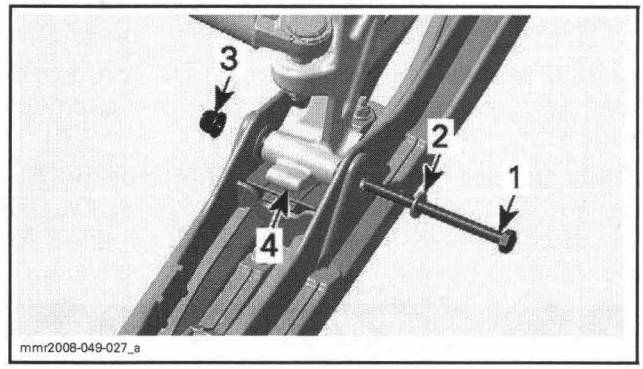

TYPICAL — SKI PILOT 5.7 SHOWN
1. Ski bolt
2. Washer
3. Nut
4. Ski leg

Remove ski from vehicle.

Ski Installation

Make sure bushings are installed in ski holes.

Install the ski stopper. Position indicator in front and make sure the bump in the ski is in the groove of the ski stopper.

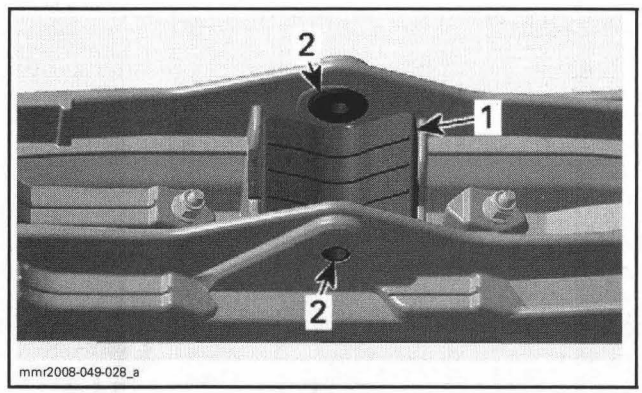

TYPICAL — SKI PILOT 5.7 SHOWN
1. Ski stopper
2. Bushings

SUMMIT Models

- Determine the desired ski stance (2 positions).
- Install the spacer inside for the narrower stance and outside for the wider stance.

⚠ WARNING

Ensure to place spacer on proper side of ski leg on both skis.

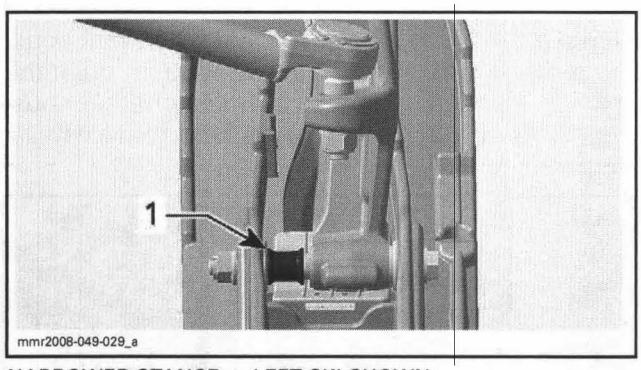

NARROWER STANCE — LEFT SKI SHOWN
1. Spacer here for the narrower stance

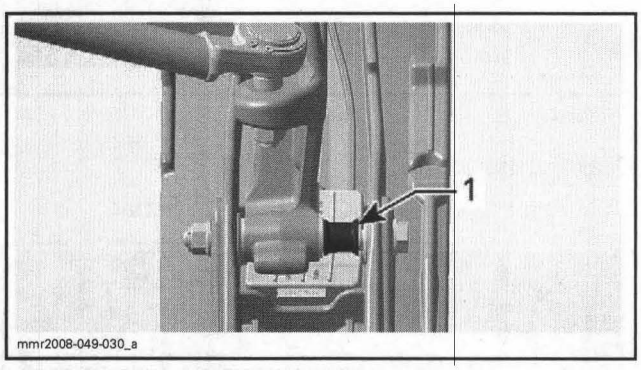

WIDER STANCE — LEFT SKI SHOWN
1. Spacer here for the wider stance

All Models

- Install ski bolt and torque it to 32 N•m (24 lbf•ft).

SKI HANDLE

Ski Handle Removal

Remove ski from vehicle.

Using a 9 mm (3/8 in) drill bit, remove ski handle rivets. Only drill the head of rivet. Do not try to drill all the way through the rivet. Angle the drill bit to reduce the chance of spinning the rivet in the ski.

Remove handle from ski.

Place handle in hot water for 10 minutes then using a punch, drive the inner part of rivet out of handle.

Ski Handle Installation

To install rivets, use a C-clamp and a short 10 mm socket.

Place a rivet in position and insert it into ski and ski handle. Repeat the procedure for the other side.

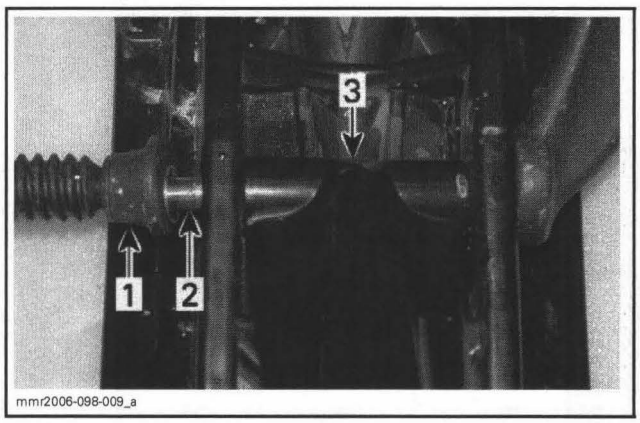

1. C-clamp
2. Rivet
3. Handle

When both rivets are installed, use the short 10 mm socket to push rivet heads against ski.

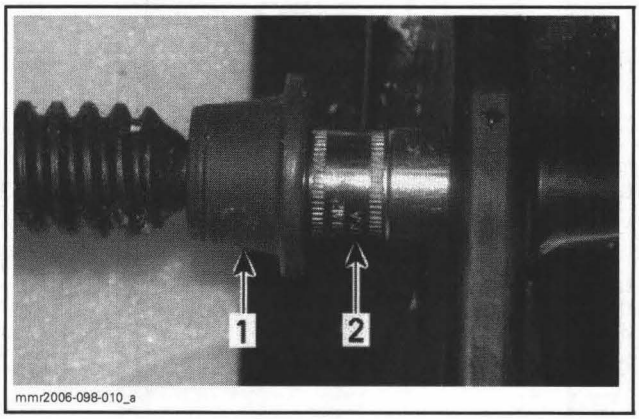

1. C-clamp
2. 10 mm socket

SKI LEG

To replace a ski leg, refer to *FRONT SUSPENSION* section.

HANDLEBAR GRIP

NOTE: To verify heating elements, refer to *LIGHTS, GAUGE AND ACCESSORIES.*

Handlebar Grip Removal

GSX (Limited, Limited Touring, Sport) and MX Z (Adrenaline, Renegade, Trail)

CAUTION: Removing grip from handlebar might damage the heating element. Do not remove needlessly.

Throttle Side:

Loosen engine stop switch and throttle lever.

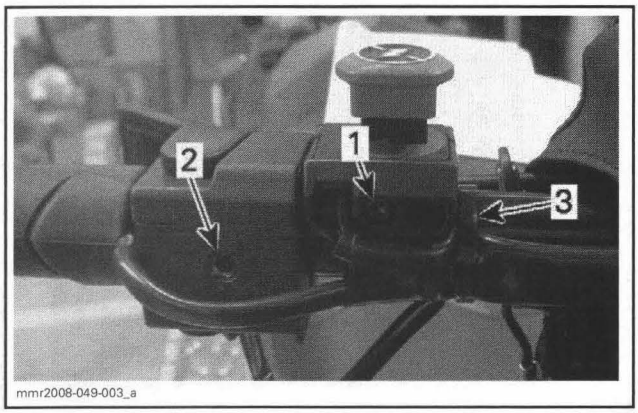

1. Engine stop switch screw
2. Throttle lever screw
3. Cut this locking tie

Move them towards the steering column.

Remove the steering cover.

Unplug the heating element connector.

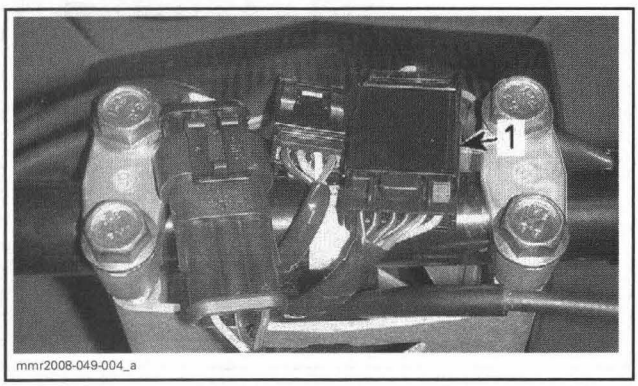

GSX LIMITED SHOWN
1. Heating element connector

Insert the open side of a 23 mm (7/8 in) wrench against the inner end of grip.

CAUTION: Pay attention not to damage wires with the wrench.

Using a plastic hammer, tap on the side of the wrench end to make the grip slide out.

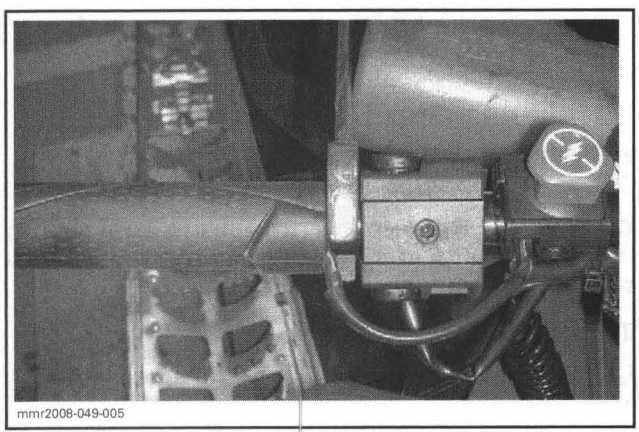

Using a tool such as the multilock-terminal housing extraction tool AMP (P/N 755430-2), push the 3 wires of the grip harness out of connector housing. Note the position of the wires for reinstallation.

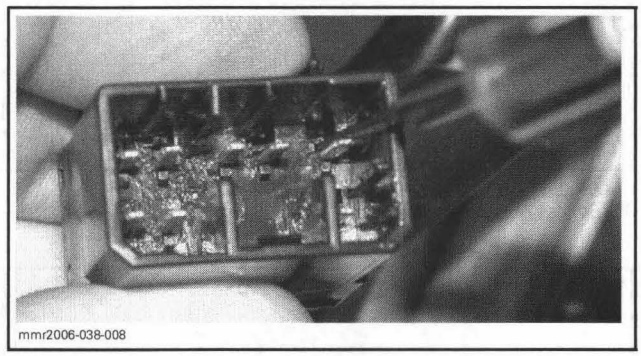

TYPICAL

Brake Side:

Unscrew master cylinder from handlebar.

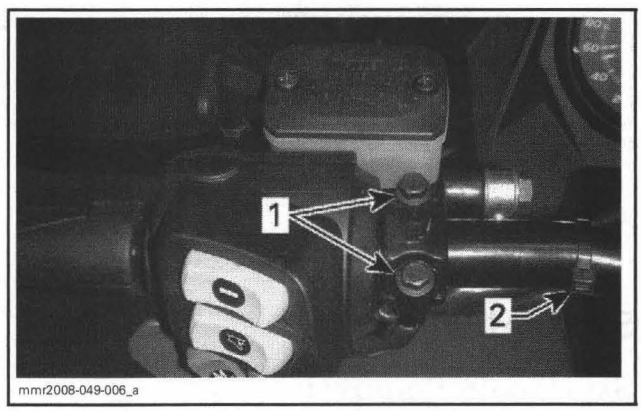

1. Master cylinder screws
2. Cut this locking tie

Loosen multifunction switch screws.

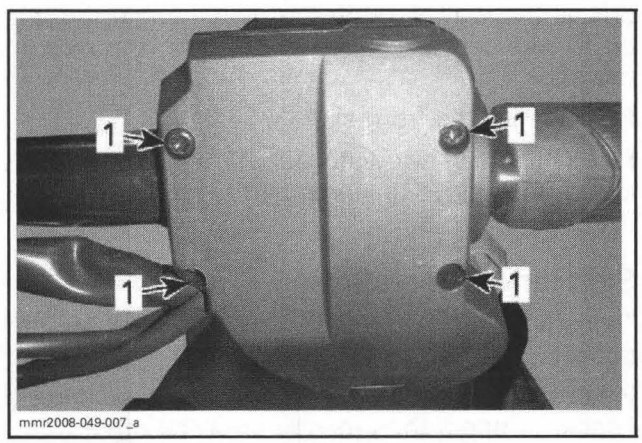

1. Multifunction switch screws

Move multifunction switch towards the steering column.

Remove the steering cover.

Unplug the heating element connector.

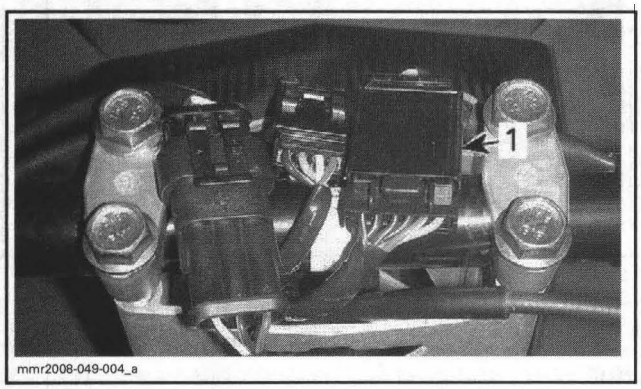

GSX LIMITED SHOWN
1. Heating element connector

Insert the open side of a 23 mm (7/8 in) wrench against the inner end of grip.

CAUTION: Pay attention not to damage wires with the wrench.

Using a plastic hammer, tap on the side of the wrench end to make the grip slide out.

Using a tool such as the multilock-terminal housing extraction tool AMP (P/N 755430-2), push the 3 wires of the grip harness out of connector housing. Note the position of the wires for reinstallation.

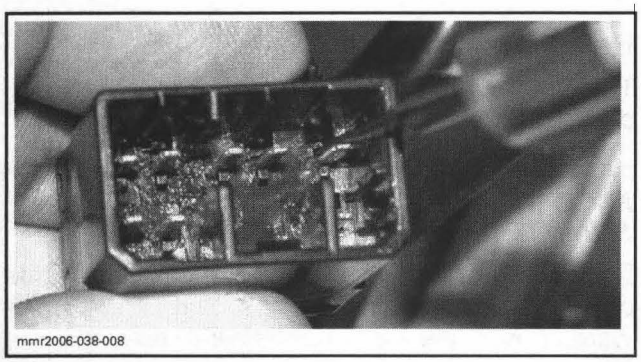

TYPICAL

MX Z (Renegade X, TNT, X) and SUMMIT (Everest, X)

Remove grips by pulling while using compressed air, which will inflate or loosen the fit between the grip and handlebar, as shown on picture.

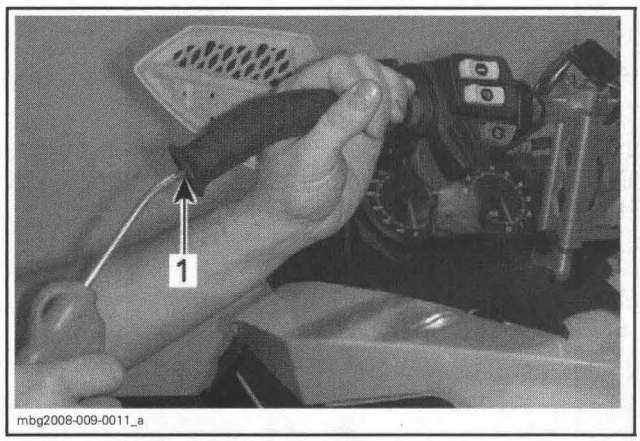

1. Blow air in the grip hole

Handlebar Grip Installation

GSX (Limited, Limited Touring, Sport) and MX Z (Adrenaline, Renegade, Trail)

Clean handlebar ends and inside of grip with isopropyl alcohol. Let dry before installation.

CAUTION: Handlebar end and inside of heating grip must be clean and dry before installing heating grip to ensure proper adhesion.

Use the heated grip installer (P/N 529 035 897) to properly install grip.

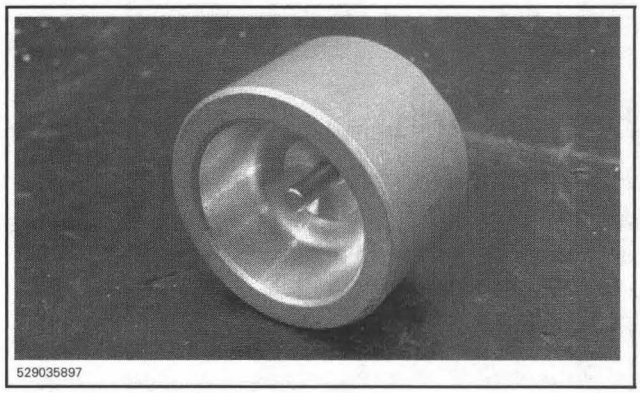

CAUTION: Installing grip without the insertion tool is likely to damage its heating element.

Position the insertion tool at the outside end of grip.

Using a plastic hammer, tap on tool to push grip on. Continue to tap until grip bottoms.

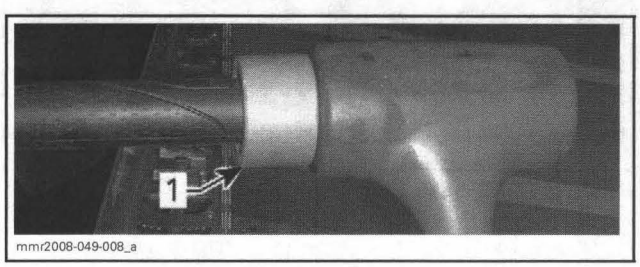

1. Heated grip installer

Properly route harness at the front of steering.

Reinstall terminals and re-plug connectors. Test grips to ensure they heat properly.

NOTE: Note that grips will not work if the engine is at idle speed. Electricity is supplied to grips only if engine is over 2000 RPM.

Install all other removed parts.

MX Z (Renegade X, TNT, X) and SUMMIT (Everest, X)

Install handlebar grips.

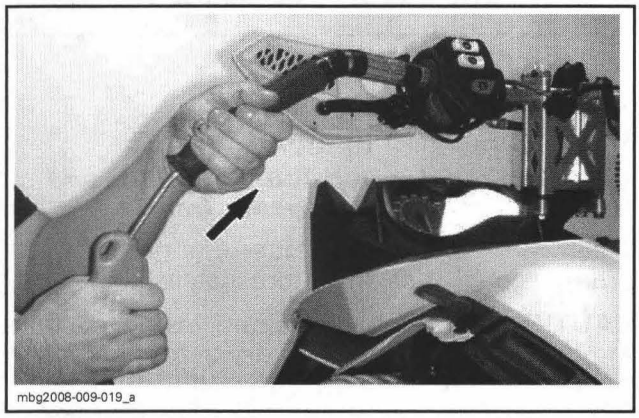
mbg2008-009-019_a

NOTE: It may be easier to install grips using compressed air, which will inflate or loosen the fit between the grip and handlebar, as shown on picture.

HANDLEBAR

Handlebar Removal

NOTE: If the handlebar must be changed, remove all components (handle grip, throttle lever housing, etc.) before removing it from vehicle.

Remove steering cover.

Unplug all connectors.

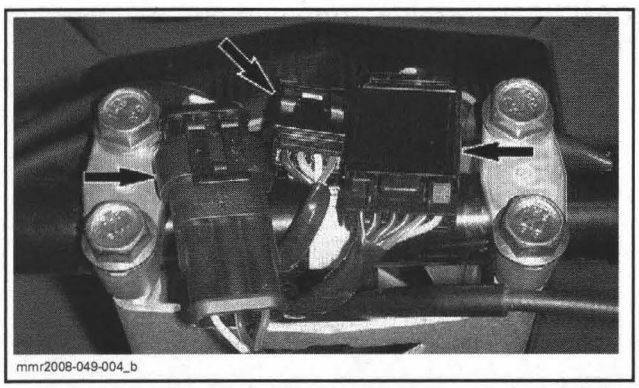
mmr2008-049-004_b

GSX LIMITED SHOWN

Remove handlebar retaining clamp screws.

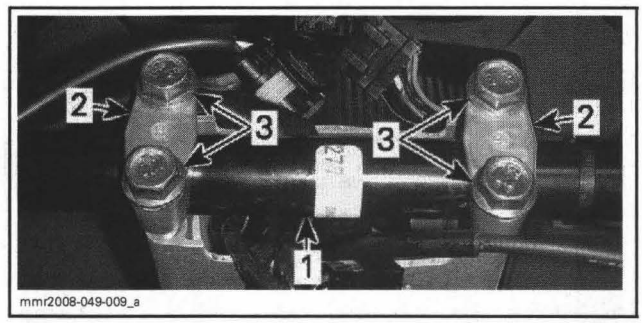

mmr2008-049-009_a

1. *Handlebar*
2. *Retaining clamps*
3. *Screws*

Remove handlebar from handlebar extension.

Handlebar Inspection

Inspect the handlebar for:
- Damages
- Cracks
- Bending.

Replace if any of these problems is detected.

⚠ WARNING

Do not try to repair a defective handlebar.

Check handlebar clamps for cracks or distortion, replace if necessary.

Handlebar Installation

The installation is the reverse of the removal procedure. However, pay attention to the following.

Handlebar Strap

MX Z (Renegade, Renegade X) and SUMMIT (Everest, X)

Ensure to position strap symmetrically each side of handlebar retaining clamps. Tilt strap 5° towards driver relative to handlebar extension.

Retaining clip and hardware must be installed in the same position on both strap ends.

HANDLEBAR EXTENSION

Handlebar Extension Removal

Remove *HANDLEBAR* from handlebar extension, see procedure above in this section.

Unscrew bolts retaining the extension to steering column.

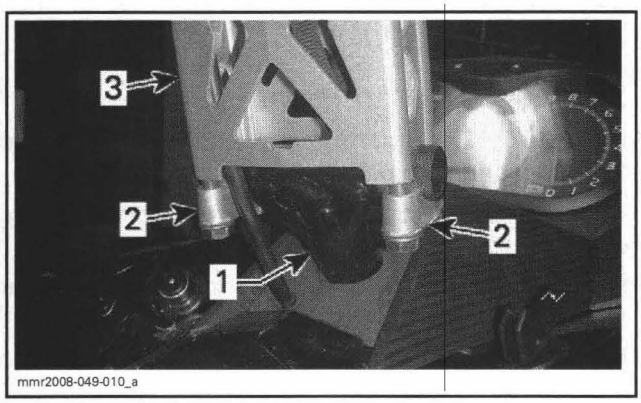

SUMMIT X SHOWN
1. *Steering column*
2. *Handlebar extension clamps*
3. *Handlebar extension*

Remove handlebar extension from vehicle.

Handlebar Extension Inspection

Check handlebar extension for:
- Cracks
- Bending
- Other damages.

Replace if any of these problems is detected.

⚠ WARNING

Do not try to repair a defective handlebar extension.

Handlebar Extension Installation

The installation is the reverse of the removal procedure. However, pay attention to the following.

When installing handlebar extension, ensure to leave a gap between handlebar extension and stop block on steering column.

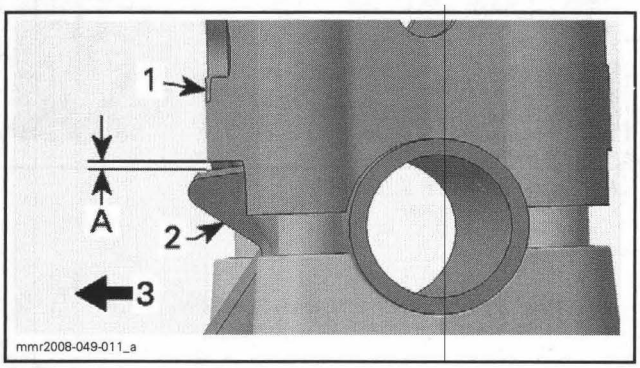

1. *Bottom of handlebar extension*
2. *Steering column stop block*
3. *Front of vehicle*

A. *1 mm (.039 in) minimum*

TIE-ROD

NOTE: The same procedure is applied on RH and LH side.

Tie-rod Inspection

Check tie-rod ends for looseness. If play is excessive, replace tie-rod.

Check if the tie-rod is bend, crack or otherwise damage. Replace if necessary.

Tie-rod Removal

Remove the tie-rod ends from the steering column and ski leg.

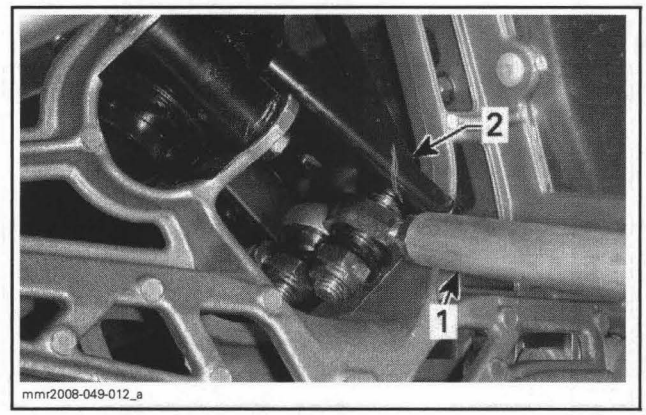

1. *Tie-rod*
2. *Steering column*

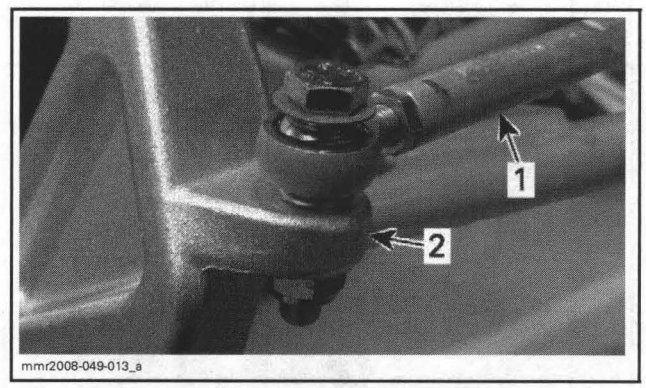

1. *Tie-rod*
2. *Ski leg*

Remove tie-rod from vehicle.

Tie-rod Installation

The installation is the reverse of the removal procedure. However, pay attention to the following.

Adjust each tie-rod end length of both tie-rod ends to 30 ± 0.5 mm (1.181 ± .020 in).

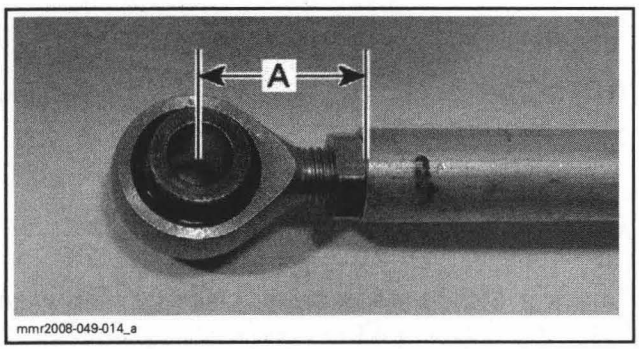

A. 30 ± 0.5 mm (1.181 ± .020 in)

NOTE: The maximum tie-rod end length not engaged in the tie rod must not exceed 34 mm (1.339 in).

Install tie-rod with the groove on ski leg side.

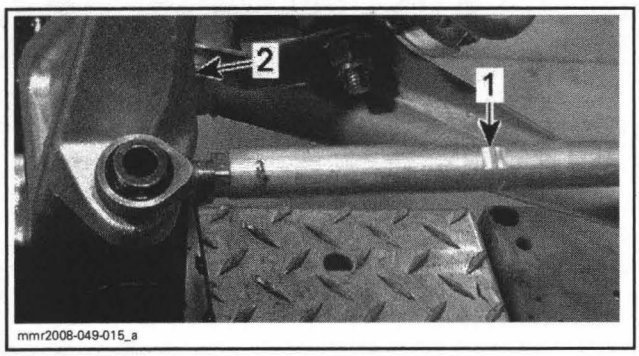

1. Tie-rod groove
2. Ski leg

On ski leg side, install hardened washers as shown.

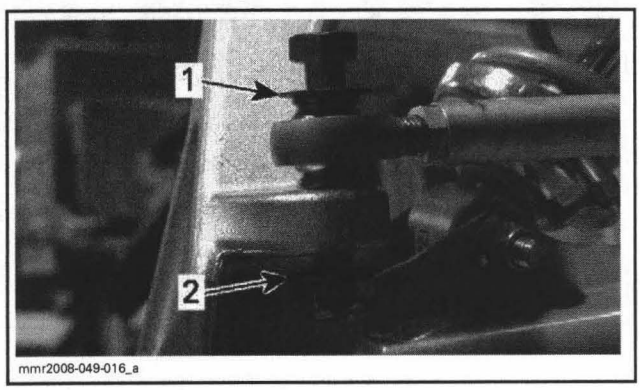

1. Large hardened washer
2. Small hardened washer

Install nuts retaining tie-rod ends. Torque them to 48 N•m (35 lbf•ft).

Perform the steering alignment, refer to *STEERING ALIGNMENT* in this section.

STEERING COLUMN

Steering Column Removal

Remove gauge support and console. Refer to *BODY* section.

Remove *HANDLEBAR EXTENSION* from steering column, see procedure in this section.

Remove screws securing steering column upper support.

Remove screws securing side frame members to rear frame member.

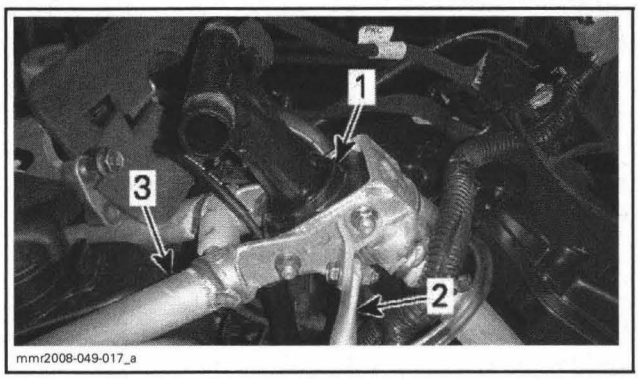

1. Steering column support
2. RH side frame member
3. Rear frame member

Remove seat.

Unscrew nuts retaining rear frame member and fuel tank to frame.

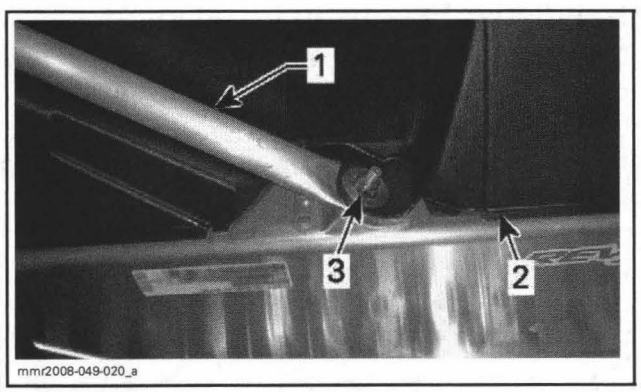

LH SIDE OF VEHICLE SHOWN
1. Rear frame member
2. Fuel tank
3. Nut to remove

Remove the secondary air intake silencer. Refer to *AIR INTAKE SYSTEM* section.

Remove tuned pipe. Refer to *EXHAUST SYSTEM* section.

Remove the tie-rod ends from the steering column.

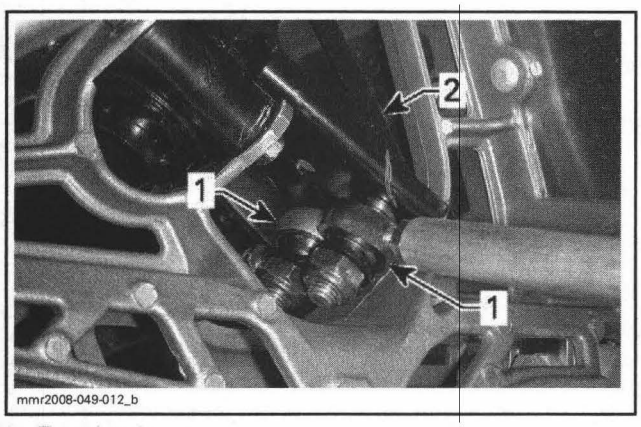

1. *Tie-rod ends*
2. *Steering column*

Remove screws securing the steering column lower support.

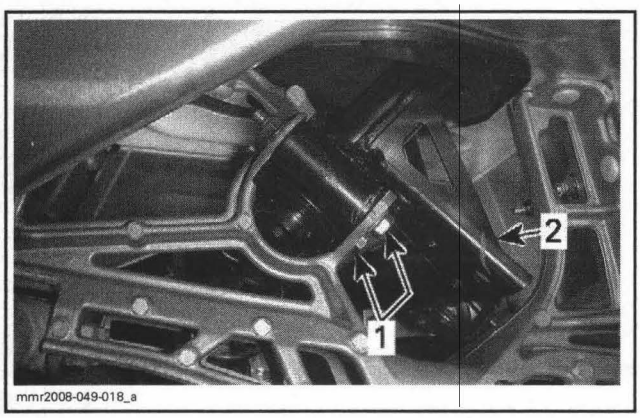

1. *Steering column support screws*
2. *Steering column*

Remove lower support.

Remove the steering column plate.

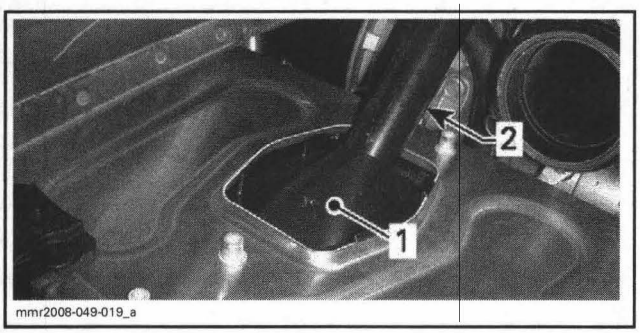

1. *Steering column plate*
2. *Steering column*

Pull steering column from top.

Steering Column Inspection

Check if steering column is: cracked, bent, twist or otherwise damaged. Replace steering column if necessary.

⚠ WARNING

Do not try to repair a defective steering column.

Steering Column Installation

The installation is the reverse of the removal procedure.

Apply ThermoLube synthetic grease (P/N 219 700 417) on steering column before installing upper and lower supports.

BODY

SERVICE TOOLS

Description	Part Number	Page
Supertanium™ drill bit	529 031 800	486
adjustment wrench	529 035 891	487

GENERAL

Seat Cleaning

It is recommended to clean the seat with a solution of warm soapy water, using a soft clean cloth.

CAUTION: Avoid use of harsh detergents such as strong soaps, degreasing solvents, abrasive cleaners, paint thinners, etc. that may cause damage to the seat cover.

Plastic Cleaning

Clean the vehicle thoroughly, removing all dirt and grease accumulation.

To clean use a soft clean cloth and either soapy water or isopropyl alcohol.

To remove grease, oil or glue use isopropyl alcohol.

CAUTION: Do not apply isopropyl alcohol or acetone directly on decals.

CAUTION: The following products must not be applied on the plastic components used on the vehicles:

- Gasoline
- Brake fluid
- Kerosene
- Diesel fuel
- Lighter fluid
- Varsol
- Naphtha
- Acetone
- Strong detergents
- Abrasive cleaners
- Waxes containing an abrasive or a cleaning agent in their formula.

Apply a non abrasive wax on glossy finish only.

Body Parts Repair

The very first step before repairing plastic materials is to find out exactly which type of material is involved.

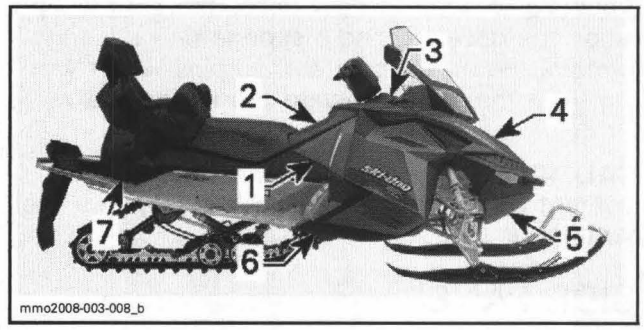

mmo2008-003-008_b

PLASTIC PARTS		
	PARTS	MATERIAL
1	Side panel	Polypropylene
2	Console	Surlyn
3	Gauge support	Polypropylene
4	Hood	Surlyn
5	Front bottom pan	Polypropylene
6	Side bottom pan	Polypropylene
7	Trunk	Polypropylene

CAUTION: Some repair products are not compatible with certain plastics.

⚠ WARNING

Polycarbonate windshields must never be repaired by welding or otherwise.

The following company provides a complete line of products to repair plastic materials:

CREST INDUSTRIES, INC.
Trenton, MI 48183
Phone: 734 479-4141
Toll Free: 1 800 822-4100
Fax: 734 479-4040
E-Mail: info@crestauto.com
www.crestauto.com

PROCEDURES

DECAL

Decal Replacement

To remove a decal; heat old decal with a heat gun and peel off slowly.

Using isopropyl alcohol, clean the surface and dry thoroughly.

Apply liquid soap to new decal and carefully position the decal. Using a sponge or a squeegee, remove the air bubbles and surplus water working from the center toward the edges. Allow to air dry.

CAUTION: Do not apply isopropyl alcohol or solvent directly on decals. Use only in a well ventilated area.

SIDE PANEL

Side Panel Removal

NOTE: The same procedure applies for RH or LH side.

Stretch and unhook the latches.

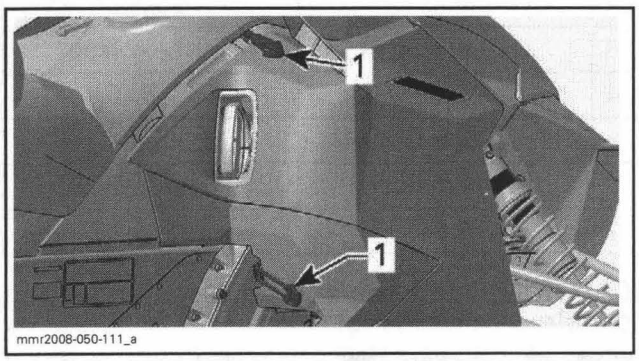

1. Latches

Open side panel.

Lift the panel and move the lower hinge out of the slot.

Lower side panel and upper hinge from the slot.

Remove side panel.

Side Panel Installation

The installation is the reverse of the removal procedure.

REWIND STARTER HANDLE HOUSING

Rewind Starter Handle Housing Removal

Open RH side panel.

Remove screws retaining housing to oil reservoir.

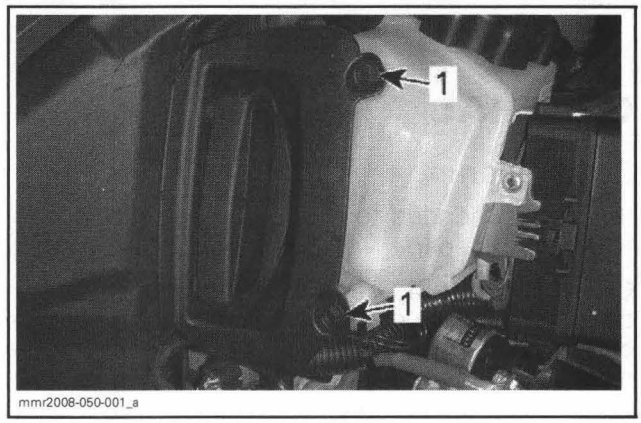

1. Screws

Pull on housing to release it from oil reservoir.

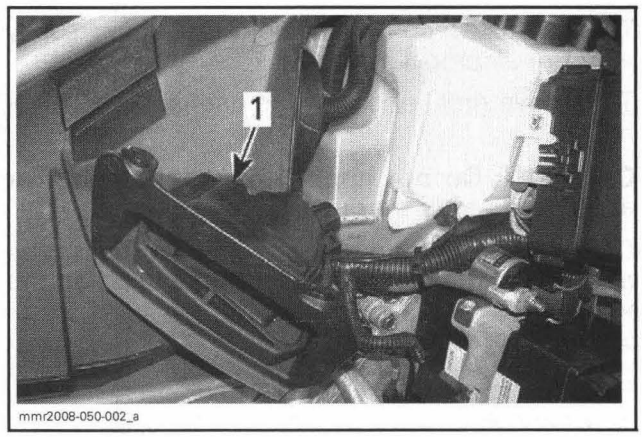

1. Housing

Remove rewind starter handle. Refer to *REWIND STARTER* section.

Rewind Starter Handle Housing Installation

Installation is the reverse of removal procedure. Pay attention to the following details.

To properly install rewind starter handle housing, it must be pushed vigorously into oil reservoir. Ensure it is properly set in place before installing hardware.

Torque screws to 1 N•m (9 lbf•**in**).

HOOD

Hood Removal

Stand in front of vehicle.

Pull outwards on both sides of hood aft section.

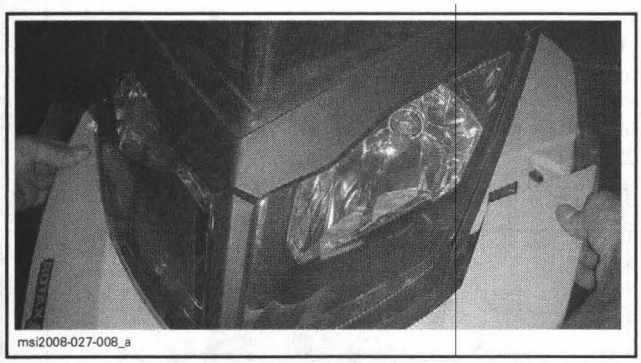

Slide hood forwards.

Remove hood from vehicle.

Hood Installation

The installation is the reverse of removal procedure.

BOTTOM PAN COVER

Bottom Pan Cover Removal

Remove *HOOD*, see procedure above.

Remove screws that hold bottom pan cover.

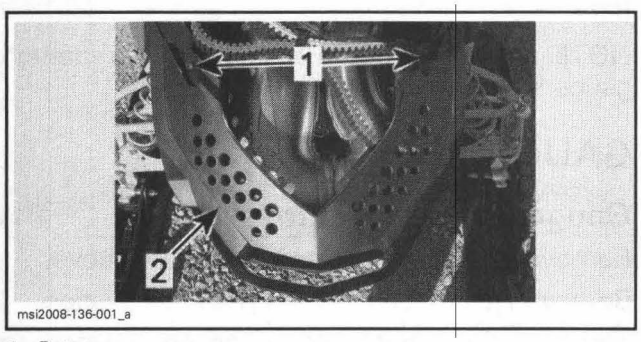

1. *Bottom pan cover screws*
2. *Bottom pan cover*

Remove bottom pan cover from vehicle.

Bottom Pan Cover Installation

The installation is the reverse of the removal procedure.

FRONT BUMPER

Front Bumper Removal

Remove *HOOD*, see procedure above.

Remove *BOTTOM PAN COVER*, see procedure above.

Remove existing rivets by drilling them.

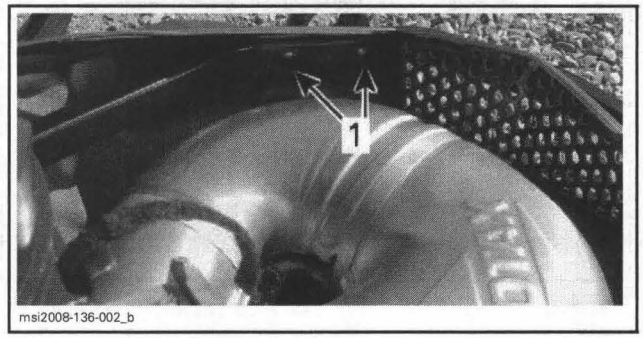

1. *Front bumper rivets*

Remove front bumper bolts.

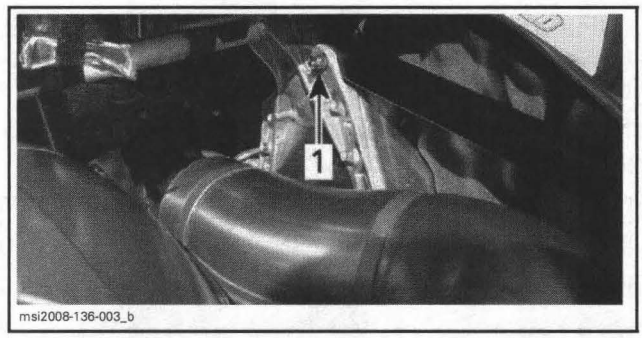

1. *Front bumper bolt*

Remove bumper from vehicle by pulling it toward the front.

Front Bumper Installation

Install bumper on vehicle.

Install rivets.

Install bumper bolts and nuts.

Tighten bumper nuts to 10 N•m (89 lbf•**in**).

Install bottom pan cover.

Install hood.

FRONT BOTTOM PAN

Front Bottom Pan Removal

Lift front of vehicle until skis are off the ground.

Place the front portion of frame on a wooden box to support it securely.

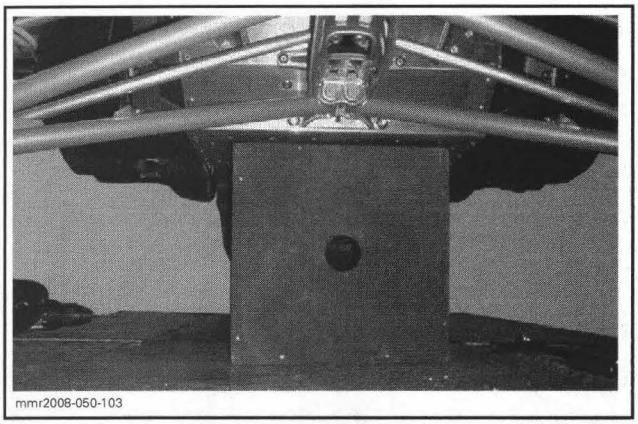
mmr2008-050-103

Remove *FRONT BUMPER*, see procedure above.

Remove muffler and tuned pipe. Refer to *EXHAUST SYSTEM* section.

Remove front shock absorbers.

Using an angle drill and a Supertanium™ drill bit (P/N 529 031 800), remove all rivets retaining bottom pan.

NOTE: Refer to *FRAME* for proper procedure when drilling rivets retaining plastic.

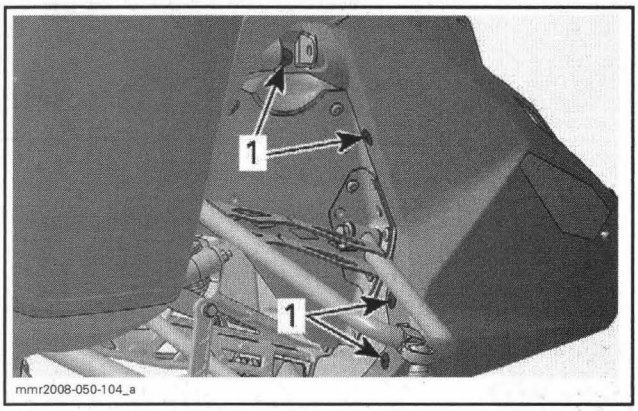

mmr2008-050-104_a

RH SIDE SHOWN
1. *Drill these rivets*

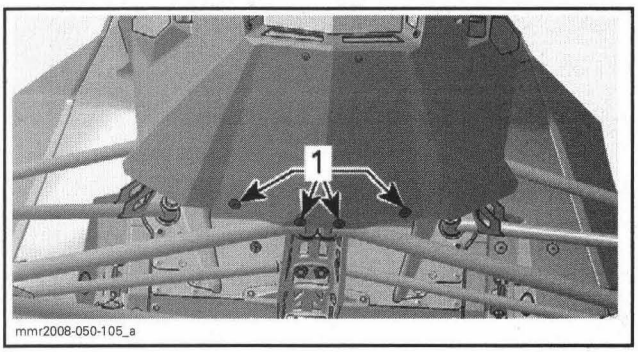

mmr2008-050-105_a

UNDERNEATH FRONT OF VEHICLE
1. *Drill these rivets*

Remove bottom pan.

Front Bottom Pan Installation

The installation is the reverse of removal procedure.

WINDSHIELD

Windshield Removal

Place your hands on each side of windshield.

Pull the windshield until its pins come out of rubber grommets.

NOTE: On **GSX models**, lift both deflectors first.

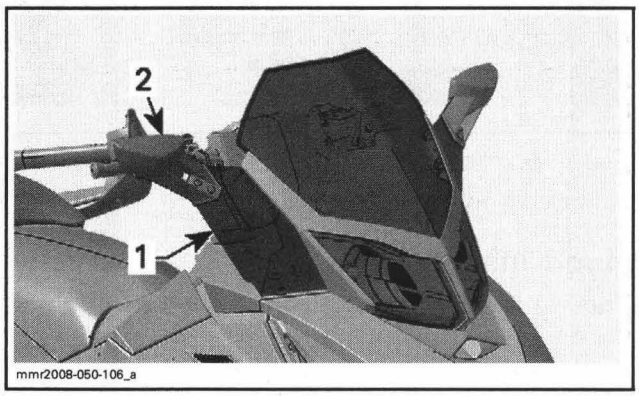

mmr2008-050-106_a

1. *Windshield deflector*
2. *Mirror*

Windshield Installation

The installation is the reverse of removal procedure.

NOTE: Make sure not to push grommets through gauge support holes.

GAUGE SUPPORT

Gauge Support Removal

Remove *WINDSHIELD*, see procedure above.

Remove *HOOD*, see procedure in this section.

Remove the multifunction gauge. Refer to *LIGHTS, GAUGE AND ACCESSORIES* section.

Unplug headlight connectors.

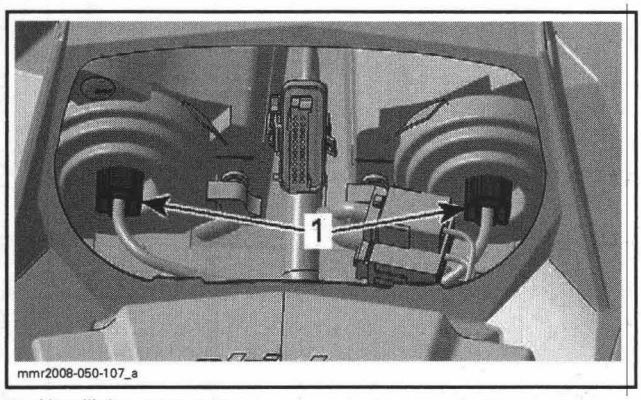

1. Headlight connectors

Remove the gauge support side screws.

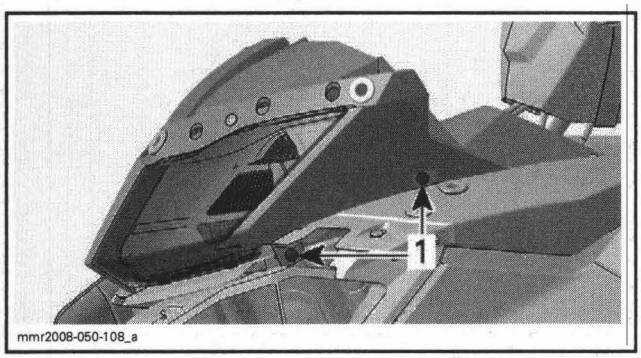

LH SIDE SHOWN
1. Gauge support side screws

Remove the screw under front of headlights.

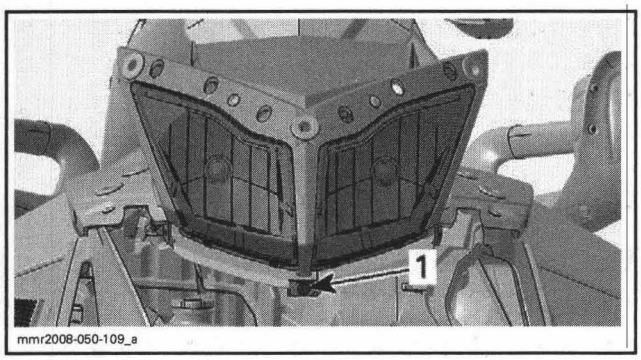

1. Remove this screw

Slide gauge support forwards the lift it.

On **GSX models**, unplug the 12-volt power outlet connectors.

Installation

The installation is the reverse of removal procedure.

CONSOLE

Console Removal

Remove LH and RH side panels.

Remove seat.

Remove the *GAUGE SUPPORT*, see procedure in this section.

Remove screws securing both sides of console front section.

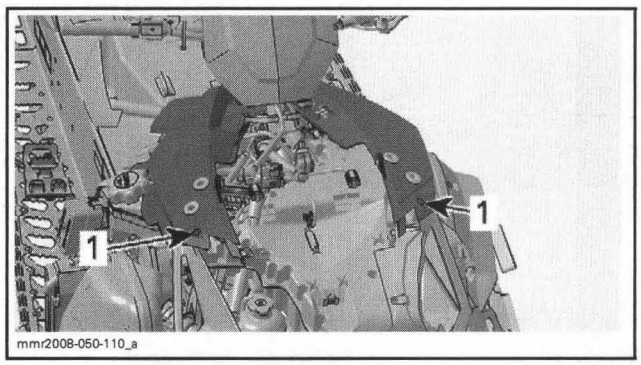

1. Remove these screws

Remove fuel tank cap.

Using the adjustment wrench (P/N 529 035 891), unscrew the fuel tank nut.

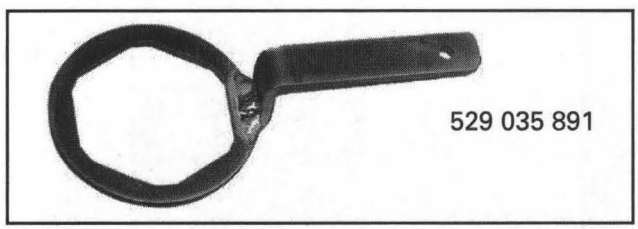

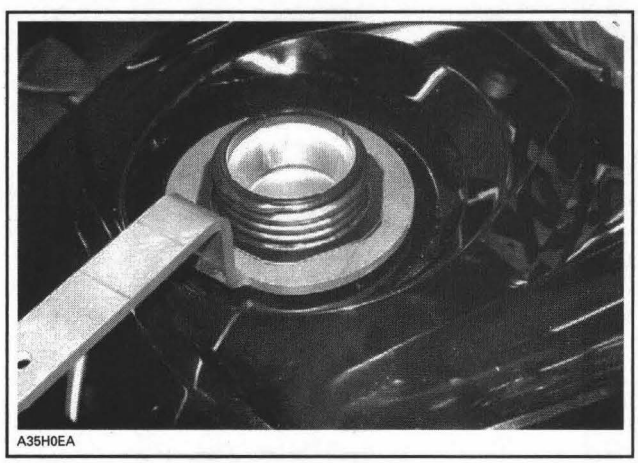

Lift up the console and unplug all connectors.

Install fuel tank cap.

Installation

The installation is the reverse of removal procedure.

FRAME

SERVICE TOOLS

Description	Part Number	Page
Supertanium drill bit	529 031 800	491

SERVICE PRODUCTS

Description	Part Number	Page
XP-S synthetic chaincase oil	413 803 300	491

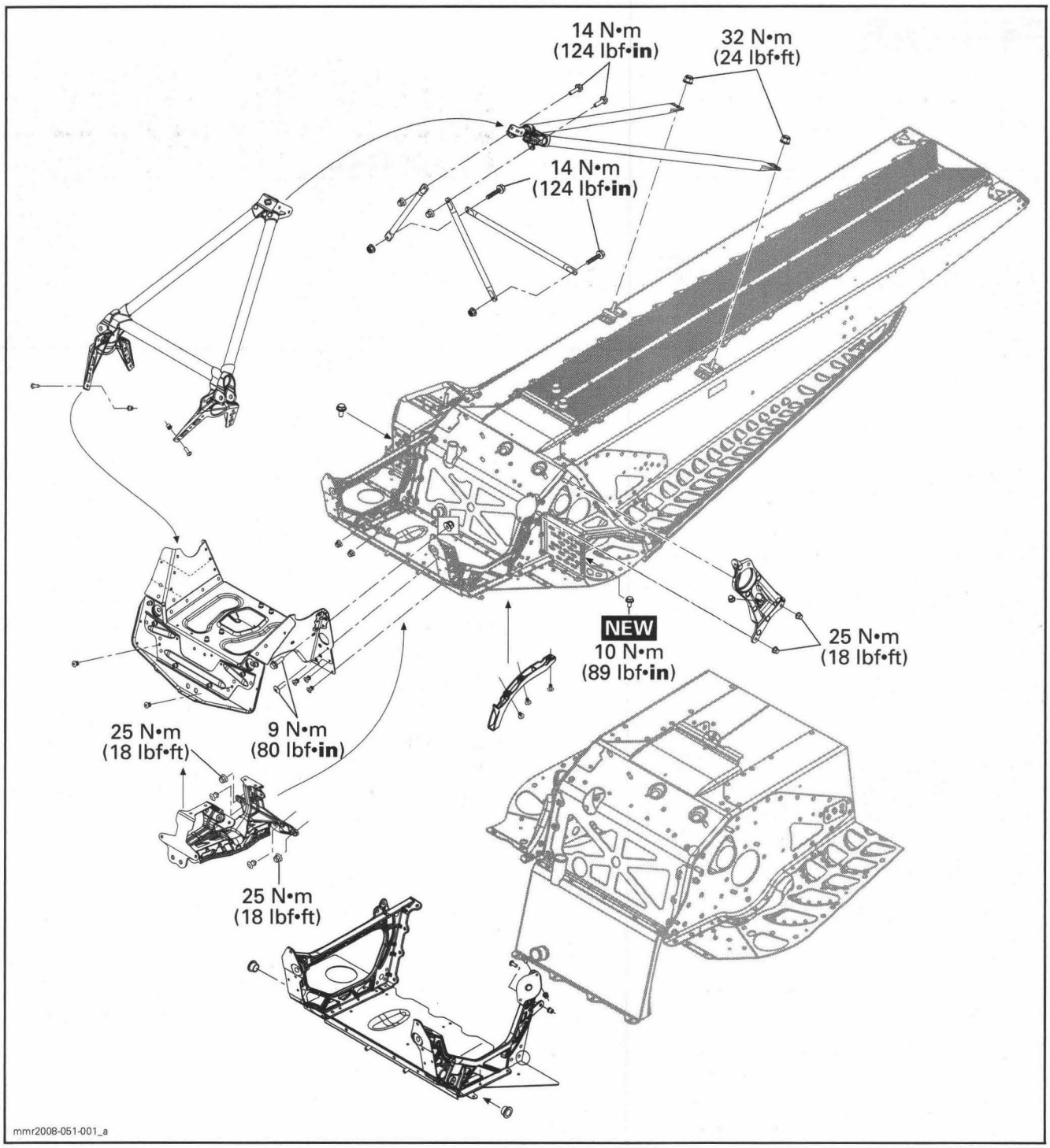
14 N•m
(124 lbf•in)
32 N•m
(24 lbf•ft)
14 N•m
(124 lbf•in)
NEW
10 N•m
(89 lbf•in)
25 N•m
(18 lbf•ft)
25 N•m
(18 lbf•ft)
9 N•m
(80 lbf•in)
25 N•m
(18 lbf•ft)
mmr2008-051-001_a

GENERAL

During assembly/installation, use the torque values and the service products as in the exploded views.

Clean threads before applying a threadlocker. Refer to *SELF-LOCKING FASTENERS* and *LOCTITE APPLICATION* at the beginning of this manual for complete procedure.

⚠ WARNING

Torque wrench tightening specifications must be strictly adhered to.
Locking devices (e.g.: locking tabs, elastic stop nuts, cotter pins, etc.) must be replaced with new ones.

RIVET DRILLING PROCEDURE

For proper drilling instructions and to prevent premature wear, follow the procedure below.

CAUTION: When removing rivets, make sure do not enlarge or deform the holes.

Self-Percing Rivet

Recommended Method

Using a grinding disk, grind the rivet head.

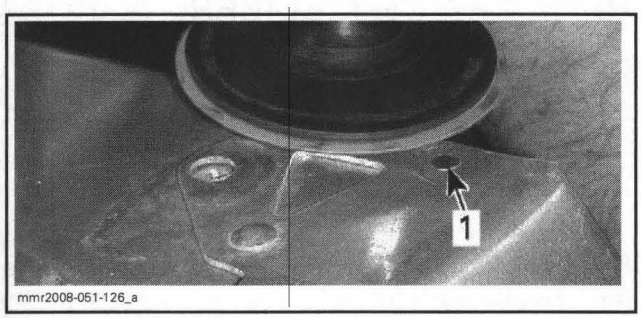

1. Rivet head removed

Support the frame around the rivet hole with a socket on the opposite side to avoid warpage.

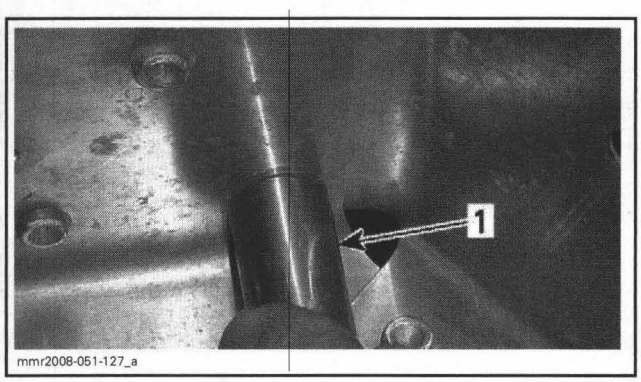

1. 11 mm socket

Drive out remaining rivet using a punch.

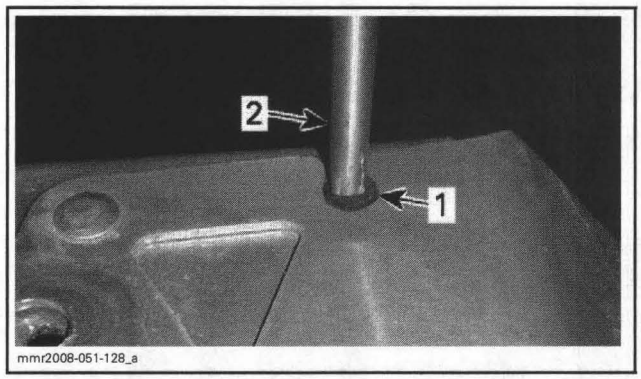

1. Punch
2. Rivet

Alternative Method

Use the Supertanium drill bit (P/N 529 031 800), available in a 5 mm (3/16 in) size and shipped in packs of 2.

Partially drill **rivet end — not the rivet head**.

Always use a variable speed drill.

Maintain a slow to medium speed at all times when drilling. The proper speed is attained when a constant chip is ejected.

NOTE: To increase bit life, use XP-S synthetic chaincase oil (P/N 413 803 300) as a cutting oil.

CAUTION: High speed drilling will cause excessive heat which may destroy the cutting edge of the bit; therefore, avoid using pneumatic drills.

Cut rivet using a chisel.

Remove riveted part.

Drive out remaining rivet head using a punch.

Pop Rivets

Use the Supertanium drill bit (P/N 529 031 800), available in a 5 mm (3/16 in) size and shipped in packs of 2.

Always use a variable speed drill.

Always drill **rivet head**.

Maintain a slow to medium speed at all times when drilling. The proper speed is attained when a constant chip is ejected.

When rivet is located on plastic part, use pliers to avoid rivet turning and heating plastic.

Use a small punch to push the rivet end.

HUCK Rivets

Recommended Method

Using a cut-off tool, cut the rivet attachment without touching the shoulder.

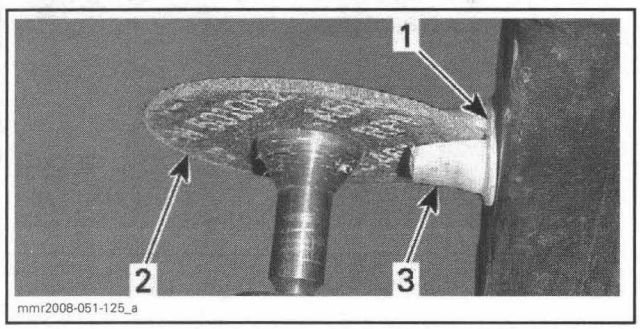

1. Rivet attachment shoulder
2. Cutter wheel
3. Rivet attachment

NOTE: Apply a thin layer of grease on cutter wheel to increase its durability.

Break the rivet attachment shoulder using a chisel.

Use a small punch to push the rivet stem.

Alternative Method

Measure outside diameter of rivet stem and select appropriate drill bit.

Drill the **rivet stem — not the rivet head** until rivet attachment is freed.

Always use a variable speed drill.

Maintain a slow to medium speed at all times when drilling. The proper speed is attained when a constant chip is ejected.

NOTE: When possible, use an angle grinder to grind rivet head or use an air hammer to cut the rivet attachment.

PROCEDURES

FRAME

Frame Cleaning

Clean frame and tunnel with appropriate cleaners and rinse with high pressure hose.

NOTE: For bare aluminum frames use only aluminum cleaner and follow instructions on container.

CAUTION: Never direct high-pressure water jet towards decals. They will peel off.

Frame Welding

No welds should be done on aluminum frame except if mentioned or required on a BRP Bulletin.

REAR BUMPER

Rear Bumper Removal

Underneath tunnel, remove bolts retaining rear bumper to tunnel.

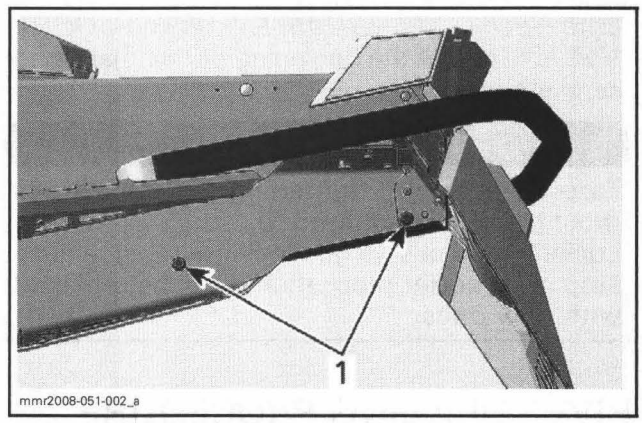

TYPICAL — MX Z TRAIL MODEL SHOWN
1. Rear bumper bolts on right side

Pull rear bumper to remove it from vehicle.

Rear Bumper Installation

The installation is the reverse of the removal procedure.

NOTE: Install all bolts before torquing them.

REAR FRAME MEMBER

Rear Frame Member Removal

Refer to *BODY* section to remove the following:
- Seat
- Gauge support
- Console.

Remove trim panel at the bottom of rear frame member (one each side).

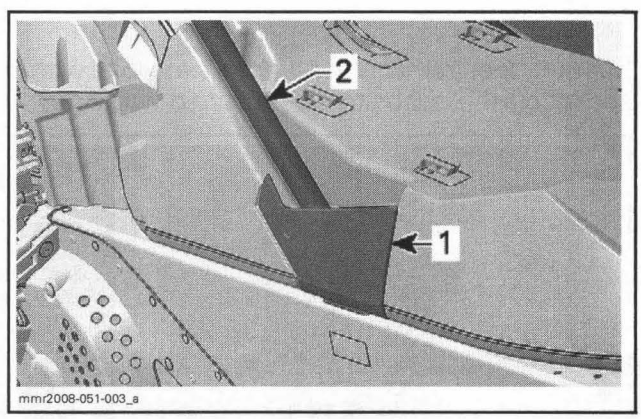

1. Trim panel
2. Rear frame member

Remove nut and shouldered washer securing rear frame member (one each side).

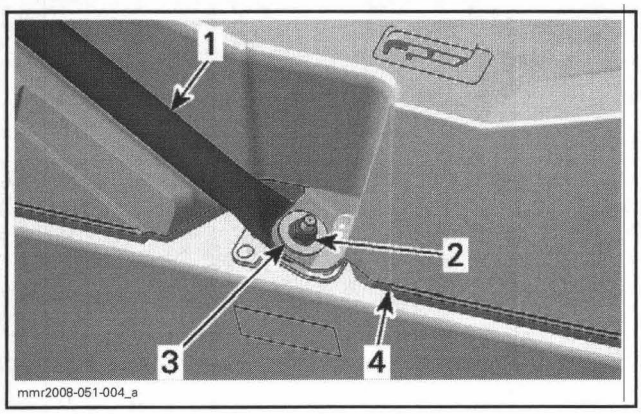

1. *Rear frame member*
2. *Nut to remove*
3. *Shouldered washer*
4. *Fuel tank*

Remove screws securing the rear frame member to steering column support and side frame members.

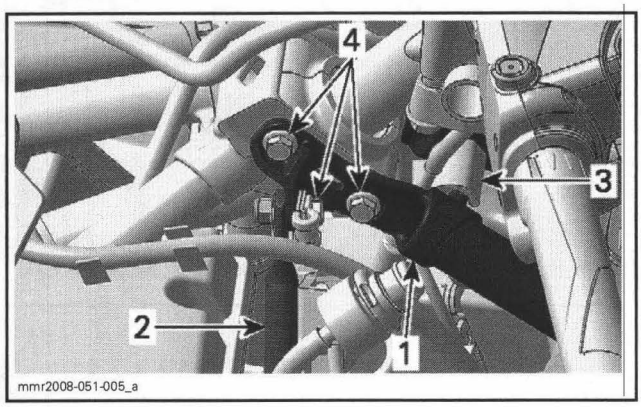

1. *Rear frame member*
2. *LH side frame member*
3. *Steering column support*
4. *Bolts to remove*

Remove rear frame member.

Rear Frame Member Installation

The installation is the reverse of the removal procedure.

NOTE: Install all bolts and nuts before tightening them.

FRONT FRAME MEMBER

Front Frame Member Removal

Refer to *BODY* section to remove the following:

- Hood
- Console
- Gauge support.

Remove the secondary air intake silencer. Refer to *AIR INTAKE SYSTEM* section.

Remove the tuned pipe. Refer to *EXHAUST SYSTEM* section.

Lift front of vehicle until skis are off the ground.

Place the front portion of frame on a wooden box to support it securely.

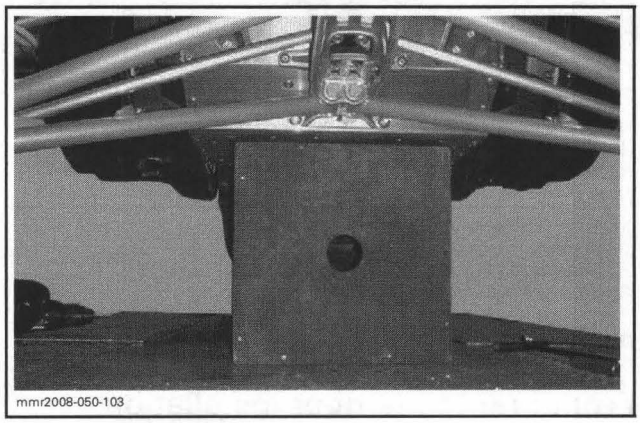

Remove front shock absorbers.

Drill the rivet retaining the front bottom pan to front frame member (one each side).

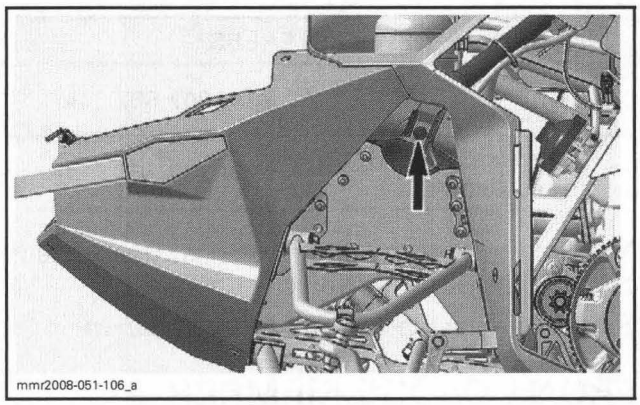

Remove HUCK rivets (six each side), see removal procedure at the beginning of this section.

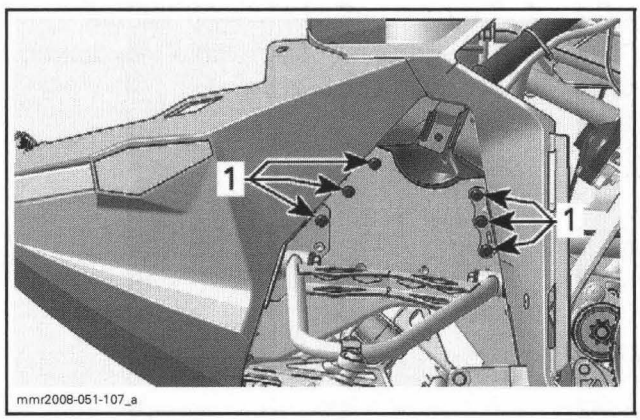

1. *HUCK rivets*

Remove bolts securing front frame member, rear frame member and steering column support.

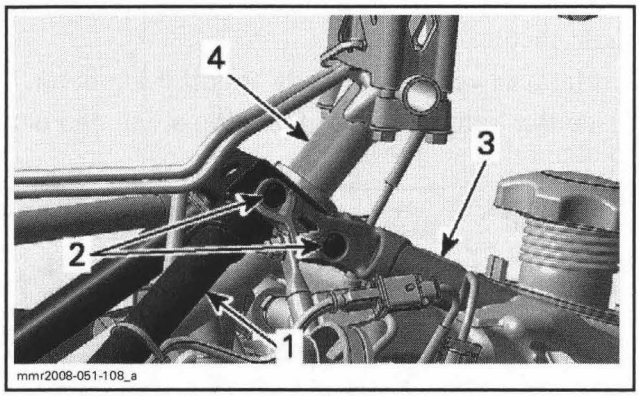

1. Front frame member
2. Bolts to remove
3. Rear frame member
4. Steering column

Remove the front frame member.

Front Frame Member Installation

The installation is the reverse of the removal procedure. However, pay attention to the following.

Replace the HUCK rivets with the following parts.

NEW FASTENERS	
Hexagonal flanged bolt M6 x 20	(P/N 207 662 044)
Hexagonal flanged elastic stop nut M6	(P/N 233 261 414)

NOTE: Unless stated otherwise, install bolt heads toward outside of the vehicle.

Torque new fasteners to 10 N•m (89 lbf•**in**).

FRONT CROSS MEMBER

Front Cross Member Removal

Lift front of vehicle until skis are off the ground.

Place the front portion of frame on a wooden box to support it securely.

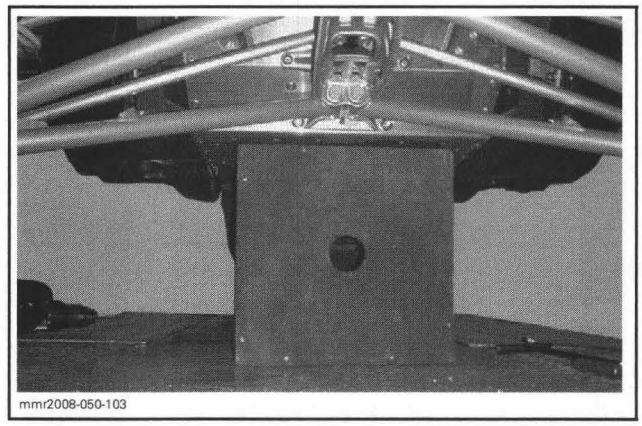

Remove the muffler and the tuned pipe. Refer to *EXHAUST SYSTEM* section.

Remove the RH front suspension assembly by doing the following:

- Detach tie-rod end from steering column.

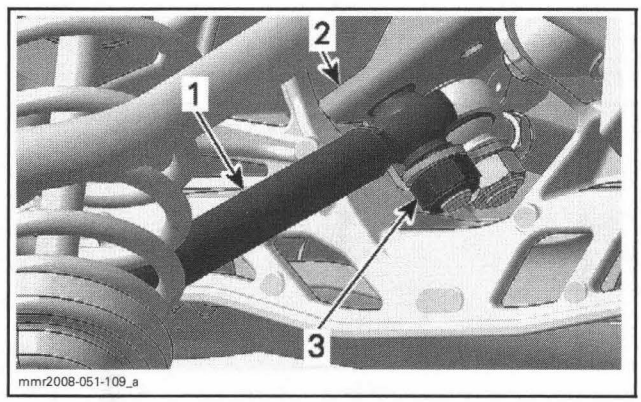

1. Tie-rod
2. Steering column
3. Tie-rod end nut

- Remove shock absorber upper bolt.
- Remove bolt linking stabilizer link and stabilizer lever.

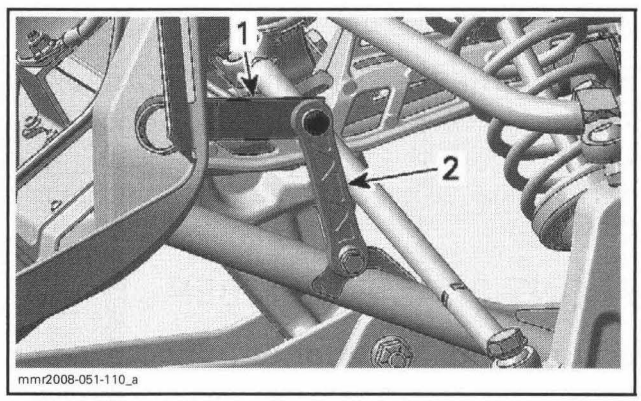

1. Stabilizer lever
2. Stabilizer link

- Remove upper and lower suspension arms bolts. Refer to *FRONT SUSPENSION* section.

- Pull suspension arms to remove the RH front suspension assembly.

NOTE: Repeat same procedure for the LH front suspension.

Remove bolts securing the bottom of steering column.

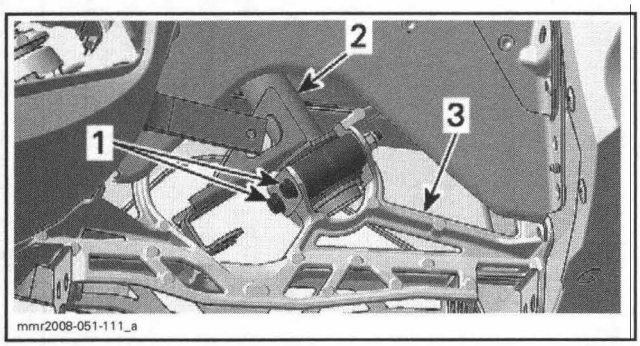

1. Steering column bolts
2. Steering column
3. Lower suspension arm support

Remove the front bottom pan. Refer to *BODY* section.

NOTE: Keep the front bumper installed on front bottom pan.

Drill the following rivets.

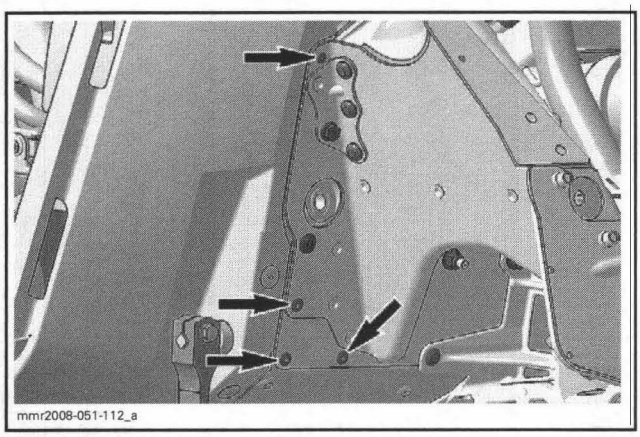

RH SIDE

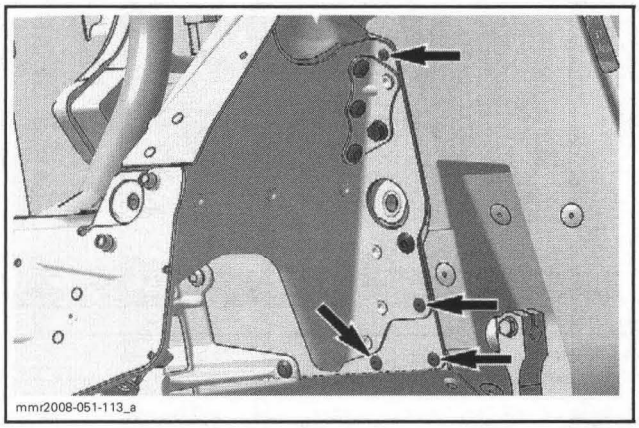

LH SIDE

Remove screws securing front cross member to frame (2 each side).

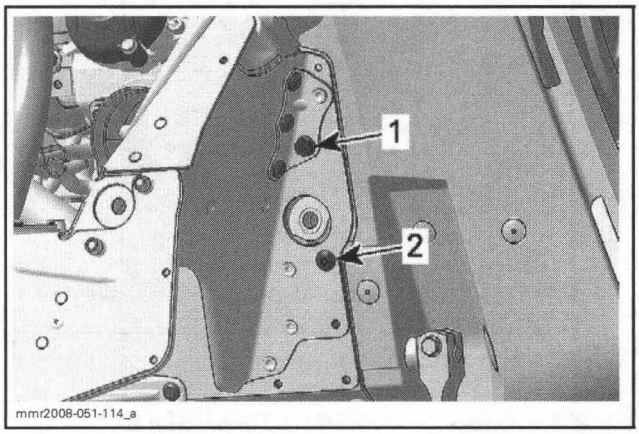

LH SIDE SHOWN
1. Hexagonal flanged bolt
2. Torx screw

Remove HUCK rivets (six each side), see removal procedure at the beginning of this section.

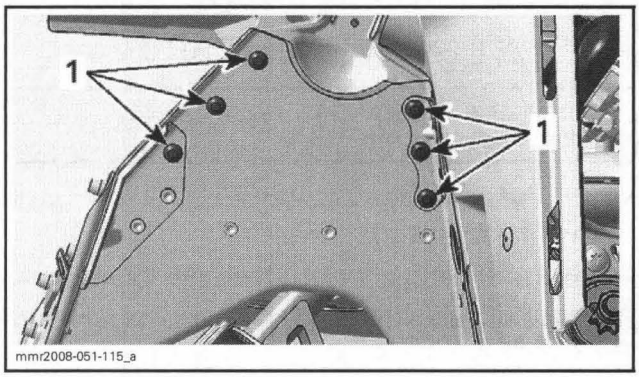

LH SIDE SHOWN
1. HUCK rivets

Grind rivets securing the lower suspension arm support to engine member.

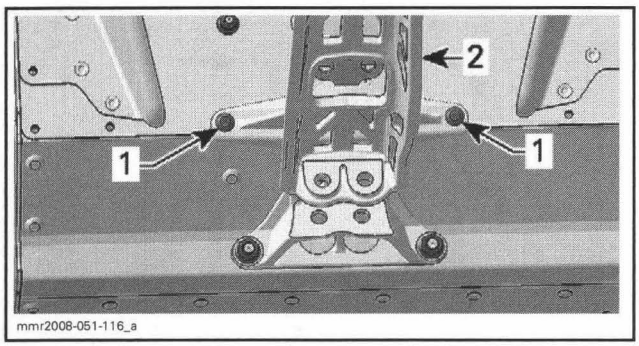

1. *Rivets*
2. *Lower suspension arm support*

Remove the following nuts.

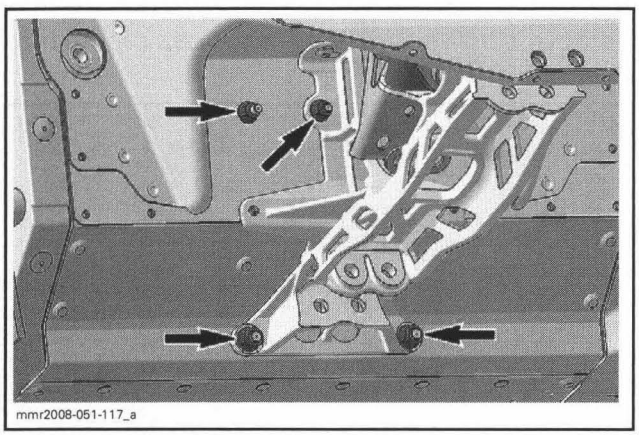

Remove the front cross member.

Front Cross Member Installation

The installation is the reverse of the removal procedure. However, pay attention to the following.

Replace the HUCK rivets with the following parts.

NEW FASTENERS	
Hexagonal flanged bolt M6 x 20	(P/N 207 662 044)
Hexagonal flanged elastic stop nut M6	(P/N 233 261 414)

NOTE: Unless stated otherwise, install bolt heads toward outside of the vehicle.

Torque new fasteners to 10 N•m (89 lbf•**in**).

Reinstall all removed parts by using the appropriate installation procedure.

ENGINE MEMBER

Engine Member Removal

Remove engine from vehicle. Refer to *ENGINE REMOVAL AND INSTALLATION* section.

Remove the *FRONT CROSS MEMBER*, see procedure in this section.

Remove stabilizer bar.

Remove screws retaining side bottom pan to headlight housing.

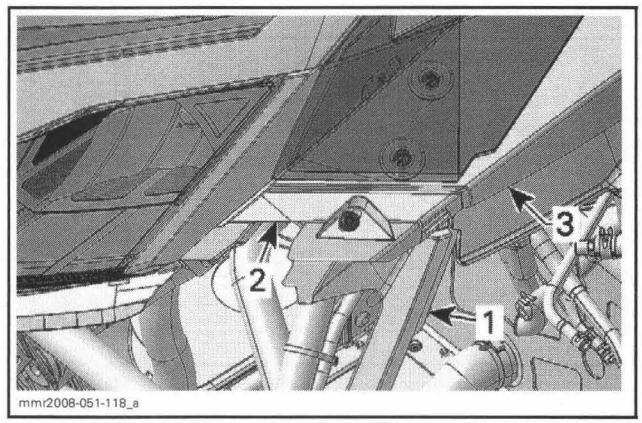

LH SIDE SHOWN
1. *Side bottom pan*
2. *Headlight housing*
3. *Gauge support*

Remove both side bottom pans by drilling the following rivets.

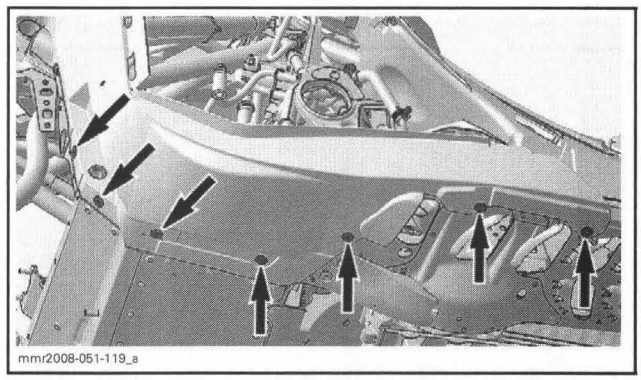

LH SIDE BOTTOM PAN

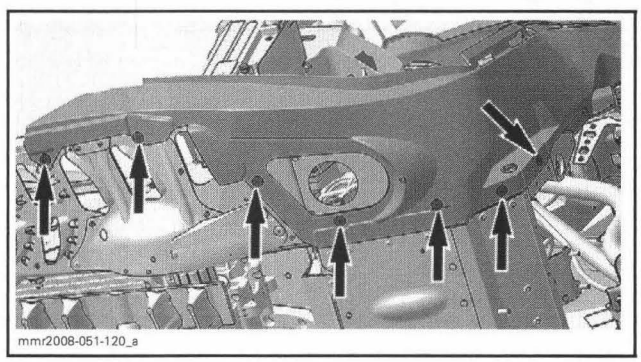

RH SIDE BOTTOM PAN

On LH side, remove front and rear engine rubber mounts.

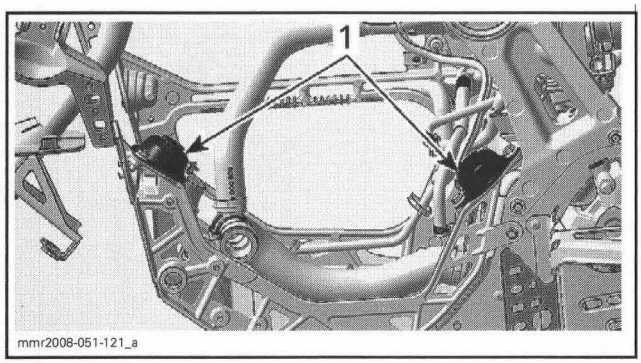

1. Engine rubber mounts

Remove HUCK rivets, see removal procedure at the beginning of this section.

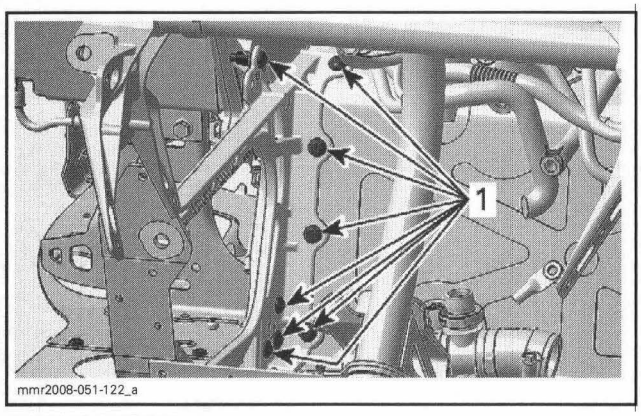

RH SIDE SHOWN
1. HUCK rivets

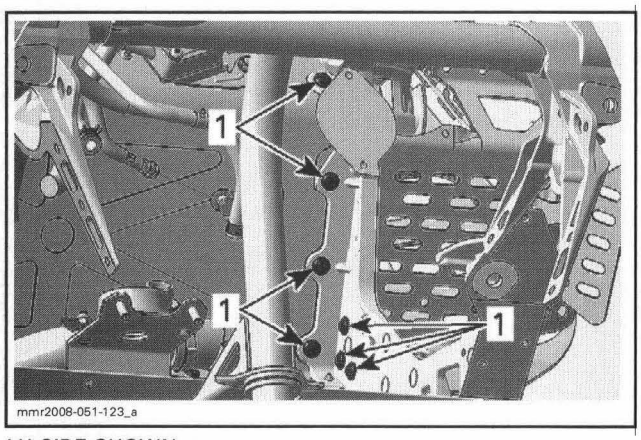

LH SIDE SHOWN
1. HUCK rivets

Drill or grind rivets securing engine member to frame.

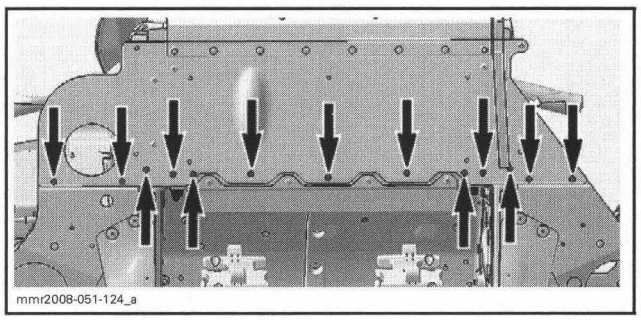

Remove the engine member.

Engine Member Installation

The installation is the reverse of the removal procedure. However, pay attention to the following.

Replace the HUCK rivets with the following parts.

NEW FASTENERS	
Hexagonal flanged bolt M6 x 20	(P/N 207 662 044)
Hexagonal flanged elastic stop nut M6	(P/N 233 261 414)

NOTE: Install bolt heads toward outside of the vehicle, except the one securing chaincase.

Torque new fasteners to 10 N•m (89 lbf•**in**).

Reinstall all removed parts by using the appropriate installation procedure.

500SS MODELS

MODEL			GSX 500SS	MX Z 500SS	
			SPORT	TNT	TRAIL
ENGINE					
Engine type			593		
Number of cylinders			2		
Bore		mm (in)	76 (2.992)		
Stroke		mm (in)	65.80 (2.591)		
Displacement		cm^3 (in^3)	597 (36.43)		
Compression ratio			12.00 ± 0.5		
Maximum power engine speed		± 100 RPM	8000		
Combustion chamber volume		cc	25.49 to 27.96		
RAVE spring	Color		Brown		
	Wire diameter	mm (in)	0.90 (0.035)		
	Minimum free length	mm (in)	48.50 (1.909)		
Piston ring type			Semi-trapezoidal		
Ring end gap	New	mm (in)	0.40 to 0.55 (.0157 to .0217)		
	Wear limit	mm (in)	1.0 (.039)		
Ring/piston groove clearance	New	mm (in)	0.040 to 0.090 (.0016 to .0035)		
	Wear limit	mm (in)	0.20 (.0079)		
Piston/cylinder wall clearance	New	mm (in)	0.120 ± 0.02 (.0047 ± .0008)		
	Wear limit	mm (in)	0.20 (.0079)		
Piston skirt wear	Wear limit	mm (in)	0.15 (.006)		
Cylinder head warpage	Wear limit	mm (in)	0.5 (.02)		
Cylinder taper	New (max.)	mm (in)	0.05 (.0020)		
	Wear limit	mm (in)	0.1 (.0039)		
Cylinder out of round	New (max.)	mm (in)	0.010 (.0004)		
	Wear limit	mm (in)	0.08 (.0031)		
Maximum crankshaft end play	New (max.)	mm (in)	0.3 (.0118)		
Maximum crankshaft deflection	Wear limit	mm (in)	MAG: 0.05 (.0020) PTO: 0.06 (.0024)		
Connecting rod big end axial play	New	mm (in)	0.390 to 0.740 (.0154 to .0291)		
	Wear limit	mm (in)	1.2 (.0472)		
COOLING SYSTEM					
Coolant	Type		Ethyl glycol and distilled water (50%/50%). Use premix coolant from BRP (P/N 219 700 362) or coolant specifically formulated for aluminum engines		
	Quantity	L (U.S. gal.)	5.5 (1.45)		
Thermostat opening temperature		°C (°F)	37 (98.6)		
Radiator cap opening pressure		kPa (PSI)	90 (13)		

MODEL			GSX 500SS	MX Z 500SS	
			SPORT	TNT	TRAIL
LUBRICATION SYSTEM					
Injection oil	Type		XP-S mineral injection oil		
	Quantity	L (U.S. oz)	3.7 (125.1)		
FUEL SYSTEM					
Carburetor type			TM40		
Main jet			390		
Needle jet			P-0M		
Pilot jet			17.5		
Jet needle identification			9CEY01 – 58		
Clip position number			3		
Slide cut-away			2.0		
Idle throttle slide height		mm (in)	1.5 ± 0.1 (.059 ± .004)		
Float adjustment		mm (in)	Not adjustable		
Air or pilot screw adjustment		± 1/16 turn	1.5		
Idle speed		± 200 RPM	1600		
Gas type			Unleaded		
Pump octane number	Inside North America ((R+M)/2)		87 or higher		
	Outside North America (RON)		92 or higher		
Fuel tank capacity		L (U.S. gal)	40 (10.6)		
Gas/oil ratio			Injection		
ELECTRICAL SYSTEM					
Magneto generator output		W	360 @ 6000 RPM		
Ignition type			C.D.I.		
Spark plug	Make and type		NGK BR10ECS		
	Gap	mm (in)	Not adjustable 0.70 to 0.80 (.028 to .032)		
Ignition timing BTDC		mm (in)	2.49 (.098) @ 3500 RPM		
Trigger coil		Ω	190 to 300		
Lighting coil		Ω	0.1 to 1.0		
High tension coil	Primary	Ω	0.3 to 0.7		
	Secondary	KΩ	18 to 26 (with caps)		
Battery			12 V, 18 A•h (with electric starter)		
Headlamp		W	2 x 60/55 (H4)		
Taillight and stoplight		W	5/21		
Fuse	Main	A	30 (with electric starter)		
	ECM	A	5 (with electric starter)		
	Headlamp	A	15		
	Accessories	A	15		
	Fuel level sensor	A	0.25 (if applicable)		

mmr2008-052

MODEL			GSX 500SS	MX Z 500SS	
			SPORT	TNT	TRAIL
DRIVE SYSTEM					
Chaincase oil	Type		XP-S synthetic chaincase oil		
	Quantity	mL (U.S. oz)	250 (8.5)		
Chain drive ratio			24/45	25/45	
Chain	Pitch	in	3/8		
	Type/links qty/plate qty		Silent 13/104		
Drive pulley type			TRA III		
Drive pulley calibration	Clutch engagement	± 100 RPM	3400	3800	
	Spring color		Blue/Purple	Purple/Purple	
	Spring length	mm (in)	96.6 (3.803)	106.98 (4.212)	
	Pin		Solid (P/N 417 004 308)		
	Ramp		412		
	Screw position		2		
Driven pulley type	Type		QRS		
	Spring color		Black		
	Spring preload		0		
	Cam angle		42°		
Pulley distance	Z	mm (in)	Not adjustable 21.2 (.835)		
Offset	X	mm (in)	Not adjustable 37.15 (1.463)		
Drive belt part number		P/N	417 300 197		
Drive belt	Width	mm (in)	37.3 (1.469)		
	Wear limit	mm (in)	34.9 (1.374)		
Drive belt adjustment	Deflection	mm (in)	32 ± 5 (1.260 ± .197)		
	Force	kgf (lbf)	11.30 (24.91)		
Track	Width	mm (in)	381 (15)		
	Length	m (in)	3.05 (120)		
	Profile height	mm (in)	25.4 (1.0)	25.4 (1.0) EUR: 31.8 (1.25)	25.4 (1.0)
Track adjustment	Deflection	mm (in)	30 to 35 (1.181 to 1.378)		
	Force	kgf (lbf)	7.3 (16)		
BRAKE SYSTEM					
Brake lining minimum thickness		mm (in)	1 (.039)		
Brake disk minimum thickness		mm (in)	4.5 (.177)		
Brake fluid	Type		DOT 4		
	Quantity	mL (U.S. oz)	60 (2.0)		

MODEL		GSX 500SS	MX Z 500SS	
		SPORT	TNT	TRAIL
SUSPENSION				
FRONT				
Suspension type		REV-XP		
Suspension maximum travel	mm (in)	229 (9)		
Shock absorber type		Motion control	H.P.G. T/A (aluminum) EUR: H.P.G. clicker T/A (aluminum)	Motion control
Sway bar type		Link		
REAR				
Suspension type		SC-5		
Suspension maximum travel	mm (in)	381 (15)		
Shock absorber type	Center	Motion control	H.P.G. T/A (aluminum)	Motion control
	Rear	Motion control	H.P.G. T/A (aluminum) EUR: H.P.G. racing clicker (aluminum)	Motion control
Stroke limiter standard position		3		
STEERING SYSTEM				
Ski type		Pilot 5.7		
Toe-out	mm (in)	0 (0)		
Camber		0°		
VEHICLE INFORMATIONS				
Mass (dry)	kg (lb)	198 (437)	181 (399)	188 (415)
Length	m (in)	2.89 (113.8)		
Width	m (in)	1.22 (48)		
Height	m (in)	1.21 (47.7)	1.0 (39.4)	1.17 (46)
Ski stance (carbide to carbide)	m (in)	1.07 (42)		
MATERIAL				
Frame		Aluminum		
Bottom pan and side panels		Polypropylene		
Hood		Surlyn		

800R MODELS

MODEL			GSX 800R POWER TEK LIMITED
ENGINE			
Engine type			797
Number of cylinders			2
Bore		mm (in)	82 (3.228)
Stroke		mm (in)	75.70 (2.980)
Displacement		cm^3 (in^3)	799.5 (48.79)
Compression ratio			12.5 ± 0.5
Maximum power engine speed		± 100 RPM	8150
Combustion chamber volume		cc	34.08 to 37.26
RAVE spring	Wire diameter	mm (in)	0.70 (0.028)
	Minimum free length	mm (in)	35.00 (1.378)
Piston ring type			Semi-trapezoidal
Ring end gap	New	mm (in)	0.40 to 0.60 (.0157 to .0236)
	Wear limit	mm (in)	1.0 (.039)
Ring/piston groove clearance	New	mm (in)	0.060 to 0.100 (.0024 to .0039)
	Wear limit	mm (in)	0.20 (.0079)
Piston/cylinder wall clearance	New	mm (in)	0.108 to 0.148 (.0043 to .0058)
	Wear limit	mm (in)	0.20 (.0079)
Piston skirt wear	Wear limit	mm (in)	0.15 (.006)
Cylinder head warpage	Wear limit	mm (in)	0.5 (.02)
Cylinder taper	New (max.)	mm (in)	0.05 (.0020)
	Wear limit	mm (in)	0.1 (.0039)
Cylinder out of round	New (max.)	mm (in)	0.010 (.0004)
	Wear limit	mm (in)	0.08 (.0031)
Maximum crankshaft end play	New (max.)	mm (in)	0.3 (.012)
Maximum crankshaft deflection	Wear limit	mm (in)	MAG: 0.05 (.0020) PTO: 0.06 (.0024)
Connecting rod big end axial play	New	mm (in)	0.230 to 0.620 (.0091 to .0244)
	Wear limit	mm (in)	1.2 (.0472)
COOLING SYSTEM			
Coolant	Type		Ethyl glycol and distilled water (50%/50%). Use premix coolant from BRP (P/N 219 700 362) or coolant specifically formulated for aluminum engines
	Quantity	L (U.S. gal.)	6 (1.59)
Thermostat opening temperature		°C (°F)	37 (98.6)
Radiator cap opening pressure		kPa (PSI)	90 (13)

MODEL			GSX 800R POWER TEK LIMITED
LUBRICATION SYSTEM			
Injection oil	Type		XP-S 2-stroke synthetic blend
	Quantity	L (U.S. oz)	3.7 (125.1)
FUEL SYSTEM			
Carburetor type			TM40
Main jet			480
Needle jet			P-0M
Pilot jet			17.5
Jet needle identification			9EGI04 – 58
Clip position number			Not adjustable
Slide cut-away			2.0
Idle throttle slide height		mm (in)	1.6 ± 0.1 (.063 ± .004)
Float adjustment		mm (in)	Not adjustable
Air or pilot screw adjustment		± 1/16 turn	1.5
Idle speed		± 200 RPM	1600
Gas type			Unleaded
Pump octane number	Inside North America ((R+M)/2)		91 or higher
	Outside North America (RON)		95 or higher
Fuel tank capacity		L (U.S. gal)	40 (10.6)
Gas/oil ratio			Injection
ELECTRICAL SYSTEM			
Magneto generator output		W	360 @ 6000 RPM
Ignition type			C.D.I.
Spark plug	Make and type		NGK BR9ECS
	Gap	mm (in)	Not adjustable 0.70 to 0.80 (.028 to .032)
Ignition timing BTDC		mm (in)	2.37 (.093) @ 3500 RPM
Trigger coil		Ω	190 to 300
Lighting coil		Ω	0.1 to 1.0
High tension coil	Primary	Ω	0.3 to 0.7
	Secondary	KΩ	18 to 26 (with caps)
Battery			12 V, 18 A•h (with electric starter) 12 V, 3 A•h (without electric starter)
Headlamp		W	2 x 60/55 (H4)
Taillight and stoplight		W	5/21
Fuse	Main	A	30 (with electric starter)
	ECM	A	5 (with electric starter)
	Headlamp	A	15
	Accessories	A	15
	Fuel level sensor	A	0.25 (if applicable)

MODEL			GSX 800R POWER TEK LIMITED
DRIVE SYSTEM			
Chaincase oil	Type		XP-S synthetic chaincase oil
	Quantity	mL (U.S. oz)	250 (8.5)
Chain drive ratio			25/45
Chain	Pitch	in	3/8
	Type/links qty/plate qty		Silent 104/13
Drive pulley type			TRA VII
Drive pulley calibration	Clutch engagement	± 100 RPM	3800
	Spring color		Blue/Green
	Spring length	mm (in)	105.7 (4.161)
	Pin		Solid (P/N 417 222 594)
	Ramp		414
	Screw position		3
Driven pulley type	Type		QRS
	Spring color		Purple
	Spring preload		0
	Cam angle		44°
Pulley distance	Z	mm (in)	Not adjustable 21.2 (.835)
Offset	X	mm (in)	Not adjustable 37.15 (1.463)
Drive belt part number		P/N	417 300 166
Drive belt	Width	mm (in)	37.7 (1.484)
	Wear limit	mm (in)	35.3 (1.390)
Drive belt adjustment	Deflection	mm (in)	32 ± 5 (1.260 ± .197)
	Force	kgf (lbf)	11.30 (24.91)
Track	Width	mm (in)	381 (15)
	Length	m (in)	3.05 (120)
	Profile height	mm (in)	25.4 (1)
Track adjustment	Deflection	mm (in)	30 to 35 (1.181 to 1.378)
	Force	kgf (lbf)	7.3 (16)
BRAKE SYSTEM			
Brake lining minimum thickness		mm (in)	1 (.039)
Brake disk minimum thichness		mm (in)	4.5 (.177)
Brake fluid	Type		DOT 4
	Quantity	mL (U.S. oz)	60 (2.0)

MODEL		GSX 800R POWER TEK LIMITED
SUSPENSION		
FRONT		
Suspension type		REV-XP
Suspension maximum travel mm (in)		229 (9)
Shock absorber type		H.P.G.
Sway bar type		Link
REAR		
Suspension type		SC-5
Suspension maximum travel mm (in)		381 (15)
Shock absorber type	Center	H.P.G.
	Rear	H.P.G. VR
Stroke limiter standard position		4
STEERING SYSTEM		
Ski type		Pilot 5.7
Toe-out mm (in)		0 (0)
Camber		0°
VEHICLE INFORMATIONS		
Mass (dry) kg (lb)		206 (455)
Length m (in)		2.89 (113.8)
Width m (in)		1.22 (47.9)
Height m (in)		1.21 (47.7)
Ski stance (carbide to carbide) m (in)		1.07 (42)
MATERIAL		
Frame		Aluminum
Bottom pan and side panels		Polypropylene
Hood		Surlyn

MODEL			MX Z 800R POWER TEK			
			ADRENALINE	X	RENEGADE	RENEGADE X
ENGINE						
Engine type			797			
Number of cylinders			2			
Bore		mm (in)	82 (3.228)			
Stroke		mm (in)	75.70 (2.980)			
Displacement		cm^3 (in^3)	799.5 (48.79)			
Compression ratio			12.5 ± 0.5			
Maximum power engine speed		± 100 RPM	8150			
Combustion chamber volume		cc	34.08 to 37.26			
RAVE spring	Wire diameter	mm (in)	0.70 (0.028)			
	Minimum free length	mm (in)	35.00 (1.378)			
Piston ring type			Semi-trapezoidal			
Ring end gap	New	mm (in)	0.40 to 0.60 (.0157 to .0236)			
	Wear limit	mm (in)	1.0 (.039)			
Ring/piston groove clearance	New	mm (in)	0.060 to 0.100 (.0024 to .0039)			
	Wear limit	mm (in)	0.20 (.0079)			
Piston/cylinder wall clearance	New	mm (in)	0.108 to 0.148 (.0043 to .0058)			
	Wear limit	mm (in)	0.20 (.0079)			
Piston skirt wear	Wear limit	mm (in)	0.15 (.006)			
Cylinder head warpage	Wear limit	mm (in)	0.5 (.02)			
Cylinder taper	New (max.)	mm (in)	0.05 (.0020)			
	Wear limit	mm (in)	0.1 (.0039)			
Cylinder out of round	New (max.)	mm (in)	0.010 (.0004)			
	Wear limit	mm (in)	0.08 (.0031)			
Maximum crankshaft end play	New (max.)	mm (in)	0.3 (.012)			
Maximum crankshaft deflection	Wear limit	mm (in)	MAG: 0.05 (.0020) PTO: 0.06 (.0024)			
Connecting rod big end axial play	New	mm (in)	0.230 to 0.620 (.0091 to .0244)			
	Wear limit	mm (in)	1.2 (.0472)			
COOLING SYSTEM						
Coolant	Type		Ethyl glycol and distilled water (50%/50%). Use premix coolant from BRP (P/N 219 700 362) or coolant specifically formulated for aluminum engines			
	Quantity	L (U.S. gal.)	6 (1.59)		6.3 (1.66)	
Thermostat opening temperature		°C (°F)	37 (98.6)			
Radiator cap opening pressure		kPa (PSI)	90 (13)			

MODEL			MX Z 800R POWER TEK			
			ADRENALINE	X	RENEGADE	RENEGADE X
LUBRICATION SYSTEM						
Injection oil	Type		XP-S 2-stroke synthetic blend			
	Quantity	L (U.S. oz)	3.7 (125.1)			
FUEL SYSTEM						
Carburetor type			TM40			
Main jet			480			
Needle jet			P-0M			
Pilot jet			17.5			
Jet needle identification			9EGI04 – 58			
Clip position number			Not adjustable			
Slide cut-away			2.0			
Idle throttle slide height		mm (in)	1.6 ± 0.1 (.063 ± .004)			
Float adjustment		mm (in)	Not adjustable			
Air or pilot screw adjustment		± 1/16 turn	1.5			
Idle speed		± 200 RPM	1600			
Gas type			Unleaded			
Pump octane number	Inside North America ((R+M)/2)		91 or higher			
	Outside North America (RON)		95 or higher			
Fuel tank capacity		L (U.S. gal)	40 (10.6)			
Gas/oil ratio			Injection			
ELECTRICAL SYSTEM						
Magneto generator output		W	360 @ 6000 RPM			
Ignition type			C.D.I.			
Spark plug	Make and type		NGK BR9ECS			
	Gap	mm (in)	Not adjustable 0.70 to 0.80 (.028 to .032)			
Ignition timing BTDC		mm (in)	2.37 (.093) @ 3500 RPM			
Trigger coil		Ω	190 to 300			
Lighting coil		Ω	0.1 to 1.0			
High tension coil	Primary	Ω	0.3 to 0.7			
	Secondary	KΩ	18 to 26 (with caps)			
Battery			12 V, 18 A•h (with electric starter) 12 V, 3 A•h (without electric starter)			
Headlamp		W	2 x 60/55 (H4)			
Taillight and stoplight		W	5/21			
Fuse	Main	A	30 (with electric starter)			
	ECM	A	5 (with electric starter)			
	Headlamp	A	15			
	Accessories	A	15			
	Fuel level sensor	A	0.25 (if applicable)			

MODEL			MX Z 800R POWER TEK			
			ADRENALINE	X	RENEGADE	RENEGADE X
DRIVE SYSTEM						
Chaincase oil	Type		XP-S synthetic chaincase oil			
	Quantity	mL (U.S. oz)	250 (8.5)			
Chain drive ratio			27/45		25/45	
Chain	Pitch	in	3/8			
	Type/links qty/plate qty		Silent 106/13		Silent 104/13	
Drive pulley type			TRA VII			
Drive pulley calibration	Clutch engagement	± 100 RPM	3800			
	Spring color		Purple/Blue			
	Spring length	mm (in)	114.6 (4.512)			
	Pin		Solid (P/N 417 222 594)			
	Ramp		414		413	
	Screw position		3			
Driven pulley type	Type		QRS			
	Spring color		Purple			
	Spring preload		0			
	Cam angle		44°		42°	
Pulley distance	Z	mm (in)	Not adjustable 21.2 (.835)			
Offset	X	mm (in)	Not adjustable 37.15 (1.463)			
Drive belt part number		P/N	417 300 166			
Drive belt	Width	mm (in)	37.7 (1.484)			
	Wear limit	mm (in)	35.3 (1.390)			
Drive belt adjustment	Deflection	mm (in)	32 ± 5 (1.260 ± .197)			
	Force	kgf (lbf)	11.30 (24.91)			
Track	Width	mm (in)	381 (15)		406.4 (16)	
	Length	m (in)	3.05 (120)		3.49 (137)	
	Profile height	mm (in)	25.4 (1)	31.8 (1.25)		
Track adjustment	Deflection	mm (in)	30 to 35 (1.181 to 1.378)			
	Force	kgf (lbf)	7.3 (16)			
BRAKE SYSTEM						
Brake lining minimum thickness		mm (in)	1 (.039)			
Brake disk minimum thickness		mm (in)	4.5 (.177)			
Brake fluid	Type		DOT 4			
	Quantity	mL (U.S. oz)	60 (2.0)			

MODEL		MX Z 800R POWER TEK			
		ADRENALINE	X	RENEGADE	RENEGADE X
SUSPENSION					
FRONT					
Suspension type		REV-XP			
Suspension maximum travel	mm (in)	229 (9)			
Shock absorber type		H.P.G.	H.P.G. clicker T/A EUR: H.P.G. clicker T/A (aluminum)	H.P.G.	H.P.G. clicker T/A EUR: H.P.G. clicker T/A (aluminum)
Sway bar type		Link			
REAR					
Suspension type		SC-5			
Suspension maximum travel	mm (in)	381 (15)		406 (16)	
Shock absorber type	Center	H.P.G.	H.P.G. T/A (aluminum)	H.P.G.	H.P.G. T/A (aluminum)
	Rear	H.P.G.	H.P.G. racing clicker (aluminum)	H.P.G.	H.P.G. racing clicker (aluminum)
Stroke limiter standard position		3			
STEERING SYSTEM					
Ski type		Pilot 5.7			
Toe-out	mm (in)	0 (0)			
Camber		0°			
VEHICLE INFORMATIONS					
Mass (dry)	kg (lb)	197 (435)	193 (425)	202 (445)	198 (437)
Length	m (in)	2.89 (113.8)		3.11 (122.4)	3.11 (122.4) EUR: 3.18 (125)
Width	m (in)	1.22 (47.9)			1.22 (47.9) EUR: 1.25 (49.1)
Height	m (in)	1.17 (46)	1 (39.4)	1.17 (46)	1 (39.4)
Ski stance (carbide to carbide)	m (in)	1.07 (42)			
MATERIAL					
Frame		Aluminum			
Bottom pan and side panels		Polypropylene			
Hood		Surlyn			

MODEL			SUMMIT 800R POWER TEK	
			EVEREST	X
ENGINE				
Engine type			797	
Number of cylinders			2	
Bore		mm (in)	82 (3.228)	
Stroke		mm (in)	75.70 (2.980)	
Displacement		cm^3 (in^3)	799.5 (48.79)	
Compression ratio			12.5 ± 0.5	
Maximum power engine speed		± 100 RPM	8150	
Combustion chamber volume		cc	34.08 to 37.26	
RAVE spring	Wire diameter	mm (in)	0.70 (0.028)	
	Minimum free length	mm (in)	35.00 (1.378)	
Piston ring type			Semi-trapezoidal	
Ring end gap	New	mm (in)	0.40 to 0.60 (.0157 to .0236)	
	Wear limit	mm (in)	1.0 (.039)	
Ring/piston groove clearance	New	mm (in)	0.060 to 0.100 (.0024 to .0039)	
	Wear limit	mm (in)	0.20 (.0079)	
Piston/cylinder wall clearance	New	mm (in)	0.108 to 0.148 (.0043 to .0058)	
	Wear limit	mm (in)	0.20 (.0079)	
Piston skirt wear	Wear limit	mm (in)	0.15 (.006)	
Cylinder head warpage	Wear limit	mm (in)	0.5 (.02)	
Cylinder taper	New (max.)	mm (in)	0.05 (.0020)	
	Wear limit	mm (in)	0.1 (.0039)	
Cylinder out of round	New (max.)	mm (in)	0.010 (.0004)	
	Wear limit	mm (in)	0.08 (.0031)	
Maximum crankshaft end play	New (max.)	mm (in)	0.3 (.012)	
Maximum crankshaft deflection	Wear limit	mm (in)	MAG: 0.05 (.0020) PTO: 0.06 (.0024)	
Connecting rod big end axial play	New	mm (in)	0.230 to 0.620 (.0091 to .0244)	
	Wear limit	mm (in)	1.2 (.0472)	
COOLING SYSTEM				
Coolant	Type		Ethyl glycol and distilled water (50%/50%). Use premix coolant from BRP (P/N 219 700 362) or coolant specifically formulated for aluminum engines	
	Quantity	L (U.S. gal.)	146" track: 6.47 (1.69) 154" track: 6.5 (1.72)	146" track: 6.4 (1.69) 154" track: 6.5 (1.72) 163" track: 6.6 (1.74)
Thermostat opening temperature		°C (°F)	37 (98.6)	
Radiator cap opening pressure		kPa (PSI)	90 (13)	
LUBRICATION SYSTEM				
Injection oil	Type		XP-S 2-stroke synthetic blend	
	Quantity	L (U.S. oz)	3.7 (125.1)	

MODEL			SUMMIT 800R POWER TEK	
			EVEREST	X
FUEL SYSTEM				
Carburetor type			TM40	
Main jet			480	
Needle jet			P-0M	
Pilot jet			17.5	
Jet needle identification			9EGI04 – 58	
Clip position number			Not adjustable	
Slide cut-away			2.0	
Idle throttle slide height		mm (in)	2.0 ± 0.1 (.079 ± .004)	
Float adjustment		mm (in)	Not adjustable	
Air or pilot screw adjustment		± 1/16 turn	1.5	
Idle speed		± 200 RPM	1900	
Gas type			Unleaded	
Pump octane number	Inside North America ((R+M)/2)		91 or higher	
	Outside North America (RON)		95 or higher	
Fuel tank capacity		L (U.S. gal)	40 (10.6)	
Gas/oil ratio			Injection	
ELECTRICAL SYSTEM				
Magneto generator output		W	360 @ 6000 RPM	
Ignition type			C.D.I.	
Spark plug	Make and type		NGK BR9ECS	
	Gap	mm (in)	Not adjustable 0.70 to 0.80 (.028 to .032)	
Ignition timing BTDC		mm (in)	2.37 (.093) @ 3500 RPM	
Trigger coil		Ω	190 to 300	
Lighting coil		Ω	0.1 to 1.0	
High tension coil	Primary	Ω	0.3 to 0.7	
	Secondary	KΩ	18 to 26 (with caps)	
Battery			12 V, 18 A•h (with electric starter) 12 V, 3 A•h (without electric starter)	
Headlamp		W	2 x 60/55 (H4)	
Taillight and stoplight		W	5/21	
Fuse	Main	A	30 (with electric starter)	
	ECM	A	5 (with electric starter)	
	Headlamp	A	15	
	Accessories	A	15	
	Fuel level sensor	A	0.25 (if applicable)	
DRIVE SYSTEM				
Chaincase oil	Type		XP-S synthetic chaincase oil	
	Quantity	mL (U.S. oz)	250 (8.5)	
Chain drive ratio			146" track: 23/45 154" track: 21/45	146" track: 23/45 154" Powder Max: 21/45 154" track (EUR): 23/49 163" track: 21/49

MODEL			SUMMIT 800R POWER TEK	
			EVEREST	X
DRIVE SYSTEM (cont'd)				
Chain	Pitch	in	3/8	
	Type/links qty/plate qty		146" track: silent 104/13 154" track: silent 102/13	146" track: silent 104/13 154" Powder Max: silent 102/13 154" track (EUR): silent 106/13 163" track: silent 106/13
Drive pulley type			TRA VII	
Drive pulley calibration	Clutch engagement	± 100 RPM	3800	
	Spring color		Purple/Purple	Purple/Purple 154" track (EUR): Purple/Blue
	Spring length	mm (in)	106.98 (4.212)	106.98 (4.212) 154" track (EUR): 114.6 (4.512)
	Pin		146" track: hollow/threaded (P/N 417 222 707) 154" track: hollow/threaded (P/N 417 223 038)	146" track: hollow/threaded (P/N 417 222 707) 154" Powder Max: hollow/threaded (P/N 417 223 035) 154" track (EUR): solid (P/N 417 222 594) 163" track: hollow/threaded (P/N 417 223 038)
	Ramp		413	
	Screw position		1	1 154" track (EUR): 3
Driven pulley type	Type		QRS	
	Spring color		Purple	
	Spring preload		0	
	Cam angle		42°	
Pulley distance	Z	mm (in)	Not adjustable 21.2 (.835)	
Offset	X	mm (in)	Not adjustable 37.15 (1.463)	
Drive belt part number		P/N	417 300 166	
Drive belt	Width	mm (in)	37.7 (1.484)	
	Wear limit	mm (in)	35.3 (1.390)	
Drive belt adjustment	Deflection	mm (in)	32 ± 5 (1.260 ± .197)	
	Force	kgf (lbf)	11.30 (24.91)	
Track	Width	mm (in)	406.4 (16)	
	Length	m (in)	146" track: 3.71 (146) 154" track: 3.92 (154)	146" track: 3.71 (146) 154" track: 3.92 (154) 163" track: 4.14 (163)
	Profile height	mm (in)	58.7 (2.31)	57.2 (2.25) Powder Max: 58.7 (2.31)
Track adjustment	Deflection	mm (in)	30 to 35 (1.181 to 1.378)	
	Force	kgf (lbf)	7.3 (16)	

MODEL			SUMMIT 800R POWER TEK	
			EVEREST	X
BRAKE SYSTEM				
Brake lining minimum thickness		mm (in)	1 (.039)	
Brake disk minimum thickness		mm (in	4.5 (.177)	
Brake fluid	Type		DOT 4	
	Quantity	mL (U.S. oz)	60 (2.0)	
SUSPENSION				
FRONT				
Suspension type			REV-XP	
Suspension maximum travel		mm (in)	229 (9)	
Shock absorber type			H.P.G.	H.P.G. T/A (aluminum)
Sway bar type			Link	
REAR				
Suspension type			SC-5M	
Suspension maximum travel		mm (in)	146" track: 356 (14) 154" track: 381 (15)	146" track: 356 (14) 154" track: 381 (15) 163" track: 406 (16)
Shock absorber type	Center		H.P.G.	H.P.G. T/A (aluminum)
	Rear		H.P.G.	H.P.G. T/A (aluminum)
Stroke limiter standard position			2	
STEERING SYSTEM				
Ski type			Pilot 6.9	
Toe-out		mm (in)	0 (0)	
Camber			0°	
VEHICLE INFORMATIONS				
Mass (dry)		kg (lb)	146" track: 197 (435) 154" track: 199 (439)	146" track: 193 (425) 154" track: 195 (429) 163" track: 197 (434)
Length		m (in)	146" track: 3.2 (126) 154" track: 3.31 (130.3)	146" track: 3.2 (126) 154" track: 3.31 (130.3) 163" track: 3.42 (134.6)
Width		m (in)	1.20 (47)	
Height		m (in)	1.17 (46)	1 (39.4)
Ski stance (carbide to carbide)		m (in)	0.99 (39)	
MATERIAL				
Frame			Aluminum	
Bottom pan and side panels			Polypropylene	
Hood			Surlyn	

600 HO SDI MODELS

MODEL			GSX 600 HO SDI	
			LIMITED	LIMITED TOURING
ENGINE				
Engine type			593 HO	
Number of cylinders			2	
Bore		mm (in)	72 (2.835)	
Stroke		mm (in)	73 (2.874)	
Displacement		cm^3 (in^3)	594.40 (36.273)	
Compression ratio			12.25 ± 0.5	
Maximum power engine speed		± 100 RPM	8100	
Combustion chamber volume		cc	25.30 to 27.60	
RAVE spring	Color		Black	
	Wire diameter	mm (in)	0.80 (0.031)	
	Minimum free length	mm (in)	42.5 (1.673)	
Piston ring type			Semi-trapezoidal	
Ring end gap	New	mm (in)	0.40 to 0.55 (.016 to .022)	
	Wear limit	mm (in)	1.0 (.039)	
Ring/piston groove clearance	New	mm (in)	0.05 to 0.1 (.0020 to .0039)	
	Wear limit	mm (in)	0.2 (.0079)	
Piston/cylinder wall clearance	New	mm (in)	0.110 ± 0.010 (.0043 ± .0004)	
	Wear limit	mm (in)	0.18 (.0071)	
Piston skirt wear	Wear limit	mm (in)	0.15 (.006)	
Cylinder head warpage	Wear limit	mm (in)	0.5 (.02)	
Cylinder taper	New (max.)	mm (in)	0.05 (.0020)	
	Wear limit	mm (in)	0.1 (.0039)	
Cylinder out of round	New (max.)	mm (in)	0.010 (.0004)	
	Wear limit	mm (in)	0.08 (.0031)	
Maximum crankshaft end play	New (max.)	mm (in)	0.3 (.012)	
Maximum crankshaft deflection	Wear limit	mm (in)	MAG: 0.05 (.0020) PTO: 0.06 (.0024)	
Connecting rod big end axial play	New	mm (in)	0.310 to 0.680 (.0122 to .0268)	
	Wear limit	mm (in)	1.2 (.0472)	
COOLING SYSTEM				
Coolant	Type		Ethyl glycol and distilled water (50%/50%). Use premix coolant from BRP (P/N 219 700 362) or coolant specifically formulated for aluminum engines	
	Quantity	L (U.S. gal.)	5.6 (1.48)	
Thermostat opening temperature		°C (°F)	37 (98.6)	
Radiator cap opening pressure		kPa (PSI)	90 (13)	

MODEL			GSX 600 HO SDI	
			LIMITED	LIMITED TOURING
LUBRICATION SYSTEM				
Injection oil	Type		XP-S 2-stroke synthetic blend	
	Quantity	L (U.S. oz)	3.7 (125.1)	
FUEL SYSTEM				
Throttle body type			Dell'Orto	
Idle speed		± 200 RPM	1700	
Gas type			Unleaded	
Pump octane number	Inside North America ((R+M)/2)		87 or higher	
	Outside North America (RON)		92 or higher	
Fuel tank capacity		L (U.S. gal)	40 (10.6)	
Gas/oil ratio			Injection	
ELECTRICAL SYSTEM				
Magneto generator output		W	470 @ 6000 RPM	
Ignition type			Inductive	
Spark plug	Make and type		NGK BR8ECS	
	Gap	mm (in)	Not adjustable 0.70 to 0.80 (.028 to .032)	
Ignition timing BTDC		mm (in)	5.39 (.212) @ 4000 RPM	
Trigger coil		Ω	190 to 290	
Lighting coil		Ω	0.1 to 1.0	
Battery			12 V, 18 A•h	
Headlamp		W	2 x 60/55 (H4)	
Taillight and stoplight		W	5/21	
Fuse	Outer injectors (F1)	A	5	
	Inner injectors (F2)	A	5	
	ECM (F3)	A	5	
	Gauge multifunction display (F4)	A	7.5	
	Fuel pump/ignition coils (F5)	A	10	
	Accessories/tail lamp (F6)	A	15	
	Headlamp (F7)	A	15	
	Capacitor (F8)	A	20	
	Relays/start button (F9)	A	5	
	Charging system	A	30	

MODEL			GSX 600 HO SDI	
			LIMITED	LIMITED TOURING
DRIVE SYSTEM				
Chaincase oil	Type		XP-S synthetic chaincase oil	
	Quantity	mL (U.S. oz)	250 (8.5)	
Chain drive ratio			25/45	
Chain	Pitch	in	3/8	
	Type/links qty/plate qty		Silent 104/13	
Drive pulley type			TRA III	
Drive pulley calibration	Clutch engagement	± 100 RPM	3600	
	Spring color		Purple/Purple	
	Spring length	mm (in)	106.98 (4.212)	
	Pin		Solid (P/N 417 004 308)	
	Ramp		414	
	Screw position		3	
Driven pulley type	Type		QRS	
	Spring color		Black	
	Spring preload		0	
	Cam angle		42°/40°	
Pulley distance	Z	mm (in)	Not adjustable 21.2 (.835)	
Offset	X	mm (in)	Not adjustable 37.15 (1.463)	
Drive belt part number		P/N	417 300 197	
Drive belt	Width	mm (in)	37.3 (1.469)	
	Wear limit	mm (in)	34.9 (1.374)	
Drive belt adjustment	Deflection	mm (in)	32 ± 5 (1.260 ± .197)	
	Force	kgf (lbf)	11.30 (24.91)	
Track	Width	mm (in)	381 (15)	
	Length	m (in)	3.05 (120)	
	Profile height	mm (in)	25.4 (1.0)	
Track adjustment	Deflection	mm (in)	30 to 35 (1.181 to 1.378)	
	Force	kgf (lbf)	7.3 (16)	
BRAKE SYSTEM				
Brake lining minimum thickness		mm (in)	1 (.039)	
Brake disk minimum thickness		mm (in)	4.5 (.177)	
Brake fluid	Type		DOT 4	
	Quantity	mL (U.S. oz)	60 (2.0)	

MODEL		GSX 600 HO SDI	
		LIMITED	LIMITED TOURING
SUSPENSION			
FRONT			
Suspension type		REV-XP	
Suspension maximum travel	mm (in)	229 (9)	
Shock absorber type		H.P.G.	
Sway bar type		Link	
REAR			
Suspension type		SC-5	
Suspension maximum travel	mm (in)	381 (15)	
Shock absorber type	Center	H.P.G.	
	Rear	H.P.G. VR	
Stroke limiter standard position		3	4
STEERING SYSTEM			
Ski type		Pilot 5.7	
Toe-out	mm (in)	0 (0)	
Camber		0°	
VEHICLE INFORMATIONS			
Mass (dry)	kg (lb)	203 (448)	215 (475)
Length	m (in)	2.89 (113.8)	
Width	m (in)	1.22 (47.9)	
Height	m (in)	1.21 (47.7)	
Ski stance (carbide to carbide)	m (in)	1.07 (42)	
MATERIAL			
Frame		Aluminum	
Bottom pan and side panels		Polypropylene	
Hood		Surlyn	

MODEL			MX Z 600 HO SDI			
			ADRENALINE	RENEGADE	RENEGADE X	X
ENGINE						
Engine type			593 HO			
Number of cylinders			2			
Bore		mm (in)	72 (2.835)			
Stroke		mm (in)	73 (2.874)			
Displacement		cm^3 (in^3)	594.40 (36.273)			
Compression ratio			12.25 ± 0.5			
Maximum power engine speed		± 100 RPM	8100			
Combustion chamber volume		cc	25.30 to 27.60			
RAVE spring	Color		Black			
	Wire diameter	mm (in)	0.80 (0.031)			
	Minimum free length	mm (in)	42.5 (1.673)			
Piston ring type			Semi-trapezoidal			
Ring end gap	New	mm (in)	0.40 to 0.55 (.016 to .022)			
	Wear limit	mm (in)	1.0 (.039)			
Ring/piston groove clearance	New	mm (in)	0.05 to 0.1 (.0020 to .0039)			
	Wear limit	mm (in)	0.2 (.0079)			
Piston/cylinder wall clearance	New	mm (in)	0.110 ± 0.010 (.0043 ± .0004)			
	Wear limit	mm (in)	0.18 (.0071)			
Piston skirt wear	Wear limit	mm (in)	0.15 (.006)			
Cylinder head warpage	Wear limit	mm (in)	0.5 (.02)			
Cylinder taper	New (max.)	mm (in)	0.05 (.0020)			
	Wear limit	mm (in)	0.1 (.0039)			
Cylinder out of round	New (max.)	mm (in)	0.010 (.0004)			
	Wear limit	mm (in)	0.08 (.0031)			
Maximum crankshaft end play	New (max.)	mm (in)	0.3 (.012)			
Maximum crankshaft deflection	Wear limit	mm (in)	MAG: 0.05 (.0020) PTO: 0.06 (.0024)			
Connecting rod big end axial play	New	mm (in)	0.310 to 0.680 (.0122 to .0268)			
	Wear limit	mm (in)	1.2 (.0472)			
COOLING SYSTEM						
Coolant	Type		Ethyl glycol and distilled water (50%/50%). Use premix coolant from BRP (P/N 219 700 362) or coolant specifically formulated for aluminum engines			
	Quantity	L (U.S. gal.)	5.6 (1.48)	6 (1.59)		5.6 (1.48)
Thermostat opening temperature		°C (°F)	37 (98.6)			
Radiator cap opening pressure		kPa (PSI)	90 (13)			

MODEL			MX Z 600 HO SDI			
			ADRENALINE	RENEGADE	RENEGADE X	X
LUBRICATION SYSTEM						
Injection oil	Type		XP-S 2-stroke synthetic blend			
	Quantity	L (U.S. oz)	3.7 (125.1)			
FUEL SYSTEM						
Throttle body type			Dell'Orto			
Idle speed		± 200 RPM	1700			
Gas type			Unleaded			
Pump octane number	Inside North America ((R+M)/2)		87 or higher			
	Outside North America (RON)		92 or higher			
Fuel tank capacity		L (U.S. gal)	40 (10.6)			
Gas/oil ratio			Injection			
ELECTRICAL SYSTEM						
Magneto generator output		W	470 @ 6000 RPM			
Ignition type			Inductive			
Spark plug	Make and type		NGK BR8ECS			
	Gap	mm (in)	Not adjustable 0.70 to 0.80 (.028 to .032)			
Ignition timing BTDC		mm (in)	5.39 (.212) @ 4000 RPM			
Trigger coil		Ω	190 to 290			
Lighting coil		Ω	0.1 to 1.0			
Battery			12 V, 18 A•h (with electric starter) 12 V, 3 A•h (without electric starter)			
Headlamp		W	2 x 60/55 (H4)			
Taillight and stoplight		W	5/21			
Fuse	Outer injectors (F1)	A	5			
	Inner injectors (F2)	A	5			
	ECM (F3)	A	5			
	Gauge multifunction display (F4)	A	7.5			
	Fuel pump/ignition coils (F5)	A	10			
	Accessories/tail lamp (F6)	A	15			
	Headlamp (F7)	A	15			
	Capacitor (F8)	A	20			
	Relays/start button (F9)	A	5			
	Charging system	A	30 (with electric starter)			

MODEL			MX Z 600 HO SDI			
			ADRENALINE	RENEGADE	RENEGADE X	X
DRIVE SYSTEM						
Chaincase oil	Type		XP-S synthetic chaincase oil			
	Quantity	mL (U.S. oz)	250 (8.5)			
Chain drive ratio			25/45	22/45	22/45 1.75" track: 21/45	25/45
Chain	Pitch	in	3/8			
	Type/links qty/plate qty		Chain drive ratio (21/45): Silent 102/13 Others: Silent 104/13			
Drive pulley type			TRA III			
Drive pulley calibration	Clutch engagement	± 100 RPM	3600			
	Spring color		Purple/Purple			
	Spring length	mm (in)	106.98 (4.212)			
	Pin		Solid (P/N 417 004 308)			
	Ramp		414			
	Screw position		3			
Driven pulley type	Type		QRS			
	Spring color		Black			
	Spring preload		0			
	Cam angle		42°/40°	40°		42°/40°
Pulley distance	Z	mm (in)	Not adjustable 21.2 (.835)			
Offset	X	mm (in)	Not adjustable 37.15 (1.463)			
Drive belt part number		P/N	417 300 197			
Drive belt	Width	mm (in)	37.3 (1.469)			
	Wear limit	mm (in)	34.9 (1.374)			
Drive belt adjustment	Deflection	mm (in)	32 ± 5 (1.260 ± .197)			
	Force	kgf (lbf)	11.30 (24.91)			
Track	Width	mm (in)	381 (15)	406 (16)		381 (15)
	Length	m (in)	3.05 (120)	3.49 (137)		3.05 (120)
	Profile height	mm (in)	25.4 (1.0)	31.8 (1.25)		
Track adjustment	Deflection	mm (in)	30 to 35 (1.181 to 1.378)			
	Force	kgf (lbf)	7.3 (16)			
BRAKE SYSTEM						
Brake lining minimum thickness		mm (in)	1 (.039)			
Brake disk minimum thickness		mm (in)	4.5 (.177)			
Brake fluid	Type		DOT 4			
	Quantity	mL (U.S. oz)	60 (2.0)			

MODEL		MX Z 600 HO SDI			
		ADRENALINE	RENEGADE	RENEGADE X	X
SUSPENSION					
FRONT					
Suspension type		REV-XP			
Suspension maximum travel	mm (in)	229 (9)			
Shock absorber type		H.P.G.		H.P.G. clicker T/A EUR: H.P.G. clicker T/A (aluminum)	
Sway bar type		Link			
REAR					
Suspension type		SC-5			
Suspension maximum travel	mm (in)	381 (15)	406 (16)		381 (15)
Shock absorber type	Center	H.P.G.		H.P.G. T/A (aluminum)	
	Rear	H.P.G.		H.P.G. racing clicker (aluminum)	
Stroke limiter standard position		3			
STEERING SYSTEM					
Ski type		Pilot 5.7			
Toe-out	mm (in)	0 (0)			
Camber		0°			
VEHICLE INFORMATIONS					
Mass (dry)	kg (lb)	194 (428)	199 (438)	195 (430)	190 (418)
Length	m (in)	2.89 (113.8)	3.11 (122.4) EUR: 3.18 (125)		2.89 (113.8)
Width	m (in)	1.22 (47.9)	1.22 (47.9) EUR: 1.25 (49)		1.22 (47.9)
Height	m (in)	1.17 (46)		1 (39.4)	
Ski stance (carbide to carbide)	m (in)	1.07 (42)			
MATERIAL					
Frame		Aluminum			
Bottom pan and side panels		Polypropylene			
Hood		Surlyn			

ELECTRICAL CONNECTORS

SERVICE TOOLS

Description	Part Number	Page
crimp pliers	529 035 730	533
crimper die	529 035 906	531
connector crimping tool	529 035 909	531

SERVICE TOOLS – OTHER SUPPLIER

Description	Part Number	Page
tool	AMP-755430-2	528–529
Snap-on screwdriver	TT600-5	525–526

SERVICE PRODUCTS

Description	Part Number	Page
dielectric grease	293 550 004	528

CONNECTOR TYPES

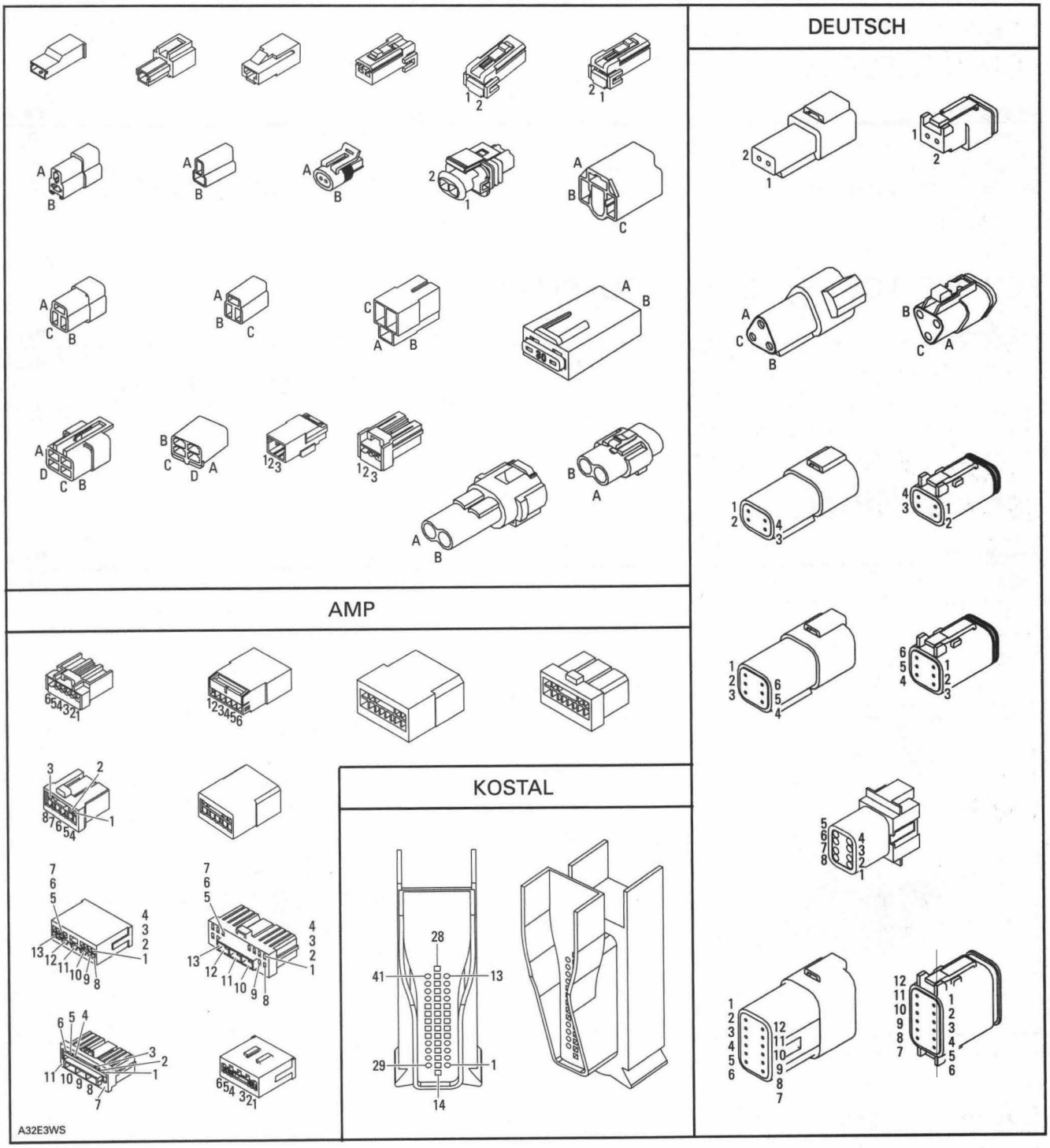

PROCEDURES

TAB AND RECEPTACLE CONNECTORS

Disconnecting the Connector

Always unplug connectors by pulling on housing not on wire.

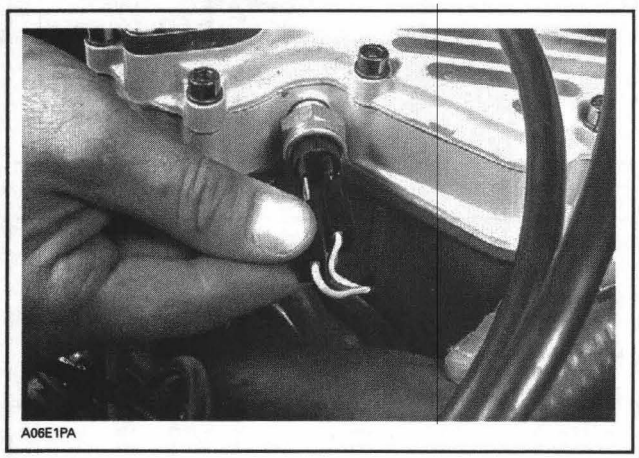

TYPICAL

Connector Disassembly

Insert Snap-on screwdriver (P/N TT600-5) in access opening then pull housing toward wire side.

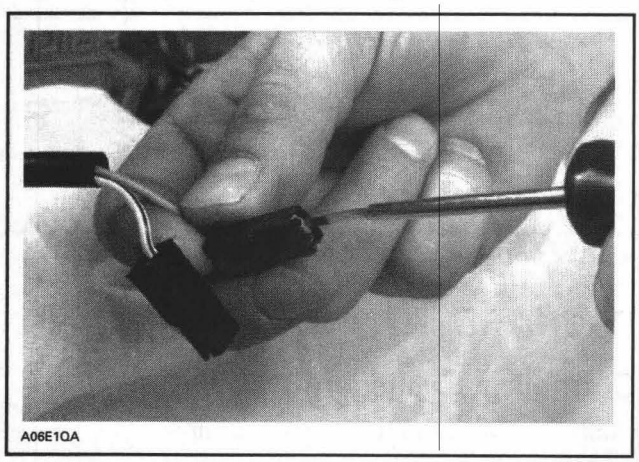

TYPICAL — RECEPTACLE CONNECTOR

Connector Assembly

Prior to installing, make sure locking tab is sufficiently lifted to properly lock.

Insert tab and receptacle connectors in their respective housings as shown in following illustrations. Push sufficiently so that they snap. Try pulling wire to ensure they are properly locked.

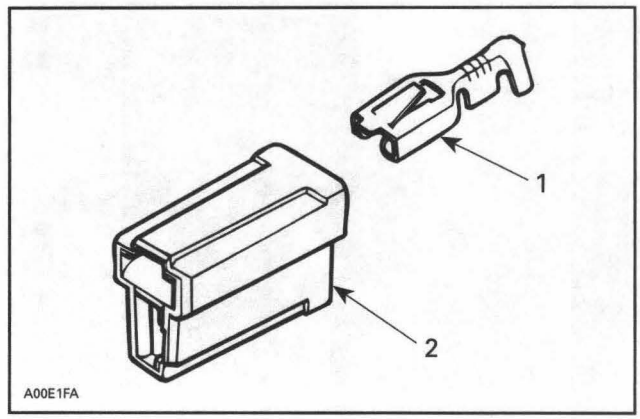

TYPICAL
1. Receptacle
2. Housing

⚠ WARNING

Keep wires away from any rotating, moving, heating, vibrating or sharp edge. Use proper fastening devices as required.

SUMITOMO CONNECTOR

Disconnecting the Connector

To disconnect the Sumitomo TPS connector from carburetor or throttle body, press the release button on the other side of the connector.



TPS CONNECTOR
1. Release button

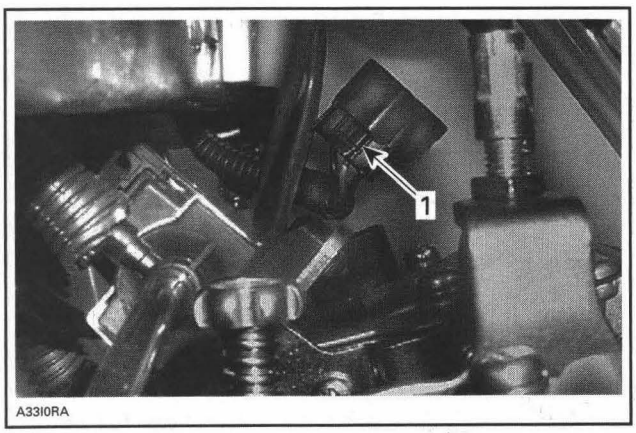

TPS CONNECTOR (UNPLUGGED)
1. Release button

DEUTSCH CONNECTORS

Connector Disassembly

Male Housing

Insert Snap-on screwdriver (P/N TT600-5) under lock and twist to lift it.

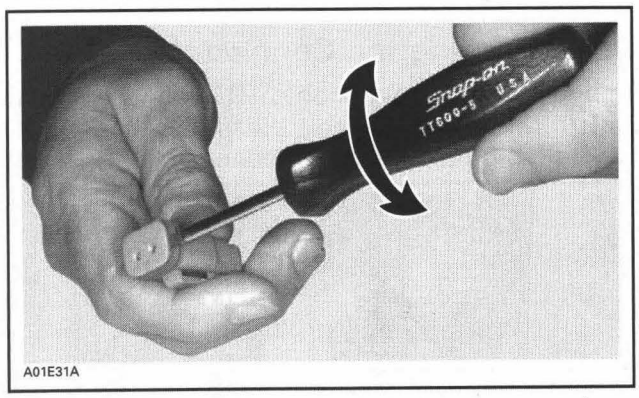

Pry tab to free connector then pull wire out of housing.

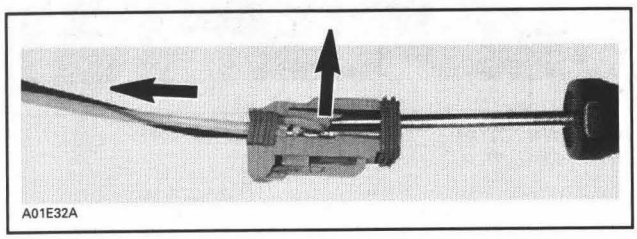

FEMALE CONNECTOR HOUSING — CUT-AWAY

Female Housing

Using a small hook, pull out the lock.

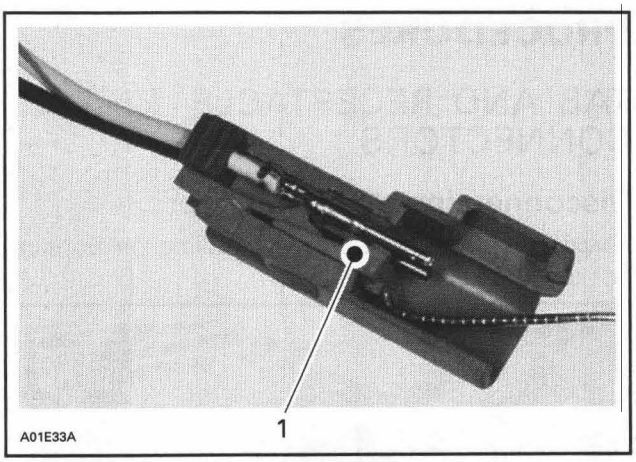

1. Lock

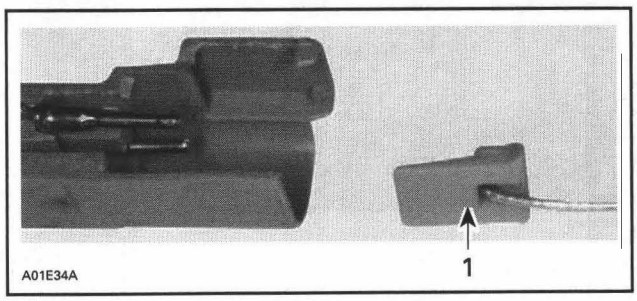

1. Lock

Pry tab to free connector then pull wire out of housing.

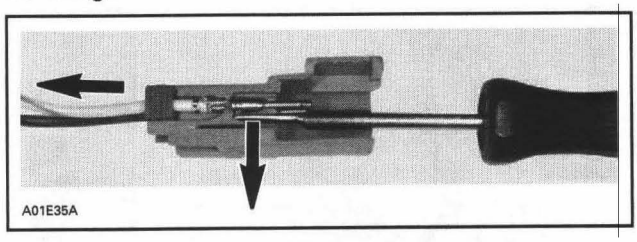

FEMALE HOUSING — CUT-AWAY

PACKARD CONNECTOR

Connector Disassembly

Push on both tabs to remove retainer.

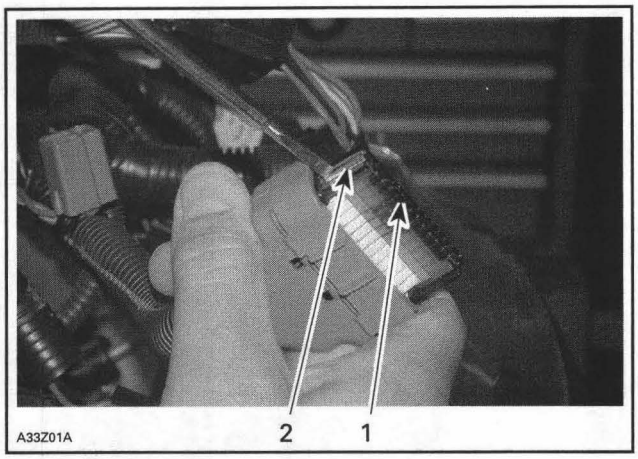

1. *Retainer*
2. *Tab (one on each side)*

Open housing by lifting 4 tabs.

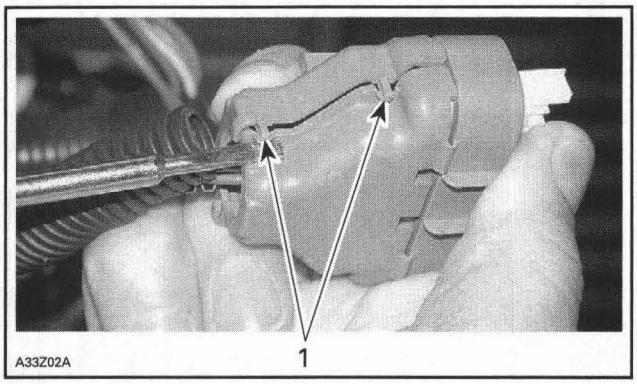

1. *Tabs (2 on each side)*

Lift the top plastic lock of the female terminal to be removed and hold in position. Lift the female terminal to unlock from the housing and push out of housing.

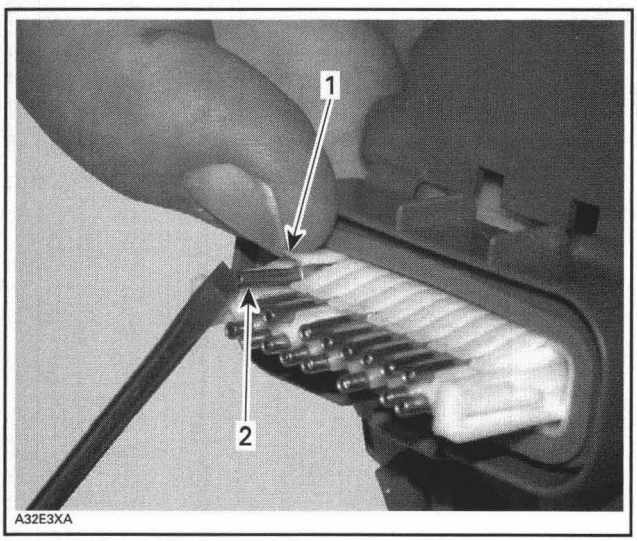

1. *Lift and hold plastic lock*
2. *Lift to unlock and push out*

Connector Corrosion Protection (ECM)

Cut the tie rap over the ECM connector.

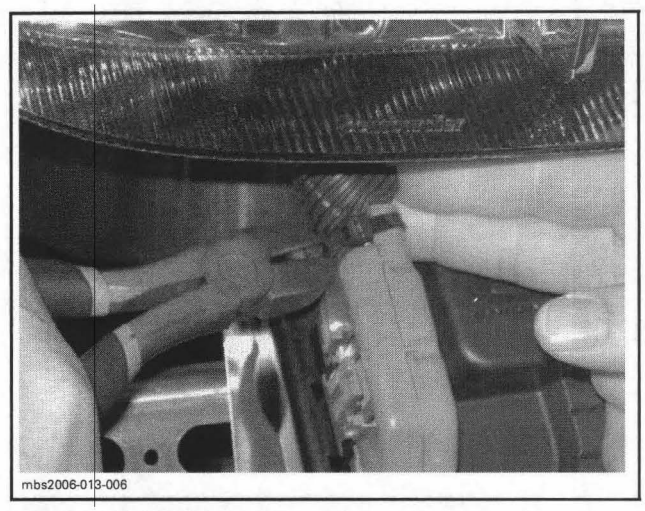

Open the 3 tabs to open the connector.

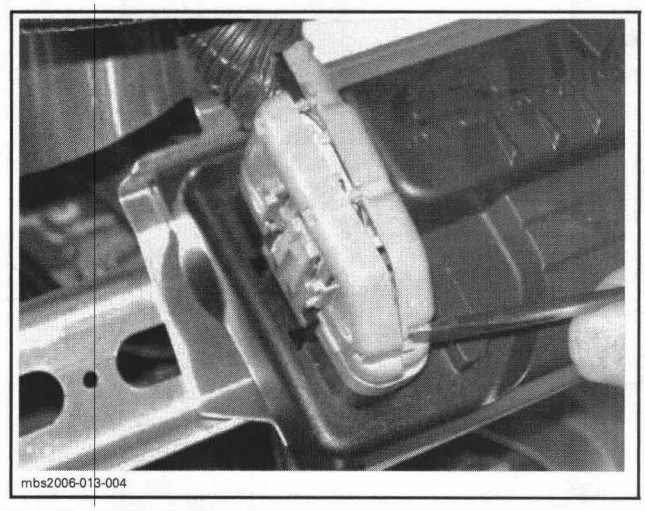

Remove at least 2 blue plug pins of the connector (keep them).

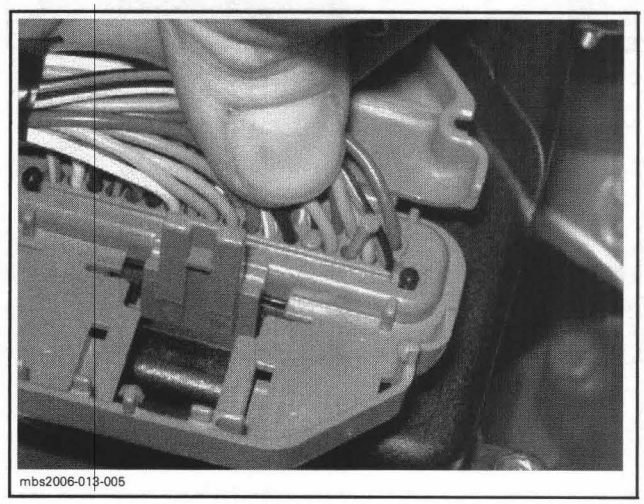

Unplug the connector from the ECM.

NOTE: Any corrosion should be carefully cleaned with a soft brass brush.

Fill the ECM socket with a generous quantity of dielectric grease (P/N 293 550 004).


mbs2006-013-003

SLOWLY reinstall the connector and make sure some grease come out by both holes previously opened (blue pin).

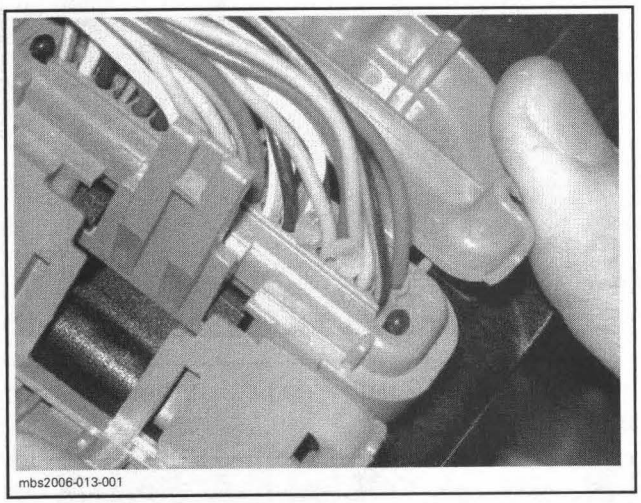
mbs2006-013-001

Reinstall both blue pins.

Close the connector.

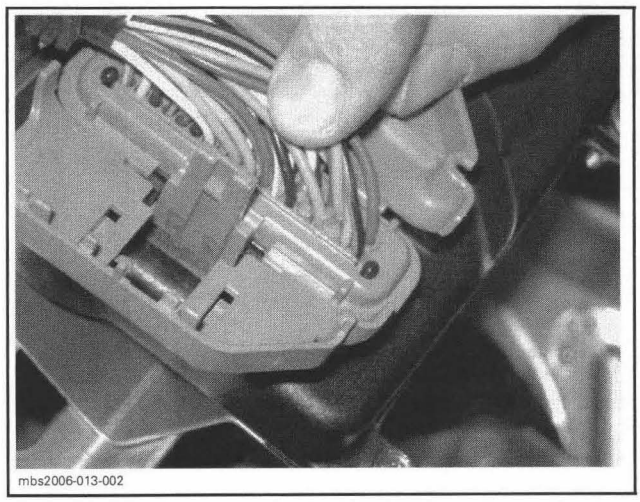
mbs2006-013-002

Reinstall a new tie rap on ECM connector.

AMP MULTILOCK CONNECTOR

Connector Disassembly

Male Housing

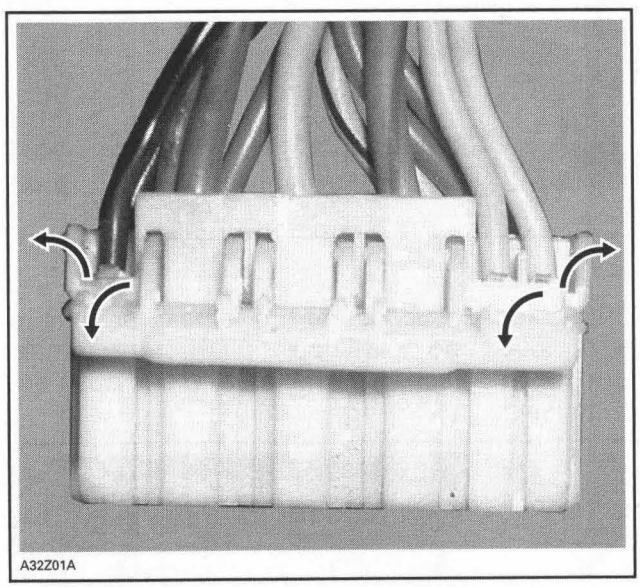
A32Z01A

Insert tool (P/N AMP-755430-2) under lock and twist to lift it.

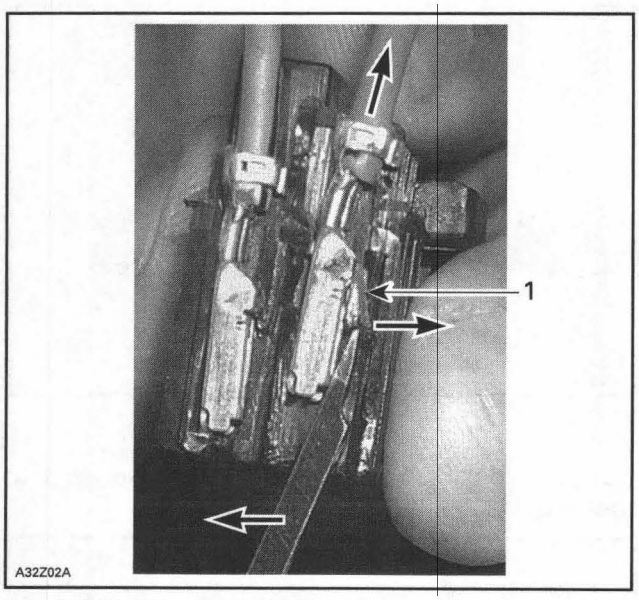

MALE HOUSING — CUT-AWAY
1. Lock

Female terminals can be removed from housing with sharp head pin.

Female Housing

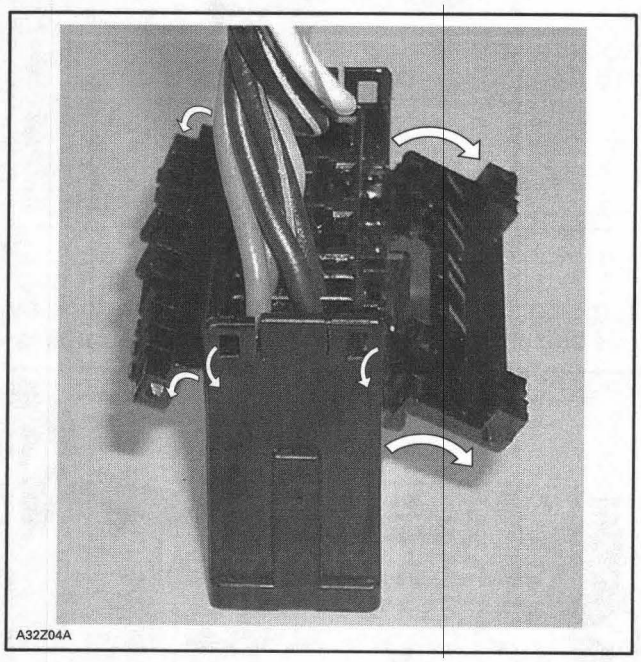

Insert tool (P/N AMP-755430-2) under lock and twist to lift it.

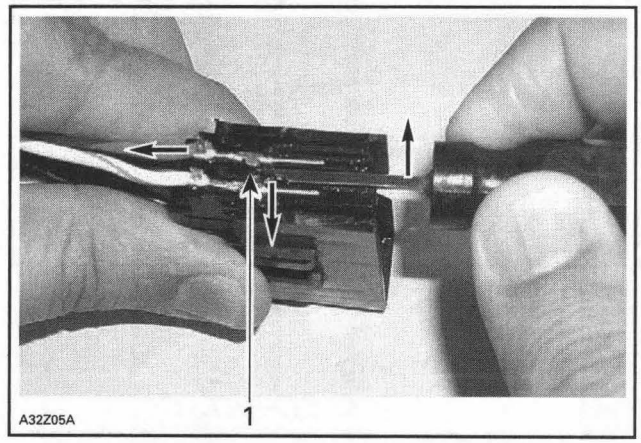

FEMALE HOUSING — CUT-AWAY
1. Lock

Terminal Crimping

Refer to *KOSTAL ECM CONNECTOR "A" AND "B"* for procedure.

AMP CONNECTOR (8-CIRCUIT)

Connector Disassembly

Pry housing to release lock.

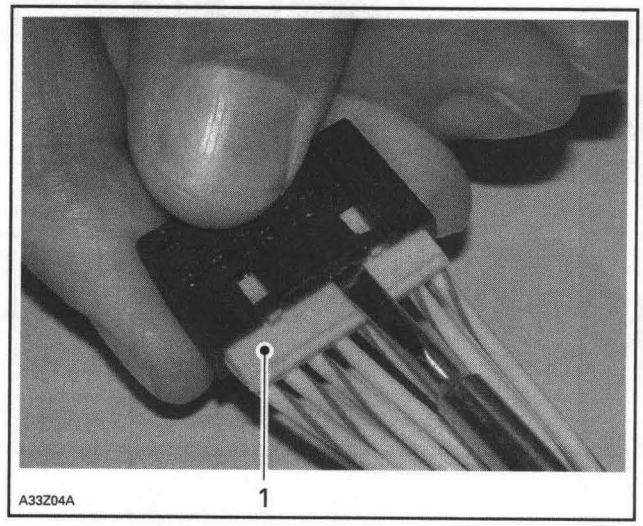

1. Lock

Insert tool (P/N AMP-755430-2) under tab and pry it to free connector. Pull on the female terminal wire to remove female terminal from housing.

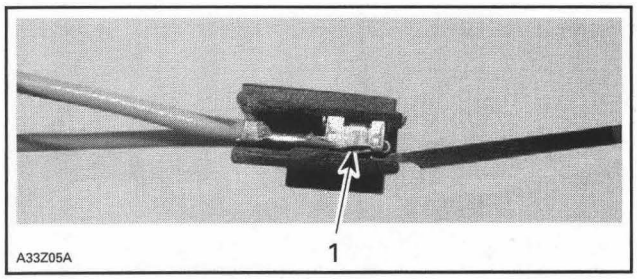

AMP 8-CIRCUIT CONNECTOR — CUT-AWAY
1. Tab

Terminal Crimping

Refer to *KOSTAL ECM CONNECTOR "A" AND "B"* for procedure.

KOSTAL CONNECTORS (ECM)

Terminal Removal

Unlock the connector housing cover by pushing in the tabs on top of the housing with a flat screwdriver to be able to flip the top cover up.

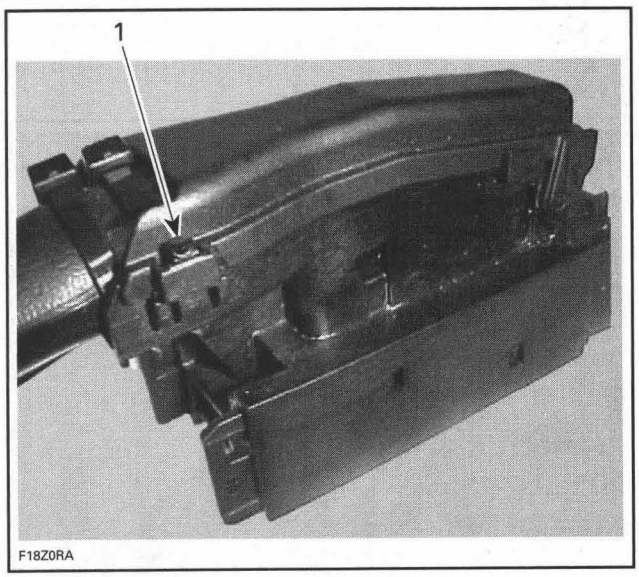

1. Push in tab

Lift the cover by pushing it forward.

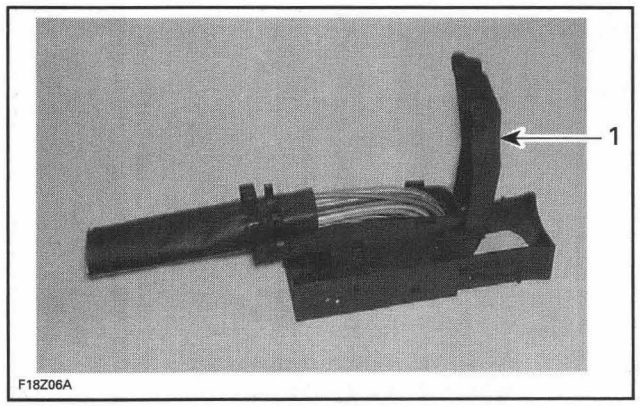

1. Cover

Cut both locking ties that secure the harness to the housing.

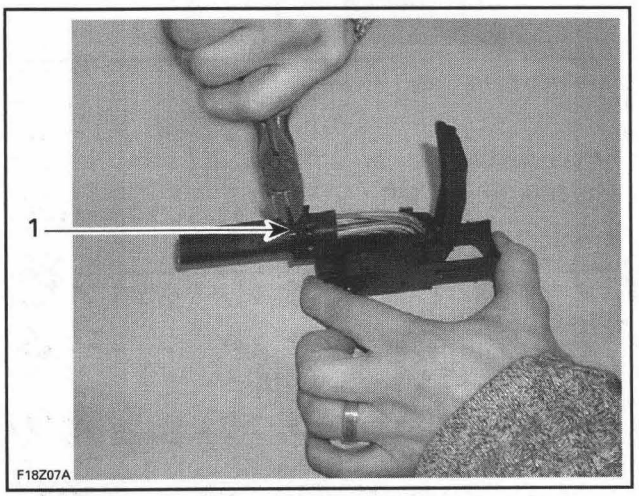

1. Locking ties

Turn the housing over and remove the lock by pushing and then pulling toward the wire harness.

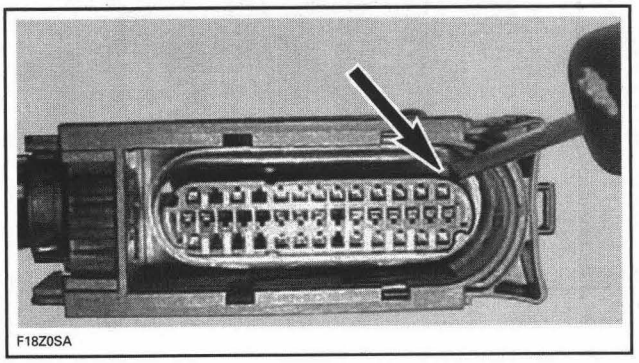

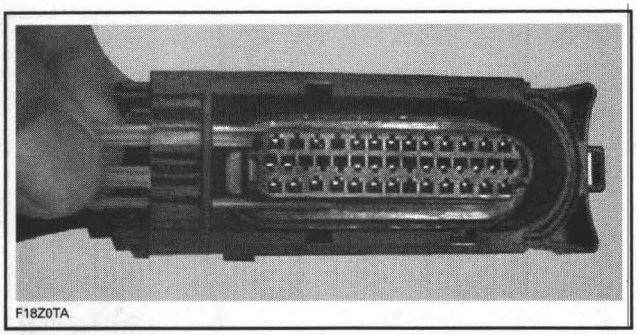
F18Z0TA

Use a 0.76 mm (.030 in) oxyacetylene torch tip cleaner or a no. 68 drill bit inserted down into the housing to release the locking tab on the connector.

CAUTION: Using a probe larger than 0.76 mm (.030 in) may damage the terminal.

Insert the probe into the housing as shown, and locate the appropriate wire in the back of the housing. You may have to slightly cam the probe against the locking tab to release it, then remove the terminal from the housing.

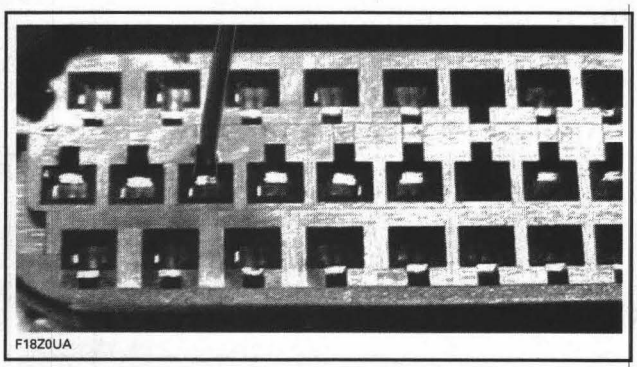
F18Z0UA

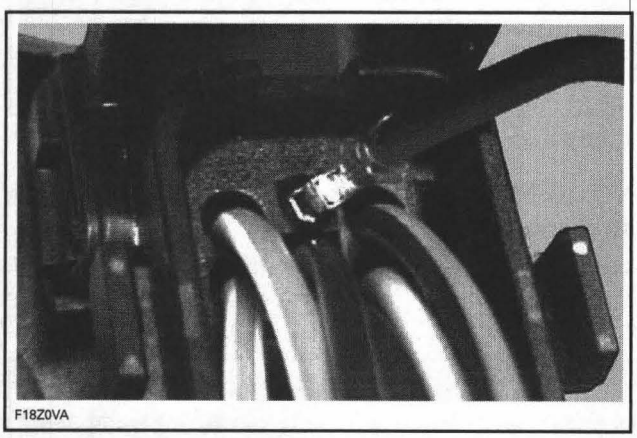
F18Z0VA

If the wire is in good condition but the terminal is rusted or corroded, remove defective terminal and crimp a new one. If wire and terminal are defective, acquire a new genuine wire and new terminal and crimp them together as explained below.

IMPORTANT: Use genuine wires only. Otherwise wires will not fit properly.

Terminal Installation

The locking tab on the connector may have to be bent out a little so it will lock in the housing when it's re-inserted.

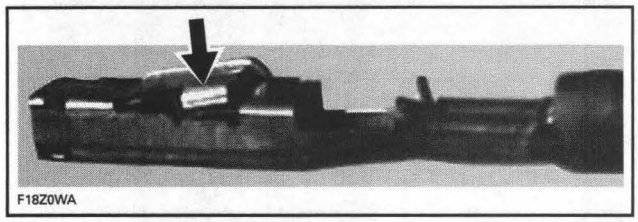
F18Z0WA

When re-inserting the connector, the locking tab must be installed facing the smaller cutout of the connector cavity.

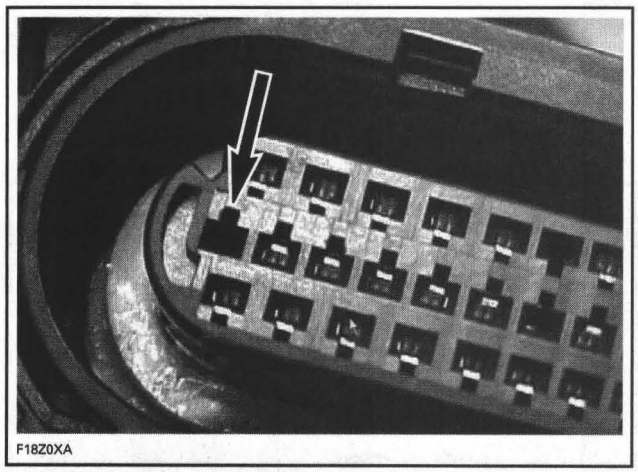
F18Z0XA

Insert the terminal, ensuring the locking tab snaps into the housing.

Re-install the lock, attach the 2 tie raps, and close the housing cover.

Terminal Crimping (Kostal and AMP Multilock)

To crimp a new connector terminal, use the connector crimping tool (P/N 529 035 909) and the crimper die (P/N 529 035 906).

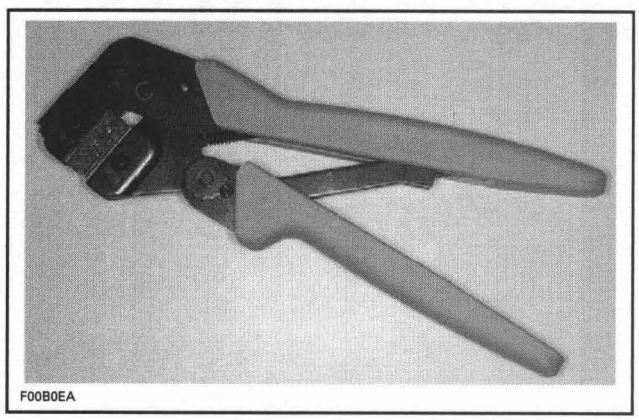
F00B0EA

CRIMPING TOOL

To properly crimp the wires, strictly follow this procedure.

Strip the wire to a maximum of 3 mm (1/8 in).

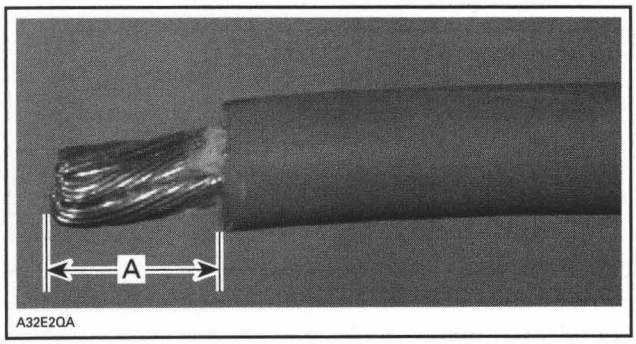

TYPICAL
A. 3 mm (1/8 in) max.

Position wire in terminal.

Squeeze the terminal tabs with your fingers to temporarily retain terminal in place.

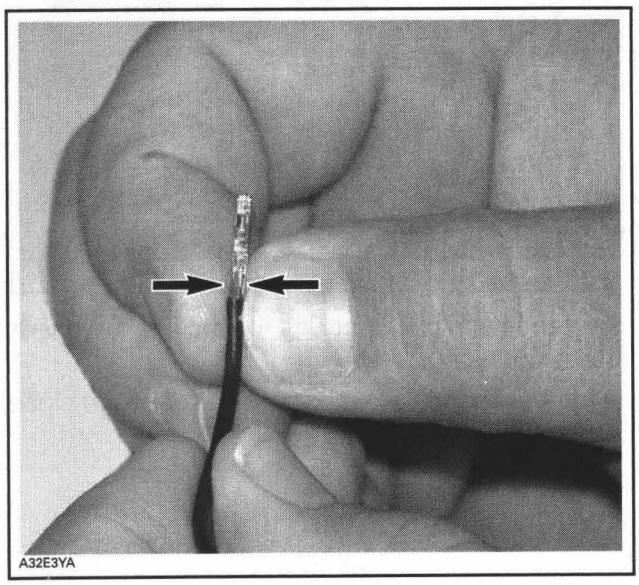

Insert terminal with wire in crimping pliers and position so that top of terminal tabs are flush with pliers edge or a little bit lower as shown.

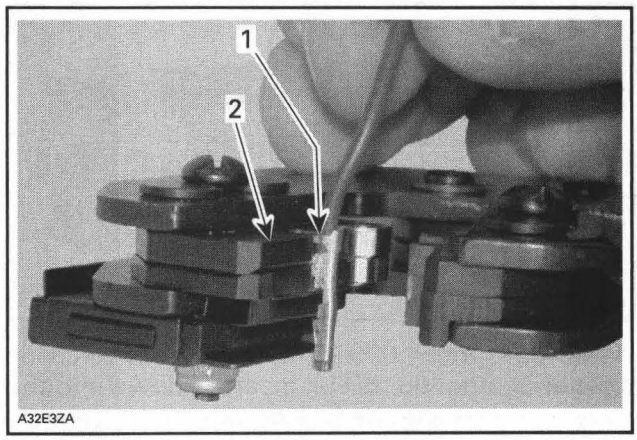

1. Top of terminal tabs
2. Align tabs with pliers edge

Crimp terminal. Ensure no tiny wire goes out of terminal. This might cause strange problems of the electrical system.

BATTERY CABLE TERMINAL

Terminal Installation

Carefully strip the wire approximately to 10 mm (1/2 in) in length, using a wire stripping tool or sharp blade/knife.

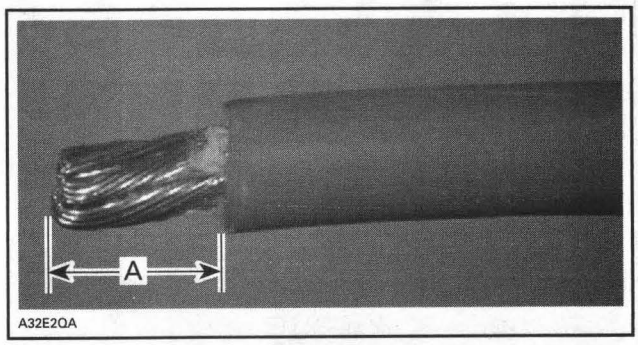

A. 10 mm (1/2 in)

NOTE: Make sure not to cut wire strands while stripping the wire.

Install the appropriate terminal on the wire according to the requirement. Refer to appropriate parts catalog.

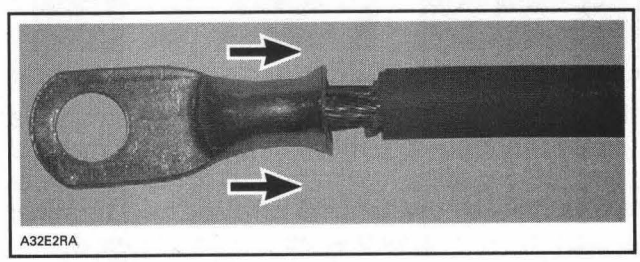

INSTALLATION OF TERMINAL

Follow the instructions provided with the crimp pliers (P/N 529 035 730) to select the proper position of the tool.

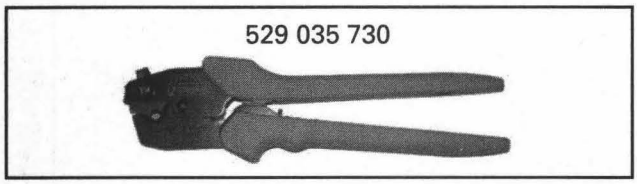

NOTE: Different wires require different crimp pliers settings, so make sure to follow the instruction supplied with the tool.

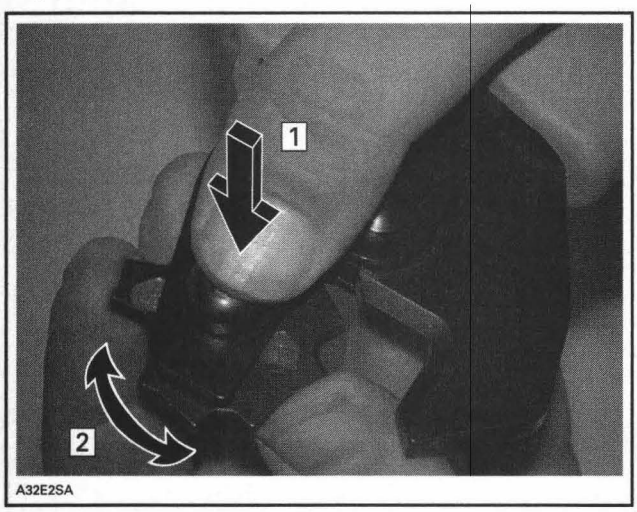

POSITIONING THE CRIMP PLIERS
Step 1: Press
Step 2: Rotate

After positioning the crimp pliers, crimp the terminal already installed on wire.

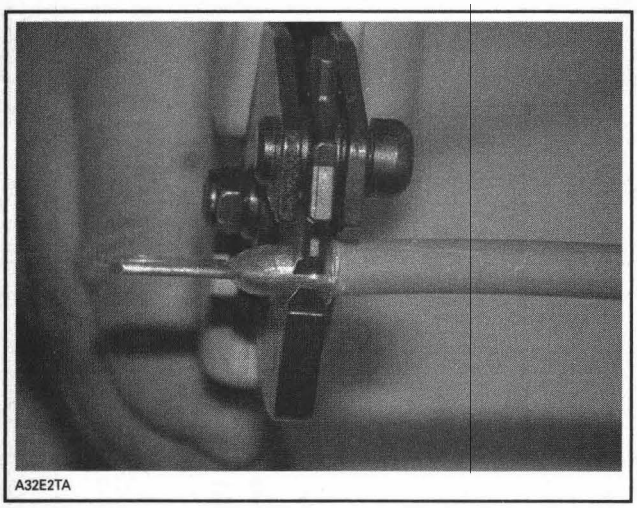

CRIMPING OF WIRE

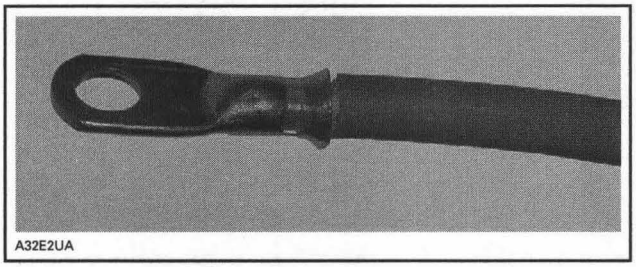

PROPERLY CRIMPED WIRE

To verify, if the wire is properly crimped, apply some pulling force on wire and the terminal at the same time from both directions.

CAUTION: Never solder the wire to the terminal. Soldering can change the property of the wire and it can become brittle and break.

Install the protective heat shrink rubber tube on the terminal. Heat the heat shrink rubber tube using the heat gun so that it grasps the wire and the terminal.

CAUTION: Make sure that the protective heat shrink rubber tube has been properly installed and no part of wire is exposed.

WIRING DIAGRAMS

WIRING DIAGRAMS

NOTE: Wiring diagrams are in the manual back cover pocket.

WIRING DIAGRAM LEGEND

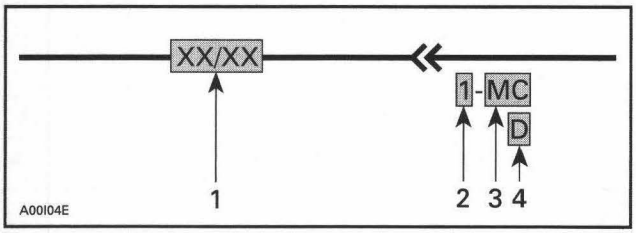

1. *Wire colors*
2. *Connector location*
3. *Connector code*
4. *Terminal position in connector*

Wire Colors

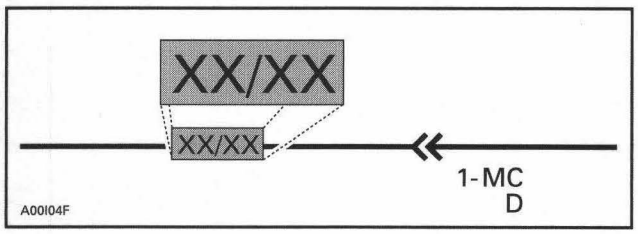

The first color of a wire is the main color, second color is the stripe.

Example: YL / BK is a YELLOW wire with a BLACK stripe.

COLOR CODE					
BE	—	BEIGE	OR	—	ORANGE
BK	—	BLACK	RD	—	RED
BU	—	BLUE	VI	—	VIOLET
BR	—	BROWN	WH	—	WHITE
GN	—	GREEN	YL	—	YELLOW
GY	—	GREY			

Connector Location

The first digit of the connector identification number presents the location of the connector on the vehicle. It may also describe the part removal that is required to reach the connector.

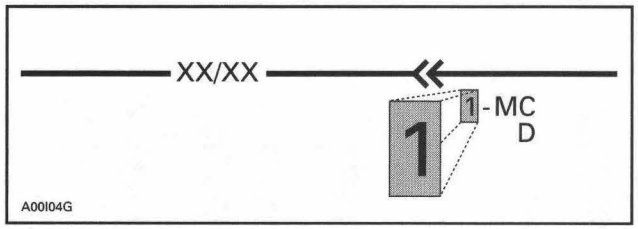

The location of the connectors are shown on the wiring diagram with a vehicle schematic as shown below.

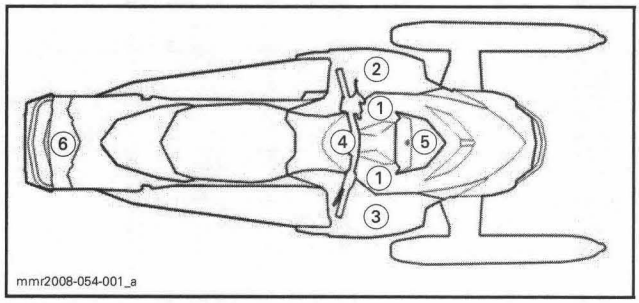

VEHICLE SCHEMATIC FOR CONNECTOR LOCATION

Connector Code

The next two letters of the connector identification number represents a connector reference. If there are many connectors in the same area this helps identify which wire is in which connector.

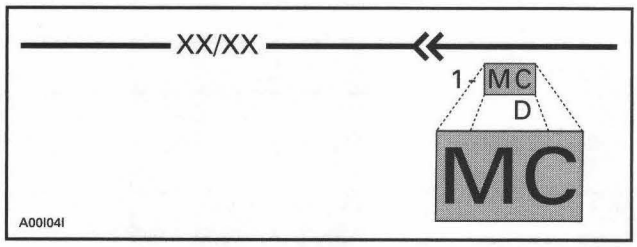

Terminal Position in Connector

The third portion of the connector identification number represents the location of the terminal in the connector. This could be identified by either a number such as 1, 2, 3 or by a letter such as A, B, C depending on the type of connector used.

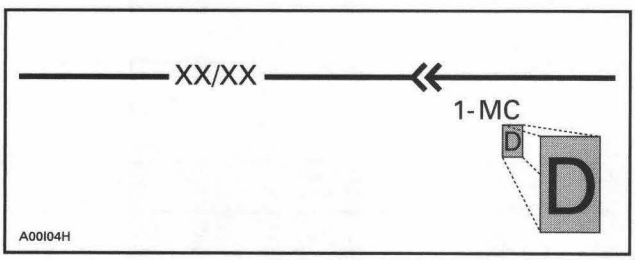

2008 REV XP FAN COOLED

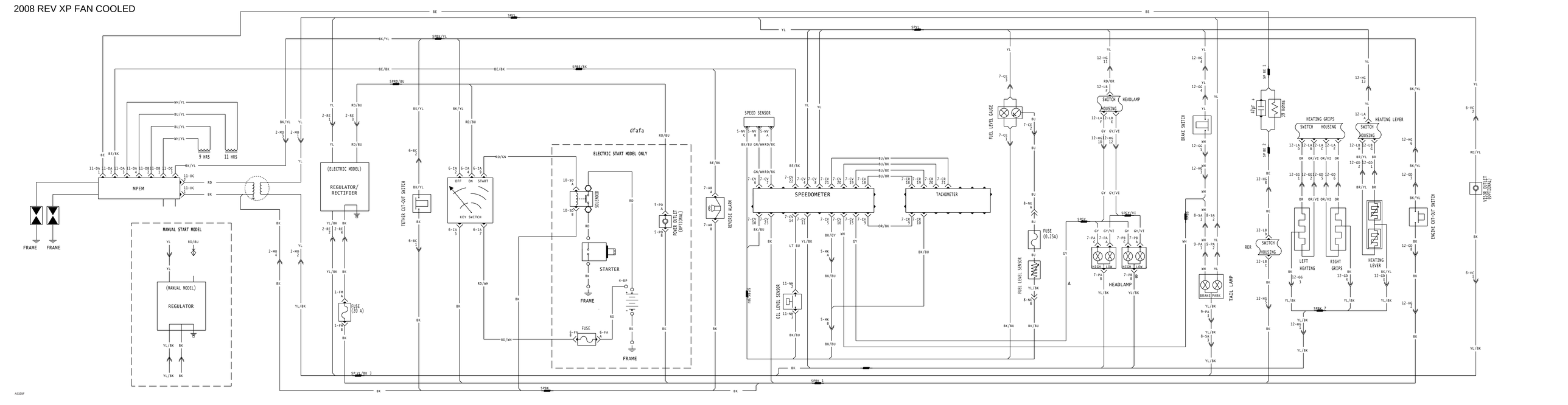

A3320F

2008 REV XP CARBURETOR MANUAL START

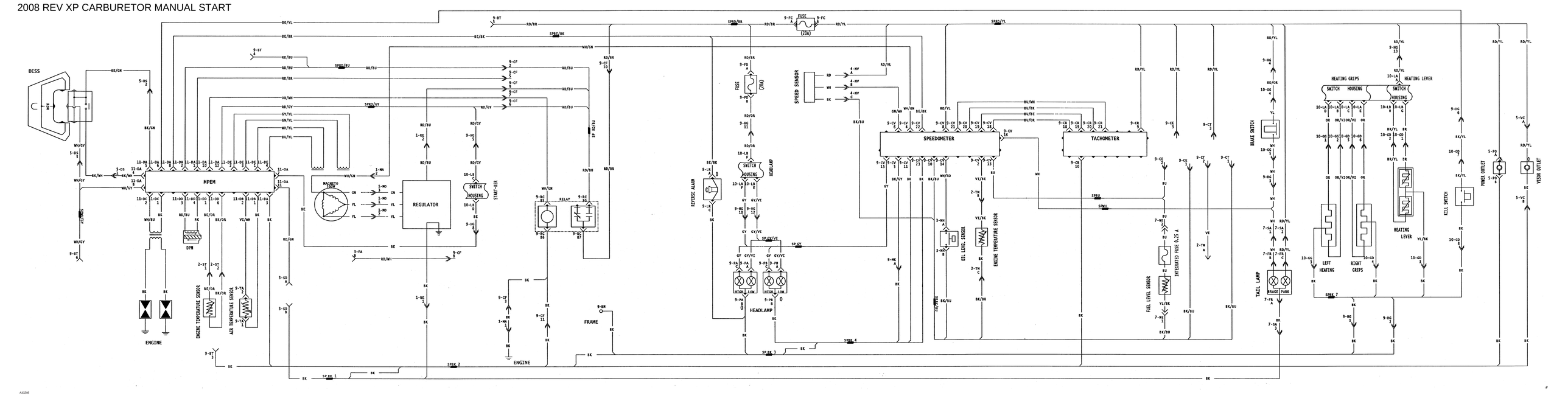

2008 REV XP CARBURETOR ELECTRIC START

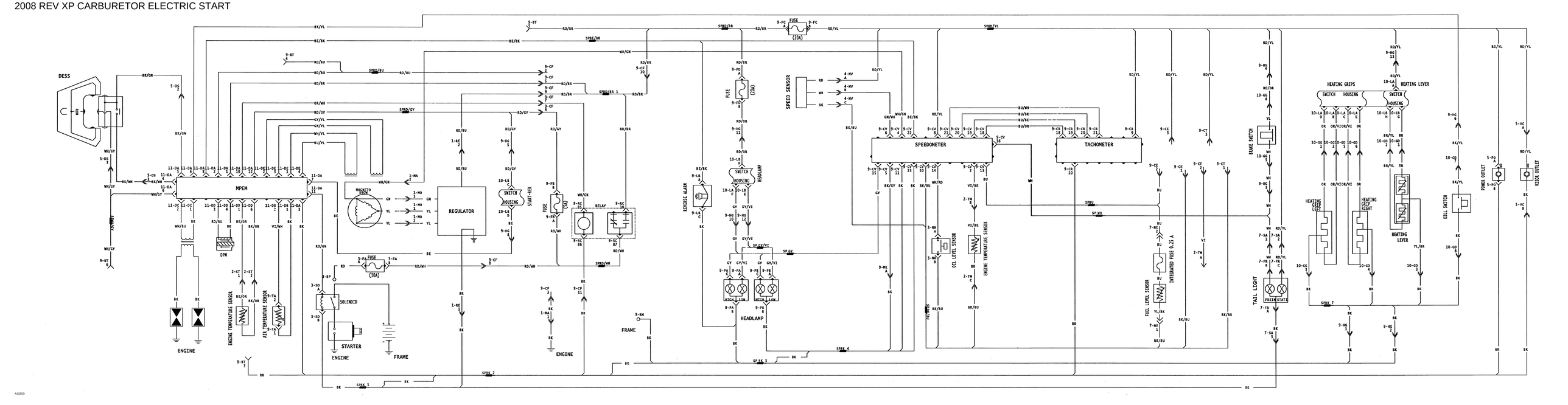

2008 REV XP SDI

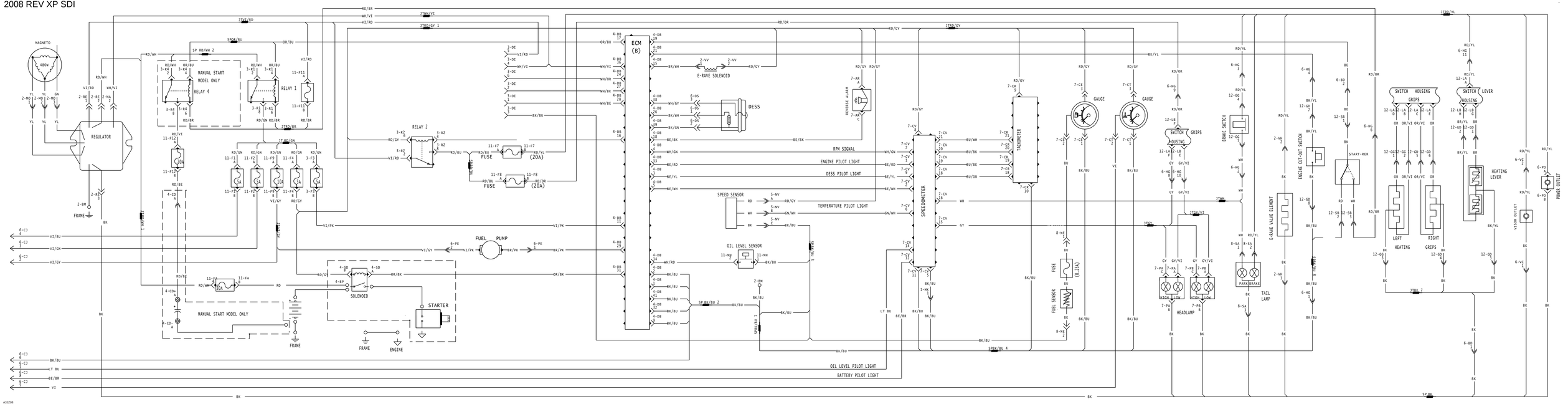

2008 REV XP POWER TEK MANUAL START

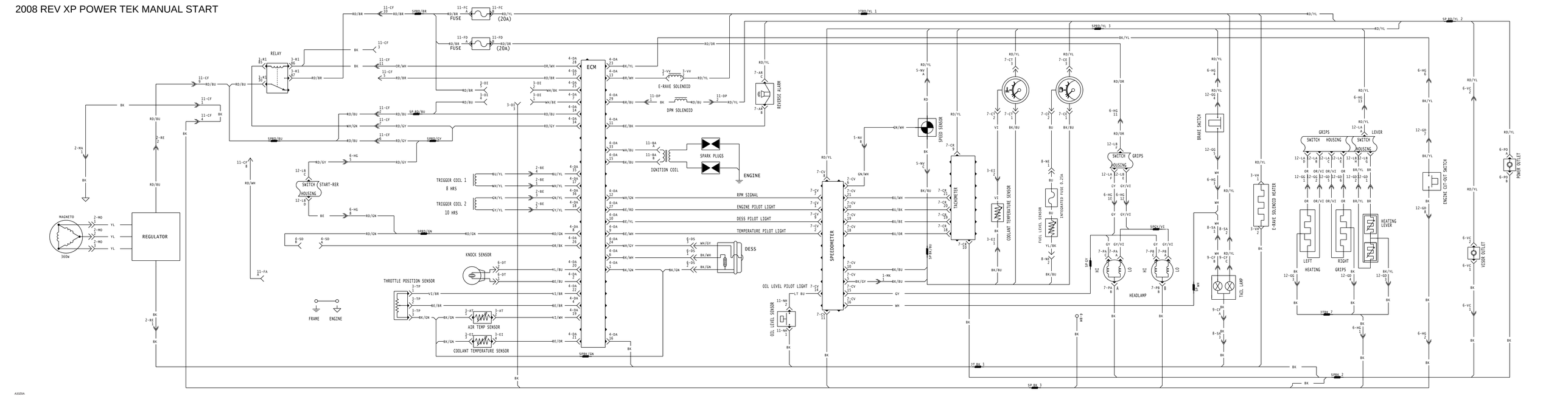

2008 Ski-Doo Rev XP/RF Series Service Manual

Some models may need supplemental manuals which have blue titles. Use the base manual for everything not contained in the supplement if your model or year requires a supplement.

If you bought this manual from any other seller, they are reselling my work.

Please leave them negative feedback & email me at sales@midwestmanuals.com .

Our goal is to be one of the BEST sellers on eBay and the internet by providing you with the BEST customer service and the BEST manuals on the market.

Thank you for choosing us.



sales@midwestmanuals.com
www.midwestmanuals.com

SAFETY NOTICE ..... **XIII**

INTRODUCTION ..... **XIV**
GENERAL INFORMATIONS XIV
VEHICLE IDENTIFICATION NUMBER XIV
ENGINE SERIAL NUMBER XV
ARRANGEMENT OF THIS MANUAL, ILLUSTRATIONS AND PROCEDURES XV
SELF-LOCKING FASTENERS PROCEDURE XVIII
LOCTITE® APPLICATION PROCEDURE XVIII
TIGHTENING TORQUE XXII

01 MAINTENANCE
01 – MAINTENANCE CHART (300F/550F) **1**
02 – MAINTENANCE CHART (V800) **3**
03 – STORAGE PROCEDURE(300F/550F) **5**
GENERAL 5
PROCEDURES 5
ENGINE SYSTEM 5
LUBRICATION SYSTEM 6
FUEL SYSTEM 6
ELECTRICAL 6
DRIVE SYSTEM 6
SUSPENSION 6
STEERING 7
VEHICLE 7
04 – STORAGE PROCEDURE (V800) **9**
GENERAL 9
PROCEDURES 9
ENGINE SYSTEM 9
FUEL SYSTEM 10
ELECTRICAL 10
DRIVE SYSTEM 10
SUSPENSION 10
STEERING 11
VEHICLE 11
05 – PRESEASON PREPARATION **13**
ENGINE 13
LUBRICATION SYSTEM 13
FUEL SYSTEM 13
DRIVE SYSTEM 14
ELECTRICAL SYSTEM 14

02 TROUBLESHOOTING
01 – ENGINE (300F/550F) **15**
02 – ENGINE (V800) **21**
COOLING SYSTEM 21
MAGNETO SYSTEM 22
LUBRICATION 22
CYLINDER AND HEAD 23
CRANKSHAFT 24
ENGINE GENERAL 24
03 – FUEL AND OIL INJECTION SYSTEMS **29**
04 – DRIVE SYSTEM **31**
DRIVE SYSTEM 31
BRAKE SYSTEM 35

TABLE OF CONTENTS

05 – ELECTRICAL SYSTEM **37**
06 – STEERING SYSTEM **45**
07 – SUSPENSION **47**

03 ENGINE (277)
01 – ENGINE REMOVAL AND INSTALLATION **49**
GENERAL 50
PROCEDURES 50
ENGINE 50
ENGINE SUPPORT 52
02 – ENGINE LEAK TEST **55**
PREPARATION 55
PROCEDURE 55
ENGINE LEAK VERIFICATION FLOW CHART 56
03 – AIR INTAKE SYSTEM **57**
PROCEDURES 58
SECONDARY AIR INTAKE SILENCER 58
PRIMARY AIR INTAKE SILENCER 58
04 – EXHAUST SYSTEM **61**
GENERAL 63
PROCEDURES 63
EXTENSION PIPE 63
MANIFOLD 64
TUNED PIPE/MUFFLER 64
05 – REWIND STARTER **65**
GENERAL 67
PROCEDURES 67
STARTER HANDLE 67
IDLER 67
REWIND STARTER 68
ROPE 71
06 – OIL INJECTION SYSTEM **73**
GENERAL 76
INSPECTION 76
OIL SYSTEM LEAK TEST 76
PROCEDURES 77
OIL RESERVOIR 77
OIL FILTER 78
OIL PUMP 79
07 – MAGNETO AND AXIAL FAN **85**
GENERAL 87
PROCEDURES 87
STARTING PULLEY 87
COOLING FAN 87
MAGNETO FLYWHEEL 87
STATOR 88
TRIGGER COIL 88
08 – TOP END **91**
GENERAL 93
PROCEDURES 93
CYLINDER COWL 93
CYLINDER HEAD 93
CYLINDER 93
PISTON 94
09 – BOTTOM END **99**
GENERAL 101

PROCEDURES 101
CRANKCASE 101
CRANKSHAFT 102
CRANKSHAFT BEARING 103
OIL SEAL 103
10 – ENGINE MEASUREMENT 105
CYLINDER TAPER 105
CYLINDER OUT OF ROUND 105
CYLINDER/PISTON CLEARANCE 105
RING/PISTON GROOVE CLEARANCE 107
RING END GAP 107
CRANKSHAFT DEFLECTION 108
CONNECTING ROD BIG END AXIAL PLAY 108
CRANKSHAFT END-PLAY 108

04 ENGINE (552)
01 – ENGINE REMOVAL AND INSTALLATION 111
GENERAL 113
PROCEDURES 113
ENGINE SUPPORT 117
02 – ENGINE LEAK TEST 119
PREPARATION 119
PROCEDURE 120
03 – AIR INTAKE SYSTEM 121
PROCEDURES 121
AIR FILTER 121
PRIMARY AIR INTAKE SILENCER 121
SECONDARY AIR INTAKE SILENCER 122
04 – EXHAUST SYSTEM 123
GENERAL 125
PROCEDURES 125
TUNED PIPE 125
MANIFOLD 126
MUFFLER 127
05 – OIL INJECTION SYSTEM 129
GENERAL 132
OIL TYPE 132
INSPECTION 132
OIL SYSTEM LEAK TEST 132
PROCEDURES 133
OIL RESERVOIR 133
OIL LEVEL SENSOR 133
OIL FILTER 134
OIL INJECTION PUMP 134
INJECTION NOZZLE 137
06 – REWIND STARTER 139
GENERAL 141
PROCEDURES 141
STARTER HANDLE 141
REWIND STARTER 141
ROPE 144
07 – AXIAL FAN 145
GENERAL 148
PROCEDURES 148
UPPER FAN DUCT 148
LOWER FAN DUCT 149

TABLE OF CONTENTS

CYLINDER COWL 149
AXIAL FAN 149
FAN BELT 150
COOLING FAN BEARING 152
08 – MAGNETO SYSTEM 155
GENERAL 157
PROCEDURES 157
MAGNETO FLYWHEEL 157
STATOR 159
TRIGGER COIL 159
09 – TOP END 161
GENERAL 163
PROCEDURES 163
CYLINDER HEAD 163
CYLINDER 163
PISTON 165
REED VALVE 168
10 – BOTTOM END 171
GENERAL 173
PROCEDURES 173
CRANKCASE 173
CRANKSHAFT 174
CRANKSHAFT BEARINGS 175
11 – ENGINE MEASUREMENT 181
CYLINDER HEAD WARPAGE 181
CYLINDER TAPER 181
CYLINDER OUT OF ROUND 181
CYLINDER/PISTON CLEARANCE 182
RING/PISTON GROOVE CLEARANCE 183
RING END GAP 184
CRANKSHAFT DEFLECTION 184
CONNECTING ROD BIG END AXIAL PLAY 184
CRANKSHAFT ALIGNMENT 184
COMBUSTION CHAMBER VOLUME MEASUREMENT 185

05 ENGINE (810)
01 – ENGINE REMOVAL AND INSTALLATION 187
GENERAL 188
PROCEDURES 188
ENGINE REMOVAL 188
ENGINE INSTALLATION 192
02 – ENGINE LEAK TEST 193
GENERAL 193
PROCEDURES 193
PREPARATION 193
LEAK TEST 195
REASSEMBLY 195
03 – AIR INTAKE SYSTEM 197
GENERAL 199
PROCEDURES 199
AIR FILTER 199
AIR INTAKE SILENCER 199
INTAKE MANIFOLD 200
04 – EXHAUST SYSTEM 203
GENERAL 203
PROCEDURES 203

MUFFLER 203
REAR EXHAUST PIPE 204
FRONT EXHAUST PIPE 205
EXHAUST MANIFOLD 206
05 – LUBRICATION SYSTEM 207
COMPONENTS 208
ENGINE LUBRICATION 209
GENERAL 210
MAINTENANCE 210
OIL LEVEL VERIFICATION 210
OIL CHANGE 210
OIL FILTER 212
INSPECTION 213
ENGINE OIL PRESSURE 213
PROCEDURES 213
OIL PRESSURE SWITCH 213
ENGINE OIL PRESSURE REGULATOR 214
OIL PUMP 214
ENGINE OIL STRAINER 217
REED VALVE 217
06 – COOLING SYSTEM 219
GENERAL 222
INSPECTION 222
COOLING SYSTEM LEAK TEST 222
MAINTENANCE 223
COOLANT REPLACEMENT 223
PROCEDURES 225
THERMOSTAT 225
COOLANT TANK CAP 226
RADIATOR AND RADIATOR PROTECTOR 226
OVERFLOW COOLANT TANK 226
COOLANT TEMPERATURE SENSOR (CTS) 227
WATER PUMP HOUSING 227
WATER PUMP IMPELLER 227
WATER PUMP SHAFT AND SEALS 228
07 – MAGNETO SYSTEM 231
GENERAL 233
PROCEDURES 233
MAGNETO COVER 233
STATOR 234
ROTOR 235
SPRAG CLUTCH 236
SPRAG CLUTCH GEAR 237
STARTER DRIVE GEARS 238
08 – CYLINDER AND HEAD 239
GENERAL 243
MAINTENANCE 243
VALVE CLEARANCE ADJUSTMENT 243
PROCEDURES 244
VALVE COVER 244
TIMING CHAIN TENSIONER 244
CAMSHAFT TIMING GEAR 246
ROCKER ARM 247
TIMING CHAIN 249
CYLINDER HEAD 249
CAMSHAFT 251

TABLE OF CONTENTS

VALVE SPRING 255
VALVE 256
VALVE GUIDE 259
CYLINDER 260
PISTON 261
PISTON RINGS 265
09 – BOTTOM END 267
GENERAL 270
PROCEDURES 270
PTO COVER OIL SEAL 270
PTO COVER 270
DRIVE GEARS 273
REED VALVE 274
TIMING CHAIN 274
TIMING CHAIN GUIDE 275
CRANKCASE 275
CRANKSHAFT 279

06 ENGINE MANAGEMENT (V800)
01 – OVERVIEW 287
OPERATING PRINCIPLE 288
AIR INDUCTION 288
FUEL SYSTEM 289
ELECTRICAL SYSTEM 289
ENGINE MANAGEMENT SYSTEM 291
ELECTRONIC FUEL INJECTION 291
IGNITION 291
ENGINE MODES OF OPERATION 292
MONITORING SYSTEM 292
02 – EMS DIAGNOSTIC AND COMMUNICATION TOOLS 295
GENERAL 295
COMMUNICATION TOOLS 295
MULTI-PURPOSE INTERFACE (MPI) 295
MULTI-PURPOSE INTERFACE-2 (MPI-2) 297
B.U.D.S. SOFTWARE 299
DIAGNOSTIC 300
FAULT CODES 300
FAULT CODE TABLE 301
03 – ADJUSTMENT AND REPAIR PROCEDURES 307
GENERAL 307
FUEL SYSTEM 307
ELECTRICAL SYSTEM 308
BASIC ADJUSTMENTS 310
IDLE SPEED 310
THROTTLE CABLE 311
CLOSED THROTTLE AND IDLE ACTUATOR RESET 312
IGNITION TIMING 312
REPAIR PROCEDURES 313
ENGINE CONTROL MODULE (ECM) 313
FUEL INJECTOR 314
FUEL RAIL 317
THROTTLE BODY 318
THROTTLE POSITION SENSOR (TPS) 321
IDLE BYPASS VALVE 322
CRANKSHAFT POSITION SENSOR (CPS) 323
CAMSHAFT POSITION SENSOR (CAPS) 325

MANIFOLD AIR PRESSURE AND TEMPERATURE SENSOR (MAPTS) 326
COOLANT TEMPERATURE SENSOR (CTS) 328
OIL PRESSURE SWITCH (OPS) 329

07 FUEL SYSTEM

01 – FUEL TANK AND FUEL PUMP (300F/550F) 331
INSPECTION 333
FUEL SYSTEM LEAK TEST 333
PROCEDURES 333
OETIKER CLAMPS 333
IN-TANK FUEL STRAINER 334
FUEL TANK 334
DIAPHRAGM FUEL PUMP 336

02 – FUEL TANK AND FUEL PUMP (V800) 337
INSPECTION 339
FUEL TANK LEAK TEST 339
FUEL PRESSURE TEST 339
PROCEDURES 341
OETIKER CLAMPS 341
FUEL FILTER 342
FUEL PUMP 342
IN-TANK FUEL STRAINER 345
FUEL TANK 345
TROUBLESHOOTING 347
FUEL SYSTEM DIAGNOSTIC FLOW CHART 347

03 – CARBURETOR (300F/550F) 349
CARBURETOR 351
THROTTLE CABLE 357
CHOKE CABLE 359

08 ELECTRICAL SYSTEM

01 – IGNITION SYSTEM (300F) 361
GENERAL 363
IGNITION SYSTEM TESTING SEQUENCE 363
PROCEDURES 363
SPARK PLUG 364
IGNITION SWITCH 364
TETHER CUT-OUT SWITCH 365
ENGINE CUT-OUT SWITCH 365
WIRING HARNESS 366
IGNITION COIL 366
IGNITION GENERATOR COIL 367
TRIGGER COIL(FORWARD ROTATION) 368
MPEM 369
ADJUSTMENT 369
IGNITION TIMING 369

02 – IGNITION SYSTEM (550F) 371
GENERAL 371
IGNITION SYSTEM TESTING SEQUENCE 371
PROCEDURES 372
SPARK PLUG 372
IGNITION SWITCH 373
TETHER CUT-OUT SWITCH 373
ENGINE CUT-OUT SWITCH 374
WIRING HARNESS 374
IGNITION COIL 374

TABLE OF CONTENTS

IGNITION GENERATOR COIL 375
TRIGGER COIL 376
MPEM 377
ADJUSTMENT 377
IGNITION TIMING 377
03 – IGNITION SYSTEM (V800) 381
GENERAL 381
PROCEDURES 381
IGNITION SWITCH 381
TETHER CUT-OUT SWITCH 384
ENGINE CUT-OUT SWITCH 384
IGNITION COIL 385
IGNITION TIMING 387
SPARK PLUG 387
04 – CHARGING SYSTEM 389
GENERAL 389
PROCEDURES 390
FUSE 390
VOLTAGE REGULATOR/RECTIFIER 390
CHARGING GENERATOR COIL (STATOR) 391
BATTERY 395
05 – STARTING SYSTEM (300F/550F) 399
GENERAL 401
DIAGNOSTIC 401
STARTING SYSTEM TEST 401
PROCEDURES 401
FUSES 401
BATTERY 402
IGNITION SWITCH 402
STARTING SOLENOID 402
ELECTRIC STARTER 404
06 – STARTING SYSTEM (V800) 411
GENERAL 411
TROUBLESHOOTING 411
ENGINE CRANKING CONDITIONS 411
STARTING SYSTEM TEST 412
PROCEDURES 413
BATTERY 413
FUSES 413
DIODE 414
ENGINE CONTROL MODULE (ECM) 415
TETHER CORD SWITCH AND ENGINE CUT-OUT SWITCH 415
IGNITION SWITCH 415
STARTING SOLENOID 415
ELECTRIC STARTER 416
07 – ROTAX ELECTRONIC REVERSE (300F/550F) 419
GENERAL 419
TROUBLESHOOTING 419
TESTING PROCEDURES 419
08 – LIGHTS, INSTRUMENTS AND ACCESSORIES 423
GENERAL 423
FUSES 424
DIAGNOSTIC 426
POWER DISTRIBUTION 426
LIGHTING AND ACCESSORIES SYSTEM TESTING 428
PROCEDURES 428

RELAY 428
HEADLAMP 429
HEADLAMP DIMMER SWITCH 431
TAILLIGHT/BRAKE LIGHT 432
SPEEDOMETER (IF SO EQUIPPED) 435
SPEED SENSOR 440
TACHOMETER (IF SO EQUIPPED) 441
HEATING ELEMENTS 442
BEEPER 444
PILOT LAMPS (MODELS WITHOUT SPEEDOMETER) 445
12-VOLT POWER OUTLET 446
VISOR OUTLET (IF SO EQUIPPED) 446

09 DRIVE SYSTEM AND BRAKE

01 – DRIVE BELT 447
APPLICATION CHART 447
DRIVE BELT 447
02 – DRIVE PULLEY (BOMBARDIER LITE) 451
GENERAL 453
PROCEDURES 453
FIXED AND SLIDING SHEAVES 453
GOVERNOR CUP 454
CENTRIFUGAL WEIGHT 455
SPRING 456
RING GEAR 457
03 – DRIVE PULLEY (TRA IV) 459
GENERAL 461
PROCEDURES 461
CALIBRATION SCREWS 461
FIXED AND SLIDING SHEAVES 462
GOVERNOR CUP 464
RAMPS 465
SPRING 466
CENTRIFUGAL LEVERS 466
BUSHING 467
04 – DRIVEN PULLEY (LPV 27 AND LPV VSA) 471
GENERAL 473
PROCEDURES 473
FIXED AND SLIDING SHEAVES 473
BUSHING 475
05 – PULLEY ALIGNMENT 479
GENERAL 479
PROCEDURES 479
W AND Z MEASUREMENTS 479
X MEASUREMENT 480
06 – COUNTERSHAFT AND BRAKE 483
GENERAL 485
PROCEDURES 485
BRAKE FLUID 485
BRAKE PADS 485
BRAKE DISC 487
CALIPER 487
MASTER CYLINDER 489
BRAKE LIGHT SWITCH 489
COUNTERSHAFT 490
COUNTERSHAFT BEARING 491

TABLE OF CONTENTS

07 – CHAINCASE (300F AND 550F) **493**
GENERAL 495
MAINTENANCE 495
CHAINCASE OIL 495
DRIVE CHAIN ADJUSTMENT 496
PROCEDURES 496
CHAINCASE 496
CHAIN TENSIONER 499
CHAIN TENSIONER ROLLER BEARING 500
08 – CHAINCASE (V800) **501**
GENERAL 503
MAINTENANCE 503
CHAINCASE OIL 503
DRIVE CHAIN ADJUSTMENT 504
PROCEDURES 504
REVERSE LEVER 504
LINK ROD 505
CHAINCASE COVER 505
CHAINCASE 506
CHAIN TENSIONER 510
CHAIN TENSIONER ROLLER BEARING 511
09 – DRIVE AXLE **513**
GENERAL 515
PROCEDURES 515
DRIVE AXLE 515
DRIVE AXLE BEARING 516
SPROCKETS 516
10 – TRACK **519**
TRACK 519
TRACTION ENHANCING PRODUCTS (STUDS) 521

10 SUSPENSION
01 – FRONT SUSPENSION **523**
GENERAL 524
PROCEDURES 524
SHOCK ABSORBER AND SPRING 524
SUSPENSION ARM 525
STABILIZER BAR 526
02 – REAR SUSPENSION (SC) **527**
GENERAL 532
PROCEDURES 532
REAR AXLE 532
REAR SHOCK ABSORBER 533
THROTTLE ROD 533
FRONT SHOCK ABSORBER 534
REAR SPRING 534
SLIDER SHOE 535
FRONT ARM 536
REAR ARM 537
IDLER WHEELS 538
STOPPER STRAP 539
SUSPENSION ASSEMBLY 539
03 – REAR SUSPENSION (SC-4) **541**
GENERAL 545
PROCEDURES 545
REAR AXLE 545

REAR SHOCK ABSORBER 545
FRONT SHOCK ABSORBER 546
REAR SPRING 547
SLIDER SHOE 548
FRONT ARM 549
REAR ARM 550
COUPLING BLOCK 550
IDLER WHEELS 550
STOPPER STRAP 551
SUSPENSION ASSEMBLY 551
04 – SHOCK ABSORBER INSPECTION AND SERVICING 553
HYDRAULIC SHOCK ABSORBER 553
GAS SHOCK ABSORBER (HPG TYPE) 553

11 STEERING SYSTEM
01 – STEERING AND HANDLEBAR 555
GENERAL 559
PROCEDURES 559
HANDLEBAR GRIP 559
HANDLEBAR 561
HANDLEBAR EXTENSION 562
TIE-ROD 563
STEERING ARM 564
STEERING COLUMN 564
02 – SKIS AND STEERING ALIGNMENT 567
GENERAL 569
PROCEDURES 569
SKI RUNNER 569
SKI 569
SKI HANDLE (FOR PILOT SKI TYPES) 570
SKI LEG 571
STEERING ALIGNMENT 571

12 BODY/FRAME
01 – BODY 575
ADJUSTMENT 575
SEAT LATCH 575
PARTS REPLACEMENT 575
DECAL 575
SIDE PANEL 575
HOOD 576
BOTTOM PAN 576
WINDSHIELD 576
CONSOLE 577
SEAT 577
BACKREST 578
SEAT COVER 578
TRUNK 579
CLEANING 579
REPAIR 579
02 – FRAME 581
GENERAL 585
RIVET DRILLING PROCEDURE 585
PROCEDURES 585
FRAME 585
FRONT BUMPER 585

TABLE OF CONTENTS

REAR BUMPER 585
FRONT PLATE 586
SIDE PLATE 586
SUSPENSION ARM SUPPORT 587
UPPER TUBE 588

13 TECHNICAL SPECIFICATIONS
01 – 300F MODELS 589
02 – 550F MODELS 593
03 – V800 MODELS 597

14 ELECTRICAL CONNECTORS AND WIRING DIAGRAMS
01 – ELECTRICAL CONNECTORS 603
PROCEDURES 605
TAB AND RECEPTACLE CONNECTORS 605
LOCKING RECEPTACLE CONNECTOR 606
DEUTSCH CONNECTORS 606
PACKARD CONNECTOR 607
AMP MULTILOCK CONNECTOR 607
AMP 8-CIRCUIT CONNECTOR 608
ECM CONNECTORS 608
MULTIFUNCTION SPEEDOMETER CONNECTOR 611
BATTERY CABLE TERMINAL 612
02 – WIRING DIAGRAMS 615
WIRING DIAGRAMS LEGEND 615

INTRODUCTION

GENERAL INFORMATIONS

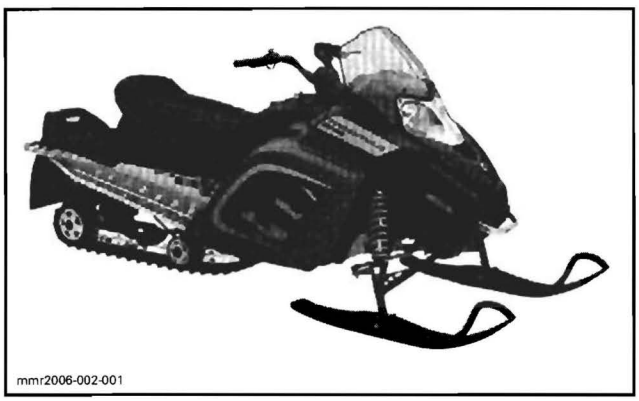

TYPICAL — RF SERIES

MODEL	ENGINE TYPE
Expedition Sport 550F	552
Expedition Sport V800	V810
Freestyle Back Country 550F	552
Freestyle Park 550F	552
Freestyle Session 300F	277
Freestyle Session 550F	552
Legend Touring V800	V810
Legend Trail V800	V810
Tundra 300F	277
Tundra V800	V810

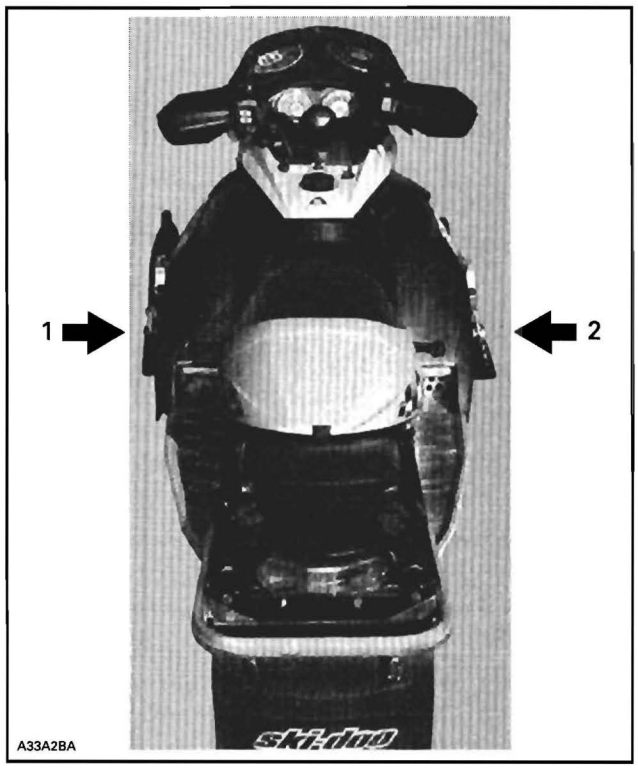

TYPICAL
1. Left
2. Right

VEHICLE IDENTIFICATION NUMBER

Vehicle Identification Number Location

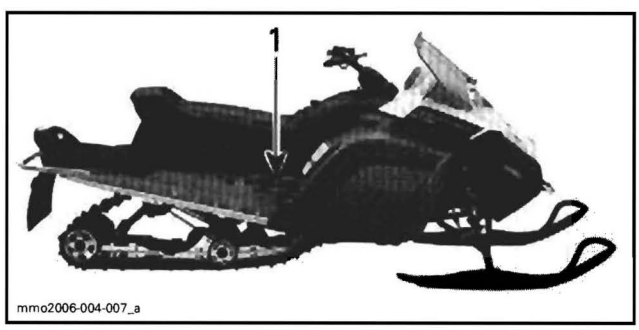

TYPICAL
1. Vehicle identification number

Identification Number Meaning

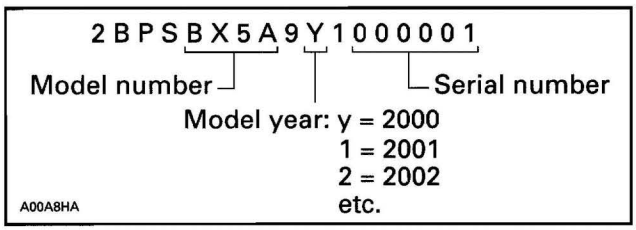

ENGINE SERIAL NUMBER

Engine Serial Number Location

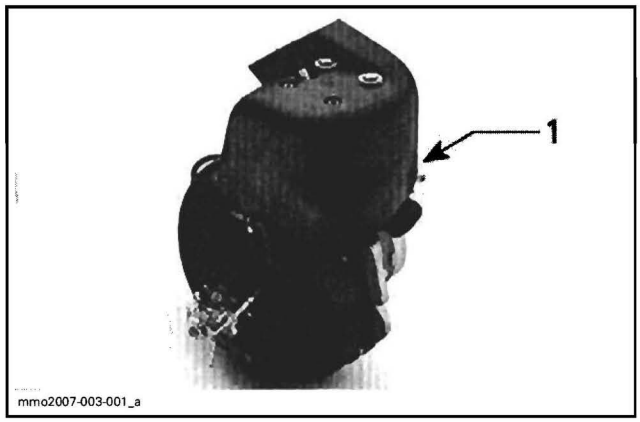

TYPICAL — 300F
1. Engine serial number

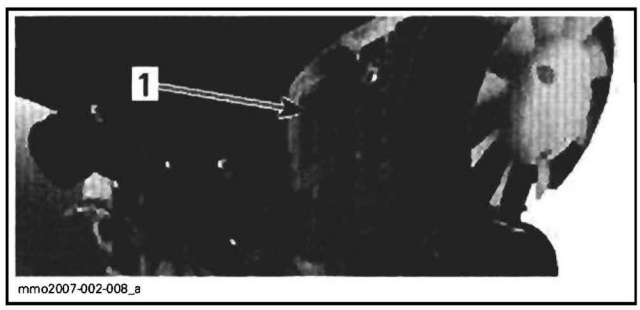

TYPICAL — 500F
1. Engine serial number

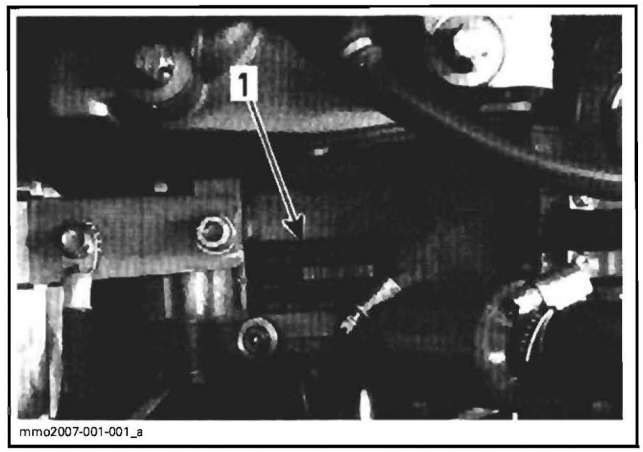

TYPICAL — V800
1. Engine serial number

ARRANGEMENT OF THIS MANUAL, ILLUSTRATIONS AND PROCEDURES

The manual is divided into many major sections as you can see in the main table of contents at the beginning of the manual.

Each section is divided in various subsections, and again, each subsection has one or more division.

Illustrations and photos show the typical construction of the different assemblies and, in all cases, may not reproduce the full detail or exact shape of the parts shown. However, they represent parts which have the same or a similar function.

CAUTION: Most components of those vehicles are built with parts dimensioned in the metric system. Most fasteners are metric and must not be replaced by customary fasteners or vice-versa. Mismatched or incorrect fasteners could cause damage to the vehicle or possible personal injury.

As many of the procedures in this manual are interrelated, we suggest, that before undertaking any task, you read and thoroughly understand the entire section or subsection in which the procedure is contained.

A number of procedures throughout the book require the use of special tools. Before commencing any procedure, be sure that you have on hand all the tools required, or approved equivalents.

This *Shop Manual* uses technical terms wich may be slightly different from the ones in the parts catalog.

TYPICAL PAGE

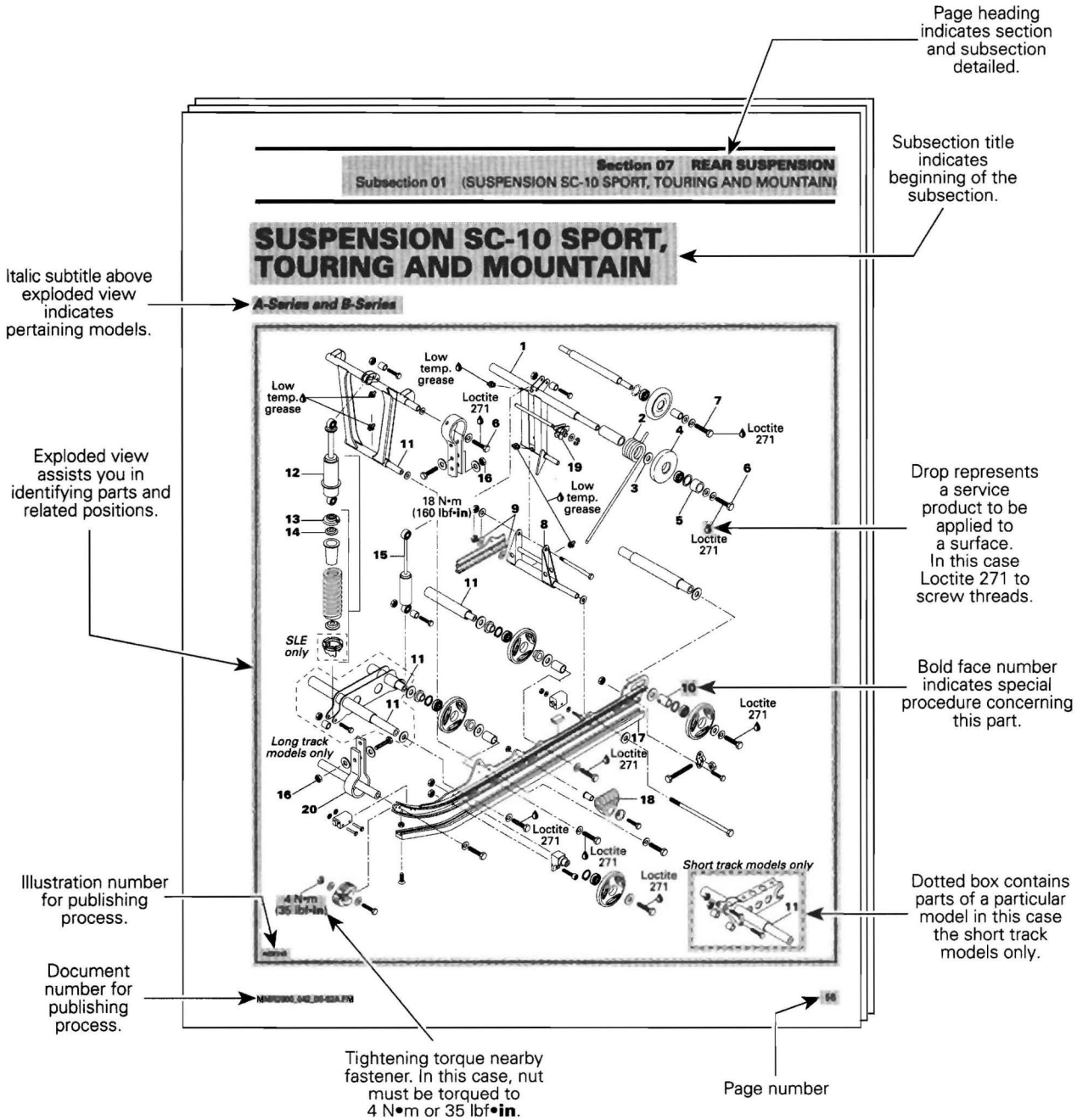

CAUTION: Pay attention to torque specifications. Some of these are in lbf•**in** instead of lbf•ft. Use appropriate torque wrench.

A00A7XS

TYPICAL PAGE

Turn puller handle and sliding half at once to extract the bushing.

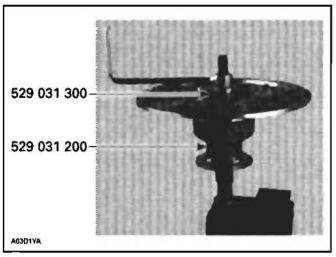

IMPORTANT: Large bushing retaining screws and washers must be removed before small bushing installation.

Coat bushing outside diameter with Loctite 609 (P/N 413 703 100).

Install bushing as following photo.

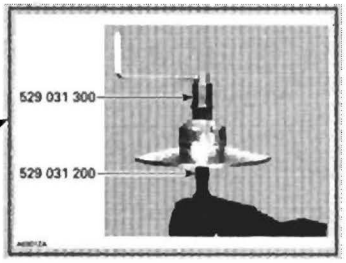

ASSEMBLY

Came Slider Shoe

When replacing slider shoes **no. 4**, always install a new set (3 shoes) to maintain equal pressure on the cam.

Assemble driven pulley components by reversing the disassembly procedure.

Cam

Coat cam **no. 18** interior with anti-seize lubricant.

INSTALLATION

Countershaft

CAUTION: Always apply anti-seize lubricant (P/N 413 701 000) on the countershaft before final pulley installation.

A-Series and B-Series Only

Should installation procedure be required, refer to BRAKE then look for **Brake Disc and Countershaft Bearing Adjustment.**

Reinstall the pulley on the countershaft by reversing the removal procedure.

All Models

Check end play of driven pulley on countershaft by pushing pulley towards outer housing so that the inner shims (P/N 504 108 200) contact it. Measure end play at the mounting screw end between shim(s) and puley. See illustration.

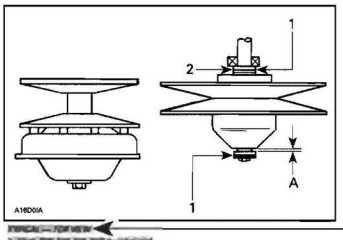

Torque retaining screw **no. 13** to 25 N•m (18 lbf•ft).

ADJUSTMENT

Refer to PULLEY DISTANCE AND ALIGNMENT to adjust pulley distance. Adjust drive belt height between pulley halves to obtain specified belt deflection.

Title indicates main procedure to be carried-out.

Italic bold face type setting indicates a particular procedure concerning a model.

Italic bold face setting in this case indicates that particular procedure for A and B-Series is finished, so from this point, all models are concerned.

"TYPICAL" caption indicates a general view which does not represent full detail. "TOP VIEW" caption helps you in understanding illustration.

Illustration always follows text to which it pertains.

Call-outs for above illustration.

Subtitle indicates a particular procedure for the named part.

Reference to look up a certain section and subsection. In this case it concerns pulleys adjustment.

Bold face number following part name refers to exploded view at beginning of subsection.

A00A7YS

SELF-LOCKING FASTENERS PROCEDURE

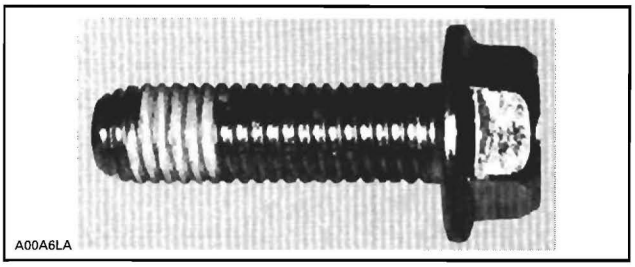

TYPICAL — SELF-LOCKING FASTENER

The following describes the most common application procedures when working with self-locking fasteners.

Use a metal brush or a tap to clean the hole properly then use a solvent, let act during 30 minutes and wipe off. The solvent utilization is to ensure the adhesive works properly.

LOCTITE® APPLICATION PROCEDURE

The following describes the most common application procedures when working with Loctite products.

NOTE: Always use proper strength Loctite product as recommended in this shop manual.

Threadlocker

Uncovered Holes (bolts and nuts)

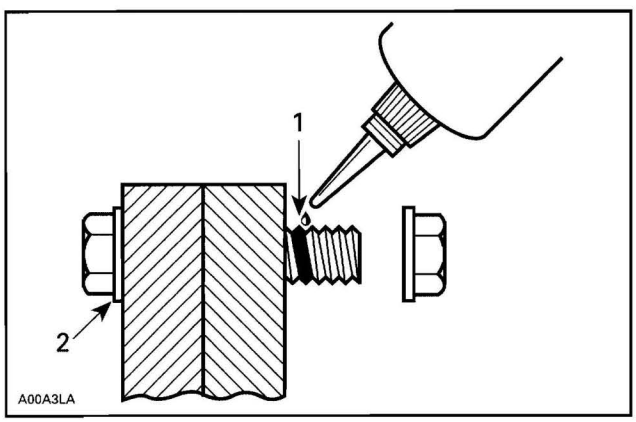

1. Apply here
2. Do not apply

- Clean threads (bolt and nut) with solvent.
- Apply Loctite Primer N (P/N 293 800 041) on threads and allow to dry.
- Choose proper strength Loctite threadlocker.
- Fit bolt in the hole.
- Apply a few drops of threadlocker at proposed tightened nut engagement area.
- Position nut and tighten as required.

Blind Holes

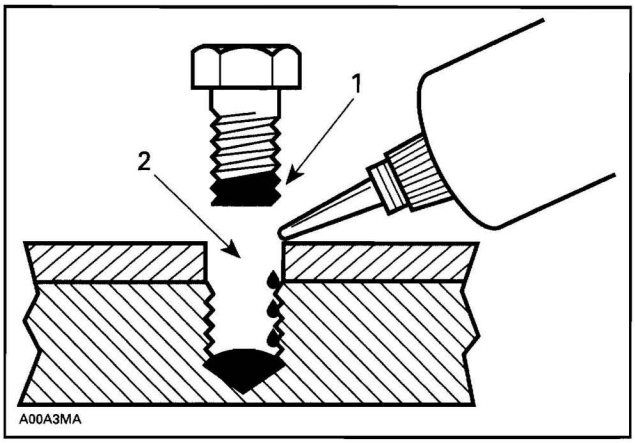

1. On threads
2. On threads and at the bottom of hole

- Clean threads (bolt and hole) with solvent.
- Apply Loctite Primer N (P/N 293 800 041) on threads (bolt and nut) and allow to dry for 30 seconds.
- Choose proper strength Loctite threadlocker.
- Apply several drops along the threaded hole and at the bottom of the hole.
- Apply several drops on bolt threads.
- Tighten as required.

Stud in Blind Holes

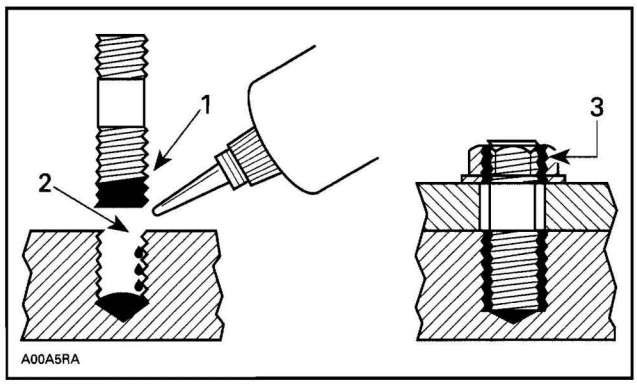

1. On threads
2. On threads and in the hole
3. Onto nut threads

- Clean threads (stud and hole) with solvent.
- Apply Loctite Primer N (P/N 293 800 041) on threads and allow to dry.
- Put several drops of proper strength Loctite threadlocker on female threads and in hole.
- Apply several drops of proper strength Loctite on stud threads.

- Install stud.
- Install cover, etc.
- Apply drops of proper strength Loctite on uncovered threads.
- Tighten nuts as required.

Preassembled Parts

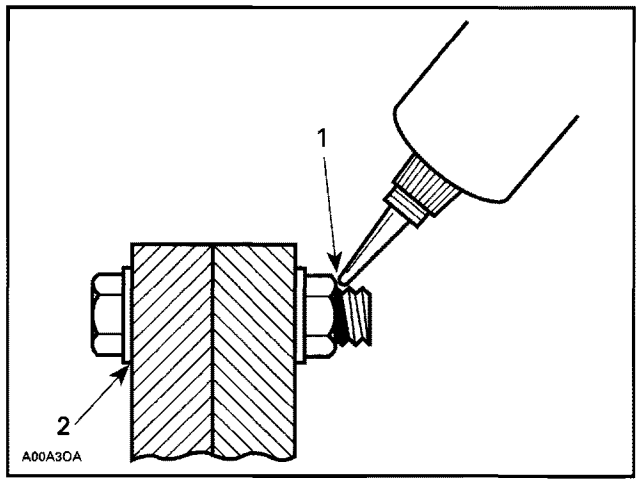

1. Apply here
2. Do not apply

- Clean bolts and nuts with solvent.
- Assemble components.
- Tighten nuts.
- Apply drops of proper strength Loctite on bolt/nut contact surfaces.
- Avoid touching metal with tip of flask.

NOTE: For preventive maintenance on existing equipment, retighten nuts and apply proper strength Loctite on bolt/nut contact surfaces.

Adjusting Screw

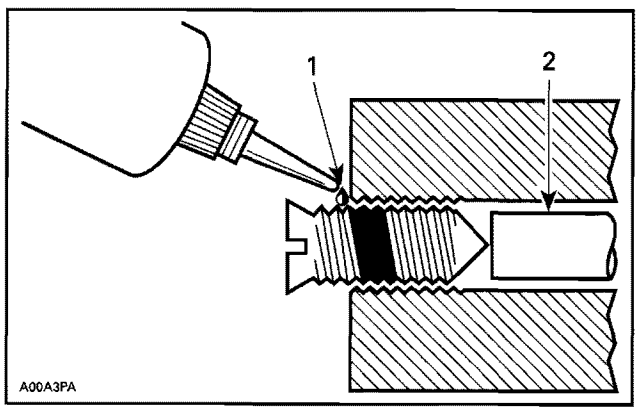

1. Apply here
2. Plunger

- Adjust screw to proper setting.
- Apply drops of proper strength Loctite threadlocker on screw/body contact surfaces.
- Avoid touching metal with tip of flask.

NOTE: if it is difficult to readjust, heat screw with a soldering iron (232°C (450°F)).

Stripped Thread Repair

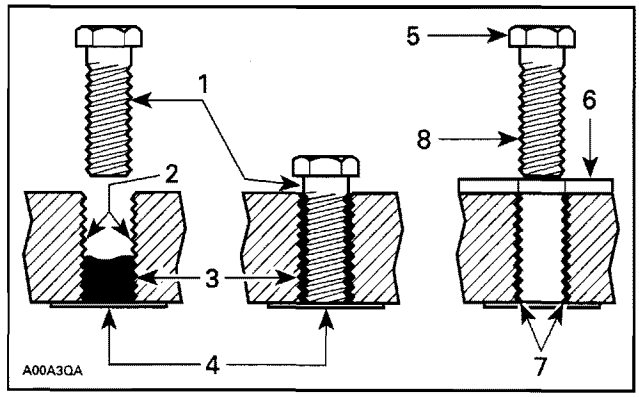

1. Release agent
2. Stripped threads
3. Form-A-Thread
4. Tapes
5. Cleaned bolt
6. Plate
7. New threads
8. Threadlocker

Standard Thread Repair

- Follow instructions on Loctite FORM-A-THREAD 81668 package.
- if a plate is used to align bolt:

a. Apply release agent on mating surfaces.
b. Put waxed paper or similar film on the surfaces.

- Twist bolt when inserting it to improve thread conformation.

NOTE: NOT intended for engine stud repairs.

Repair of Small Holes/Fine Threads

Option 1: Enlarge damaged hole, then follow *STANDARD THREAD REPAIR* procedure.

Option 2: Apply FORM-A-THREAD on the screw and insert in damaged hole.

Permanent Stud Installation (light duty)

- Use a stud or thread on desired length.
- DO NOT apply release agent on stud.
- Do a STANDARD THREAD REPAIR.
- Allow to cure for 30 minutes.
- Assemble.

Gasket Compound

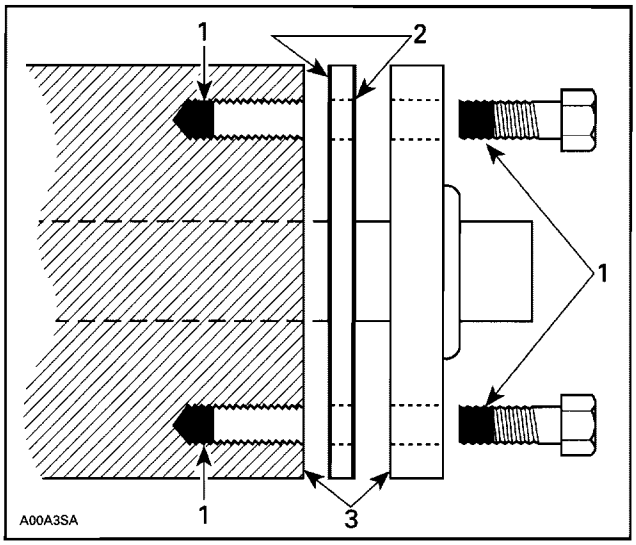

1. *Proper strength Loctite*
2. *Loctite Primer N (P/N 293 800 041) and Loctite 518 (P/N 293 800 038) on both sides of gasket*
3. *Loctite Primer N only*

- Remove old gasket and other contaminants with Loctite chisel (gasket remover) (P/N 413 708 500). Use a mechanical mean if necessary.

NOTE: Avoid grinding.

- Clean both mating surfaces with solvent.
- Spray Loctite Primer N on both mating surfaces and on both sides of gasket. Allow to dry 1 or 2 minutes.
- Apply Loctite 518 (P/N 293 800 038) on both sides of gasket, using a clean applicator.
- Place gasket on mating surfaces and assemble immediately.

NOTE: If the cover is bolted to blind holes (above), apply proper strength Loctite in the hole and on threads. Tighten.

If holes are sunken, apply proper strength Loctite on bolt threads.

- Tighten as usual.

Mounting on Shaft

Mounting with a Press

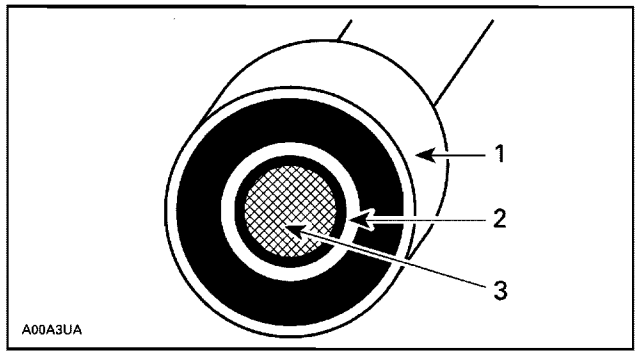

1. *Bearing*
2. *Proper strength Loctite*
3. *Shaft*

- Clean shaft external part and element internal part.
- Apply a strip of proper strength Loctite on shaft circumference at insert or engagement point.

NOTE: Retaining compound is always forced out when applied on shaft.

- DO NOT use antiseize Loctite or any similar product.
- No curing period is required.

Mounting in Tandem

1. Apply retaining compound on internal element bore.
2. Continue to assemble as shown above.

Case-In Components

Metallic Gaskets

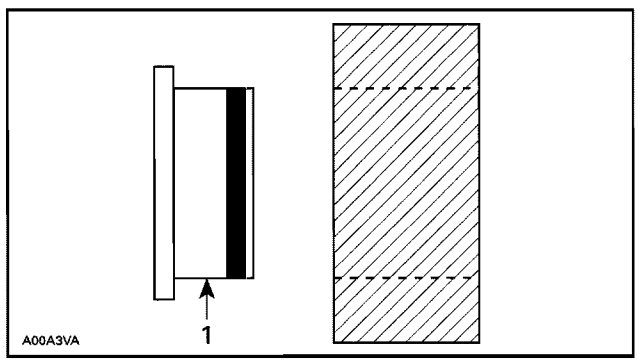

1. *Proper strength Loctite*

- Clean inner housing diameter and outer gasket diameter.
- Spray housing and gasket with Loctite Primer N (P/N 293 800 041).
- Apply a strip of proper strength Loctite on leading edge of outer metallic gasket diameter.

NOTE: Any Loctite product can be used here. A low strength liquid is recommended as normal strength and gap are required.

- Install according to standard procedure.
- Wipe off surplus.
- Allow it to cure for 30 minutes.

NOTE: Normally used on worn-out housings to prevent leaking or sliding.

It is generally not necessary to remove gasket compound applied on outer gasket diameter.

TIGHTENING TORQUE

Tighten fasteners to torque mentioned in exploded views and/or text, When they are not specified, refer to following table. The table also gives the metric conversion.

⚠ WARNING

Torque wrench tightening specifications must strictly be adhered to.
Locking devices (e.g.: locking tabs, elastic stop nuts, self-locking fasteners, etc.) must be installed or replaced with new ones, where specified. If the efficiency of a locking device is impaired, it must be renewed.

In order to avoid a poor assembling, tighten screws, bolts or nuts in accordance with the following procedure:

- Manually screw all screws, bolts and/or nuts.
- Apply the half of the recommended torque value.

CAUTION: Be sure to use proper tightening torque for the proper strength grade.

NOTE: When possible, always apply torque on the nut.

- Torque at the recommended torque value.

NOTE: Always torque screws, bolts and/or nuts in a criss-cross sequence.

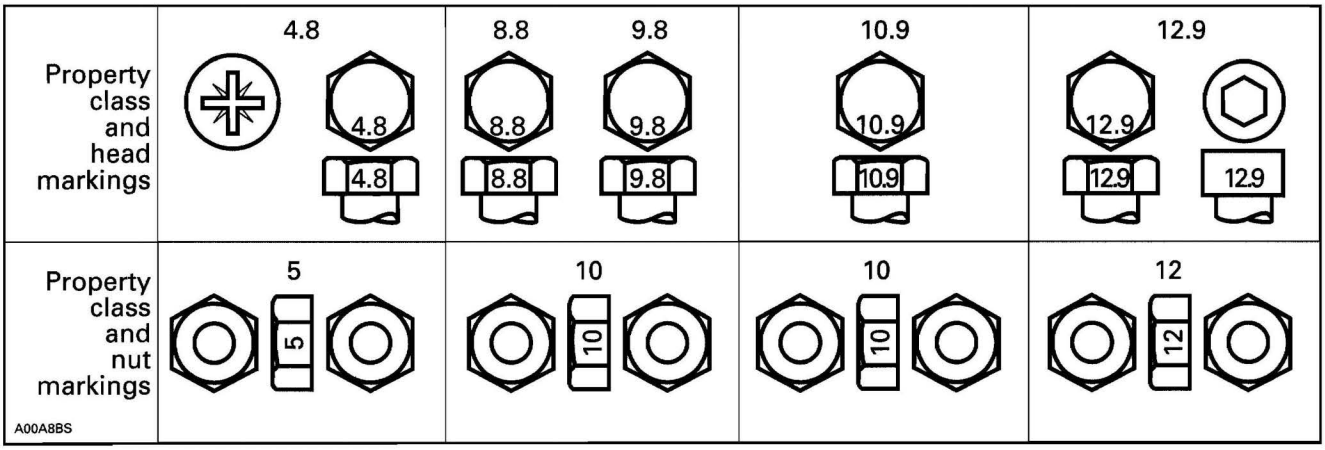

FASTENER SIZE	FASTENER GRADE/TORQUE			
	5.8 Grade	**8.8** Grade	**10.9** Grade	**12.9** Grade
M4	1.5 – 2 N•m (13 – 18 lbf•**in**)	2.5 – 3 N•m (22 – 27 lbf•**in**)	3.5 – 4 N•m (31 – 35 lbf•**in**)	4 – 5 N•m (35 – 44 lbf•**in**)
M5	3 – 3.5 N•m (27 – 31 lbf•**in**)	4.5 – 5.5 N•m (40 – 47 lbf•**in**)	7 – 8.5 N•m (62 – 75 lbf•**in**)	8 – 10 N•m (71 – 89 lbf•**in**)
M6	6.5 – 8.5 N•m (58 – 75 lbf•**in**)	8 – 12 N•m (71 – 106 lbf•**in**)	10.5 – 15 N•m (93 – 133 lbf•**in**)	16 N•m (142 lbf•**in**)
M8	15 N•m (11 lbf•ft)	24.5 N•m (18 lbf•ft)	31.5 N•m (23 lbf•ft)	40 N•m (30 lbf•ft)
M10	29 N•m (21 lbf•ft)	48 N•m (35 lbf•ft)	61 N•m (45 lbf•ft)	72.5 N•m (53 lbf•ft)
M12	52 N•m (38 lbf•ft)	85 N•m (63 lbf•ft)	105 N•m (77 lbf•ft)	127.5 N•m (94 lbf•ft)
M14	85 N•m (63 lbf•ft)	135 N•m (100 lbf•ft)	170 N•m (125 lbf•ft)	200 N•m (148 lbf•ft)

MAINTENANCE CHART (300F/550F)

A: ADJUST
I: INSPECT
L: LUBRICATE
R: REPLACE
C: CLEAN
T: PROCEED WITH TASK

PART/TASK	10-HOUR OR 500 KM (300 mi) INSPECTION [1]	WEEKLY OR EVERY 240 KM (150 mi)	MONTHLY OR EVERY 800 KM (500 mi)	ONCE A YEAR OR EVERY 3200 KM (2000 mi)	EVERY 2 YEARS OR 6000 KM (3700 mi)	STORAGE [1]	PRESEASON PREPARATION [1]	REFER TO SUBSECTION
ENGINE								
Rewind starter							I, L, C	*REWIND STARTER*
Engine support	I			I		I		*ENGINE REMOVAL AND INSTALLATION*
Exhaust system	I			I		I		*EXHAUST SYSTEM*
Air filter			C				C	*AIR INTAKE SYSTEM*
Engine lubrication						T		*STORAGE*
LUBRICATION SYSTEM								
Injection oil filter					R			*OIL INJECTION SYSTEM*
Oil injection pump	A			A			A	*OIL INJECTION PUMP*
Injection oil	AS REQUIRED							*OIL INJECTION SYSTEM*
FUEL SYSTEM								
Add fuel stabilizer						T		*STORAGE*
Fuel filter					R			*FUEL TANK AND FUEL PUMP*
Fuel lines and connections	I						I	*CARBURETOR, THROTTLE AND CHOKE CABLES*
Carburetor	A			A			A, C	
Throttle cable	I			I			I	
ELECTRICAL SYSTEM								
Spark plugs [3]	I		I				R	*IGNITION SYSTEM*
Battery (if so equipped)	I		I			I	I	*CHARGING SYSTEM*
Wiring harnesses, cables	I		I			I		*ELECTRICAL SYSTEM*
Headlamp beam aiming				A				*LIGHTS, INSTRUMENTS AND ACCESSORIES*
Operation of lighting system (HI/LO beam, taillight and brake light)	I	I				I		
Engine cut-out switch and tether cut-out switch operation test	I	I				I		*IGNITION SYSTEM*

A: ADJUST
I: INSPECT
L: LUBRICATE
R: REPLACE
C: CLEAN
T: PROCEED WITH TASK

PART/TASK	10-HOUR OR 500 KM (300 mi) INSPECTION (1)	WEEKLY OR EVERY 240 KM (150 mi)	MONTHLY OR EVERY 800 KM (500 mi)	ONCE A YEAR OR EVERY 3200 KM (2000 mi)	EVERY 2 YEARS OR 6000 KM (3700 mi)	STORAGE (1)	PRESEASON PREPARATION (1)	REFER TO SUBSECTION
DRIVE SYSTEM								
Drive belt	I	I					I	*DRIVE BELT*
Drive belt height adjustment	EACH BELT REPLACEMENT							*DRIVE BELT*
Drive and driven pulleys	I		I	C		I	C	*DRIVE PULLEY* and *DRIVEN PULLEY*
Tightening torque of drive pulley screw	I			I				*DRIVE PULLEY*
Drive chain tension	A		A			A		*CHAINCASE*
Chaincase oil	I		I			R	I	*CHAINCASE*
Drive axle end bearing (2)	L		L			L		*DRIVE AXLE*
Countershaft	L		L			L		*COUNTERSHAFT AND BRAKE*
Track	I	I				I		*TRACK*
Track tension and alignment	A	AS REQUIRED						*TRACK*
BRAKE SYSTEM								
Brake fluid	I	I			R		I	*COUNTERSHAFT AND BRAKE*
Brake hose, pads and disk	I	I					I	*COUNTERSHAFT AND BRAKE*
SUSPENSION								
Front and rear suspensions	I		I, L			I, L		*SUSPENSION*
Rear suspension stopper strap				I		I		*SUSPENSION*
STEERING SYSTEM								
Steering mechanism (2)	I, L		I	L		I, L		*STEERING AND HANDLEBAR*
Wear and condition of skis and runners	I	I				I		*SKIS AND STEERING ALIGNMENT*
VEHICLE								
Vehicle cleaning and protection	T		T			T		*STORAGE*

(1) To be performed by an authorized Ski-Doo dealer.

(2) Lubricate whenever the vehicle is used in wet conditions (wet snow, rain, puddles).

(3) Before installing new spark plugs at preseason preparation, it is suggested to burn excess storage oil by starting the engine with the old spark plugs. Only perform this operation in a well-ventilated area.

MAINTENANCE CHART (V800)

A: ADJUST
I: INSPECT
L: LUBRICATE
R: REPLACE
C: CLEAN
T: PROCEED WITH TASK

PART/TASK	10-HOUR OR 500 KM (300 mi) INSPECTION (1)	WEEKLY OR EVERY 240 KM (150 mi)	MONTHLY OR EVERY 800 KM (500 mi)	ONCE A YEAR OR EVERY 3200 KM (2000 mi)	EVERY 2 YEARS OR 6000 KM (3700 mi)	STORAGE (1)	PRESEASON PREPARATION (1)	REFER TO SUBSECTION
ENGINE								
Engine and oil filter					R			*LUBRICATION SYSTEM*
Valve adjustment	I, A		I, A					*CYLINDER AND HEAD*
Engine seals							I	*ENGINE*
Engine supports	I		I		I			*ENGINE REMOVAL AND INSTALLATION*
Exhaust system	I	I			I			*EXHAUST SYSTEM*
Air filter		C				C		*AIR INTAKE SYSTEM*
Air intake silencer						I, C		
Cooling system cap, hoses and clamps	I		I			I		*COOLING SYSTEM*
Coolant	I			R				
Engine lubrication					T			*STORAGE*
FUEL SYSTEM								
Add fuel stabilizer					T			*STORAGE*
Fuel filter				R				*FUEL TANK AND FUEL PUMP*
Fuel lines and connections	I					I		*ENGINE MANAGEMENT*
Throttle body						C		
Throttle cable	I		I			I		
ELECTRICAL SYSTEM								
EMS fault codes	I				I			*ENGINE MANAGEMENT*
Spark plugs	I			R				*IGNITION SYSTEM*
Battery	I	I			I	I		*CHARGING SYSTEM*
Wiring harnesses and cables	I	I			I			*ELECTRICAL SYSTEM*
Headlamp beam aiming			A					*LIGHTS, INSTRUMENTS AND ACCESSORIES*
Operation of lighting system (HI/LO beam, taillight and brake light)	I				I			
Engine cut-out switch and tether cut-out switch operation test	I				I			*IGNITION SYSTEM*

A: ADJUST
I: INSPECT
L: LUBRICATE
R: REPLACE
C: CLEAN
T: PROCEED WITH TASK

PART/TASK	10-HOUR OR 500 KM (300 mi) INSPECTION (1)	WEEKLY OR EVERY 240 KM (150 mi)	MONTHLY OR EVERY 800 KM (500 mi)	ONCE A YEAR OR EVERY 3200 KM (2000 mi)	EVERY 2 YEARS OR 6000 KM (3700 mi)	STORAGE (1)	PRESEASON PREPARATION (1)	REFER TO SUBSECTION
DRIVE SYSTEM								
Drive belt	I	I					I	*DRIVE BELT*
Drive belt height adjustment	EACH BELT REPLACEMENT							
Drive and driven pulley	I		I	C		I	C	*DRIVE PULLEY* and *DRIVEN PULLEY*
Tightening torque of drive pulley screw	I			I			I	*DRIVE PULLEY*
Driven pulley preload	I			I			I	*DRIVEN PULLEY*
Drive chain tension	A		A			A		*CHAINCASE*
Chaincase oil	I		I			R	I	
Drive axle end bearing (2)	L		L			L		DRIVE AXLE
Countershaft	L		L			L		*COUNTERSHAFT AND BRAKE*
Track	I	I				I		*TRACK*
Track tension and alignment	A	AS REQUIRED						
BRAKE SYSTEM								
Brake fluid	I	I			R		I	*COUNTERSHAFT AND BRAKE*
Brake hose, pads and disk	I	I					I	
SUSPENSION								
Front and rear suspensions	I		I, L			I, L		*SUSPENSION*
Rear suspension stopper strap				I		I		
STEERING SYSTEM								
Steering mechanism (2)	I, L		I	L		I, L		*STEERING AND HANDLEBAR*
Wear and condition of skis and runners	I	I				I		*SKIS AND STEERING ALIGNMENT*
VEHICLE								
Vehicle cleaning and protection	T		T			T		*STORAGE*

(1) To be performed by an authorized Ski-Doo dealer.

(2) Lubricate whenever the vehicle is used in wet conditions (wet snow, rain, puddles).

STORAGE PROCEDURE (300F/550F)

SERVICE PRODUCTS

Description	Part Number	Page
BRP fuel stabilizer	413 408 600	6
heavy duty cleaner	293 110 001	7
Loctite 767 (antiseize lubricant)	293 800 070	6
plastic & vinyl cleaner	413 711 200	7
scratch remover	861 774 800	7
suspension grease	293 550 033	6–7
XP-S Lube	293 600 016	6–7
XP-S storage oil (USA)	413 711 900	5
XP-S storage oil	413 711 600	5

GENERAL

Proper snowmobile storage is a necessity during the summer months or when a vehicle is not being used for more than one month.

Refer to storage column from *MAINTENANCE CHART* jointly with the present storage procedure in order to cover each and every aspect of the snowmobile storage procedure. Any worn, broken or damaged parts should be replaced.

⚠ WARNING

Unless otherwise specified, engine should be turned off for storage procedure.

To facilitate the inspection and ensure adequate lubrication of components, it is recommended to clean the entire vehicle first.

PROCEDURES

ENGINE SYSTEM

Engine Support

Check if engine support is cracked, bent or otherwise damaged. Replace if necessary.

Check rubber mounts on engine support. Replace them if brittle, cracked or otherwise damaged.

Exhaust System

Check and replace if necessary:
- tuned pipe shield for damages
- tuned pipe ends for cracks or damages
- manifold for cracks or damages.

Engine

Crankshaft PTO Seal

Make sure there is no grease coming out from crankshaft PTO seal, if so replace seal.

Engine Lubrication

Engine internal parts must be lubricated to protect them from possible rust formation during the storage period.

NOTE: Be sure to add fuel stabilizer before starting the engine.

Proceed as follows:

Start the engine and allow it to run at idle speed until the engine reaches its operating temperature.

Stop the engine.

Remove primary air intake silencer to spray storage oil into carburetor.

Restart engine and run at idle speed.

Inject storage oil until the engine stalls or until a sufficient quantity of oil has entered the engine (approximately half a can).

With the engine stopped, remove the spark plug and spray XP-S storage oil (P/N 413 711 600) into cylinder.

NOTE: For US citizens, use the XP-S storage oil (USA) (P/N 413 711 900) only.

Crank slowly 2 or 3 revolutions to lubricate cylinder.

Reinstall the spark plug and air intake silencer.

⚠ WARNING

This procedure must only be performed in a well-ventilated area. Do not run engine during storage period.

LUBRICATION SYSTEM

Injection Oil Filter

Replace injection oil filter, refer to *OIL INJECTION SYSTEM* section.

FUEL SYSTEM

Fuel Stabilizer

It is critical to use the BRP fuel stabilizer (P/N 413 408 600) to prevent fuel deterioration, gum formation and fuel system components corrosion. Follow manufacturer's instructions for proper use.

Pour fuel stabilizer in fuel tank **prior to starting engine** for internal parts lubrication so that stabilizer flows everywhere in fuel system and ensures carburetor protection against varnish deposit. Fill up fuel tank completely. Ensure there is no water inside fuel tank.

Do not drain fuel system.

⚠ WARNING

Fuel is flammable and explosive under certain conditions. Always work in a well ventilated area. Do not smoke or allow open flames or sparks in the vicinity. Fuel tank may be pressurized, slowly turn cap when opening. Never use an open flame to check fuel level. When fueling, keep vehicle level. Do not overfill or top off the fuel tank and leave vehicle in the sun. As temperature increases, fuel expands and might overflow. Always wipe off any fuel spillage from the vehicle. Periodically inspect fuel system.

ELECTRICAL

Lighting System and Switches

Check operation of lighting system (HI/LO beam, brake light, etc.).

Check if engine cutout switch and tether cord cutout switch work properly.

Battery (if so equipped)

Remove battery, clean its tray and close area with water and baking soda.

Inspect, clean and charge battery as explained in *CHARGING SYSTEM*.

Wiring Harnesses, Cables and Connectors

Inspect for wear, deterioration or damage, replace defective parts if necessary.

DRIVE SYSTEM

Drive and Driven Pulleys

After inspection and interior cleaning of pulleys, spray XP-S Lube (P/N 293 600 016) on sheaves. Do not reinstall drive belt.

Chaincase

Check drive chain tension and adjust if necessary. Replace chaincase oil. Refer to *DRIVE SYSTEM* section.

Drive Axle End Bearing

Lubricate end housing bearing with suspension grease (P/N 293 550 033). Continue lubricating until grease flows out of the pilot hole on end cap.

Countershaft

Driven pulley and brake disc must be floating on the countershaft for efficient operation. Lubricate with Loctite 767 (antiseize lubricant) (P/N 293 800 070).

CAUTION: Do not lubricate excessively as lubricant could contact and soil brake pads and/or drive belt.

Track

Visually inspect track for:
- cuts and abnormal wear
- broken rods
- broken or missing track cleats.

Replace damaged or missing cleats.

If track is damaged or rods are broken, replace track.

NOTE: Do not release track tension.

SUSPENSION

Front Suspension

Lubricate ski legs if needed with suspension grease (P/N 293 550 033). **Inspect all suspension components for tightness.**

Rear Suspension

Inspect rear suspension components for wear, deterioration or damage.

Lubricate front and rear arms at grease fittings using suspension grease (P/N 293 550 033).

Suspension Stopper Strap

Inspect strap for wear or cracks, bolt and nut for tightness. If loose, inspect hole for deformation.

STEERING

Steering Mechanism

Lubricate the steering mechanism if needed. **Inspect all components for tightness.**

Skis and Runners

Inspect skis and runners for wear, deterioration or damage.

VEHICLE

Vehicle Cleaning

Clean the engine compartment. Remove grass, twigs, cloth, etc. These are combustible under certain conditions.

To clean the entire vehicle, use only flannel cloths or equivalent.

CAUTION: It is necessary to use flannel cloths or equivalent on windshield and hood to avoid further damaging surfaces to clean.

To clean the entire vehicle, including bottom pan and metallic parts use heavy duty cleaner (P/N 293 110 001).

CAUTION: Do not use this product on decals or vinyl.

For vinyl and plastic parts use plastic & vinyl cleaner (P/N 413 711 200).

To remove scratches on windshield or hood use scratch remover (P/N 861 774 800).

CAUTION: Never clean plastic parts or hood with strong detergent, degreasing agent, paint thinner, acetone, products containing chlorine, etc.

Inspect the hood and repair any damage.

Touch up all metal spots with touch-up paint where paint has been scratched off.

Spray all bare metal parts including shock chromed rods with XP-S Lube (P/N 293 600 016).

Wax the hood and the painted portion of the frame for better protection. Use a non-abrasive wax such as silicone wax.

NOTE: Apply non-abrasive wax on glossy finish only.

Vehicle Protection

Block air intake and exhaust system using clean rags.

Protect the vehicle with a cover to prevent dust accumulation during storage.

CAUTION: The snowmobile has to be stored in a cool and dry place and covered with an opaque but ventilated tarpaulin. This will prevent sun rays and grime from affecting plastic components and vehicle finish.

Lift rear of vehicle until track is clear of the ground. Install on a snowmobile mechanical stand.

STORAGE PROCEDURE (V800)

SERVICE PRODUCTS

Description	Part Number	Page
BRP fuel stabilizer	413 408 600	10
heavy duty cleaner	293 110 001	11
Loctite 767 (antiseize lubricant)	293 800 070	10
plastic & vinyl cleaner	413 711 200	11
scratch remover	861 774 800	11
suspension grease	293 550 033	10
XP-S Lube	293 600 016	10–11
XP-S storage oil (USA)	413 711 900	9
XP-S storage oil	413 711 600	9

GENERAL

Proper snowmobile storage is a necessity during the summer months or when a vehicle is not being used for more than one month.

Refer to storage column from *MAINTENANCE CHART* jointly with the present storage procedure in order to cover each and every aspect of the snowmobile storage procedure. Any worn, broken or damaged parts should be replaced.

⚠ WARNING

Unless otherwise specified, engine should be turned off for storage procedure.

To facilitate the inspection and ensure adequate lubrication of components, it is recommended to clean the entire vehicle first.

PROCEDURES

ENGINE SYSTEM

Engine Support

Check if engine support is cracked, bent or otherwise damaged. Replace if necessary.

Check rubber mounts on engine support. Replace them if brittle, cracked or otherwise damaged.

Exhaust System

Check and replace if necessary:
- tuned pipe shield for damages
- tuned pipe ends for cracks or damages
- manifold for cracks or damages.

Engine

Engine internal parts must be lubricated to protect them from possible rust formation during the storage period.

NOTE: Be sure to add fuel stabilizer before starting the engine.

Proceed as follows:

Start the engine and allow it to run at idle speed until the engine reaches its operating temperature.

Stop the engine.

Change engine oil and filter. Refer to *LUBRICATION SYSTEM*.

With the engine stopped, remove spark plugs and spray XP-S storage oil (P/N 413 711 600) into each cylinder.

NOTE: For US citizens, use the XP-S storage oil (USA) (P/N 413 711 900) only.

CAUTION: Do not inject storage oil into throttle body bore to avoid blocking idle bypass valve.

Press start button, 1 or 2 seconds maximum, to lubricate cylinder.

Reinstall the spark plugs.

⚠ WARNING

This procedure must only be performed in a well-ventilated area. Do not run engine during storage period.

FUEL SYSTEM

Fuel Stabilizer

It is critical to use the BRP fuel stabilizer (P/N 413 408 600) to prevent fuel deterioration, gum formation and fuel system components corrosion. Follow manufacturer's instructions for proper use.

Pour fuel stabilizer in fuel tank **prior to starting engine** for internal parts lubrication so that stabilizer flows everywhere in fuel system. Fill up fuel tank completely. Ensure there is no water inside fuel tank.

Do not drain fuel system.

⚠ WARNING

Fuel is flammable and explosive under certain conditions. Always work in a well ventilated area. Do not smoke or allow open flames or sparks in the vicinity. Fuel tank may be pressurized, slowly turn cap when opening. Never use an open flame to check fuel level. When fueling, keep vehicle level. Do not overfill or top off the fuel tank and leave vehicle in the sun. As temperature increases, fuel expands and might overflow. Always wipe off any fuel spillage from the vehicle. Periodically inspect fuel system.

ELECTRICAL

Lighting System and Switches

Check operation of lighting system (HI/LO beam, brake light, etc.).

Check if engine cutout switch and tether cord cutout switch work properly.

Battery

Remove battery, clean its tray and close area with water and baking soda.

Inspect, clean and charge battery as explained in *CHARGING SYSTEM.*

Wiring Harnesses, Cables and Connectors

Inspect for wear, deterioration or damage, replace defective parts if necessary.

DRIVE SYSTEM

Drive and Driven Pulleys

After inspection and interior cleaning of pulleys, spray XP-S Lube (P/N 293 600 016) on sheaves. Do not reinstall drive belt.

Chaincase

Check drive chain tension and adjust if necessary. Replace chaincase oil. Refer to *DRIVE SYSTEM* section.

Drive Axle End Bearing

Lubricate end housing bearing with suspension grease (P/N 293 550 033). Continue lubricating until grease flows out of the pilot hole on end cap.

Countershaft

Driven pulley and brake disc must be floating on the countershaft for efficient operation. Lubricate with Loctite 767 (antiseize lubricant) (P/N 293 800 070).

CAUTION: Do not lubricate excessively as lubricant could contact and soil brake pads and/or drive belt.

Track

Visually inspect track for:
- cuts and abnormal wear
- broken rods
- broken or missing track cleats.

If track is damaged or rods are broken, replace track.

Replace damaged or missing cleats by new ones.

NOTE: Do not release track tension.

SUSPENSION

Front Suspension

Lubricate ski legs if needed with suspension grease (P/N 293 550 033). **Inspect all suspension components for tightness.**

Rear Suspension

Inspect rear suspension components for wear, deterioration or damage, replace defective parts if necessary.

Lubricate front and rear arms at grease fittings using suspension grease (P/N 293 550 033).

Suspension Stopper Strap

Inspect strap for wear or cracks, bolt and nut for tightness. If loose, inspect hole for deformation. Replace if necessary.

STEERING

Steering Mechanism

Lubricate the steering mechanism if needed. **Inspect all components for tightness.**

Skis and Runners

Inspect skis and runners for wear, deterioration or damage, replace if necessary.

VEHICLE

Vehicle Cleaning

Clean the engine compartment. Remove grass, twigs, cloth, etc. These are combustible under certain conditions.

To clean the entire vehicle, use only flannel cloths or equivalent.

CAUTION: It is necessary to use flannel cloths or equivalent on windshield and hood to avoid further damaging surfaces to clean.

To clean the entire vehicle, including bottom pan and metallic parts use heavy duty cleaner (P/N 293 110 001).

CAUTION: Do not use this product on decals or vinyl.

For vinyl and plastic parts use plastic & vinyl cleaner (P/N 413 711 200).

To remove scratches on windshield or hood use scratch remover (P/N 861 774 800).

CAUTION: Never clean plastic parts or hood with strong detergent, degreasing agent, paint thinner, acetone, products containing chlorine, etc.

Inspect the hood and repair any damage.

Touch up all metal spots with touch-up paint where paint has been scratched off.

Spray all bare metal parts including shock chromed rods with XP-S Lube (P/N 293 600 016).

Wax the hood and the painted portion of the frame for better protection. Use a non-abrasive wax such as silicone wax.

NOTE: Apply non-abrasive wax on glossy finish only.

Vehicle Protection

Block air intake and exhaust system using clean rags.

Protect the vehicle with a cover to prevent dust accumulation during storage.

CAUTION: The snowmobile has to be stored in a cool and dry place and covered with an opaque but ventilated tarpaulin. This will prevent sun rays and grime from affecting plastic components and vehicle finish.

Lift rear of vehicle until track is clear of the ground. Install on a snowmobile mechanical stand.

PRESEASON PREPARATION

SERVICE PRODUCTS

Description	Part Number	Page
pulley flange cleaner	413 711 809	14
XP-S chaincase oil	413 801 900	14
XP-S synthetic chaincase oil	413 803 300	14

Proper vehicle preparation is necessary after the summer months or when a vehicle has not been used for more than one month.

Refer to preseason preparation column from *MAINTENANCE CHART* jointly with the present preseason preparation procedure in order to cover each and every aspect of the snowmobile preseason preparation procedure.

Any worn, broken or damaged parts found during the storage procedure should have been replaced. If not, proceed with the replacement.

⚠ WARNING

Unless otherwise specified, engine should be turned off for preparation procedure.

ENGINE

Rewind Starter and Rope

300F and 550F Models

Check if rope is fraying.

When pulling starter grip, it must return freely. If not, check for damaged parts or lack of lubrication. Replace parts or lubricate accordingly.

Muffler

Remove rags that were installed during storage preparation.

Axial Fan

550F Models

Inspect fan belt, adjust or replace if required.

Cooling System

V800 Models

Inspect cooling system for leaks, to perform a cooling system leak test, refer to *COOLING SYSTEM*.

Check coolant level in coolant reservoir. Add coolant if necessary.

If engine is cold, refill up to 15 mm (5/8 in) over COLD level line.

If engine is hot, refill up to 25 mm (1 in) over COLD level line. Use caution when opening pressurized coolant reservoir cap. Place a rag over cap and turn it slowly to release pressure.

Engine Seals

300F and 550F Models

Make sure there is no grease coming out from crankshaft PTO seal, if so replace seal. Refer to *BOTTOM END* section.

V800 Models

Check engine for leaks, if so replace the defective seal.

Air Filter and Air Intake Silencer

Remove rags that were installed for storage.

Check that inside of air silencer is clean and dry then properly reinstall the filter.

CAUTION: These snowmobiles have been calibrated with the filter installed. Operating the snowmobile without it, may cause engine damage.

LUBRICATION SYSTEM

Oil Injection Pump

300F and 550F Models

Make sure oil injection pump is properly adjusted, refer to *OIL INJECTION PUMP*.

FUEL SYSTEM

Fuel Lines, Fuel Rails and Connections

Inspect fuel system for leaks. Perform a fuel system leak test, refer to *FUEL TANK AND FUEL PUMP*.

Carburetors

300F and 550F Models

Disassemble carburetors in order to clean all internal parts. Do not hesitate to replace any jets having gum or varnish on their surfaces.

Make sure carburetors are properly adjusted, refer to *CARBURETOR, THROTTLE AND CHOKE CABLES*.

Throttle Body

V800 Models

Using the pulley flange cleaner (P/N 413 711 809), clean the throttle plates and throttle body bores.

NOTE: To ease cleaning, throttle body should be partially pulled from engine, without disconnecting throttle cable or coolant hose.

CAUTION: Ensure the cleaner does not enter engine intake.

Throttle Cable

Make sure that cable operates freely, replace if necessary, refer to *CARBURETOR, THROTTLE AND CHOKE CABLES (300F AND 550F MODELS)* or *ENGINE MANAGEMENT (V800 MODELS)*.

Choke Cable

300F and 550F Models

Make sure that cable operates freely, replace if necessary, refer to *CARBURETOR, THROTTLE AND CHOKE CABLES*.

DRIVE SYSTEM

Drive Belt

Inspect belt for cracks, fraying or abnormal wear. Replace if necessary.

Make sure to install the proper belt with arrow printed on belt pointing front of vehicle.

Drive and Driven Pulleys

Clean drive and driven pulleys sheaves with pulley flange cleaner (P/N 413 711 809).

V800 Models

Check tightening of drive pulley screw.

Verify the drive pulley preload. refer to *DRIVE PULLEY (TRA IV)*.

Brake

Brake Fluid

Check brake fluid in reservoir for proper level. Add fluid (DOT 4) as required.

CAUTION: Use only (DOT 4) brake fluid from a sealed container. Do not store or use a started bottle of brake fluid.

Brake Hose, Pads and Disk

Inspect brake hose for wear, deterioration or damage, replace if necessary.

Inspect brake pads for proper thickness. Refer to *COUNTERSHAFT AND BRAKE*.

Remove any rust built-up on braking surfaces. Clean brake disk braking surfaces with pulley flange cleaner (P/N 413 711 809).

Chaincase

Check chaincase oil for proper level. Add recommended chaincase oil as required.

MODELS	CHAINCASE OIL
300F AND 550F	XP-S chaincase oil (P/N 413 801 900)
V800	XP-S synthetic chaincase oil (P/N 413 803 300)

Track

Verify track tension and alignment, refer to *TRACK*.

NOTE: Track tension and alignment are interrelated. Do not adjust one without checking the other. Track tension procedure must be carried out prior to track alignment.

ELECTRICAL SYSTEM

Battery (if so equipped)

Verify that battery is fully charged, if not, refer to the appropriate charging procedure in *CHARGING SYSTEM*.

Spark Plugs

300F and 550F Models

Once preseason preparation is done, start engine with the old spark plugs to burn excess storage oil. Then, install new properly gapped spark plugs.

NOTE: Ensure to replace with recommended spark plugs.

ENGINE (300F/550F)

The following chart is provided to help diagnose the probable source of troubles. It should be used as a guideline.

Symptom: **ENGINE BACKFIRES.**

1. **Check spark plug.**
   - *Carbon accumulation caused by defective spark plug. Clean carbon accumulation from piston and cylinder head and install dry properly gapped spark plug.*
2. **Check ignition timing.**
   - *Timing is too advanced. Refer to* IGNITION SYSTEM *to find defective parts.*
3. **Check for erratic sparks.**
   - *Poor electrical connections. Repair.*
   - *Faulty stator. Replace defective parts.*
4. **Check carburetor.**
   - *Fuel passages obstructed. Clean carburetor and install new filter(s).*
   - *Fuel level too low. Adjust float level according to specifications.*

Symptom: **ENGINE SUDDENLY TURNS OFF AT HIGH RPM AND/OR WITH LIGHT LOAD.**

1. **Check spark plug.**
   - *Non-resistor type spark plug installed. Install resistor type spark plug.*
2. **Check that ground wires are well connected.**
   - *Loose or corroded ground. Screw or repair.*

Symptom: **ENGINE SUDDENLY TURNS OFF.**

1. **Perform engine leak test. Refer to *LEAK TEST*. Check possible piston seizure.**
   - *Damaged gasket and/or seal. Replace defective parts.*
2. **"Four-corner" seizure of piston.**
   - *High acceleration when engine is cold. Piston expands faster than cylinder. Replace piston. Ask driver to refer to the* WARM-UP PROCEDURE *in the* OPERATOR'S GUIDE.
3. **Piston seizure on exhaust side (color on piston dome is correct).**
   - *Kinked fuel tank vent tube. Repair fuel tank vent tube.*
   - *Leaks at fuel line connections or damaged fuel lines. Replace defective lines.*
   - *Fuel does not flow through carburetor (foreign particles in needle area and/or varnish formation in carburetor). Clean carburetor and install new filter(s).*
   - *Spark plug heat range is too warm. Install spark plug with appropriate heat range (refer to* TECHNICAL SPECIFICATIONS*).*
   - *Improper ignition timing. Refer to* IGNITION SYSTEM *to find defective parts.*
   - *Restriction in exhaust system. Replace.*
   - *Compression ratio is too high. Install genuine parts.*
   - *Too low fuel octane number. Use proper fuel octane number.*
   - *Carburetor calibration is too lean. Adjust according to specifications (refer to* TECHNICAL SPECIFICATIONS*).*
   - *Poor quality oil. Use XP-S injection oil.*
   - *Leaks at air intake silencer. Replace air intake silencer grommet.*
   - *Excessive wear of piston rings. Replace piston rings.*

Symptom: **ENGINE SUDDENLY TURNS OFF.** (cont'd)

4. **Melted and/or perforated piston dome; melted section at ring end gap.**
   - *When piston reaches TDC, mixture is ignited by heated areas in combustion chamber. This is due to an incomplete combustion of a poor quality oil. Clean residue accumulation in combustion chamber and replace piston. Use XP-S injection oil.*
   - *Spark plug heat range is too high. Install recommended dry properly gapped spark plug (refer to* TECHNICAL SPECIFICATIONS*).*
   - *Ignition timing is too advanced. Refer to* IGNITION SYSTEM *to find defective parts.*
   - *Inadequate fuel quality. Use appropriate fuel.*
   - *Carburetion is too lean. Adjust according to specifications (refer to* TECHNICAL SPECIFICATIONS*).*
5. **Seized piston all around the circumference (dry surface).**
   - *Lack of oil, damaged oil line, defective check valve or defective injection pump. Replace defective part(s).*
6. **Grooves on intake side of piston only.**
   - *Oil film eliminated by water (snow infiltration in engine). This can also be caused by running engine on choke for too long. Excessive fuel will remove the oil film on the piston and make marks. Replace piston and check if intake system leaks.*
7. **Piston color is dark due to seizure on intake and exhaust sides.**
   - *Accumulation of foreign particles in needle valve and/or main jet area. Clean carburetor.*
8. **Cracked or broken piston.**
   - *Cracked or broken piston due to excessive piston/cylinder clearance or engine over-revving. Replace piston. Check piston/cylinder clearance (refer to* ENGINE MEASUREMENT*). Adjust drive pulley according to specifications (refer to* TECHNICAL SPECIFICATIONS*) and/or clean pulley sheaves if they are contaminated with greasy particles.*

Symptom: **PISTON RING AND CYLINDER SURFACE ARE SCRATCHED.**

1. **Check oil quality.**
   - *Poor quality oil. Use XP-S injection oil.*
2. **Check injection pump and its hoses.**
   - *Inadequate injection pump adjustment and/or defective hoses. Adjust pump according to specifications (refer to* OIL INJECTION PUMP*) and/or replace hoses.*

Symptom: **ENGINE DOES NOT OFFER MAXIMUM POWER AND/OR DOES NOT REACH MAXIMUM OPERATING RPM.**

1. **Check spark plug condition and gap.**
   - *Fouled spark plug or wrong spark plug gap. Replace or readjust gap.*
2. **Check if there is water in fuel.**
   - *There is water in fuel. Drain fuel system, then fill with appropriate fuel.*
3. **Check items listed in *ENGINE RUNS OUT OF FUEL* (refer to *FUEL AND OIL INJECTION SYSTEMS* subsection).**
4. **Check carburetor adjustments and cleanliness.**
   - *Inadequate carburetor adjustments or dirt accumulation. Adjust according to specifications (refer to* TECHNICAL SPECIFICATIONS*) or clean.*
5. **Check drive belt.**
   - *Worn belt. Replace belt if the wear limit is reached (refer to* TECHNICAL SPECIFICATIONS*).*
6. **Check track adjustment.**
   - *Too much tension and/or improper alignment. Align track and adjust its tension to specifications (refer to* TECHNICAL SPECIFICATIONS*).*

Symptom: **ENGINE DOES NOT OFFER MAXIMUM POWER AND/OR DOES NOT REACH MAXIMUM OPERATING RPM.** (cont'd)

7. **Check drive pulley.**
   - *Worn bushing. Replace drive pulley.*
8. **Check driven pulley.**
   - *Worn bushing and/or spring tension. Replace spring and/or adjust its tension according to specifications (refer to* TECHNICAL SPECIFICATIONS*).*
   - *Worn bushing. Replace driven pulley.*
   - *Worn spring tension. Install new spring with proper tension (refer to* DRIVEN PULLEY*).*
9. **Check exhaust system.**
   - *Restriction or exhaust system leakage. Replace or reseal with Ultra Copper.*
10. **Check ignition timing.**
    - *Decrease in power due to delayed ignition. Refer to* IGNITION SYSTEM *to find defective parts.*
11. **Check engine compression.**
    - *Worn piston and ring(s). Replace (refer to* TECHNICAL SPECIFICATIONS *for specifications).*

Symptom: **ENGINE DETONATION AT MAXIMUM RPM.**

1. **Check which type of fuel is used.**
   - *Octane number is too low. Use recommended fuel type.*
2. **Check spark plug type.**
   - *Improper spark plug heat range. Install recommended spark plug (refer to* TECHNICAL SPECIFICATIONS*).*
3. **Check exhaust system.**
   - *Too much restriction. Replace.*
4. **Check ignition timing.**
   - *Timing is too advanced. Refer to* IGNITION SYSTEM *to find defective parts.*
5. **Check if engine is overheating. (Refer to *HIGH ENGINE OPERATING TEMPERATURE*).**
6. **Check carburetion.**
   - *Fouled and/or improper carburetor components. Clean or replace according to specifications (refer to* TECHNICAL SPECIFICATIONS*).*
7. **Check compression ratio.**
   - *Compression ratio is too high. Install genuine parts.*

Symptom: **ENGINE TURNS OVER BUT FAILS TO START.**

1. **Check switches.**
   - *Ignition switch, emergency cut-out switch or tether switch is OFF. Place all switches in the RUN or ON position.*
2. **Check fuel level.**
   - *Mixture too lean to start cold engine. Check fuel tank level and use choke.*
3. **Check spark plug.**
   - *Defective spark plug (no spark) or wrong spark plug gap. Replace spark plug or readjust gap.*
4. **Check amount of fuel on spark plug.**
   - *Flooded engine (spark plug wet when removed). Do not over-choke. Remove wet spark plug, turn ignition switch to OFF and crank engine several times. Install clean dry properly gapped spark plug. Start engine following usual starting procedure.*

Symptom: **ENGINE TURNS OVER BUT FAILS TO START.** (cont'd)

5. **Check fuel lines.**
   - *No fuel to the engine (spark plug dry when removed). Check fuel tank level; check fuel filter, replace if clogged; check condition of fuel and impulse lines and their connections.*
6. **Check engine compression.**
   - *Insufficient engine compression. Replace defective part(s) (ex.: piston, ring(s), etc.).*

Symptom: **IRREGULAR ENGINE IDLE.**

1. **Check choke.**
   - *Choke plunger may be partially opened. Readjust.*
2. **Check carburetor adapter.**
   - *Air enters through a crack. Replace.*
3. **Check dimension of pilot jet.**
   - *Inadequate fuel/air mixture. Adjust according to specifications (refer to* TECHNICAL SPECIFICATIONS*).*
4. **Perform engine leak test.**
   - *Leaking gaskets allow air to enter in engine. Replace defective parts.*
5. **Check throttle slide height.**
   - *Incorrect throttle slide height. Readjust according to specifications.*

Symptom: **HIGH ENGINE OPERATING TEMPERATURE.**

1. **Check air ducts.**
   - *Blocked air ducts or dirty cylinder cooling fins. Clean.*
2. **Check axial fan belt (550F models).**
   - *Loose or broken belt. Repair.*

Symptom: **REWIND STARTER ROPE DOES NOT REWIND.**

1. **Check rewind spring.**
   - *Broken spring. Replace spring.*

Symptom: **REWIND STARTER PAWL DOES NOT ENGAGE.**

1. **Check stopper spring.**
   - *Broken stopper spring. Replace.*
2. **Check pawl and pawl lock.**
   - *Pawl and pawl lock have stuck together because of heat. Replace.*
3. **Check pawl and rope sheave.**
   - *Pawl and rope sheave have stuck together because of heat. Replace.*

Symptom: **ENGINE PINGING.**

1. **Check for proper fuel octane number according to engine type.**
   - *Too low fuel octane number. Use appropriate fuel octane number (Refer to* OPERATOR'S GUIDE*).*
2. **Check fuel lines.**
   - *Bent fuel lines (preventing fuel from flowing through). Repair or replace fuel lines.*
3. **Check if carburetor is clean.**
   - *Dirt prevents fuel from flowing through. Clean.*

Symptom: **ENGINE PINGING.** (cont'd)

4. **Check ignition timing.**
   - *Timing is too advanced. Refer to* IGNITION SYSTEM *to find defective parts.*
5. **Check compression ratio.**
   - *Compression ratio is too high. Replace inadequate part(s) to obtain manufacturer's recommended compression ratio or use a higher grade fuel.*
6. **Check for carbon accumulation in combustion chamber and/or on piston dome.**
   - *Carbon accumulation. Remove carbon accumulation.*

Symptom: **ENGINE GENERATES A LOT OF VIBRATIONS.**

1. **Check engine supports and stopper.**
   - *Loose and/or broken supports or interference between support and chassis. Retighten to specification (refer to* ENGINE REMOVAL AND INSTALLATION*) or replace.*
2. **Check drive pulley.**
3. **Check for crankshaft and bearings.**
   - *Loose crankshaft bearings or uneven crankshaft. Retighten or replace the parts.*

ENGINE (V800)

The following charts are provided to help in diagnosing the probable source of troubles. It should be used as a guideline. This section pertains to engine mechanical components only. Some related problems can come from other systems such as ignition system, fuel system etc. and have an impact on the engine. Ensure to check the other systems before concluding that the engine is faulty.

COOLING SYSTEM

Symptom: **HIGH ENGINE OPERATING TEMPERATURE.**

1. **Check coolant level.**
   - *Coolant level lower than recommended. Refill (refer to* COOLING SYSTEM*).*
2. **Check for air bubbles in cooling system.**
   - *Air in cooling system. Refill and bleed cooling system (refer to* COOLING SYSTEM*).*
3. **Check temperature sensor for electrical/mechanical failure.**
   - *Temperature sensor defective. Replace.*
4. **Check thermostat.**
   - *Thermostat defective (does not open when engine gets hot). Replace (refer to* COOLING SYSTEM*).*
5. **Check leak indicator hole (in crankcase MAG side-water pump housing area) if coolant leaks.**
   - *Coolant leaking from indicator hole means a damaged water pump rotary seal. Replace rotary seal (refer to* COOLING SYSTEM*).*
6. **Check condition of hoses and hose clamps fixation.**
   - *Hoses are brittle and/or hard. Replace.*
   - *Hose clamps are loose. Retighten clamps.*
7. **Check condition of impeller located on the water pump shaft.**
   - *Impeller wings broken and/or impeller threads are damaged. Replace (refer to* COOLING SYSTEM*).*
8. **Check gasket on water pump housing.**
   - *Gasket on water pump housing leaks. Retighten screws and/or replace gasket.*
9. **Check cylinder head and/or cylinder base gasket.**
   - *Worn out gasket(s) is (are) causing coolant leakage. Replace.*
10. **Check coolant drain screw on water pump housing MAG side (marked "DRAIN").**
    - *Copper ring on drain screw leaks. Retighten screw and/or replace copper ring.*
11. **Check intermediate gear(s) behind of PTO cover.**
    - *Worn out and/or broken gear(s) is/are causing less coolant supply. Replace worn out and/or broken gear(s) (refer to* BOTTOM END*).*
12. **Check if water pump shaft is seized.**
    - *Water pump shaft does not turn. Replace defective part(s).*
13. **Check radiators condition.**
    - *Radiator cracked or deformed. Replace radiator.*

MAGNETO SYSTEM

Symptom: **BATTERY NOT CHARGING OR CHARGING VOLTAGE INADEQUATE.**

1. **Check battery.**
   - *Battery shows less power. Reload battery.*
   - *Battery has electrical failure. Replace.*
2. **Check magneto for damage and/or electrical failure.**
   - *Radial position of rotor wrong due to broken Woodruff key. Replace Woodruff key.*
   - *Coating on stator winding is damaged. Replace stator.*
   - *Resistance value is out of specification (refer to* TECHNICAL SPECIFICATIONS*). Replace magneto.*
   - *Connector on magneto is damaged and/or has electrical failure. Repair and clean contacts of connector.*
3. **Check voltage regulator/rectifier.**
   - *Refer to* CHARGING SYSTEM.
4. **Check wiring harness for cracks or other damages.**
   - *Harness shows electrical failure and/or other damages. Replace/repair wiring harness.*

LUBRICATION

Symptom: **LOW OR NO OIL PRESSURE/HIGH OIL CONSUMPTION.**

1. **Check oil level and search for leakage on crankcase and/or sealing parts.**
   - *Crankcase is leaking due to damage. Rebuild engine with new crankcase and gasket parts. Use recommended oil (refer to* TECHNICAL SPECIFICATIONS*).*
   - *Crankcase is leaking due to loose screws. Retighten screws with recommended torque.*
   - *Sealing rings, O-rings and/or gaskets are brittle, hard or damaged. Replace damaged parts.*
   - *Piston rings worn out (blue colored engine exhaust emission). Replace piston rings (refer to* CYLINDER AND HEAD*).*
   - *Piston rings are broken (low compression). Replace piston rings (refer to* CYLINDER AND HEAD*).*
   - *Valve stem seal damaged and/or sealing lip is hard and/or brittle. Replace all valve stem seals.*
2. **Check oil filter for contamination.**
   - *Oil filter clogged. Replace oil and oil filter at the same time. Use recommended oil (refer to* TECHNICAL SPECIFICATIONS*).*
3. **Check oil drain plug on engine bottom.**
   - *Plug is loose and/or gasket ring is missing. Retighten the plug and/or place gasket ring.*
4. **Check leak indicator hole if oil leaks (in crankcase MAG side-water pump housing area).**
   - *Oil leaking from leak indicator hole means a damaged oil seal on water pump shaft. Replace oil seal (refer to* COOLING SYSTEM*).*
5. **Check oil pressure switch function.**
   - *Oil pressure switch damaged. Replace oil pressure switch.*
6. **Check oil orifice(s) on the oil pump suction side.**
   - *Oil orifice(s) is (are) clogged. Clean from contamination. Replace oil and oil filter if necessary (refer to* MAINTENANCE *or* LUBRICATION SYSTEM*).*

Symptom: **LOW OR NO OIL PRESSURE/HIGH OIL CONSUMPTION.** (cont'd)

7. **Check oil pump function.**
   - *Oil pump rotor is out of wear limit. Replace oil pump (refer to* LUBRICATION SYSTEM*).*
   - *Oil pump seized due to oil leakage and/or air inclusion. Replace oil pump (refer to* LUBRICATION SYSTEM*).*
   - *Gears driving oil pump are broken or otherwise damaged. Replace gears.*
   - *Incorrect oil being used. Use recommended oil (refer to* TECHNICAL SPECIFICATIONS*).*
8. **Check oil pressure regulator valve (spring) function.**
   - *Valve spring damaged (valve always open). Replace spring.*
   - *Valve piston is worn or broken. Replace valve piston (refer to* LUBRICATION SYSTEM*).*
   - *Valve piston stays open due to contamination. Clean or repair valve piston.*
9. **Check plain bearings in crankcase for heavy wear.**
   - *Plain bearings out of specification (increased clearance). Replace plain bearings (refer to* BOTTOM END*).*
10. **Check engine oil strainer in crankcase.**
    - *Oil strainer is clogged due to contamination. Clean or replace strainer and diagnose causes. Replace possible damaged parts (refer to* BOTTOM END*).*

Symptom: **OIL CONTAMINATION (white appearance).**

1. **Check leak indicator hole (in crankcase MAG side-water pump housing area) if water and oil leaks.**
   - *Leakage of oil/water mixture from indicator bore means damaged water pump seal ring and rotary seal. Replace sealing ring, rotary seal and change oil, oil filter and/or coolant (refer to* LUBRICATION SYSTEM, COOLING SYSTEM *and* BOTTOM END*).*
2. **Check cylinder head and/or cylinder base gasket.**
   - *Gasket damaged or leaking. Retighten cylinder head with recommended torque and/or replace gasket.*
3. **Check tightening torque of cylinder head screws.**
   - *Screws not properly tightened. Retighten screws to recommended torque and replace oil.*
4. **Check oil for particles (may indicate possible engine internal damages).**
   - *Oil contamination due to metal or plastic particles. Replace possibly damaged part(s) including oil and oil filter. Use recommended oil (refer to* TECHNICAL SPECIFICATIONS*).*

CYLINDER AND HEAD

Symptom: **UNUSUAL ENGINE NOISE AND/OR VIBRATION.**

1. **Check noise coming from cylinder head area.**
   - *Improper valve clearance adjustment. Readjust valve clearance and/or replace defective part(s).*
   - *Faulty chain tensioner. Replace spring and/or mechanism.*
   - *Chain guide worn out. Replace chain guide.*
   - *Stretched chain and/or worn out sprockets. Replace chain and sprockets.*
   - *Sprocket screws got loose. Retighten screws with recommended torque.*
   - *Rocker arm(s) is (are) worn out (valve adjustment). Readjust valve clearance and/or replace rocker arm(s).*
   - *Incorrect camshaft timing adjustment. Replace damaged components and readjust camshaft timing (refer to* CYLINDER AND HEAD*).*

Symptom: **OIL CONTAMINATION ON CYLINDER AND/OR HEAD.**

1. **Check screws for torque.**
   - *Loose screws. Retighten screws with recommended torque.*
   - *Gaskets are brittle, hard, worn out or otherwise damaged. Replace damaged gaskets, O-rings or the V-ring on breather.*

CRANKSHAFT

Symptom: **UNUSUAL ENGINE NOISE AND/OR VIBRATIONS.**

1. **Check noise coming from crankshaft area.**
   - *Crankshaft plain bearings are damaged. Replace crankshaft plain bearings (refer to* BOTTOM END*).*
   - *Connecting rod plain bearings are damaged. Replace connecting rod plain bearings (refer to* BOTTOM END*).*
   - *Magneto rotor got loose. Replace damaged components and retighten rotor retaining screw with recommended torque (refer to* MAGNETO SYSTEM*).*

ENGINE GENERAL

Symptom: **ENGINE CRANKS BUT FAILS TO START.**

1. **Check if spark plug connectors fit on spark plugs (refer to *IGNITION SYSTEM*).**
2. **Check spark plugs.**
   - *Define spark plugs (no spark) or wrong spark plug gap. Readjust gap and clean spark plugs or replace.*
3. **Check for fuel on spark plugs.**
   - *Flooded engine (spark plugs wet when removed). Activate engine drowned mode and crank engine with rags over the spark plug holes (refer to* OVERVIEW *in* EMS SYSTEM*).*
4. **Check battery voltage.**
   - *Battery is discharged and starter works not properly. Charge battery.*
5. **Check fault codes in B.U.D.S system.**
   - *Check if electrical actuator(s) is/are defective. Replace defective part(s) (refer to* COMPONENT INSPECTION AND ADJUSTMENT*).*
6. **Check fuel level in fuel tank and fuel pressure. Ensure fuel pump was not disabled by B.U.D.S.**
   - *Low or no fuel pressure. Replace defective part(s) (refer to* FUEL TANK AND FUEL PUMP*).*
7. **Check fuel injectors.**
   - *Plugged or faulty injector(s). Replace defective part(s) (refer to* ENGINE MANAGEMENT*).*
8. **Check idle bypass valve.**
   - *Stuck or defective. Refer to* ENGINE MANAGEMENT.
9. **Check encoder wheel.**
   - *Bent tooth. Refer to* MAGNETO SYSTEM.
10. **Check engine compression.**
    - *Insufficient engine compression. Replace defective part(s) (refer to* LEAK TEST*).*

Symptom: ENGINE DOES NOT START.

1. **Electrical problem.**
   - *Determine if the electrical system works correctly (fuse(s), battery, wiring harness, etc.). Refer to* IGNITION SYSTEM.
2. **Problem with fuel system (carburetor, fuel pump, hoses, etc.).**
   - *Clean, inspect, repair or replace defective parts. Refer to* FUEL SYSTEM.
3. **Check engine compression.**
   - *Insufficient engine compression. Replace defective parts.*
   - *Valve seat worn and/or damaged. Repair by performing valve guide procedure (refer to* CYLINDER AND HEAD*). Readjust valve clearance.*
4. **Internal engine problem.**
   - *Overhaul engine to find defective parts. refer to the appropriate section in* ENGINE.

Symptom: ENGINE HARD TO START.

1. **Check idle bypass valve.**
   - *Stuck or defective. Refer to* ENGINE MANAGEMENT.
2. **Check closed throttle and idle actuator with B.U.D.S.**
   - *Wrong TPS zero setting/idle bypass valve reset. Refer to* ENGINE MANAGEMENT.
3. **Check throttle cable adjustment.**
   - *Wrong adjustment (likely too tight). Refer to* ENGINE MANAGEMENT.
4. **Check engine compression.**
   - *Insufficient engine compression. Replace defective part(s) (refer to* LEAK TEST*).*
5. **Verify spark plug condition.**
   - *Defective, improperly set, worn out, fouled. Identify source of problem and correct. Replace spark plug.*
6. **Check fuel level in fuel tank and fuel pressure.**
   - *Low or no fuel pressure. Replace defective part(s) (refer to* FUEL TANK AND FUEL PUMP*).*
7. **Check CAPS (camshaft position sensor).**
   - *Defective sensor/wiring. Refer to* ENGINE MANAGEMENT.

Symptom: ENGINE SUDDENLY TURNS OFF.

1. **Perform engine leak test. Refer to *ENGINE LEAK TEST* procedure.**
   - *Damaged head gasket and/or seal and/or leaking inlet/exhaust valve(s). Replace and/or repair defective parts.*
2. **Check fault codes in B.U.D.S. system.**
   - *Check if electrical actuator(s) is/are defective. Replace defective part(s) (refer to* COMPONENT INSPECTION AND ADJUSTMENT*).*
3. **Check spark plugs condition and/or gap.**
   - *Fouled spark plugs or wrong spark plug gap. Readjust gap and clean spark plugs or replace.*

Symptom: **ENGINE SUDDENLY TURNS OFF.** (cont'd)

4. **Piston seizure.**
   - *Spark plugs heat range is too hot. Install spark plugs with appropriate heat range (refer to* TECHNICAL SPECIFICATIONS*).*
   - *Compression ratio is too high. Install genuine parts.*
   - *Poor oil quality. Use recommended oil.*
   - *Leaks at air intake manifold (engine gets too lean). Retighten screws or replace air intake manifold gasket.*
   - *Snow/water intrusion through intake system into combustion chamber. Clean intake system and replace defective part(s).*
5. **Melted and/or perforated piston dome; melted section at ring end gap.**
   - *Spark plugs heat range is too hot. Install recommended spark plugs (refer to* TECHNICAL SPECIFICATIONS*).*
   - *Coolant less than recommended level (engine gets too hot). Repair cooling circuit and/or refill with recommended liquid.*
   - *Poor quality and/or wrong fuel. Clean from contamination and use appropriate fuel (refer to* TECHNICAL SPECIFICATIONS*).*
6. **Piston color is dark due to seizure on intake and exhaust sides.**
   - *Cooling system leaks and lowers coolant level. Tighten clamps or replace defective parts. Add antifreeze in cooling system until appropriate level is reached. Replace damaged parts.*
7. **Cracked or broken piston.**
   - *Cracked or broken piston due to excessive piston/cylinder clearance or engine overreving. Replace piston. Check piston/cylinder clearance (refer to* CYLINDER AND HEAD*).*
8. **Check piston rings and cylinder surface for grooves.**
   - *Poor oil quality. Use recommended oil.*
   - *Contamination through engine intake. Replace defective part(s) and use new air filter.*
9. **Check crankshaft, rocker arms movement.**
   - *Oil pump failure due to lack of oil. Repair and replace defective parts and use recommended oil.*
   - *Oil contamination due to clogged oil filter/oil strainer. Replace oil and oil filter at the same time, replace defective part(s) (refer to* MAINTENANCE CHART *and LUBRICATION SYSTEM).*
10. **Check valve springs exhaust/intake.**
    - *Broken valve spring damages the cylinder head, valve(s), rocker arm(s), piston, piston rings and connecting rod. Replace defective part(s).*
11. **Check if fuel supply is sufficient.**
    - *Low fuel level.*
    - *Clogged fuel filter or fuel injector filter.*
    - *Fuel line is contaminated and/or bent. Clean and/or replace defective part(s).*

Symptom: **ENGINE BACKFIRES.**

1. **Check fault codes in B.U.D.S. system.**
   - *Check if electrical actuator(s) is/are defective. Replace defective part(s) (refer to* COMPONENT INSPECTION AND ADJUSTMENT*).*
2. **Check spark plugs.**
   - *Carbon accumulation caused by defective spark plugs. Replace spark plugs.*
3. **Check leakage on intake manifold.**
   - *Air leak on intake system. Retighten screws and/or replace intake manifold gasket.*
4. **Check exhaust air leaking.**
   - *Exhaust gasket is leaking. Retighten screws and/or replace exhaust gasket.*

Symptom: ENGINE BACKFIRES. (cont'd)

5. **Check intake valve(s) for leaking.**
   - *Intake valve(s) is (are) leaking. Repair or replace valve(s).*
6. **Check if fuel supply is sufficient.**
   - *Fuel line is contaminated and/or bent (engine gets lean). Clean and/or replace defective part(s).*
7. **Check engine ground.**
   - *Poor engine ground. Clean.*

Symptom: ENGINE DOES NOT OFFER MAXIMUM POWER AND/OR DOES NOT REACH MAXIMUM OPERATING RPM.

1. **Check spark plugs condition and/or gap.**
   - *Fouled spark plugs or wrong spark plug gap. Readjust gap and clean spark plugs or replace.*
2. **Check spark plugs type.**
   - *Improper spark plugs heat range. Install recommended spark plugs (refer to* TECHNICAL SPECIFICATIONS*).*
3. **Perform engine leak test. Refer to *ENGINE LEAK TEST* procedure.**
   - *Damaged head gasket and/or seal and/or leaking intake/exhaust valve(s). Replace and/or repair defective parts.*
4. **Check for water in fuel (wrong fuel).**
   - *There is water in fuel or wrong fuel. Drain fuel system, search for leakage and refill it with appropriate fuel.*
5. **Check engine compression.**
   - *Worn piston(s) and/or piston ring(s). Replace defective part(s) (refer to* CYLINDER AND HEAD *and* LEAK TEST*).*
6. **Check fuel pressure.**
   - *Low fuel pressure. Perform fuel pressure test (refer to* FUEL SYSTEM*).*
7. **Check air intake system.**
   - *Air filter is clogged due to contamination. Replace air filter.*
8. **Check if EMS (Engine Management System) is in limp home mode. Check fault codes in B.U.D.S system.**
   - *Check if electrical actuator(s) is/are defective. Replace defective part(s) (refer to* COMPONENT INSPECTION AND ADJUSTMENT*).*
9. **Check drive belt.**
   - *Worn. Replace belt if its width is less than specified (refer to* CONTINUOUSLY VARIABLE TRANSMISSION (CVT)*).*

Symptom: HIGH ENGINE OPERATING TEMPERATURE.

1. **Check if cooling system shows any failure (see *COOLING SYSTEM*).**
   - *System is leaking. Repair and/or replace damaged part(s).*
2. **Check function of lubrication system (see *LUBRICATION SYSTEM*).**
   - *Lubrication is not working properly. Repair and/or replace damaged part(s).*
3. **Check condition and heat range of spark plugs.**
   - *Melted spark plug tip or inadequate heat range. Replace.*
4. **Check air leakage on engine intake.**
   - *Leakage causes overheating. Replace/repair damaged part(s).*

FUEL AND OIL INJECTION SYSTEMS

The following chart is provided to help diagnose the probable source of troubles. It should be used as a guideline.

NOTE: For troubleshooting the lubrication system of the V800 models, refer to *ENGINE (V800)*.

Symptom: **HIGH FUEL CONSUMPTION OR RICH MIXTURE (300F AND 550F).**

1. **Check fuel tank.**
   - *Perforated fuel tank. Replace fuel tank.*
2. **Check fuel pump, reservoir and carburetor fittings.**
   - *Leaking fittings. Replace defective part.*
3. **Check choke adjustment.**
   - *Fuel flows through choke circuit while engine runs. Readjust choke.*
4. **Check float height in carburetor(s).**
   - *Fuel level is too high in float bowl(s). Adjust according to specifications (refer to* TECHNICAL SPECIFICATIONS*).*
5. **Check needle valve on each carburetor.**
   - *Foreign particles prevent needle valve from closing and/or pounded seating area. Clean or replace needle valve, then clean seating area.*

Symptom: **FUEL LEAKS IN ENGINE BASE WHEN ENGINE IS STOPPED (300F AND 550F).**

1. **Check items 3, 4 and 5 of *HIGH FUEL CONSUMPTION*.**
2. **Check fuel pump diaphragm.**
   - *Cracked diaphragm. Replace pump.*

Symptom: **ENGINE LACKS POWER OR STALLS AT HIGH RPM.**

1. **Check in-line fuel filter (V800).**
   - *Clogged filter. Replace fuel filter.*
2. **Check electric fuel pump pressure (V800).**
   - *Electric fuel pump defective. Replace.*
   - *Regulator defective. Replace.*
3. **Check fuel tank vent hose.**
   - *Kinked or clogged hose. Relocate or replace.*
4. **Check in-tank strainer.**
   - *Clogged strainer. Replace.*
5. **Check fuel lines.**
   - *Kinked or clogged lines. Relocate or replace.*
6. **Check fuel pump flow (300F and 550F).**
   - *Check impulse hose. Replace.*
   - *Dried diaphragm. Replace.*
7. **Check if carburetor(s) is(are) clean (300F and 550F).**
   - *Varnish. Clean.*
8. **Check fuel injectors flow (V800).**
   - *Dirty or defective fuel injectors. Replace.*

Symptom: **HIGH INJECTION OIL CONSUMPTION (300F AND 550F).**

1. **Check oil injection pump adjustment.**
   - *Oil injection pump adjusted too rich. Adjust.*
2. **Check injection pump identification.**
   - *Wrong pump. Replace with the appropriate pump. Refer to* LUBRICATION SYSTEM.
3. **Check injection oil line and its fitting.**
   - *Leaking line and/or cover. Replace defective part(s).*
4. **Check injection pump cover gasket.**
   - *Broken gasket. Replace.*
5. **Check nipple check valve.**
   - *Check valve stuck open. Replace.*
6. **Check pump.**
   - *Defective pump. Replace pump or connecting cable.*
7. **Test pump shaft gear reservoir for leaks.**
   - *Leaking seal(s). Replace seal(s).*

Symptom: **OIL STARVATION (300F AND 550F).**

1. **Check for oil flow in pump inlet tube.**
   - *Clogged oil filter. Replace filter.*
2. **Check for oil leaks of pump inlet and outlet tubes and fittings.**
   - *Loose, kinked or plugged hose. Loose/damage fitting. Replace hose or fitting.*
3. **Verify vent line check valve.**
   - *Defective check valve or plugged/kinked line. Replace check valve or line.*
4. **Check pump.**
   - *Defective pump. Replace pump.*

DRIVE SYSTEM

The following chart is provided to help diagnose the probable source of troubles. It should be used as a guideline. Some causes or corrections may not apply to a specific model.

DRIVE SYSTEM

Symptom: **THE SNOWMOBILE ACCELERATES SLOWLY, ESPECIALLY FROM A STANDING START.**

1. **Check drive belt condition.**
   - *Belt is too narrow (drive belt engagement is higher in drive pulley). Replace belt if width is less than specified in* DRIVE BELT.
2. **Check drive belt deflection.**
   - *Deflection is too high (drive belt engagement is higher in drive pulley). Adjust drive belt height according to specifications (refer to* PULLEY ALIGNMENT *and* DRIVE BELT*).*
3. **Check if driven pulley sliding half slides freely.**
   - *Jammed sliding half. Replace.*
4. **Check spring tension of driven pulley sliding half.**
   - *Sliding half rotation is accelerated when spring tension is too weak. Adjust according to specifications (refer to* TECHNICAL SPECIFICATIONS*) or replace.*
5. **Refer to *VIBRATIONS ORIGINATING FROM DRIVE PULLEY* and *VIBRATIONS ORIGINATING FROM DRIVEN PULLEY* and check items listed.**
6. **Check drive pulley spring tension.**
   - *Spring tension is too weak. Replace.*

Symptom: **ENGINE MAXIMUM RPM IS TOO HIGH AND TOP SPEED IS NOT REACHED.**

1. **Check items 1, 2 and 3 of *THE SNOWMOBILE ACCELERATES SLOWLY, ESPECIALLY FROM A STANDING START.***
2. **Check driven pulley spring tension.**
   - *Spring tension is too stiff.*
3. **Refer to *VIBRATIONS ORIGINATING FROM DRIVE PULLEY* and check items listed.**
4. **Check the driven pulley.**
   - *Driven pulley does not open completely. Clean, readjust or replace driven pulley.*

Symptom: **LOOSE IN DRIVE SYSTEM WHEN ACCELERATING/DECELERATING.**

1. **Check drive chain tension.**
   - *Drive chain is too loose. Adjust.*
2. **Check radial play of driven pulley.**
   - *Worn splines. Replace pulley.*

Symptom: **VIBRATIONS ORIGINATING FROM DRIVE PULLEY.**

1. **Check drive belt.**
   - *Belt width is uneven on several places. Replace.*
2. **Check tightening torque of drive pulley screw.**
   - *Moving drive pulley cover. Retighten screw.*

Symptom: **VIBRATIONS ORIGINATING FROM DRIVEN PULLEY.**

1. **Check sliding half side play.**
   - *Sliding half bushing worn out. Replace sliding half bushing.*
2. **Check sliding half and fixed half straightness.**
   - *Sliding half/fixed half warped. Replace.*
3. **Check slider shoes.**
   - *Slider shoes can be broken. Replace.*

Symptom: **PULLEYS DO NOT DOWN SHIFT PROPERLY.**

1. **Check driven pulley spring tension.**
   - *Spring tension is too low. Adjust according to specifications (refer to* TECHNICAL SPECIFICATIONS*) or replace spring.*
2. **Refer to *VIBRATIONS COMING FROM DRIVEN PULLEY* and check items listed.**
3. **Check drive pulley bushings (cleanliness, wear, etc.).**
   - *Bushings stick to fixed half pulley shaft. Clean or replace.*

Symptom: **IN REVERSE (RER) ENGINE FAILS AND DRIVEN PULLEY OPENS TOO FAST (drive belt is low in drive pulley).**

1. **Check pulley alignment.**
   - *Improper adjustment. Adjust according to specifications (refer to* PULLEY ALIGNMENT*).*
2. **Check for reverse sliding shoes.**
   - *Sliding shoes are worn or missing. Replace sliding shoes.*
3. **Check spring.**
   - *Spring is weak or insufficient tension. Replace spring.*

Symptom: **IT IS DIFFICULT TO ENGAGE FORWARD OR REVERSE (V800).**

1. **Check reverse link rod adjustment.**
   - *Reverse link rod is not adjust properly. Adjust. Refer to* CHAINCASE (V800).
2. **Check reverse rod.**
   - *The reverse rod is bent. Replace.*

Symptom: **UNEVEN BELT WEAR ON ONE SIDE.**

1. **Check tightening torque of engine mount bolts.**
   - *Loose engine mount. Tighten mount nuts/bolts equally.*
2. **Check pulley alignment.**
   - *Pulley misalignment. Align pulleys.*
3. **Check drive belt contact area on pulleys.**
   - *Rough or scratched pulley surfaces. Repair or replace pulley half.*
4. **Check driven pulley sliding half play.**
   - *Driven pulley bushing worn. Replace bushing.*

Symptom: **BELT TOO NARROW ON ONE SECTION.**

1. **Vehicle started with a frozen track.**
   - *Free track from ice before starting vehicle.*

Symptom: **BELT TOO NARROW ON ONE SECTION.** (cont'd)

2. **Vehicle ridden with parking brake engaged.**
   - *Release parking brake before riding vehicle.*
3. **Check track tension/alignment.**
   - *Track too tight. Adjust track tension and alignment.*
4. **Check drive pulley.**
   - *Drive pulley does not operate properly. Repair or replace drive pulley.*
5. **Check idle speed.**
   - *Engine idle speed is too high. Adjust according to specifications.*
6. **Check drive belt length.**
   - *Incorrect belt length. Replace with an appropriate drive belt (refer to* TECHNICAL SPECIFICATIONS*).*
7. **Check belt height.**
   - *Belt height is incorrect. Adjust according to specifications.*

Symptom: **BELT GLAZED EXCESSIVELY OR HAVING BAKED APPEARANCE.**

1. **Check if drive pulley bushings are worn.**
   - *Slipping due to insufficient pressure on belt sides. Replace bushing.*
2. **Check condition of drive pulley fixed half shaft.**
   - *Slipping due to rusted drive or driven pulley shafts. Clean shaft with fine steel wool.*
3. **Check if pulley halves are clean.**
   - *Slipping due to oily pulley surfaces. Clean pulley halves.*
4. **Check pulley calibration.**
   - *Slipping due to improper pulley calibration. Calibrate according to specifications.*

Symptom: **BELT WORN EXCESSIVELY IN TOP WIDTH.**

1. **Check drive pulley.**
   - *Excessive slippage due to jamming of drive pulley. Inspect drive pulley.*
2. **Check drive belt identification number.**
   - *Improper belt angle (wrong type of belt). Replace belt with an appropriate drive belt.*
3. **Check drive belt width.**
   - *Considerable use. Replace belt if less than specified in* DRIVE BELT.

Symptom: **BELT SIDES WORN CONCAVE.**

1. **Check pulley half surfaces.**
   - *Rough or scratched pulley half surfaces. Repair or replace.*
2. **Check drive belt identification number.**
   - *Wrong belt. Replace with an appropriate drive belt (refer to* TECHNICAL SPECIFICATIONS*).*

Symptom: **BELT DISINTEGRATION.**

1. **Check drive belt identification number.**
   - *Excessive belt speed. Wrong type of belt. Replace with proper type of belt (refer to* TECHNICAL SPECIFICATIONS*).*

Symptom: **BELT DISINTEGRATION.** (cont'd)

2. **Check if pulley halves are clean.**
   - *Oil on pulley surfaces. Clean pulley surfaces with fine emery cloth and wipe clean using pulley flange cleaner (P/N 413 711 809) and a cloth.*

Symptom: **BELT CORD POP OUT.**

1. **Check pulley alignment.**
   - *Pulley misalignment. Align pulley (refer to* PULLEY ALIGNMENT*).*

Symptom: **FATIGUE CRACKS BETWEEN COGS.**

1. **Check drive belt condition.**
   - *Belt considerably worn, worn out. Replace.*
   - *Distortion of natural belt shape due to improper storage. Store properly.*

Symptom: **TOOTH CHUNK OUT.**

1. **Check drive belt rotational direction.**
   - *Improper belt installation. Replace.*
2. **Check if drive belt rubs against components.**
   - *Belt rubs against fixed components. Relocate components.*
3. **Check drive pulley.**
   - *Violent engagement of drive pulley. Check drive pulley engagement speed, drive pulley bushings and components.*

Symptom: **BELT "FLIP-OVER" AT HIGH SPEED.**

1. **Check pulley alignment.**
   - *Pulley misalignment. Align pulley (refer to* PULLEY ALIGNMENT*).*
2. **Check drive belt identification number.**
   - *Wrong type of belt. Replace with an appropriate drive belt.*

Symptom: **SLIDER SHOES WEAR OUT PREMATURELY/OR TRACK CLEATS BECOME BLUE.**

1. **Check track tension.**
   - *Pressure is too great on slider shoes. Adjust according to specifications (refer to* TRACK*). Replace defective parts.*
2. **Check idler wheel condition.**
   - *Stuck bearing, flat spot on wheel or damaged wheel. Replace defective parts.*
3. **Check snow conditions or lack of snow.**
   - *Lack of lubrication of slider shoes. Ask driver to ride in appropriate snow conditions (see* OPERATOR'S GUIDE*).*
4. **Check slider shoes and/or suspension retaining screws.**
   - *Twisted slider shoes or loose retaining screws. Replace defective parts and/or tighten loose screws.*

Symptom: **DERAILING TRACK.**

1. **Check track tension.**
   - *Track is too loose. Adjust.*
2. **Check if track and slider shoes are properly aligned.**
   - *Improper alignment. Adjust.*

Symptom: **NOISE OR VIBRATION COMING FROM THE TRACK.**

1. **Check track tension.**
   - *Track is too loose. Adjust to recommended tension.*
2. **Check slide suspension retaining bolts.**
   - *Missing bolt(s) (some components interfere with track rotation). Replace missing bolt(s).*
3. **Check condition of idler wheel(s).**
   - *Idler wheel rubber is damaged. Replace.*
4. **Check guide cleats.**
   - *Top portion of guide cleat(s) is bent. Replace.*
5. **Check sprockets.**
   - *One or several teeth of drive shaft sprockets are broken. Replace sprocket(s).*
6. **Check track rods and/or internal traction teeth.**
   - *One or several track rods and/or teeth are broken. Replace track.*

BRAKE SYSTEM

Symptom: **SPONGY BRAKE CONDITION.**

1. **Brake pads worn.**
   - *Replace brake pads.*
2. **Air in brake system.**
   - *Bleed system.*
3. **Contaminated brake fluid.**
   - *Replace brake fluid and bleed system.*
4. **Leak in brake system.**
   - *Repair leak.*
5. **Master cylinder faulty.**
   - *Replace master cylinder.*
6. **Piston seals worn or damaged.**
   - *Replace caliper.*

Symptom: **BRAKE FLUID LEAKAGE.**

1. **Check for loosen hose connectors.**
   - *Replace copper washers and retighten.*
2. **Check for damaged hose, master cylinder and caliper.**
   - *Replace part(s) and check for proper mounting.*

Symptom: **BRAKE SYSTEM IS NOISY.**

1. **Check brake pad thickness.**
   - *Pads are worn out. Replace.*
2. **Check Woodruff key and/or key way on countershaft.**
   - *Key and/or key way is (are) worn out. Replace defective part(s).*

ELECTRICAL SYSTEM

The following chart is provided to help diagnose the probable source of troubles. It should be used as a guideline. Some causes or corrections may not apply to a specific model.

Symptom: **STARTER DOES NOT TURN.**

1. **Check fuses.**
   - *Burnt fuse. Check wiring condition and replace fuse.*
2. **Check battery charge.**
   - *Discharged or disconnected battery. Recharge battery and check charging system and wires.*
3. **Check ground. Check terminal of BLACK wire at engine connector.**
   - *Poor, or corroded ground contacts. Check, clean and tighten.*
4. **Check continuity of ignition switch contact points.**
   - *Poor contact of ignition switch contact points. Repair or replace switch.*
5. **Check continuity between ignition switch and solenoid.**
   - *Open circuit. Repair.*
6. **Check starter solenoid.**
   - *Inadequate connection (too much resistance) or defective solenoid. Clean, reconnect and/or replace.*
7. **Check starter.**
   - *Inadequate connection (too much resistance) or defective starter. Reconnect and/or replace.*
8. **Check ECM tracking connector (V800 engines).**
   - *Connector disconnected. Refer to* STARTING SYSTEM.
9. **Check engine problems.**
   - *Damaged engine. Check and repair.*

Symptom: **STARTER TURNS BUT DOES NOT CRANK THE ENGINE (V800 engine).**

1. **Check splines condition on electric starter.**
   - *Worn and/or damaged starter splines. Replace electric starter and drive gear.*
2. **Check condition of starter drive gears and sprag clutch gear.**
   - *Worn and/or damaged gears. Replace gears.*
3. **Check sprag clutch.**
   - *Defective sprag clutch. Replace.*

Symptom: **CLUTCH PINION DOES MESH WITH RING GEAR BUT STARTER DOES NOT CRANK THE ENGINE (300F AND 550F).**

1. **Check battery capacity.**
   - *Shorted battery cell(s). Replace.*
2. **Check battery charge.**
   - *Low battery. Recharge battery and check recharge system and wires.*
3. **Check engine.**
   - *Engine seized. Overhaul the engine.*
4. **Check wire connection.**
   - *Inadequate connection (too much resistance). Clean and reconnect.*

Symptom: **CLUTCH PINION DOES MESH WITH RING GEAR BUT STARTER DOES NOT CRANK THE ENGINE (300F AND 550F).** (cont'd)

5. **Check starter brushes.**
   - *Poor contact of brushes. Replace brushes.*
6. **Check starter commutator.**
   - *Burnt commutator. Repair or replace. Refer to* ELECTRIC STARTER.
7. **Check height of commutator mica.**
   - *Commutator mica too high. Undercut mica.*
8. **Check starter armature resistance.**
   - *Shorted armature. Repair or replace armature.*
9. **Check tension of starter brush springs.**
   - *Weak brush spring tension. Replace springs.*
10. **Check starter magnets.**
    - *Weak magnets. Replace yoke assembly or starter.*
11. **Check if starter bushings are worn.**
    - *Worn bushings. Replace bushings.*

Symptom: **STARTER TURNS, BUT OVERRUNNING CLUTCH PINION DOES NOT MESH WITH RING GEAR.**

1. **Check clutch pinion gear.**
   - *Worn clutch pinion gear. Replace clutch.*
2. **Check clutch.**
   - *Defective clutch. Replace clutch.*
3. **Check mounting brackets.**
   - *Worn or broken brackets. Replace brackets.*
4. **Check movement of clutch on splines.**
   - *Poor movement of clutch on splines. Clean and correct.*
5. **Check clutch bushing.**
   - *Worn clutch bushing. Replace clutch.*
6. **Check starter bushings.**
   - *Worn starter bushing(s). Replace bushing(s).*
7. **Check ring gear.**
   - *Worn ring gear. Replace ring gear.*
8. **Check for proper starter rotation direction.**
   - *Starter turns in wrong direction, incorrectly installed brushes, wrong polarity or wrong starter. Replace starter or reconnect properly.*

Symptom: **ELECTRIC STARTER KEEPS TURNING WHEN ENGINE IS STARTED.**

1. **Check clutch (300F and 550F).**
   - *Jammed clutch pinion gear. Replace or clean.*
2. **Check movement of clutch on splines (300F and 550F).**
   - *Clutch is stuck on splines. Clean.*
3. **Check starter brackets (300F and 550F).**
   - *Broken bracket(s). Replace bracket(s).*

Symptom: **ELECTRIC STARTER KEEPS TURNING WHEN ENGINE IS STARTED.** (cont'd)

4. **Check ignition switch.**
   - *Ignition switch does not return to its ON position or is short-circuited. Adjust switch position. Face nut is too far in.*
5. **Check starter solenoid.**
   - *Shorted starter solenoid winding(s). Replace starter solenoid.*
   - *Melted starter solenoid contacts. Replace starter solenoid.*
   - *Starter solenoid returns poorly. Replace starter solenoid.*
6. **Check ignition switch contacts.**
   - *Contacts shorted. Replace ignition switch.*

Symptom: **NOISE OCCURRENCE WHEN STARTING ENGINE.**

1. **Check if ring gear is well-mounted to drive pulley fixed sheave.**
   - *Loose and/or broken bolts. Retighten bolts using thread locker or replace ring gear and drive pulley fixed sheave.*
2. **Check sprag clutch (V800 engines).**
   - *Defective or loose sprag clutch. Tighten or replace.*

Symptom: **ACCESSORY FUSE IS BURNT (ground protection).**

1. **Check that large ground wire at battery is well connected to chassis.**
   - *Corroded and/or loose connection(s). Clean and/or retighten.*

Symptom: **ELECTRIC STARTER SOMETIMES DOES NOT WORK WHEN ACTIVATED.**

1. **Check battery cables and starter wires.**
   - *Corroded and/or loose connection(s). Clean and/or retighten.*
2. **Check fuse.**
   - *Oxidized or burnt fuse. Clean or replace.*
3. **Check wiring harness connections.**
   - *Oxidized connections. Clean or replace defective terminals.*
4. **Check ignition switch.**
   - *Defective contacts in ignition switch. Replace.*
5. **Check solenoid of electric starter.**
   - *Shorted solenoid wiring harness or corroded contact washer. Replace.*

Symptom: **THE MPEM DOES NOT WORK.**

1. **Check that spark plug high tension cable does not touch any metal parts.**
   - *Short circuit. Isolate and reroute cable.*

Symptom: **ENGINE DOES NOT START — NO SPARK AT SPARK PLUG.**

1. **Verify spark plug condition.**
   - *Defective, improperly set, worn-out, fouled. Identify source of problem and correct. Replace spark plugs.*
2. **Verify spark plug cap resistance with an ohmmeter.**
   - *Defective part. Replace cap.*

Symptom: **ENGINE DOES NOT START — NO SPARK AT SPARK PLUG.** (cont'd)

3. **Verify if problem originated from electrical system wiring harness and/or accessories and/or ignition cut-out switches by unplugging the engine connector. Check condition of terminals.**
   - *Heating, rotating or sharp part in contact with harness. Improper harness routing. Defective switch(es). Corroded connector terminals. Replace or repair damaged connectors/wires. Reroute where necessary. Replace defective switch(es). Clean terminals and apply silicone dielectric grease.*
4. **Verify trigger coil (CPS on V800) and connector condition.**
   - *Defective coil. Corroded connector terminals. Replace defective coil. Clean terminals and apply silicone dielectric grease.*
5. **Verify condition of ignition coil.**
   - *Mechanically damaged part. Vibration problem. Electrically damaged part. Tighten mounting screws. Replace ignition coil.*
6. **Verify condition of ignition generator coils.**
   - *Mechanically damaged part. Vibration problem. Electrically damaged part. Tighten mounting screws. Replace coils.*
7. **Verify MPEM (300F and 550F).**
   - *Mechanically damaged part. Vibration problem. Electrically damaged part. Tighten mounting screws. Replace MPEM, retest and verify ignition timing.*

Symptom: **ENGINE IS MISFIRING — ERRATIC SPARK AT SPARK PLUG.**

1. **Verify misfiring by observing flash of stroboscopic timing light; unplug connectors between magneto/generator and vehicle wiring harness to isolate problem. Check condition of connectors.**
   - *Defective spark plug and/or cable/cap. Defective electrical system wiring harness and/or accessories and/ignition cut-out switches. Condition of connector terminals. Replace defective parts and/or repair damaged wires. Replace defective switch(es). Clean terminals and apply silicone dielectric grease.*

Symptom: **ENGINE IS MISFIRING — ERRATIC SPARK AT SPARK PLUG (riding on wet snow).**

1. **Check if spark plug wire and/or spark plug cap seal are sealing out moisture.**
   - *Defective wire and/or seal. Replace defective part.*
2. **Check if ignition system wiring harness connectors are in good condition and/or are sealing out moisture.**
   - *Loose connectors, corroded terminals or defective parts. Clean terminals and apply silicone dielectric grease. Replace defective parts.*

Symptom: **ENGINE IS MISFIRING — ERRATIC SPARK AT SPARK PLUG (riding in deep and thick snow).**

1. **Perform all verifications outlined under *ENGINE DOES NOT START — NO SPARK AT SPARK PLUG.***
2. **Check spark plugs. Proceed with spark plug analysis in order to identify source of problem.**
   - *Defective and/or worn spark plug(s) and/or cable(s) and/or cap(s). Engine related problem. Replace defective part(s). Proceed with ignition system testing procedures. Perform engine analysis.*

Symptom: **FOULED (black) SPARK PLUG TIP (300F AND 550F).**

1. **Check carburetor**
   - *Carburation is too rich. Adjust according to specifications (refer to* TECHNICAL SPECIFICATIONS*).*

Symptom: **FOULED (black) SPARK PLUG TIP (300F AND 550F).** (cont'd)

2. **Check injection oil consumption.**
   - *Injection pump flow is too high. Adjust according to specifications or replace.*
3. **Check oil quality.**
   - *Poor quality oil (creation of deposits). Use XP-S injection oil.*
4. **Check engine compression.**
   - *Leaking piston ring(s). Replace.*

Symptom: **SPARK PLUG TIP IS LIGHT GRAY (300F AND 550F).**

1. **Check spark plug heat range.**
   - *Spark plug heat range is too high. Replace by BRP's recommended spark plug (refer to* TECHNICAL SPECIFICATIONS*).*
2. **Check air intake silencer.**
   - *Leak at air intake silencer. Seal.*
3. **Check carburetor adapter or throttle body adapters collars.**
   - *Loose collar(s). Tighten.*
4. **Check carburetor adapter or throttle body adapters.**
   - *Cracked or deformed adapter. Replace.*
5. **Check if primary compression leaks.**
   - *Primary compression leaks. Perform leak down test and repair as necessary.*

Symptom: **RER (Rotax Electronic Reverse) DOES NOT WORK (300F AND 550F).**

1. **Check idle speed.**
   - *Wrong idle speed. Adjust according to specification (refer to* TECHNICAL SPECIFICATIONS*).*
2. **Check spark plug.**
   - *Faulty spark plug. Replace.*
3. **Check drive belt height.**
   - *Wrong belt height. Adjust according to specification (refer to* DRIVE BELT*).*
4. **Check engine compression.**
   - *Too low engine compression; engine stalls when pushing RER button. Rebuilt the engine.*
5. **Check carburetor mixture screw adjustment.**
   - *Wrong adjustment. Adjust according to specification (refer to* TECHNICAL SPECIFICATIONS*).*
6. **Check switch electrical connections.**
   - *Bad electrical connections or damaged wires. Clean or replace.*
7. **Check MPEM.**
   - *Faulty MPEM. Replace.*

Symptom: **RER (Rotax Electronic Reverse) SOMETIMES DOES NOT WORK WHEN ACTIVATED (300F AND 550F).**

1. **Check RER switch.**
   - *Defective contacts in ignition switch. Replace.*
   - *Moisture in RER switch. Blow dry RER switch.*
2. **Check engine condition.**
   - *Low engine compression and/or defective piston. Replace defective parts.*

Symptom: **HEADLAMP NOT LIGHTING (white bulb).**

1. **Check bulb.**
   - *Gas leak. Replace bulb.*

Symptom: **HEADLAMP NOT LIGHTING (broken element).**

1. **Check for loose headlamp housing and bulb socket.**
   - *Vibration problem. Tighten headlamp mounting screws. Lock bulb in socket. Replace bulb.*

Symptom: **HEADLAMP NOT LIGHTING (melted filament (ends of element holder) and black bulb).**

1. **Check voltage at headlamp at different speeds. It must not be above 13.8 Vac.**
   - *Excessive voltage in lighting circuit. Replace voltage regulator and ensure proper grounding. Retest.*

Symptom: **HEADLAMP DIMMING.**

1. **Check voltage at headlamp at different speeds.**
   - *Insufficient voltage in lighting circuit. Replace voltage regulator and retest.*
2. **Visually inspect wiring harness for damaged and/or melted wires and/or bad wire terminal crimping and/or connections.**
   - *Heating, rotating or sharp part in contact with harness. Improper harness routing. Repair/replace damaged wires and/or terminals. Reroute harness where necessary.*
3. **On** manual start models: **Verify voltage regulator ground.**
   - *Rusted or loose retaining screws. Clean, apply lithium grease (LMZ1) and firmly tighten screws.*
4. **Verify if there is an interconnection between AC and DC current.**
   - *Faulty installation of optional equipment. Find optional equipment connected directly to DC ground (BLACK wire or chassis) or to any DC hot wire (RED or RED/BLUE). Disconnect and reconnect to AC current (YELLOW and YELLOW/BLACK wires). Refer to the appropriate section.*
5. **Check if optional electric accessories are overloading the magneto/generator.**
   - *Excessive electrical load to magneto/generator. Reduce the electrical load by removing excess accessories. Reconnect as recommended by manufacturer.*
6. **Check heating grips.**
   - *Grounded wire or element causing short. Repair.*

Symptom: **BRAKE LIGHT REMAINS ON.**

1. **Check if bulb is properly installed.**
   - *Bulb is not installed correctly (contact elements are reversed). Install bulb correctly.*
2. **Check brake switch.**
   - *Switch contact remains closed. Replace brake switch.*
3. **Check wiring harness.**
   - *Shorted wiring harness. Replace or repair wiring harness.*

Symptom: **REAR LIGHT BULB FLASHES.**

1. **Check bulb tightness in housing.**
   - *Looseness at bulb contact elements. Install bulb correctly.*
2. **Check if rear light is properly connected.**
   - *Connector housing is partially connected. Install connector housing properly.*

Symptom: **REAR LIGHT BULB FLASHES.** (cont'd)

3. Check continuity of wires.

- Corroded terminals and/or broken wires. Replace terminal(s) or crimp defective wires.

STEERING SYSTEM

The following chart is provided to help diagnose the probable source of troubles. It should be used as a guideline.

Symptom: **WHEN HANDLEBAR IS TURNED, SNOWMOBILE UNDERSTEERS.**

1. **Check ski runner condition.**
   - *Worn ski runners. Replace.*
2. **Check if front arm stopper strap is too long (rear suspension).**
   - *Insufficient ski pressure on the ground. Shorten stopper strap.*
3. **Check front arm spring preload (rear suspension).**
   - *Insufficient ski pressure on the ground. Loosen spring tension.*

Symptom: **HANDLEBAR IS DIFFICULT TO TURN.**

1. **Check if the handlebar turns freely when skis are off the ground.**
   - *Ball joints corrosion restrains movement. Lubricate or replace the ball joint.*
   - *Component needs proper lubrication. Lubricate. Refer to* MAINTENANCE.
   - *Bent parts. Replace parts.*
2. **Check position of stopper strap (rear suspension).**
   - *Too much weight when stopper strap is short. Lengthen front arm stopper strap.*
3. **Check camber of front suspension.**
   - *A-arm is bent. Replace defective parts.*
4. **Check ski runners.**
   - *Wrong ski runners type. Replace.*

Symptom: **THE SNOWMOBILE ZIGZAGS.**

1. **Check ski runner condition.**
   - *Worn or bent ski runners. Replace ski runners.*
2. **Check ski alignment.**
   - *Improper ski alignment. Align skis in order to obtain proper toe-out (opening), refer to* STEERING SYSTEM.
3. **Check if bushings are too loose in steering system.**
   - *Bushings are too loose. Replace.*
4. **Check ski pressure.**
   - *Too much pressure on skis. Increase center spring preload (rear suspension).*
5. **Check ski runners.**
   - *Wrong ski runner type. Replace.*

SUSPENSION

The following chart is provided to help diagnose the probable source of troubles. It should be used as a guideline.

Symptom: **SUSPENSION IS TOO LOW.**

1. **Check springs preload.**
   - *Low spring preload. Increase preload to the recommended position.*
2. **Check condition of springs.**
   - *Springs are weakened or broken. Replace springs.*
3. **Wrong springs.**
   - *Springs are too soft. Install optional stiffer springs.*
4. **Check condition of shock.**
   - *Shock frozen. Replace shock.*

Symptom: **REAR SUSPENSION BOTTOMS OUT.**

1. **Check springs preload.**
   - *Low spring preload. Increase preload to the recommended position.*
2. **Check condition of springs.**
   - *Springs are weakened or broken. Replace springs.*
3. **Wrong springs.**
   - *Springs are too soft. Install optional stiffer springs.*
4. **Check condition of the rear shock absorber.**
   - *Damaged rear shock absorber. Replace rear shock absorber.*
5. **Check gas pressure in HPG shock.**
   - *Low gas pressure. Add gas and check for leak. Refer to* SHOCK ABSORBER INSPECTION AND SERVICING.

Symptom: **REAR SUSPENSION IS TOO STIFF.**

1. **Check rear spring preload.**
   - *Too much preload. Adjust to a softer position.*
2. **Wrong springs.**
   - *Springs are too stiff. Install optional softer springs.*
3. **Check track tension.**
   - *Track is too tight. Adjust.*
4. **Check if axles are properly lubricated.**
   - *Improper lubrication and/or contaminated grease (sticky oil sludge) Clean and/or lubricate.*
5. **Check condition of the rear shock absorber.**
   - *Damaged rear shock absorber. Replace rear shock absorber.*

ENGINE REMOVAL AND INSTALLATION

SERVICE PRODUCTS

Description	Part Number	Page
Loctite 222	413 703 400	53

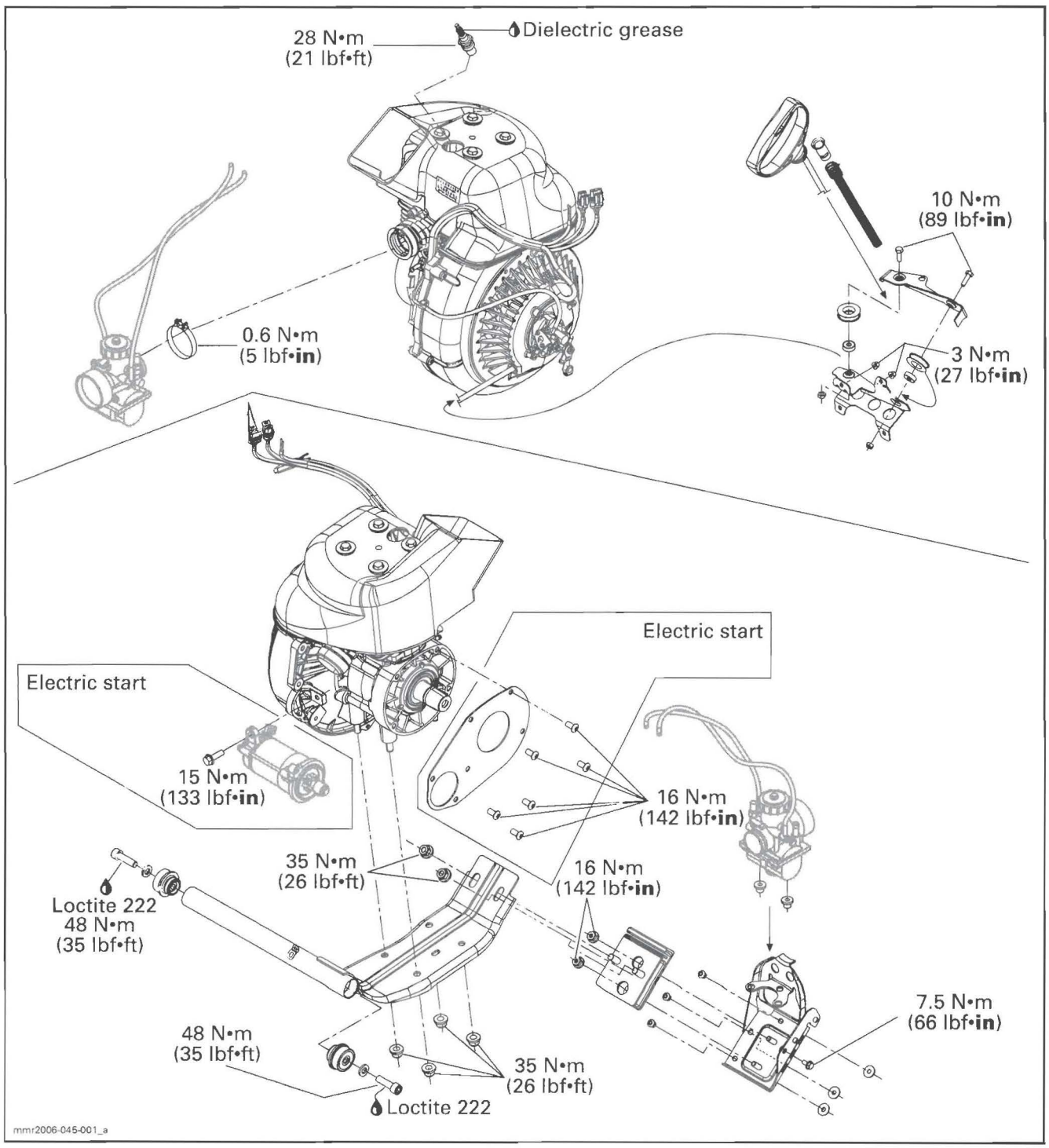

GENERAL

During assembly/installation, use the torque values and service products as in the exploded view.

Clean threads before applying a threadlocker. Refer to *SELF-LOCKING FASTENERS* and *LOCTITE APPLICATION* at the beginning of this manual for complete procedure.

⚠ WARNING

Torque wrench tightening specifications must strictly be adhered to.
Locking devices (e.g.: locking tabs, elastic stop nuts, self-locking fasteners, cotter pin, etc.) must be installed or replaced with new ones where specified. If the efficiency of a locking device is impaired, it must be renewed.

PROCEDURES

ENGINE

Removal

Place vehicle at workstation that will have access to an engine-lifting hoist.

Remove hood then RH and LH side panels.

If the vehicle is equipped with a battery, disconnect BLACK (-) cable then the RED (+) cable.

⚠ WARNING

Always disconnect battery or starter cables exactly in the specified order, BLACK (-) cable first. It is recommended to disconnect electrical connections prior to disconnecting fuel lines.

Remove the following components and refer to the appropriate section in this manual for the procedure.

- exhaust system
- belt guard, drive and driven pulleys
- primary and secondary air intake silencers
- carburetor.

Remove oil pump cable from oil pump.

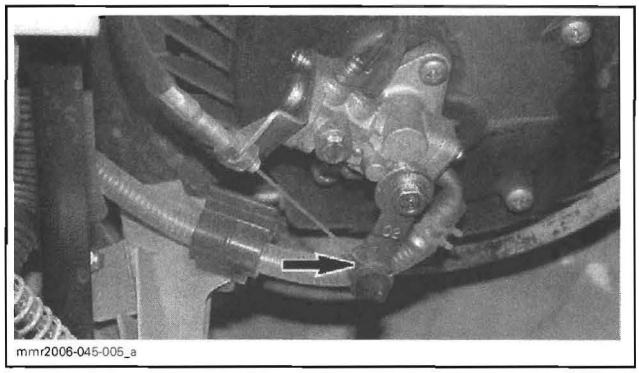
mmr2006-045-005_a

Remove oil pump inlet hose.

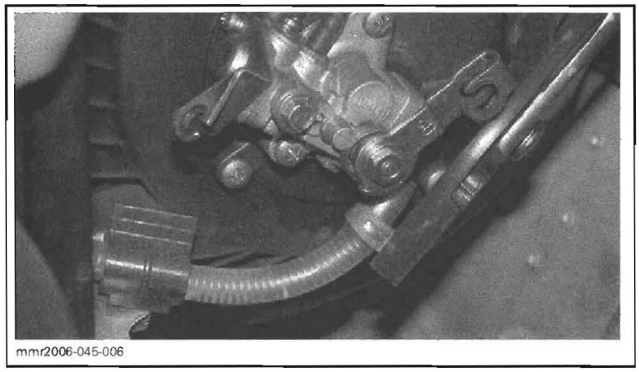
mmr2006-045-006

Unscrew ground wire from rewind stater housing.

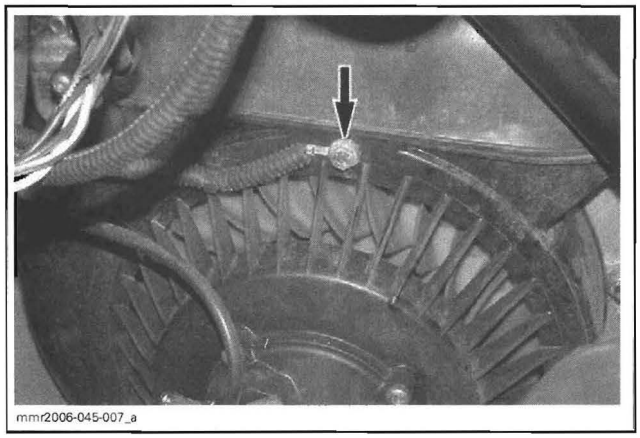
mmr2006-045-007_a

Remove rewind starter handle.

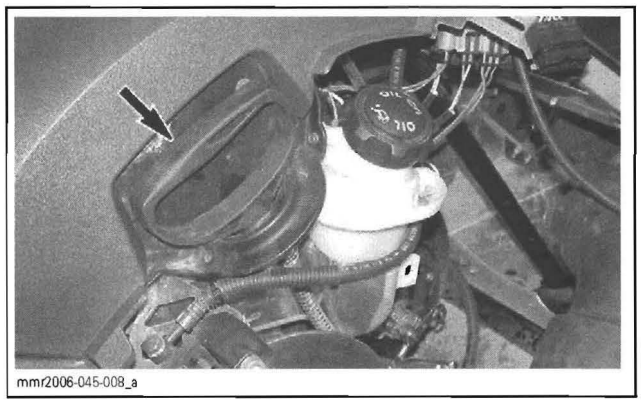
mmr2006-045-008_a

Unscrew engine ground wire.

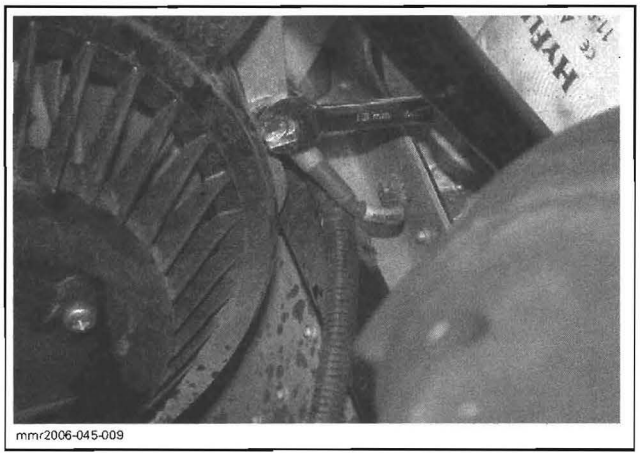
mmr2006-045-009

Disconnect electrical connectors.

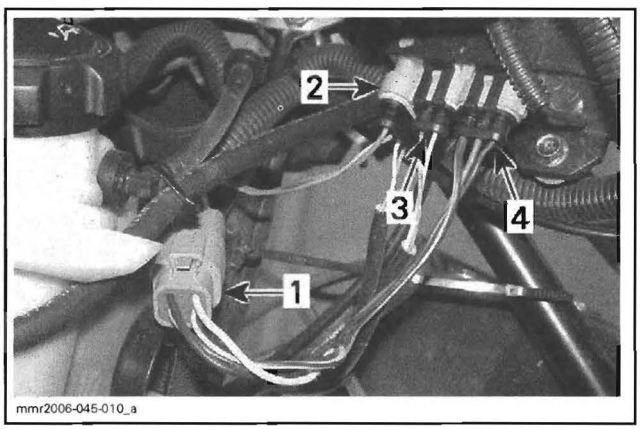

mmr2006-045-010_a

1. *Magneto connector*
2. *RER connector*
3. *Trigger coil connector*
4. *Engine stop switch connector*

NOTE: On RER connector, disconnect the BLUE/YELLOW and the WHITE/YELLOW wires from the connector. To do this, remove the lock the using a small tool, extract wires from connector.

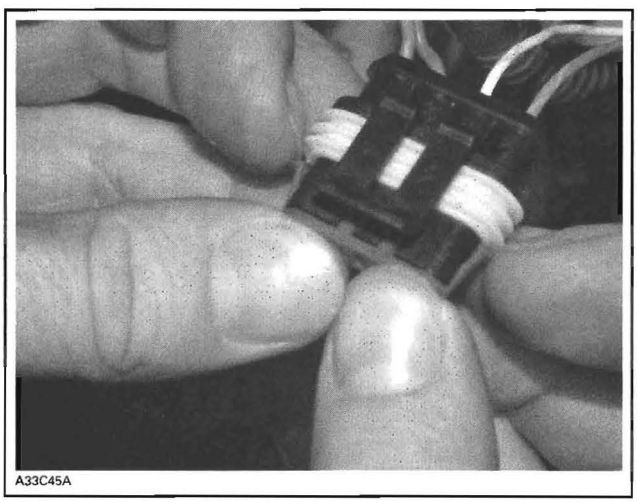
A33C45A

MOVE ASIDE BOTH TABS TO REMOVE LOCK

Cut locking tie retaining harnesses to steering support.

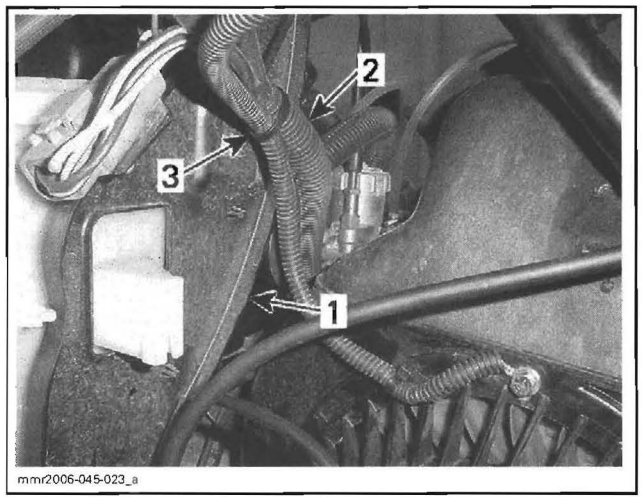

mmr2006-045-023_a

1. *Steering support*
2. *Wiring harnesses*
3. *Locking tie*

Disconnect spark plug cable.

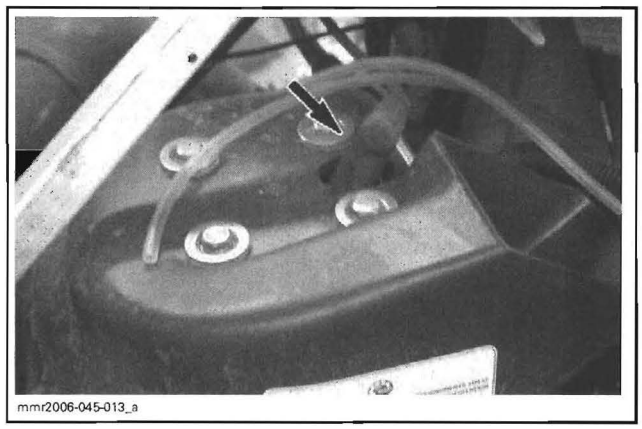
mmr2006-045-013_a

Unplug crankcase impulse line.

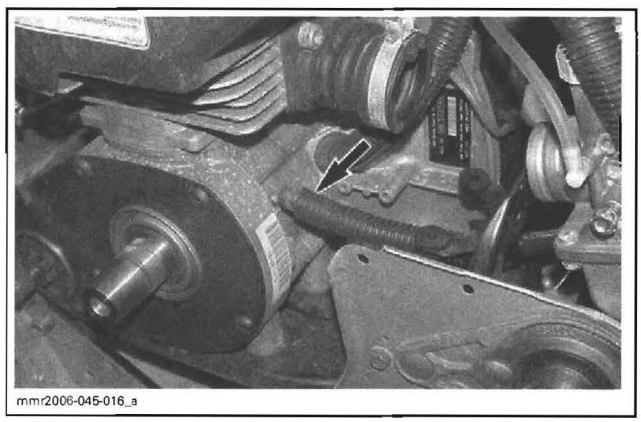
mmr2006-045-016_a

Disconnect starter cable.

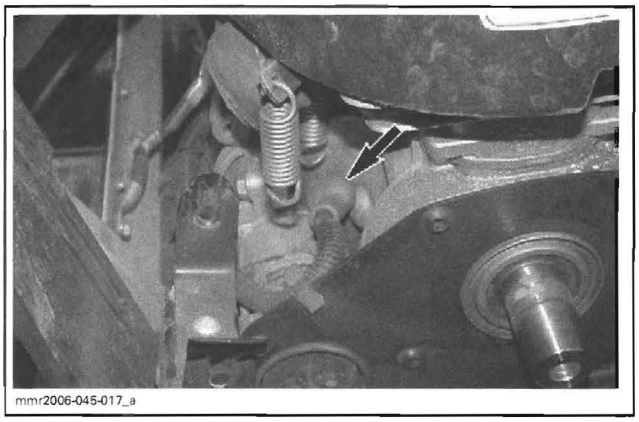
mmr2006-045-017_a

Remove engine nuts retaining engine to its support.

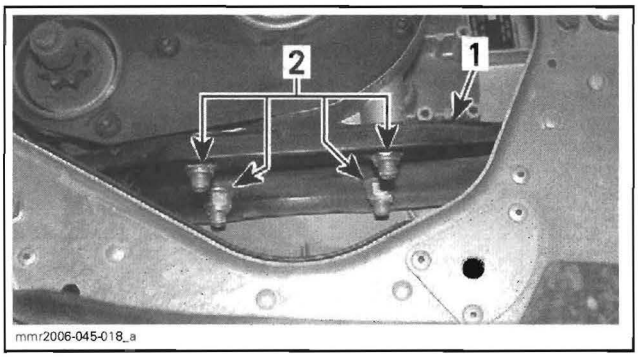

mmr2006-045-018_a

1. Engine support
2. Engine nuts

Unscrew one of the cylinder cowl screw. Using a longer screw, install a chain to lift the engine.

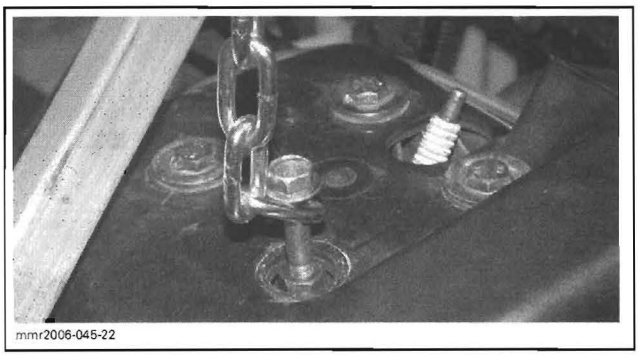
mmr2006-045-22

Lift up engine and remove it from vehicle.

Installation

The installation is the reverse of the removal procedure. However, pay attention to the following.

Torque engine nuts to 35 N•m (26 lbf•ft).

To adjust oil pump cable, refer to *LUBRICATION SYSTEM*.

When installing ground wire on rewind starter housing, place parts in the following order:

- rewind starter housing
- star washer
- ground wire connector
- flat washer
- lock washer
- bolt.

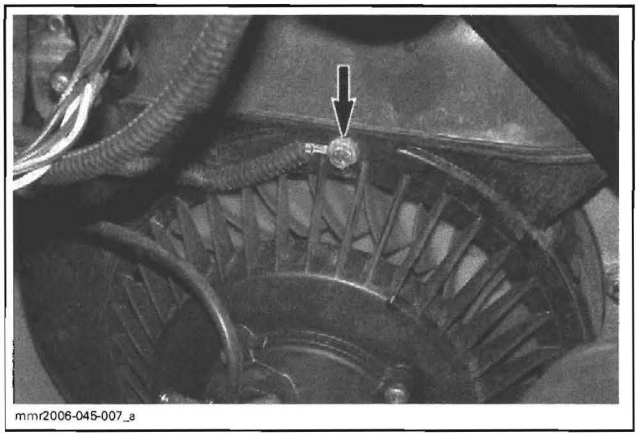
mmr2006-045-007_a

When all wires are connected, install a new locking tie to retain wiring harnesses to steering support.

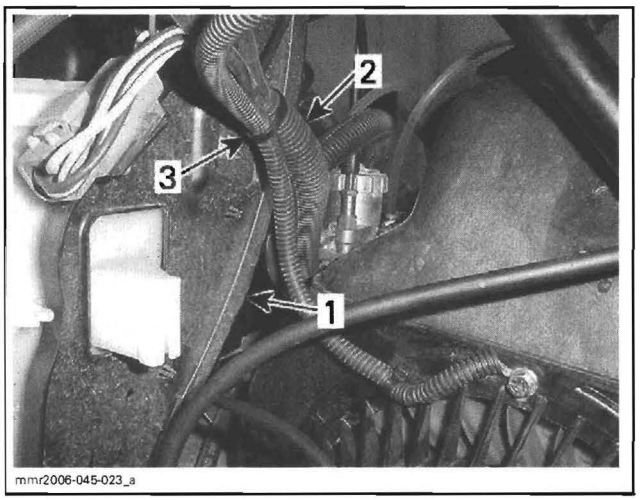

mmr2006-045-023_a

1. Steering support
2. Wiring harnesses
3. Locking tie

ENGINE SUPPORT

Removal

Remove engine from vehicle.

Unscrew nuts retaining support to frame.

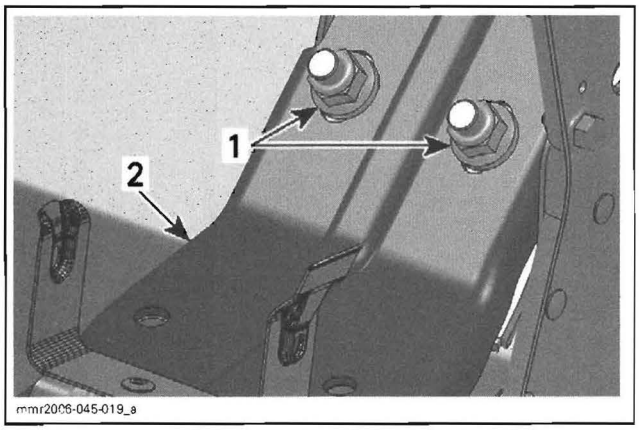

1. Engine support nuts
2. Engine support

Unscrew both socket screws that retain support tube to the front part of frame.

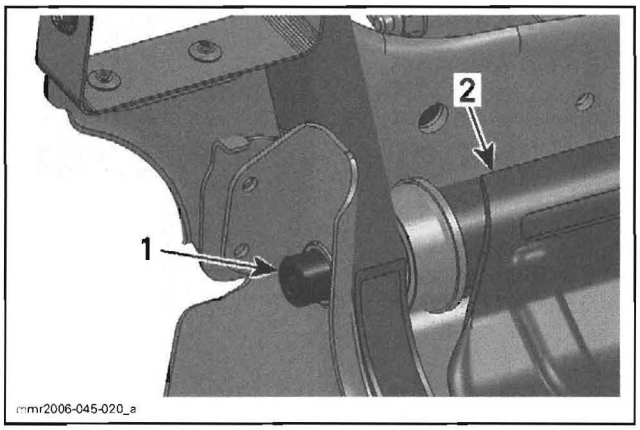

LH SIDE SHOWN
1. Socket screw
2. Engine support

Remove engine support from vehicle.

Inspection

Check support for cracks, torsion or other damages, replace if necessary.

Check the condition of support bushings, replace support if necessary.

Installation

The installation is the reverse of the removal procedure. However, pay attention to the following.

Apply Loctite 222 (P/N 413 703 400) on socket screw threads in accordance with the next illustration.

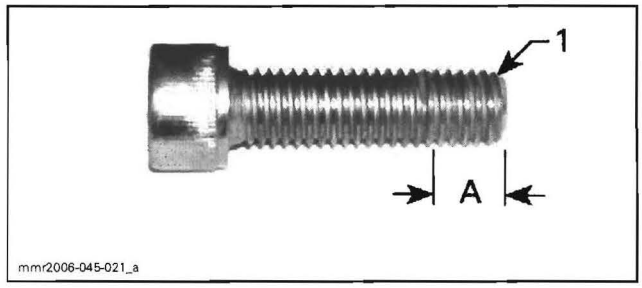

1. Apply threadlocker on this section only
A. 10 mm (.3937 in)

Torque socket screws to 48 N•m (35 lbf•ft).

Torque engine support nuts to 35 N•m (26 lbf•ft).

ENGINE LEAK TEST

SERVICE TOOLS

Description	Part Number	Page
exhaust plate	529 021 300	55
intake plug	529 011 000	55
small hose pincher	295 000 076	55
vacuum/pressure pump	529 021 800	55

PREPARATION

Remove extension pipe and manifold of exhaust system.

Install an exhaust plate (P/N 529 021 300) instead of exhaust manifold.

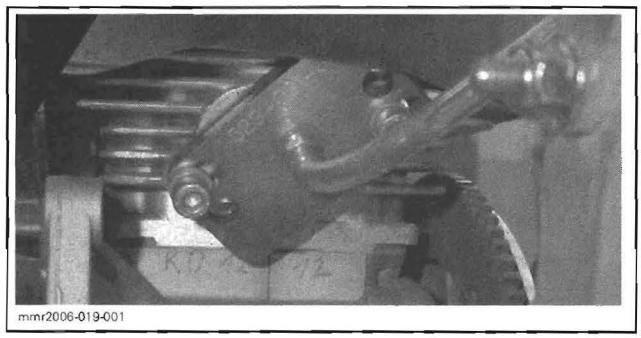
mmr2006-019-001

Remove primary air intake silencer and carburetor.

Install a small hose pincher (P/N 295 000 076) on injection oil line (between engine and check valve).

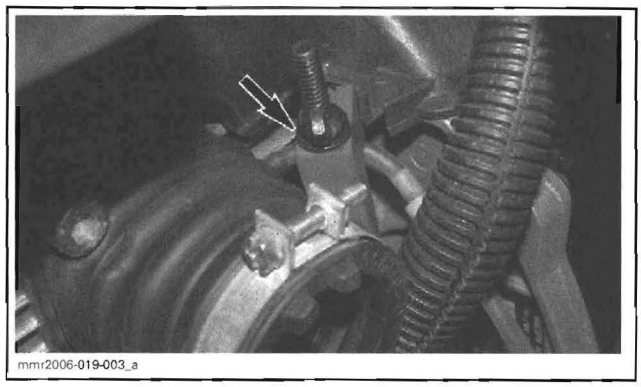
mmr2006-019-003_a

Install an intake plug (P/N 529 011 000) in the rubber boot and secure it with carburetor clamp.

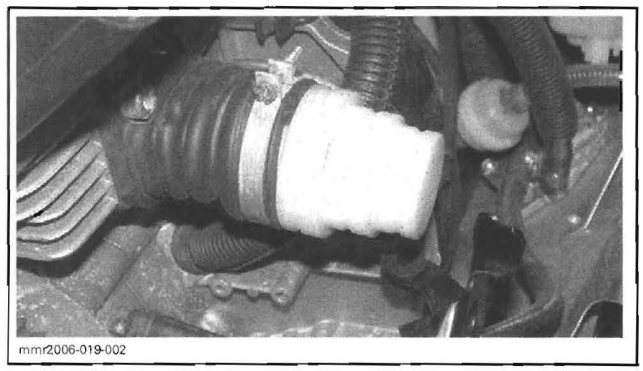
mmr2006-019-002

Using another small hose pincher (P/N 295 000 076), block impulse hose.

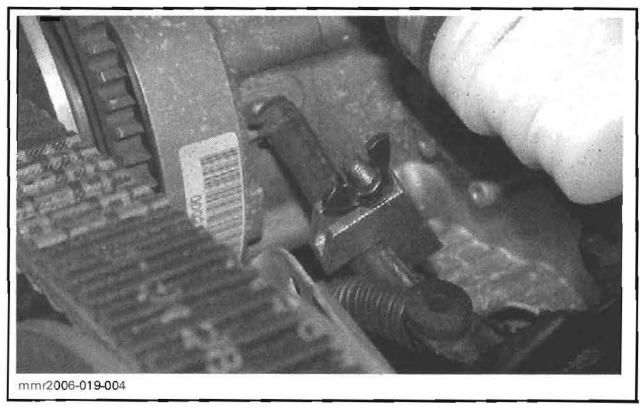
mmr2006-019-004

PROCEDURE

NOTE: A flow chart has been prepared as a visual reference. See last page of this chapter.

Install vacuum/pressure pump (P/N 529 021 800) air pump on exhaust plug.

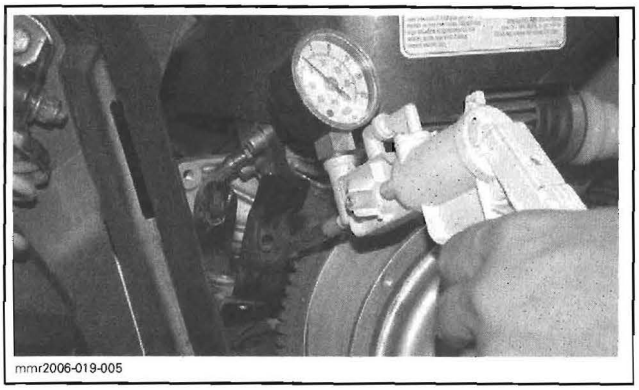
mmr2006-019-005

Activate pump and pressurize engine to 34 kPa (5 PSI). Do not exceed this pressure.

Engine must stand this pressure during 3 minutes.

NOTE: If pressure drops before 3 minutes, check tester kit by spraying a soapy solution on pump cylinder, all plugs and fittings. Bubbles will indicate where leak comes from. If kit does not leak, proceed as follows.

Check the following:
- All jointed surfaces and screw/stud threads of engine:
  - spark plug base, insulator
  - cylinder head
  - cylinder crankcase halves (joint).
- Remove drive pulley then check crankshaft outer seal.
- Remove rewind starter and magneto system then check crankshaft outer seal.

After engine is repaired, always recheck for leakage.

ENGINE LEAK VERIFICATION FLOW CHART

ENGINE LEAK VERIFICATION FLOW CHART

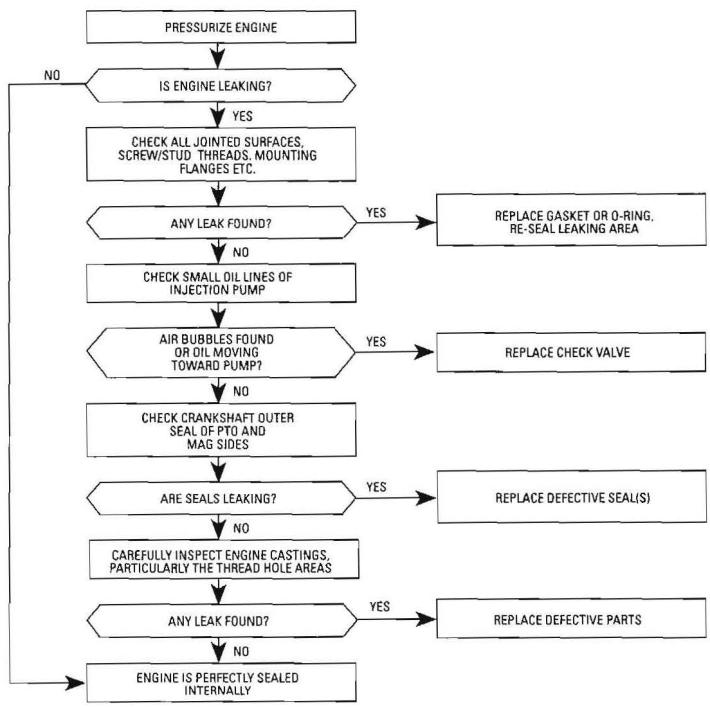

A32C1KU

AIR INTAKE SYSTEM

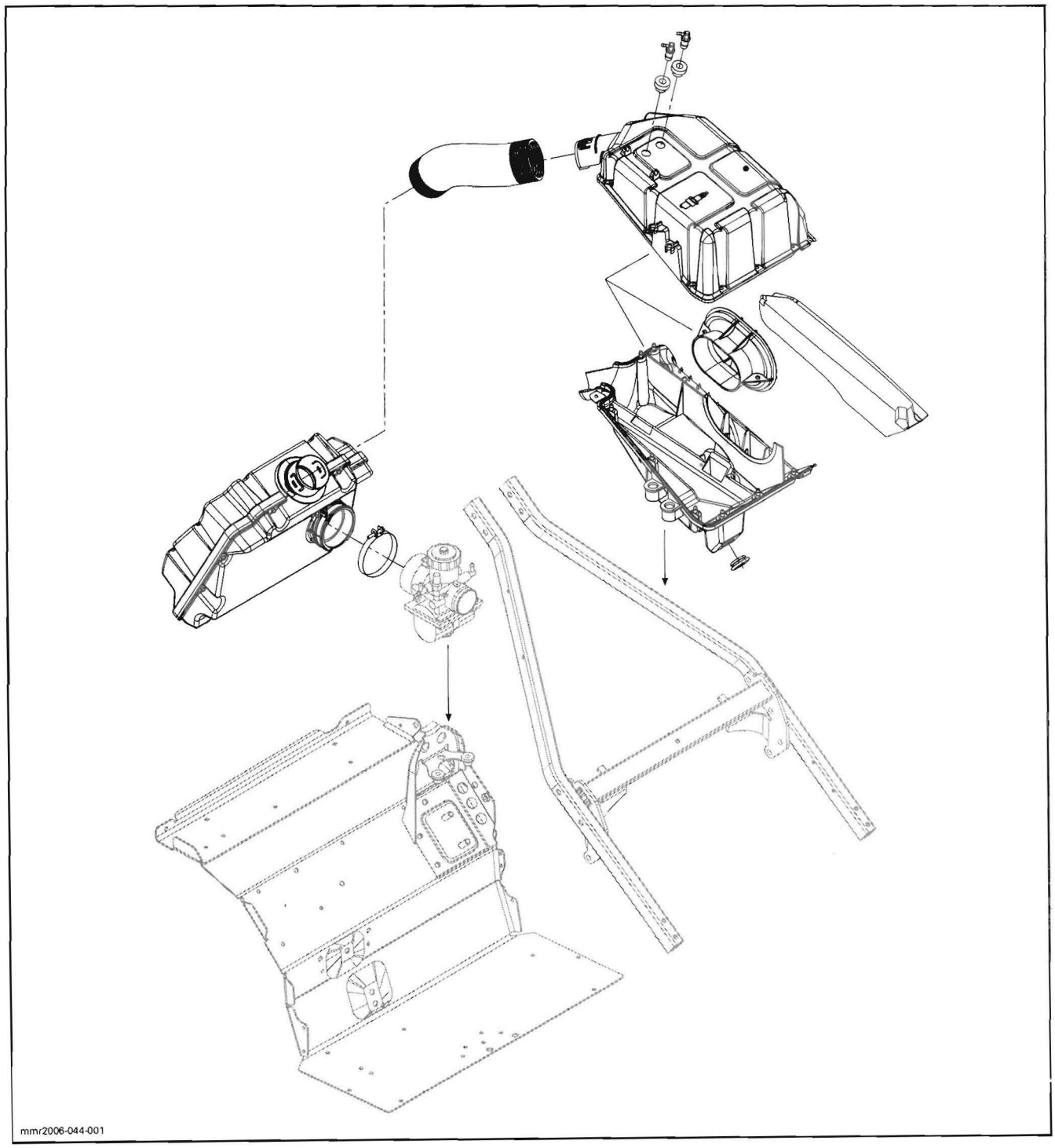

mmr2006-044-001

PROCEDURES

SECONDARY AIR INTAKE SILENCER

Removal

Open LH side panel and remove hood.

Disconnect both tubes on the top of secondary air intake silencer.

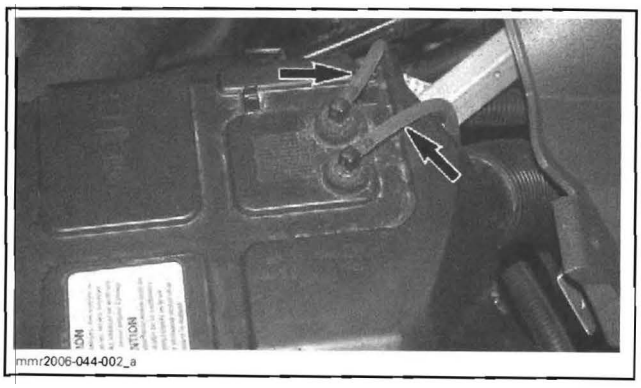

Disconnect air intake silencer tube from the primary air intake silencer.

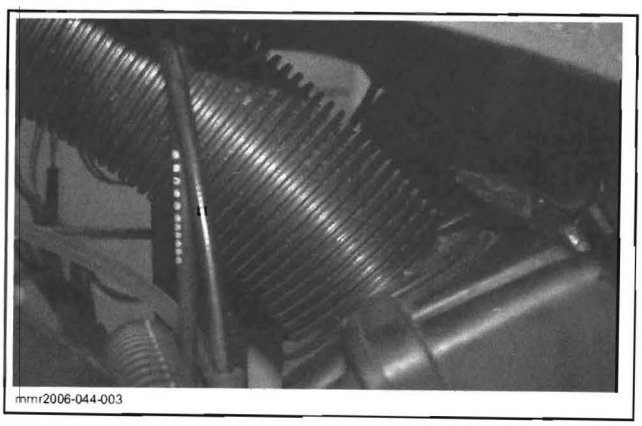

Pull up secondary air intake silencer and remove it from vehicle.

Installation

Insert frame pin into rubber grommet.

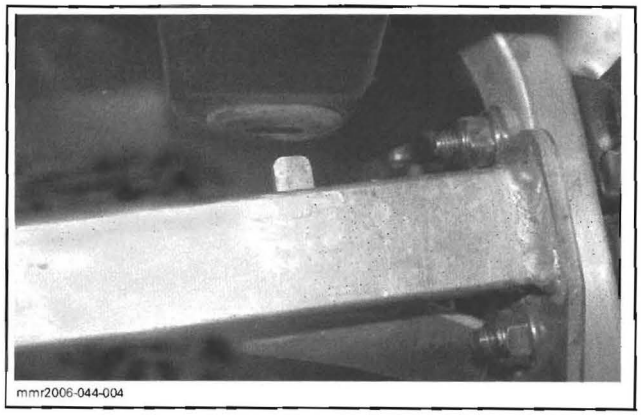

Align locking tabs under air intake silencer with the upper cross member then press the air intake silencer to lock its tabs on arm.

Install air intake silencer tube on primary air intake silencer.

PRIMARY AIR INTAKE SILENCER

Removal

Open LH side panel.

Remove pulley guard then the driven pulley. Refer to *DRIVEN PULLEY*.

Unscrew primary air intake silencer clamp.

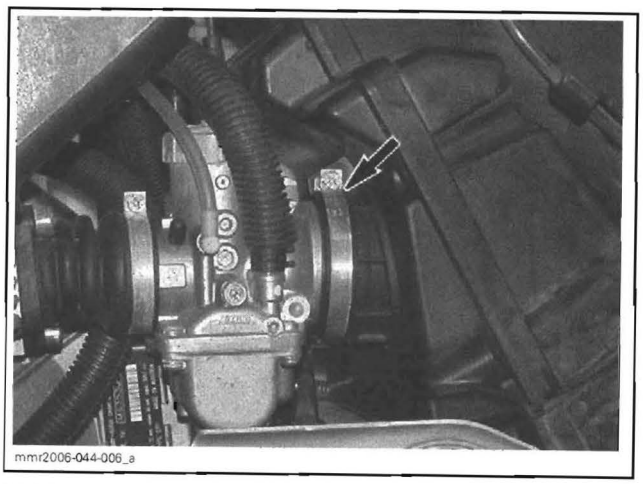

Pull primary air intake silencer from carburetor.

Pull primary air intake silencer out of vehicle.

Installation

The installation is the reverse of the removal procedure. Pay attention to the following.

CAUTION: When installing primary air intake silencer, make sure its adaptor is inserted between carburetor and carburetor support. The clamp must tight carburetor support and adapter to carburetor. See the following illustration.

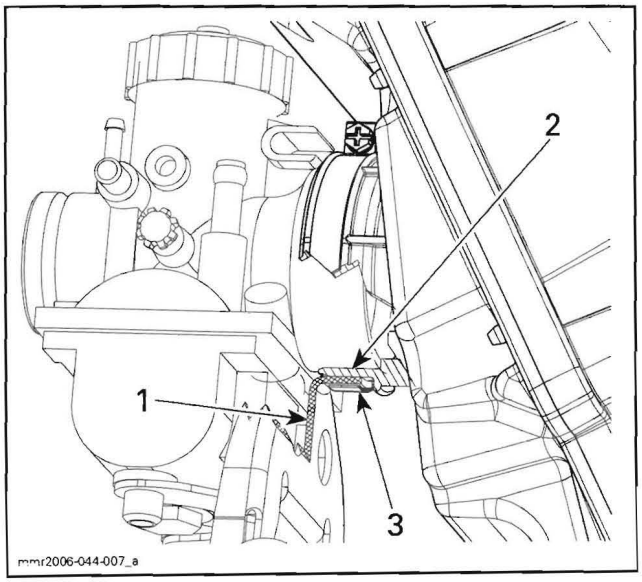

1. *Carburetor support*
2. *Air intake silencer adapter*
3. *Clamp*

EXHAUST SYSTEM

SERVICE TOOLS

Description	Part Number	Page
exhaust spring installer/remover	529 035 401	63–64

SERVICE PRODUCTS

Description	Part Number	Page
Loctite 5920 (RTV high temperature sealant)	293 800 090	63

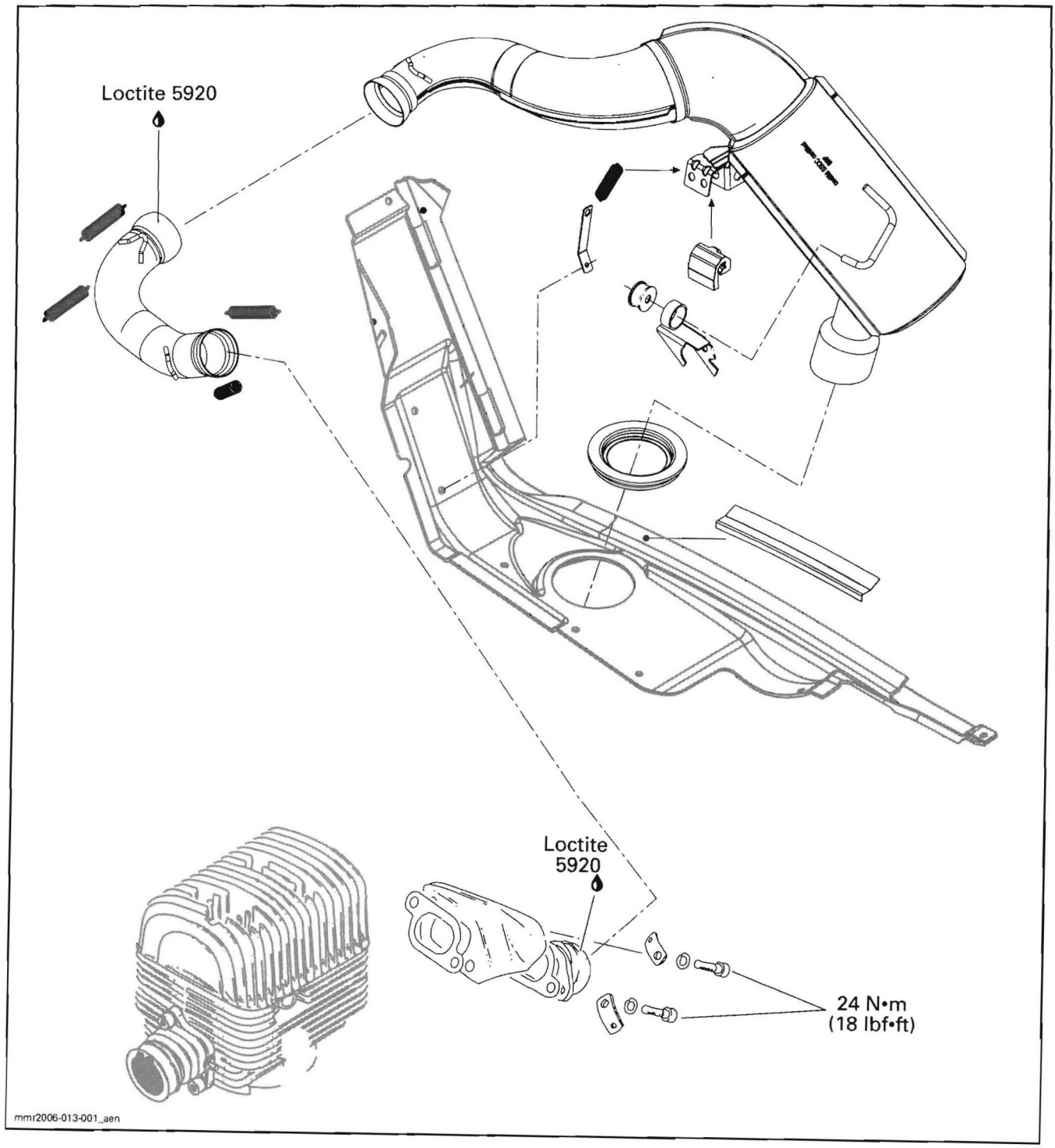
Loctite 5920
Loctite
5920
24 N•m
(18 lbf•ft)
mmr2006-013-001_aen

GENERAL

⚠ WARNING

To avoid potential burns, never touch exhaust system components immediately after the engine has been run because these components are very hot. Let engine and exhaust system cool down before performing any servicing.

During assembly/installation, use the torque value and service products as in the exploded view.

Clean threads before applying a threadlocker. Refer to *SELF-LOCKING FASTENERS* and *LOCTITE APPLICATION* at the beginning of this manual for complete procedure.

⚠ WARNING

Torque wrench tightening specifications must strictly be adhered to.
Locking devices (e.g.: locking tabs, elastic stop nuts, self-locking fasteners, cotter pins, etc.) must be installed or replaced with new ones where specified. If the efficiency of a locking device is impaired, it must be renewed.

PROCEDURES

EXTENSION PIPE

Removal

Remove hood and right side panel.

Using exhaust spring installer/remover (P/N 529 035 401), remove exhaust springs that retain extension pipe to manifold.

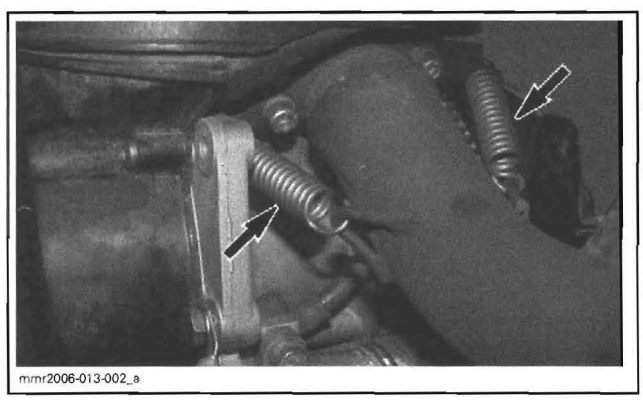

Use the same tool to remove exhaust springs that retain extension pipe to tuned pipe/muffler.

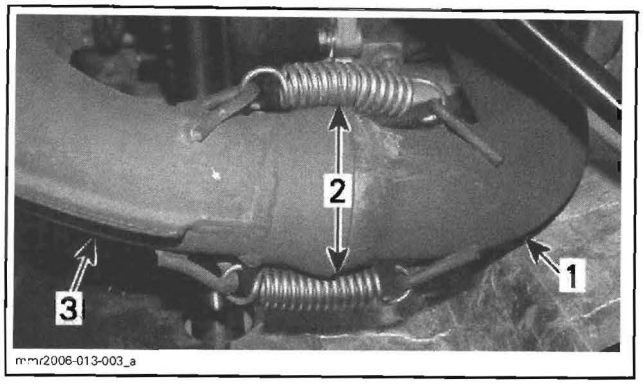

1. *Extension pipe*
2. *Exhaust spring*
3. *Tuned pipe/muffler*

Remove extension pipe from vehicle.

Inspection

Check extension pipe for cracks or damages.

Installation

Apply Loctite 5920 (RTV high temperature sealant) (P/N 293 800 090) on mating surfaces as follows.

NOTE: Clean all sealant residue before applying a new layer.

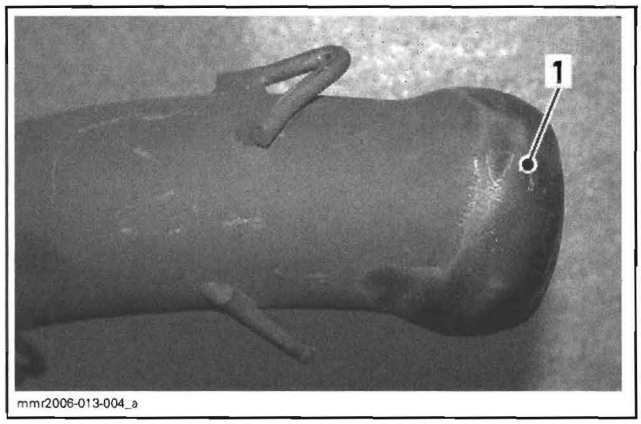

1. *Apply sealant on extension pipe mating surface with tuned pipe/muffler*

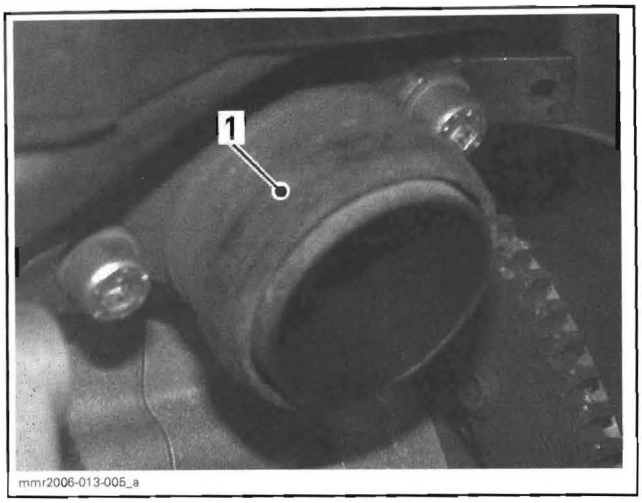

1. Apply sealant on exhaust manifold

Position extension pipe between tuned pipe/muffler and manifold then install all exhaust springs using exhaust spring installer/remover (P/N 529 035 401).

Install all other removed parts.

MANIFOLD

Removal

Remove extension pipe, see above.

Unscrew and remove manifold socket screws.

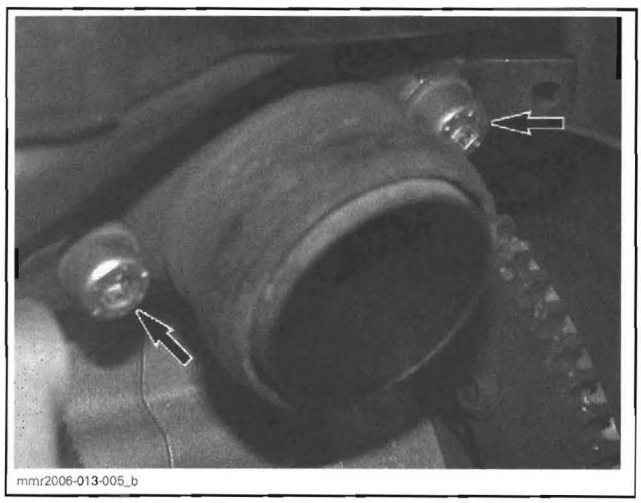

Remove socket screws, lock washers, exhaust spring brackets, manifold, first gasket, air deflector and the second gasket.

Inspection

Check if the manifold is cracked or damaged. Replace if necessary.

Installation

The installation is the reverse of the removal procedure. Pay attention to the following.

Torque socket screws to 24 N•m (18 lbf•ft).

Install extension pipe. Refer to *EXTENSION PIPE* for procedure.

TUNED PIPE/MUFFLER

Removal

Remove extension pipe.

Remove exhaust spring retaining the muffler to frame. Use exhaust spring installer/remover (P/N 529 035 401).

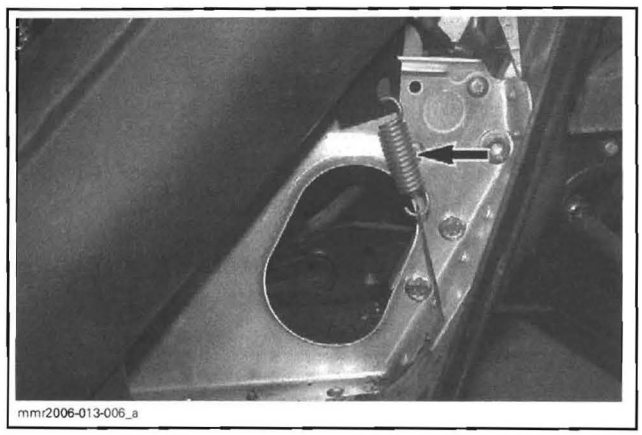

Rotate muffler by lifting the front section and disengage the retaining rod from the rubber mount. Then lift muffler and remove it from vehicle.

Inspection

Check the muffler for cracks or other damages.

Installation

For installation, reverse the removal procedure.

REWIND STARTER

SERVICE TOOLS

Description	Part Number	Page
small hose pincher	295 000 076	67

SERVICE PRODUCTS

Description	Part Number	Page
Loctite 243 (blue)	293 800 060	71
Molykote PG 54	420 899 763	69–71

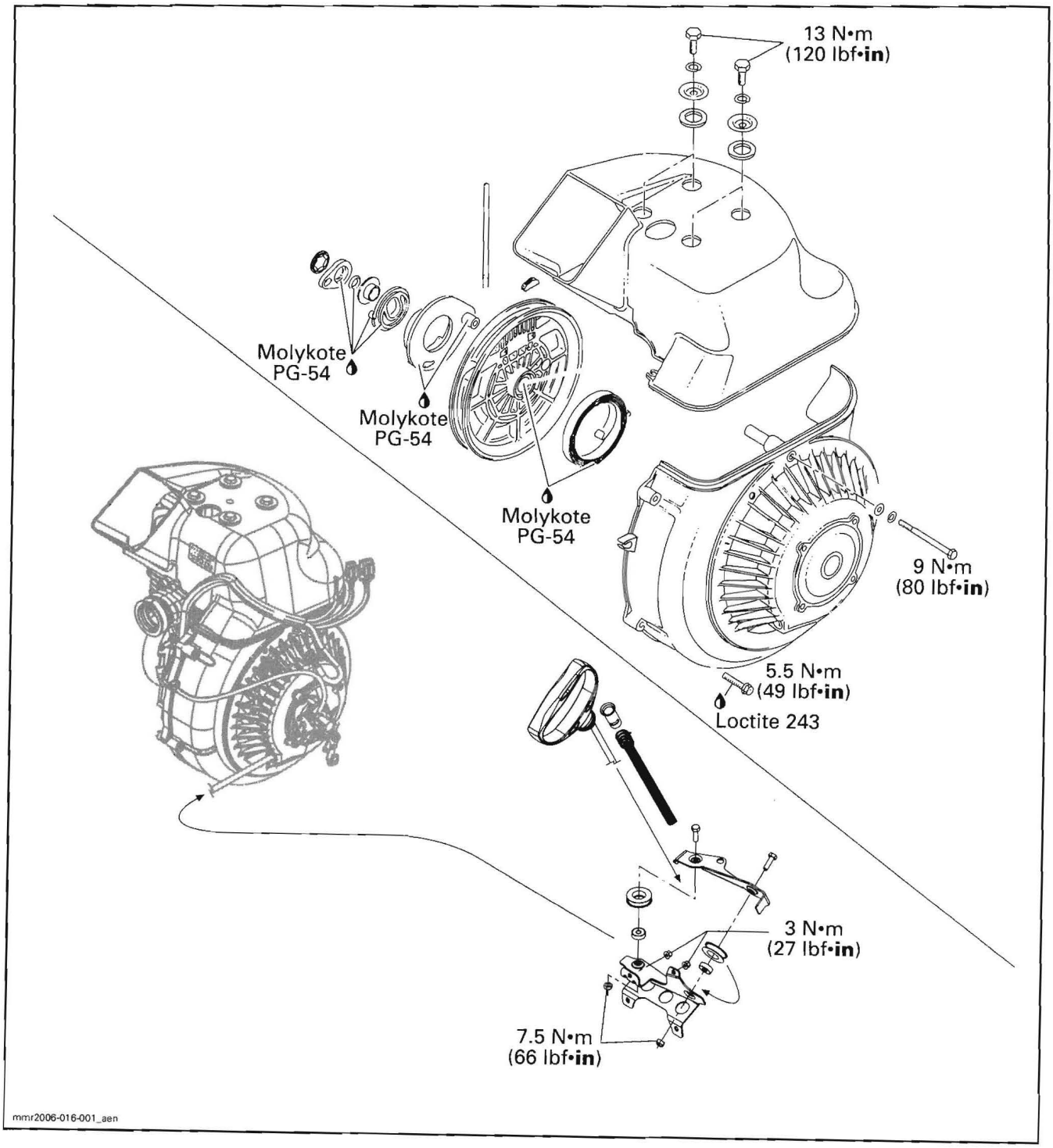
13 N•m
(120 lbf•in)
Molykote
PG-54
Molykote
PG-54
Molykote
PG-54
9 N•m
(80 lbf•in)
5.5 N•m
(49 lbf•in)
Loctite 243
3 N•m
(27 lbf•in)
7.5 N•m
(66 lbf•in)
mmr2006-016-001_aen

GENERAL

NOTE: Due to dust accumulation, rewind starter must be periodically cleaned, inspected and relubricated.

CAUTION: It is of the utmost importance that the rewind starter spring be lubricated periodically using specific lubricant. Otherwise, rewind starter component life will be shortened and/or rewind starter will not operate properly under very cold temperatures.

Check if rope is fraying, replace if so.

When pulling starter handle, mechanism must engage within 30 cm (1 ft) of rope pulled. If not, disassemble rewind starter, clean and check for damaged plastic parts. Replace as required, lubricate, reassemble and recheck. Always replace O-ring in lock lever every time rewind starter is disassemble.

When releasing starter handle, it must return to its stopper and stay against it. If not, check for proper spring preload or damages. Readjust or replace as required.

When pulling starter handle 10 times in a row, it must return freely. If not, check for damaged parts or lack of lubrication. Replace parts or lubricate accordingly.

PROCEDURES

STARTER HANDLE

Removal

Pull rope for 50 cm (20 in) approximately. Using a small hose pincher (P/N 295 000 076), lock rope near rewind starter.

Using a small screwdriver, extract rope knot from stater handle. Cut rope close to knot.

Installation

Prior to installing starter handle on rope, it is first necessary to fuse the rope end with a lit match. Pass rope through starter handle and tie a knot in the rope end. Fuse the knot with a lit match then insert rope end down and pull the starter handle over the knot.

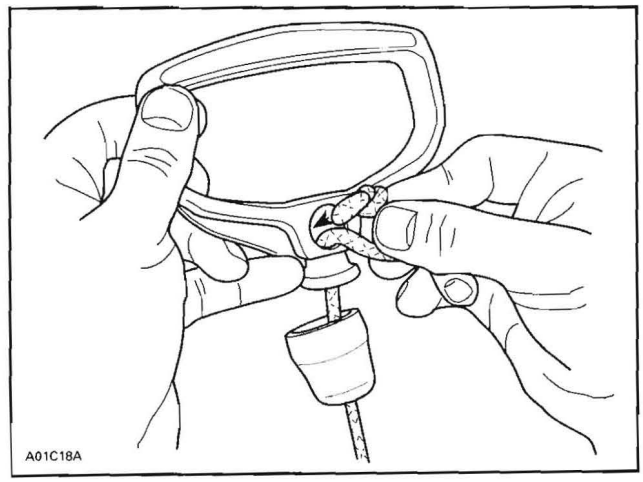

TYPICAL

IDLER

Inspection

Check if idlers turn freely and smoothly. Replace idlers if necessary.

Removal

Remove oil pump from rewind starter.

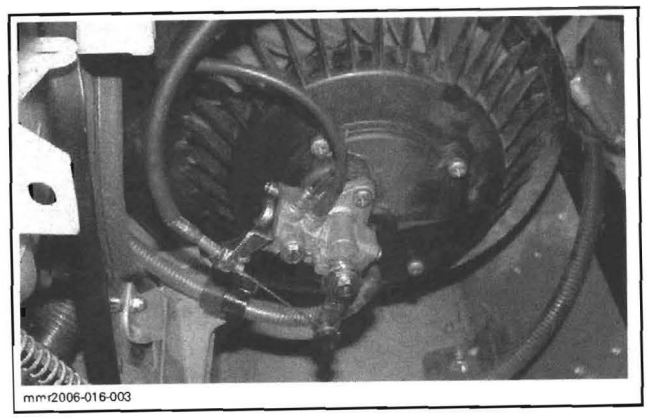

Remove rope from idlers.

Remove nuts that retain idler bracket to frame.

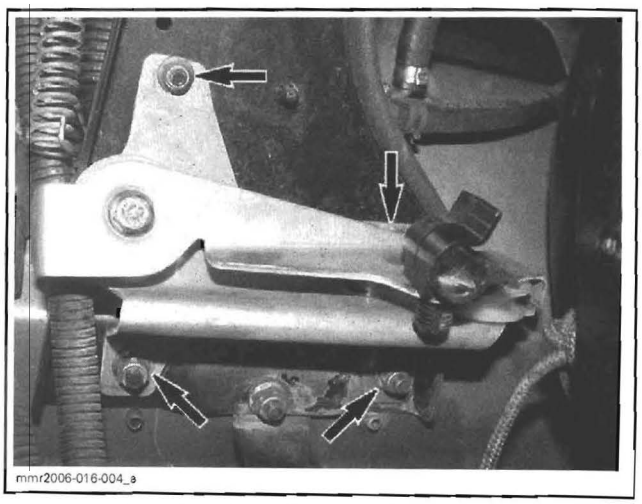

Remove idler bracket from vehicle.

Unscrew and remove idler screw.

Remove idler from its bracket.

Installation

The installation is the reverse of the removal procedure.

Torque M5 nuts to 3 N•m (27 lbf•**in**) and M6 nuts to 7.5 N•m (66 lbf•**in**).

NOTE: Use the following illustration to position cord correctly in idler bracket.

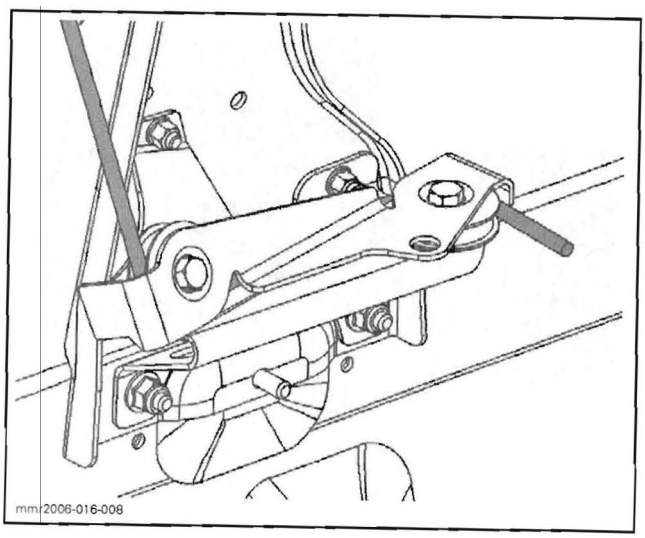

REWIND STARTER

Removal

Remove starter handle.

Remove oil pump from rewind starter.

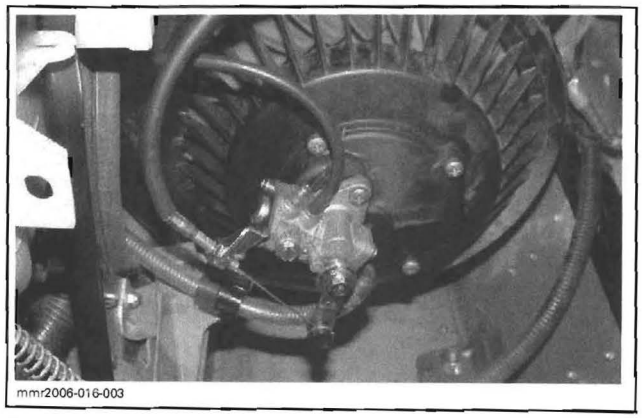

Remove oil pump shaft.

Unscrew ground wire from rewind starter.

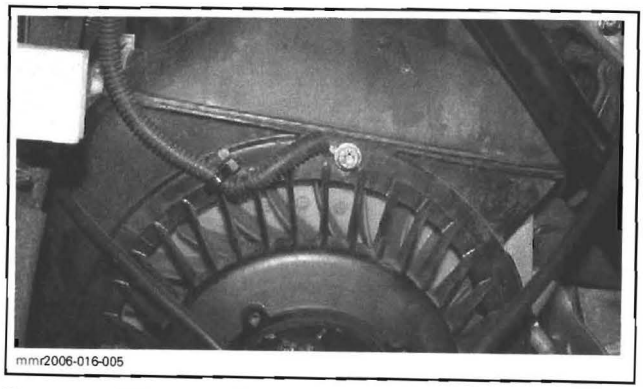

Remove idler bracket.

Remove secondary air intake silencer to reach two (2) rewind starter screws.

Remove all screws retaining rewind starter.

Remove bolts retaining the engine air deflector and lift it.

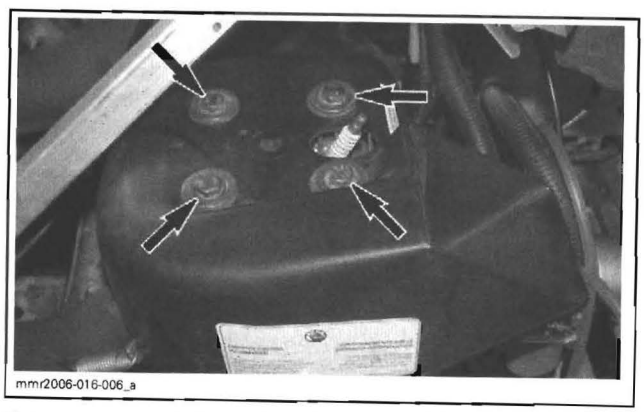

Remove rewind starter from vehicle.

Inspection

When rewind starter is removed, check starting pulley on cooling fan for wear or damages. Refer to *MAGNETO SYSTEM* if its replacement is necessary.

Disassembly

Undo knot and let sheave get free to release spring preload then remove rewind starter.

Cut push nut retaining lock lever and discard.

Remove lock lever, O-ring, collar sleeve, pawl lock and pawl.

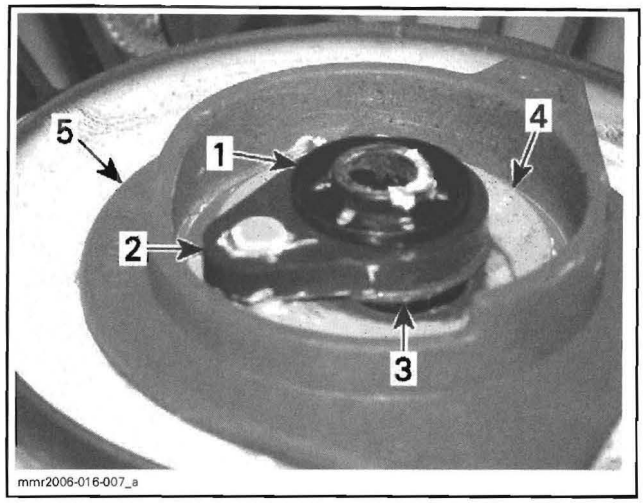

1. *Push nut*
2. *Lock lever*
3. *Collar sleeve*
4. *Pawl lock*
5. *Pawl*

Remove sheave from rewind starter. Hold spring with a screwdriver.

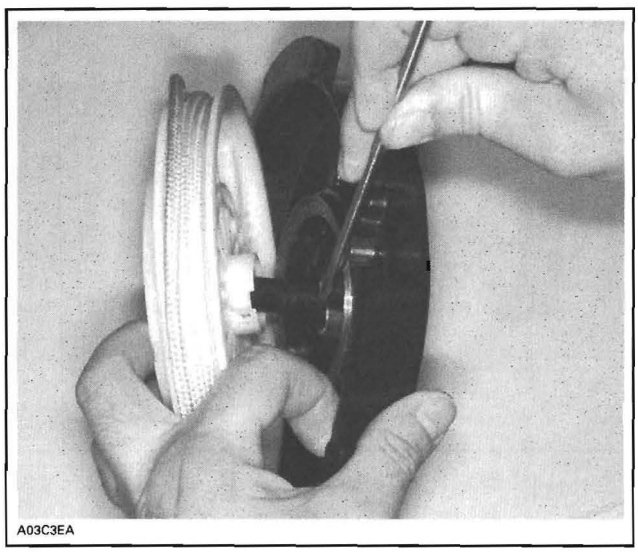

Using a long thin rod, push the key to disengage key then pull out rope.

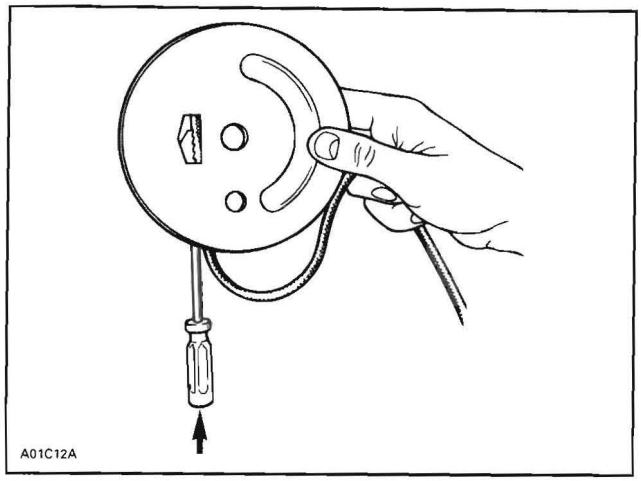

PUSH THE ROD IN TO RELEASE KEY

Assembly

At assembly, position spring outer end into spring guide notch then wind the spring counterclockwise into guide.

⚠ WARNING

Since the spring is tightly wound inside the guide it may fly out when rewind is handled. Always handle with care.

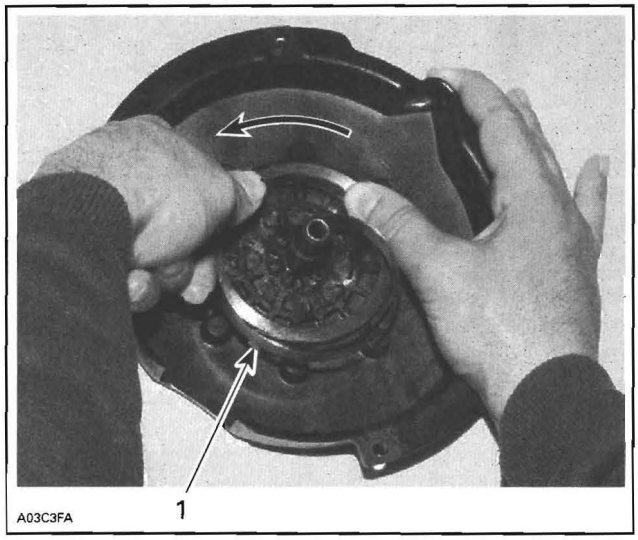

1. *Outer end into guide notch*

Lubricate spring and 1 cm (1/2 in) wide on bottom of rewind starter with Molykote PG 54 (P/N 420 899 763).

CAUTION: It is of the utmost importance that the rewind starter spring be lubricated periodically using Molykote PG 54 (P/N 420 899 763). Otherwise, rewind starter component life will be shortened and/or rewind starter will not operate properly under very cold temperatures.

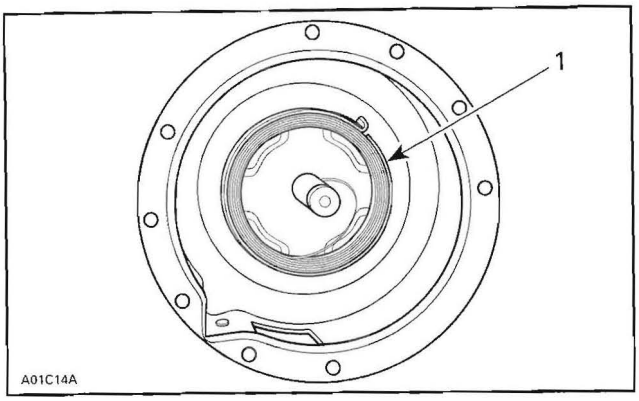

TYPICAL
1. Molykote PG 54 inside spring guide

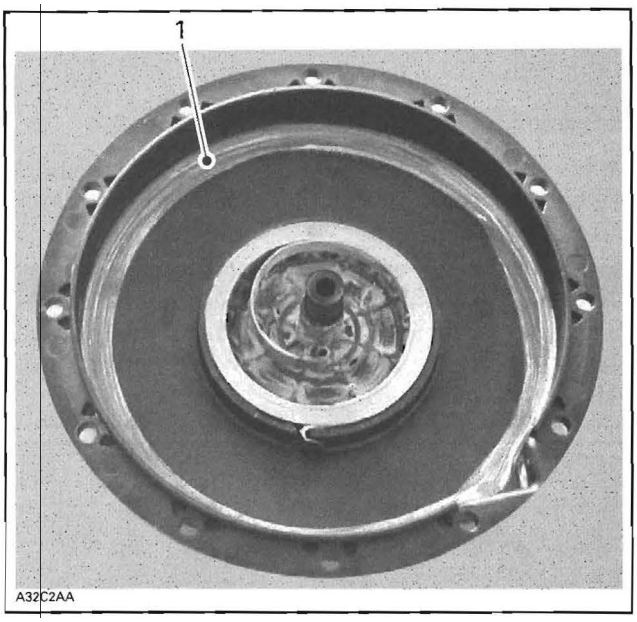

TYPICAL
1. Molykote PG 54 applied 1 cm (1/2 in) wide on bottom of rewind starter

CAUTION: The use of standard multipurpose grease could result in rewind starter malfunction.

To install rope, insert rope into sheave orifice and lock it with the key as illustrated.

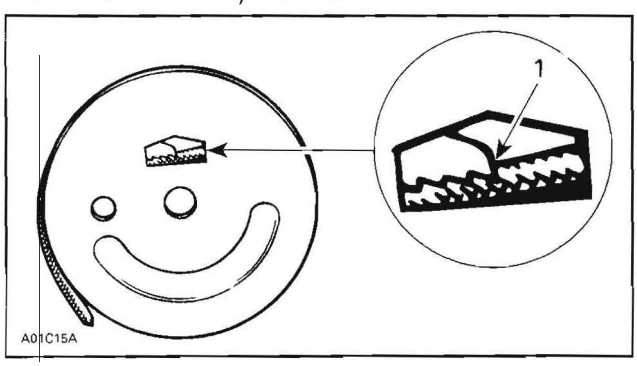

TYPICAL
1. Push to lock

Lubricate rewind starter post with Molykote PG 54 (P/N 420 899 763). Install sheave.

Wind rope on sheave and place rope sheave into rewind starter making sure that the sheave hub notch engages in the rewind spring hook.

Rotate the sheave counterclockwise until rope end is accessible through rope exit hole. This will give 1/2 turn of preload.

Pull the rope out of the rewind starter and temporarily make a knot to hold it.

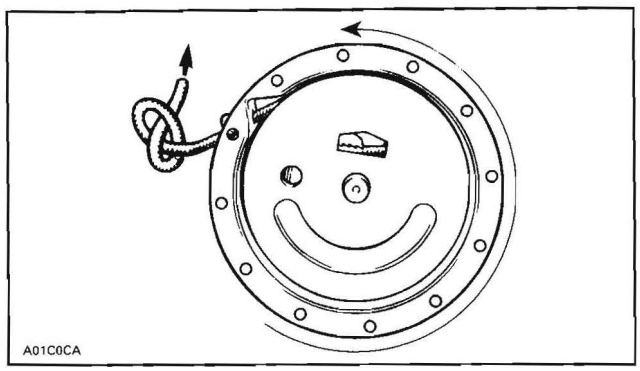

TYPICAL

Lubricate pawl with Molykote PG 54 (P/N 420 899 763) then install over rope sheave.

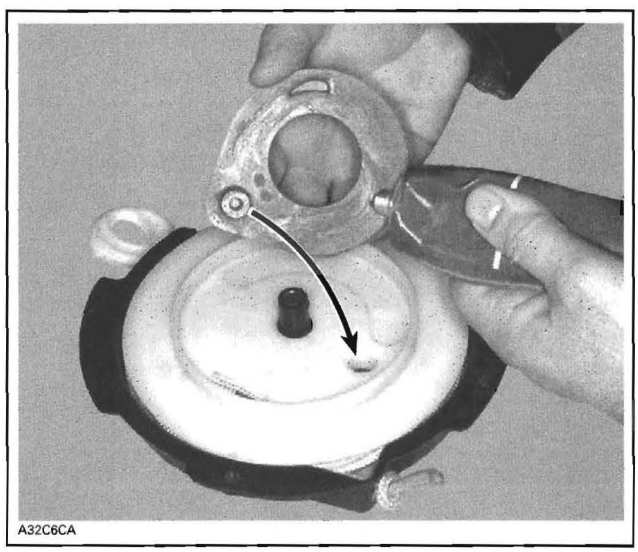

Lubricate pawl lock with Molykote PG 54 (P/N 420 899 763). Install over pawl.

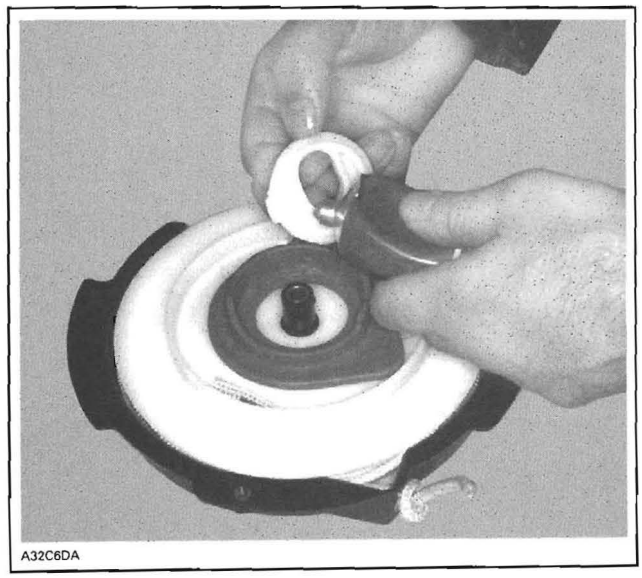

Install collar sleeve with its collar first. Lubricate the new O-ring and lock lever with Molykote PG 54 (P/N 420 899 763). Install over pawl lock.

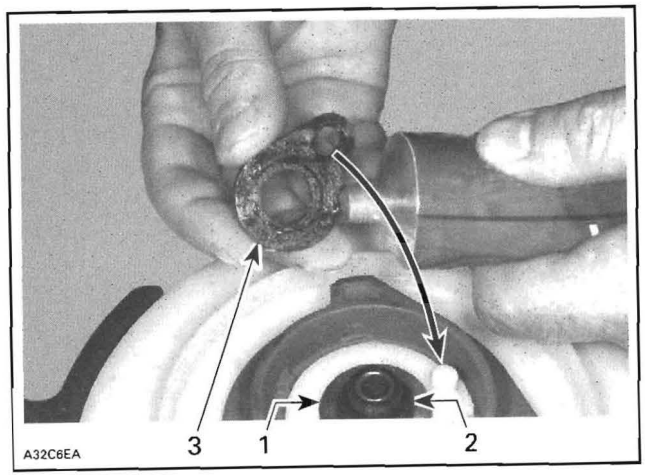

1. *Collar sleeve*
2. *O-ring*
3. *Lock lever*

Position a new push nut.

Installation

Install on engine.

Apply Loctite 243 (blue) (P/N 293 800 060) on threads of all M6 x 35 screws. The M6 x 75 screw retaining wire ground on rewind starter must be freed of threadlocker.

Thread rope through both idlers then through rope guide.

Install starter handle.

ROPE

Replacement

Remove rewind starter from engine.

Completely pull out rope. Hold rewind starter in a vise.

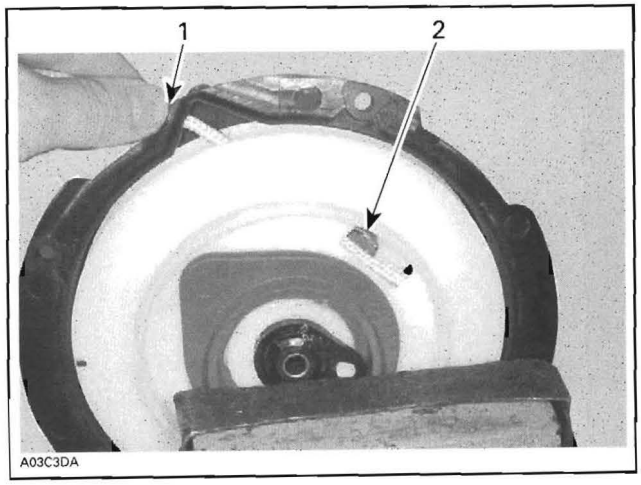

1. *Rope exit hole*
2. *Key to be removed*

With a long thin pin punch inserted through rope exit hole, push key. Remove key and rope. Install a new rope and lock it using key.

NOTE: When rope is completely pulled out, spring preload is 4-1/2 turns.

OIL INJECTION SYSTEM

SERVICE TOOLS

Description	Part Number	Page
gear holder	420 876 695	81
hose pincher	295 000 076	76
leak testing kit	529 033 100	76

SERVICE PRODUCTS

Description	Part Number	Page
Molykote 111	413 707 000	81

OIL RESERVOIR AND FILTER

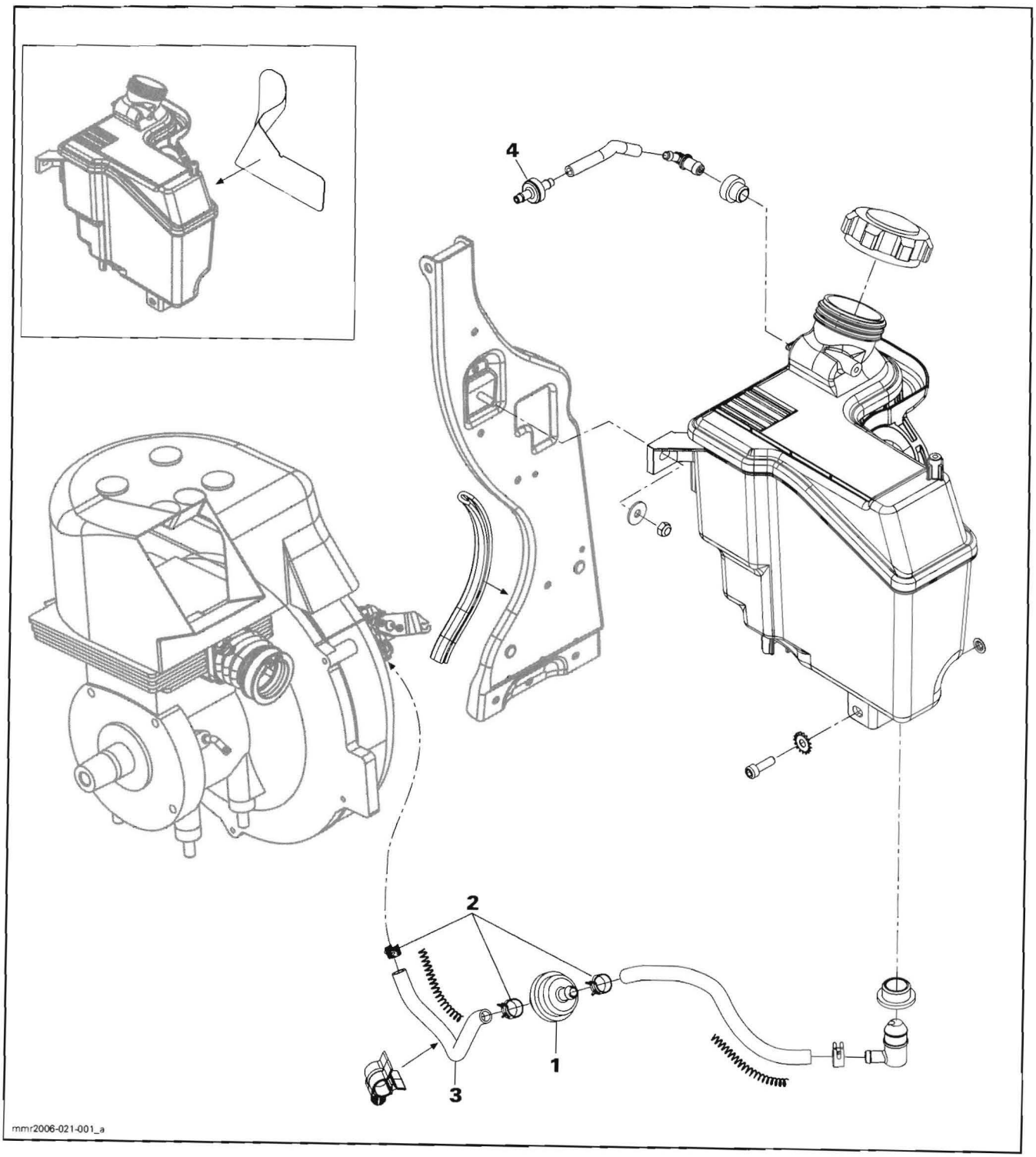

OIL INJECTION PUMP

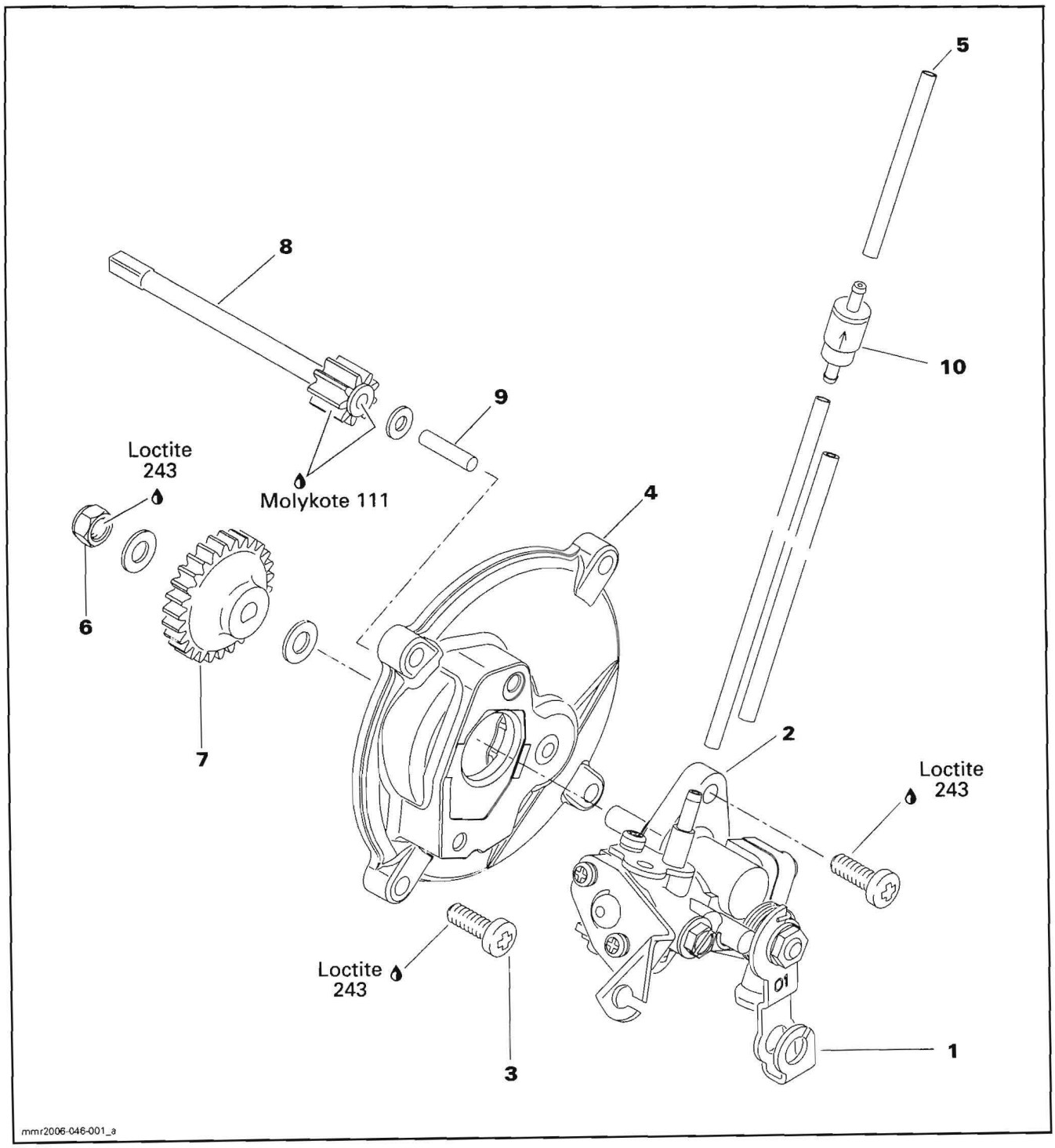

GENERAL

During assembly/installation, use the torque values and service products as in the exploded view.

Clean threads before applying a threadlocker. Refer to *SELF-LOCKING FASTENERS* and *LOCTITE APPLICATION* at the beginning of this manual for complete procedure.

⚠ WARNING

Torque wrench tightening specifications must strictly be adhered to.
Locking devices (e.g.: locking tabs, elastic stop nuts, self-locking fasteners, etc.) must be installed or replaced with new ones where specified. If the efficiency of a locking device is impaired, it must be renewed.

⚠ WARNING

Wipe off any oil spills. Oil is highly flammable.

Oil Type

ENGINE	OIL TYPE
277	XP-S™ synthetic 2-stroke oil or XP-S™ 2-stroke synthetic blend or XP-S™ mineral injection oil (1) (2)

(1) If XP-S™ mineral injection oil is not available, API TC high-quality low ash two-stroke injection oil may be used.

(2) XP-S™ synthetic 2-stroke, XP-S™ 2-stroke synthetic blend and XP-S™ mineral injection oil are compatible, they can be mixed together.

INSPECTION

OIL SYSTEM LEAK TEST

The following test will indicate any leak from oil injection system.

Fill up oil reservoir.

Install special cap of leak testing kit (P/N 529 033 100) on oil reservoir .

Install a hose pincher (P/N 295 000 076) on outlet hose.

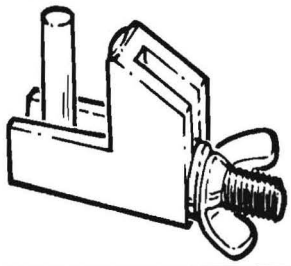

295 000 076

Connect leak testing kit pump to special cap.

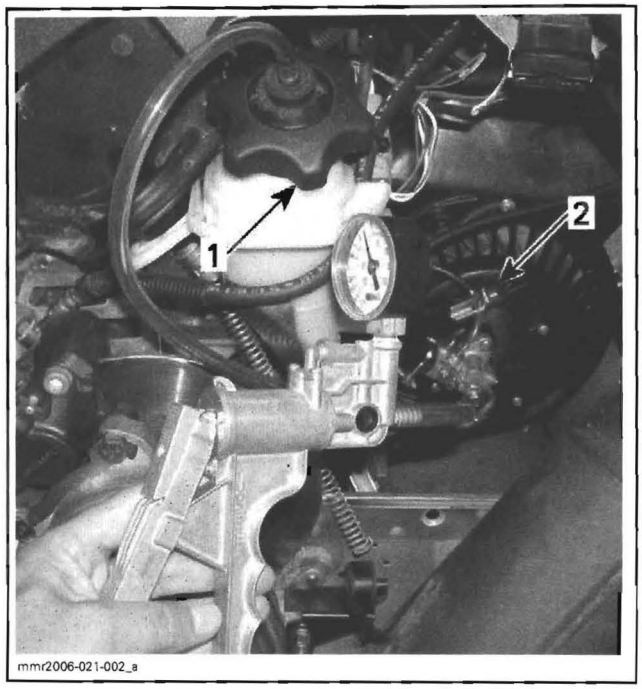

1. Special cap on reservoir
2. Hose pincher on outlet hose

Pressurize oil system as follows.

PRESSURE	TIME TO HOLD PRESSURE
21 kPa (3 PSI)	3 minutes

If pressure drops, locate leak(s) and repair/replace leaking component(s).

If air leaks through check valve **no. 4**, replace it.

Check Valve Inspection

Check valve **no. 4** allows air to go in reservoir and prevent oil to flow out.

Remove oil cap from reservoir. Connect leak testing kit pump to white end of check valve and activate pump. Air must flow towards reservoir. Otherwise, replace check valve.

CAUTION: If check valve does not allow air to enter, serious engine damage will occur.

When replacing/installing check valve, insert its black side into vent line.

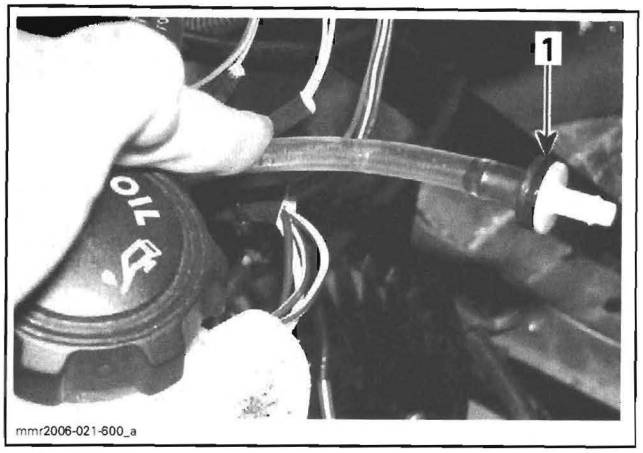

1. Black side here

PROCEDURES

NOTE: The following procedures can be done without removing the engine from chassis.

OIL RESERVOIR

Reservoir Removal

Remove oil pump from rewind starter.

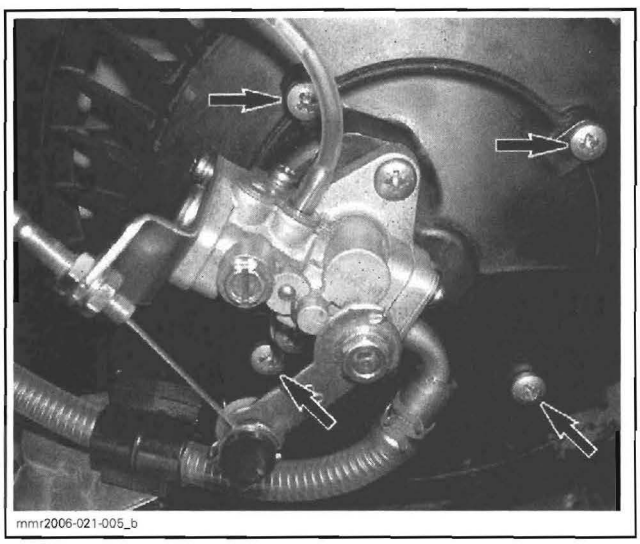

Remove retaining screws on support of rewind starter pulleys and on front plate.

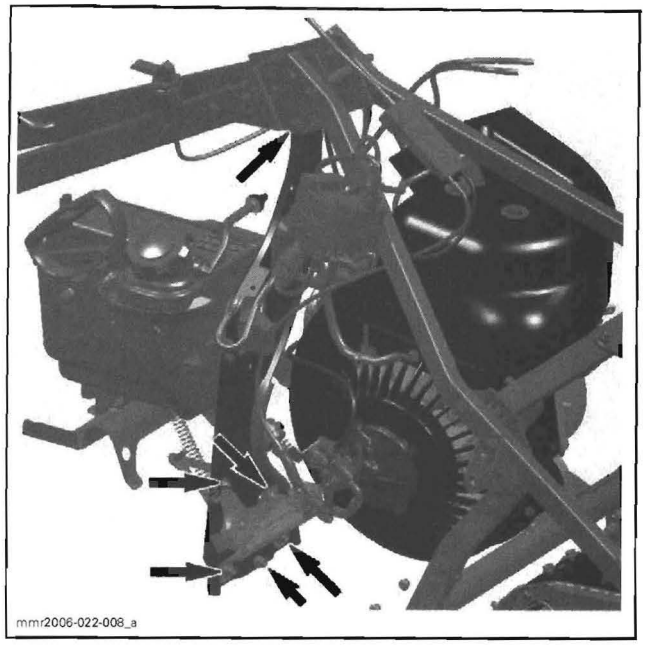

Remove air intake silencer. Refer to *AIR INTAKE SYSTEM*.

Remove oil reservoir retaining nut.

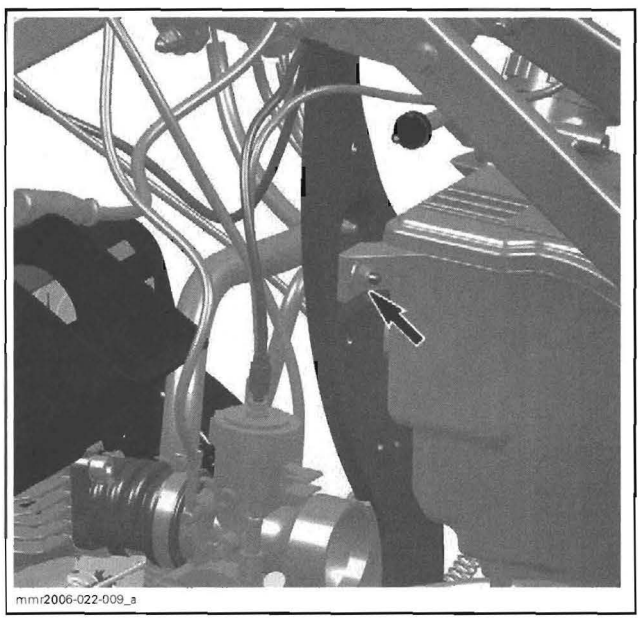

Remove oil reservoir retaining screw.

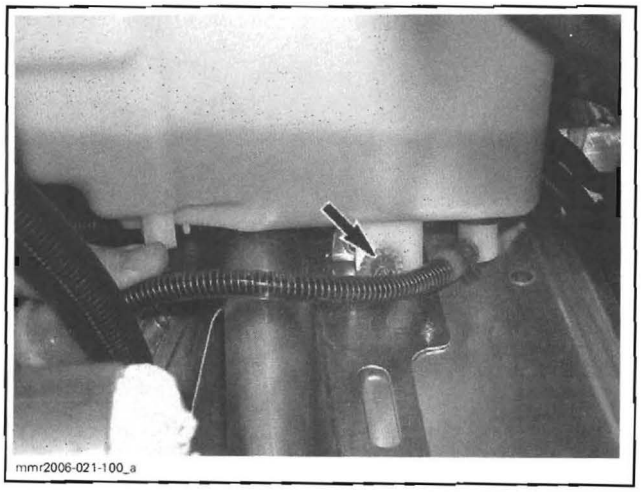

Disconnect wiring harnesses/hoses from front plate.

NOTE: Locking ties with an anchor tree can be detached to be then reused. Unlock as shown.

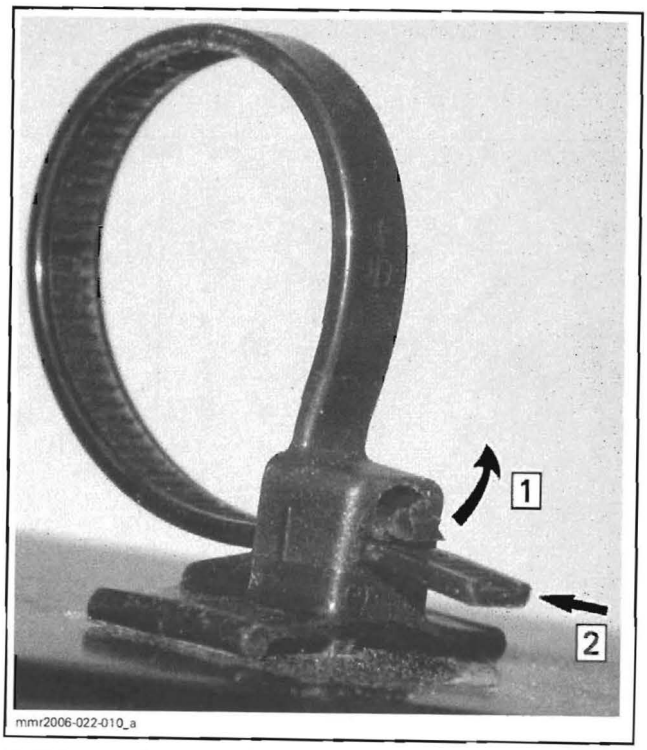

Pull front plate out beginning with bottom.

Remove rewind handle support screws.

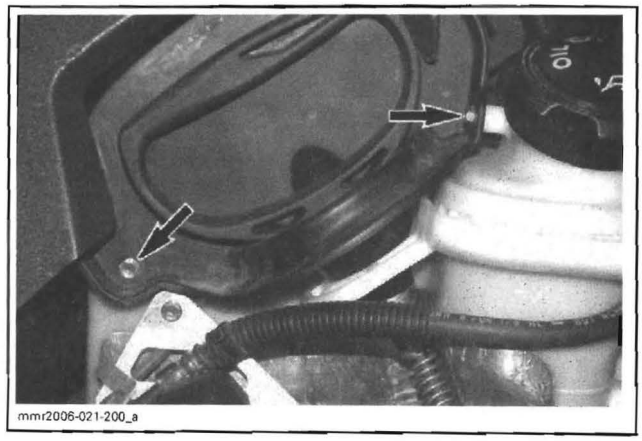

Detach rope from rewind handle and make a knot in rope end to prevent it falling into rewind starter. Refer to *REWIND STARTER*.

Remove circlip **no. 2** then unplug hose from pump. Plug end of hose to prevent oil spillage.

CAUTION: Do not use a hose pincher on inlet hose. This would damage the spring inside hose.

Pull reservoir out.

Reservoir Installation

Installation is the reverse of removal. However, pay attention to the following.

Ensure spring clip is tight on oil supply line.

Bleed oil pump. See procedure in this section.

OIL FILTER

Filter Removal

Remove clips **no. 2** each side of filter then unplug filter. Plug end of inlet hose **no. 3** to prevent oil spillage.

CAUTION: Do not use a hose pincher on inlet hose. This would damage the spring inside hose.

Filter Installation

Install new filter paying attention to place arrow on filter towards pump.

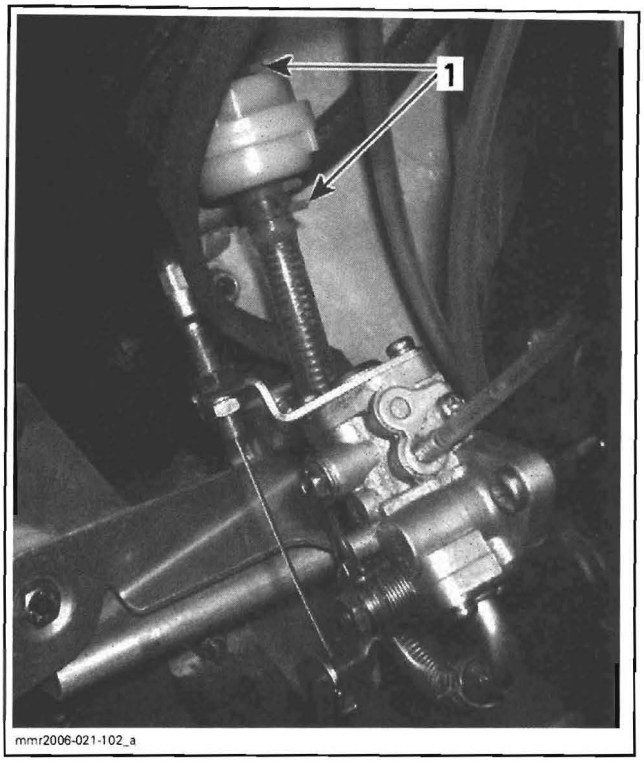

1. Clips

Bleed oil pump. See procedure in this section.

OIL PUMP

Oil Pump Identification

Different engines need different pumps. See identification on lever **no. 1**.

CAUTION: Always mount proper pump on engine.

ENGINE TYPE	OIL PUMP IDENTIFICATION
277	02

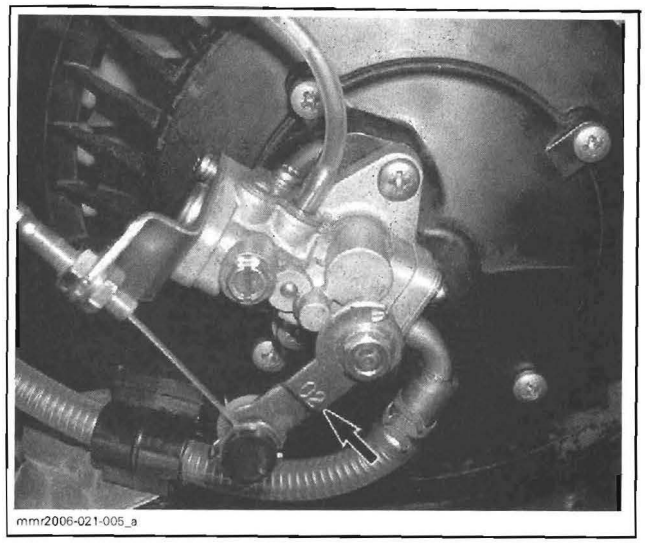

NOTE: The following procedures can be done without removing the engine from chassis.

Oil Pump Verification

NOTE: Since pump is a piston type, it works when engine rotates in both forward and reverse.

On Vehicle

NOTE: Main oil line must be full of oil. See *OIL PUMP BLEEDING*.

Lift rear of vehicle and support with a mechanical stand. Disconnect small oil line **no. 5** from pump.

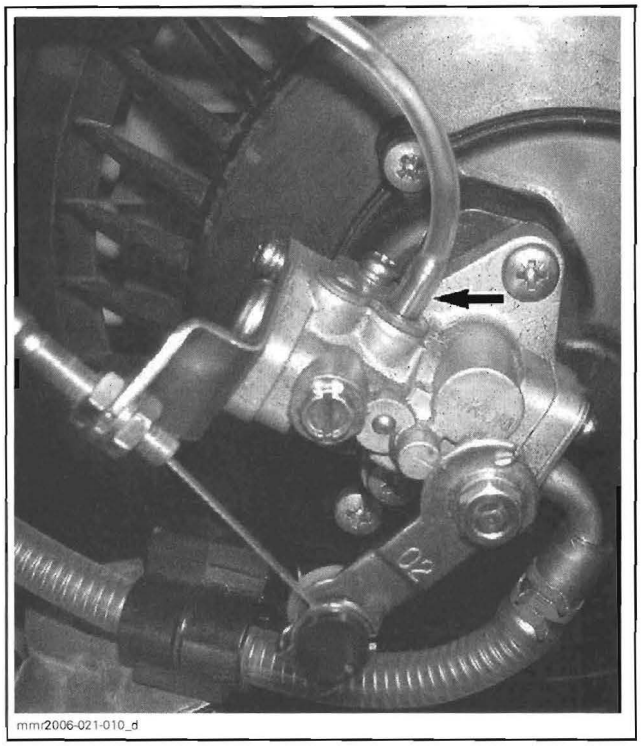

Start engine and stop it as soon as it fires.

Check that oil in small oil line has been sucked up (this will be indicated by a clear section of small oil line). Repeat the procedure until this condition is attained.

Reconnect small oil line. Start engine and run at idle while holding the pump lever in fully open position. Oil column must advance into small oil line.

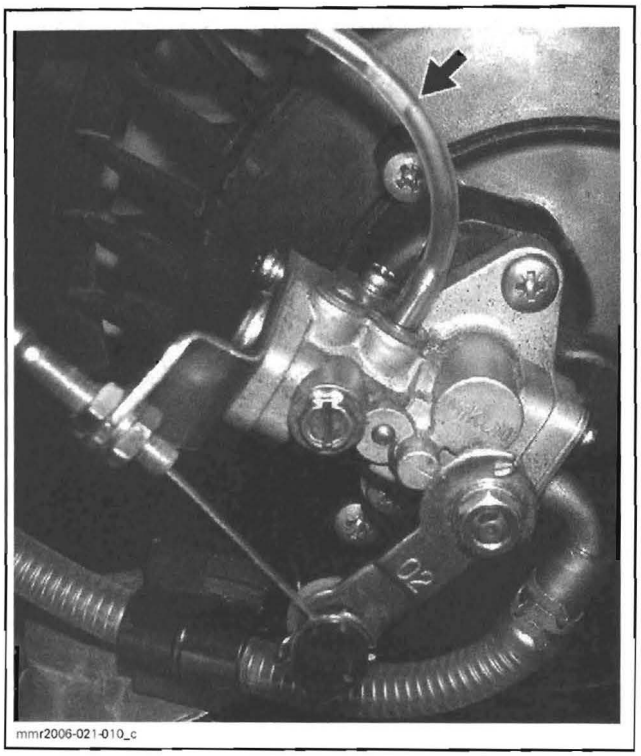

If not, remove pump assembly and check the pump gear and drive shaft for defects, replace as necessary. Test pump as describes below.

NOTE: Through normal use, oil level must not drop in small oil line. If oil drops or moves back and forth, verify check valve **no. 10** operation before replacing pump. Replace check valve as necessary. At installation, ensure to orient check valve according to oil flow.



Test Bench

Connect a hose filled with injection oil to supply line fitting. Insert other hose end in an injection oil container. Using a clockwise rotating drill, rotate pump shaft. Oil must drip from outlet fitting while holding lever in a fully open position. If not replace pump.

Oil Pump Removal

NOTE: Before removing the injection oil pump **no. 2**, check its operation.

CAUTION: Never try to pull out oil pump without removing mounting flange no. 4. Damage to pump components would occur.

Remove screws **no. 3**.

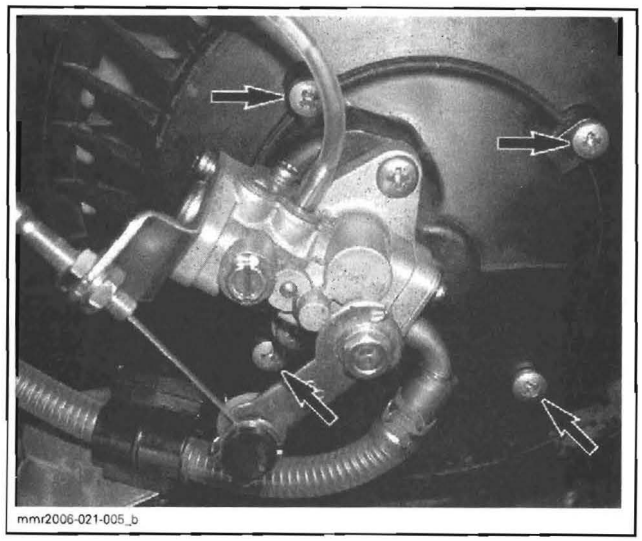

Slightly pull mounting flange. Retain small gear **no. 8** to avoid it falls down then, pull it out.

Remove circlip **no. 2** then unplug hose from pump. Plug end of hose to prevent oil spillage.

CAUTION: Do not use a hose pincher on inlet hose. This would damage the spring inside hose.

Unplug outlet hose from pump.

Remove circlip then pull out throttle cable.

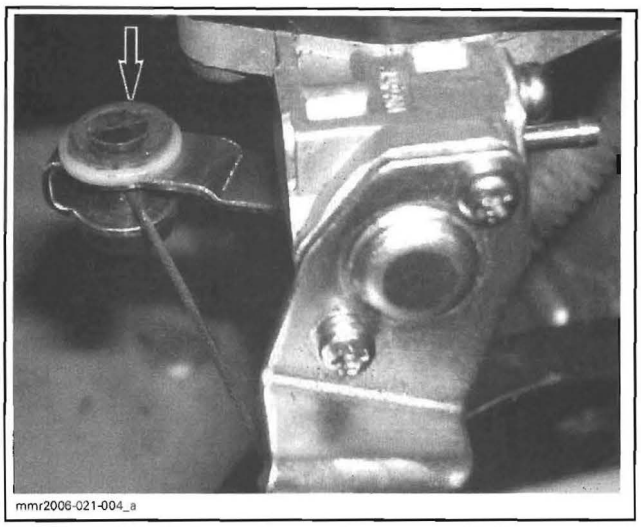
mmr2006-021-004_a

Withdraw pump.

Oil Pump Cleaning

Clean all metal components in a non-ferrous metal cleaner.

Oil Pump Disassembly

NOTE: Some oil pump components are not available as single parts.

First extract the needle roller with pliers.

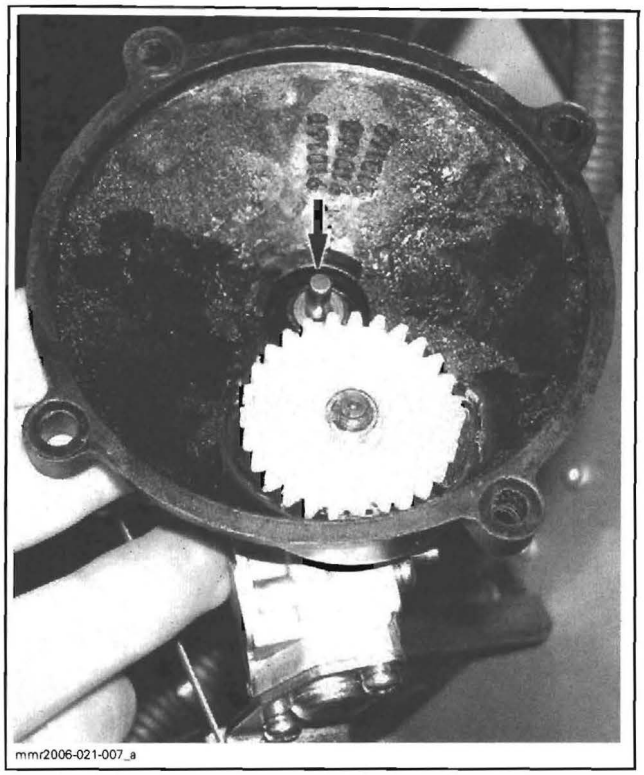
mmr2006-021-007_a

Lock gear in place using gear holder (P/N 420 876 695).

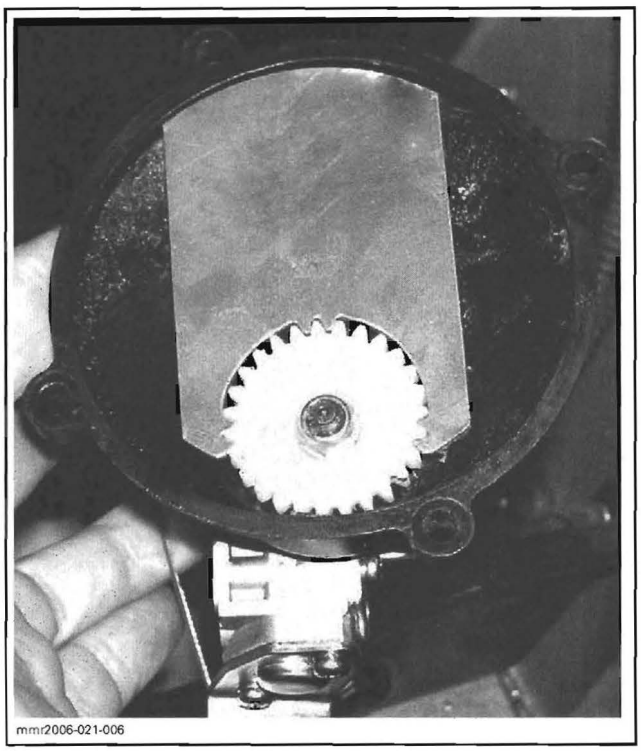
mmr2006-021-006

Oil Pump Assembly

For assembly, reverse the disassembly procedure. However, pay attention to the following.

At gear **no. 7** assembly, apply a light coat of grease Molykote 111 (P/N 413 707 000) on gear teeth.

The needle roller must be engaged as deep as possible in the pump mounting flange.

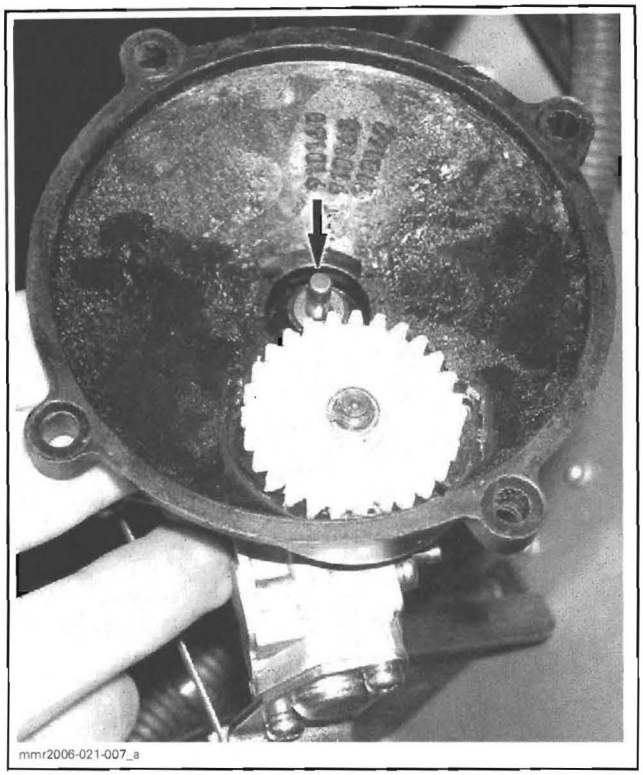
mmr2006-021-007_a

Install small gear **no. 8** in mounting flange.

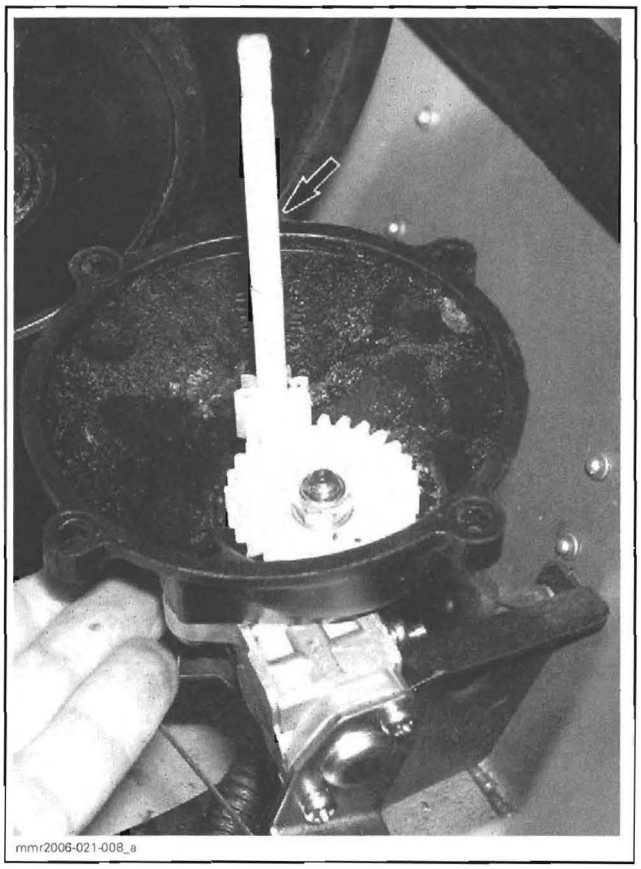
mmr2006-021-008_a

Oil Pump Installation

Install pump mounting flange on rewind starter.

CAUTION: Do not force flange onto rewind starter for installation. Rotate flange while inserting so that gear shaft properly mesh with crankshaft end.

Torque the screws **no. 3** to 5 N•m (44 lbf•**in**).

Make sure cable barrel is well seated in oil pump lever.

Secure barrel with plastic washer and circlip as shown.

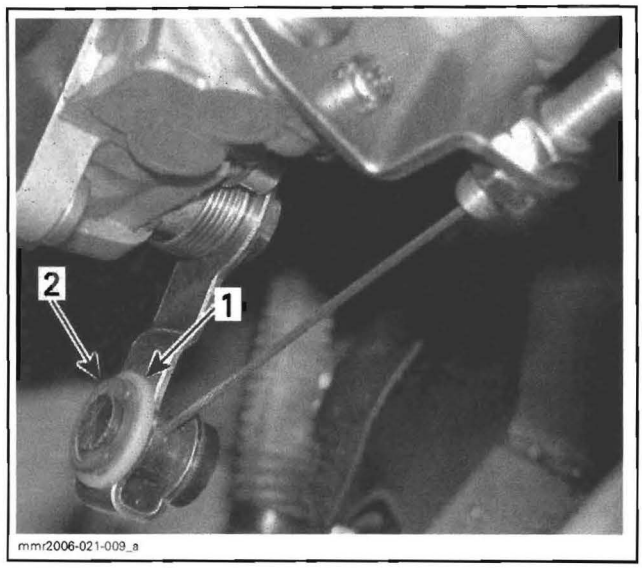

mmr2006-021-009_a

1. *Plastic washer on this side*
2. *Circlip on this side*

Verify cable and oil pump lever operation then adjust cable.

Always check for spring clip tightness on inlet hose.

Bleed oil pump.

Oil Pump Bleeding

Bleed main oil line (between tank and pump) by loosening the bleeder screw until air has escaped from the line. Add injection oil as required.

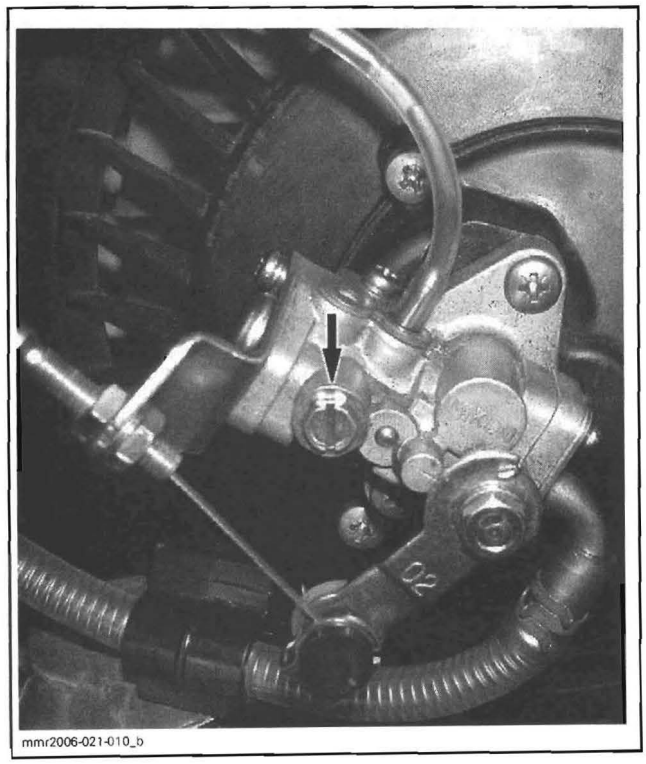

Reinstall all parts.

Bleed the small oil line between pump and engine by running engine at idle while holding the pump lever in fully open position until the line is completely full of oil.

⚠ WARNING

Ensure not to operate carburetor throttle mechanism. Secure the rear of the vehicle on a stand.

Oil Pump Adjustment

Prior to adjusting the pump, make sure all carburetor adjustments are completed and engine is stopped.

Eliminate the throttle cable free-play by pressing the throttle lever until a light resistance is felt, then hold in place.

The mark on the pump casting and on the lever must align. Width of lever mark is the tolerance.

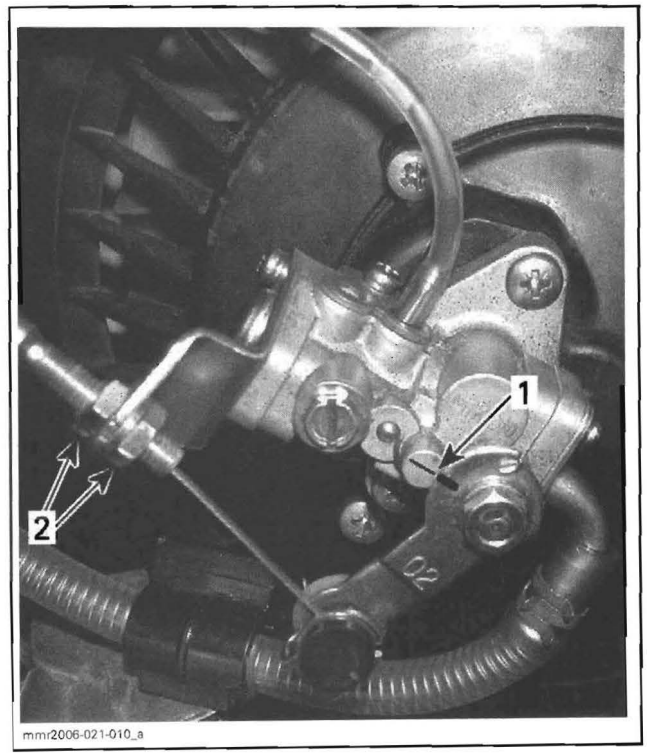

1. Marks
2. Adjuster nuts

Loosen the adjuster nuts and adjust accordingly.

Retighten the adjuster nuts.

CAUTION: Proper oil injection pump adjustment is very important. Any delay in the opening of the pump can result in serious engine damage.

MAGNETO AND AXIAL FAN

SERVICE TOOLS

Description	Part Number	Page
crankshaft protector	420 876 557	87
Loctite 243 (blue)	293 800 060	89
magneto puller	529 035 547	87
magneto puller ring	529 036 001	87

SERVICE PRODUCTS

Description	Part Number	Page
Loctite 243 (blue)	293 800 060	88
pulley flange cleaner	413 711 809	88

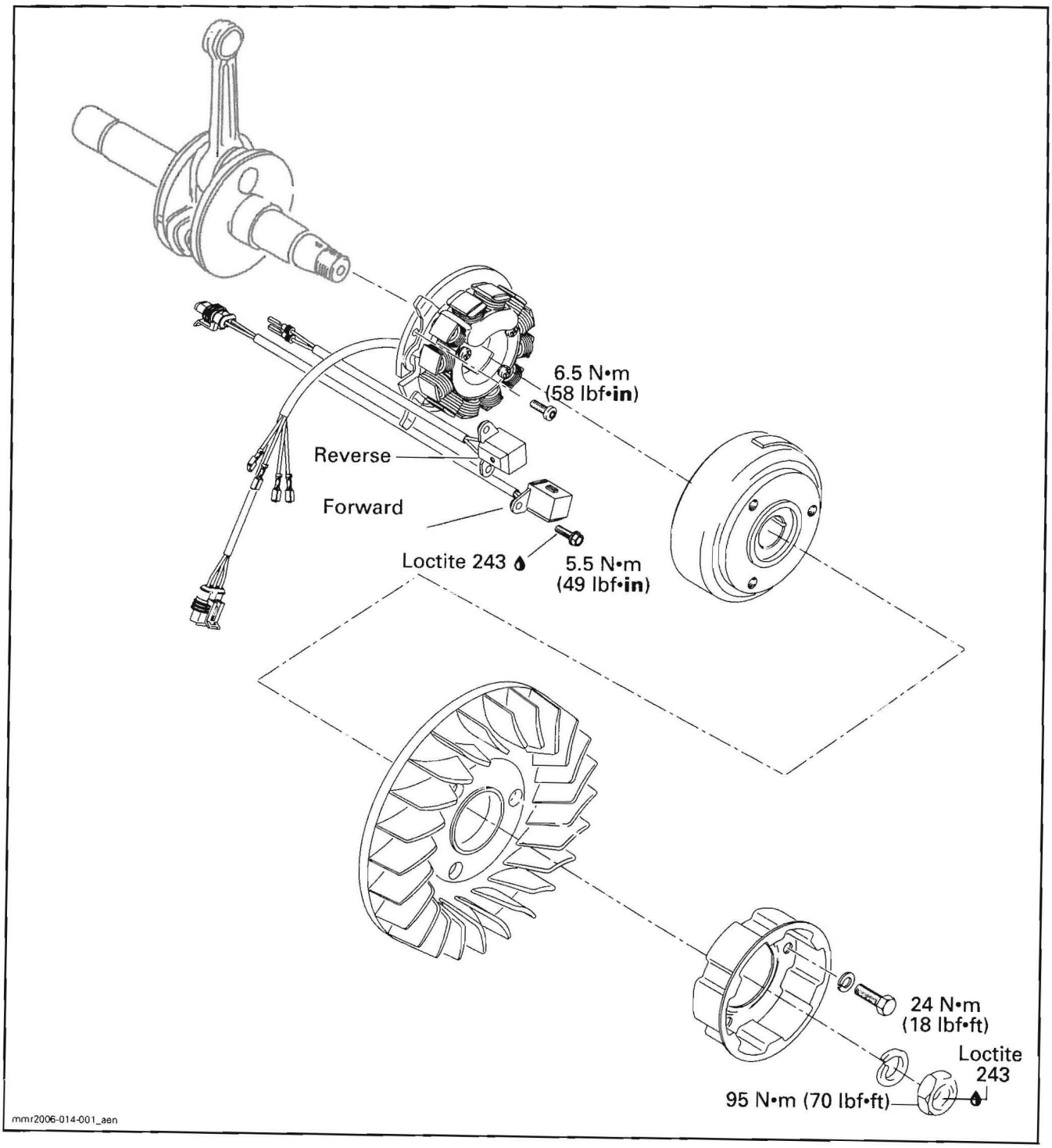
6.5 N•m
(58 lbf•in)
Reverse
Forward
Loctite 243
5.5 N•m
(49 lbf•in)
24 N•m
(18 lbf•ft)
Loctite
243
95 N•m (70 lbf•ft)
mmr2006-014-001_aen

GENERAL

NOTE: To perform procedures described in this section, the engine removal is recommended.

During assembly/installation, use the torque values and service products as in the exploded views.

Clean threads before applying a threadlocker. Refer to *SELF-LOCKING FASTENERS* and *LOCTITE APPLICATION* at the beginning of this manual for complete procedure.

⚠ WARNING

Torque wrench tightening specifications must strictly be adhered to.
Locking devices (e.g.: locking tabs, elastic stop nuts, self-locking fasteners, etc.) must be installed or replaced with new ones where specified. If the efficiency of a locking device is impaired, it must be renewed.

PROCEDURES

STARTING PULLEY

Removal

Remove all bolts attaching rewind starter housing to engine.

Remove starter pulley bolts with their lock washers.

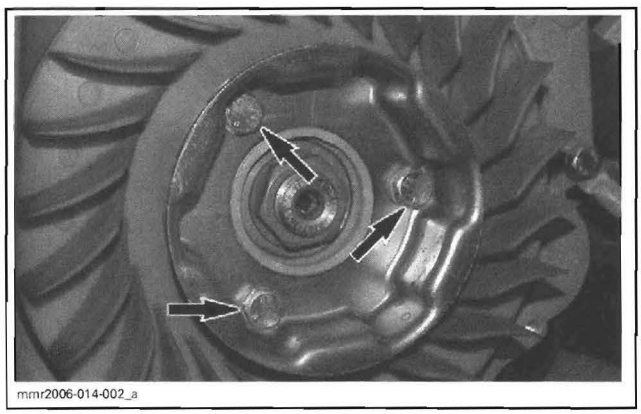
mmr2006-014-002_a

Pull starting pulley.

Installation

The installation is the reverse of the removal procedure.

COOLING FAN

Removal

To remove cooling fan, use same procedure that starting pulley.

Inspection

Check wings for damages. Replace cooling fan if a broken wing or excessive wear at the end of wings is detected.

Installation

The installation is the reverse of the removal procedure.

MAGNETO FLYWHEEL

Removal

Remove starting pulley and fan.

Using starting pulley bolts, install the magneto puller ring (P/N 529 036 001) on magneto flywheel.

Install a tube on magneto puller ring tab to retain it during magneto flywheel nut removal.

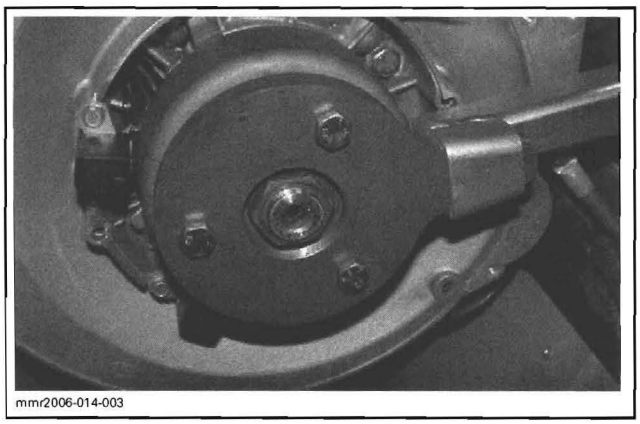
mmr2006-014-003

Remove magneto flywheel nut, using a 30 mm socket machined to 40 mm (1.580 in) outside diameter by 16 mm (5/8 in) long. Tap on socket with a hammer to break threadlocker and avoid thread breakage.

Install the crankshaft protector (P/N 420 876 557) on crankshaft end. Screw the magneto puller (P/N 529 035 547) into magneto puller ring.

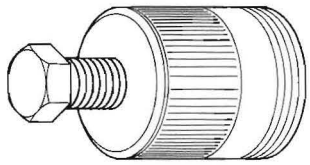
529 035 547

Remove magneto flywheel by screwing the magneto puller bolt. Tap on the head of magneto puller bolt to release magneto flywheel from its taper.

Installation

The installation is the reverse of the removal procedure. However, pay attention to the following.

Clean magneto flywheel taper and crankshaft taper with pulley flange cleaner (P/N 413 711 809).

Apply Loctite 243 (blue) (P/N 293 800 060) on threads of magneto flywheel nut.

Torque magneto flywheel nut to 95 N•m (70 lbf•ft).

STATOR

NOTE: Always check stator before changing it, refer to *CHARGING SYSTEM*.

Removal

Remove magneto flywheel, see procedure above.

Unplug magneto connector.

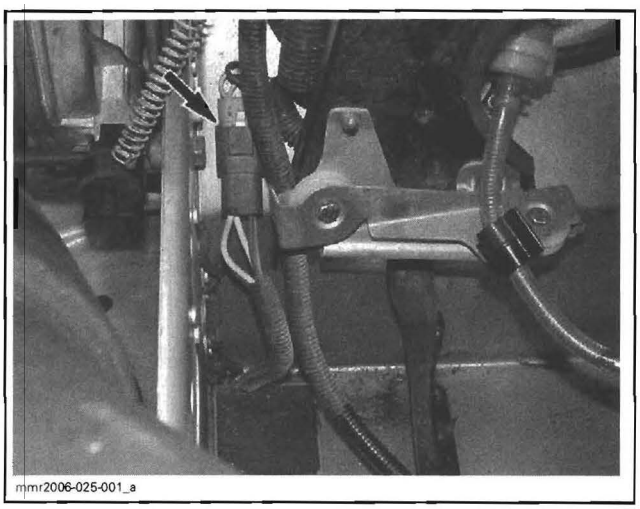

Unscrew stator bolts.

Remove stator from engine.

Installation

The installation is the reverse of the removal procedure.

TRIGGER COIL

NOTE: Always check trigger coils before changing them, refer to *IGNITION SYSTEM (300F)* or *DESS* sections.

Removal

Remove rewind starter.

Unplug trigger coil(s) from MPEM.

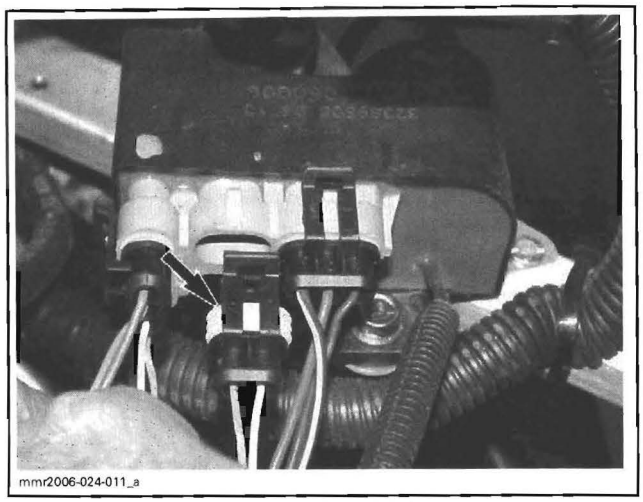

TRIGGER COIL CONNECTOR (FORWARD)

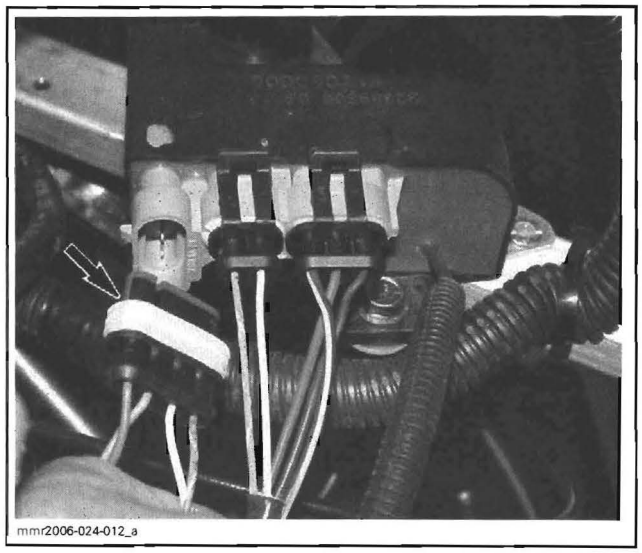

REVERSE CONNECTOR

NOTE: On reverse connector, disconnect the BLUE/YELLOW and the WHITE/YELLOW wires of the reverse trigger coil.

Remove screws retaining trigger coil to magneto housing.

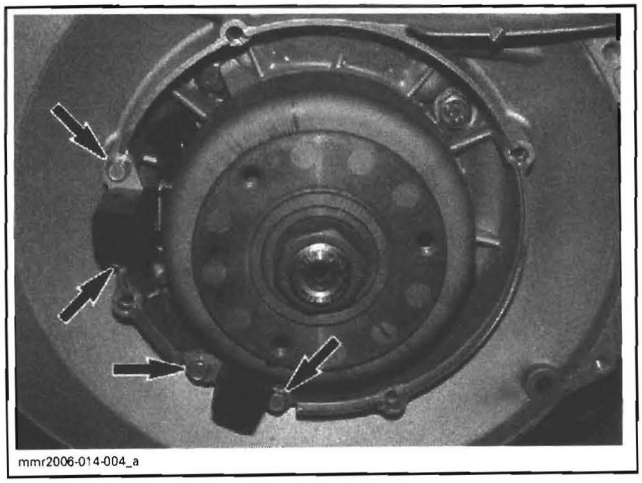
mmr2006-014-004_a

Installation

The installation is the reverse of the removal procedure.

Apply Loctite 243 (blue) (P/N 293 800 060) on bolt threads.

TOP END

SERVICE TOOLS

Description	Part Number	Page
18 mm sleeve kit	529 035 541	94
locating sleeve	529 023 800	94
piston circlip installer	529 035 561	96
piston pin puller	529 035 503	94

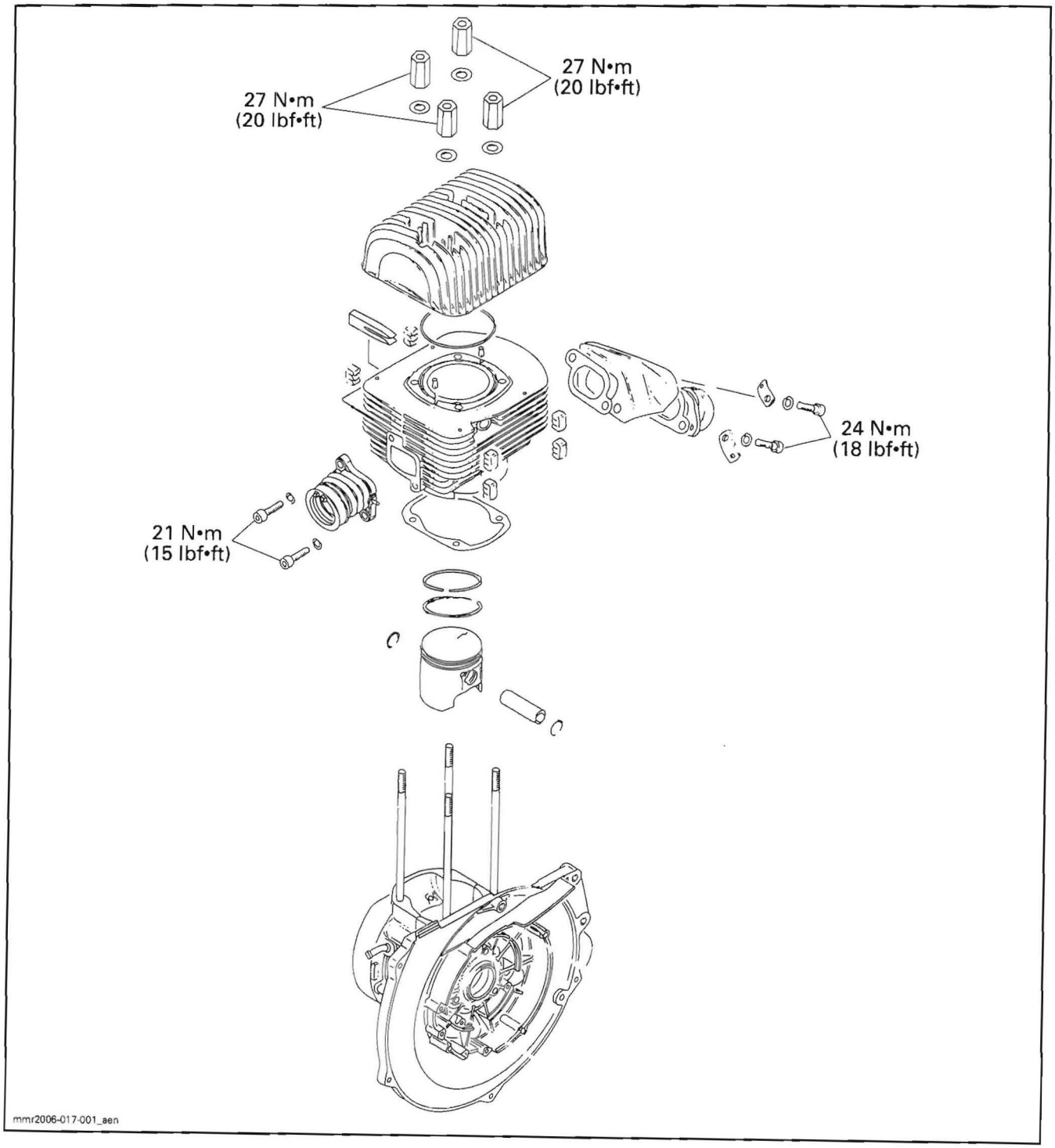
27 N•m
(20 lbf•ft)
27 N•m
(20 lbf•ft)
24 N•m
(18 lbf•ft)
21 N•m
(15 lbf•ft)
mmr2006-017-001_aen

GENERAL

Before completely disassembling the engine, check airtightness. Refer to *LEAK TEST*.

To measure internal parts, refer to *ENGINE MEASUREMENT* section.

During assembly/installation, use torque values and service products as in the exploded view.

Clean threads before applying a threadlocker. Refer to *SELF-LOCKING FASTENERS* and *LOCTITE APPLICATION* at the beginning of this manual for complete procedure.

⚠ WARNING

Torque wrench tightening specifications must strictly be adhered to.
Locking devices (e.g.: locking tabs, elastic stop nuts, self-locking fasteners, cotter pins, etc.) must be installed or replaced with new ones where specified. If the efficiency of a locking device is impaired, it must be renewed.

PROCEDURES

NOTE: To reach any internal parts, the engine removal is necessary.

CYLINDER COWL

Removal

Unscrew cylinder cowl screws on the top of engine.

Remove screws with lock washers, cowl washers and rubber washers.

Pull cylinder cowl.

Installation

The installation is the reverse of the removal procedure.

Torque cylinder cowl screws to 13.5 N•m (120 lbf•**in**).

CYLINDER HEAD

Removal

Remove cylinder cowl. See above.

Remove distance sleeves and flat washers.

Lift cylinder head over cylinder studs to remove it.

Inspection

Check cylinder head for cracks, broken fins or other damages. Replace if necessary.

Using a straightedge and a feeler gauge, check cylinder head warpage.

MAXIMUM CYLINDER HEAD WARPAGE
0.05 mm (.002 in) per 50 mm (2 in) of surface
0.5 mm (.020 in) for total length of cylinder head

Check O-ring between cylinder head and cylinder.

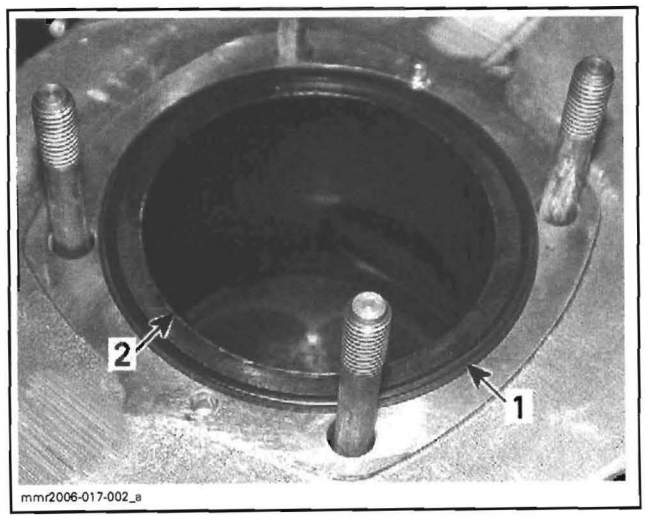

1. *O-ring*
2. *Cylinder*

Installation

The installation is the reverse of the removal procedure.

Torque distance sleeves to 27 N•m (20 lbf•ft).

CYLINDER

Removal

Remove intake and exhaust manifolds.

Remove cylinder cowl and cylinder head.

Lift cylinder.

Discard the cylinder gasket.

Inspection

Check cylinder for cracks and scoring on the top and bottom of cylinder. Replace if necessary.

Refer to table below to find cylinder specifications. For dimension measurement procedures, refer to *ENGINE MEASUREMENT*.

ENGINE MEASUREMENT	MAXIMUM TOLERANCES
Cylinder taper	0.10 mm (.004 in)
Cylinder out of round	0.08 mm (.003 in)
Cylinder/piston clearance (piston skirt wear)	0.15 mm (.006 in)

Installation

Before inserting piston in the cylinder, lubricate the cylinder with new injection oil or equivalent.

Install a new gasket.

Using fingers or a piston ring compressor, slide piston into cylinder.

Install cylinder head and the other removed parts in accordance with the proper installation procedures.

PISTON

Removal

Remove cylinder.

Place a clean rag over crankcase to prevent circlips from falling into crankcase. Then with a pointed tool inserted in piston notch, remove both circlips from piston.

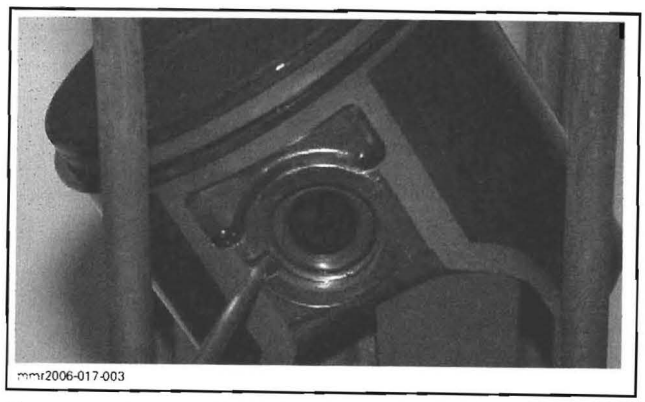

Use the piston pin puller (P/N 529 035 503) along with the 18 mm sleeve kit (P/N 529 035 541) and the locating sleeve (P/N 529 023 800) to remove piston pin. Use the following procedure.

- When inserting piston pin puller, make sure it sits squarely against piston.

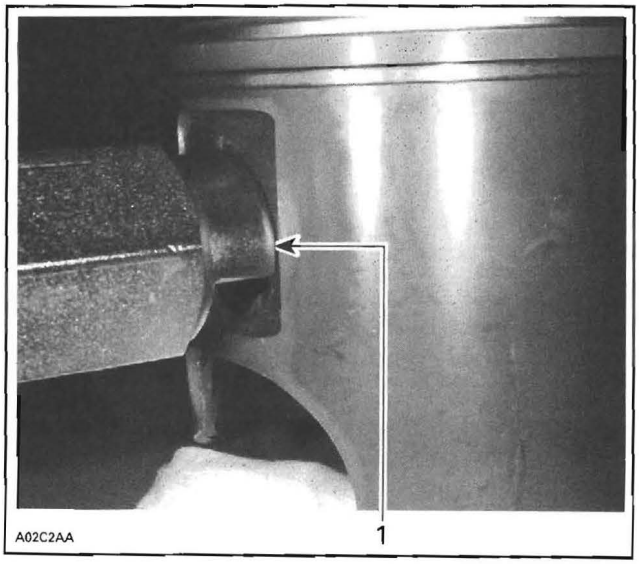

TYPICAL
1. Properly seated all around

- Install sleeve then shouldered sleeve over puller rod.
- Pull out piston pin by unscrewing puller until shouldered sleeve end is flush with thrust washer of piston pin bearing.

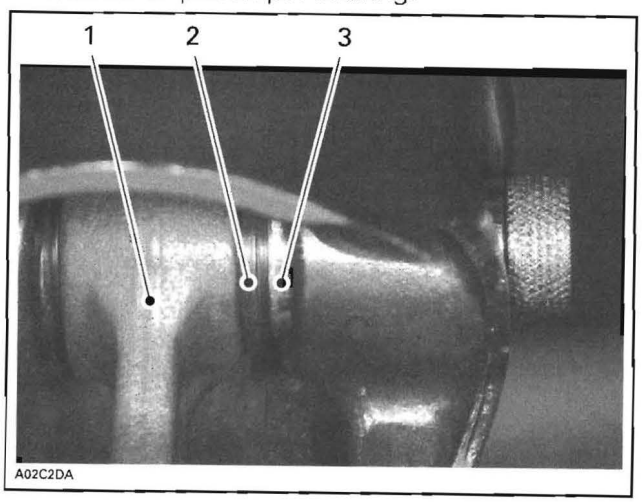

TYPICAL
1. Sleeve inside bearing
2. Thrust washer
3. Shouldered sleeve end

- Remove puller. Pull out shouldered sleeve carefully.
- Remove piston from connecting rod.
- Install locating sleeve. Then push needle bearings along with thrust washers and sleeve.

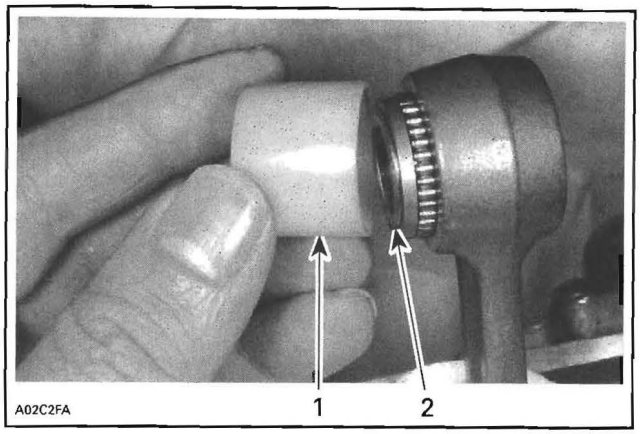

TYPICAL
1. *Locating sleeve*
2. *Sleeve*

– Use a locking tie to fasten all needles and thrust washers along with locating sleeve.

Inspection

Inspect piston for scoring, cracking or other damages. Replace piston and piston rings if necessary. Refer to *ENGINE MEASUREMENT* to complete inspection.

Installation

When reinstalling original needle bearings, make sure that 31 needles are inserted between sleeve and locating sleeve.

When installing a new cageless bearing, replace half plastic cages by sleeve.

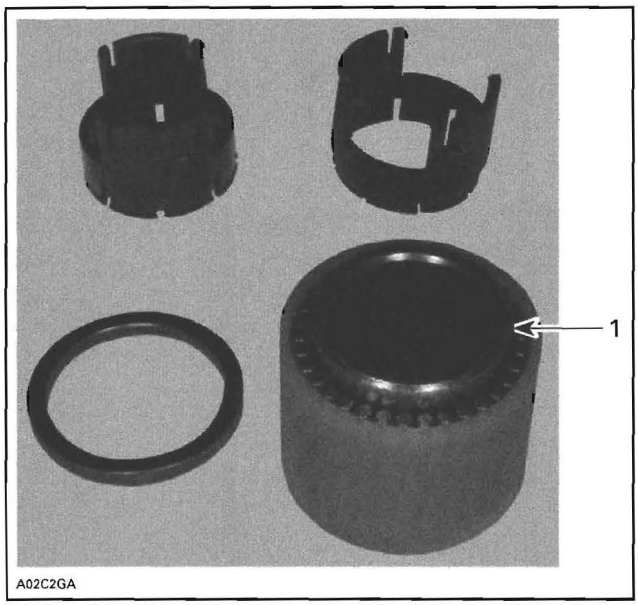

TYPICAL
1. *Sleeve*

Grease thrust washers and install them on each end of needles.

Insert cageless bearing into connecting rod.

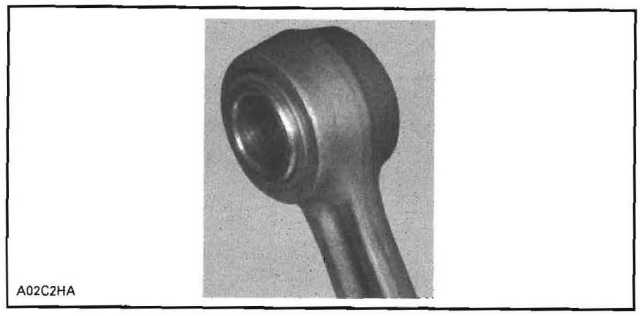

TYPICAL — CAGELESS BEARING AND SLEEVE INSTALLED

Mount piston over connecting rod with the letters "AUS" (over an arrow on the piston dome) facing in the direction of exhaust port.

Install shouldered sleeve.

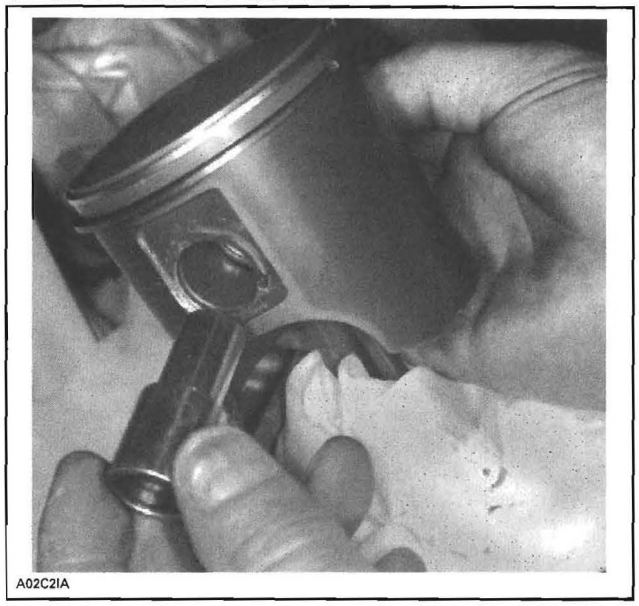

TYPICAL — SHOULDERED SLEEVE INSTALLATION

Install piston pin puller and turn handle until piston pin is correctly positioned in piston.

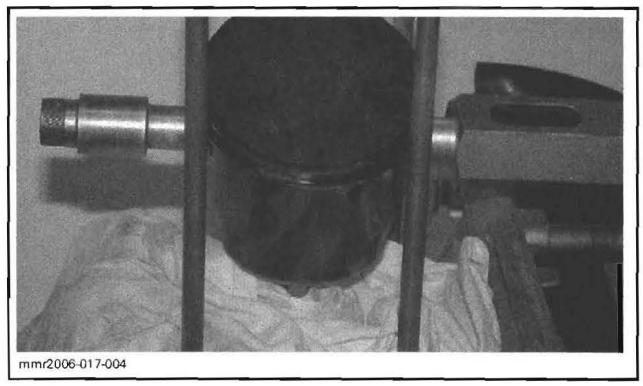

TYPICAL

Remove piston pin puller and sleeve kit.

Use piston circlip installer (P/N 529 035 561) to install circlips.

Insert circlip in tool at an angle.

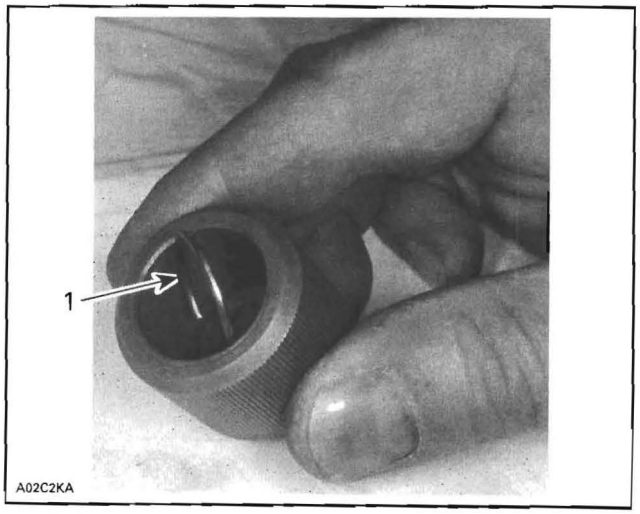

1. Circlip

Square it up using a finger.

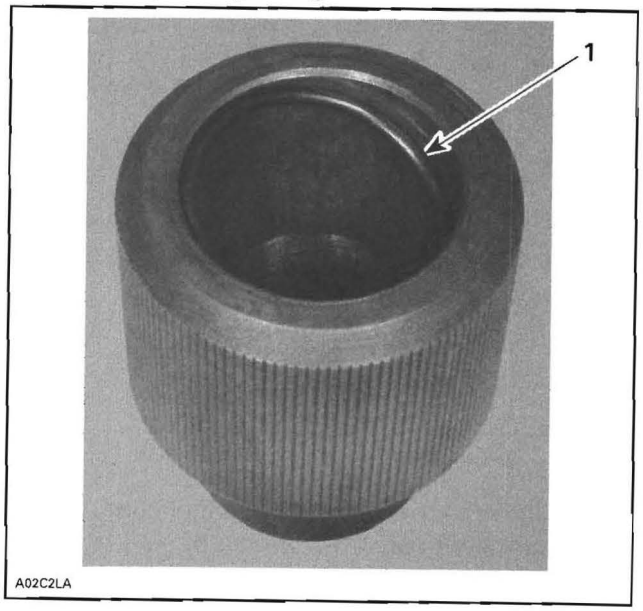

1. Circlip

Continue to square it up using round end of circlip installer.

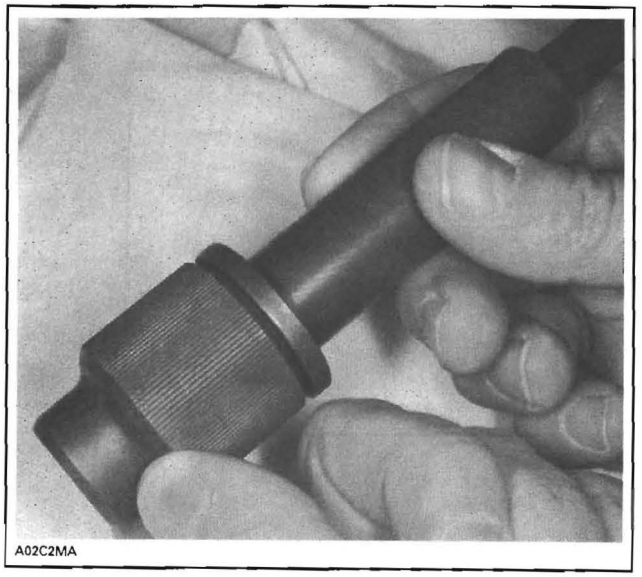

Using square end of tool, push circlip in until it rests in groove.

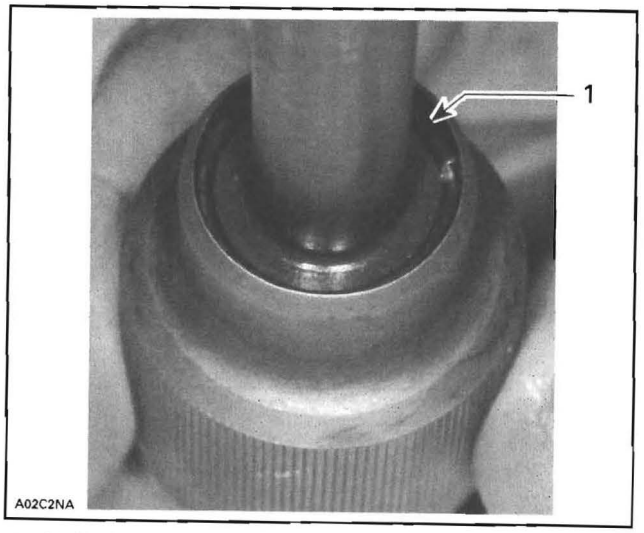

1. Circlip in groove

Mount tool in piston making sure that circlip break is facing down.

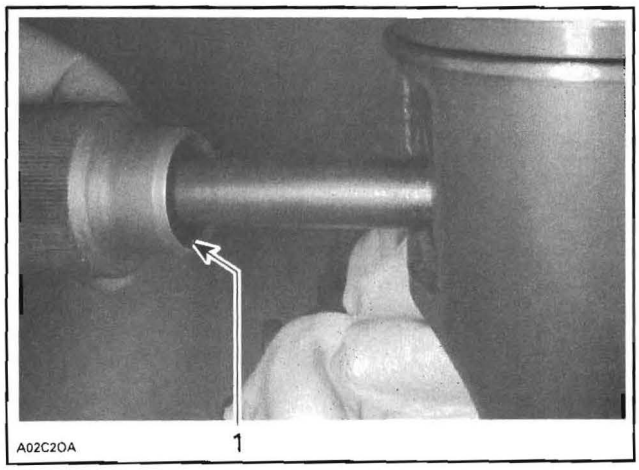

TYPICAL
1. Circlip break facing down

Hold tool firmly against piston then strike on round end of tool. Circlip will move from tool groove to piston groove.



TYPICAL

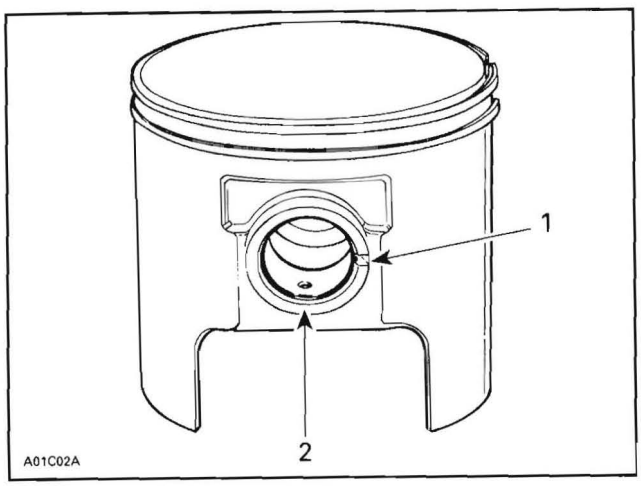

1. Piston notch
2. Circlip break

CAUTION: Circlips must not move freely in the groove after installation. If so, replace them.

Before inserting piston in the cylinder, lubricate the cylinder with new injection oil or equivalent.

BOTTOM END

SERVICE TOOLS

Description	Part Number	Page
bearing heater	529 035 969	103
crankshaft bearing puller	420 877 635	103
MAG oil seal pusher	420 277 875	103
protective cap	420 976 890	103
PTO oil seal pusher	420 876 660	103

SERVICE PRODUCTS

Description	Part Number	Page
Molykote 111	413 707 000	102

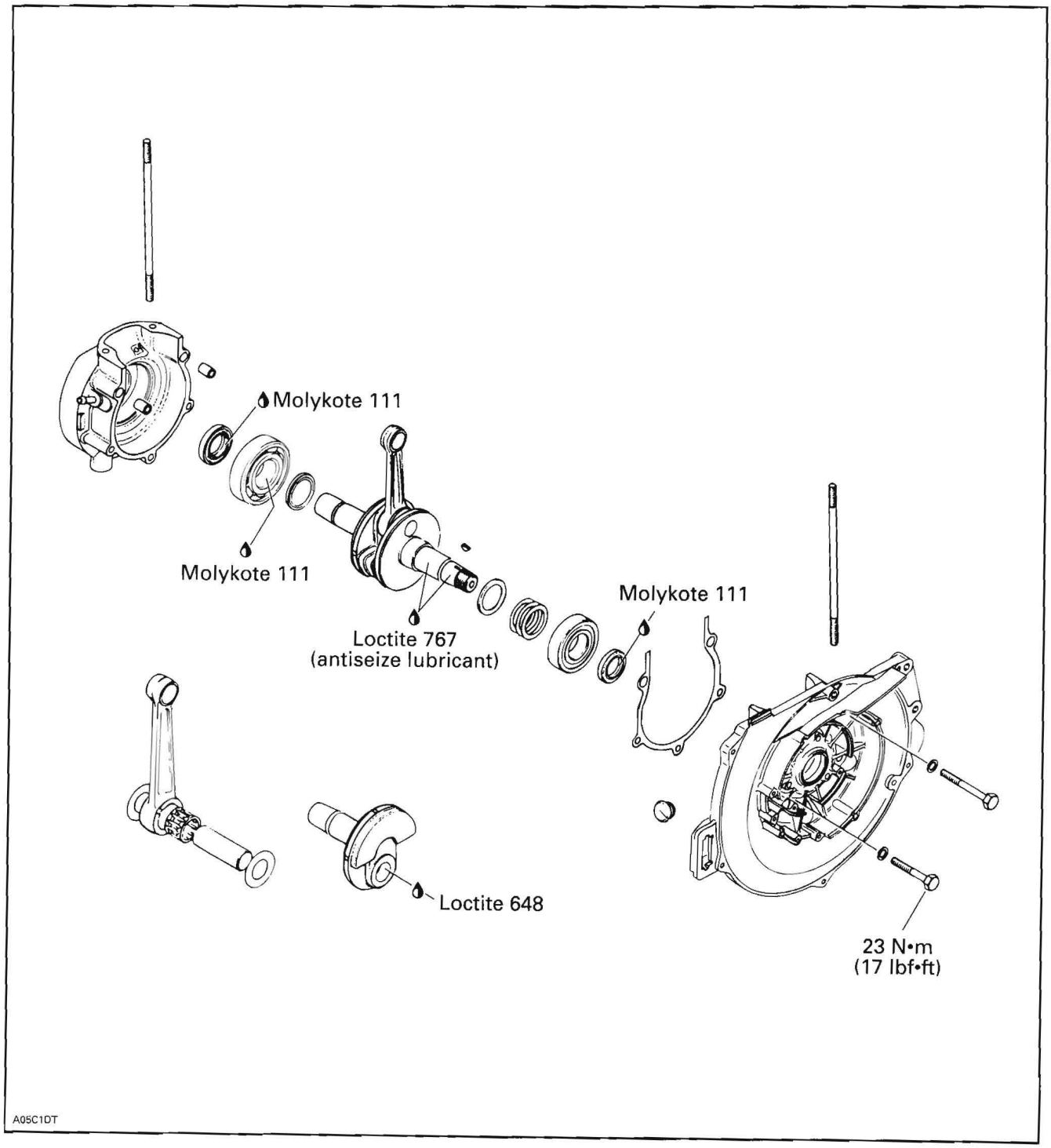
Molykote 111
Molykote 111
Loctite 767
(antiseize lubricant)
Molykote 111
Loctite 648
23 N•m
(17 lbf•ft)
A05C1DT

GENERAL

Before completely disassembling the engine, check airtightness. Refer to *LEAK TEST*.

To verify internal parts, refer to *ENGINE MEASUREMENT* section.

All oil seals and gaskets must be discard and replace with new ones when crankcase is split.

CAUTION: After rebuilding an engine always observe a break-in period as described in *OPERATOR'S GUIDE*.

During assembly/installation, use torque values and service products as in the exploded view.

Clean threads before applying a threadlocker. Refer to *SELF-LOCKING FASTENERS* and *LOCTITE APPLICATION* at the beginning of this manual for complete procedure.

⚠ WARNING

Torque wrench tightening specifications must strictly be adhered to.
Locking devices (e.g.: locking tabs, elastic stop nuts, self-locking fasteners, cotter pins, etc.) must be installed or replaced with new ones where specified. If the efficiency of a locking device is impaired, it must be renewed.

PROCEDURES

CRANKCASE

Disassembly

Remove:
- engine from vehicle, refer to *REMOVAL AND INSTALLATION*
- starter and starter plate on electric started models
- cylinder cowl, cylinder head and cylinder, refer to *TOP END*
- rewind starter, refer to *REWIND STARTER*
- magneto flywheel, stator and trigger coils, refer to *MAGNETO SYSTEM*.

On MAG side, remove bolts holding both parts of crankcase together.

Install the MAG crankcase on suitable supports and press crankshaft out of housing. Heat all around bearing area using a heat gun.

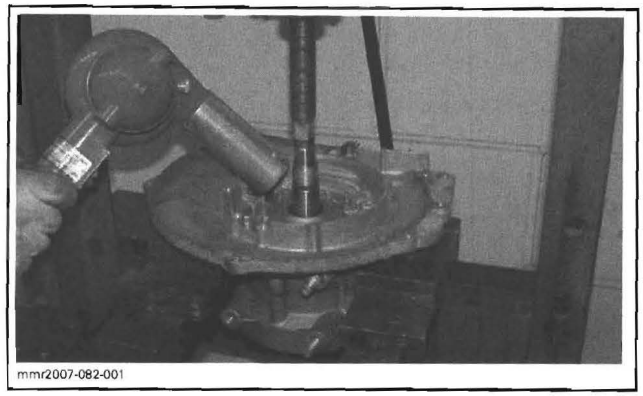
mmr2007-082-001

Support the PTO crankcase and press the crankshaft out of housing.

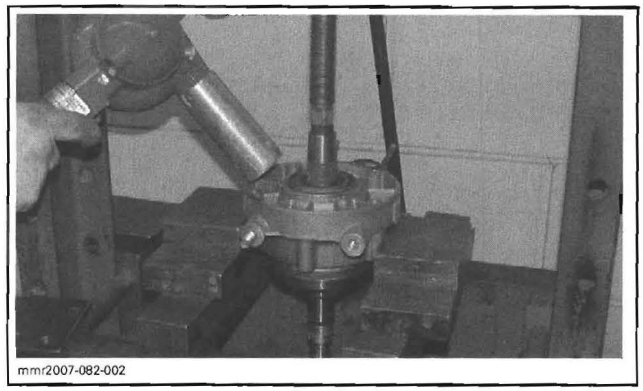
mmr2007-082-002

NOTE: Use housing bumps to support the housing correctly.

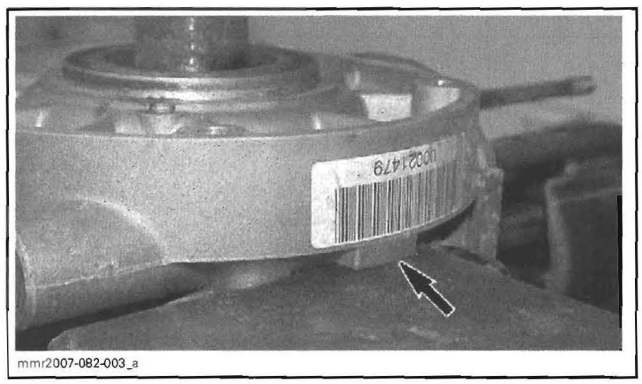
mmr2007-082-003_a

Inspection

Check crankcase for cracks. Replace if necessary.

Assembly

NOTE: The adjustment of crankshaft end play is required when crankshaft and/or crankcase is replaced. Refer to *ENGINE MEASUREMENT* for the complete procedure.

Heat crankshaft to 80°C (176°F) to ease its installation into crankcase.

Install a protector on each crankshaft end to prevent oil seal damage.

Apply a light coat of Molykote 111 (P/N 413 707 000) on oil seal lips.

Spray some new injection oil on all moving parts of crankshaft.

Using a press, install crankshaft into MAG crankcase.

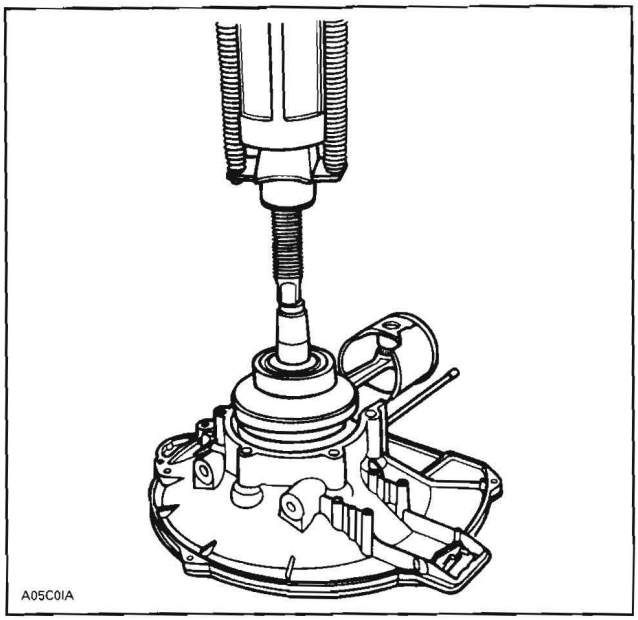

Install a new crankcase gasket.

Press down PTO crankcase onto crankshaft using appropriate spacer(s).

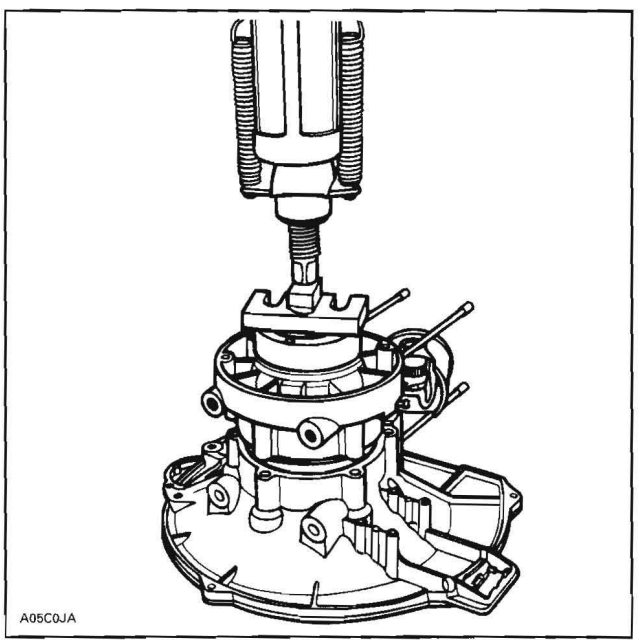

Install crankcase bolts with their lock washers. Torque bolts to 23 N•m (17 lbf•ft) as per following sequence.

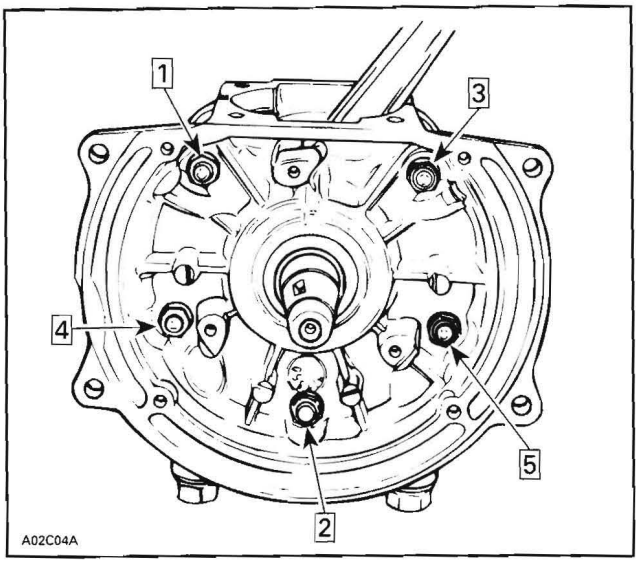

Install all other removed parts.

CRANKSHAFT

Removal/Installation

Refer to *CRANKCASE* to remove or install crankshaft into crankcase.

Inspection

Refer to table below to find crankshaft dimensions. For dimension measurement procedures, refer to *ENGINE MEASUREMENT*.

ENGINE MEASUREMENT	TOLERANCES mm (in)		
	NEW PARTS MIN.	NEW PARTS MAX.	WEAR LIMIT
Crankshaft deflection on PTO side	—	0.06 (.0024)	—
Crankshaft deflection in center of crankshaft	—	0.08 (.0031)	—
Crankshaft deflection on MAG side	—	0.03 (.0012)	—
Connecting rod big end axial play	0.20 (.008)	0.33 (.013)	1.2 (.047)
Crankshaft end play	0.10 (.004)	0.030 (.012)	—

CRANKSHAFT BEARING

Inspection

Check if the bearings turn smoothly and freely. Replace if necessary.

Removal

Remove crankshaft from crankcase.

Install the crankshaft bearing puller (P/N 420 877 635) with the proper half ring and the protective cap (P/N 420 976 890).

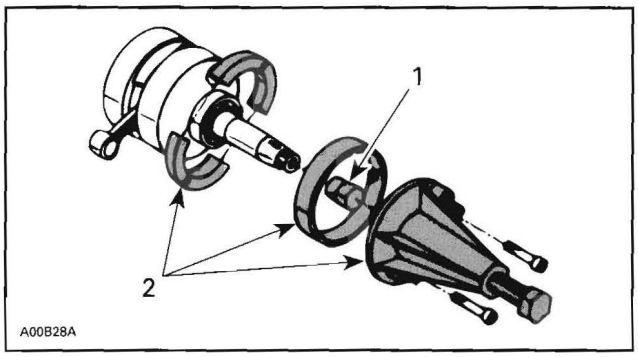

1. Protective cap
2. Crankshaft bearing puller

Installation

NOTE: The adjustment of crankshaft end play is required when crankshaft and/or crankcase is replaced. Refer to *ENGINE MEASUREMENT* for the complete procedure. This procedure must be done before bearings installation.

Using the bearing heater (P/N 529 035 969), heat up bearings. This will expand bearings and ease installation.

CAUTION: Bearings should not be heated to more than 80°C (176°F). Do not heat bearings on direct flame, or with a heat gun or in an oil bath. Inappropriate bearings heating may result in inner seals or cage failure.

Install spacers on both sides and calculated shims on MAG side then put bearings on crankshaft with the groove outward.

Install all other removed parts.

OIL SEAL

Removal

Split crankcase and remove crankshaft.

Push oil seals from outside towards the inside of crankcase.

Installation

To install the PTO oil seal, use the PTO oil seal pusher (P/N 420 876 660) and the MAG oil seal pusher (P/N 420 277 875) for the oil seal on MAG side.

CAUTION: To ensure appropriate crankshaft bearing lubrication, seal outer surface must be pressed against seal crankcase shoulder.

ENGINE MEASUREMENT

SERVICE TOOLS

Description	Part Number	Page
dial indicator	414 104 700	108

NOTE: This subsection explains the procedures to correctly measure engine components. For the engine technical specifications, refer to *INSPECTION* in the appropriate *ENGINE* subsection.

CYLINDER TAPER

Compare cylinder diameter 16 mm (5/8 in) from top of cylinder to just below its intake port area.

If the difference exceeds the specified dimension the cylinder should be rebored and honed or should be replaced.

NOTE: If cylinder is rebored, be sure to restore the chamfer around all cylinder sleeve port openings.

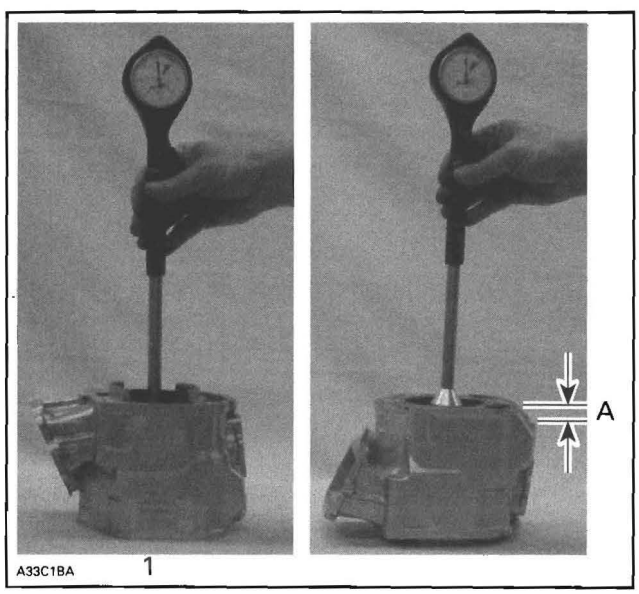

TYPICAL
1. Below the intake port
A. 16 mm (5/8 in) from top

CYLINDER OUT OF ROUND

Measuring 16 mm (5/8 in) from top of cylinder with a cylinder gauge, check if the cylinder out of round is more than the specified dimension. If larger, cylinder should be rebored and honed or should be replaced. Nikasil cylinder can be honed using diamond hone but can not be rebored.

NOTE: If cylinder is rebored, be sure to restore the chamfer around all cylinder sleeve port openings.

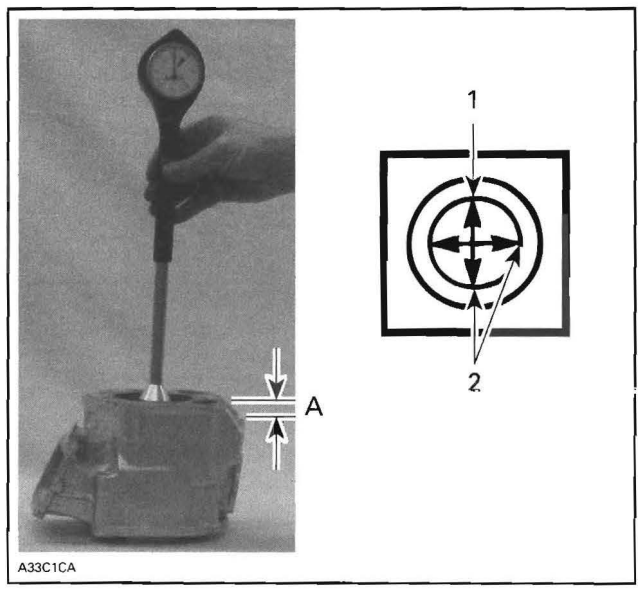

TYPICAL
1. Piston pin position
2. Measures to be compared
A. 16 mm (5/8 in)

CYLINDER/PISTON CLEARANCE

Procedure with a Used Piston

Note the piston diameter on the piston dome.

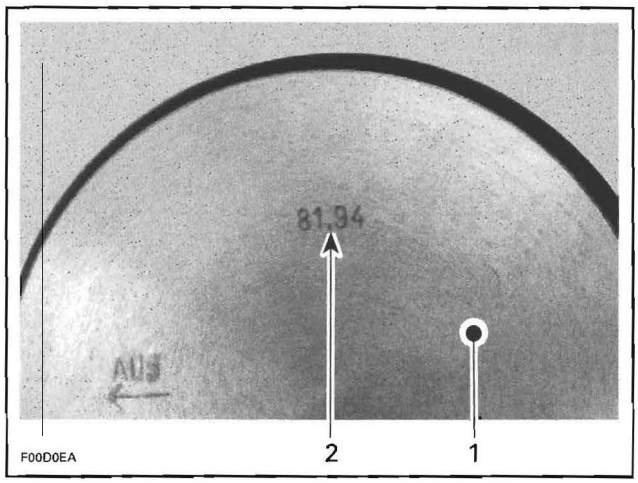

TYPICAL
1. Piston dome
2. Piston diameter

Using a micrometer, measure piston at "A" perpendicularly (90°) to piston pin.

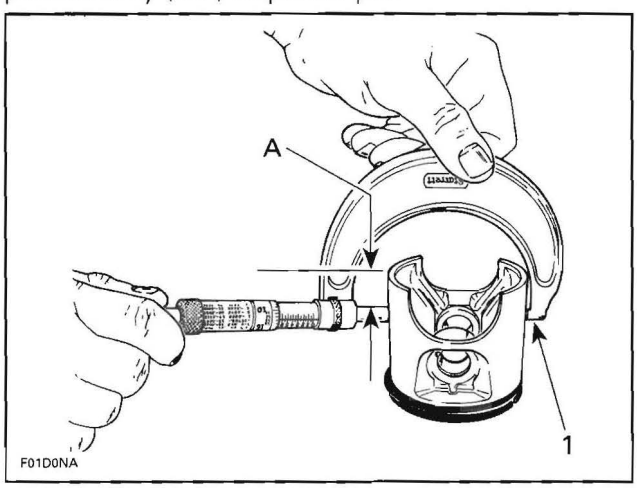

TYPICAL
1. Measuring perpendicularly (90°) to piston pin axis
A. 15 mm (.590 in)

The measured dimension must not be less than 0.15 mm (.006 in) of the one scribed on piston dome. Otherwise, install a new piston.

If piston is within tolerance, adjust and lock a micrometer to the piston dimension.

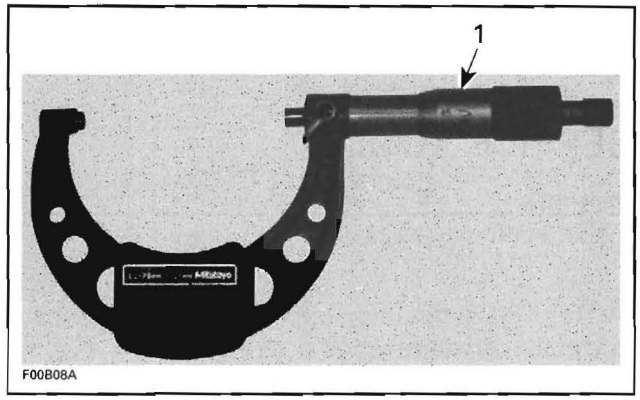

1. Micrometer set to the piston dimension

Refer to *PROCEDURE CONTINUATION WITH A NEW OR USED PISTON* further.

Procedure with a New Piston

Read the piston diameter on the piston dome.

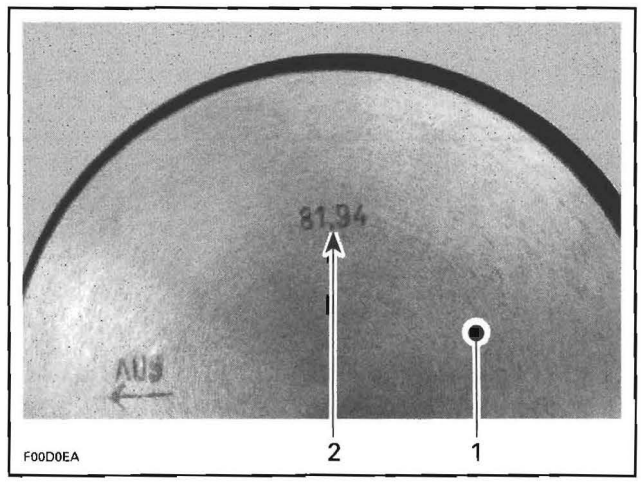

TYPICAL
1. Piston dome
2. Piston diameter

Adjust and lock a micrometer to the specified value on the piston dome.

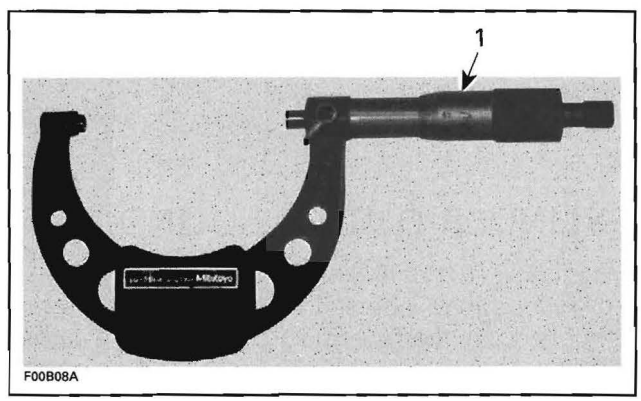

TYPICAL
1. Micrometer set to the piston dimension

Procedure Continuation with a New or Used Piston

With the micrometer set to the piston dimension, adjust a cylinder bore gauge to the micrometer dimension and set the indicator to 0.

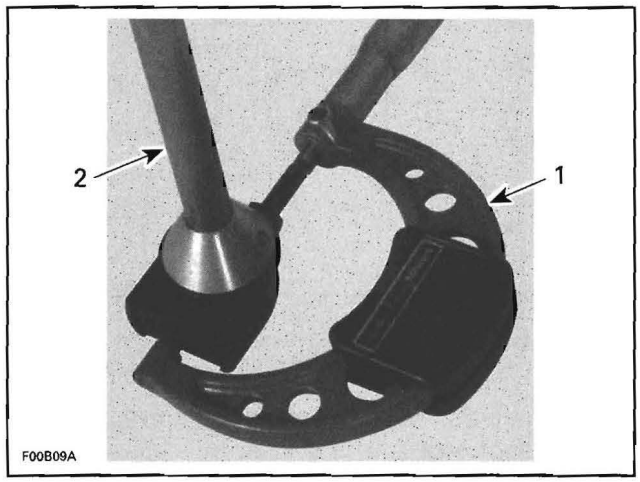

TYPICAL
1. *Use the micrometer to set the cylinder bore gauge*
2. *Dial bore gauge*

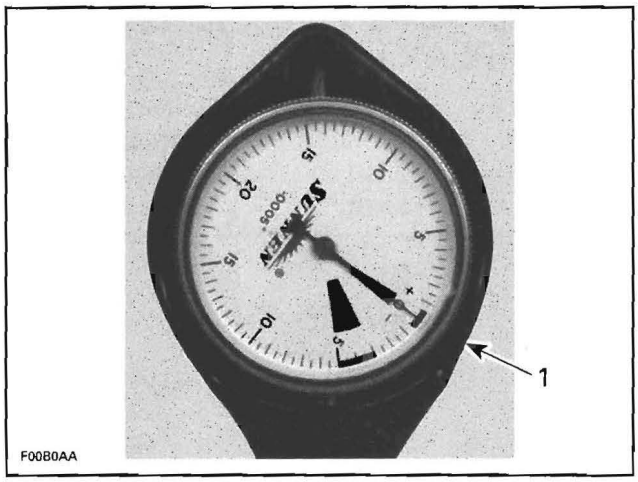

TYPICAL
1. *Indicator set to 0 (zero)*

IMPORTANT: Always remove cylinders from crankcase before measuring.

Position the dial bore gauge at 16 mm (5/8 in) below cylinder top edge.

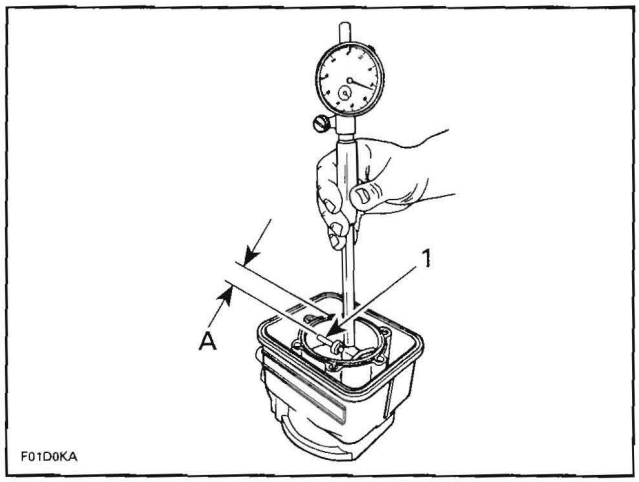

TYPICAL
1. *Measuring perpendicularly (90°) to piston pin axis*
A. *16 mm (5/8 in)*

Read the measurement on the cylinder bore gauge. The result is the exact piston/cylinder wall clearance. If clearance exceeds specified tolerance, replace cylinder or rebore. Refer to *TECHNICAL SPECIFICATIONS.*

NOTE: Make sure the cylinder bore gauge indicator is set exactly at the same position as with the micrometer, otherwise the reading will be false.

RING/PISTON GROOVE CLEARANCE

Using a feeler gauge check clearance between upper compression ring and groove. Replace piston if clearance exceeds specified tolerance. Refer to *TECHNICAL SPECIFICATIONS.*

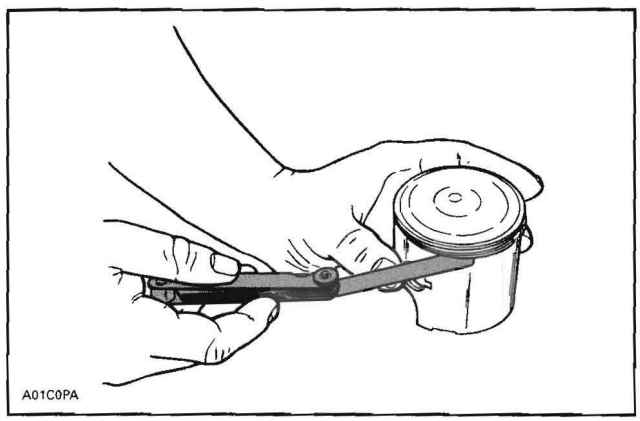

RING END GAP

Position ring halfway between transfer port and intake port.

NOTE: In order to correctly position the ring in the cylinder, use piston as a pusher.

Using a feeler gauge, check ring end gap. Replace ring if gap exceeds specified tolerance. Refer to *TECHNICAL SPECIFICATIONS*.

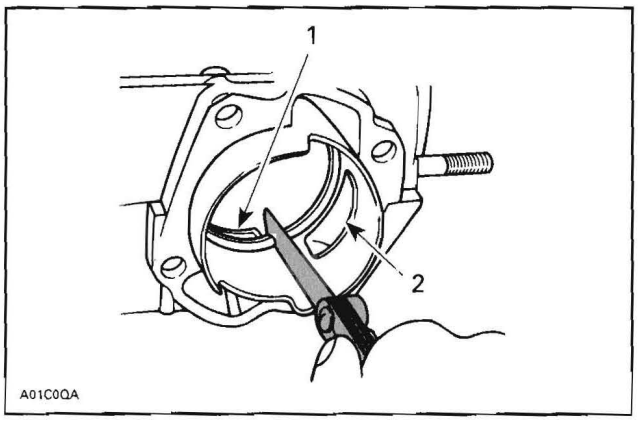

1. Transfer port
2. Intake port

CRANKSHAFT DEFLECTION

Crankshaft deflection is measured with a dial indicator (P/N 414 104 700).

Measuring (in crankcase)

First, check deflection with crankshaft in engine. If deflection exceeds the specified tolerance, recheck deflection using V-shaped blocks to determine the defective part(s). See below.

Measuring (on bench)

Once engine is disassembled, check crankshaft deflection on V-shaped blocks. If deflection exceeds the specified tolerance, it can be worn bearings or a bent crankshaft. Remove crankshaft bearings and check deflection again on V-shaped blocks to determine the defective part(s). See measurement "A" in following illustration.

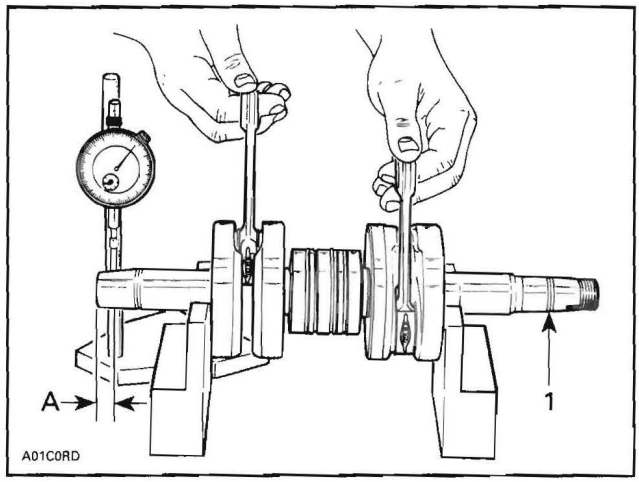

TYPICAL
1. Measure at mid point between the key and the first thread
A. 3 mm (1/8 in)

Crankshaft deflection cannot be correctly measured between centers of a lathe.

If the deflection exceeds the specified tolerance, crankshaft should be repaired or replaced.

CONNECTING ROD BIG END AXIAL PLAY

Using a feeler gauge, measure distance between thrust washer and crankshaft counterweight. If the distance exceeds specified tolerance, repair or replace the crankshaft.

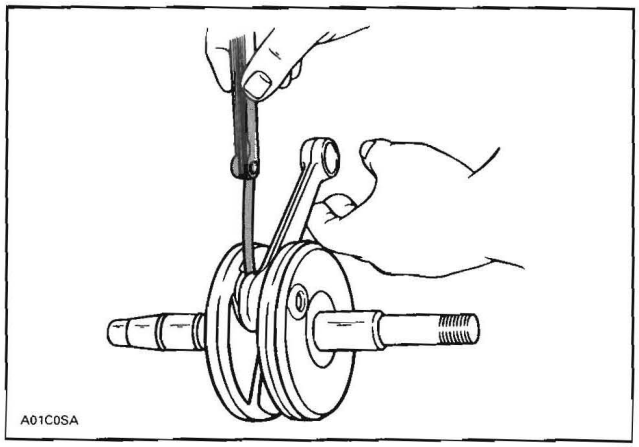

TYPICAL

CRANKSHAFT END-PLAY

Adjustment

Crankshaft end-play is adjusted with shims located between crankshaft and magneto side bearing.

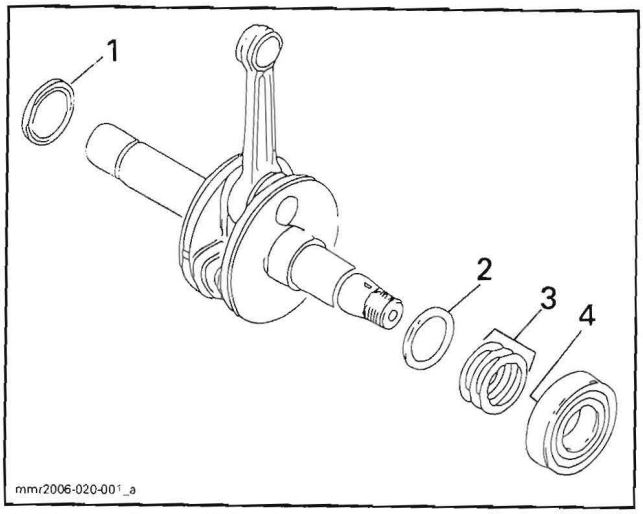

1. Distance ring on PTO side
2. Distance ring on MAG side
3. Shims
4. Bearing

CAUTION: Always install end-play adjustment shims on the magneto side between bearing and crankshaft counterweight.

The following is required for the adjustment procedure:

– adjustment shims (refer to *PARTS CATALOG*)

THICKNESSES AVAILABLE
0.10 mm (.004 in)
0.20 mm (.008 in)
0.30 mm (.012 in)
0.50 mm (.020 in)

– micrometer
– caliper.

Total shim thickness needed for the end-play adjustment is determined with the following procedure:

- Measure crankcase halves as illustrated (M_1 and M_2).

A standard compressed crankcase gasket will have a 0.30 mm (.012 in) thickness (M_3). **Add these measurements to obtain dimension "A".**

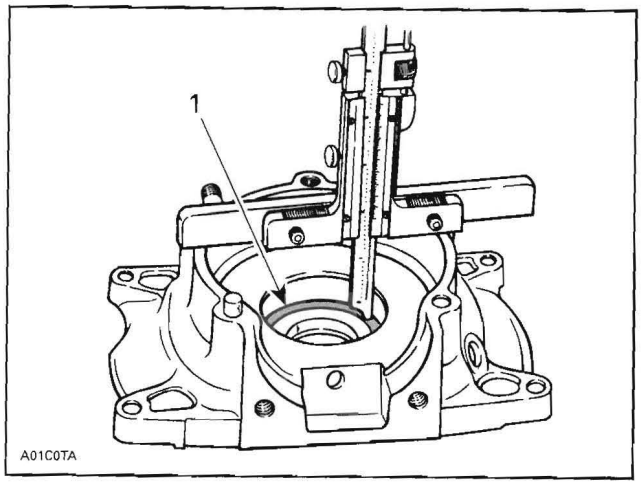

MEASURING M_1 AND M_2
1. Bearing seat

- Measure the thickness of each bearing (M_4 and M_5).

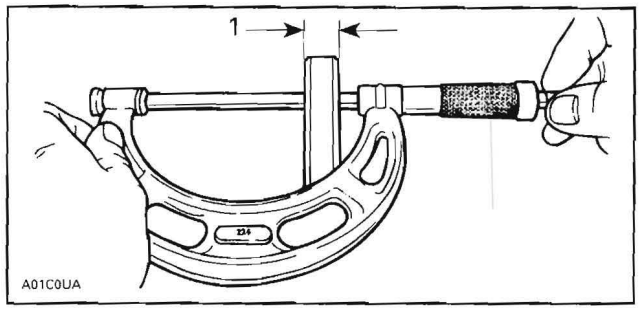

MEASURING M_4 AND M_5
1. Bearing thickness

- Measure distance between bearing shoulders on crankshaft (M_6).

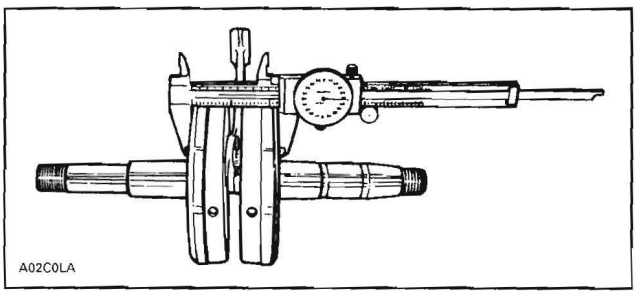

MEASURING M_6

- Measure the distance ring (M_7) and adjustment shims thickness (M_8). **Add these measurements to obtain dimension "B".**
- **From dimension "A", subtract dimension "B".**

The result is the actual crankshaft end-play that must be within specification.

If the result is over specification, add adjustment shim(s) to reach this specification.

If the result is under specification, remove adjustment shim(s) to reach this specification.

To Summarize

A	=	$M_1 + M_2 + M_3$
B	=	$M_4 + M_5 + M_6 + M_7 + M_8$
A - B	=	Actual end-play that must be within specification

M_8 is the dimension that must be adjusted to obtain the specified crankshaft end-play.

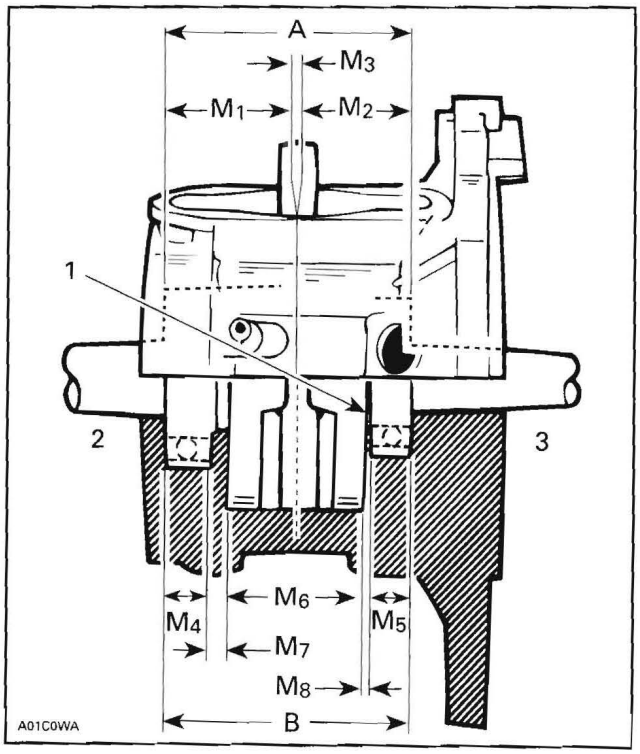

1. End-play is adjusted with shims
2. PTO
3. MAG

ENGINE REMOVAL AND INSTALLATION

SERVICE TOOLS

Description	Part Number	Page
ball joint installer	529 000 012	117
small hose pincher	295 000 076	114

SERVICE PRODUCTS

Description	Part Number	Page
Molykote 111	413 707 000	117



Midwest Manuals
sales@midwestmanuals.com
www.midwestmanuals.com

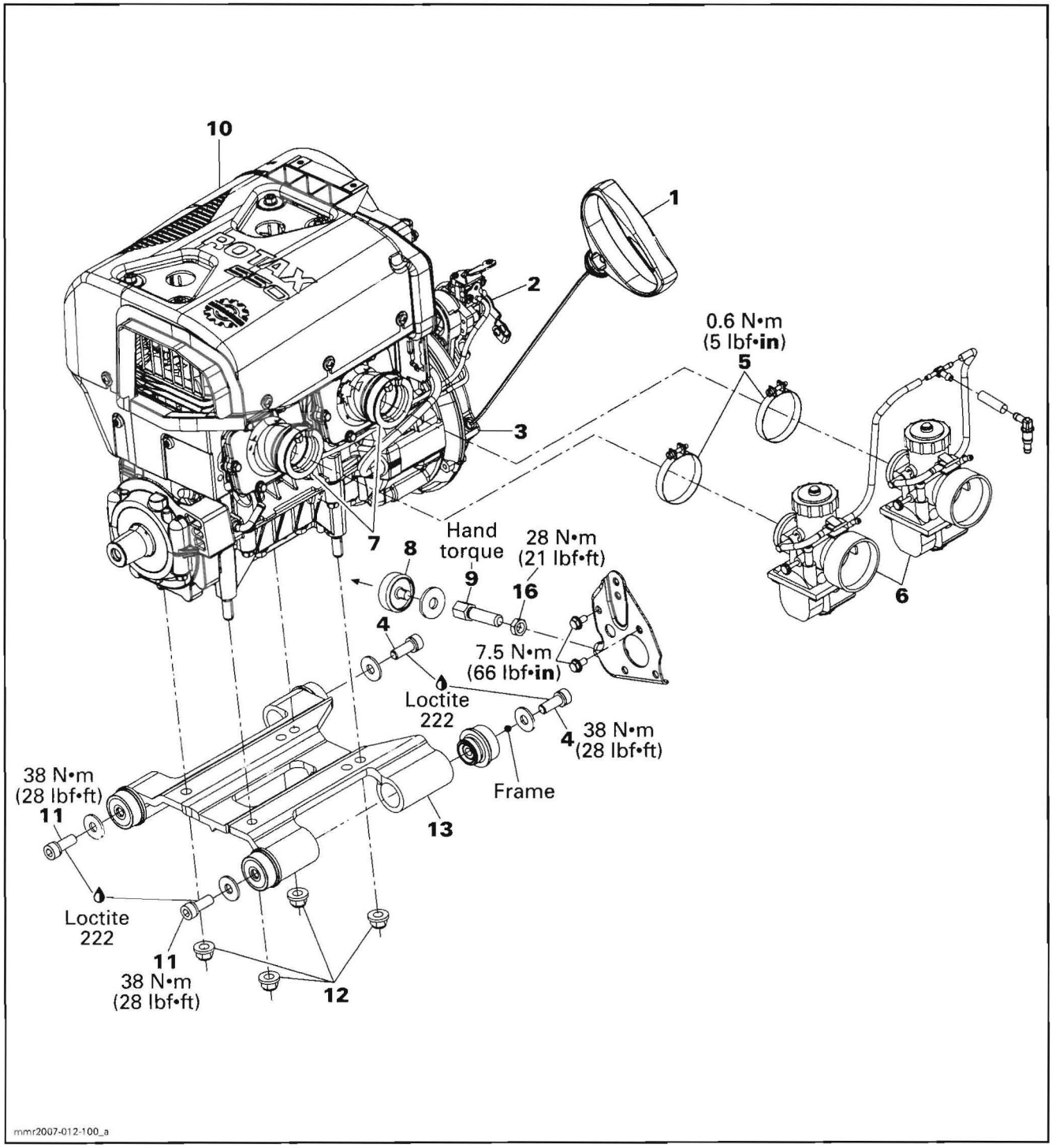
10
1
2
3
0.6 N•m
(5 lbf•in)
5
6
7
8
Hand
torque
9
28 N•m
(21 lbf•ft)
16
4
7.5 N•m
(66 lbf•in)
Loctite
222
4
38 N•m
(28 lbf•ft)
38 N•m
(28 lbf•ft)
11
Frame
13
Loctite
222
11
38 N•m
(28 lbf•ft)
12
mmr2007-012-100_a

GENERAL

During assembly/installation, use the torque values and service products as in the exploded view.

Clean threads before applying a threadlocker. Refer to *SELF-LOCKING FASTENERS* and *LOCTITE APPLICATION* at the beginning of this manual for complete procedure.

⚠ WARNING

Torque wrench tightening specifications must strictly be adhered to.
Locking devices (e.g.: locking tabs, elastic stop nuts, self-locking fasteners, cotter pin, etc.) must be installed or replaced with new ones where specified. If the efficiency of a locking device is impaired, it must be renewed.

PROCEDURES

Vehicle and Engine Preparation

Place vehicle at workstation that will have access to an engine-lifting hoist. Then start with initial preparation of vehicle by doing the following.

Remove the RH and the LH side panels.

Disconnect BLACK (-) cable from battery, then the RED (+) cable.

⚠ WARNING

Always disconnect battery or starter cables exactly in the specified order, BLACK (-) cable first. It is recommended to disconnect electrical connections prior to disconnecting fuel lines.

Front of Vehicle

Remove the secondary air intake silencer.

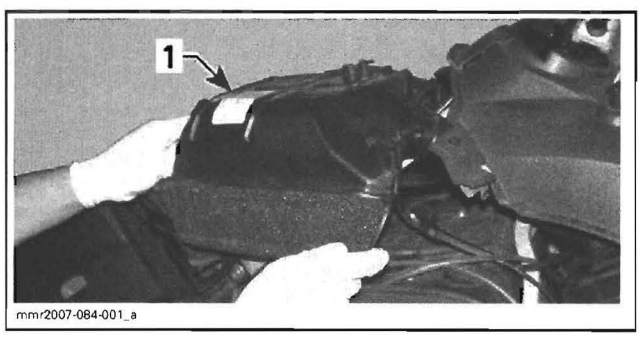

1. Secondary air intake silencer

Remove tuned pipe and manifold, refer to *EXHAUST SYSTEM*.

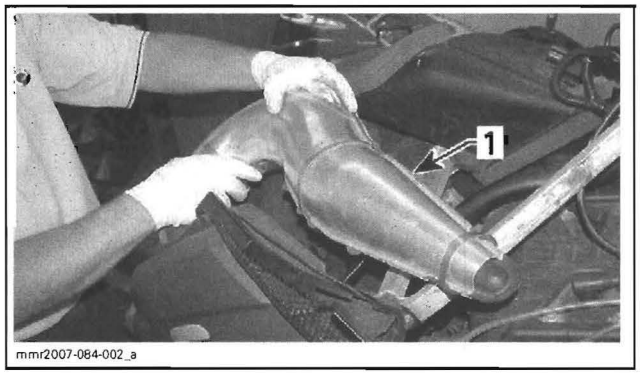

1. Tuned pipe

Disconnect starter cables.

Right Side of Vehicle

Remove muffler.

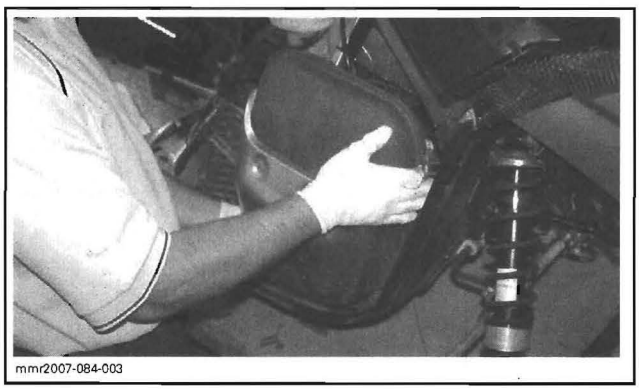

Unfasten the screws retaining the air inlet duct, lift up the retaining tabs and remove the air inlet duct.

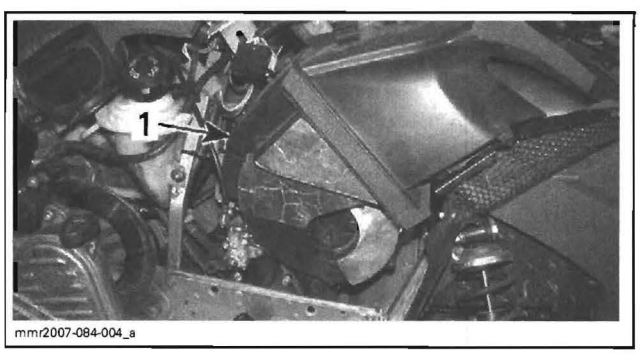

1. Air inlet duct

Unplug electrical connectors near injection oil reservoir.

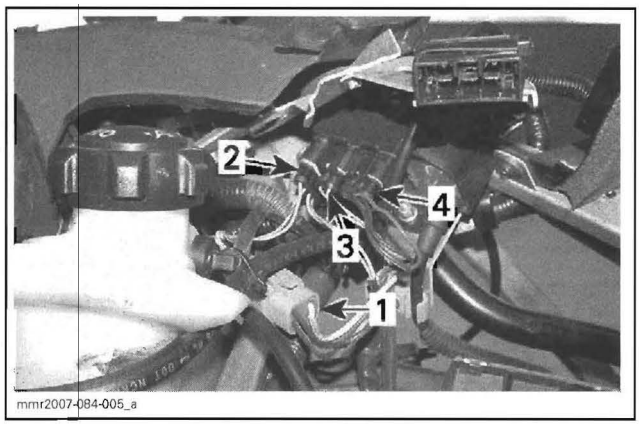

1. *Magneto connector*
2. *RER connector*
3. *Trigger coil connector*
4. *Engine stop switch connector*

On the RER connector, disconnect the BLUE/YELLOW and the WHITE/YELLOW wires from the connector. To do this, remove the lock then using a small tool extract wires from connector.

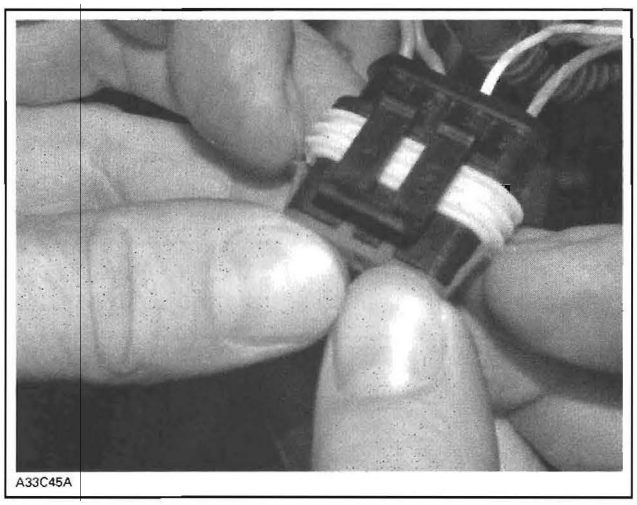

MOVE ASIDE BOTH TABS TO REMOVE LOCK

Remove the rewind starter handle **no. 1**.

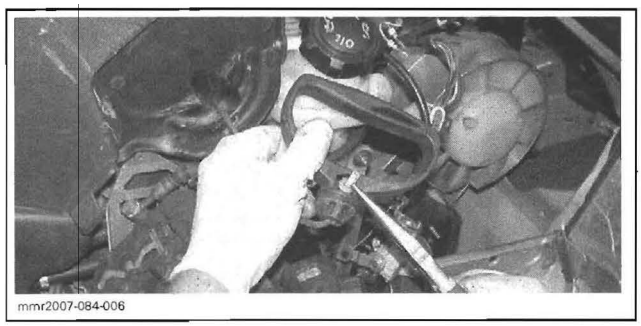

Unscrew oil pump **no. 2** from rewind starter housing **no. 3**.

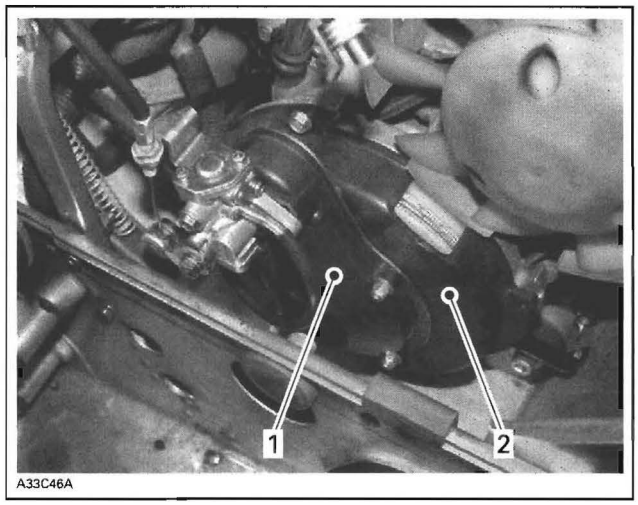

1. *Oil pump*
2. *Rewind starter housing*

Unplug both outlet hoses from oil pump.

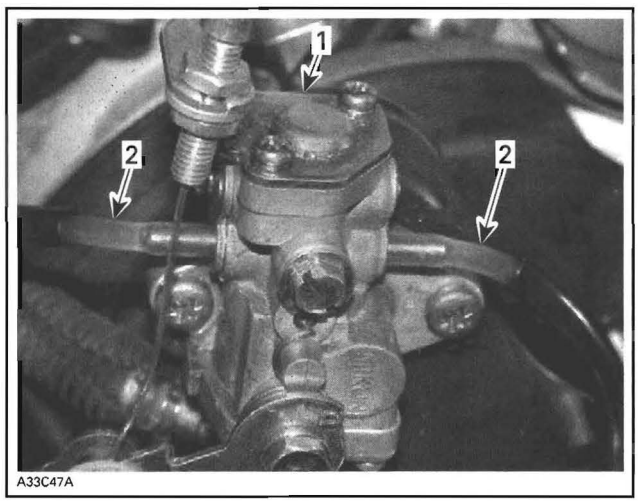

1. *Oil pump*
2. *Outlet hoses*

Install a small hose pincher (P/N 295 000 076) on the inlet oil line and disconnect it from oil pump. Clean any spillage.

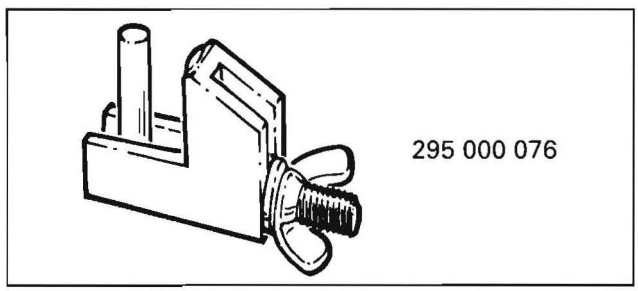

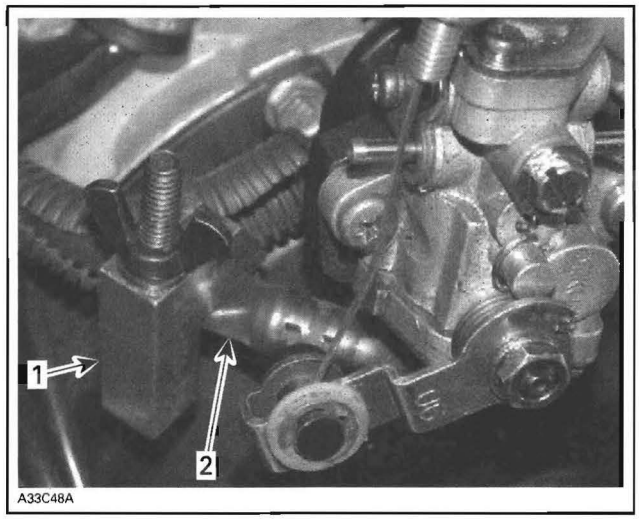

1. Hose pincher
2. Inlet oil line

Unscrew engine support bolts **no. 4**.

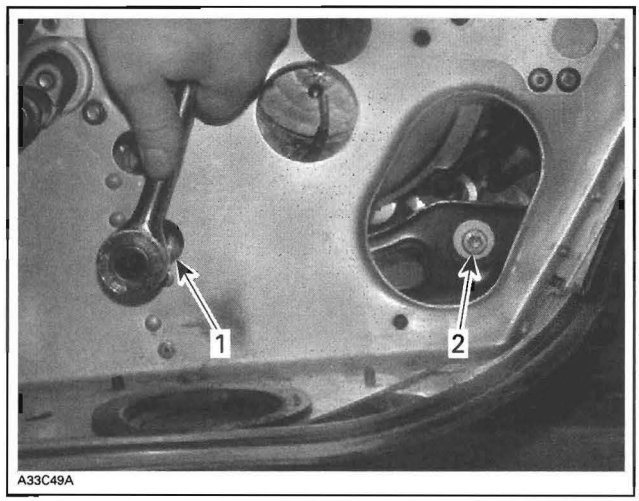

TYPICAL
1. Rear engine support bolt location
2. Front engine support bolt

Left Side of Vehicle

Remove drive and driven pulleys. Refer to the appropriate section.

Remove primary air intake silencer.

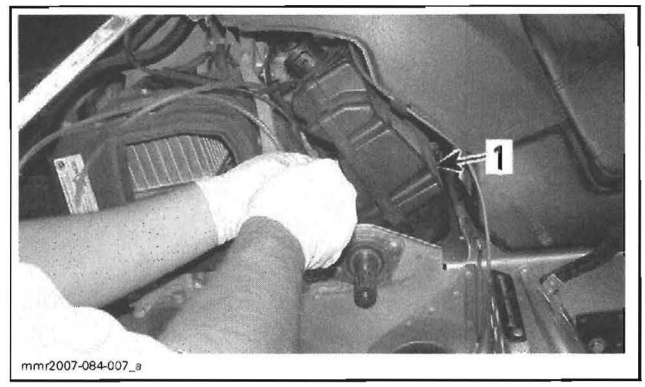

1. Primary air intake silencer

Unscrew carburetor clamps **no. 5** then remove the carburetors **no. 6** from intake adapters **no. 7**.

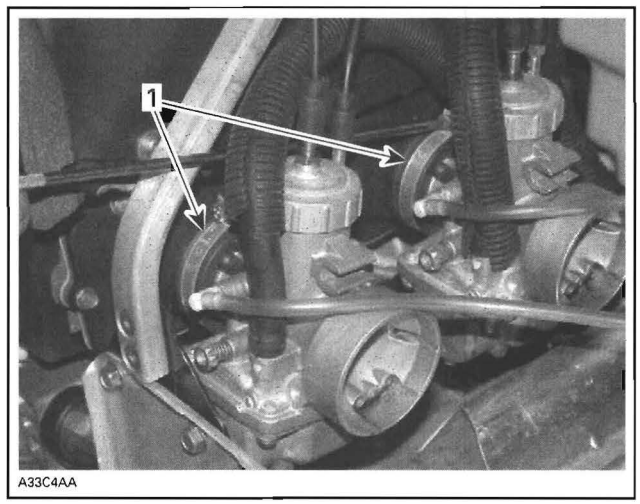

1. Carburetor clamps

Disconnect the spark plug cables and remove spark plugs.

Unscrew the front LH side member.

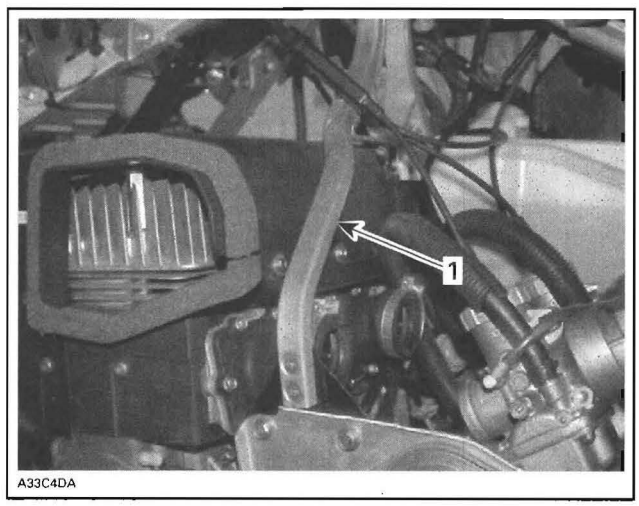

1. Front LH side member

Remove the impulse line from crankcase.

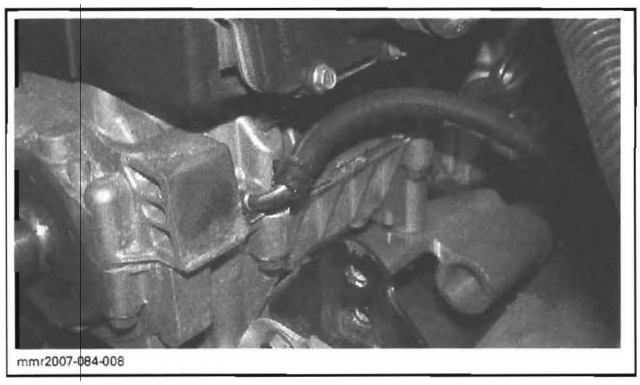
mmr2007-084-008

Remove the cylinder cowl **no. 10**.

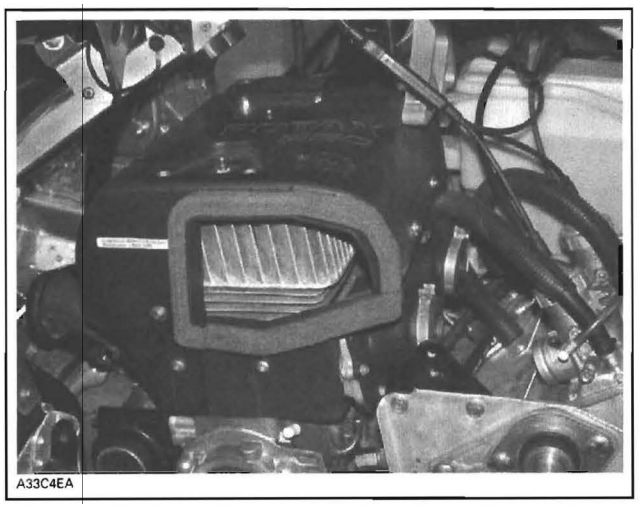
A33C4EA

Remove the engine support bolts **no. 11**.

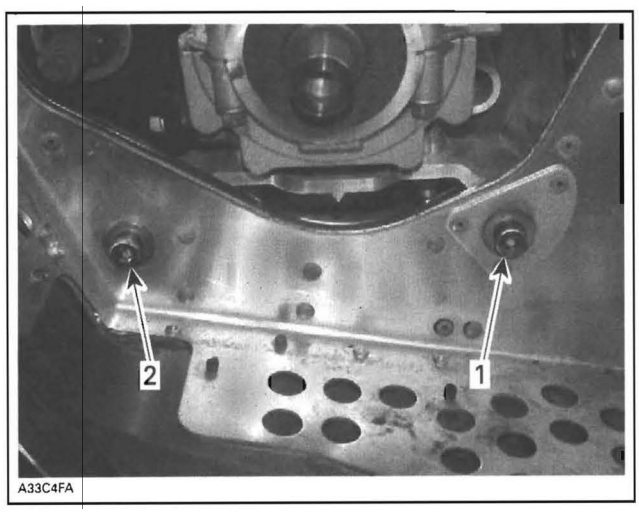

A33C4FA

1. Rear engine support bolt
2. Front engine support bolt

Use the following illustration to fabricate a lifting tool.

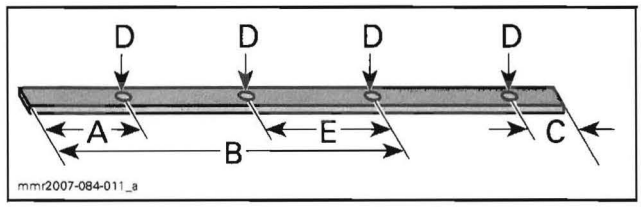

mmr2007-084-011_a

FLAT BAR 152 x 25.4 x 13 mm (16 x 1 x 1/2 in)
A. 51 mm (2 in)
B. 260 mm (10-1/4 in)
C. 38 mm (1-1/2 in)
D. Diameter: 13 mm (1/2 in)
E. 105 mm (4-1/8 in)

Install the lifting tool and attach hoist.

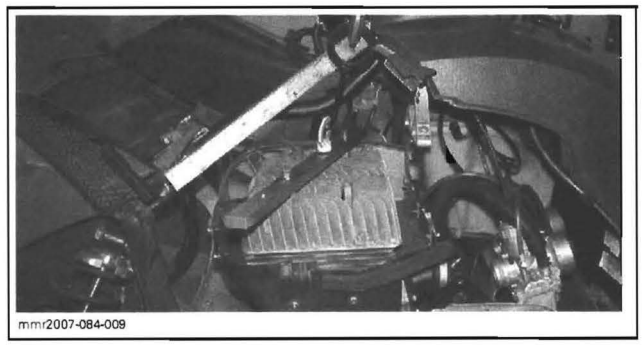
mmr2007-084-009

Lift up the engine.

Unscrew jam nut and remove the engine stopper.

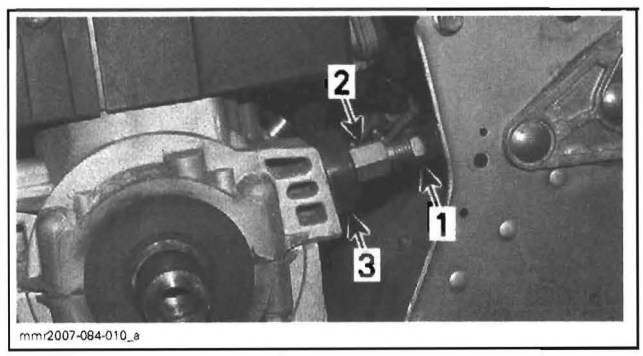

mmr2007-084-010_a

1. Jam nut
2. Screwed rod
3. Rubber damper

Unscrew the nuts **no. 12** retaining engine support **no. 13** to engine.

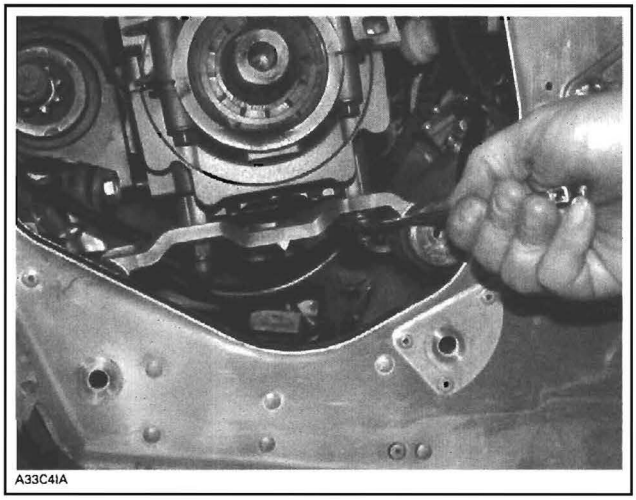
A33C4IA

Remove the support from engine and lower it in frame.

Remove engine from vehicle.

Inspection

Check if engine support **no. 13** is cracked, bent or damaged. Replace if necessary.

Check rubber mounts **no. 14** on engine support. Replace them if brittle, cracked or damaged.

Installation

To install engine in vehicle, reverse the removal procedure. However, pay attention to the following.

Install engine support under engine then torque engine support nuts to 35 N•m (26 lbf•ft).

Before installing engine support bolts, apply as shown in the following illustration.

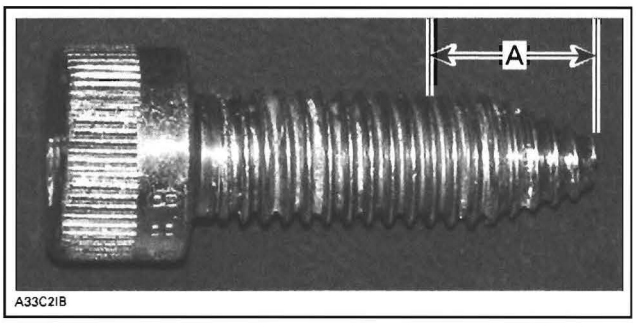

A33C2IB

A. Apply Loctite in this area, 10 ± 1.5 mm (.39 ± .059 in)

Torque engine support bolts to 38 N•m (28 lbf•ft).

Hand torque engine stopper **no. 9** then torque its nut **no. 15** to 28 N•m (21 lbf•ft).

Reinstall all removed parts by using the appropriate component/system reinstallation procedures described in this shop.

ENGINE SUPPORT

Engine Support Removal

Remove engine from vehicle.

Unscrew nuts securing the engine support.

Rubber Mount Replacement

Install the support on a flat surface and using a chisel remove the rubber mount.

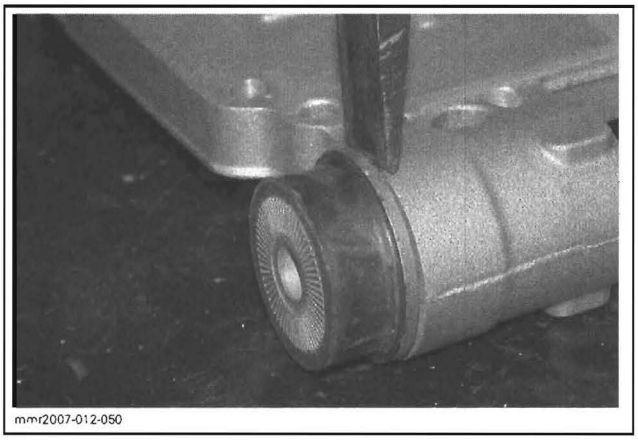
mmr2007-012-050

It is recommended to replace all rubber mounts at the same time.

Before installing the rubber mount, file chisel marks on engine support.

Using a press and the ball joint installer (P/N 529 000 012), press the rubber mount into engine support.

Support the engine support to avoid damaging it during the installation.

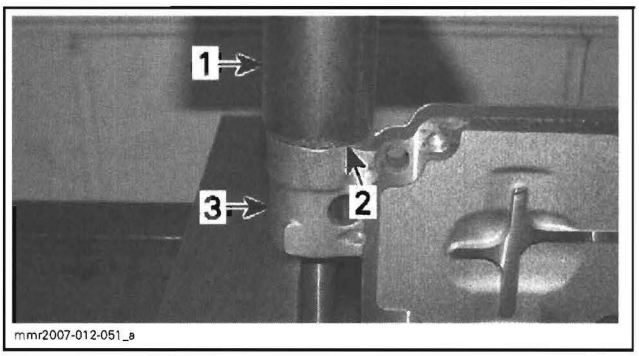

mmr2007-012-051_a

1. Special tool (P/N 529 000 012)
2. Rubber mount
3. Engine support

Engine Support Installation

Install the engine support on engine and torque nuts to 35 N•m (26 lbf•ft).

ENGINE LEAK TEST

SERVICE TOOLS

Description	Part Number	Page
intake plug	529 011 000	119
manifold plug	529 035 961	119
small hose pincher	295 000 076	119
vacuum/pressure pump	529 021 800	120

Prior to take apart an engine, it is important to proceed with a leak test to diagnose engine problems. Whenever the engine is disassembly, a leak test should be performed after reassembly.

PREPARATION

Remove tuned pipe. Refer to *EXHAUST SYSTEM.*

Install the manifold plug (P/N 529 035 961) over exhaust manifold.

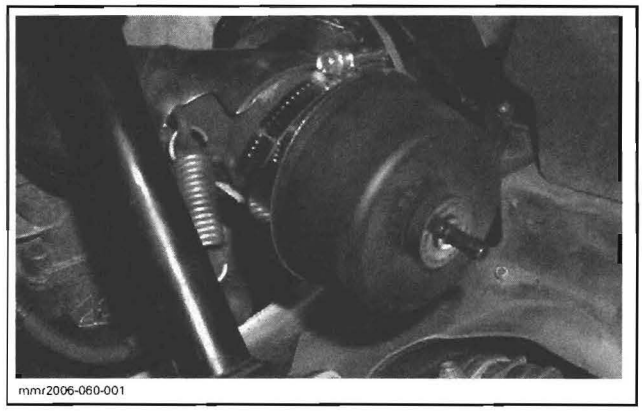

TYPICAL

Open the LH side panel and remove primary air intake silencer. Refer to *AIR INTAKE SYSTEM.*

Remove carburetors.

Insert an intake plug (P/N 529 011 000) in each intake adaptors. Tighten with existing clamps.

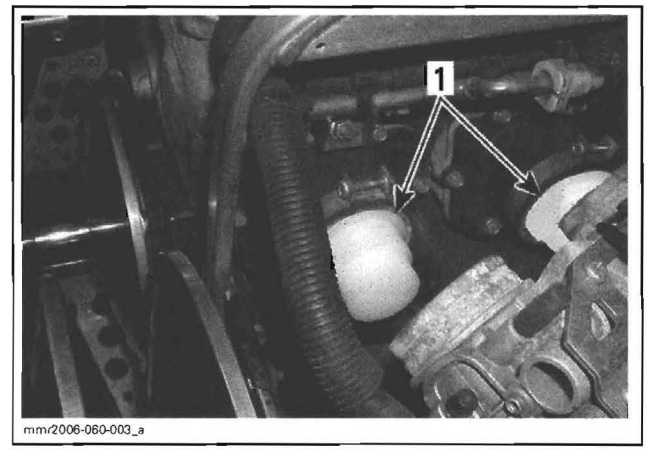

TYPICAL
1. Intake plug

Using a small hose pincher (P/N 295 000 076), block impulse hose.

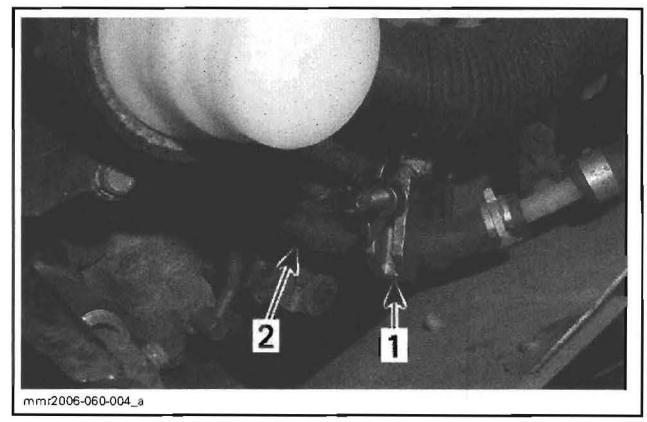

1. Small hose pincher
2. Impulse hose

PROCEDURE

Install the vacuum/pressure pump (P/N 529 021 800) on manifold plug.

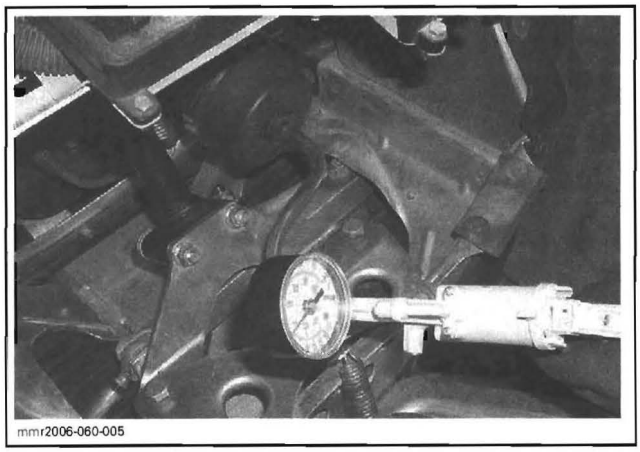

TYPICAL

Activate pump and pressurize engine to 34 kPa (5 PSI). Do not exceed this pressure.

Engine must stand this pressure during 3 minutes. If pressure drops before 3 minutes, spray a soapy solution on tester kit (manifold and intake plugs, vacuum/pressure pump and its hose).

- If tester kit (manifold and intake plugs, hoses and pump) is leaking, bubbles will indicate where leak comes from.
- If tester kit is not leaking, check engine, see below for procedure.
- If there is a leak at the tested location, it is recommended to continue testing next items before overhauling engine. There is a possibility of more than one leak.
- If there is no leak at the tested location, continue pumping to maintain pressure and continue with next items until leak is found.

Engine

Check the following:

- All jointed surfaces and screw/stud threads of engine:
  - spark plug bases, insulators
  - cylinder head
  - pistons and cylinders
  - crankcase halves (housing and joint)
  - oil injection pump mounting flange.
- Crankshaft outer seals. One behind drive pulley and the other behind magneto.

If leak still persists, it indicates a defective casting somewhere in engine. Disassemble engine and carefully check for defects in castings. Pay attention to tapped holes which may go through engine sealed area and thus lead to leakage.

After engine is repaired, always recheck for leakage.

AIR INTAKE SYSTEM

PROCEDURES

AIR FILTER

Removal

The air filter is located inside secondary air intake silencer.

Open LH side panel and pull air filter out of secondary air intake silencer.

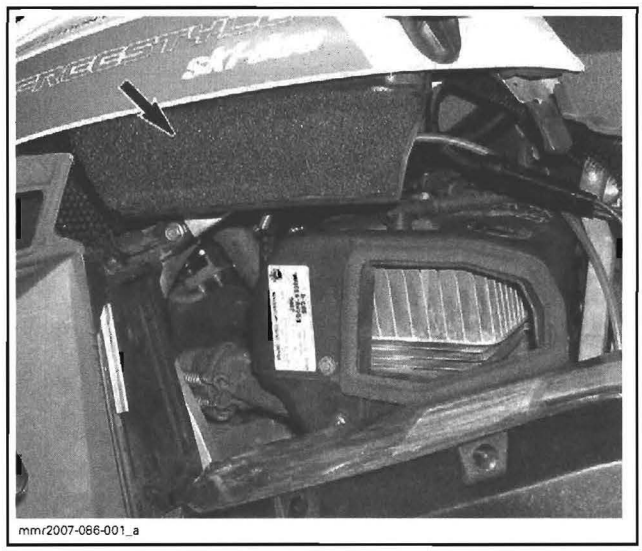
mmr2007-086-001_a

Cleaning

Blow low pressure compressed air on filter to clean it.

Replace air filter as required.

NOTE: If the filter is very dirty, clean the interior of secondary air intake silencer at the same time.

Installation

The installation is the reverse of the removal procedure.

PRIMARY AIR INTAKE SILENCER

Removal

Open LH side panel.

Remove driven pulley. Refer to *DRIVE SYSTEM*.

Disconnect secondary air intake silencer.

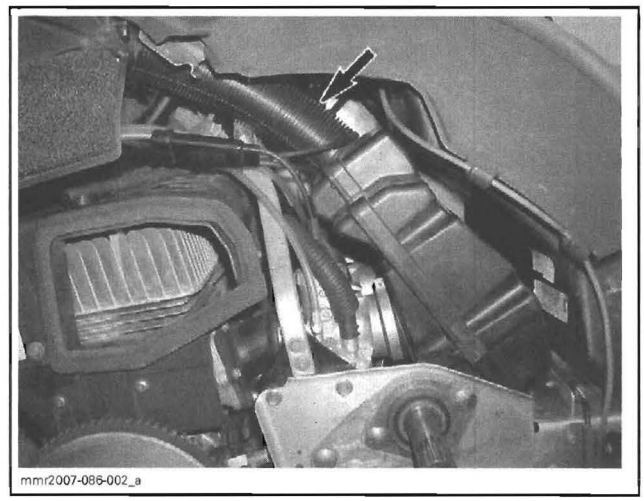
mmr2007-086-002_a

Unscrew clamps that retain air intake adaptor to carburetors.

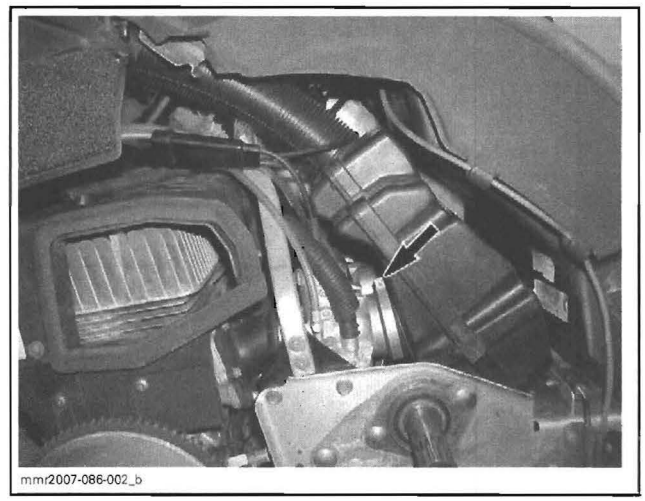
mmr2007-086-002_b

Separate primary air intake silencer from carburetors and pull it out of vehicle.

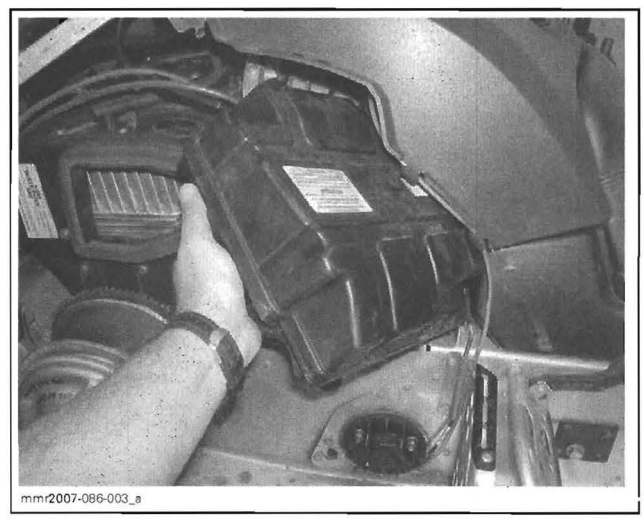
mmr2007-086-003_a

Installation

The installation is the reverse of the removal procedure. However, pay attention to the following.

Tighten clamps to 0.8 N•m (7 lbf•**in**).

SECONDARY AIR INTAKE SILENCER

Removal

Remove hood and LH side panel. Refer to *BODY*.

Disconnect vent tubes.

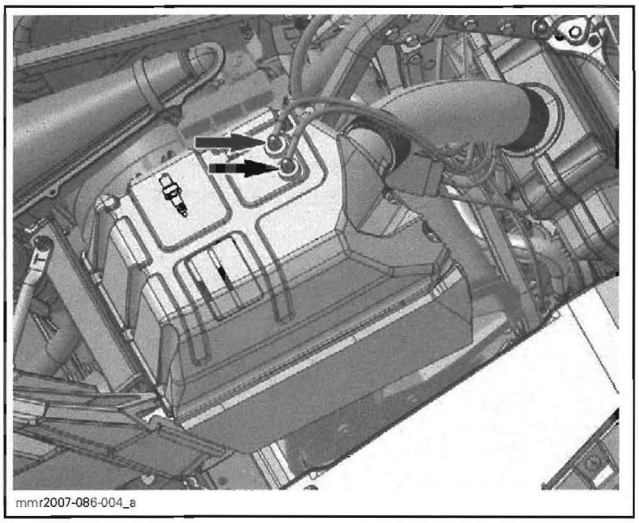

Remove air intake silencer.

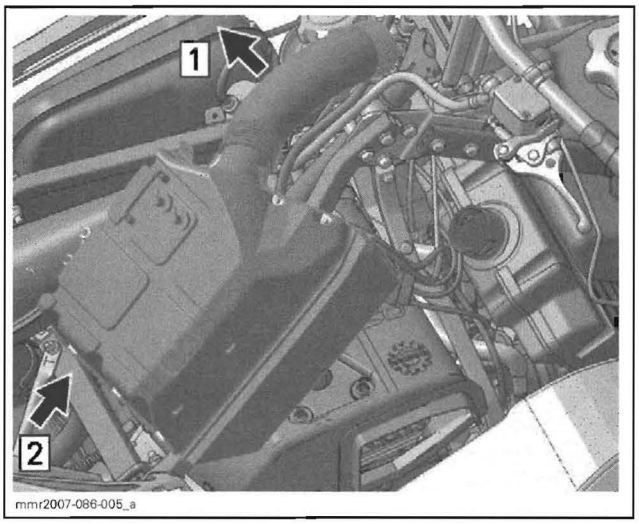

Step 1: Lift back of air intake silencer to disconnect tube
Step 2: Push rearward

Installation

The installation is the reverse of the removal procedure. However, pay attention to the following.

First insert grommet of air intake silencer to chassis tab.

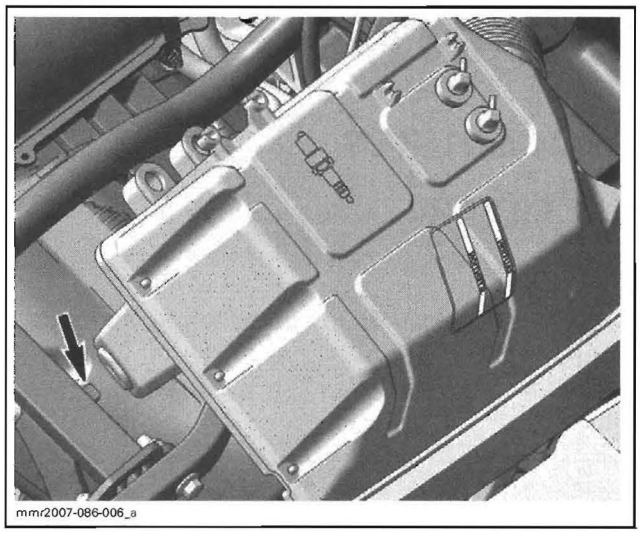

Ensure to reconnect vent tubes.

EXHAUST SYSTEM

SERVICE TOOLS

Description	Part Number	Page
exhaust spring installer/remover	529 035 401	125–127

SERVICE PRODUCTS

Description	Part Number	Page
Loctite 5920 (RTV high temperature sealant)	293 800 090	126

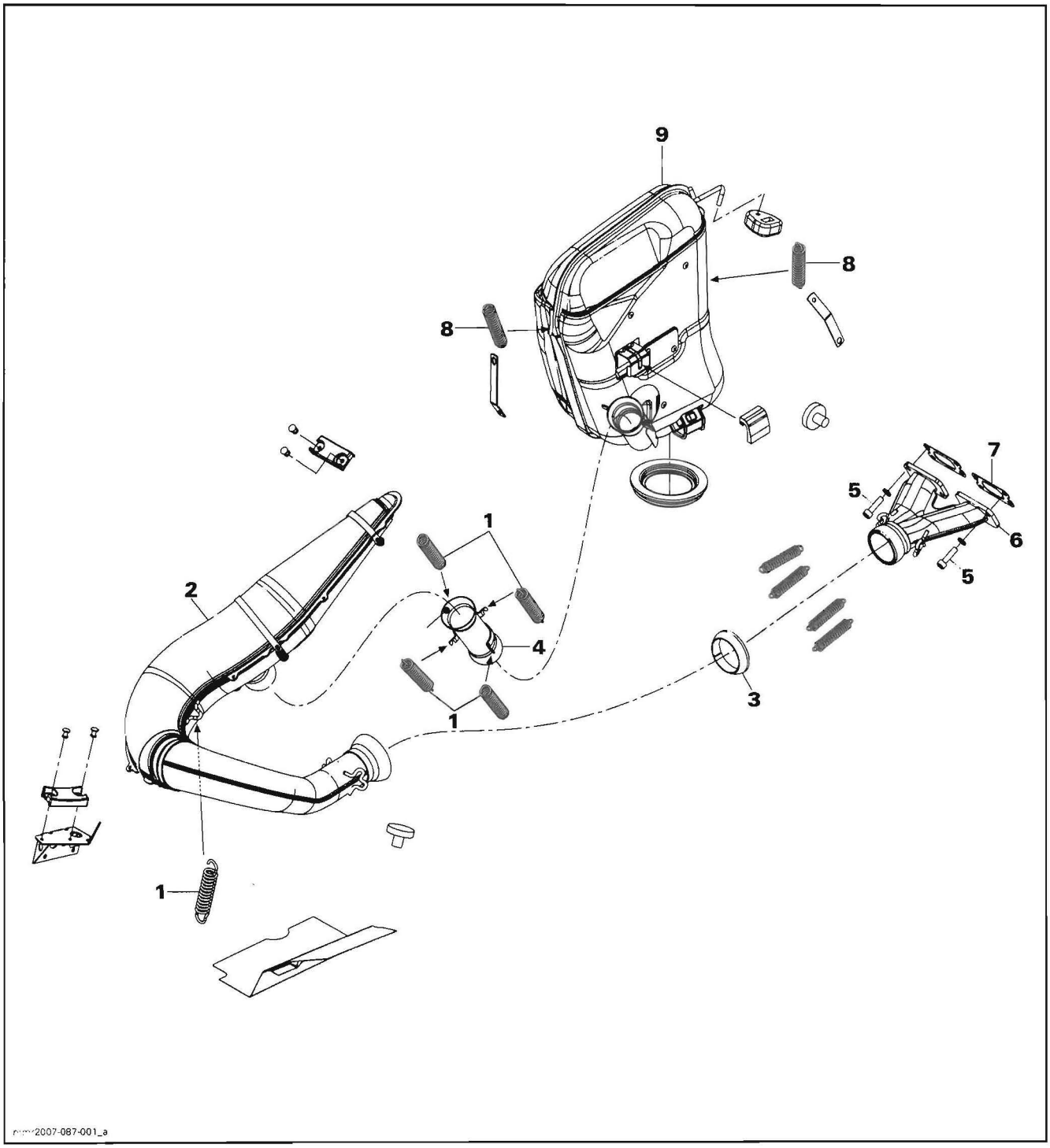
9
8
8
7
5
6
5
1
2
4
3
1
1
mmr2007-087-001_a

GENERAL

⚠ WARNING

To avoid potential burns, never touch exhaust system components immediately after the engine has been run because these components are very hot. Let engine and exhaust system cool down before performing any servicing.

During assembly/installation, use the torque value and service products as in the exploded view.

Clean threads before applying a threadlocker. Refer to *SELF-LOCKING FASTENERS* and *LOCTITE APPLICATION* at the beginning of this manual for complete procedure.

⚠ WARNING

Torque wrench tightening specifications must strictly be adhered to.
Locking devices (e.g.: locking tabs, elastic stop nuts, self-locking fasteners, cotter pins, etc.) must be installed or replaced with new ones where specified. If the efficiency of a locking device is impaired, it must be renewed.

NOTE: On applicable models, it is good practice to check for fault codes using B.U.D.S. software as a first troubleshooting step. Refer to *EMS DIAGNOSTIC AND COMMUNICATION TOOLS*.

PROCEDURES

TUNED PIPE

Identification

Each tuned pipe is identified by a number. To use the proper tuned pipe with the proper vehicle, check the number on the welded clamp at the end of tuned pipe. This number depicts the 6 last digits of the BRP part number.

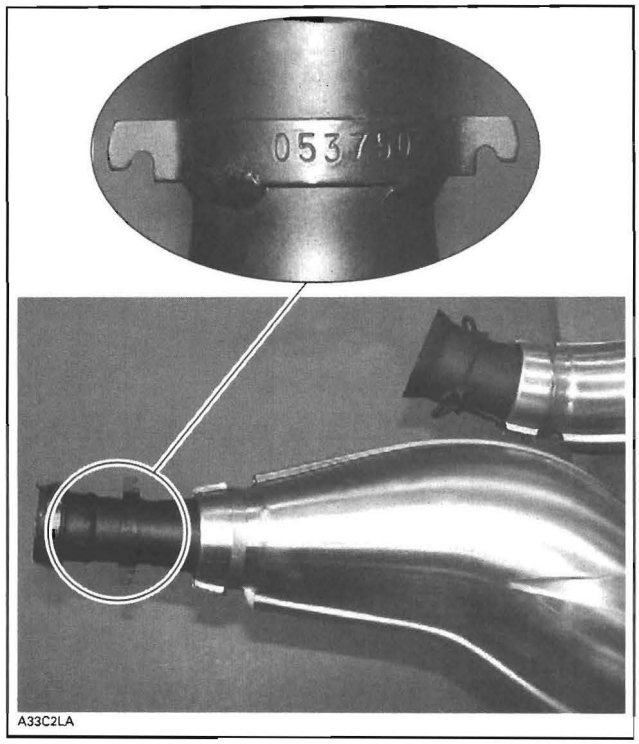

TYPICAL

Removal

Open hood and right side panel.

Remove brace.



Remove exhaust bottom springs **no. 1** using exhaust spring installer/remover (P/N 529 035 401).

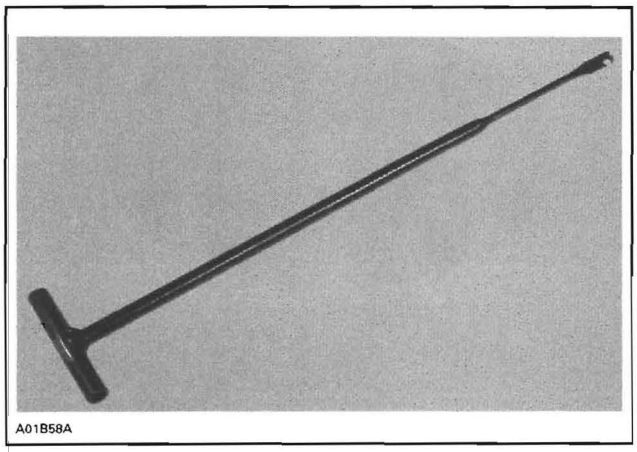
A01B58A

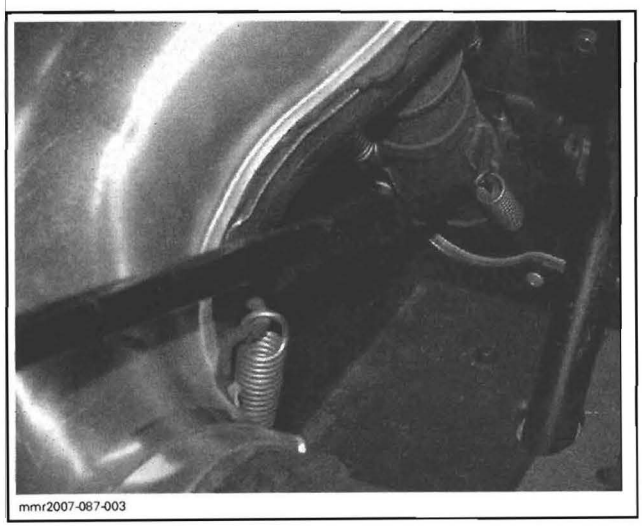
mmr2007-087-003

NOTE: Do not unhook exhaust pipe **no. 4** from tuned pipe needlessly.

Remove tuned pipe **no. 2**.

Remove exhaust gasket **no. 3** if applicable.

Inspection

Check tuned pipe shield for damages.

Check tuned pipe ends for cracks or damages.

Installation

Install doughnut shaped exhaust gasket **no. 3** with both of its notches aligned with Y-manifold protrusions.

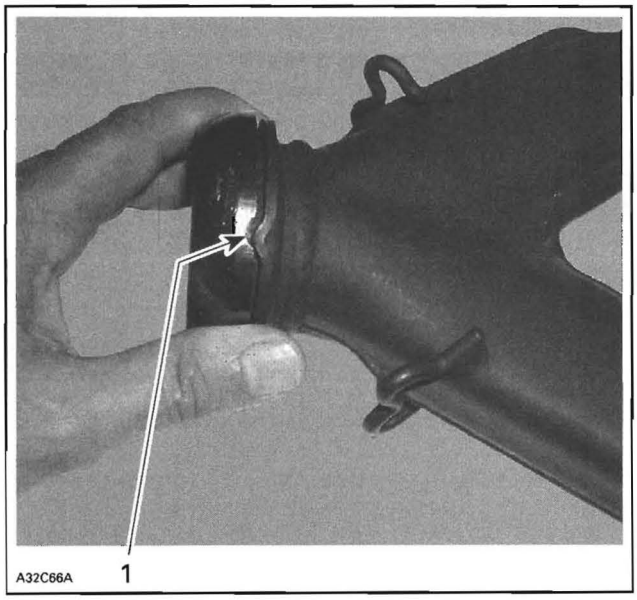

1. Align notches

If the gasket is damaged, replace it.

Apply Loctite 5920 (RTV high temperature sealant) (P/N 293 800 090) on gasket contact surfaces.

Install all exhaust springs using exhaust spring installer/remover (P/N 529 035 401).

MANIFOLD

Removal

Remove tuned pipe **no. 2**.

Remove doughnut shaped exhaust gasket **no. 3**.

Remove manifold screws **no. 5**

CAUTION: Heat screws for 30 seconds before loosening to prevent screw breakage.

Remove manifold **no. 6**.

Remove gaskets **no. 7**.

Inspection

Check if the manifold is cracked or damaged. Replace if necessary.

Installation

Install the manifold with new gaskets.

Torque manifold screws **no. 5**.

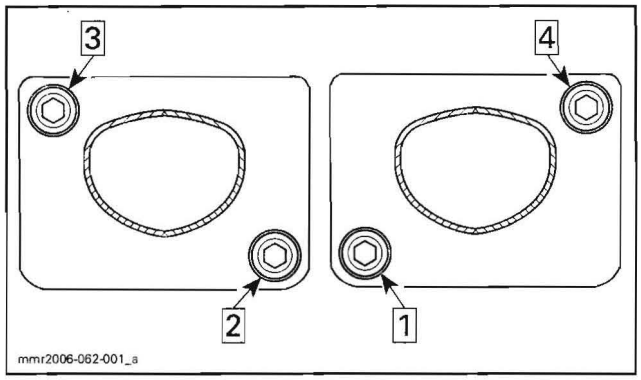

ENGINE	TORQUE
552	22 N•m (16 lbf•ft)

Install tuned pipe.

MUFFLER

Identification

Each muffler is identified by a number. To use the proper muffler with the proper vehicle, check the number on the welded clamp at the end of muffler. This number depicts the 6 last numbers of BRP part number.

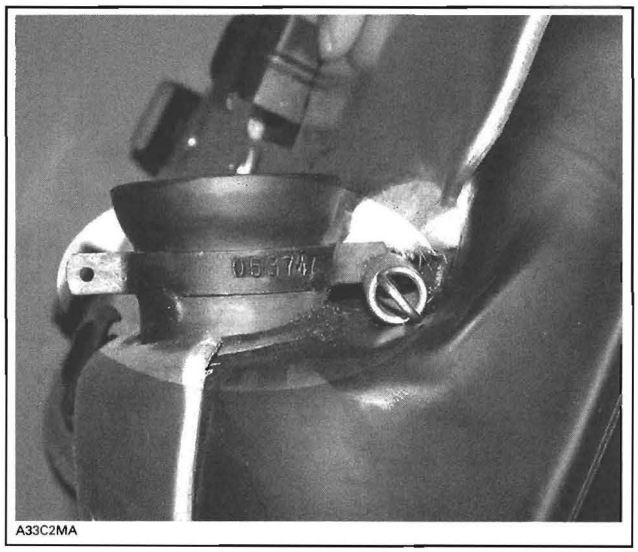

TYPICAL

Removal

Remove tuned pipe **no. 2**.

Remove springs **no. 8** retaining the muffler **no. 9** to chassis. Use exhaust spring installer/remover (P/N 529 035 401).

Remove the muffler by first lifting it to unhook and then pulling it out.

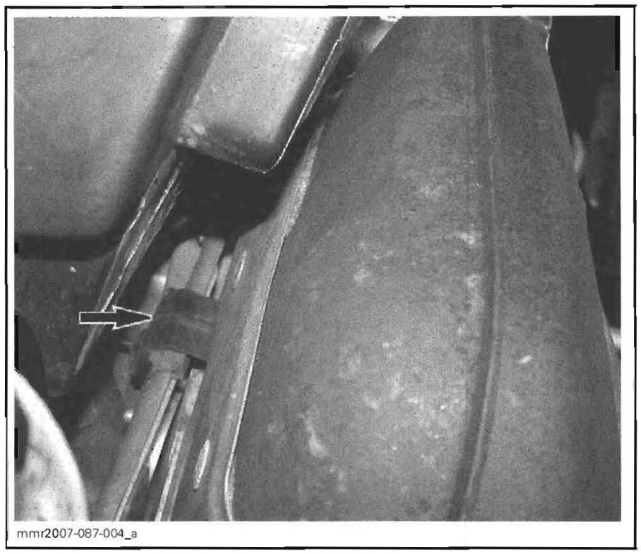

FIRST LIFT MUFFLER TO UNHOOK HERE

Inspection

Check the muffler for cracks or other damages.

Check springs condition. Ensure they well retain exhaust parts.

Check muffler rubber pads and grommet condition.

Installation

For installation, reverse the removal procedure. However, pay attention to the following.

Ensure rubber pads and grommet are in position before installing muffler.

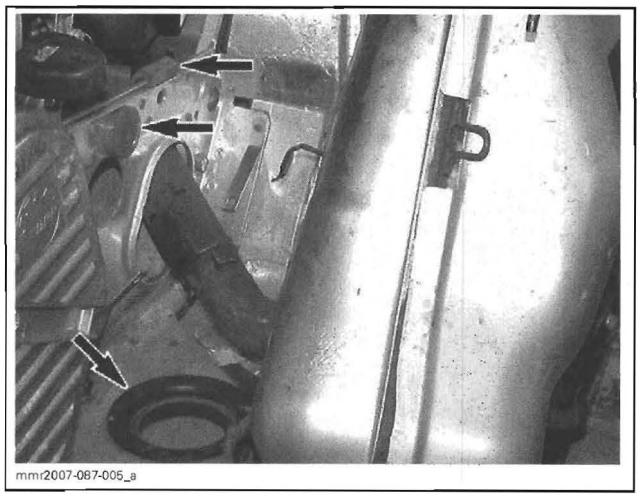

OIL INJECTION SYSTEM

SERVICE TOOLS

Description	Part Number	Page
gear holder	529 036 061	136
leak testing kit	529 033 100	132
multimeter Fluke 111	529 035 868	134
small hose pincher	295 000 076	132, 135
vacuum/pressure pump	529 021 800	132, 137

SERVICE PRODUCTS

Description	Part Number	Page
Loctite 243 (blue)	293 800 060	136
Loctite 648 (green)	413 711 400	137
pulley flange cleaner	413 711 809	137

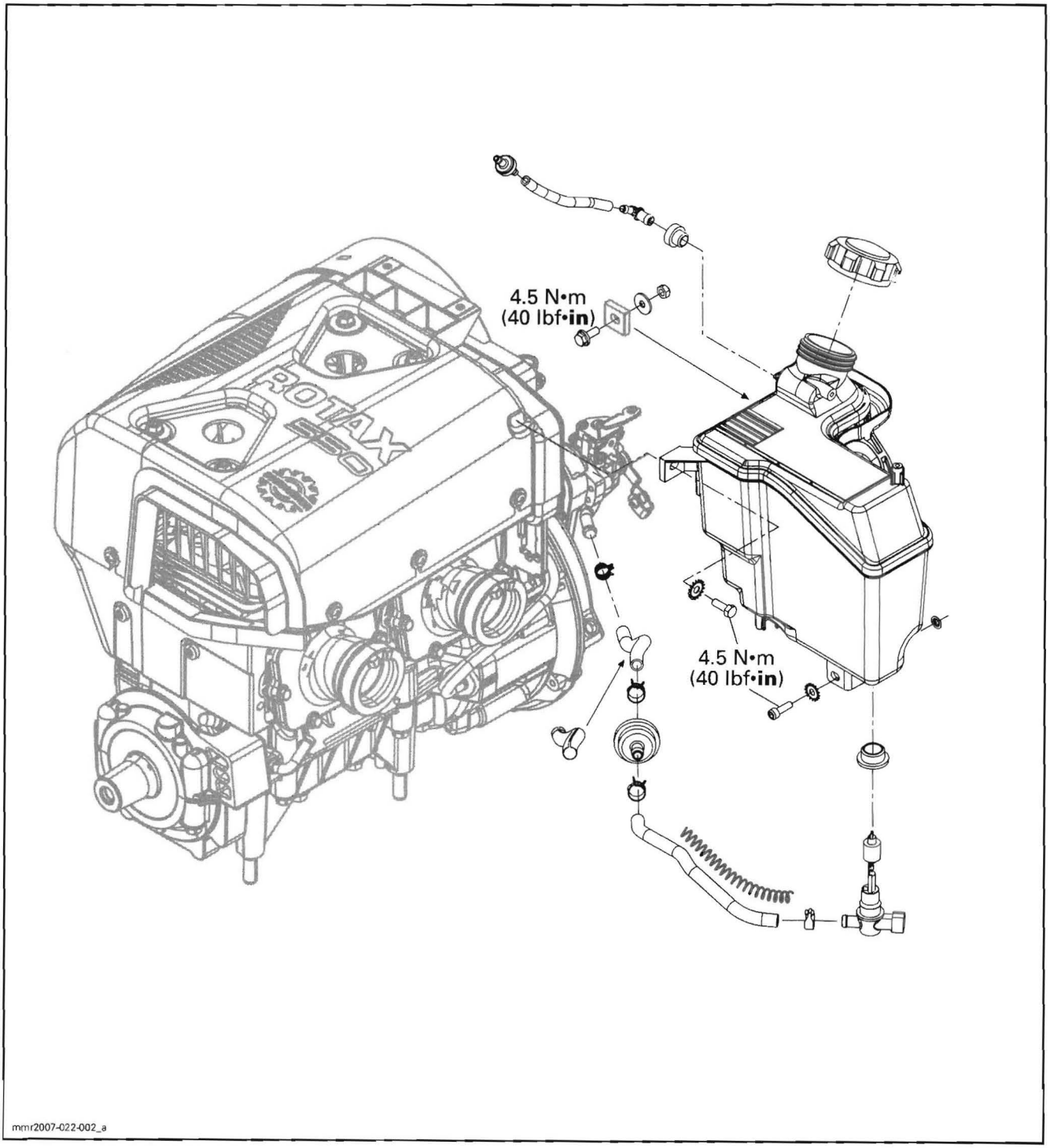
4.5 N•m
(40 lbf•in)
4.5 N•m
(40 lbf•in)
mmr2007-022-002_a

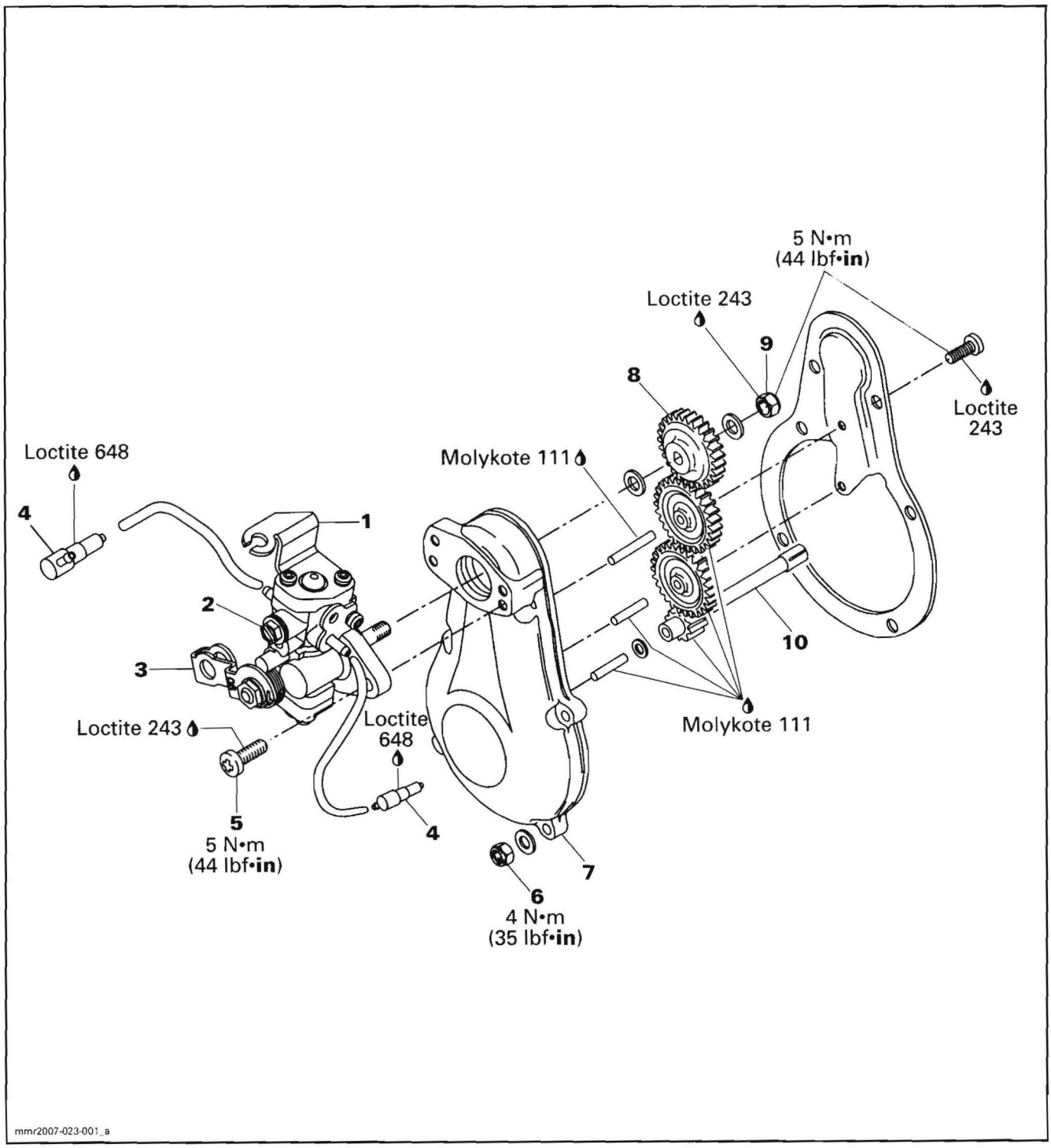
5 N•m
(44 lbf•in)
Loctite 243
9
8
Loctite
243
Loctite 648
4
1
Molykote 111
2
3
10
Loctite 243
Loctite
648
Molykote 111
5
5 N•m
(44 lbf•in)
4
7
6
4 N•m
(35 lbf•in)
mmr2007-023-001_a

GENERAL

During assembly/installation, use the torque values and service products as in the exploded views.

Clean threads before applying a threadlocker. Refer to *SELF-LOCKING FASTENERS* and *LOCTITE APPLICATION* at the beginning of this manual for complete procedure.

⚠ WARNING

Torque wrench tightening specifications must strictly be adhered to.
Locking devices (e.g.: locking tabs, elastic stop nuts, self-locking fasteners, etc.) must be installed or replaced with new ones where specified. If the efficiency of a locking device is impaired, it must be renewed.

⚠ WARNING

Wipe off any oil spills. Oil is highly flammable.

CAUTION: Do not use a hose pincher on inlet/outlet hoses. This would damage the spring inside hose.

NOTE: The following procedures can be done without removing the engine from chassis.

OIL TYPE

MODEL	OIL TYPE
550F	All XP-S 2-stroke oil (synthetic, synthetic blend or mineral) can be used(1) (2)

(1) If XP-S 2-stroke oil (synthetic, synthetic blend or mineral) is not available, API TC high-quality low ash two-stroke injection oil may be used.

(2) XP-S synthetic 2-stroke oil, XP-S synthetic blend 2-stroke and XP-S mineral injection oil are compatible, they can be mixed together.

INSPECTION

OIL SYSTEM LEAK TEST

The following test will indicate any leak from oil injection system.

Install on oil reservoir a special cap from the leak testing kit (P/N 529 033 100).

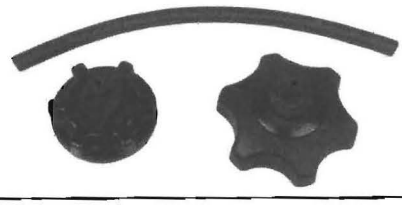

529 033 100

Install a small hose pincher (P/N 295 000 076) on check valve outlet hose.

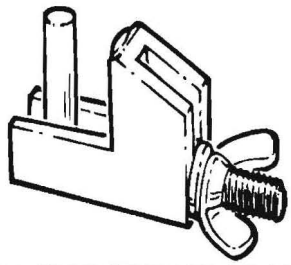

295 000 076

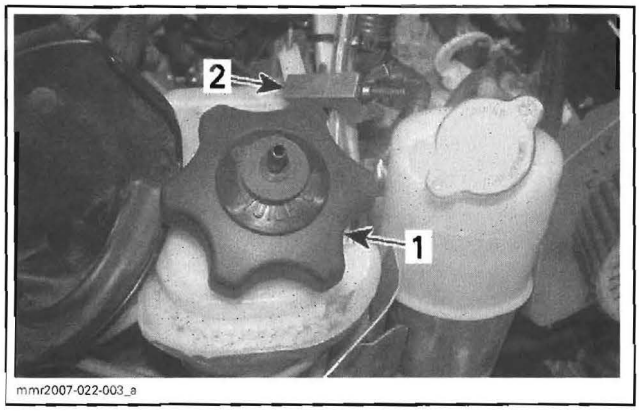

TYPICAL
1. *Special cap on reservoir*
2. *Hose pincher on check valve outlet hose*

Remove the muffler to gain access to the oil pump hoses. Install a small hose pincher (P/N 295 000 076) on each outlet hoses.

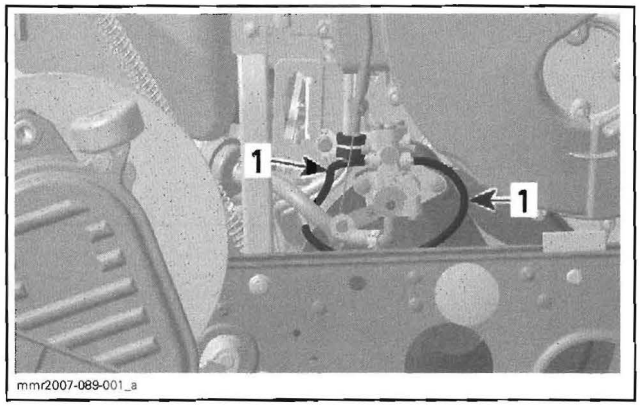

TYPICAL
1. *Outlet hoses of oil pump*

Connect the vacuum/pressure pump (P/N 529 021 800) to special cap.

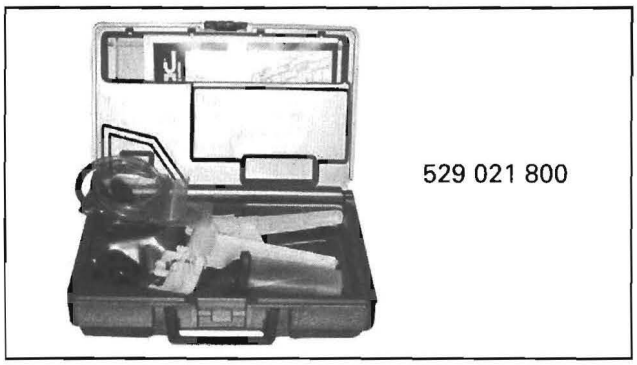

529 021 800

Pressurize oil system as follows.

PRESSURE	TIME TO HOLD PRESSURE
21 kPa (3 PSI)	3 minutes

If pressure drops, locate leak(s) and repair/replace leaking component(s).

NOTE: An oil pump shaft test must be done to complete the oil system leak test. Refer to *LEAK TEST* and *ENGINE DIMENSION MEASUREMENT* for the procedure.

Check Valve

It allows air to get into the reservoir. To verify this one-way check valve, remove it along with the hose. Make sure that it holds pressure and that it does not let air go through.

CAUTION: If check valve does not allow air to enter, serious engine damage will occur.

When replacing/installing check valve, insert its black side into vent line.

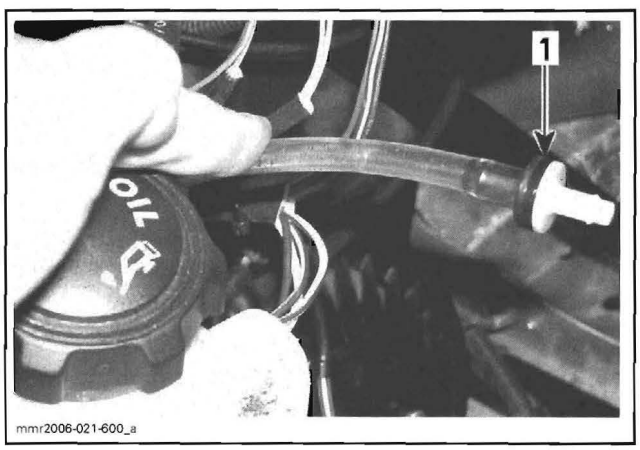

TYPICAL
1. Black side here

PROCEDURES

OIL RESERVOIR

Reservoir Removal

Empty oil reservoir by siphoning injection oil.

Remove:

- primary air intake silencer
- upper screw securing oil reservoir

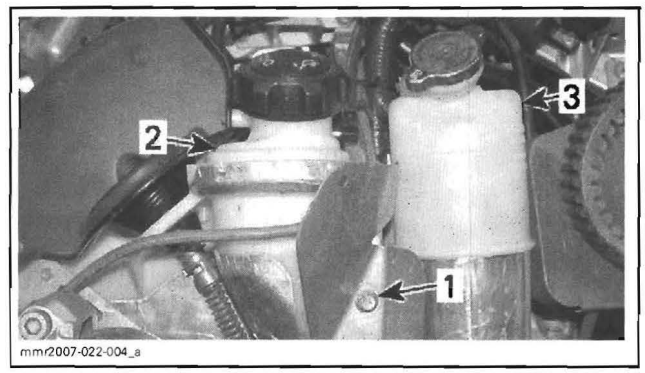

1. Upper screw
2. Oil reservoir
3. Coolant reservoir

- rewind starter support and grip
- hose protector support
- electronic module (if the module is located on the reservoir)
- lower fasteners.

NOTE: Cut the ties retaining the wiring harness if necessary.

Pull oil reservoir and unplug all hoses.

Reservoir Installation

For installation, reverse the removal procedure.

Bleed oil pump. Refer to *OIL PUMP*.

OIL LEVEL SENSOR

Sensor Removal

To remove the oil level sensor, use the following procedure.

Remove oil reservoir, as mentioned above.

Unplug sensor connector.

Pull sensor out of reservoir.

Before replacing the oil level sensor, check it according to the following procedure:

CAUTION: Do not remove or bend the reed switch protective float magnet. It can damage the reed switch glass.

With the float magnet ring at the lowest position and using the multimeter Fluke 111 (P/N 529 035 868), measure the resistance of the oil level sensor.

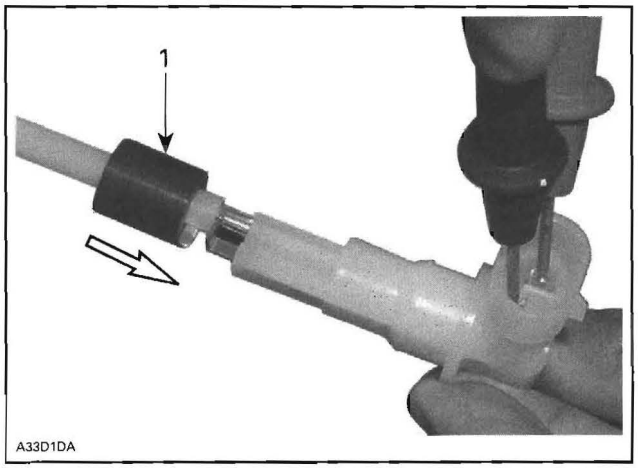

1. Float magnet at the lowest position

MEASURE	SENSOR CONDITION
Closed circuit (close to 0 Ω)	Good
Open or resistive circuit more than 0.5 Ω	Defective

Sensor Installation

For installation, reverse the removal procedure.

OIL FILTER

Filter Removal

Remove primary air intake silencer and carburetor.

Siphon injection oil reservoir.

Disconnect oil filter hose from the oil level sensor.

Disconnect filter from oil hoses and remove it.

Filter Installation

For installation, reverse the removal procedure.

The filter must be installed with the arrow pointing toward the pump.

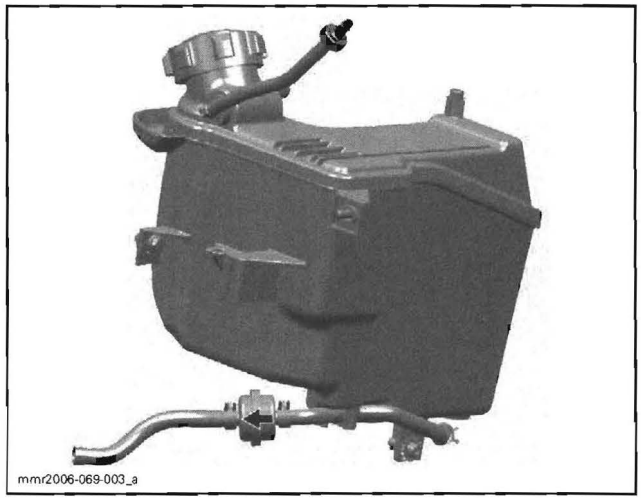

Bleed oil pump. Refer to *OIL PUMP*.

OIL INJECTION PUMP

Oil Pump Identification

Different engines need different pumps. See identification on lever **no. 3**.

CAUTION: Always mount proper pump on engine.

ENGINE TYPE	OIL PUMP IDENTIFICATION
552	06

Oil Pump Verification

NOTE: Since pump is a piston type, it works when engine rotates in both forward and reverse.

On Vehicle

NOTE: Main oil line must be full of oil. See bleeding procedure further.

Lift rear of vehicle and support with a mechanical stand. Unplug small oil lines from pump. Start engine and stop it as soon as it fires.

Check that oil in small oil lines has been sucked up (this will be indicated by a clear section of small oil lines). Repeat the procedure until this condition is attained.

Reconnect small oil lines, start engine and run at idle while holding the pump lever **no. 3** in fully open position. Oil columns must advance into small oil lines.

If not, remove injection oil pump **no. 1** and check the pump gear **no. 8** and drive shaft (if applicable) for defects, replace as necessary. Test pump as described below.

NOTE: Through normal use, oil level must not drop in small tubes. If oil drops, verify injection nozzle **no. 4** operation. Replace as necessary.

Test Bench

Connect a hose filled with injection oil to main line fitting. Insert other hose end in an injection oil container. Using a clockwise rotating drill rotate pump shaft. Oil must drip from outer fittings while holding lever in a fully open position. If not replace pump.

Oil Pump Removal

NOTE: Before removing the injection oil pump **no. 1**, check its operation. Refer to *VERIFICATION*, above in this section.

Drain injection oil reservoir.

Remove the muffler.

Disconnect oil pump cable.

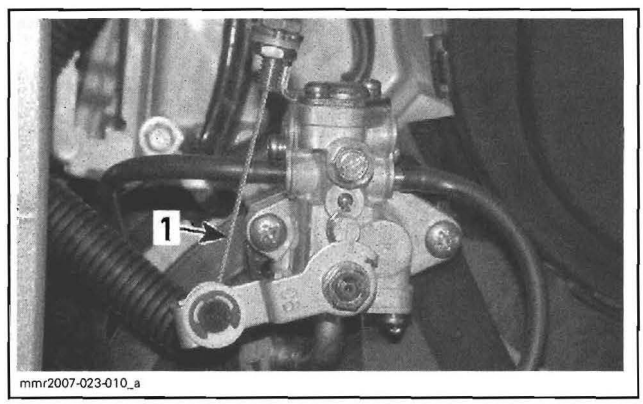

1. Oil pump cable

Install a small hose pincher (P/N 295 000 076) on each oil pump outlet hoses then disconnect them.

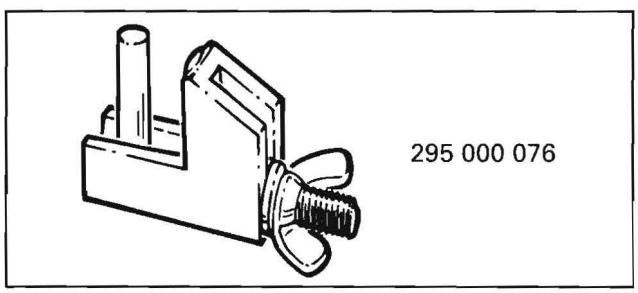

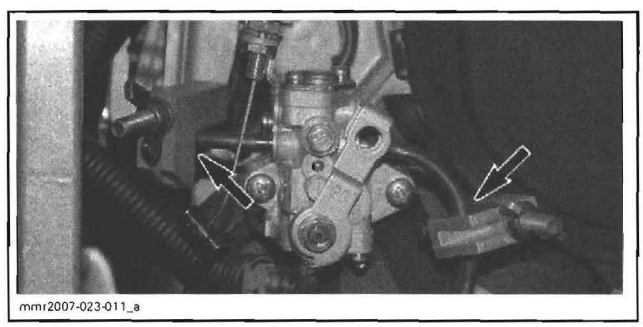

NOTE: Mark hoses locations for installation.

Unscrew nuts **no. 6** holding oil pump mounting housing.

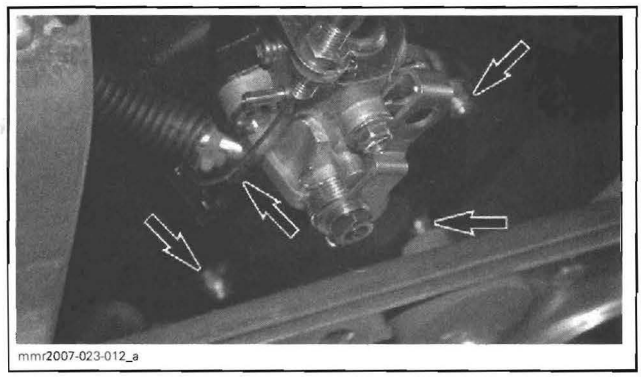

Remove oil pump mounting housing **no. 7**.

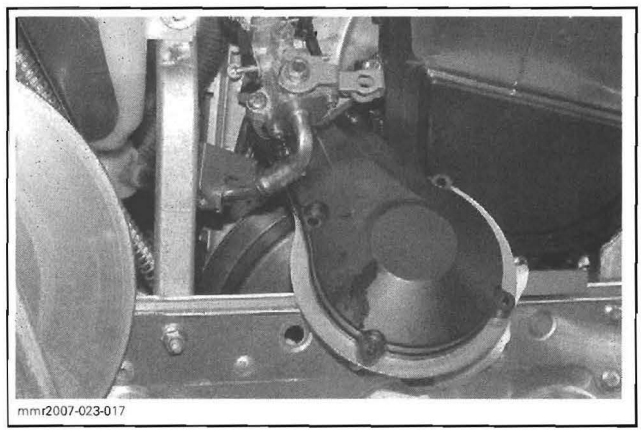

Disconnect the oil line from oil pump.

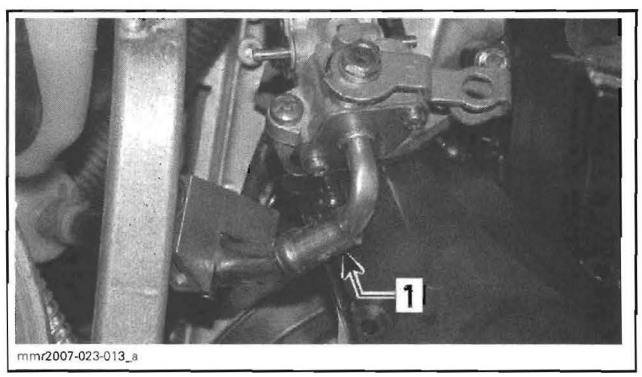

1. Oil line from oil injection reservoir

Remove the plate on the back of oil pump mounting housing.

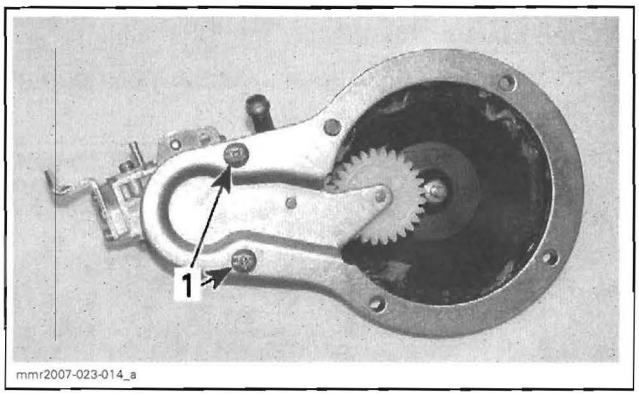

1. Unscrew these nuts

Install the gear holder (P/N 529 036 061) and unscrew oil gear nut.

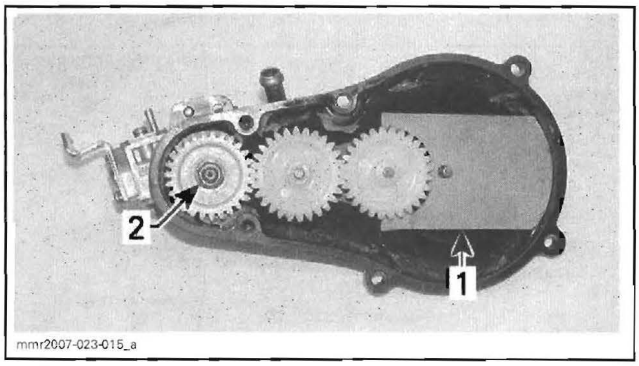

1. Gear holder
2. Oil gear nut

Remove oil pump gear **no. 8**.

Remove screws **no. 5** securing oil pump to oil pump mounting housing.

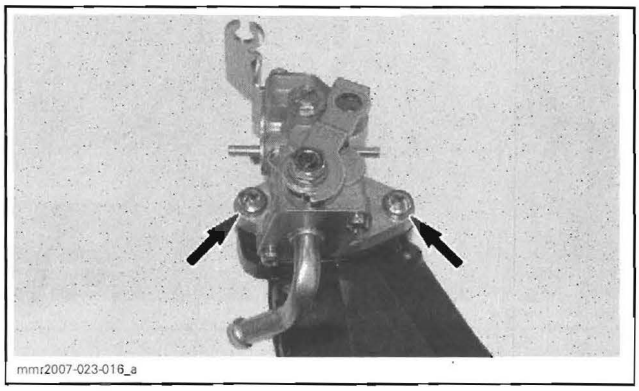

Remove oil pump.

Oil Pump Cleaning

Clean all metal components in a non-ferrous metal cleaner.

Oil Pump Installation

For installation, reverse the removal procedure. However, pay attention to the following.

NOTE: During installation, always check for spring clips tightness on pump inlet hoses.

Apply Loctite 243 (blue) (P/N 293 800 060) on threads of screws **no. 5** and torque them to 6 N•m (53 lbf•**in**).

Make sure cable barrel is well seated in oil pump lever.

Secure barrel with plastic washer and circlip.

Install cable lock washer on left side of support.

Verify cable and oil pump lever operation then adjust cable.

Bleed oil pump. See procedure further.

CAUTION: Always bleed oil pump when the system has been opened.

Oil Pump Cable Adjustment

Prior to adjusting the pump, make sure all carburetor adjustments are completed and engine is stopped. Refer to *CARBURETOR AND THROTTLE CABLE.*

Eliminate the throttle cable free-play by pressing the throttle lever until a light resistance is felt, then hold in place.

The mark on the pump casting and on the lever must align. Width of lever mark is the tolerance.

Loosen the adjuster nut and adjust accordingly.

Retighten the adjuster nut.

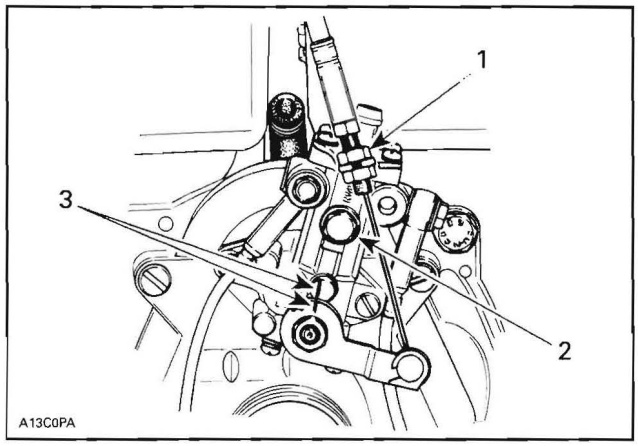

TYPICAL
1. Adjuster nut
2. Bleeder screw
3. Marks

CAUTION: Proper oil injection pump adjustment is very important. Any delay in the opening of the pump can result in serious engine damage.

Oil Pump Bleeding

Bleed main oil line (between reservoir and pump) by loosening the bleeder screw until air has escaped from the line. Add injection oil as required.

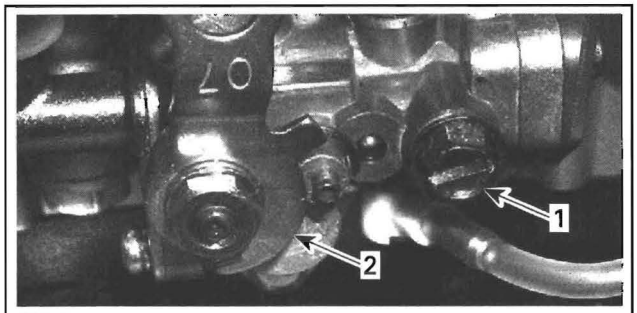

A35C2MA

TYPICAL
1. Bleeder screw
2. Oil pump lever

Bleed the small oil line between pump and engine by running engine at idle while holding the pump lever in fully open position.

NOTE: Make a "J" hook out of mechanical wire to lift the lever.

⚠ WARNING

Do not operate throttle mechanism. Secure the rear of the vehicle on a stand.

INJECTION NOZZLE

Nozzle Inspection

CAUTION: Do not remove injection nozzle needlessly. It is likely to be damaged.

Use the vacuum/pressure pump (P/N 529 021 800).


529 021 800

Connect pump to injection nozzle **no. 4**.

Test check valve of injection nozzle as follows.

PUMP SETTING	Set to VACUUM	Set to PRESSURE
TO DO	Activate pump several times	Slowly activate pump and listen to check valve
RESULT	Air must not flow through check valve	You should hear it release pressure at approx. 20.7 kPa (3 PSI)
ACTION	**Success:** Perform next test	**Success:** Check valve is good
	Failed: Replace injection nozzle	**Failed:** Replace injection nozzle

Nozzle Removal

NOTE: Before removing injection nozzle **no. 4**, check its operation. Refer to the end of this section.

Remove air intake silencer and carburetor or throttle body.

Clean injection nozzle area to remove oil or dirt.

Heat injection nozzle **no. 4** then pull it out of crankcase.

Nozzle Installation

Prior to coating it with Loctite, make sure check valve body is clean and dry. Clean from dirt or oil, if any, with pulley flange cleaner (P/N 413 711 809).

Apply Loctite 648 (green) (P/N 413 711 400) on the outer diameter of the check valve (machined section). Take care that Loctite is ONLY in this area.

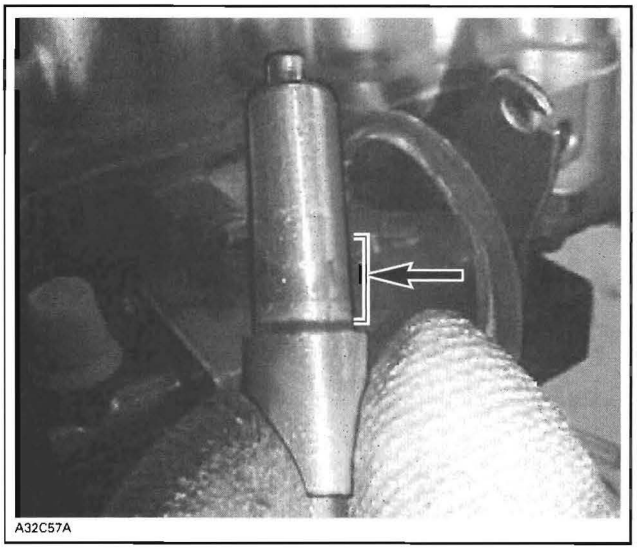
A32C57A

APPLY LOCTITE ON THIS AREA ONLY

Install the check valve in the correct position as described on next photos into the crankcase lower side.

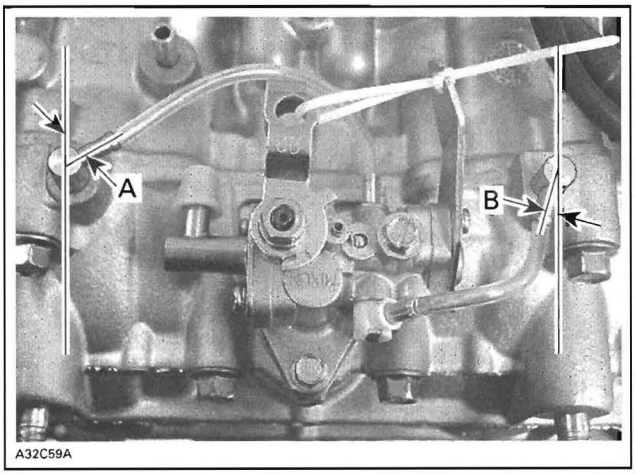

TYPICAL
A. PTO side 45° ± 5° from cylinder axis to the top
B. MAG side 20° ± 5° from cylinder axis to the bottom

Punch in the injection nozzle carefully with a plastic hammer.

Clean the crankcase from surplus of Loctite 648 with a rag.

REWIND STARTER

SERVICE TOOLS

Description	Part Number	Page
small hose pincher	295 000 076	141

SERVICE PRODUCTS

Description	Part Number	Page
Molykote PG 54	420 899 763	142–144

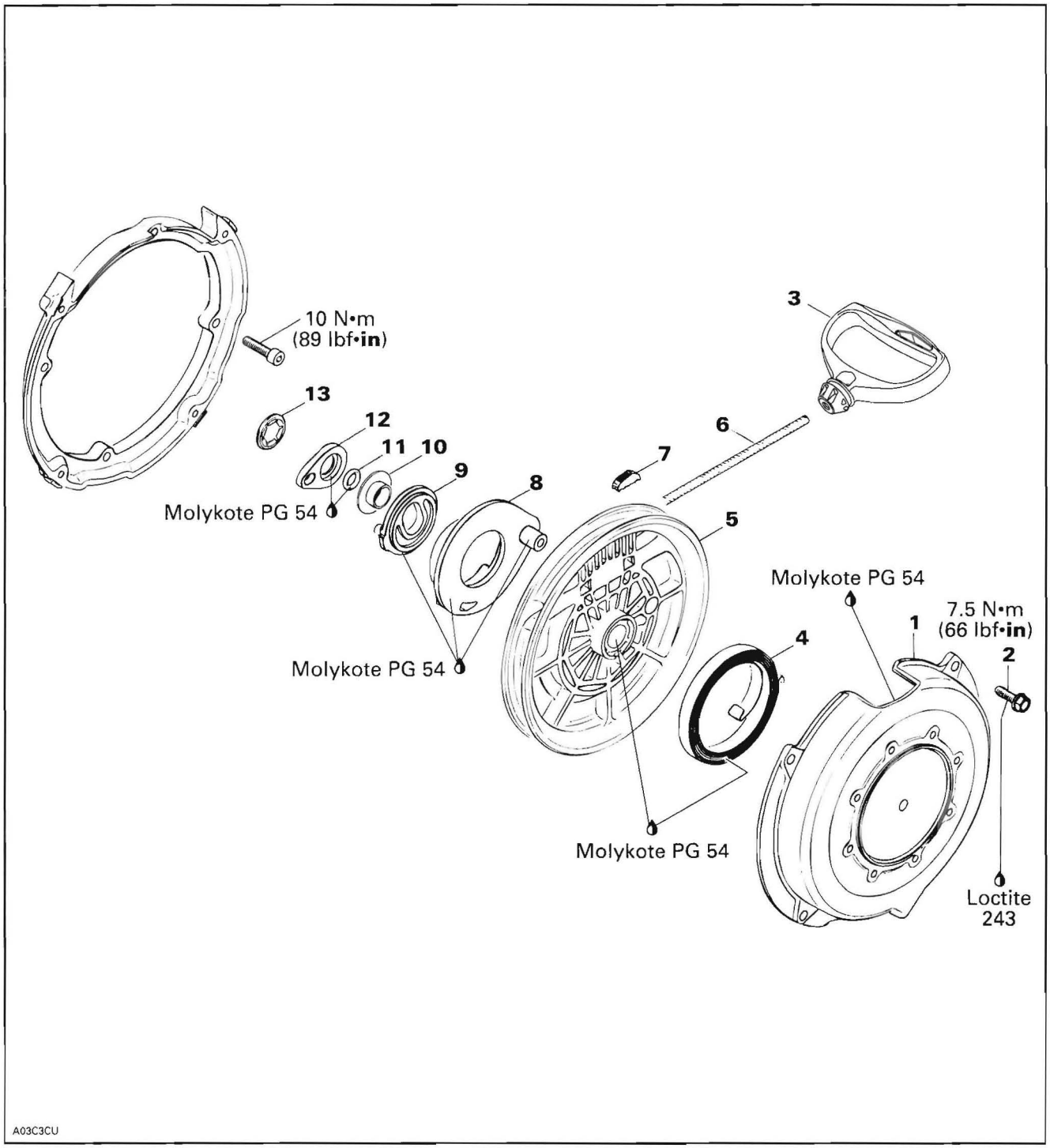
10 N•m
(89 lbf•in)
13
12
11
10
9
8
7
6
3
5
Molykote PG 54
Molykote PG 54
Molykote PG 54
4
1
7.5 N•m
(66 lbf•in)
2
Loctite
243
A03C3CU

GENERAL

NOTE: Due to dust accumulation, rewind starter must be periodically cleaned, inspected and relubricated.

CAUTION: It is of the utmost importance that the rewind starter spring be lubricated periodically using specific lubricant. Otherwise, rewind starter component life will be shortened and/or rewind starter will not operate properly under very cold temperatures.

Inspection

Check if rope **no. 6** is fraying, replace if so.

When pulling starter grip, mechanism must engage within 30 cm (1 ft) of rope pulled. If not, disassemble rewind starter, clean and check for damaged plastic parts. Replace as required, lubricate, reassemble and recheck. Always replace O-ring **no. 11** every time rewind starter is disassemble.

When releasing starter grip, it must return to its stopper and stay against it. If not, check for proper spring preload or damages. Readjust or replace as required.

When pulling starter grip 10 times in a row, it must return freely. If not, check for damaged parts or lack of lubrication. Replace parts or lubricate accordingly.

PROCEDURES

STARTER HANDLE

Removal

Remove muffler. Refer to *EXHAUST SYSTEM*.

Remove fan cowl. Refer to *AXIAL COOLING FAN*.

Pull rope for 50 cm (20 in) approximately. Using a small hose pincher (P/N 295 000 076), lock rope near rewind starter.

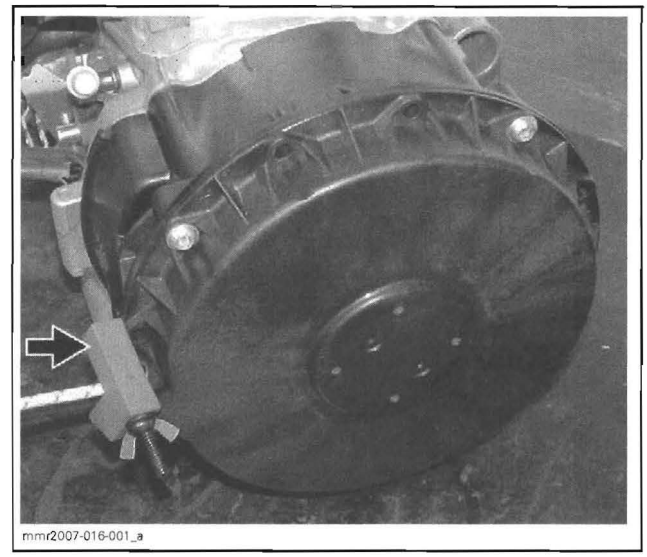

Using a small screwdriver, extract rope knot from starter handle **no. 3**. Cut rope close to knot.

Installation

Prior to installing starter handle on rope, it is first necessary to fuse the rope end with a lit match. Pass rope through starter handle and tie a knot in the rope end. Fuse the knot with a lit match then insert rope end down and pull the starter handle over the knot.

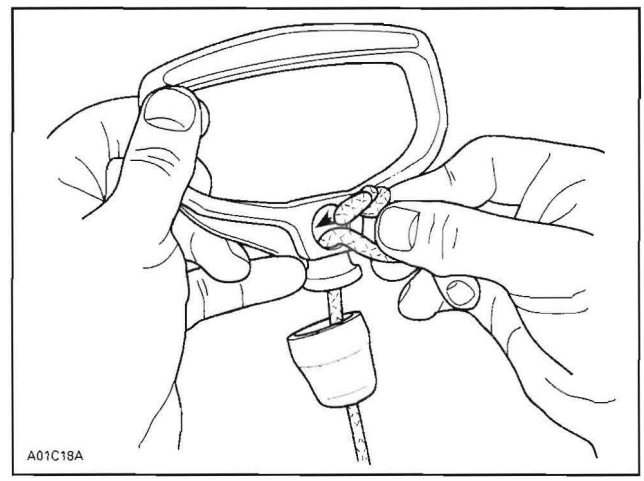

TYPICAL

Reinstall other removed parts.

REWIND STARTER

Removal

Remove starter handle **no. 3**.

Remove nuts retaining oil injection pump to rewind starter housing.

Remove oil injection pump shaft.

Remove screws **no. 2** securing rewind starter **no. 1** to engine then remove rewind starter.

Disassembly

Undo knot previously tied at removal. Let sheave get free to release spring preload.

Cut push nut and discard.

Remove lock lever, O-ring **no. 11**, collar sleeve, pawl lock and pawl.

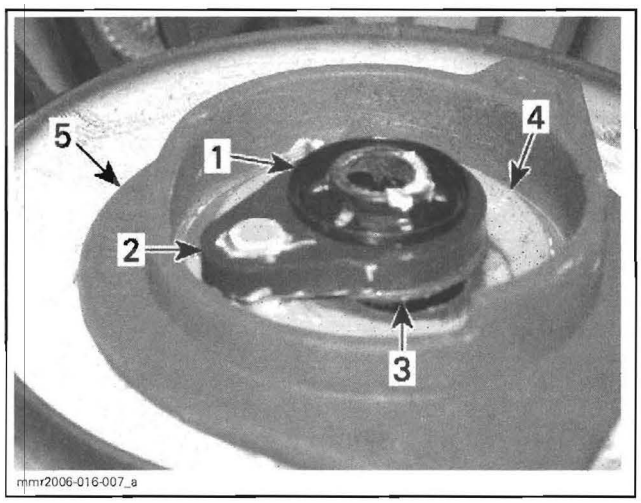

1. *Push nut*
2. *Lock lever*
3. *Collar sleeve*
4. *Pawl lock*
5. *Pawl*

Remove sheave **no. 5** from starter housing **no. 1**. Hold spring with a screwdriver.

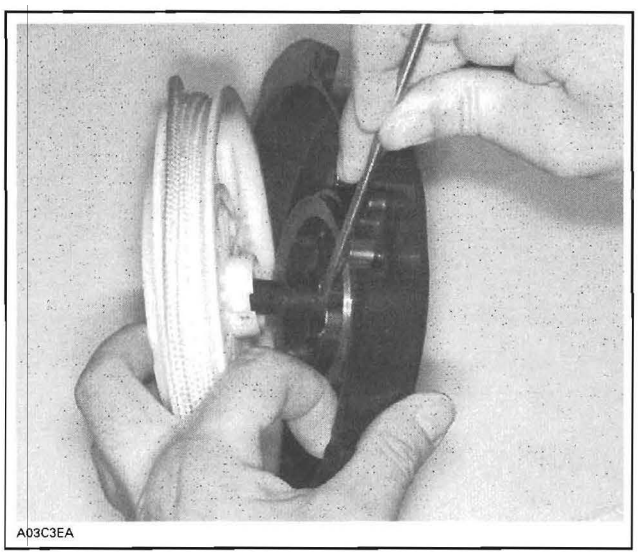

Disengage key **no. 7** and pull out rope **no. 6**.

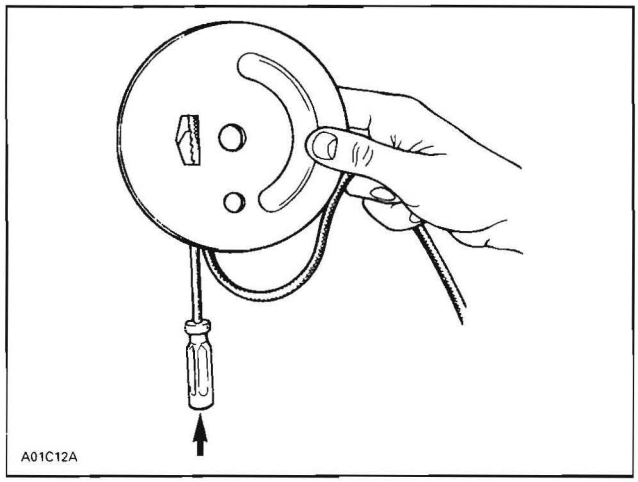

GENTLY TAP ON KEY

Assembly

At assembly, position spring **no. 4** outer end into spring guide notch then wind the spring counter-clockwise into guide.

⚠ WARNING

Since the spring is tightly wound inside the guide it may fly out when rewind is handled. Always handle with care.



1. *Outer end into guide notch*

Lubricate spring assembly and 1 cm (1/2 in) wide on bottom of housing with Molykote PG 54 (P/N 420 899 763).

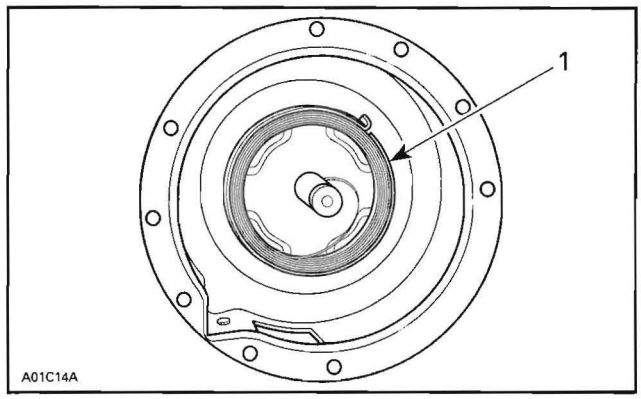

TYPICAL
1. Molykote PG 54 inside spring guide

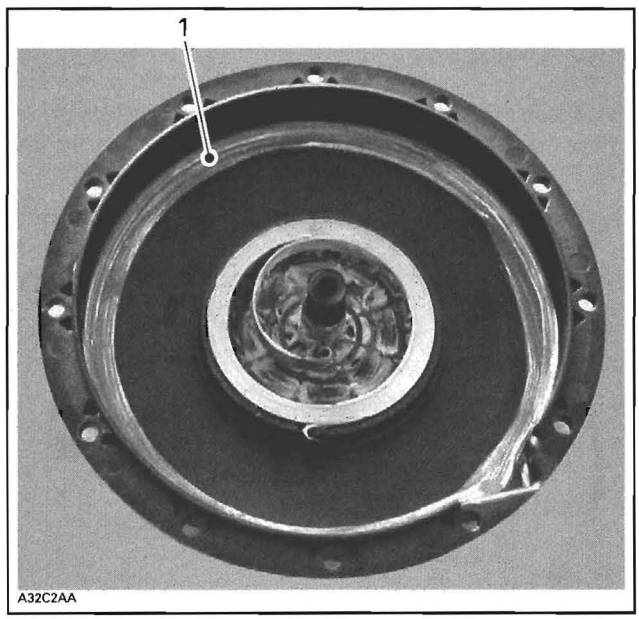

1. Molykote PG 54 applied 1 cm (1/2 in) wide on bottom of housing

CAUTION: It is of the utmost importance that the rewind starter spring be lubricated periodically using Molykote PG 54 (P/N 420 899 763). The use of standard multipurpose grease could result in rewind starter malfunction under very cold temperatures and components life will be shortened.

Lubricate housing post with silicone compound grease. Install sheave.

To adjust spring tension:

Wind rope on sheave and place rope sheave into starter housing making sure that the sheave hub notch engages in the rewind spring hook.

Rotate the sheave counterclockwise until rope end is accessible through rope exit hole. This will give 1/2 turn of preload.

Pull the rope out of the starter housing and temporarily make a knot to hold it.

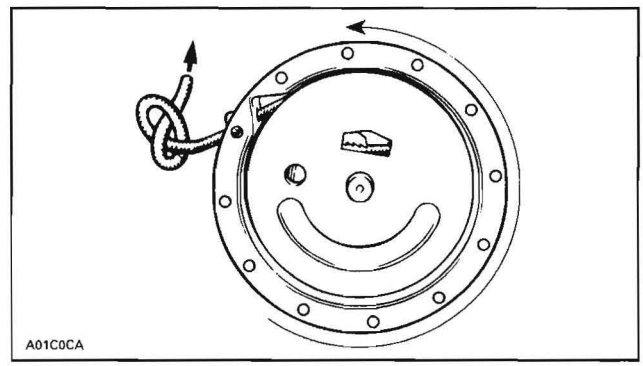

TYPICAL

Lubricate pawl **no. 8** with Molykote PG 54 (P/N 420 899 763) then install over rope sheave.

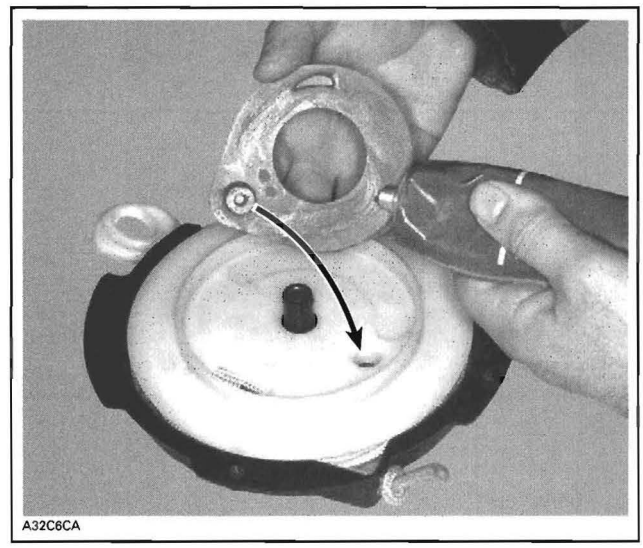

Lubricate pawl lock **no. 9** with Molykote PG 54 (P/N 420 899 763). Install over pawl.

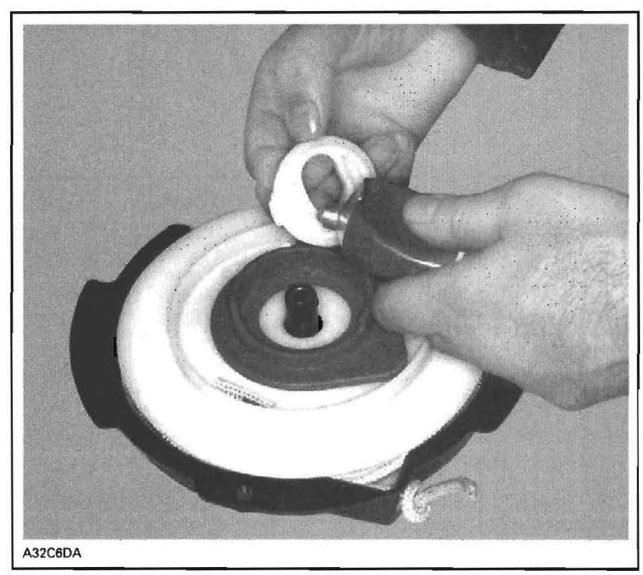

Install collar sleeve **no. 10** with its collar first. Lubricate a new O-ring **no. 11** and lock lever **no. 12** with Molykote PG 54 (P/N 420 899 763). Install over pawl lock.

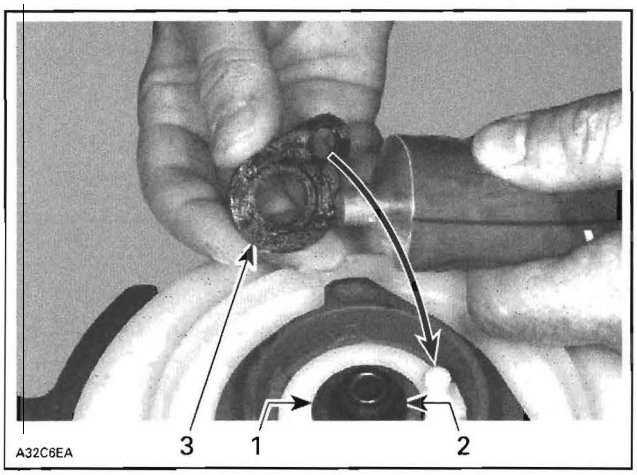

1. *Collar sleeve*
2. *O-ring*
3. *Lock lever*

Position a new push nut **no. 13**.

Installation

Thread starter rope **no. 6** through rope guide when applicable.

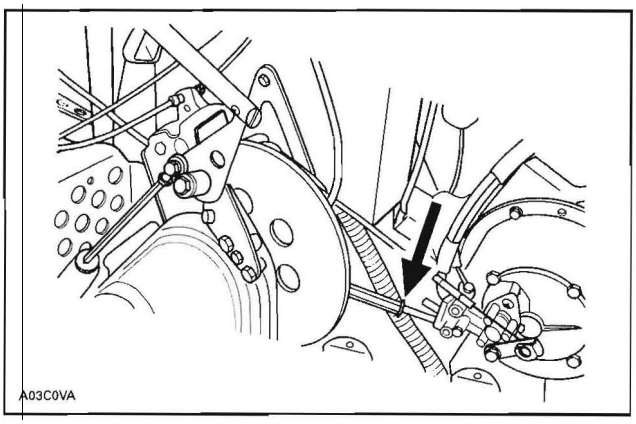

TYPICAL

Reinstall rewind starter assembly on engine.

Reinstall oil injection pump and its shaft. Refer to *OIL INJECTION PUMP*.

ROPE

Replacement

Completely pull out rope. Hold rewind starter in a vise.

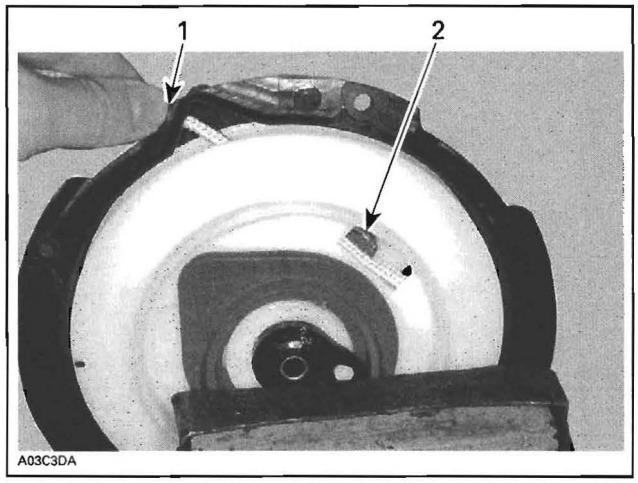

1. *Rope exit hole*
2. *Key to be removed*

With a long thin pin punch or a long screwdriver inserted through rope exit hole, gently tap on key **no. 7** to disengage it. Remove key and rope.

To install rope **no. 6**, insert rope into sheave **no. 5** orifice and lock it with the key **no. 7** as illustrated.

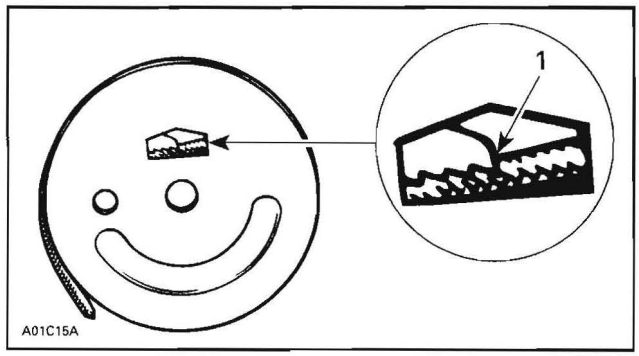

1. *Push to lock*

NOTE: When rope is completely pulled out, spring preload is 4-1/2 turns.

AXIAL FAN

SERVICE TOOLS

Description	Part Number	Page
Holder wrench	529 036 006	150

SERVICE PRODUCTS

Description	Part Number	Page
Loctite 243 (blue)	293 800 060	150

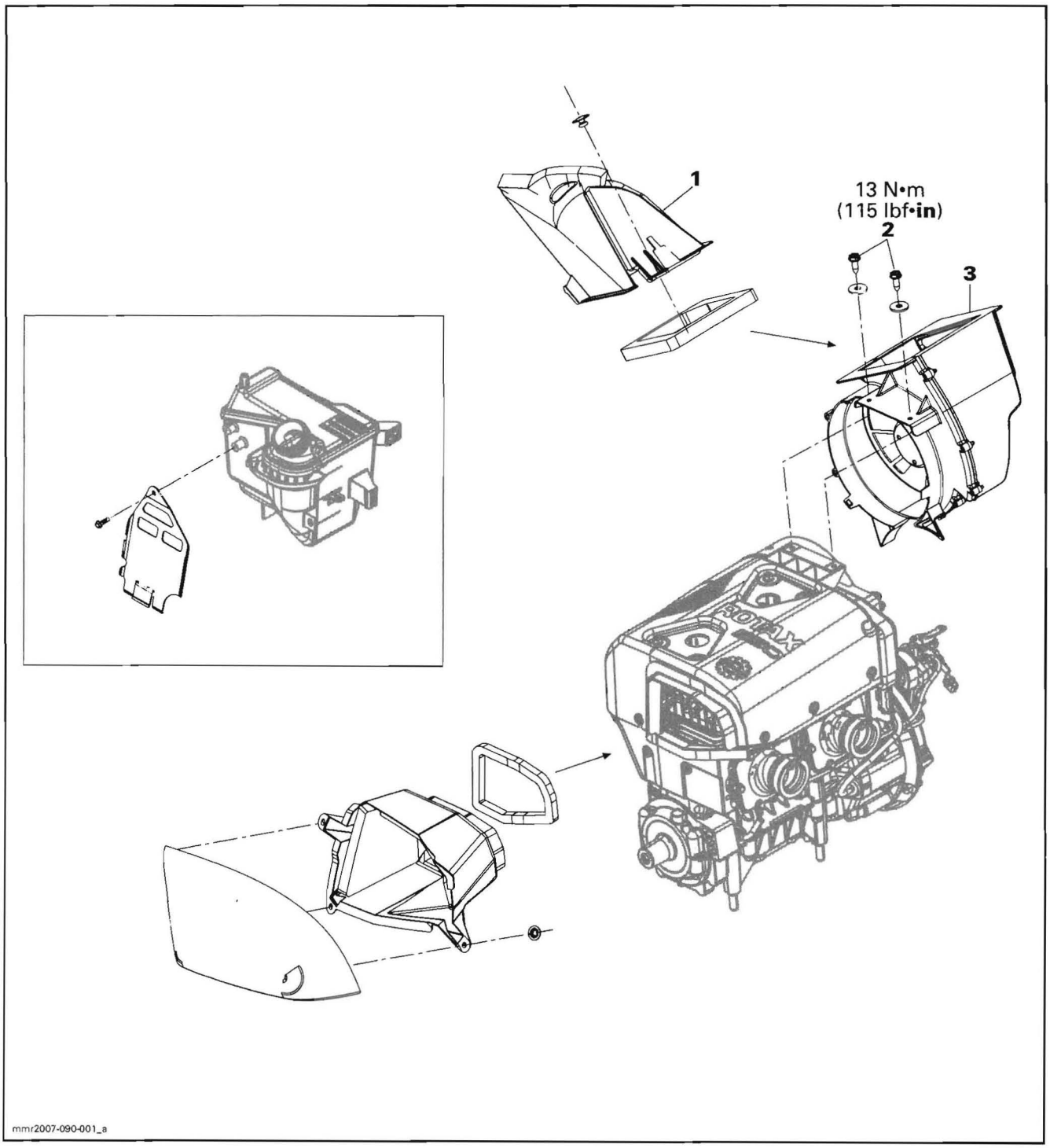
1
13 N•m
(115 lbf•in)
2
3
ROTAX
mmr2007-090-001_a

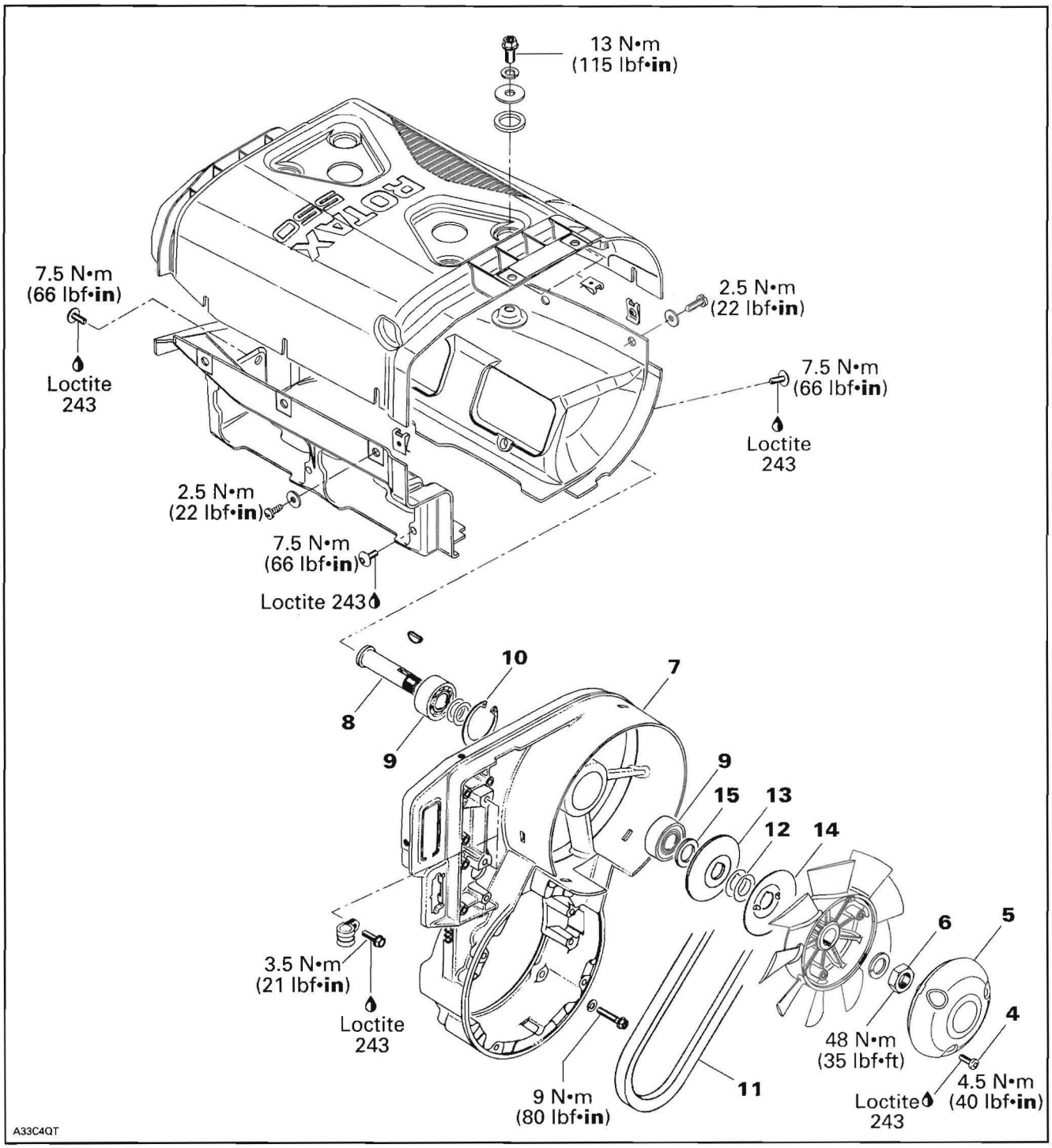
13 N•m
(115 lbf•in)
ROTAX 552
7.5 N•m
(66 lbf•in)
Loctite
243
2.5 N•m
(22 lbf•in)
7.5 N•m
(66 lbf•in)
Loctite
243
2.5 N•m
(22 lbf•in)
7.5 N•m
(66 lbf•in)
Loctite 243
10
8
9
7
9
15
13
12
14
6
5
4
3.5 N•m
(21 lbf•in)
Loctite
243
48 N•m
(35 lbf•ft)
9 N•m
(80 lbf•in)
11
4.5 N•m
(40 lbf•in)
Loctite
243
A33C4QT

GENERAL

During assembly/installation, use torque values and service products as in the exploded view.

Clean threads before applying a threadlocker. Refer to *SELF-LOCKING FASTENERS* and *LOCTITE APPLICATION* at the beginning of this manual for complete procedure.

⚠ WARNING

Torque wrench tightening specifications must strictly be adhered to.
Locking devices (e.g.: locking tabs, elastic stop nuts, self-locking fasteners, cotter pins, etc.) must be installed or replaced with new ones where specified. If the efficiency of a locking device is impaired, it must be renewed.

PROCEDURES

Remove RH side panel and hood.

UPPER FAN DUCT

Removal

Remove retaining screws.

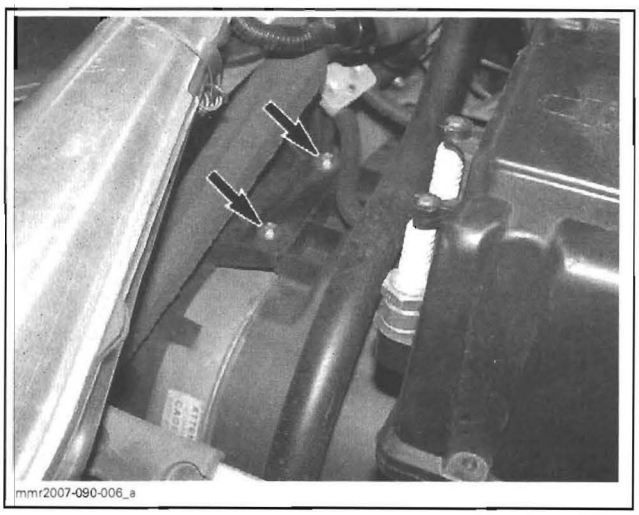

Unlock upper fan duct.

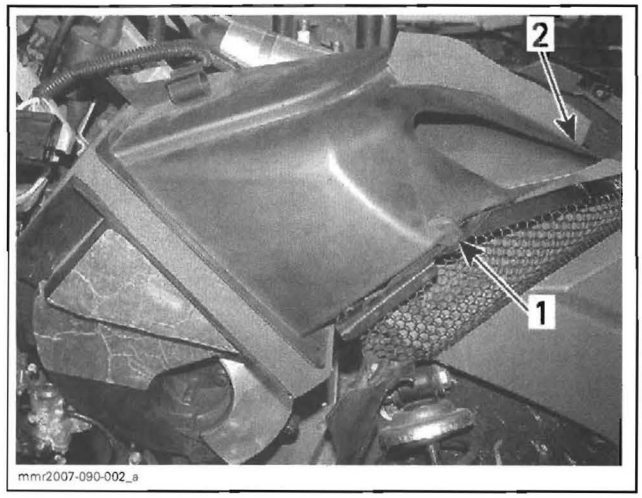

1. Unlock side tab
2. Unlock front tab

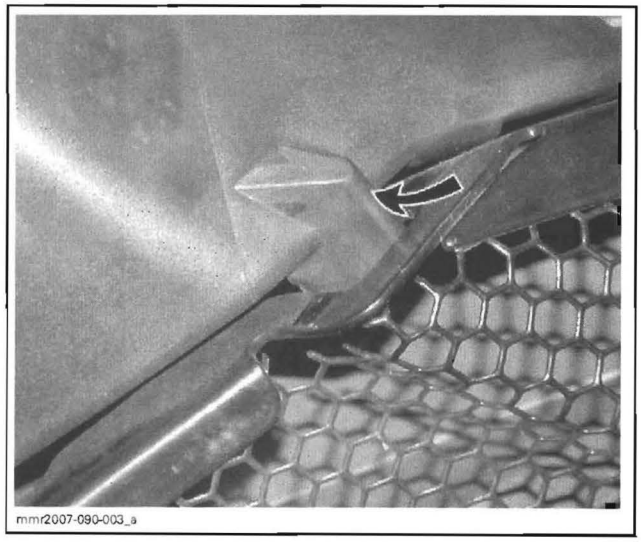

SIDE TAB

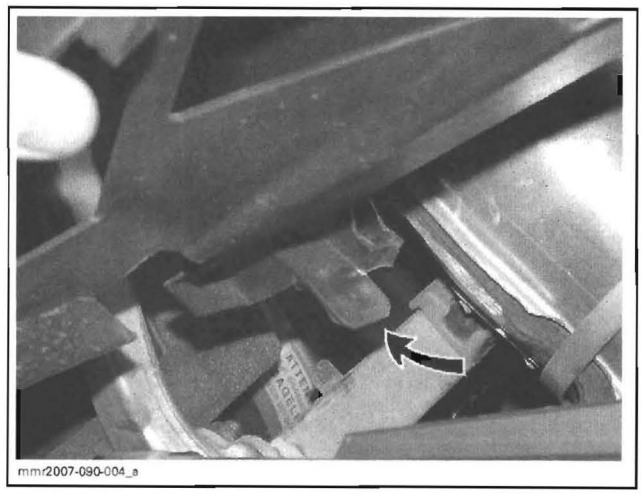

FRONT TAB

Remove fan duct.



Installation

Installation is the reverse of removal procedures.

LOWER FAN DUCT

Removal

Remove upper fan duct.

Remove lower fan duct by unclipping the 3 tabs using a flat screwdriver as shown.

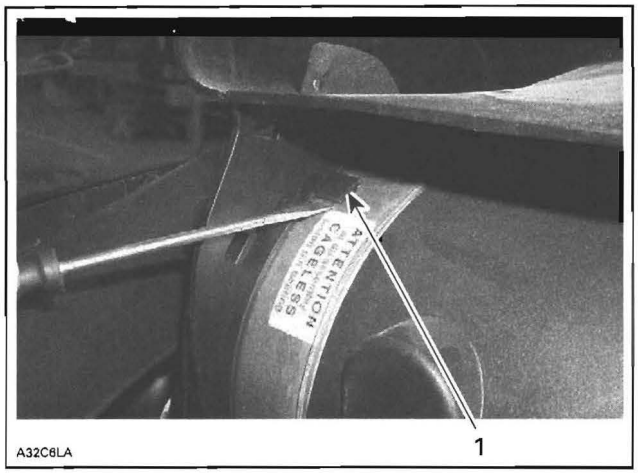

TYPICAL
1. Tab

To reach the 3rd tab, insert the screwdriver through the duct inlet and push tab out.

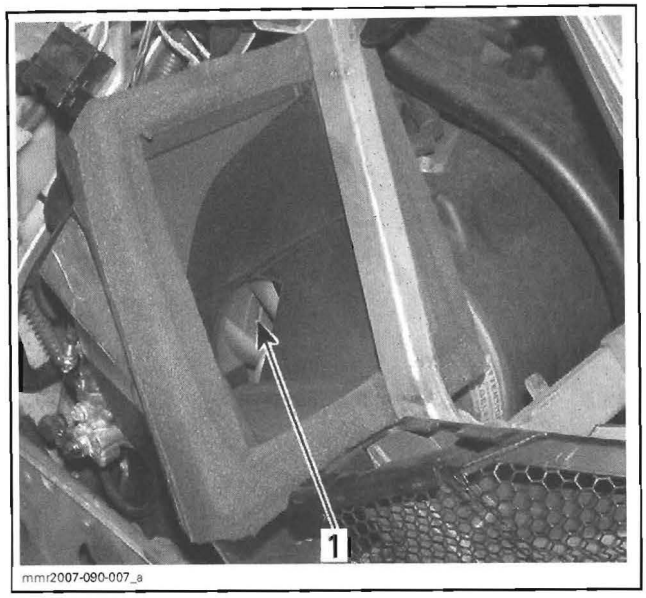

1. Push tab out here

Installation

Installation is the reverse of removal procedures.

CYLINDER COWL

Removal

Unscrew cylinder cowl screws on the top of engine.

Remove screws with lock washers, flat washers and rubber washers.

Pull cylinder cowl.

Installation

The installation is the reverse of the removal procedure.

Torque cylinder cowl screws.

SCREW	TORQUE
M4	2.5 N•m (22 lbf•**in**)
M8	13 N•m (115 lbf•**in**)

AXIAL FAN

Removal

Remove the muffler to gain access. Refer to *EXHAUST SYSTEM*.

Unlock upper fan duct and pivot rearward.

Remove lower fan duct.

Unscrew the screws **no. 4** to remove the fan cover **no. 5**.

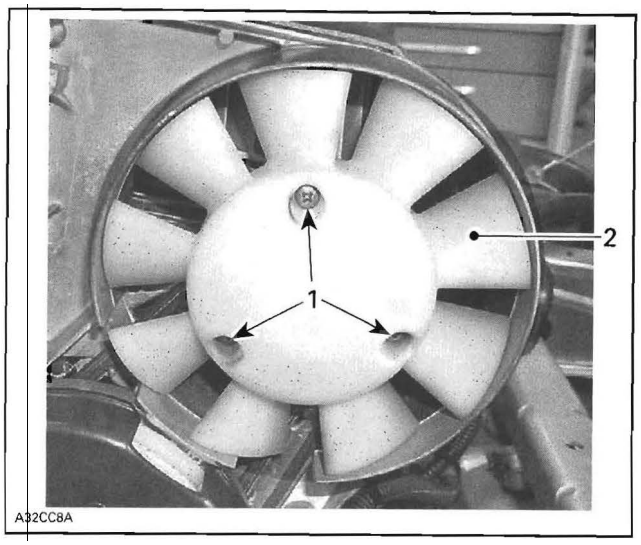

1. Screws
2. Cooling fan

To remove fan pulley retaining nut **no. 6**, lock fan pulley with special holder wrench and 3 screws as per following table:

ENGINE	TOOL
552	Holder wrench (P/N 529 036 006)

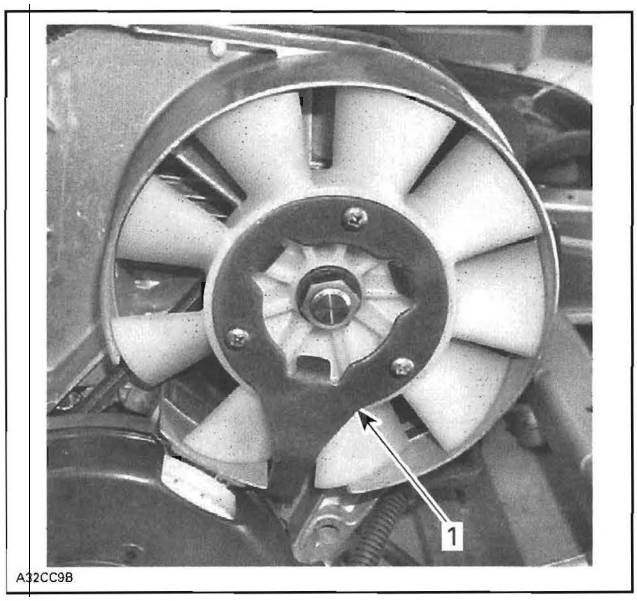

1. Holder wrench

Inspection

Check cooling fan for cracks or damaged fins.

Installation

At assembly, torque nut **no. 6** to 48 N•m (35 lbf•ft).

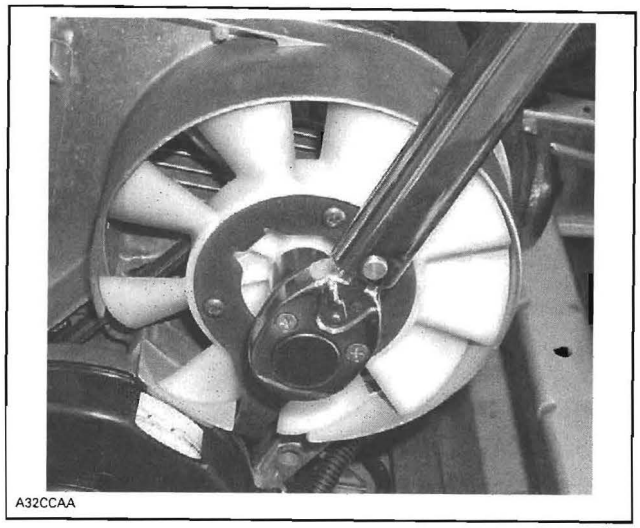

TYPICAL

Apply Loctite 243 (blue) (P/N 293 800 060) on threads of fan cover screws then torque them to 4.5 N•m (40 lbf•**in**).

FAN BELT

Removal

Remove muffler. Refer to *EXHAUST SYSTEM*.

Remove upper and lower fan ducts.

Remove rewind starter. Refer to *REWIND STARTER*.

Remove cooling fan as explained in this section.

Remove pulley half.

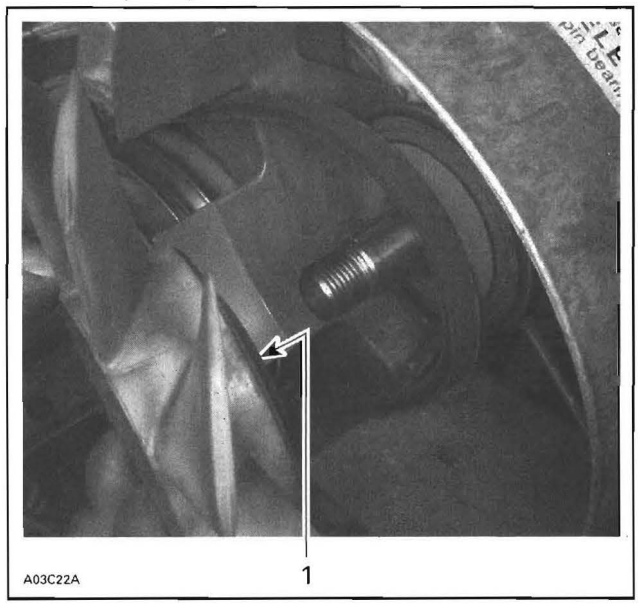

1. Fan with pulley half

Remove fan belt **no. 11**.

Leave shims and second half pulley in place. Refer to the following photo.

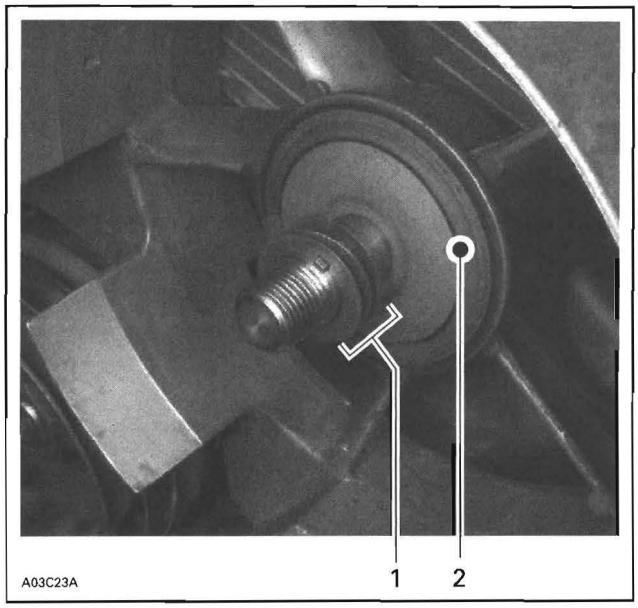

1. *Keep shims*
2. *Leave second half pulley in place*

Installation

Install new fan belt on bottom pulley first then position onto fan shaft, as shown in the next photo.

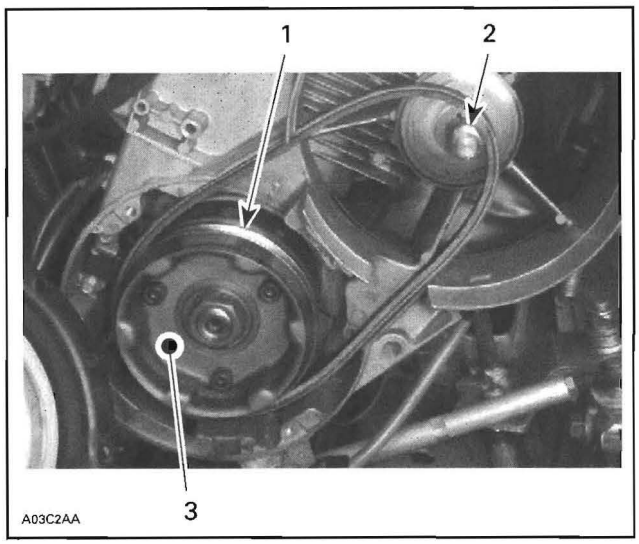

FAN BELT PROPERLY INSTALLED ON BOTTOM PULLEY AND FAN SHAFT
1. *Bottom pulley*
2. *Fan shaft*
3. *Starting pulley*

Reinstall fan assembly on fan shaft. Temporarily tighten fan nut.

CAUTION: When reinstalling fan assembly, ensure that key is properly positioned into fan shaft keyway.

Check belt deflection and adjust it if needed.

Deflection and Adjustment

Check fan belt deflection using a ruler and a fish scale positioned midway between pulleys as per following photo.

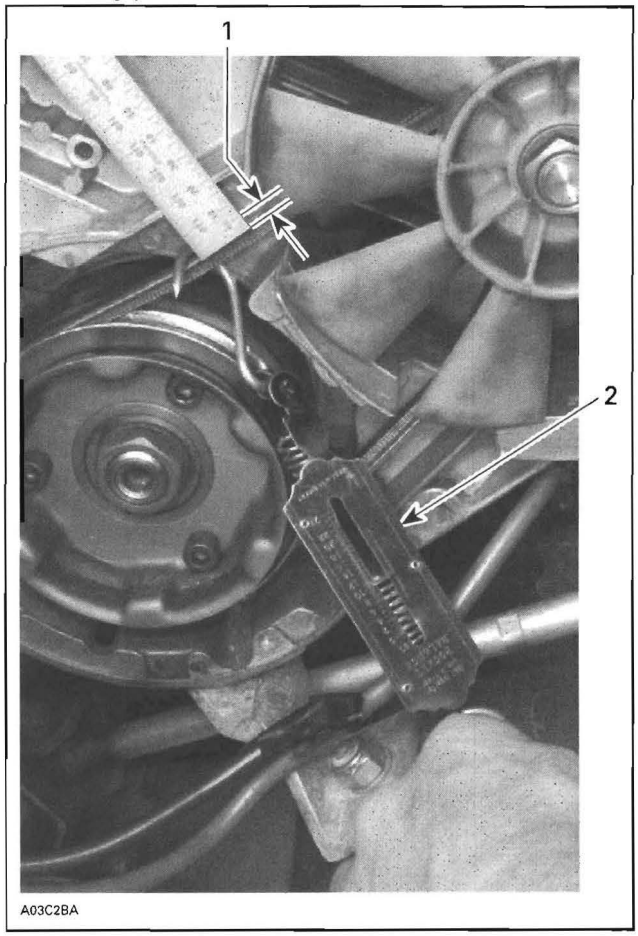

TYPICAL
1. *Measure deflection here*
2. *Fish scale*

Belt deflection must be according to the following specifications:

ENGINE	BELT DEFLECTION	FORCE APPLIED
552	9.5 mm ± 1.5 mm (3/8 in ± 1/16 in)	5 kgf (11 lbf)

To adjust deflection tension, add or remove shim(s) **no. 12** between pulley halves **no. 13** and **no. 14**. Install excess shim(s) between distance sleeve **no. 15** and pulley half **no. 13** (housing side).

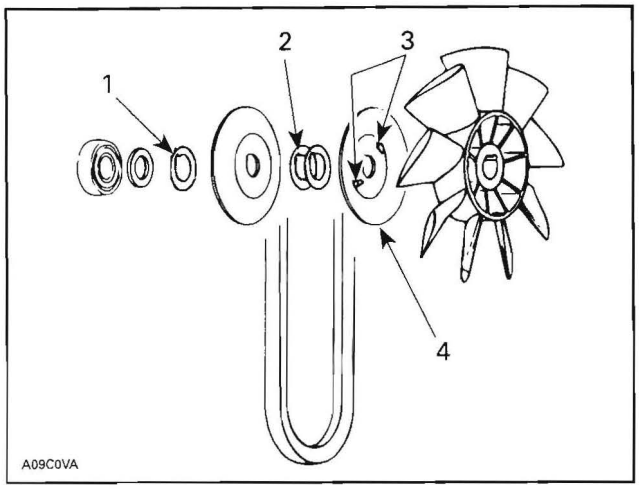

TYPICAL
1. *Unused shim(s) here*
2. *Adjust here*
3. *Positioning noses*
4. *Some engines only*

Select pulley halves so that the one with 2 positioning noses will be on fan side. Ensure to insert these noses into fan notches.

Once fan belt is properly adjusted, torque fan nut to 48 N•m (35 lbf•ft) using holder wrench, as shown in the following photo.

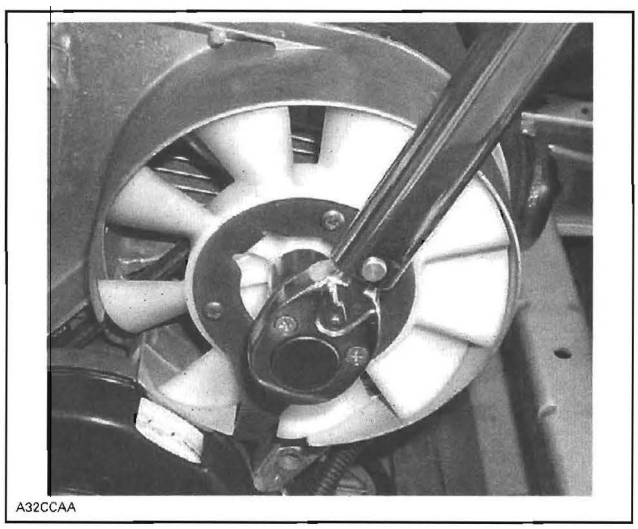

TYPICAL — TORQUE FAN NUT USING HOLDER WRENCH

Finalizing Reassembly

Reinstall rewind starter. Refer to *REWIND STARTER*.

Install the upper and lower ducts .

Reinstall muffler. Refer to *EXHAUST SYSTEM*.

COOLING FAN BEARING

Removal

To remove the fan support housing **no. 7**, do the following:

- Remove muffler. Refer to *EXHAUST SYSTEM*.
- Remove upper and lower ducts, rewind starter, cooling fan, fan belt, magneto and stator. Refer to appropriate sections for procedures.
- Unscrew bolts that retain support fan housing to engine.

Using a press, drive the fan shaft **no. 8** out. Install a support under fan housing before using the press.

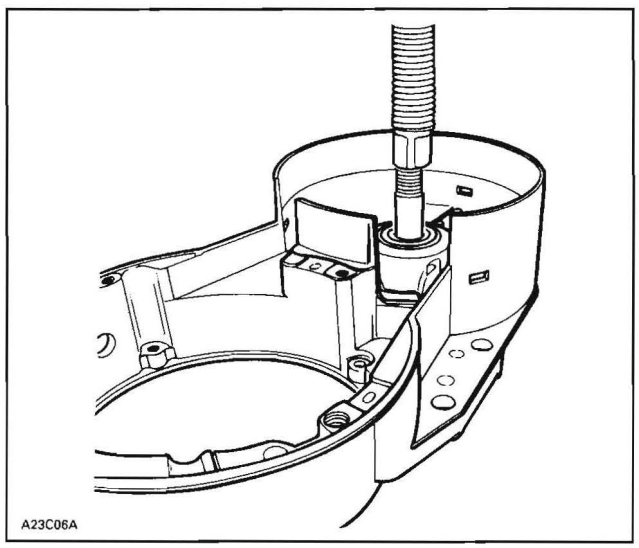

Support fan housing **no. 7** with a ring. With a punch, working all around bearing **no. 9** inner race, drive bearing out of fan housing. Keep shims for installation.

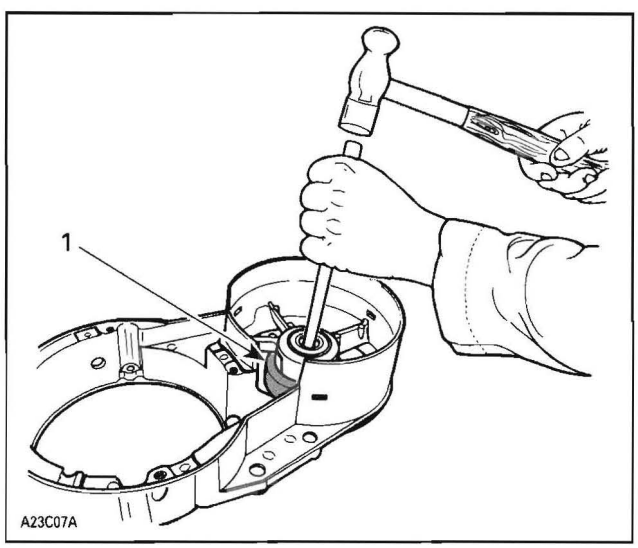

1. Ring supporting fan housing

Remove circlip **no. 10** then remaining bearing.

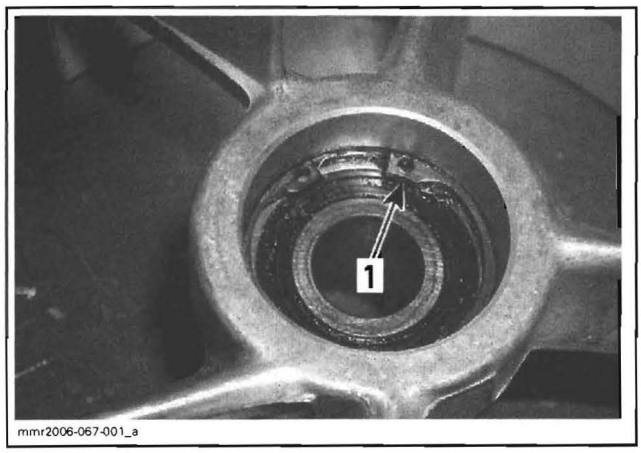

TYPICAL
1. Circlip

Installation

To install, press one bearing in place then install circlip and shims. Press the other bearing from opposite side until it is flush with housing. Press fan shaft from engine side of fan housing. Check for free rolling action.

NOTE: The bearings are sealed, do not add grease at time of assembly.

MAGNETO SYSTEM

SERVICE TOOLS

Description	Part Number	Page
crankshaft protector	420 876 557	158
magneto puller	529 035 547	158
puller ring	420 876 081	158

SERVICE PRODUCTS

Description	Part Number	Page
Loctite 243 (blue)	293 800 060	159
silicone dielectric grease	293 550 004	159

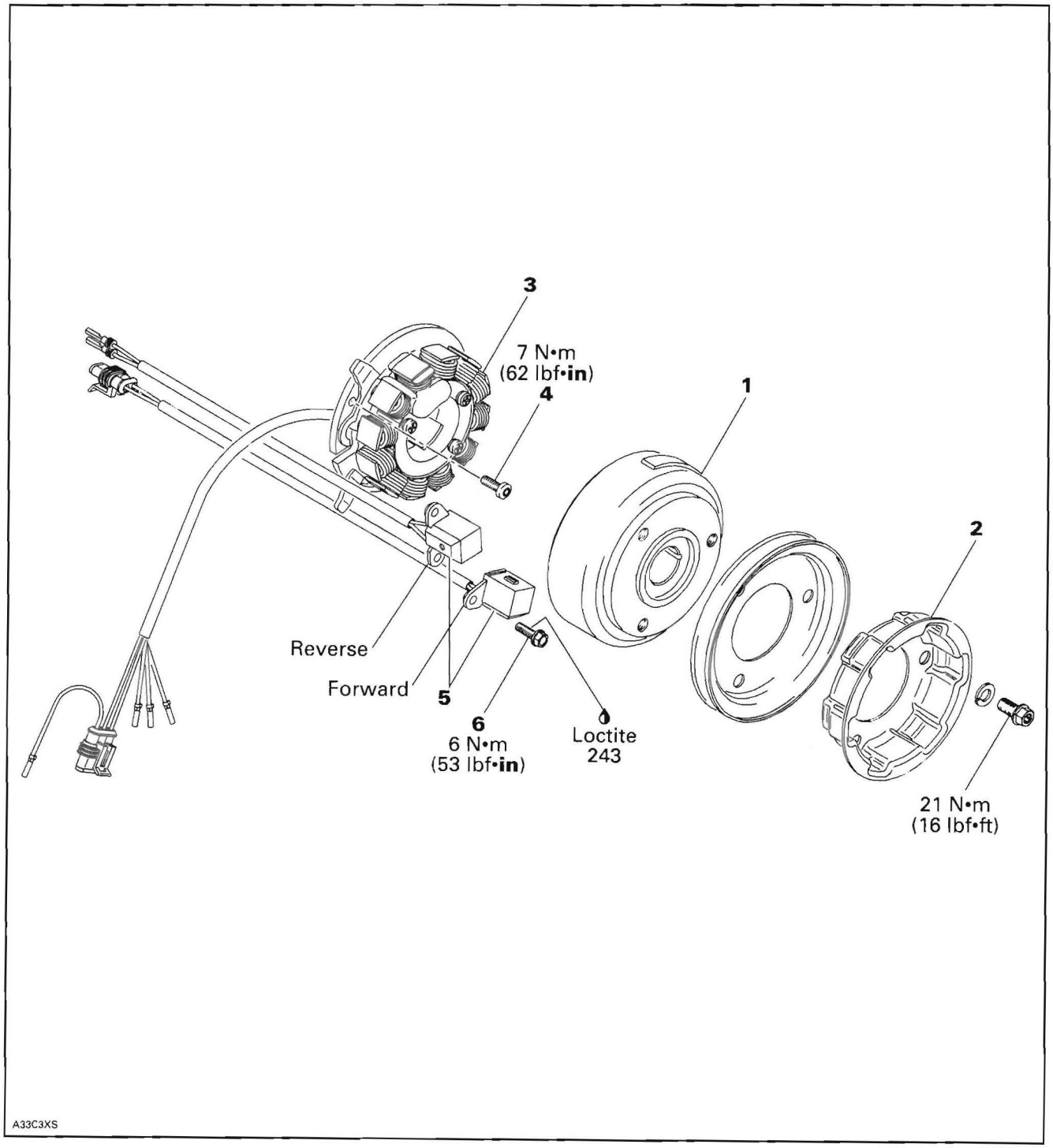
3
7 N•m
(62 lbf•in)
4
1
2
Reverse
Forward
5
6
6 N•m
(53 lbf•in)
Loctite
243
21 N•m
(16 lbf•ft)
A33C3XS

GENERAL

NOTE: The following procedures can be done without removing the engine. To facilitate magneto removal, hold drive pulley with the appropriate tool. Refer to *DRIVE PULLEY*.

During assembly/installation, use the torque values and service products as in the exploded view.

Clean threads before applying a threadlocker. Refer to *SELF-LOCKING FASTENERS* and *LOCTITE APPLICATION* at the beginning of this manual for complete procedure.

⚠ WARNING

Torque wrench tightening specifications must strictly be adhered to.
Locking devices (e.g.: locking tabs, elastic stop nuts, self-locking fasteners, etc.) must be installed or replaced with new ones where specified. If the efficiency of a locking device is impaired, it must be renewed.

PROCEDURES

MAGNETO FLYWHEEL

Cleaning

Clean all metal components in a non-ferrous metal cleaner.

CAUTION: Clean magneto flywheel using only a clean cloth.

Removal

To gain access to magneto flywheel **no. 1** assembly, remove the following parts as needed on different engines:

- tuned pipe and muffler
- rewind starter
- starting pulley **no. 2**.

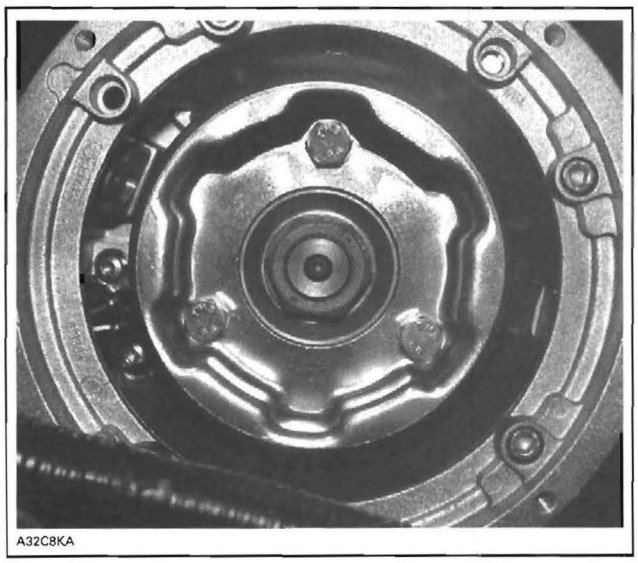
A32C8KA

TYPICAL

NOTE: To remove starting pulley bolts, hold magneto flywheel with a socket as shown.


mmr2007-016-002

TYPICAL

As necessary, remove the connecting flange retaining the rewind starter to the engine housing.

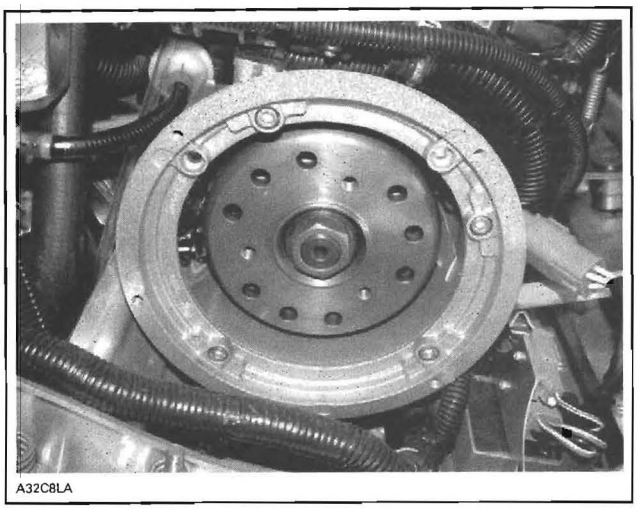
A32C8LA

TYPICAL

Install the puller ring (P/N 420 876 081) on magneto flywheel (or counterweight if so equipped).

CAUTION: Use only the following screw length to bolt puller to magneto flywheel. Otherwise damage to stator behind magneto flywheel could occur.

ENGINE	SCREW LENGTH	
	WITHOUT COUNTERWEIGHT INSTALLED	WITH COUNTERWEIGHT INSTALLED
552	M8 x 20 mm	M8 x 30 mm

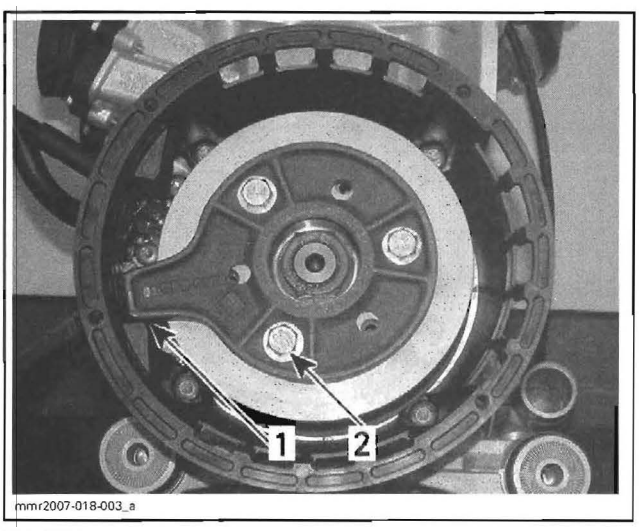

mmr2007-018-003_a

TYPICAL
1. Tab in magneto housing opening
2. M8 screws of appropriate length

Remove magneto flywheel nut, using a 30 mm socket machined to 40 mm (1.580 in) outside diameter by 16 mm (5/8 in) long.

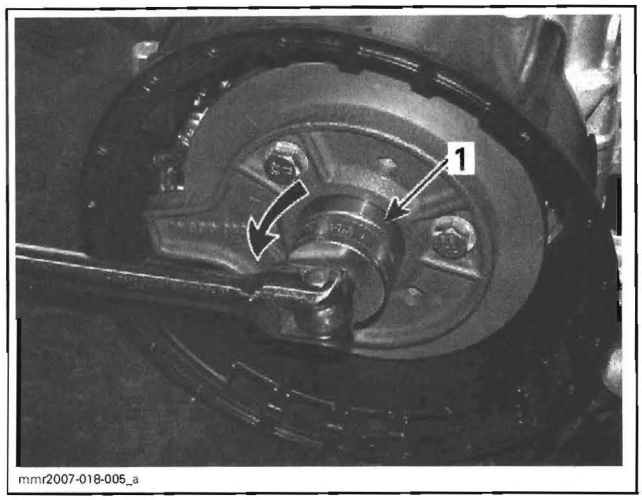

mmr2007-018-005_a

TYPICAL
1. Machined 30 mm socket

NOTE: To correctly remove a threadlocked fastener, first tap on the fastener to break threadlocker bond. This will avoid thread breakage.

To remove magneto flywheel, install the crankshaft protector (P/N 420 876 557) on crankshaft end. Screw the magneto puller (P/N 529 035 547) into puller ring.

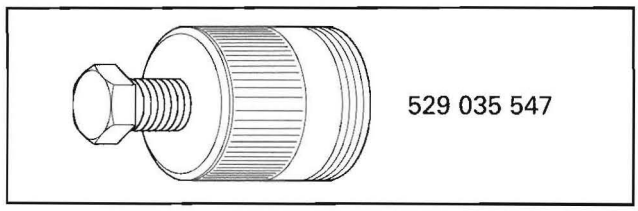
529 035 547

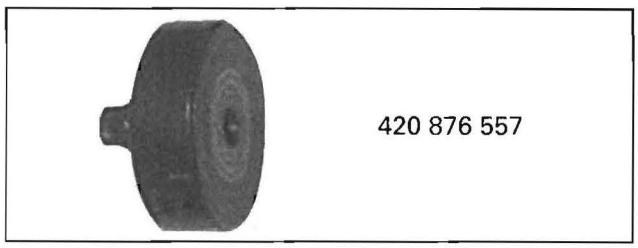
420 876 557

Tighten puller bolt and at the same time, tap on bolt head using a hammer to release magneto flywheel from its taper.

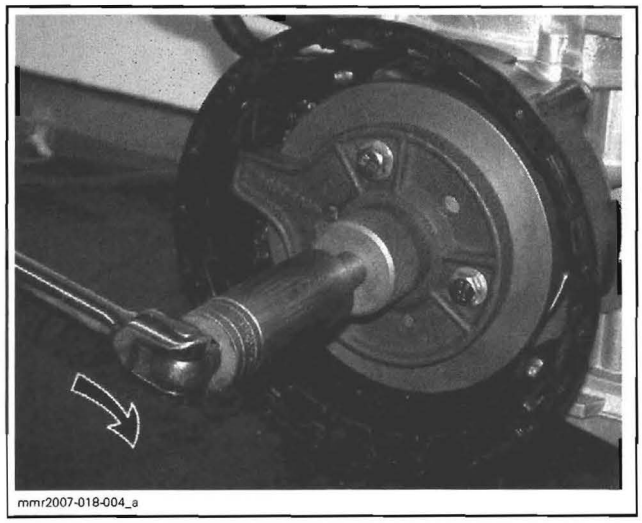
mmr2007-018-004_a

Installation

Clean crankshaft extension (taper) and apply Loctite 243 (blue) (P/N 293 800 060) on taper, then position Woodruff key, magneto flywheel **no. 1** and lock washer on crankshaft.

Clean magneto flywheel nut threads and apply Loctite 243 (blue) (P/N 293 800 060) then tighten nut.

ENGINE	TORQUE
552	105 N•m (77 lbf•ft)

At reassembly coat all electric connections except Deutsch housings (waterproof housing) with silicone dielectric grease (P/N 293 550 004) to prevent corrosion or moisture penetration.

CAUTION: Do not use silicone «sealant», this product will corrode contacts. Do not apply silicone dielectric grease on any Deutsch waterproof housing otherwise housing seal will be damaged.

Ignition Timing

Check as described in *IGNITION SYSTEM*.

STATOR

Inspection

Always check stator **no. 3** before changing it. Refer to *CHARGING SYSTEM*.

Cleaning

Clean all metal components in a non-ferrous metal cleaner.

CAUTION: Clean stator using only a clean cloth.

Removal

Remove:

- magneto flywheel **no. 1**
- all Allen socket screws **no. 4** retaining stator to magneto housing
- grommet from crankcase where trigger coils **no. 5** and stator wires exit magneto housing.

Unplug the trigger coil connectors and pull the wires through the grommet location.

NOTE: To pass the stator connector into the grommet location it is necessary to pass the trigger coil connector first.

Unplug the stator connector and remove the stator **no. 3**.

Installation

Insert the stator connector into crankcase grommet then the trigger coil connector(s).

Install the grommet on crankcase.

Position stator **no. 3** so that its wire protectors are over crankcase recess.

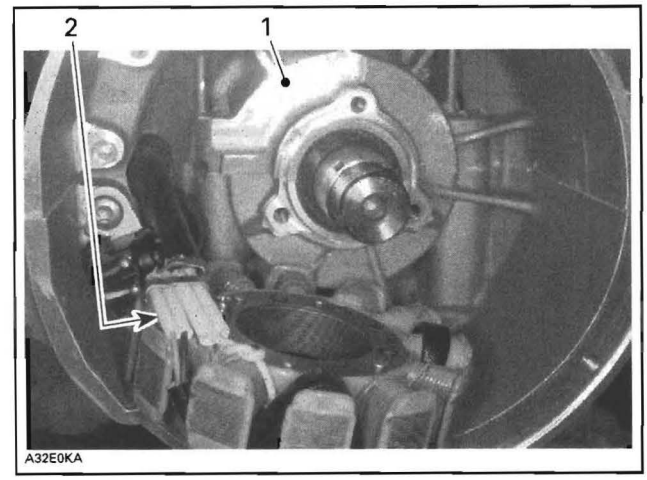

A32E0KA

1. *Crankcase recess*
2. *Wire protectors*

NOTE: During installation, make sure the stator harness is located on the left side.

Apply Loctite 243 (blue) (P/N 293 800 060) on threads of stator screws then torque them to 9 N•m (80 lbf•**in**).

Reinstall all other removed parts.

TRIGGER COIL

Inspection

For trigger coil inspection, refer to *IGNITION SYSTEM* and/or *RER SYSTEM*.

Removal

To replace the trigger coil(s) **no. 5**, remove or disconnect the following:

- magneto flywheel **no. 1**
- air intake silencer to allow an access to the trigger coil connectors (if necessary)
- trigger coil connector housing(s)
- grommet from crankcase where trigger coil wire(s) exit(s) magneto housing
- retaining screws **no. 6**
- trigger coil(s) and carefully pull wires.

Installation

For installation, reverse the removal procedure.

NOTE: It is important to remove the old silicon at trigger coil location then apply new silicon. Screw trigger coil then stick the trigger coil wires in the silicon.

TOP END

SERVICE TOOLS

Description	Part Number	Page
20 mm sleeve kit	529 035 542	165
locating sleeve	529 023 800	165
piston circlip installer	529 035 686	167
piston pin puller	529 035 503	165
ring compressor	420 876 972	164

SERVICE PRODUCTS

Description	Part Number	Page
Loctite 518	293 800 038	164
Loctite Chisel	413 708 500	163

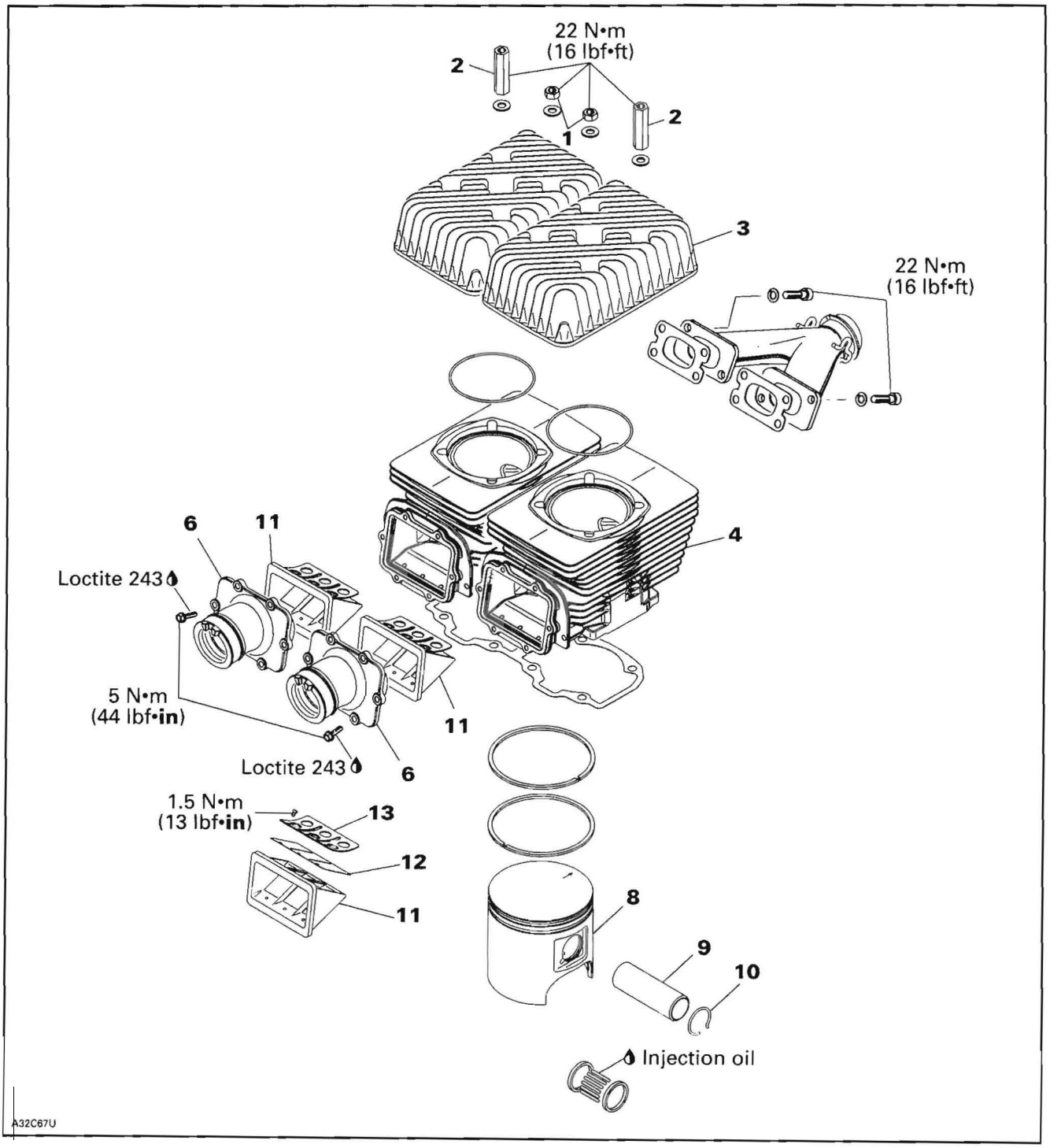
22 N•m
(16 lbf•ft)
2
2
1
3
22 N•m
(16 lbf•ft)
6
11
4
Loctite 243
5 N•m
(44 lbf•in)
11
Loctite 243
6
1.5 N•m
(13 lbf•in)
13
12
11
8
9
10
Injection oil
A32C67U

GENERAL

Before completely disassembling the engine, check airtightness. Refer to *LEAK TEST*.

To measure internal parts, refer to *ENGINE MEASUREMENT* section.

During assembly/installation, use torque values and service products as in the exploded view.

Clean threads before applying a threadlocker Refer to *SELF-LOCKING FASTENERS* and *LOCTITE APPLICATION* at the beginning of this manual for complete procedure.

⚠ WARNING

Torque wrench tightening specifications must strictly be adhered to.
Locking devices (e.g.: locking tabs, elastic stop nuts, self-locking fasteners, cotter pins, etc.) must be installed or replaced with new ones where specified. If the efficiency of a locking device is impaired, it must be renewed.

Cleaning

Discard all gaskets and O-rings. Use Loctite Chisel (P/N 413 708 500) to clean mating surfaces.

Clean all metal components in a non-ferrous metal cleaner.

PROCEDURES

NOTE: To reach any internal parts or to remove cylinder head and cylinder, the engine removal is necessary.

CYLINDER HEAD

Removal

Remove cylinder cowl. Refer to *AXIAL FAN*.

Remove cylinder head nuts **no. 1**, distance nuts **no. 2** and flat washers.

Lift cylinder heads **no. 3** over cylinder studs to remove them.

Inspection

Check cylinder heads for cracks, broken fins, warp or other damages.

Refer to tables below to find cylinder head specifications. For dimension measurement procedures, refer to *ENGINE MEASUREMENT*.

MAXIMUM CYLINDER HEAD WARPAGE
0.05 mm (.002 in) per 50 mm (2 in) of surface
0.5 mm (.020 in) for total length of cylinder head

COMBUSTION CHAMBER VOLUME (CC)
35.5

Cleaning

Scrape off carbon formation from cylinder head.

Installation

Position cylinder head nuts **no. 1** and distance nuts **no. 2** as shown below.

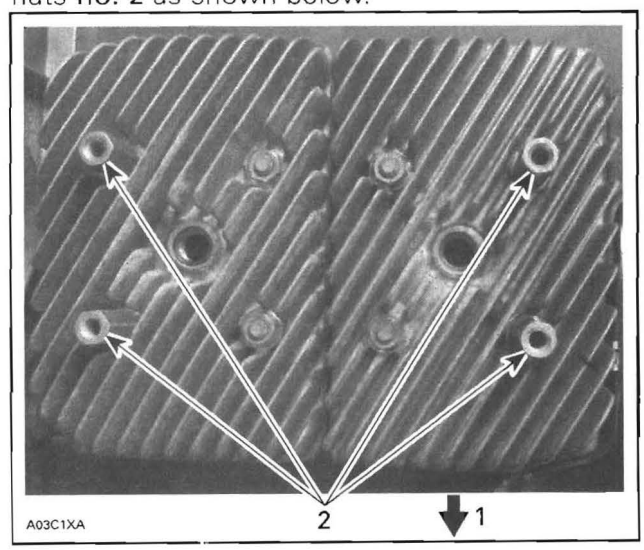

1. Exhaust side
2. Distance nuts

Torque in a criss-cross sequence cylinder head nuts **no. 1** and **no. 2** to 22 N•m (16 lbf•ft); torque each cylinder head individually.

CYLINDER

Identification

On the RF chassis, the 552 engine has a lower exhaust port. The cylinder can be recognized with a drilled indent near intake manifold.

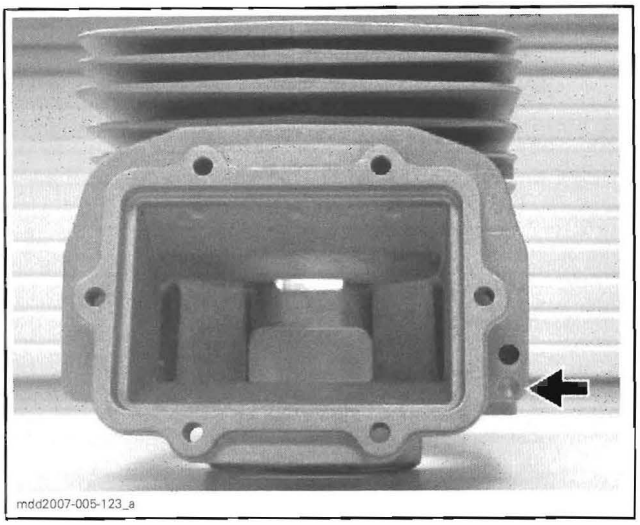

Removal

Remove intake adapters **no. 6** and reed valves **no. 11**.

Remove exhaust manifold.

Remove cylinder cowl and cylinder heads.

Lift cylinders **no. 4**.

Discard the cylinder gasket.

Inspection

Check cylinders for cracks and scoring.

Check exhaust flanges for flatness.

Check cylinder O-ring.

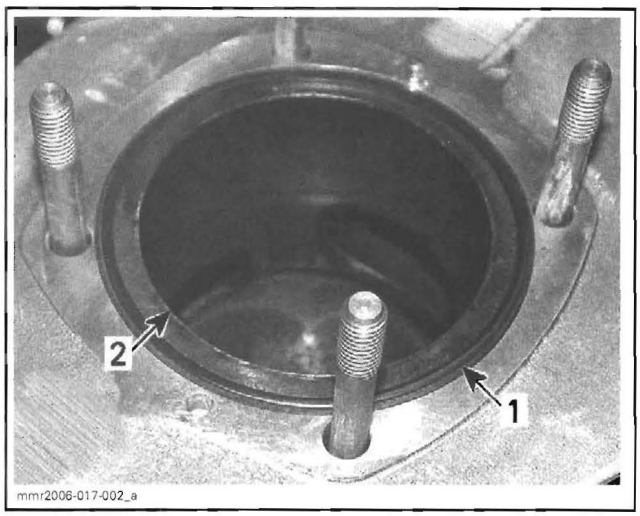

1. O-ring
2. Cylinder

Refer to table below to find cylinder specifications. For dimension measurement procedures, refer to *ENGINE MEASUREMENT*.

MEASUREMENT	MAXIMUM TOLERANCES
Cylinder taper	0.10 mm (.0039 in)
Cylinder out of round	0.08 mm (.0031 in)

Cleaning

Scrape off carbon formation from exhaust ports.

Installation

Apply a thin layer of Loctite 518 (P/N 293 800 038) to crankcase mating surface of base gasket.

Install a new cylinder base gasket of the same thickness as previously used.

NOTE: If the old gasket thickness is unknown or if a cylinder head or cylinder is replaced, measure the combustion chamber volume to determine the right gasket to use. Refer to *ENGINE MEASUREMENT* for the measurement procedures. Refer to *CYLINDER HEAD* above for the combustion chamber volume specifications.

CAUTION: Always install a gasket of the proper thickness. Failure to do so may cause detonation and severe engine damage.

Coat gasket with Loctite 518.

Before inserting piston in the cylinder, lubricate the cylinder with new injection oil or equivalent.

Using fingers or the ring compressor (P/N 420 876 972), slide piston **no. 8** into cylinder **no. 4**.

Install exhaust manifold to align cylinders.

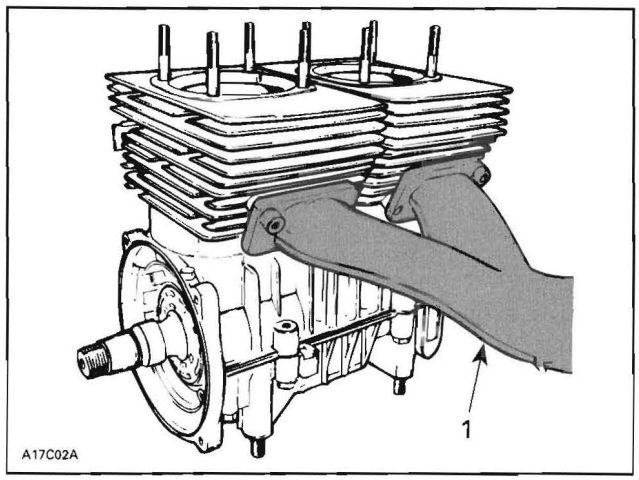

1. Use exhaust manifold to align cylinders

Install reed valves and intake adapters.

NOTE: Check intake adapters for cracks or delamination.

Torque intake adapter screws to 5 N•m (44 lbf•**in**).

Torque exhaust manifold bolts to 22 N•m (16 lbf•ft).

Install all other removed parts.

PISTON

Removal

Remove cylinders.

NOTE: The PTO cylinder or fan housing have to be removed to give access to MAG piston with puller.

Place a clean rag over crankcase to prevent circlips **no. 10** from falling into crankcase. Then with a pointed tool inserted in piston notch, remove both circlips from piston **no. 8**.

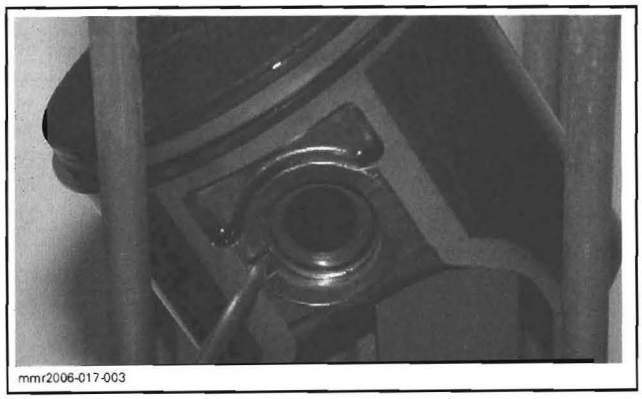

NOTE: On this engine, piston pin is mounted with cageless bearing.

Use the piston pin puller (P/N 529 035 503) along with the 20 mm sleeve kit (P/N 529 035 542) and the locating sleeve (P/N 529 023 800) to remove piston pin **no. 9**. Use the following procedure.

- When inserting piston pin puller, make sure it sits squarely against piston.

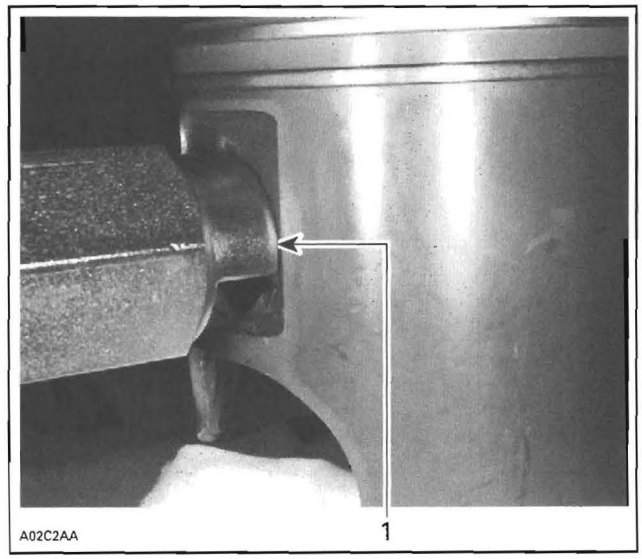

TYPICAL
1. Properly seated all around

- Install sleeve then shouldered sleeve over puller rod.

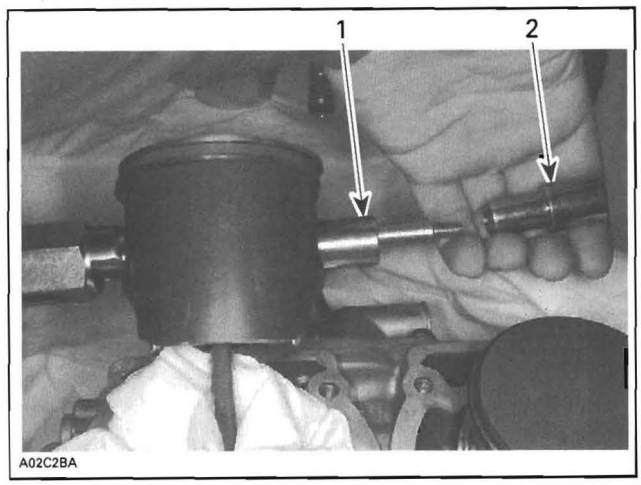

TYPICAL — INSTALLATION OF SLEEVE KIT
1. Sleeve
2. Shouldered sleeve

- Pull out piston pin by unscrewing puller until shouldered sleeve end is flush with thrust washer of piston pin bearing.

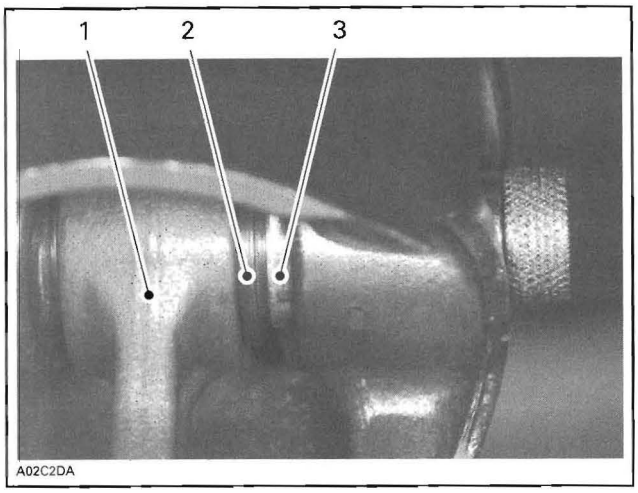

TYPICAL
1. *Sleeve inside bearing*
2. *Thrust washer*
3. *Shouldered sleeve end*

– Remove puller. Pull out shouldered sleeve carefully.

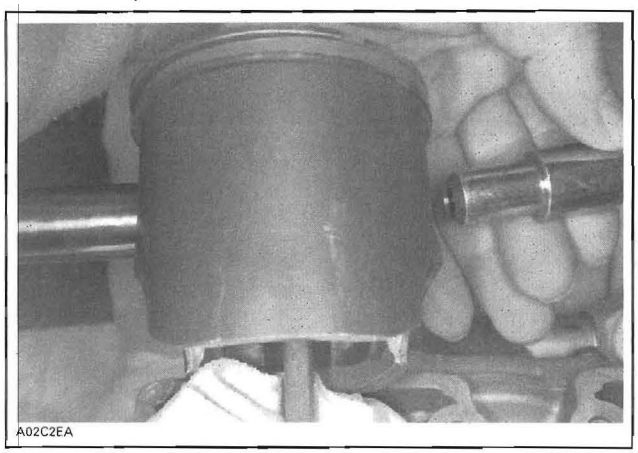

TYPICAL

– Remove piston from connecting rod.
– Install locating sleeve. Then push needle bearings along with thrust washers and sleeve.

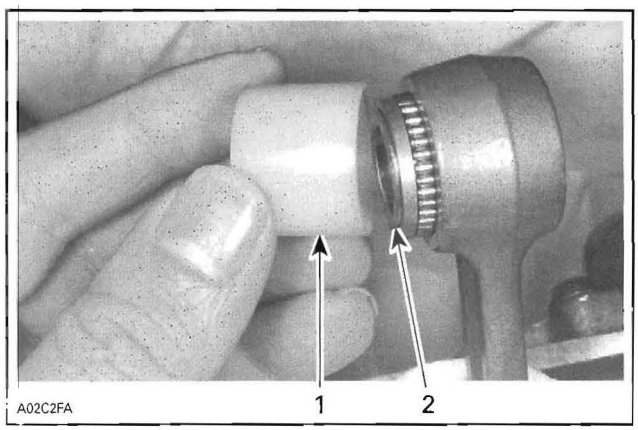

TYPICAL
1. *Locating sleeve*
2. *Sleeve*

– Use a locking tie to fasten all needles and thrust washers along with locating sleeve.

Inspection

Inspect piston for scoring, cracking or other damages.

Refer to table below to find piston specifications. For dimension measurement procedures, refer to *ENGINE MEASUREMENT*.

MEASUREMENT	MAXIMUM TOLERANCES
Piston/cylinder wall clearance	0.2 mm (.0079 in)
Piston skirt wear	0.15 mm (.006 in)
Ring end gap	1.0 mm (.039 in)
Ring/piston groove clearance	0.2 mm (.0079 in)

Cleaning

Scrape off carbon formation from piston dome.

NOTE: The arrow on the piston dome must be visible after cleaning.

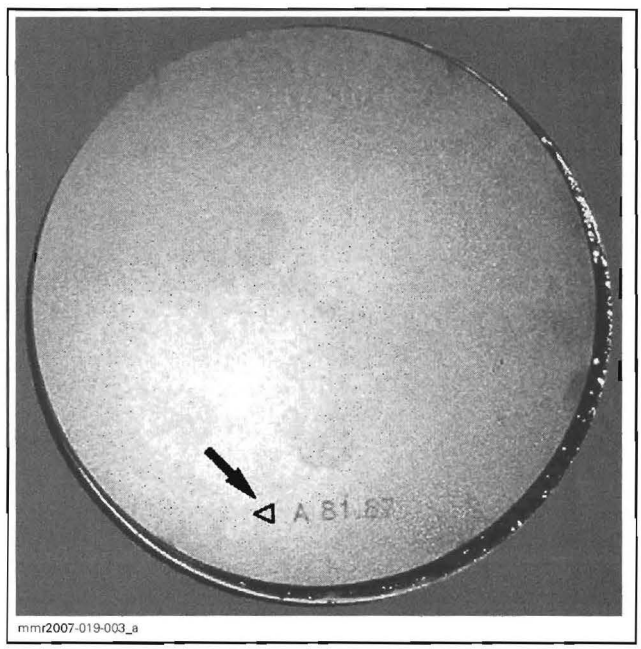

Clean the piston ring groove with a groove cleaner tool or with a piece of broken ring.

Installation

When reinstalling original needle bearings, make sure that 34 needles are inserted between sleeve and locating sleeve.

When installing a new cageless bearing, replace half plastic cages by sleeve.

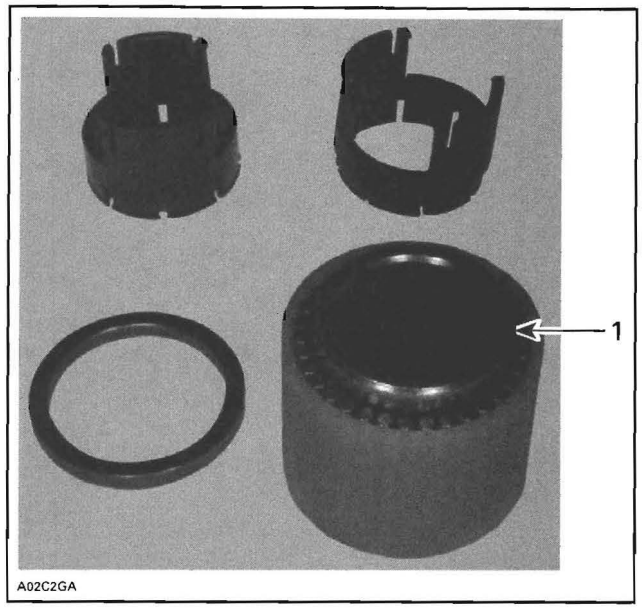

TYPICAL
1. Sleeve

Grease thrust washers and install them on each end of needles.

Insert cageless bearing into connecting rod.

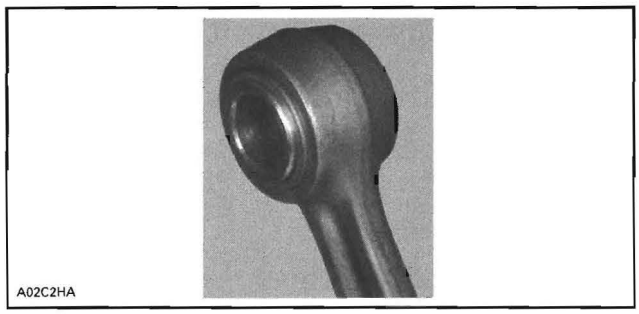

TYPICAL — CAGELESS BEARING AND SLEEVE INSTALLED

Mount piston over connecting rod with the letters "AUS" (over an arrow on the piston dome) facing in the direction of exhaust port.

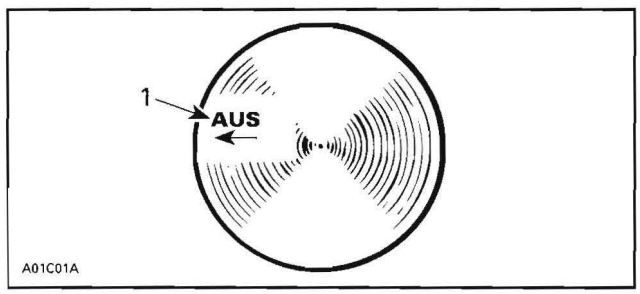

1. Exhaust

Install shouldered sleeve.

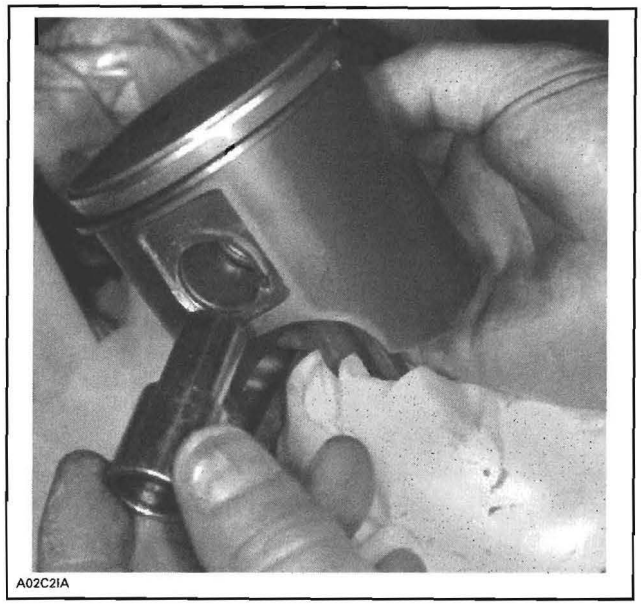

TYPICAL — SHOULDERED SLEEVE INSTALLATION

Install piston pin puller and turn handle until piston pin is correctly positioned in piston.

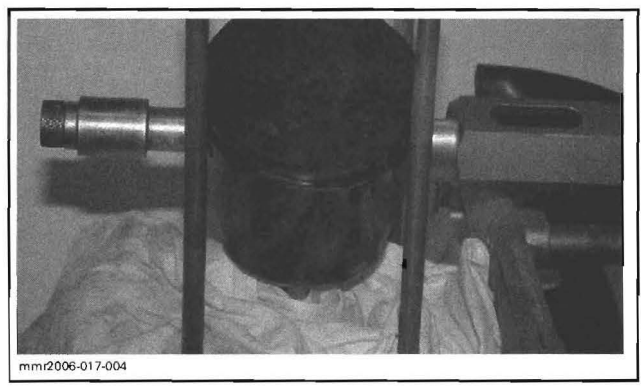

TYPICAL

Remove piston pin puller and sleeve kit.

Use piston circlip installer (P/N 529 035 686) to install mono-hook circlips **no. 10**.

Insert circlip into support in such a way that when installed in piston groove, the tab will face upward.

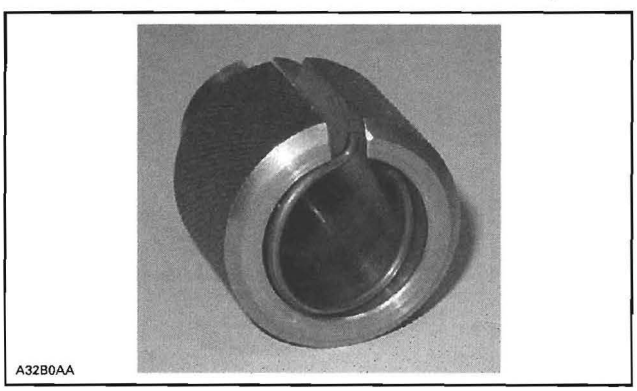

With round end of pusher, position circlip perpendicular to the support axis.

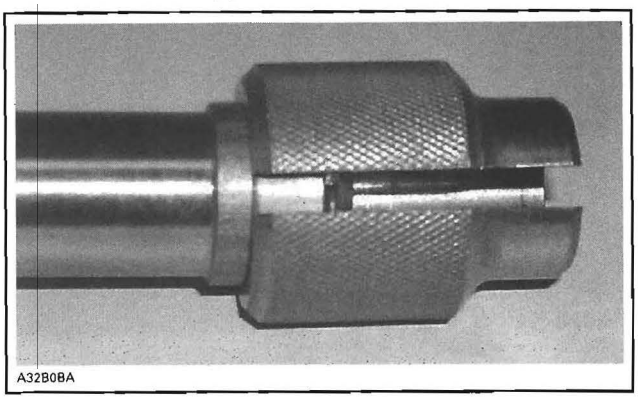

With the other end of the pusher, push circlip into the support groove.

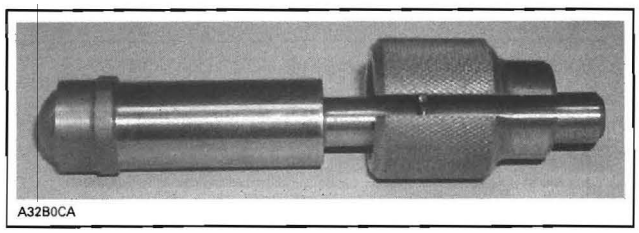

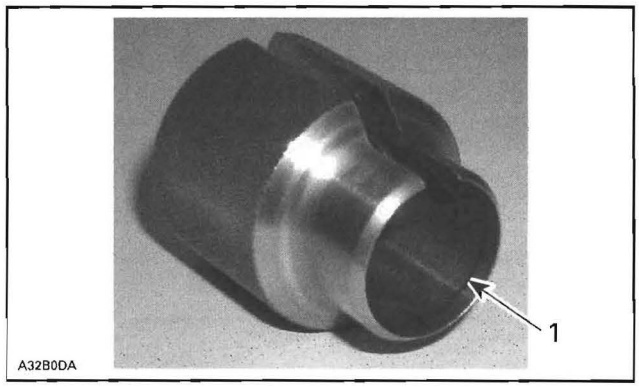

1. Groove

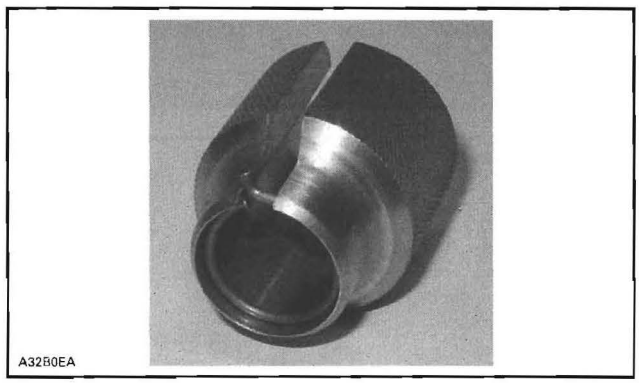

CIRCLIP READY TO BE INSTALLED ON PISTON

Using a plastic hammer, tap pusher to insert circlip in place. Take care to install new circlips with tab toward top as per following photo.

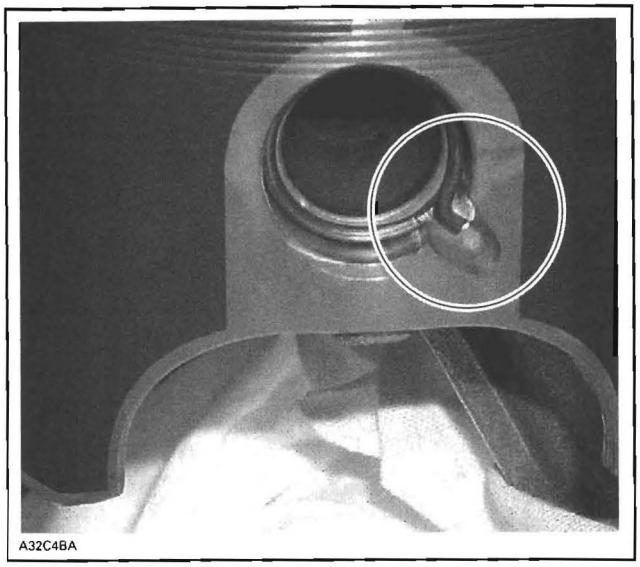

TAB TOWARD TOP

CAUTION: Always install new mono-hook circlips. If circlip installation fails at the first attempt, always retry with a new one as on a second attempt circlip will lose its normal retaining capabilities.

CAUTION: Circlips must not move freely after installation; if so, replace them.

Before inserting piston in the cylinder, lubricate the cylinder with new injection oil or equivalent.

REED VALVE

Removal

Remove intake adapters **no. 6** by removing carburetors and screws retaining intake adapters.

Remove reed valves **no. 11** from engine.

Inspection

With blade stopper **no. 13** removed, check reed valve for proper tightness. There must be no play between blade **no. 12** and valve body when exerting a finger pressure on blade at blade stopper location.

In case of a play, turn blade upside down and recheck. If there is still a play, replace blade and/or valve body.

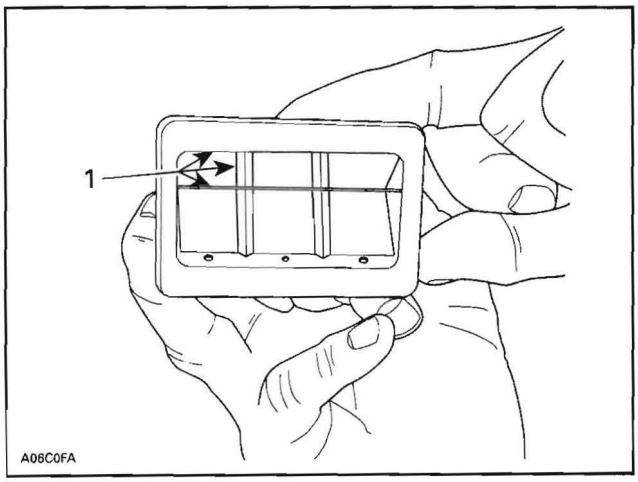

1. No play

NOTE: Blades **no. 12** have a curved shape. Install with their curve facing reed block.

Check distance from blade stopper inner edge and distance from center of reed valve block.

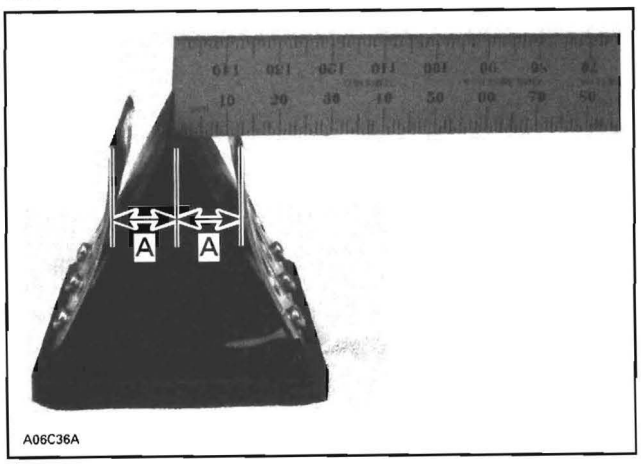

TYPICAL
A. 14.75 - 0, + 0.75 mm (.580 - 0, + .030 in)

Bent blade stopper as required to obtain the proper distance.

Installation

The installation is the reverse of the removal procedure.

NOTE: Blade stoppers may slightly interfere with cylinder during installation. Adjusted distance will be reduced automatically upon installation.

BOTTOM END

SERVICE TOOLS

Description	Part Number	Page
bearing heater	529 035 969	176
bearing installer	529 035 980	178
bearing installer	529 035 990	177
bearing puller	529 036 004	175
crankshaft protector	420 876 552	175
crankshaft protector	420 876 557	176
distance gauge	529 035 965	178
half rings	420 977 475	175
indicator stick	529 035 970	177
puller ring	420 977 490	175
screws	420 840 681	175
support plate	529 035 976	178

SERVICE TOOLS – OTHER SUPPLIER

Description	Part Number	Page
bearing separator Snap-on	CJ951	176
bearing separator SPX/OTC	1124	176

SERVICE PRODUCTS

Description	Part Number	Page
Isoflex grease	293 550 021	174
Loctite 5910	293 800 081	173
Loctite 767 (antiseize lubricant)	293 800 070	176
Loctite Chisel	413 708 500	173
Petamo grease	420 899 271	174
pulley flange cleaner	413 711 809	174, 176
Thermo Lube grease	219 700 417	175

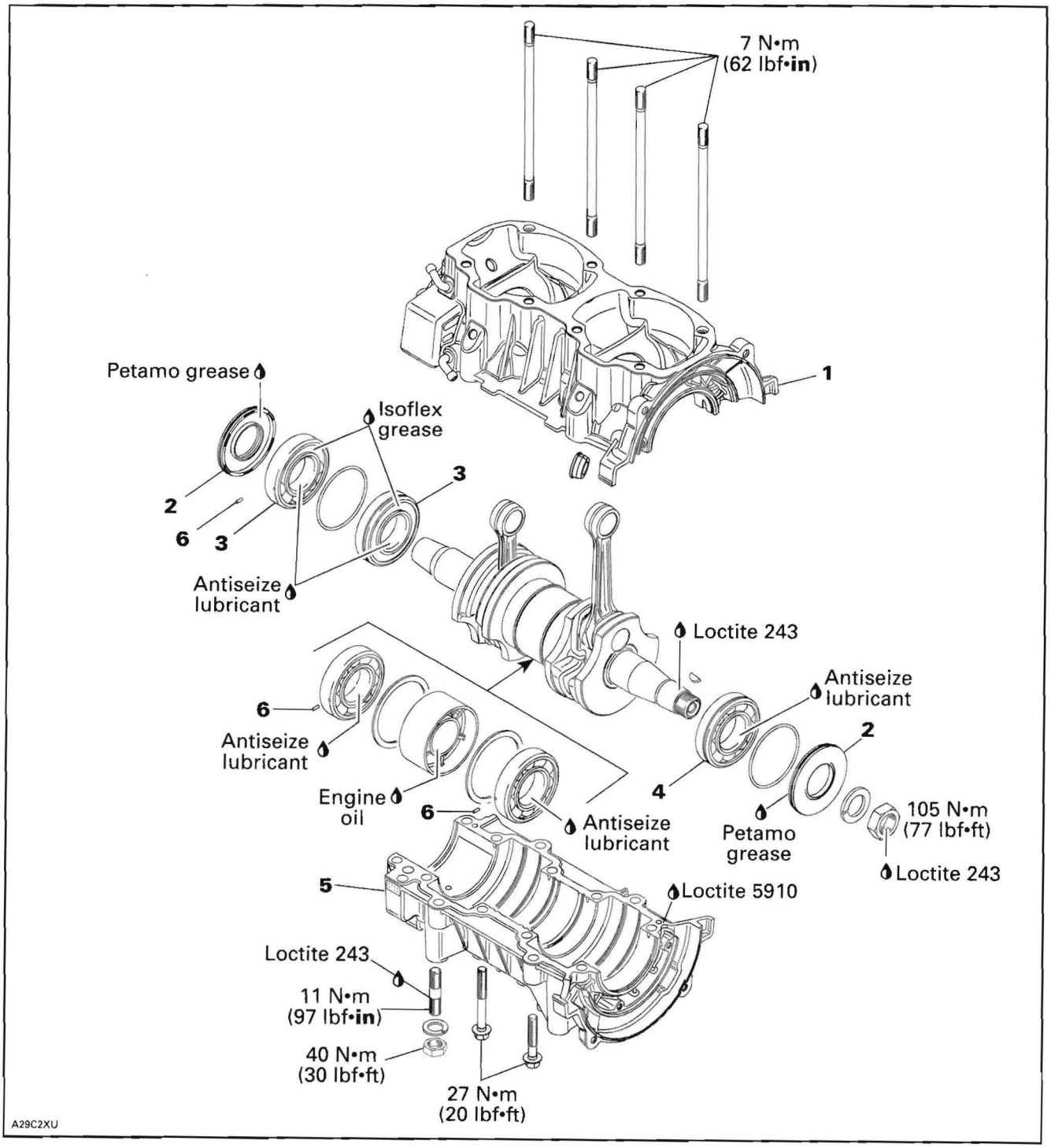
7 N•m
(62 lbf•in)
1
Petamo grease
Isoflex
grease
2
6
3
3
Antiseize
lubricant
Loctite 243
Antiseize
lubricant
6
Antiseize
lubricant
2
4
Engine
oil
6
Antiseize
lubricant
Petamo
grease
105 N•m
(77 lbf•ft)
Loctite 243
5
Loctite 5910
Loctite 243
11 N•m
(97 lbf•in)
40 N•m
(30 lbf•ft)
27 N•m
(20 lbf•ft)
A29C2XU

GENERAL

Before completely disassembling the engine, check airtightness. Refer to *LEAK TEST*.

To verify internal parts, refer to *ENGINE MEASUREMENT* section.

All oil seals and gaskets must be discarded and replaced with new ones when crankcase is split.

CAUTION: After rebuilding an engine always observe a break-in period as described in *OPERATOR'S GUIDE*.

During assembly/installation, use torque values and service products as in the exploded view.

Clean threads before applying a threadlocker. Refer to *SELF-LOCKING FASTENERS* and *LOCTITE APPLICATION* at the beginning of this manual for complete procedure.

⚠ WARNING

Torque wrench tightening specifications must strictly be adhered to.
Locking devices (e.g.: locking tabs, elastic stop nuts, self-locking fasteners, cotter pins, etc.) must be installed or replaced with new ones where specified. If the efficiency of a locking device is impaired, it must be renewed.

PROCEDURES

CRANKCASE

Disassembly

Remove:

- engine from chassis (refer to *ENGINE REMOVAL AND INSTALLATION*)
- engine fan cowls, cylinder heads and cylinders (refer to *TOP END*)
- rewind starter (refer to *REWIND STARTER*)
- fan belt pulley, trigger coils, magneto flywheel and stator (refer to *MAGNETO SYSTEM*).

Remove all screws that retain both housings together.

Split crankcase and remove internal components.

Clean all metal components and remove old sealant from crankcase mating surfaces with Loctite Chisel (P/N 413 708 500).

CAUTION: Never use a sharp object to scrape away old sealant as score marks incurred are detrimental to crankcase sealing.

Inspection

Check crankcase for cracks. Replace if needed.

Assembly

Crankcase halves **no. 1** and **no. 5** are factory matched and therefore, are not interchangeable as single halves.

Install all internal components.

Close and torque crankcase by performing the following:

IMPORTANT: The total assembly sequence, including sealing compound application, crankcase screw installation and torquing, must be performed within 10 minutes. The torquing sequence must be accomplished without interruption.

Before screwing both parts of crankcase, seal it with Loctite 5910 (P/N 293 800 081).

NOTE: It is recommended to apply this specific sealant as described here to get an uniform application without lumps. If you do not use the roller method, you may use your finger to uniformly distribute the sealant.

Use a plexiglass plate and apply some sealant on it. Use a 50 - 75 mm (2 - 3 in) soft rubber roller and spread the sealant to get a thin uniform coat on the plate (spread as necessary). When ready, apply the sealant on crankcase mating surfaces.

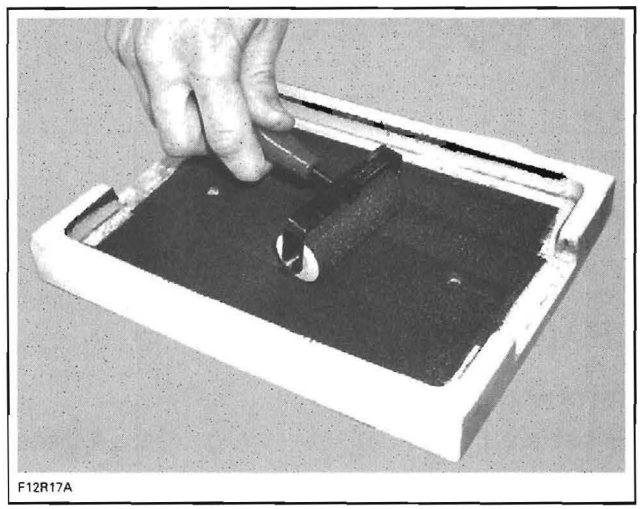
F12R17A

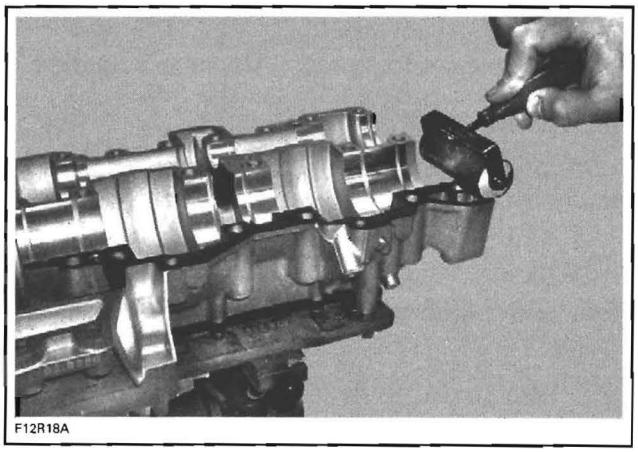

TYPICAL

Tighten all crankcase screws in place in the following sequence and to the appropriate torque through a two steps torquing: first, tighten screws up to 60% of the final torque 13 N•m (115 lbf•**in**) for M8 screws, then, tighten to the required torque (i.e. 22 N•m (16 lbf•ft).

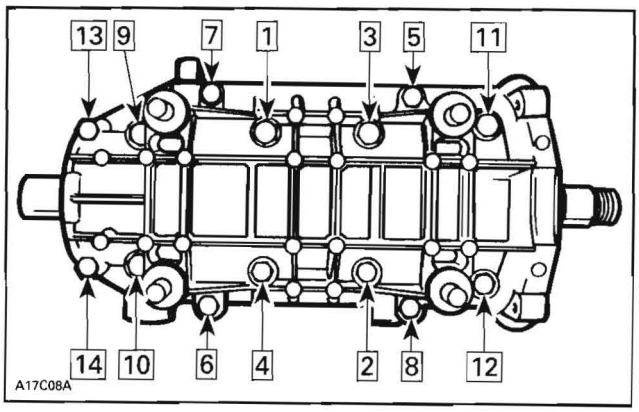

TIGHTENING SEQUENCE

CAUTION: After rebuilding an engine always observe a break-in period as described in *OPERATOR'S GUIDE*.

CRANKSHAFT

Removal

To remove crankshaft, use the crankcase disassembly procedure.

Inspection

Refer to table below to find crankshaft dimension specifications. For dimension measurement procedures, refer to *ENGINE MEASUREMENT*.

ENGINE MEASUREMENT	TOLERANCES		
	NEW PARTS (MIN.)	(MAX.)	WEAR LIMIT
Crankshaft deflection on PTO side	N.A.	0.06 mm (.0024 in)	N.A.
Crankshaft deflection on MAG side	N.A.	0.03 mm (.001 in)	N.A.
Crankshaft deflection in center of crankshaft	N.A.	0.08 mm (.0031 in)	N.A.
Connecting rod big end axial play	0.2 mm (.008 in)	0.53 mm (.0209 in)	1.20 mm (.047 in)
Crankshaft end-play	0.10 mm (.004 in)	0.30 mm (.012 in)	N.A.

Installation

Using pulley flange cleaner (P/N 413 711 809), remove all trace of Loctite 243 from crankshaft taper.

When installing crankshaft, position drive pins **no. 6** as illustrated.

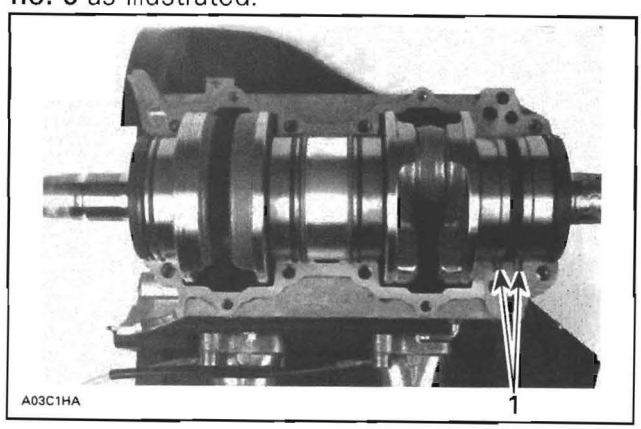

TYPICAL
1. Drive pins

At seal **no. 2** assembly, apply a light coat of Petamo grease (P/N 420 899 271) on seal lip.

Put 15 to 20 mL of Isoflex grease (P/N 293 550 021) in a syringe.

NOTE: The 50 g tube corresponds to 50 mL of grease.

With the syringe, fill in the PTO side ball bearings as shown below.

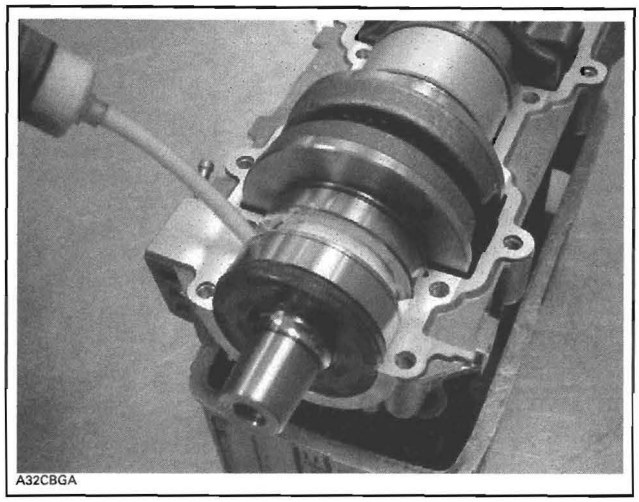

TYPICAL — BALLS COATED WITH A SEAM OF GREASE

CAUTION: Use only the recommended grease. Make sure not to push grease between outside bearing race and half crankcase.

Close crankcase and install all removed parts.

CRANKSHAFT BEARINGS

Removal

NOTE: Normally it takes approximately 10 minutes to heat up a bearing so in the event of replacing bearing, it's recommended to start the bearing heating process prior to removal operation. See procedure further.

To remove PTO side bearings **no. 3** from crankshaft, install half rings (P/N 420 977 475) and puller ring (P/N 420 977 490) on the bearing.

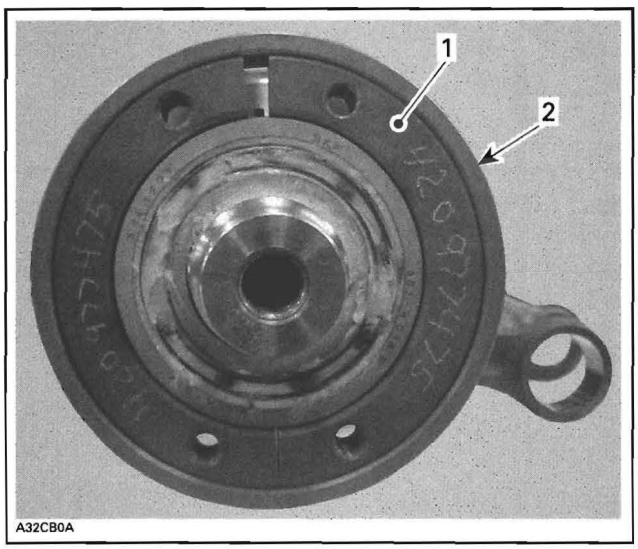

1. *Half ring*
2. *Puller ring*

Apply Thermo Lube grease (P/N 219 700 417) on the crankshaft end and install crankshaft protector (P/N 420 876 552).

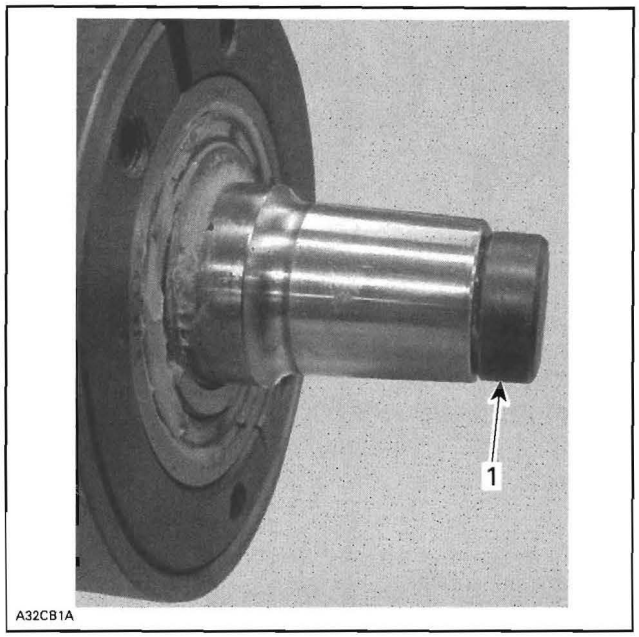

1. *Crankshaft protector*

Install bearing puller (P/N 529 036 004) and secure to half rings using screws (P/N 420 840 681).

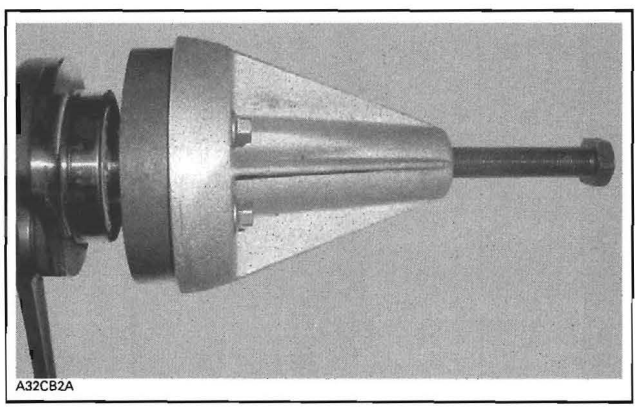

PULLER INSTALLED ON THE HALF RINGS

Secure the bearing puller in a vise by one of its rib.

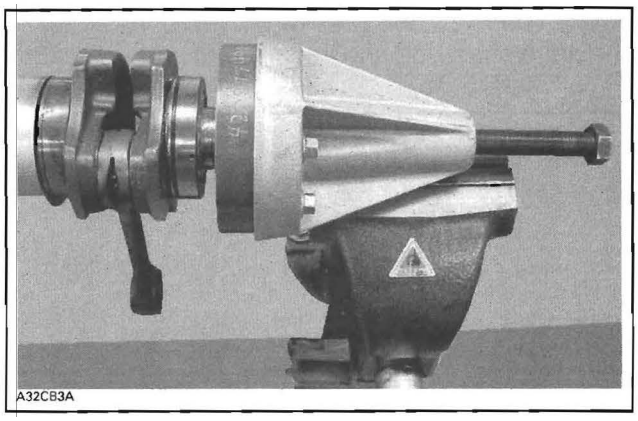

BEARING PULLER SECURED IN THE VISE

CAUTION: Never use any air impact tool for tightening the puller bolt.

Lubricate the puller bolt and then proceed with tightening the puller bolt until the bearing comes out.

Follow the same procedure for the inner bearing.

NOTE: In the case of damaged bearing or less clearance between crankshaft counterbalance and the bearing or on the MAG side bearing, use a bearing separator Snap-on (P/N CJ951) or a bearing separator SPX/OTC (P/N 1124) to facilitate the removal.

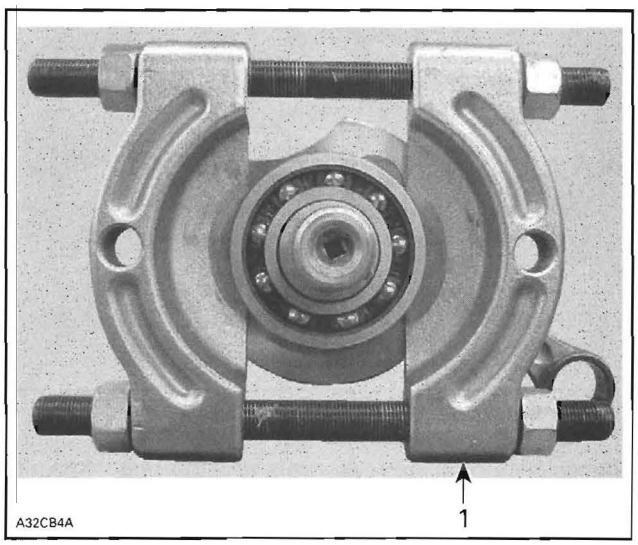

1. Bearing separator

Procedure for MAG side bearings **no. 4** is same as of PTO side with the exception of the crankshaft protector (P/N 420 876 557).

Installation

Clean crankshaft end with sand paper no. 180 and remove all residue using pulley flange cleaner (P/N 413 711 809).

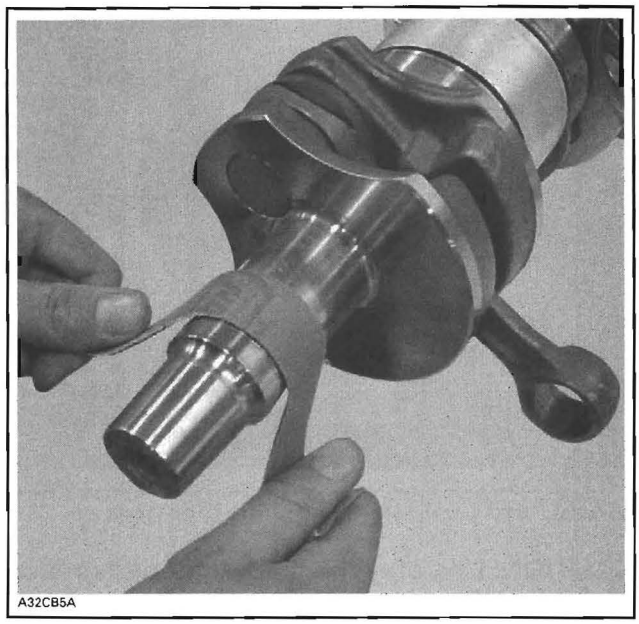

Smear Loctite 767 (antiseize lubricant) (P/N 293 800 070) on part of crankshaft where bearing fits.

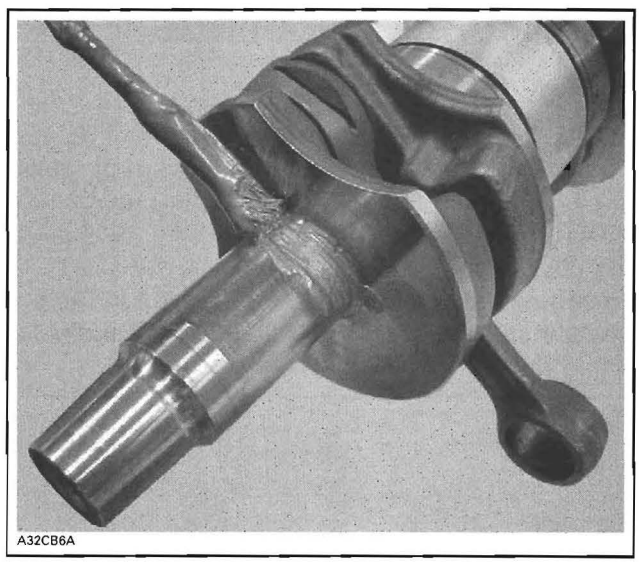

Heat up the bearing(s) using bearing heater (P/N 529 035 969). This will expand bearings and ease installation. If required, put a suitable plate or shim to avoid the direct contact between integrated seal (if applicable) with the heating surface.

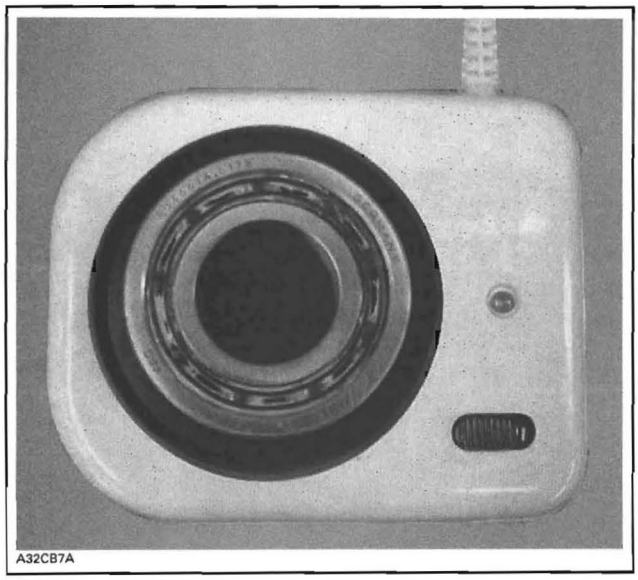
A32CB7A

CAUTION: Bearing should not be heated to more than 80°C (176°F). Do not heat bearing with direct flame or heat gun or heated oil. Inappropriate heating procedure(s) may cause inner seal failure.

For even heat distribution, turn bearing several times during heating process.

NOTE: Two bearings can be heated at the same time on one bearing heater.

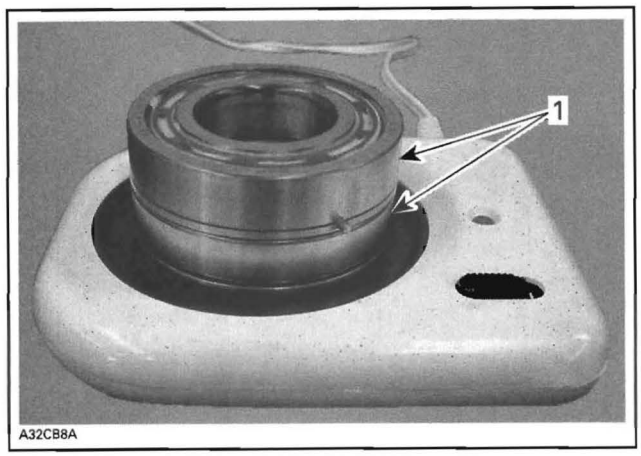

A32CB8A

1. Bearings

Touch the inner race of the bearing with the temperature indicator stick (P/N 529 035 970). Stick will liquefy when the bearing reach the proper temperature.

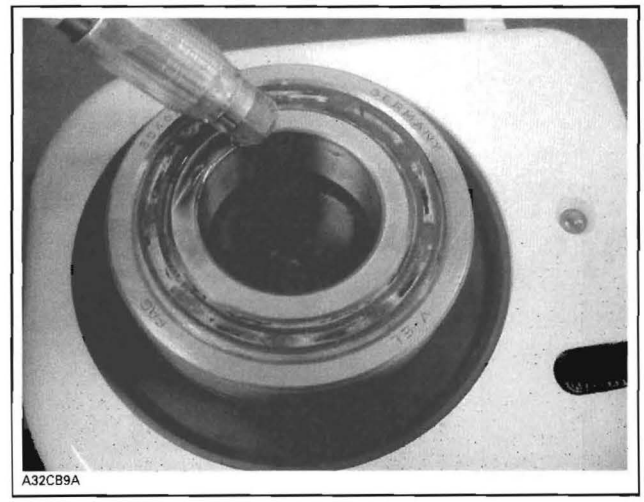
A32CB9A

⚠ WARNING

Do not touch heated bearing with bare hands. Wear heat resisting gloves before handling the heated bearing(s).

Slide in the inner PTO bearing with the integrated seal facing crankshaft. Push bearing to end position.

NOTE: The heated bearing should slide easily on the crankshaft. If required, push with a bearing installer (P/N 529 035 990).

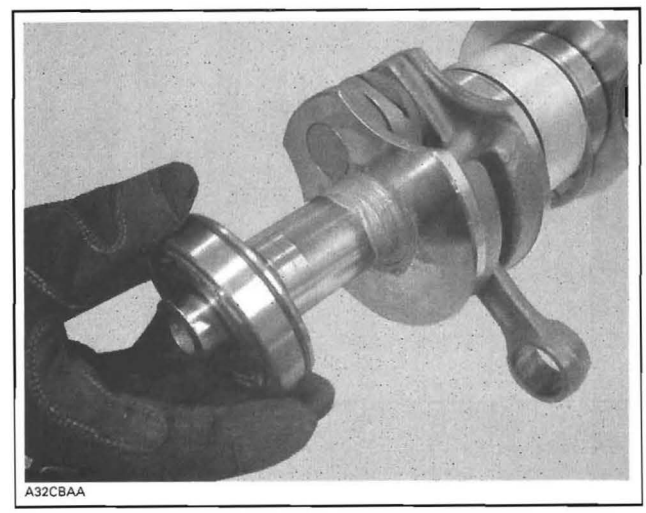
A32CBAA

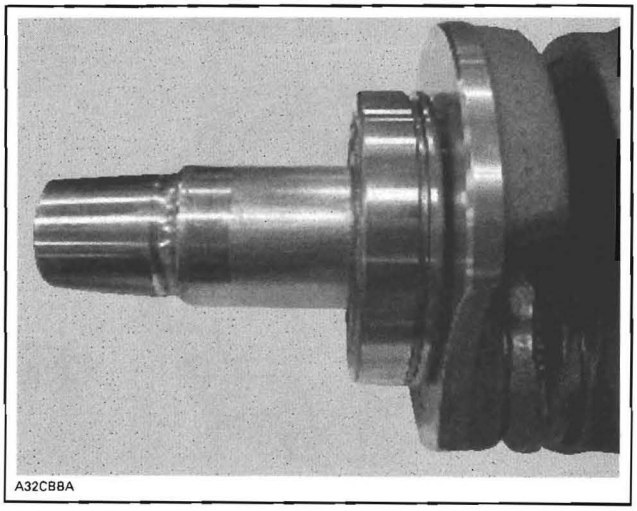

BEARING TO END POSITION

Install the O-ring.

Make a bearing locator tool using support plate (P/N 529 035 976) and distance gauge (P/N 529 035 965).

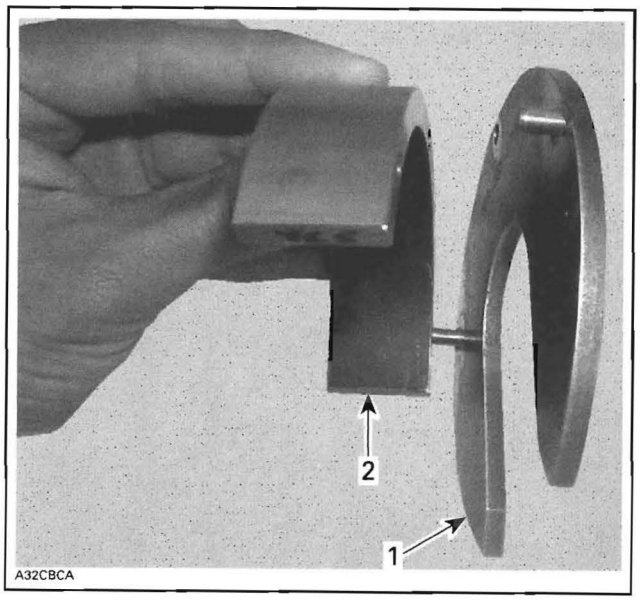

1. *Support plate*
2. *Distance gauge*

Install bearing locator tool.

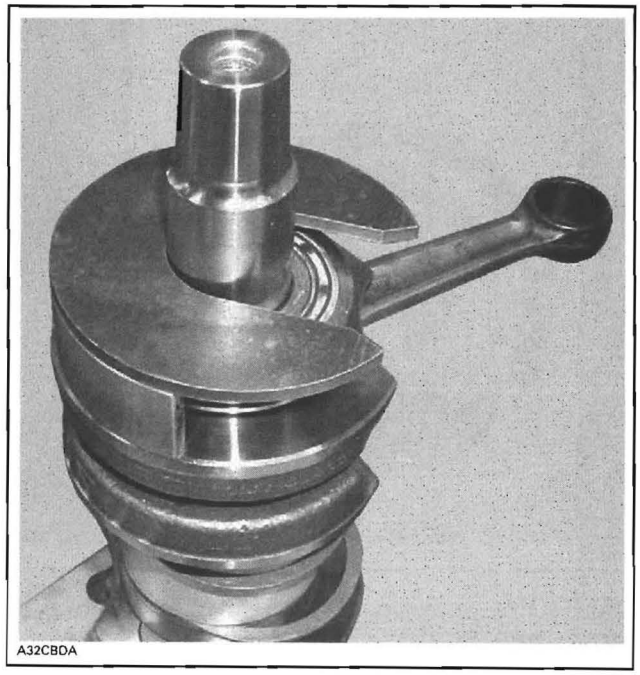

Slide in the heated outer PTO bearing onto the crankshaft.

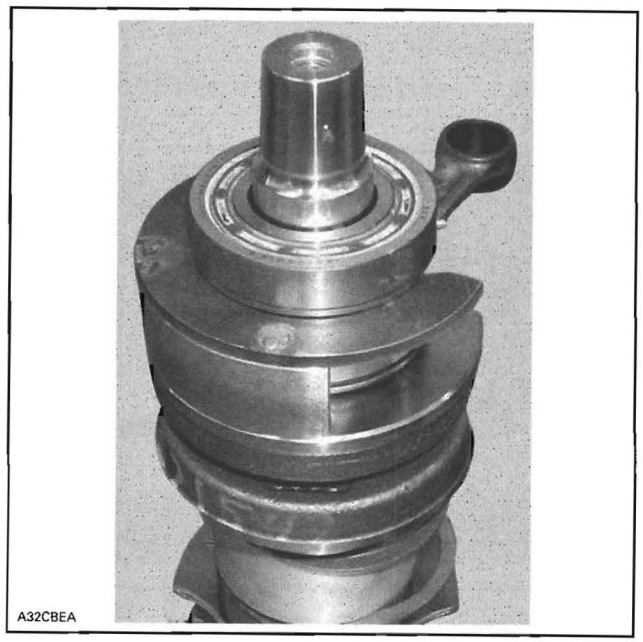

Install the heated MAG side bearing.

NOTE: The heated bearing should slide easily on the crankshaft. If required, push with a bearing installer (P/N 529 035 980).

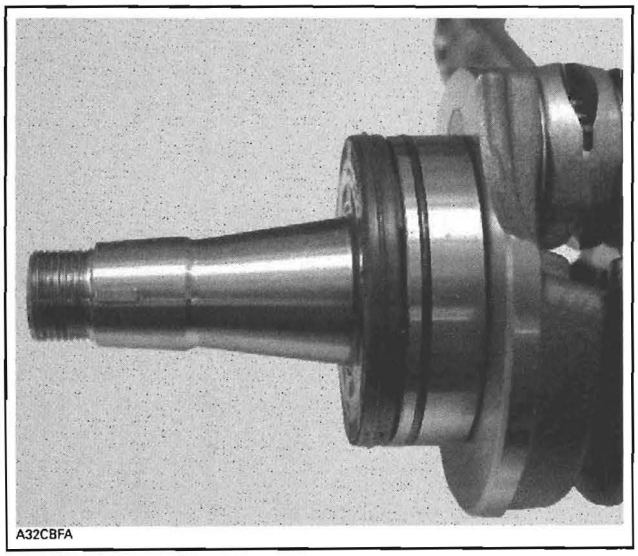

TYPICAL

ENGINE MEASUREMENT

SERVICE TOOLS

Description	Part Number	Page
degree wheel	529 035 607	185
dial indicator	414 104 700	184–185

NOTE: This subsection explains the procedures to correctly measure engine components. For the engine technical specifications, refer to *INSPECTION* in the appropriate *ENGINE* subsection.

CYLINDER HEAD WARPAGE

Check gasketed surface of the cylinder head with a straight edge and a feeler gauge. Make sure part is within the given specification. If cylinder head is out of specification, replace it. Verify combustion chamber volume to use the correct cylinder base gasket with the new part.

CYLINDER TAPER

Compare cylinder diameter 33 mm (1.3 in) from top of cylinder to just below its intake port area.

If the difference exceeds the specified dimension the cylinder should be rebored and honed or should be replaced.

NOTE: If cylinder is rebored, be sure to restore the chamfer around all cylinder sleeve port openings.

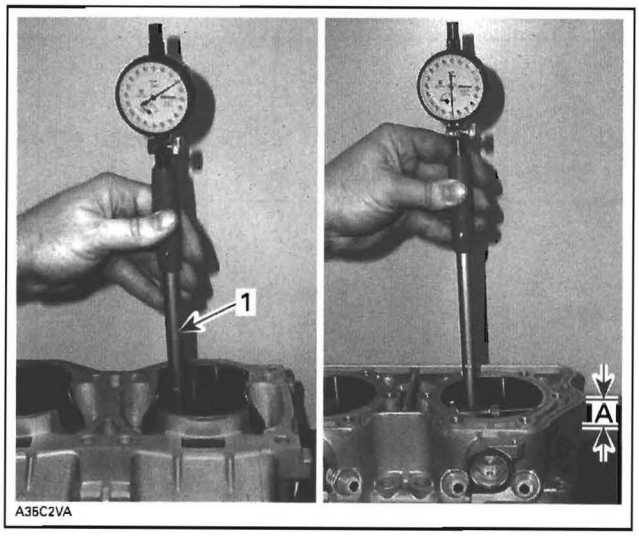

TYPICAL
1. Below the intake port
A. 33 mm (1.3 in) from top

CYLINDER OUT OF ROUND

Measuring 33 mm (1.3 in) from top of cylinder with a cylinder gauge, check if the cylinder out of round is more than the specified dimension. If larger, cylinder should be rebored and honed or should be replaced.

NOTE: If cylinder is rebored, be sure to restore the chamfer around all cylinder sleeve port openings.

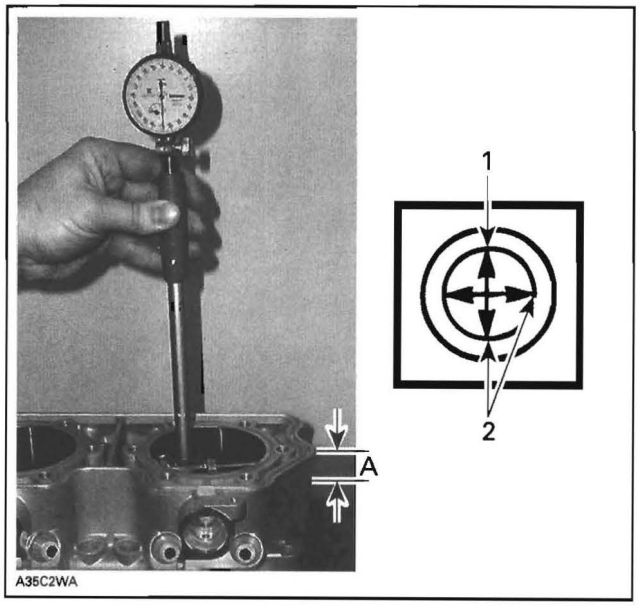

TYPICAL
1. Piston pin position
2. Measures to be compared
A. 33 mm (1.3 in)

CYLINDER/PISTON CLEARANCE

Procedure with a Used Piston

Using a micrometer, measure piston at A perpendicularly (90°) to piston pin.

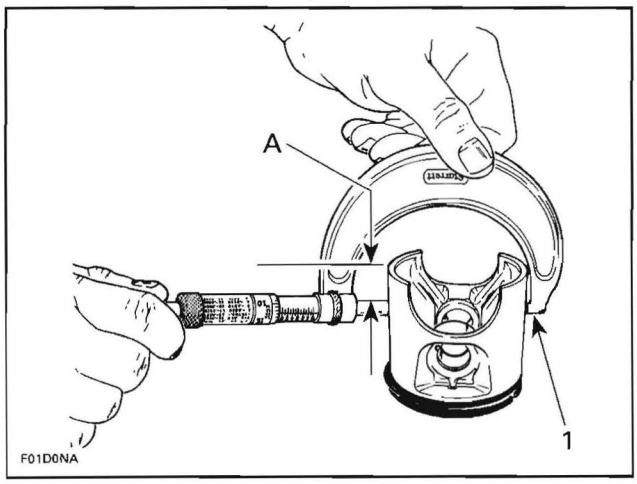

TYPICAL
1. Measuring perpendicularly (90°) to piston pin axis
A. 15 mm (.590 in)

The measured dimension must not be less than 0.15 mm (.006 in) of the one scribed on piston dome. Otherwise, install a new piston.

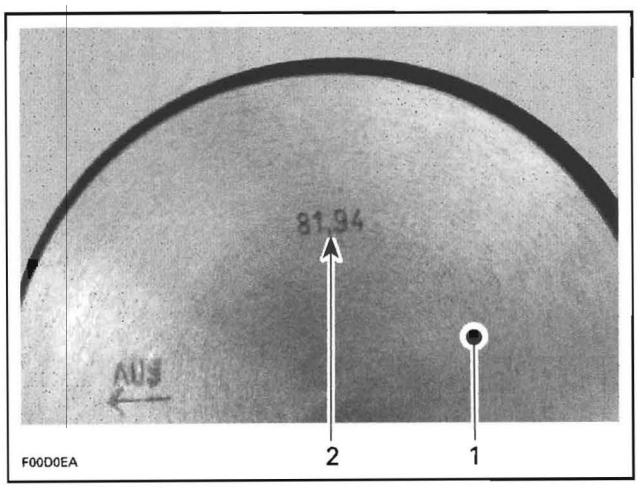

TYPICAL
1. Piston dome
2. Piston measurement

If piston is within tolerance, adjust and lock a micrometer to the piston dimension.

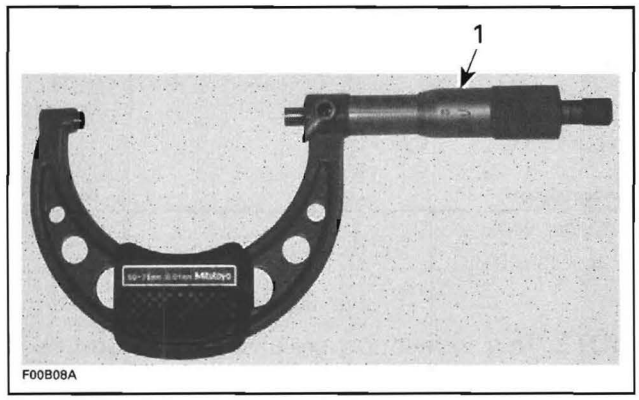

1. Micrometer set to the piston dimension

Refer to *PROCEDURE CONTINUATION WITH A NEW OR USED PISTON* further.

Procedure with a New Piston

Read the piston diameter on the piston dome.

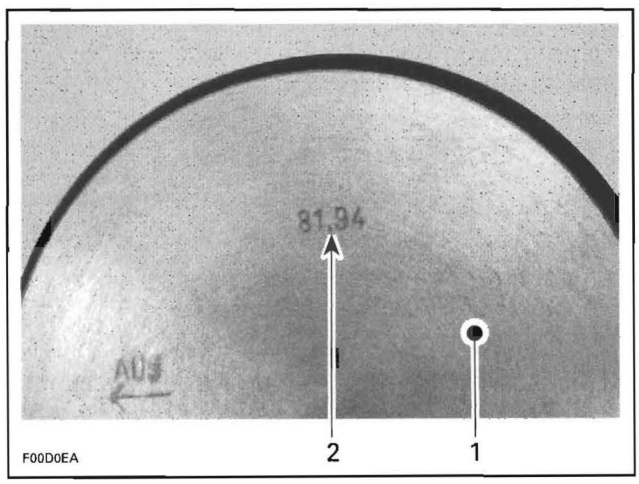

1. Piston dome
2. Piston diameter

Adjust and lock a micrometer to the specified value on the piston dome.

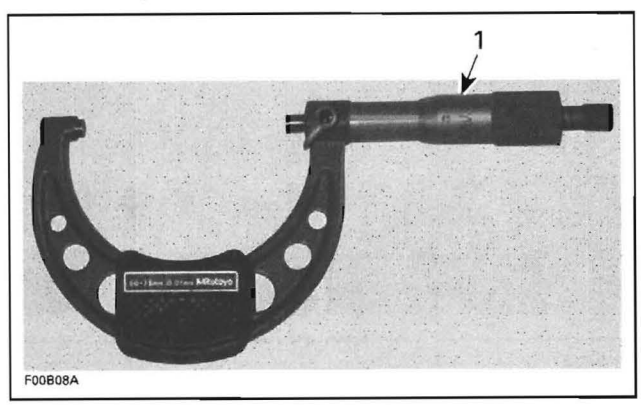

1. Micrometer set to the piston dimension

Procedure Continuation with a New or Used Piston

With the micrometer set to the piston dimension, adjust a cylinder bore gauge to the micrometer dimension and set the indicator to 0.

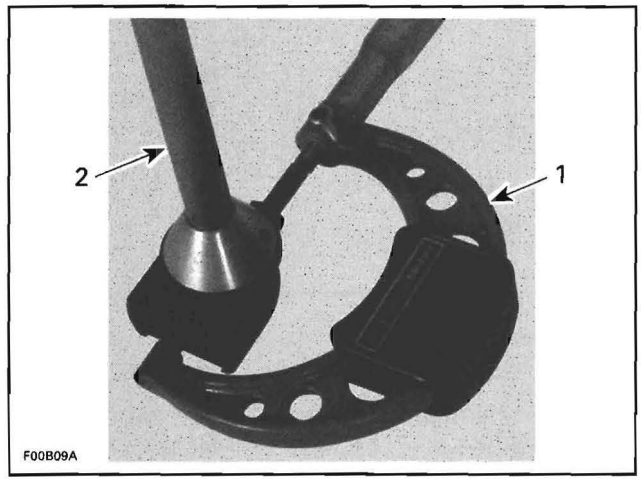

1. Use the micrometer to set the cylinder bore gauge
2. Dial bore gauge

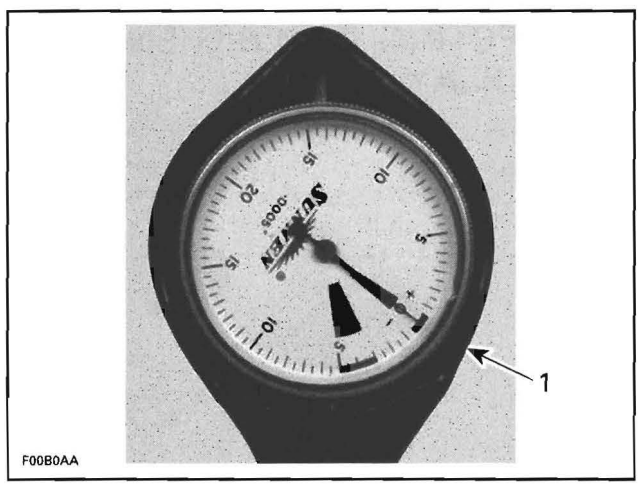

1. Indicator set to 0 (zero)

NOTE: Make sure the cylinder bore gauge indicator is set exactly at the same position as with the micrometer, otherwise the reading will be false.

Position the dial bore gauge at 33 mm (1.3 in) below cylinder top edge.

IMPORTANT: Always remove cylinder-block from crankcase before measuring.

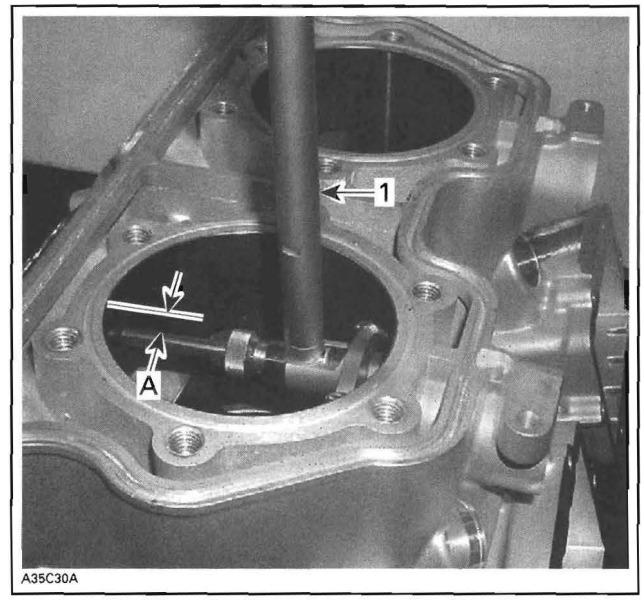

TYPICAL
1. Measuring perpendicularly (90°) to piston pin axis
A. 33 mm (1.3 in)

Read the measurement on the cylinder bore gauge. The result is the exact piston/cylinder wall clearance. If clearance exceeds specified tolerance, replace piston and cylinder.

NOTE: Oversize pistons are available for the 552 engine.

RING/PISTON GROOVE CLEARANCE

Using a feeler gauge check clearance between rectangular ring and groove. Replace piston if clearance exceeds specified tolerance.

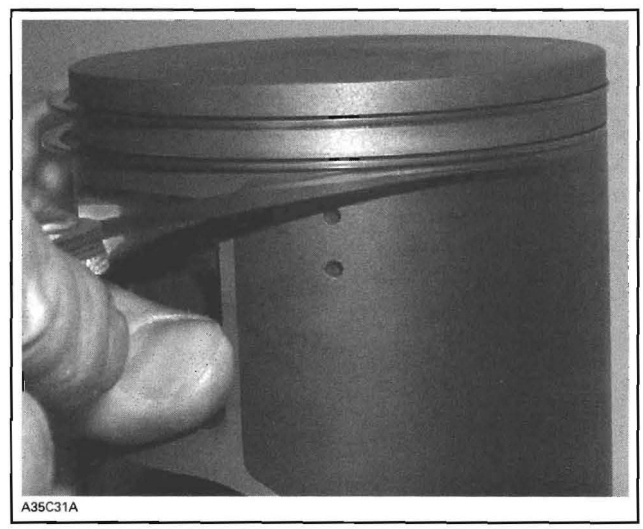

RING END GAP

Position ring halfway between transfer ports and intake port.

NOTE: In order to correctly position the ring in the cylinder, use piston as a pusher.

Using a feeler gauge, check ring end gap. Replace ring if gap exceeds specified tolerance.

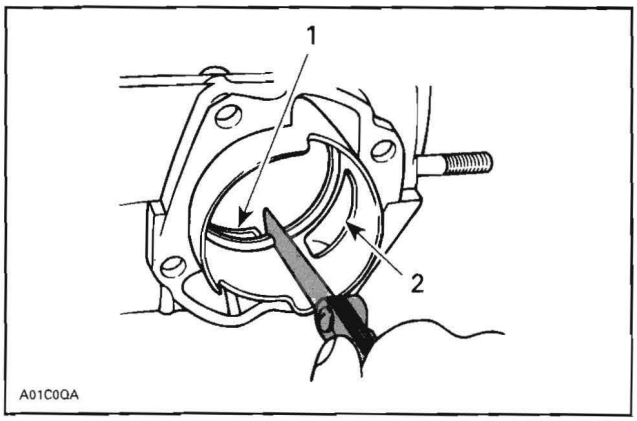

TYPICAL
1. Transfer port
2. Intake port

CRANKSHAFT DEFLECTION

Crankshaft deflection is measured with the dial indicator (P/N 414 104 700).

Measuring in Crankcase

First, check deflection with crankshaft in crankcase. If deflection exceeds the specified tolerance, recheck deflection using V-shaped blocks to determine the defective part(s). See below.

Measuring on Bench

Once engine is disassembled, check crankshaft deflection on V-shaped blocks. If deflection exceeds the specified tolerance, it can be worn bearings or a bent crankshaft. Remove crankshaft bearings and check deflection again on V-shaped blocks to determine the defective part(s). See measurement "A" in following illustration.

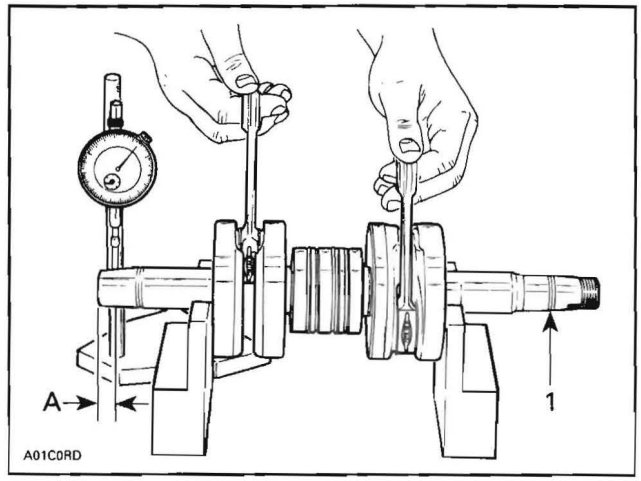

TYPICAL
1. Measure at mid point between the key and the first thread
A. 3 mm (1/8 in)

NOTE: Crankshaft deflection cannot be correctly measured between centers of a lathe.

If the deflection exceeds the specified tolerance, crankshaft should be repaired or replaced.

CONNECTING ROD BIG END AXIAL PLAY

Using a feeler gauge, measure distance between thrust washer and crankshaft counterweight. If the distance exceeds specified tolerance, repair or replace the crankshaft.

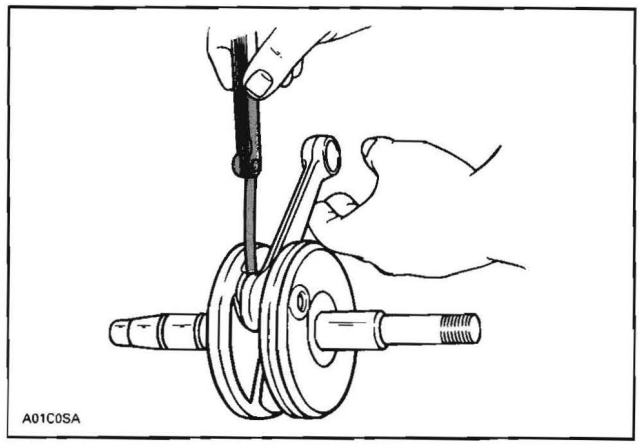

TYPICAL

CRANKSHAFT ALIGNMENT

Remove both spark plugs.

Install the dial indicator (P/N 414 104 700) in spark plug hole on MAG side.

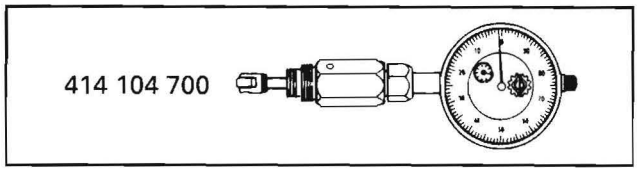

Bring MAG piston at top dead center.

Install the degree wheel (P/N 529 035 607) on crankshaft end.

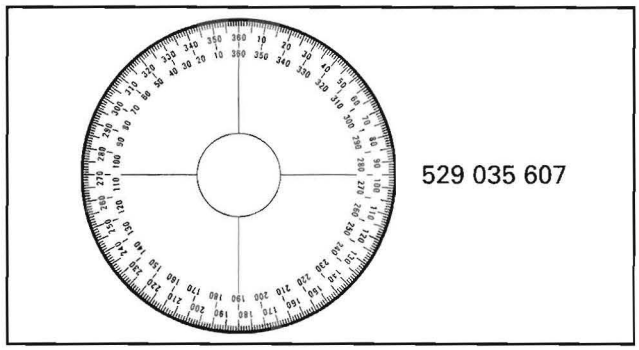

Scribe a mark on crankcase.

Install degree wheel so that 360° mark aligns with the mark on crankcase. Do not rotate crankshaft.

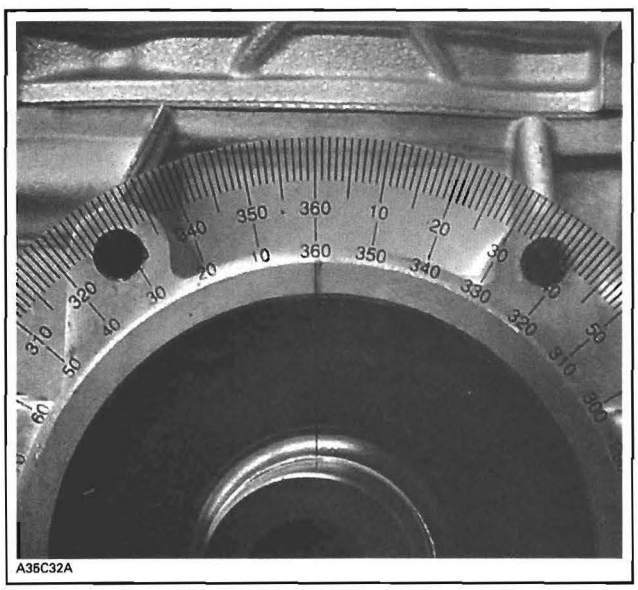

Remove dial indicator and install it in spark plug hole on PTO side.

Bring PTO piston to top dead center. Degree wheel must rotate with crankshaft.

Interval between cylinders must be 180° ± 0.5.

Any other reading indicates a misaligned (twisted) crankshaft.

COMBUSTION CHAMBER VOLUME MEASUREMENT

The combustion chamber volume is the region in the cylinder head above the piston at Top Dead Center (TDC). It is measured with the cylinder head installed on the engine.

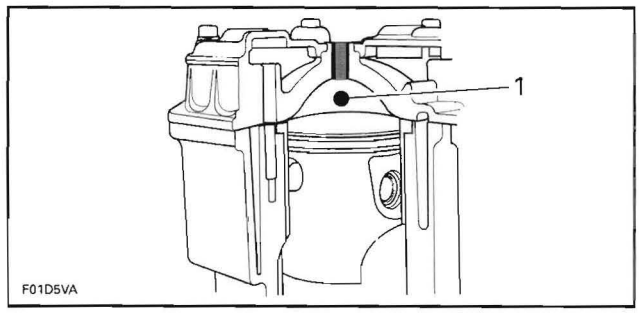

TYPICAL
1. Combustion chamber

NOTE: When checking the combustion chamber volume, engine must be cold, piston must be free of carbon deposits and cylinder head must be leveled.

- Remove both spark plugs and bring one piston to Top Dead Center using the dial indicator (P/N 414 104 700).

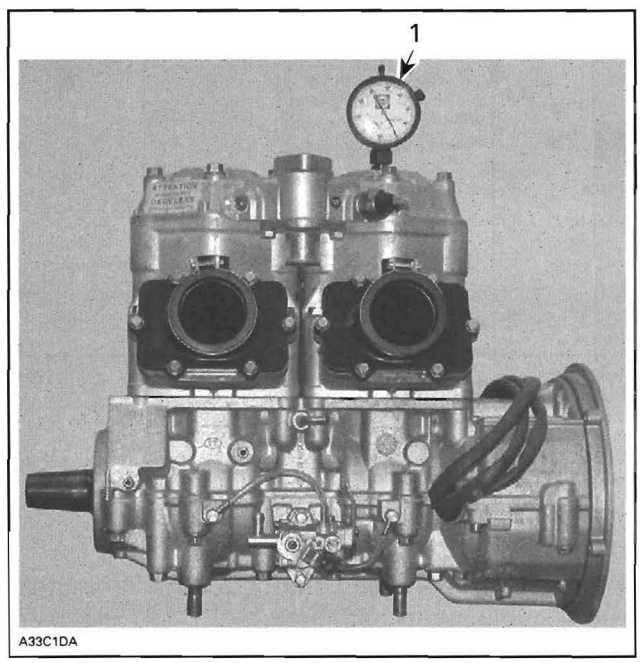

TYPICAL
1. Bring piston to TDC

- Obtain a graduated burette (capacity 0 - 50 cc) and fill with an equal part (50/50) of gasoline and injection oil.

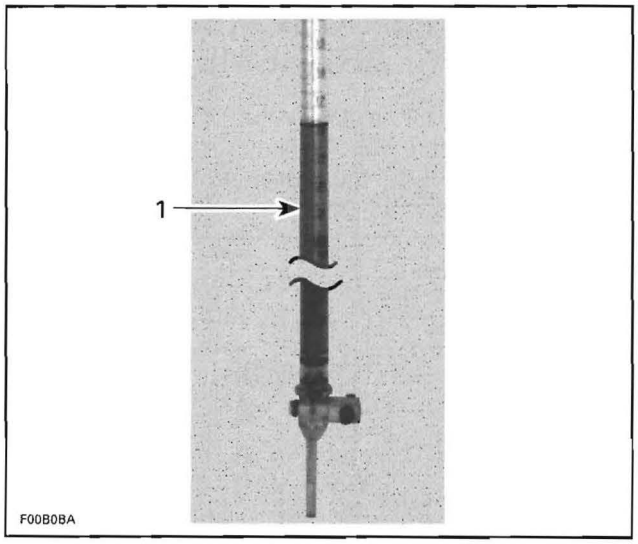

1. Graduated burette (0 - 50 cc)

- Open burette valve to fill its tip. Add liquid in burette until level reaches 0 cc.
- Inject the burette content through the spark plug hole until liquid touches the top spark plug hole.

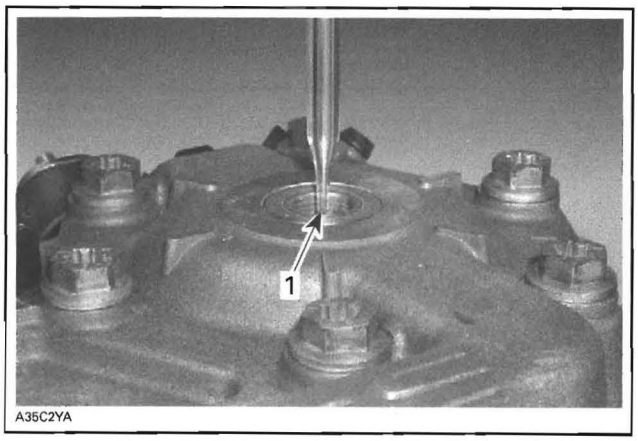

TYPICAL
1. Top of spark plug hole

NOTE: The liquid level in cylinder must not drop for a few seconds after filling. If so, there is a leak between piston and cylinder. The recorded volume would be false.

- Let burette stand upward for about 10 minutes, until liquid level is stabilized.
- Read the burette scale to obtain the quantity of liquid injected in the combustion chamber.

NOTE: When the combustion chamber is filled to top of spark plug hole, it includes an amount of 2.25 cc corresponding to the spark plug well.

- Repeat the procedure for the other cylinder.
- Install a thicker or thinner cylinder/crankcase gasket (refer to *PARTS CATALOGS*) in order to obtain the specified combustion chamber volume.

ENGINE REMOVAL AND INSTALLATION

SERVICE TOOLS

Description	Part Number	Page
engine lifting tool	529 036 022	191

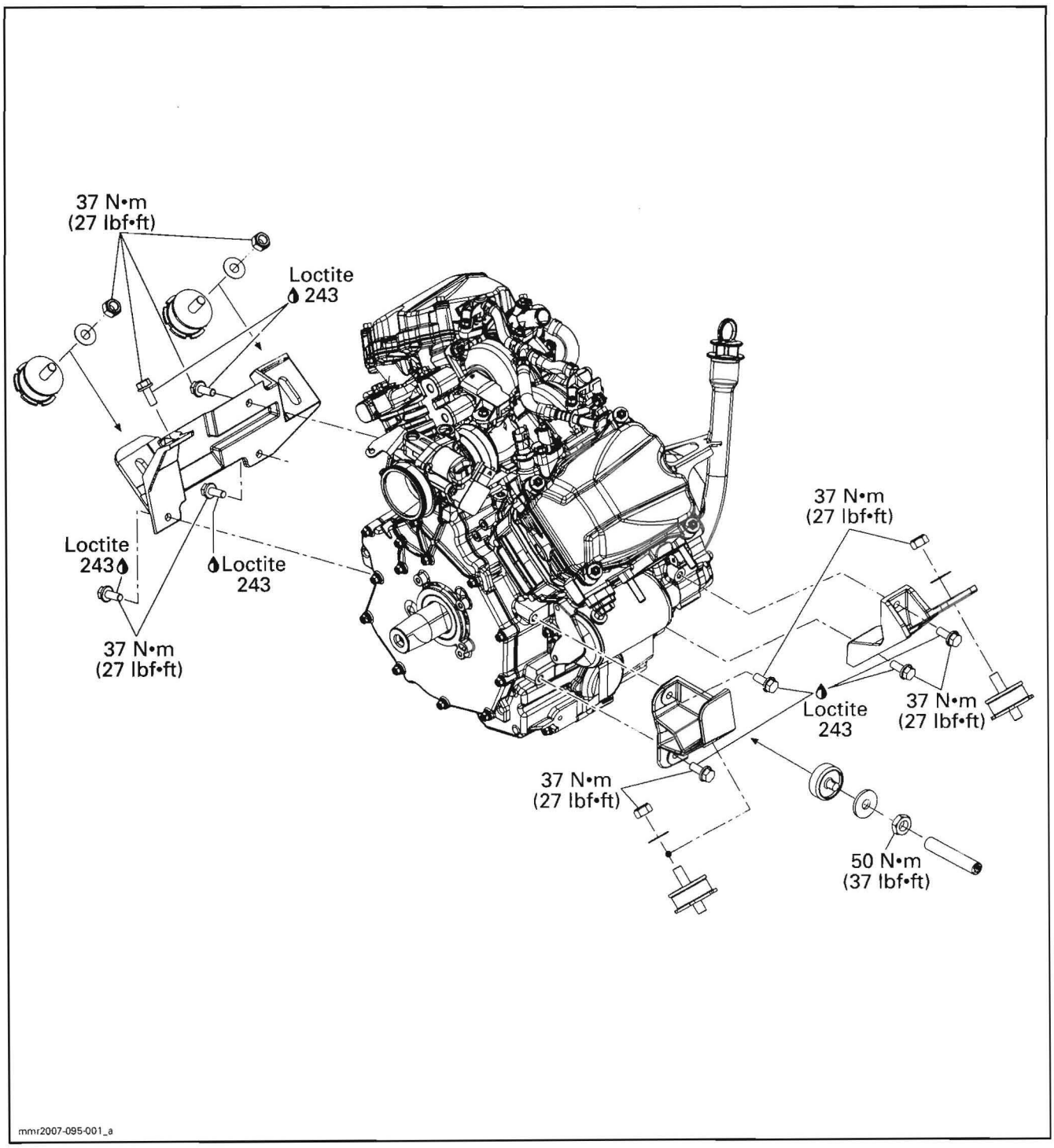

GENERAL

⚠ WARNING

To avoid potential burns, let engine and exhaust system cool down before performing any servicing.

During assembly/installation, use the torque values and service products as in the exploded view.

Clean threads before applying a threadlocker. Refer to *SELF-LOCKING FASTENERS* and *LOCTITE APPLICATION* at the beginning of this manual for complete procedure.

⚠ WARNING

Torque wrench tightening specifications must strictly be adhered to.
Locking devices (e.g.: locking tabs, elastic stop nuts, self-locking fasteners, cotter pin, etc.) must be installed or replaced with new one where specified. If the efficiency of a locking device is impaired, it must be renewed.

PROCEDURES

ENGINE REMOVAL

Vehicle and Engine Preparation

Place vehicle on a work station that will have access to an engine-lifting hoist. Then start with initial preparation of vehicle by doing the following.

Remove both side panels, hood and console. Refer to *BODY*.

On right side of vehicle, do the following:

Unplug the BLACK (-) cable from battery, then the RED (+) cable.

⚠ WARNING

Always unplug battery cables exactly in the specified order, the BLACK (-) cable first. It is recommended to unplug electrical connections prior to disconnecting fuel lines.

Drain cooling system. Refer to *COOLING SYSTEM*.

NOTE: It is not necessary to drain engine oil. Drain engine oil only if engine overhaul is necessary.

Remove muffler. Refer to *EXHAUST SYSTEM*.

Disconnect coolant hose from water pump cover.

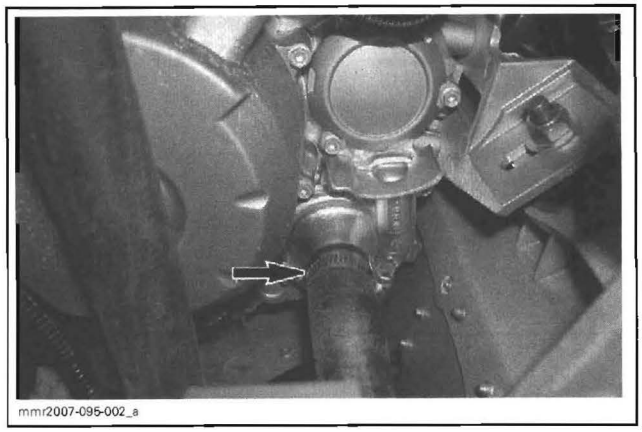

Unplug the magneto connector and cut locking ties securing its harness.

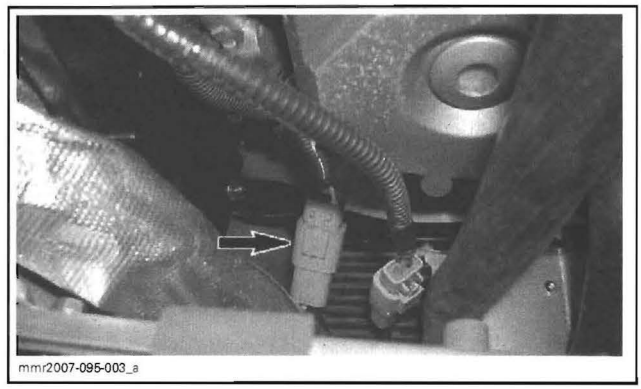

Unplug the CAPS on cylinder **no. 1**.

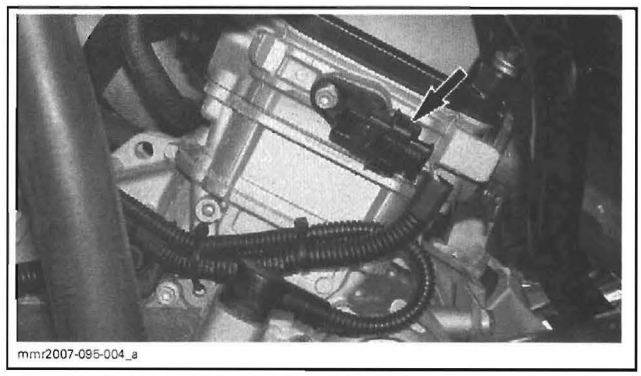

CAMSHAFT POSITION SENSOR (CAPS)

Remove CPS from engine and cut locking ties retaining harnesses.

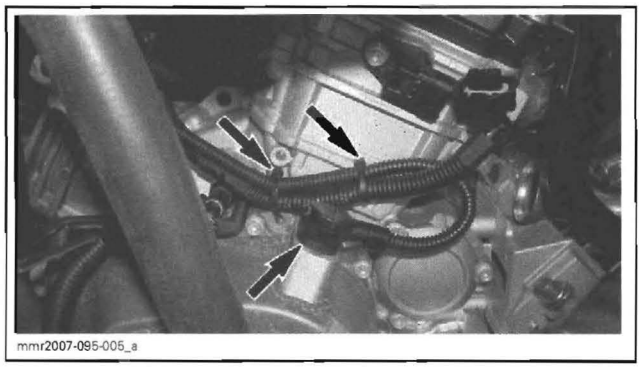

CRANKSHAFT POSITION SENSOR (CPS)

Unplug OPS.

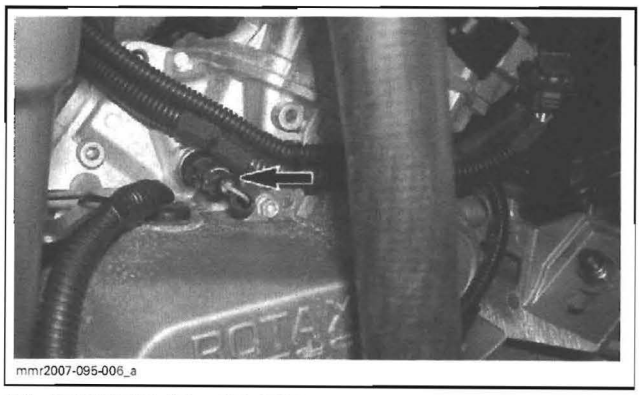

OIL PRESSURE SWITCH (OPS)

Remove the dipstick tube.

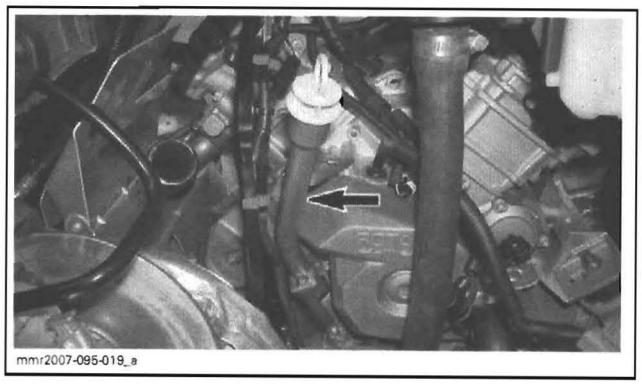

Unplug spark plug cable on cylinder no. 2.

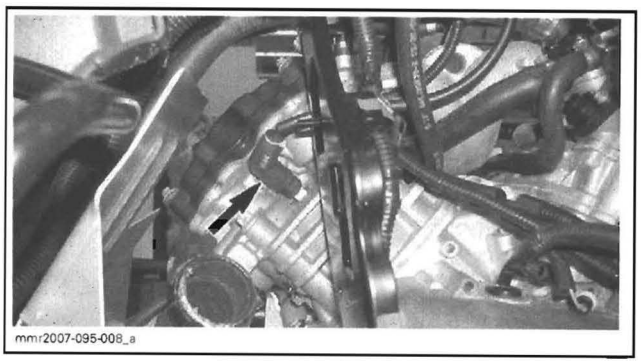

Unscrew ground wire from engine.

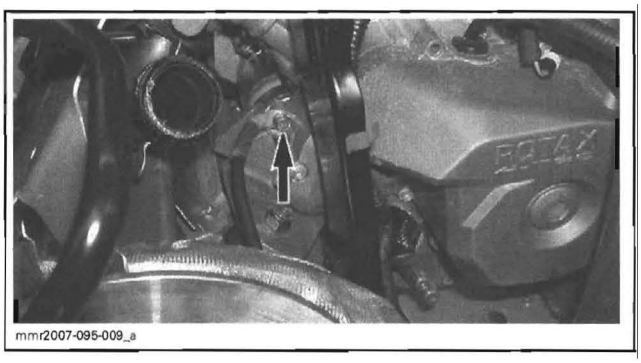

Unscrew the Banjo fitting on the top of cylinder no. 1. Discard sealing rings.

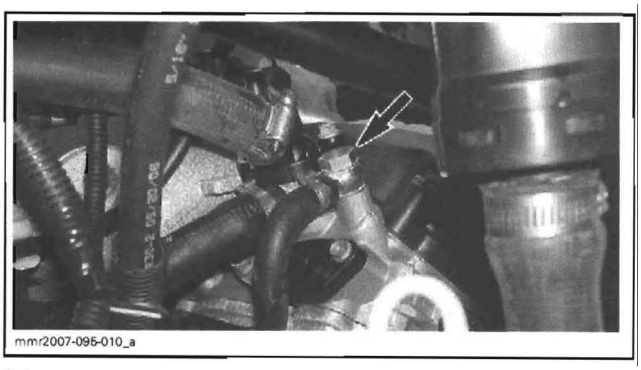

Disconnect throttle body heater hose from coolant reservoir.

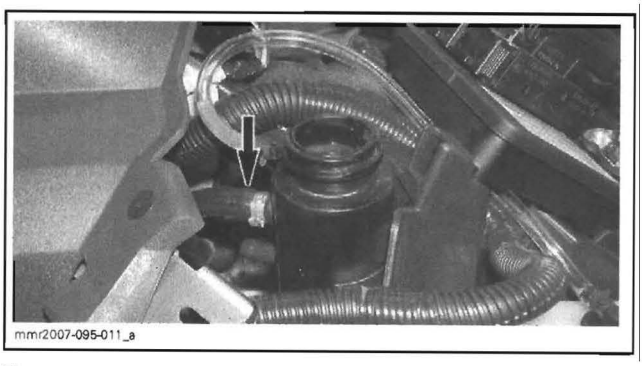

Remove nuts securing engine supports to rubber mounts.

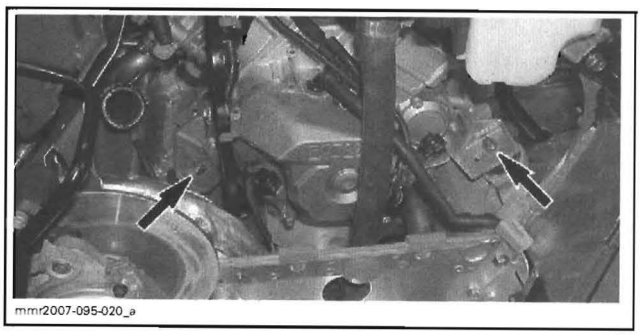

On left side of vehicle, do the following:

Remove air intake silencer. Refer to *AIR INTAKE SILENCER*.

Remove drive and driven pulleys. Refer to *DRIVE SYSTEM*.

Remove springs securing front exhaust pipe to exhaust manifold.

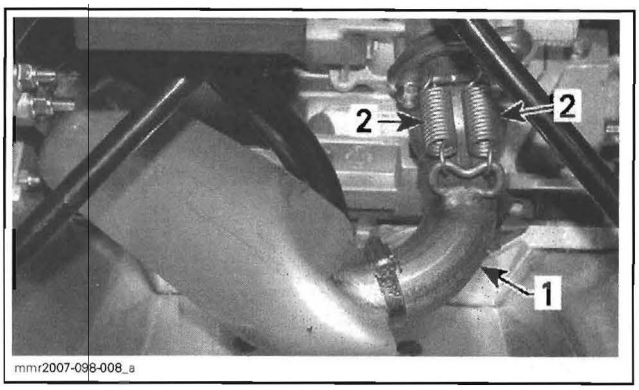

1. *Front exhaust pipe*
2. *Exhaust springs*

Drill rivets that attach bottom pan to the LH upper tube and remove bolts securing upper tube to front plate.

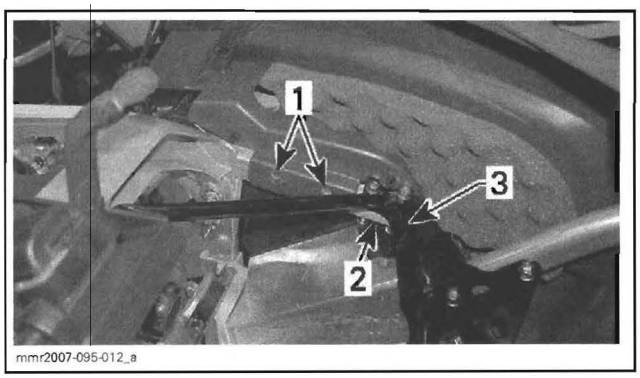

1. *Rivets locations*
2. *Upper tube*
3. *Front plate*

Remove bolts retaining upper tube and upper cross member.

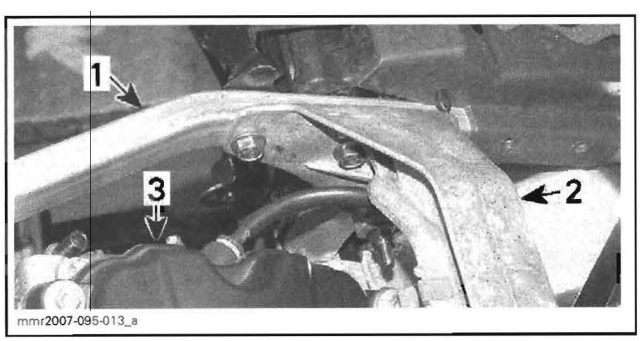

1. *Upper tube*
2. *Upper cross member*
3. *Cylinder no. 1*

Near handlebar, remove bolts retaining upper tube to retaining block.

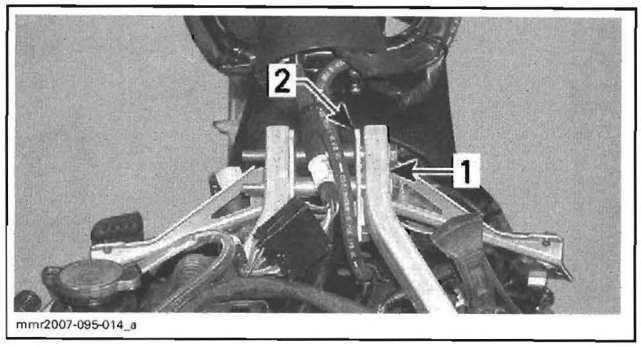

1. *LH upper tube*
2. *Retaining block*

Unplug CPS connector on LH upper tube.

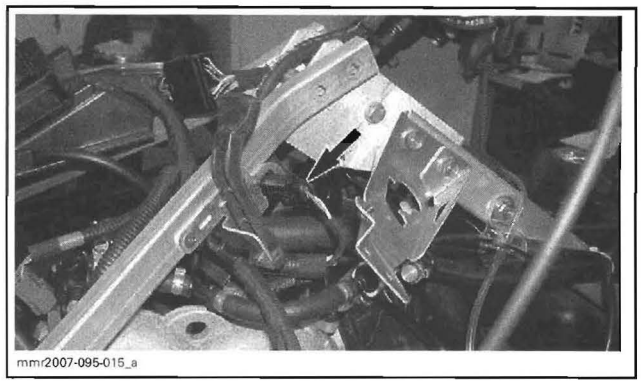

Remove upper tube with CPS.

Unplug spark plug cable cylinder no. 1.

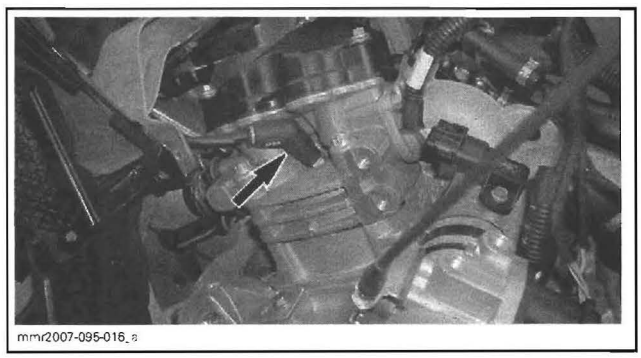

Unplug the fuel injector on cylinder no. 1 and the MAPTS.

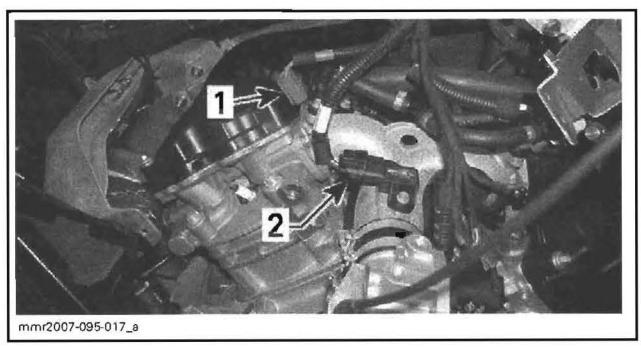

1. *Fuel injector*
2. *Manifold air pressure and temperature sensor (MAPTS)*

Unplug CTS, TPS and IBV.

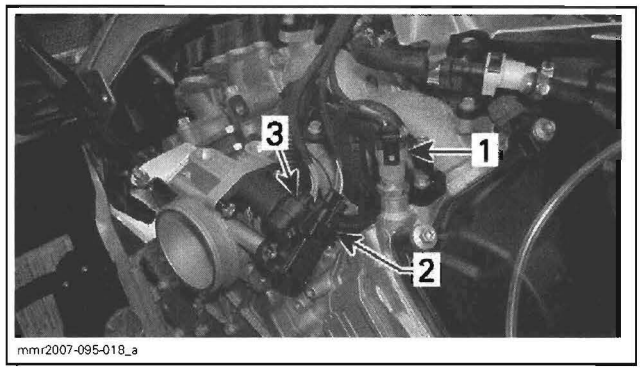

1. *Coolant Temperature Sensor (CTS)*
2. *Throttle Position Sensor (TPS)*
3. *Idle Bypass Valve (IBV)*

Unplug the fuel injector on cylinder no. 2.

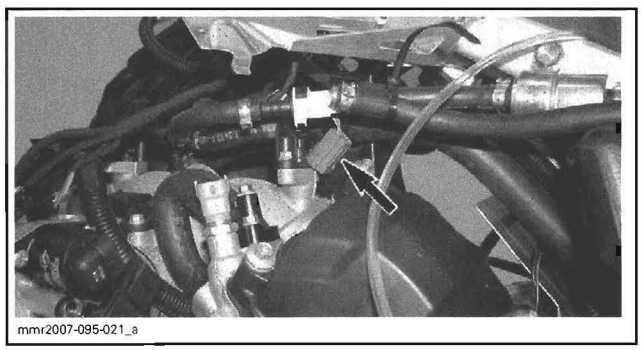

Remove the intake manifold screws then remove manifold.

Disconnect the coolant hose on the top of cylinder no. 1.

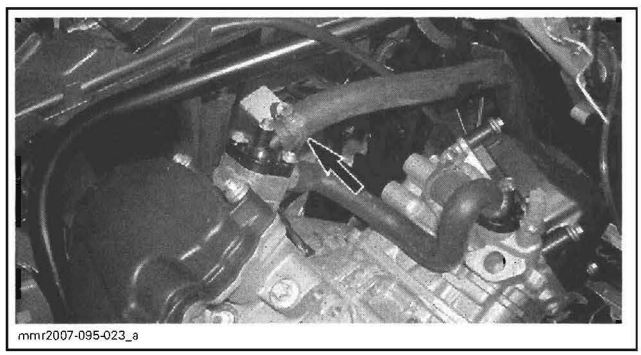

Unscrew engine stopper.

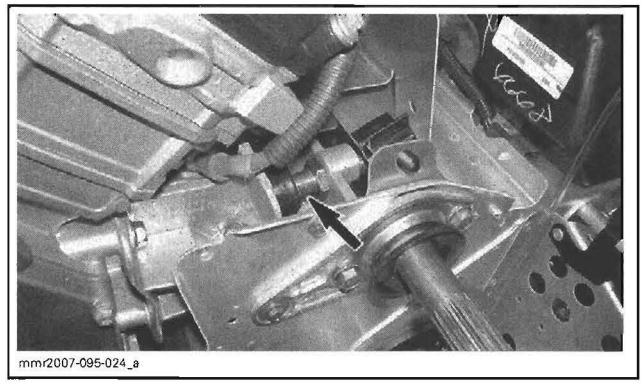

Remove nuts securing engine supports to rubber mounts.

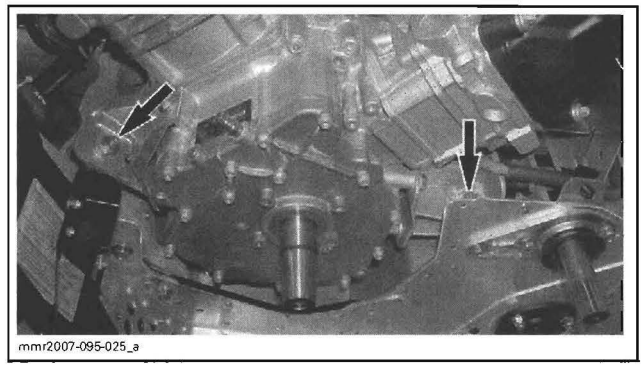

Remove the rear exhaust pipe. Refer to *EXHAUST SYSTEM*.

Lifting Engine

Install the engine lifting tool (P/N 529 036 022).

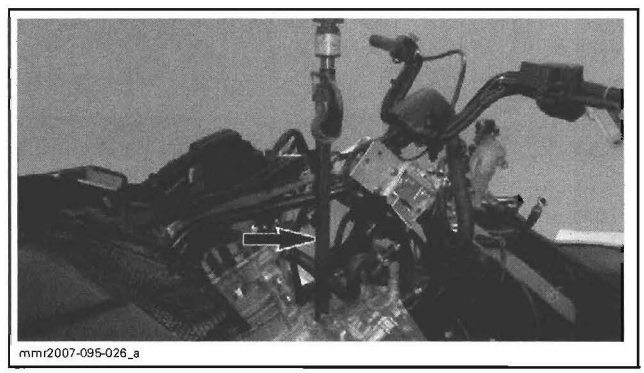

Lift the engine a little to remove the LH rear engine support.

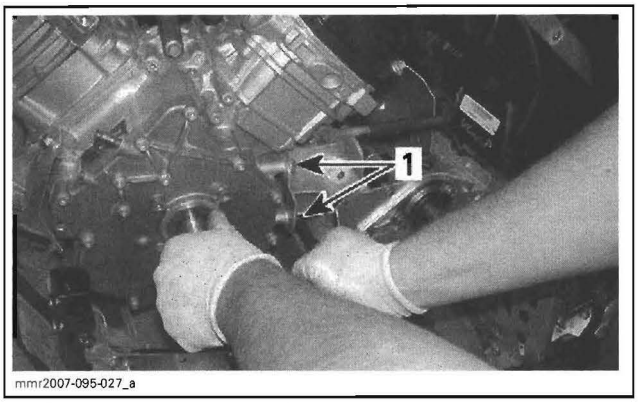

1. LH rear engine support bolts

Remove starter.

Lift engine a little and push down the cylinder no. 2 to clear the console support.

Lift and turn engine to remove it, cylinder no. 2 first.

ENGINE INSTALLATION

The installation is the reverse of the removal procedure. However, pay attention to the following.

Check condition of rubber mounts and replace them if necessary.

Make sure oil drain plug is installed and tight.

Final Assembly Procedure

Fill cooling system. Refer to *COOLING SYSTEM.*

Fill engine with the right amount of oil. Put oil of appropriate viscosity.

Reconnect battery.

⚠ WARNING

Connect RED (+) cable then BLACK (-) cable. Always connect RED (+) cable in first.

Start vehicle. Let engine reaches the operating temperature.

Stop engine and check if coolant and oil levels are correct. Refill as necessary.

Test drive vehicle to confirm proper operation.

ENGINE LEAK TEST

SERVICE TOOLS

Description	Part Number	Page
camshaft locking tool	529 035 926	194
dial gauge	414 104 700	194

GENERAL

Before performing the cylinder leak test, verify the following:
- clamp(s) tightness
- radiator and hoses.

NOTE: For best accuracy, the leak test should be done with the engine at normal operating temperature.

⚠ WARNING

Prevent burning yourself on hot engine parts.

Repair Tips

- blue exhaust gas means damaged/worn piston rings or valve stem seals
- oily contamination on leak indicator hole means a damaged oil seal on water pump shaft (refer to *COOLING SYSTEM*)
- coolant out of leak indicator hole means a damaged rotary seal on water pump shaft (refer to *COOLING SYSTEM*)
- coolant escaping from water pump housing means damaged gasket(s) and/or loosened screws (refer to *COOLING SYSTEM*).

NOTE: For all the checkpoints mentioned above, see the appropriate engine section to diagnose and repair the engine.

PROCEDURES

NOTE: The following instructions are valid for both cylinders.

PREPARATION

Disconnect battery.

⚠ WARNING

Always respect this order for disassembly; disconnect BLACK (-) cable first.

Remove coolant tank cap.

⚠ WARNING

To avoid potential burns only remove the radiator cap by wearing the appropriate safety equipment.

Remove any parts to have access to engine cylinder heads.

Unplug and remove spark plug cable.

Clean spark plug area and remove spark plug from cylinder head.

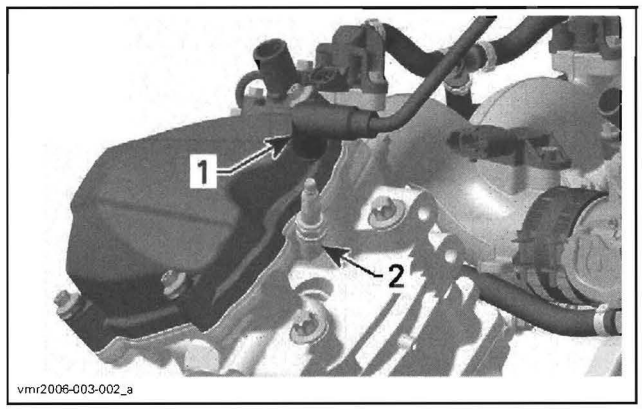

TYPICAL
1. *Spark plug cable*
2. *Spark plug*

Remove valve cover.

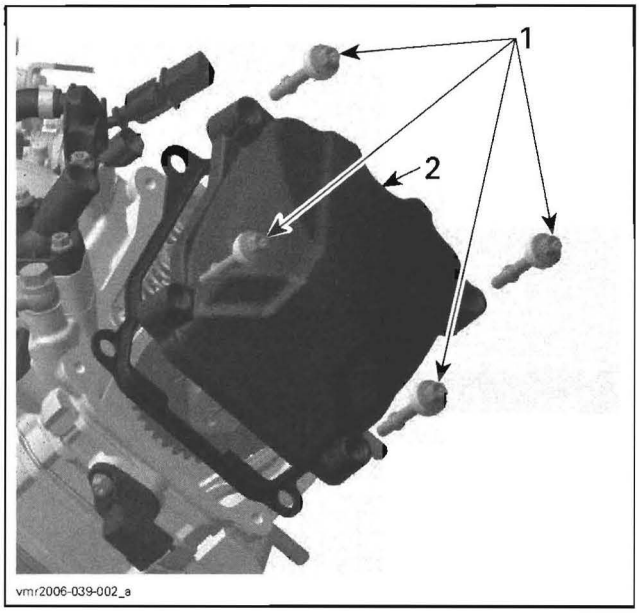

1. *Valve cover screws*
2. *Valve cover*

Rotate crankshaft until piston is at ignition TDC. See procedure below.

How to Turn Crankshaft

To turn crankshaft, there are two possible procedures.

First Procedure

– Turn the drive pulley.

Second Procedure

– Remove plug screw with O-ring from magneto cover.
– Use a 14 mm Allen key and turn crankshaft.

NOTE: Muffler must be removed for this operation.

CAUTION: Turn only clockwise to avoid loosening of magneto flywheel Allen screw.

How to Position Piston at TDC

Using the dial gauge (P/N 414 104 700), turn the crankshaft and set the piston to precisely ignition TDC.

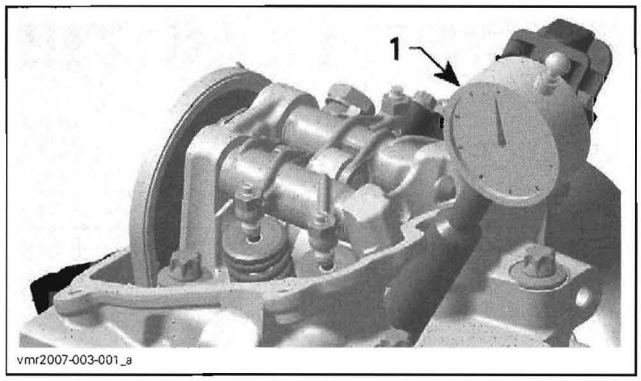

TYPICAL
1. *Dial gauge*

NOTE: If a dial gauge is not available, use a screwdriver or another similarly tool.

CAUTION: Do not scratch or damage piston/cylinder surface.

NOTE: At ignition TDC the marks on the camshaft timing gear have to be parallel to cylinder head base as per following illustration.

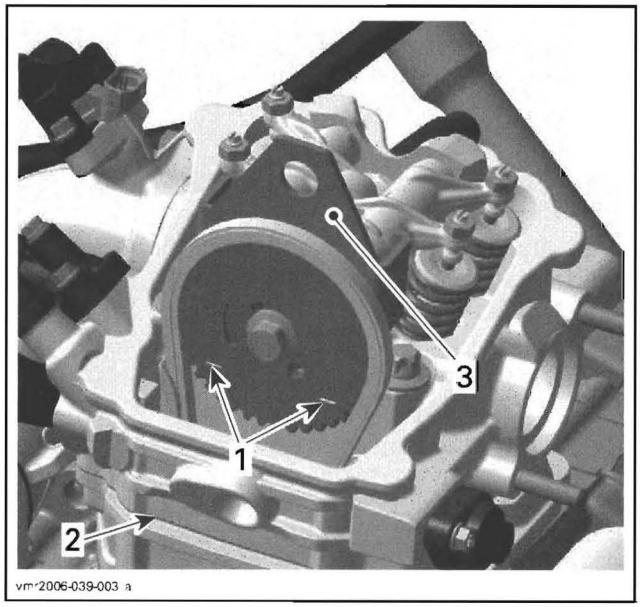

1. *Marks on camshaft timing gear*
2. *Cylinder head base*
3. *Camshaft locking tool*

How to Lock Camshaft

Lock camshaft at TDC by using camshaft locking tool (P/N 529 035 926).

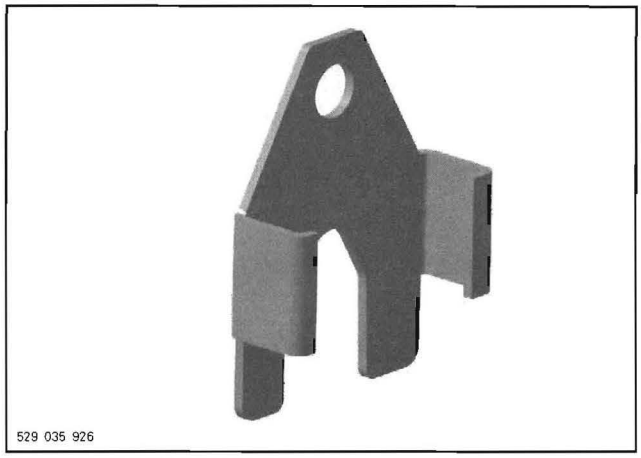

CAMSHAFT LOCKING TOOL

LEAK TEST

Connect to adequate air supply.

Set needle of measuring gauge to zero.

NOTE: All testers have specific instructions on gauge operation and required pressure.

Install gauge adapter into previously cleaned spark plug hole.

Supply combustion chamber with air pressure.

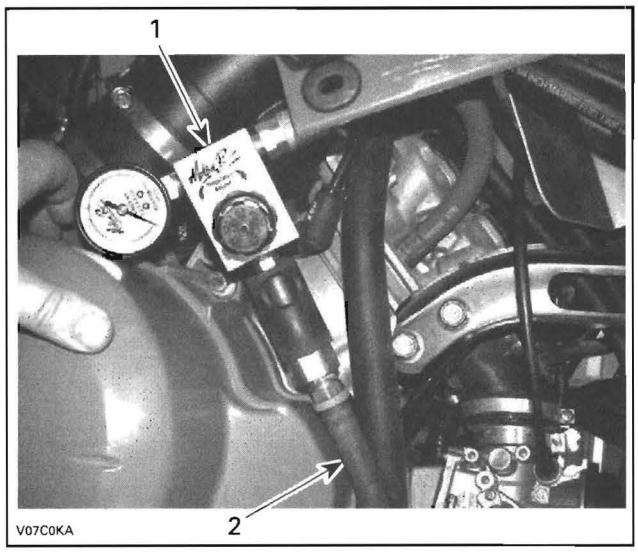

TYPICAL
1. Leak Tester
2. Air supply hose

Note the amount or percentage of leakage (depending on tester).

LEAKAGE PERCENTAGE	ENGINE CONDITION
0% to 15%	Excellent condition
16% to 25%	Good condition
26% to 40%	Fair condition; reduced engine performance
41% and higher	Poor condition, diagnose and repair engine

Diagnosis

Listen for air leaks.

- air escaping on intake port/throttle body means leaking intake valve(s)
- air escaping on exhaust port means leaking exhaust valve(s)
- air bubbles out of radiator means leaking cylinder head gasket
- air/oil escaping from crankcase means damaged gasket and/or loosened screws (refer to *BOTTOM END*)
- air/coolant escaping from cylinder/head means damaged gasket(s) and/or loosened screws (refer to *CYLINDER AND HEAD*)
- air escaping into crankcase area means excessively worn cylinder and/or broken piston rings (refer to *CYLINDER AND HEAD*).

NOTE: For all the checkpoints mentioned above, see the appropriate engine section to diagnose and repair the engine.

REASSEMBLY

Reverse the preparation procedure. Ensure to respect torque values and use of appropriate products/lubricants. Refer to exploded views in other sections of this manual as required.

AIR INTAKE SYSTEM

AIR INTAKE SILENCER

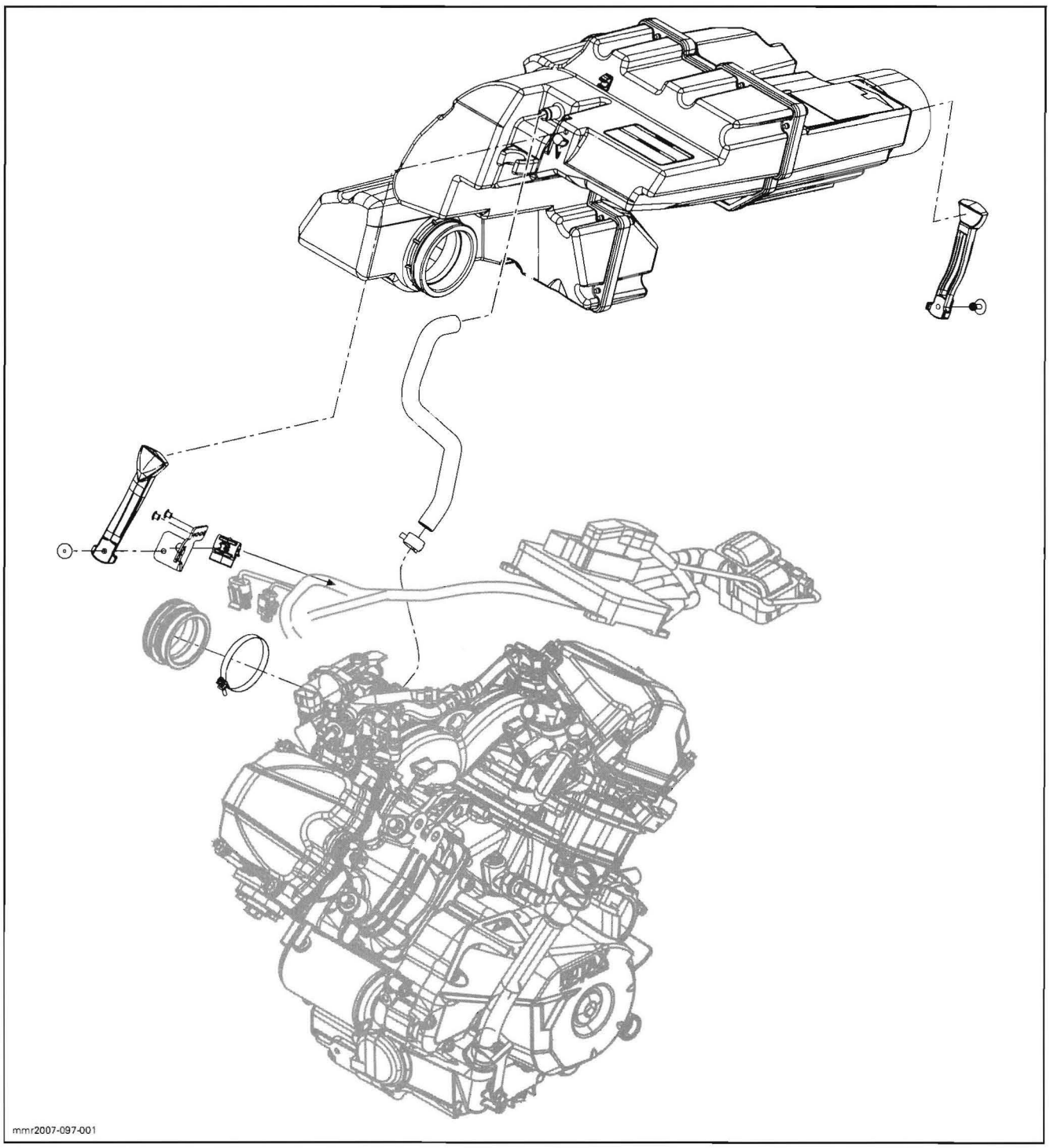

INTAKE MANIFOLD

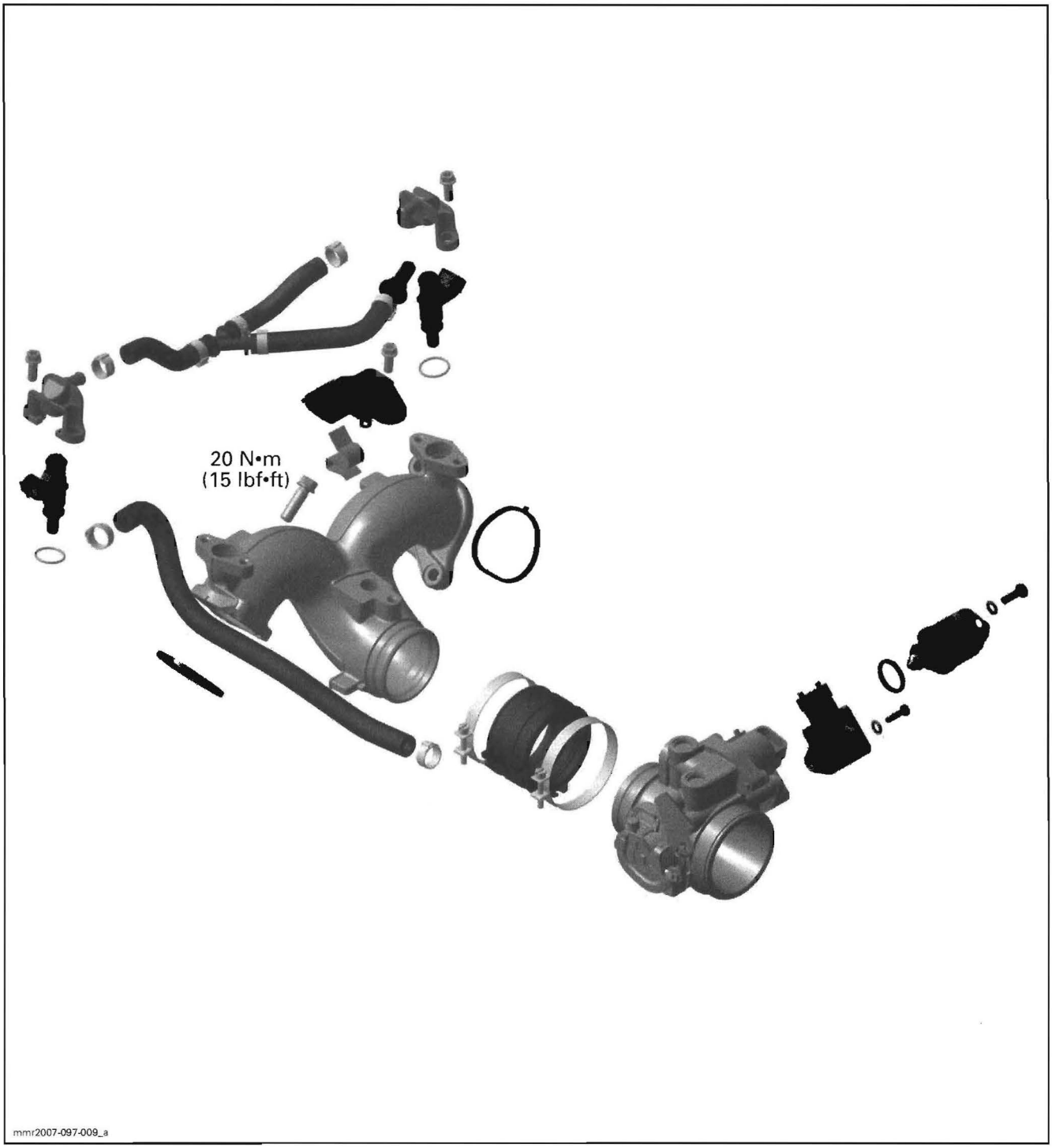

GENERAL

During assembly/installation, use the torque values and service products as in the exploded views.

Clean threads before applying a threadlocker. Refer to *SELF-LOCKING FASTENERS* and *LOCTITE APPLICATION* at the beginning of this manual for complete procedure.

⚠ WARNING

Torque wrench tightening specifications must strictly be adhered to.
Locking devices (e.g.: locking tabs, elastic stop nuts, self-locking fasteners, etc.) must be installed or replaced with new ones where specified. If the efficiency of a locking device is impaired, it must be renewed.

PROCEDURES

AIR FILTER

Removal

The air filter is located on air intake silencer.

Open hood and pull air filter from air intake silencer.

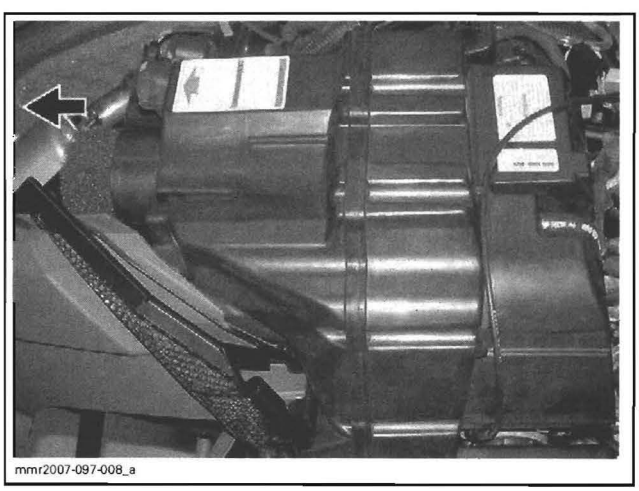
mmr2007-097-008_a

Cleaning

Blow low pressure compressed air on filter to clean it.

Replace air filter as required.

NOTE: If the filter is very dirty, clean the interior of air intake silencer at the same time.

Installation

The installation is the reverse of the removal procedure.

AIR INTAKE SILENCER

Removal

Remove hood and LH side panel. Refer to *BODY*.

Unhook latches and throttle cable.

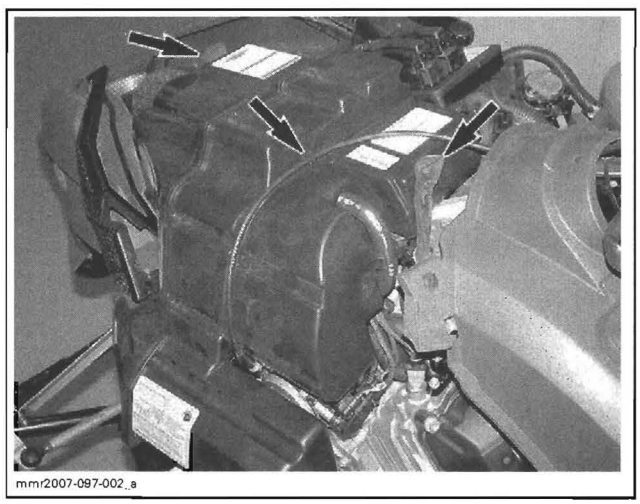
mmr2007-097-002_a

Unhook vent tube.

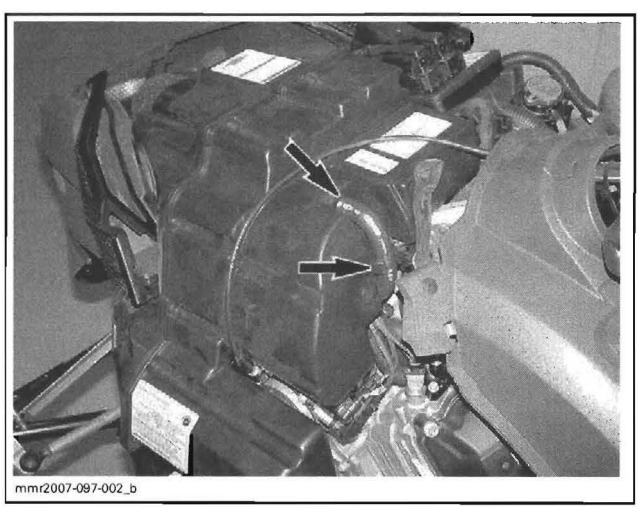
mmr2007-097-002_b

Loosen throttle body clamp.

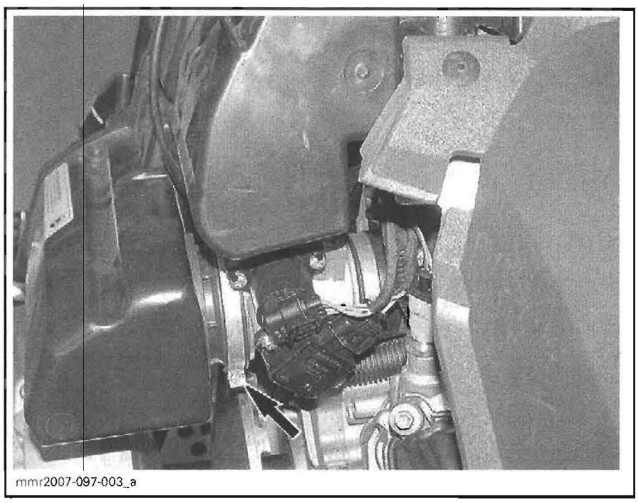
mmr2007-097-003_a

Pull out air intake silencer.

Installation

Move aside throttle cable and vent tube prior to installing air intake silencer.

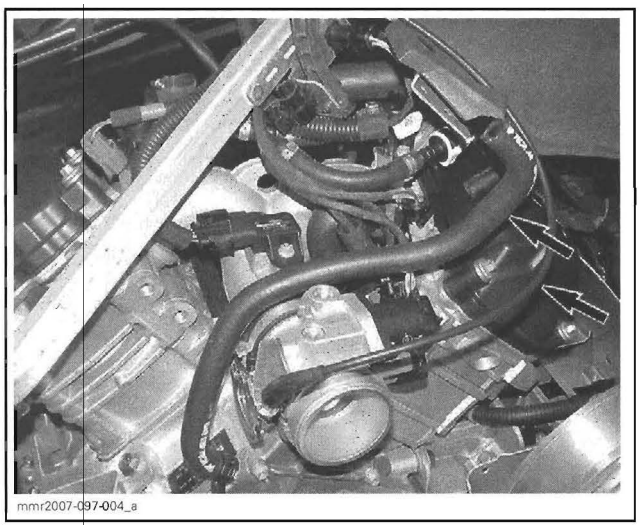
mmr2007-097-004_a

First insert the front corner of air intake silencer into body, then lower it in place.

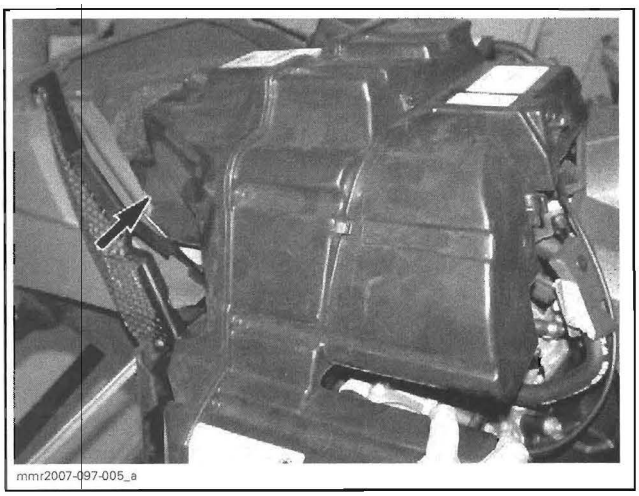
mmr2007-097-005_a

Properly route throttle cable and clip it in place.

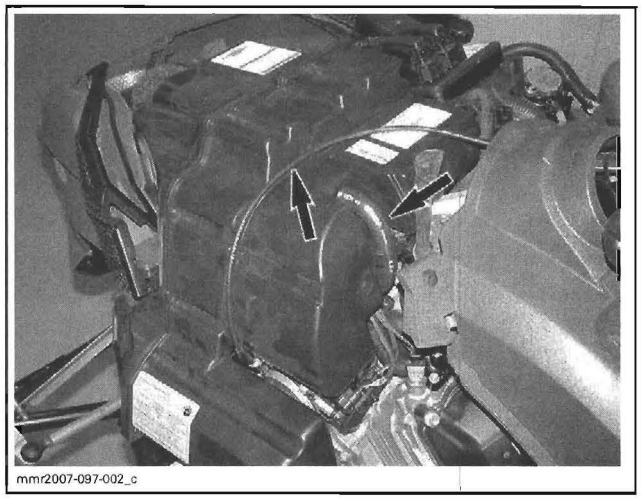
mmr2007-097-002_c

Latch air intake silencer.

Tighten throttle body clamp.

CAUTION: Make sure air intake silencer boot is properly installed onto throttle body and the clamp is tight.

INTAKE MANIFOLD

Removal

NOTE: For throttle body, fuel injectors and fuel rails procedures, refer to *ENGINE MANAGEMENT*.

Disable fuel pump using B.U.D.S. Look in the **Activation** tab.

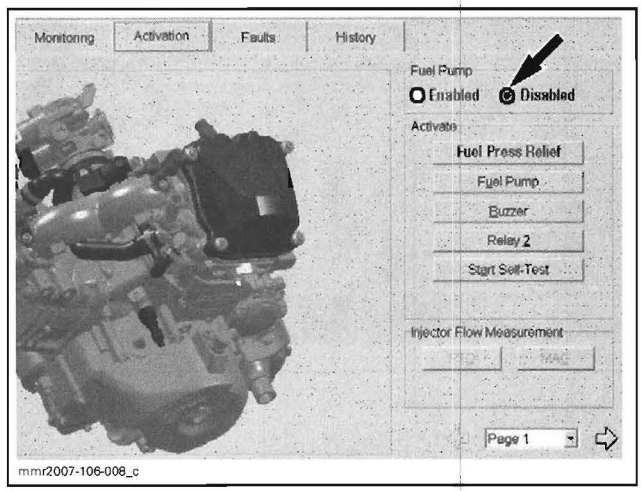

mmr2007-106-008_c

Release fuel pressure by running engine until it runs out of gas.

⚠ WARNING

The fuel hose may be under pressure. Cover the fuel line connection with an absorbent shop rag. Slowly disconnect the fuel hose to release the pressure. Wipe off any fuel spillage inside engine compartment.

Remove air intake silencer.

Disconnect throttle position sensor (TPS) and idle bypass valve connectors.

Pull throttle body and move aside.



NOTE: Keep coolant hoses connected.

Disconnect injectors, manifold air pressure and temperature sensor (MAPTS), camshaft position sensor (CPS) and coolant temperature sensor (CTS).

Move harness aside.

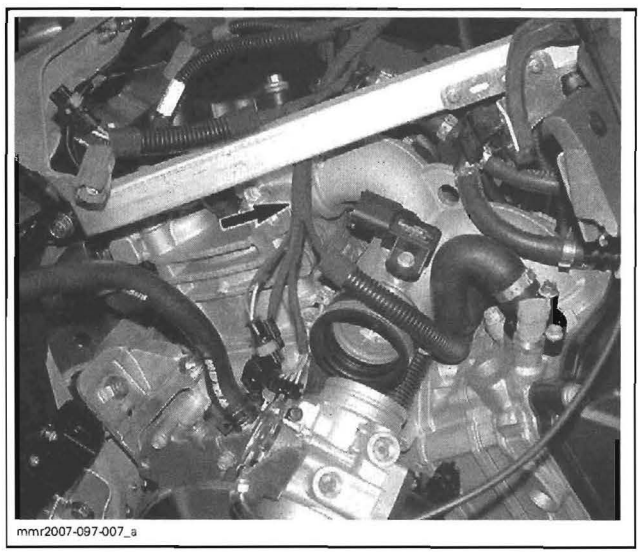

Disconnect outlet hose from fuel pump.

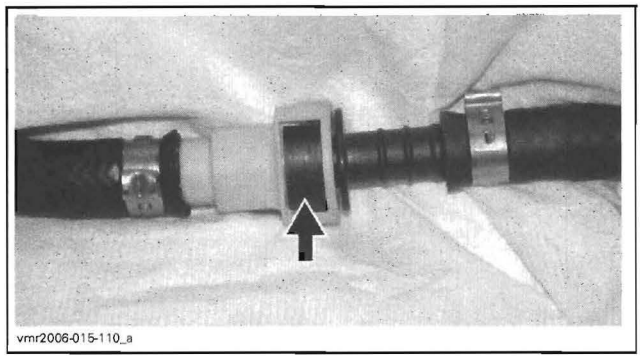

PRESS TAB

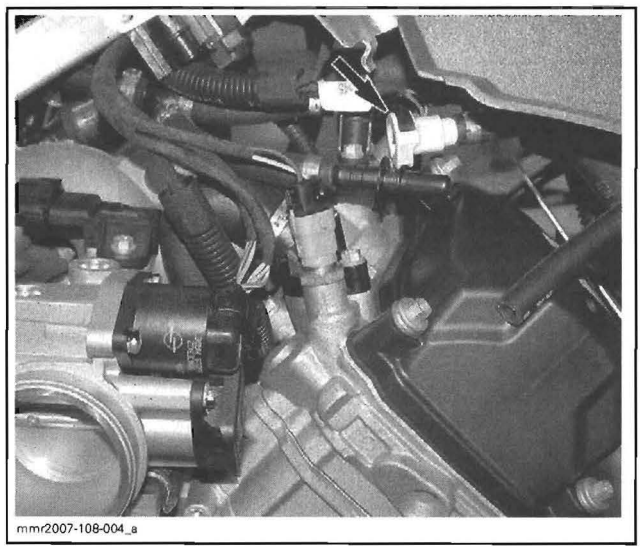

HOSE DISCONNECTED

Remove intake manifold.

NOTE: To remove fuel injectors and fuel rails from intake manifold, refer to *ENGINE MANAGEMENT*.

Inspection

Check intake manifold for cracks, warping at flanges or any other damage. Replace if necessary.

Installation

The installation is the reverse of the removal procedure. However, pay attention to the following.

Torque manifold screws to 20 N•m (15 lbf•ft) one cylinder at a time.

Re-enable fuel pump using B.U.D.S.

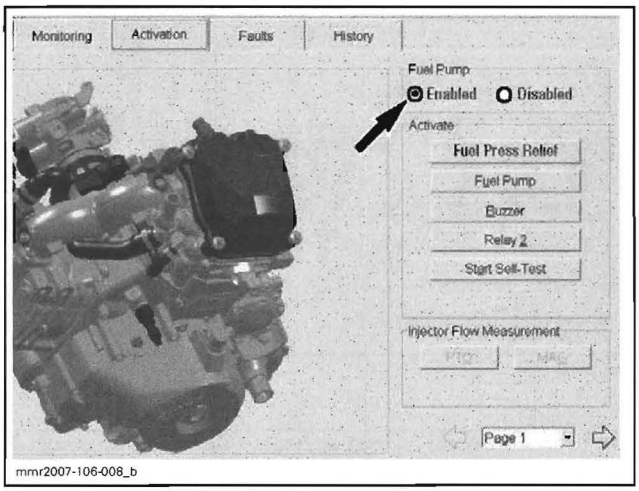

mmr2007-106-008_b

EXHAUST SYSTEM

SERVICE TOOLS

Description	Part Number	Page
exhaust spring tool	529 035 983	203–205

GENERAL

⚠ WARNING

To avoid potential burns, never touch exhaust system components immediately after the engine has been run because these components are very hot. Let engine and exhaust system cool down before performing any servicing.

During assembly/installation, use the torque values and service products as in the exploded views.

Clean threads before applying a threadlocker. Refer to *SELF-LOCKING FASTENERS* and *LOCTITE APPLICATION* at the beginning of this manual for complete procedure.

⚠ WARNING

Torque wrench tightening specifications must strictly be adhered to.
Locking devices (e.g.: locking tabs, elastic stop nuts, self-locking fasteners, cotter pin, etc.) must be installed or replaced with new ones where specified. If the efficiency of a locking device is impaired, it must be renewed.

PROCEDURES

MUFFLER

Identification

Each muffler is identified by a number. To use the proper muffler with the proper vehicle, check the number on the welded clamp at the end of muffler. This number depicts the 6 last digits of BRP part number.

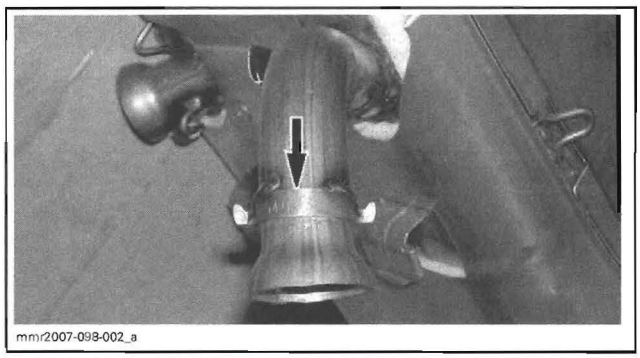
mmr2007-098-002_a

Removal

Remove the RH side panel and the hood.

Lift coolant tank and move it aside to allow access to exhaust springs.

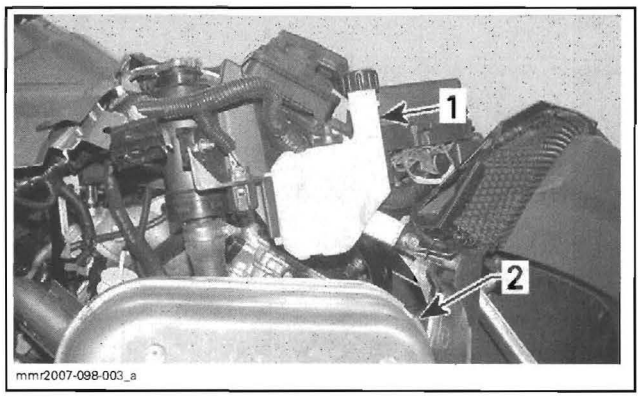

mmr2007-098-003_a

1. *Coolant tank*
2. *Muffler*

Using the exhaust spring tool (P/N 529 035 983), remove all exhaust springs.

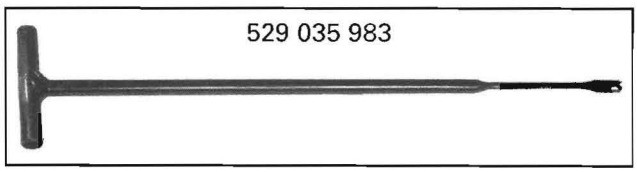

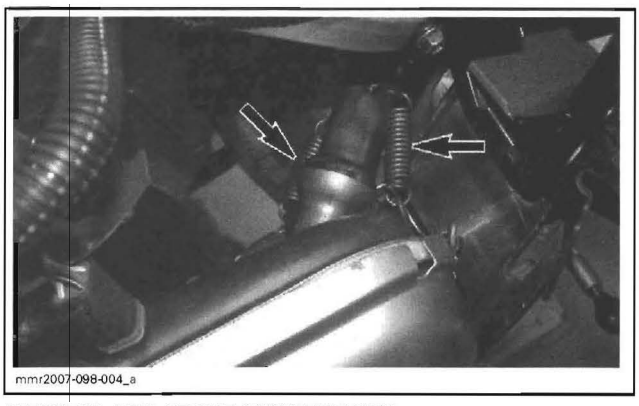

MUFFLER AND FRONT EXHAUST PIPE

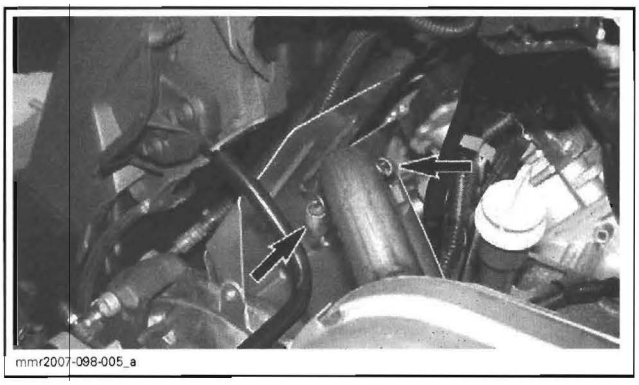

MUFFLER AND REAR EXHAUST PIPE

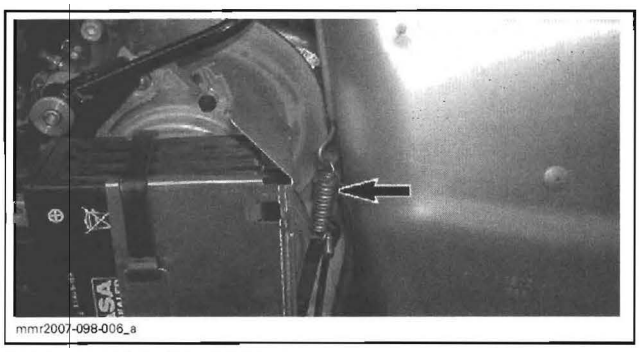

ON LEFT SIDE OF MUFFLER

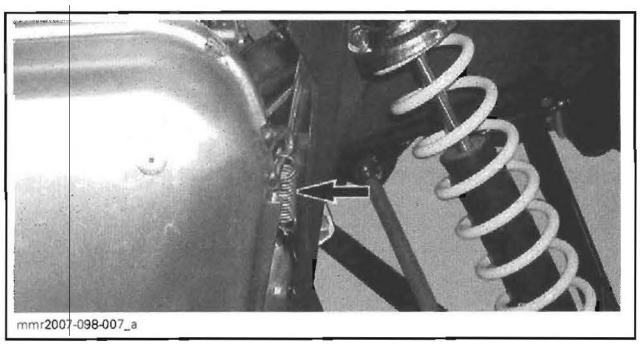

ON RIGHT SIDE OF MUFFLER

Lift and remove muffler.

Discard gaskets located on the ends of exhaust pipes.

Inspection

Check muffler for cracks, perforation or other damages. Replace as required.

Installation

The installation is the reverse of the removal procedure. However, pay attention to the following.

Install new exhaust gaskets on the front and the rear exhaust pipe ends

REAR EXHAUST PIPE

Removal

Open RH side panel.

Using the exhaust spring tool (P/N 529 035 983), remove exhaust springs securing the rear exhaust pipe to muffler.



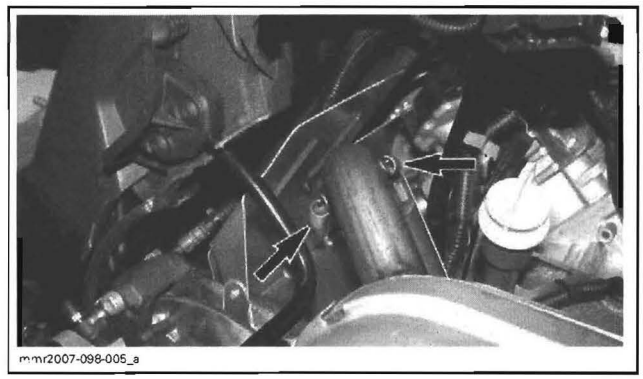

On LH side, open side panel and remove belt guard.

Unscrew exhaust pipe nuts from cylinder head.

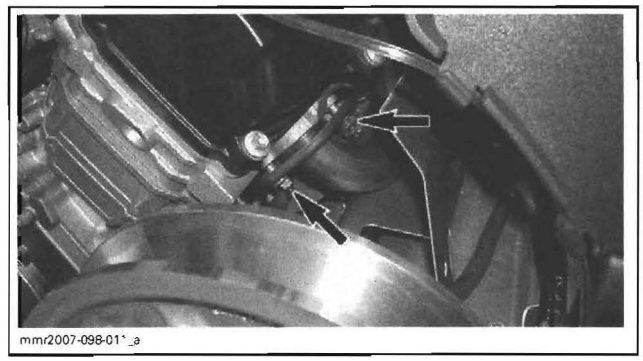

Remove exhaust pipe.

Inspection

Check the rear exhaust pipe for cracks or other damages. Replace as required.

Installation

The installation is the reverse of the removal procedure. However, pay attention to the following.

Install new exhaust gaskets.

Torque nuts to 13 N•m (115 lbf•**in**).

Install all other removed parts.

FRONT EXHAUST PIPE

Inspection

Check for cracks or other damages. Replace if necessary.

Removal

Remove hood.

Remove the air intake silencer. Refer to *AIR INTAKE SILENCER*.

Lift coolant tank and move it aside to allow access to exhaust springs.

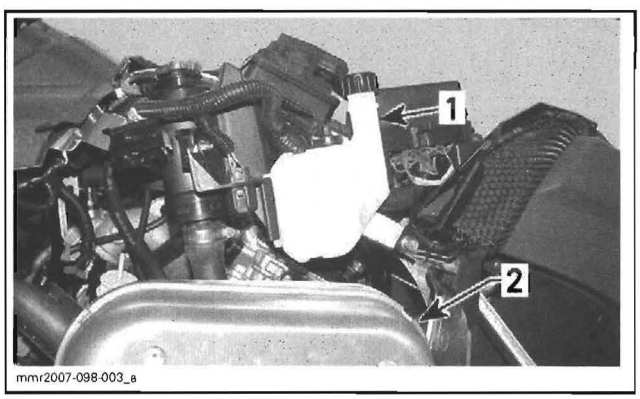

1. Coolant tank
2. Muffler

Using the exhaust spring tool (P/N 529 035 983), remove exhaust springs securing the front exhaust pipe to muffler.

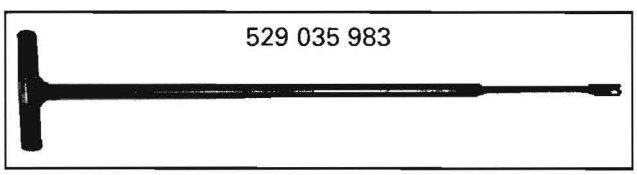

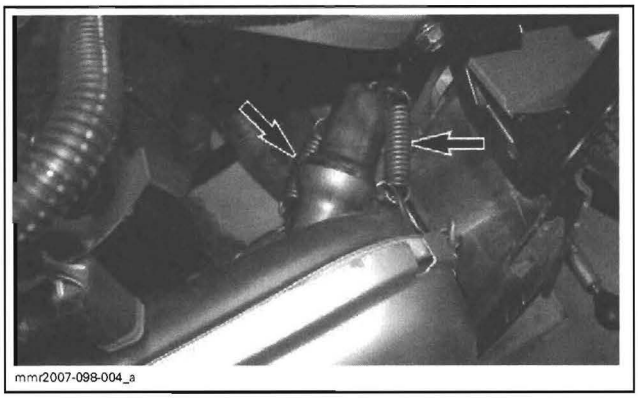

Remove exhaust springs securing the front exhaust pipe to manifold.

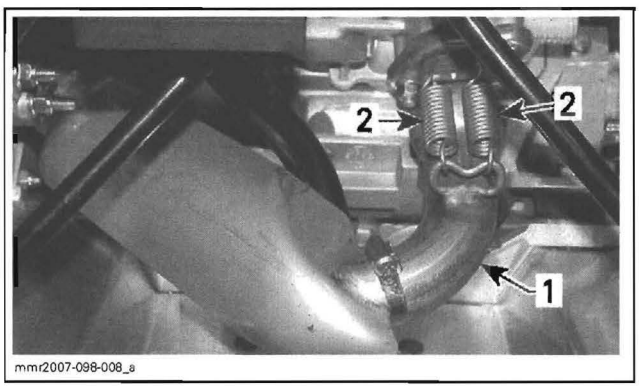

1. Front exhaust pipe
2. Exhaust spring

Move front exhaust pipe forward then remove it.

Discard exhaust pipe gaskets.

Installation

Install new gaskets on both ends of front exhaust pipe.

Secure front exhaust pipe on manifold with exhaust springs. Make sure manifold end is properly aligned inside ball socket of exhaust pipe.

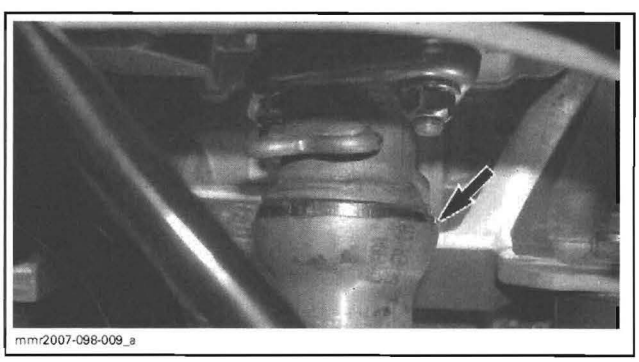

Align the other end of front exhaust pipe with muffler. Install exhaust springs.

Install all other removed parts.

EXHAUST MANIFOLD

Removal

Remove front exhaust pipe. See procedure above.

Remove nuts securing manifold to cylinder.

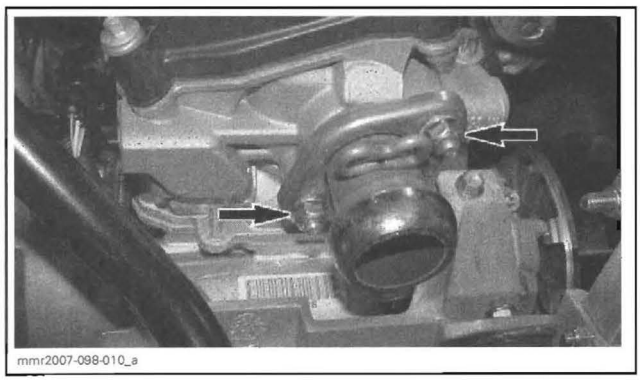

Remove the exhaust manifold and its gasket.

Inspection

Check exhaust manifold for cracks or other damages. Replace if necessary.

Installation

The installation is the reverse of the removal procedure. However, pay attention to the following.

Install a new gasket on manifold end (cylinder head side).

Torque nuts to 13 N•m (115 lbf•**in**).

Install all other removed parts.

LUBRICATION SYSTEM

SERVICE TOOLS

Description	Part Number	Page
adapter hose	529 035 652	213
disconnect tool	529 035 714	213
oil pressure gauge	529 035 709	213
suction pump	529 035 880	212

SERVICE PRODUCTS

Description	Part Number	Page
Loctite 243 (blue)	293 800 060	214

COMPONENTS

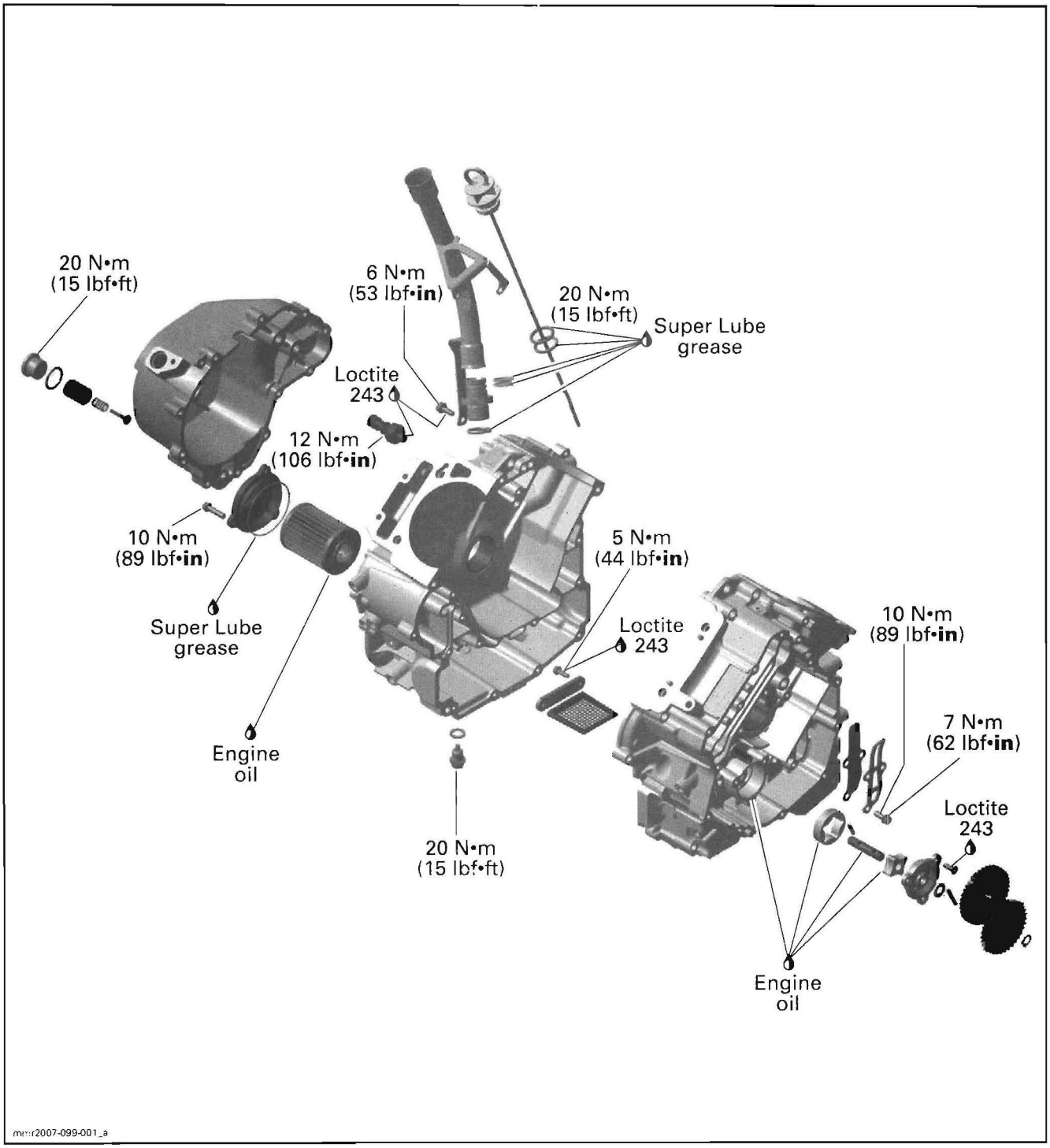
20 N•m
(15 lbf•ft)
6 N•m
(53 lbf•in)
20 N•m
(15 lbf•ft)
Super Lube
grease
Loctite
243
12 N•m
(106 lbf•in)
10 N•m
(89 lbf•in)
Super Lube
grease
Engine
oil
5 N•m
(44 lbf•in)
Loctite
243
10 N•m
(89 lbf•in)
7 N•m
(62 lbf•in)
Loctite
243
20 N•m
(15 lbf•ft)
Engine
oil
mmr2007-099-001_a

ENGINE LUBRICATION

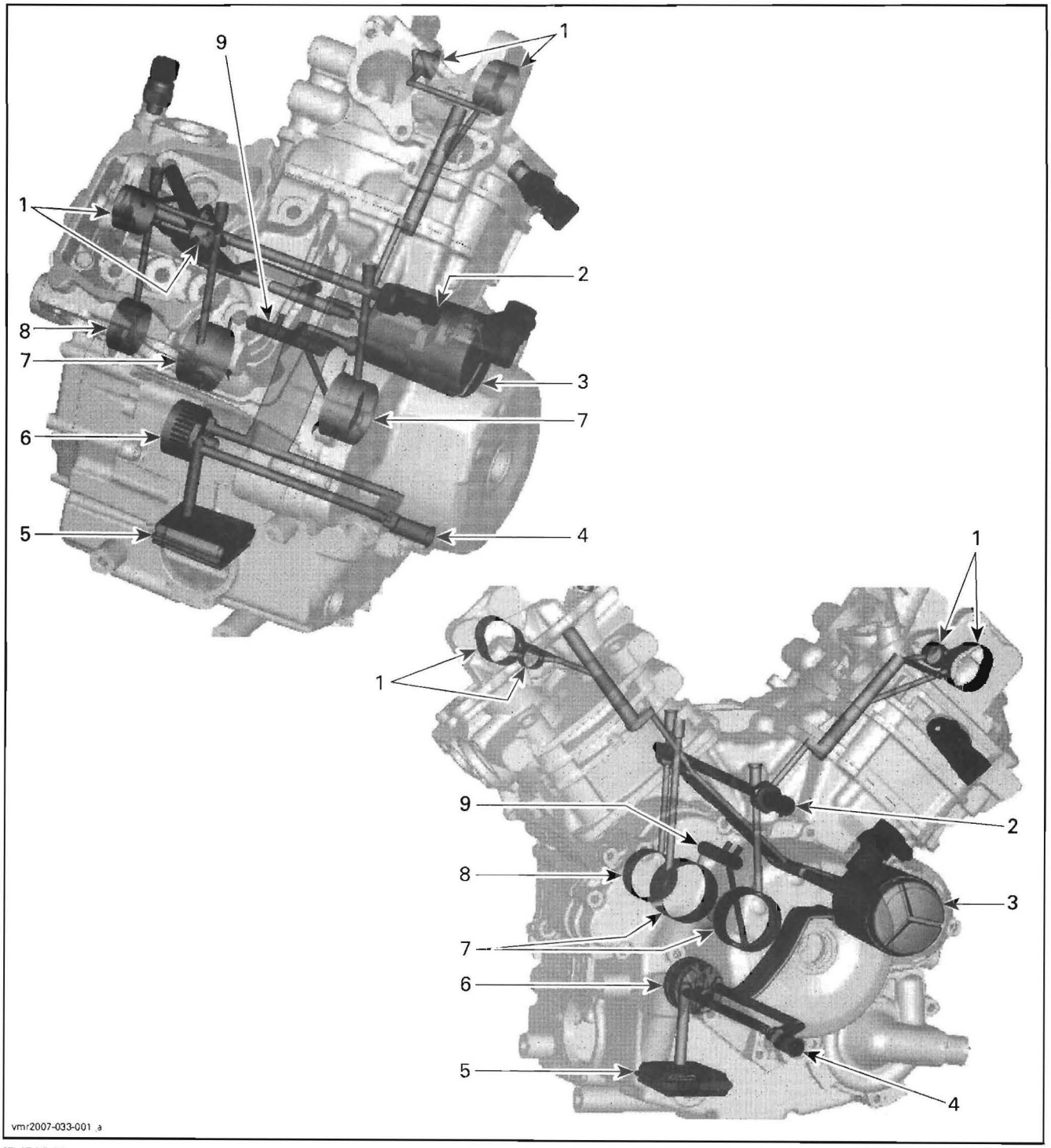

TYPICAL
1. *Camshaft bearings*
2. *Oil pressure switch*
3. *Oil filter*
4. *Oil pressure regulator valve*
5. *Oil strainer*
6. *Oil pump*
7. *Crankshaft main bearings*
8. *Crankshaft support bearing*
9. *Connecting rod bearings*

GENERAL

During assembly/installation, use the torque values and service products as in the exploded view.

Clean threads before applying a threadlocker. Refer to *SELF-LOCKING FASTENERS* and *LOCTITE APPLICATION* at the beginning of this manual for complete procedure.

⚠ WARNING

Torque wrench tightening specifications must strictly be adhered to.
Locking devices (e.g.: locking tabs, elastic stop nuts, self-locking fasteners, etc.) must be installed or replaced with new ones where specified. If the efficiency of a locking device is impaired, it must be renewed.

MAINTENANCE

OIL LEVEL VERIFICATION

CAUTION: Check level frequently and refill if necessary. Do not overfill. Operating the engine with an improper level may severely damage engine. Wipe off any spillage.

With vehicle on a level surface and engine cold, not running, check the oil level as follows:

- Remove dipstick and wipe clean.
- Reinstall dipstick.

NOTE: Make sure it is completely inserted inside tube.

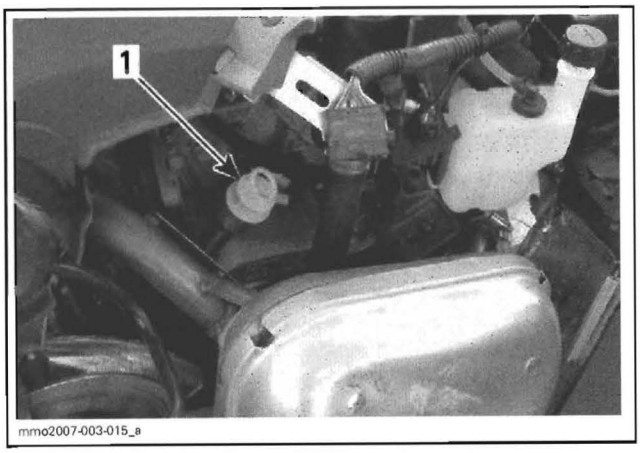

1. Dipstick fully inserted in tube

- Remove dipstick and read oil level.

Oil level must be between minimum and maximum marks on dipstick.

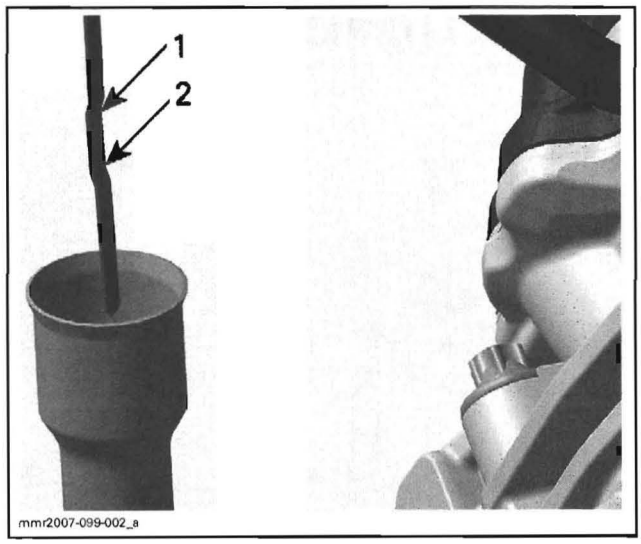

1. Maximum
2. Minimum

NOTE: There is a capacity of 300 mL (10 U.S. oz) between the two marks.

Refill oil as necessary. Place a funnel into the dipstick tube to avoid spillage. Do not overfill.

Reinstall dipstick.

OIL CHANGE

Prior to change the oil, ensure vehicle is on a level surface.

Oil and oil filter must be replaced at the same time. Oil change and oil filter replacement should be done with a warm engine.

⚠ WARNING

The engine oil can be very hot. Wait until engine oil is warm.

Dispose oil and filter as per your local environmental regulations.

Oil Drain

Procedure Using Drain Plug

Remove muffler. Refer to *EXHAUST SYSTEM*.

Clean the drain plug area.

To prevent oil spillage in bottom pan, the following may be performed.

- Lift rear of vehicle so that the lowest edge of bottom pan is level.

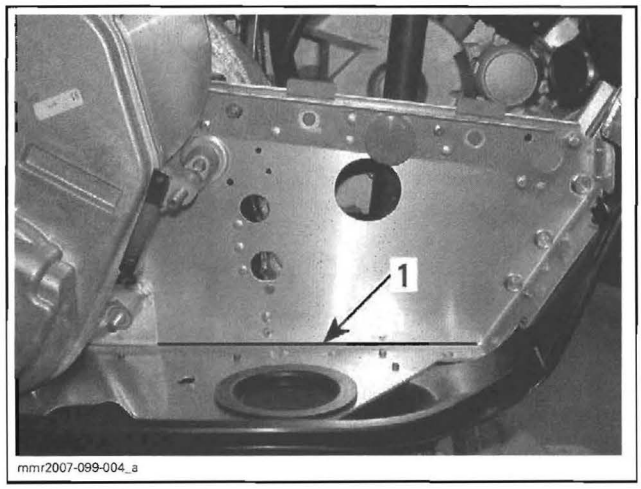

1. This surface level

– To prevent spillage in bottom pan, use a coolant hose and cut it as shown.

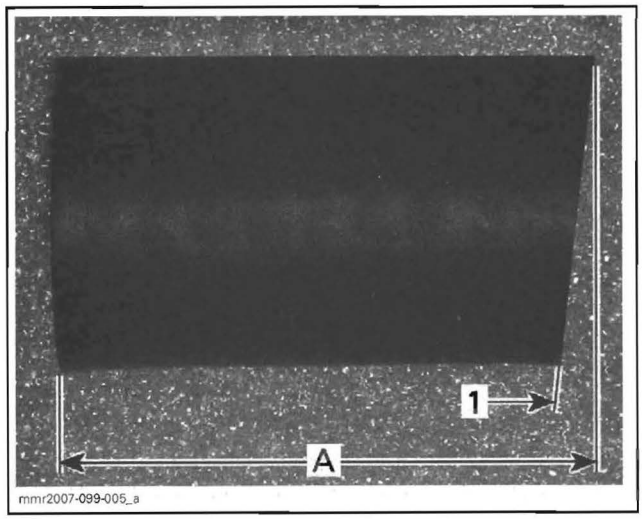

25 MM (1") DIAMETER MIN.
1. Angled side
A. 60 mm (2-3/8 in)

– Temporarily install hose underneath engine drain plug between engine and bottom pan. Place the angled side to match the bottom pan. Ensure drain hole is completely inside hose.

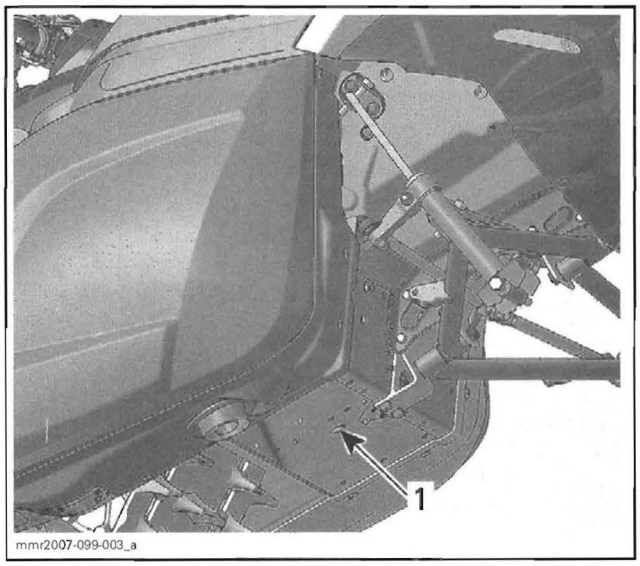

1. Access hole

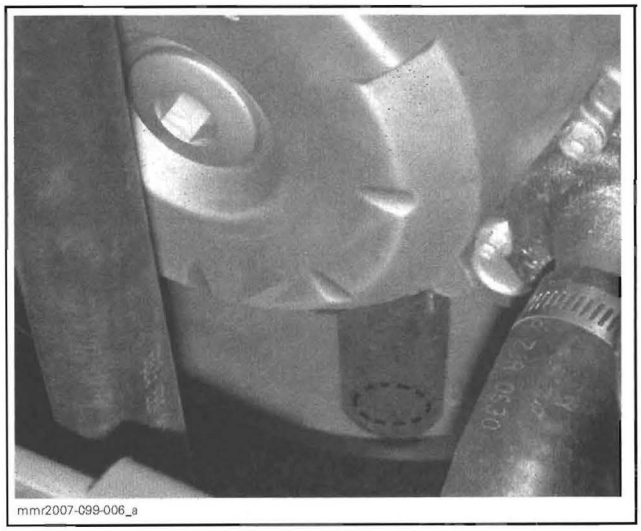

Place a drain pan under the bottom pan access hole.

From bottom pan access hole unscrew drain plug then remove dipstick.

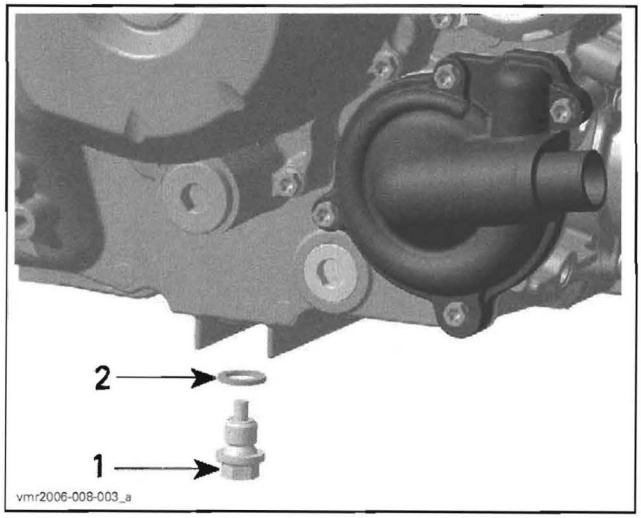

TYPICAL — DRAIN HOSE NOT SHOWN
1. *Drain plug*
2. *Gasket ring*

Allow oil to drain completely from crankcase.

Remove drain hose.

Procedure Using Suction Pump

Remove dipstick.

Using the suction pump (P/N 529 035 880), siphon oil through dipstick tube.

Oil Inspection

Oil condition gives information about the engine condition. See *TROUBLESHOOTING* section.

Clean the magnetic drain plug from metal shavings and residue. Presence of debris gives an indication of failure inside the engine. Check engine to correct the problem.

Oil Fill

Install a new gasket ring on drain plug. Torque drain plug to 20 N•m (15 lbf•ft).

CAUTION: Never use the gasket ring a second time. Always replace by a new one.

Refill engine with BRP XP-S 0W40 synthetic oil or an equivalent.

Oil change capacity with filter: 2 L (2.11 qt).

After filling, check the oil level with the dipstick. Refer to *OIL LEVEL CHECK* above.

NOTE: Run engine to ensure oil filter and drain plug areas are not leaking.

Ensure to completely wipe out oil that may have spilled in bottom pan.

OIL FILTER

Removal

Remove:
- muffler, refer to *EXHAUST SYSTEM*
- oil filter screws
- oil filter cover
- oil filter.

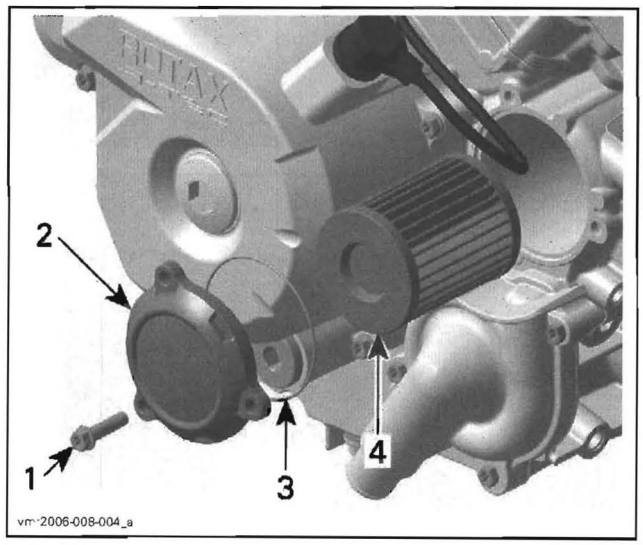

TYPICAL
1. *Oil filter screw*
2. *Oil filter cover*
3. *O-ring*
4. *Oil filter*

Inspection

Check and clean the oil filter inlet and outlet area for dirt and other contaminations.

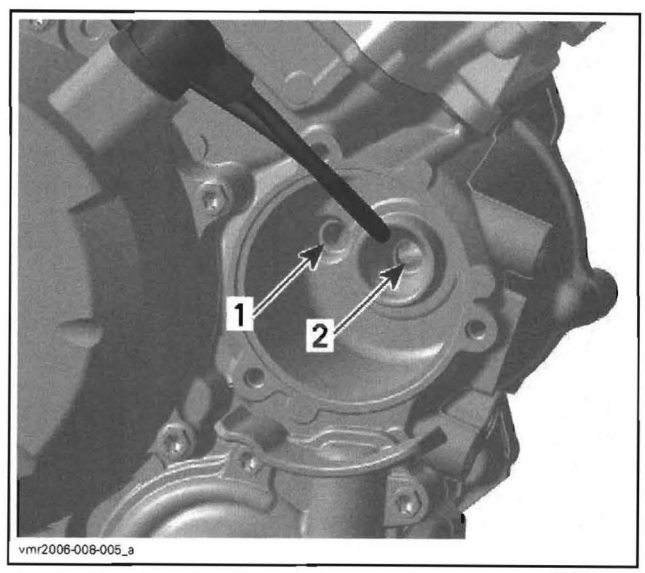

1. *Inlet bore from the oil pump to the oil filter*
2. *Outlet bore to the engine oil providing system*

Installation

The installation is the reverse of the removal procedure. Pay attention to the following details.

Install a new gasket on oil filter cover.

To ease assembly and prevent displacement of the gasket during installation, refer to following illustration.

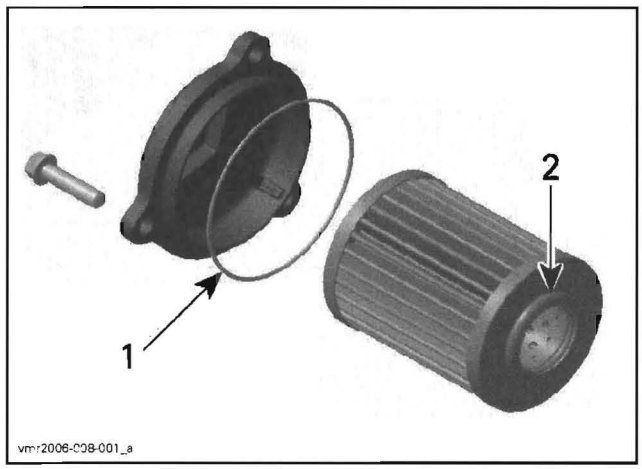

1. *Slightly oil*
2. *Slightly grease*

INSPECTION

ENGINE OIL PRESSURE

NOTE: The engine oil pressure test should be done with a **warm engine** 90°C (194°F) and the **recommended oil**.

Remove the oil pressure switch. See procedure below.

Install oil pressure gauge (P/N 529 035 709) and adapter hose (P/N 529 035 652).

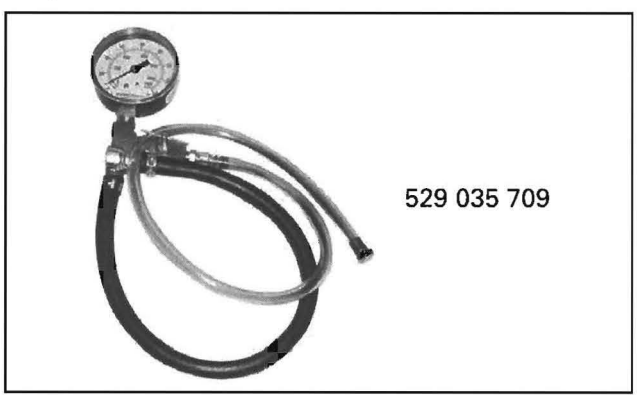

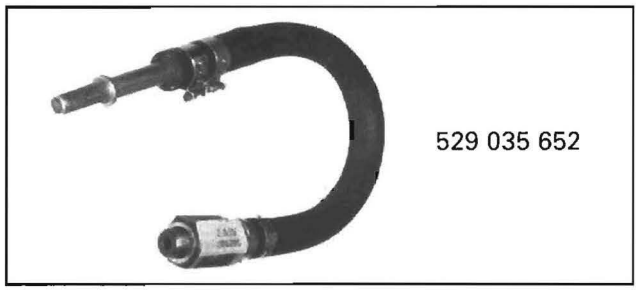

The engine oil pressure should be within the following values.

OIL PRESSURE	1250 RPM	6000 RPM
MINIMAL	70 kPa (10 PSI)	350 kPa (51 PSI)
NOMINAL	180 kPa (26 PSI)	420 kPa (61 PSI)
MAXIMAL	300 kPa (43 PSI)	550 KPa (80 PSI)

If the engine oil pressure is out of specifications, check the points described in *TROUBLESHOOTING* section.

Remove oil pressure gauge and adapter hose.

NOTE: To remove adapter hose from oil pressure gauge, use the disconnect tool (P/N 529 035 714).

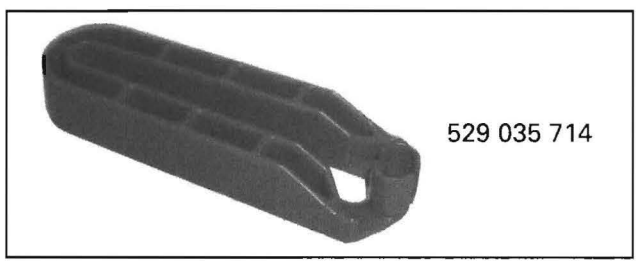

Reinstall the oil pressure switch.

PROCEDURES

OIL PRESSURE SWITCH

Switch Activation

Oil pressure switch works when engine oil pressure is between 20 and 40 kPa (2.9 and 5.8 PSI).

Test

Refer to *ENGINE MANAGEMENT*.

Removal

Unplug then unscrew the oil pressure switch, mounted on the crankcase.

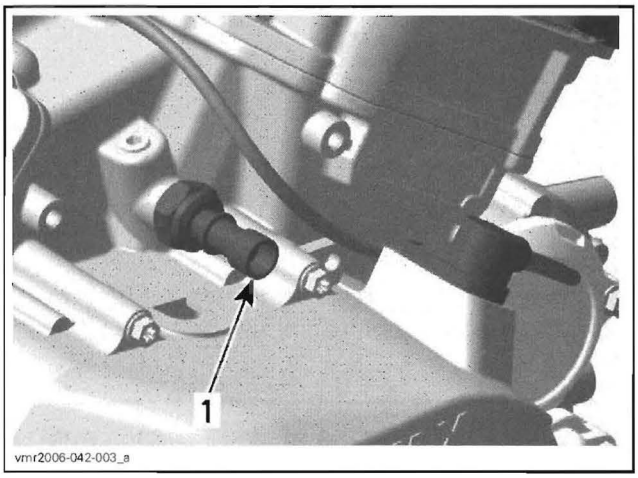

1. Oil pressure switch

Installation

Torque switch to 12 N•m (106 lbf•**in**).

NOTE: Install oil pressure switch with Loctite 243 (blue) (P/N 293 800 060).

ENGINE OIL PRESSURE REGULATOR

The oil pressure regulator is located on the engine magneto side (inside magneto cover).

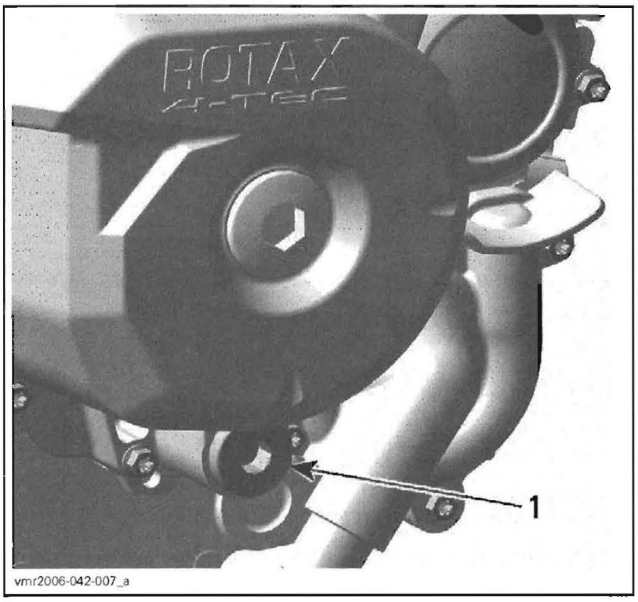

TYPICAL
1. Engine oil pressure regulator

NOTE: The oil pressure regulator system works when the oil pressure exceeds 450 kPa (65 PSI).

Removal

Remove plug screw and pull oil pressure regulator out.

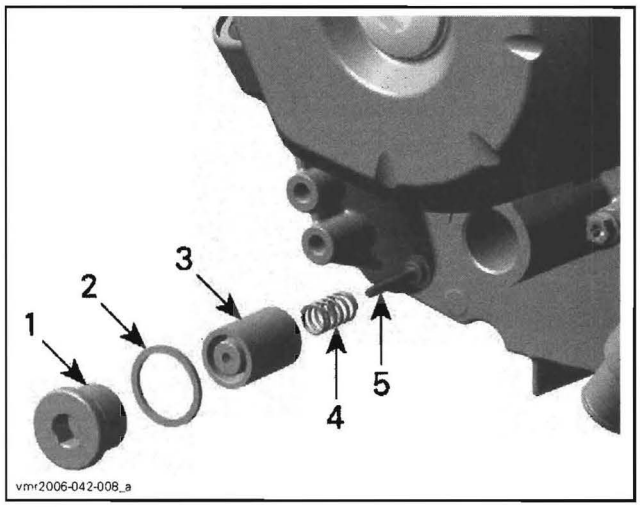

1. Plug screw
2. Gasket ring
3. Pressure regulator housing
4. Spring
5. Pressure regulator valve

Inspection

Inspect pressure regulator housing and valve for scoring or other damages.

Check spring for free length.

SPRING FREE LENGTH	
NEW NOMINAL	39 mm (1.535 in)
SERVICE LIMIT	37 mm (1.457 in)

NOTE: Replace worn or damaged components.

Clean bore and thread in the magneto housing from metal shavings and other contaminations.

Installation

For installation, reverse the removal procedure. Pay attention to the following details.

NOTE: At installation, always replace the gasket ring of the plug screw.

OIL PUMP

The oil pump is located on the engine PTO side (behind cover).

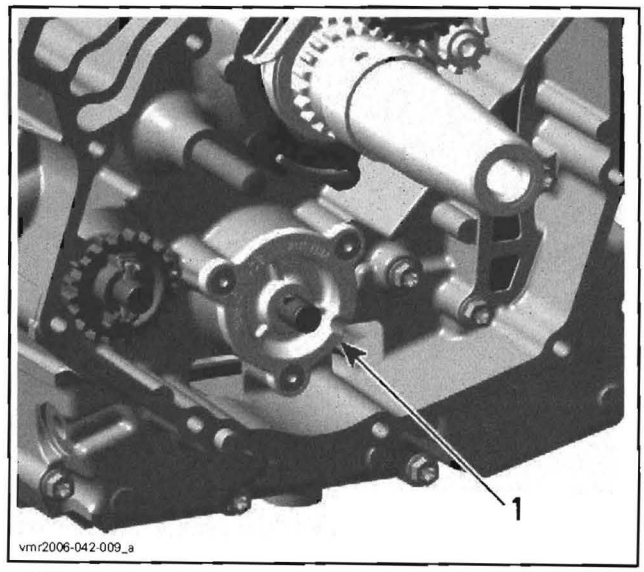

1. Oil pump

Removal

Remove parts to access the engine crankcase PTO cover.

Remove the engine crankcase PTO cover. Refer to *BOTTOM END* section.

Remove:
- retaining ring
- oil pump gear
- needle pin
- thrust washer

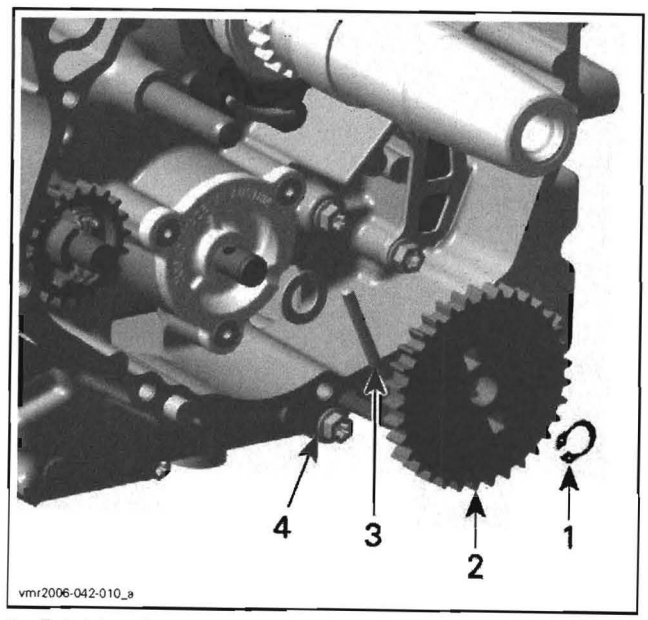

1. Retaining ring
2. Oil pump gear
3. Needle pin
4. Thrust washer

- oil pump cover screws and pull oil pump cover
- oil pump shaft with inner rotor and outer rotor.

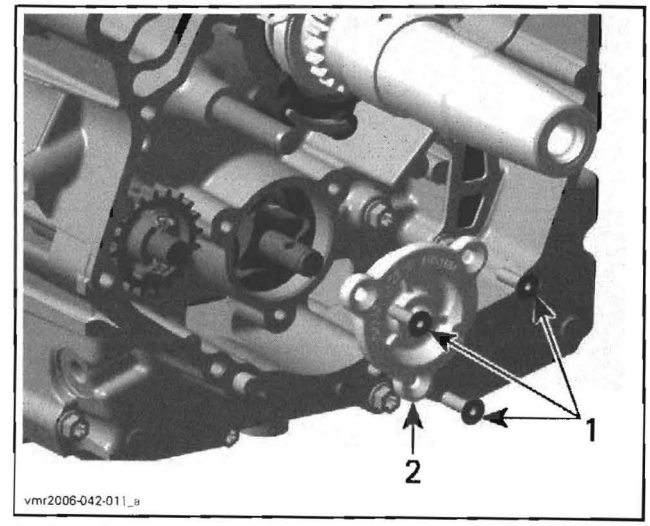

1. Retaining screws
2. Oil pump cover

Inspection

Inspect oil pump for marks or other damages. Check for scratches in crankcase between outer rotor and oil pump bore. If so, replace damaged parts.

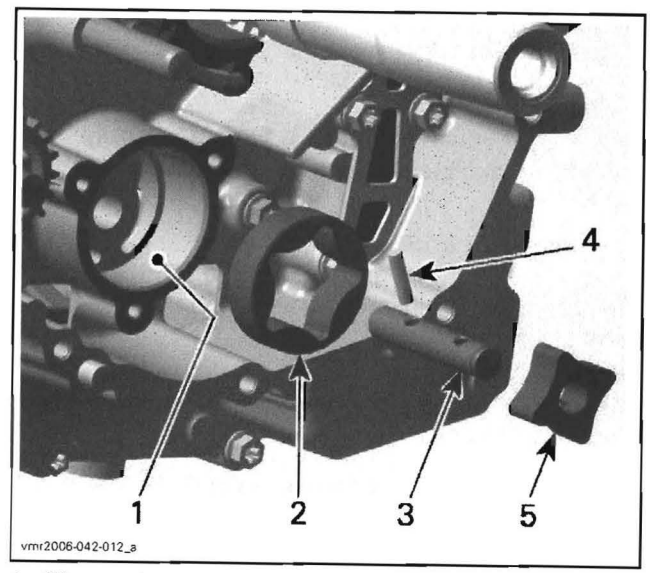

1. Oil pump bore
2. Outer rotor
3. Oil pump shaft
4. Needle pin
5. Inner rotor

Check inner rotor for corrosion pin holes or other damages. If so, replace oil pump shaft assembly.

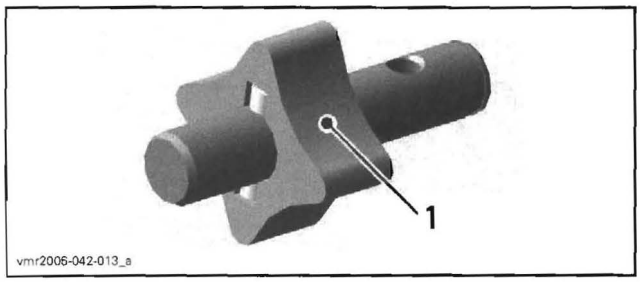

1. Pittings on the teeth

Using a feeler gauge, measure the clearance of inner and outer rotors as shown.

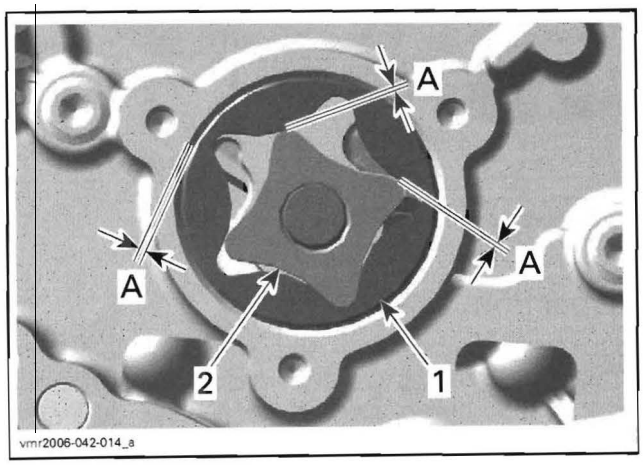

1. Outer rotor
2. Inner rotor
A. SERVICE LIMIT: 0.25 mm (.009 in)

If clearance of inner and outer rotors exceeds the tolerance, replace oil pump shaft assembly. Ensure to also check oil pump cover. If damaged, replace the complete oil pump assembly.

If clearance between outer rotor and its bore in crankcase exceeds the tolerance, replace the complete oil pump assembly and/or the crankcase.

Using a depth gauge, measure the axial clearance of the oil pump as shown.

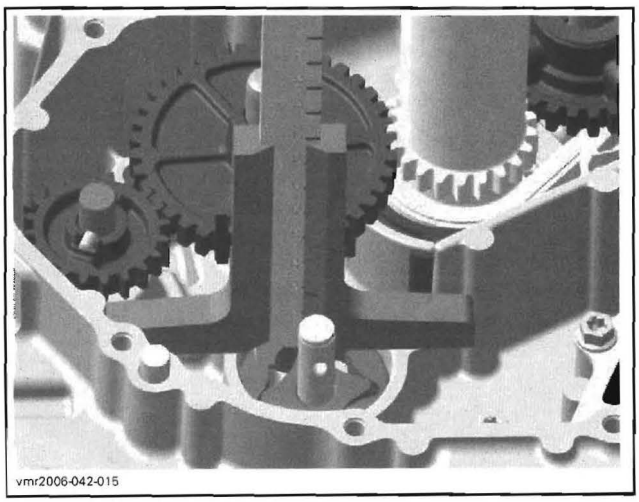

OIL PUMP — MEASUREMENT "A"

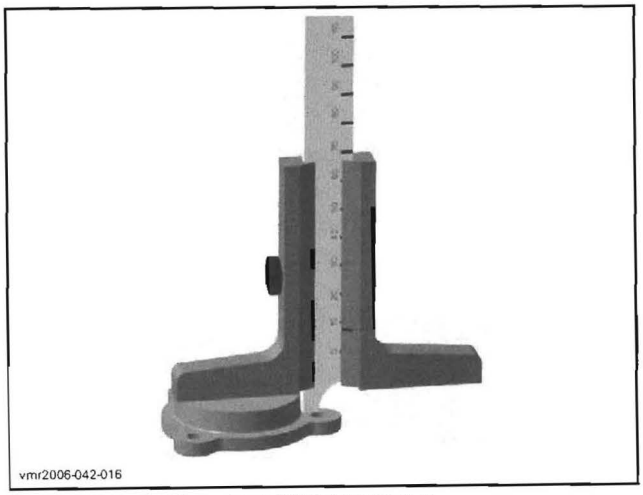

OIL PUMP COVER — MEASUREMENT "B"

Difference between measurements should not exceed 0.2 mm (.008 in). If so, replace the complete oil pump assembly.

NOTE: When the axial clearance of the oil pump shaft assembly increases, the oil pressure decreases.

Installation

For installation, reverse the removal procedure.

Pay attention to the following details.

NOTE: The outer rotor and inner rotor are marked. When installing, make sure both markings are on the upper side.

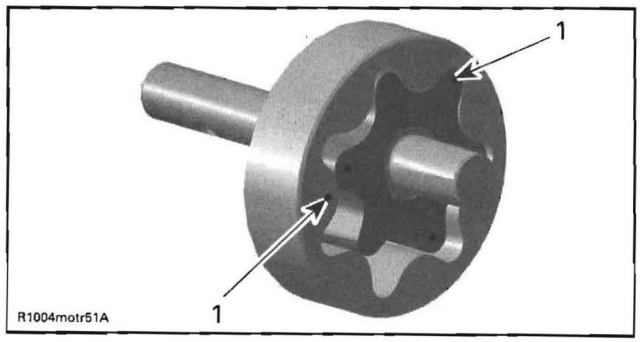

TYPICAL
1. Markings

After reinstallation of the remaining parts, check for smooth operation of the oil pump assembly.

Final Test

After engine is completely reassembled, start engine and make sure oil pressure is within specifications (refer to *OIL PRESSURE TEST* above).

ENGINE OIL STRAINER

The engine oil strainer is located between both crankcase halves.

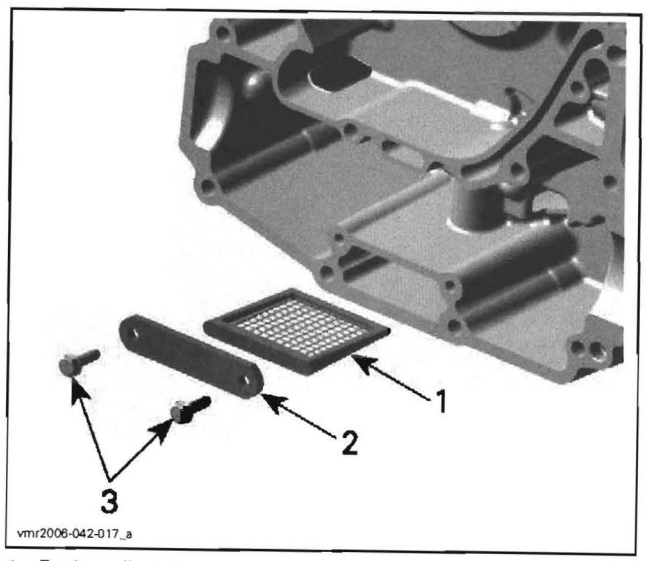

1. Engine oil strainer
2. Retaining plate
3. Screws

Removal

Refer to *BOTTOM END* section.

Cleaning and Inspection

Clean engine oil strainer with a part cleaner then use an air gun to dry it.

⚠ WARNING

Always wear eye protector. Chemicals can cause a rash break out and injure your eyes.

Check engine oil strainer for cracks or other damage. Replace if damaged.

Installation

Refer to *BOTTOM END* section.

REED VALVE

The engine is equipped with a reed valve which prevents accumulation of larger oil quantities in the crankcase. The reed valve is fitted into the crankcase.

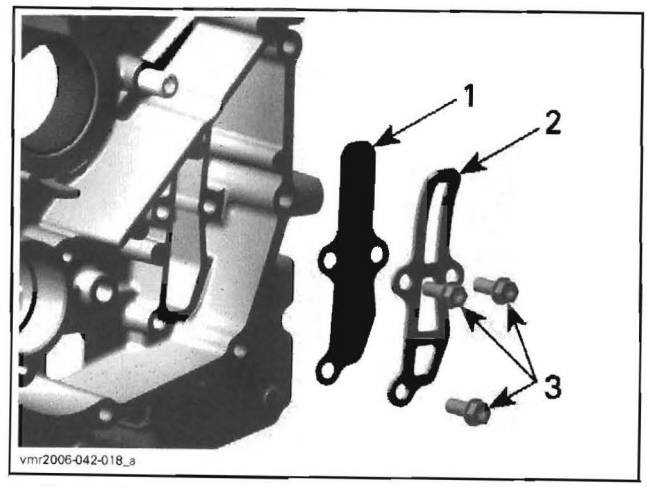

1. Reed valve
2. Stopper
3. Screws

Removal

Refer to *BOTTOM END*.

Inspection

Check reed valve for cracks or other damage.

NOTE: Replace reed valve if damaged.

Installation

Refer to *BOTTOM END*.

COOLING SYSTEM

SERVICE TOOLS

Description	Part Number	Page
installer handle	420 877 650	229
oil seal pusher	529 035 757	229
pressure/vacuum pump	529 021 800	222
rotary seal installer	529 035 766	230
small hose pincher	295 000 076	222
test cap	529 035 991	222

SERVICE PRODUCTS

Description	Part Number	Page
BRP premixed coolant	219 700 362	223
Molykote 111	413 707 000	229

RADIATOR

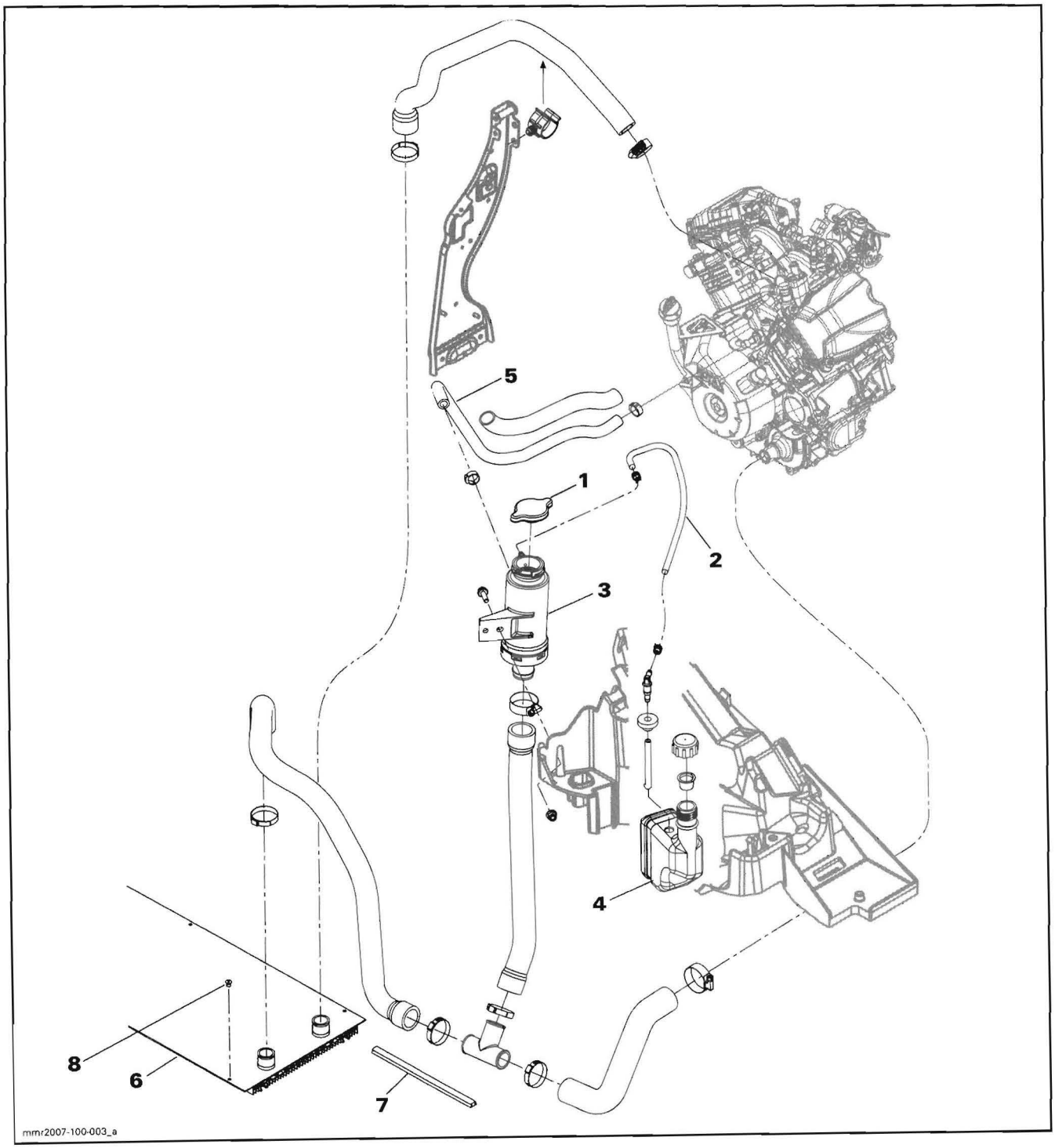

WATER PUMP

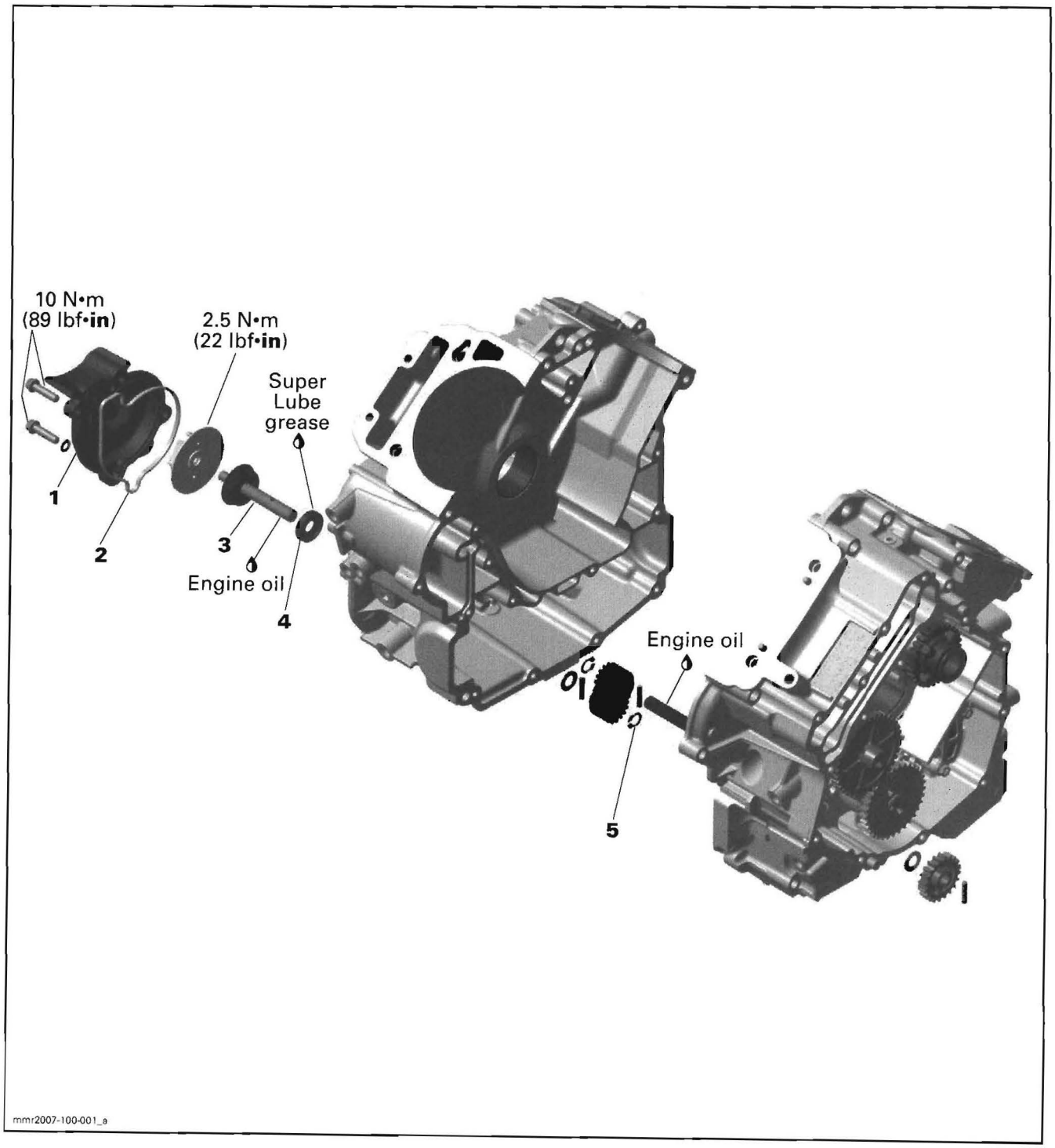
10 N•m
(89 lbf•in)
2.5 N•m
(22 lbf•in)
Super
Lube
grease
1
2
3
Engine oil
4
Engine oil
5
mmr2007-100-001_a

GENERAL

⚠ WARNING

Never start engine without coolant. Some engine parts such as the rotary seal on water pump shaft can be damaged.

During assembly/installation, use the torque values and service products as in the exploded views.

Clean threads before applying a threadlocker. Refer to *SELF-LOCKING FASTENERS* and *LOCTITE APPLICATION* at the beginning of this manual for complete procedure.

⚠ WARNING

Torque wrench tightening specifications must strictly be adhered to.
Locking devices (e.g.: locking tabs, elastic stop nuts, self-locking fasteners, etc.) must be installed or replaced with new ones where specified. If the efficiency of a locking device is impaired, it must be renewed.

INSPECTION

COOLING SYSTEM LEAK TEST

⚠ WARNING

To avoid potential burns, do not remove the coolant tank cap if the engine is hot.

Open side panels, hood and remove the coolant tank cap **no. 1**.

Install the test cap (P/N 529 035 991) and a small hose pincher (P/N 295 000 076) on overflow hose **no. 2**.

Using pressure/vacuum pump (P/N 529 021 800), pressurize system to 103 kPa (15 PSI).



529 035 991

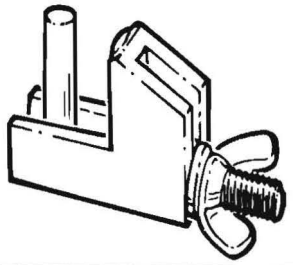

295 000 076

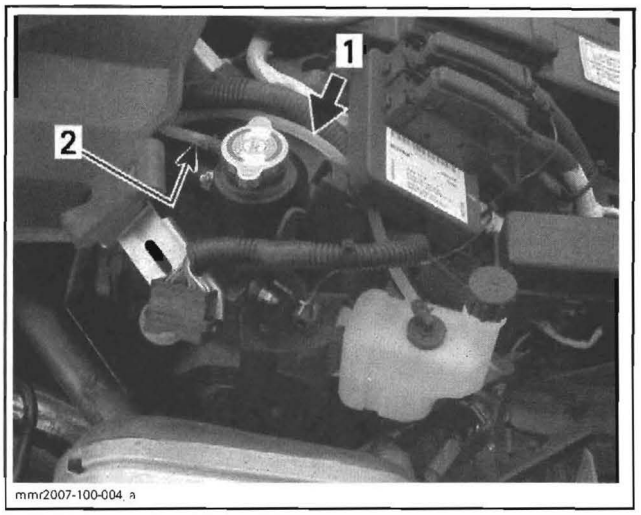

1. Install hose pincher here
2. Overflow hose

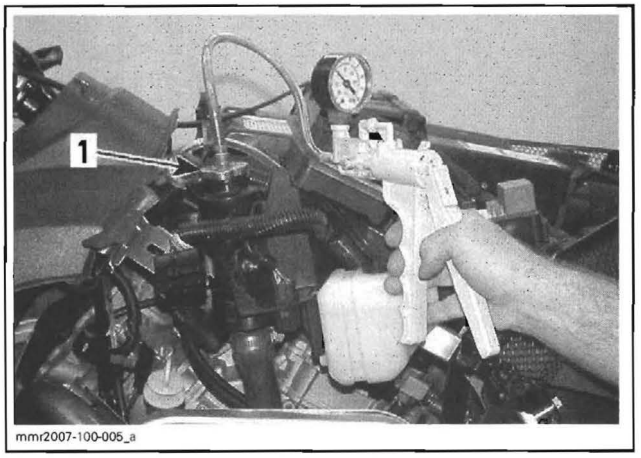

1. Special radiator cap

Check all hoses and cylinder(s)/base for coolant leaks or air bubbles.

Inspection

Check general condition of hoses and clamps tightness.

Check the leak indicator holes.

Leak Indicator in Front of Engine

Flowing coolant indicates a defective rotary seal. Oil indicates a defective inner oil seal. If either seal is leaking, both seals must be replaced at the same time. Refer to *WATER PUMP SHAFT AND SEALS* in this section.

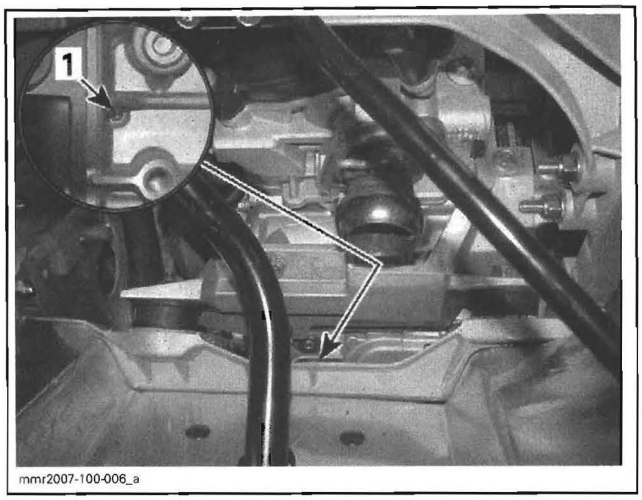

1. Leak indicator hole

Leak Indicator on PTO Side

The PTO side leak indicator hole indicates if the PTO gasket is in good condition. If a liquid leaks by this hole, the PTO gasket replacement is necessary.

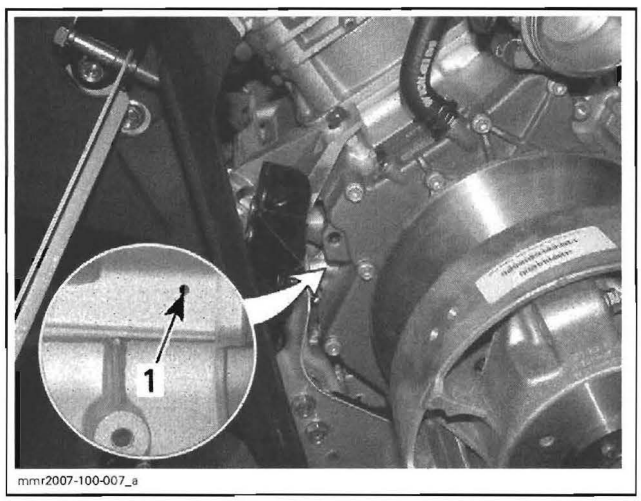

1. Leak indicator hole

MAINTENANCE

COOLANT REPLACEMENT

⚠ WARNING

To avoid potential burns, do not remove the coolant tank cap if the engine is hot.

Recommended Coolant

Use BRP premixed coolant (P/N 219 700 362) or a blend of 50% antifreeze with 50% water.

To prevent antifreeze deterioration, always use the same brand. Never mix different brands unless cooling system is completely flushed and refilled.

CAUTION: To prevent rust formation or freezing condition, always replenish the system with the BRP premixed coolant or with 50% antifreeze and 50% water. Do not use tap water, straight antifreeze or straight water in the system. Tap water contains minerals and impurities which build up in the system. During cold weather, straight water causes the system to freeze while straight antifreeze thickens and does not have the same efficiency. Always use ethylene glycol antifreeze containing corrosion inhibitors specifically recommended for aluminum engines.

Draining the System

⚠ WARNING

Never drain or refill cooling system when engine is hot.

Remove coolant tank cap **no. 1**.

Siphon as much coolant through coolant tank **no. 3**.

When the coolant level is low enough, lift the rear of the vehicle to drain the radiator.

Empty the overflow coolant tank **no. 4**.

Refilling the System

Unscrew bleeding screw on each cylinder head.

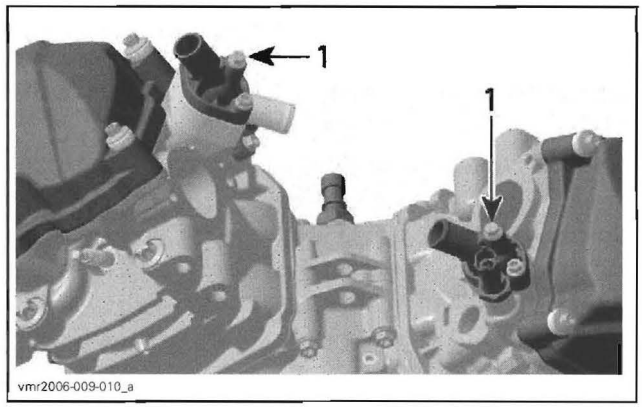

1. Bleeding screws

NOTE: Both cylinders must be bled.

With vehicle on a flat surface, engine cold, refill coolant tank **no. 3**.

NOTE: While refilling, always maintain coolant level below the overflow hose.

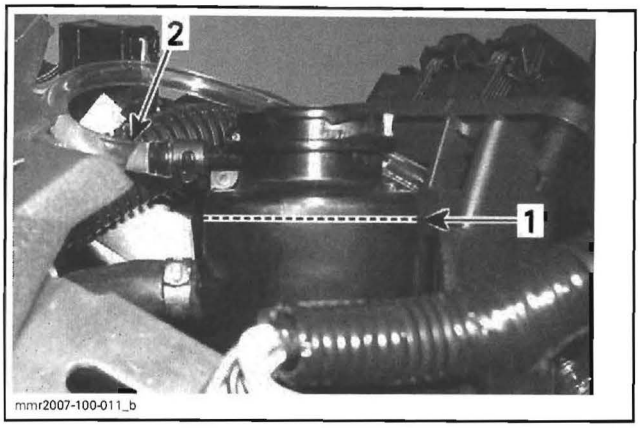

1. Maintain coolant level below the overflow hose
2. Overflow hose

When the coolant comes out by the rear cylinder head, install the bleeding screw. Continue filling until coolant comes out from front cylinder head, then install the bleeding screw.

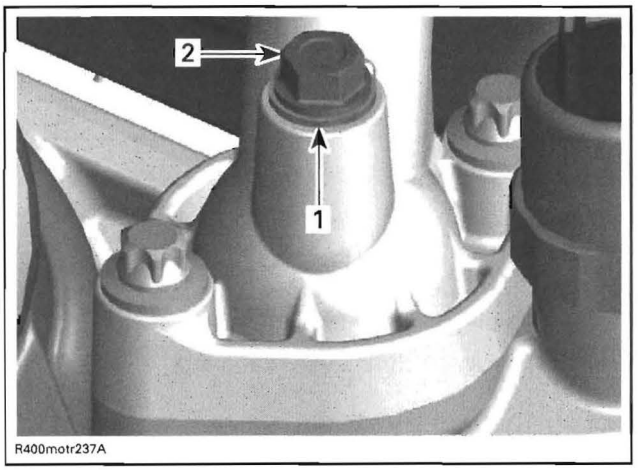

TYPICAL
1. Gasket ring
2. Bleeding screw

Lift the front of the vehicle 50 cm (20 in) off the ground and secure safely.

Unscrew bleeding screw again on each cylinder head.

Continue filling coolant tank **no. 3** until coolant comes out by the rear cylinder head, then install the bleeding screw.

Continue filling until coolant comes out from front cylinder head, then install the bleeding screw.

NOTE: While refilling, always maintain coolant level below the overflow hose.

Put vehicle back on the ground.

Verify coolant level in coolant tank **no. 3**, if coolant level exceeds overflow hose fitting, remove excess coolant.

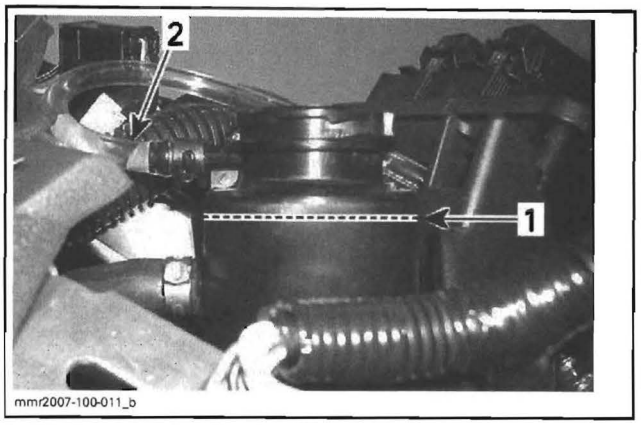

1. Maximum coolant level
2. Overflow hose

Fill up overflow coolant tank **no. 4** up to the rim. Instal cap.

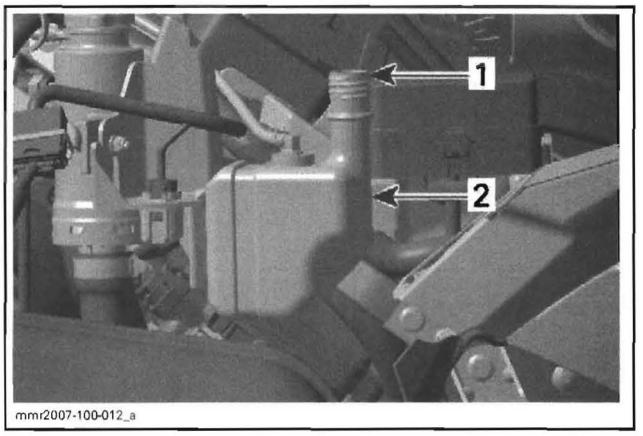

1. Coolant level
2. Overflow coolant tank

Start engine.

Continuously check coolant level in coolant tank **no. 3**. Coolant level must be maintain above the throttle body outlet hose **no. 5**.

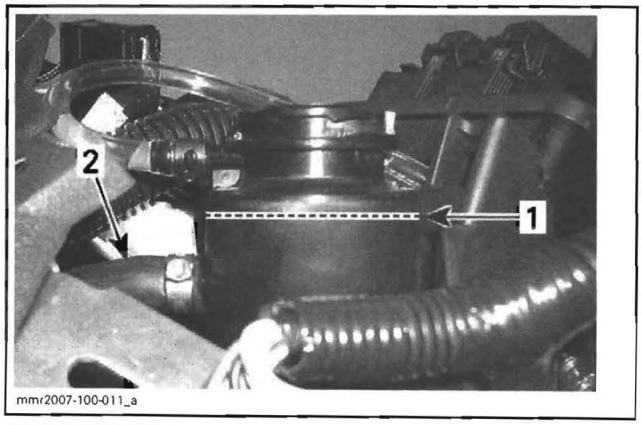

COOLANT TANK
1. Coolant level
2. Throttle body outlet hose

CAUTION: Never allow coolant tank to be empty during the filling procedure.

Let engine idling until coolant temperature reach 100°C (212°F). Monitor engine coolant temperature by using B.U.D.S. or any appropriate digital thermometer.

Stop engine.

Fill up coolant tank **no. 3**. Install cap.

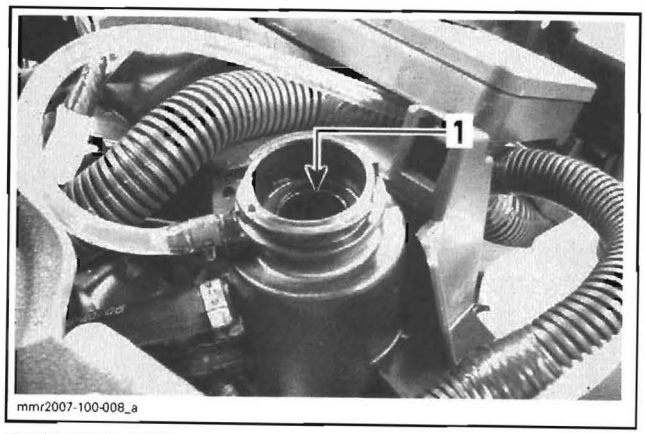

COOLANT TANK
1. Maximum level

Let engine cool down for a minimum of 60 minutes.

Fill overflow coolant tank **no. 4** to maximum level line.

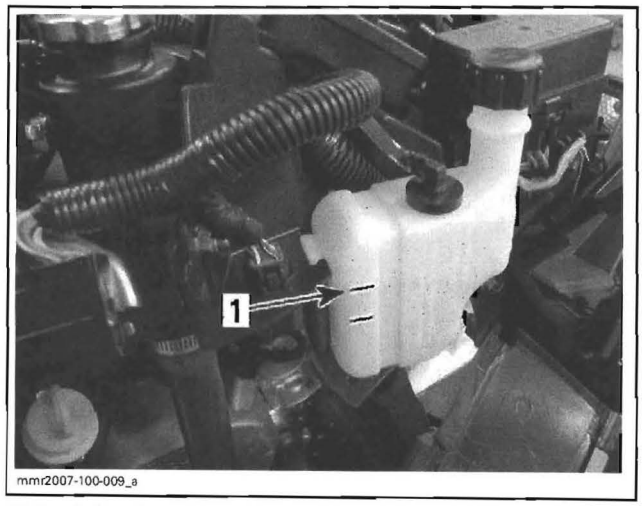

OVERFLOW COOLANT TANK
1. Maximum level

Recheck coolant level after vehicle has completely cooled down. Coolant tank **no. 3** must be filled to the maximum level and the overflow coolant tank **no. 4** must be between the minimum and maximum marks.

After the first few kilometers (miles) of running, recheck level in expansion coolant tank.

PROCEDURES

THERMOSTAT

Thermostat Type

The thermostat is a single action type.

Thermostat Removal

NOTE: The thermostat is located on the top of cylinder head (front cylinder), on intake side.

Install a hose pincher on both radiator hoses.

Remove:

- thermostat housing screws and pull thermostat housing

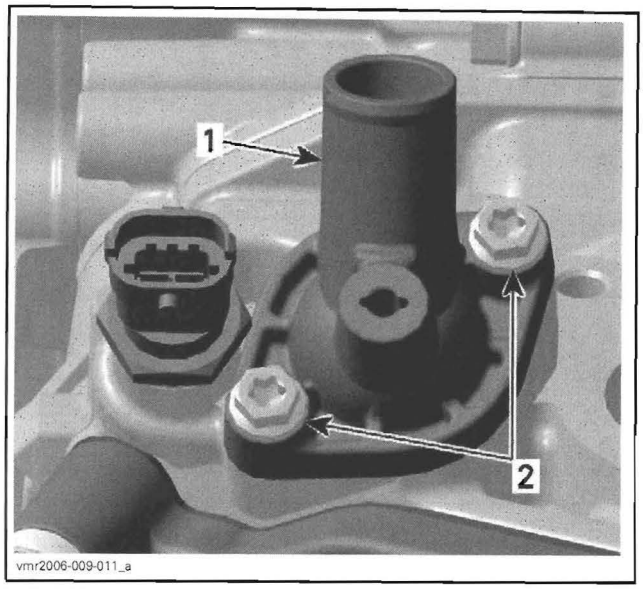

TYPICAL
1. *Thermostat cover*
2. *Screws*

– thermostat with gasket out of the hole.

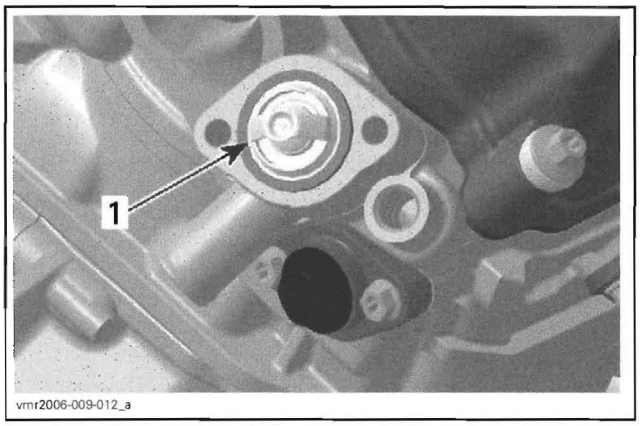

TYPICAL
1. *Thermostat with gasket*

Thermostat Test

To check thermostat, put in water and heat water. Thermostat should open when water temperature reaches 75°C (167°F).

Check if the gasket is brittle, hard or damaged. If so, replace gasket.

Thermostat Installation

For installation, reverse the removal procedure, pay attention to the following details.

Install the thermostat cover then torque screws to 6 N•m (53 lbf•**in**).

Check coolant level in radiator and coolant tank and top up if necessary.

CAUTION: Do not forget to bleed the cooling system. Refer to *COOLANT REPLACEMENT*.

COOLANT TANK CAP

Using a pressure cap tester, check the efficiency of radiator cap **no. 1**. If the efficiency is feeble, install a new 110 kPa (16 PSI) cap (do not exceed this pressure).

RADIATOR AND RADIATOR PROTECTOR

Cleaning and Inspection

Remove all debris between radiator fins. A clean radiator is more efficient than a dirty one.

Check if the radiator fins are damaged. Replace the radiator **no. 6** if necessary.

NOTE: A radiator with many broken fins does not work properly.

Removal

Drain cooling system, see *DRAINING THE SYSTEM*.

Remove rear suspension. Refer to *SC REAR SUSPENSION* or *SC-4 REAR SUSPENSION*.

Remove fuel tank. Refer to *FUEL TANK AND FUEL PUMP*.

Using a grinding disk, grind all rivets **no. 8** retaining rear radiator **no. 6** to frame.

Unplug radiator hoses from radiator then remove radiator from vehicle.

Installation

For installation, reverse the removal procedure. Pay attention to the following detail.

Insert radiator protector **no. 7** onto radiator C-rail and crimp C-rail at rear end.

OVERFLOW COOLANT TANK

The coolant expands as the temperature (up to 100 - 110°C (212 - 230°F)) and pressure rise in the system. If the limiting system working pressure cap is reached 110 kPa (16 PSI), the pressure relief valve in the pressure cap is lifted from its seat and allows coolant to flow through the overflow hose into the overflow coolant tank **no. 4**.

Tank Removal

Open side panels and hood.

Unplug overflow hose **no. 2**.

Lift tank vertically to remove.

Empty overflow coolant tank.

Tank Installation

The installation is the reverse of the removal procedure.

COOLANT TEMPERATURE SENSOR (CTS)

Refer to *ENGINE MANAGEMENT* section for testing and replacement procedures of the coolant temperature sensor (CTS).

WATER PUMP HOUSING

It is located on the engine MAG side.

Water Pump Housing Removal

⚠ WARNING

To avoid potential burns, do not remove the radiator cap or loosen the cooling drain plug if the engine is hot.

Drain cooling system.

Remove radiator outlet hose from water pump housing.

Remove screws retaining water pump housing.

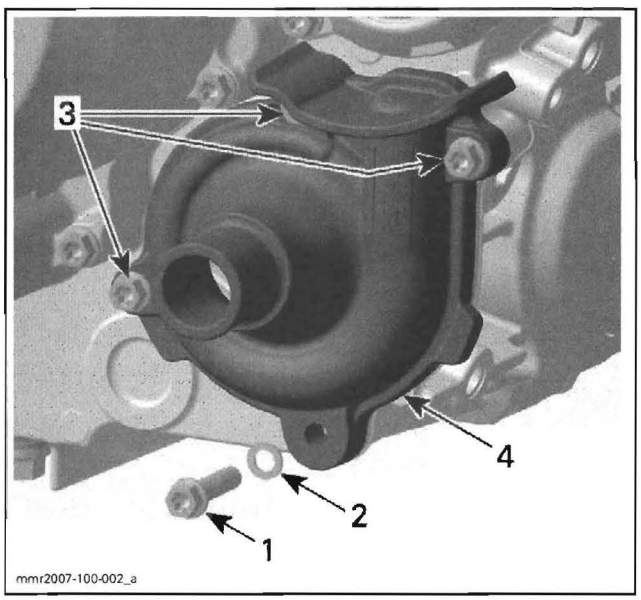

1. *Cooling drain plug*
2. *Sealing ring*
3. *Screws*
4. *Water pump housing*

Pull water pump housing to remove it.

Water Pump Housing Inspection

Check if gasket is brittle, hard or damaged and replace as necessary.

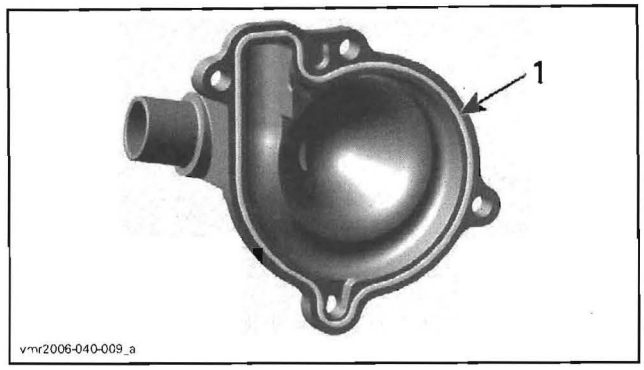

TYPICAL
1. *Gasket*

Water Pump Housing Installation

The installation is the opposite of the removal procedure.

CAUTION: To prevent leaking, take care that the gasket is exactly in groove when you reinstall the water pump housing.

Tighten screws of water pump housing in a criss cross sequence.

WATER PUMP IMPELLER

Impeller Removal

Remove water pump housing.

Unscrew impeller.

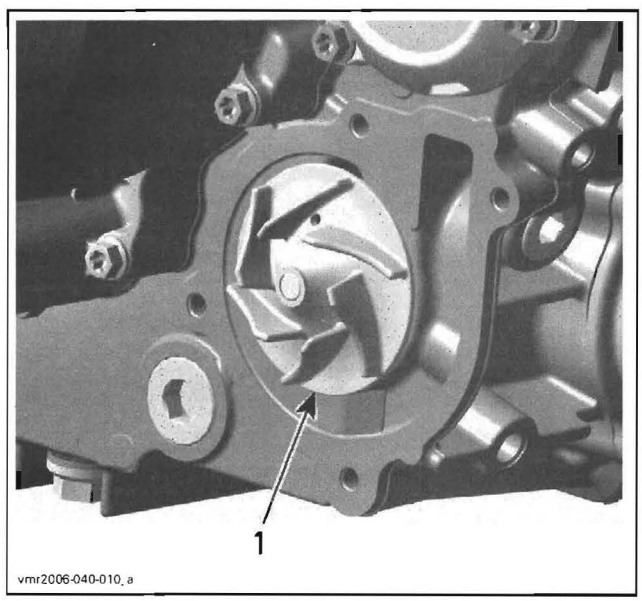

TYPICAL
1. *Impeller*

CAUTION: Water pump shaft and impeller have right-hand threads. Remove by turning counterclockwise and install by turning clockwise.

Impeller Inspection

Check impeller for cracks or other damage. Replace impeller if damaged.

Impeller Installation

The installation is the opposite of the removal procedure.

CAUTION: Be careful not to damage impeller wings during installation.

WATER PUMP SHAFT AND SEALS

Shaft/Seal Removal

NOTE: To replace the water pump shaft and seals, engine removal and disassembly is necessary.

Remove engine from vehicle. Refer to *ENGINE REMOVAL AND INSTALLATION* section.

Remove both cylinders and heads, refer to *CYLINDER AND HEAD.*

Separate crankcase, refer to *BOTTOM END.*

Remove water pump housing and impeller. See procedures in this section.

Remove retaining ring **no. 5** with appropriate pliers.

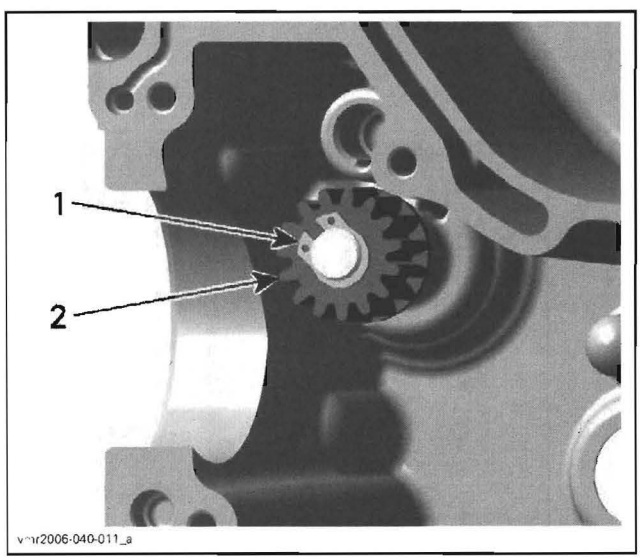

TYPICAL
1. *Retaining ring*
2. *Water pump gear*

NOTE: The water pump gear is held by a needle pin on the water pump shaft.

Remove needle pin and thrust washer.

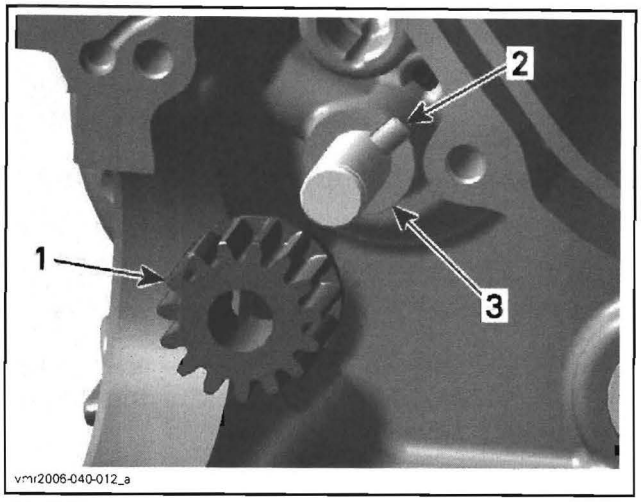

TYPICAL
1. *Water pump gear*
2. *Needle pin*
3. *Thrust washer*

Using a soft hammer to push out water pump shaft with rotary seal from inside of crankcase MAG side.

CAUTION: When removing water pump shaft, always replace rotary seal with water pump shaft **no. 3** and oil seal **no. 4** (behind rotary seal).

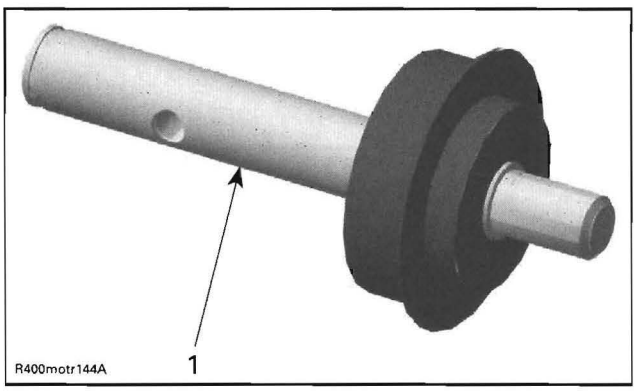

1. *Water pump shaft with rotary seal*

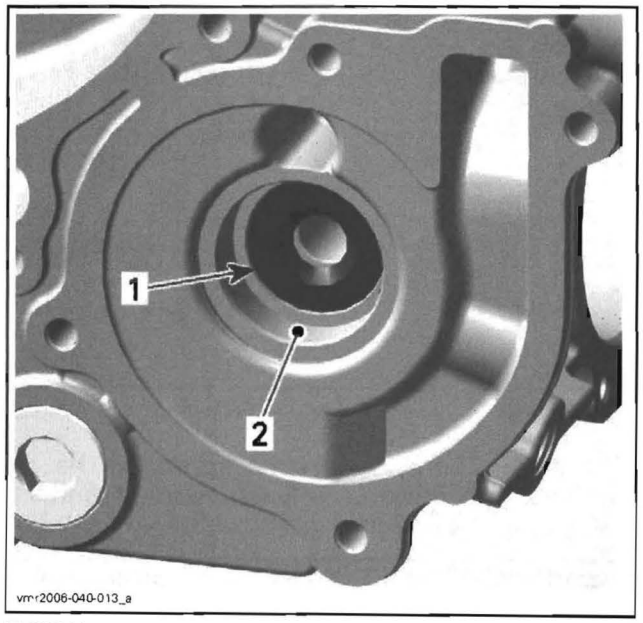

TYPICAL
1. Oil seal behind the rotary seal
2. Rotary seal bore

Extract oil seal **no. 4** from inside of crankcase MAG side with a pusher.

CAUTION: Be careful not to damage the surface of the rotary seal bore in crankcase MAG side.

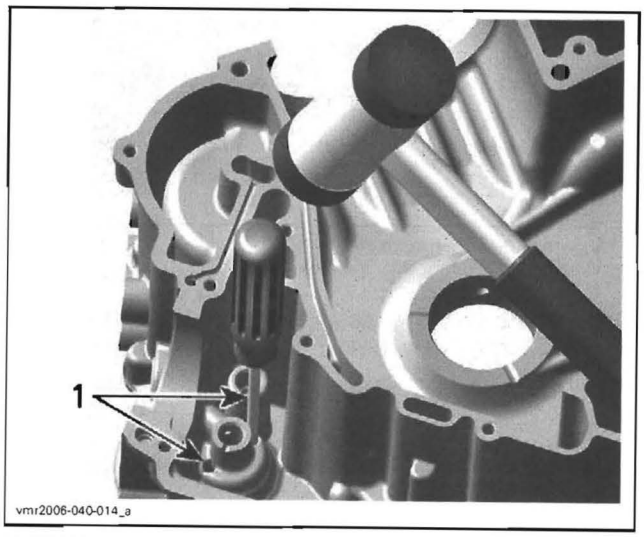

TYPICAL
1. Extract oil seal with a pusher

Parts Inspection

Inspect water pump gear for wear and damage on the snap mechanism to the needle pin. Replace if damaged.

NOTE: When removing water pump shaft, always replace together retaining ring, oil seal, water pump shaft with rotary seal with new parts.

Shaft/Seal Installation

For installation, reverse the removal procedure. However, pay attention to the following.

NOTE: For installation use the torque values in the exploded view.

CAUTION: Always replace rotary seal and water pump shaft together. Also, install a new inner oil seal (behind rotary seal) at the same time.

Apply engine oil on the water pump shaft and intermediate shaft.

NOTE: Never use oil in the press fit area of the oil seal and rotary seal.

Use the oil seal pusher (P/N 529 035 757) and the installer handle (P/N 420 877 650) to install inner oil seal.

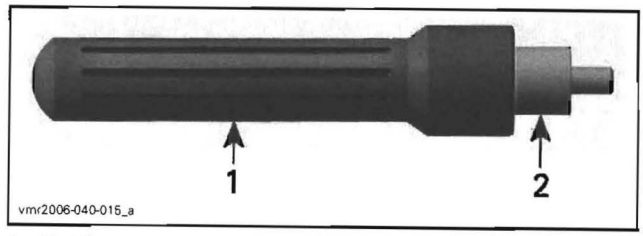

1. Handle
2. Pusher

Apply Molykote 111 (P/N 413 707 000) inside lips of oil seal.

When installing the oil seal on the pusher, make sure sealing lip points outside.

Push inner oil seal in place.

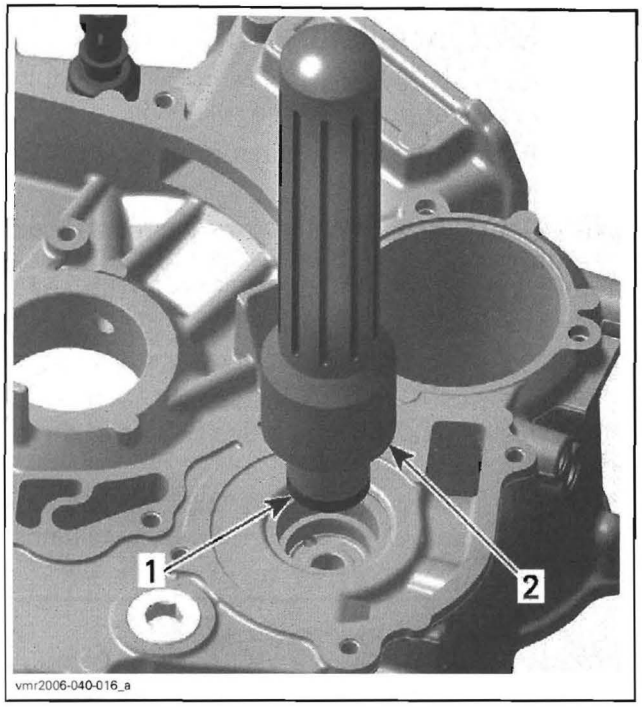

1. Inner oil seal
2. Installer handle with oil seal pusher

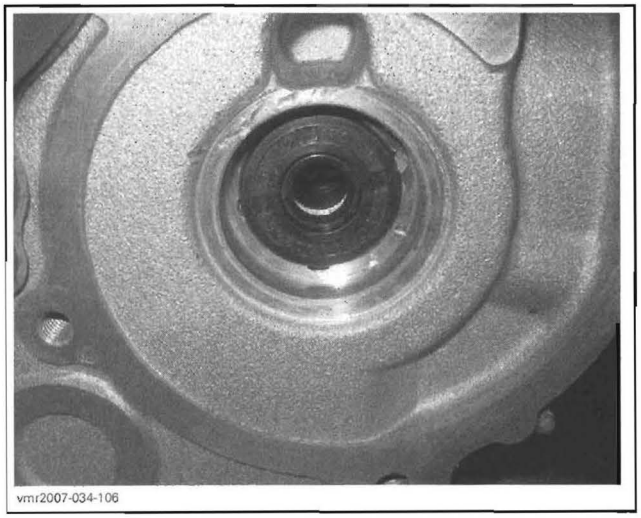

Slide water pump shaft with the new rotary seal into crankcase.

To properly install water pump shaft with rotary seal, use the rotary seal installer (P/N 529 035 766).

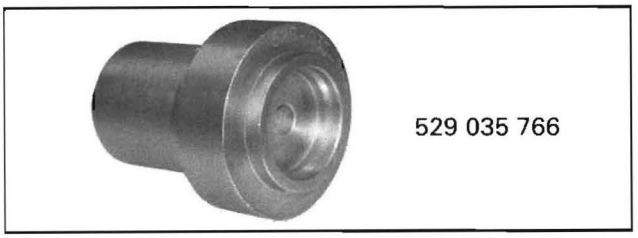

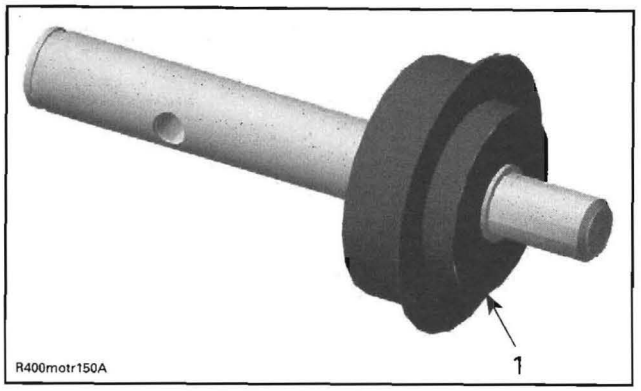

1. Surface where rotary seal is pushed by tool

CAUTION: Never use a hammer for the rotary seal installation. Only use a press to avoid damaging the ceramic component.

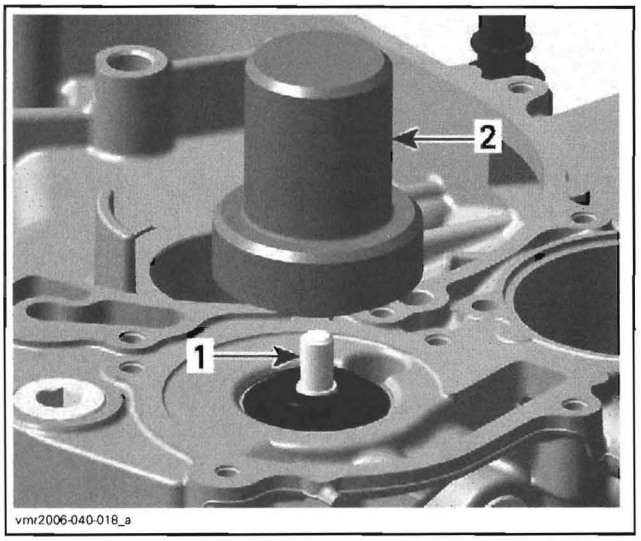

1. Water pump shaft with rotary seal
2. Water pump rotary seal installer

CAUTION: Never use the retaining ring no. **5** a second time. Always install a new one.

After installation, water pump shaft with rotary seal must rotate freely.

Tighten screws of the water pump housing crosswise.

Properly reinstall remaining parts. Refer to appropriate sections.

Refill all fluids.

MAGNETO SYSTEM

SERVICE TOOLS

Description	Part Number	Page
crankshaft protector	529 036 034	235
magneto puller	529 035 748	235
siphon pump	529 035 880	233

SERVICE PRODUCTS

Description	Part Number	Page
BRP premixed coolant	219 700 362	234
Drei Bond sealing compound	420 297 906	233
Loctite 648 (green)	413 711 400	237
Loctite 767 (antiseize lubricant	293 800 070	238
Loctite Chisel (gasket remover)	413 708 500	233
pulley flange cleaner	413 701 809	236
XP-S synthetic 0W40 motor oil	293 600 054	234

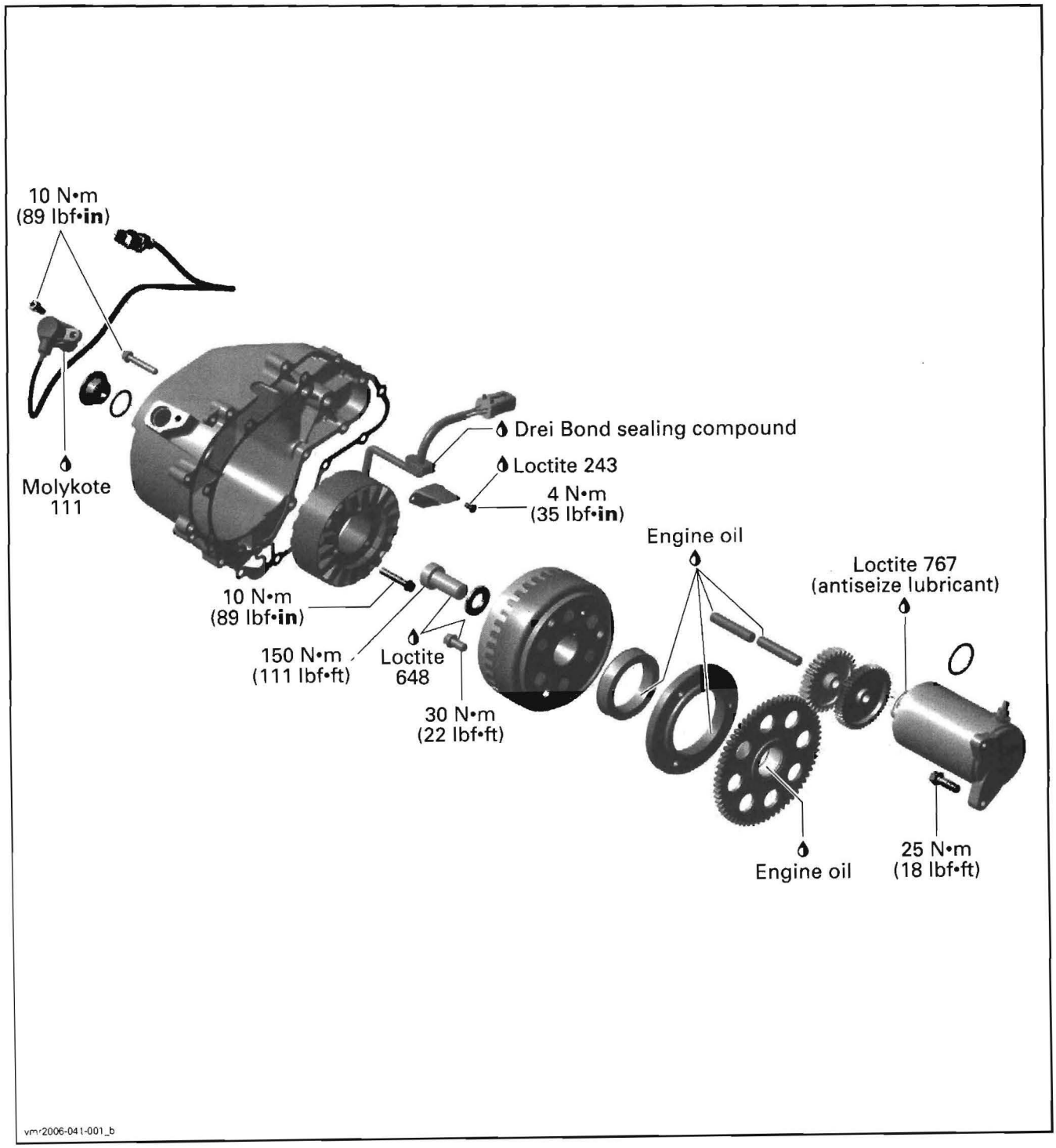
10 N•m
(89 lbf•in)
Molykote
111
Drei Bond sealing compound
Loctite 243
4 N•m
(35 lbf•in)
Engine oil
Loctite 767
(antiseize lubricant)
10 N•m
(89 lbf•in)
150 N•m
(111 lbf•ft)
Loctite
648
30 N•m
(22 lbf•ft)
Engine oil
25 N•m
(18 lbf•ft)
vmr2006-041-001_b

GENERAL

During assembly/installation, use the torque values and service products as in the exploded view.

Clean threads before applying threadlocker. Refer to *SELF-LOCKING FASTENERS* and *LOCTITE APPLICATION* at the beginning of this manual for complete procedure.

⚠ WARNING

Torque wrench tightening specifications must strictly be adhered to.
Locking devices (e.g.: locking tabs, elastic stop nuts, self-locking fasteners, cotter pins, etc.) must be installed or replaced with new ones where specified. If the efficiency of a locking device is impaired, it must be renewed.

PROCEDURES

MAGNETO COVER

NOTE: The magneto cover can be removed without removing the engine.

Magneto Cover Removal

Remove muffler. Refer to *EXHAUST SYSTEM*.

Lower coolant tank level. Use siphon pump (P/N 529 035 880).

Disconnect the coolant hose from tank.

Drain engine oil (refer to *LUBRICATION SYSTEM*).

Remove crankshaft position sensor (CPS) and cut tie raps.

Disconnect magneto connector.

Remove the dipstick's tube and unscrew its adaptor.

Remove magneto cover retaining screws.

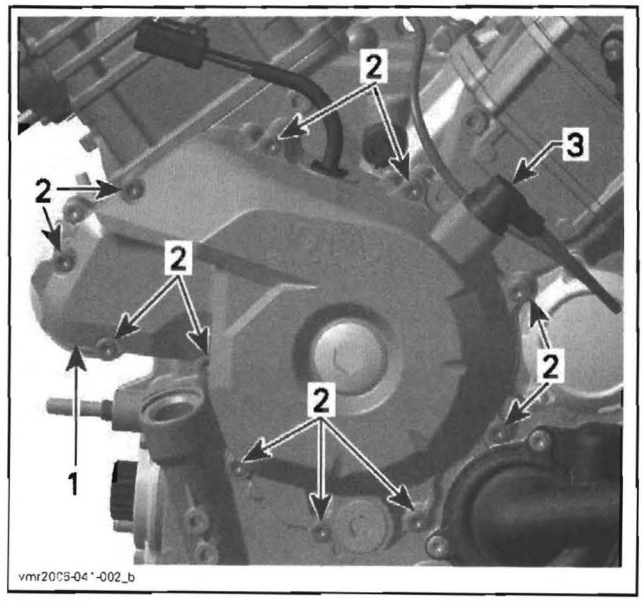

TYPICAL
1. *Magneto cover*
2. *Retaining screws*
3. *Crankshaft position sensor*

Pull magneto cover.

Magneto Cover Inspection and Cleaning

Check magneto cover for cracks or other damage. Replace if necessary.

NOTE: Clean all metal components in a non-ferrous metal cleaner. Use Loctite Chisel (gasket remover) (P/N 413 708 500), or suitable equivalent.

⚠ WARNING

Wear safety glasses and work in a well ventilated area when working with strong chemical products. Also wear suitable non-absorbent gloves to protect your hands.

Magneto Cover Installation

For installation, reverse the removal procedure. However, pay attention to the following.

NOTE: At installation replace magneto cover gasket.

Apply Drei Bond sealing compound (P/N 420 297 906) on stator cable grommet as shown in next illustration.

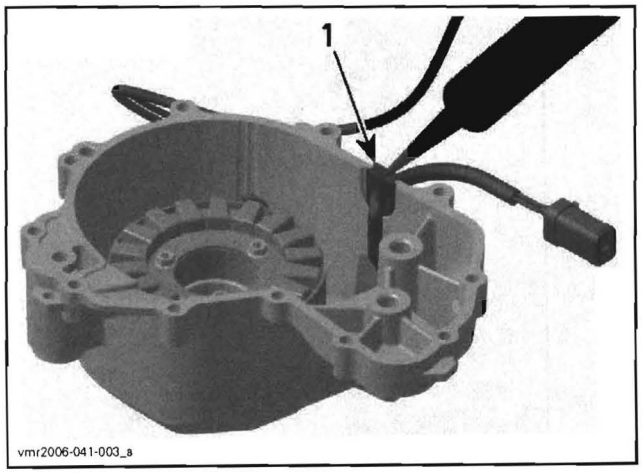

1. Apply Drei Bond sealing compound

Tightening sequence for screws on magneto cover is as per following illustration.

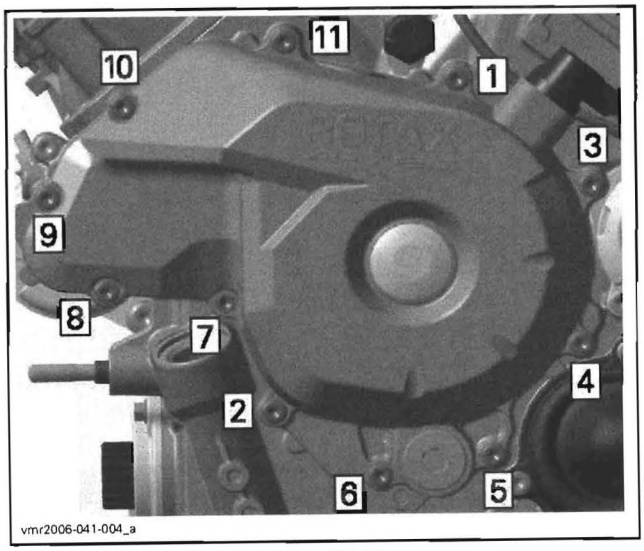

TYPICAL — TIGHTENING SEQUENCE

Refill engine with XP-S synthetic 0W40 motor oil (P/N 293 600 054).

Refill cooling system with BRP premixed coolant (P/N 219 700 362).

STATOR

Stator Removal

Remove magneto cover (refer to *MAGNETO COVER* above).

Remove screws securing holding strip.

Remove stator retaining screws then the stator.

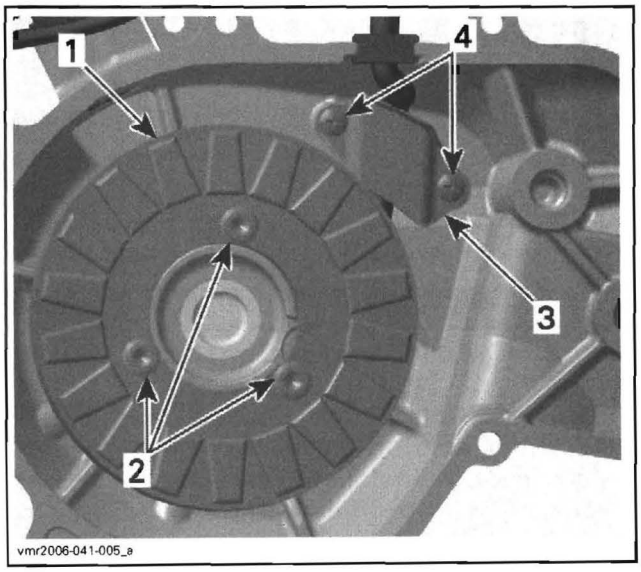

1. Stator
2. Stator retaining screws
3. Holding strip
4. Holding strip screws

Stator Inspection

Check stator condition. If damaged replace it.

Check if stator wires are brittle, hard or otherwise damaged.

For electrical inspection, refer to *CHARGING SYSTEM*.

Stator Installation

For installation, reverse the removal procedure. However, pay attention to the following.

CAUTION: When installing the stator take care that the cable is in place (guide for the wire).

NOTE: There is only one position for the stator (notch in the magneto housing cover).

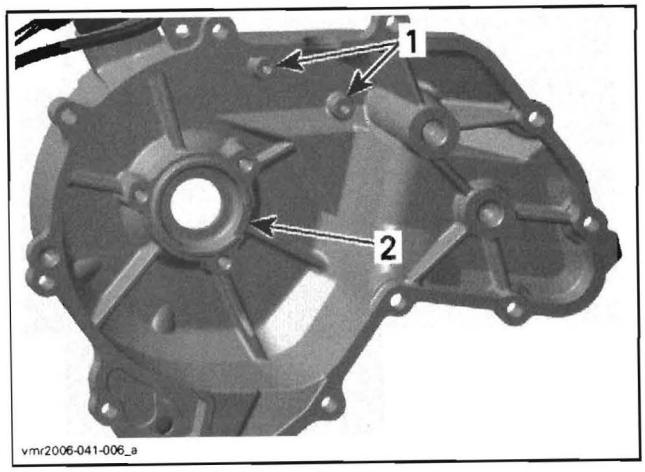

1. Threads for cable holding strip
2. Notch for stator

ROTOR

Rotor Removal

Remove engine from vehicle. Refer to *ENGINE REMOVAL AND INSTALLATION.*

Lock crankshaft (refer to *BOTTOM END*).

Remove magneto cover. Refer to *MAGNETO COVER* above.

Using a 14 mm Allen key, remove screw and washer securing rotor to crankshaft.

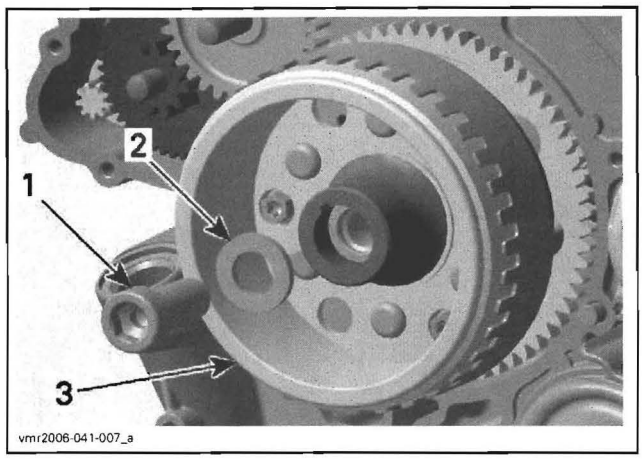

TYPICAL
1. *Rotor screw*
2. *Washer*
3. *Rotor*

Install magneto puller (P/N 529 035 748) and crankshaft protector (P/N 529 036 034) then remove rotor.

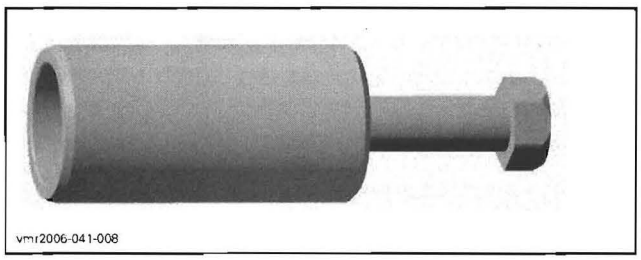

MAGNETO PULLER

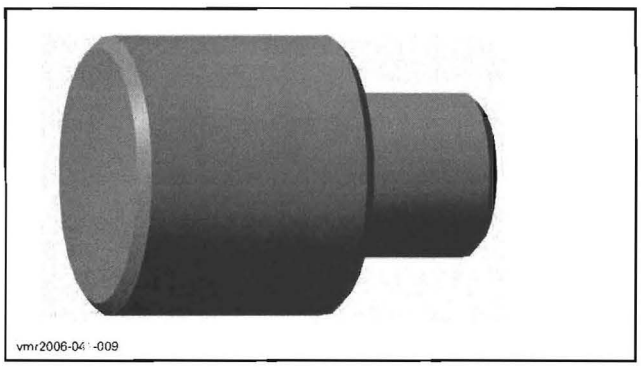

CRANKSHAFT PROTECTOR

NOTE: Use grease to place protector on crankshaft end prior to screw on the magneto puller.

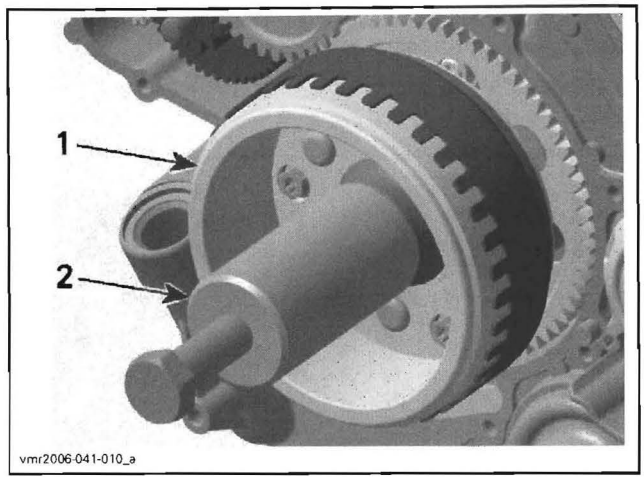

TYPICAL
1. *Rotor*
2. *Magneto puller*

Screw magneto puller bolt to remove rotor.

Rotor Inspection

Check inner side of rotor for scratches or other damage.

Check keyway of the rotor for wear or damages.

Check if trigger wheel teeth are bent or otherwise damaged.

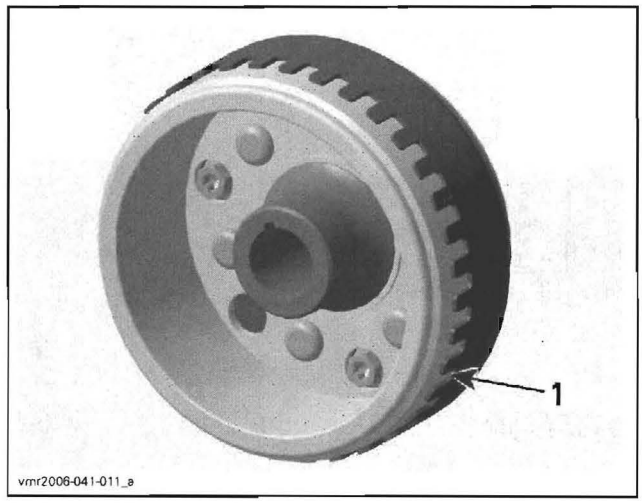

1. *Rotor with trigger wheel*

Check woodruff key and keyway on the crankshaft for wear or damages.

Replace parts as necessary.

Rotor Installation

For installation, reverse the removal procedure. However, pay attention to the following.

Clean crankshaft taper and rotor with pulley flange cleaner (P/N 413 701 809).

CAUTION: Taper on crankshaft and rotor must be free of grease.

Oil sprag clutch in sprag clutch housing and install sprag clutch gear.

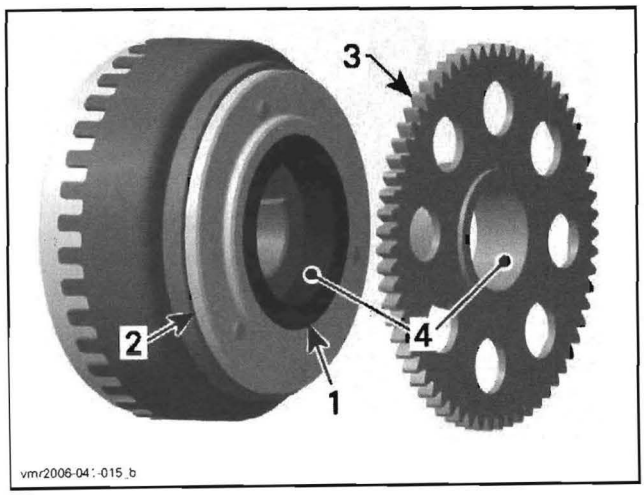

1. *Sprag clutch*
2. *Sprag clutch housing*
3. *Sprag clutch gear*
4. *Apply engine oil here*

Slide rotor onto crankshaft. The woodruff key and the keyway must be aligned.

Rotate starter double gear counterclockwise to align intermediate gear teeth with sprag clutch gear.

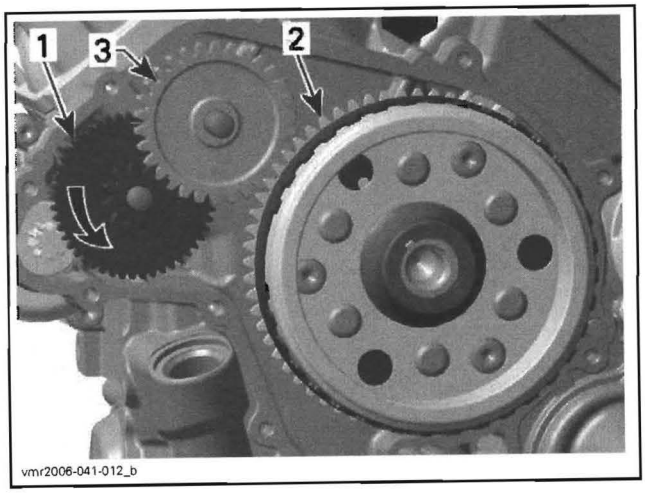

TYPICAL
1. *Starter double gear*
2. *Sprag clutch gear*
3. *Intermediate gear*

SPRAG CLUTCH

Sprag Clutch Removal

Remove engine from vehicle (refer to *ENGINE REMOVAL AND INSTALLATION*).

Remove magneto cover (refer to *MAGNETO COVER* above).

Loosen sprag clutch housing screws located inside rotor.

Remove rotor (refer to *ROTOR* above).

Remove sprag clutch gear.

Remove sprag clutch housing screws and sprag clutch housing.

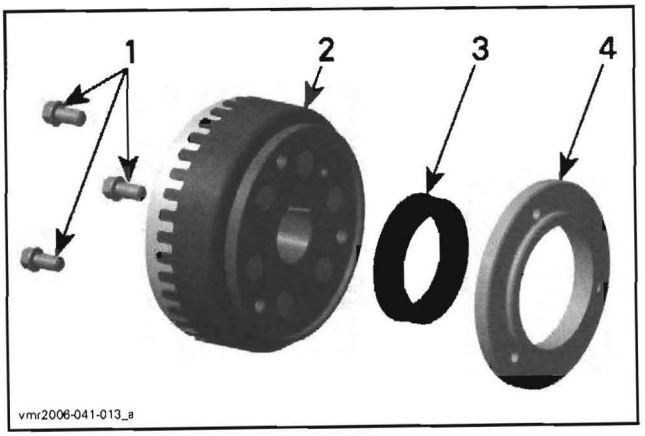

1. *Sprag clutch housing screws*
2. *Rotor*
3. *Sprag clutch*
4. *Sprag clutch housing*

Sprag Clutch Inspection

Inspect sprag clutch and sprag clutch housing for wear and damage.

Also check the collar of the sprag clutch gear.

Perform a functional test of the sprag clutch. To do so, rotate sprag clutch gear in sprag clutch.

NOTE: Sprag clutch must lock in counterclockwise direction.

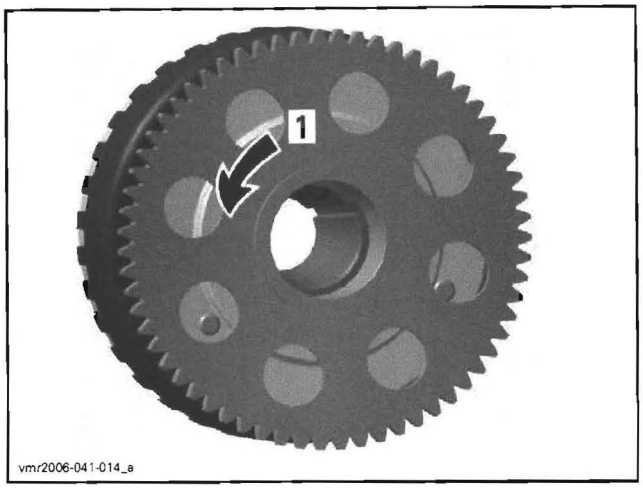

SPRAG CLUTCH FUNCTIONAL TEST
1. Lock

NOTE: Sprag clutch, housing and gear must be replaced at the same time, if damaged.

Sprag Clutch Installation

For installation, reverse the removal procedure. Pay attention to the following details.

Apply Loctite 648 (green) (P/N 413 711 400) on threads of sprag clutch housing screws.

Install screws but do not torque yet.

Apply engine oil on sprag clutch and inside sprag clutch gear hole.

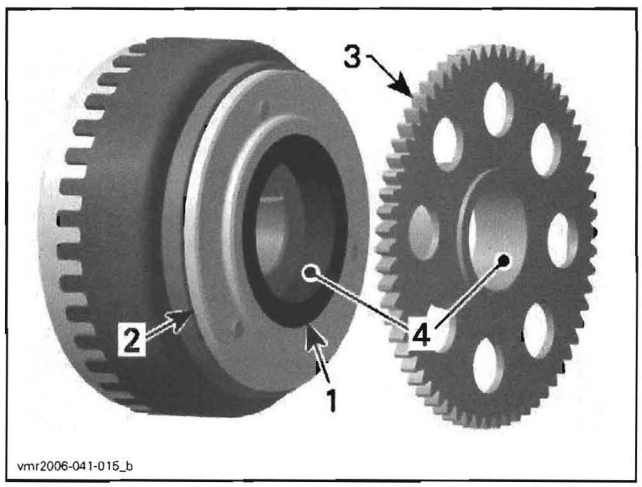

1. Sprag clutch
2. Sprag clutch housing
3. Sprag clutch gear
4. Apply engine oil here

Install rotor then torque sprag clutch housing screws to 30 N•m (22 lbf•ft).

SPRAG CLUTCH GEAR

Sprag Clutch Gear Removal

Remove rotor (refer to *ROTOR* above).

Pull sprag clutch gear from the rotor.

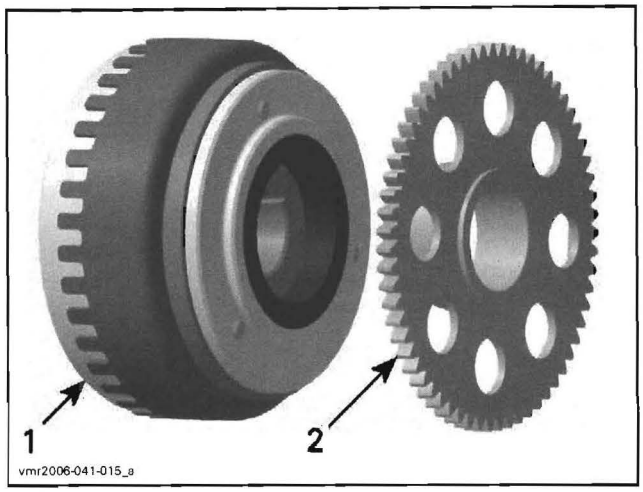

1. Rotor
2. Sprag clutch gear

Sprag Clutch Gear Inspection

Inspect gear, especially teeth and sprag clutch collar, for wear and other damage.

Check needle bearing condition. Replace sprag clutch gear if necessary.

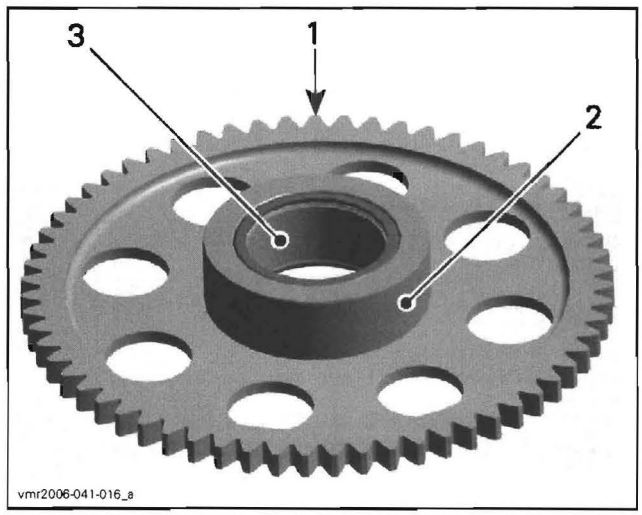

INSPECT
1. Teeth
2. Collar
3. Needle bearing

Sprag Clutch Gear Installation

The installation is the reverse of the removal procedure.

NOTE: Apply engine oil on needle bearing and collar of sprag clutch gear.

STARTER DRIVE GEARS

The starter drive gears are located on the engine MAG side behind the magneto cover. No need to remove engine.

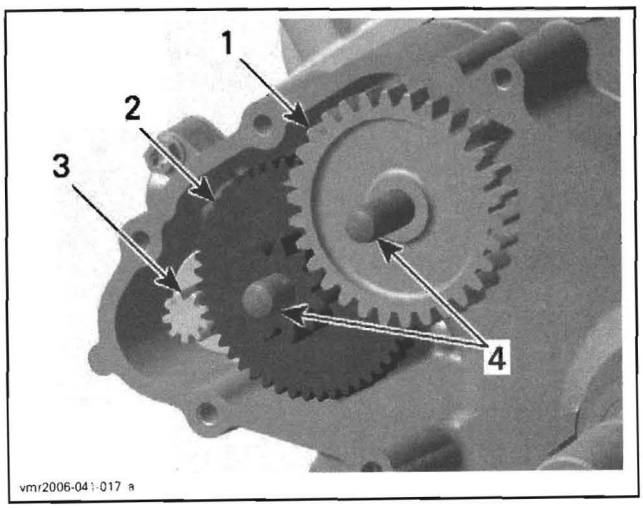

1. *Intermediate gear*
2. *Starter double gear*
3. *Starter gear*
4. *Location pins*

Gear Removal

Remove magneto cover (refer to *MAGNETO COVER* above).

Remove location pins, starter double gear and intermediate gear.

Gear Inspection

Inspect gears and location pins for wear and damage.

Replace parts as necessary.

Gear Installation

The installation is the reverse of the removal procedure. Pay attention to the following details.

Apply Loctite 767 (antiseize lubricant (P/N 293 800 070) on starter gear before installing the starter double gear.

Apply engine oil on location pins.

CYLINDER AND HEAD

SERVICE TOOLS

Description	Part Number	Page
camshaft locking tool	529 035 926	246
piston circlip installer	529 035 921	264
piston ring compressor	529 035 919	261
valve guide installer	529 035 853	259
valve guide remover	529 035 924	259
valve spring compressor clamp	529 035 724	255
valve spring compressor cup	529 035 764	255

SERVICE TOOLS – OTHER SUPPLIER

Description	Part Number	Page
Snap-on pliers	YA 8230	256

SERVICE PRODUCTS

Description	Part Number	Page
Loctite 243 (blue)	293 800 060	247
Loctite 767 (antiseize lubricant)	293 800 070	259

CYLINDER HEAD NO. 1

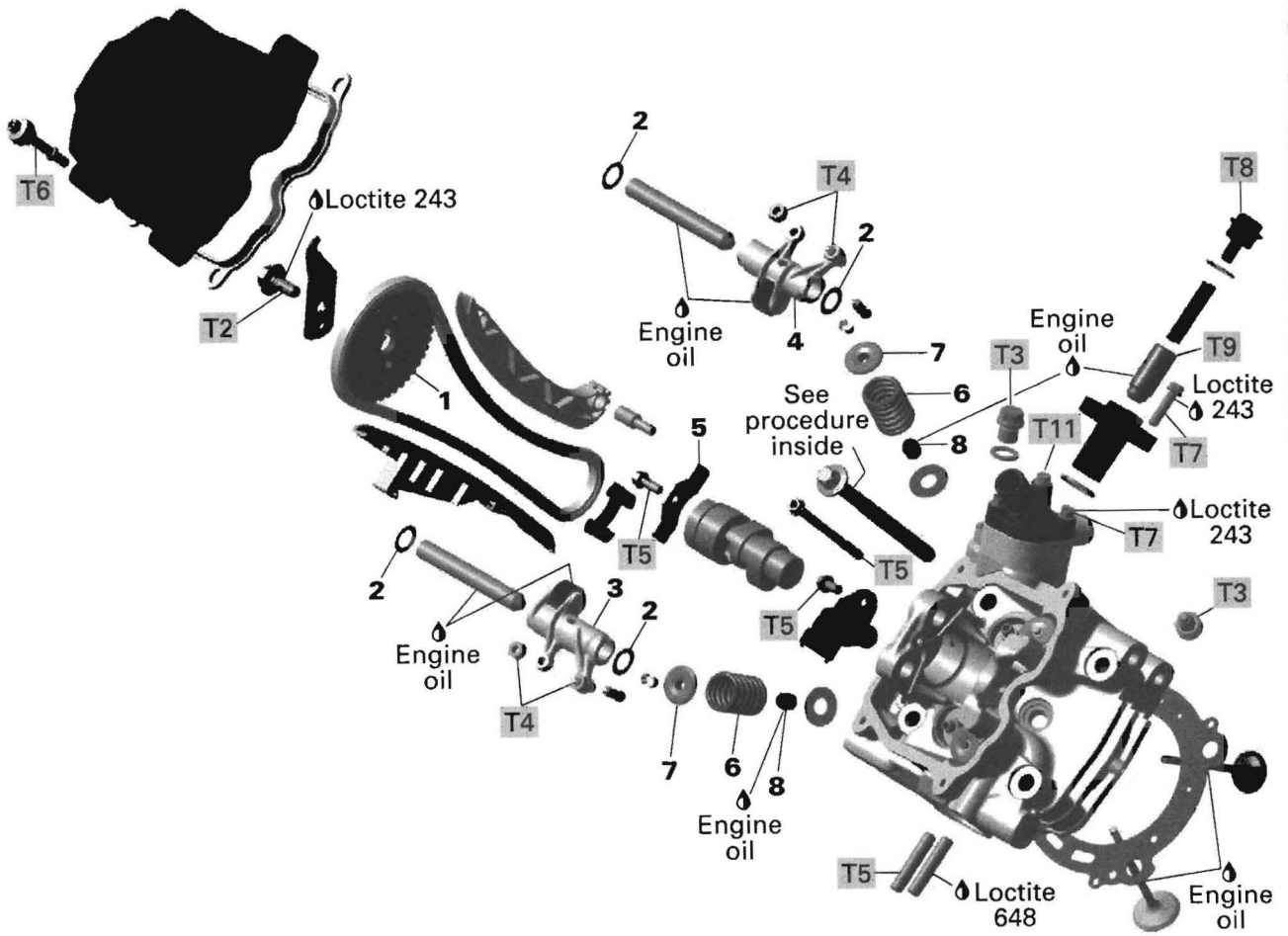

T1	60 N•m (44 lbf•ft)
T2	30 N•m (22 lbf•ft)
T3	20 N•m (15 lbf•ft)
T4	12 N•m (106 lbf•**in**)
T5	10 N•m (89 lbf•**in**)
T6	7 N•m (62 lbf•**in**)

T7	6 N•m (53 lbf•**in**)
T8	4.5 N•m (40 lbf•**in**)
T9	0.1 N•m (0.89 lbf•**in**)
T10	16 N•m (141 lbf•**in**)
T11	5 N•m (44 lbf•**in**)

vmr2007-036-001_a

CYLINDER HEAD NO. 2

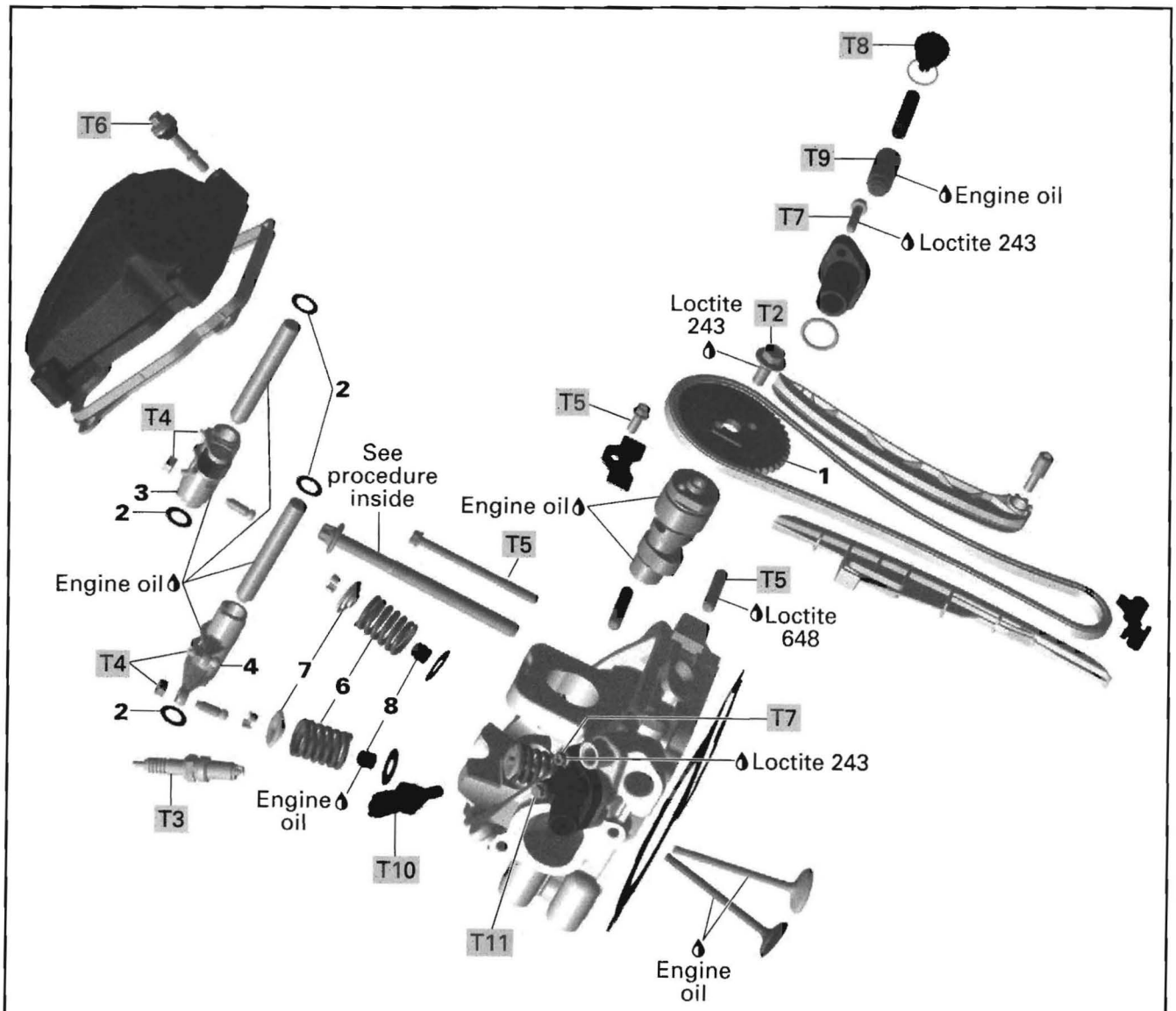

T1	60 N•m (44 lbf•ft)
T2	30 N•m (22 lbf•ft)
T3	20 N•m (15 lbf•ft)
T4	12 N•m (106 lbf•**in**)
T5	10 N•m (89 lbf•**in**)
T6	7 N•m (62 lbf•**in**)

T7	6 N•m (53 lbf•**in**)
T8	4.5 N•m (40 lbf•**in**)
T9	0.1 N•m (0.89 lbf•**in**)
T10	16 N•m (141 lbf•**in**)
T11	5 N•m (44 lbf•**in**)

vmr2007-036-002_a

CYLINDERS AND PISTONS

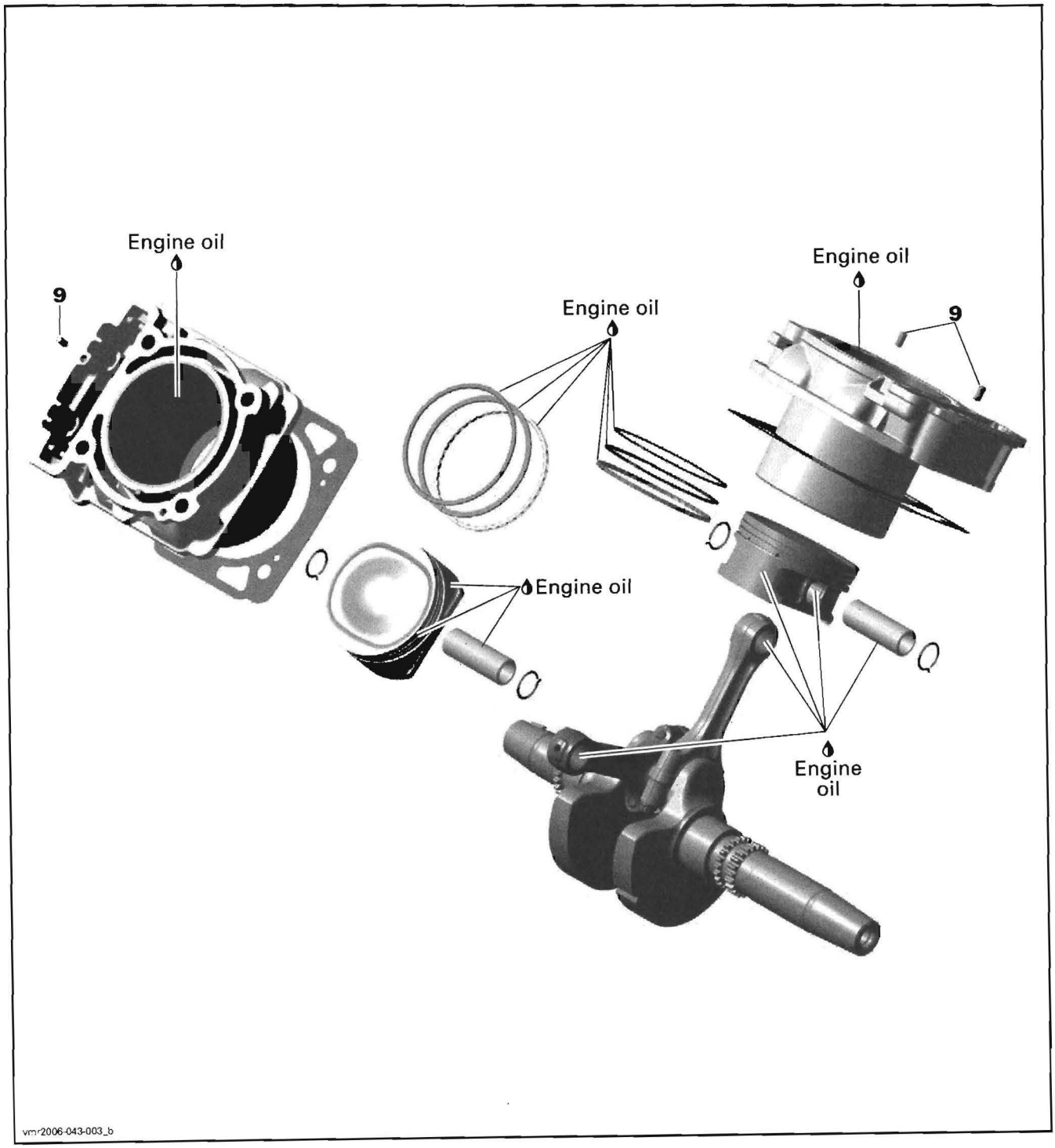

GENERAL

Components which are identical for both cylinders/cylinder heads are identified in the two exploded views by the same number. Components which are different or which are, for instance, present of one of the cylinders/cylinder heads but not on the other, have different numbers. The information given below always relates as a general rule.

Special reference is made in the text to work instructions which are not the same for cylinder no. 1 and cylinder no. 2.

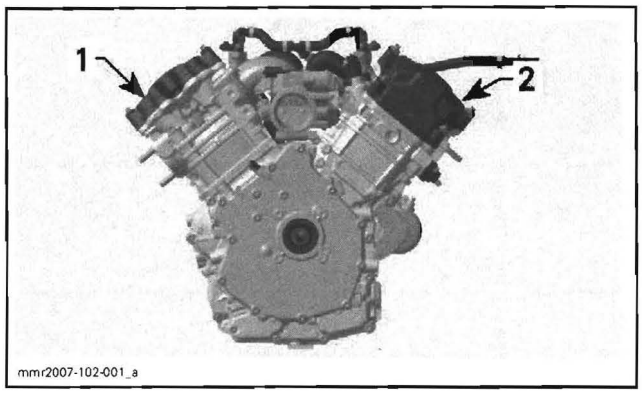

1. Cylinder 1 (front)
2. Cylinder 2 (rear)

When diagnosing an engine problem, always perform a cylinder leak test. This will help solving a problem. Refer to the instructions included with your leak tester and to *LEAK TEST* section for procedures.

Always place the vehicle on level surface.

NOTE: For a better understanding, the many illustrations are taken with engine out of vehicle. To perform the following instructions, it is not necessary to remove engine from vehicle.

Always disconnect BLACK (-) cable from the battery, then RED (+) cable before working on the engine.

Even if the removal of many parts is not necessary to reach another part, it is recommended to remove these parts in order to check them.

During assembly/installation, use the torque values and service products as in the exploded views.

Clean threads before applying a threadlocker. Refer to *SELF-LOCKING FASTENERS* and *LOCTITE APPLICATION* at the beginning of this manual for complete procedure.

⚠ WARNING

Torque wrench tightening specifications must strictly be adhered to.
Locking devices (e.g.: locking tabs, elastic stop nuts, self-locking fasteners, cotter pin, etc.) must be installed or replaced with new ones where specified. If the efficiency of a locking device is impaired, it must be renewed.

When disassembling parts that are duplicated in the engine, (e.g.: valves), it is a strongly recommended to note their position (PTO/MAG side, front/rear cylinder) and to keep them as a "group". If you find a defective component, it would be much easier to find the cause of the failure among its group of parts (e.g.: you found a worn valve guide. A bent spring could be the cause and it will be easy to know which one among the springs is the cause to replace it if you grouped them at disassembly). Also, since used parts have matched together during the engine operation, they will keep their matched fit when you reassemble them together within their "group".

MAINTENANCE

VALVE CLEARANCE ADJUSTMENT

NOTE: Check and adjust valve clearance only when engine is cold.

Remove valve covers. Refer to *VALVE COVER*.

Before checking or adjusting the valve clearance, turn crankshaft to TDC ignition of the respective cylinder, see *CAMSHAFT*.

Using a feeler gauge, check the valve clearance.

VALVE CLEARANCE	
EXHAUST	0.11 to 0.19 mm (.0043 to .0075 in)
INTAKE	0.06 to 0.14 mm (.0024 to .0055 in)

If the valve clearance is out of specification, adjust valves as follows.

NOTE: Use mean value of exhaust/intake to ensure a proper valve adjustment.

Hold the adjustment screw at the proper position and torque the locking nut.

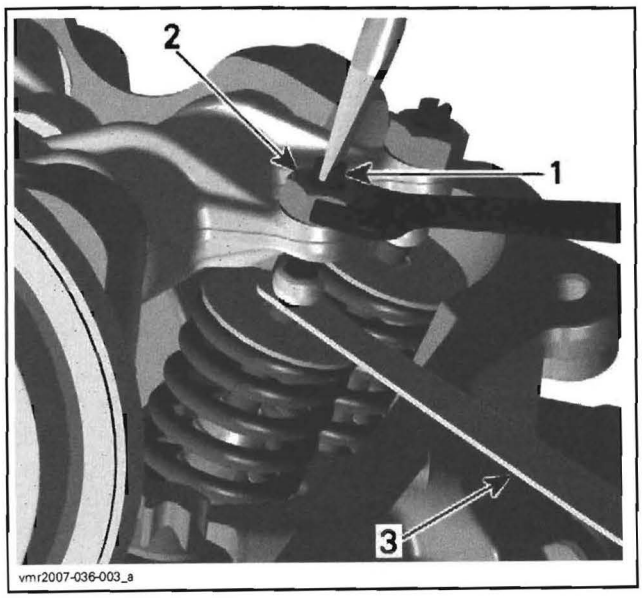

1. *Adjustment screw*
2. *Locking nut*
3. *Feeler gauge*

Repeat the procedure for each valve.

Before installing valve covers, recheck valve clearance.

PROCEDURES

VALVE COVER

Cover Removal

Remove:
- LH side panel and hood, refer to *BODY*
- air intake silencer, refer to *AIR INTAKE SYSTEM*
- distance screws of valve cover

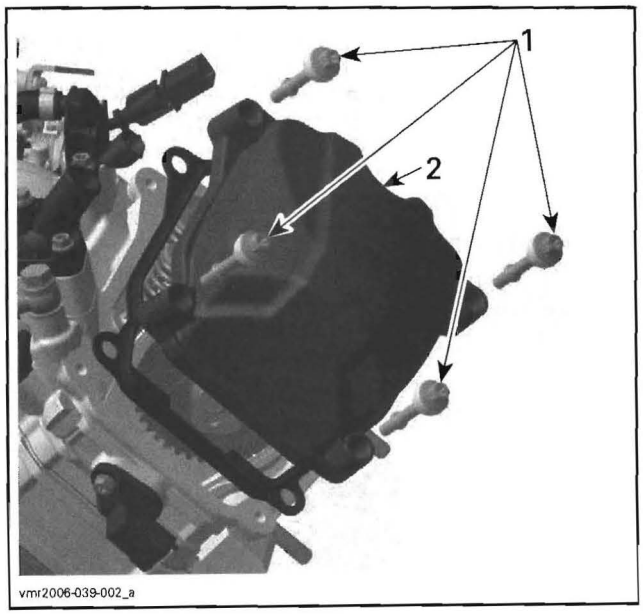

1. *Distance screws*
2. *Valve cover*

- valve cover and gasket.

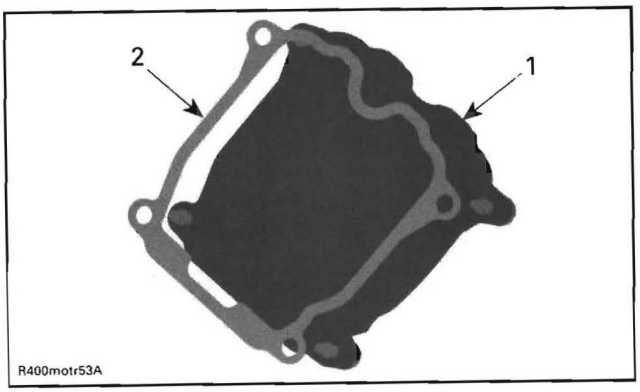

1. *Valve cover*
2. *Gasket*

Repeat the procedure for the other valve cover if required.

Cover Inspection

Check the gasket on the valve cover if it is brittle, cracked or hard. If so, replace the gasket.

Cover Installation

For installation, reverse the removal procedure.

Torque the valve cover distance screws in a criss-cross sequence.

TIMING CHAIN TENSIONER

NOTE: Before removal and installation, make sure that the respective cylinder is set to TDC ignition. Refer to *CAMSHAFT*.

Tensioner Removal

⚠ WARNING

Timing chain tensioner is spring loaded. Never perform this operation immediately after the engine has been run because the exhaust system can be very hot. Wait until exhaust system is warm or cold.

Remove:
- chain tensioner plug
- O-ring
- spring
- chain tensioner plunger

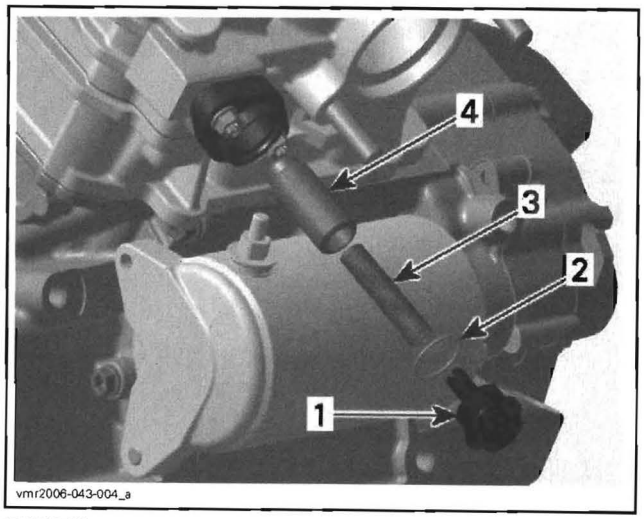

TYPICAL
1. *Chain tensioner plug*
2. *O-ring*
3. *Spring*
4. *Chain tensioner plunger*

- screws retaining chain tensioner housing
- chain tensioner housing with O-ring.

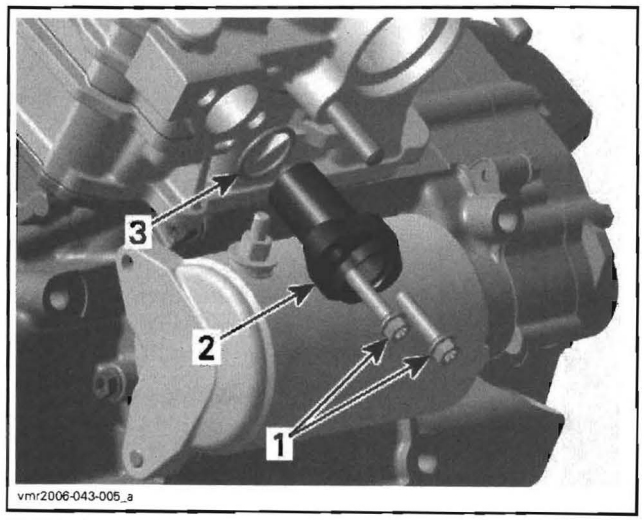

TYPICAL
1. *Chain tensioner screws*
2. *Chain tensioner housing*
3. *O-ring*

Tensioner Inspection

Check the housing for cracks or other damages. Replace if necessary.

Check chain tensioner plunger for free movement and/or scoring.

Check if O-rings are brittle, cracked or hard. Replace if necessary.

Check spring condition. Replace if broken or worn.

Tensioner Installation

For installation, reverse the removal procedure. However, pay attention to the following.

Before installing the chain tensioner make sure, that the camshaft timing gear can be moved back and forth.

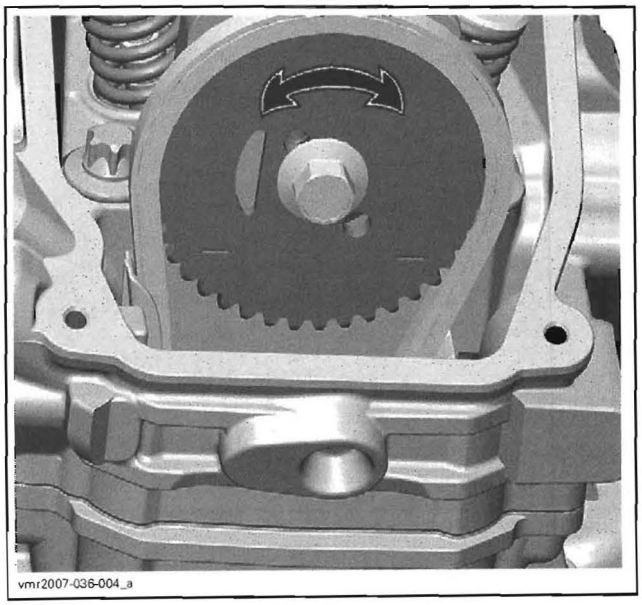

MOVE GEAR BACK AND FORTH

Apply engine oil on the plunger before installing.

Slightly screw in the plunger until the timing chain allows no more back and forth movement of the camshaft timing gear. Then screw in the plunger an additional 1/8 turn to reach the required torque of 0.1 N•m (.9 lbf•**in**).

CAUTION: Improper adjustment of the timing chain will lead to severe engine damage.

Fit the spring on one side into the slot of the plug screw and on the other side into the plunger. Turn spring only clockwise in order to fit the spring end into the notch of the plunger and to avoid loosening the plunger during spring installation. Do not preload the spring.

NOTE: Do not forget to place the O-ring on chain tensioner plug.

Then compress the spring and screw in the plug screw.

Finally, tighten the plug screw to 4.5 N•m (40 lbf•**in**).

CAMSHAFT TIMING GEAR

Gear Removal

Remove the valve cover.

Turn crankshaft to TDC ignition of the respective cylinder, see *CAMSHAFT*.

Unscrew timing chain tensioner.

Remove camshaft timing gear screw.

To prevent timing chain stretching during removal of camshaft timing gear screw, use the camshaft locking tool (P/N 529 035 926).

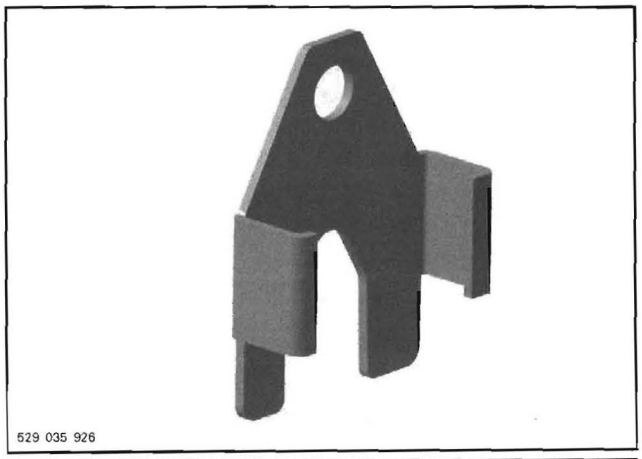

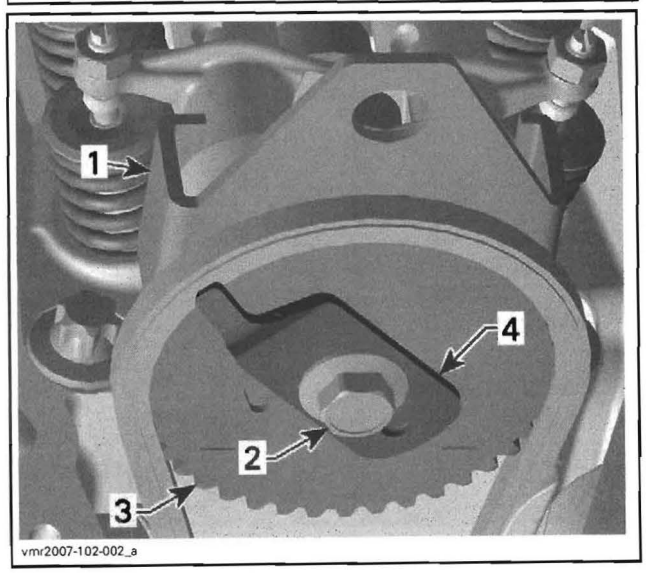

1. *Camshaft locking tool*
2. *Camshaft timing gear screw*
3. *Camshaft timing gear*
4. *Trigger wheel (cylinder head 1 only)*

Remove the camshaft timing gear.

NOTE: Secure timing chain with a retaining wire.

Gear Inspection

Check camshaft timing gear for wear or deterioration.

If gear is worn or damaged, replace it as a set (camshaft timing gear and timing chain).

For crankshaft gear, refer to *BOTTOM END* section, see *CRANKSHAFT*.

Gear Installation

For installation, reverse the removal procedure. Pay attention to the following details.

Clean mating surface and threads of camshaft prior to assemble camshaft timing gear.

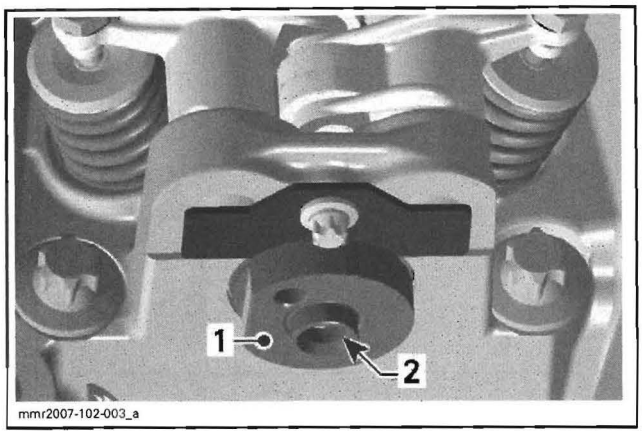

1. Mating surface on camshaft
2. Threads for camshaft screw

CAUTION: Crankshaft and camshaft must be on TDC ignition position to place camshaft timing gear and timing chain in the proper position. Refer to *CAMSHAFT*.

Install camshaft timing gear so that the timing gear tabs are located into the flat zone of the camshaft.

The printed marks on the camshaft timing gear must be parallel to the cylinder head base. See the following illustration for a proper positioning.

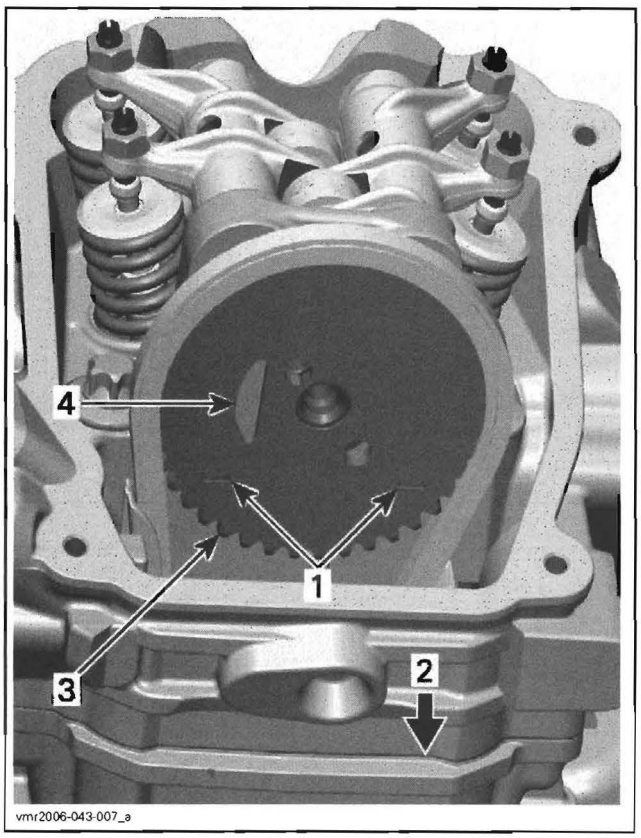

1. Printed marks on camshaft timing gear
2. Cylinder head base
3. Camshaft timing gear
4. Timing gear tab

Install the camshaft locking tool.

Install the chain tensioner (see *CHAIN TENSIONER* above) and check again if marks on the timing gear are parallel to cylinder head base and crankshaft is at TDC ignition.

Apply Loctite 243 (blue) (P/N 293 800 060) on camshaft screw threads and tighten it to 30 N•m (22 lbf•ft).

NOTE: On cylinder 1, install the trigger wheel on camshaft timing gear.

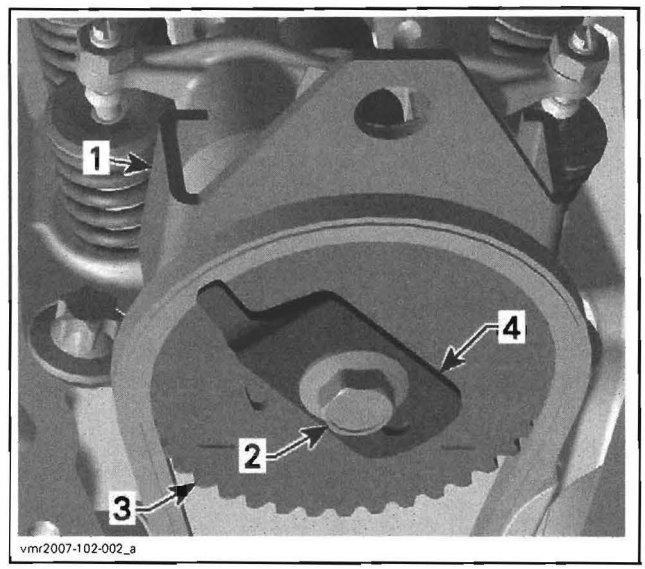

1. Camshaft locking tool
2. Camshaft screw
3. Camshaft timing gear
4. Trigger wheel (cylinder head 1 only)

Remove the camshaft locking tool.

ROCKER ARM

Rocker Arm Removal

Remove:
- valve cover
- chain tensioner
- camshaft timing gear **no. 1**
- Allen screw and camshaft retaining plate

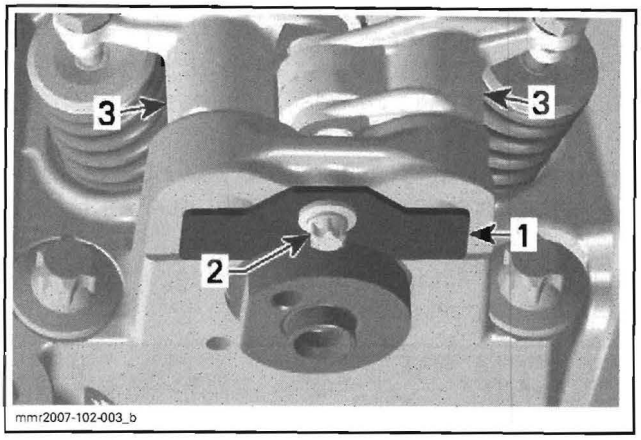

1. Camshaft retaining plate
2. Camshaft retaining plate screw
3. Rocker arms

– rocker arm shafts
– rocker arm assembly (exhaust side and intake side) with adjustment screws and nuts

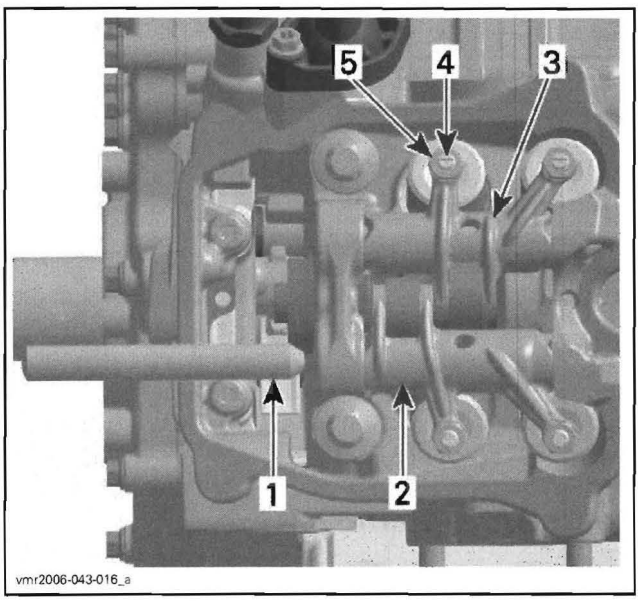

1. Rocker arm shaft
2. Rocker arm (exhaust side)
3. Rocker arm (intake side)
4. Adjustment screw
5. Locking nut

– thrust washers no. 2.

CAUTION: Pay attention not to lose thrust washers or drop them into the timing chain compartment.

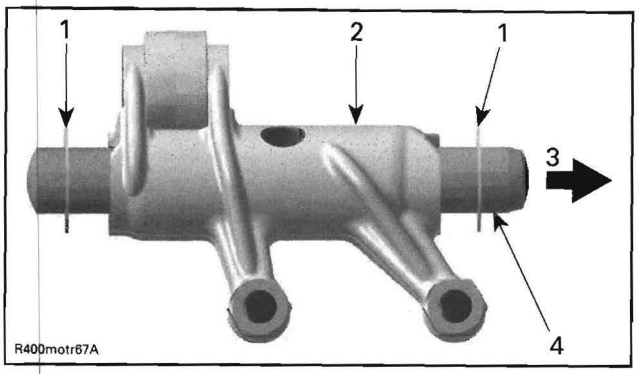

1. 2 thrust washers
2. Rocker arm (exhaust side)
3. Cylinder head — spark plug side
4. Big taper to spark plug side

Rocker Arm Inspection

Inspect each rocker arm for cracks and scored friction surfaces. If so, replace rocker arm assembly.

Check the rocker arm rollers for free movement, wear and excessive radial play. Replace rocker arm assembly if necessary.

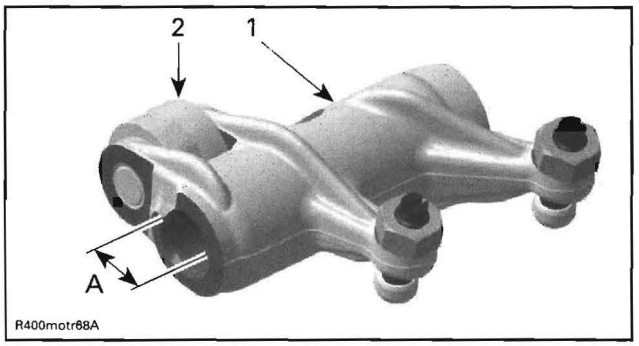

1. Rocker arm (exhaust side)
2. Roller
A. Bore for rocker arm shaft

Measure rocker arm bore diameter. If diameter is out of specification, change the rocker arm assembly.

ROCKER ARM BORE DIAMETER	
NEW	12.036 to 12.050 mm (.4739 to .4744 in)
SERVICE LIMIT	12.060 mm (.4748 in)

Check adjustment screws for free movement, cracks and/or excessive play.

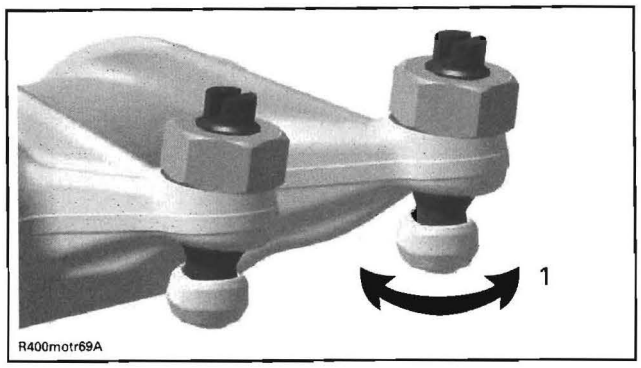

1. Free movement of adjustment screw top

Rocker Arm Shaft

Check for scored friction surfaces; if so, replace parts.

Measure rocker arm shaft diameter.

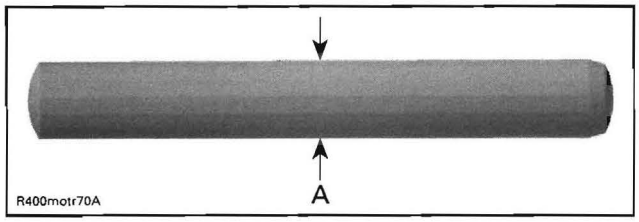

A. Measure rocker arm shaft diameter here

ROCKER ARM SHAFT DIAMETER	
NEW	12.000 to 12.018 mm (.4724 to .4731 in)
SERVICE LIMIT	11.990 mm (.4720 in)

Any area worn excessively will require parts replacement.

Rocker Arm Installation

NOTE: Use the same procedure for exhaust and intake rocker arm.

Apply engine oil on rocker arm shaft.

Install the rocker arm shafts with the chamfered edge first and use following procedure:

- Insert a rocker arm shaft in its bore in cylinder head.
- Install a thrust washer **no. 2** then the proper rocker arm **no. 3** (exhaust side) or **no. 4** (intake side).
- Push in rocker arm shaft until its chamfer reaches the end of rocker arm bore.

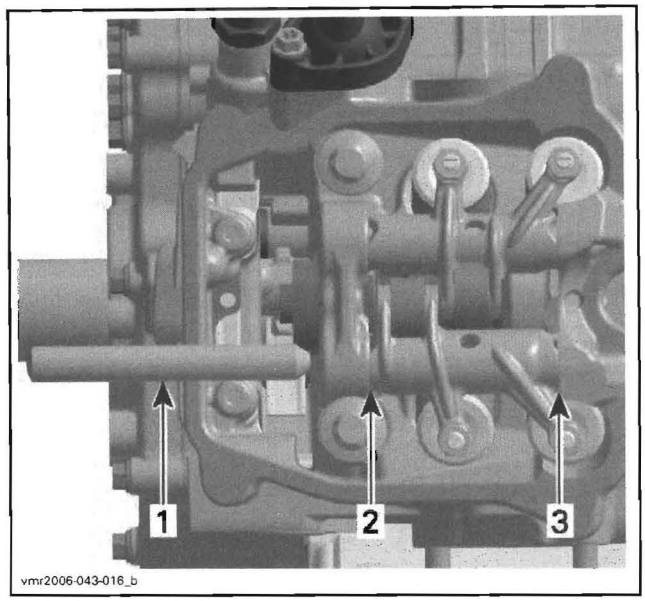

1. Rocker arm shaft
2. Thrust washer (timing chain side)
3. Thrust washer (spark plug side)

- Place the other thrust washer and push rocker arm shaft to end position.
- Install the camshaft retaining plate **no. 5**.

TIMING CHAIN

Refer to *BOTTOM END*, see *TIMING CHAIN*.

CYLINDER HEAD

Cylinder Head Removal

Remove both side panels and hood.

Remove air intake silencer. Refer to *AIR INTAKE SYSTEM*.

Disconnect battery. Refer to *CHARGING SYSTEM*.

Using B.U.D.S., remove pressure in fuel system.

Drain coolant (refer to *COOLING SYSTEM*).

NOTE: Before removing cylinder head, blow out remaining coolant by air pressure. During cylinder head removal, the remaining coolant in cylinder head could overflow into the engine and a little quantity of coolant could drop into the engine. In this case, the engine oil will be contaminated.

Unplug throttle body coolant return hose from coolant reservoir.

Remove muffler. Refer to *EXHAUST SYSTEM*.

Nearby throttle body, disconnect the throttle position sensor (TPS), the idle by-pass valve (IBV) and the manifold air pressure and temperature sensor (MAPTS).

Disconnect the connector from both fuel injectors.

Unplug fuel line.

Remove the thermostat housing on cylinder 2.

Unscrew the Banjo fitting on the top of cylinder 1.

Remove intake manifold with throttle body.

Cylinder 1

Disconnect spark plug cable.

Unplug coolant hose on the top of cylinder head.

Disconnect CAPS.

Remove the front exhaust pipe and the exhaust manifold.

Cylinder 2

Remove the rear exhaust pipe.

Disconnect spark plug cable.

Disconnect CTS.

For Both Cylinders

Remove:
- chain tensioner (see *CHAIN TENSIONER* above)
- valve cover and gasket (see *VALVE COVER* above)
- camshaft timing gear
- cylinder head screws M6
- cylinder head screws M10 retaining cylinder head and cylinder to cylinder base.

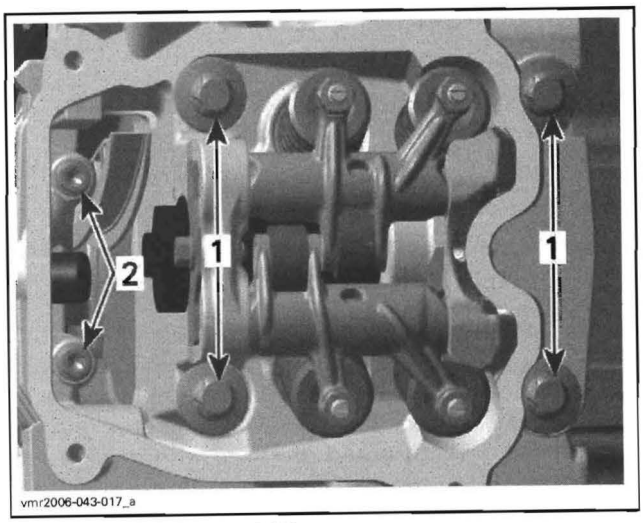

1. Cylinder head screws M10
2. Cylinder head screws M6

Pull up cylinder head.

Remove:
- chain guide
- cylinder head gasket and scrap it.

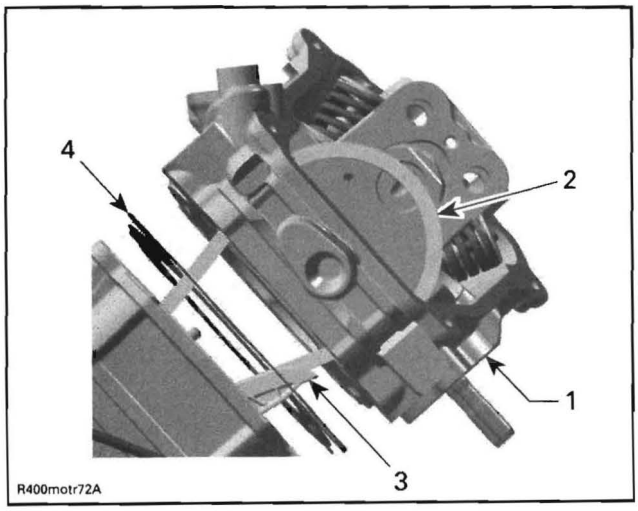

1. Cylinder head
2. Timing chain
3. Chain guide
4. Cylinder head gasket

Cylinder Head Inspection

Inspect timing chain guide for wear, cracks or other damages. Replace if necessary.

Check for cracks between valve seats, if so, replace cylinder head.

Check mating surface between cylinder and cylinder head for contamination. If so, clean both surfaces.

Clean oil support through the cylinder head from contamination.

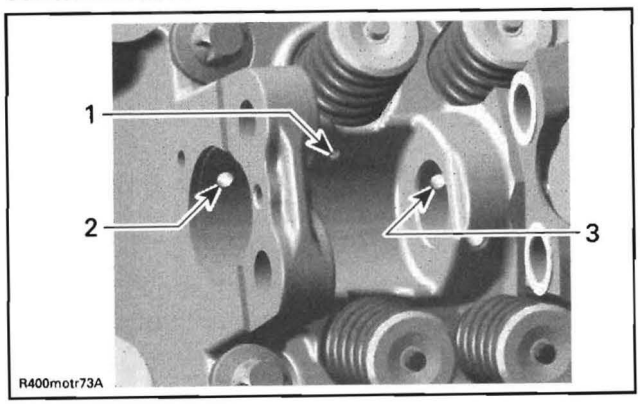

1. Oil port to lubricate camshaft lobes intake/exhaust
2. Oil supply to camshaft bearing journal timing chain side
3. Oil supply to camshaft bearing journal spark plug side

Cylinder Head Installation

NOTE: The cylinder heads are not identical in design. Do not invert the cylinder heads at assembly.

For installation, reverse the removal procedure. Pay attention to the following details.

Ensure dowel pins **no. 9** are in place.

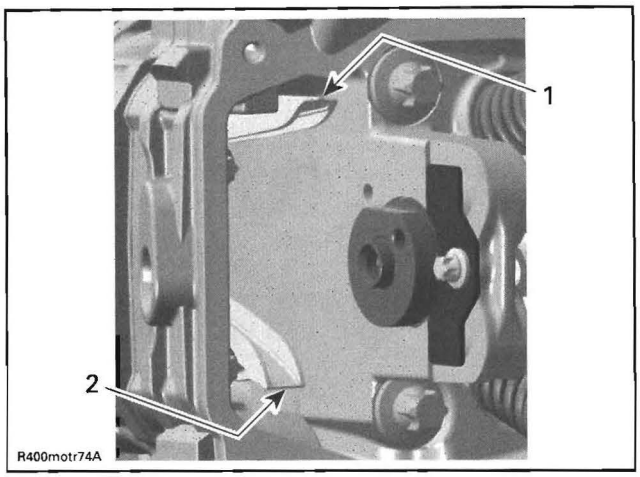

1. Chain guide (fixed between cylinder and cylinder head)
2. Chain tensioner guide (mounted in crankcase)

Install a new cylinder head gasket.

First, torque cylinder head screws M10 in criss-cross sequence to 20 N•m (15 lbf•ft) then finish by tightening to 60 N•m (44 lbf•ft).

Install cylinder head screws M6.

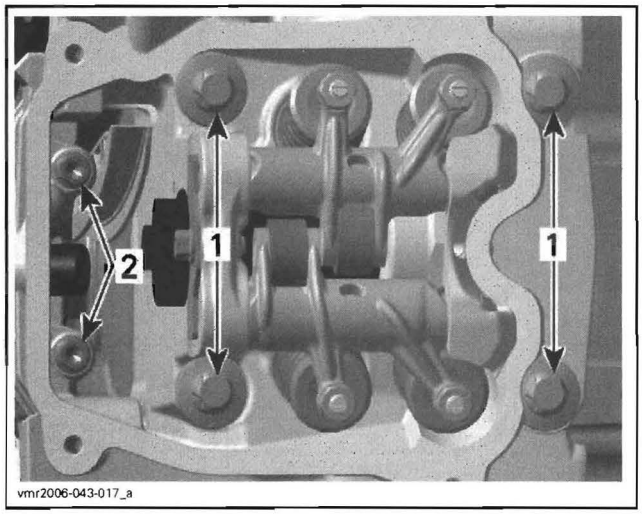

1. Cylinder head screws M10
2. Cylinder head screws M6

Check chain guide for movement.

CAUTION: Chain guide has to be fixed between cylinder and cylinder head.

Install camshaft timing gear and perform proper camshaft timing. Refer to *CAMSHAFT*.

Install all remaining components as described in this section.

CAMSHAFT

Camshaft Timing

NOTE: If a piston (of cylinder 1 or 2) is set to TDC ignition, the camshaft timing gear of the opposite cylinder must be in the following position.

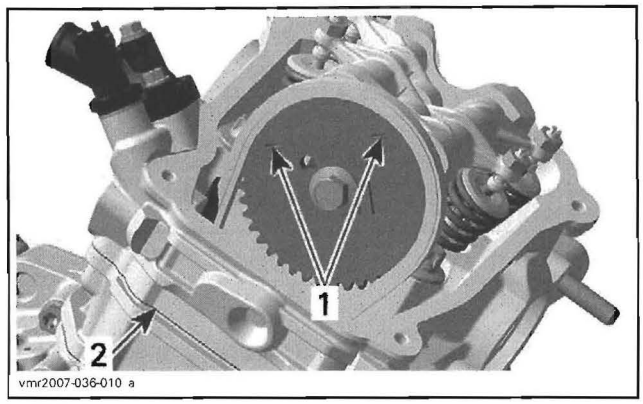

TYPICAL
1. Marks on timing gear of the opposite cylinder
2. Cylinder head base

Camshaft Timing Cylinder 2

Turn crankshaft until piston is at TDC ignition as follows.

Remove:

- spark plug cable and spark plug of both cylinders
- valve covers of both cylinders
- plug screw and O-ring of magneto cover

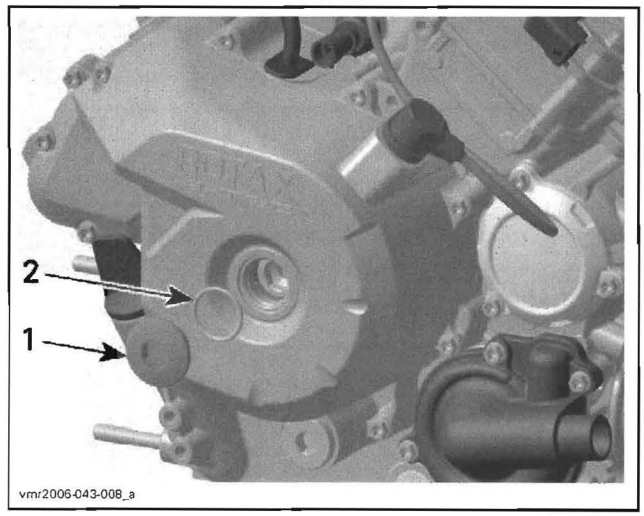

TYPICAL
1. Plug screw
2. O-ring

- crankshaft position sensor.

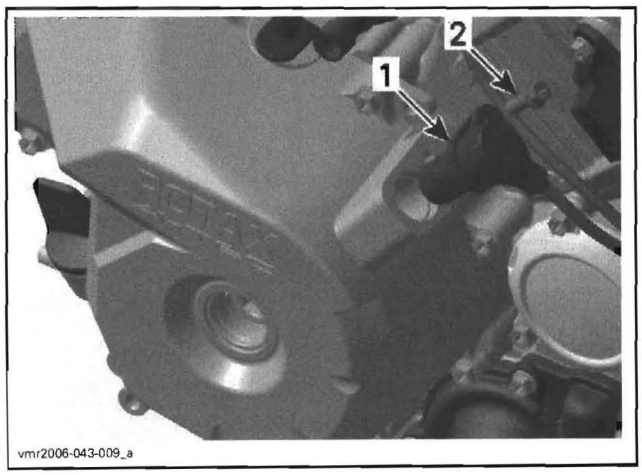

TYPICAL
1. *Crankshaft position sensor*
2. *Screw*

Use a 14 mm Allen key to turn crankshaft until piston 2, rear is at TDC ignition.

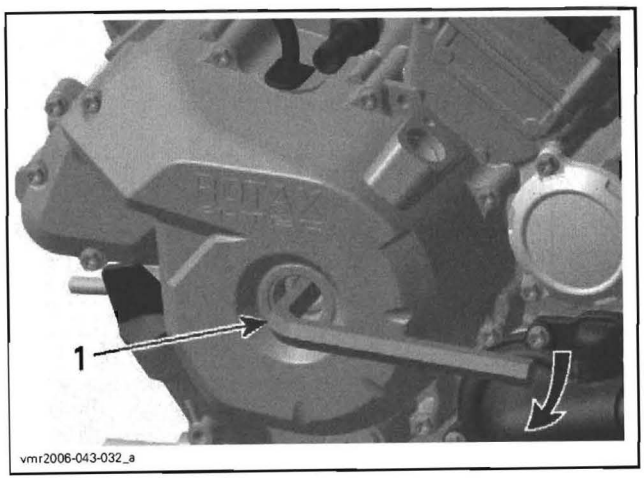

TYPICAL
1. *Allen key 14 mm*

When rear piston is at TDC ignition, marks on magneto flywheel "2" and on the magneto cover are aligned.

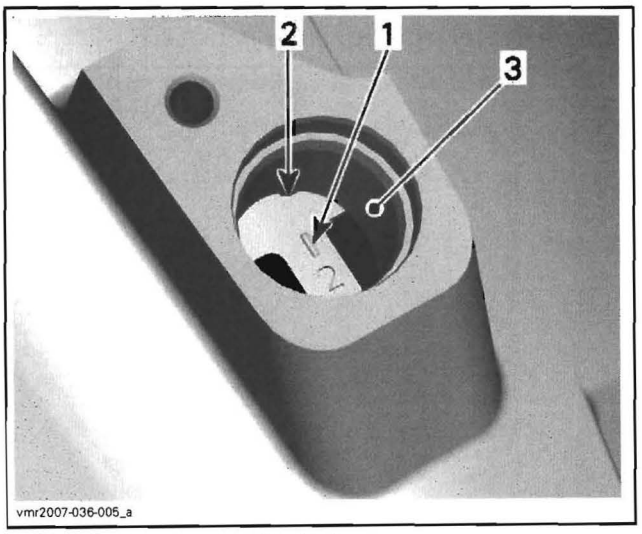

1. *Mark "2" on magneto flywheel*
2. *Notch on magneto cover*
3. *Crankshaft position sensor location*

At TDC ignition, the printed marks on the camshaft timing gear have to be parallel to cylinder head base.

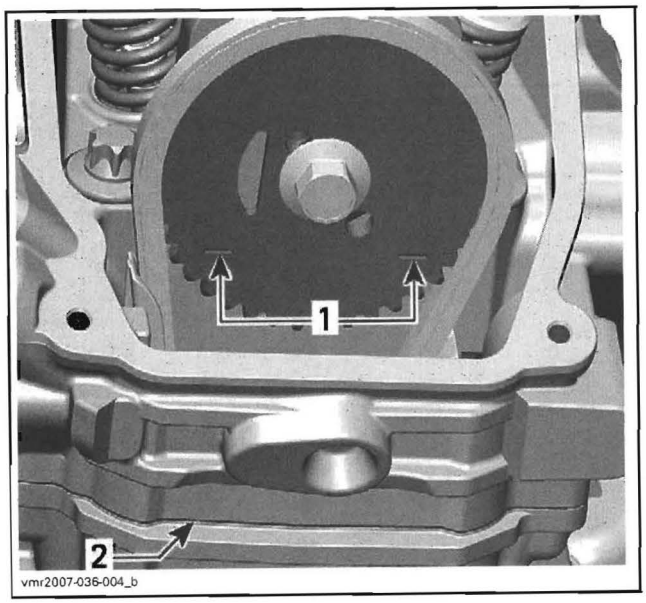

TYPICAL
1. *Printed marks on camshaft timing gear*
2. *Cylinder head base*

Camshaft Timing Cylinder 1

Turn cylinder 2 to TDC ignition, see *CAMSHAFT TIMING CYLINDER 2*.

Using a 14 mm Allen key, turn crankshaft 280° counterclockwise, until marks on magneto flywheel "1" and magneto cover are aligned.

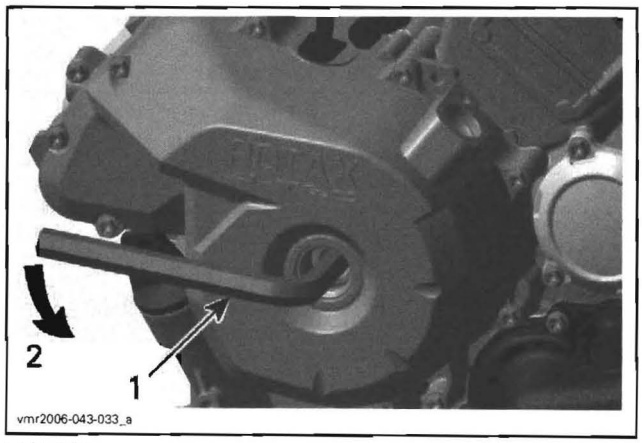

TYPICAL
1. *Allen key 14 mm*
2. *Turn crankshaft 280° counterclockwise*

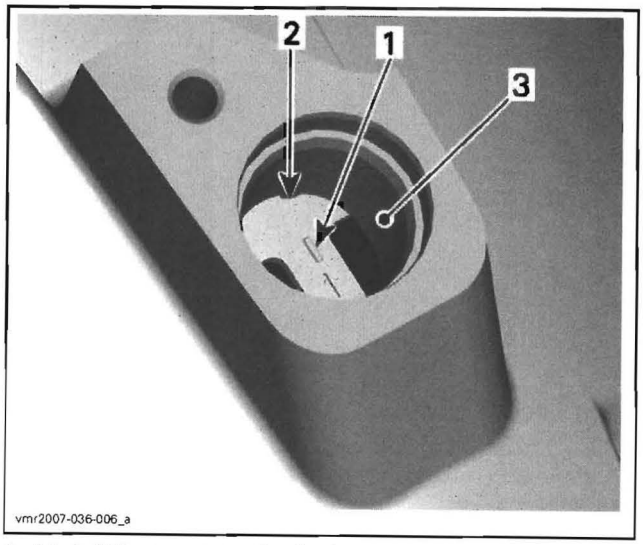

1. *Mark "1" on magneto flywheel*
2. *Notch on magneto cover*
3. *Location of crankshaft position sensor*

NOTE: At TDC ignition, the printed marks on the camshaft timing gear have to be parallel to cylinder head base as per following illustration.

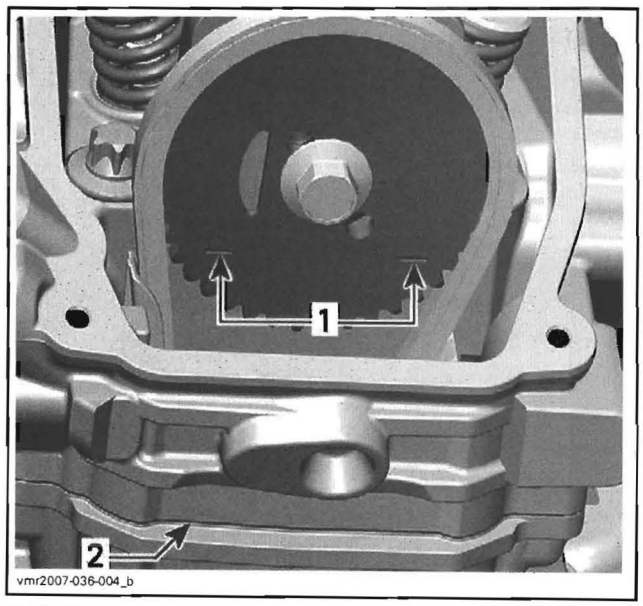

TYPICAL
1. *Printed marks on camshaft timing gear*
2. *Cylinder head base*

Camshaft Removal

The removal procedure is the same for both camshafts.

Each camshaft is different in design. Thus, it is important not to mix up any parts of the camshaft assembly with that of the other cylinder. Keep parts as a group.

Remove:

- valve cover (see *VALVE COVER* above)
- chain tensioner (see *CHAIN TENSIONER* above)
- camshaft timing gear (see *CAMSHAFT TIMING GEAR* above)
- camshaft retaining plate

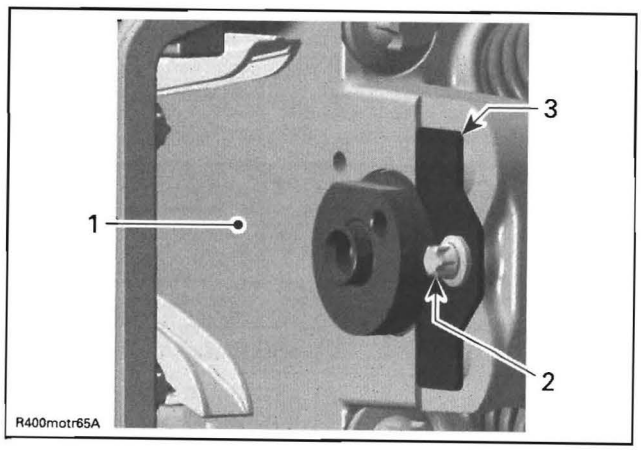

1. *Cylinder head*
2. *Allen screw*
3. *Camshaft retaining plate*

- rocker arms (see *ROCKER ARM* above)

– camshaft.

NOTE: For removal rotate camshaft so that intake/exhaust lobe shows to upper side of cylinder head.

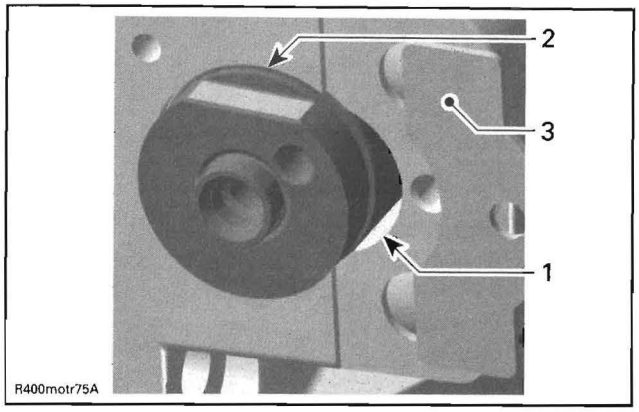

1. Area for camshaft lobes
2. Camshaft
3. Camshaft retaining plate

Camshaft Inspection

Check each lobe and bearing journal of camshaft for scoring, scuffing, cracks or other signs of wear.

Measure camshaft bearing journal diameter and lobe height using a micrometer.

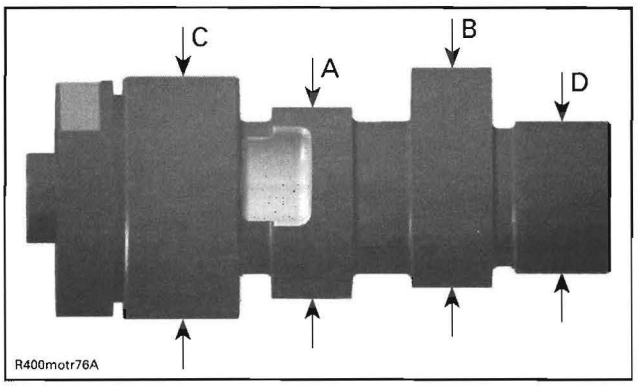

A. Camshaft lobe (exhaust valves)
B. Camshaft lobe (intake valves)
C. Camshaft journal timing chain side
D. Camshaft journal spark plug side

CAMSHAFT LOBE (exhaust)	
NEW	31.940 to 32.140 mm (1.2575 to 1.2654 in)
SERVICE LIMIT	31.920 mm (1.2567 in)
CAMSHAFT LOBE (intake)	
NEW	32.110 to 32.310 mm (1.2642 to 1.2721 in)
SERVICE LIMIT	32.090 mm (1.2634 in)

CAMSHAFT JOURNAL (timing chain side)	
NEW	34.959 to 34.975 mm (1.3763 to 1.3770 in)
SERVICE LIMIT	34.950 mm (1.3760 in)
CAMSHAFT JOURNAL (spark plug side)	
NEW	21.959 to 21.980 mm (.8645 to .8654 in)
SERVICE LIMIT	21.950 mm (.8642 in)

Measure clearance between both ends of camshaft and cylinder head.

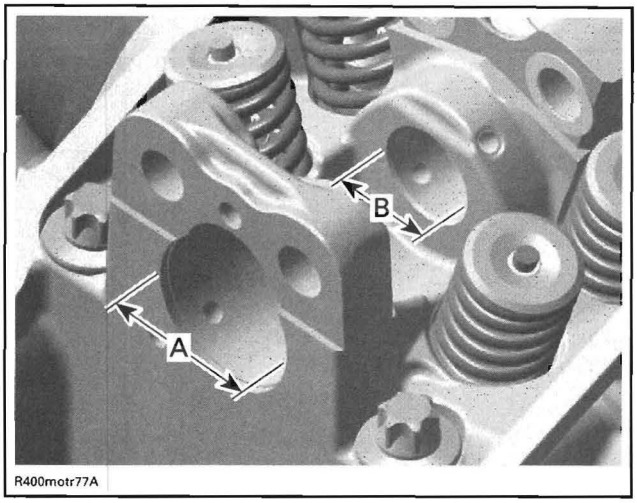

A. Camshaft bore timing chain side
B. Camshaft bore spark plug side

CAMSHAFT BORE (timing chain side)	
NEW	35.000 to 35.025 mm (1.3780 to 1.3789 in)
SERVICE LIMIT	35.040 mm (1.3795 in)
CAMSHAFT BORE (spark plug side)	
NEW	22.000 to 22.021 mm (.8661 to .8670 in)
SERVICE LIMIT	22.040 mm (.8677 in)

Replace parts that are not within specifications.

Camshaft Installation

For installation, reverse the removal procedure. Pay attention to the following details.

CAUTION: The camshafts are not identical in design. Do not invert the camshafts during assembly. Any mix-up of the components will lead to engine damage.

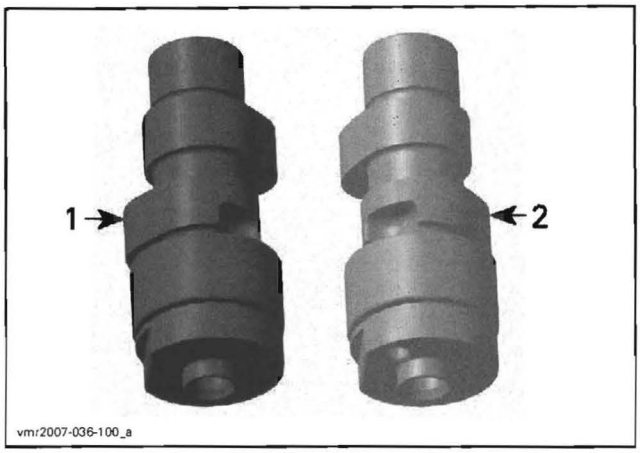

1. Camshaft of cylinder 1
2. Camshaft of cylinder 2

Properly install rocker arms. Refer to *ROCKER ARM* above.

Place the camshaft retaining plate in the slot of the camshaft.

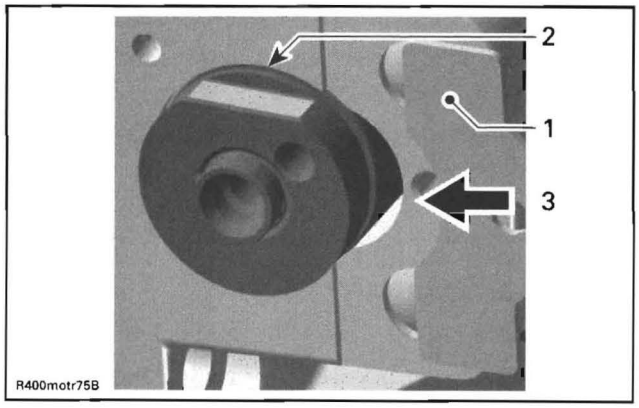

1. Camshaft retaining plate position
2. Slot retaining camshaft
3. Direction of movement

Install camshaft timing gear and perform proper camshaft timing, as described above.

Adjust valve clearance. Refer to *VALVE CLEARANCE ADJUSTMENT.*

For other parts, refer to proper installation procedure.

VALVE SPRING

Valve Spring Removal

Remove:

- rocker arms (see *ROCKER ARM* above)
- cylinder head (see *CYLINDER HEAD* above).

Compress valve spring **no. 6**; use valve spring compressor clamp (P/N 529 035 724) and valve spring compressor cup (P/N 529 035 764).

⚠ WARNING

Always wear safety glasses when disassembling valve springs. Be careful when unlocking valves. Components could fly away because of the strong spring preload.

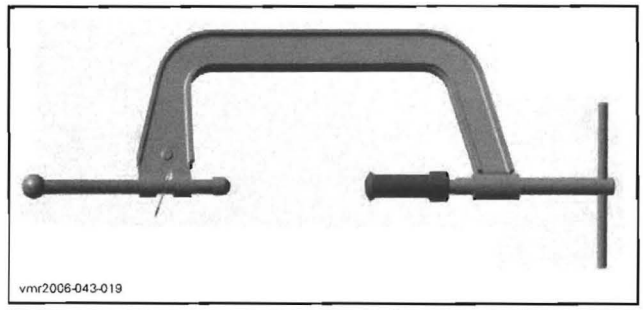

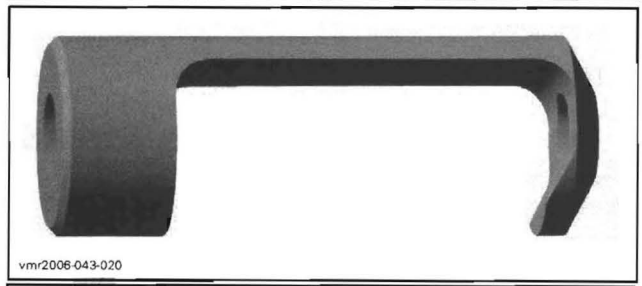

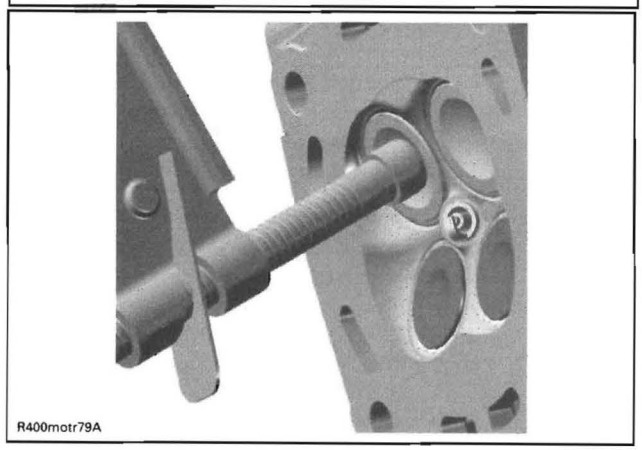

LOCATE VALVE SPRING COMPRESSOR CLAMP IN CENTER OF THE VALVE

Remove valve cotters.

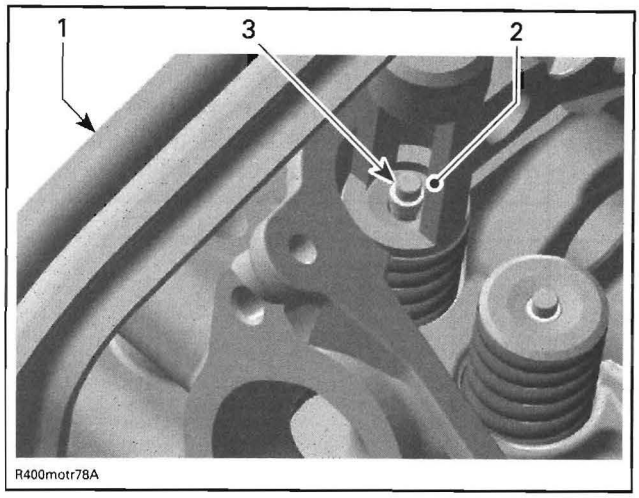

1. Valve spring compressor clamp
2. Valve spring compressor cup
3. Valve cotter

Withdraw valve spring compressor, valve spring retainer **no. 7** and valve spring **no. 6**.

Valve Spring Inspection

Check valve spring for visible damages. If so, replace valve spring.

Check valve spring for free length and straightness.

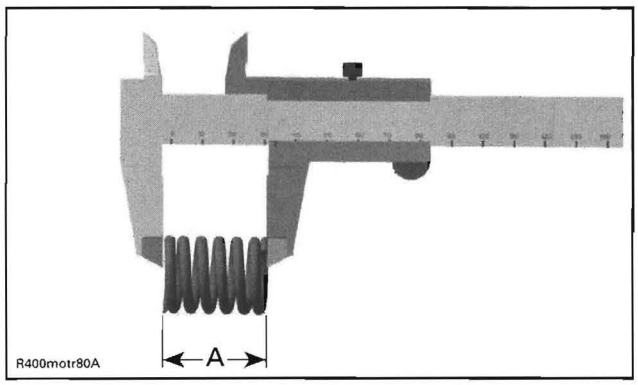

A. Valve spring length

VALVE SPRING FREE LENGTH	
NOMINAL NEW	40.81 mm (1.607 in)
SERVICE LIMIT	39.00 mm (1.535 in)

Replace valves springs if not within specifications.

Valve Spring Installation

For installation, reverse the removal procedure. Pay attention to the following details.

Colored area of the valve spring must be placed on top.

To ease installation of cotters, apply oil or grease on them so that they remain in place while releasing the spring.

NOTE: Valve cotter must be properly engaged in valve stem grooves.

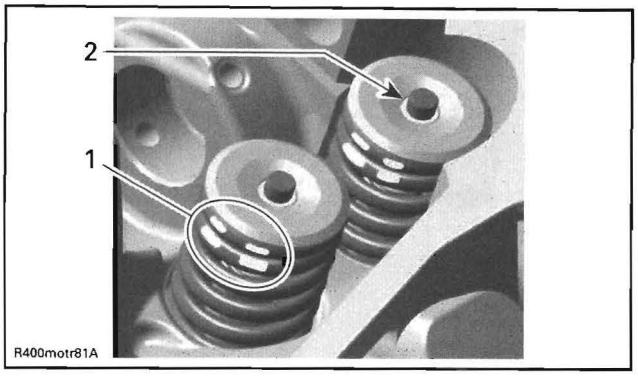

1. Position of the valve spring
2. Valve cotter

After spring is installed, ensure it is properly locked by tapping on valve stem end with a soft hammer so that valve opens and closes a few times.

CAUTION: An improperly locked valve spring will cause engine damage.

VALVE

Valve Removal

Remove valve spring, see *VALVE SPRING* above.

Push valve stem, then pull valves (intake and exhaust) out of valve guide.

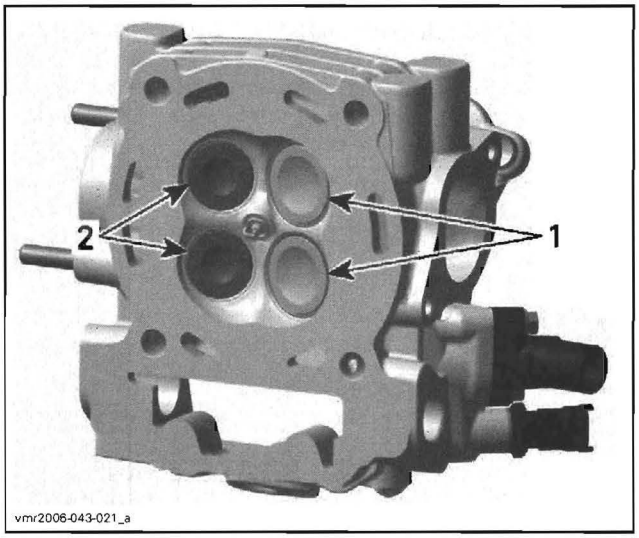

1. Intake valves 31 mm
2. Exhaust valves 27 mm

Remove valve stem seal **no. 8** with Snap-on pliers (P/N YA 8230) and discard it.

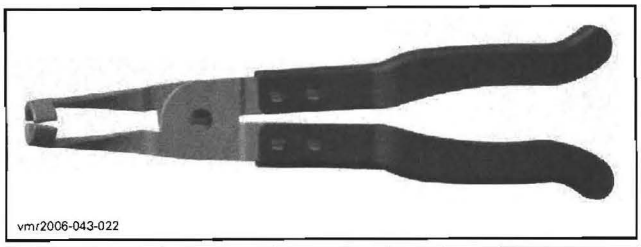
vmr2006-043-022

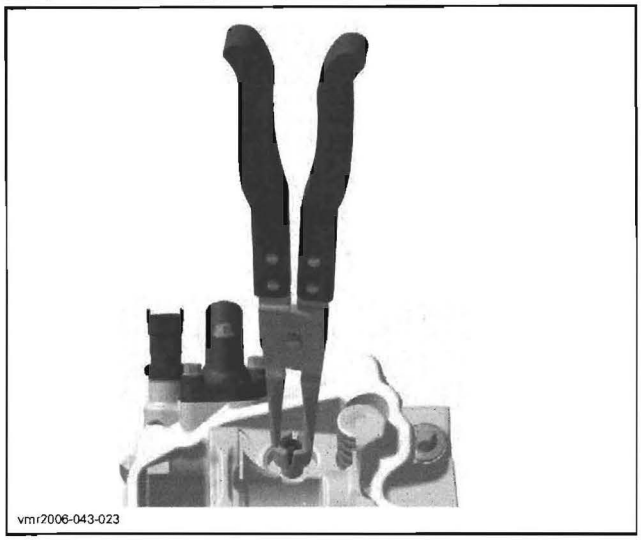
vmr2006-043-023

Valve Inspection

Valve Stem Seal

Always install new seals whenever valves are removed.

Valve

Inspect valve surface, check for abnormal stem wear and bending. If out of specification, replace by a new one.

VALVE OUT OF ROUND (intake and exhaust valves)	
NEW	0.005 mm (.0002 in)
SERVICE LIMIT	0.06 mm (.0024 in)

Valve Stem and Valve Guide Clearance

Measure valve stem and valve guide in three places using a micrometer and a small bore gauge.

NOTE: Clean valve guide to remove carbon deposits before measuring.

Change valve if valve stem is out of specification or has other damages such as wear or friction surface.

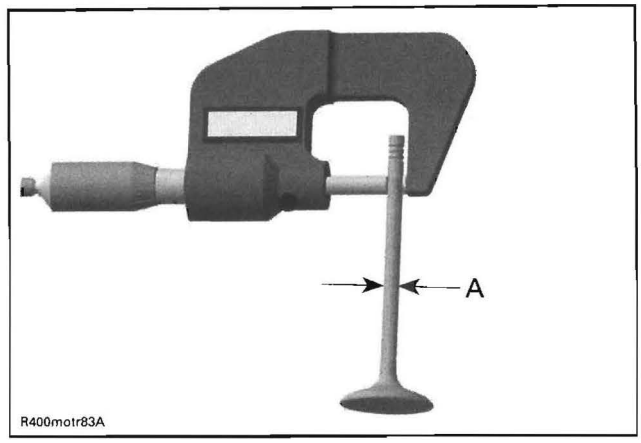

R400motr83A

A. Valve stem diameter

VALVE STEM DIAMETER	
EXHAUST VALVE	
NEW	4.956 to 4.970 mm (.1951 to .1957 in)
SERVICE LIMIT	4.930 mm (.1941 in)
INTAKE VALVE	
NEW	4.966 to 4.980 mm (.1955 to .1960 in)
SERVICE LIMIT	4.930 mm (.1941 in)

Replace valve guide out of cylinder head if valve guide is out of specification or has other damages such as wear or friction surface (see *VALVE GUIDE PROCEDURE* below).

VALVE GUIDE DIAMETER (intake and exhaust valves)	
NEW	5.006 to 5.018 mm (.1971 to .1976 in)
SERVICE LIMIT	5.050 mm (.1988 in)

Valve Face and Seat

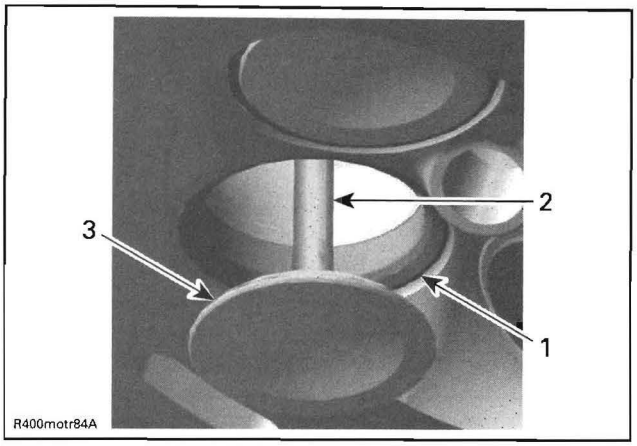

1. Valve seat
2. Exhaust valve contaminated area
3. Valve face (contact surface to valve seat)

Check valve face and seat for burning or pittings and replace valve or cylinder head if there are signs of damage.

Ensure to seat valves properly. Apply some lapping compound to valve face and work valve on its seat with a lapping tool (see *VALVE GUIDE PROCEDURE* below).

Measure valve face contact width.

NOTE: The location of contact area should be in center of valve seat.

Measure valve seat width using a caliper.

VALVE SEAT CONTACT WIDTH	
EXHAUST VALVE	
NEW	1.25 to 1.55 mm (.049 to .061 in)
SERVICE LIMIT	2.00 mm (.078 in)
INTAKE VALVE	
NEW	1.05 to 1.35 mm (.041 to .053 in)
SERVICE LIMIT	1.80 mm (.070 in)

If valve seat contact width is too wide or has dark spots, replace the cylinder head.

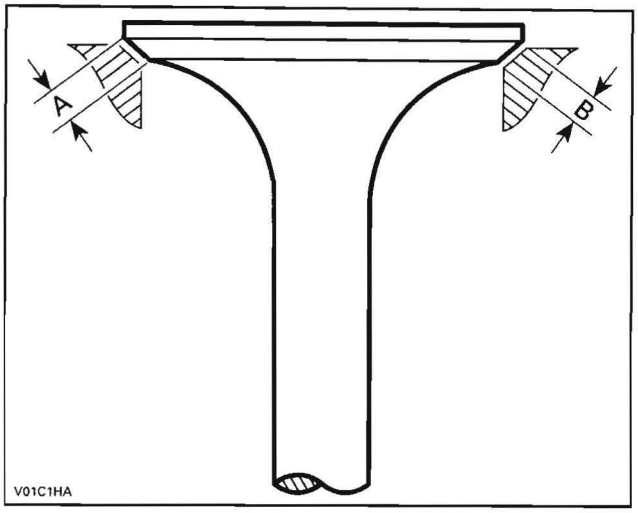

A. Valve face contact width
B. Valve seat contact width

Valve Installation

For installation, reverse the removal procedure. Pay attention to the following details.

Install a NEW valve stem seal. Make sure thrust washer is installed before installing seal.

Apply engine oil on valve stem and install it.

CAUTION: Be careful when valve stem is passed through sealing lips of valve stem seal.

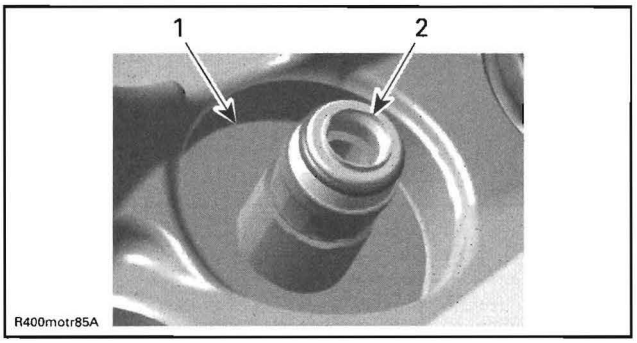

1. Thrust washer
2. Sealing lips of valve stem seal

To ease installation of cotters, apply oil or grease on them so that they remain in place while releasing the spring.

After spring is installed, ensure it is properly locked by tapping on valve stem end with a soft hammer so that valve opens and closes a few times.

CAUTION: An improperly locked valve spring will cause engine damage.

VALVE GUIDE

Valve Guide Removal

Remove:
- cylinder head (see *CYLINDER HEAD* above)
- valve spring (see *VALVE SPRING* above)
- valves (see *VALVE* above).

NOTE: Clean valve guide area from contamination before removal.

Using valve guide remover (P/N 529 035 924), remove valve guide with a hammer.

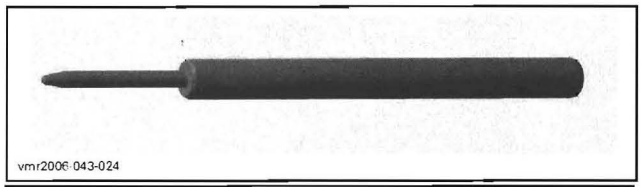

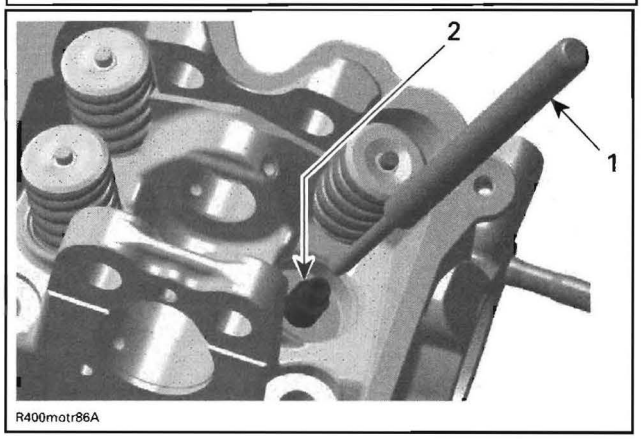

1. Valve guide remover
2. Valve guide

Valve Guide Inspection

Always replace valve stem seals whenever valve guides are removed.

Clean the valve guide bore before reinstalling the valve guide into cylinder head.

Valve Guide Installation

For installation, reverse the removal procedure. Pay attention to the following details.

Use valve guide installer (P/N 529 035 853) to install valve guide.

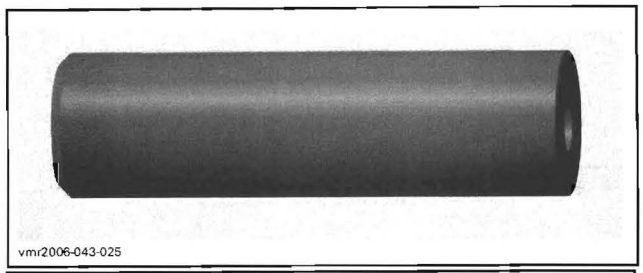

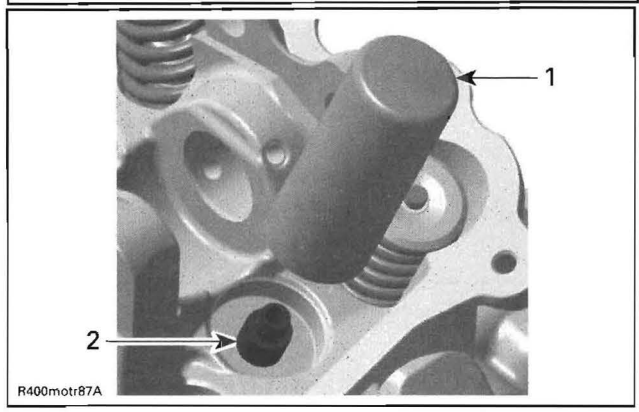

1. Valve guide installer
2. Valve guide

NOTE: Apply Loctite 767 (antiseize lubricant) (P/N 293 800 070) on valve guide prior to install it into the cylinder head.

CAUTION: Push valve guide in the cold cylinder head as per following illustration.

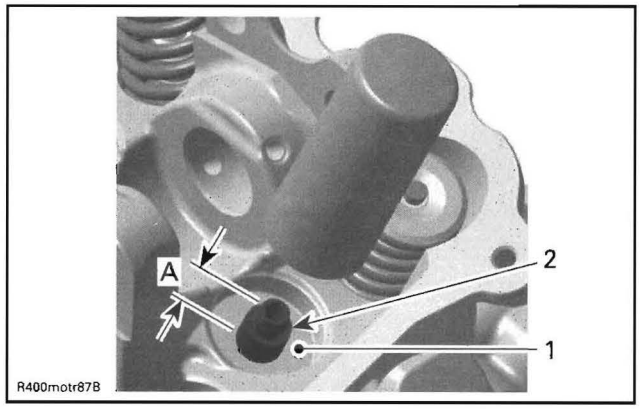

1. Thrust surface of cylinder head
2. Valve guide
A. Measurement from thrust surface to valve guide top

VALVE GUIDE (measurement "A")	
NEW	14.00 to 14.40 mm (.5512 to .5669 in)

Valve guide to be adjusted in diameter by using a reamer.

VALVE GUIDE DIAMETER (intake and exhaust valves)	
NEW	5.006 to 5.018 mm (.1971 to .1976 in)

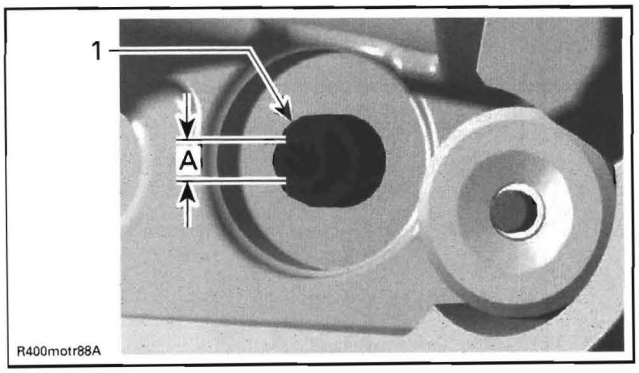

1. Valve guide
A. Valve guide diameter

NOTE: Ensure to turn reamer in the right direction. Use cutting oil and make brakes to clean reamer/valve guide from metal shavings.

Apply some lapping compound to valve face and work valve on its seat with a lapping tool.

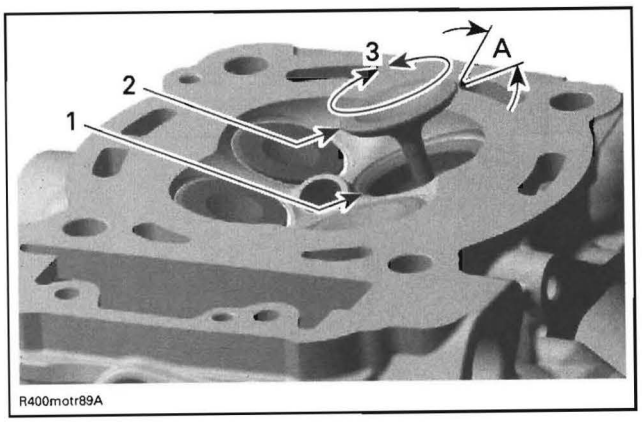

1. Valve seat
2. Valve face (contact surface to valve seat)
3. Turn valve while pushing against cylinder head
A. Valve seat angle 45°

NOTE: Ensure to seat valves properly. Apply marking paste to ease checking contact pattern.

Repeat procedure until valve seat/valve face fits together.

CYLINDER

Cylinder Removal

NOTE: Before removal or installation, make sure respective cylinder is set to TDC ignition. Refer to *CAMSHAFT*.

Remove:

- chain tensioner (see *CHAIN TENSIONER*)
- camshaft timing gear (see *CAMSHAFT TIMING GEAR*)
- cylinder head (see *CYLINDER HEAD*).

Pull cylinder.

Discard cylinder base gaskets.

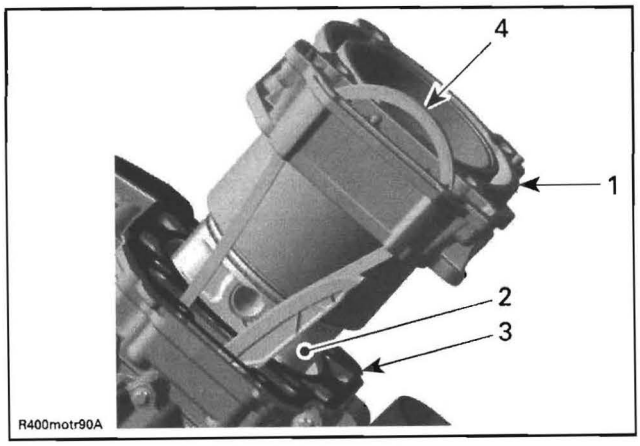

1. Cylinder
2. Piston assembly
3. Cylinder base gasket
4. Camshaft timing chain

Cylinder Inspection

Check cylinder for cracks, scoring and wear ridges on the top and bottom of the cylinder. If so, replace cylinder.

Cylinder Taper

Measure cylinder bore and if it is out of specifications, replace cylinder and piston rings.

Measure cylinder bore at 3 recommended positions. See the following illustration.

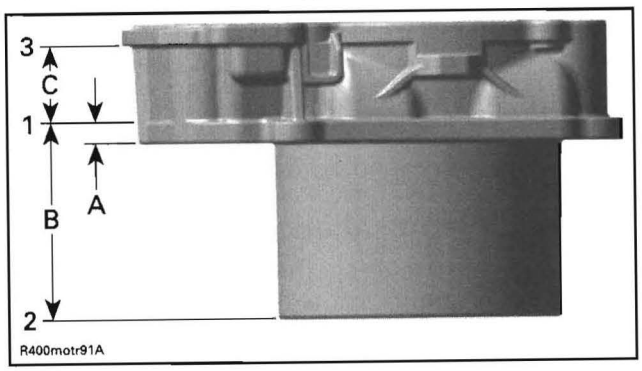

1. First measuring of diameter
2. Second measuring of diameter
3. Third measuring of diameter
A. 7 mm (.276 in) from cylinder bottom
B. 68 mm (2.68 in)
C. 32 mm (1.260 in)

CYLINDER TAPER IN DIAMETER	
NEW (maximum)	0.038 mm (.0015 in)
SERVICE LIMIT	0.090 mm (.0035 in)

Distance between measurements should not exceed the service limit mentioned above.

Cylinder Out of Round

Measure cylinder diameter in piston axis direction from top of cylinder. Take another measurement 90° from first one and compare.

NOTE: Take the same measuring points like described in *CYLINDER TAPER* above.

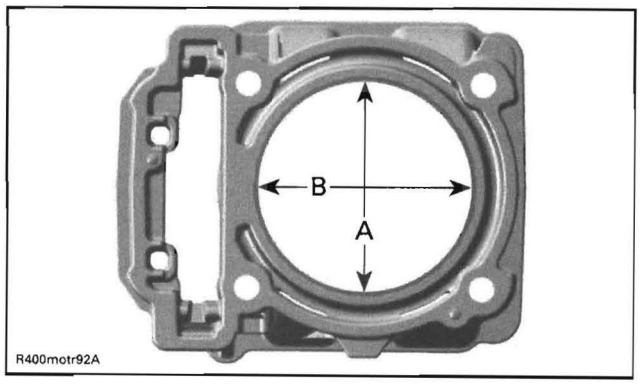

A. Perpendicular to crankshaft axis
B. Parallel to crankshaft axis

CYLINDER OUT OF ROUND	
NEW (maximum)	0.015 mm (.0006 in)
SERVICE LIMIT	0.020 mm (.0008 in)

Cylinder Installation

For installation, reverse the removal procedure. Pay attention to the following details.

CAUTION: Always replace cylinder base gasket before installing the cylinder.

First mount cylinder 2. Then remove crankshaft locking bolt (P/N 529 035 617). Crank the engine further and position piston 1 at TDC. Mount cylinder 1. The cylinder can not be pushed fully over the piston unless the piston is located at TDC.

Apply engine oil in the bottom area of the cylinder bore and also on the band of the piston ring compressor (P/N 529 035 919) piston ring compressor tool.

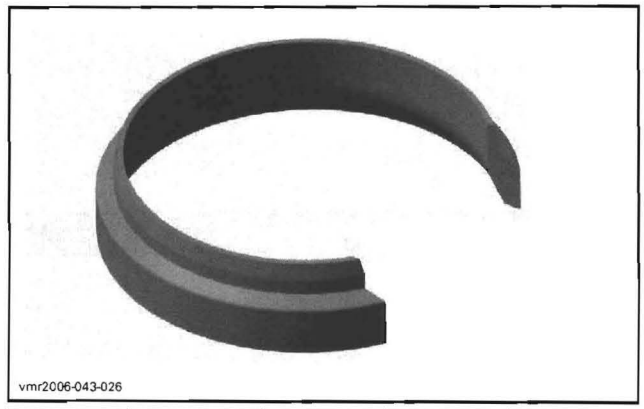

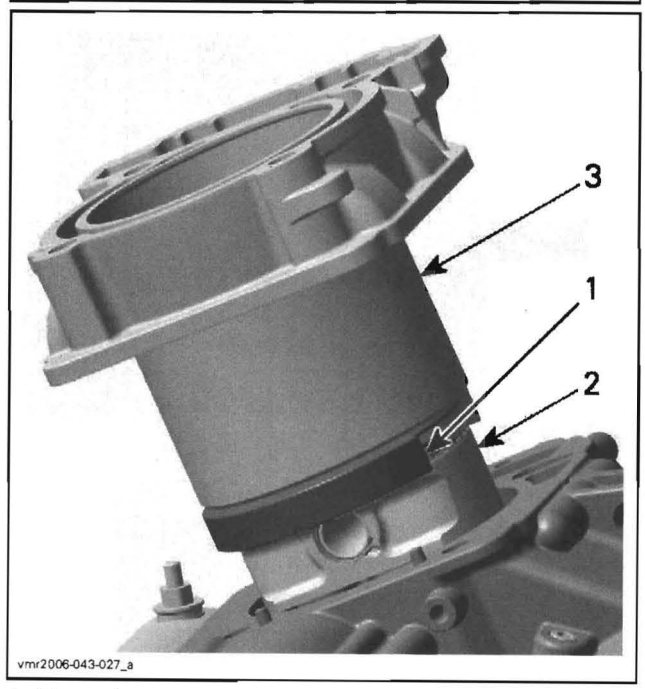

1. Piston ring compressor
2. Piston
3. Cylinder

NOTE: Put timing chain through the chain pit then put the cylinder in place.

CAUTION: Chain guide has to be fixed between cylinder and cylinder head.

NOTE: After both cylinders are installed, turn crankshaft until piston of cylinder 2 is at TDC ignition and lock crankshaft. Refer to *CAMSHAFT*.

Install cylinder head and the other parts in accordance with the proper installation procedures.

PISTON

Piston Removal

NOTE: Before removal or installation, make sure respective cylinder is set to TDC ignition. Refer to *CAMSHAFT*.

Remove:
- cylinder head (see *CYLINDER HEAD* above)
- cylinder (see *CYLINDER* above).

Place a rag under piston and in the area of timing chain compartment.

⚠ WARNING

Piston circlips are spring loaded.

Remove one piston circlip and discard it.

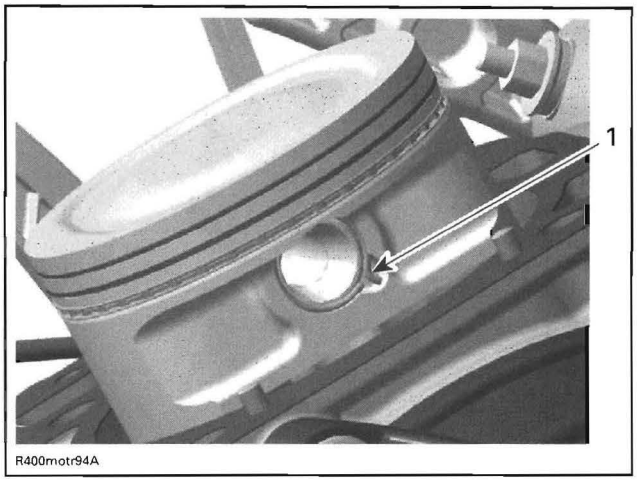

1. Piston circlip

NOTE: The removal of both piston circlips is not necessary to remove piston pin.

Push piston pin out of piston.

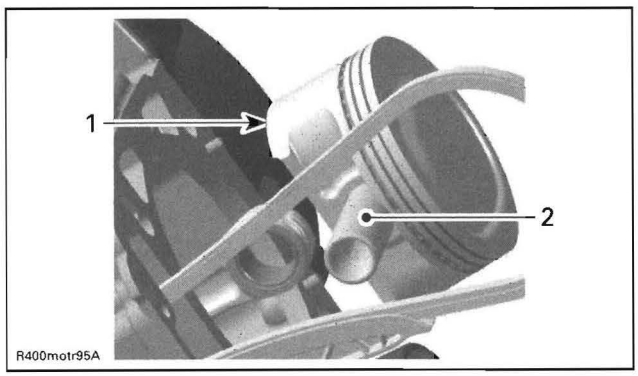

1. Piston
2. Piston pin

Detach piston from connecting rod.

Piston Inspection

Inspect piston for scoring, cracking or other damages. Replace piston and piston rings if necessary.

Using a micrometer, measure piston at 8 mm (.315 in) perpendicularly (90°) to piston pin.

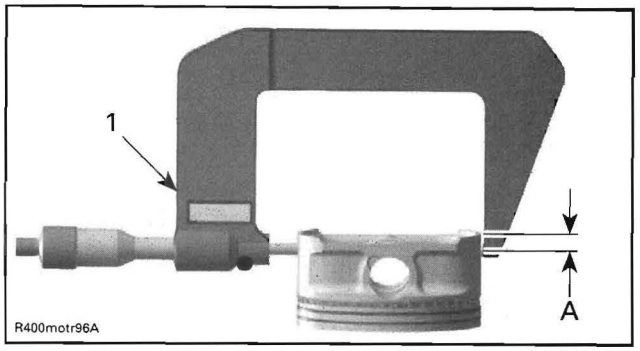

1. Measuring perpendicularly (90°) to piston pin
A. 8 mm (.315 in)

The measured dimension should be as described in the following tables. If not, replace piston.

PISTON MEASUREMENT	
NEW	90.950 to 90.966 mm (3.5807 to 3.5813 in)
SERVICE LIMIT	90.850 mm (3.577 in)

Piston/Cylinder Clearance

Adjust and lock a micrometer to the piston dimension.

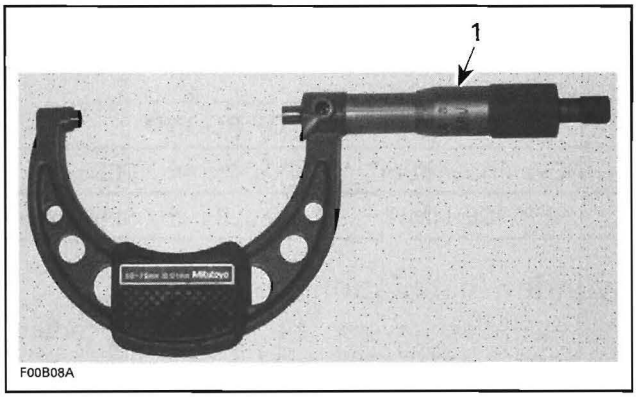

1. Micrometer set to the piston dimension

With the micrometer set to the dimension, adjust a cylinder bore gauge to the micrometer dimension and set the indicator to 0 (zero).

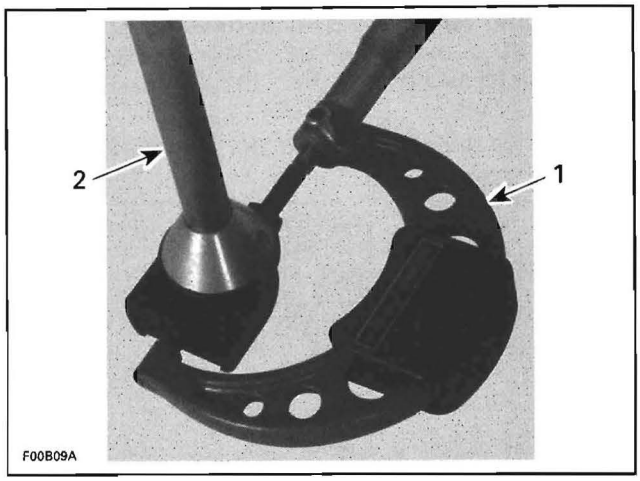

1. *Use the micrometer to set the cylinder bore gauge*
2. *Dial bore gauge*

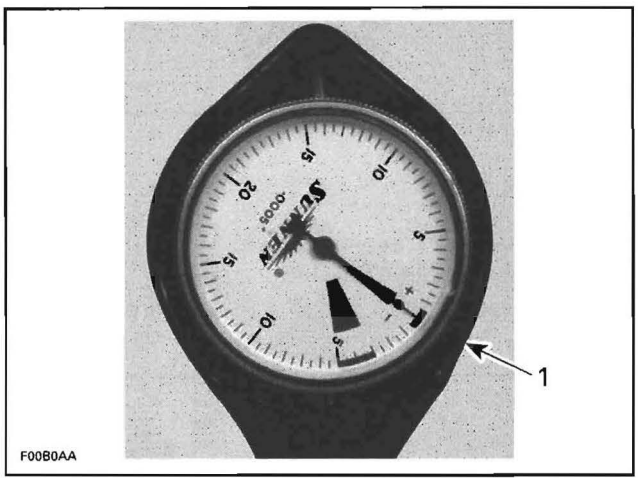

TYPICAL
1. *Indicator set to 0 (zero)*

Position the dial bore gauge 20 mm (.787 in) above cylinder base, measuring perpendicularly (90°) to piston pin axis.

Read the measurement on the cylinder bore gauge. The result is the exact piston/cylinder wall clearance.

PISTON/CYLINDER CLEARANCE	
NEW	0.027 to 0.057 mm (.0011 to .0022 in)
SERVICE LIMIT	0.100 mm (.0040 in)

NOTE: Make sure used piston is not worn.

If clearance exceeds specified tolerance, replace piston by a new one and measure piston/cylinder clearance again.

NOTE: Make sure the cylinder bore gauge indicator is set exactly at the same position as with the micrometer, otherwise the reading will be false.

Connecting Rod/Piston Pin Clearance

Using synthetic abrasive woven, clean piston pin from deposits.

Inspect piston pin for scoring, cracking or other damages.

Measure piston pin. See the following illustration for the proper measurement positions.

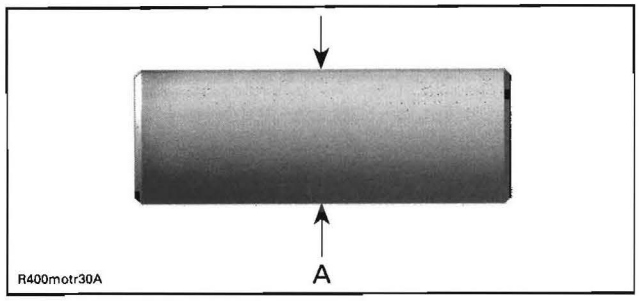

A. Piston pin diameter

PISTON PIN DIAMETER	
NEW	19.996 to 20.000 mm (.7872 to .7874 in)
SERVICE LIMIT	19.980 mm (.7866 in)

Replace piston pin if diameter is out of specifications.

Measure inside diameter of connecting rod small end bushing.

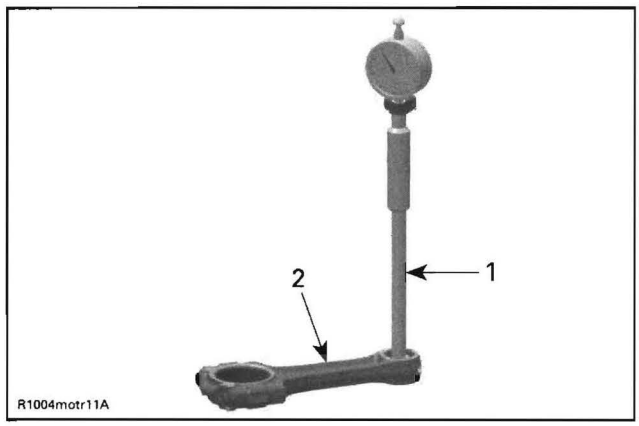

1. *Bore gauge*
2. *Connecting rod*

CONNECTING ROD SMALL END DIAMETER	
NEW	20.010 to 20.020 mm (.7878 to .7882 in)
SERVICE LIMIT	20.060 mm (.7898 in)

Replace connecting rod if diameter of connecting rod small end is out of specifications. Refer to *BOTTOM END* for removal procedure.

Compare measurements to obtain the connecting rod/piston pin clearance.

CONNECTING ROD/ PISTON PIN CLEARANCE	
SERVICE LIMIT	0.080 mm (.0035 in)

Piston Installation

For installation, reverse the removal procedure. Pay attention to the following details.

Apply engine oil on the piston pin.

Insert piston pin into piston and connecting rod.

CAUTION: Take care that pistons will be installed with the punched arrow on piston top direction to the rear side of the engine.
Front cylinder: Mark on top of piston must show to intake side.
Rear cylinder: Mark on top of piston must show to exhaust side.

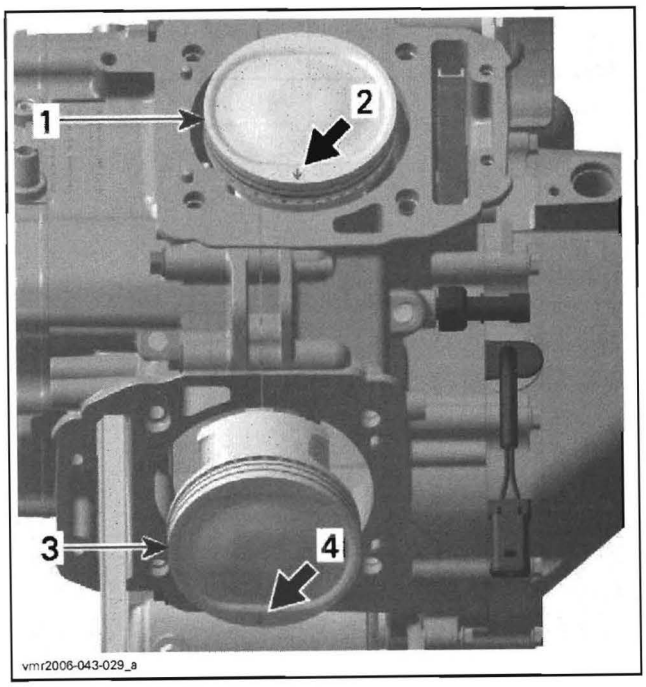

1. *Piston of cylinder 1*
2. *Mark on piston must show to intake side of cylinder 1*
3. *Piston of cylinder 2*
4. *Mark on piston must show to exhaust side of cylinder 2*

Use the piston circlip installer (P/N 529 035 921) piston appropriate circlip installer to assemble the new piston circlip as per following procedure:

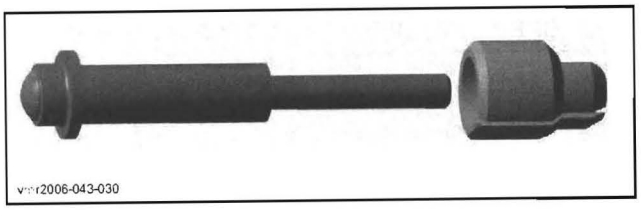

CAUTION: Always replace disassembled piston circlip(s) by new ones. Place a rag on cylinder base to avoid dropping the circlip inside the engine.

- Place circlip in sleeve as per following illustration.

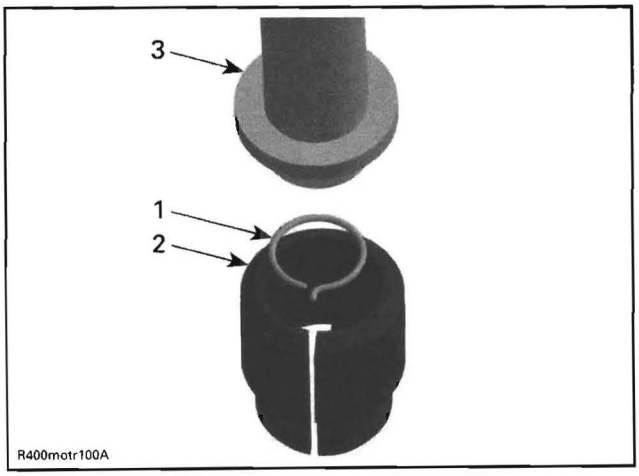

1. *Circlip*
2. *Sleeve*
3. *Assembly jig from piston clip installer*

- Push taper side of assembly jig until circlip reaches middle of sleeve.
- Align sleeve with piston pin axis and push assembly jig until circlip engages in piston.

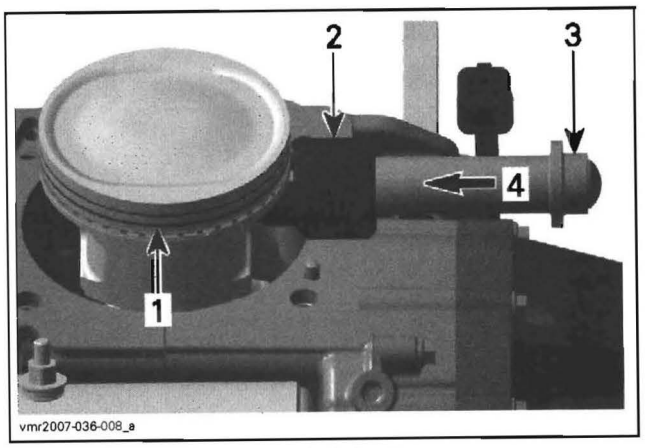

1. *Hold piston while pushing circlip in place*
2. *Sleeve*
3. *Assembly jig*
4. *Direction to push circlip*

NOTE: Take care that the hook of the piston circlip is positioned properly.

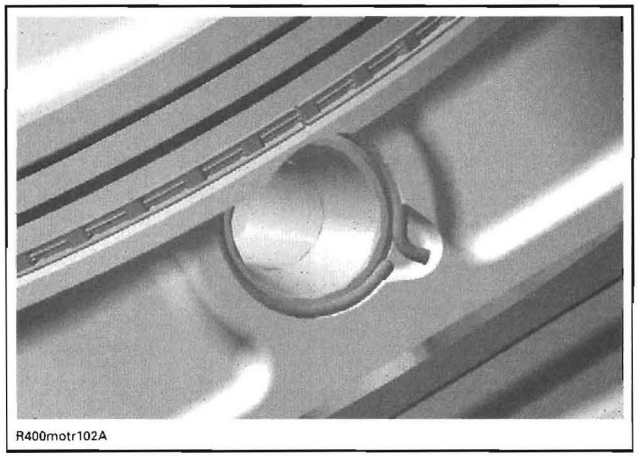

CORRECT POSITION OF THE PISTON CIRCLIP

PISTON RINGS

Ring Removal

Remove:
- cylinder head
- cylinder
- piston.

Ring Inspection

Ring/Piston Groove Clearance

Using a feeler gauge measure each ring/piston groove clearance. If the clearance is too large, the piston and the piston rings should be replaced.

RING/PISTON GROOVE CLEARANCE	
UPPER COMPRESSION RING	
NEW	0.030 to 0.070 mm (.0012 to .0028 in)
SERVICE LIMIT	0.150 mm (.0059 in)
LOWER COMPRESSION RING	
NEW	0.020 to 0.060 mm (.0008 to .0024 in)
SERVICE LIMIT	0.150 mm (.0059 in)
OIL SCRAPER RING	
NEW	0.010 to 0.180 mm (.0004 to .0071 in)
SERVICE LIMIT	0.250 mm (.0098 in)

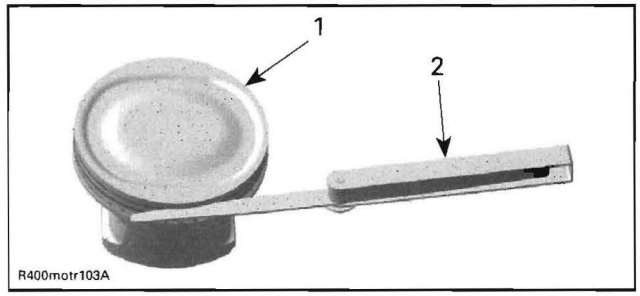

1. Piston
2. Feeler gauge

Ring End Gap

To measure the ring end gap place the ring in the cylinder in the area of 8 to 16 mm (5/16 to 5/8 in) from top of cylinder.

NOTE: In order to correctly position the ring in the cylinder, use piston as a pusher.

Using a feeler gauge, check ring end gap. Replace ring if gap exceeds above described specified tolerance.

RING END GAP	
UPPER COMPRESSION RING	
NEW	0.20 to 0.40 mm (.008 to .016 in)
SERVICE LIMIT	1.50 mm (.059 in)
LOWER COMPRESSION RING	
NEW	0.20 to 0.40 mm (.008 to .016 in)
SERVICE LIMIT	1.50 mm (.059 in)
OIL SCRAPER RING	
NEW	0.20 to 0.70 mm (.008 to .028 in)
SERVICE LIMIT	1.50 mm (.059 in)

Ring Installation

For installation, reverse the removal procedure. Pay attention to the following details.

NOTE: First install spring and then rings of oil scraper ring.

Install the oil scraper ring first, then the lower compression ring with the word "N and TOP " facing up, then the upper compression ring with the word "N and TOP" facing up.

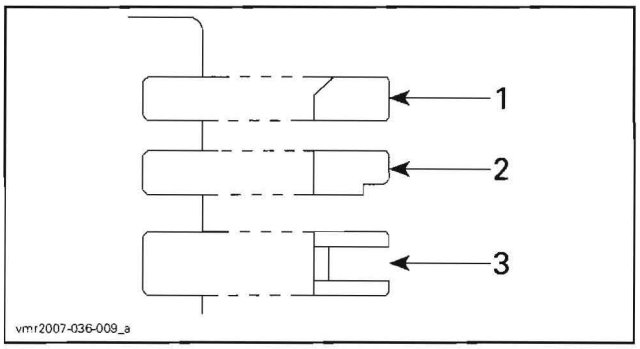

1. Upper compression ring
2. Lower compression ring
3. Oil scraper ring

CAUTION: Ensure that top and second rings are not interchanged.

NOTE: Use a ring expander to prevent breakage during installation. The oil ring must be installed by hand.

Check that rings rotate smoothly after installation.

Space the piston ring end gaps 120° apart and do not align the gaps with the piston pin bore or the thrust side axis.

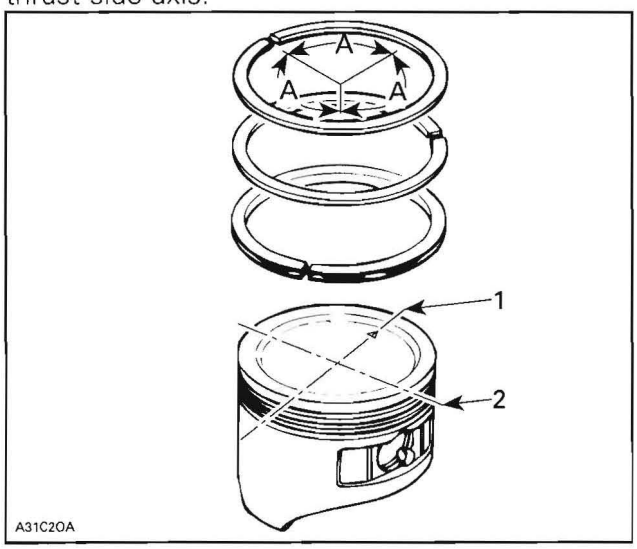

1. DO NOT align ring gap with piston thrust side axis
2. DO NOT align ring gap with piston pin bore axis
A. 120°

BOTTOM END

SERVICE TOOLS

Description	Part Number	Page
crankcase support sleeve	529 036 031	277
crankshaft locking bolt	529 035 617	281
engine lifting tool	529 036 022	271
oil seal installer	529 036 033	270
plain bearing remover/installer	529 036 032	271–272
plain bearing remover/installer	529 035 917	277–278

CRANKCASE AND PTO COVER

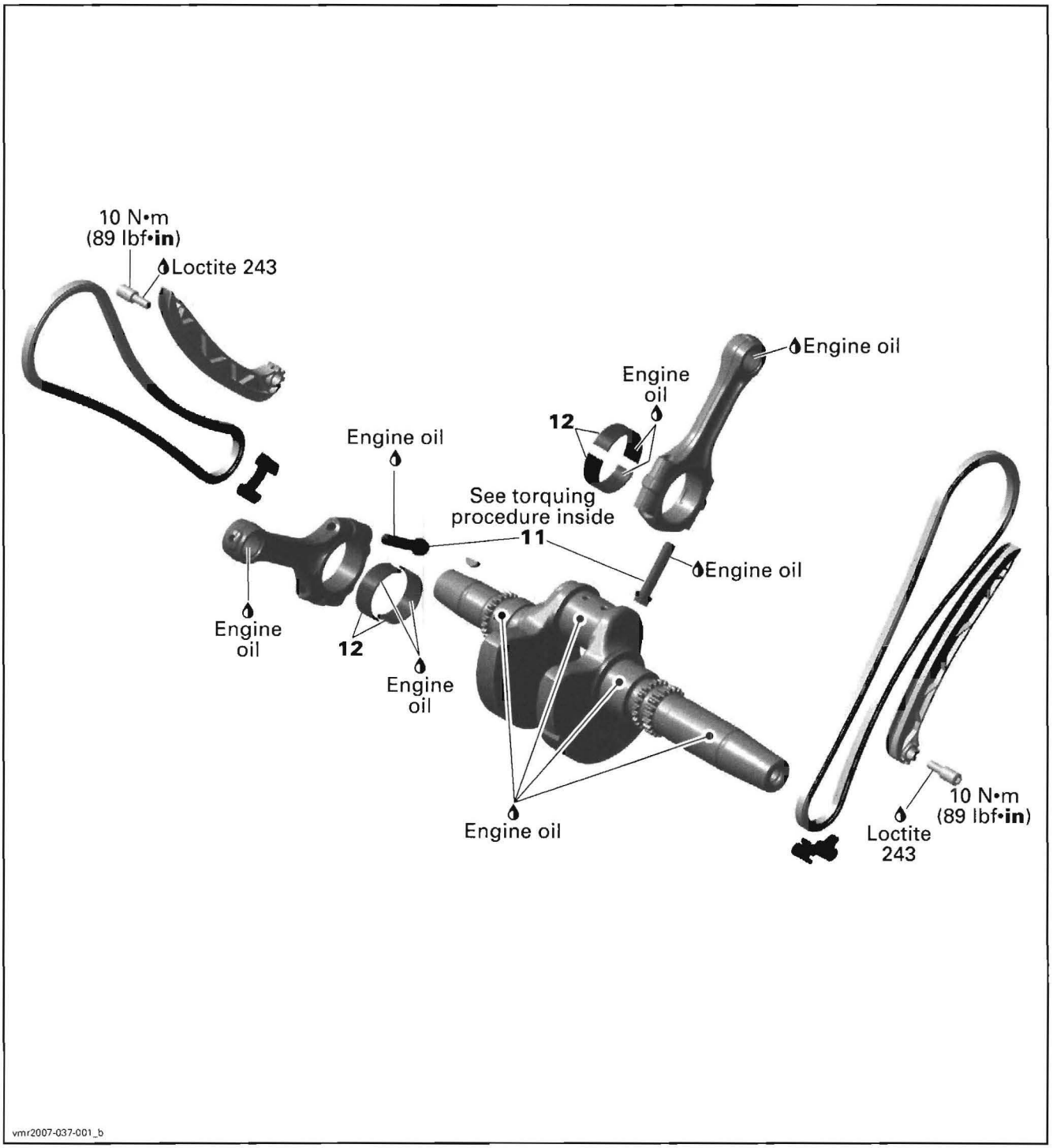

CRANKSHAFT

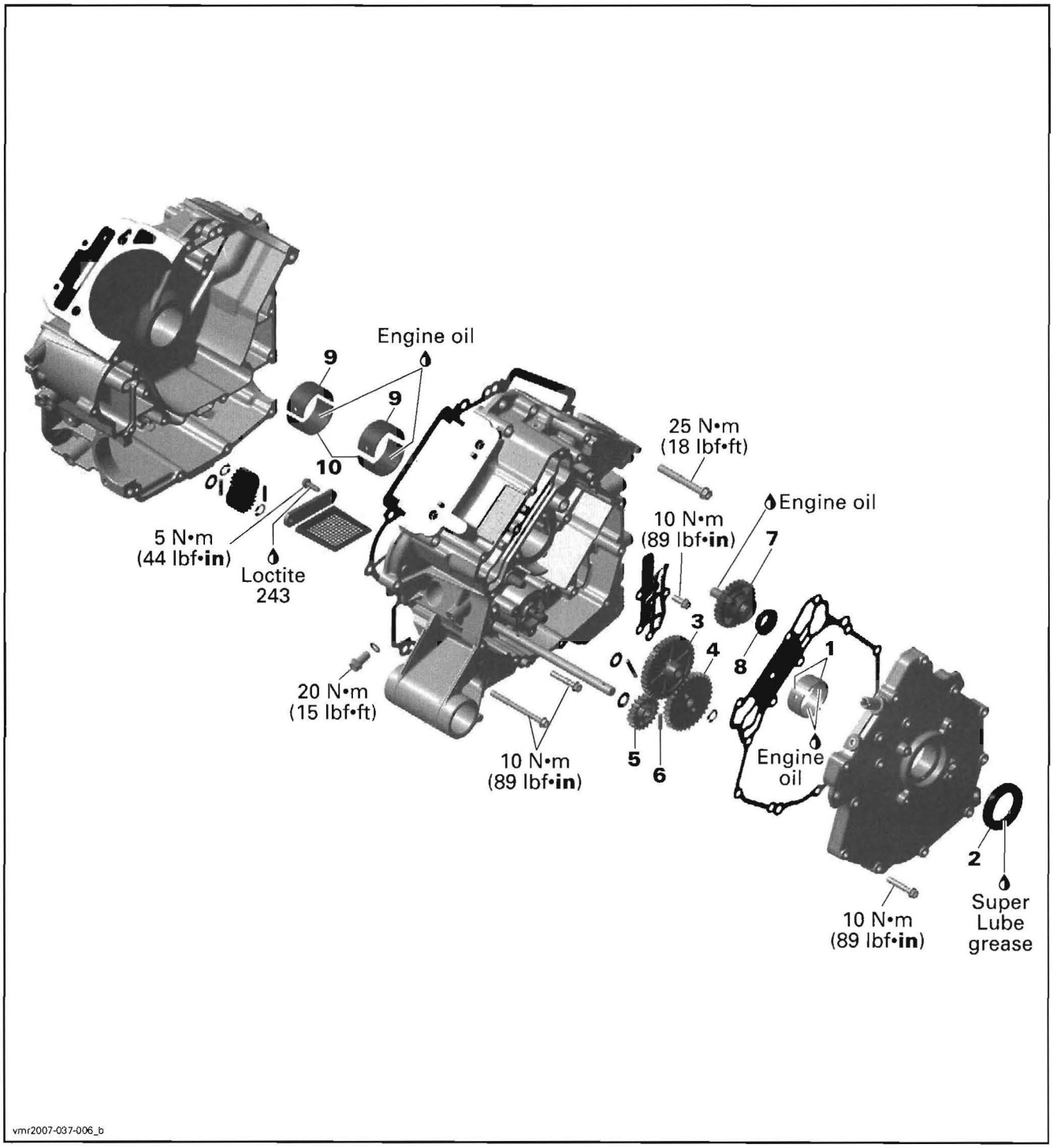
Engine oil
9
9
10
5 N•m
(44 lbf•in)
Loctite
243
20 N•m
(15 lbf•ft)
10 N•m
(89 lbf•in)
25 N•m
(18 lbf•ft)
Engine oil
10 N•m
(89 lbf•in)
7
3
4
8
1
5
6
Engine
oil
2
Super
Lube
grease
10 N•m
(89 lbf•in)
vmr2007-037-006_b

GENERAL

During assembly/installation, use the torque values and service products as shown in the exploded view(s).

Clean threads before applying a threadlocker. Refer to *SELF-LOCKING FASTENERS* and *LOCTITE APPLICATION* in *INTRODUCTION* section.

⚠ WARNING

Torque wrench tightening specifications must strictly be adhered to.
Locking devices (e.g.: locking tabs, elastic stop nuts, self-locking fasteners, cotter pin, etc.) must be installed or replaced with new ones where specified. If the efficiency of a locking device is impaired, it must be renewed.

The following components can be serviced without removing engine from vehicle:
- PTO cover oil seal
- PTO cover
- drive gears
- reed valve
- timing chain
- timing chain guide.

Engine removal is necessary to service the following components:
- crankcase
- crankshaft.

PROCEDURES

PTO COVER OIL SEAL

To replace oil seal **no. 2**, it is not necessary to remove engine from vehicle and PTO cover from the crankcase.

Oil Seal Removal

Remove belt guard.

Remove drive pulley.

Remove oil seal **no. 2** with a small flat screwdriver.

CAUTION: Avoid scoring surfaces with tool.

Oil Seal Inspection

Check oil seal running surface of crankshaft PTO side for grooves. Replace if necessary.

Oil Seal Installation

The installation is the reverse of the removal procedure.

Pay attention to the following details.

CAUTION: Oil seal must be installed with sealing lip toward the engine.

Push oil seal in place by using the oil seal installer (P/N 529 036 033).

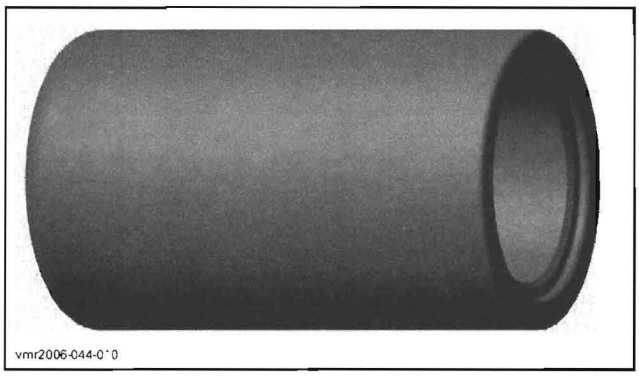

OIL SEAL INSTALLER

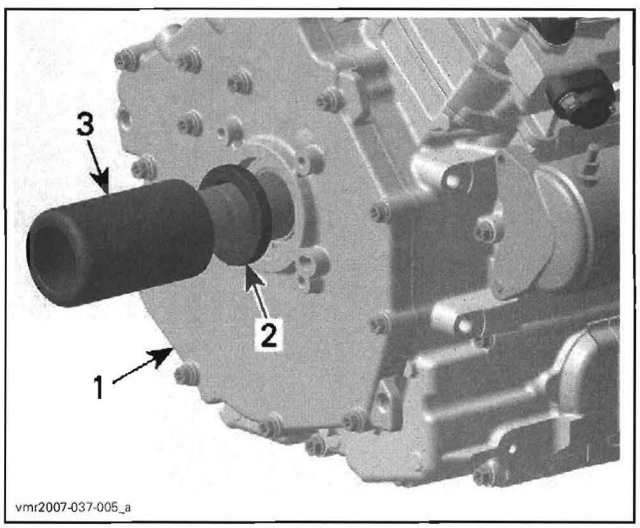

1. *PTO cover*
2. *Oil seal*
3. *Oil seal installer*

PTO COVER

NOTE: It is necessary to raise the engine in order to remove the PTO cover.

Cover Removal

On RH Side of Vehicle

Disconnect battery. Refer to *CHARGING SYSTEM*.

Remove the muffler.

Unscrew the ground wire from engine.

Remove engine support nuts.

On LH Side of Vehicle

Remove LH side panel and hood.

Remove air intake silencer.

Remove drive pulley. Refer to *DRIVE SYSTEM*.

Remove engine support nuts.

Install the engine lifting tool (P/N 529 036 022) on intake manifold.

Lift engine until the bottom of PTO cover is over frame opening.

Remove PTO cover screws and pull the cover.

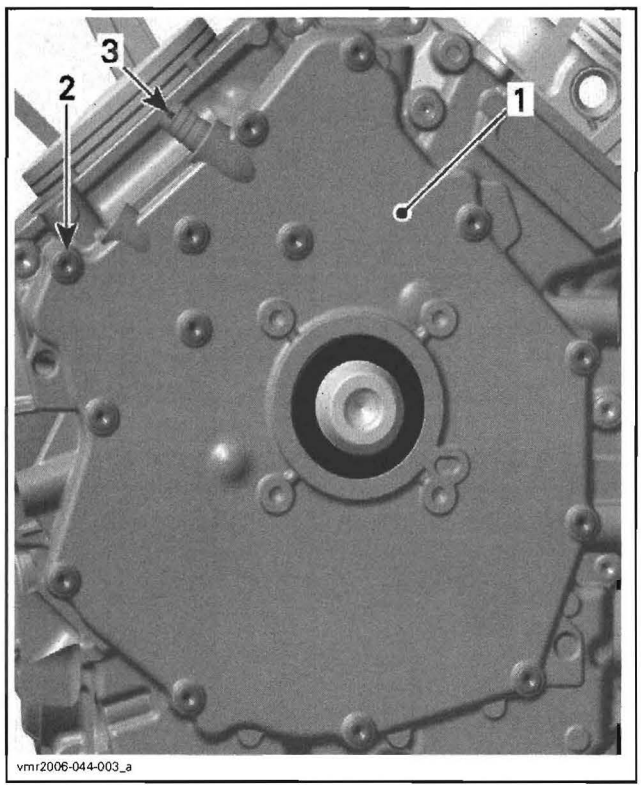

1. *PTO cover*
2. *PTO cover screws*
3. *Vent hose nipple*

Cover Inspection

Check the PTO cover for cracks or other damage.

Replace PTO cover if damaged.

Clean oil breather bore in PTO cover from contaminations with part cleaner then use an air gun to dry it.

⚠ WARNING

Always wear eye protector. Chemicals can cause a rash break out and injure your eyes.

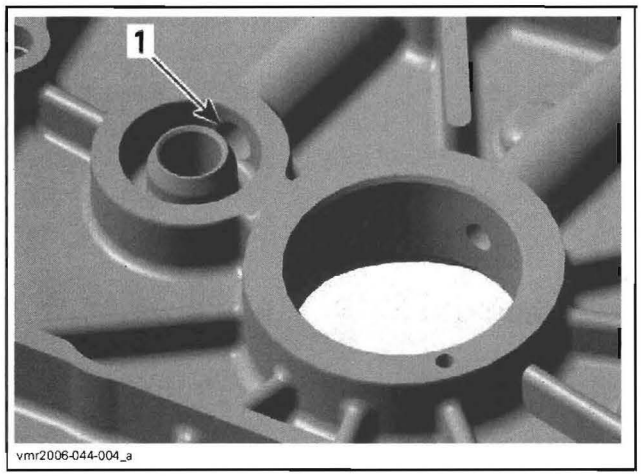

1. *Oil breather bore*

Check plain bearings **no. 1** for scorings or other damages.

NOTE: Measure plain bearing inside diameter and compare to crankshaft journal diameter (PTO support bearing). Refer to *CRANKSHAFT* in this section. Replace if the measurement is out of specification.

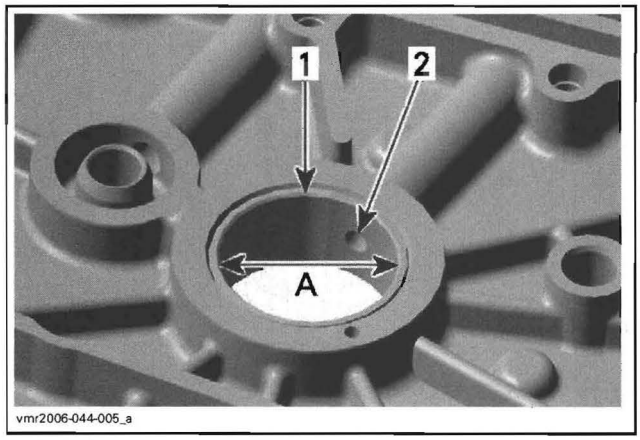

1. *Plain bearing*
2. *Oil bore*

A. *Measure plain bearing inside diameter*

PLAIN BEARING INSIDE DIAMETER (PTO side support bearing)	
SERVICE LIMIT	34.120 mm (1.3433 in)

Plain Bearing Replacement Procedure

Plain Bearing Removal

Carefully remove the oil seal **no. 2** with a screwdriver, without damaging the PTO cover.

Push-out the plain bearings from the outside towards the inside using the plain bearing remover/installer (P/N 529 036 032).

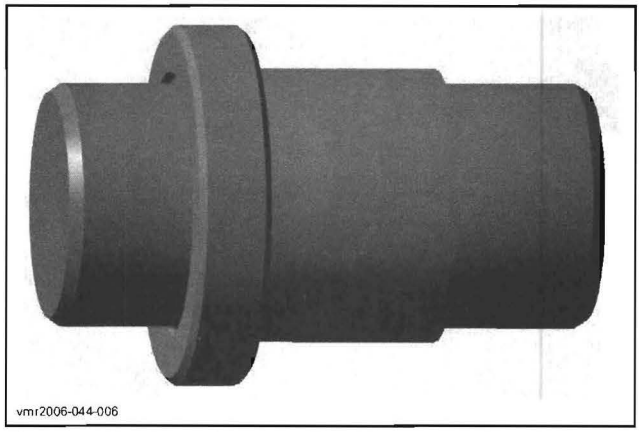

PLAIN BEARING REMOVER/INSTALLER — PTO COVER

The PTO cover has to be supported from below with suitable support with straight surface, in order to prevent damage of the sealing surface.

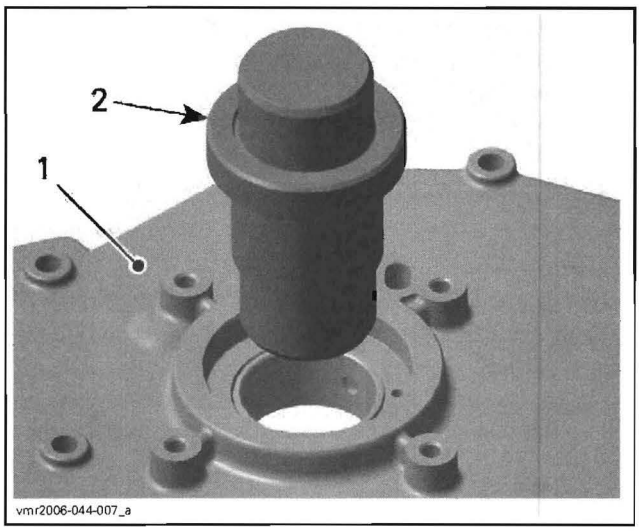

1. *PTO cover*
2. *Plain bearing remover/installer*

Plain Bearing Installation

CAUTION: Unless otherwise instructed, never use hammer to install plain bearings. Use press only.

Install plain bearings with the proper plain bearing remover/installer (P/N 529 036 032) in a cool PTO cover. Do not lubricate plain bearings and/or PTO cover for installation.

Carefully press-in the plain bearings in the same direction as during disassembly, from the outside towards the inside. Support PTO cover with suitable support with straight surface, in order to prevent damage of the sealing surface.

CAUTION: Mark position of oil bore on PTO cover and on plain bearing remover/installer. Align mark on plain bearing remover/installer with mark on PTO cover.

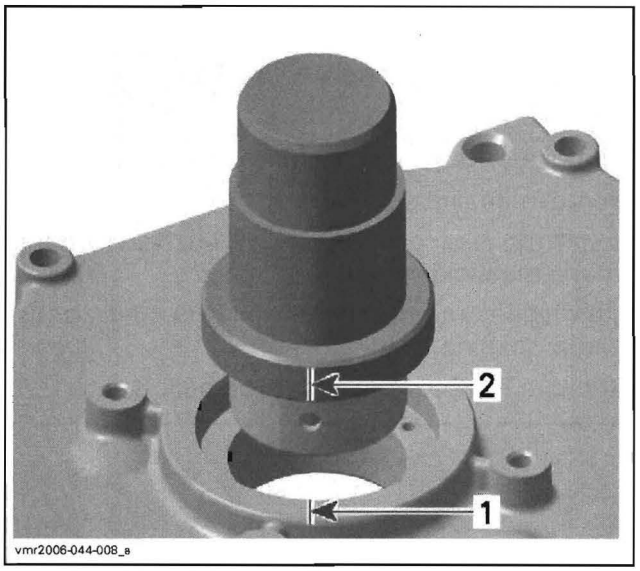

1. *Mark position of oil bore on PTO cover*
2. *Mark position of oil bore on plain bearing remover/installer*

NOTE: Wrong oil bore position will stop oil supply to plain bearings and will damage the engine.

CAUTION: The partition of the plain bearings must be positioned near to oil bore in counter-clockwise direction. (refer to no. 3 in next illustration).

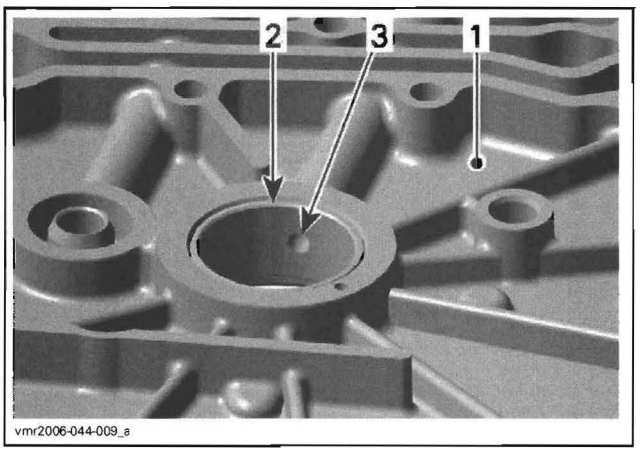

1. *PTO cover (inside)*
2. *Partition*
3. *Oil bore*

Cover Installation

For installation, reverse the removal procedure.

Pay attention to the following details.

NOTE: At installation, replace PTO cover gasket and oil seal.

Tightening sequence for screws on PTO cover is as per following illustration.

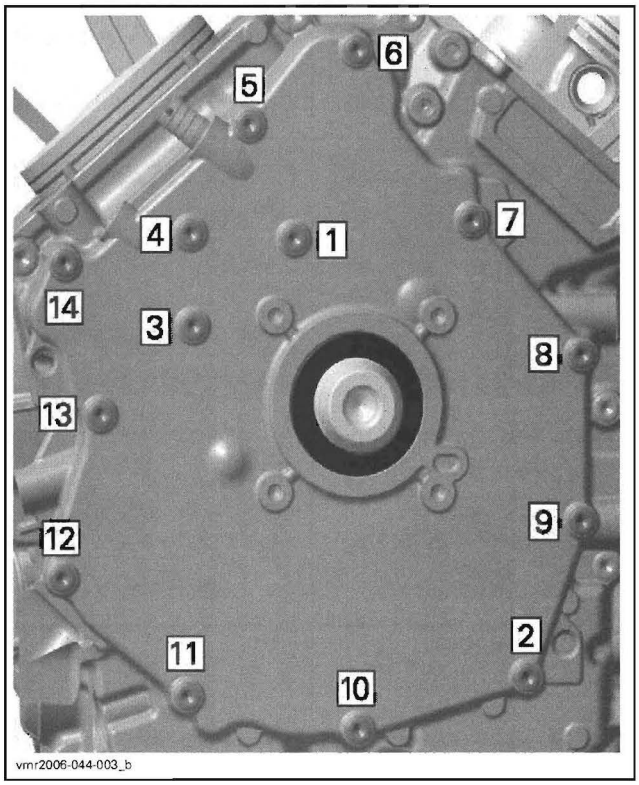

TIGHTENING SEQUENCE

DRIVE GEARS

The drive gears are located on the engine PTO side behind the PTO cover.

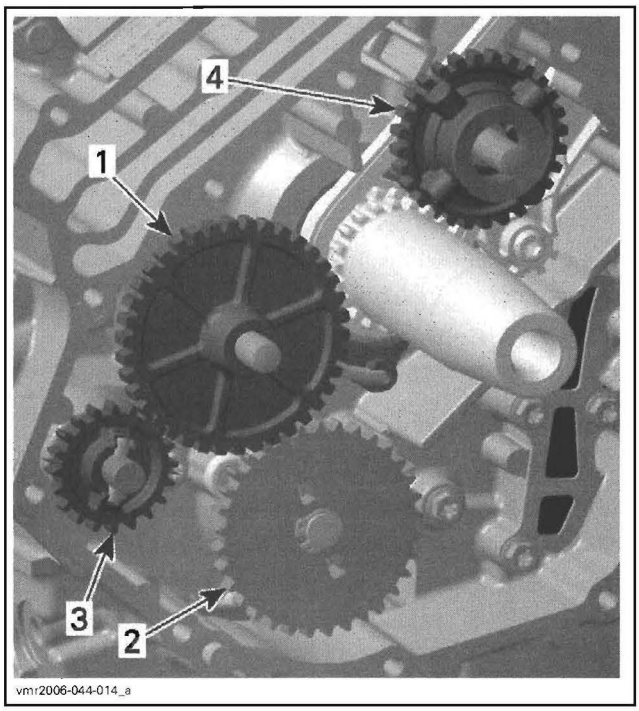

1. *Intermediate gear*
2. *Oil pump gear*
3. *Water pump gear*
4. *Breather gear*

Drive Gear Removal

Remove:
- PTO cover (refer to *PTO COVER*)
- intermediate gear **no. 3**
- oil pump gear **no. 4** (refer to *OIL PUMP* in *LUBRICATION SYSTEM*)
- water pump gear **no. 5**.

To remove water pump gear, pull the shaft assembly a bit out and turn it about one teeth until it stays out.

Now you can push water pump gear down. Remove needle pin **no. 6** and pull water pump gear out.

Remove breather gear **no. 7**.

Drive Gear Inspection

Intermediate Gear/Oil Pump Gear/ Water Pump Gear

Inspect gears for wear or other damage. Replace if damaged.

Breather Gear

The engine is equipped with a breather gear which prevents engine oil coming out through the breathing system into the air box.

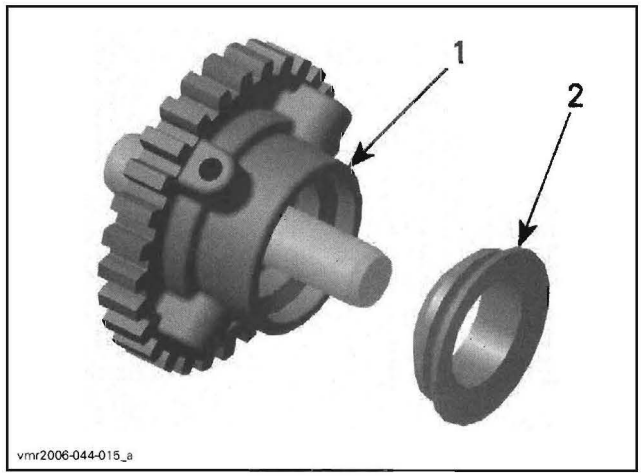

1. *Breather gear*
2. *V-ring*

Inspect gear for wear or other damage.

Check ball bearing for excessive play and smooth operation. Replace breather gear assembly if necessary.

Drive Gear Installation

The installation is essentially the reverse of the removal procedure, but pay attention to the following details.

NOTE: At installation replace the V-ring **no. 8** of the breather gear.

Adequately oil the ball bearing of the breather gear.

REED VALVE

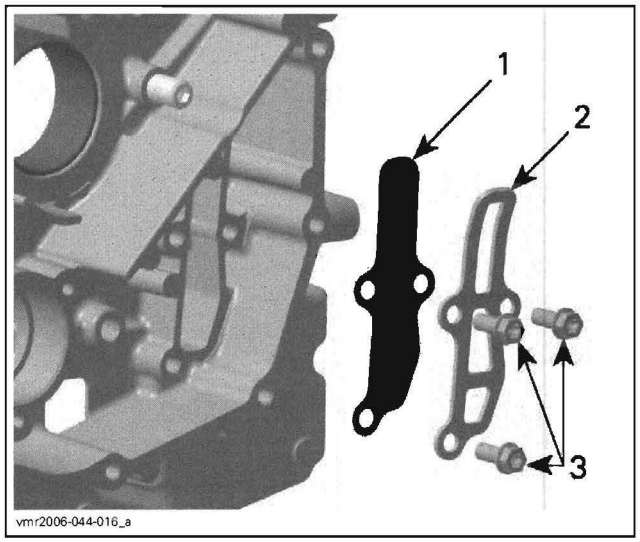

1. *Reed valve*
2. *Stopper plate*
3. *Screws*

Valve Removal

Remove:
- PTO cover (refer to *PTO COVER*)
- reed valve retaining screws
- stopper plate
- reed valve.

Valve Inspection

Check reed valve for cracks or other damage.

NOTE: Replace reed valve if damaged.

Valve Installation

The installation is the reverse of the removal procedure.

TIMING CHAIN

The engine is equipped with two timing chains. One of the timing chain is located on engine MAG side behind the magneto cover. The second timing chain is located on engine PTO side behind the PTO cover.

Removal of Magneto Side Timing Chain

Remove:
- valve cover, chain tensioner and camshaft timing gear (refer to *CYLINDER AND HEAD*)
- magneto cover and rotor (refer to *MAGNETO SYSTEM*)
- timing chain guide and lower timing chain guide.

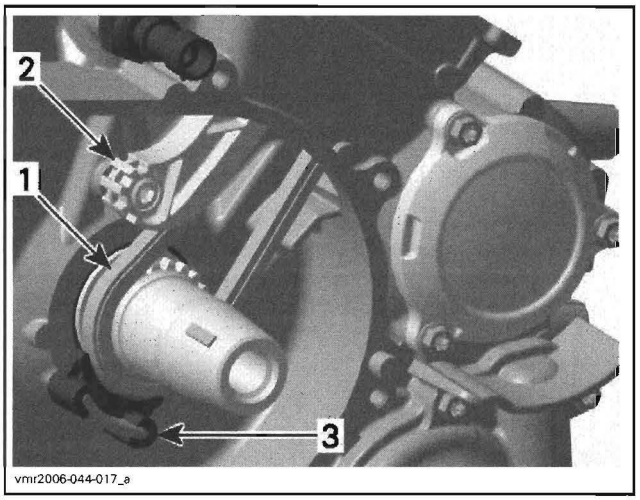

1. *Timing chain*
2. *Timing chain guide*
3. *Lower timing chain guide*

Carefully pull the timing chain sideward and down from the crankcase.

NOTE: Mark the operating direction of the timing chain before removal.

Removal of PTO Side Timing Chain

Remove:
- valve cover, chain tensioner and camshaft timing gear (refer to *CYLINDER AND HEAD* section)
- PTO cover (refer to *PTO COVER*)
- intermediate gear and breather gear (refer to *DRIVE GEARS*)
- timing chain guide and lower timing chain guide (see illustration above).

Carefully pull the timing chain sideward and down from the crankcase.

NOTE: Mark the operating direction of the timing chain before removal.

Timing Chain Inspection

Inspection is the same for both timing chains.

NOTE: Check timing chain on camshaft timing gear for excessive radial play.

Check chain condition for wear and teeth condition.

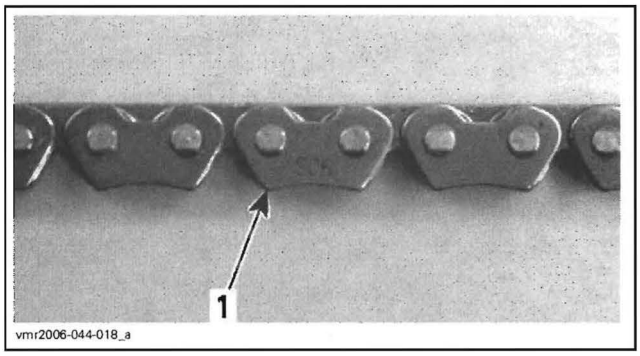

1. Timing chain

If chain is excessively worn or damaged, replace it as a set (camshaft timing gear and timing chain).

Timing Chain Installation

The installation is essentially the reverse of the removal procedure, but pay attention to the following details.

Refer to *CYLINDER AND HEAD* for proper camshaft timing gear installation.

CAUTION: Improper valve timing will damage engine components.

TIMING CHAIN GUIDE

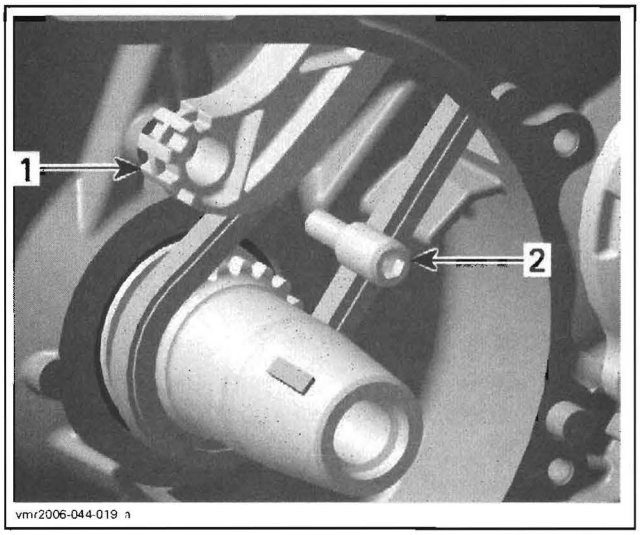

1. Timing chain guide
2. Bearing screw

Guide Removal

Refer to *TIMING CHAIN* above.

Guide Inspection

Check timing chain guide for wear, cracks or other damage. Replace if necessary.

Guide Installation

The installation is the reverse of the removal procedure.

CRANKCASE

NOTE: Before disassembly, remove engine from vehicle, refer to *ENGINE REMOVAL AND INSTALLATION*.

Crankcase Disassembly

Remove:

- PTO cover (refer to *PTO COVER*)
- drive gears (refer to *DRIVE GEARS*)

NOTE: Oil pump removal from crankcase is not necessary, but recommended to see condition of oil pump (refer to *LUBRICATION SYSTEM* section).

- electric starter

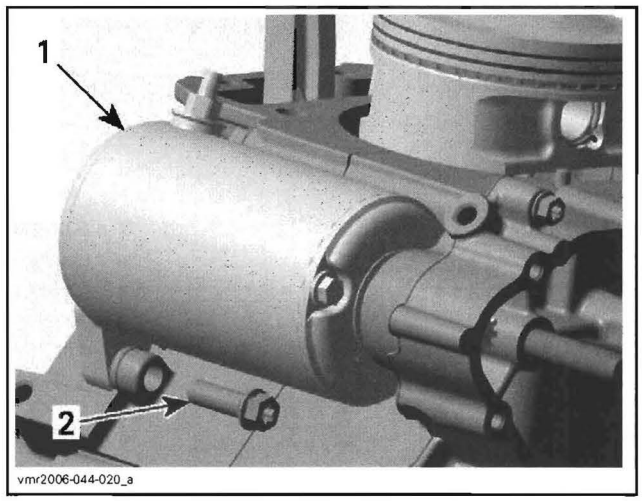

1. Electric starter
2. Screw

- magneto cover and rotor (refer to *MAGNETO SYSTEM* section)
- electric starter drive gears (refer to *MAGNETO SYSTEM* section)
- water pump housing (refer to *COOLING SYSTEM* section)
- oil filter (refer to *LUBRICATION SYSTEM* section)
- cylinder head and cylinder (refer to *CYLINDER AND CYLINDER HEAD* section)
- timing chains and timing chain guides (refer to *TIMING CHAIN* and *TIMING CHAIN GUIDE*).

NOTE: Before splitting the crankcase, measure crankshaft axial play on PTO end. Refer to *CRANKSHAFT INSPECTION*.

Remove retaining screws of crankcase.

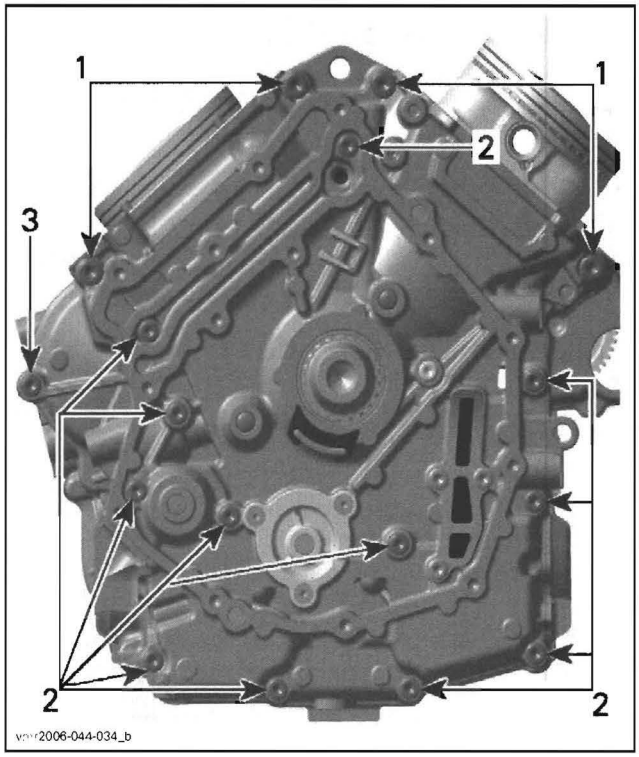

TYPICAL
1. *Four screws M8 x 65*
2. *12 screws M6 x 75*
3. *One screw M6 x 35*

Carefully split crankcase halves by using a screwdriver and a soft hammer.

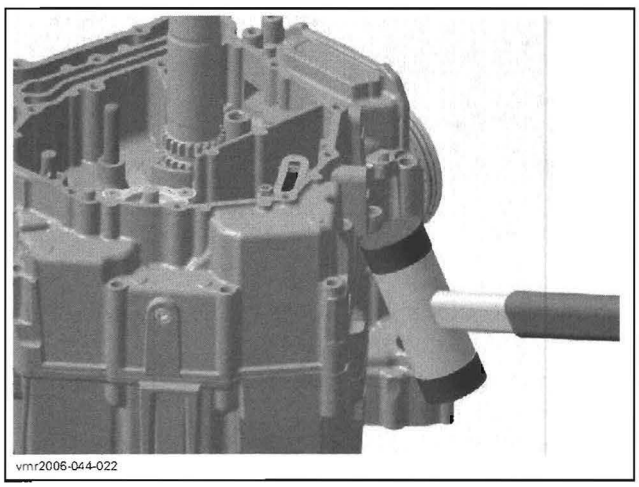

NOTE: During disassembly, do not damage the sealing surfaces of the crankcase halves.

Pull crankshaft out of crankcase.

Remove the water pump intermediate shaft and the water pump gear.

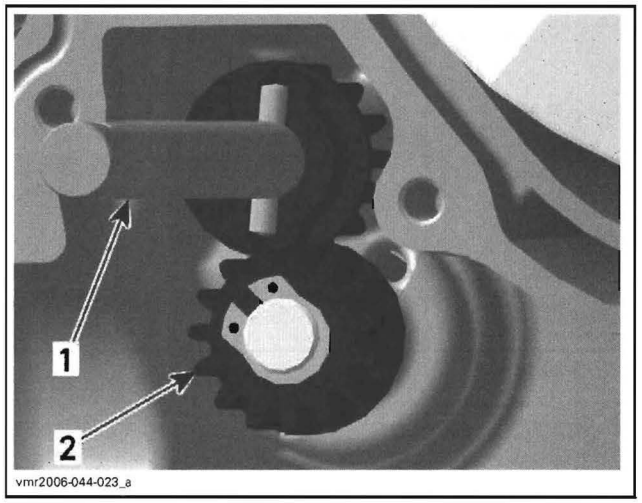

1. *Water pump intermediate shaft*
2. *Water pump gear*

Remove engine oil strainer.

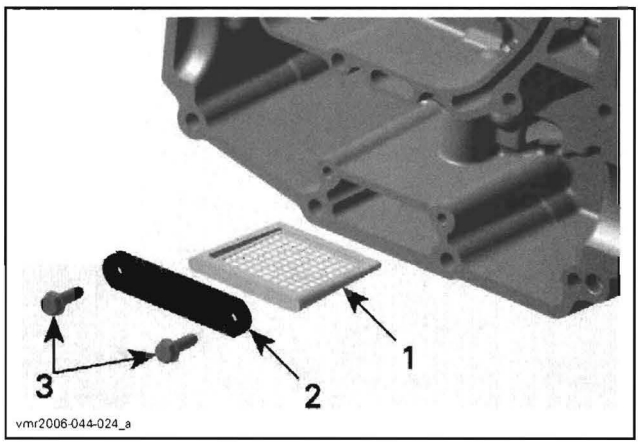

1. *Engine oil strainer*
2. *Retaining plate*
3. *Screws*

Crankcase Inspection

NOTE: Remove all remaining parts from the crankcase halves; they could get damaged during repair work.

Clean crankcase halves from contaminations and blow the oil supply lines with compressed air.

⚠ WARNING

Use safety goggles to avoid eye injuries.

Check crankcase halves for cracks or other damage. Replace if damaged.

Check plain bearings **no. 9** and **no. 10** for scorings or other damages.

NOTE: Measure plain bearing inside diameter and compare to PTO/MAG side journal diameters of crankshaft (refer to *CRANKSHAFT*). Replace if the measurements are out of specification.

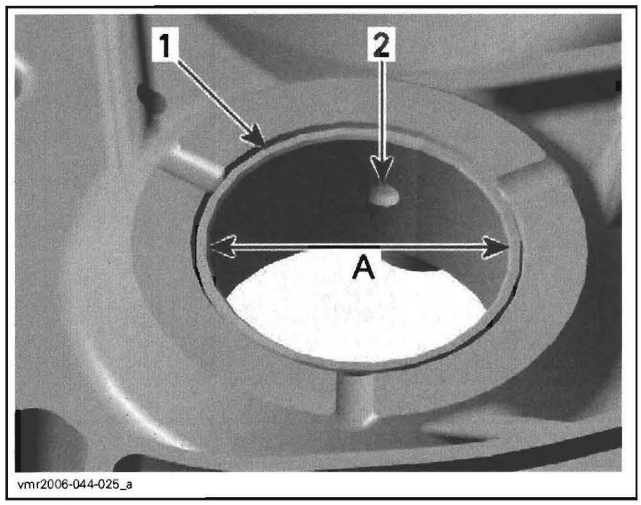

1. *Plain bearing*
2. *Oil bore*

A. *Measure plain bearing inside diameter*

PLAIN BEARING INSIDE DIAMETER (PTO/MAG)	
SERVICE LIMIT	42.100 mm (1.6574 in)

Plain Bearing Replacement

Plain Bearing Removal

CAUTION: Always support crankcase halves properly when ball bearings or plain bearings are removed. Damages to crankcase halves may occur if this procedure is not performed correctly.

NOTE: Always use a press for removal of plain bearings.

Remove plain bearings **no. 9** and **no. 10** with the proper plain bearing remover/installer (P/N 529 035 917).

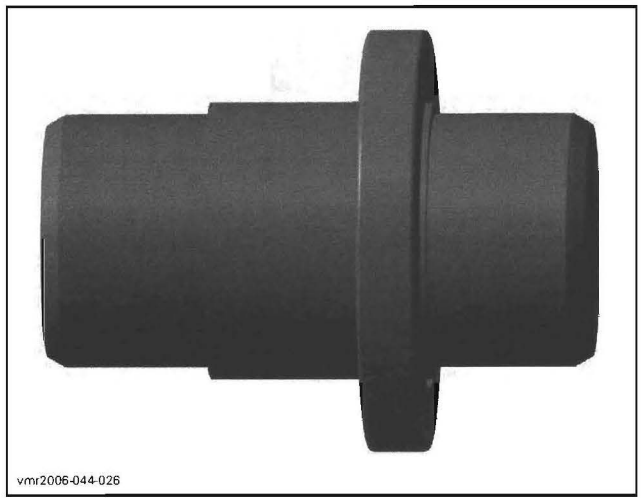

PLAIN BEARING REMOVER/INSTALLER (P/N 529 035 917)

Carefully push the plain bearings out, from the crankcase half inside towards the outside.

NOTE: Place the proper crankcase support sleeve (P/N 529 036 031) under crankcase halves before removing plain bearings.

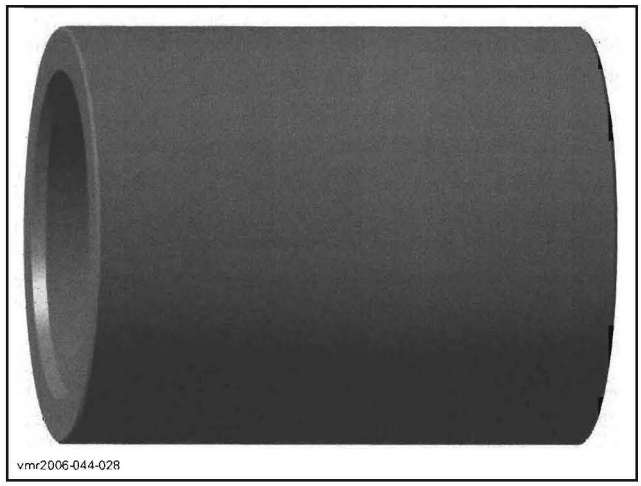

CRANKCASE SUPPORT SLEEVE (P/N 529 036 031)

NOTE: During disassembly, make sure not to damage the sealing surfaces of the crankcase halves.

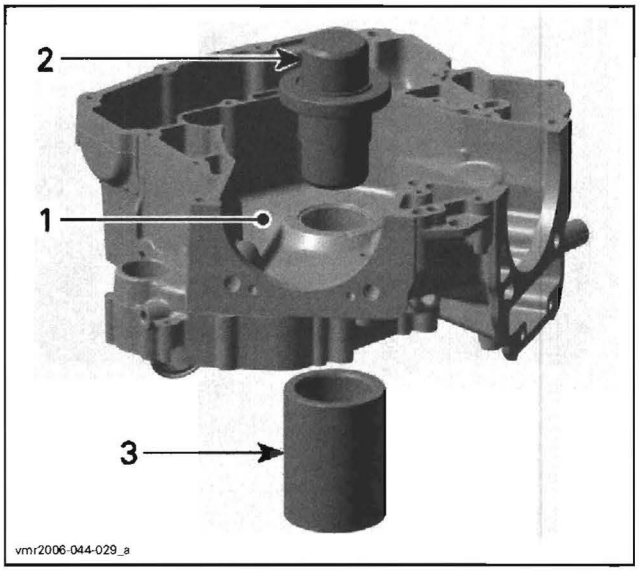

PUSH PLAIN BEARINGS OUTSIDE
1. *Crankcase half*
2. *Plain bearing remover/installer (P/N 529 035 917)*
3. *Crankcase support sleeve (P/N 529 036 031)*

Plain Bearing Installation

CAUTION: Unless otherwise instructed, never use hammer to install ball bearings or plain bearings. Use press only.

Install plain bearings with the proper plain bearing remover/installer (P/N 529 035 917) in a cool crankcase. Do not lubricate plain bearings and/or crankcase for installation.

NOTE: Place the proper crankcase support sleeve under crankcase halves before installing the plain bearings (refer to *BEARING REMOVAL PROCEDURE*).

Carefully press-in the plain bearings in the same direction as during disassembly, from the crankcase inside towards the outside.

During reassembly, make sure not to damage the sealing surfaces of the crankcase halves.

CAUTION: Mark position of oil bore on crankcase half and on plain bearing remover/installer. Align mark on plain bearing remover/installer with mark on crankcase half.

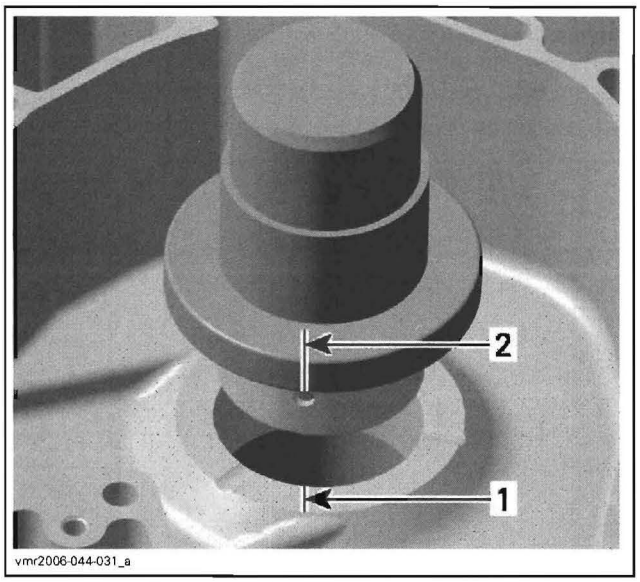

1. *Oil bore position marked on crankcase*
2. *Oil bore position marked on plain bearing remover/installer*

NOTE: Wrong oil bore position will stop oil supply to plain bearings and will cause engine damage.

CAUTION: The partition of the plain bearings in crankcase half MAG side must be positioned near to oil bore in clockwise direction (refer to no. 3 in next illustration).

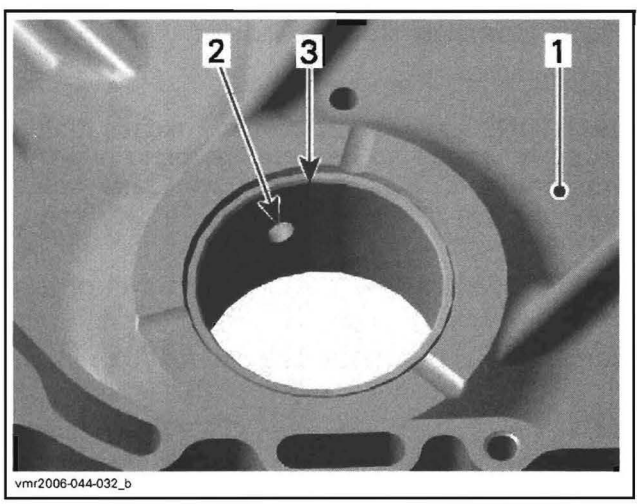

1. *Crankcase half* MAG *(inside)*
2. *Oil bore*
3. *Partition*

CAUTION: The partition of the plain bearings in crankcase half PTO side must be positioned near to oil bore in counterclockwise direction (refer to no. 3 in next illustration).

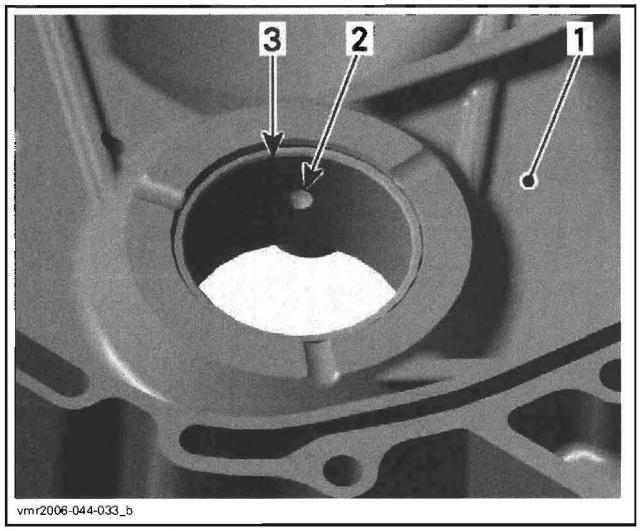

1. *Crankcase half* PTO *(inside)*
2. *Oil bore*
3. *Partition*

NOTE: Use an O-ring (42 mm diameter x 1 to 1.5 mm (.04 to .06 in) thickness) to hold plain bearings in place during installation. The O-ring will disappear in the groove of the plain bearing remover/installer.

Crankcase Assembly

The assembly of crankcase is essentially the reverse of removal procedure. However, pay attention to the following details.

NOTE: Clean oil passages and make sure they are not clogged.

Clean all metal components in a solvent.

NOTE: At installation, replace crankcase gasket.

Oil the plain bearings before mounting the crankshaft.

CAUTION: Correctly reinstall crankshaft (refer to *CRANKSHAFT*).

Reinstall engine oil strainer.

Reinstall water pump shaft shafts/gears (refer to *COOLING SYSTEM* section).

Tightening sequence for screws on crankcase is as per following illustration.

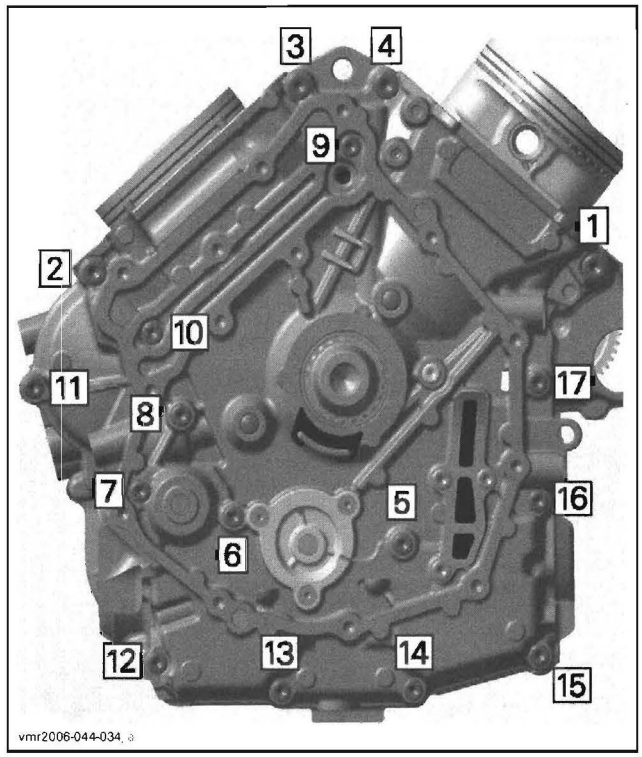

TIGHTENING SEQUENCE

CRANKSHAFT

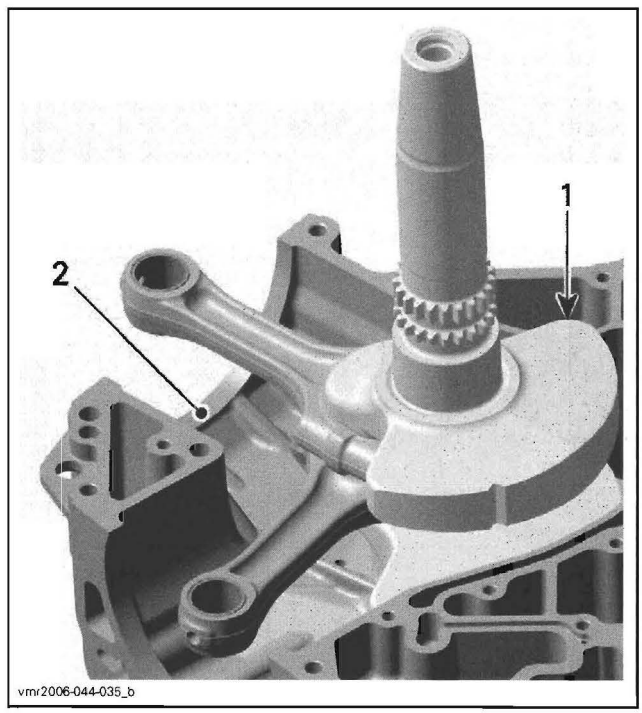

1. *Crankshaft*
2. *Crankcase MAG*

Crankshaft Locking Procedure

NOTE: When crankshaft is locked, the rear piston (cylinder 2, rear) is at TDC ignition. Crankshaft can not be locked at cylinder 1 (front) TDC.

Remove:

- spark plug cable and spark plug of both cylinders
- valve covers of both cylinders
- plug screw and O-ring of magneto cover

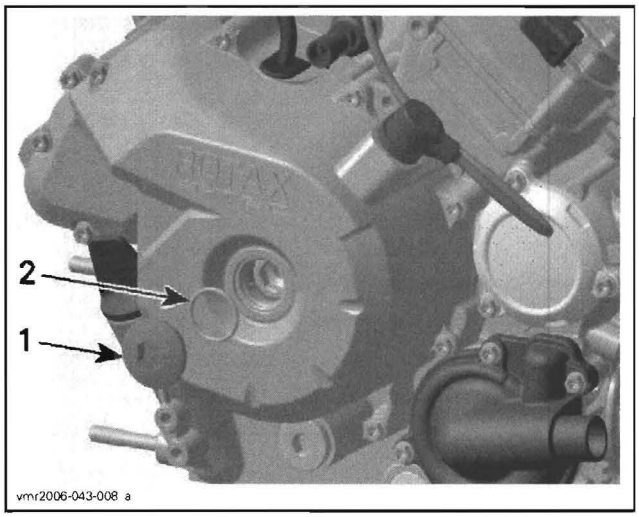

TYPICAL
1. Plug screw
2. O-ring

- crankshaft position sensor

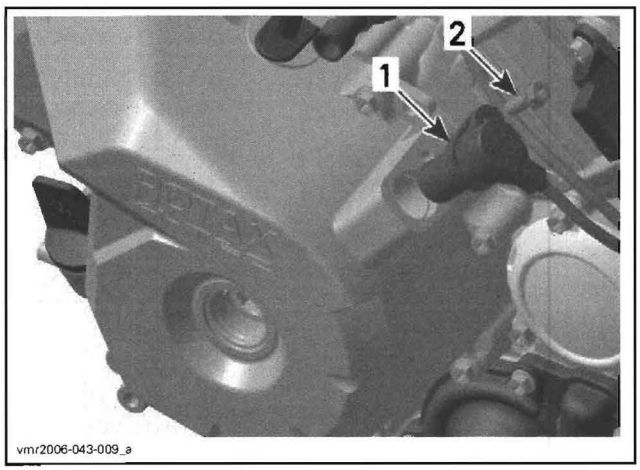

TYPICAL
1. Crankshaft position sensor
2. Screw

- plug screw with sealing ring.

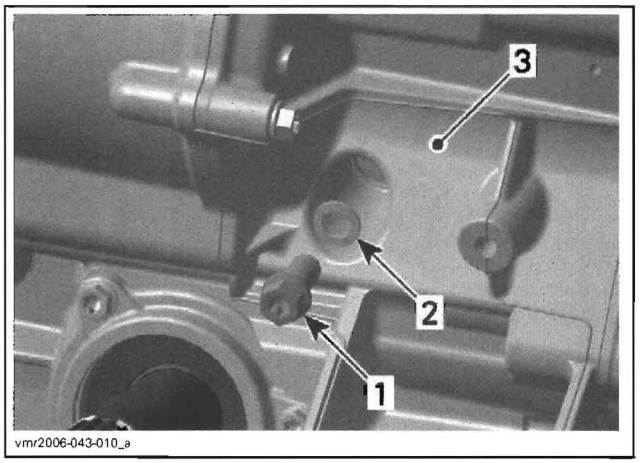

TYPICAL
1. Plug screw
2. Sealing ring
3. Crankcase PTO side, front side

Use a 14 mm Allen key to turn crankshaft until piston 2, rear is at TDC ignition.

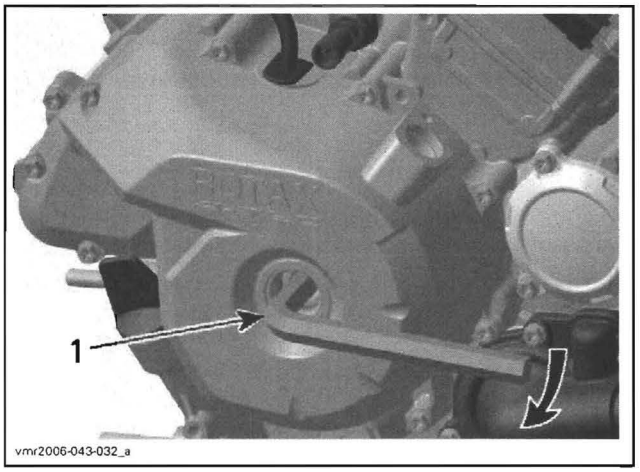

TYPICAL
1. Allen key 14 mm

When rear piston is at TDC ignition, marks on magneto flywheel "2" and on the magneto cover are aligned.

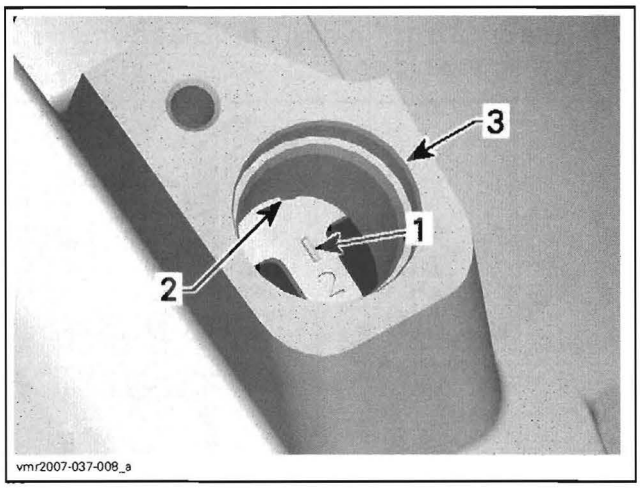

1. *Mark "2" on magneto flywheel*
2. *Notch on magneto cover*
3. *Crankshaft position sensor location*

Use a screwdriver to check if the groove in the crankshaft is aligned with the hole.

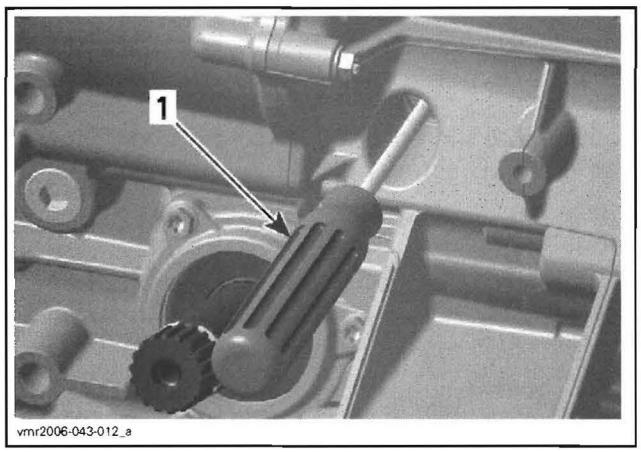

TYPICAL
1. *Screwdriver*

Lock crankshaft with crankshaft locking bolt (P/N 529 035 617).

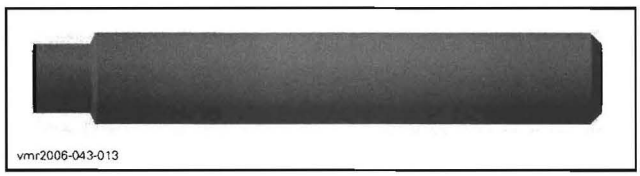

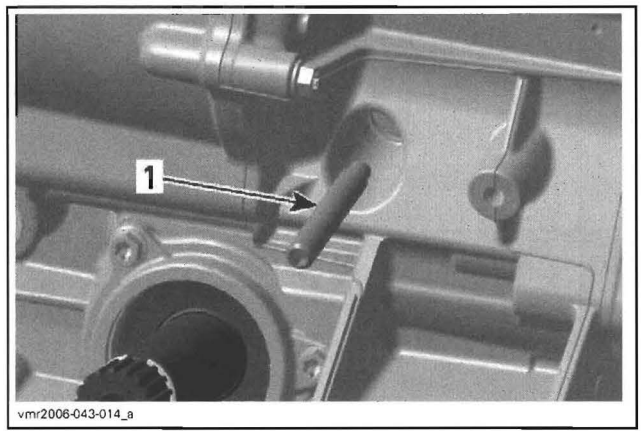

TYPICAL
1. *Crankshaft locking bolt*

Crankshaft Removal

Refer to *CRANKCASE*.

NOTE: It is recommended to verify crankshaft axial play before splitting the crankcase. Refer to *CRANKSHAFT INSPECTION*.

Crankshaft Inspection

NOTE: Check each bearing journal of crankshaft for scoring, scuffing, cracks or other signs of wear.

NOTE: Replace crankshaft if the gears are worn or otherwise damaged.

CAUTION: Components with less than the service limit always have to be replaced. If this is not observed, severe damage may be caused to the engine.

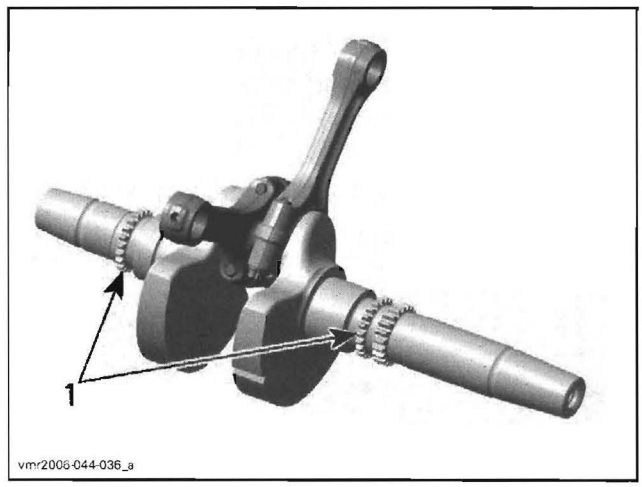

1. *Crankshaft timing gears*

Connecting Rod Big End Axial Play

Using a feeler gauge, measure distance between butting face of connecting rods and crankshaft counterweight. If the distance exceeds specified tolerance, replace the crankshaft.

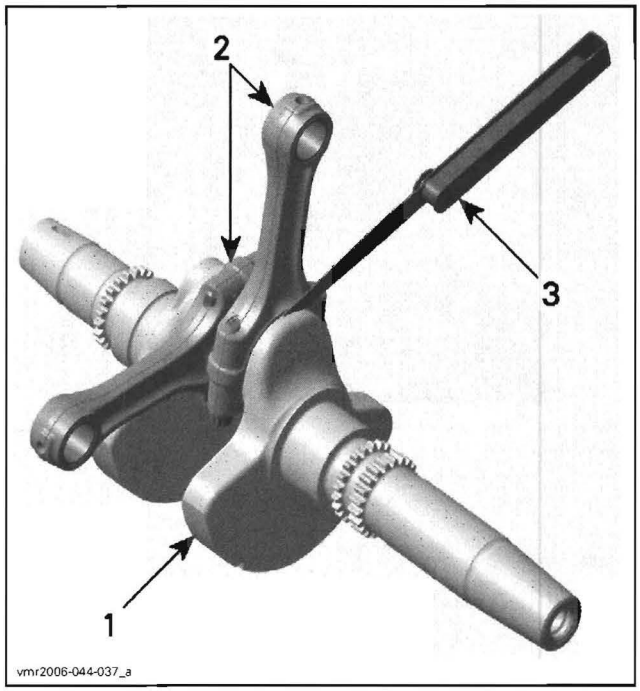

1. Crankshaft
2. Connecting rods
3. Feeler gauge

CONNECTING ROD BIG END AXIAL PLAY	
NEW	0.200 to 0.500 mm (.008 to .020 in)
SERVICE LIMIT	0.6 mm (.024 in)

Connecting Rod/Piston Pin Clearance

Refer to *CYLINDER AND HEAD* section.

Connecting Rod Big End Radial Play

NOTE: Prior to remove connecting rod from the crankshaft, mark big end halves together to ensure a correct reinstallation (cracked surface fits in only one position).

Remove connecting rods from crankshaft.

CAUTION: Always replace connecting rod screws no. 11 if removing the connecting rod. It is recommended to replace plain bearings no. 12, in case of installing the connecting rod.

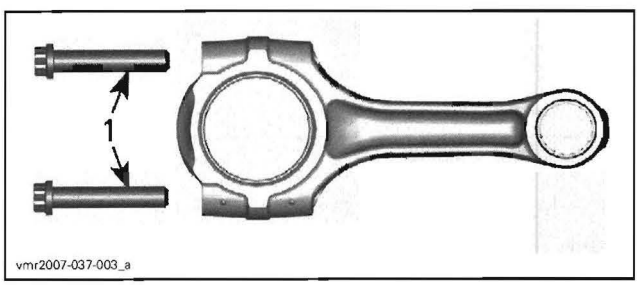

1. Connecting rod screws

Measure crankpin. Compare to inside diameter of connecting rod big end.

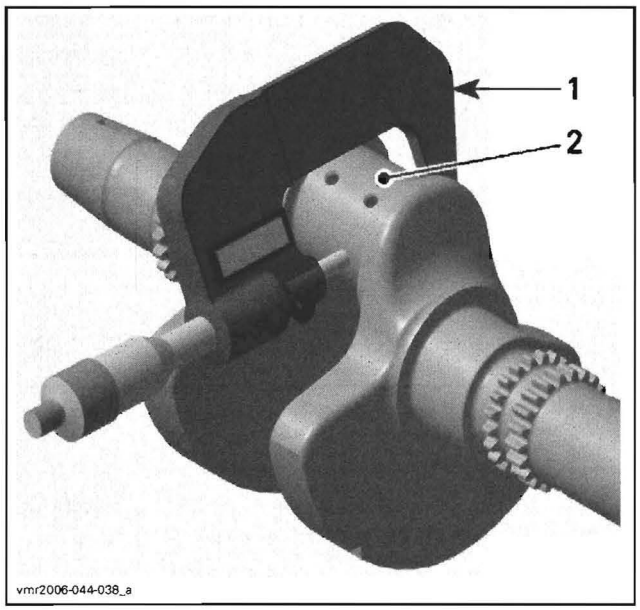

1. Micrometer
2. Crankpin area for plain bearing

To measure the connecting rod big end diameter, use the OLD screws **no. 11**.

Install the OLD plain bearings **no. 12** as they were mounted initially.

Do the torque procedure as described further.

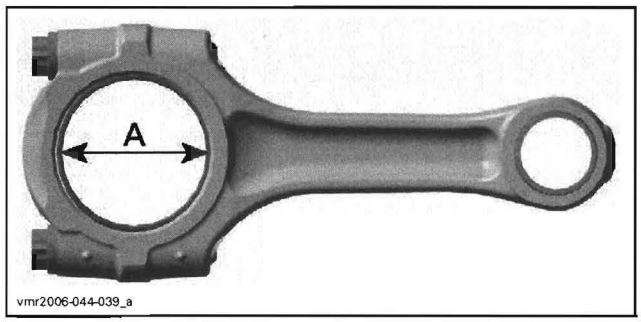

A. Connecting rod big end plain bearing

CRANKSHAFT PIN DIAMETER	
NEW	40.009 to 40.025 mm (1.5752 to 1.5758 in)
SERVICE LIMIT	39.990 mm (1.5744 in)
CONNECTING ROD BIG END DIAMETER	
SERVICE LIMIT	40.100 mm (1.5787 in)
CONNECTING ROD BIG END RADIAL CLEARANCE	
SERVICE LIMIT	0.09 mm (.0035 in)

Crankshaft Axial Play

Measure crankshaft axial play on PTO end using a dial indicator. If the distance exceeds specified tolerance, replace crankcase and/or crankshaft.

CRANKSHAFT AXIAL PLAY	
NEW	0.200 to 0.500 mm (.008 to .020 in)
SERVICE LIMIT	0.6 mm (.024 in)

Crankshaft Radial Play MAG/PTO Side

Measure crankshaft on MAG/PTO side. Compare to inside diameter of MAG/PTO plain bearing (refer to *CRANKCASE*).

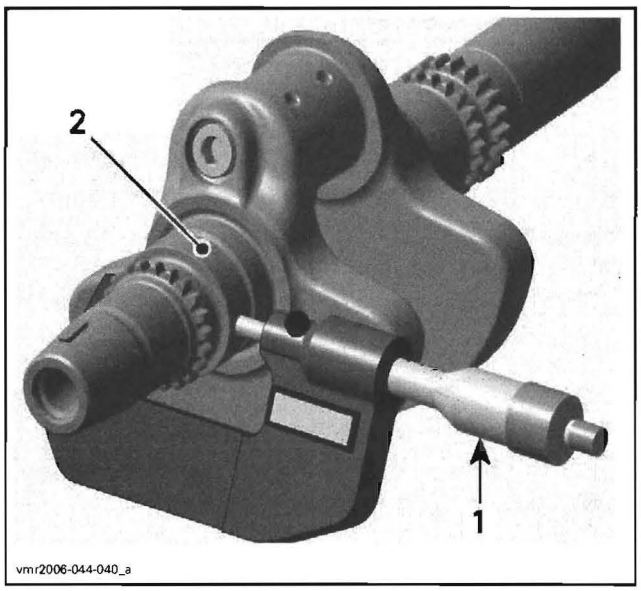

1. *Micrometer*
2. *Crankshaft area for MAG plain bearing*

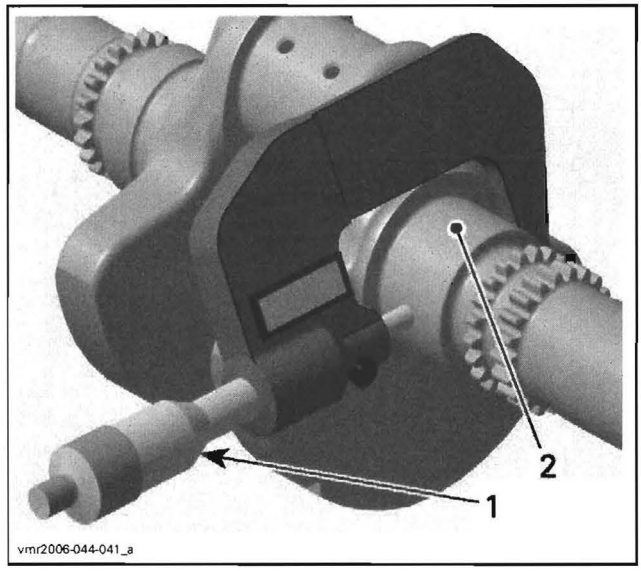

1. *Micrometer*
2. *Crankshaft area for PTO plain bearing*

CRANKSHAFT MAG/PTO SIDE DIAMETER	
NEW	42.024 to 42.040 mm (1.6545 to 1.6551 in)
SERVICE LIMIT	42.000 mm (1.6535 in)

CRANKSHAFT MAG/PTO SIDE RADIAL CLEARANCE	
SERVICE LIMIT	0.07 mm (.0031 in)

Crankshaft Radial Play (PTO side support bearing)

Measure crankshaft journal of PTO support bearing. Compare to inside diameter of PTO support bearing in PTO cover (refer to *PTO COVER*).

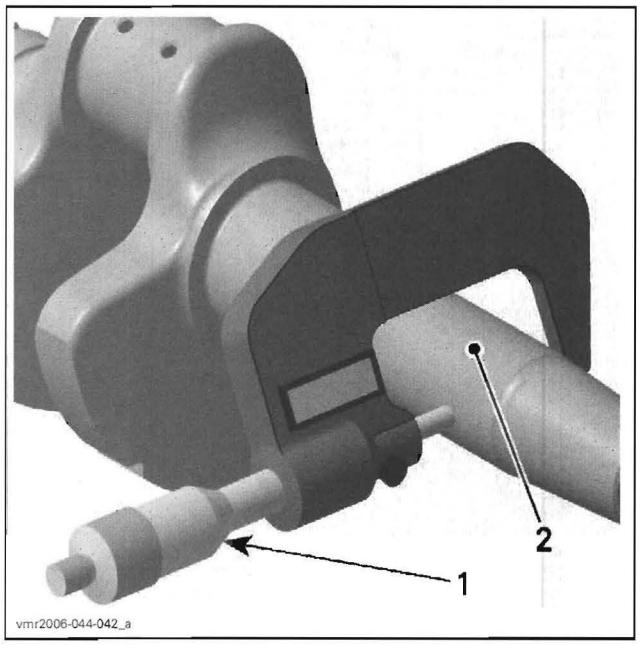

1. Micrometer
2. Crankshaft journal (PTO support bearing)

CRANKSHAFT JOURNAL DIAMETER (PTO support bearing)	
NEW	34.024 to 34.040 mm (1.3395 to 1.3402 in)
SERVICE LIMIT	34.010 mm (1.3390 in)

CRANKSHAFT PTO SUPPORT BEARING RADIAL CLEARANCE	
SERVICE LIMIT	0.10 mm (.0039 in)

Crankshaft Assembly

For assembly, reverse the disassembly procedure. Pay attention to following details.

NOTE: Use NEW plain bearings **no. 12**, when connecting rod big end diameter is out of specification.

Put plain bearings correctly in place and clean the split surface on both sides (cracked area) carefully with compressed air.

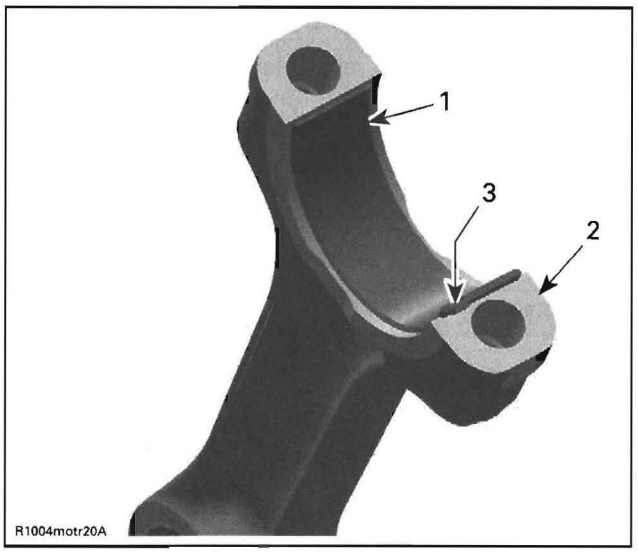

1. Half plain bearing of connecting rod big end
2. Split surface of the connecting rod
3. Nose of plain bearing in line with connecting rod groove

NOTE: Oil the plain bearing surface of the connecting rod and crank pin before installation.

Torque NEW connecting rod screws **no. 11** as per following procedure:

- First, install screws with half of the recommended torque. Do not apply any thread locker.
- Secondly, torque connecting rod screws to 20 N•m (15 lbf•ft).
- Finish tightening the screws with an additional 60° turn using an angle torque wrench.

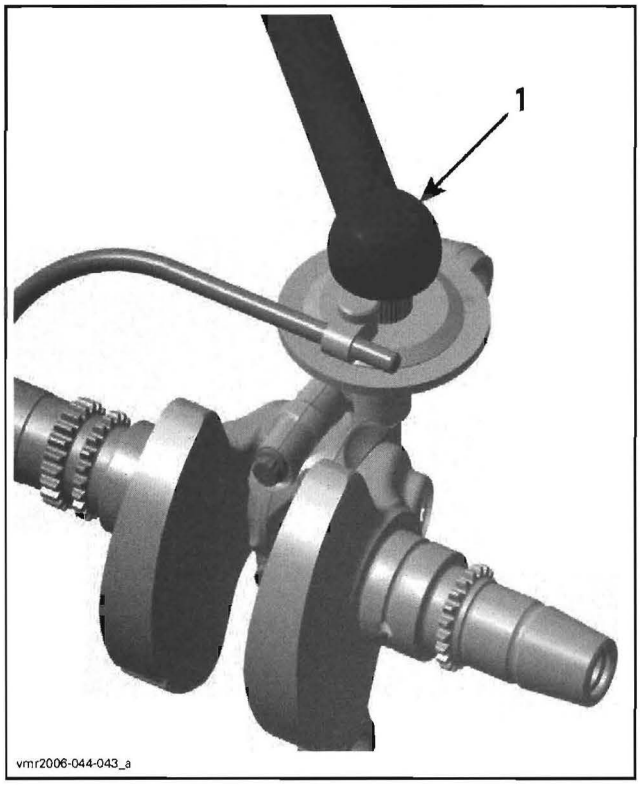

1. Angle torque wrench

CAUTION: Failure to strictly follow this procedure may cause screw to loosen and lead to engine damage. The plain bearing tapered end must be against the counterweight. Besides, as the "crankpin" screw has been stretched from the previous installation, it is very important to **use a new screw at assembly.**

NOTE: The running direction of the big end bearings and of the piston pins must not change.

Crankshaft Installation

For installation of crankshaft in crankcase reverse the removal procedure. Pay attention to the following details.

Do not mix up the connecting rods of cylinders 1 and 2 during installation.

CAUTION: Observe the correct installation position when fitting the crankshaft with the connecting rods. The connecting rod MAG side has to face to cylinder 1.

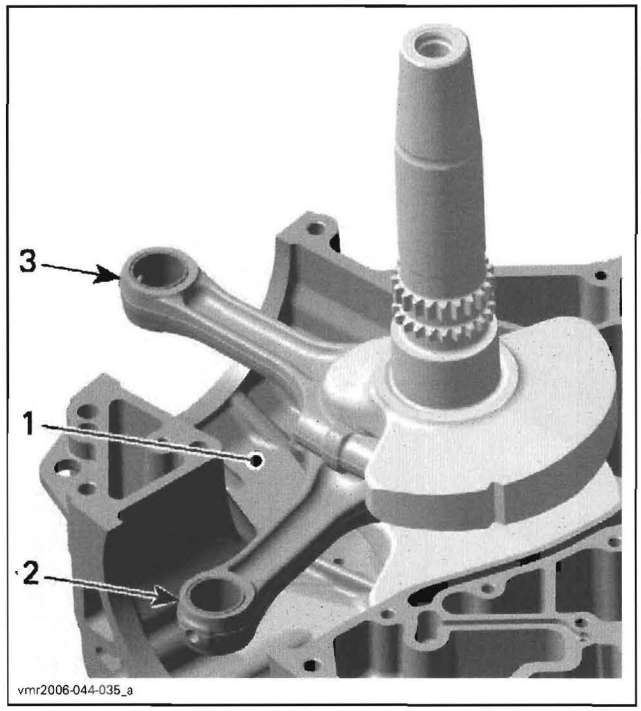

1. Crankcase half MAG side
2. Connecting rod cylinder 1
3. Connecting rod cylinder 2

CAUTION: Install CRANKSHAFT LOCKING BOLT to put crankshaft in TDC position before installing the camshaft and rocker arms (refer to *CRANKSHAFT LOCKING PROCEDURE*).

OVERVIEW

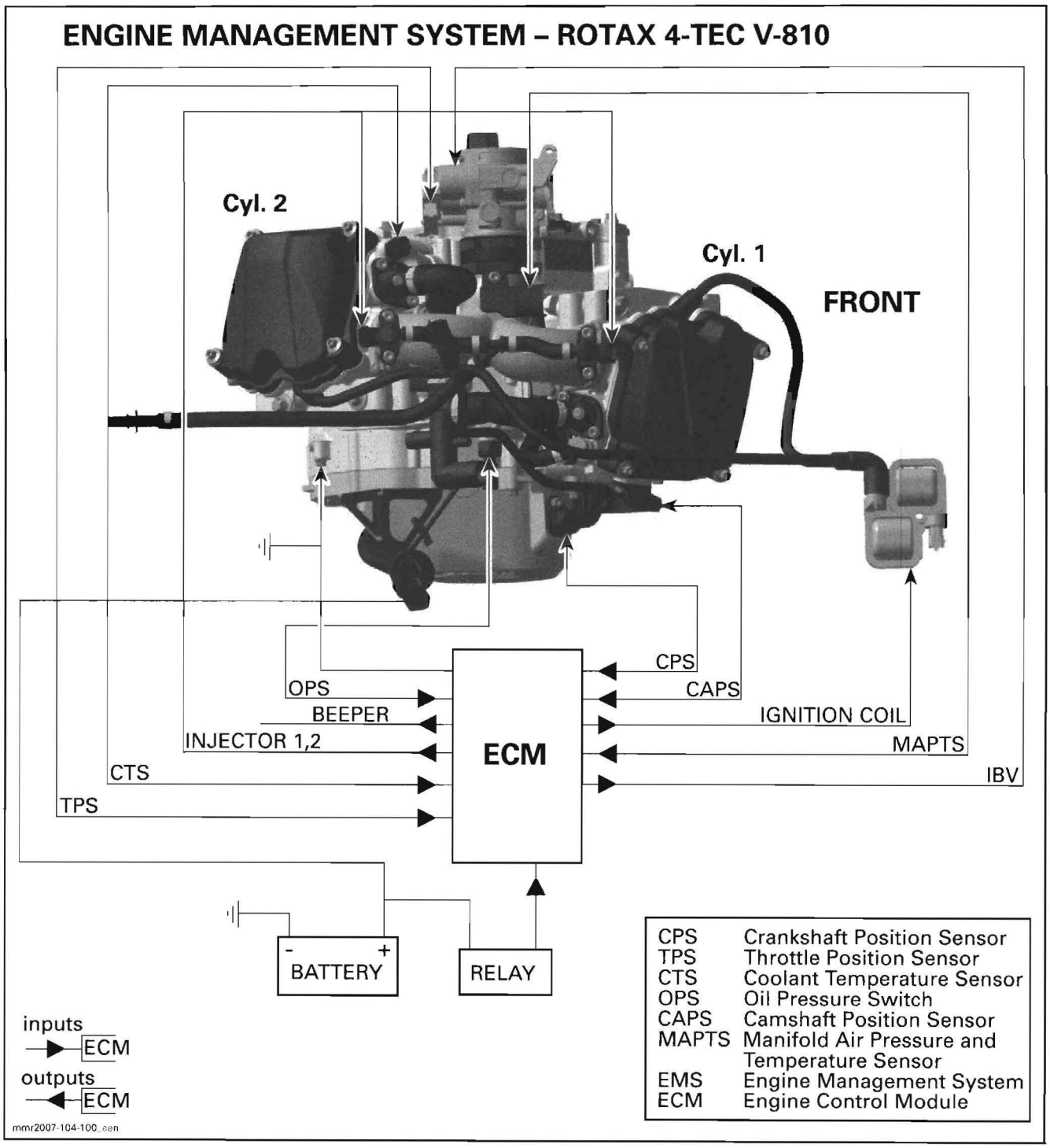
ENGINE MANAGEMENT SYSTEM – ROTAX 4-TEC V-810
Cyl. 2
Cyl. 1
FRONT
CPS
OPS
CAPS
BEEPER
IGNITION COIL
INJECTOR 1,2
MAPTS
ECM
CTS
IBV
TPS
- +
BATTERY
RELAY
inputs
ECM
outputs
ECM
CPS Crankshaft Position Sensor
TPS Throttle Position Sensor
CTS Coolant Temperature Sensor
OPS Oil Pressure Switch
CAPS Camshaft Position Sensor
MAPTS Manifold Air Pressure and Temperature Sensor
EMS Engine Management System
ECM Engine Control Module
mmr2007-104-100_en

OPERATING PRINCIPLE

A highly advanced engine management system (EMS) has been used to ensure a high power output with cleaner combustion.

There are 3 main systems in interaction with the engine management system (EMS):

1. Air induction.
2. Fuel system.
3. Electrical system.

NOTE: The cylinders are referenced as 1 (front) and 2 (rear).

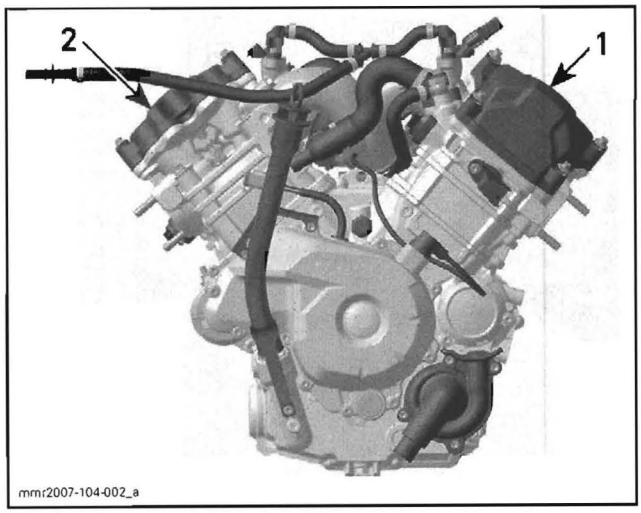

1. Cylinder 1 (front)
2. Cylinder 2 (rear)

AIR INDUCTION

Air flows through air filter, air intake silencer, throttle body, intake manifold and then goes into combustion chamber. Air pressure and temperature are measured directly in the intake manifold.

Throttle Body

The 46 mm throttle body is mounted on the side of intake manifold. Fitted on the throttle body, there is the TPS and the idle bypass valve which allows the ECM to control the idle speed while the throttle plate is closed.

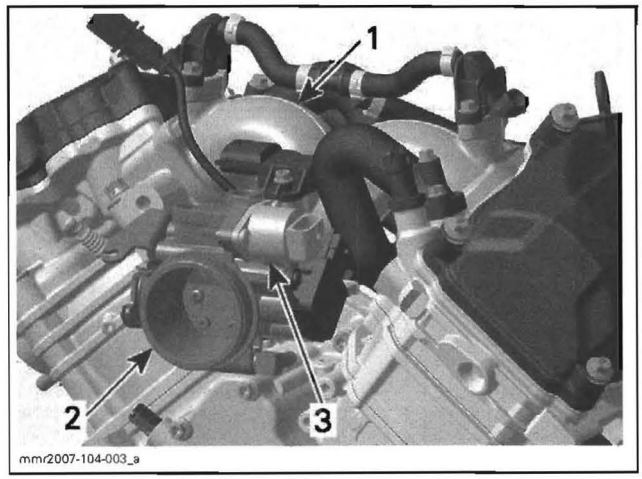

1. Intake manifold
2. Throttle body
3. Idle bypass valve

Intake Manifold

The intake manifold is mounted on the top of the engine on both cylinder heads. It provides support for the throttle body, fuel injectors, the fuel rails and the MAPTS (manifold air pressure and temperature sensor).

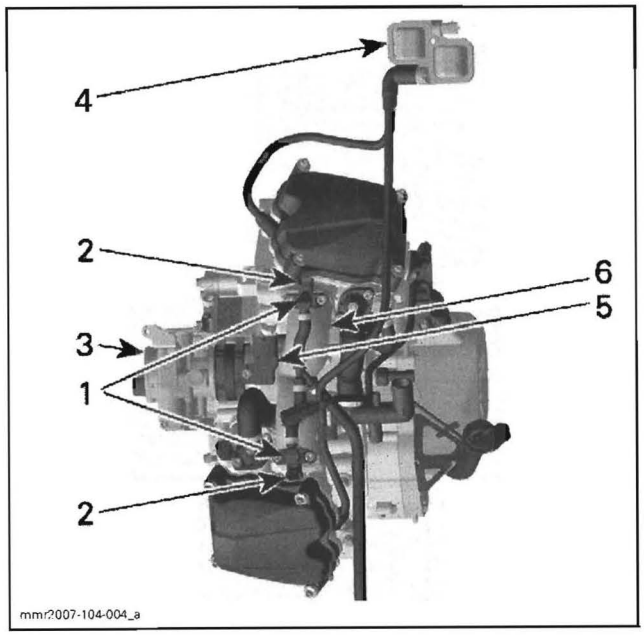

INTAKE MANIFOLD
1. Fuel rail
2. Injector
3. Throttle body
4. Ignition coil
5. Manifold air pressure and temperature sensor (MAPTS)
6. Intake manifold

FUEL SYSTEM

During the intake stroke, the ECM (engine control module) activates the fuel injector and fuel is sprayed into the intake port. The injector uses the high pressure inside the fuel rail. The air/fuel mixture then enters the combustion chamber through the open intake valve. This mixture is then ignited by the spark plug at the end of the compression stroke.

Fuel Rail

The fuel rail distributes the correct fuel pressure to each injector which are mounted on the intake manifold. The fuel rail is fed by the fuel pump at a specific fuel pressure.

Fuel Injector

Two fuel injectors (one per cylinder) are used to inject fuel into the intake port of the cylinder head.

Fuel Pump Module

The fuel pump module is inside fuel tank. The module includes fuel pump and the fuel pressure regulator. The fuel pump inlet includes a strainer. Refer to *FUEL SYSTEM*.

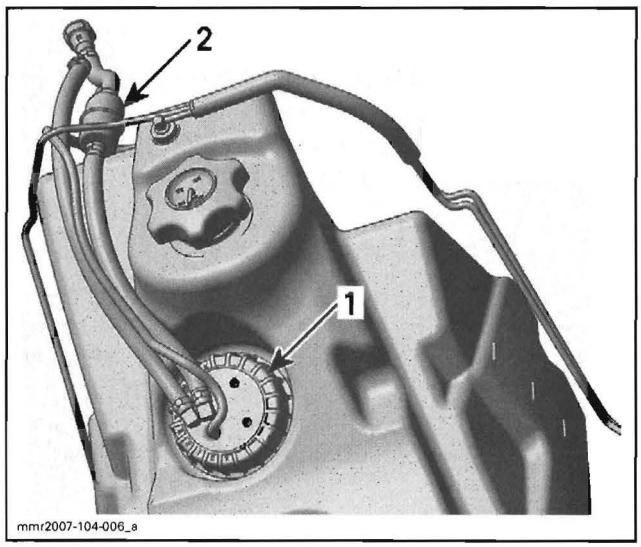

1. *Fuel pump module*
2. *In-line fuel filter*

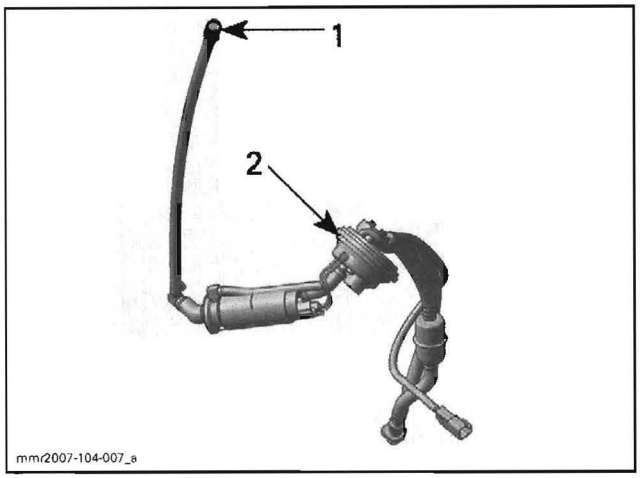

1. *Strainer*
2. *Fuel pressure regulator (inside)*

Fuel Pressure Regulator

A fuel pressure regulator, inside fuel pump module, controls the pressure in the system. Excess fuel is returned to the fuel tank. Refer to *FUEL SYSTEM*.

ELECTRICAL SYSTEM

A communication link (CAN lines) is used to communicate between the ECM and the B.U.D.S. software. CAN lines consist of a pair of wires (WHITE/BEIGE and WHITE/BLACK). Refer to *EMS DIAGNOSTIC AND COMMUNICATION TOOLS*.

Engine Control Module (ECM)

The ECM controls the electrical system and the engine management functions, by processing the information given by various sensors.



The ECM is located just under hood.

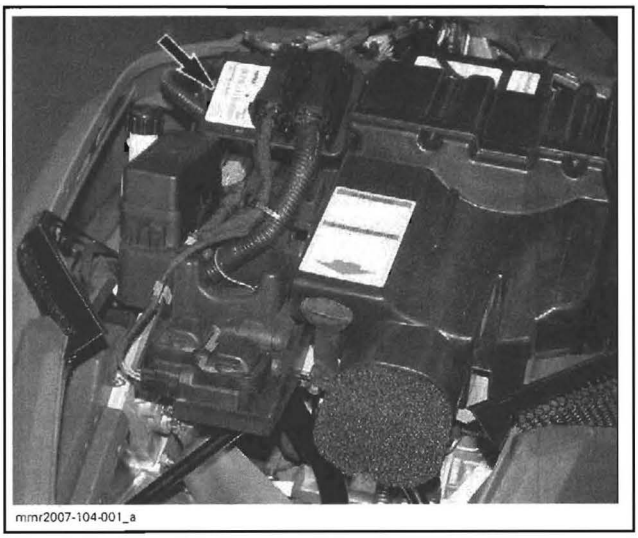
mmr2007-104-001_a

The ECM features a permanent memory that will keep the fault codes, customer information and other engine information, even when the battery is removed from the vehicle.

When ignition key is turned to START, the ECM initiates a self-diagnostic mode. However, some components need the engine to be running so that they can be monitored. Some problems will turn on a warning lamp and will set the engine in limp home mode. Refer to *EMS DIAGNOSTIC AND COMMUNICATION TOOLS* section for more information.

Power Distribution

Electrical system is protected by fuses located in the fuse box. Refer to *LIGHTS, INSTRUMENTS AND ACCESSORIES*.

⚠ WARNING

Engine-related sensors and injectors are continuously powered from the battery when the ECM is woken up. The ECM switches the ground to complete the electrical circuits it controls. Take this into account when troubleshooting the electrical system. Always disconnect the battery prior to disconnecting any electric or electronic parts.

The system uses 2 relays that control different components. See illustration.

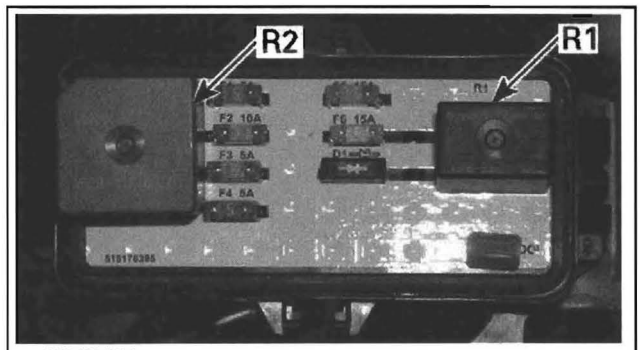

mmr2007-138-001_b

R1: ECM, EMS (Ignition/injectors, fuel pump) and gauges
R2: Lights and accessories

When the ignition key is briefly turned to START or held, it wakes up the EMS and powers the relay 1. Then, if the cut-off switch and the tether cord are in the RUN position while the START position is held, the starter solenoid is activated.

When engine reaches approximately 800 RPM, the ECM activates the relay 2.

Gauges Current Supply

Gauges are supplied with current for 30 seconds when briefly turning ignition key to START. At the same moment, the fuel pump is activated for 2 seconds to build up pressure in the fuel injection system.

NOTE: On vehicle without gauges, the oil light will turn on.

NOTE: Setting engine cut-out switch to OFF or removing the tether cord will prevent engine cranking.

Automatic Power Shut-Down

The ECM is equipped with an automatic power shut-down. This feature prevents the battery from discharging if the ignition key is left in the ON position when the engine is not running for more then 30 seconds. The ECM will remain offline until the ignition key is turned to START.

ENGINE MANAGEMENT SYSTEM

The EMS calculates the proper air/fuel mixture and ignition timing for each cylinder separately.

The ECM is the central point of the engine management system. It reads the inputs, makes computations, uses pre-determined parameters and sends the proper signals to the outputs for proper engine management.

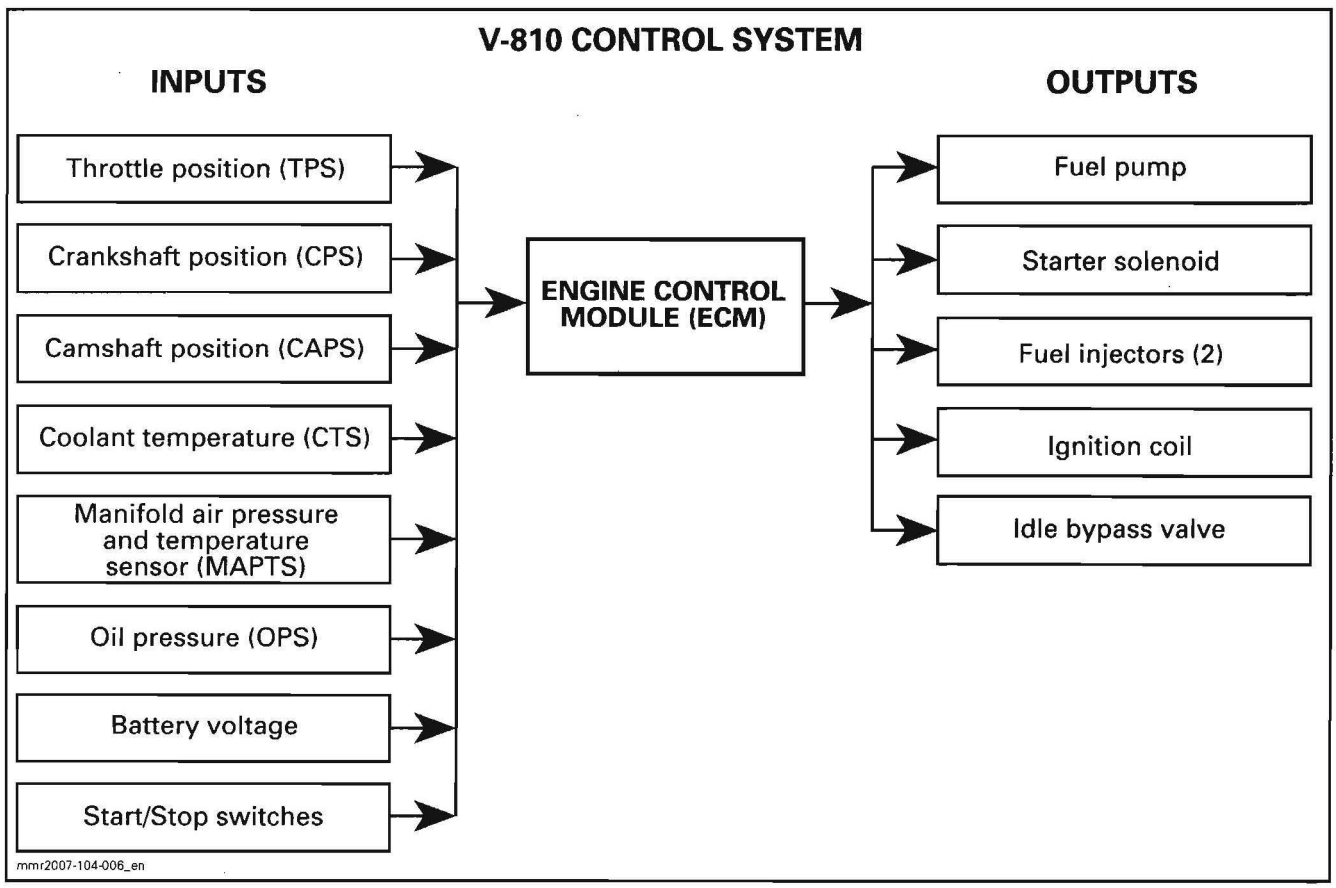

ELECTRONIC FUEL INJECTION

The ECM reads the signals from different sensors which indicate engine operating conditions at millisecond intervals.

Signals from sensors are used by the ECM to determine the injection parameters (fuel maps) required for optimum air-fuel ratio.

The CPS, the MAPTS and the TPS are the primary sensors used to control the injection and ignition timing. Other sensors (like temperature sensors, etc.) are used for secondary input.

IGNITION

The ignition system is fully managed by the ECM which controls the ignition system parameters, such as spark timing, duration and firing order to achieve the proper engine requirements.

Ignition Coil

A double ignition coil induces voltage to a high level in the secondary winding to produce a spark at each spark plug independently.

The ignition coil receives input from the ECM.

The ignition coil is located just under hood.

ENGINE MANAGEMENT SYSTEM

The EMS calculates the proper air/fuel mixture and ignition timing for each cylinder separately.

The ECM is the central point of the engine management system. It reads the inputs, makes computations, uses pre-determined parameters and sends the proper signals to the outputs for proper engine management.

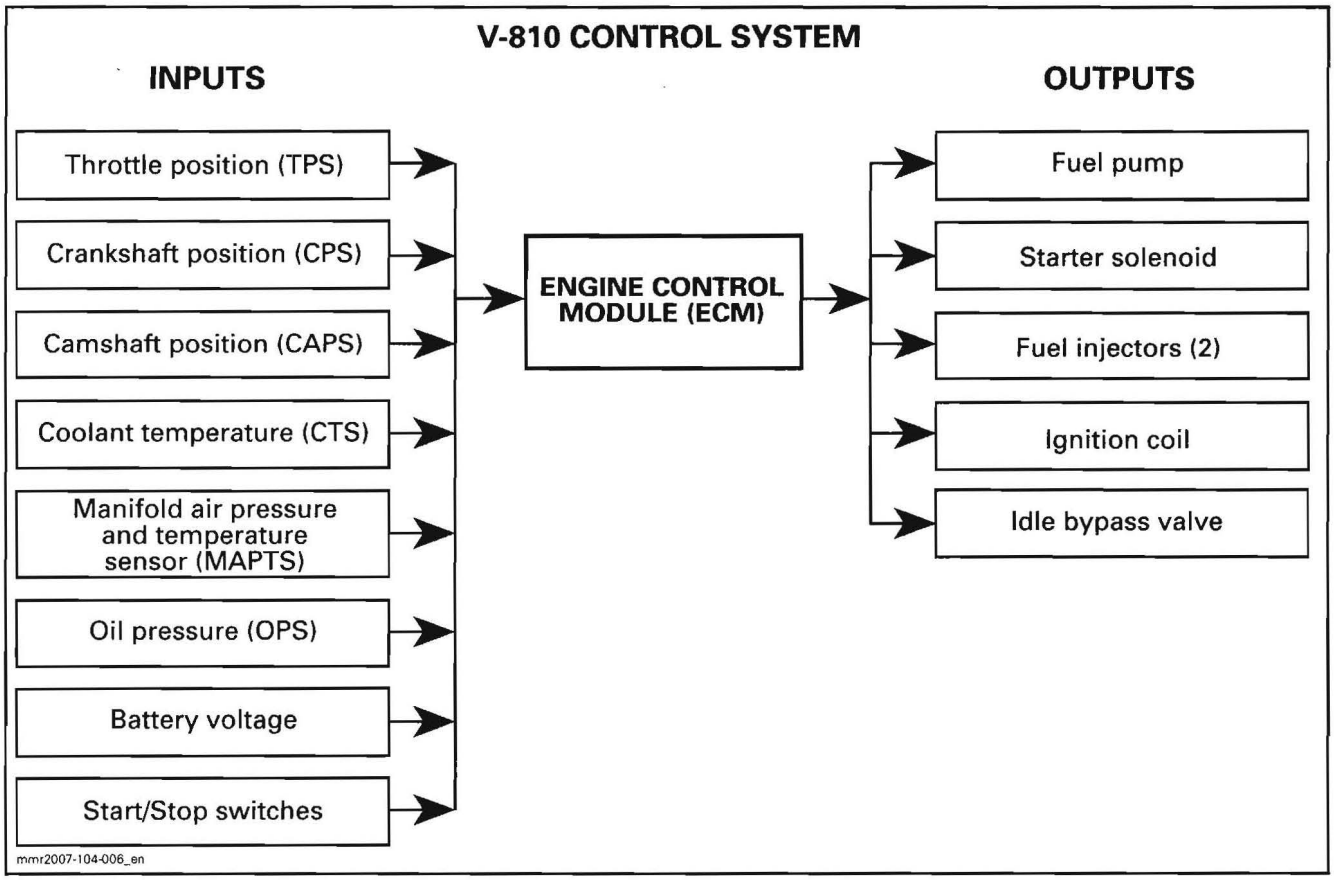

ELECTRONIC FUEL INJECTION

The ECM reads the signals from different sensors which indicate engine operating conditions at millisecond intervals.

Signals from sensors are used by the ECM to determine the injection parameters (fuel maps) required for optimum air-fuel ratio.

The CPS, the MAPTS and the TPS are the primary sensors used to control the injection and ignition timing. Other sensors (like temperature sensors, etc.) are used for secondary input.

IGNITION

The ignition system is fully managed by the ECM which controls the ignition system parameters, such as spark timing, duration and firing order to achieve the proper engine requirements.

Ignition Coil

A double ignition coil induces voltage to a high level in the secondary winding to produce a spark at each spark plug independently.

The ignition coil receives input from the ECM.

The ignition coil is located just under hood.

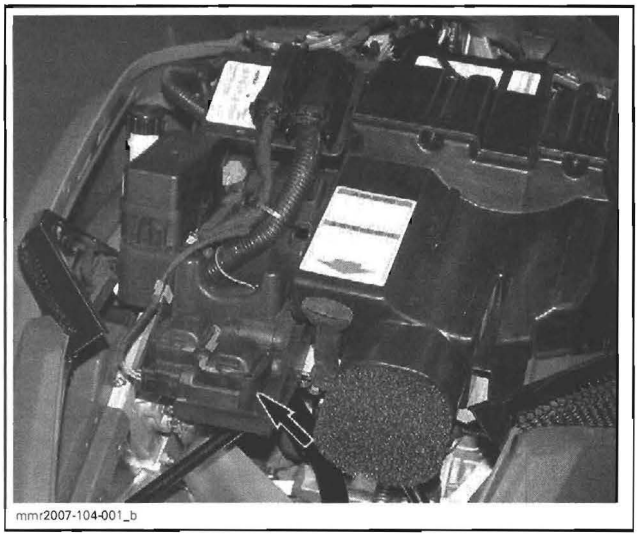
mmr2007-104-001_b

Ignition Timing

The ECM is programmed with data (it contains ignition mappings) for optimum ignition timing under all operating conditions. Using engine operating conditions provided by the sensors, the ECM controls the ignition timing for optimum engine operation. There is no mechanical adjustment to perform.

ENGINE MODES OF OPERATION

Engine RPM Limiter

The ECM will limit the maximum engine speed to approximately 8000 RPM by cutting fuel injection and ignition.

The ECM uses the CPS for this function.

Limp Home Mode

The ECM may automatically set default parameters to the engine management to ensure the adequate operation of the engine if a component of the fuel injection system is not operating properly. The engine will operate with reduced performance to protect the engine. In more severe cases, the engine RPM will be limited, also to protect the engine.

These performance-reduced modes allow the rider to go back home which would not be otherwise possible without this advanced system. Refer to the *EMS DIAGNOSTIC AND COMMUNICATION TOOLS* for a complete chart.

In the following situations, engine RPM will be limited.

CONDITION	MAX ALLOWED RPM
High engine temperature	5000
Low oil pressure	4500
Safety fuel cut-off (TPS or internal memory error)	5000

Drowned Mode (Flooded Engine)

If engine is fuel-flooded and does not start, this special mode can be activated to prevent fuel injection and ignition while cranking. Proceed as follows to activate it.

Install tether cord and set engine cut-off switch to RUN.

Press and HOLD throttle lever at WOT position.

Turn ignition key to START. The mode is now on.

If engine does not start, it may be necessary to remove spark plugs and crank engine with rags over spark plug holes. Refer to *ADJUSTMENT AND REPAIR PROCEDURES* subsection.

To leave the drowned mode, release START (ignition key) and throttle lever.

MONITORING SYSTEM

The ECM monitors the electronic components of the fuel injection system and also parts of the electrical system. When a significant fault occurs, it sends visual messages through the referring warning light and sometimes audible signals through a beeper to inform you of a particular condition. Refer to the *EMS DIAGNOSTIC AND COMMUNICATION TOOLS* for a chart.

For some faults, the warning light/beeper may disappear automatically when the condition no longer exists.

Releasing throttle and letting the engine returning at idle speed may allow normal operation to come back. If it does not work, try stopping engine then restarting it. An analysis of occured faults using B.U.D.S. is recommended. Refer to the *EMS DIAGNOSTIC AND COMMUNICATION TOOLS*.

Battery Voltage Warning Device

When the battery voltage is either too low or too high, the ECM sends out a signal to the check engine light, battery light and beeper will warn. Limp home will be set.

Low Oil Pressure Warning Device

When the oil pressure falls under a certain level, the OPS sends out a signal to the low oil pressure light and to the ECM. The ECM then activates the check engine light. Limp home will be set.

High Coolant Temperature Warning Device

When the coolant temperature is getting too high, the ECM sends out signals to the engine overheating light and to the check engine light. Limp home will be set.

EMS DIAGNOSTIC AND COMMUNICATION TOOLS

SERVICE TOOLS

Description	Part Number	Page
Communication kit	529 035 981	295
diagnostic cable	710 000 851	298
Diagnostic cable	710 000 851	297
MPI-2	529 036 018	297–298
Optional extension cable	529 035 697	297
Optional extension cable	529 035 703	295
supply T-harness	529 035 869	296, 298
Supply T-harness	529 035 869	295, 297

GENERAL

Here is the basic order suggested to diagnose a suspected engine management or fuel injection related problem:

- Check the chart in the *TROUBLESHOOTING* section to have an overview of problems and suggested solutions.
- Check if the engine management system (EMS) pilot lamp blinks. If so, use the B.U.D.S. software and look for fault codes to diagnose the trouble.
- Check all fuses.
- Check relay 1.
- Check fuel pressure.
- Check spark plugs condition.
- Check all connections of the wiring harness.
- Refer to *ADJUSTMENT AND REPAIR PROCEDURES* section for procedures.

When using the service action suggested in the Fault section of B.U.D.S., the system circuits are referred to as 2-A-41, which means connector "A" on the ECM and pin 41. The first digit (2) indicates connector location in vehicle such as shown in the *WIRING DIAGRAMS*.

COMMUNICATION TOOLS

Two different MPI (Multi-Purpose Interface) can be used with B.U.D.S. software: MPI and MPI-2.

MULTI-PURPOSE INTERFACE (MPI)

PART REQUIRED
PC computer
B.U.D.S. software Use latest version available on BOSSWeb
Communication kit (P/N 529 035 981) 
Optional extension cable (P/N 529 035 703) 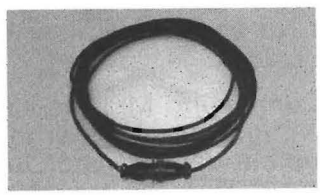
Supply T-harness (P/N 529 035 869) 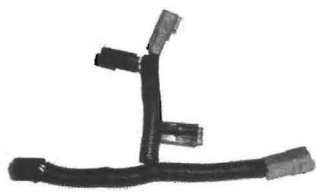

MPI Supply

The MPI can use the vehicle power for its supply. Four AA batteries or an AC/DC power supply can also be used. Make sure to respect MPI specification if a power supply is used.

Connections with Vehicle

⚠ WARNING

If the computer you are using is connected to the power outlet, there is a potential risk of electric shock when working in contact with water. Be careful not to touch water while working with the computer.

Remove the 6 pin connector from its receptacle on the right side of the vehicle.

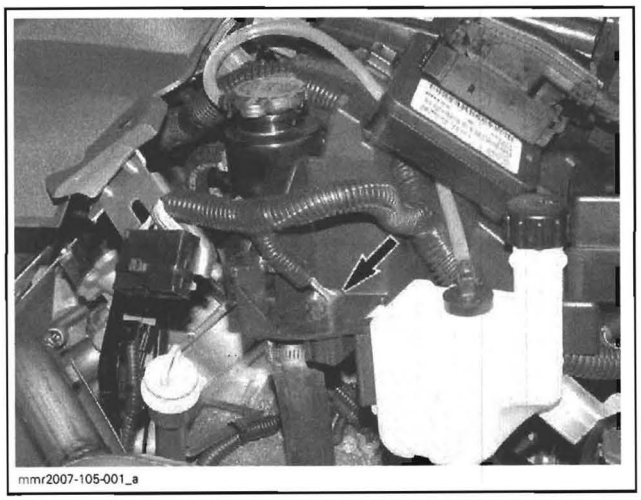

Connect supply T-harness (P/N 529 035 869), to vehicle 6-pin connector.

NOTE: The use of the supply T-harness will keep the ECM ON. Not using it will allow the ECM shutting-off after some time.

CAUTION: Connecting MPI directly to vehicle connector (without supply T-harness) may lead to an incomplete data transfer to the ECM if it shuts down during the transfer. If this occurs during a reflashing of the ECM, it could become unusable. Always use the proper supply T-harness to allow continuous communication.

Connect the 6 pin diagnostic cable from MPI to supply T-harness.

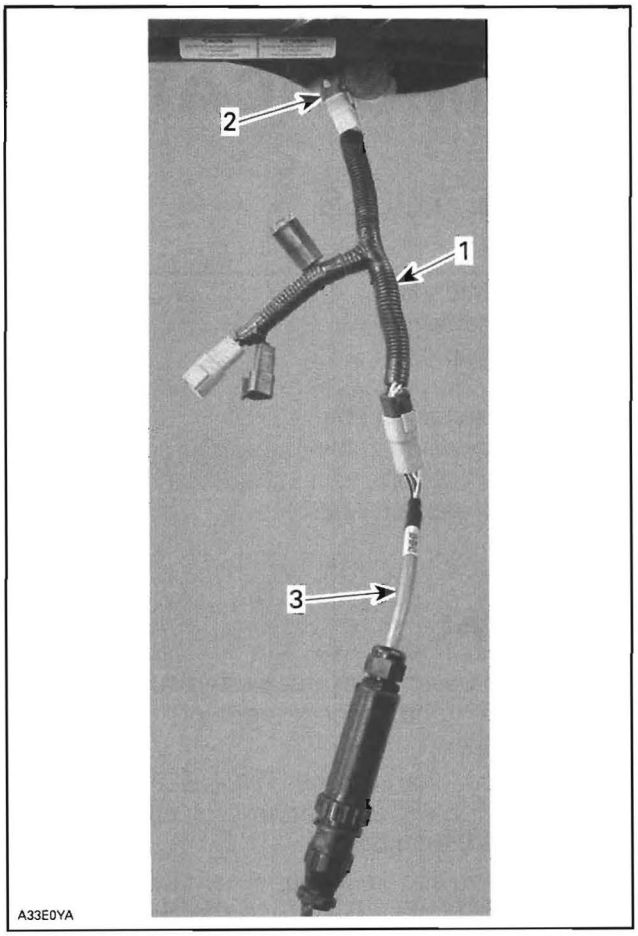

TYPICAL
1. *Supply T-harness*
2. *Vehicle 6-pin connector*
3. *MPI cable*



Connect remaining MPI connector to the serial port of a PC (personal computer).

Use B.U.D.S. software as described further in *B.U.D.S. SOFTWARE*.

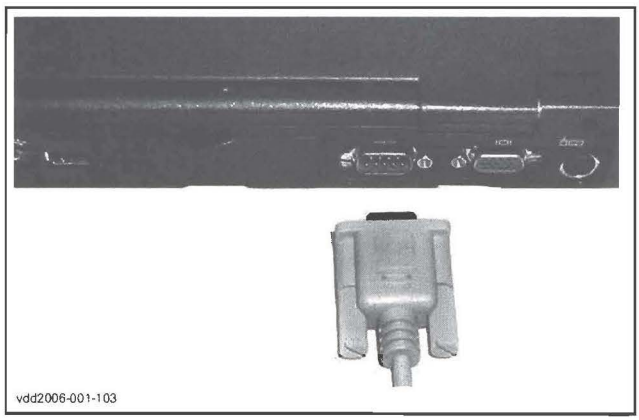
vdd2006-001-103

MULTI-PURPOSE INTERFACE-2 (MPI-2)

PART REQUIRED
PC computer
B.U.D.S. software Use latest version available on BOSSWeb
MPI-2 (P/N 529 036 018) 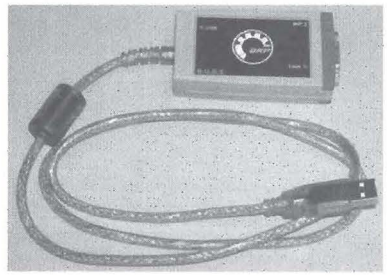
Optional extension cable (P/N 529 035 697) 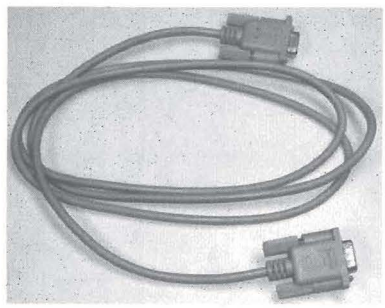
Diagnostic cable (P/N 710 000 851) 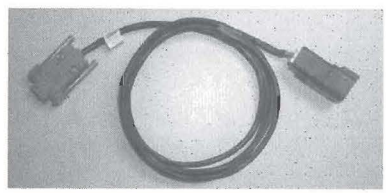
Supply T-harness (P/N 529 035 869) 

MPI-2 Supply

The MPI uses the PC computer USB port power for its supply.

Connections with Vehicle

⚠ WARNING

If the computer you are using is connected to the power outlet, there is a potential risk of electric shock when working in contact with water. Be careful not to touch water while working with the computer.

Remove the 6 pin connector from its receptacle on the right side of the vehicle.

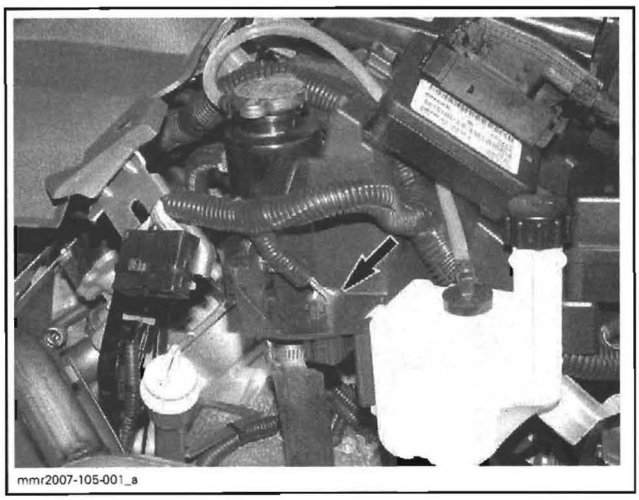
mmr2007-105-001_a

Connect supply T-harness (P/N 529 035 869), to vehicle 6-pin connector.

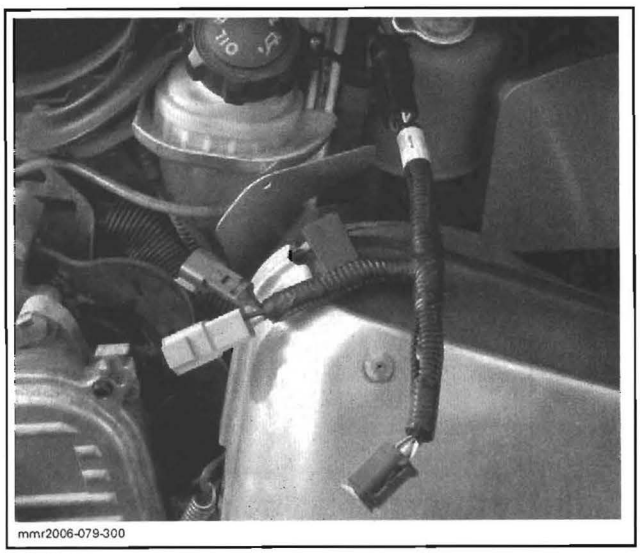
mmr2006-079-300

TYPICAL

NOTE: The use of the supply T-harness will keep the ECM ON. Not using it will allow the ECM shutting-off after some time.

CAUTION: Connecting MPI directly to vehicle connector (without supply T-harness) may lead to an incomplete data transfer to the ECM if it shuts down during the transfer. If this occurs during a reflashing of the ECM, it could become unusable. Always use the proper supply T-harness to allow continuous communication.

Connect diagnostic cable (P/N 710 000 851) to supply T-harness connector.


mmr2006-079-303

TYPICAL

Connect MPI-2 (P/N 529 036 018) to diagnostic cable.

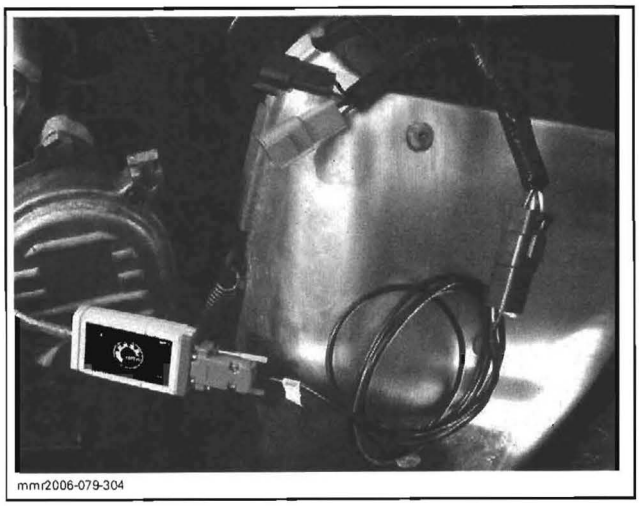
mmr2006-079-304

TYPICAL

Connect remaining MPI-2 connector to the USB port of a PC (personal computer).

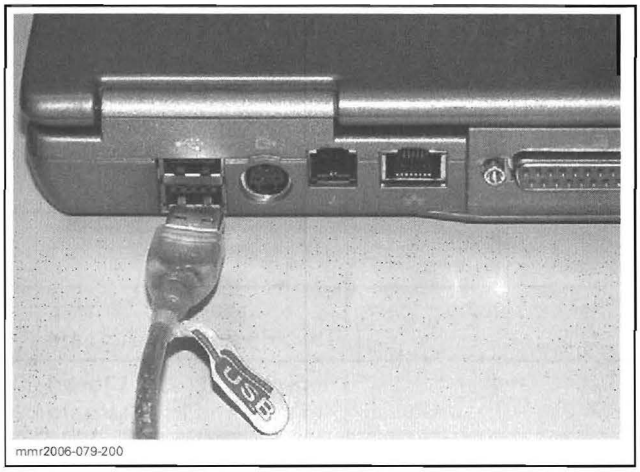

B.U.D.S. SOFTWARE

B.U.D.S. (Bombardier Utility and Diagnostic Software) is designed to allow electrical component inspection, diagnostic options and adjustments such as the closed throttle.

For more information pertaining to the use of the B.U.D.S. software, use its help which contains detailed information on its functions.

When using the service action suggested in the Fault section of B.U.D.S., for instance, a system circuit referred to as DA-35, means connector "A" on the ECM and the contact 35.

When using the B.U.D.S. software:

MPI Only

– ensure that 115200 speed is properly selected in "MPI" under "**Choose speed**".

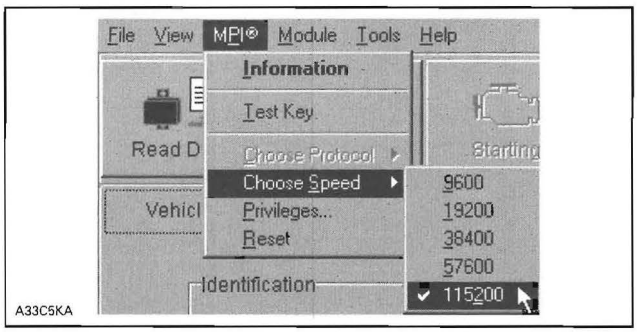

NOTE: If you are using an old PC computer, it may be necessary to use a slower speed so that the communication works.

MPI and MPI-2

– ensure that the protocol "kW2000" is properly selected in "MPI" under "**Choose protocol**

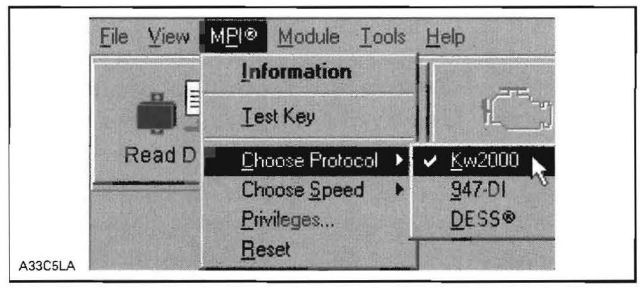

– ensure the status bar shows the kW2000 and the number 1 to the right. To communicate with the ECM, number 1 must be displayed.

Number 1 indicates that the ECM is recognized by the MPI.

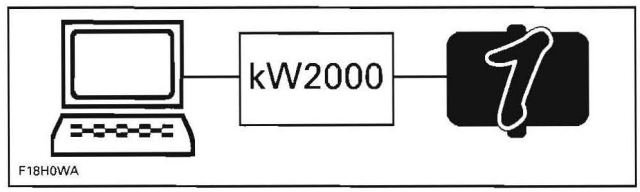

CONNECTION SUCCESSFUL

If an "X" is shown, this means that no communication between the MPI and the ECM is possible. In this case possible causes are:

– ECM is not powered-up
– wrong protocol is used
– bad connection between MPI and ECM.

Changes in ECM

Anytime a change is brought in ECM through B.U.D.S., there will be an "EMS Tracking" message that will say "Remove key from vehicle". When this occurs, disconnect the EMS tracking connector.

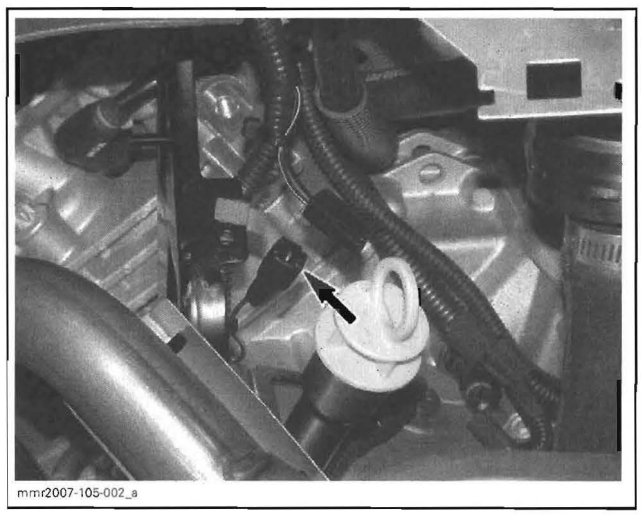

CONNECTOR CLOSE TO OIL DIPSTICK

Wait until the message disappears (it lasts approximately 15 seconds after connector disconnection). **Ensure to reconnect connector afterwards. Otherwise, engine will not crank.**

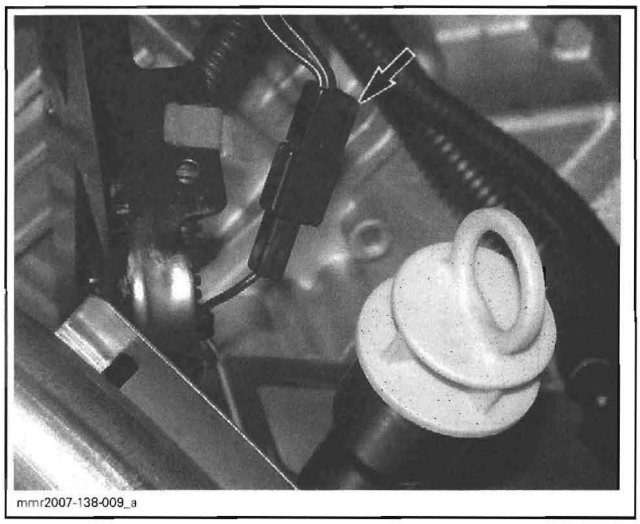

CONNECTED FOR NORMAL ENGINE OPERATION

DIAGNOSTIC

FAULT CODES

General

The faults saved in the ECM (Engine Control Module) are kept even if the battery is disconnected.

IMPORTANT: After a problem has been solved, ensure to clear the fault(s) in the ECM using the B.U.D.S. software. This will properly reset the appropriate counter(s) and will also record that the problem has been fixed in the ECM memory.

Many fault codes at the same time is likely to be burnt fuse(s) or a faulty relay.

For more information pertaining to the fault codes (state, count, first, etc.) and report, refer to B.U.D.S. online help.

TPS (Throttle Position Sensor) Faults

Faults which are reported in B.U.D.S. fall into two groups: TPS faults and adaptation faults. These are displayed on the B.U.D.S. system as TPS OUT OF RANGE and TPS ADAPTATION FAILURE.

TPS "OUT OF RANGE" Fault

It is caused by the sensor reading going out of its allowable range. This fault can occur during the whole range of movement of the throttle.

To diagnose this fully, it is recommended to operate the throttle through its full range. It is also recommended to release the throttle quickly as this may also reveal a fault that is intermittent.

POSSIBLE CAUSES	ACTION
Check if connector is disconnected from TPS	Fix.
Check if sensor is loose	Tighten and reset **Closed Throttle and Idle Actuator**.
Inspect sensor for damage or corrosion	Replace and reset **Closed Throttle and Idle Actuator**.
Inspect wiring (voltage test)	Repair.
Inspect wiring and sensor (resistance test)	If bad wiring, repair. If bad TPS, replace and reset **Closed Throttle and Idle Actuator**.
Test sensor operation (wear test)	Replace and reset **Closed Throttle and Idle Actuator**.

TPS "ADAPTATION FAILURE" Fault

It is caused by the idle position moving out of an acceptable range.

Following problems can be caused by a TPS "Adaptation Failure":

- Idle speed is out of range.
- Engine stops when throttle is released quickly.
- Engine runs inconsistent in low partload or low RPM.

POSSIBLE CAUSES	ACTION
Sensor has been replaced and TPS closed position not reset	Reset **Closed Throttle and Idle Actuator**.
Throttle body has been replaced and TPS closed position not reset	Reset **Closed Throttle and Idle Actuator**.
ECM has been replaced and TPS closed position not reset	Reset **Closed Throttle and Idle Actuator**.
Throttle cable too tight	Tighten and reset **Closed Throttle and Idle Actuator**.
Sensor is loose	Tighten and reset **Closed Throttle and Idle Actuator**.
Throttle bracket is loose	Tighten and reset **Closed Throttle and Idle Actuator**.
Idle speed screw (tamper proof) worn or loose	Change throttle body.
Idle bypass valve replaced but not reset	Reset **Closed Throttle and Idle Actuator** using B.U.D.S.

Fault Code P0654

If this code occurs and tachometer works normally, disregard this fault code.

Fault Code P1611

If you experience the check engine light slightly flashing and the beeper sounding erratically, it may be the capacitor in wiring harness under fuse box.

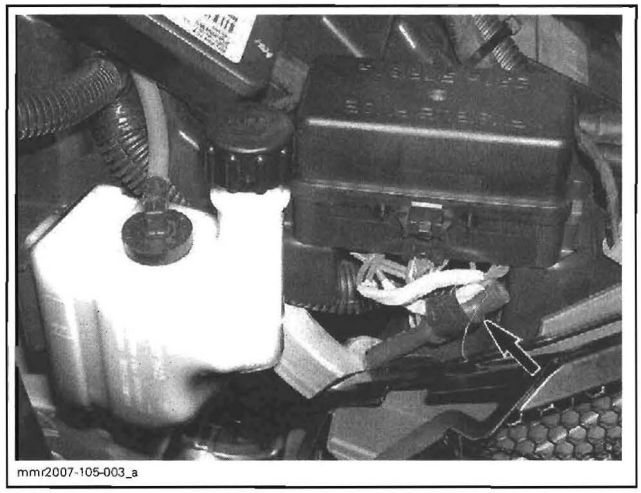
mmr2007-105-003_a

Refer to service action in B.U.D.S. pertaining to this code and if everything tests good, try a new capacitor.

FAULT CODE TABLE

CHECK ENGINE LIGHT	BEEPER	LIMP HOME MODE	FAULT CODE	DESCRIPTION	CAUSE	ACTION
OFF	OFF	Active	P0106	Air pressure sensor voltage out of range	Sensing port dirty or blocked. Sensor failure or unexpected reading. Disconnected sensor. Intake leakage, cracked gasket, sensor fit, loose bolts.	Make sure sensor's connector is fully inserted. Check for approximately 5 volts between sensor connector pins 1 and 4. Check system circuits DA-12, DA-28 and DA-40. Check for intake leakage, cracked gasket, sensor fit, loose bolts.
Flash	OFF	Active	P0107	Air pressure sensor voltage too low	Damaged circuit wires, damaged or disconnected sensor, sensor shorted to ground.	Make sure sensor's connector is fully inserted. Check for approximately 5 volts between sensor connector pins 1 and 4. Check system circuits DA-12, DA-28 and DA-40.
Flash	OFF	Active	P0108	Air pressure sensor voltage too high	Damaged circuit wires, damaged or disconnected sensor, sensor shorted to a supply.	Make sure sensor's connector is fully inserted. Check for approximately 5 volts between sensor connector pins 1 and 4. Check system circuits DA-12, DA-28 and DA-40.
Flash	OFF	Active	P0111	Air temperature sensor functional problem	Intermittent air temperature sensor reading or circuit wires shorted to ground.	The air temperature sensor is part of the pressure temperature sensor. Check for approximately 2500 ohms between sensor connector pins 1 and 2. Check system circuits DA-7 and DA-28. Replace the sensor if necessary.

CHECK ENGINE LIGHT	BEEPER	LIMP HOME MODE	FAULT CODE	DESCRIPTION	CAUSE	ACTION
Flash	OFF	Active	P0112	Air temperature sensor voltage too low	Air temperature sensor or circuit wires shorted to ground.	The air temperature sensor is part of the pressure temperature sensor. Check the air temperature sensor for approximately 2280 to 2736 ohms at 19 to 21°C (66 to 70°F) between sensor connector pins 1 and 2. Check system circuits DA-7 and DA-28. Replace the sensor if necessary.
Flash	OFF	Active	P0113	Air temperature sensor voltage too high	Disconnected sensor or sensor's resistance too high.	The air temperature sensor is part of the pressure temperature sensor. Check the air temperature sensor for approximately 2280 to 2736 ohms at 19 to 21°C (66 to 70°F) between sensor connector pins 1 and 2. Check system circuits DA-7 and DA-28. Replace the sensor if necessary.
Flash	OFF	Active	P0116	Engine temperature sensor functional problem	Intermittent engine temperature sensor reading or circuit wires shorted to ground.	Check system circuits DA-11 and DA-27. Replace the sensor if necessary.
Flash	OFF	Active	P0117	Engine temperature sensor voltage too low	Engine temperature sensor or circuit wires shorted to ground.	Disconnect the sensor and check for a change in the fault code. If the fault code stays the same, look for a short circuit on the harness. If the fault code is different, replace the sensor. Check for leakage between sensor's connection and ground. Check system circuits DA-11 and DA-27.
Flash	OFF	Active	P0118	Engine temperature sensor voltage too high	Disconnected sensor or sensor's resistance too high.	Check for disconnected engine temperature sensor. Check the engine temperature sensor for approximately 2280 to 2736 ohms at 19 to 21°C (66 to 70°F). Replace the sensor if necessary. Check system circuits DA-11 and DA-27.
Flash	OFF	Active	P0122	Throttle position sensor voltage too low	Damaged circuit wires, damaged throttle position sensor or damaged ECM pins.	Check system circuits DA-24, DA-25 and DA-39. Refer to the service manual for complete throttle position sensor testing procedure.
Flash	OFF	Active	P0123	Throttle position sensor voltage too high	Damaged circuit wires, damaged throttle position sensor or damaged ECM pins.	Check system circuits DA-24, DA-25 and DA-39. Refer to the service manual for complete throttle position sensor testing procedure.
Flash	OFF	Active	P0231	Fuel pump open circuit or shorted to ground	Blown fuse, damaged or disconnected fuel pump, damaged circuit wires, damaged connectors or damaged ECM output pins.	Check fuse F2. Check for approximately 1 ohm between pins PE-1 and PE-2 of the fuel pump connector. Check for approximately 12 volts on pin PE-2 and chassis. Check system circuit DB-29.
Flash	OFF	Active	P0232	Fuel pump shorted to battery	Damaged fuel pump, damaged circuit wires, damaged connectors or damaged ECM output pins.	Check fuse F2. Check for approximately 1 ohm between pins PE-1 and PE-2 of the fuel pump connector. Check for approximately 12 volts on pin PE-2 and chassis. Check system circuit DB-29.
Flash	OFF	Active	P0261	MAG injector open circuit or shorted to ground	Blown fuse, damaged or disconnected injector, damaged or disconnected circuit wires, damaged ECM output pins.	Check fuse F1. Check connections on injector. Check for approximately 14.5 ohms on injector. Check system circuit DA-15. Check connector CJ connecting the two harnesses together.
Flash	OFF	Active	P0262	MAG injector shorted to battery	Damaged injector, damaged circuit wires, damaged connector or damaged ECM output pins.	Check for approximately 14.5 ohms on injector. Check if system circuit DA-15 is shorted to 12 V.

CHECK ENGINE LIGHT	BEEPER	LIMP HOME MODE	FAULT CODE	DESCRIPTION	CAUSE	ACTION
Flash	OFF	Active	P0264	PTO injector open circuit or shorted to ground	Blown fuse, damaged or disconnected injector, damaged or disconnected circuit wires, damaged ECM output pins.	Check fuse F1. Check connections on injector. Check for approximately 14.5 ohms on injector. Check system circuit DA-33. Check connector CJ connecting the two harnesses together.
Flash	OFF	Active	P0265	PTO injector shorted to battery	Damaged injector, damaged circuit wires, damaged connector or damaged ECM output pins.	Check if system circuit DA-33 is shorted to 12 V.
Flash	OFF	Active	P0344	Cam phase sensor signal missing	Damaged circuit wires or damaged sensor.	Check for 12 volts between sensor's connector pins 1 and 3.Check system circuits DA-20 and DA-34. Check connector CJ-3 for approximately 12 volts.
Flash	OFF	Active	P0351	No MAG ignition output stage	Blown fuse, damaged circuit wires, damaged connector or damaged ignition coil.	Check fuse F2. Check for 0.40 to 1.15 ohm between ignition coil pins. Check connector CJ connecting the two harnesses together. Check system circuit DA-41.
Flash	OFF	Active	P0352	No PTO ignition output stage	Blown fuse, damaged circuit wires, damaged connector or damaged ignition coil.	Check fuse F2. Check for 0.40 to 1.15 ohm between ignition coil pins. Check connector CJ connecting the two harnesses together. Check system circuit DA-1.
Flash	OFF	None	P0505	Idle air control valve output stage cutoff memory difference	Damaged actuator, damaged circuit wires, damaged connector or damaged ECM output pins.	Check for approximately 50 ohms between pins A and D and also between pins B and C of the idle air control valve. Check for damaged circuit wires. Check system circuits DA-35, DA-36, DA-37 and DA-38. Check for damaged connector or damaged ECM output pins.
Flash	OFF	Active	P0505	Idle air control valve output stage fault	Damaged actuator, damaged circuit wires, damaged connector or damaged ECM output pins.	Check for approximately 50 ohms between pins A and D and also between pins B and C of the idle air control valve. Check for damaged circuit wires. Check system circuits DA-35, DA-36, DA-37 and DA-38. Check for damaged connector or damaged ECM output pins. Check for faulty capacitor under the fuse box.
Flash	OFF	Active	P0520	Oil pressure switch functional problem	Low oil level, engine leak, oil pump failure, damaged sensor, damaged or shorted circuit wires.	Check oil level. Check oil pressure switch resistance. With engine stopped, the resistance should be less than 1 ohm. With engine running, the resistance should be infinitely high (OL). Check system circuit DA-10.
Flash	2 sec beeep every 15 min	Active	P0562	Battery voltage too low	Battery failure, damaged circuit wires, damaged or disconnected regulator/rectifier.	Check battery voltage for 11 to 13 volts with engine stopped. Check battery voltage for 14.1 to 14.7 volts with engine idling. Check connections on regulator. Check ground and positive connections near the battery.
Flash	2 sec beeep every 15 min	Active	P0563	Battery voltage too high	Damaged regulator/rectifier. An external battery charger may have been used.	Check battery voltage for 14.1 to 14.7 volts with engine idling. Check connections on regulator/rectifier. Check ground and positive connections near the battery.
Flash	OFF	Active	P0601	Throttle position sensor adaptation failure	Wrong throttle body mechanical position during reset of closed TPS or no initialisation after ECM replacement.	Check cable adjustment. Check idle stop for wear. Make sure throttle plate is against throttle stop. Reset closed TPS.
Flash	OFF	None	P0601	Module call monitoring	Damaged ECM or faulty programmation.	Try updating the ECM. If the problem persists, replace the ECM.

CHECK ENGINE LIGHT	BEEPER	LIMP HOME MODE	FAULT CODE	DESCRIPTION	CAUSE	ACTION
Flash	OFF	Active	P0602	ECM not coded	Damaged ECM or faulty programmation.	Try updating the ECM. If the problem persists, replace the ECM.
Flash	OFF	Active	P0604	RAM fault	Damaged ECM or faulty programmation.	Try updating the ECM. If the problem persists, replace the ECM.
Flash	OFF	Active	P0605	EEPROM fault	Damaged ECM or faulty programmation.	Try updating the ECM. If the problem persists, replace the ECM.
Flash	OFF	Active	P0605	EEPROM checksum fault	Damaged ECM or faulty programmation.	Try updating the ECM. If the problem persists, replace the ECM.
Flash	OFF	Active	P0605	Coding ID checksum fault	Damaged ECM or faulty programmation.	Try updating the ECM. If the problem persists, replace the ECM.
Flash	OFF	Active	P0605	Coding checksum fault	Damaged ECM or faulty programmation.	Try updating the ECM. If the problem persists, replace the ECM.
Flash	OFF	Active	P0605	Programming checksum fault	Damaged ECM or faulty programmation.	Try updating the ECM. If the problem persists, replace the ECM.
Flash	OFF	Active	P0608	Sensor's power supply voltage too low	Damaged circuit wires, shorted air pressure sensor or shorted TPS.	Check system circuits DA-12, DA-28, DA-40, DA-24, DA-25 and DA-39.
Flash	OFF	Active	P0608	Sensor's power supply voltage too high	Damaged circuit wires, TPS or air pressure sensor shorted to a supply.	Check system circuits DA-12, DA-28, DA-40, DA-24, DA-25 and DA-39.
OFF	OFF	Active	P0650	Engine lamp shorted to battery	Damaged speedometer, damaged circuit wires, damaged cab connector or damaged ECM output pins.	Check if system circuit DB-33 is shorted to 12 V. Check for damaged cab connector.
OFF	OFF	Active	P0650	Engine lamp open circuit or shorted to ground	Blown fuse, damaged speedometer, damaged or disconnected circuit wires, disconnected connector on speedometer or cab, damaged ECM output pins.	Check fuse F4. Check for approximately 12 volts between pins 8 and 11 of the speedometer connector. Check system circuit DB-33. Check for disconnected or damaged cab connector.
OFF	OFF	None	P0654	Tachometer RPM signal shorted to battery	Damaged or wrong speedometer, damaged circuit wires, damaged cab connector or damaged ECM output pins.	Check if system circuit DB-4 is shorted to 12 V. Check if the right speedometer part number is installed. Check for damaged cab connector.
OFF	OFF	None	P0654	Tachometer RPM signal open circuit or shorted to ground	Blown fuse, damaged speedometer, damaged or disconnected circuit wires, disconnected connector on speedometer or cab, damaged ECM output pins.	Check fuse F4. Check for approximately 12 volts between pins 8 and 11 of the speedometer connector. Check system circuit DB-4. Check for disconnected or damaged cab connector.
Flash	OFF	None	P0655	Engine temperature lamp shorted to battery	Damaged speedometer, damaged circuit wires, damaged cab connector or damaged ECM output pins.	Check if system circuit DB-5 is shorted to 12 V. Check for damaged cab connector.
Flash	OFF	None	P0655	Engine temperature lamp open circuit or shorted to ground	Blown fuse, damaged speedometer, damaged or disconnected circuit wires, disconnected connector on speedometer or cab, damaged ECM output pins.	Check fuse F4. Check for approximately 12 volts between pins 8 and 11 of the speedometer connector. Check system circuit DB-5. Check for disconnected or damaged cab connector.

CHECK ENGINE LIGHT	BEEPER	LIMP HOME MODE	FAULT CODE	DESCRIPTION	CAUSE	ACTION
Flash	OFF	Active	P1102	Throttle position sensor adaptation failure	Wrong throttle body mechanical position during reset of closed TPS or no initialisation after ECM replacement.	Check cable adjustment. Check idle stop for wear. Make sure throttle plate is against throttle stop. Reset closed TPS.
Flash	OFF	Active	P1104	Throttle position sensor adaptation failure	Wrong throttle body mechanical position during reset of closed TPS or no initialisation after ECM replacement.	Check cable adjustment. Check idle stop for wear. Make sure throttle plate is against throttle stop. Reset closed TPS.
Flash	OFF	Active	P1148	Safety fuel cut off detected	TPS adaptation failure, TPS failure, damaged ECM memory or battery voltage out of range.	Check cable adjustment. Check idle stop for wear. Make sure throttle plate is against throttle stop. Reset closed TPS.
Flash	OFF	None	P1611	P+ Test of idle air control valve output signal failed	Damaged actuator, damaged circuit wires, damaged connector or damaged ECM output pins.Damaged or disconnected capacitor.	Check for approximately 50 ohms between pins A and D and also between pins B and C of the idle air control valve. Check for damaged circuit wires. Check system circuits DA-35, DA-36, DA-37 and DA-38. Check for damaged connector or damaged ECM output pins. Check for faulty capacitor under the fuse box.
Flash	OFF	Active	P1646	Engine temperature lamp shorted to battery	Damaged speedometer, damaged circuit wires, damaged cab connector or damaged ECM output pins.	Check if system circuit DB-5 is shorted to 12 V. Check for damaged cab connector.
OFF	OFF	None	P1647	Engine temperature lamp open circuit or shorted to ground	Blown fuse, damaged speedometer, damaged or disconnected circuit wires, disconnected connector on speedometer or cab, damaged ECM output pins.	Check fuse F4. Check for approximately 12 volts between pins 8 and 11 of the speedometer connector. Check system circuit DB-5. Check for disconnected or damaged cab connector.
OFF	OFF	None	P1670	Buzzer shorted to battery	Damaged buzzer, damaged circuit wires, damaged connector or damaged ECM output pins.	Check if system circuit DB-18 is shorted to 12 V. Refer to the service manual for complete buzzer testing procedure.
OFF	OFF	None	P1671	Buzzer open circuit or shorted to ground	Blown fuse, damaged buzzer, damaged or disconnected circuit wires, disconnected connector on buzzer, damaged ECM output pins.	Check fuse F4. Check for approximately 12 volts between connector pin AR-A and negative battery terminal. Check system circuit DB-18. Refer to the service manual for complete buzzer testing procedure.
OFF	OFF	Active	P1675	Relay 2 shorted to battery	Damaged relay, damaged circuit wires, damaged connector or damaged ECM output pins.	Check for approximately 100 ohms between relay pins 85 and 86. Check if system circuit DB-16 is shorted to 12 V.
OFF	OFF	Active	P1676	Relay 2 open circuit or shorted to ground	Blown fuse, damaged or disconnected relay, damaged or disconnected circuit wires, damaged ECM output pins.	Check fuse F4. Check for approximately 100 ohms between relay pins 85 and 86. Check system circuit DB-16.

ADJUSTMENT AND REPAIR PROCEDURES

SERVICE TOOLS

Description	Part Number	Page
ECM adapter	420 277 010	309
Fluke 111	529 035 868	309
hose pincher	295 000 076	318
pliers	295 000 070	317, 320
tachometer	529 014 500	310

SERVICE TOOLS – OTHER SUPPLIER

Description	Part Number	Page
rigid back probe Fluke	TP88	309

SERVICE PRODUCTS

Description	Part Number	Page
Loctite 243	293 800 060	322, 326, 328

GENERAL

Engine problems are not necessarily related to the electronic fuel injection system.

It is important to ensure that the mechanical integrity of the engine/propulsion system is present:
- good transmission system operation
- good engine compression and properly operating mechanical components, no leaks etc.
- fuel pump connection and fuel lines without leaks.

Check the chart in *TROUBLESHOOTING* section to have an overview of problems and suggested solutions.

When replacing a component, always check its operation after installation.

FUEL SYSTEM

⚠ WARNING

Fuel is flammable and explosive under certain conditions. Ensure work area is well ventilated. Do not smoke or allow open flames or sparks in the vicinity.

⚠ WARNING

Always disconnect battery prior to working on the fuel system. Always disconnect battery exactly in the specified order, BLACK (-) cable first. It is recommended to disconnect electrical connections prior to disconnecting fuel lines.

⚠ WARNING

The components of a fuel injection system holds much more pressure than on a carbureted engine. Prior to disconnecting a hose or removing a component from the fuel system, follow the recommendation described here.

- Use the B.U.D.S. software to release the fuel pressure in the system (refer to *EMS DIAGNOSTIC AND COMMUNICATION TOOLS*). Look in the *ACTIVATION* section of the software B.U.D.S.

⚠ WARNING

Fuel lines remain under pressure at all times. Always proceed with care and use appropriate safety equipment when working on pressurized fuel system. Wear safety glasses. Proceed with care when removing/installing pressure test equipment or disconnecting fuel line connections. Use the B.U.D.S. software to release fuel pressure prior to removing a hose. Cover the fuel line connection with an absorbent shop rag. Slowly disconnect the fuel hose to minimize spilling. Wipe off any fuel spillage in the engine compartment. Do not allow fuel to spill on hot engine parts and/or on electrical connectors. Never use a hose pincher on injection system high pressure hoses. Replace any damaged or deteriorated fuel lines.

When the repair is completed, ensure that all hoses are connected and secured. Perform the *FUEL PRESSURE TEST* and the *FUEL TANK LEAK TEST* as explained in *FUEL TANK AND FUEL PUMP* section. A fuel pressure drop indicates a leak. Check for leaking fuel.

⚠ WARNING

Always perform the fuel pressure test if any component has been removed. A pressure test must be done before turning the ignition key to START. The fuel pump is activated each time ignition key is turned to START. After performing a fuel pressure test, use the valve on the fuel pressure gauge to release the pressure (if so equipped).

ELECTRICAL SYSTEM

It is important to check that the electrical system is functioning properly:

- battery
- fuses
- relay 1
- diode
- ignition (spark)
- ground connections
- wiring connectors
- speedometer.

It is possible that a component seems to operate in static condition but in fact, it is defective. In this case, the best way to solve this problem is to remove the original part and replace it with one which is in good condition.

Never use a battery charger to substitute temporarily the battery, as it may cause the ECM (engine control module) to work erratically or not to work at all. Check related-circuit fuse solidity and condition with an ohmmeter. Visual inspection could lead to false results.

⚠ WARNING

Some EMS components are continuously powered when ignition key is turned to START. The ECM switches the circuit to the ground to complete the electrical circuits it controls. Take this into account when troubleshooting. Always disconnect the battery prior to disconnecting any electric or electronic parts.

Pay particular attention to ensure that pins are not out of their connectors or out of shape.

When probing terminals, pay attention not to bend the terminal as this could bring a loose connection that would be difficult to troubleshoot.

⚠ WARNING

Ensure all terminals are properly crimped on wires and connector housings are properly fastened.

Before replacing an ECM, always check electrical connections. Make sure terminals are properly crimped on wires and fastened in housing, and that they are free of corrosion or moisture. Check if wiring harness shows any signs of scoring. Ensure proper electrical connection. Particularly check ECM ground connections. A "defective module" could possibly be "repaired" simply by unplugging and replugging the ECM. The voltage and current might be too weak to go through dirty wire pins.

For the electrical connectors, pay attention to the following:

- ECM connectors: Do not apply dielectric grease or any other lubricant.
- Other connectors: Apply a silicon-based dielectric grease or other appropriate lubricant.

Ensure that all electronic components are genuine. Any modification on the wiring harness may lead to generate fault codes or bad operation.

NOTE: For diagnostics purposes, use B.U.D.S. software. See *EMS DIAGNOSTIC AND COMMUNICATION TOOLS* subsection.

After a problem has been solved, ensure to clear the fault(s) in the ECM using the B.U.D.S. software. Refer to *EMS DIAGNOSTIC AND COMMUNICATION TOOLS* subsection.

Diagnostic Tools

To perform verifications, a good quality multimeter such as Fluke 111 (P/N 529 035 868) should be used.



529 035 868

To easily probe wire terminals through the back of their connectors, rigid back probe Fluke (P/N TP88) pins or equivalent can be used.

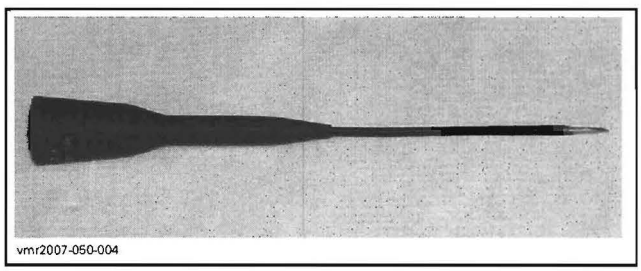

vmr2007-050-004

They can be inserted at the end of the standard probes of the Fluke 111 multimeter.

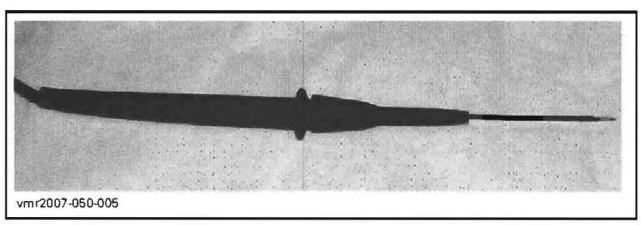

vmr2007-050-005

The most recommended and safest method to probe ECM connector terminals is to use the ECM adapter (P/N 420 277 010). This tool will prevent deforming or enlarging terminals which would lead to bad ECM terminal contact creating intermittent or permanent problems.

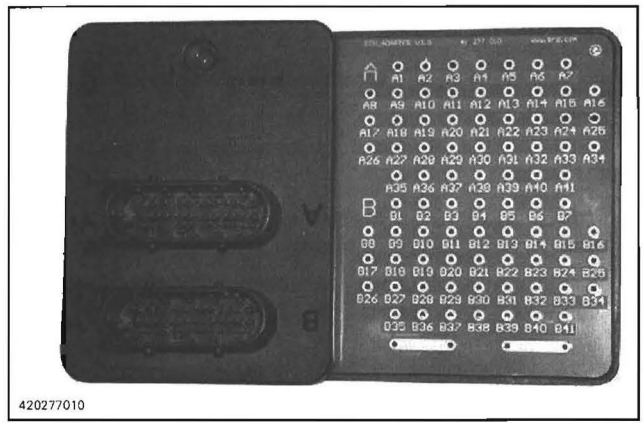

420277010

Disconnect the desired connector from ECM and reconnect on the tool connector. Probe required terminals directly in the tool holes.

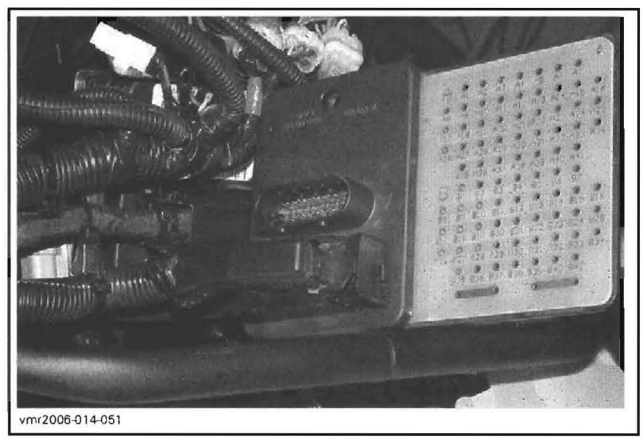

vmr2006-014-051

Resistance Measurement

When measuring the resistance with an ohmmeter, all values are given for a temperature of 20°C (68°F). The resistance value of a resistance varies with the temperature. The resistance value for usual resistor or windings (such as injectors) **increases** as the temperature increases. However, our temperature sensors are NTC types (Negative Temperature Coefficient) and work the opposite which means that the resistance value **decreases** as the temperature increases. Take it into account when measuring at temperatures different from 20°C (68°F). Use this table for resistance variation relative to temperature for **temperature** sensors.

TEMPERATURE SENSOR TABLE			
TEMPERATURE		RESISTANCE (ohms)	
°C	°F	MAPTS	CTS
- 40	- 40	—	45000
- 30	- 22	28000	28000
- 20	- 4	15000	15000
0	32	5500	5500
20	68	2500	2500
40	104	1200	1200
60	140	600	600
80	176	320	320
100	212	180	180
130	266	90	90

CONVERSION CHART FOR TEMPERATURE SENSORS

The resistance value of a temperature sensor may test good at a certain temperature but it might be defective at other temperatures. If in doubt, try a new sensor.

Also remember this validates the operation of the sensor at room temperature. It does not validate the over temperature functionality. To test it, the sensor could be removed from the engine and heated with a heat gun while it is still connected to the harness to see if the ECM will detect the high temperature condition and generate a fault code.

ECM Connectors

The ECM connectors are identified by the letter "A" and "B".

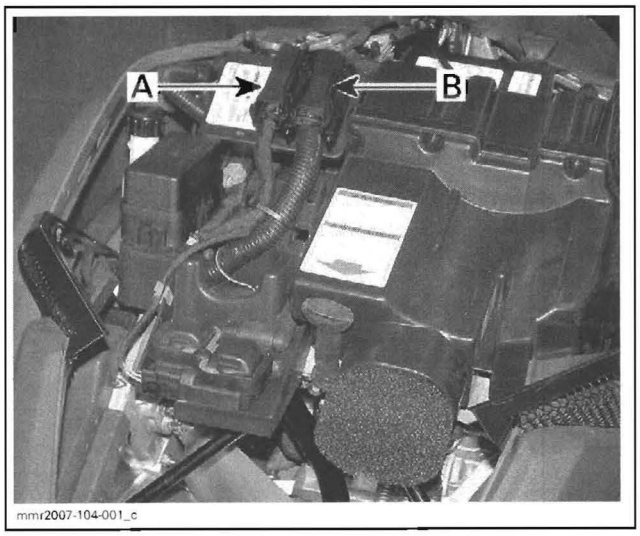

Engine Connector

Engine connector is located under ECM.

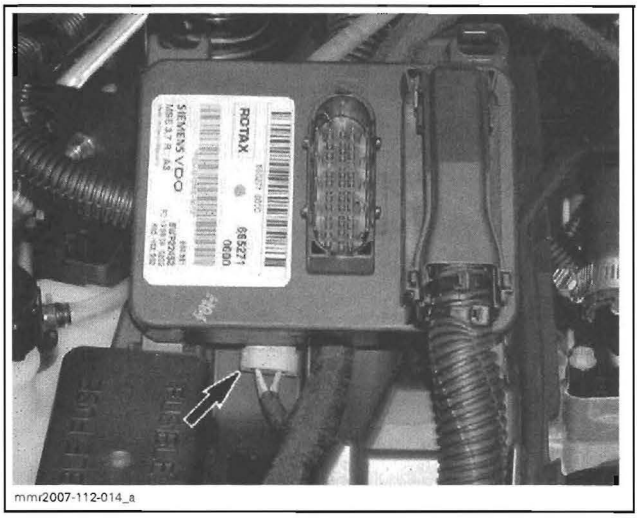

Use this illustration to locate the pin numbers on the engine connector when performing tests.

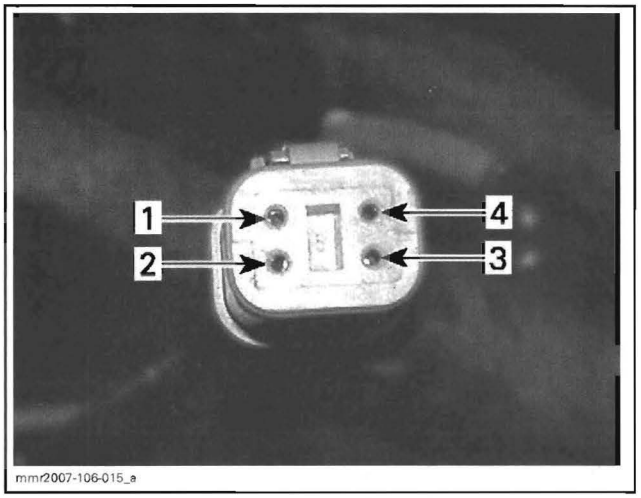

ENGINE CONNECTOR PIN-OUT (ENGINE SIDE)

BASIC ADJUSTMENTS

IDLE SPEED

The idle speed is not adjustable. The ECM controls the idle speed of the engine.

CAUTION: Never attempt to adjust the sealed idle stop screw. It is calibrated at the factory. If the screw adjustment is changed, the throttle body must be replaced.

If desired, the engine RPM can be verified with the tachometer (P/N 529 014 500).

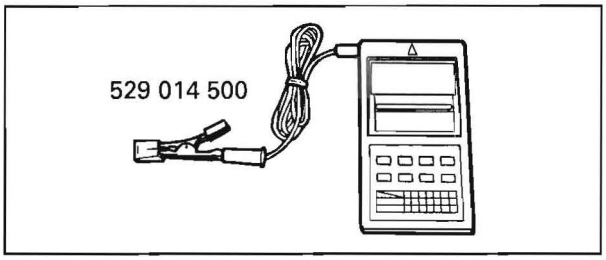

THROTTLE CABLE

Handlebar and throttle cable must be at their normal position.

Wide Open Throttle Position Verification

Squeeze throttle lever and hold it at wide open throttle (WOT).

There must be free-play in throttle cable. Push against throttle cable to see if cam stopper will move just a little to touch throttle body. If so, it confirms proper free-play.

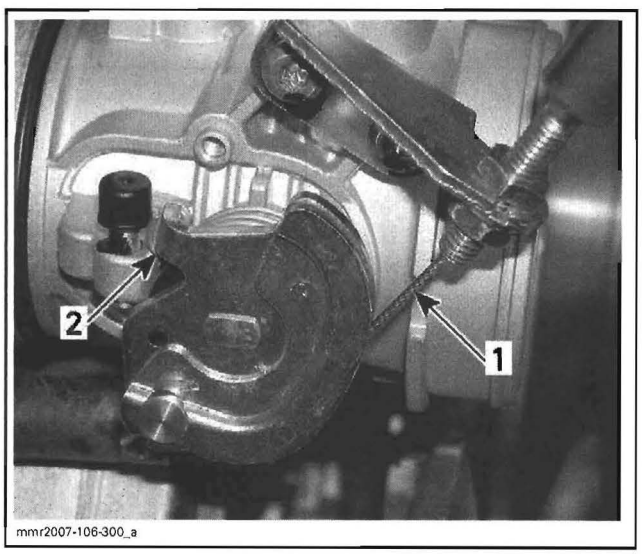

WOT POSITION
1. *Push here to feel free-play*
2. *Stopper just close to touching throttle body*

If adjustment is needed, use adjuster nuts.

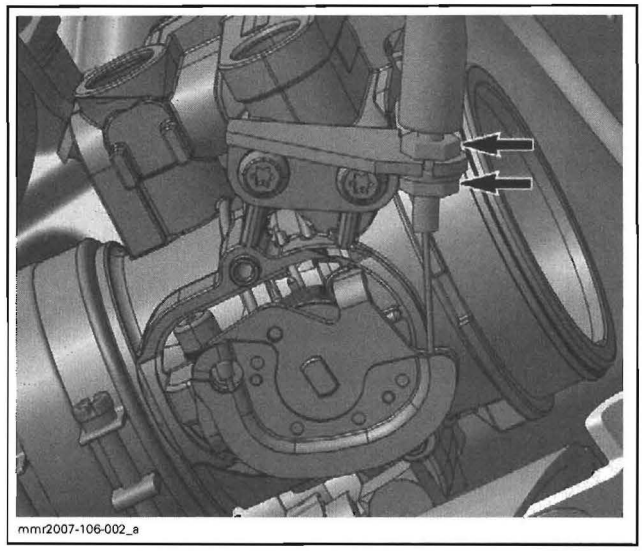

When done, turn handlebar side to side and ensure there is still free-play in each position while at WOT.

CAUTION: Improper cable adjustment will cause strain on cable and/or damage cable bracket or throttle lever at handlebar.

Idle Position Verification

Activate throttle lever a few times. Make sure throttle cam of throttle body rests against set screw with some free-play in the cable.

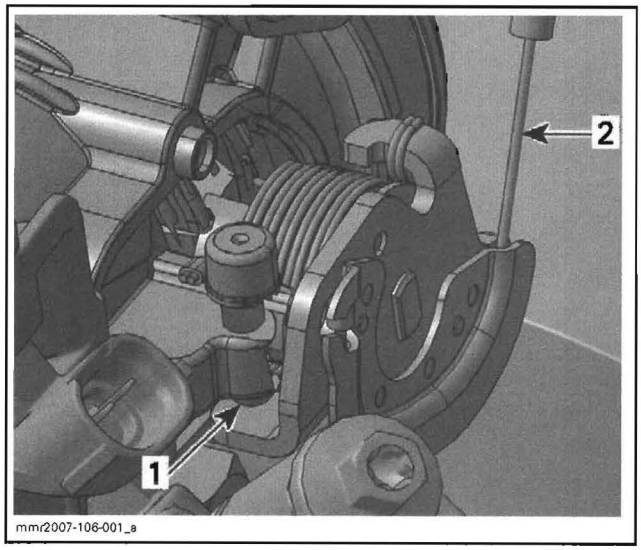

1. *Contact here*
2. *Free-play here*

CAUTION: If there is no free-play at idle position, it may cause poor idling and startability problems.

⚠ WARNING

Make sure idle speed stopper contacts throttle cam when throttle lever is fully released at handlebar.

CLOSED THROTTLE AND IDLE ACTUATOR RESET

NOTE: This operation performs a reset of the values in the ECM.

This reset is very important. The setting of the TPS will determine the basic parameters for all fuel mapping and several ECM calculations.

NOTE: Reset must be done each time the throttle position sensor (TPS) is loosened, removed or replaced, and also if throttle body or ECM are replaced.

CAUTION: An improperly set TPS may lead to poor engine performance and emission compliance could possibly be affected.

Reset

Use the B.U.D.S. software to perform this adjustment.

Open throttle approximately one quarter then quickly release. Repeat 2 - 3 times to settle throttle plate.

Ensure the throttle cam of throttle body rests against set screw without any tension in the cable. Otherwise, perform the throttle cable adjustment.

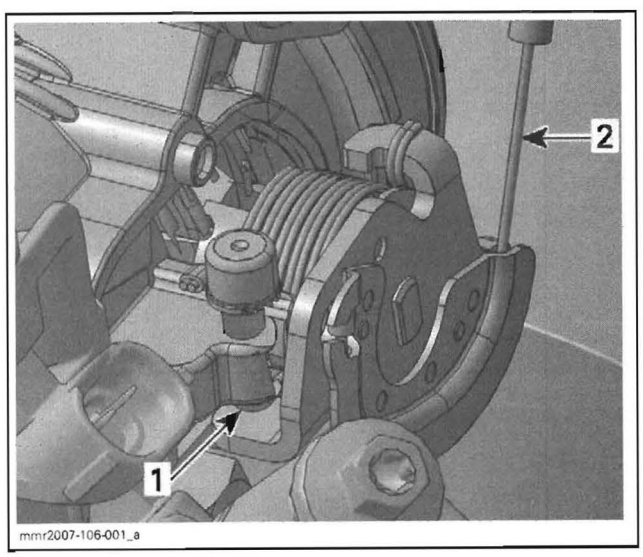

1. Contact here
2. Free-play here

Select the **Setting** tab of B.U.D.S.

Ensure the proper variant according to vehicle is selected.

V800 MODEL	VARIANT
Legend, Expedition Sport and Tundra	Platform RF
Skandic SWT and Expedition TUV	Platform Yeti

Click on the **Reset** button.

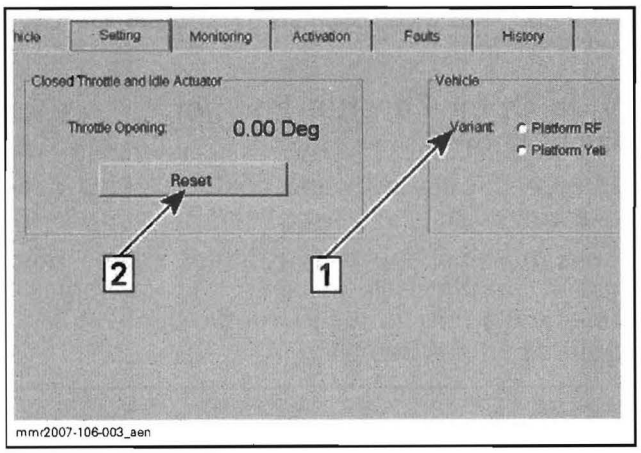

Step 1: Select variant according to vehicle
Step 2: Click reset

Reset is completed.

NOTE: No message will be displayed if operation is successful. If TPS is not within the allowed range while resetting the **Closed Throttle and Idle Actuator**, the ECM will generate a fault code and will not accept the setting.

Start engine and make sure it operates normally through its full engine RPM range. If fault codes appear, refer to *EMS DIAGNOSTIC AND COMMUNICATION TOOLS* section for more information.

IGNITION TIMING

The ignition timing is not adjustable.

REPAIR PROCEDURES

ENGINE CONTROL MODULE (ECM)

Power Supply to ECM

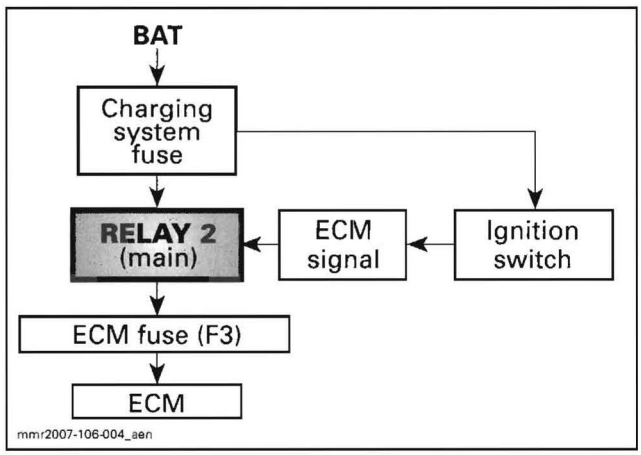

ECM Power Supply and Ground Pinout

FUNCTION	CONNECTOR PIN
Power 12 Vdc	B-11
Grounds	B1, B2, B32 and B41

Troubleshooting ECM

Briefly turn ignition key to START.

QUICK INDICATION THAT ECM IS NOT WORKING (assuming the observed component is working)
Speedometer does not turn on. On models without speedometer, oil light will not turn on.
Fuel pump does not turn on for approx. 5 seconds.

If ECM does not turn on, check the following.

Check charging system fuse and fuse F3. If they test good, check relay 1.

To check relay, remove relay and bypass it with a jumper between terminals as shown.

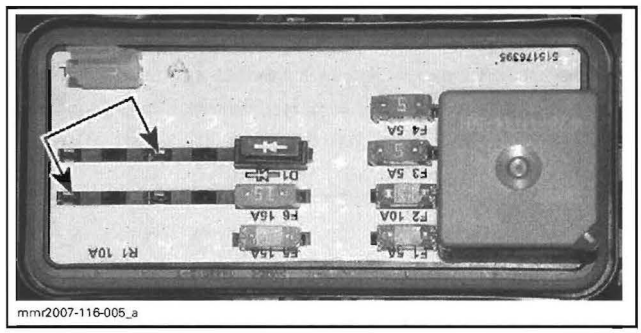

RELAY R1 (ECM, EMS AND GAUGES)

If ECM is now WORKING, replace relay.

If ECM is NOT working, check ignition switch. Refer to *IGNITION SYSTEM*.

If ECM still does not work, check wiring/connectors from battery to ECM.

If they test good, check ECM grounds.

ECM GROUND TEST		MEASUREMENT
ECM connector B-1, B-2, B-32, B-41	Battery ground	Close to 0 Ω (continuity)

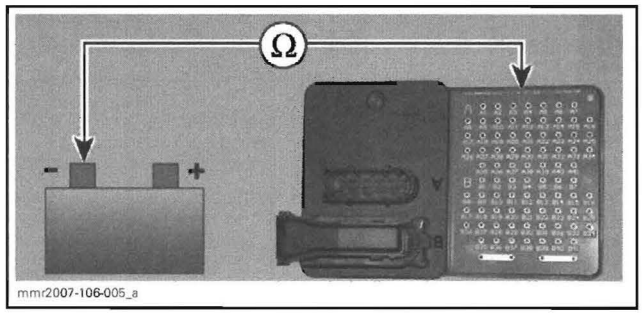

If everything is good, refer to *ECM REPLACEMENT*.

ECM Replacement

Prior to replacing a possibly faulty ECM, ensure that all the recommendations in the general introduction of this section have been carried out. Also, check ECM power supply and all grounds for proper contact/cleanliness and tightness.

IMPORTANT: When the ECM is replaced, the **Closed Throttle and Idle Actuator** must be reset. Refer to *BASIC ADJUSTMENTS*.

To allow transferring the previous recorded information from the old ECM to the new one, use the B.U.D.S. software. Use **Replace** ECM in the ECM menu. Follow instructions in its help system.

NOTE: If the old ECM still works, its information must be read by B.U.D.S. before being removed from the vehicle in order to transfer vehicle information and history to the new ECM.

Disconnect battery cables.

⚠ WARNING

Battery BLACK negative cable must always be disconnected first and connected last.

Remove hood.

Disconnect both connectors from ECM.

Remove ECM.

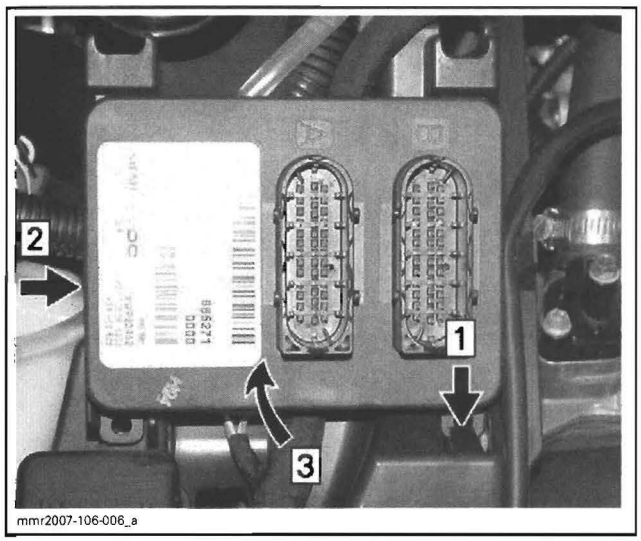

Step 1: Unlock tab
Step 2: Slide toward right to unlock tab
Step 3: Lift this side of ECM to release from opposite tabs

Install the new ECM to the vehicle.

Ensure to securely lock ECM to vehicle.

Reconnect connectors to ECM, and then battery cables.

Transfer the data from the previous ECM to the new one using B.U.D.S. then proceed with the required resets and reprogram ignition key(s), if you were unable to transfer the data.

NOTE: If data cannot be transferred, manually enter information in **Vehicle** tab and **Engine Serial Number** in **History**, **Part Replacement**.

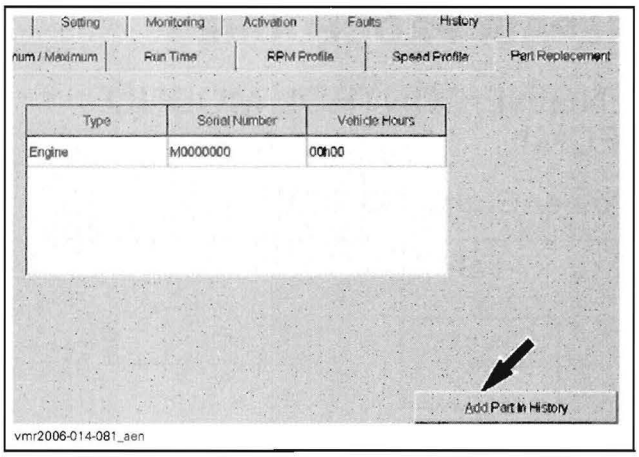

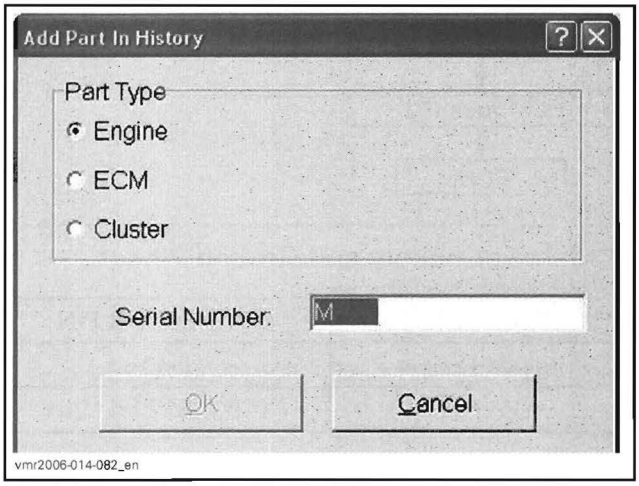

After performing the required resets, ensure to clear all faults from the newly replaced ECM.

FUEL INJECTOR

Leakage Test

The leakage test is validated when performing the "fuel delivery system diagnostic flow chart" in *FUEL TANK AND FUEL PUMP*.

Electrical Test

Briefly turn ignition key to START.

Using the B.U.D.S. software, energize the fuel injector from the **Activation** section.

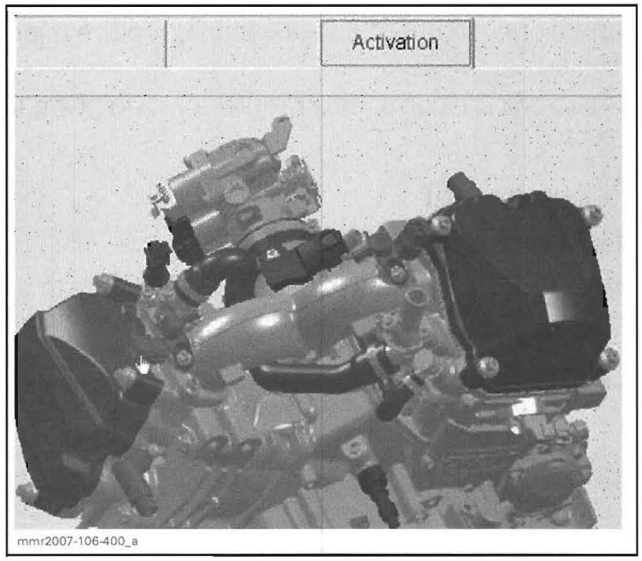

You should hear the injector working.

CAUTION: While doing fuel injector electrical test, do not apply continuous voltage for more than 10 seconds. This can damage the injector.

This will validate the injector mechanical and electrical operation.

If the injector does not work, check injector power supply.

Voltage Test

Disconnect the connector from the injector.

NOTE: If connector is hard to unlock, gently use a screwdriver to release connector.

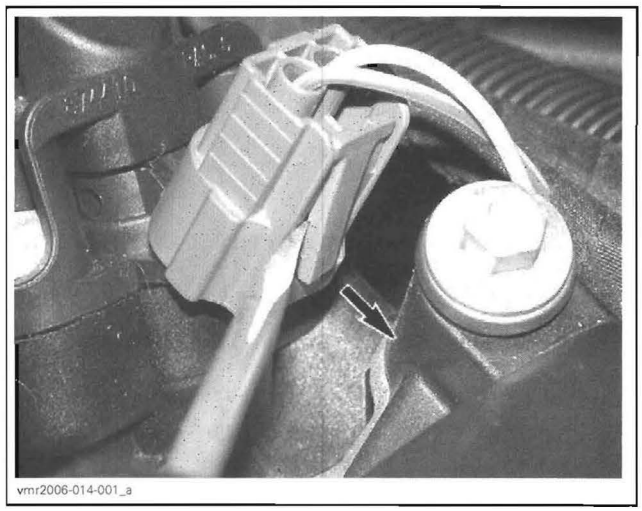

Briefly turn ignition key to START.

Use a multimeter and set it to Vdc. Read voltage.

CYLINDER	INJECTOR CONNECTOR WIRE		MEASUREMENT
FRONT REAR	VIOLET/ BLUE	Battery ground	12 Vdc

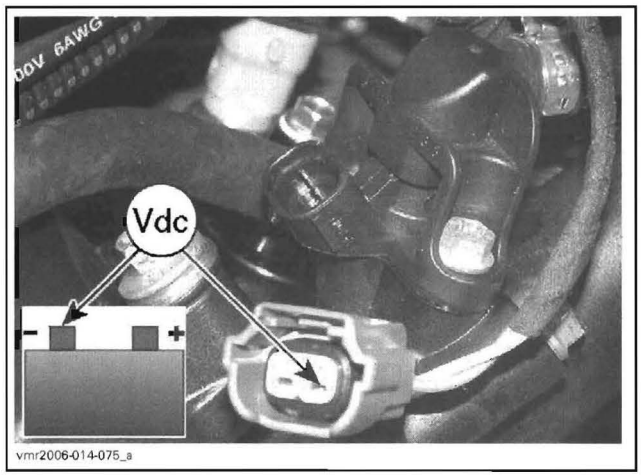

If supply voltage is good, check ground circuit between injector and ECM (see *WIRING DIAGRAMS*).

- If ground circuit is faulty, repair/replace.
- If ground circuit is good, refer to *ECM REPLACEMENT*.

If supply voltage is not good, check continuity between fuse F1 and injector (see *WIRING DIAGRAMS*).

NOTE: Probe fuse exactly as shown. This validates fuse at the same time.

Use a multimeter and set it to Ω. Read resistance.

CYLINDER	INJECTOR CIRCUIT WIRE		MEASUREMENT
FRONT REAR	VIOLET/ BLUE	Fuse F1	Close to 0 Ω

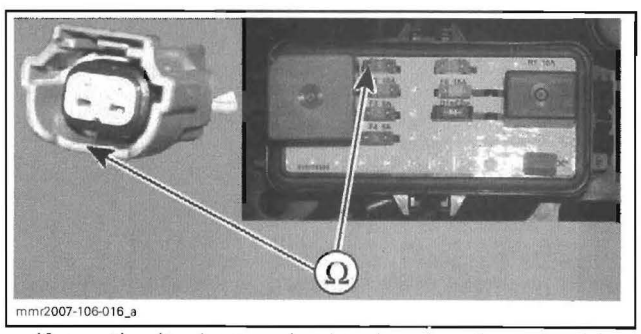

- If continuity is good, check relay 1 and wiring from battery.
- If continuity is faulty, check fuse and if ok, repair/replace wiring going to injector.

Resistance Test

Reconnect the injector connector.

Disconnect the connector "A" from the ECM and the engine connector.

Using a multimeter, check resistance value between terminals as follows.

INJECTOR	ENGINE CONNECTOR PIN	ECM CONNECTOR "A"	RESISTANCE @ 20°C (68°F)
FRONT	1	A-15	13.8 - 15.2 Ω
REAR		A-33	

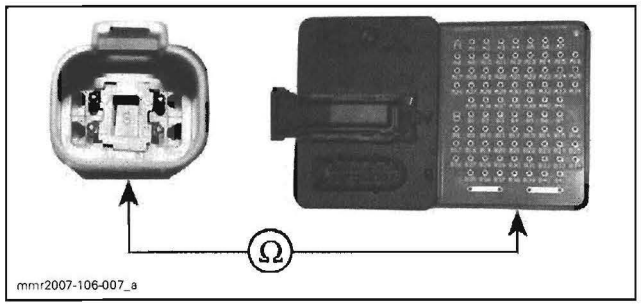

If resistance value is correct, refer to *ECM REPLACEMENT*.

If resistance value is incorrect, remove injector connector and check resistance value between injector pins as follows.

INJECTOR	INJECTOR PIN		RESISTANCE @ 20°C (68°F)
FRONT	1	2	13.8 - 15.2 Ω
REAR			

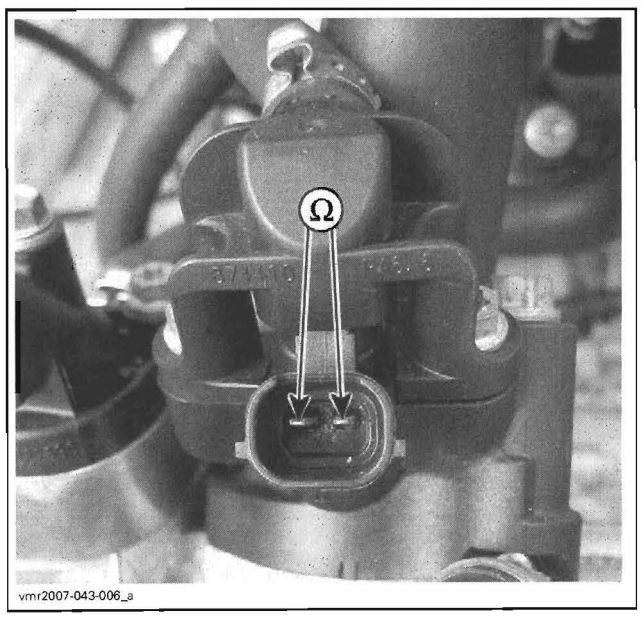

If readings are out of specifications, replace injector.

If readings are good, repair/replace wiring going to injector.

Replacement

Removal

Before removing the injector, the fuel rail has to be removed from the engine. Refer to *FUEL RAIL* for the procedure.

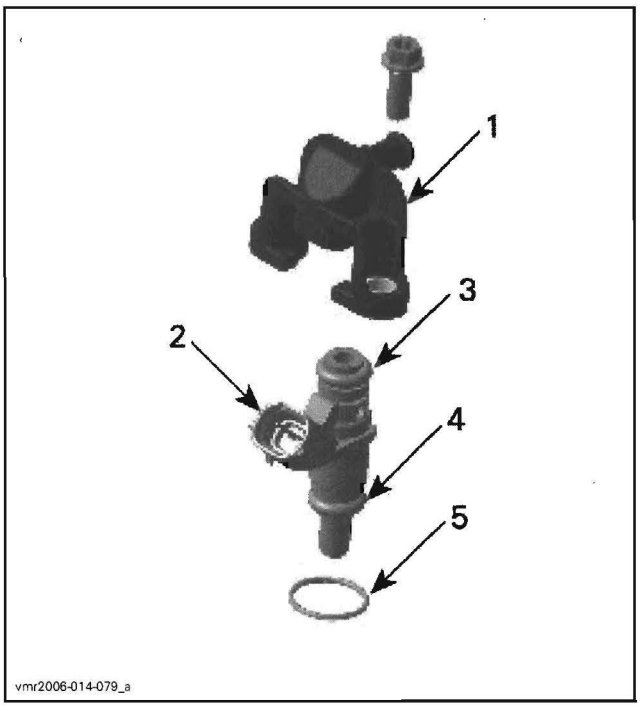

FUEL RAIL ASS'Y
1. *Fuel rail*
2. *Fuel injector*
3. *Injector top O-ring*
4. *Injector bottom O-ring*
5. *Manifold O-ring*

The fuel injector can be easily pulled out of the fuel rail.

Installation

For the installation, reverse the removal procedure. Pay attention to the following details.

Apply a thin film of engine oil to O-rings to ease insertion in rail.

Install new O-rings, if you reinstall a used injector then insert the fuel injector in place with your hand. Do not use any tool.

Carefully insert injector in manifold. Gently push in evenly all around while inserting injector. O-ring must be completely inserted and not visible, before finishing pushing injector.

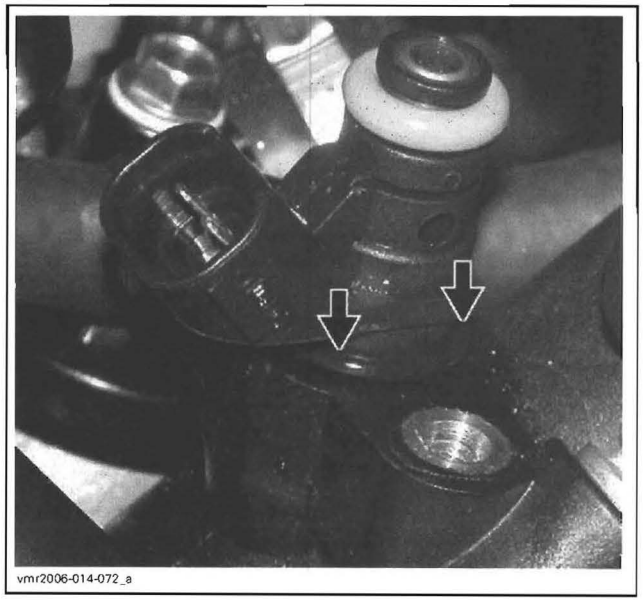
vmr2006-014-072_a

Firmly push injector until it bottoms.

Reinstall fuel rail.

FUEL RAIL

Pressure at fuel rails is supplied and controlled by the fuel pump module. Refer to *FUEL TANK AND FUEL PUMP* for pressure test.

Replacement

Removal

Disable fuel pump using B.U.D.S. Look in the **Activation** tab.

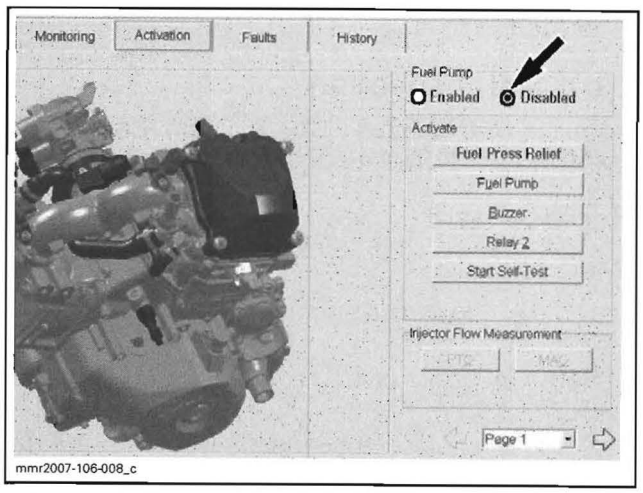

mmr2007-106-008_c

Release fuel pressure by running engine until it runs out of gas.

Turn ignition key off.

Wrap a rag around the inlet hose and release the quick fitting.

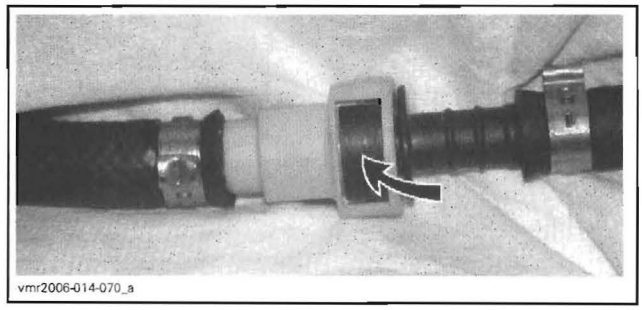
vmr2006-014-070_a

Unscrew rail retaining screws.

Gently pull rail up by hand.

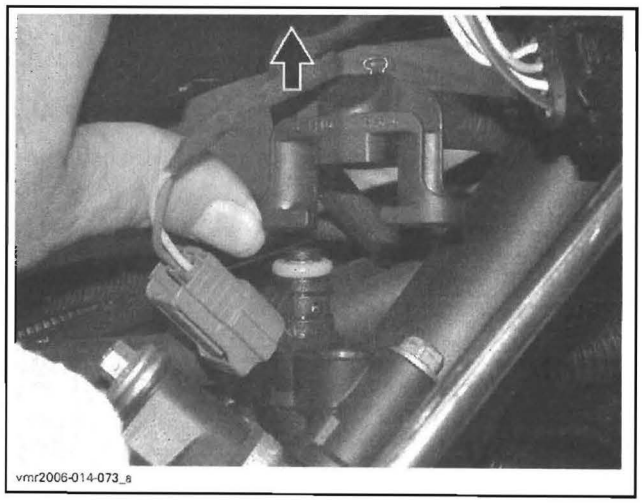
vmr2006-014-073_a

To disconnect fuel rail, cut clamp on fuel hose using pliers (P/N 295 000 070). Refer to *FUEL TANK AND FUEL PUMP* for clamp removal/installation procedures.

NOTE: If fuel rail is removed purposely to access fuel injector, it is not necessary to cut hose clamp. Only to replace fuel rail.

Installation

For installation, reverse the removal process but pay attention to the following.

Install new clamps using pliers as per removal (if fuel rail was replaced).

A thin film of oil should be applied to O-rings of fuel injector to ease installation of fuel rail.

Install new O-rings.

Install fuel rail and evenly tighten screws a little at a time each side.

Tightening torque of the rail retaining screws is 6 N•m (53 lbf•**in**).

After securing inlet hose at quick fitting, re-enable fuel pump using B.U.D.S.

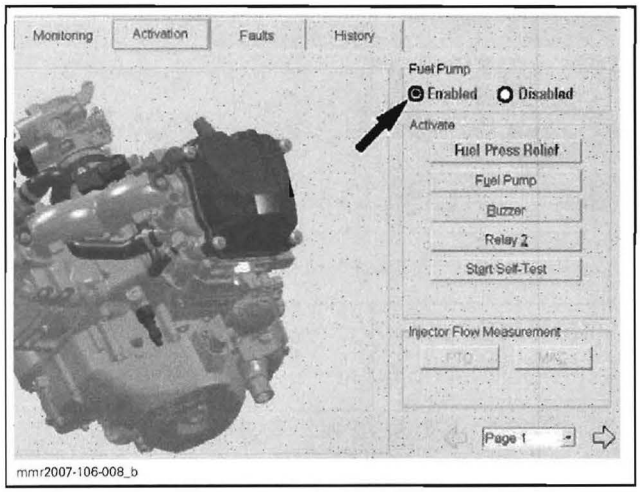

mmr2007-106-008_b

⚠ WARNING

Perform a fuel pressure test and ensure that there is no leak. Refer to *FUEL TANK AND FUEL PUMP*. Run engine and check for leaks.

THROTTLE BODY

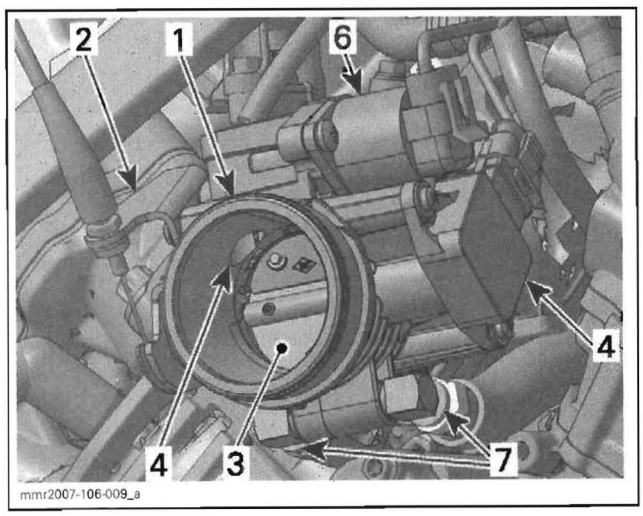

mmr2007-106-009_a

1. *Throttle body*
2. *Throttle cable attachment*
3. *Throttle plate*
4. *TPS*
5. *Idle bypass channel*
6. *Idle bypass valve*
7. *Coolant hoses*

Mechanical Inspection

Check that the throttle plate moves freely and smoothly when depressing throttle lever.

IMPORTANT: Never attempt to adjust the sealed idle stop screw. It is calibrated at the factory. If the screw adjustment is changed, the throttle body must be replaced.

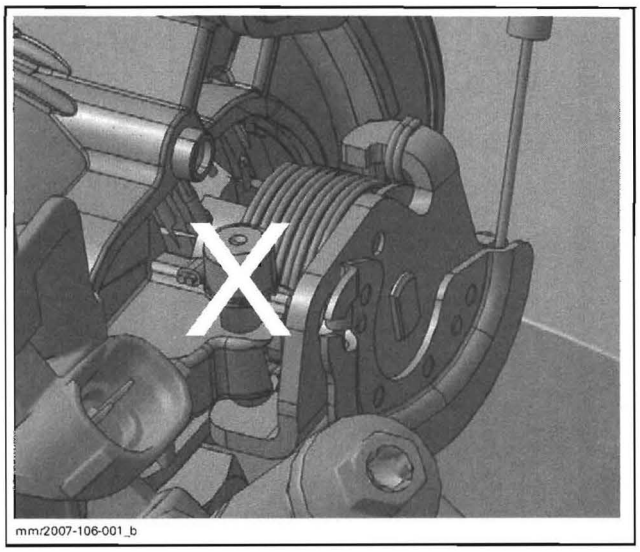
mmr2007-106-001_b

Before replacing any part, check the following as these could be causing the fault. Perform the test while the engine is off.

- Throttle cable adjustment too tight. Not returning fully to idle stop.
- Throttle body idle set screw is loose or worn (throttle body must be replaced).
- TPS is loose.
- Idle bypass valve is loose.
- Corroded or damaged wiring or connectors.
- Throttle body has been replaced and the **Closed Throttle and Idle Actuator** reset has not been performed.
- ECM has been replaced and the **Closed Throttle and Idle Actuator** reset has not been performed.

Electrical Inspection

Refer to *THROTTLE POSITION SENSOR (TPS)* and *IDLE BYPASS VALVE* in this section.

Replacement

Removal

To remove the throttle body from engine, proceed as follows:

- Remove hood and LH side panel. Refer to *BODY*.
- Remove air intake silencer. Refer to *AIR INTAKE SYSTEM*.
- Install a hose pincher (P/N 295 000 076) on each coolant hose connected to throttle body.

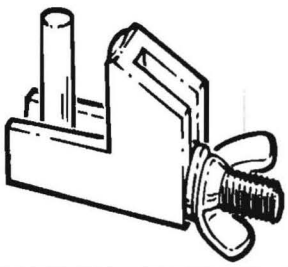

295 000 076

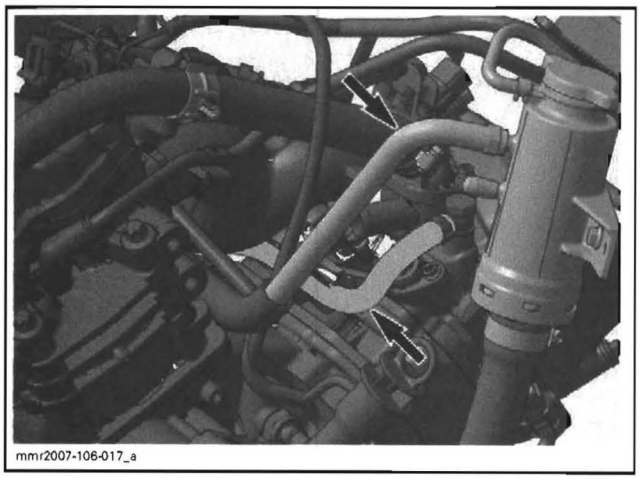

– Disconnect coolant hoses from throttle body.

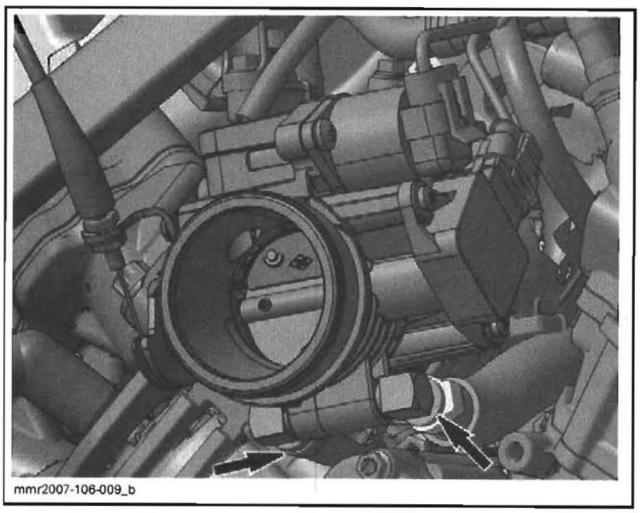

– Turn throttle lever cam to increase throttle cable free-play.

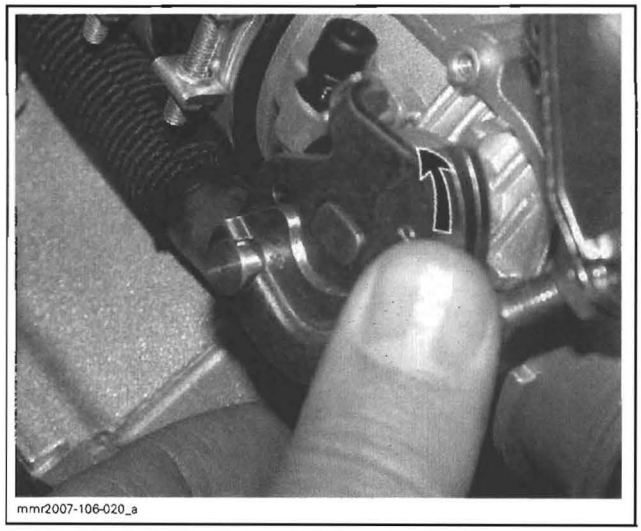

– Hold cam in this position and pull out cable barrel. Detach throttle cable.

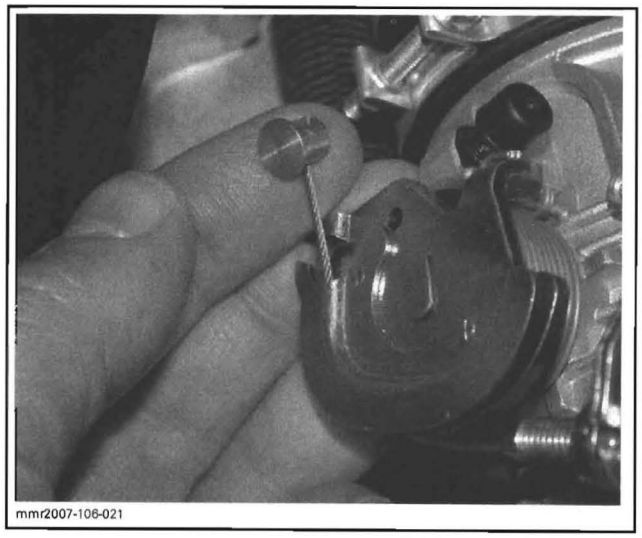

– Disconnect TPS and idle bypass valve connectors.

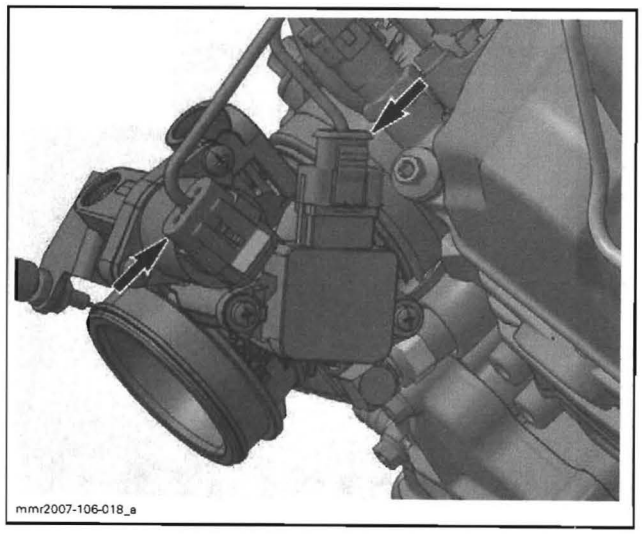

– Detach throttle body from intake manifold.

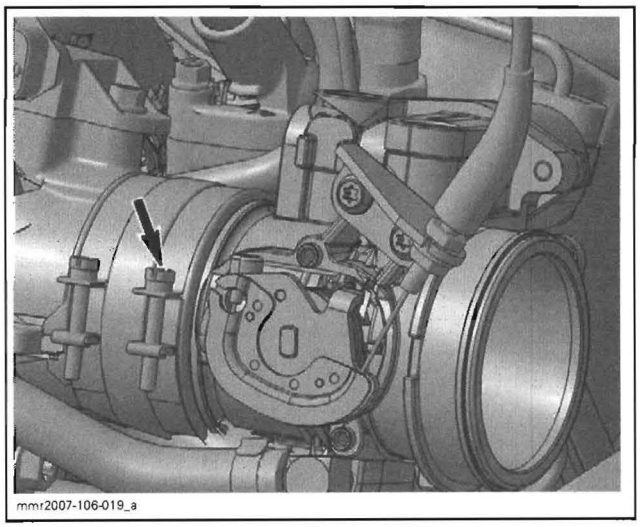
mmr2007-106-019_a

Installation

Installation of the throttle body is the reverse of the removal procedure. Pay attention for the following details.

Install throttle body on intake manifold. Ensure to index throttle body tab with boot notch.

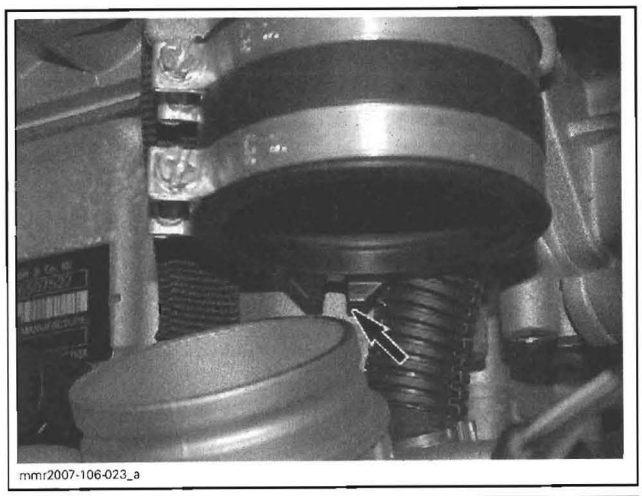
mmr2007-106-023_a

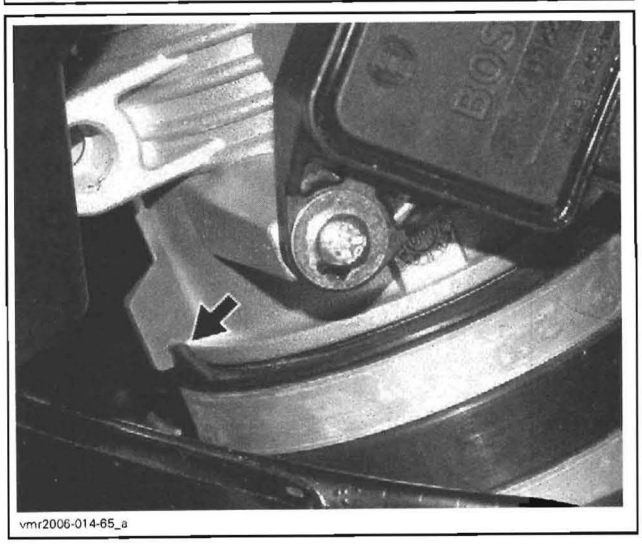
vmr2006-014-65_a

Insert throttle cable in lever cam.

Properly install cable barrel to throttle cable end.

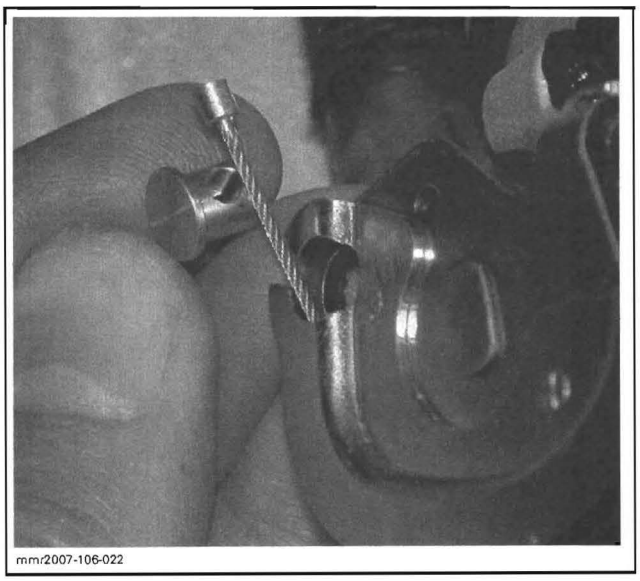
mmr2007-106-022

Turn cam to slacken throttle cable and insert barrel in cam.

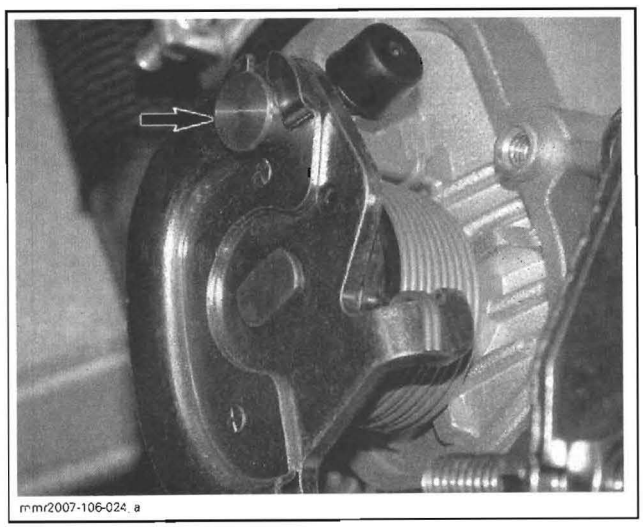
mmr2007-106-024_a

Release cam and ensure throttle cable is properly locked. Activate throttle lever several times.

To install coolant hose clamps, use pliers (P/N 295 000 070).

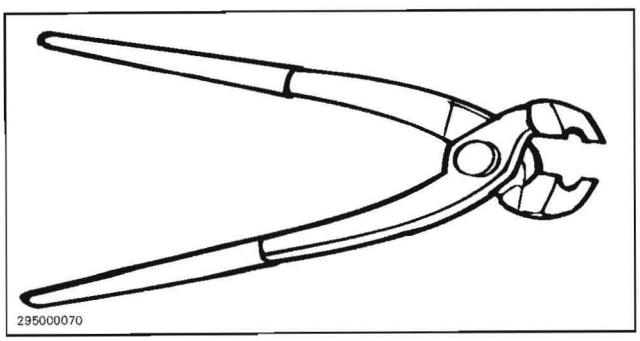
295000070

Refill and bleed cooling system if necessary. Refer to *COOLING SYSTEM.*

For TPS and idle bypass valve replacement procedures, refer to the respective paragraph in this section.

Adjustment

When the throttle body has been replaced, perform throttle cable adjustment and the **Closed Throttle and Idle Actuator** reset. Refer to *BASIC ADJUSTMENTS* in this section.

THROTTLE POSITION SENSOR (TPS)

General

The throttle position sensor (TPS) is a potentiometer that sends a signal to the ECM which is proportional to the throttle shaft angle.

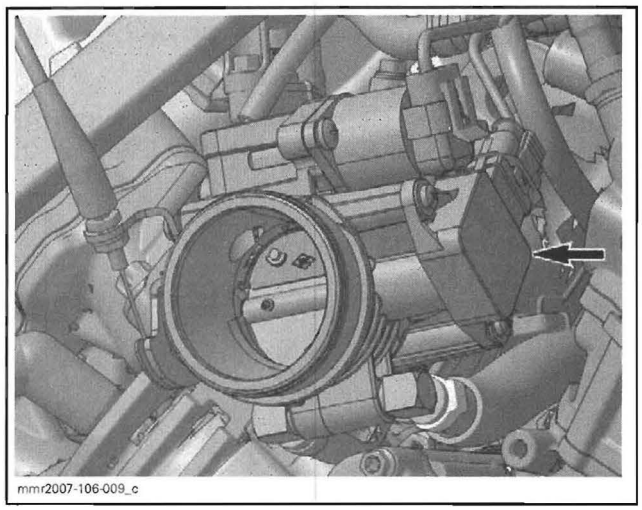
mmr2007-106-009_c

Remove LH side panel. Refer to *BODY.*

NOTE: Air intake silencer may be removed to ease access.

IMPORTANT: Prior to testing the TPS, ensure that mechanical components/adjustments of throttle body are adequate.

The EMS may generate several fault codes pertaining to the TPS. Refer to *EMS DIAGNOSTIC AND COMMUNICATION TOOLS* section for more information.

Wear Test

While engine is not running, activate throttle and pay attention for smooth operation without physical stops of the cable.

Using the B.U.D.S. software, use the **Throttle Opening** display under **Monitoring**.



mmr2007-106-010_en

Slowly and regularly depress the throttle. Observe the needle movement. It must change gradually and regularly as you move the throttle. If the needle "sticks", bounces, suddenly drops or if any discrepancy between the throttle movement and the needle movement is noticed, it indicates that the TPS needs to be replaced or the computer used may be too slow to transfer data fast enough for real time display.

Resistance Test

Ensure TPS is connected to wiring harness.

Disconnect the "A" connector from the ECM.

Using a multimeter, check resistance values on ECM connector as per the following table.

ECM CONNECTOR		THROTTLE IDLE POSITION	WIDE OPEN THROTTLE POSITION
PIN		RESISTANCE Ω @ 20°C (68°F)	
A-24	A-25	710 - 1300	2600 - 2700
A-25	A-39	1600 - 2400	1600 - 2400
A-24	A-39	2600 - 2700	710 - 1300

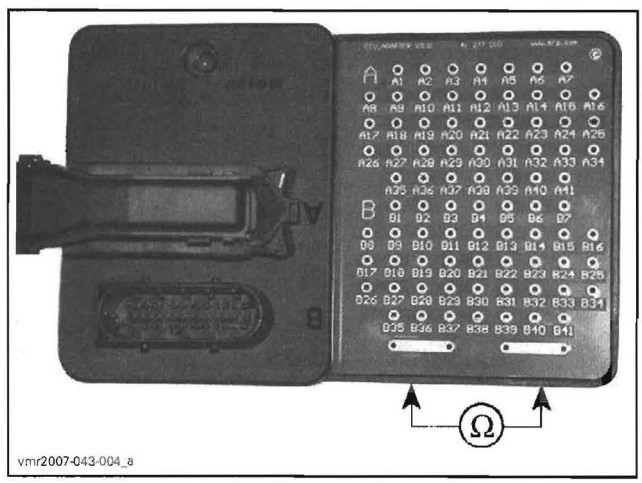
vmr2007-043-004_a

NOTE: The resistance value should change smoothly and proportionally to throttle movement. Otherwise, replace TPS.

If resistance values are correct, perform the *VOLTAGE TEST* below.

If resistance values are incorrect, check wiring harness. If wiring is faulty, repair/replace. If wiring is good, replace TPS.

Reconnect ECM connector.

Voltage Test

Check the ECM voltage output to the TPS.

Disconnect connector from TPS.

Briefly turn ignition key to START.

Check the voltage readings from harness connector as follows.

CONNECTION	VOLTAGE
Pin 1 with battery ground	5.0 V
Pin 2 with battery ground	0 V
Pin 3 with battery ground	4.75 - 5 V

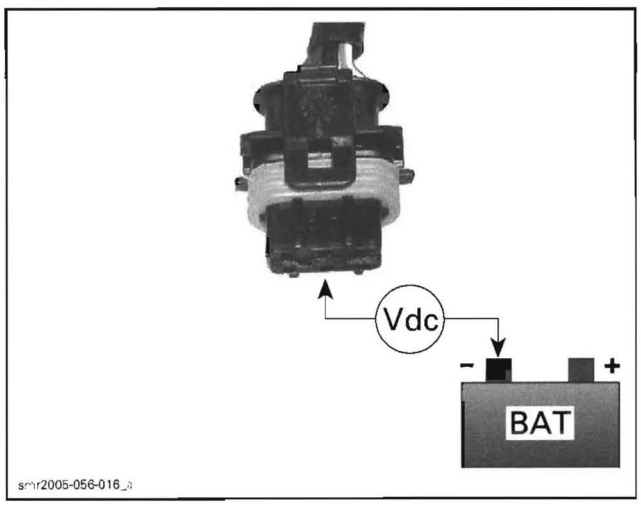

If voltage test is not good, check/repair wiring harness. If wiring tests good, refer to *ECM REPLACEMENT*.

If voltage test is good, everything is in order (assuming resistance test was performed).

Replacement

Remove hood.

Loosen two screws retaining the TPS.

Remove TPS.

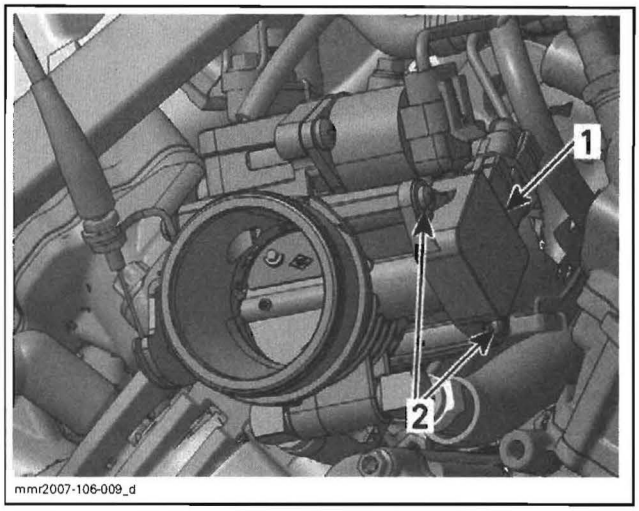

THROTTLE BODY
1. *Throttle position sensor (TPS)*
2. *Screws*

Install the new TPS.

Apply Loctite 243 (P/N 293 800 060) on the TPS retaining screws, then torque to 3 N•m (27 lbf•**in**).

Reinstall remaining removed parts.

Proceed with the **Closed Throttle and Idle Actuator Reset**. See *BASIC ADJUSTMENTS* at the beginning of this section.

IDLE BYPASS VALVE

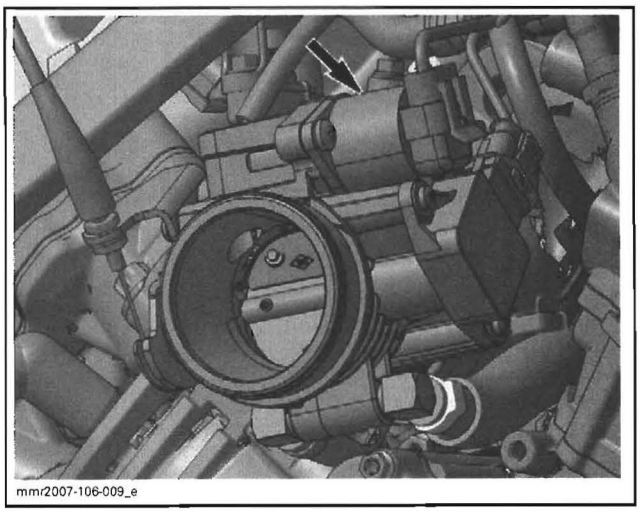

Remove LH side panel. Refer to *BODY*.

NOTE: Air intake silencer may be removed to ease access.

An idle bypass valve with good resistance measurement can still be faulty. It is also possible that a mechanical failure occurs which is not detectable without measuring the air flow. Replacing the idle bypass valve may be necessary as a test.

Resistance Test

Disconnect idle bypass valve from the wiring harness.

Using a multimeter, check the resistance in both windings.

Check the resistance between pins as shown.

IDLE BYPASS VALVE		MEASUREMENT
PIN		RESISTANCE Ω @ 20°C (68°F)
1	4	50
2	3	

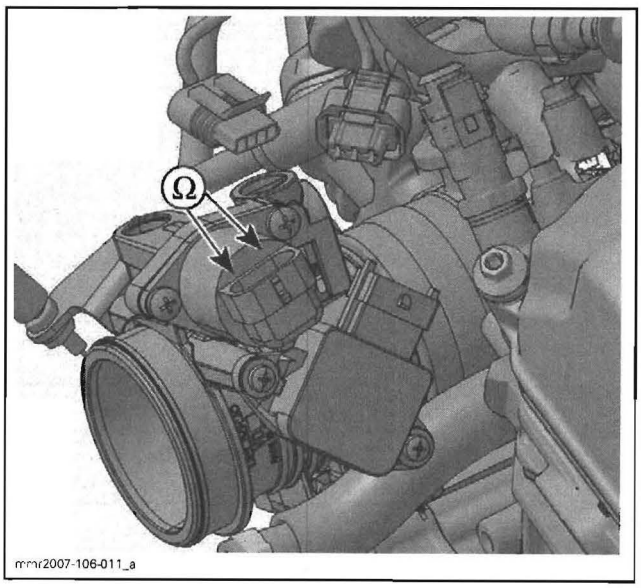

If the resistance of one or both windings is not good, replace the idle bypass valve.

If resistance test of valve windings is good, check continuity of circuits A-35, A-36, A-37, A-38. If not good, check/repair wiring/connectors.

Visual Inspection

NOTE: Make sure the ignition key is turned off during the following procedure.

Remove idle bypass valve from throttle body.

Check the piston and bypass channel for dirt/deposits which can cause a sticking piston.

CAUTION: Always keep the ignition key turned OFF, while the idle bypass valve is removed.

CAUTION: Do not try to operate the piston of the idle bypass valve when it is dismounted. Also do not move the piston by hand. The drive screw is very sensitive and may be destroyed.

Using a part cleaner, clean idle bypass in throttle body from contamination then use an air gun to dry it.

⚠ WARNING

Always wear eye protector. Chemicals can cause a rash break out and injure your eyes.

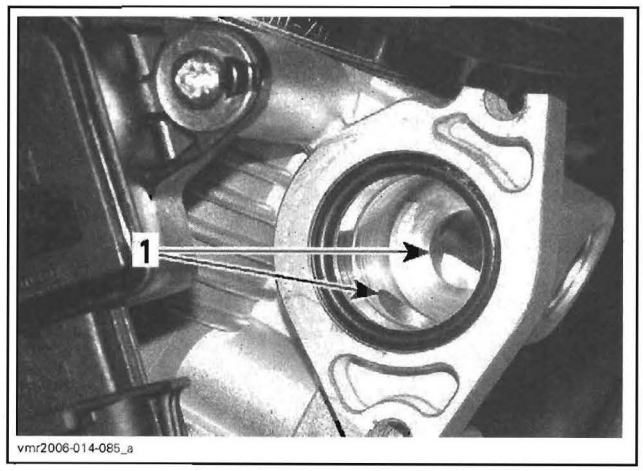

TYPICAL — IDLE BYPASS VALVE REMOVED
1. Clean bore from contamination

Clean all remaining parts and install the idle bypass valve on the throttle body.

CRANKSHAFT POSITION SENSOR (CPS)

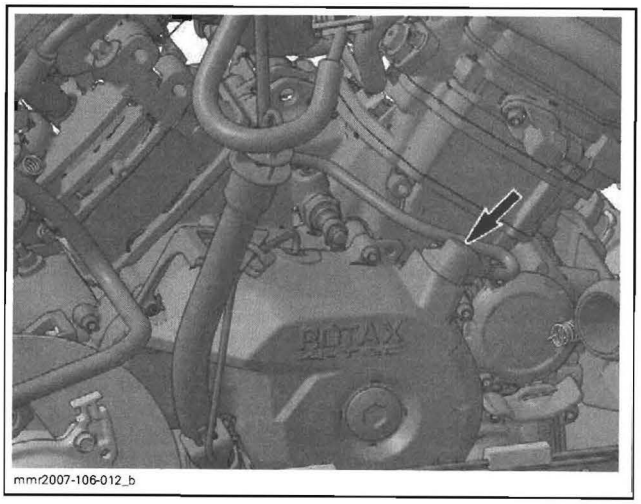

NOTE: Take into account that a CPS fault can be triggered by bent or missing encoder wheel teeth. First check fault codes (refer to *EMS DIAGNOSTIC AND COMMUNICATION TOOLS*) then check the teeth condition if necessary (refer to *MAGNETO SYSTEM*).

Remove hood and side panels. Refer to *BODY*.

NOTE: Air intake silencer may be removed to ease access.

Voltage Test

Disconnect CPS wiring harness connector. Probe pins while cranking engine, as shown.

CPS CONNECTOR		MEASUREMENT
PIN		VOLTAGE
1	2	Approximately 2 Vac

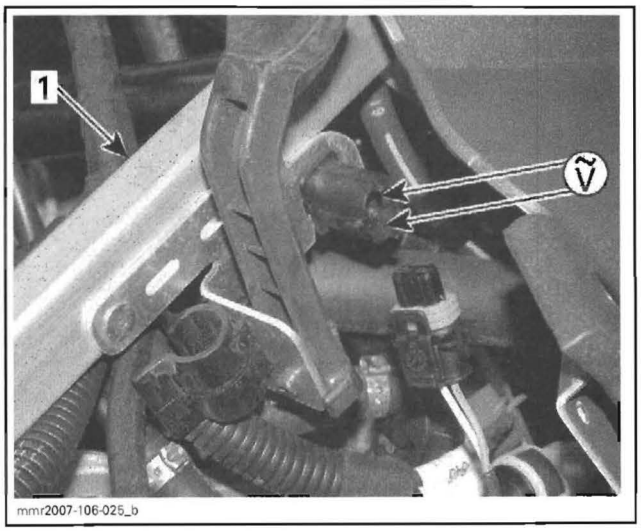

1. Upper LH tube

If voltage is not within specifications, inspect wiring and replace CPS if wiring is good.

Resistance Test

Disconnect CPS wiring harness connector. Probe terminals as shown.

CPS CONNECTOR		MEASUREMENT
PIN		RESISTANCE Ω @ 20°C (68°F)
1	2	700 - 900 Ω

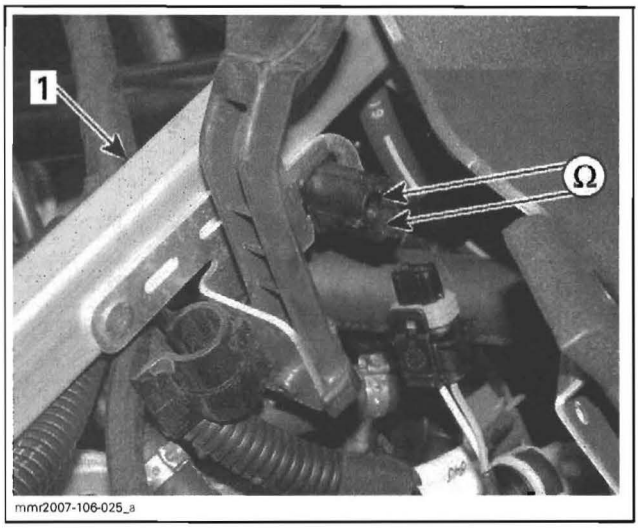

LH SIDE OF VEHICLE
1. Upper LH tube

If resistance is not within specifications, replace the CPS.

If resistance tests good, **reconnect** the CPS connector and disconnect the connector "A" on the ECM.

Using a multimeter, recheck resistance as per table.

ECM CONNECTOR		MEASUREMENT
PIN		RESISTANCE Ω @ 20°C (68°F)
A-5	A-19	700 - 900 Ω

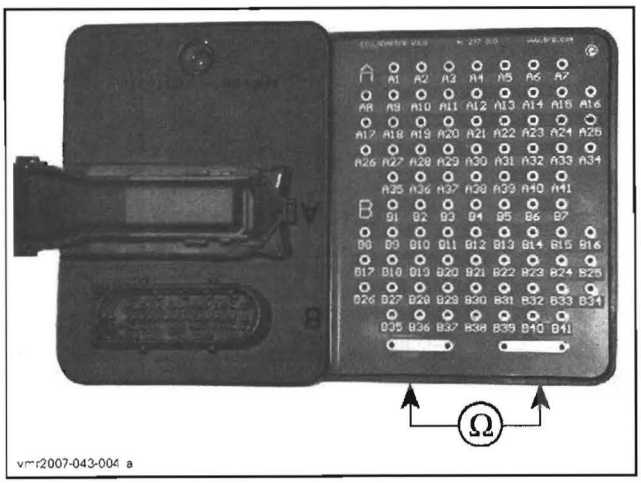

If resistance value is correct, refer to *ECM REPLACEMENT*.

If resistance value is incorrect, repair the connectors or replace the wiring harness between ECM connector and the CPS.

Replacement

NOTE: Muffler may be removed to ease access.

Unplug CPS connector.

To remove connector from upper LH tube, firmly squeeze connector tabs and slide connector out.

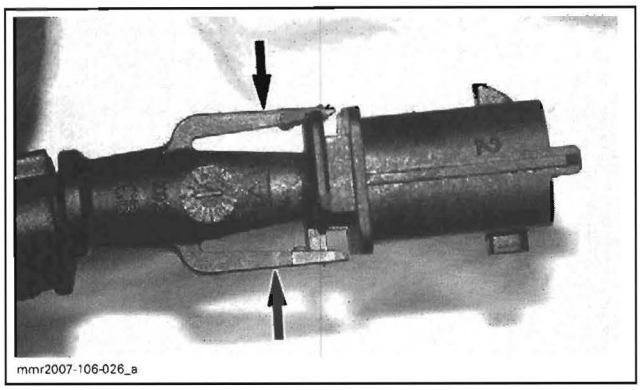

CONNECTOR ALONE FOR CLARITY PURPOSE

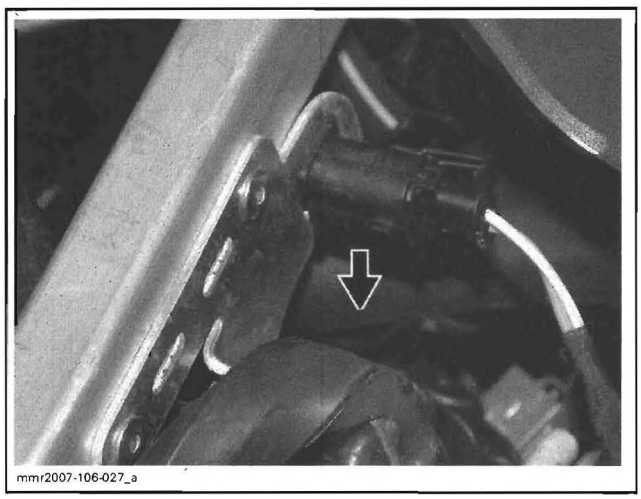

Remove CPS.

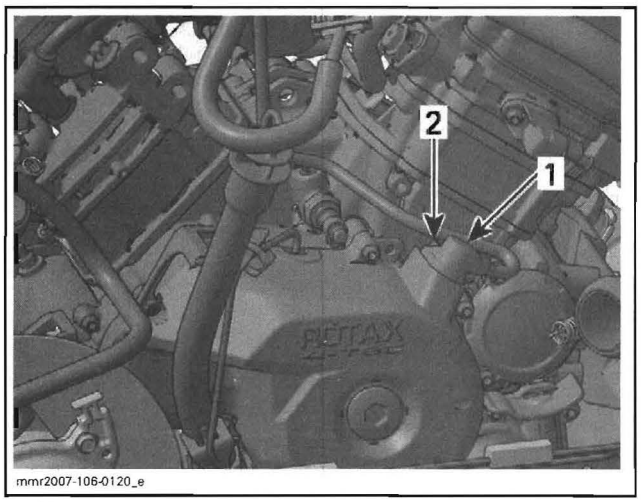

1. *CPS*
2. *Retaining screw*

Install new CPS and secure harness with a locking tie.

Tightening torque of the CPS retaining screws is 10 N•m (89 lbf•**in**).

CAMSHAFT POSITION SENSOR (CAPS)

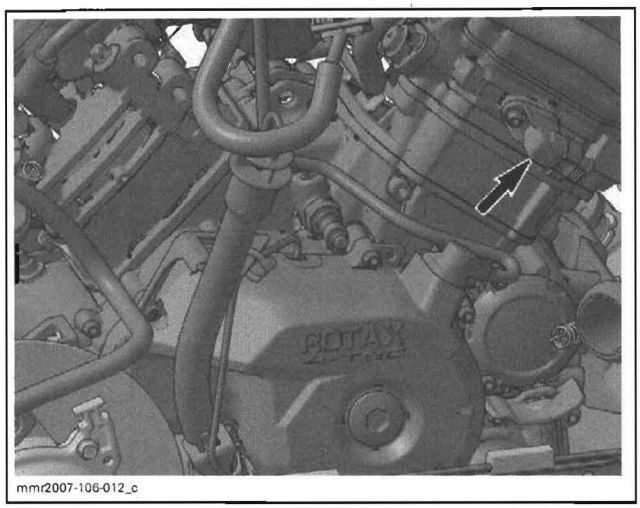

Remove LH side panel. Refer to *BODY*.

Voltage Test

Briefly turn ignition key to START.

Use a multimeter and set it to Vdc.

Back-probe connector and read voltage as follows.

CAPS CONNECTOR		VOLTAGE
VIOLET/PINK	BLACK/GREEN	Battery voltage

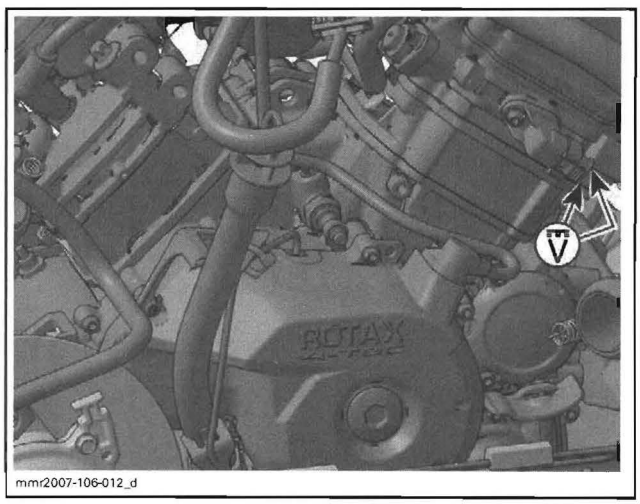

If voltage is not good, check/repair wiring/connectors.

If voltage is good, do the following test.

Remove CAPS sensor from engine.

Ensure connector is plugged.

Use a multimeter and set it to Vdc.

Back-probe connector and read voltage as follows.

CAPS CONDITION	CAPS CONNECTOR		VOLTAGE
Free	VIOLET/ PINK	BLACK/ GREEN	Close to 0 Vdc

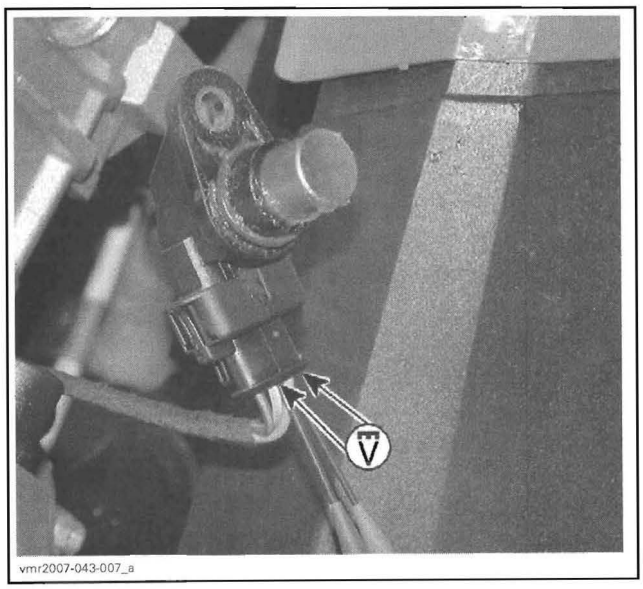

vmr2007-043-007_a

CAPS CONDITION	CAPS CONNECTOR		VOLTAGE
Metallic object on sensor	VIOLET/ PINK	BLACK/ GREEN	Battery voltage

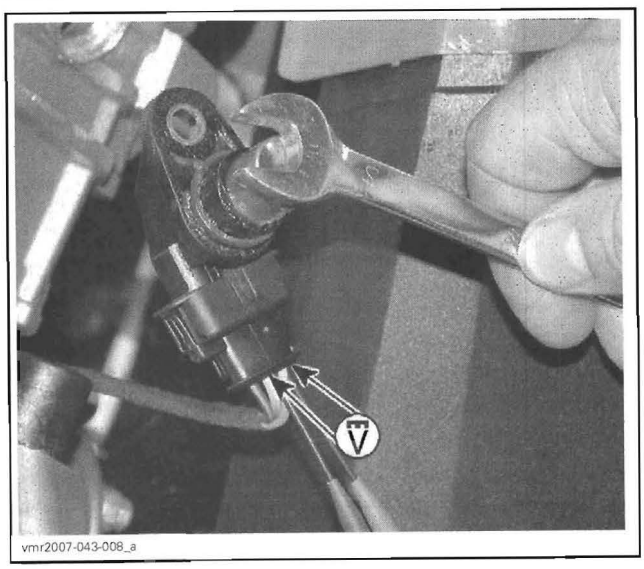

vmr2007-043-008_a

If voltage is appropriate, check/repair wiring/ connector between sensor and ECM. If it is good, refer to *ECM REPLACEMENT*.

If voltage is wrong, try a new CAPS.

Replacement

Unscrew the retaining screw and replace the CAPS. Ensure to reinstall O-ring.

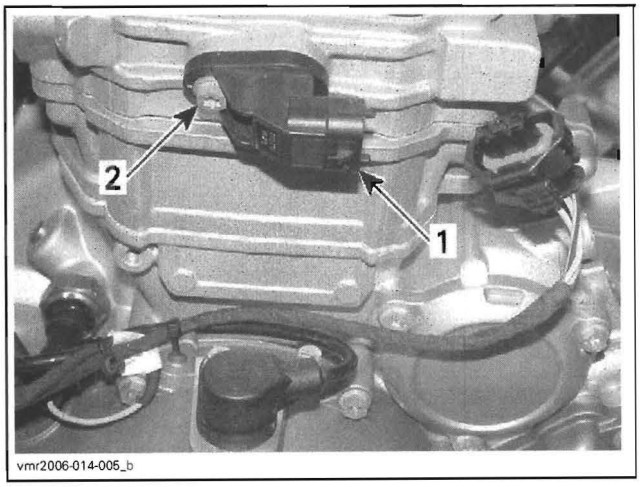

vmr2006-014-005_b

1. *CAPS*
2. *Retaining screw*

Apply Loctite 243 (P/N 293 800 060) on thread and torque to 10 N•m (89 lbf•**in**).

MANIFOLD AIR PRESSURE AND TEMPERATURE SENSOR (MAPTS)

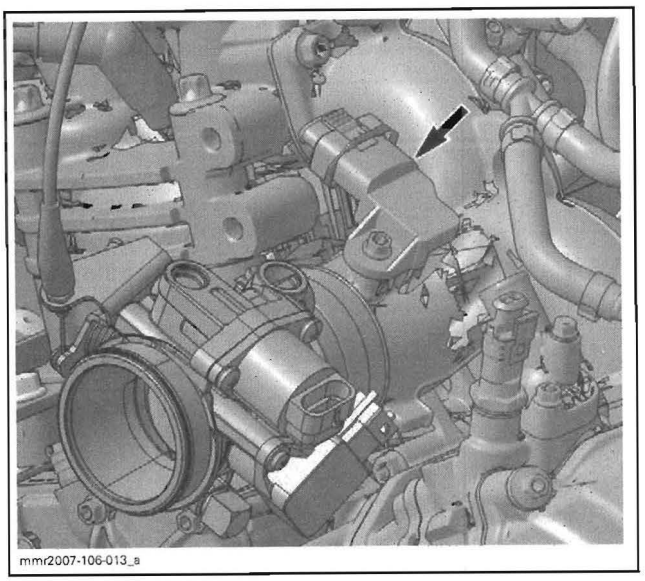
mmr2007-106-013_a

NOTE: This sensor is a multifunction device. It measures ambient pressure, intake manifold air pressure and temperature for air flow calculations.

Remove hood and LH side panel. Refer to *BODY*.

Remove air intake silencer. Refer to *AIR INTAKE SYSTEM*.

Sensor Pressure Function

Ensure sensor is correctly installed on intake manifold. Otherwise, the MAPTS could generate a fault code for an unexpected sensor range at idle when it reads the atmospheric pressure. Remove sensor and check for oil or dirt on its end and if problem persists, check throttle plate condition/position and the wiring harness. Perform the following tests.

Voltage Test

Check the voltage output from ECM to the pressure sensor.

Briefly turn ignition key to START.

Disconnect plug connector from MAPTS and connect a voltmeter as shown.

MAPTS CONNECTOR		MEASUREMENT
PIN		VOLTAGE
1	3	5 Vdc

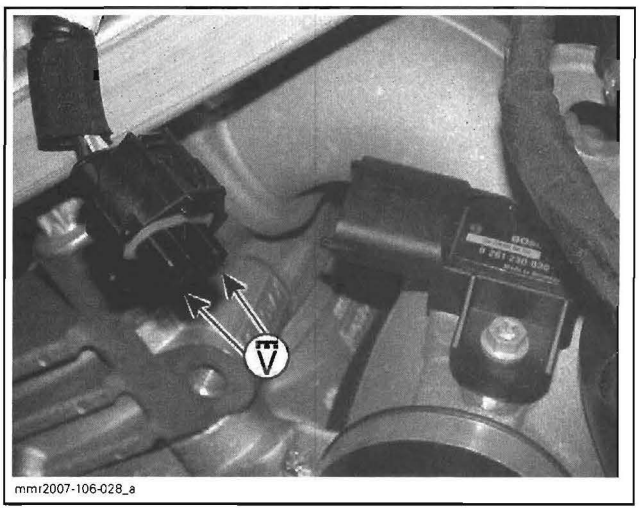

mmr2007-106-028_a

If voltage test is good, replace the MAPTS.

If voltage test is not good, check the continuity of the MAPTS circuit. See below.

Resistance Test

Disconnect the connector "A" from the ECM.

Using a multimeter, check continuity of circuits 12, 28 and 40.

If wiring harness is good, refer to *ECM REPLACEMENT*.

Otherwise, repair the connectors or replace the wiring harness between ECM connector and the MAPTS.

Quick Test

Using B.U.D.S. software, look the MAPTS from the **Monitoring** section and read out the pressure value while engine is stopped.

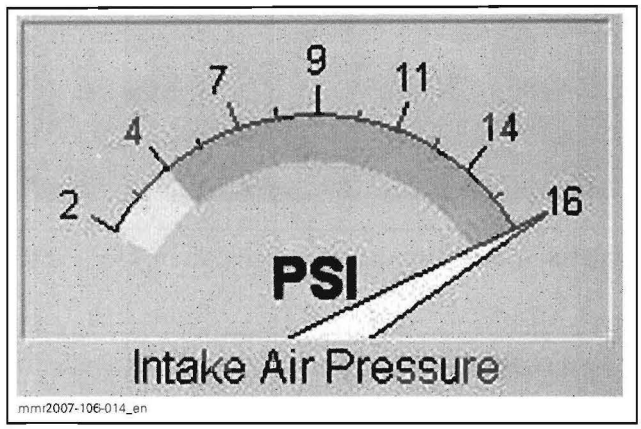

mmr2007-106-014_en

Perform the same test with a new MAPTS and compare both readings.

Values have to be within ± 3.4 kPa (0.5 PSI).

If old MAPTS's value is out of this range, replace it.

Sensor Temperature Function

The sensor also monitors the temperature at manifold.

Resistance Test

Disconnect the connector from the MAPTS.

Using a multimeter, check the resistance of the sensor itself as shown.

MAPTS		MEASUREMENT
PIN		RESISTANCE Ω @ 20°C (68°F)
1	2	2280 - 2740

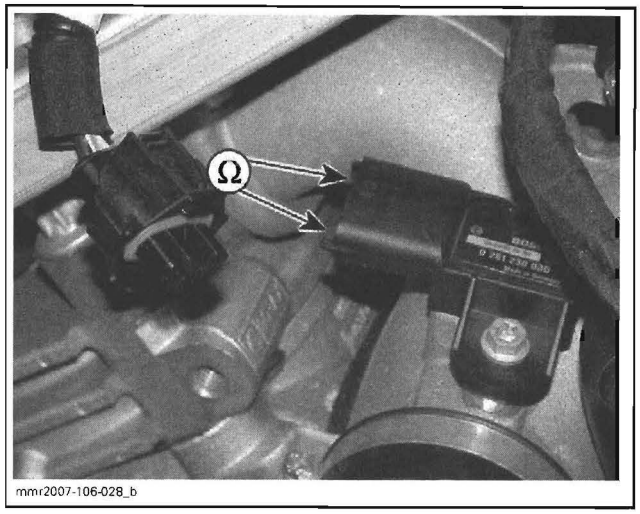

If resistance is not within specification, replace the MAPTS.

If resistance tests good, **reconnect** the MAPTS and disconnect the connector "A" from the ECM.

Using a multimeter, recheck resistance value between pins as shown.

ECM CONNECTOR		MEASUREMENT
PIN		RESISTANCE Ω @ 20°C (68°F)
A-7	A-28	2280 - 2740

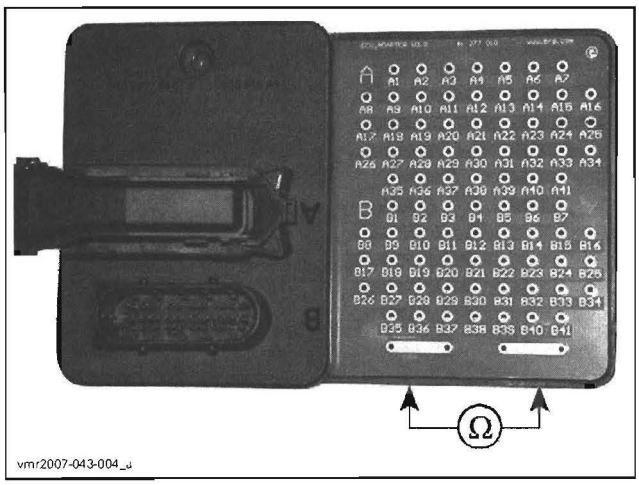

If resistance value is correct, refer to *ECM REPLACEMENT*.

If resistance value is incorrect, inspect/repair/replace wiring harness between ECM connector and the MAPTS.

Replacement

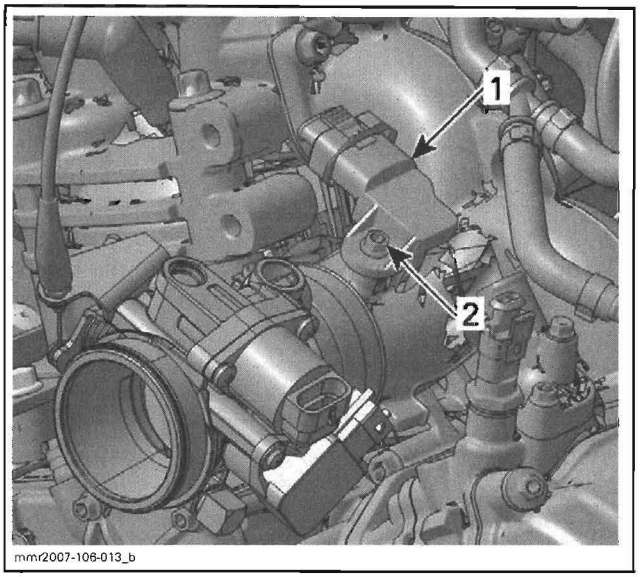

1. MAPTS
2. Retaining screw

Disconnect MAPTS connector and remove the MAPTS.

Apply Loctite 243 (P/N 293 800 060) on screw then torque to 6 N•m (53 lbf•**in**).

COOLANT TEMPERATURE SENSOR (CTS)

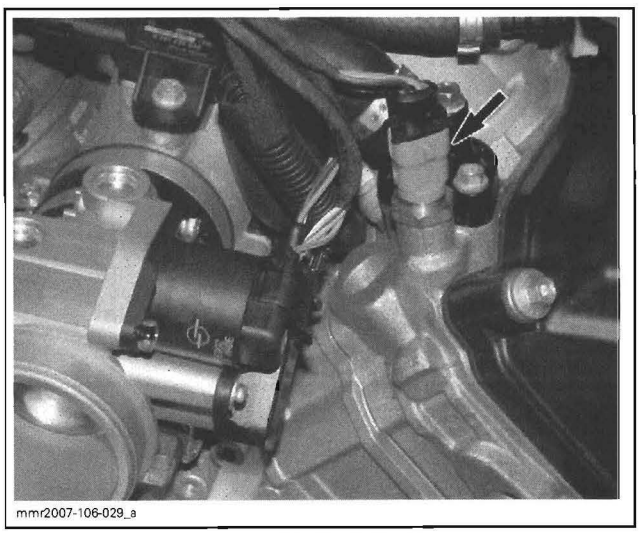

COOLANT TEMPERATURE SENSOR (CTS)

Remove hood and LH side panel. Refer to *BODY*.

Resistance Test

Disconnect the plug connector from the CTS and check the resistance of the sensor itself.

CTS SENSOR		MEASUREMENT
PIN		RESISTANCE Ω @ 20°C (68°F)
1	2	2280 - 2740

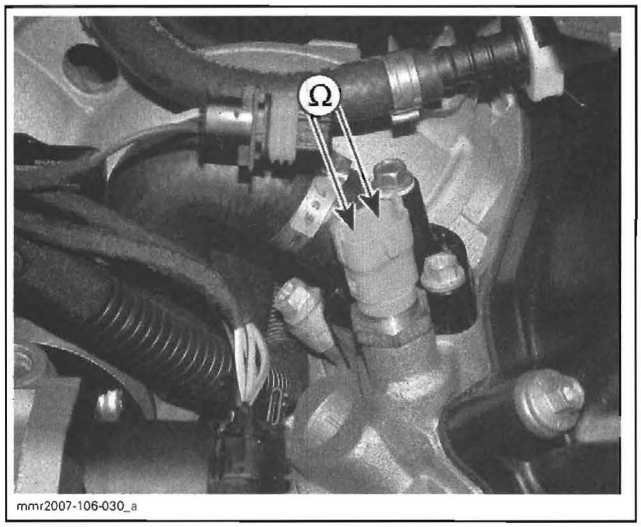

If resistance is out of specification, replace the CTS.

If resistance tests good,**reconnect** the CTS and disconnect the ECM connector "A" from the ECM.

Using a multimeter, recheck resistance on the ECM connector as per table.

ECM CONNECTOR		MEASUREMENT
PIN		RESISTANCE Ω @ 20°C (68°F)
A-11	A-27	2280 - 2736

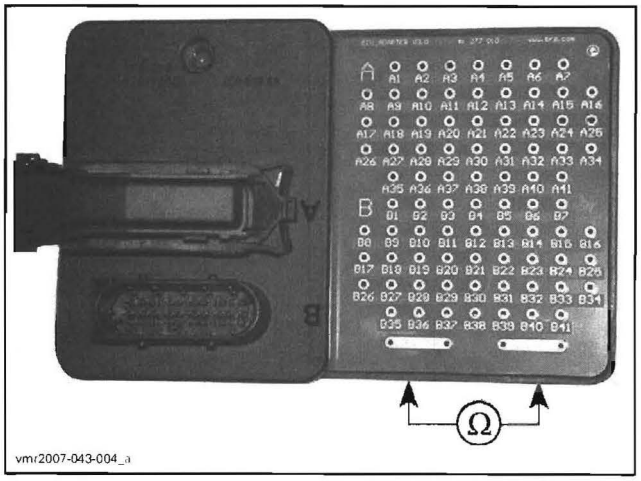

If resistance value is correct, refer to *ECM REPLACEMENT.*

If resistance value is incorrect, repair the connectors or replace the wiring harness between ECM connector and the CTS.

Replacement

Disconnect CTS connector and remove CTS.

Install the new CTS and torque to 16 N•m (142 lbf•**in**).

Reinstall remaining removed parts.

Refill and bleed the cooling system, refer to *COOLING SYSTEM* subsection.

OIL PRESSURE SWITCH (OPS)

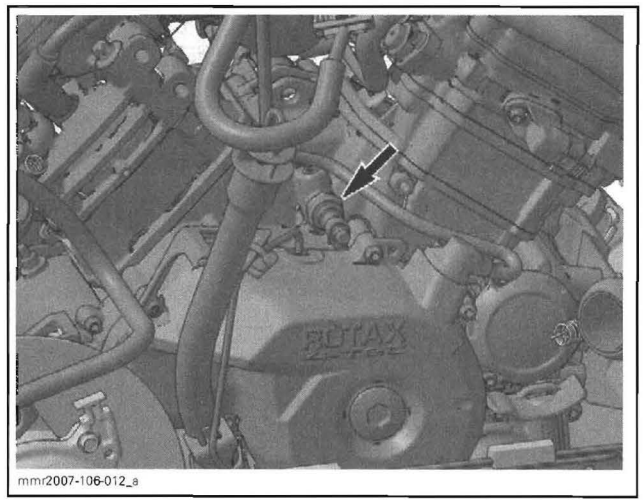

Oil Pressure Test

To check the function of the oil pressure switch, an oil pressure test has to be performed. Refer to *OIL PRESSURE TEST* in *LUBRICATION SYSTEM* section.

If the engine oil pressure is good, check the resistance of the OPS while engine is off and while engine is running.

Resistance Test

Disconnect the connector from the OPS.

Use a multimeter to check the resistance as shown.

OPS CONNECTOR		ENGINE NOT RUNNING	ENGINE RUNNING
PIN		RESISTANCE (Ω)	
1	Engine ground	Close to 0 Ω (normally closed switch)	Infinitely high when pressure reaches 30 - 60 kPa (4.4 - 8.7 PSI)

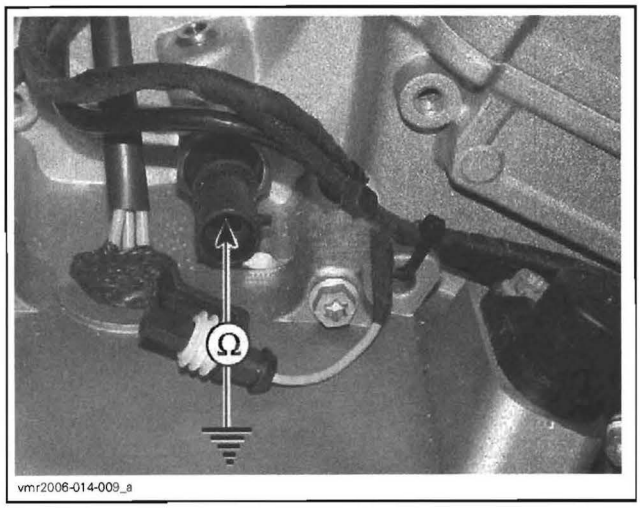

If resistance values are incorrect, replace OPS.

If the values are correct, check the continuity of the wiring harness.

Disconnect the connector "A" from the ECM and check continuity of circuit 10.

If wiring harness is good, refer to *ECM REPLACEMENT*.

Otherwise, repair the connector or replace the wiring harness between ECM connector and OPS.

Replacement

Refer to *LUBRICATION SYSTEM* section.

FUEL TANK AND FUEL PUMP (300F/550F)

SERVICE TOOLS

Description	Part Number	Page
leak tester kit	529 033 100	333
pliers Oetiker 1099	295 000 070	333
pressure pump kit	529 021 800	333
small hose pincher	295 000 076	333, 335
wrench	529 035 891	334



sales@midwestmanuals.com
www.midwestmanuals.com

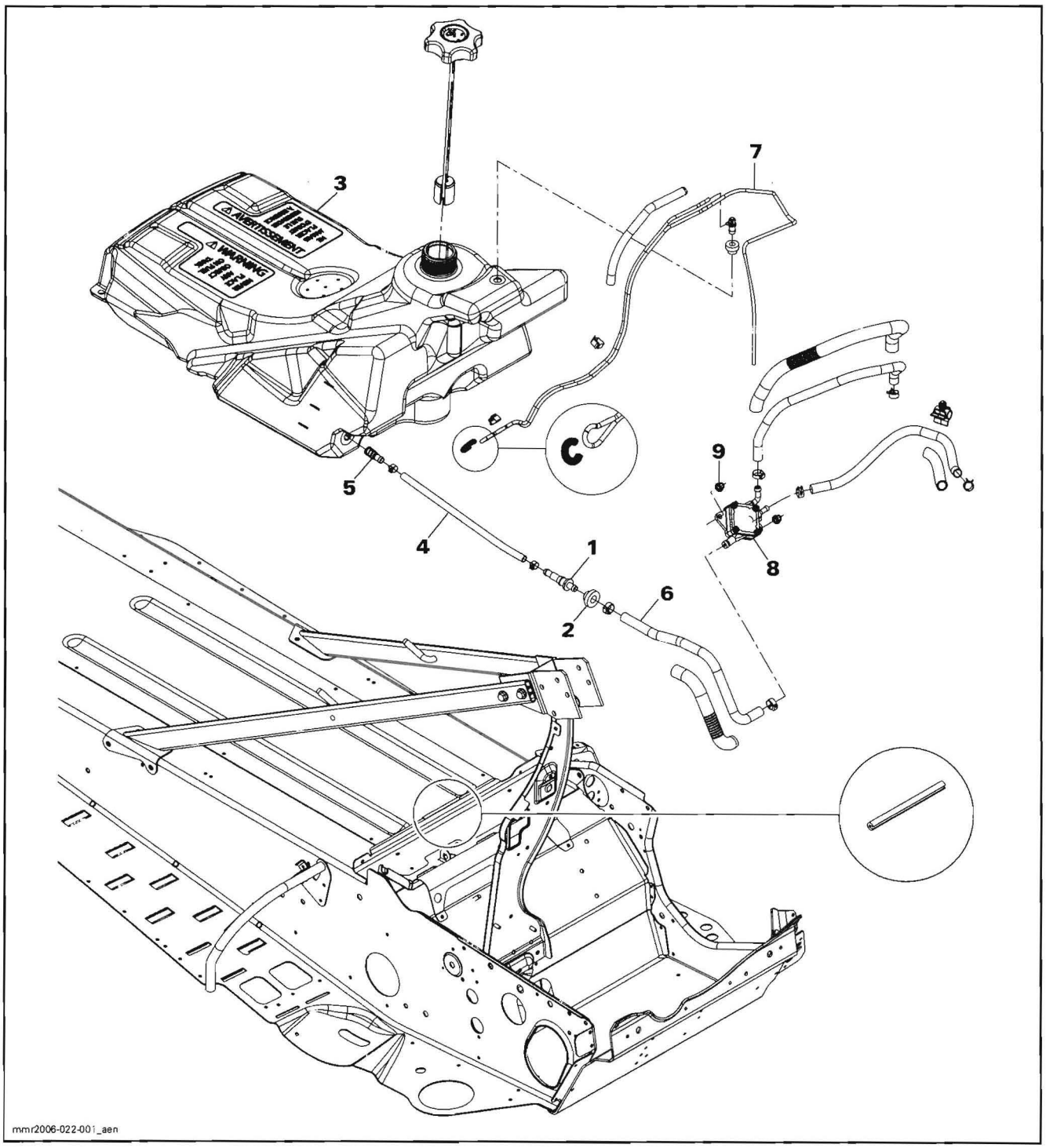
3
7
C
5
9
4
1
8
6
2
mmr2006-022-001_aen

INSPECTION

FUEL SYSTEM LEAK TEST

Fill up fuel tank.

Install the special cap of leak tester kit (P/N 529 033 100) on fuel tank.

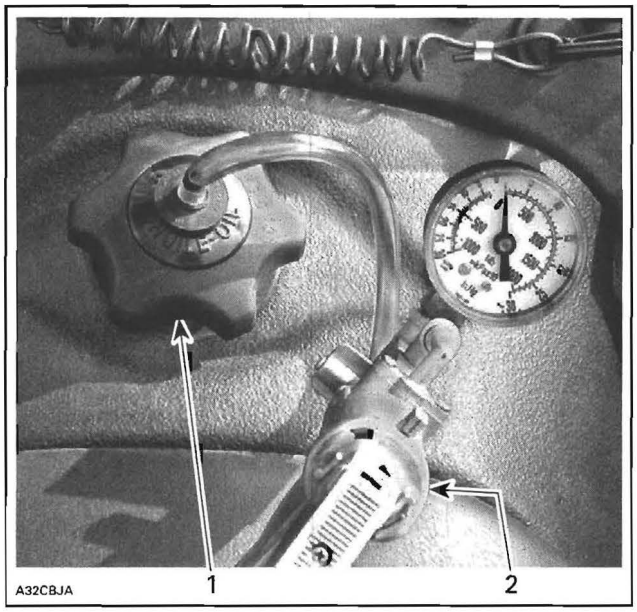

TYPICAL
1. *Special cap on tank*
2. *Air pump*

Install a small hose pincher (P/N 295 000 076) on vent line.

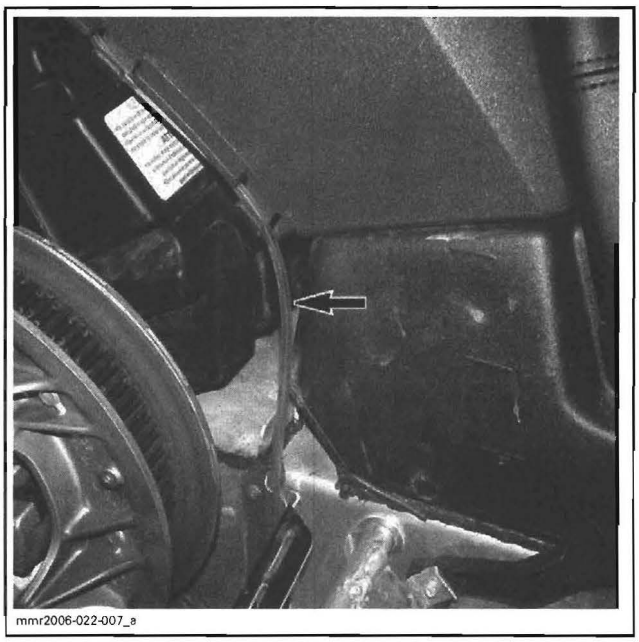

Using air pump in pressure pump kit (P/N 529 021 800), inject air into fuel tank.

Pressurize fuel system as follows.

PRESSURE	TIME TO HOLD PRESSURE
21 kPa (3 PSI)	3 minutes

If pressure drops, locate fuel leak(s) and repair or replace leaking component(s).

To ease locating leak(s), spray soapy water on components; bubbles will indicate leak location(s).

PROCEDURES

OETIKER CLAMPS

Replacement

To secure or cut Oetiker clamps on fuel lines, use pliers Oetiker 1099 (P/N 295 000 070).

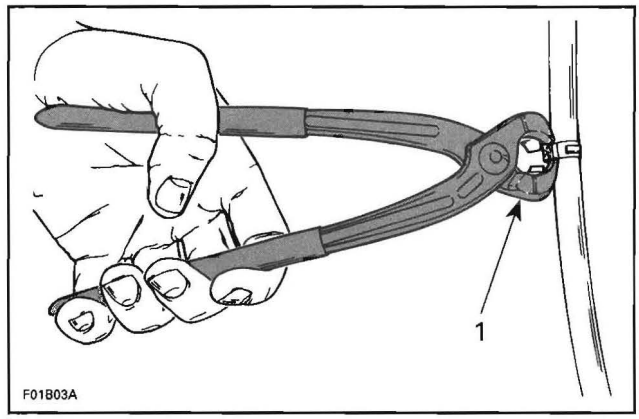

1. Cutting clamp

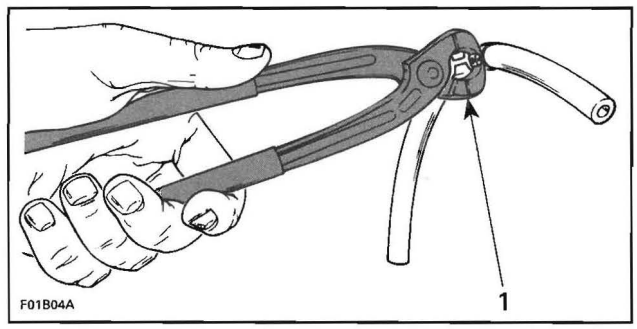

1. Securing clamp

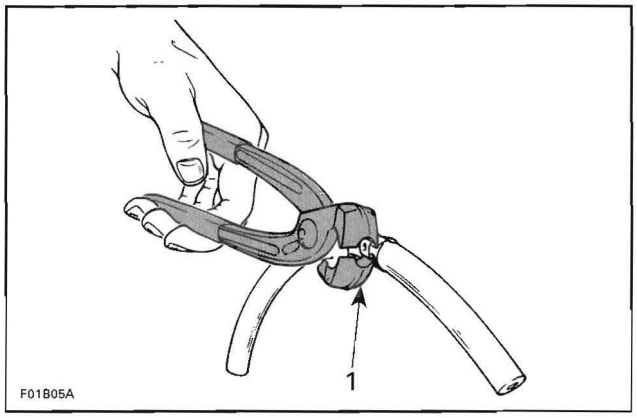

1. Securing clamp in limited access

⚠ WARNING

Use of improper fuel lines could compromise fuel system integrity.

IN-TANK FUEL STRAINER

Replacement

Drain fuel tank.

Unplug supply hose.

Pull out male connector **no. 1** from grommet.

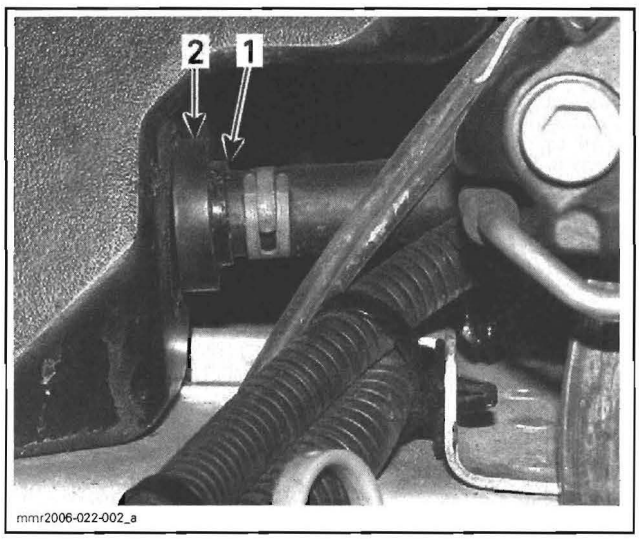

1. Male connector (under hose end)
2. Grommet

Pull out grommet **no. 2** from fuel tank **no. 3** then, pull out pickup hose **no. 4** and fuel strainer **no. 5**.

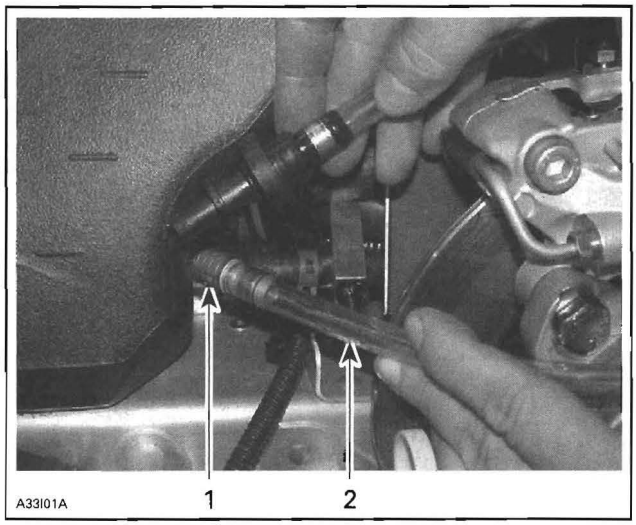

1. Fuel strainer
2. Pickup hose

Replace fuel strainer and grommet. To facilitate the installation, grommet should be on smaller diameter of male connector. Install grommet on fuel tank and push male connector through grommet.

FUEL TANK

Removal

Remove seat and trunk, refer to *BODY*.

Remove fuel tank cap.

Remove filler neck plastic nut using wrench (P/N 529 035 891).

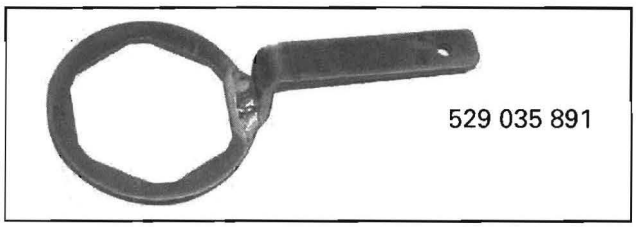

Remove console. Refer to *BODY*.

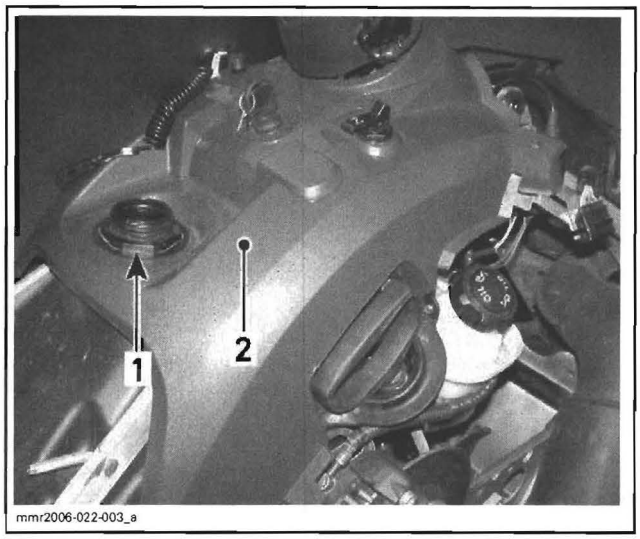

1. Neck nut
2. Console

Empty fuel tank and install a small hose pincher (P/N 295 000 076) on fuel line **no. 6**.

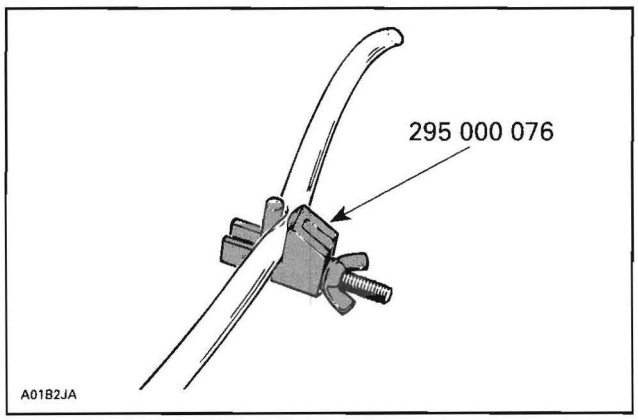

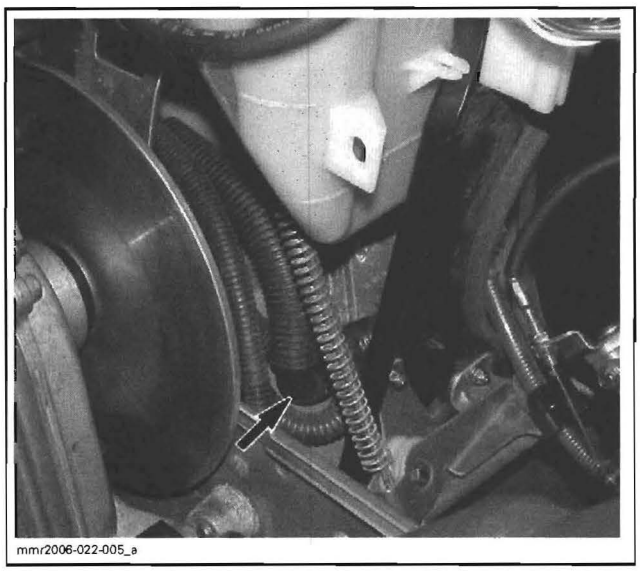

Disconnect supply hose at fuel pump.

⚠ WARNING

Whenever a fuel line is disconnected, obstruct line with a hose pincher. Fuel is flammable and explosive under certain conditions. Always wipe off any fuel or oil spillage from the vehicle. Ensure work area is well ventilated. Do not smoke or allow open flames or sparks in the vicinity.

Unplug vent tube **no. 7** from tank.

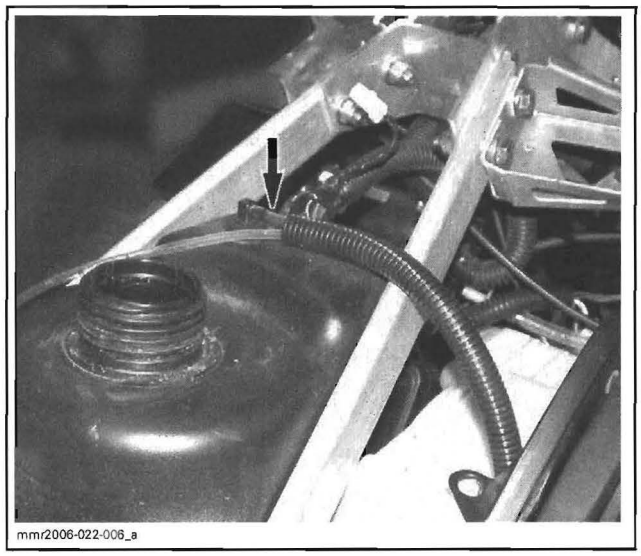

Remove aluminum braces each side of fuel tank.

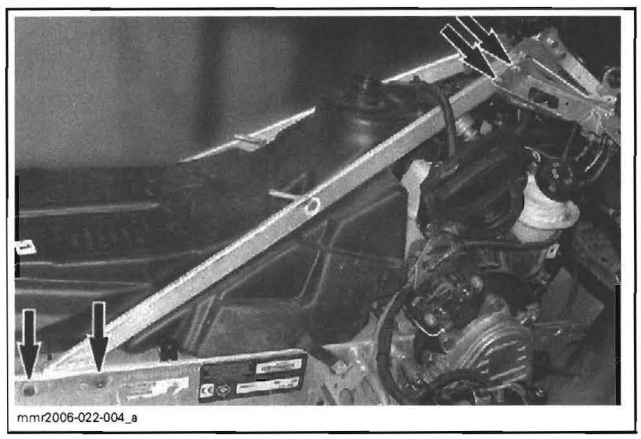

Remove fuel tank **no. 3** and set it aside.

Installation

Installation is the reverse of removal procedures. However, pay attention to the following.

Ensure to reconnect vent tube **no. 7**.

⚠ WARNING

Make sure vent tube is not kinked.

Connect fuel line and remove hose pincher.

When reinstalling aluminum braces, install new Torx screws at bottom and new lock nuts at top.

Pressurize fuel system to ensure there is no leak.

DIAPHRAGM FUEL PUMP

Verification

Check fuel pump valves operation as follows:

Empty fuel tank.

NOTE: For the following test, ensure hoses have a tight fit.

Disconnect outlet hose from fuel tank.

Alternately apply pressure and vacuum with pump of leak test kit to disconnected fuel tank hose. The inlet valve should release with pressure and hold under vacuum.

Disconnect inlet hose from carburetor.

Repeat the same procedure with disconnected carburetor inlet hose. This time the outlet valve should hold with pressure and release under vacuum.

Removal

Empty fuel tank.

Disconnect hoses from fuel tank, carburetor and impulse hose from crankcase.

Remove air intake silencer. Refer to *AIR INTAKE SYSTEM.*

Remove nuts and or screws securing the injection oil reservoir. Refer to *OIL INJECTION SYSTEM.*

Slightly move oil reservoir to gain access to fuel pump nuts.

Remove nuts **no. 9** securing fuel pump to chassis.

CAUTION: If a nut is hard to unscrew, be careful not to break screw. Apply a lubricant on threads to ease removal.

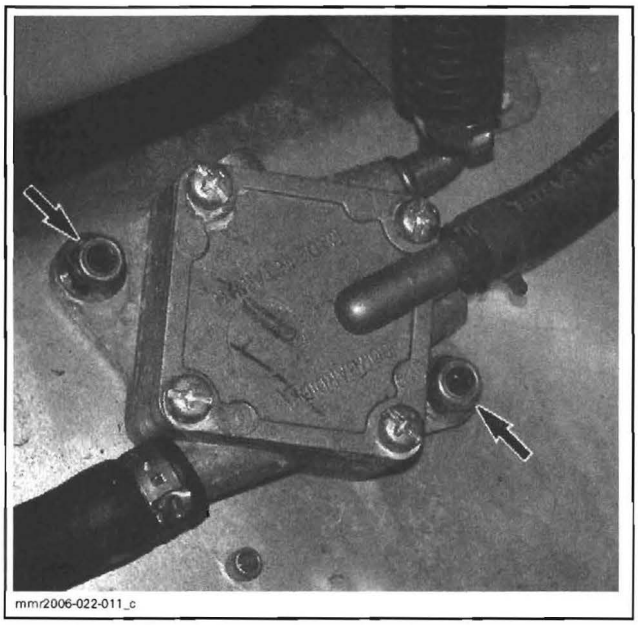

Installation

Reverse removal procedure paying attention to the following.

Install hoses on pump prior to installing pump in vehicle.

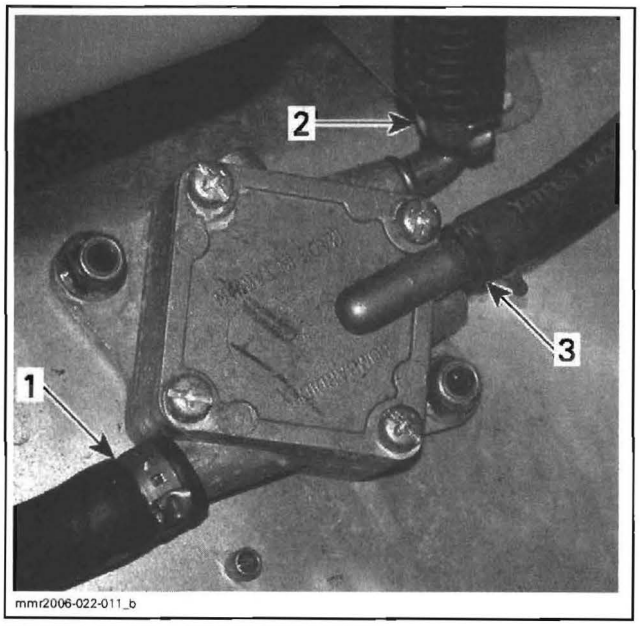

TYPICAL VIEW AFTER INSTALLATION
1. *Inlet (hose from fuel tank)*
2. *Outlet (hose going to carburetor)*
3. *Impulse (hose from crankcase)*

Secure hoses with new collars and ensure spring clip on impulse hose is tight.

⚠ WARNING

Proceed with a fuel system leak test.

FUEL TANK AND FUEL PUMP (V800)

SERVICE TOOLS

Description	Part Number	Page
hose pincher	295 000 076	339
leak tester kit	529 033 100	339
pliers Oetiker 1099	295 000 070	341
pressure gauge	529 035 709	340
pressure pump kit	529 021 800	339
T-fitting	529 036 023	340
wrench	529 035 899	344

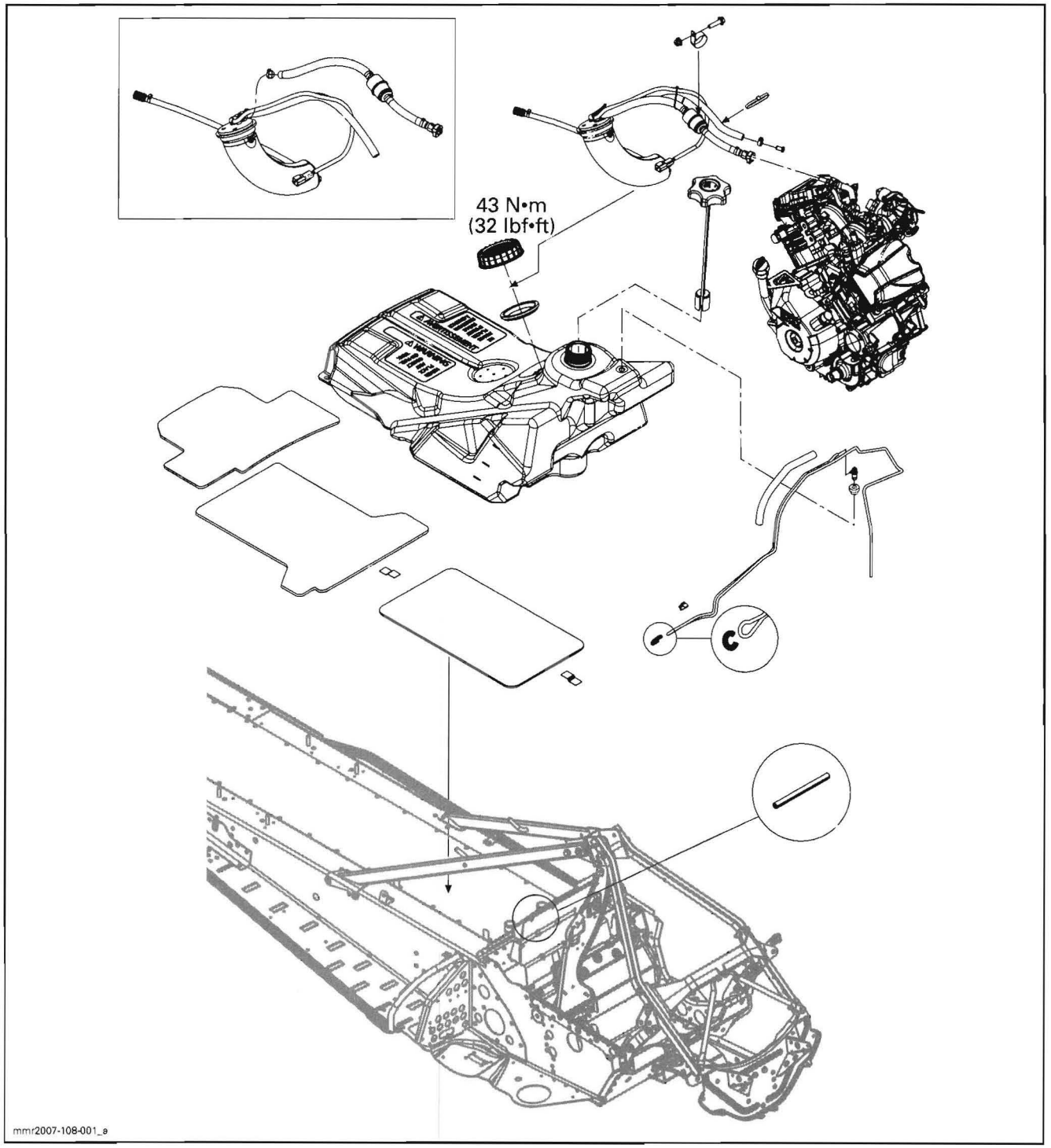
43 N•m
(32 lbf•ft)
C
mmr2007-108-001_a

INSPECTION

FUEL TANK LEAK TEST

Fill up fuel tank.

Install the special cap of leak tester kit (P/N 529 033 100) on fuel tank.

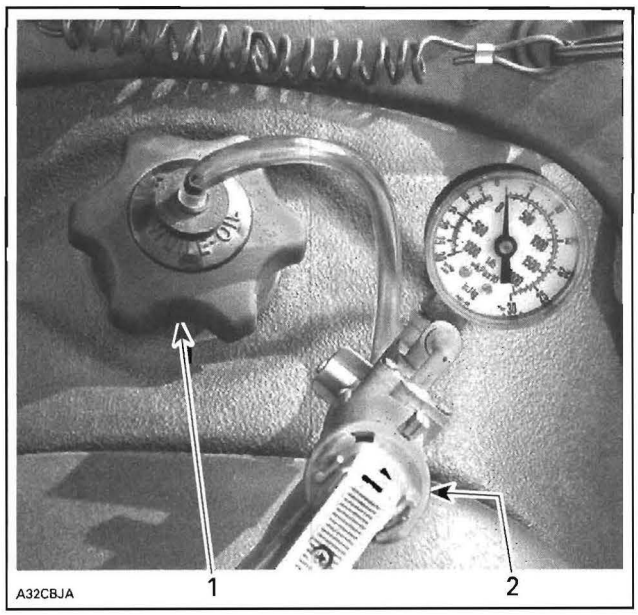

TYPICAL
1. Special cap on tank
2. Air pump

Install a hose pincher (P/N 295 000 076) on vent line.

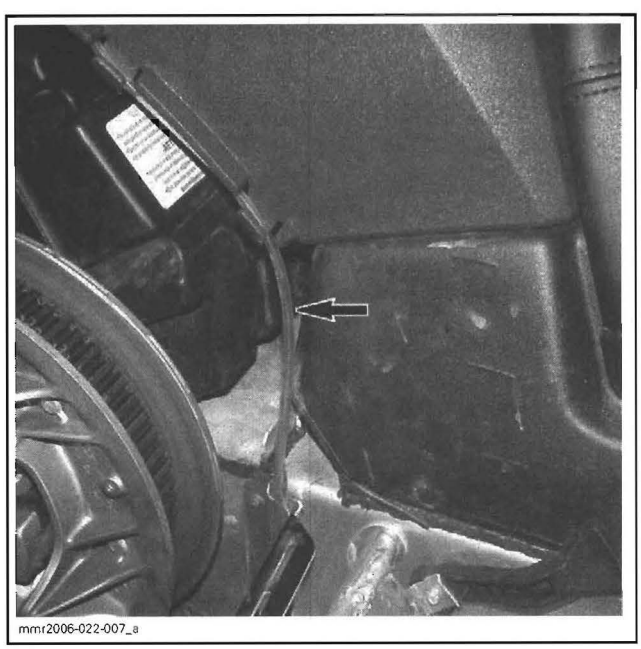

Using air pump in pressure pump kit (P/N 529 021 800), inject air into fuel tank.

Pressurize fuel system as follows.

PRESSURE	TIME TO HOLD PRESSURE
21 kPa (3 PSI)	3 minutes

If pressure drops, locate fuel leak(s) and repair/replace leaking component(s).

To ease locating leak(s), spray soapy water on components; bubbles will indicate leak location(s).

FUEL PRESSURE TEST

Before proceeding to the pressure test, ensure the battery is fully charged. Battery voltage must be over 12 volts.

Disable fuel pump using B.U.D.S. Look in the **Activation** tab.

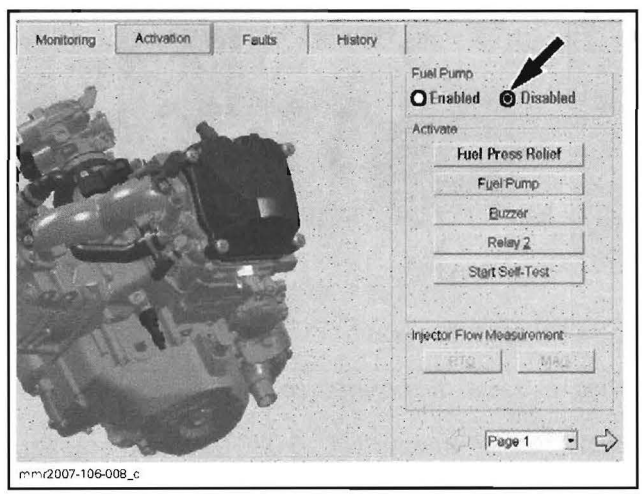

Release fuel pressure by running engine until it runs out of gas.

⚠ WARNING

The fuel hose may be under pressure. Cover the fuel line connection with an absorbent shop rag. Slowly disconnect the fuel hose to release the pressure. Wipe off any fuel spillage inside engine compartment.

The pressure test will show the available pressure at the fuel pump outlet. It validates the pressure regulator, the fuel pump and leaks in the system.

Ensure there is no leak from hoses and fittings. Repair any leak.

Ensure there is enough gas in fuel tank.

Disconnect outlet hose from fuel pump.

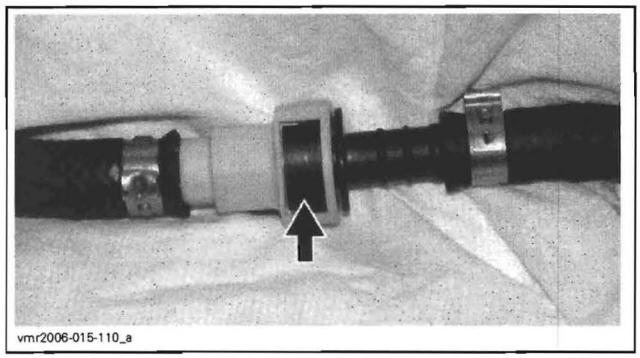
vmr2006-015-110_a

PRESS TAB

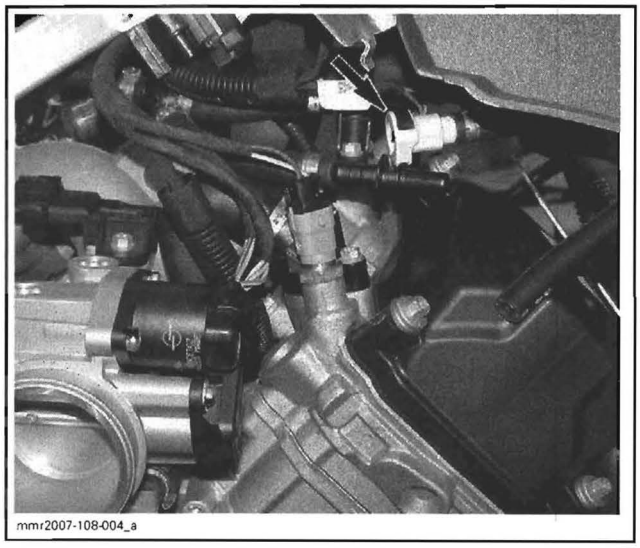
mmr2007-108-004_a

TYPICAL — HOSE DISCONNECTED

Install fuel T-fitting (P/N 529 036 023) and pressure gauge (P/N 529 035 709) between disconnected hoses (in-line installation).

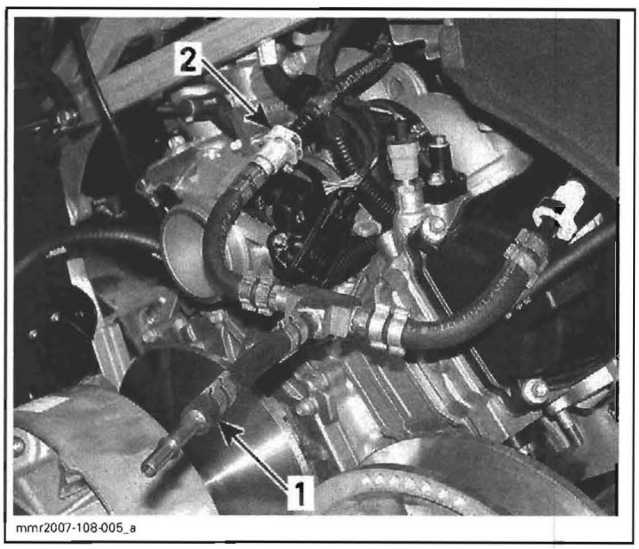

mmr2007-108-005_a

1. *T-fitting*
2. *T-fitting adapter (spare part P/N 513 033 135)*

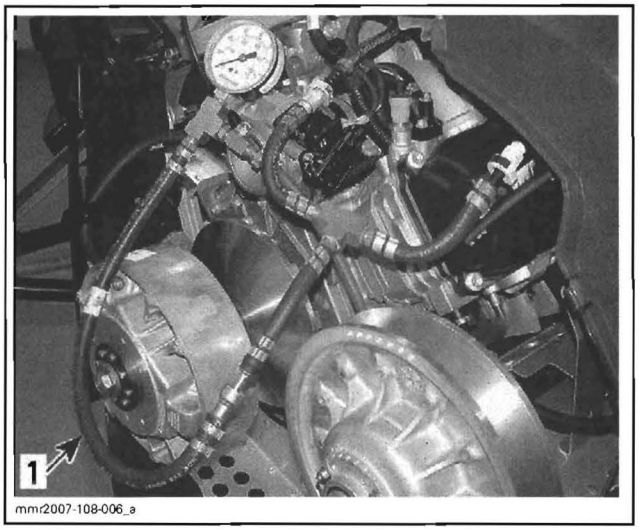

mmr2007-108-006_a

1. *Pressure gauge connected to T-fitting*

Re-enable fuel pump using B.U.D.S.

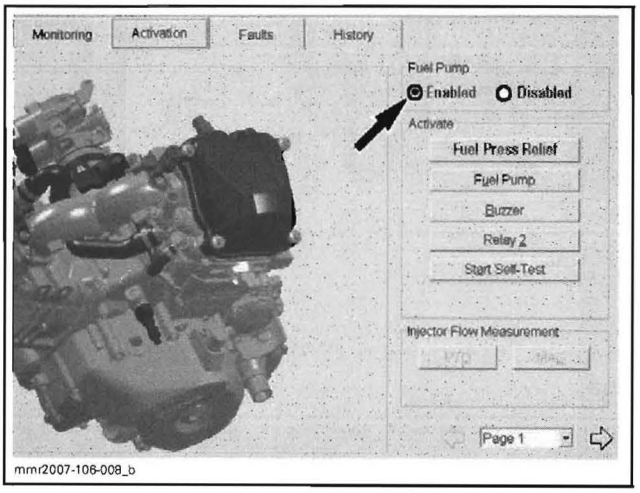

mmr2007-106-008_b

Briefly turn ignition key to START **Do not crank engine.** Repeat twice. Release pressure using valve on fuel gauge. Ensure gauge is "reset" to zero (0).

FUEL PRESSURE (when briefly turning ignition key to START)
400 ± 20 kPa (58 ±3 PSI)

Ensure plug is not leaking on the unused fuel pump hose.

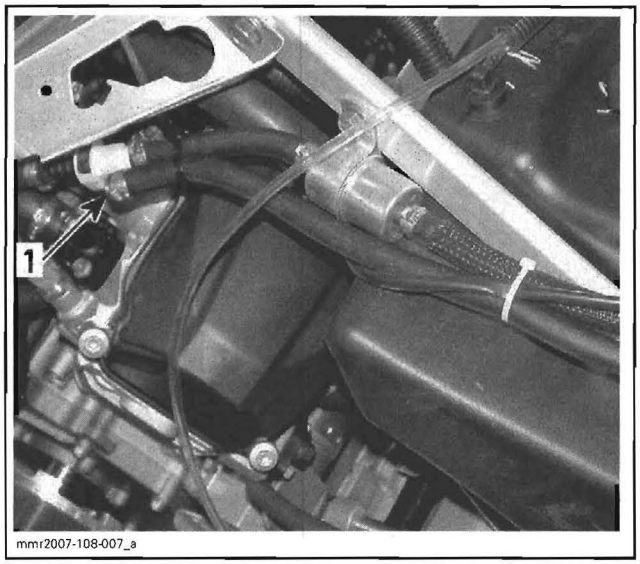

SOME COMPONENTS REMOVED FOR CLARITY PURPOSE ONLY
1. Plug on unused hose

NOTE: This hose is only for factory use.

Crank or start engine and observe fuel pressure. The fuel pressure should be the same as above.

If pressure is within limits, the fuel pump and pressure regulator are working adequately.

A rapid pressure drop indicates leakage either from the fuel rail or from the fuel pump check valve. Check fuel rail for leaks. If it is not leaking then replace the fuel pump.

A slow pressure drop indicates leakage either from the fuel injector or from the fuel pressure regulator. Check fuel injector for leaks (see below). If it is not leaking then replace the fuel pump.

NOTE: For resolving a fuel pressure problem, refer to *TROUBLESHOOTING* in this section.

Release fuel pressure from fuel gauge valve.

Remove pressure gauge and T-fitting from inlet hose.

Reconnect inlet hose.

⚠ WARNING

Wipe off any fuel spillage in the engine compartment. Fuel is flammable and explosive under certain conditions. Always work in a well ventilated area.

Reinstall removed parts.

PROCEDURES

OETIKER CLAMPS

Clamp Replacement

To secure or cut Oetiker clamps on fuel lines, use pliers Oetiker 1099 (P/N 295 000 070).

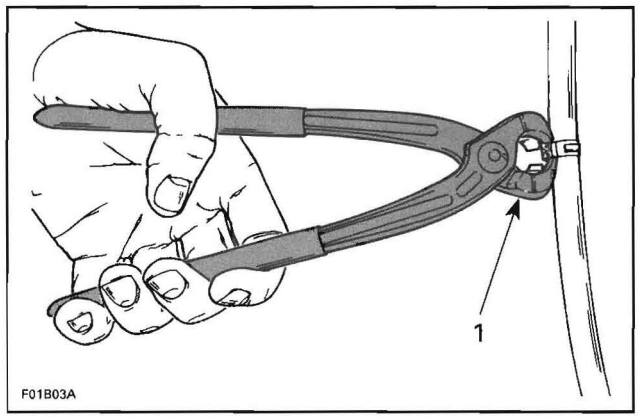

1. Cutting clamp

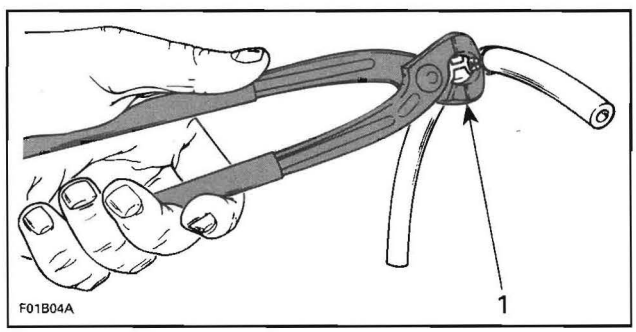

1. Securing clamp

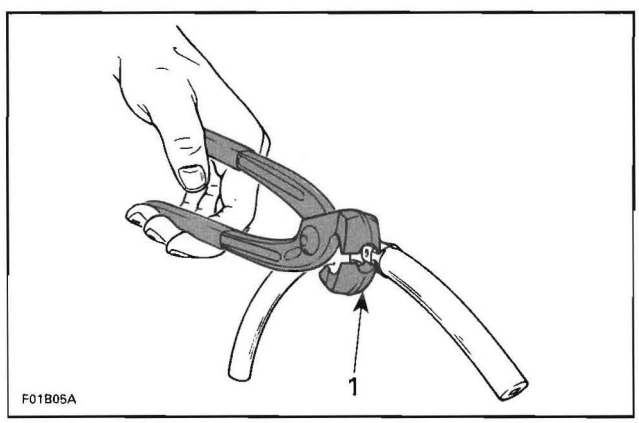

1. Securing clamp in limited access

⚠ WARNING

Use of improper fuel lines could compromise fuel system integrity.

FUEL FILTER

Fuel Filter Replacement

NOTE: The fuel filter comes as an assembly with the hoses.

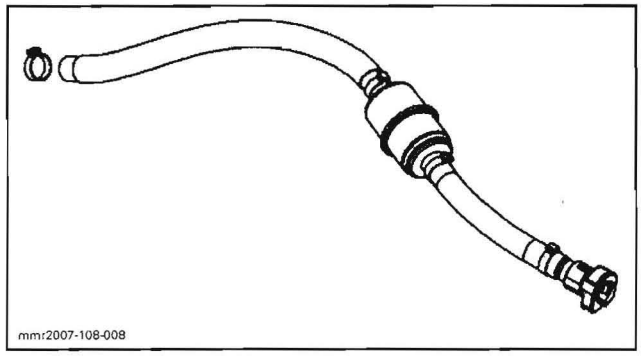

FUEL FILTER AND HOSES

The fuel filter is located on LH side of the vehicle underneath console.

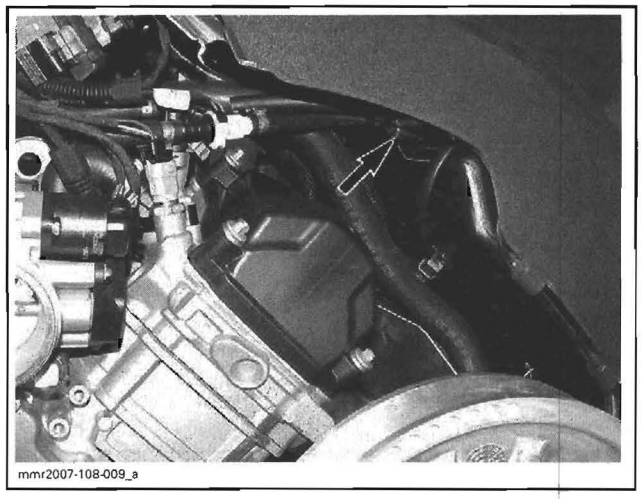

Release fuel pressure. Refer to *FUEL PRESSURE TEST* above.

Remove console. Refer to *BODY*.

Disconnect both ends of fuel filter hoses.

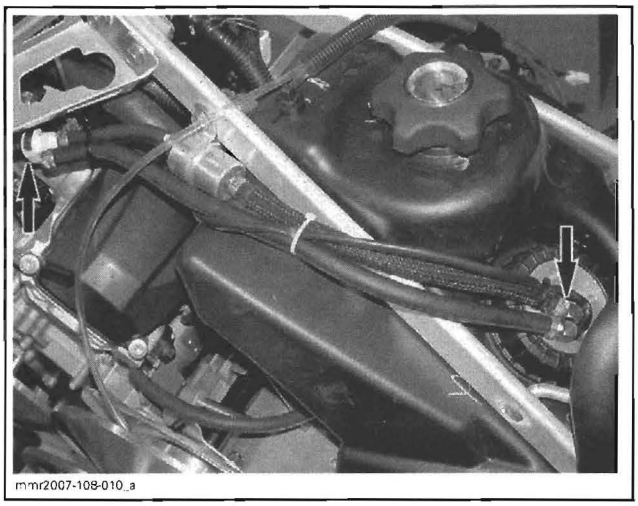

Unscrew fuel filter support then remove the filter with hoses.

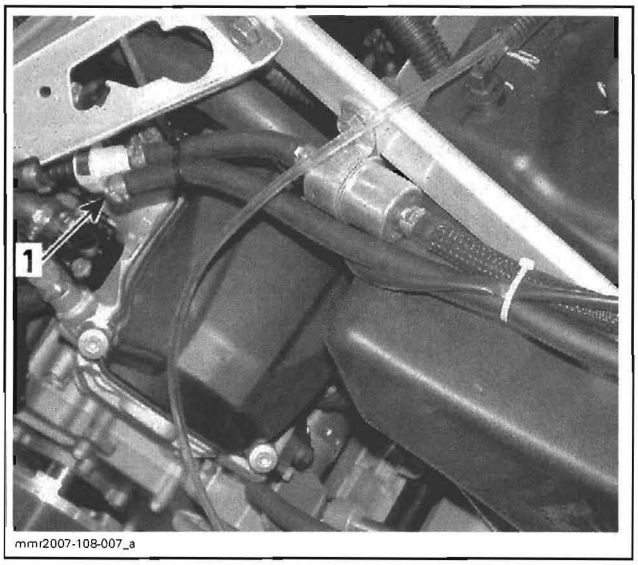

1. Unscrew fuel filter support

Installation is reverse of removal procedure.

Install a new Oetiker clamp.

Re-enable fuel pump. Refer to *FUEL PRESSURE TEST* above.

FUEL PUMP

Fuel Pressure Test

Refer to *INSPECTION* in this section.

Fuel Pump Electrical Test

NOTE: Ensure fuel pump is enabled in B.U.D.S.

Briefly turn ignition key to START. The fuel pump should run for 2 seconds to build up the pressure in the system.

If pump does not work, disconnect its plug connector.

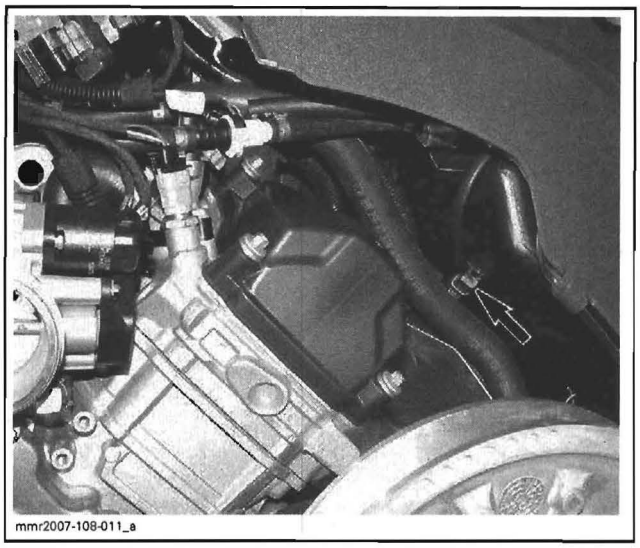
mmr2007-108-011_a

Install a temporary connector to the suspected fuel pump connector to test. Apply 12 V (+) on pin 2 and (–) on pin 1 to this test harness.

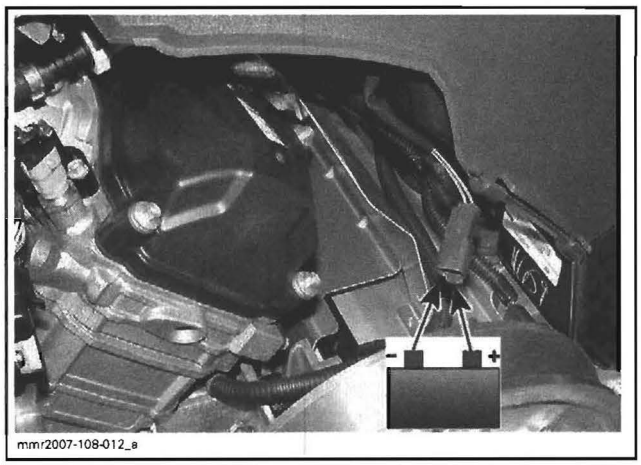
mmr2007-108-012_a

If pump does not run, replace it.

Otherwise, probe pin 2 and battery ground of fuel pump connector on vehicle harness side.

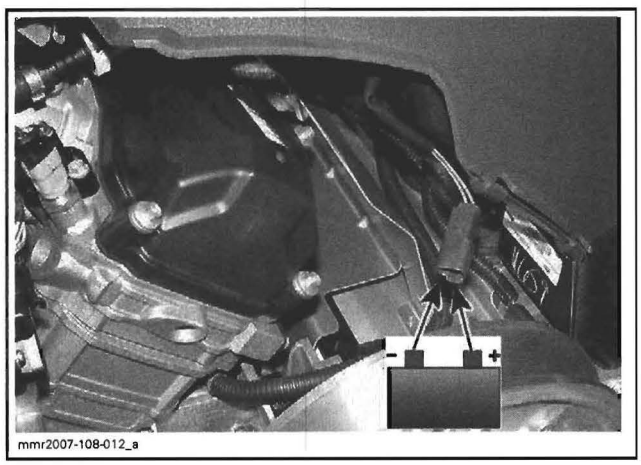
mmr2007-108-012_a

Briefly turn ignition key to START. You should read battery voltage; otherwise, the problem can be in fuse 2, relay 1, harness or in fuel pump connector. Repair or replace appropriate part.

Check continuity between pin 1 of the fuel pump connector on the vehicle harness side and terminal 29 of the ECM connector "B". If there is no continuity the problem is in the harness. Otherwise, try a new ECM.

Fuel Pump Removal

Remove seat, refer to *BODY*.

Release fuel pressure and disable fuel pump. Refer to *FUEL PRESSURE TEST* above.

Disconnect hoses from fuel pump.

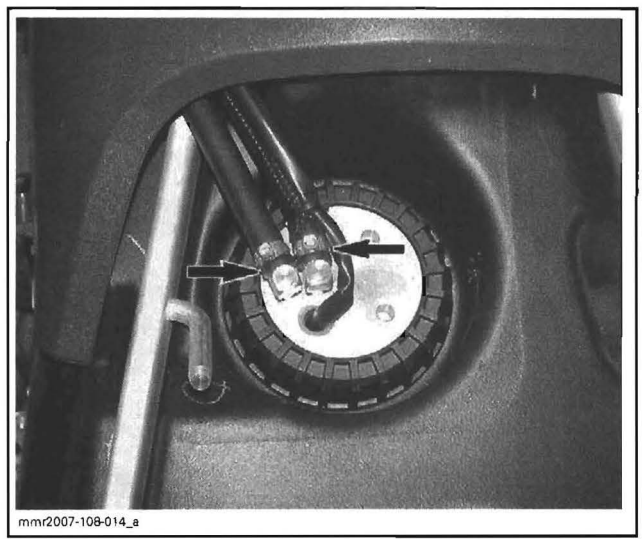
mmr2007-108-014_a

Disconnect the fuel pump connector and cut the hidden locking tie behind console. Pull pump harness.

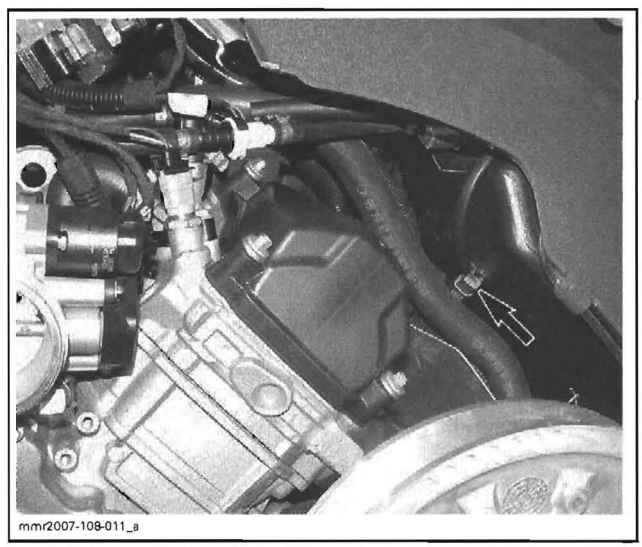
mmr2007-108-011_a

With two screwdrivers or a bent rod holding the flange, unscrew the fuel pump nut using fuel pump nut wrench (P/N 529 035 899).

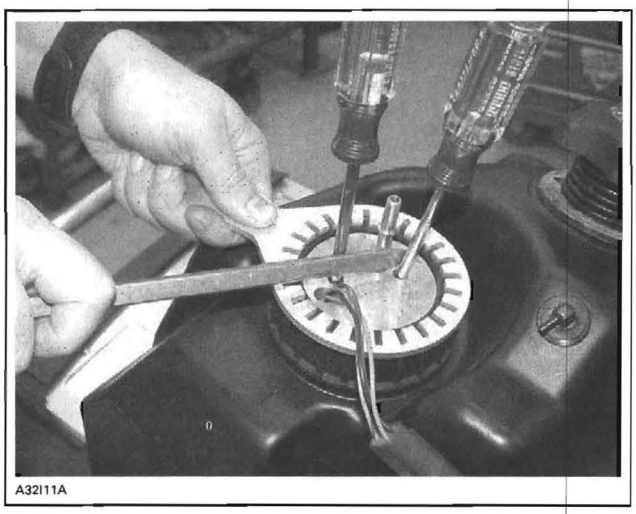
A32I11A

CONSOLE REMOVED FOR CLARITY PURPOSE ONLY

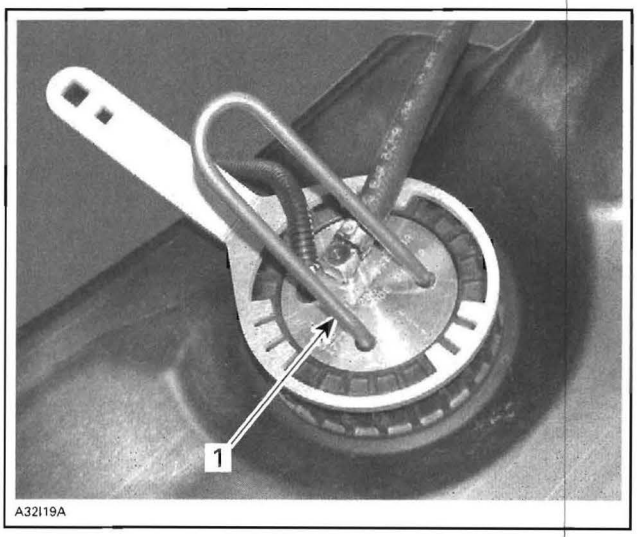

A32I19A

1. Bent rod

Remove fuel pump assembly.

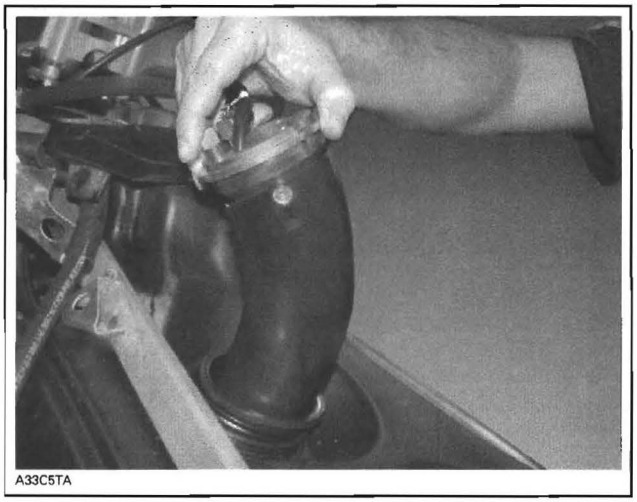
A33C5TA

Fuel Pump Installation

For installation, reverse the removal process but pay attention to the following.

Ensure to insert strainer to the rearmost and left most position in fuel tank.

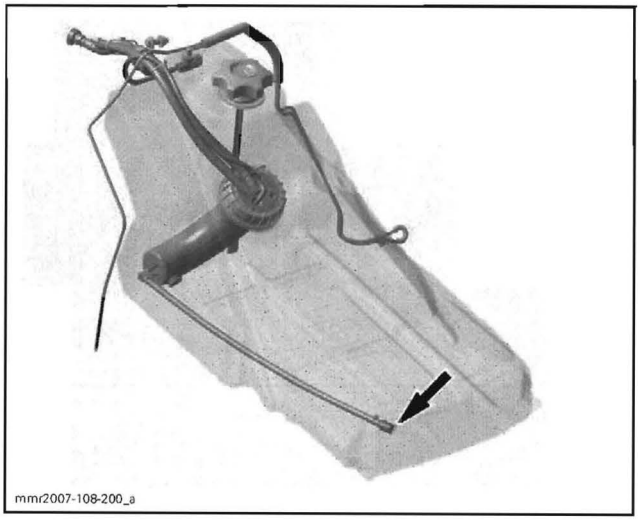
mmr2007-108-200_a

Install a new gasket.

Align the arrow on fuel pump assembly with the one on fuel tank. Keep arrows aligned when tightening fuel pump assembly.

Install a torque wrench perpendicularly (90°) to fuel pump nut wrench (P/N 529 035 899). Torque fuel pump nut to 43 N•m (32 lbf•ft).

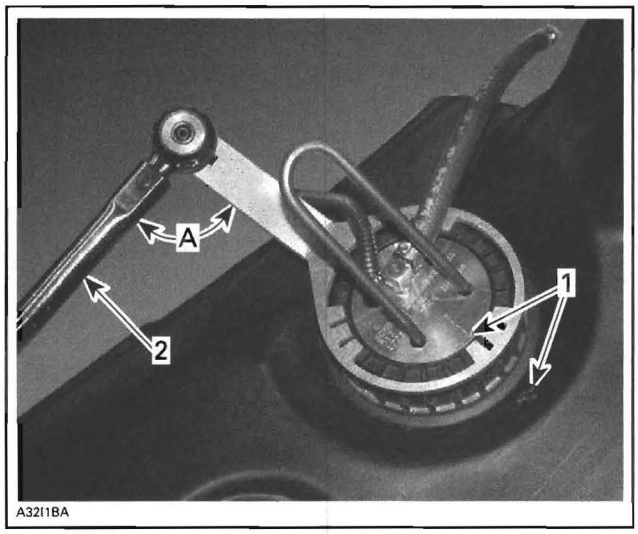

1. Arrows
2. Torque wrench
A. 90°

Use new clamps to secure hoses to fuel pump fitting.

Ensure to install hose with the fuel filter on RH fitting of fuel pump.

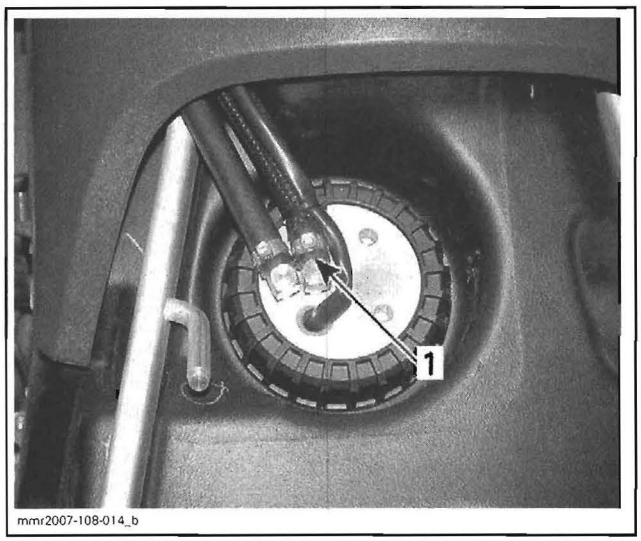

1. Hose with fuel filter here

CAUTION: Make sure that hose clamps are tight to avoid that they turn on their fittings.

Re-enable fuel pump. Refer to *FUEL PRESSURE TEST* above.

IN-TANK FUEL STRAINER

Strainer Replacement

Remove fuel pump from fuel tank.

Cut clamp and pull out strainer.

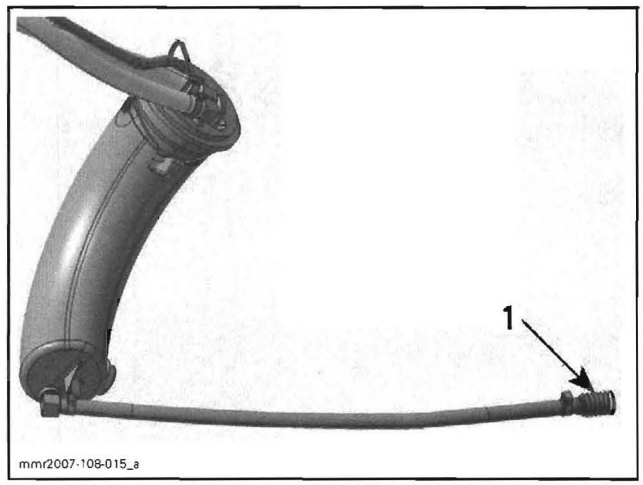

1. Fuel strainer

Reinstall new strainer and secure with a new clamp.

Reinstall fuel pump.

FUEL TANK

Fuel Tank Removal

Release fuel pressure. Refer to *FUEL PRESSURE TEST* above.

Remove seat and console. Refer to *BODY*.

1-Up Seat Models

Remove trunk. Refer to *BODY*.

All Models

Disconnect outlet hose from fuel pump.

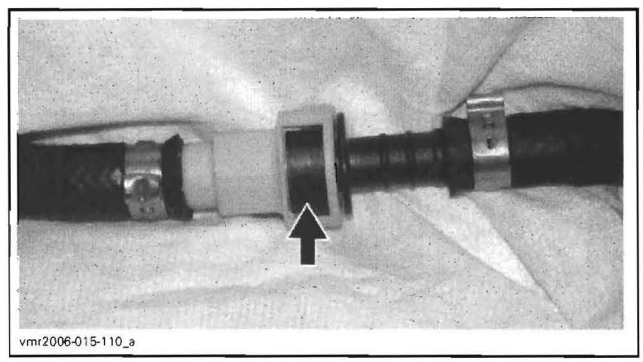

PRESS TAB

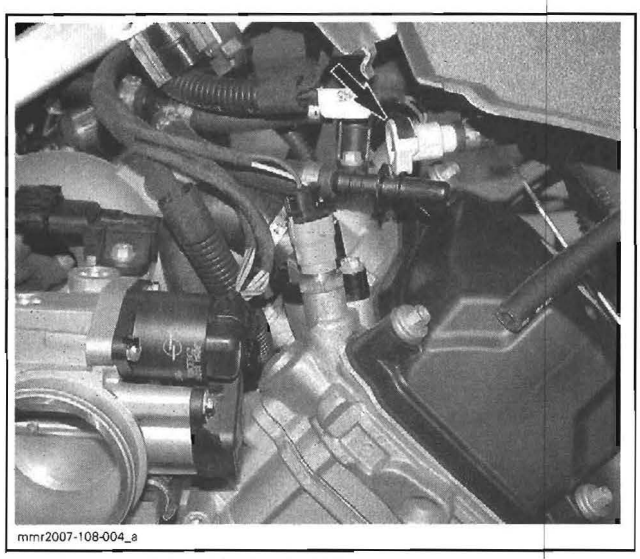
mmr2007-108-004_a

TYPICAL — HOSE DISCONNECTED

Disconnect the fuel pump connector.

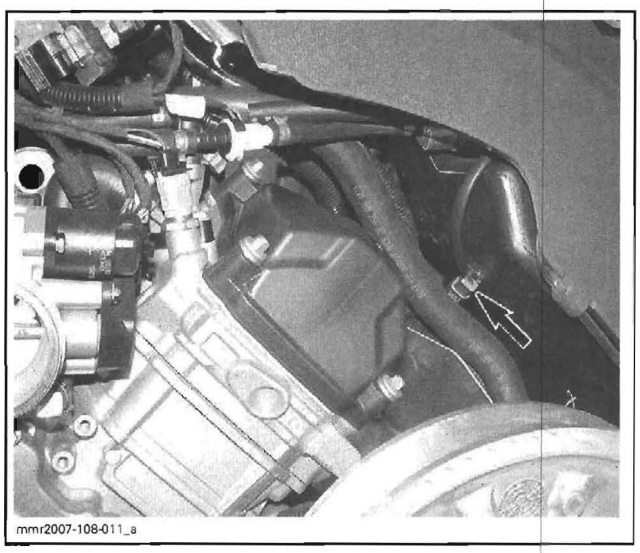
mmr2007-108-011_a

Unplug vent tube from tank.

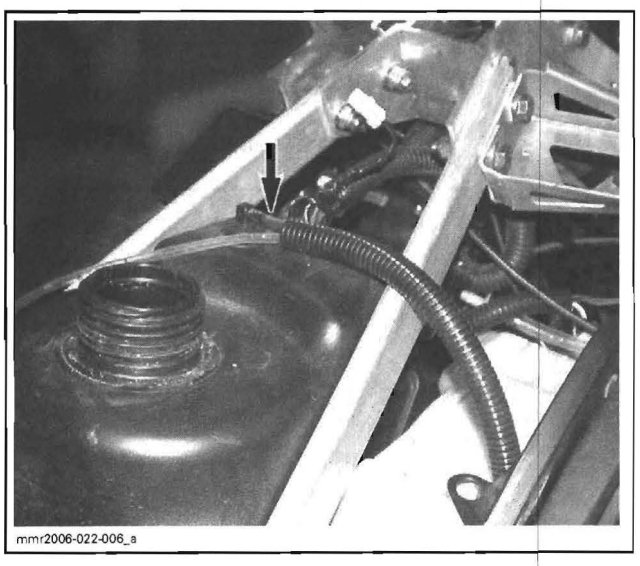
mmr2006-022-006_a

Remove aluminum braces each side of fuel tank.

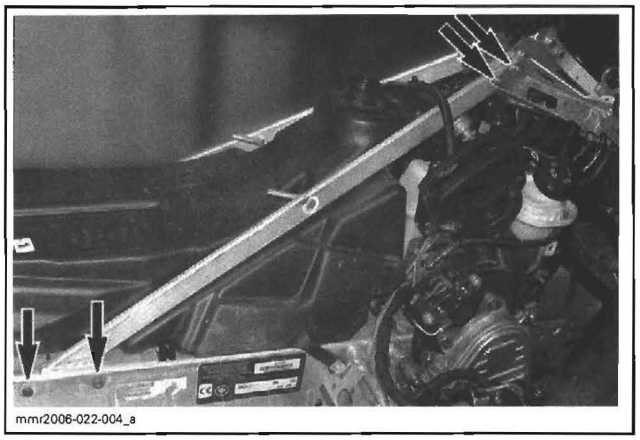
mmr2006-022-004_a

Remove fuel tank and set it aside.

Fuel Tank Installation

Installation is the reverse of removal procedures. However, pay attention to the following.

Ensure to reconnect vent tube .

⚠ WARNING

Make sure vent tube is not kinked.

Connect fuel line and remove hose pincher.

When reinstalling aluminum braces, install new Torx screws at bottom and new lock nuts at top.

Re-enable fuel pump. Refer to *FUEL PRESSURE TEST* above.

Pressurize fuel system to ensure there is no leak.

TROUBLESHOOTING

FUEL SYSTEM DIAGNOSTIC FLOW CHART

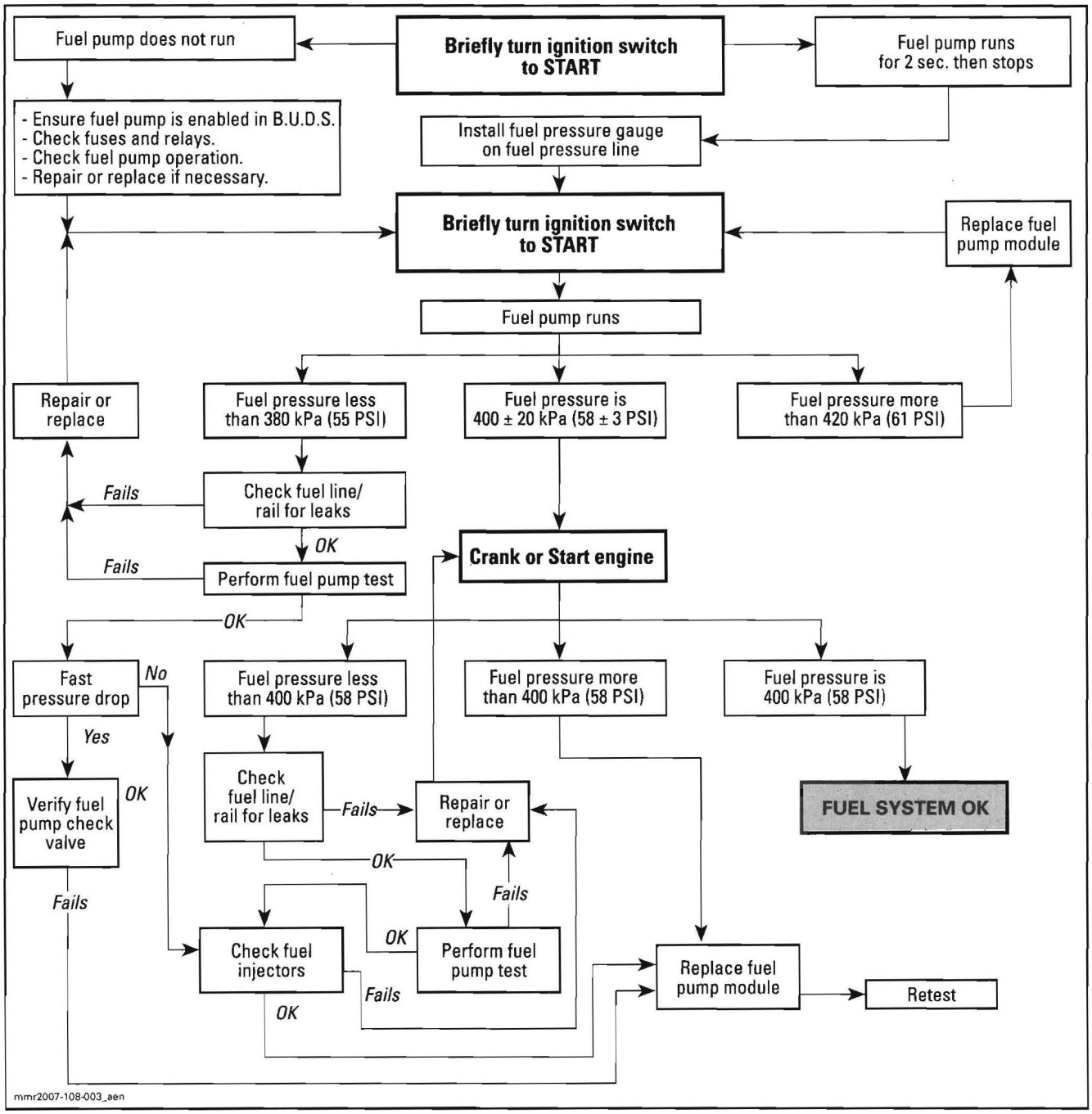

CARBURETOR (300F/550F)

SERVICE TOOLS

Description	Part Number	Page
carburetor tool kit	404 112 000	351–352
choke plunger tool	529 035 602	359
float gauge	529 035 520	354

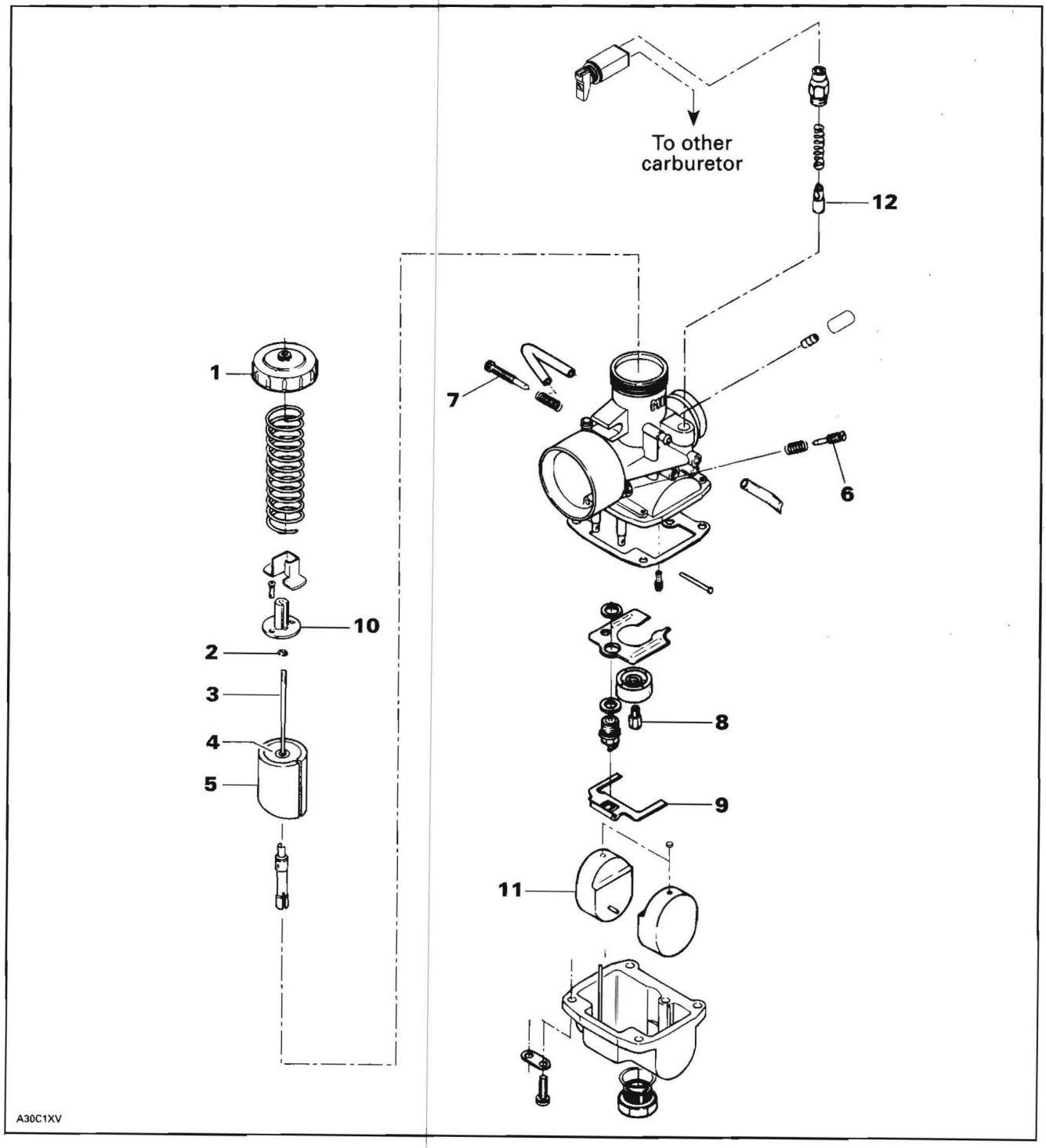
To other carburetor
12
1
7
6
10
2
3
4
5
8
9
11
A30C1XV

CARBURETOR

Carburetor Identification

All carburetors are identified on their body.

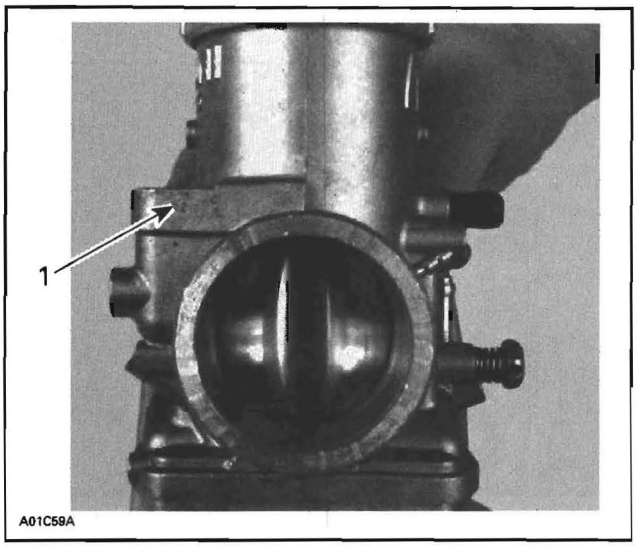

TYPICAL
1. Identification: 34-617

Carburetor Removal

Lift hood and open LH side panel.

Disconnect carburetor vent hose from primary air intake silencer.

Loosen clamps retaining primary air intake silencer adapter to carburetors.

Remove the primary air intake silencer.

NOTE: The following procedure applies to both carburetors. Carburetors can be removed individually.

Loosen clamp retaining carburetor to intake adapter.

Remove carburetor from engine.

Disconnect fuel inlet line.

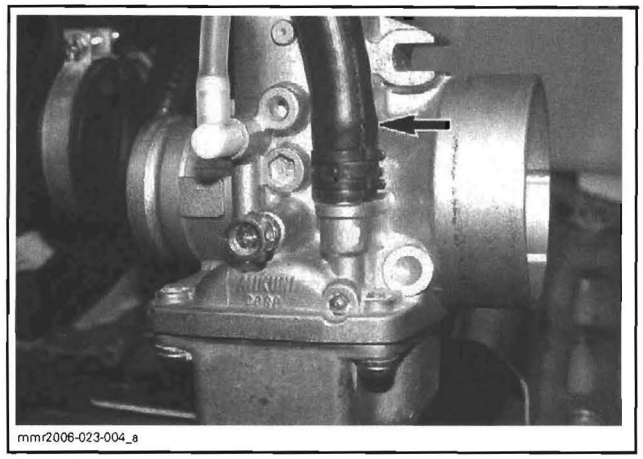

TYPICAL

Unscrew carburetor cover **no. 1** then pull out throttle slide **no. 5** from carburetor.

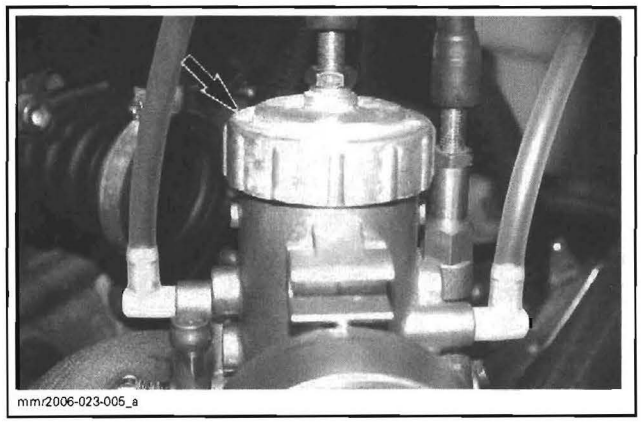

TYPICAL

Disconnect throttle cable from throttle slide.

Unscrew choke plunger from carburetor.

Carburetor Disassembly

NOTE: To ease the carburetor disassembly and assembly procedures it is recommended to use carburetor tool kit (P/N 404 112 000).

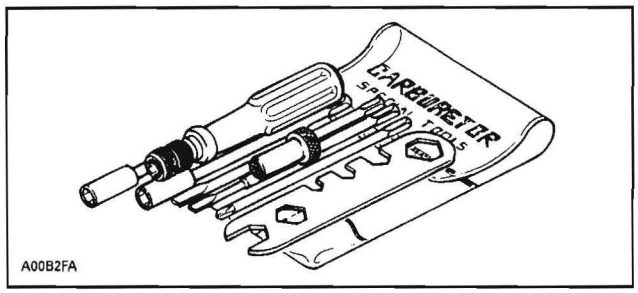

E-Clip and Jet Needle

Remove screws from needle retaining plate **no. 10** to remove the jet needle **no. 3**.

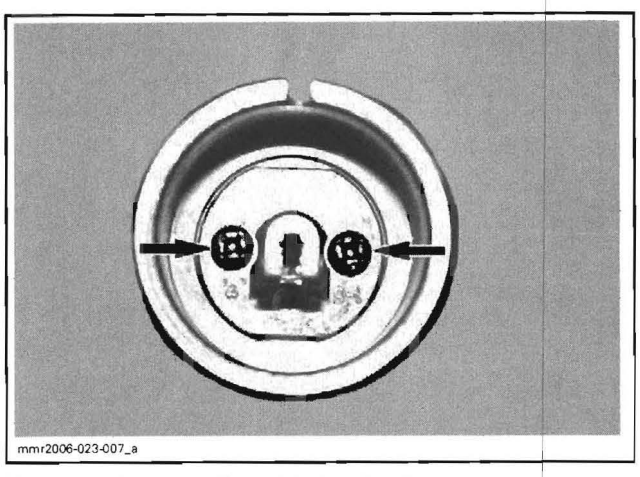
mmr2006-023-007_a

Remove jet needle with its E-clip.

Float Bowl

Unscrew drain plug of float bowl. Recover the remaining fuel in a container.

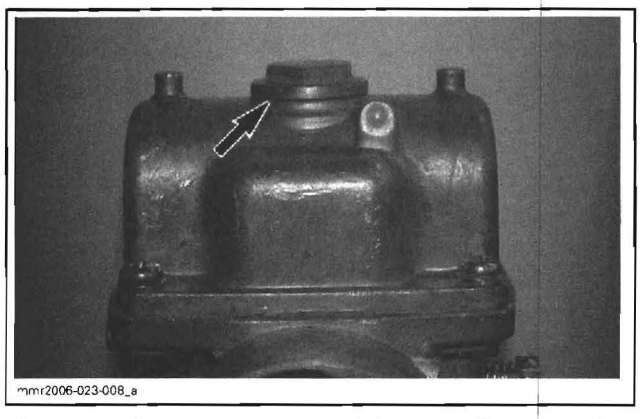
mmr2006-023-008_a

Unscrew the 4 screws retaining the float bowl to the carburetor body.

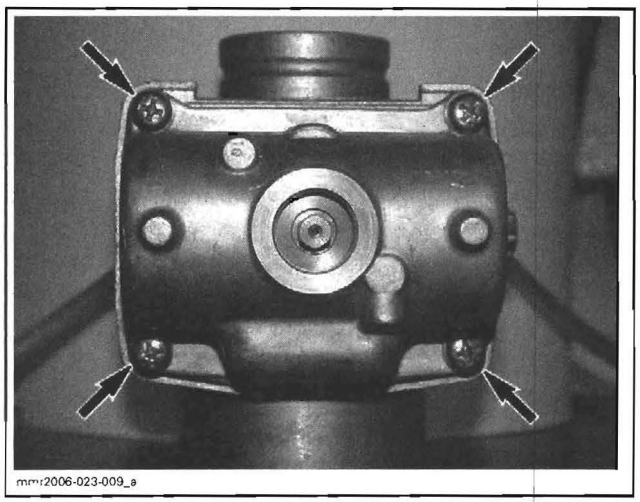
mmr2006-023-009_a

Remove float bowl.

NOTE: Upon float bowl removal, make sure not to drop carburetor floats.

Needle Valve

Remove float bowl as explained above.

Pull out pin retaining float arm to carburetor body. Remove float arm.

Unscrew needle valve.

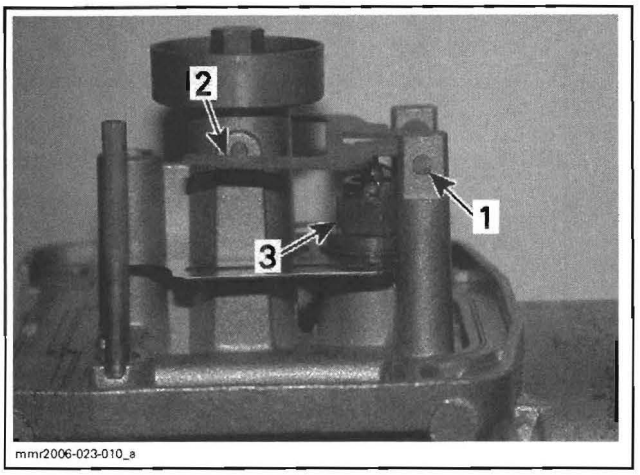

mmr2006-023-010_a

1. *Float arm pin*
2. *Float arm*
3. *Needle valve*

Pilot Jet

Remove float bowl as explained above.

Unscrew pilot jet **no. 8** using narrow screwdriver from carburetor tool kit (P/N 404 112 000).

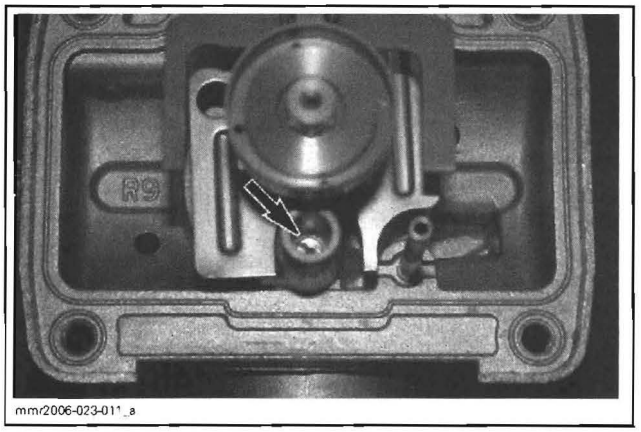

mmr2006-023-011_a

Main Jet

Remove float bowl as explained above.

Unscrew main jet from carburetor body.

NOTE: To replace main jet by a different size, main jet is accessible through the drain plug without removing float bowl.

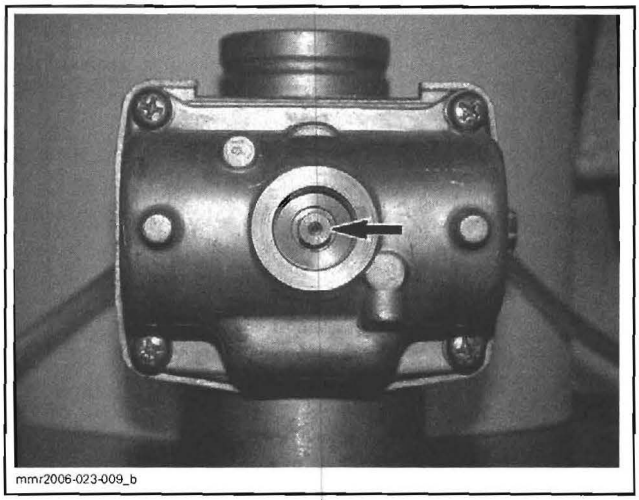
mmr2006-023-009_b

Carburetor Cleaning

The entire carburetor should be cleaned with a general solvent and dried with compressed air.

CAUTION: Heavy duty carburetor cleaner may be harmful to the float material and to the rubber parts, O-rings, etc. Therefore, it is recommended to remove those parts prior to cleaning.

Carburetor body and pilot/main jets should be cleaned in a carburetor cleaner following manufacturer's instructions.

⚠ WARNING

Solvent with a low flash point such as gasoline, naphtha, benzol, etc., should not be used as they are flammable and explosive.

Carburetor Inspection

Check inlet needle tip condition. If worn, the inlet needle and seat must be replaced as a matched set.

NOTE: Install needle valve for snowmobile carburetor only. It is designed to operate with a fuel pump system.

Check throttle slide **no. 5** for wear. Replace as necessary.

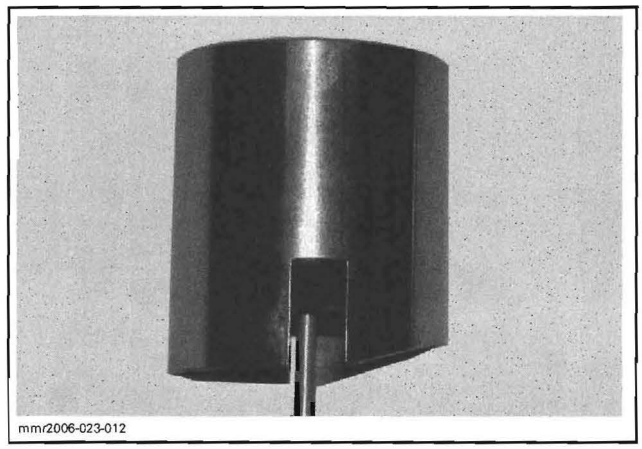
mmr2006-023-012

Check idle speed screw straightness. Replace as necessary.

Check for fuel soaked into float **no. 11**; replace as necessary.

Check float for cracks or other damages affecting free movement; replace as necessary.

Carburetor Assembly

The assembly is the reverse of the disassembly procedure. Pay attention to the following.

Float

Verify float adjustment after installation.

CAUTION: Spark plugs will foul if float is adjusted too low. Engine may be damaged if float is adjusted too high.

Correct fuel level in float chamber is vital toward maximum engine efficiency. To check for correct float level proceed as follows:

- Make sure that float arm **no. 9** is symmetrical — not distorted.
- With carburetor chamber **upside-down** on a level surface, measure height between bowl seat and top edge of float arm. Keep ruler perfectly vertical and in line with main jet hole.

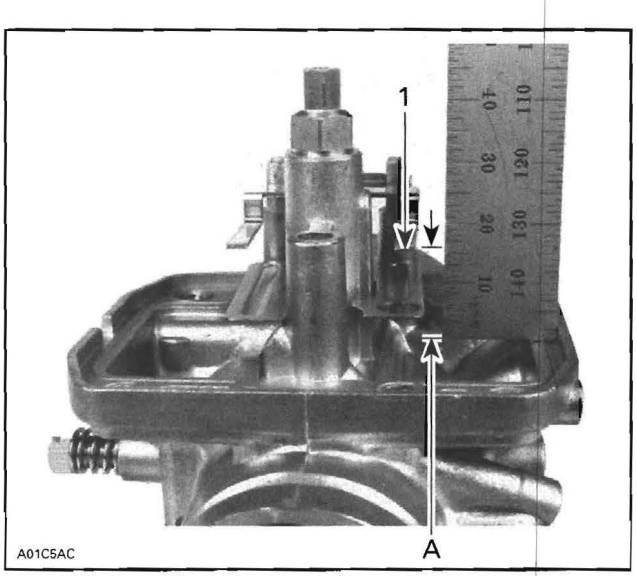

TYPICAL — VM TYPE
1. Measure from top of float arm
A. Float height (including float arm thickness)

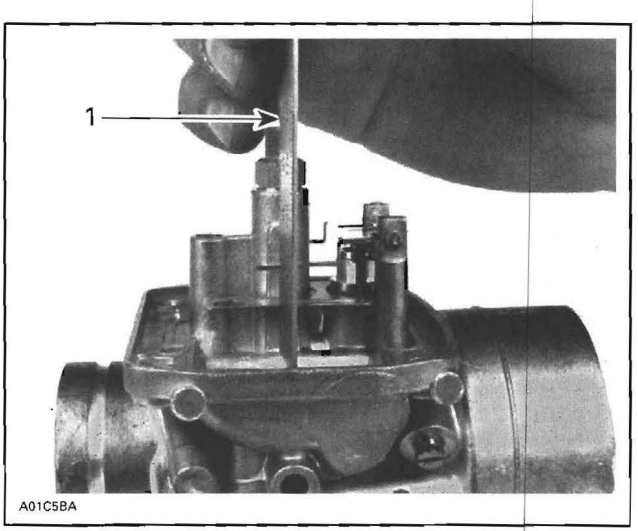

TYPICAL — VM TYPE
1. Ruler vertical and in line with main jet

Float level height can be checked using the float gauge (P/N 529 035 520). Keep tool in line with main jet as explained above.

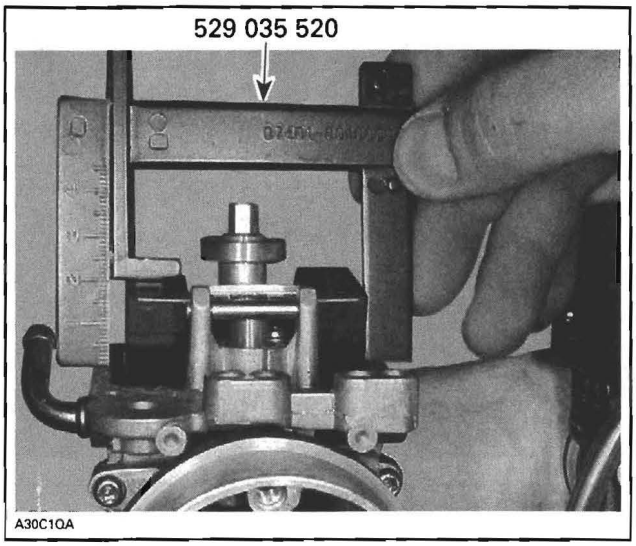

MODELS	FLOAT HEIGHT
300F	24.9 ± 1.0 mm (.980 ± .039 in)
550F	23.9 ± 1.0 mm (.941 ± .039 in)

To Adjust Height

– Bend the contact tab of float arm until the specified height is reached.

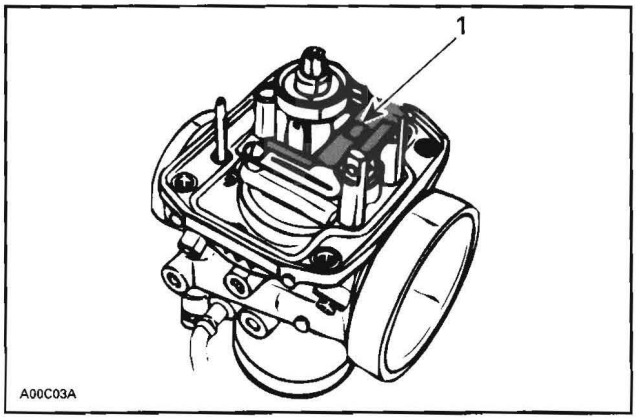

TYPICAL
1. Contact tab

E-Clip and Jet Needle

Make sure E-clip is installed in the proper groove of jet needle.

The position of the needle in the throttle slide is adjustable by means of an E-clip **no. 2** inserted into 1 of 5 grooves located on the upper part of the needle. Position 1 (at top) is the leanest, 5 (at bottom) the richest.

NOTE: The last digit of the needle identification number gives the recommended calibrated position of the E-clip **from the top** of the needle.

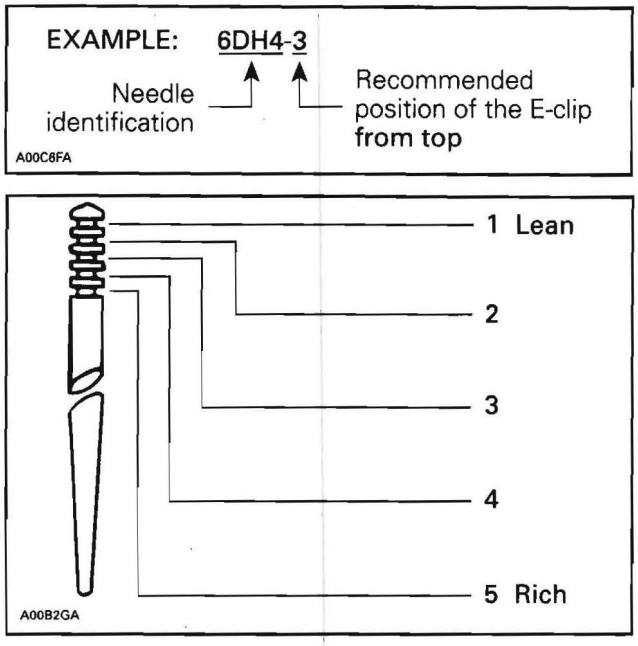

CLIP POSITIONS

Install the nylon packing **no. 4** underneath jet needle E-clip on all applicable throttle slides.

CAUTION: Serious engine damage can occur if this part is not installed.

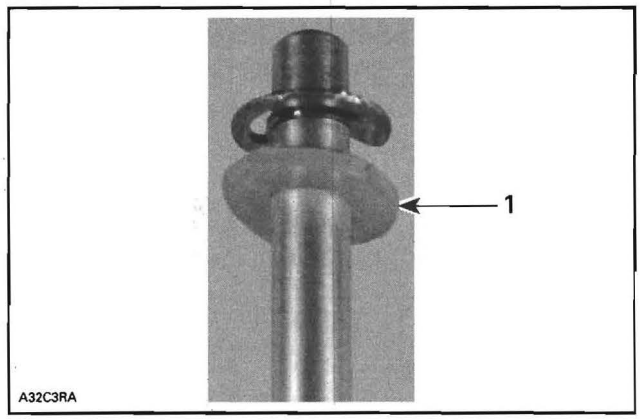

TYPICAL
1. Nylon packing

Install jet needle in throttle slide.

When installing jet needle plate, do not obstruct hole in throttle slide.

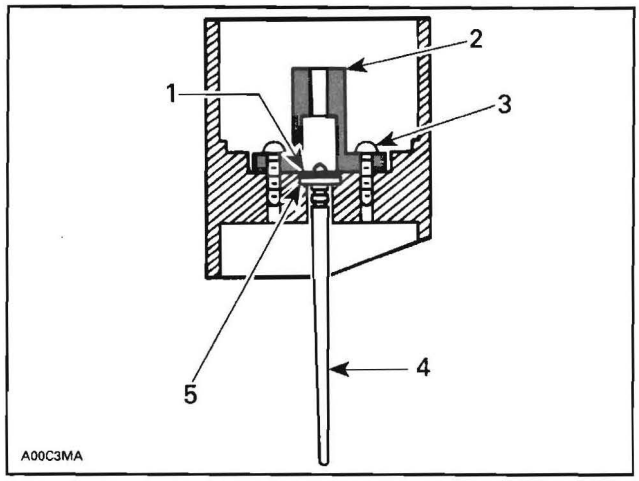

1. Clip
2. Jet needle plate
3. Screw
4. Jet needle
5. Nylon packing

Carburetor Installation

To install carburetor on engine, inverse removal procedure. However, pay attention to the following:

Prior to installing carburetor, adjust air screw and preliminary idle speed as described in *ADJUSTMENTS*.

On applicable models, make sure to align tab of carburetor with notch of intake adapter.

CAUTION: The rubber intake adapter must be checked for cracks and/or damage. At assembly, the intake adapter must be perfectly matched with carburetor and engine otherwise severe engine damage will occur.

Hook throttle cable into jet needle plate.

⚠ WARNING

Ensure throttle slide return spring is installed.

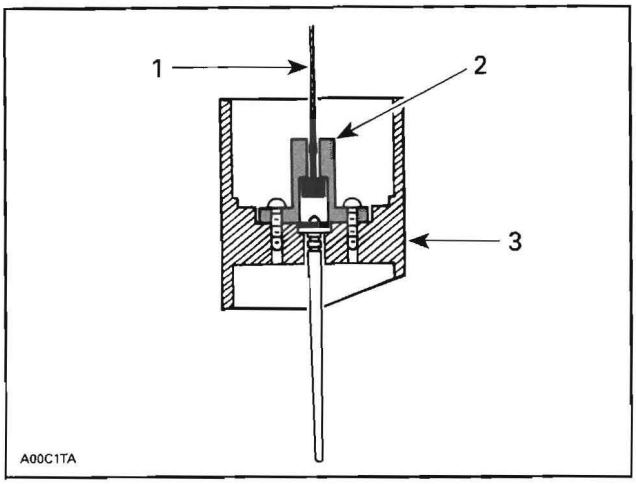

1. Throttle cable
2. Jet needle plate
3. Throttle slide

Install throttle slide with spring in carburetor.

CAUTION: Never allow throttle slide to snap shut. Be careful not to bent jet needle.

Tighten carburetor cap.

⚠ WARNING

Ensure throttle lever operates normally.

Carburetor Adjustments

NOTE: Carburetor is calibrated at the factory for a temperature of - 20°C (0°F) at sea level. For colder temperature or high altitude applications, carburetor must be recalibrated. A service bulletin gives information about carburetor calibration according to altitude and temperature.

Adjustments should be performed following this sequence:

- float height
- jet needle
- air screw
- preliminary idle speed adjustment
- throttle cable
- choke cable
- final idle speed adjustment.

Float Height

Refer to *ASSEMBLY* to verify float height.

Jet Needle

Refer to *ASSEMBLY* to position E-clip in the proper jet needle groove.

Air Screw

Completely close the **air screw no. 6** (until a slight seating resistance is felt) then back off as specified.

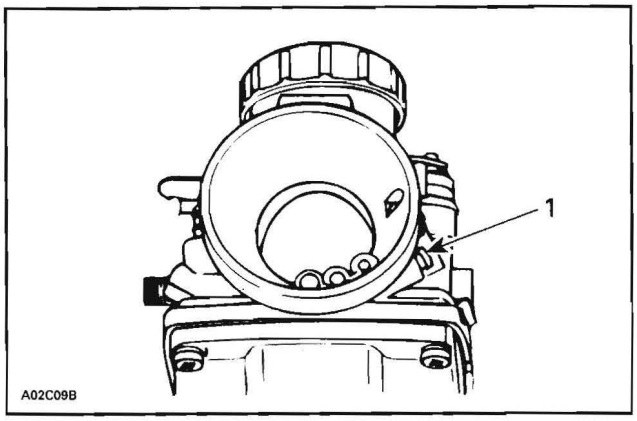

1. Air screw

NOTE: Turning screw in clockwise enriches mixture and conversely, turning it out counterclockwise leans mixture.

MODELS	AIR SCREW
300F and 550F	2.0 turns

Preliminary Idle Speed Adjustment

Using a drill bit, adjust throttle slide height (see following table) by turning idle speed screw **no. 7**.

Throttle slide height is measured on outlet side of carburetor (engine side).

NOTE: Make sure that throttle cable does not hold throttle slide. Loosen cable adjuster accordingly.

MODEL	THROTTLE SLIDE HEIGHT (drill bit size)
300F	1.6 ± 0.1 mm (.063 ± .004 in)
550F	1.5 ± 0.1 mm (.059 ± .004 in)

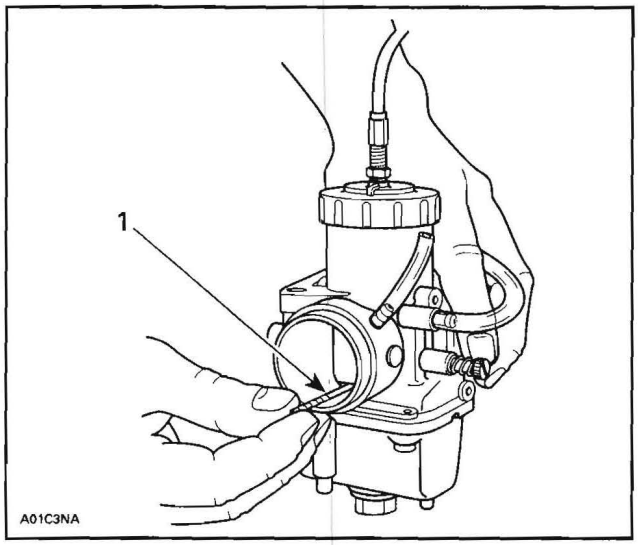

TYPICAL
1. Drill bit used as gauge for throttle slide height

Throttle Cable

Refer to *THROTTLE CABLE* further in this section for proper procedure.

Choke Cable

Adjust choke cable. Refer to *CHOKE CABLE* further in this section.

Final Idle Speed Adjustment

CAUTION: Before starting engine for the final idle adjustment, make sure that oil pump is adjusted. The oil injection pump adjustment must be checked after each time carburetor idle is adjusted. Refer to *OIL INJECTION SYSTEM*.

Install primary air intake silencer. Refer to *AIR INTAKE SYSTEM*.

Start engine and allow it to warm then adjust idle speed to specifications by turning **idle speed screw** clockwise to increase engine speed or counterclockwise to decrease it.

CAUTION: Do not attempt to set the idle speed by using the air screw. Severe engine damage can occur.

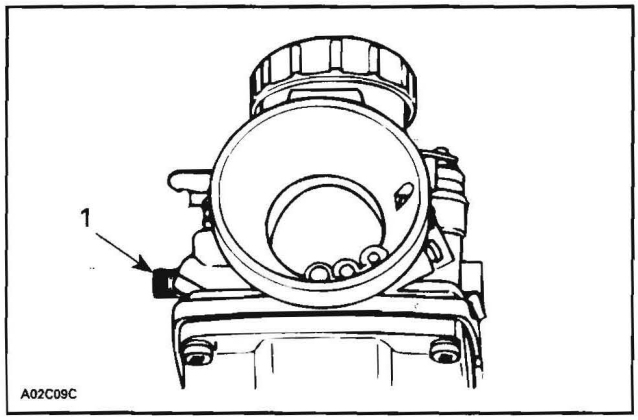

1. Idle speed screw

MODELS	IDLE SPEED (RPM)
300F and 550F	1650 ± 200

NOTE: On **550F models**, turn adjustment screw the same amount on each carburetor to keep carburetors synchronized.

Final idle speed adjustment (engine running at idle speed) should be within 1/2 turn of idle speed screw from preliminary adjustment.

THROTTLE CABLE

Throttle Cable Removal

NOTE: Before removing throttle cable from vehicle, note its routing for installation.

On Handlebar

Remove the circlip retaining throttle cable to throttle cable housing.

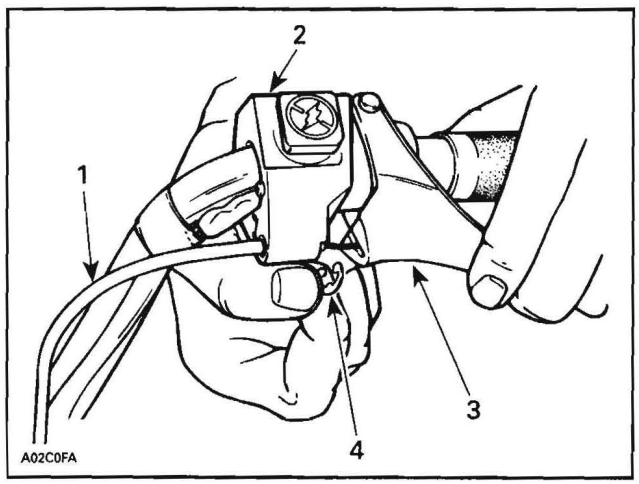

1. Throttle cable housing
2. Throttle lever housing
3. Throttle lever
4. Circlip

Using long nose pliers to hold cable, push the end of cable out of its location in throttle lever.

Remove cable from throttle cable housing.

On Carburetor

Unscrew carburetor cover then pull out throttle slide from carburetor.

Disconnect throttle cable from throttle slide.

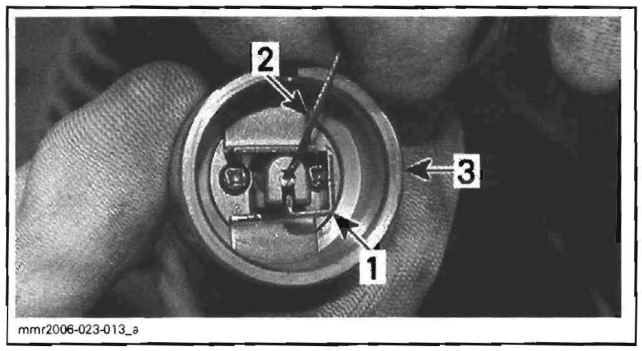

1. Throttle cable lock
2. Throttle cable
3. Throttle slide

On RH side of vehicle, disconnect cable end from oil pump.

Cut all locking ties and remove throttle cable.

Throttle Cable Inspection

Inspect throttle cable and housing for any damages. Replace as necessary.

Throttle Cable Installation

The installation is the reverse of the removal procedure.

CAUTION: Check that throttle cable is routed away from sharp edges, hot or vibrating parts.

Throttle Cable Adjustment

⚠ WARNING

Ensure the engine is turned OFF, prior to performing the throttle cable adjustment.

Carburetor(s) must be installed on engine and throttle cable properly routed.

Adjust throttle cable as per following procedure:

Loosen throttle cable housing adjusting and locking nuts.

While holding throttle lever to wide open throttle position, adjust throttle cable until cut-away lower edge is equal or 1.0 mm (.040 in) lower than the venturi bore on engine side. In this position, turn cable housing adjusting nut and tighten lock nut. Proceed on both carburetors.

CAUTION: If the throttle slide rests against the carburetor cover at full throttle opening, this will create too much strain and may damage the throttle cable or other components in throttle mechanism.

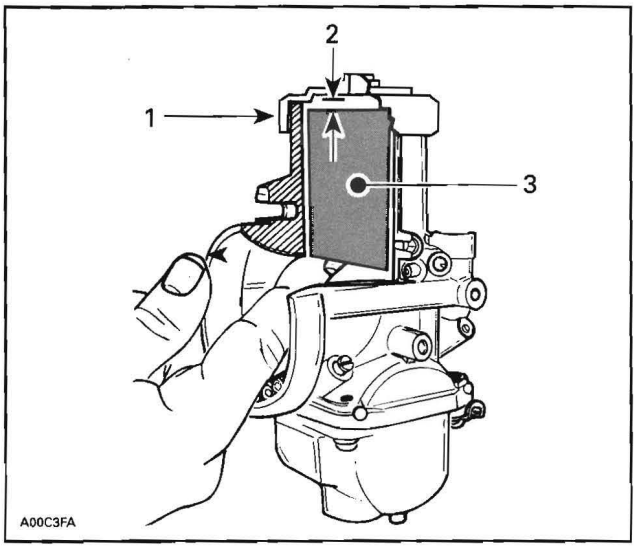

FULL OPENING (THROTTLE LEVER AGAINST HANDLE GRIP)
1. Cover
2. Free play
3. Throttle slide

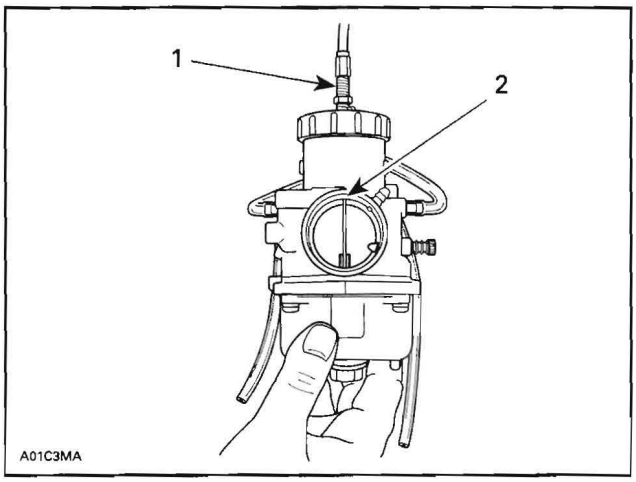

FULL OPENING (THROTTLE LEVER AGAINST HANDLE GRIP)
1. Adjusting nut
2. Throttle slide flush or 1.0 mm (.040 in) lower than carburetor outlet bore (engine side)

Also ensure that, when throttle is released to idle position, the idle adjusting screw end touches its stopper. No tension should be applied to throttle cable.

550F Models

Carburetor Synchronization

When depressing throttle lever, both carburetor slides must start to open at same time.

Screw or unscrew cable adjuster until all carburetor slides start to open at the same time. Cable play will be identical on all carburetors. Retighten jam nut.

CAUTION: Make sure carburetors start to operate simultaneously.

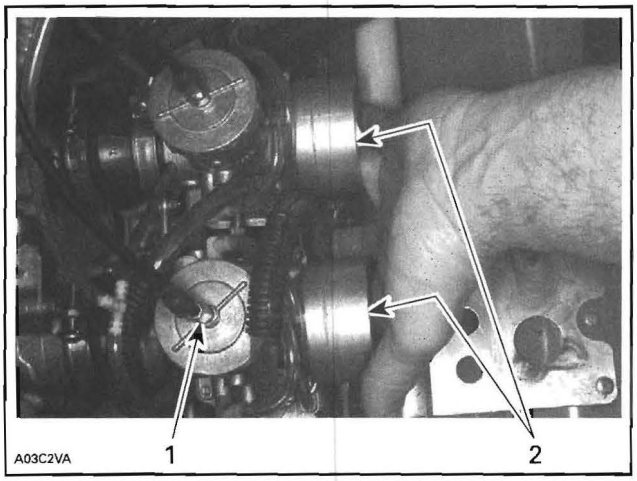

TYPICAL
1. *Screw or unscrew adjuster*
2. *Check that all slides start to open at the same time*

300F and 550F Models

When throttle cable adjustment is completed, check oil pump cable adjustment (refer to *OIL INJECTION PUMP*).

CAUTION: Oil pump cable adjustment must be verified, otherwise serious engine damage may occur.

CHOKE CABLE

Choke Cable Removal

NOTE: Before removing choke cable, note its routing for installation.

Remove choke cable nut and pull cable underneath console.

Unscrew choke cable from carburetor.

Cut all locking ties retaining cable and remove it from vehicle.

Choke Cable Installation

The installation is the reverse of the removal procedure.

Choke Cable Adjustment

Set choke lever to half open position.

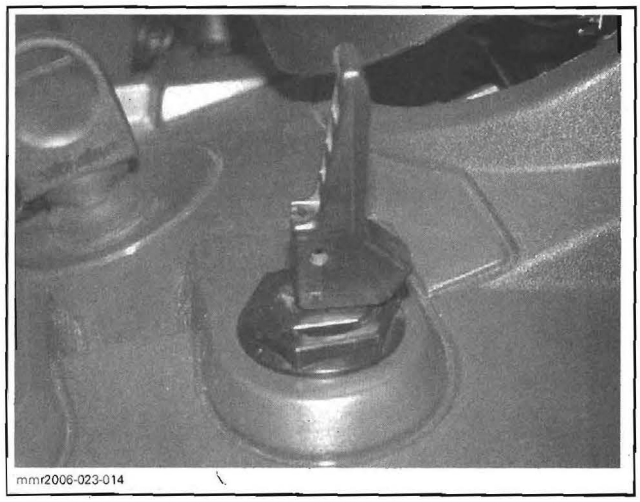

CHOKE LEVER — MID OPEN POSITION

Insert the choke plunger tool (P/N 529 035 602) into choke air inlet of carburetor. Tool stopper may not lean against recess wall.

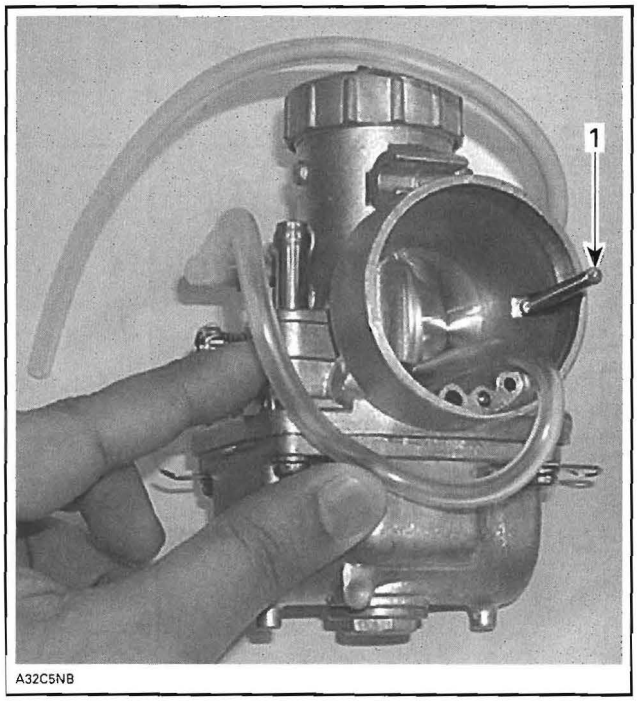

AIR SILENCER SIDE SHOWN
1. *Choke plunger tool*

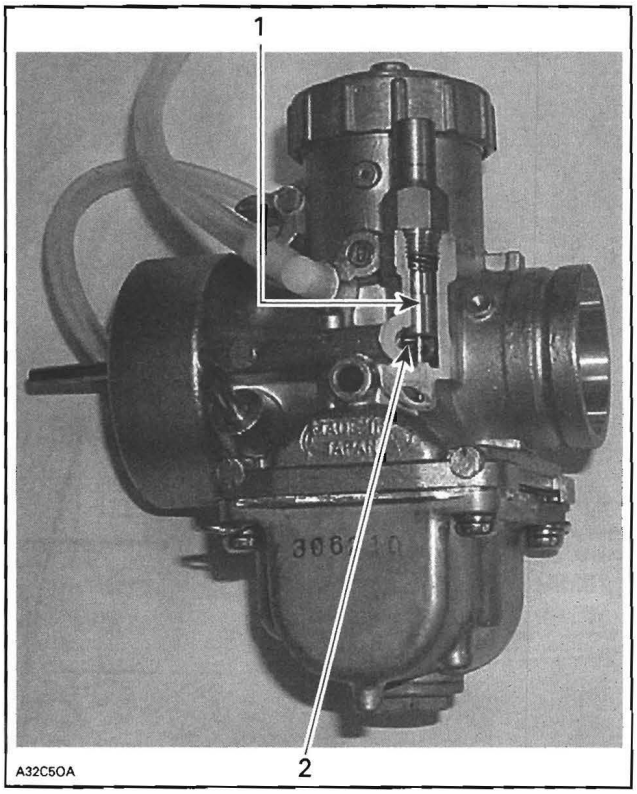

CUT-AWAY — ENGINE SIDE SHOWN
1. *Choke plunger*
2. *Tool properly seated under choke plunger*

If tool tip does not seat under choke plunger **no. 12**, adjust as follows:

Make sure choke lever is at mid open position.

Lift up protector cap and loosen choke cable lock nut, as shown in the next photo.

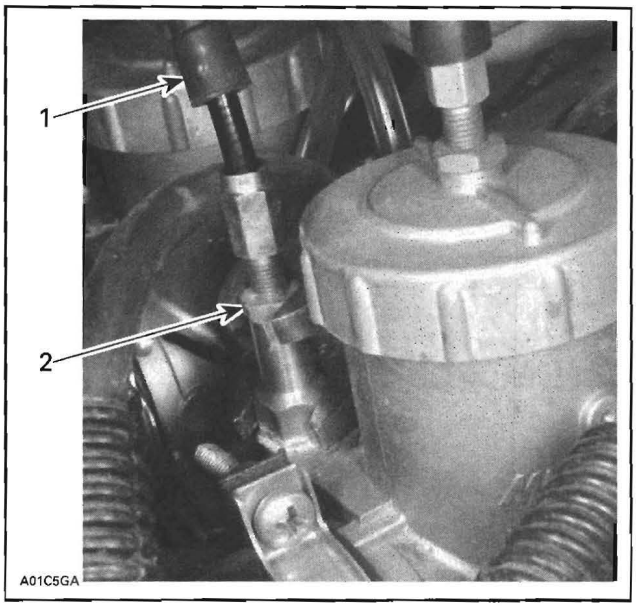

TYPICAL
1. *Lift up protector cap*
2. *Loosen lock nut*

Turn choke cable adjustment nut by hand until tool properly seats under choke plunger.

NOTE: A light pressure should be needed to position tool under plunger.

Tighten choke cable lock nut and reinstall protector cap.

Set choke lever to close and open positions and ensure that tool properly seats under plunger **only** when lever is set to half open position.

Set choke lever to close position and make sure there is no tension on cable (free play).

IGNITION SYSTEM (300F)

SERVICE TOOLS

Description	Part Number	Page
digital inductive type tachometer	529 014 500	370
multimeter Fluke 111	529 035 868	363

SERVICE PRODUCTS

Description	Part Number	Page
antiseize lubricant	293 800 070	364

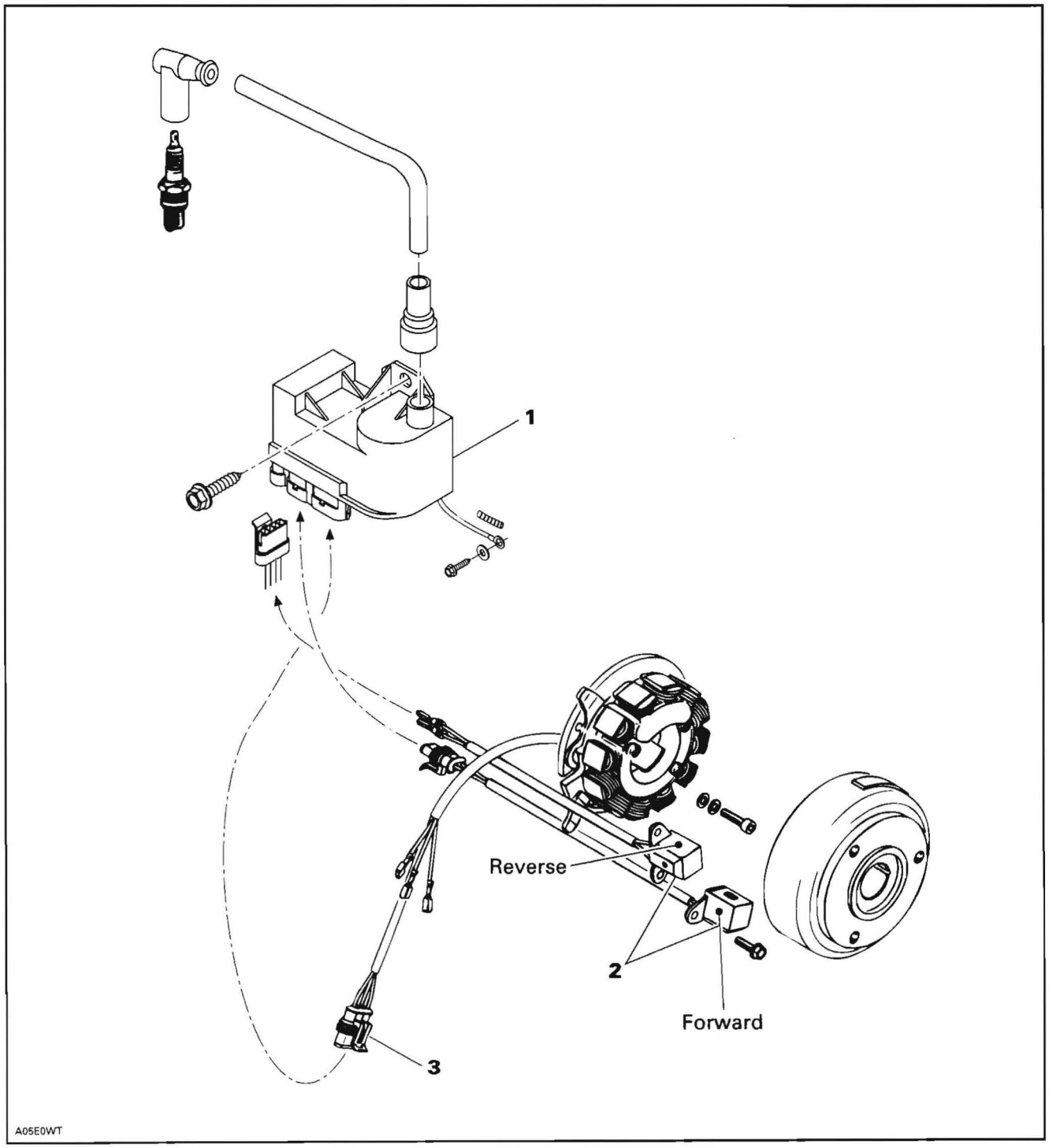
1
Reverse
2
Forward
3
A05E0WT

GENERAL

The RER dual trigger coil CDI system features an ignition coil integrated to the MPEM.

NOTE: For more information pertaining to RER, refer to *ROTAX ELECTRONIC REVERSE (RER)*.

Multi-Purpose Electronic Module (MPEM)

The following illustration identifies the connector functions on the MPEM.

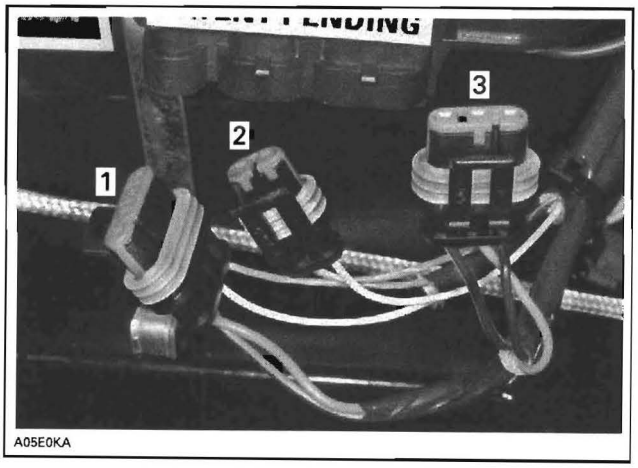

MPEM
1. *Reverse switch, reverse indicator and reverse trigger coil*
2. *Trigger coil (forward rotation)*
3. *Ignition generator coil and cut-off switches*

NOTE: A MPEM problem can be resolve simply by unplugging and re-plugging the module, indicating a connection problem. Also, check MPEM ground connections.

Electrical Connectors

Before replacing a component, always check electrical connections. The voltage and current might be too weak to go through dirty wire terminals. Clean as required. Make sure terminals are properly crimped on wires and fastened in housing, and that they are free of corrosion or moisture.

IGNITION SYSTEM TESTING SEQUENCE

In the case of ignition problems, check the following in the prescribed order until the problem can be solved.

1. spark plug
2. electrical connectors
3. ignition switch
4. tether cut-out switch
5. engine cut-out switch
6. wiring harness
7. ignition coil
8. ignition generator coil
9. trigger coil
10. MPEM.

Testing Conditions

Voltage measurements are always taken upon engine cranking using the rewind starter. Readings when the engine is running would be higher than specified range. Part temperature must be approximately 20°C (68°F) (room temperature), otherwise readings could be distorted.

CAUTION: When taking measurements, it is useless to try to run the engine since readings would then be distorted.

Analysis of Readings

Voltage Readings

Take into consideration that readings vary according to the force applied onto the manual starter. It is therefore important to employ enough force upon each trial.

It is recommended to proceed 3 times with the test. Each reading must be within the range indicated in the corresponding table. If the reading is too low, the part is considered to be defective and must be replaced.

Resistance Readings

Readings must be within the indicated range. Otherwise, replace the part.

Intermittent Ignition Problems

It is difficult to make a diagnostic in the case of intermittent ignition problems. Thus, problems occurring only when the engine operating temperature is normal must be checked in similar conditions.

In most cases when problems are caused by temperature or vibrations, these can only be solved by replacing parts. Most problems cannot be detected when the engine is stopped.

Multiple Problems

More that one component can be defective. As a result, if the problem remains although a part was replaced, start over the whole verification from the beginning in order to identify the other defective component.

PROCEDURES

For best results, use the multimeter Fluke 111 (P/N 529 035 868).


529 035 868

SPARK PLUG

Removal

First unscrew the spark plug 1 turn.

Clean the spark plug and cylinder head with pressurized air, then completely unscrew.

⚠ WARNING

Whenever using compressed air, always wear protective eye wear.

Spark Testing

Use the snowmobile spark plug and not a new one. Bring the plug in contact with the engine. Pull rewind starter. If no spark is produced, replace the spark plug with a new one and do the test again.

If there is still no spark, continue testing.

Installation

Prior to installation make sure that contact surfaces of the cylinder head and spark plug are free of grime.

Using a feeler gauge, set electrode gap as per *TECHNICAL SPECIFICATIONS*.

1. Apply antiseize lubricant (P/N 293 800 070) over the spark plug threads to prevent possible seizure.
2. Hand screw spark plug into cylinder head and tighten with a torque wrench and a proper socket.

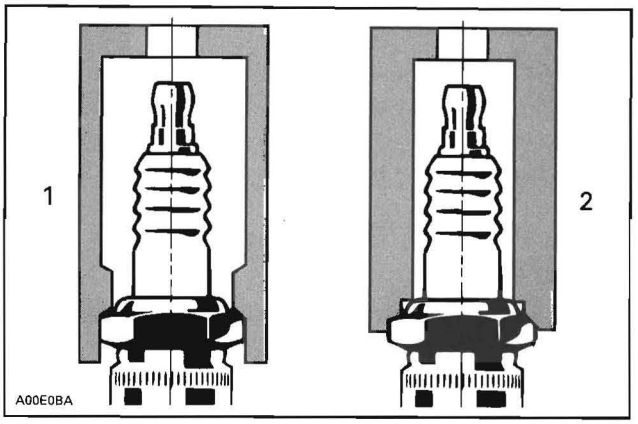

TYPICAL
1. Proper socket
2. Improper socket

Use the following table to torque the spark plug.

MODEL	SPARK PLUG	TORQUE N•m (lbf•ft)
300F	NGK BR9ES	27 (20)

IGNITION SWITCH

Unplug ignition switch connector.

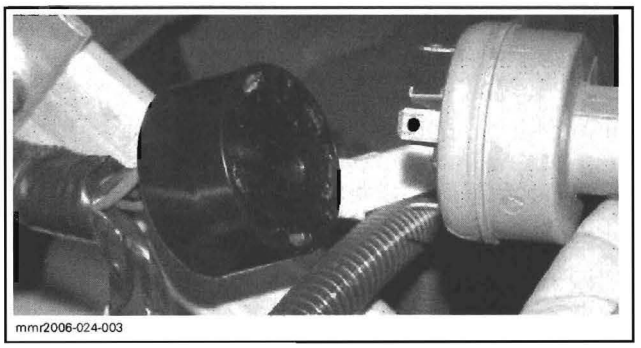

Check switch as follows.

POSITION	TERMINAL		RESISTANCE
OFF	MAG	GRD	0.2 Ω (closed)
	BAT	ACC	Infinite (0L)
	BAT	SOL	
ON	MAG	GRD	Infinite (0L)
	BAT	ACC	0.2 Ω (closed)
	BAT	SOL	Infinite (0L)
START	BAT	SOL	0.2 Ω (closed)

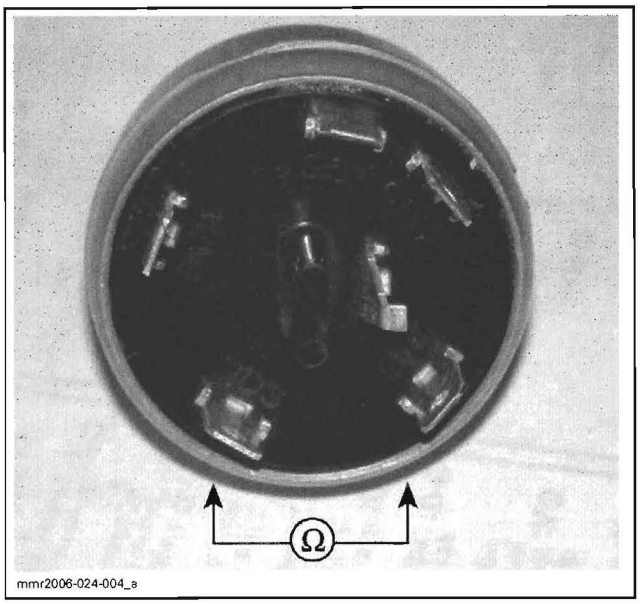

TETHER CUT-OUT SWITCH

Unplug tether cut-out switch connector.

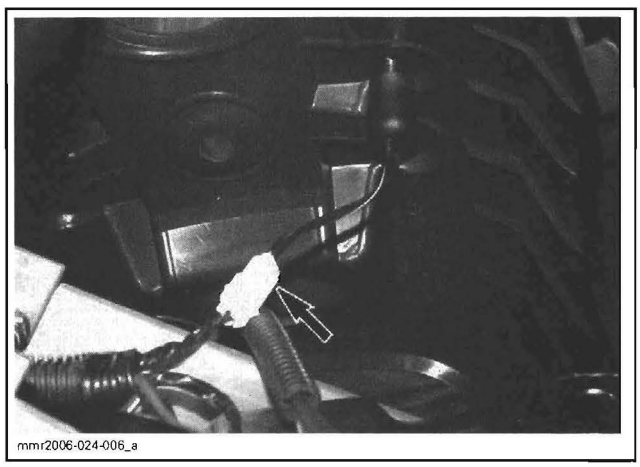

Check switch as follows.

SWITCH POSITION	RUN	STOP
TEST PROBES	BLACK/YELLOW and BLACK wires	BLACK/YELLOW and BLACK wires
RESISTANCE	OL	0 to 0.5 Ω

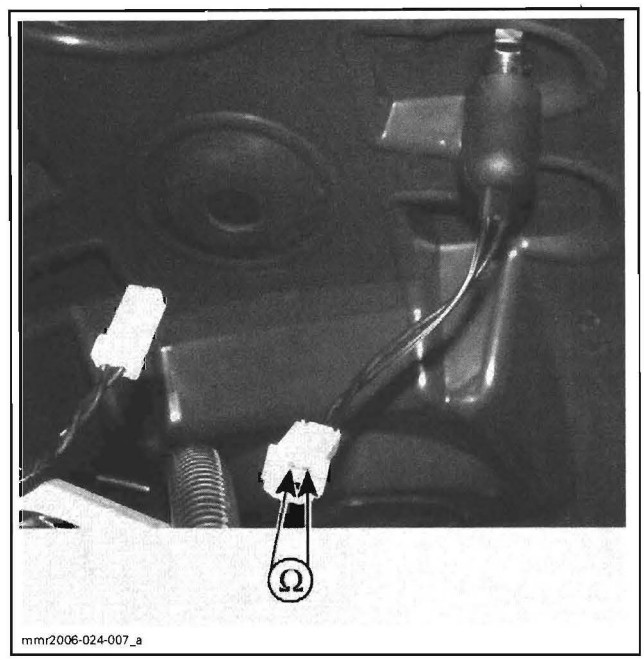

NOTE: When checking switch in the RUN position, use the tether cap. This validates its ability to remain on switch to make proper electrical contact.

If readings do not correspond to the above specifications, replace switch.

ENGINE CUT-OUT SWITCH

Unplug connector under steering cover.

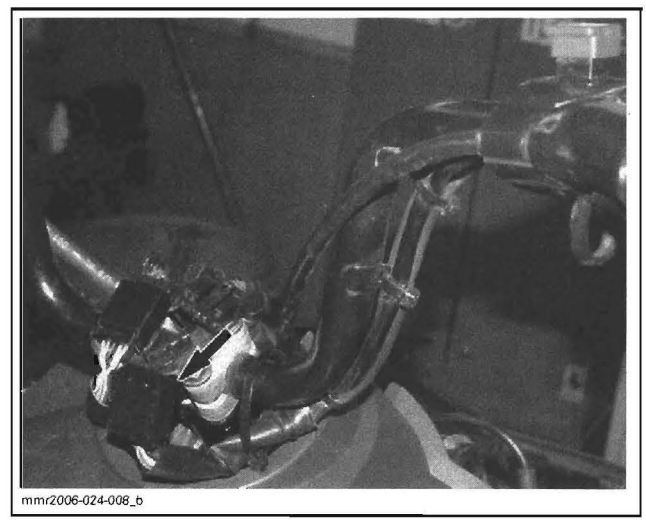

Check the condition of engine cut-out switch as follows.

SWITCH POSITION	RUN	STOP
TEST PROBES	BLACK/YELLOW and BLACK wires	
RESISTANCE	OL	0 to 0.5 Ω

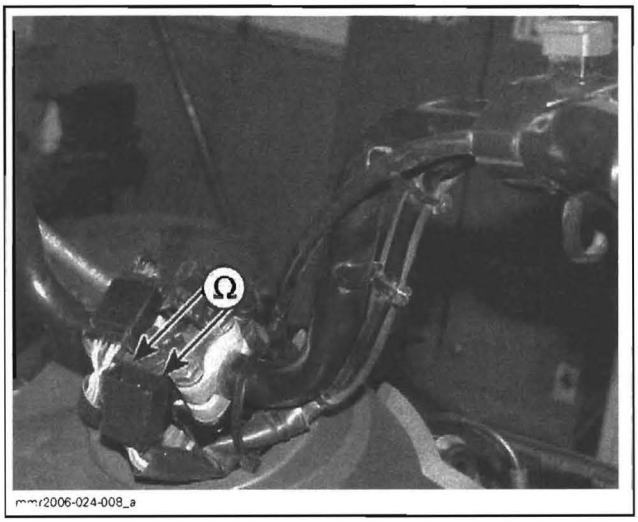

If readings do not correspond to the above-mentioned indications, check switch wires/connector and if good, replace switch.

WIRING HARNESS

When switches test good, check wiring harness as follows.

Check if wiring harness shows any signs of scoring or other damage.

No spark problem: Disconnect all switches from the main wiring harness and ensure BLACK/YELLOW wire is completely isolated from ground. Otherwise, repair/replace wiring.

No engine stop problem: Disconnect all switches from the main wiring harness and ensure there is continuity between each end of wires of the same color related to ignition. Otherwise, repair/replace wiring.

NOTE: All wires of the same color within a given harness are connected together.

IGNITION COIL

Static Test

Disconnect spark plug cable.

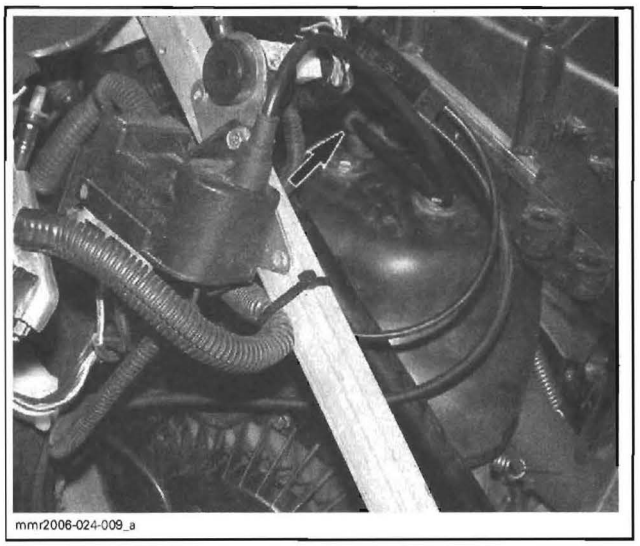

Take measurements and compare readings with the following table.

NOTE: Primary side of ignition coil cannot be measured.

TEST	Secondary winding resistance (WITHOUT spark plug cap)	Spark plug cap resistance
TEST PROBES	Cable end and on engine	Each side of cap
RESISTANCE	.900 – 1100 Ω	4 – 6 kΩ

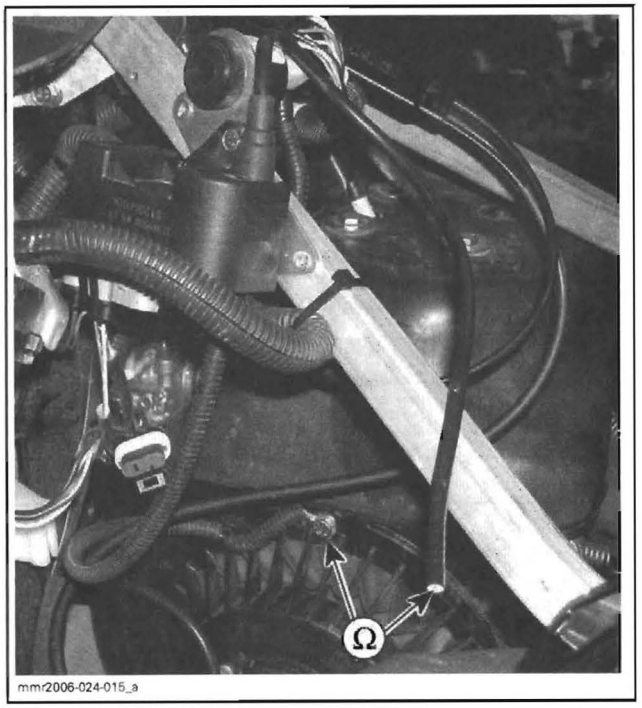

SECONDARY WINDING RESISTANCE TEST

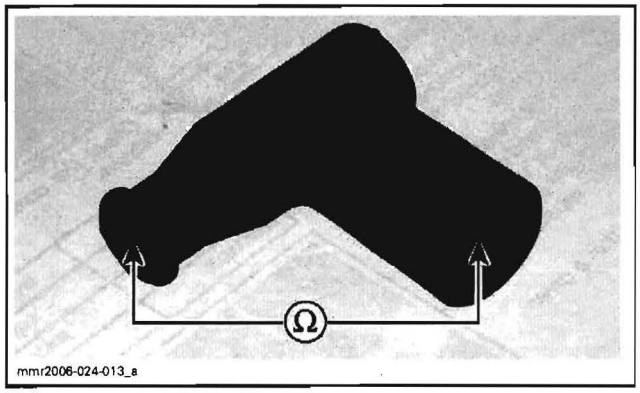

SPARK PLUG CAP RESISTANCE TEST

If ignition coil is out of specification, replace it.

NOTE: Keep in mind that even if this static test is good, voltage requirement is higher to produce a spark in the combustion chamber when engine is running. Ignition coil may be faulty. Replacing ignition coil/MPEM may be necessary as a test.

Dynamic Test

Take measurements and compare readings with the following table.

TEST	Secondary winding induced voltage
TEST PROBES	On cable (with a clip) and on engine
VOLTAGE	.15 - .35 Vac
	Crank engine with spark plug cable installed and measure voltage.

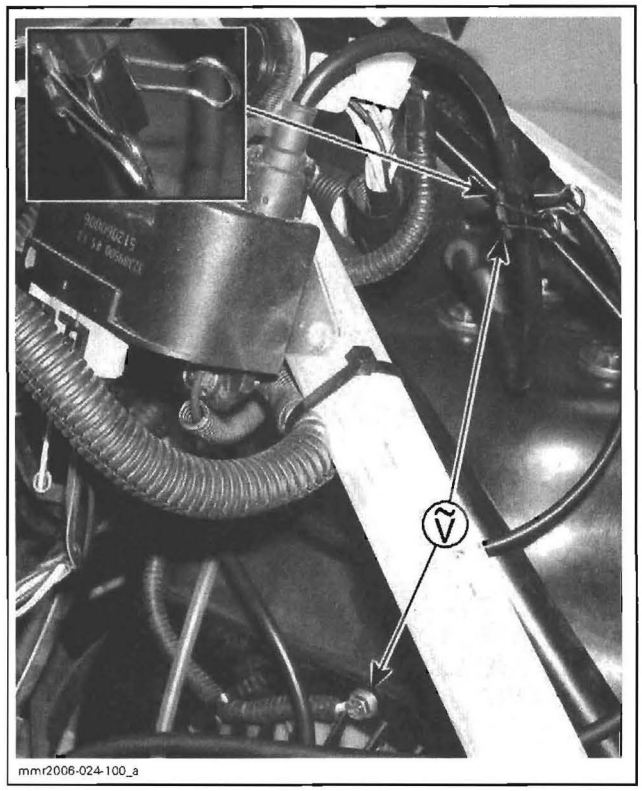

CABLE INDUCED VOLTAGE TEST

IGNITION GENERATOR COIL

Static Test

Disconnect 3-pin connector from MPEM.

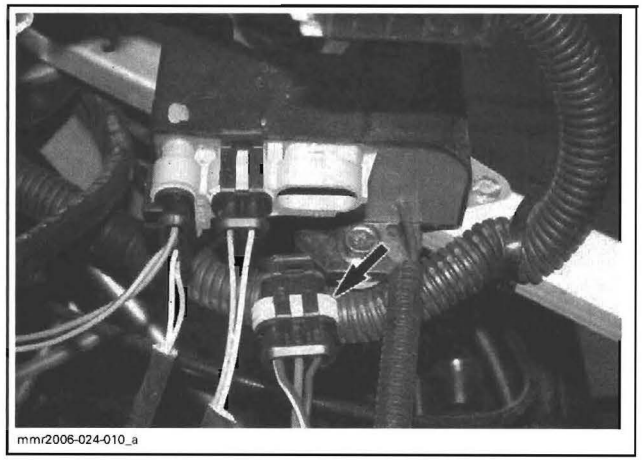

Take measurements and compare readings with the following table.

TEST PROBES	RED and BLACK/RED wires	BLACK/RED wire and engine
RESISTANCE	4.5 to 6.5 Ω	0 to 0.5 Ω
NOTE	The term engine refers to the engine metal parts connected to the magneto housing.	

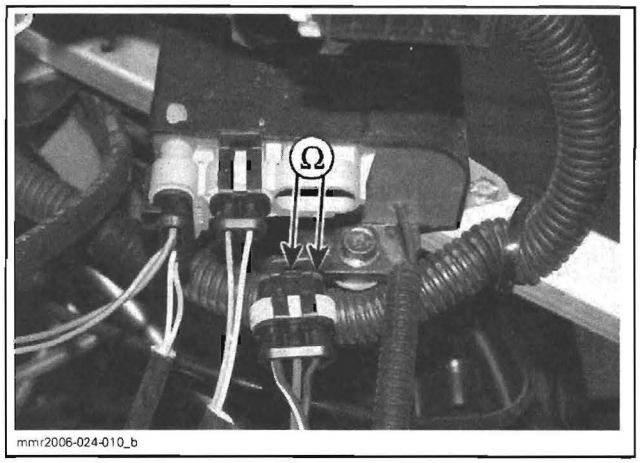

RESISTANCE TEST

Dynamic Test

Take measurements and compare readings with the following table.

TEST PROBES	RED and BLACK/RED wires
VOLTAGE	7.0 to 15.0 Vac
NOTE	When manually cranking the engine with the spark plug installed, the engine will tend to accelerate beyond the compression point. This will result in higher magneto output. Always repeat the procedure 3 times.

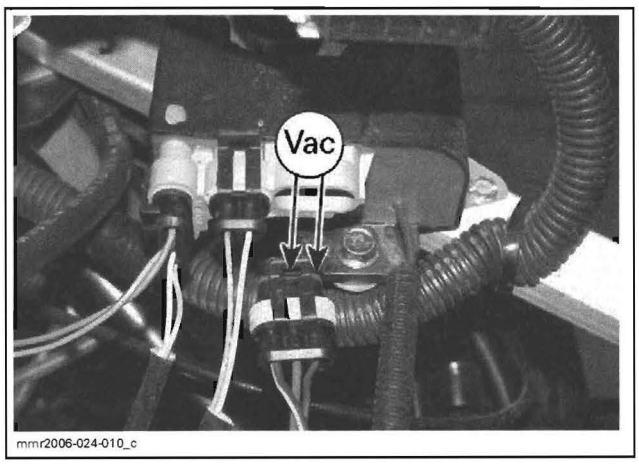

VOLTAGE TEST

If generator coil is out of specification, replace it.

TRIGGER COIL (forward rotation)

NOTE: RER trigger coil is used only when engine is in reverse operation. For testing, refer to *ROTAX ELECTRONIC REVERSE.*

Static Test

Disconnect 2-pin connector from MPEM.

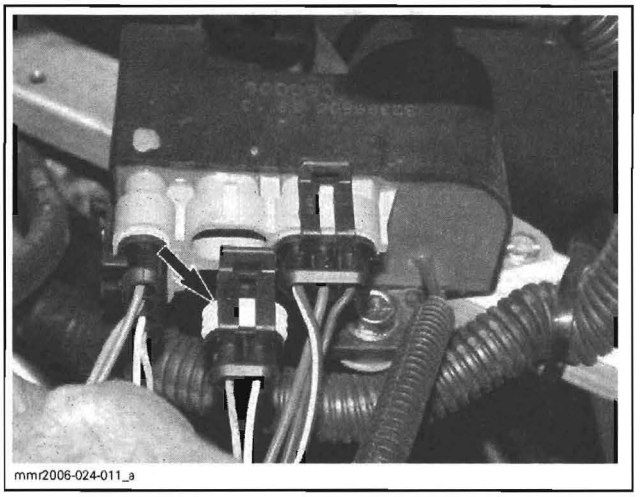

FORWARD TRIGGER COIL CONNECTOR

Check the resistance of the forward trigger coil.

TEST PROBES	BLUE/YELLOW and WHITE/YELLOW wires
RESISTANCE	160 to 180 Ω

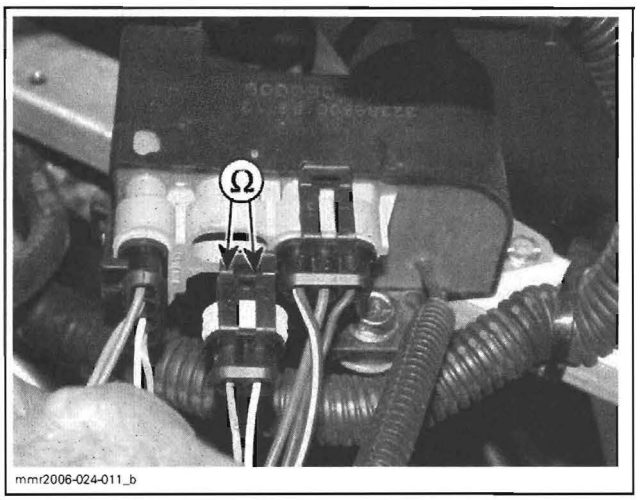

FORWARD TRIGGER COIL CONNECTOR — RESISTANCE TEST

Dynamic Test

Check the voltage of the forward trigger coil.

TEST PROBES	BLUE/YELLOW and WHITE/YELLOW wires
VOLTAGE	0.15 to 0.35 Vac
NOTE	Voltage testing: Manually crank engine with the spark plug installed. Always repeat the procedure 3 times.

If trigger coil is out of specification, replace it.

MPEM

When other components have been tested above and are good, the electronic module can be suspected.

ADJUSTMENT

IGNITION TIMING

If for any reason, ignition timing accuracy is suspected, it can be verified as follows.

PROCEDURE OVERVIEW
Verify timing mark position
Check ignition timing with a timing light

Verifying Timing Mark Position

General

Verification of the position of the timing mark on the magneto flywheel is required for the following reasons:

- To detect a missing or broken magneto flywheel Woodruff key.
- To correctly locate and mark a timing mark on a new service magneto flywheel.
- To verify the correct location of the factory timing mark.

TDC Gauge Installation

- Clean the area around the spark plug, and remove it.
- Install the TDC gauge in the spark plug hole and adjust as follows:

414 104 700

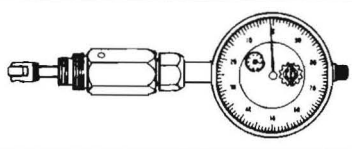

- Rotate magneto flywheel clockwise until piston is just Before Top Dead Center.

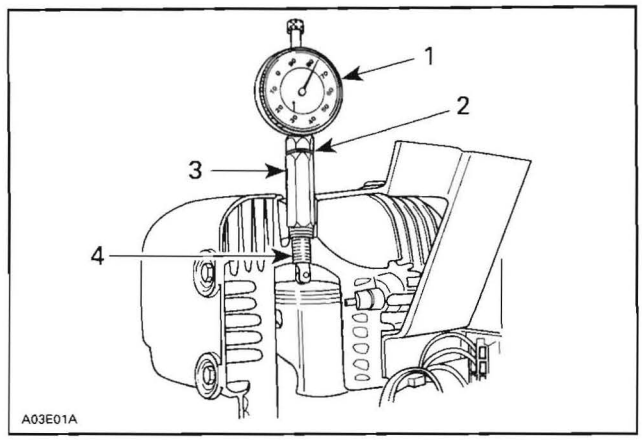

1. *Outer ring*
2. *Adaptor lock nut*
3. *Roller lock nut*
4. *Adaptor*

- Loosen adaptor lock nut then holding gauge with dial face toward magneto, screw adaptor in spark plug hole.
- Slide gauge far enough into adaptor to obtain a reading then finger tighten adaptor lock nut.
- Rotate magneto flywheel clockwise until piston is at Top Dead Center.
- Unlock outer ring of dial and turn it until "0" (zero) on dial aligns with pointer.
- Lock outer ring in position.

From this point, rotate magneto flywheel back 1/4 turn then rotate it clockwise to reach the specified position. Refer to *TECHNICAL SPECIFICATIONS*.

Verification of Timing Mark

Check if red fin aligns with mark on fan cowl.

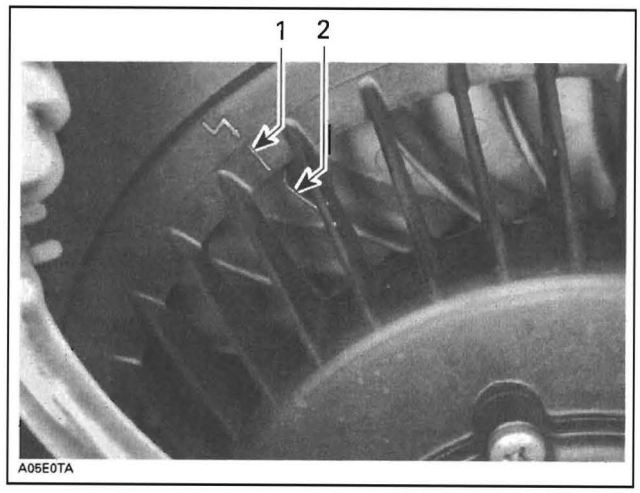

1. *Fan cowl timing mark*
2. *Red fin*

If marks do not align, there is something wrong with magneto flywheel mounting. Check Woodruff key and flywheel.

If marks align, check ignition timing.

Checking Ignition Timing

CAUTION: Always check the timing with a stroboscopic timing light at 3500 RPM after the marks have been checked.

Use a timing light and the digital inductive type tachometer (P/N 529 014 500).

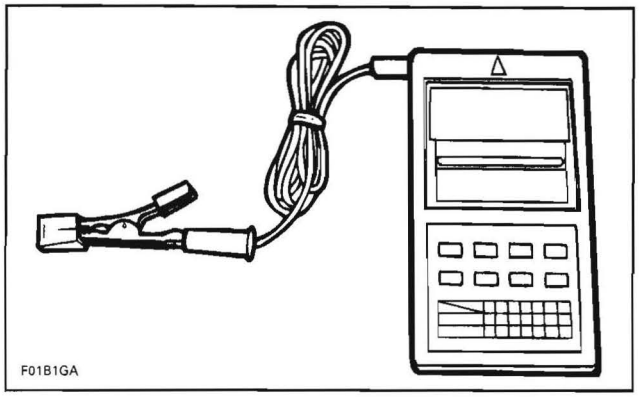

TACHOMETER

To check the ignition timing, refer to illustration and proceed as follows:

- Place ski tips against a wall, raise rear of vehicle on a stand, so that track does not contact the ground.

⚠ WARNING

Do not allow anyone in front of or behind the vehicle while engine is running. Keep clear of track and do not wear loose clothing which can get caught in moving parts.

- Connect the timing light pick-up to spark plug cable.

NOTE: To avoid an incorrect reading due to parallax, view the magneto flywheel and the crankcase timing marks in a straight line.

- Connect tachometer wire to spark plug wire or aim tachometer toward spark plug wire without using any connection wire.
- Start the engine and raise the engine speed within 3000 - 4000 RPM while observing the timing marks, refer to illustration.

The red fin must align with the fan cowl timing mark. Tolerance is ± 1°.

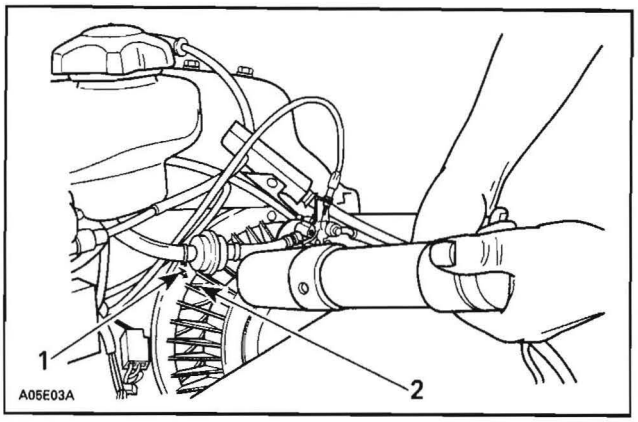

TYPICAL
1. Fan cowl timing mark
2. Red fin

- If marks align, timing is correct.
- If marks do not align, ignition timing is incorrect. Since there is no adjustment, a faulty trigger coil (check proper grounding of coil), flywheel, Woodruff key or MPEM could be the cause. Substitute one part at a time and recheck timing marks.
- Install parts which were removed.

IGNITION SYSTEM (550F)

SERVICE TOOLS

Description	Part Number	Page
digital inductive type tachometer	529 014 500	378
multimeter Fluke 111	529 035 868	372

SERVICE PRODUCTS

Description	Part Number	Page
antiseize lubricant	293 800 070	372

GENERAL

The RER dual trigger coil CDI system features an ignition coil integrated to the MPEM.

NOTE: For more information pertaining to RER, refer to *ROTAX ELECTRONIC REVERSE (RER).*

Multi-Purpose Electronic Module (MPEM)

The following illustration identifies the connector functions on the MPEM.

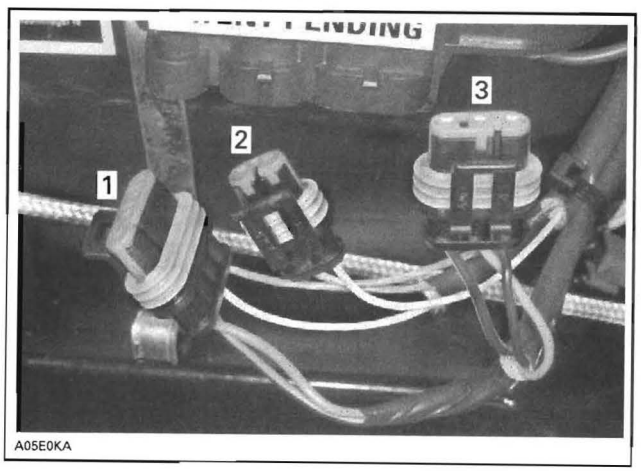

MPEM
1. *Reverse switch, reverse indicator and reverse trigger coil*
2. *Trigger coil (forward rotation)*
3. *Ignition generator coil and cut-off switches*

NOTE: A MPEM problem can be resolve simply by unplugging and re-plugging the module, indicating a connection problem. Also, check MPEM ground connections.

Electrical Connectors

Before replacing a component, always check electrical connections. The voltage and current might be too weak to go through dirty wire terminals. Clean as required. Make sure terminals are properly crimped on wires and fastened in housing, and that they are free of corrosion or moisture.

IGNITION SYSTEM TESTING SEQUENCE

In the case of ignition problems, check the following in the prescribed order until the problem can be solved.

1. spark plug
2. electrical connectors
3. ignition switch
4. tether cut-out switch
5. engine cut-out switch
6. wiring harness
7. ignition coil
8. ignition generator coil
9. trigger coil
10. MPEM.

Testing Conditions

Voltage measurements are always taken upon engine cranking using the rewind starter. Readings when the engine is running would be higher than specified range. Part temperature must be approximately 20°C (68°F) (room temperature), otherwise readings could be distorted.

CAUTION: When taking measurements, it is useless to try to run the engine since readings would then be distorted.

Analysis of Readings

Voltage Readings

Take into consideration that readings vary according to the force applied onto the manual starter. It is therefore important to employ enough force upon each trial.

It is recommended to proceed 3 times with the test. Each reading must be within the range indicated in the corresponding table. If the reading is too low, the part is considered to be defective and must be replaced.

Resistance Readings

Readings must be within the indicated range. Otherwise, replace the part.

Intermittent Ignition Problems

It is difficult to make a diagnostic in the case of intermittent ignition problems. Thus, problems occurring only when the engine operating temperature is normal must be checked in similar conditions.

In most cases when problems are caused by temperature or vibrations, these can only be solved by replacing parts. Most problems cannot be detected when the engine is stopped.

Multiple Problems

More that one component can be defective. As a result, if the problem remains although a part was replaced, start over the whole verification from the beginning in order to identify the other defective component.

PROCEDURES

For best results, use the multimeter Fluke 111 (P/N 529 035 868).



529 035 868

SPARK PLUG

Removal

First unscrew the spark plug 1 turn.

Clean the spark plug and cylinder head with pressurized air, then completely unscrew.

⚠ WARNING

Whenever using compressed air, always wear protective eye wear.

Spark Testing

Use the snowmobile spark plug and not a new one. Bring the plug in contact with the engine. Pull rewind starter. If no spark is produced, replace the spark plug with a new one and do the test again.

If there is still no spark, continue testing.

Installation

Prior to installation make sure that contact surfaces of the cylinder head and spark plug are free of grime.

Using a feeler gauge, set electrode gap (except if spark plug is an ECS type) as per *TECHNICAL SPECIFICATIONS*.

1. Apply antiseize lubricant (P/N 293 800 070) over the spark plug threads to prevent possible seizure.
2. Hand screw spark plug into cylinder head and tighten with a torque wrench and a proper socket.

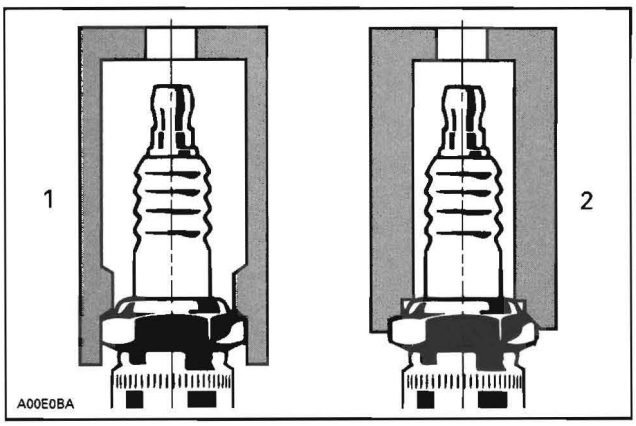

TYPICAL
1. Proper socket
2. Improper socket

Use the following table to torque the spark plug.

MODEL	SPARK PLUG	TORQUE N•m (lbf•ft)
550F	NGK	27 (20)

IGNITION SWITCH

Unplug ignition switch connector.

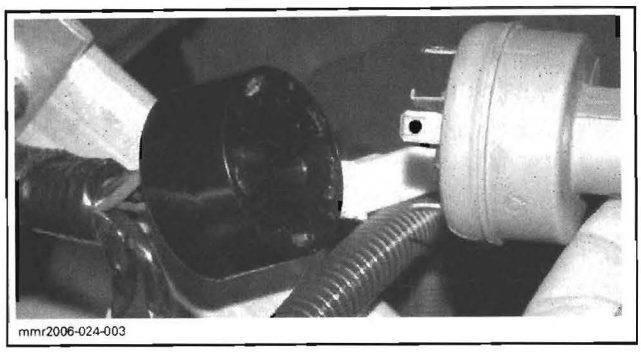

Check switch as follows.

POSITION	TERMINAL		RESISTANCE
OFF	MAG	GRD	0.2 Ω (closed)
	BAT	ACC	Infinite (0L)
	BAT	SOL	
ON	MAG	GRD	Infinite (0L)
	BAT	ACC	0.2 Ω (closed)
	BAT	SOL	Infinite (0L)
START	BAT	SOL	0.2 Ω (closed)

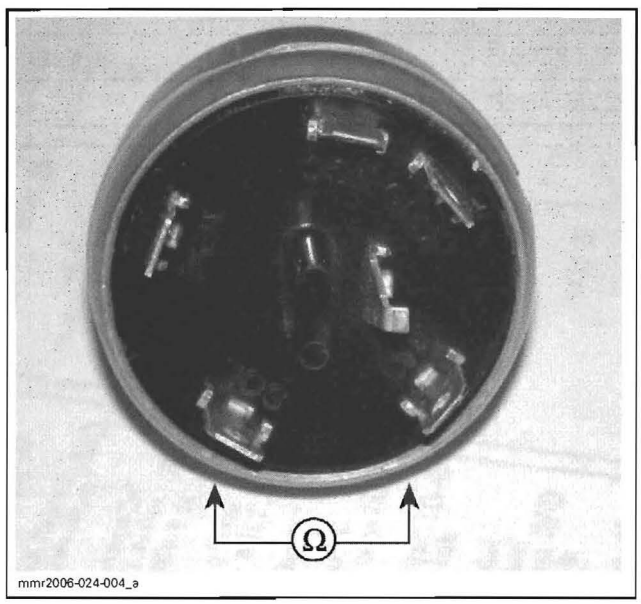

TETHER CUT-OUT SWITCH

Unplug tether cut-out switch connector.

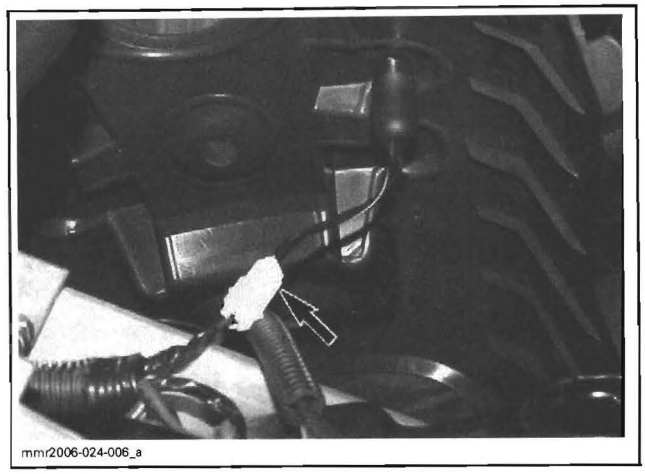

TYPICAL

Check switch as follows.

SWITCH POSITION	RUN	STOP
TEST PROBES	BLACK/YELLOW and BLACK wires	BLACK/YELLOW and BLACK wires
RESISTANCE	0L	0 to 0.5 Ω

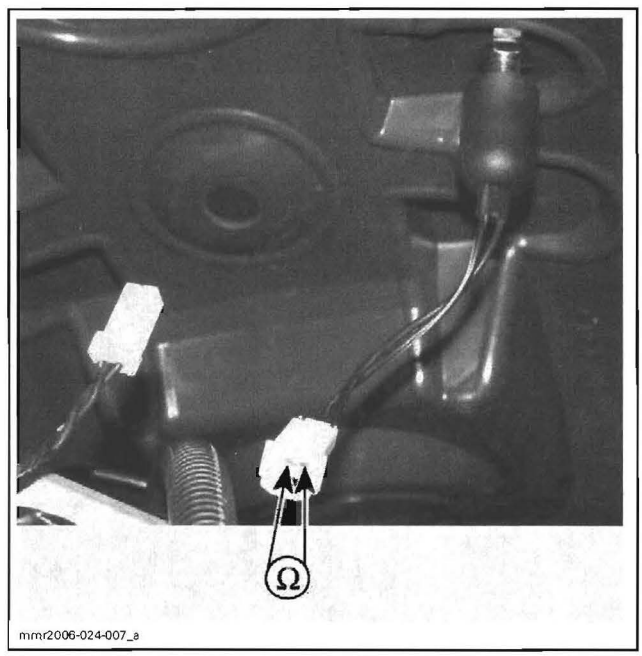

TYPICAL

NOTE: When checking switch in the RUN position, use the tether cap. This validates its ability to remain on switch to make proper electrical contact.

If readings do not correspond to the above specifications, replace switch.

ENGINE CUT-OUT SWITCH

Unplug connector under steering cover.

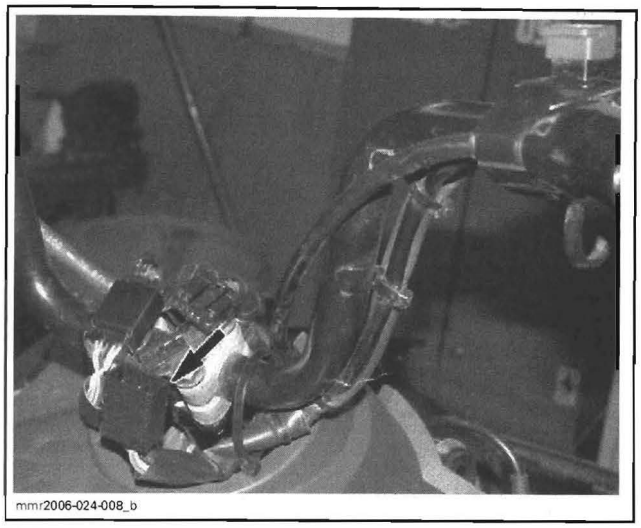

TYPICAL

Check the condition of engine cut-out switch as follows.

SWITCH POSITION	RUN	STOP
TEST PROBES	BLACK/YELLOW and BLACK wires	
RESISTANCE	OL	0 to 0.5 Ω

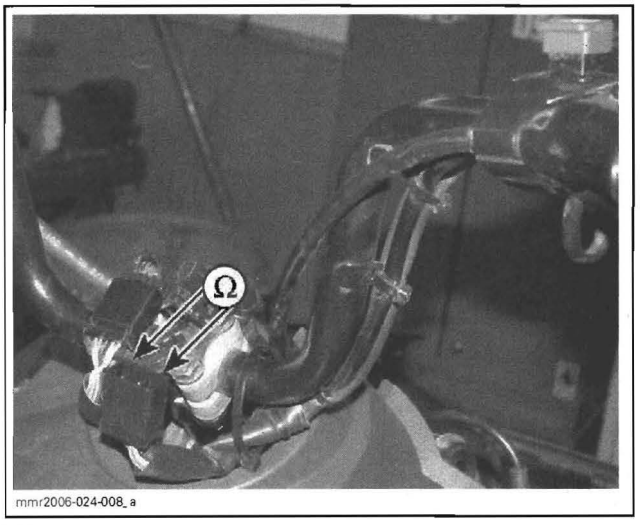

TYPICAL

If readings do not correspond to the above-mentioned indications, check switch wires/connector and if good, replace switch.

WIRING HARNESS

When switches test good, check wiring harness as follows.

Check if wiring harness shows any signs of scoring, chaffing or other damage.

No spark problem: Disconnect all switches from the main wiring harness and ensure BLACK/YELLOW wire is completely isolated from ground. Otherwise, repair/replace wiring.

No engine stop problem: Disconnect all switches from the main wiring harness and ensure there is continuity between each end of wires of the same color related to ignition. Otherwise, repair/replace wiring.

NOTE: All wires of the same color within a given harness are connected together.

IGNITION COIL

Static Test

Disconnect spark plug cables and remove each cap.

Take measurements and compare readings with the following table.

NOTE: Primary side of ignition coil cannot be measured.

TEST	Secondary winding resistance (WITHOUT spark plug cap)	Spark plug cap resistance
TEST PROBES	Each cable end	Each side of cap
RESISTANCE	900 - 1000 Ω	4 – 6 kΩ

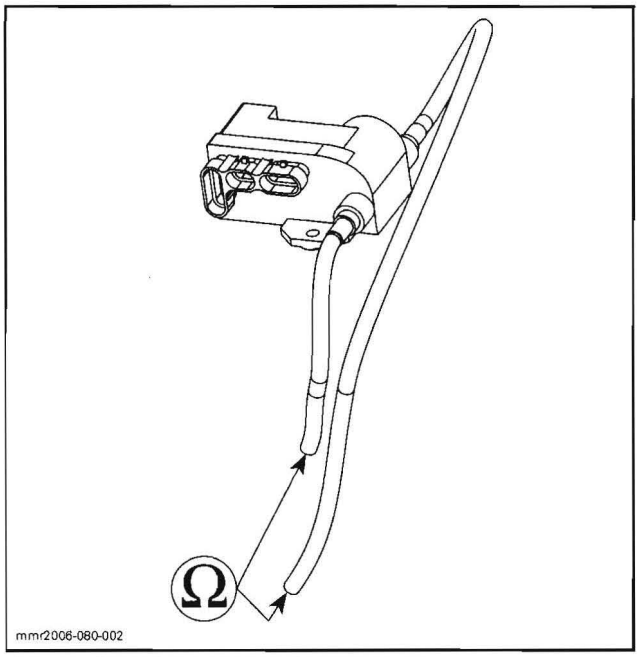

SECONDARY WINDING RESISTANCE TEST

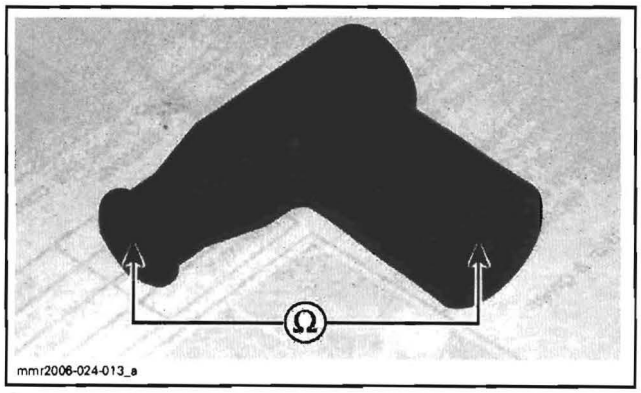

SPARK PLUG CAP RESISTANCE TEST

NOTE: Keep in mind that even if this static test is good, voltage requirement is higher to produce a spark in the combustion chamber when engine is running. Ignition coil may be faulty. Replacing ignition coil/MPEM may be necessary as a test.

Dynamic Test

Take measurements and compare readings with the following table.

TEST	Spark plug cable induced voltage
TEST PROBES	On cable (with a clip) and on engine
VOLTAGE	.100 – .250 Vac
	Crank engine with spark plug cable installed and measure voltage.

NOTE: Proceed with each cylinder spark plug cable.

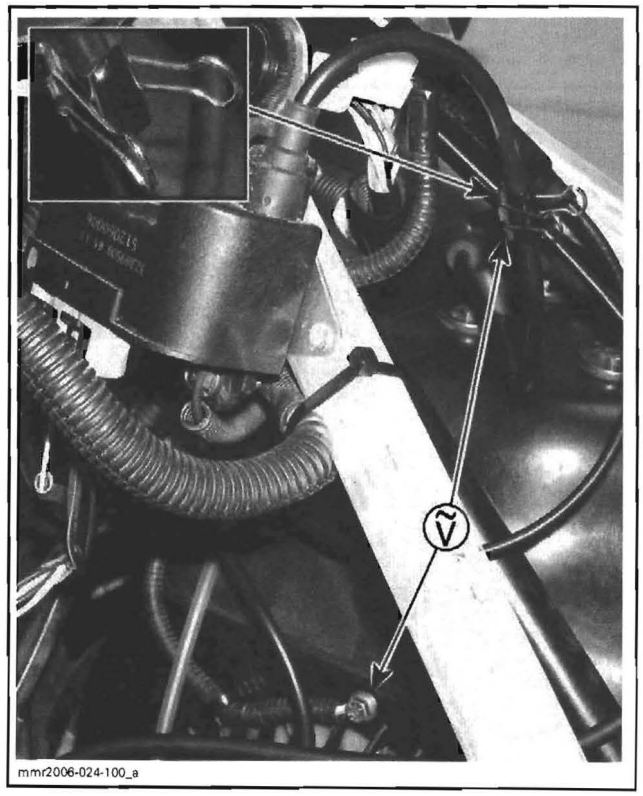

TYPICAL VIEW — SPARK PLUG CABLE INDUCED VOLTAGE TEST

If ignition coil is out of specification, replace it.

IGNITION GENERATOR COIL

Static Test

Disconnect 3-pin connector from MPEM.

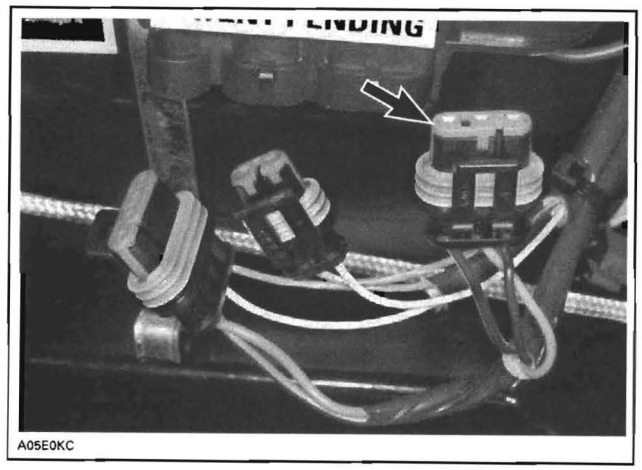

Take measurements and compare readings with the following table.

TEST PROBES	RED and BLACK/RED wires	BLACK/RED wire and engine
RESISTANCE	6.5 to 8.5 Ω	0 to 0.5 Ω
NOTE	The term engine refers to the engine metal parts connected to the magneto housing.	

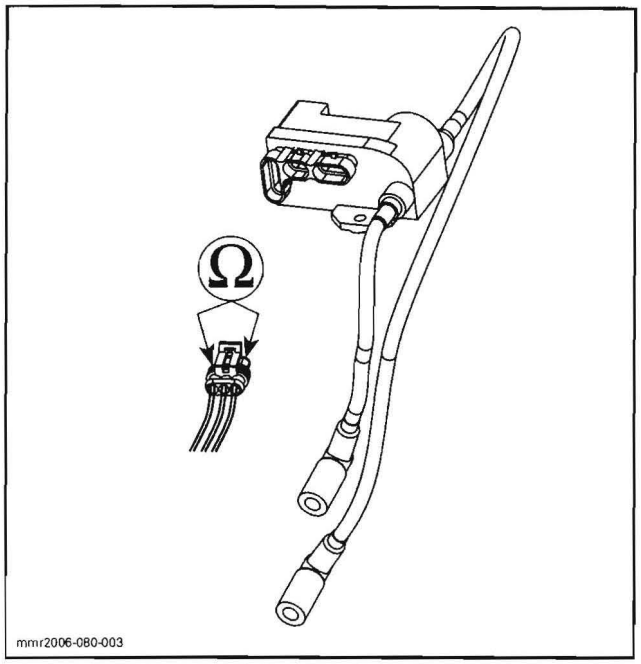

IGNITION GENERATOR COIL — RESISTANCE TEST

Dynamic Test

Take measurements and compare readings with the following table.

TEST PROBES	RED and BLACK/RED wires
VOLTAGE	7.0 to 15.0 Vac
NOTE	When manually cranking the engine with the spark plug installed, the engine will tend to accelerate beyond the compression point. This will result in higher magneto output. Always repeat the procedure 3 times.

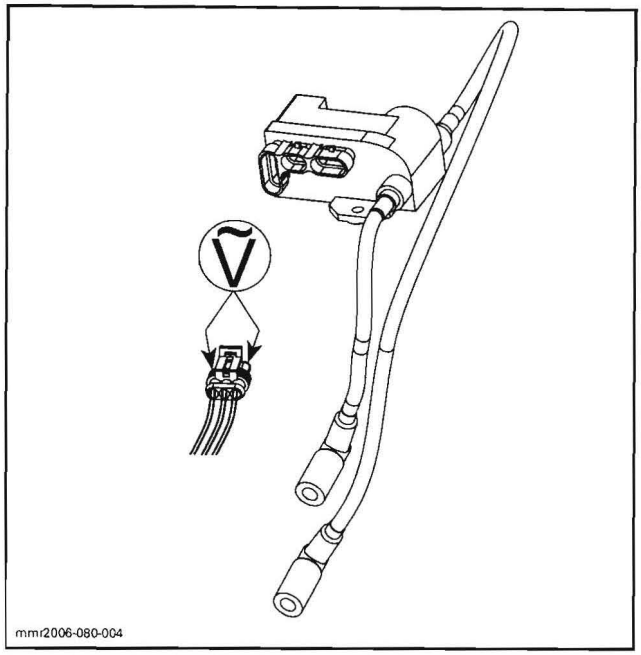

IGNITION GENERATOR COIL — VOLTAGE TEST

If generator coil is out of specification, replace it.

TRIGGER COIL

NOTE: RER trigger coil is used only when engine is in reverse operation. For testing, refer to *ROTAX ELECTRONIC REVERSE.*

Static Test

Disconnect 2-pin connector from MPEM.

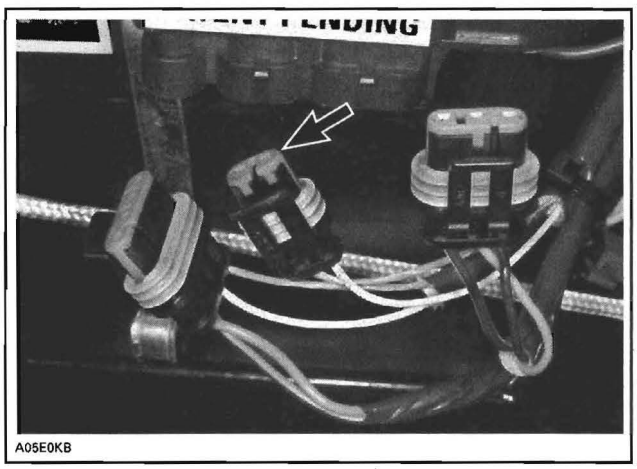

Check the resistance of the forward trigger coil.

TEST PROBES	BLUE/YELLOW and WHITE/YELLOW wires
RESISTANCE	160 to 180 Ω

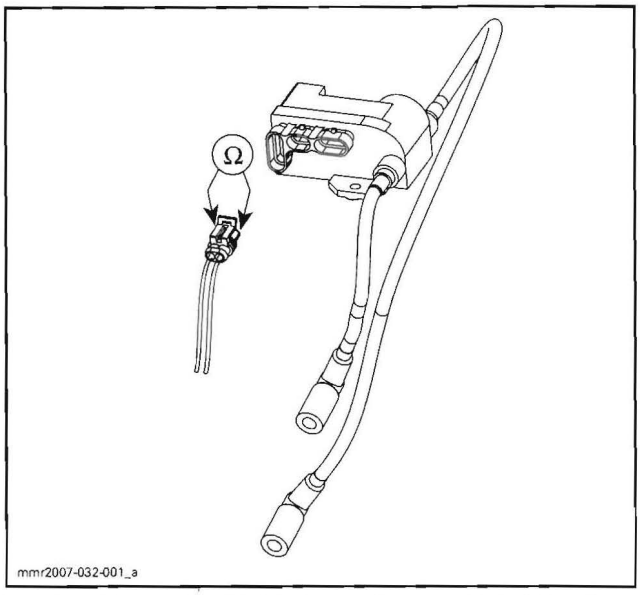

FORWARD TRIGGER COIL CONNECTOR — RESISTANCE TEST

Dynamic Test

Check the voltage of the forward trigger coil.

TEST PROBES	BLUE/YELLOW and WHITE/YELLOW wires
VOLTAGE	0.15 to 0.35 Vac
NOTE	Manually crank engine with the spark plug installed. Always repeat the procedure 3 times.

If trigger coil is out of specification, replace it.

MPEM

When other components have been tested above and are good, the electronic module can be suspected.

ADJUSTMENT

IGNITION TIMING

If for any reason, ignition timing accuracy is suspected, it can be verified as follows.

PROCEDURE OVERVIEW
Verify timing mark position
Scribe a new mark if existing mark was not good
Check ignition timing with a timing light

Verifying Timing Mark Position

General

Verification of the position of the timing mark on the magneto flywheel is required for the following reasons:

- To detect a missing or broken magneto flywheel Woodruff key.
- To correctly locate and mark a timing mark on a new service magneto flywheel.
- To verify the correct location of the factory timing mark.
- To detect a wrong magneto flywheel corresponding to a different engine type.

TDC Gauge Installation

- Clean the area around the spark plugs, and remove them.
- Remove the rewind starter from the engine.
- Install the TDC gauge in the MAG spark plug hole, and adjust as follows:
  - Position the magneto flywheel at approximately TDC.

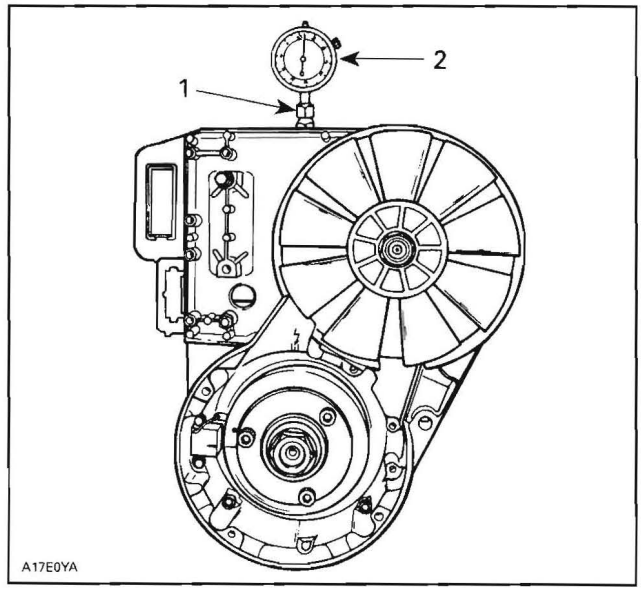

TYPICAL — INSTALLATION OF TDC GAUGE
1. Adaptor lock nut
2. Gauge on MAG side cylinder

  - Assemble the gauge to the adaptor and tighten the roller lock nut. Do not tighten the adaptor lock nut.
  - Screw the adaptor into the spark plug hole and tighten to prevent movement in the plug hole.

- Position the dial face toward the MAG side. Move the gauge down until the needle just begins to move, then move down a further 5 or 6 mm (approximately 1/4 in). Tighten adaptor lock nut by hand.

• Locate the piston TDC position as follows:
- Slowly rotate the magneto flywheel back and forth across TDC while observing the needle. Note that the needle stops moving only as the piston is changing direction.
- Rotate the dial face so that «0» is in line with the needle when it stops moving.
- Again, slowly rotate the magneto flywheel back and forth across TDC and adjust the dial face to «0», until the needle always stops exactly at «0» before changing direction.
- «0» now indicates exact TDC.

Verification of Timing Mark

NOTE: When checking timing, certain procedures require that the magneto flywheel be turned in a clockwise direction, viewed facing the MAG side. If it is necessary to turn back (counterclockwise) for any reason, rotate the magneto flywheel at least one-quarter turn counterclockwise, and then rotate it clockwise to ensure the slack in engine moving parts is taken-up.

- Rotate the magneto flywheel counterclockwise, one-quarter turn then carefully rotate it clockwise until the needle indicates the specified measurement. Refer to *TECHNICAL SPECIFICATIONS*.
- Verify that the magneto flywheel mark perfectly aligns with the mark on the trigger coil, refer to illustration.

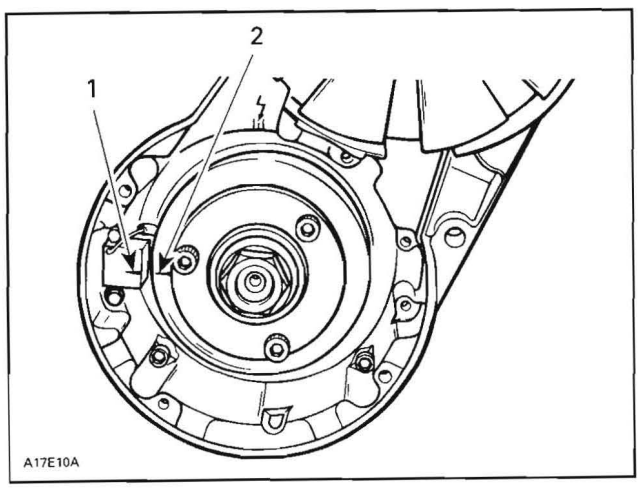

TYPICAL
1. *Trigger coil mark*
2. *Magneto flywheel mark*

- If the marks align, check ignition timing using those marks.
- If the marks do not align, check magneto flywheel and trigger coil part numbers and check Woodruff key condition. If all parts are good continue procedure to scribe a new mark.

NOTE: If marks were not aligned, do not use them to check ignition timing with a timing light.

Scribing a Mark on Magneto Flywheel

- Remove the fan cover from the engine.
- Maintain magneto flywheel so that previous marks remain aligned.
- Scribe or punch a mark on magneto flywheel so that it perfectly aligns with the arrow on crankcase, refer to illustration.

NOTE: This new timing mark should be used for future timing checks (dynamic timing).

- Reinstall rewind starter.
- Check the timing with a timing light.

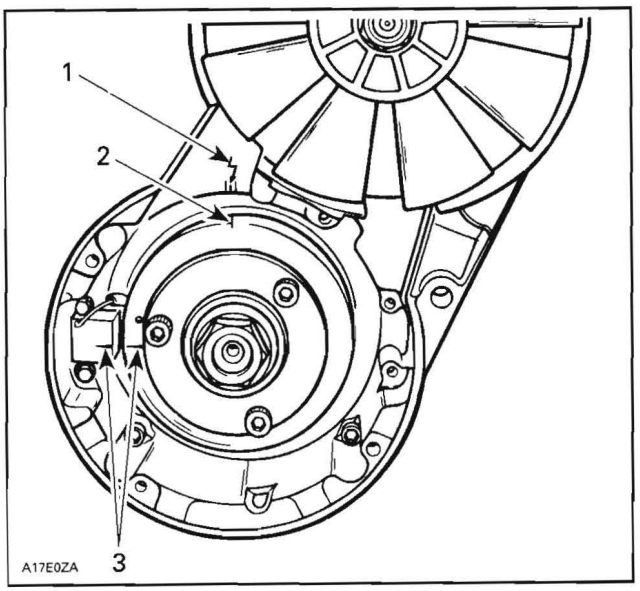

TYPICAL
1. *Crankcase arrow*
2. *Scribe a mark here*
3. *Maintain verified timing marks aligned (static timing)*

Checking Ignition Timing

Use a timing light and the digital inductive type tachometer (P/N 529 014 500).

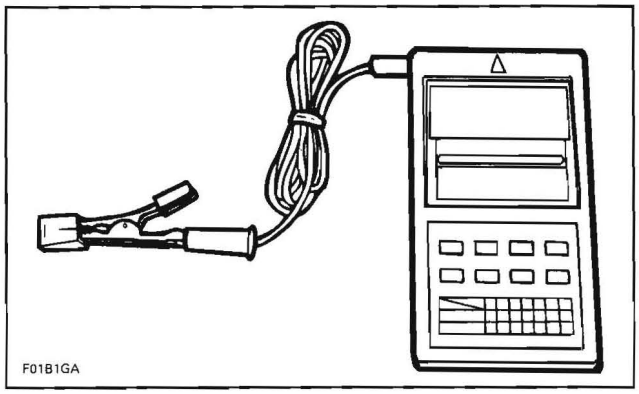

TACHOMETER

To check the ignition timing, refer to illustration and proceed as follows:

- Place ski tips against a wall, raise rear of vehicle on a stand, so that track does not contact the ground.

⚠ WARNING

Do not allow anyone in front of or behind the vehicle while engine is running. Keep clear of track and do not wear loose clothing which can get caught in moving parts.

- Connect the timing light pick-up to a spark plug cable.

NOTE: To avoid an incorrect reading due to parallax, view the magneto flywheel and the crankcase timing marks in a straight line.

- Connect tachometer wire to spark plug wire or aim tachometer toward spark plug wire without using any connection wire.
- Start the engine and raise the engine speed within 3000 - 4000 RPM while observing the timing marks, refer to illustration.

The magneto flywheel mark and the crankcase arrow must be perfectly aligned.

NOTE: If a mark was scribed previously, use it.

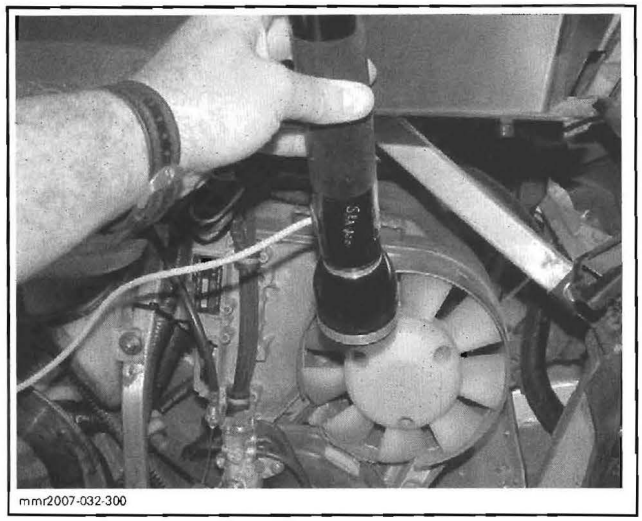

- If marks are not aligned, timing is incorrect. Since there is no adjustment, a faulty trigger coil (check proper grounding of coil), a faulty flywheel, a faulty Woodruff key, a misaligned (twisted) crankshaft or a faulty MPEM could be the cause. Substitute one part at a time and recheck timing marks.

IGNITION SYSTEM (V800)

SERVICE TOOLS

Description	Part Number	Page
ECM adapter	420 277 010	381
multimeter Fluke 111	529 035 868	381

GENERAL

NOTE: It is a good practice to check for fault codes using B.U.D.S. software as a first troubleshooting step. Refer to *EMS DIAGNOSTIC AND COMMUNICATION TOOLS.*

The EMS controls the ignition system. For more information, refer to *ENGINE MANAGEMENT.*

The battery supplies the primary side of ignition coil through a relay (R1) while the ECM completes the circuit for each cylinder by switching it to the ground at the right moment. Upon engine starting, the ECM can detect open and short circuit in the primary winding but it does not check the secondary winding.

Diagnostic Tools

For most accurate measurements, use the multimeter Fluke 111 (P/N 529 035 868).



529 035 868

NOTE: To probe the ECM connector terminals, use the ECM adapter (P/N 420 277 010) to prevent damaging terminals. Refer to *ENGINE MANAGEMENT* for more information.

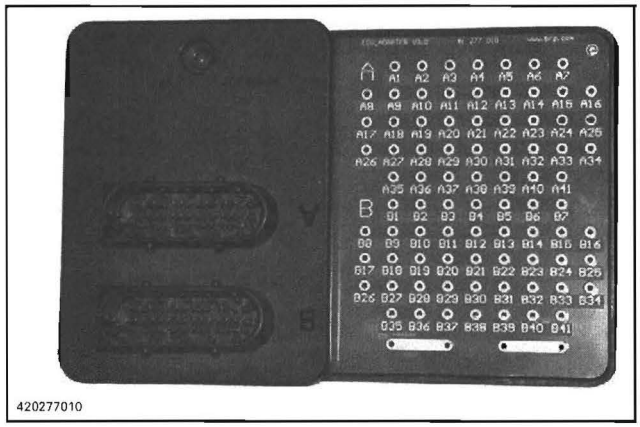

420277010

PROCEDURES

IGNITION SWITCH

Quick Test

Set engine cut-out switch to STOP or remove tether cap to prevent engine cranking.

NOTE: Ensure hood connector is connected.

In the OFF position no light should be on.

To check if ignition switch functions properly, turn it to the START position.

NOTE: Turning ignition switch to ON will not wake up the ECM. Key must be turned to START.

If speedometer turns on, the ignition switch is good.

NOTE: On models without an electronic speedometer, the oil pressure lamp should turn ON.

Otherwise, check the charging system fuse. If fuse is in good condition, proceed with the following tests.

Switch Resistance Test

Remove RH panel. Refer to *BODY.*

Unscrew switch nut and remove switch from underneath dashboard.

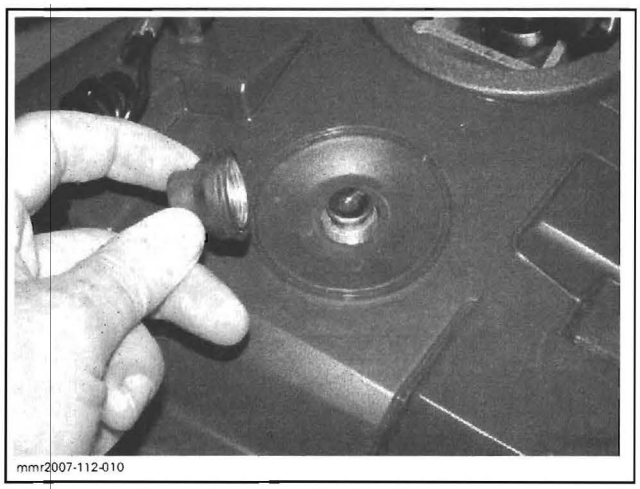
mmr2007-112-010

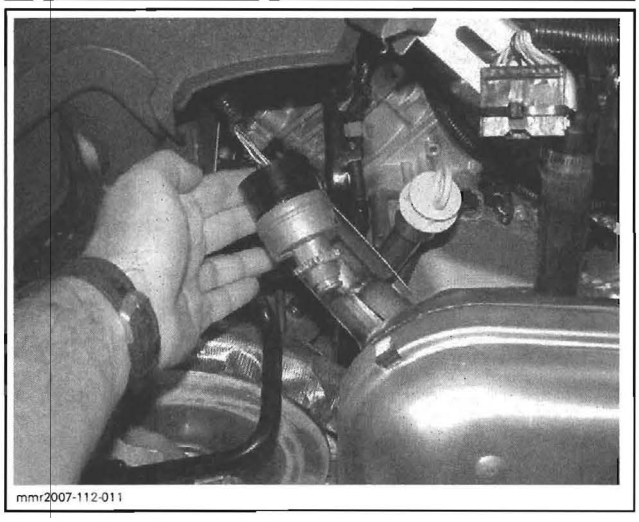
mmr2007-112-011

Unplug ignition switch connector.

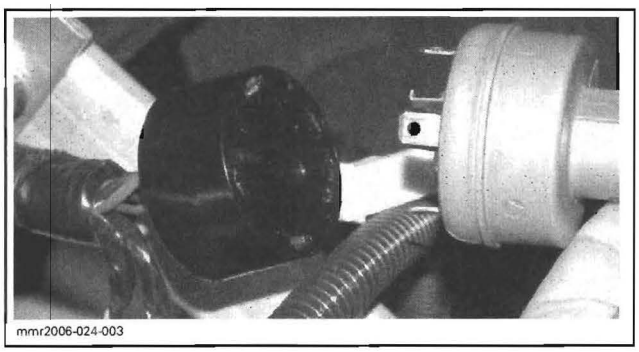
mmr2006-024-003

Check switch as follows.

POSITION	TERMINAL		RESISTANCE
OFF	MAG	GRD	0.2 Ω (closed)
	BAT	ACC	Infinite (0L)
	BAT	SOL	
ON	MAG	GRD	Infinite (0L)
	BAT	ACC	0.2 Ω (closed)
	BAT	SOL	Infinite (0L)
START	BAT	SOL	0.2 Ω (closed)
	MAG	GRD	Infinite (0L)
	BAT	ACC	0.2 Ω (closed)

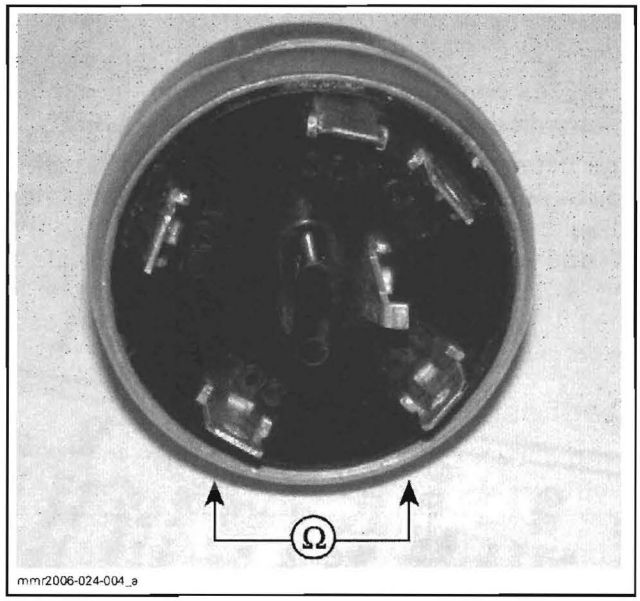

mmr2006-024-004_a

If switch is out of specification, replace with a new one.

Switch Wiring Test (ignition functions)

Battery and Ground Wires

Check as follows.

IGNITION SWITCH CONNECTOR		VOLTAGE
Pin 9	Pin 5	Battery voltage

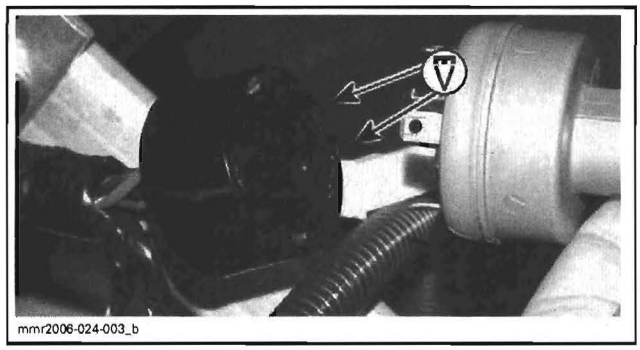

mmr2006-024-003_b

If test is out of specification, check ground wire as follows.

IGNITION SWITCH CONNECTOR	BATTERY	VOLTAGE (VDC)
Pin 5	Ground	Battery voltage

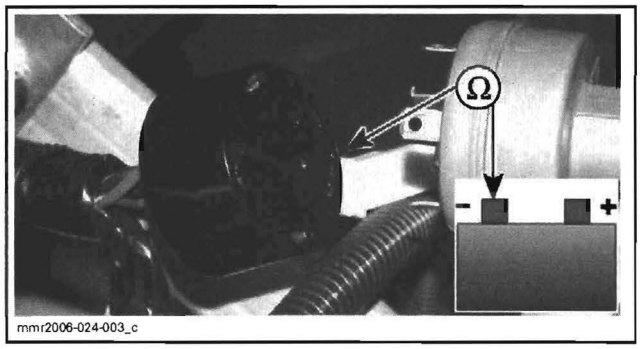

mmr2006-024-003_c

If ground wire is out of specification, repair wiring/connector.

If ground wire is good, repair BAT wiring/connector.

Engine Cut-Out Wire

IMPORTANT: Set cut-out switch to RUN and install tether cord to its post.

Disconnect ECM connector "B".

Check if wire is inappropriately grounded.

IGNITION SWITCH CONNECTOR	BATTERY	RESISTANCE @ 20°C (68°F)
Pin 2	Ground	Open circuit (OL)

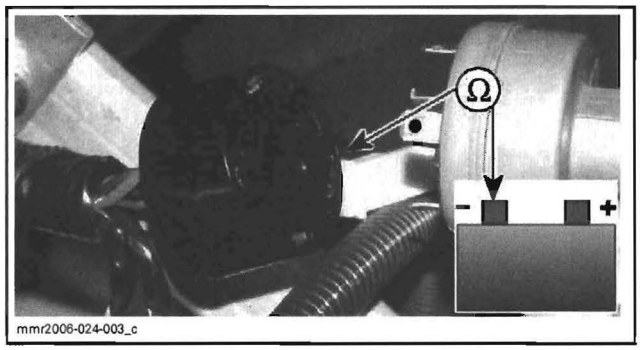

mmr2006-024-003_c

If out of specification, repair wiring/connector.

Start Wire

Disconnect specified wire from starting solenoid and check as follows.

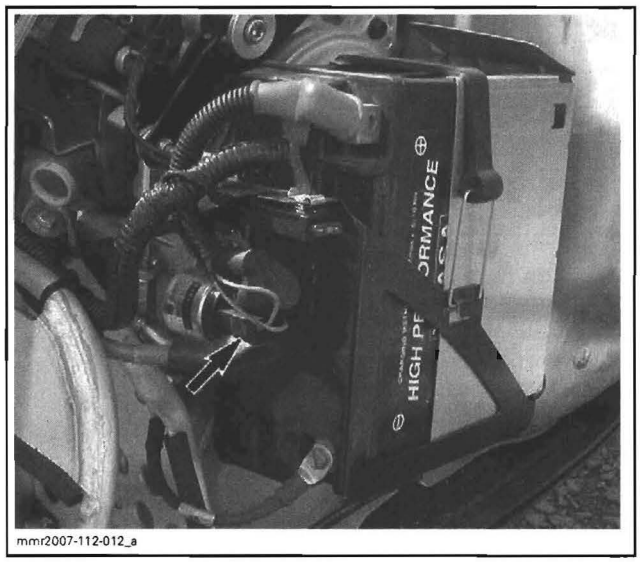

mmr2007-112-012_a

IGNITION SWITCH CONNECTOR	STARTING SOLENOID WIRE	RESISTANCE @ 20°C (68°F)
Pin 4	BEIGE	Close to 0 Ω

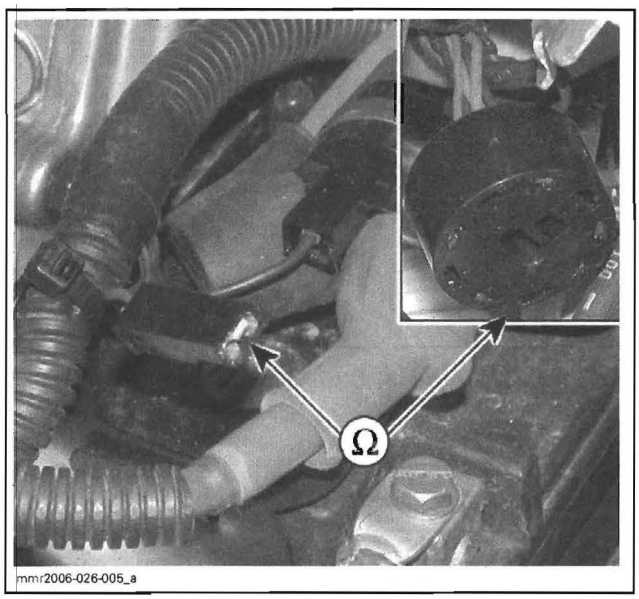

TETHER CUT-OUT SWITCH

Unplug tether cut-out switch connector behind dashboard.

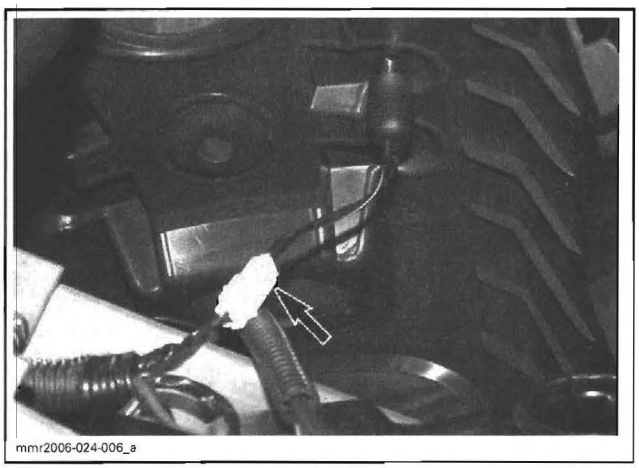

Check switch as follows.

SWITCH POSITION	RUN	STOP
TEST PROBES	BLACK and BLACK wires	BLACK and BLACK wires
RESISTANCE	Open circuit (OL)	0 to 0.5 Ω

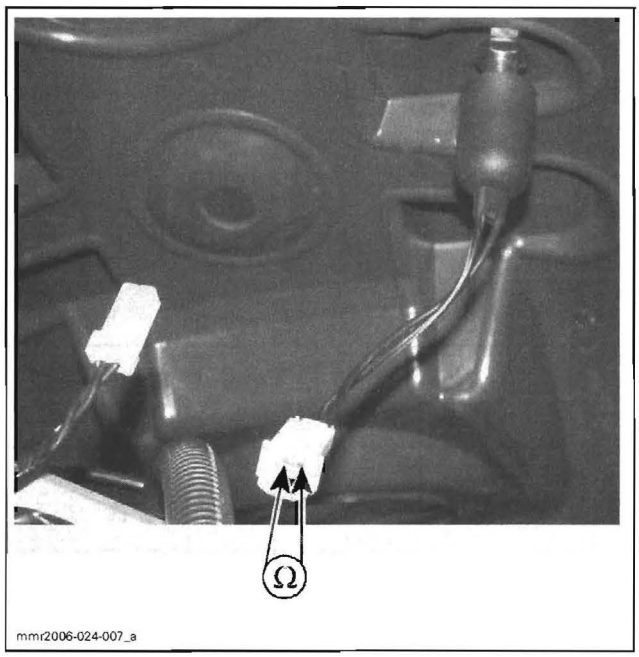

NOTE: When checking switch in the RUN position, use the tether cap. This validates its ability to remain on switch to make proper electrical contact.

If readings do not correspond to the above specifications, replace switch.

ENGINE CUT-OUT SWITCH

Unplug connector under steering cover.

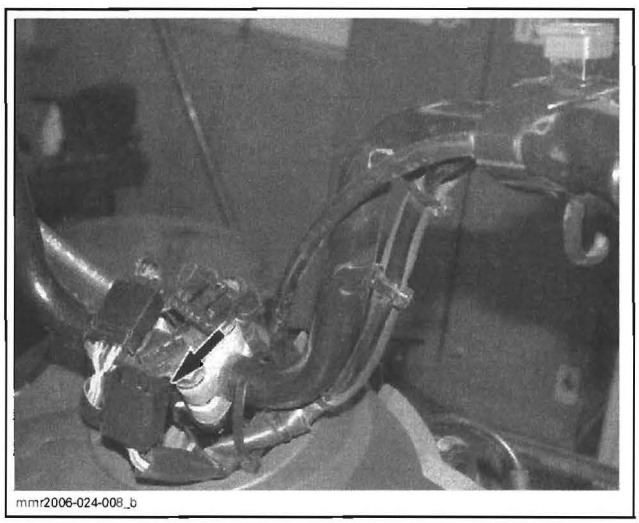

Check the condition of engine cut-out switch as follows.

SWITCH POSITION	RUN	STOP
TEST PROBES	BLACK/YELLOW and BLACK wires	
RESISTANCE	Open circuit (OL)	0 to 0.5 Ω

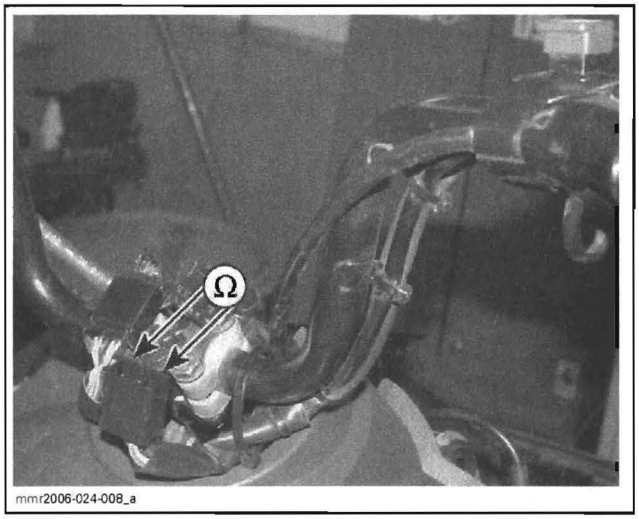

If readings do not correspond to the above-mentioned indications, check switch wires and connector. If good, replace switch.

IGNITION COIL

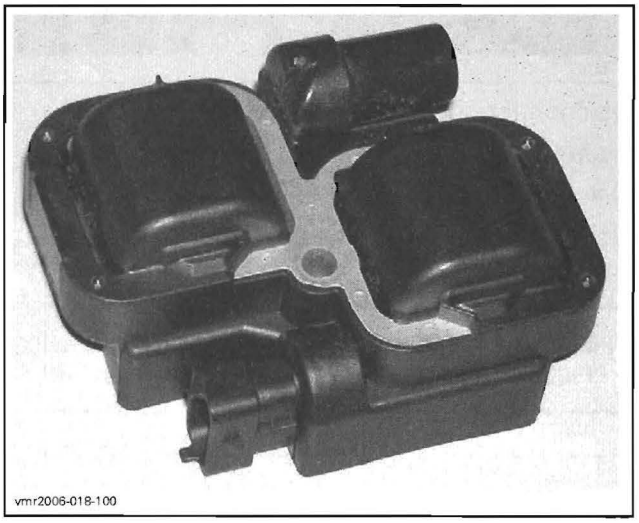

Quick Test with B.U.D.S.

Using the B.U.D.S. software, energize the ignition coil for each spark plug.

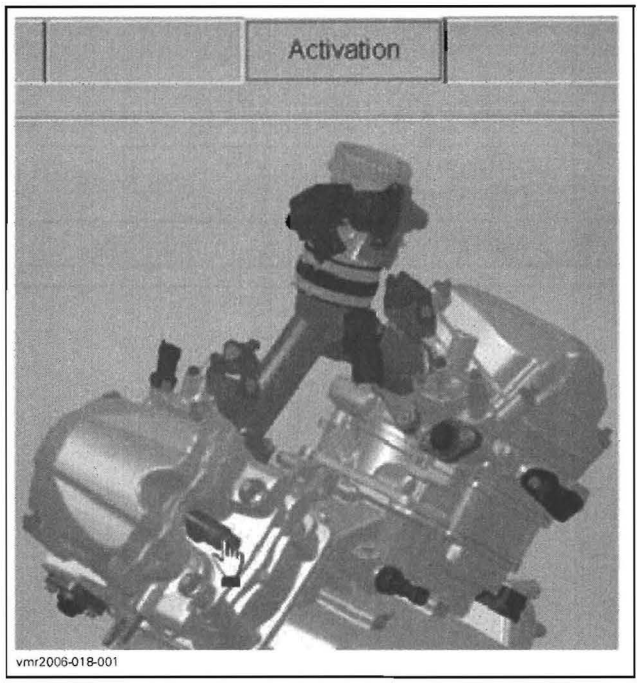

You should hear the spark occurring. In doubt, use an inductive spark tester. If there is no spark, perform the following checks.

NOTE: Keep in mind that even if there is a spark during this static test, voltage requirement is higher to produce a spark in the combustion chamber when engine is running. Ignition coil could be not working in real operation. Replacing ignition coil may be necessary as a test.

NOTE: Ensure spark plug cable is on the appropriate cylinder.

Ignition Coil Power Supply

Ensure ignition coil is properly powered as follows.

Remove hood. Refer to *BODY*.

Disconnect the 3-pin connector from the ignition coil and check the voltage supplied by the relay R1.

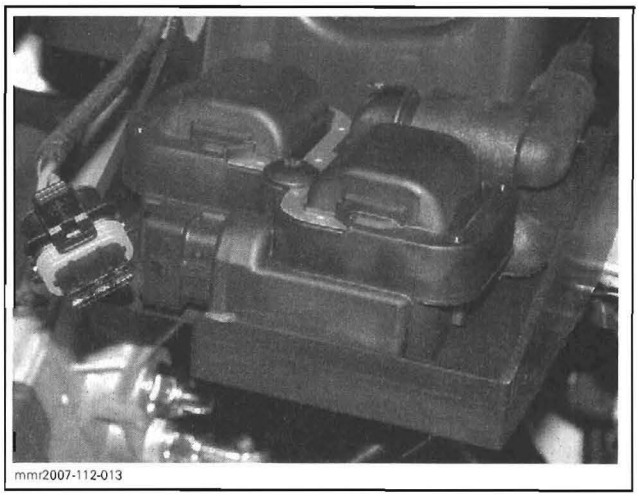

Briefly turn ignition switch to START to wake up ECM.

Using a multimeter, read voltage.

IGNITION COIL CONNECTOR	VOLTAGE
Pin 2 with battery ground	12 Vdc

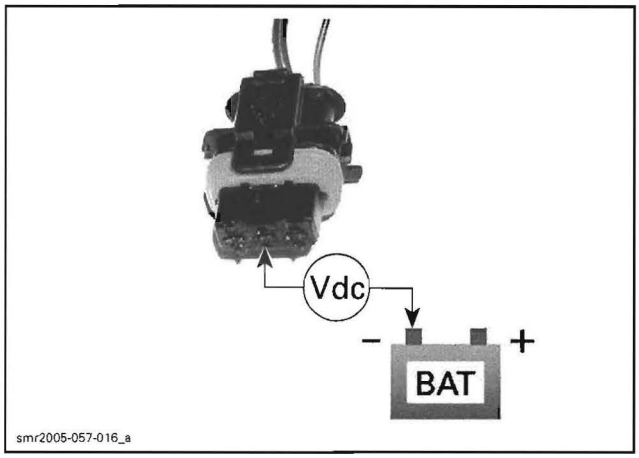

TYPICAL

If proper voltage is NOT read, check continuity of ignition coil supply circuit (charging system fuse, relay R1 and fuse F2 and wiring/connectors).

If adequate voltage is read, disconnect the ECM connector "A" and check the continuity of appropriate circuit.

COMPONENT	CIRCUIT NUMBER (ignition coil connector)	CIRCUIT NUMBER (ECM connector)
Cylinder 1 (front)	1	A-1
Cylinder 2 (rear)	3	A-41

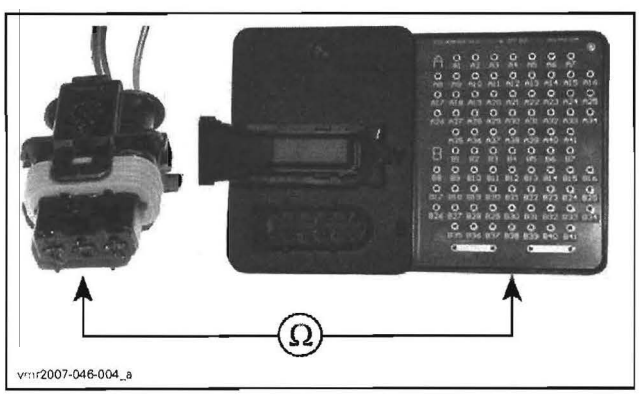

If wiring harness is defective, repair the connector or replace the wiring harness between ECM connector and the ignition coil.

If wiring harness is good, refer to ECM in *ENGINE MANAGEMENT*.

Resistance Test

An ignition coil with good resistance measurement can still be faulty. Voltage leak can occur at high voltage level which is not detectable with an ohmmeter. Replacing the ignition coil may be necessary as a test.

Disconnect ignition cable from spark plug.

Primary Windings

Reconnect connector to ignition coil.

Locate engine connector under ECM.

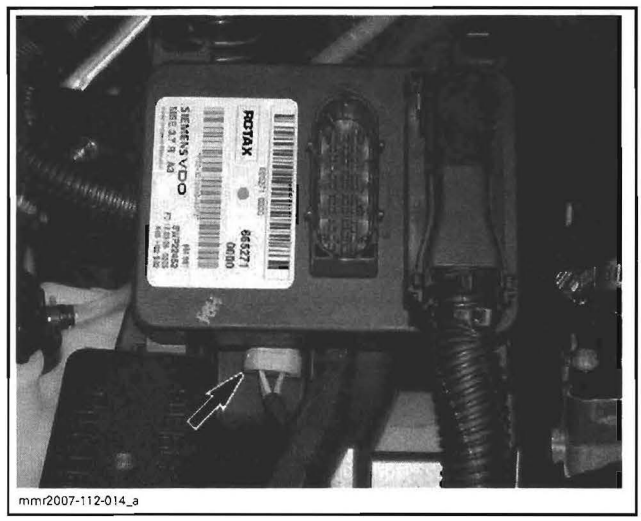

Disconnect connector "A" from ECM.

Raise ECM.

Disconnect engine connector.

Using a multimeter, check resistance in primary windings as follows.

PRIMARY CIRCUIT	ENGINE CONNECTOR	ECM CONNECTOR "A"	RESISTANCE @ 20°C (68°F)
Front	Pin 2	A-1	.3 - .6 Ω
Rear		A-41	

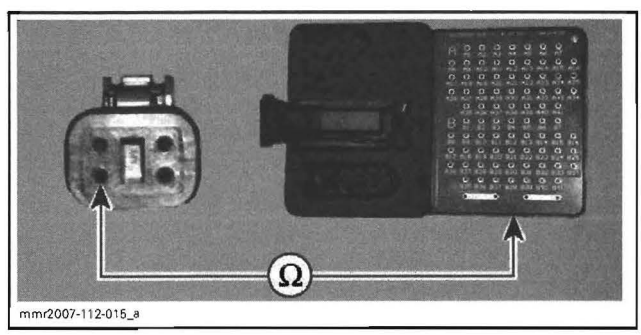

If any resistance is not good, replace ignition coil.

If the windings test good, check wiring/connectors and if adequate, try a new ECM.

Reinstall ECM and plug connectors.

Secondary Windings

Due to the integrated diode, it is not possible to take any resistance measurement of the secondary winding.

IGNITION TIMING

Ignition timing is not adjustable.

SPARK PLUG

Spark Plug Removal

Unplug the spark plug cable.

Clean the spark plug area with pressurized air.

Unscrew spark plug.

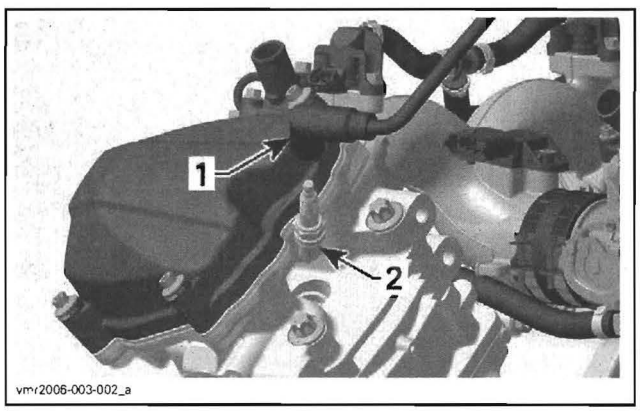

TYPICAL
1. *Spark plug cable*
2. *Spark plug*

Troubleshooting Fouled Spark Plug

Fouling of the spark plug is indicated by irregular running of the engine, decreased engine speed due to misfiring, reduced performance, and increased fuel consumption. This is could due to a loss of compression. Other possible causes are: a clogged air filter, incorrect spark plug gap, lubricating oil entering the combustion chamber, or too cold spark plug. The plug face of a fouled spark plug has either a wet black deposit or a black carbon fouling. Such coatings form a conductive connection between the center electrode and ground.

Spark Plug Analysis

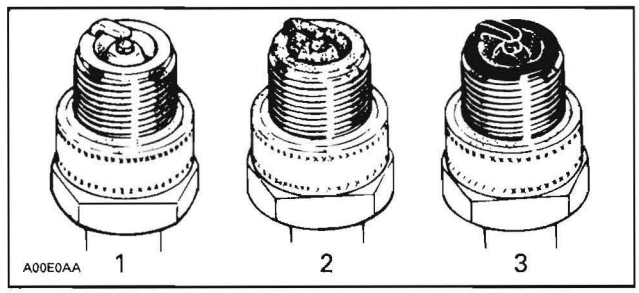

TYPICAL
1. *Overheated (light grey, white)*
2. *Normal (light brown, brown)*
3. *Fouled (black, wet or dry, dark deposits, grey, melted coating)*

The plug face reveals the condition of the engine, operating condition, method of driving and fuel mixture. For this reason it is advisable to inspect the spark plug at regular intervals, examining the plug face (i.e. the part of the plug projecting into the combustion chamber).

Spark Plug Installation

Prior to installation make sure that contact surfaces of the cylinder head and spark plug are free of grime.

- Using a wire feeler gauge, set electrode gap as per *TECHNICAL SPECIFICATIONS*.
- Apply antiseize lubricant over the spark plug threads to prevent possible seizure.
- Hand screw spark plug into cylinder head and tighten with a torque wrench and a proper socket.

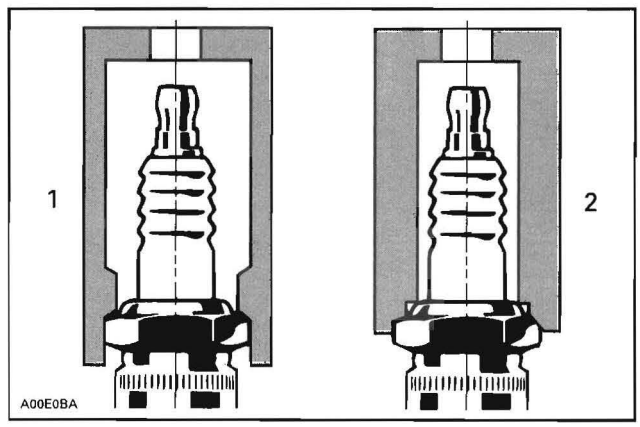

1. *Proper socket*
2. *Improper socket*

- Torque spark plug to 20 N•m (15 lbf•ft).

CHARGING SYSTEM

SERVICE TOOLS

Description	Part Number	Page
magneto harness adapter	529 036 062	392, 394
multimeter Fluke 111	529 035 868	389

SERVICE TOOLS – OTHER SUPPLIER

Description	Part Number	Page
Snap-on inductive ammeter	MT110	390

SERVICE PRODUCTS

Description	Part Number	Page
silicone dielectric grease	293 550 004	396–397

GENERAL

Voltage measurements are always taken upon engine cranking. Readings when the engine is running would be higher than specified range. Part temperature must be approximately 20°C (68°F) (room temperature), otherwise readings could be distorted.

CAUTION: When taking measurements, it is useless to try to run the engine since readings would then be distorted.

When testing the different magneto components, it is important to take into consideration that reading vary according to the force applied onto the manual starter. It is therefore important to employ enough force upon each trial.

It is recommended to proceed 3 times with the test. Each reading must be within the range indicated in the corresponding table. If the reading is too low, the part is considered to be defective and must be replaced.

For best results, use the multimeter Fluke 111 (P/N 529 035 868).



529 035 868

Place the selector switch of the multimeter to the appropriate position for the tests.

It is difficult to make a diagnostic in the case of intermittent ignition problems. Thus, problems occurring only when the engine operating temperature is normal must be checked in similar conditions.

In most cases when problems are caused by temperature or vibrations, these can only be solved by replacing parts. Most problems cannot be detected when the engine is stopped.

As a matter of fact, more than one component can be defective. As a result, if the problem remains although a part was replaced, start over the whole verification from the beginning in order to identify the other defective component.

PROCEDURES

FUSE

Make sure the charging system fuse besides battery is in good condition. If the fuse tests good, continue with the next tests.

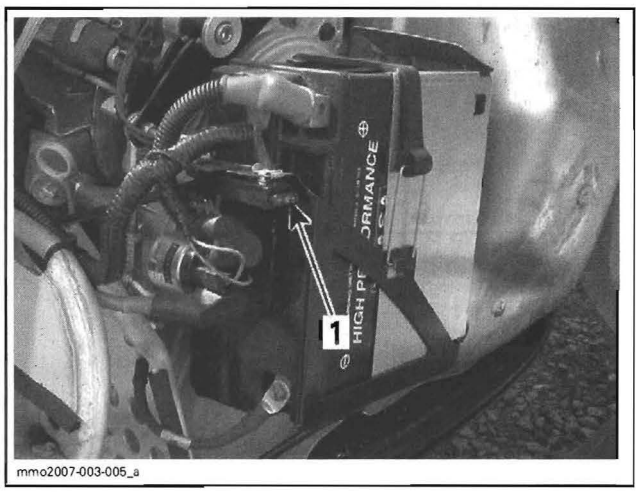

1. Charging system fuse

NOTE: The solenoid or the regulator/rectifier may be the cause of a burnt charging system fuse. To check, disconnect one at the time each component from the circuit. If fuse does not burn anymore with one of the component disconnected, replace defective part. If the fuse still burns, check for a defective accessory or wire in harness.

CAUTION: With the regulator/rectifier disconnected, do not race engine to avoid damage to lights and accessories.

VOLTAGE REGULATOR/ RECTIFIER

Continuity Test

Due to internal circuitry, there is no static test available to check continuity.

DC Current Test

300F, 550F Electric Start Models and V800 Models

Use an Snap-on inductive ammeter (P/N MT110) and place it over the RED wire going to charging system fuse.

Proceed as follows:

- Start engine.
- Read current.

MODELS	TEST ENGINE SPEED	CURRENT
300F and 550F	5000 RPM	approx. 2 - 4 A
V800	4000 RPM	approx. 3 - 7 A

- If current is below specification, check magneto (stator) output prior to concluding that rectifier is faulty.

DC Voltage Test

300F and 550F Electric Start Models

Proceed as follows:

- Set multimeter to Vdc scale.
- Connect multimeter to battery posts.

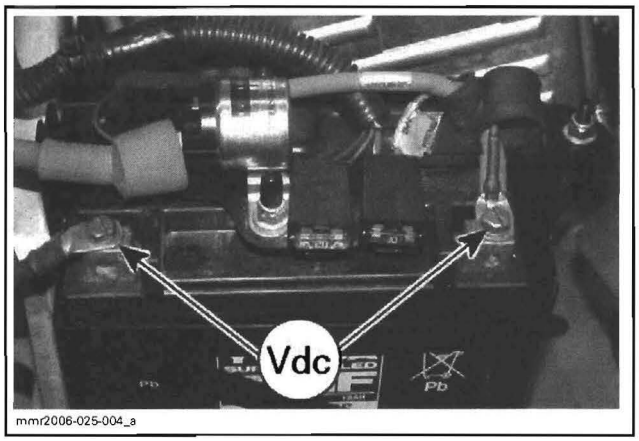

- Start engine.
- Read voltage.

TEST ENGINE SPEED	VOLTAGE
5000 RPM	Max. 14.7 Vdc

- If voltage is above specification, replace voltage regulator/rectifier.
- If voltage is below specification, check ignition switch, charging generator coil and wiring/connections.

NOTE: If the battery will not stay charged and charging system components test good, try a new voltage regulator/rectifier.

V800 Models

Proceed as follows:

- Set multimeter to Vdc scale.
- Connect multimeter to battery posts.

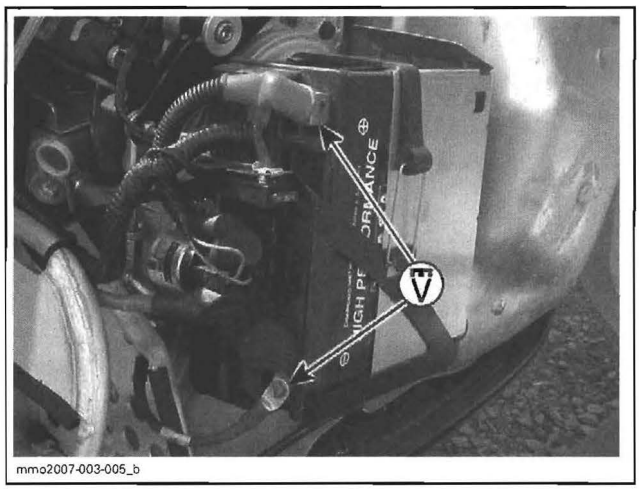

mmo2007-003-005_b

- Start engine.
- Read voltage.

TEST ENGINE SPEED	VOLTAGE
4000 RPM	Max. 14.4 - 15.2 Vdc

- If voltage is above specification, replace voltage regulator/rectifier.
- If voltage is below specification, check ignition switch, charging generator coil and wiring/connections.

NOTE: If the battery will not stay charged and charging system components test good, try a new voltage regulator/rectifier.

AC Voltage Test

300F and 550F Manual Start Models

NOTE: There is no rectifier in the voltage regulator on manual start models.

Proceed as follows:

- Set multimeter to Vac scale.
- Disconnect connector from hood.
- Connect multimeter to connector.

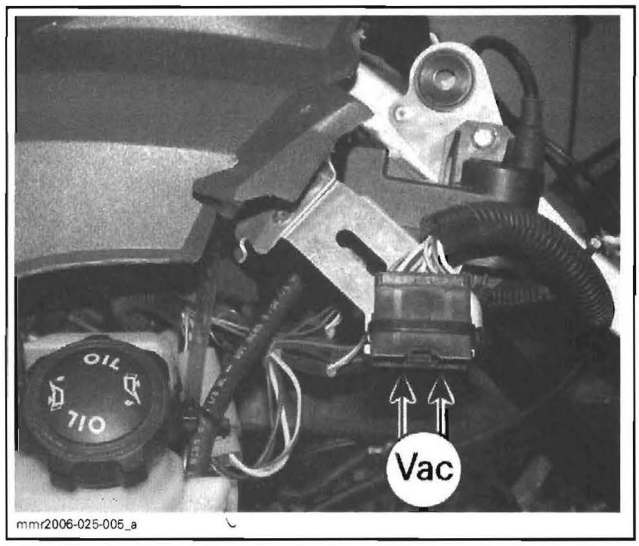

mmr2006-025-005_a

- Start engine.
- Read voltage.

TEST ENGINE SPEED	WIRE COLOR		VOLTAGE
5000 RPM	YELLOW	YELLOW/ BLACK	Max. 13.8 Vac

- If voltage is above specification, replace voltage regulator.
- If voltage is below specification, check lighting generator coil and wiring/connections. If good, try a new voltage regulator.

Regulator/Rectifier Removal

Disconnect battery (if so equipped).

Unplug the voltage regulator/rectifier connector.

Remove retaining screws.

Regulator/Rectifier Installation

The installation is the reverse of the removal procedure.

Torque voltage regulator/rectifier screws to 5 N•m (44 lbf•**in**).

CHARGING GENERATOR COIL (stator)

Continuity Test

300F and 550F Models

Disconnect engine connector.

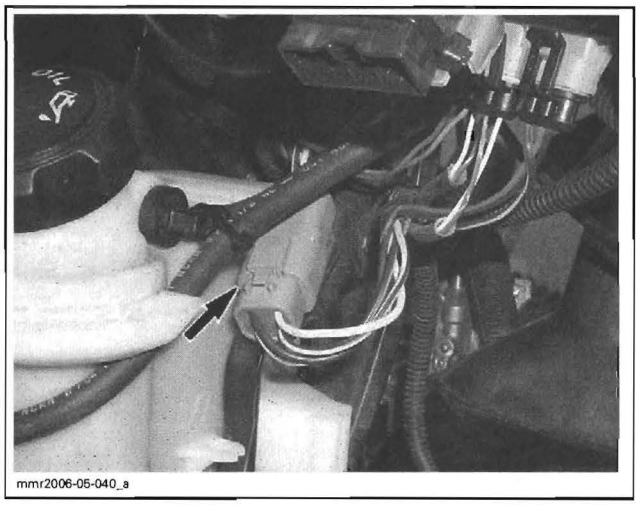
mmr2006-05-040_a

Set multimeter to Ω.

Read the resistance as follows.

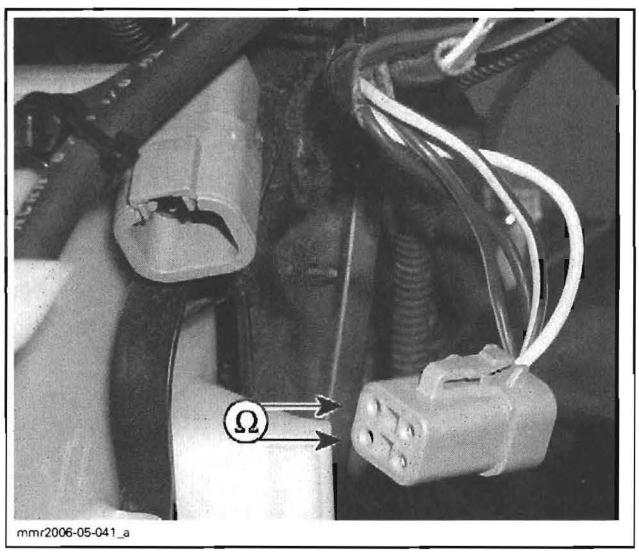

mmr2006-05-041_a

WIRE COLOR		RESISTANCE @ 20°C (69°F)
YELLOW	YELLOW/BLACK	0 - 0.6 Ω

If resistance is out of specification, replace stator.

Re-plug connector properly.

V800 Models

NOTE: To ease access, muffler may be removed.

Disconnect magneto wiring harness connector.

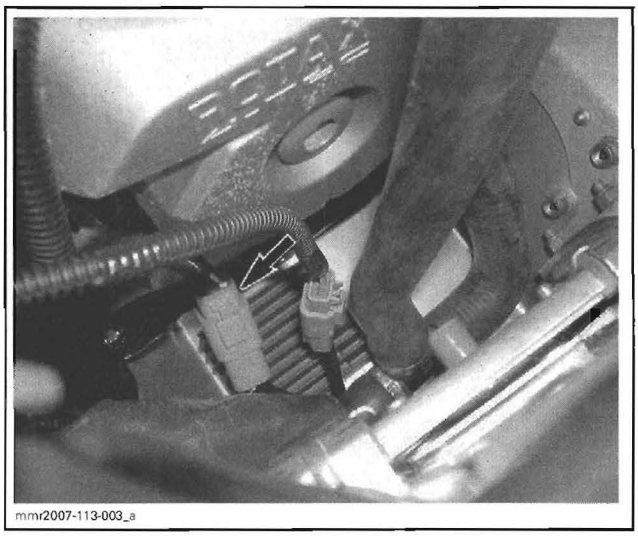
mmr2007-113-003_a

Install the magneto harness adapter (P/N 529 036 062) on magneto connector. Leave the other connector unplugged.

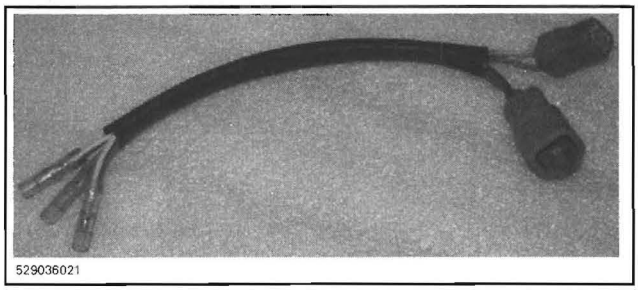
529036021

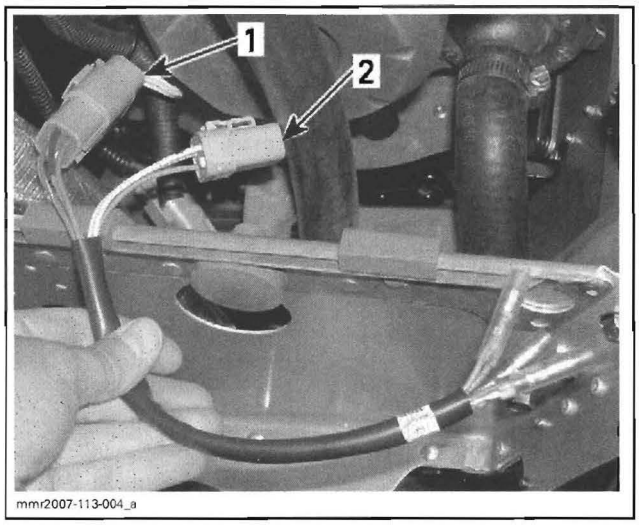

mmr2007-113-004_a

1. Magneto connector
2. Leave this tool connector unplugged

Set multimeter to Ω.

Connect multimeter between YELLOW wires.

Read resistance as follows.

TERMINAL	RESISTANCE @ 20°C (69°F)
1 and 2	0.1 - 1 Ω
1 and 3	
2 and 3	

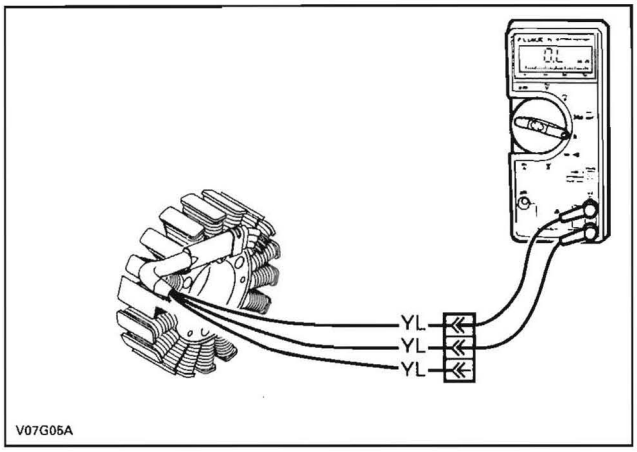

TYPICAL

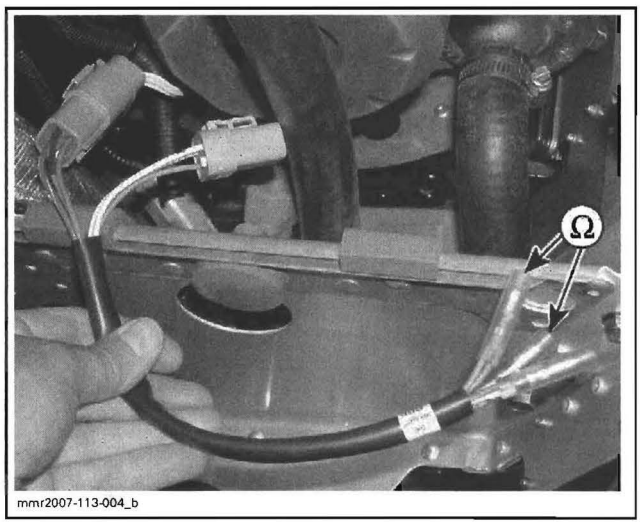

If any reading is out of specification, replace stator.

Insulation and Ground Continuity Test

300F and 550F Models

Disconnect engine connector.

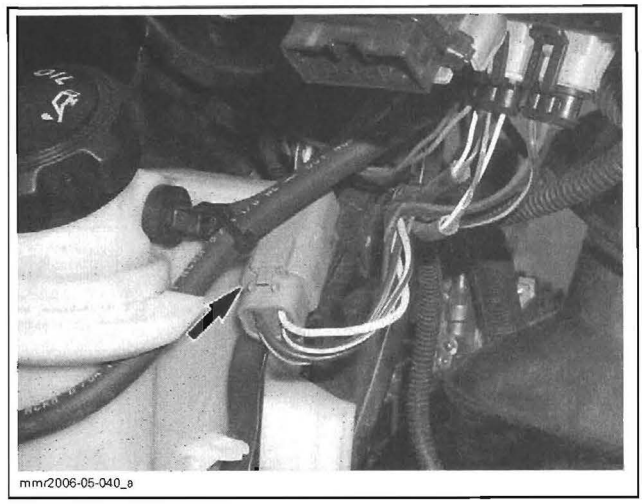

Set multimeter to Ω.

Read resistance as follows.

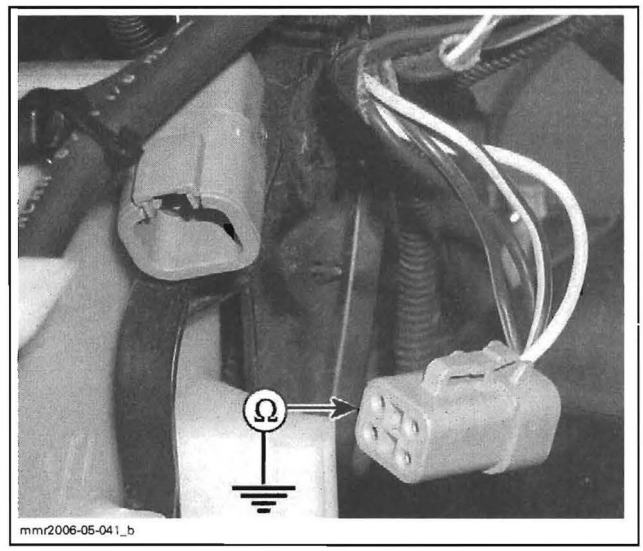

MULTIMETER PROBE LOCATION		RESISTANCE @ 20°C (69°F)
YELLOW wire	Engine ground	0L (open circuit)
BLACK wire		0 - 0.5 Ω

- If results are out of specification, the generator coil and/or the wiring need to be repaired/replaced.
- Re-plug connector properly.

V800 Models

Install the magneto harness adapter. See *CONTINUITY TEST* above for procedure.

Set multimeter to Ω.

Connect multimeter between any YELLOW wire and engine ground.

Read resistance.

PROBE	RESISTANCE @ 20°C (69°F)
Any YELLOW wire and engine ground	Infinity (open circuit)

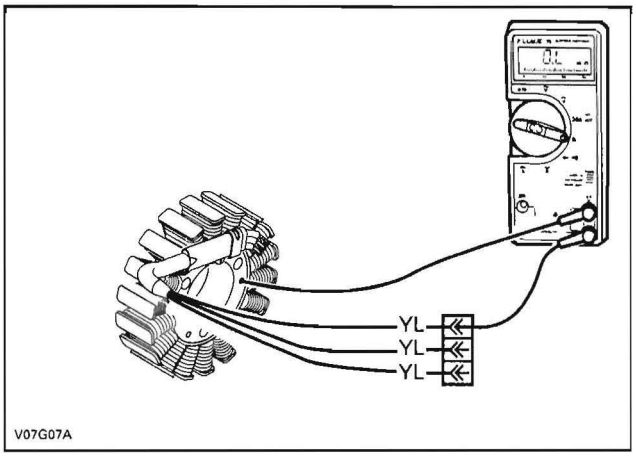

TYPICAL

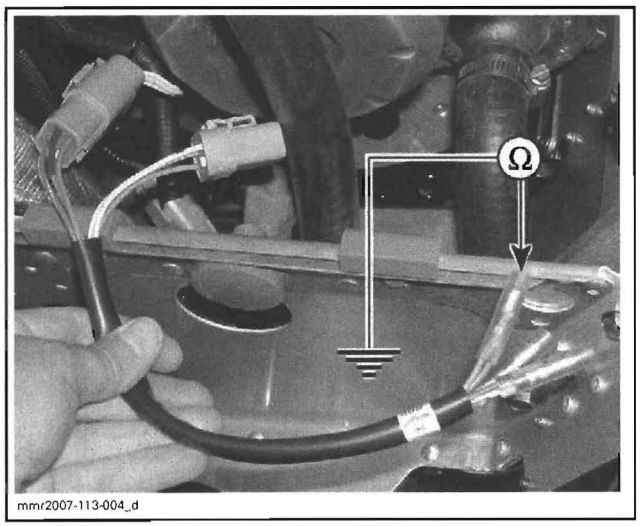

If there is a resistance or continuity, the stator coils and/or the wiring is grounded and need to be repaired or replaced.

Re-plug connectors properly.

AC Voltage Test

300F and 550F Models

– Disconnect the voltage regulator/rectifier connector.

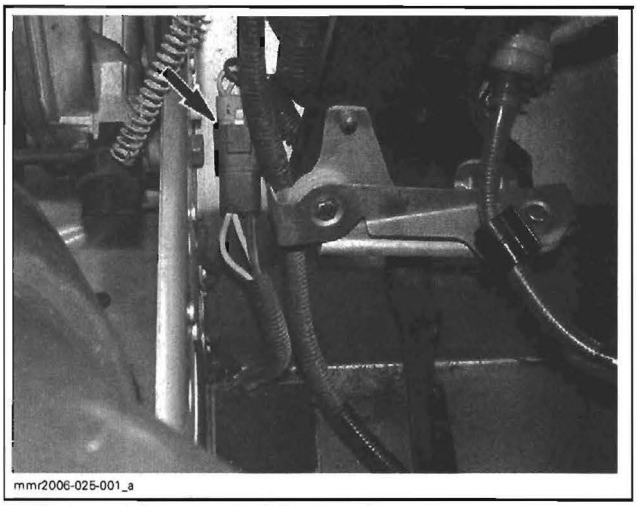

– Set multimeter to Vac scale.
– Manually crank engine and read the voltage as follows. Repeat the test 3 times.

CAUTION: Do not start engine with voltage regulator/rectifier disconnected. Lights and accessories might be damaged.

WIRE COLOR		VOLTAGE
YELLOW	YELLOW/BLACK	3 - 7 Vac

– If voltage is lower than specification, replace generator coil.
– Re-plug connector properly.

V800 Models

Disconnect voltage regulator/rectifier connectors.

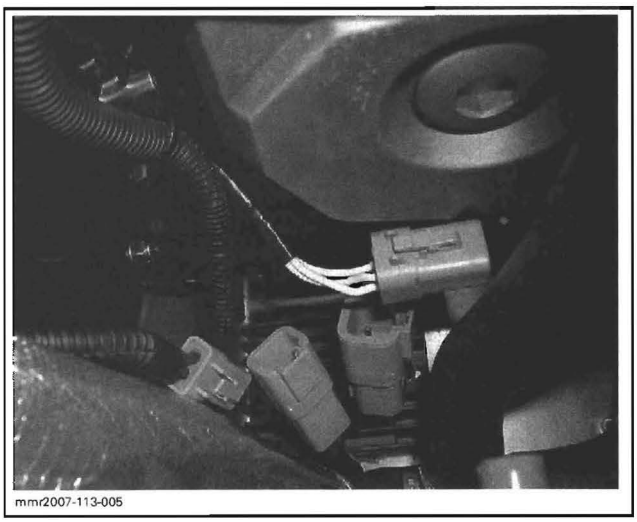

Install the magneto harness adapter (P/N 529 036 062) on magneto connector. Leave the other connector unplugged.

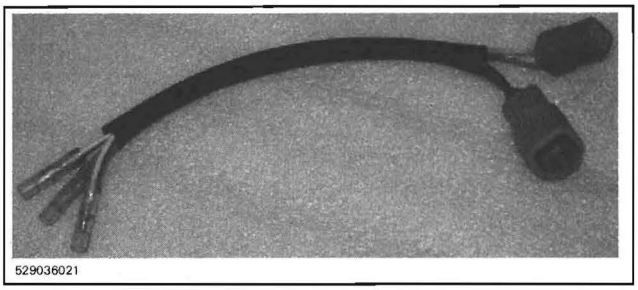
529036021

Set multimeter to Vac scale.

Connect multimeter between YELLOW wires.

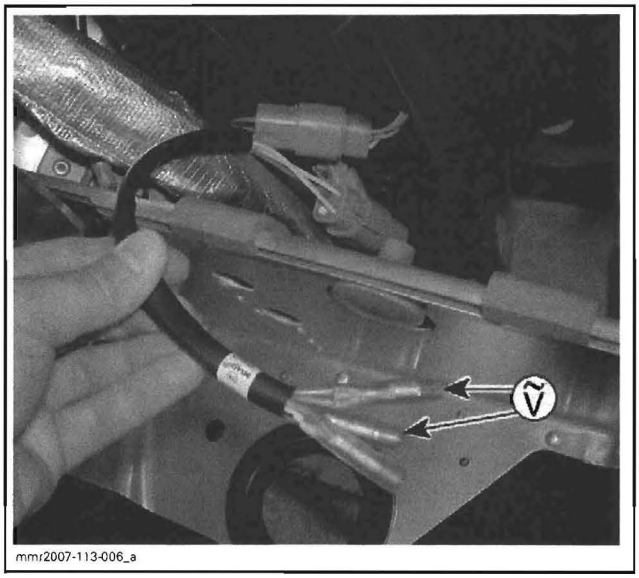
mmr2007-113-006_a

MUFFLER REMOVED FOR CLARITY PURPOSE ONLY

Start engine.

Read voltage as follows.

TEST ENGINE SPEED	TERMINAL	VOLTAGE
4000 RPM	1 and 2	Approx. 10 - 25 Vac
	1 and 3	
	2 and 3	

If voltage is lower than specification, replace stator.

Reconnect voltage regulator/rectifier connectors.

BATTERY

General

Sealed valve regulated lead acid (VRLA) battery are used. They are non-spillable and maintenance reduced — no electrolyte level to be checked and readjusted. No ventilation tube is attached to the battery.

MODEL	SUPPLIER P/N	BRP P/N
300F/550F	YTX20L-BS	515 175 642
V800	YTX24L-BS	515 175 895

Removal

⚠ WARNING

Battery BLACK (–) cable must always be disconnected first and connected last.

⚠ WARNING

Never charge or boost battery while installed on vehicle.

Open right side panel of vehicle.

Disconnect BLACK (–) cable end from the terminal.

Slide off rubber boot from RED (+) cable and disconnect it.

300F and 550F Models

Unscrew the bracket retaining nut and lift bracket to remove it.

Put bracket aside.

Remove battery.

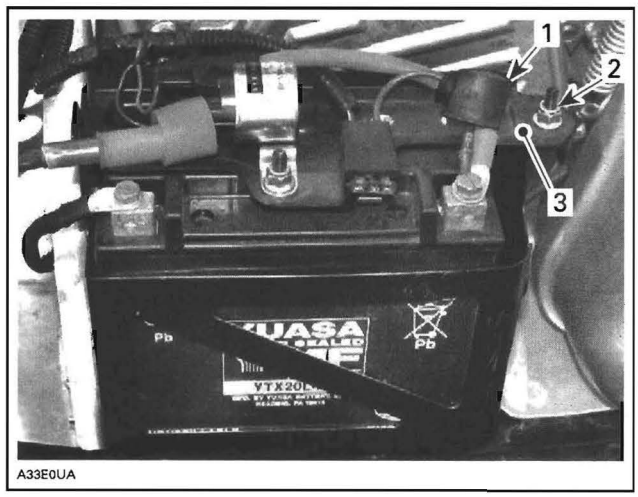

A33E0UA

1. *Rubber boot of RED (+) cable terminal*
2. *Bracket retaining nut*
3. *Battery bracket*

V800 Models

Unfasten strap.

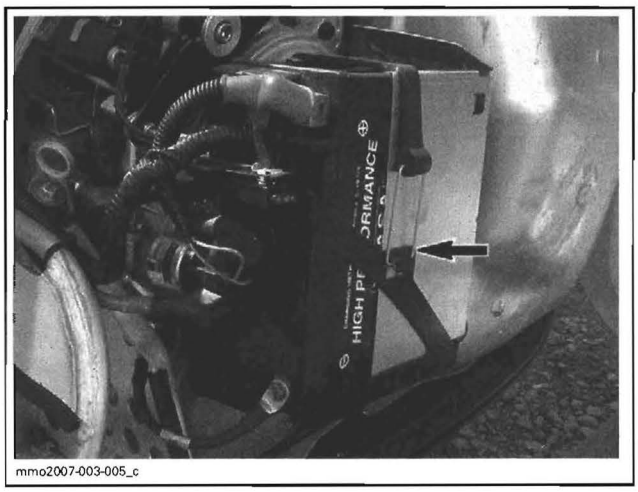

Remove battery.

All Models

CAUTION: Should any electrolyte spillage occur, immediately wash off with a solution of baking soda and water to prevent damage to vehicle components.

Cleaning

Clean the battery, battery casing, cables and battery posts using a solution of baking soda and water.

Remove corrosion from battery cable terminals and battery posts using a firm wire brush. Battery top should be cleaned by soft brush and any grease-cutting soap or baking soda solution.

Inspection

Visually inspect battery casing for cracks, leaks or other possible damage. Discoloration, warping or raised top, indicates that battery has overheated or been overcharged. If casting is damaged, replace battery and thoroughly clean battery tray and close area with water and baking soda.

⚠ WARNING

Should the battery casing be damaged, wear a suitable pair of non-absorbent gloves when removing the battery by hand.

Inspect battery posts for security of mounting.

Battery Charge Testing

Voltmeter Test

NOTE: To determine the battery state of charge, these sealed batteries have to be tested with a voltmeter. They also need to be tested when their voltage is stabilized. Disconnect battery to have open connectors and wait 1 - 2 hours prior to reading the voltage. The same condition is required after a battery has been charged.

Batteries with a voltage above 12.8 V do not need to be charged.

Batteries with a voltage of 12.8 V and below need to be charged. Refer to *BATTERY CHARGING* below.

Battery Storage

CAUTION: A discharged battery will freeze and it may damage its casing. A damaged casing will allow electrolyte spillage that may damage surrounding parts.

Disconnect and remove battery from the vehicle.

The battery must always be stored in fully charged condition.

Clean battery terminals and cable connections using a wire brush. Apply a light coat of silicone dielectric grease (P/N 293 550 004) or petroleum jelly on terminals.

Clean battery casing using a solution of baking soda and water. Rinse battery with clear water and dry well using a clean cloth.

Charge the battery every month if stored at temperature **below** 15°C (60°F).

Charge the battery every two week if stored at temperature **above** 15°C (60°F).

Activation of New Battery

Refer to the instructions provided with the battery.

Battery Charging

⚠ WARNING

Always wear safety glasses and charge in a ventilated area. Never charge or boost battery while installed on vehicle. Do not open the sealed caps during charging. Do not place battery near open flame.

CAUTION: If battery becomes hot, stop charging and allow it to cool before continuing.

NOTE: Sealed VRLA batteries have an internal safety valve. If battery pressure increases due to overcharging, the valve opens to release excess pressure, preventing battery damage.

Perform *BATTERY CHARGE TESTING* above then proceed as described here.

An automatic charger is the fastest and most convenient way for error-proof charging.

When using a constant current charger, charge battery according to the chart below.

Battery Voltage Below 12.8 V and Above 11.5 V

STANDARD CHARGING (recommended)		
BATTERY TYPE	TIME	CHARGE
YTX20L-BS	4 - 9 hours	2 A
YTX24L-BS	5 - 10 hours	

QUICK CHARGING		
BATTERY TYPE	TIME	CHARGE
YTX20L-BS	50 minutes	10 A
YTX24L-BS	60 minutes	

Battery Voltage Below 11.5 V

Batteries with voltage below 11.5 V requires special procedures to recharge and are not prone to accept charging. In charging an over discharged battery, its internal resistance may be too high to charge at a normal charging voltage. Therefore, it may be necessary to raise the voltage of the battery initially to 25 V as a maximum, and charge for approximately 5 minutes.

If the charger ammeter shows no change in current after 5 minutes, you need a new battery. Current flowing into the battery at high voltage can become excessive. Monitor amperage and adjust voltage as necessary to keep current at the battery's standard amp rating. Charge for approximately 20 hours.

Installation

Reinstall battery and secure bracket properly (strap on V800 models).

Connect RED (+) cable it to positive battery terminal. Also connect RED wire (on electric start models).

Connect BLACK (–) cable LAST.

⚠ WARNING

Battery BLACK (–) cable must always be disconnected first and connected last.

⚠ WARNING

Never charge or boost battery while installed on vehicle.

Cover the RED (+) terminal with rubber boot.

Apply silicone dielectric grease (P/N 293 550 004) on battery posts and connectors.

STARTING SYSTEM (300F/550F)

SERVICE TOOLS

Description	Part Number	Page
multimeter Fluke 111	529 035 868	401

SERVICE TOOLS – OTHER SUPPLIER

Description	Part Number	Page
Snap-on remote starter solenoid switch	MT302A	401

SERVICE PRODUCTS

Description	Part Number	Page
synthetic grease	413 711 500	405, 408

STARTER

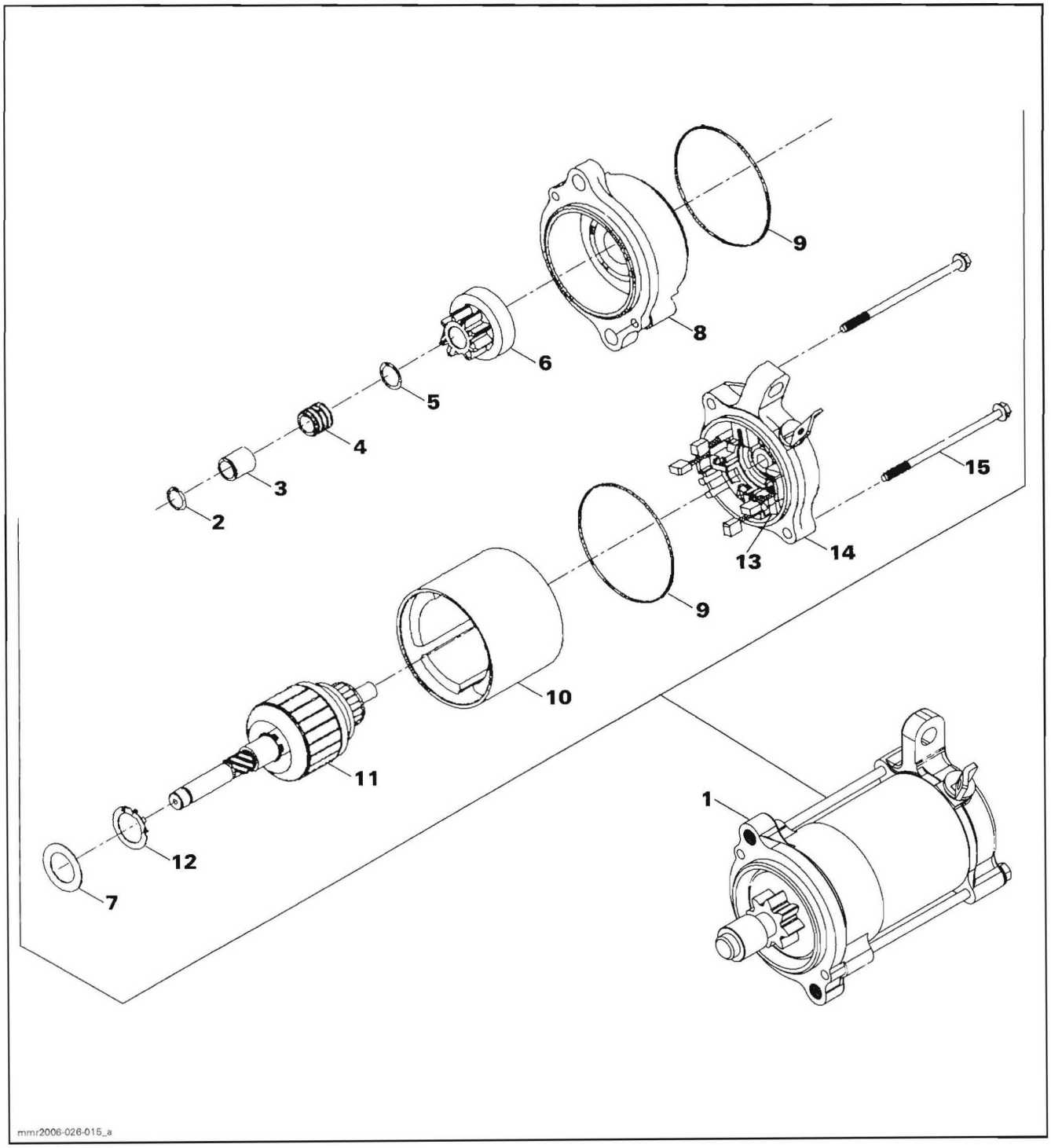

GENERAL

For best testing results, use the multimeter Fluke 111 (P/N 529 035 868).



When the ignition switch is turned to start, a current is sent to the starting solenoid. The battery then supplies current to the starter through the starting solenoid to crank the engine.

In case of problems, first ensure the problem is not related to engine mechanical components. If not, test the starting system.

Causes of problems are not necessarily related to starter but may be due to a burnt fuse, faulty battery, ignition switch, starting solenoid and electrical cables and connections. Check all connections, harnesses and wires. Tighten any loose connections. Replace any chafed wires.

DIAGNOSTIC

STARTING SYSTEM TEST

Use a Snap-on remote starter solenoid switch (P/N MT302A).

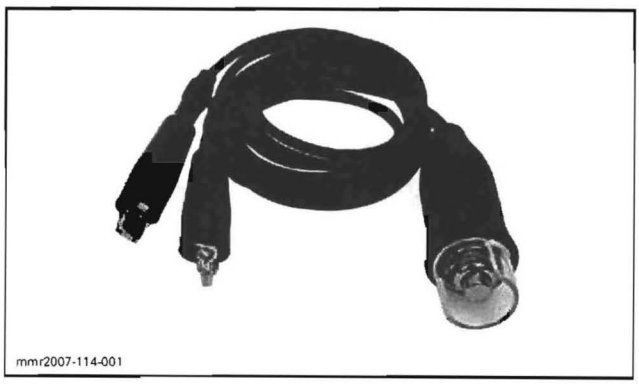

Carefully connect clips to solenoid posts.

⚠ WARNING

Pay attention to avoid sparks.

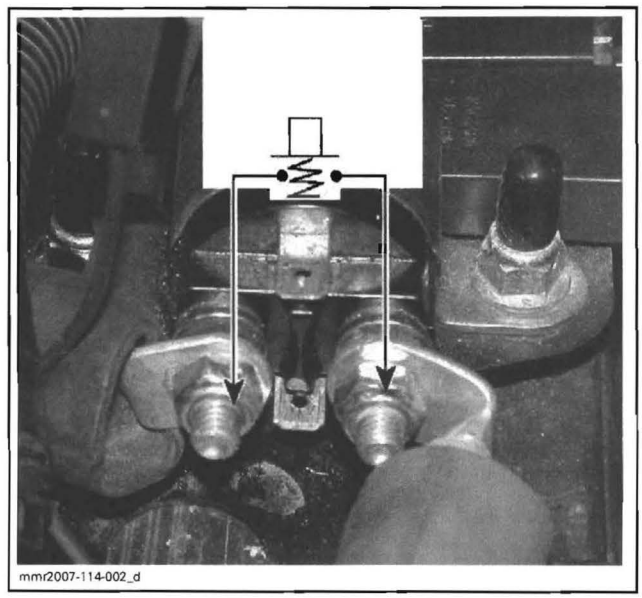

Press and hold switch.

If engine does not crank or crank slowly, check the following:
- battery
- starter and battery cables/connections
- electric starter.

If engine does crank, check the following:
- charging system fuse
- ignition switch
- starting solenoid.

PROCEDURES

FUSES

Make sure the charging system fuse (with RED wires) on battery is in good condition. If the fuse tests good, continue with the next tests.

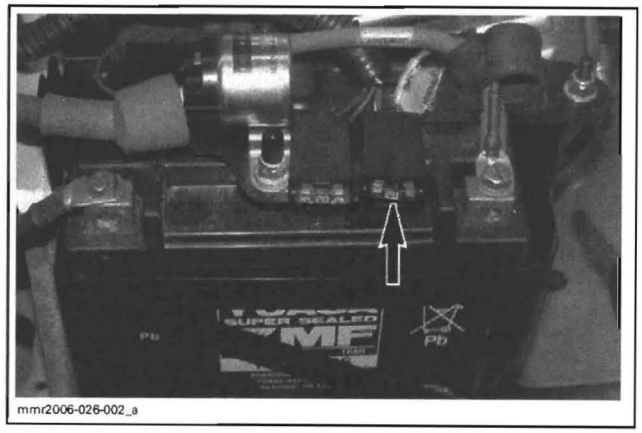

NOTE: The solenoid may be the cause of a burnt fuse. If the solenoid tests good, one of the accessory may be defective.

BATTERY

Refer to *CHARGING SYSTEM* to check battery condition. If the test is good, continue with the next tests.

IGNITION SWITCH

Refer to *IGNITION SYSTEM.*

If the switch works correctly, continue with the next tests.

STARTING SOLENOID

General

Inspect connections and clean as necessary.

Solenoid Winding Power Supply

Disconnect connector with RED/GREEN wire from solenoid.

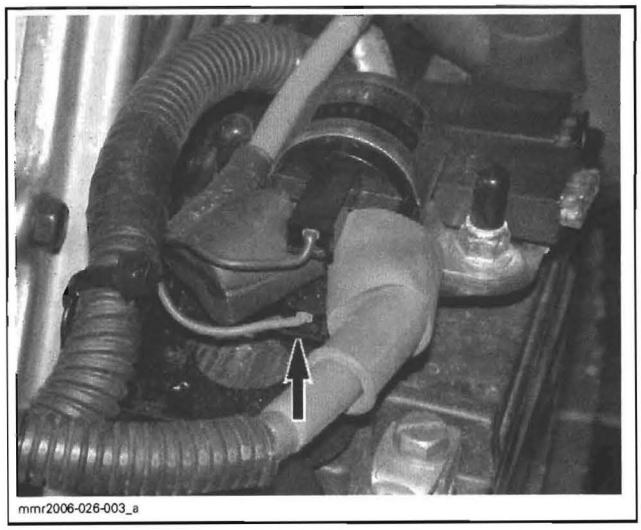
mmr2006-026-003_a

Check voltage as follows.

Either set engine cut-out switch to STOP or remove tether cord to prevent engine to run.

Turn ignition key to START and hold to take the measurement.

Read voltage.

SOLENOID CONNECTOR (harness side)	VOLTAGE
RED/GREEN with battery ground	12 Vdc

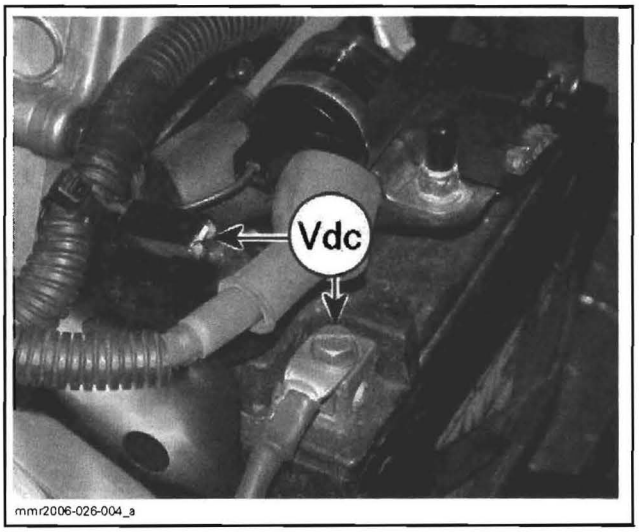

mmr2006-026-004_a

If voltage is not adequate, check continuity of wiring as follows.

Disconnect ignition switch connector.

CONNECTIONS		RESISTANCE
RED/GREEN wire at solenoid	RED/GREEN wire at ignition switch connector	Close to 0 Ω
RED/WHITE wire at ignition switch connector	RED wire (small wire) at battery post	

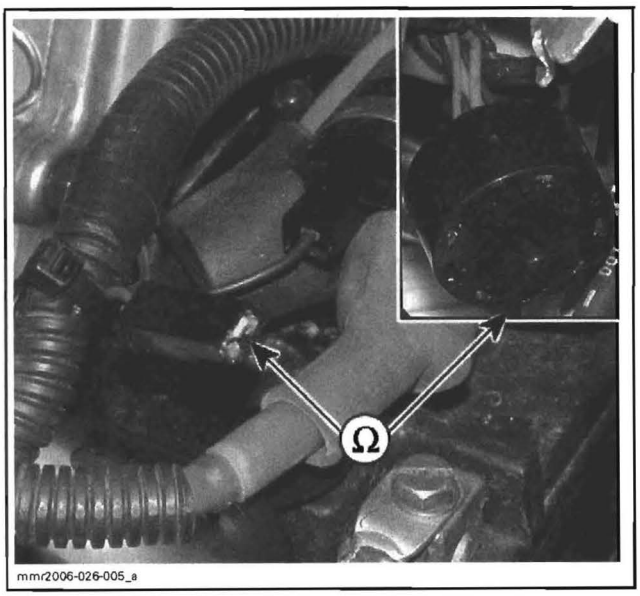

mmr2006-026-005_a

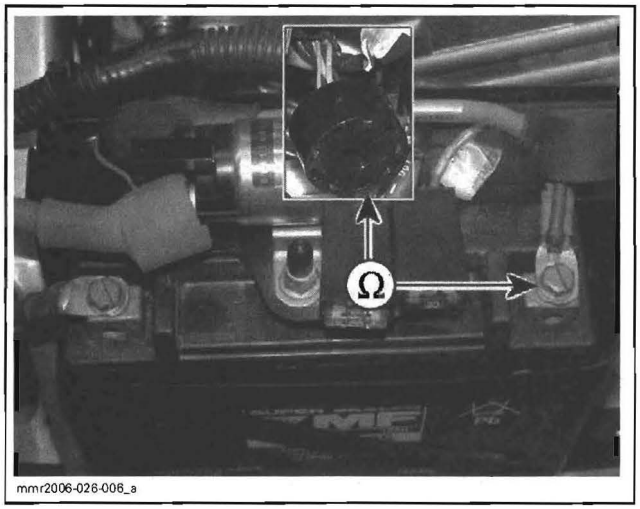

mmr2006-026-006_a

If wiring is good, do the following test.

Reconnect RED/GREEN terminal to solenoid and ignition switch connector.

Disconnect BLACK terminal from solenoid.

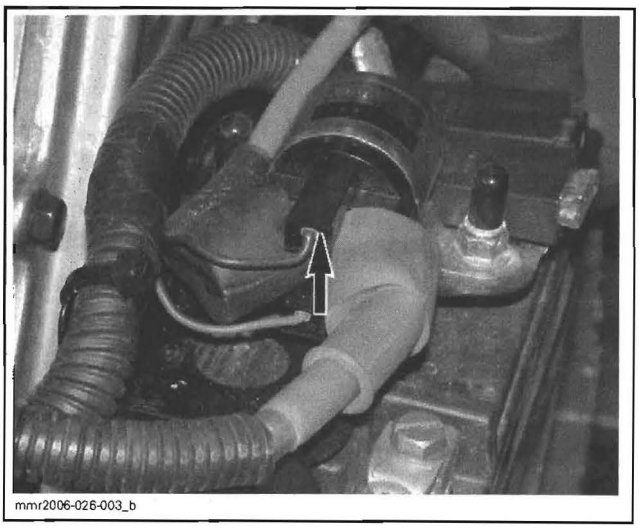
mmr2006-026-003_b

Connect a jumper wire between solenoid terminal and battery ground.


mmr2006-026-007_b

If solenoid works, check wiring/connectors for continuity of BLACK wire.

Reconnect BLACK wire to solenoid.

If solenoid does not work, test solenoid.

Static Test: Continuity

Disconnect terminals from solenoid.

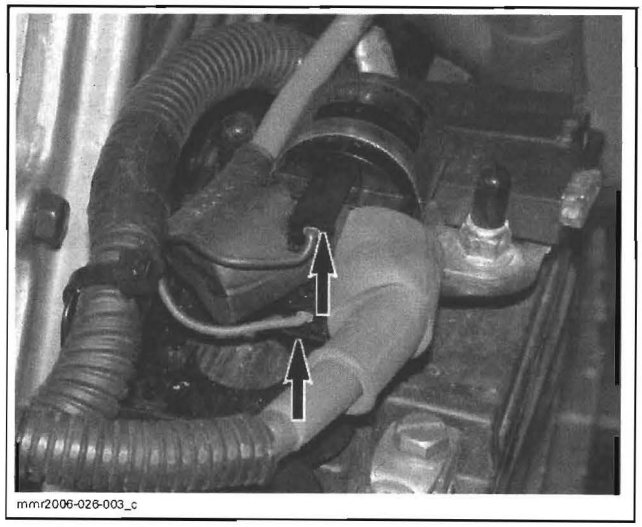
mmr2006-026-003_c

With a multimeter, check primary winding resistance as follows.

SOLENOID		MEASUREMENT
PRIMARY WINDING		RESISTANCE @ 20°C (68°F)
Terminal A	Terminal B	Approximately 7.5 Ω

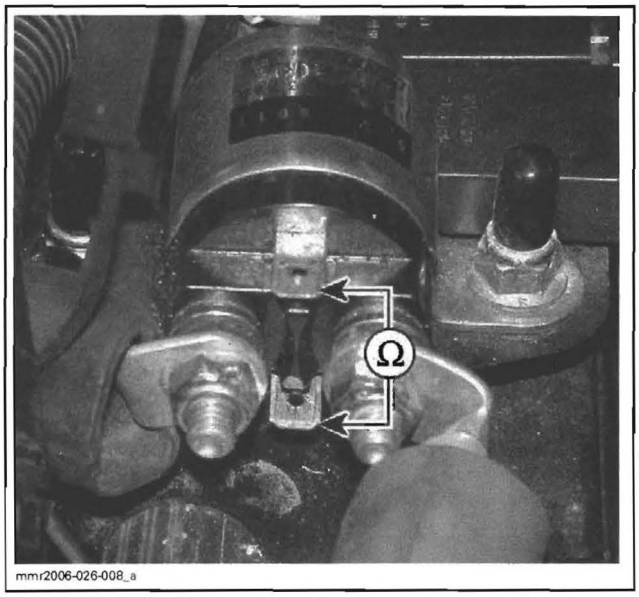

Check for stuck solenoid plunger. Disconnect battery ground cable and measure resistance as follows.

SOLENOID		MEASUREMENT
PLUNGER		RESISTANCE @ 20°C (68°F)
Battery post	Starter post	Open circuit

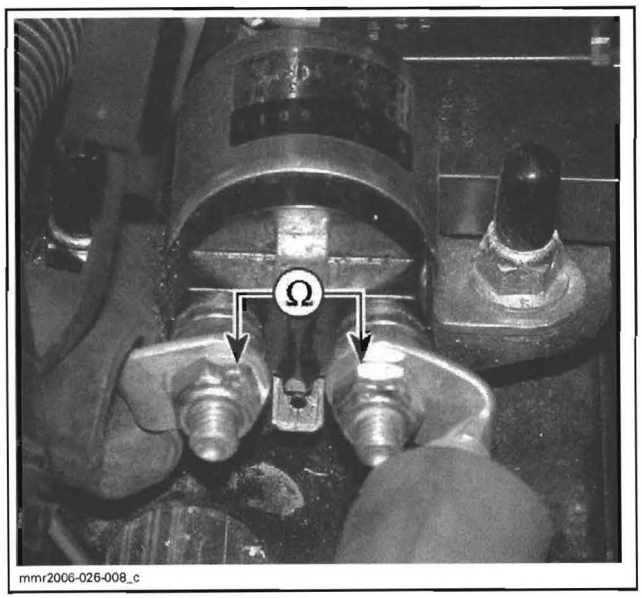

If any measurement is out of specification, replace solenoid.

Reconnect battery ground cable and solenoid connectors.

Dynamic Test

Either set engine cut-out switch to STOP or remove tether cord to prevent engine to run.

Turn ignition key to START and hold. While engine is cranking, measure the voltage drop as follows.

SOLENOID		MEASUREMENT
Battery post	Starter post	0.2 Vdc max.

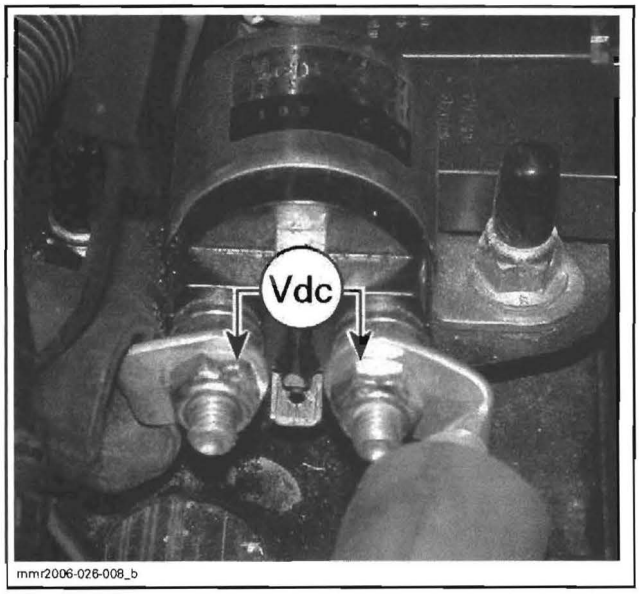

If voltage is out of specification, replace solenoid.

If solenoid tests good, check the electric starter.

ELECTRIC STARTER

Test

Either set engine cut-out switch to STOP or remove tether cord to prevent engine to run.

Using booster cables, carefully supply current from the battery directly to the starter. Connect the RED cable first to starter. Connect the remaining booster cable from the starter then to the battery.

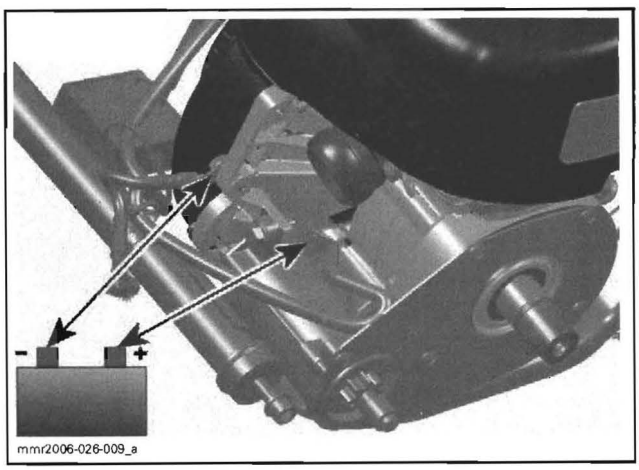

300F MODELS

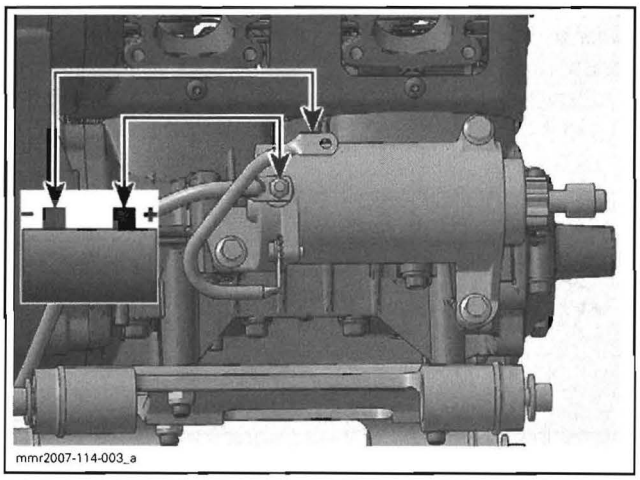

550F MODELS

If the starter turns, check wiring harness and connectors between battery and starter are in good condition.

If the starter does not turn, check for mechanical problem in the starter.

Removal

- Disconnect BLACK (-) cable from battery.
- Disconnect RED (+) cable from battery.

⚠ WARNING

Always disconnect BLACK (-) cable first and connect last.

300F Models

- Remove drive pulley. Refer to *DRIVE PULLEY.*
- Disconnect RED cable from starter.
- Remove screws as shown.

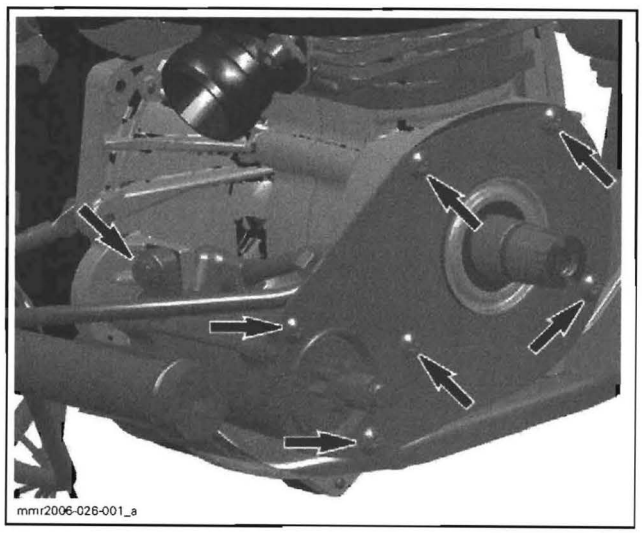

- Pull starter out.

550F Models

- Remove tuned pipe. Refer to *EXHAUST SYSTEM.*
- Disconnect cables from starter.
- Remove starter screws.

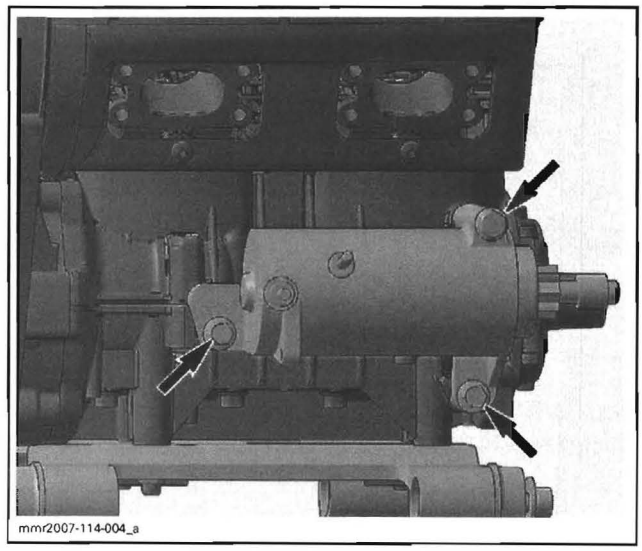

- Pull starter out.

Dissassembly

Before disassembling, trace index marks on starter housing **no. 10** and starter end housing **no. 8** to ease further assembly.

Remove starter through bolts **no. 15**. Separate end frame housing **no. 14** from starter housing **no. 10**. Withdraw starter housing from armature **no. 11**.

Brush holder **no. 13** can be removed from end frame housing **no. 14** by disconnecting the end frame attached brush from brush holder **no. 13**.

Check the radial play between the armature shaft and end frame bearing. Replace the end frame bearing or replace starter. If parts are in good condition then coat with synthetic grease (P/N 413 711 500) before reinstalling them.

Push back the collar **no. 3** using a screwdriver.

Remove snap ring **no. 2**. Remove collar **no. 3** and spring **no. 4**.

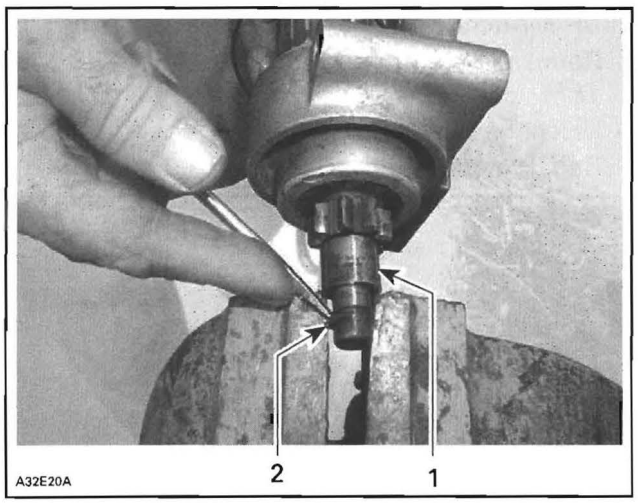

1. *Collar*
2. *Snap ring*

Turn starter clutch **no. 6** clockwise to remove it from armature assembly **no. 11**.

Pull housing from armature.

Cleaning

CAUTION: Yoke assembly and drive unit assembly must not be immersed in cleaning solvent.

Clean brushes and holders with a clean cloth soaked in solvent. Brushes must be dried thoroughly with a clean cloth.

Blow brush holders clean using compressed air.

⚠ WARNING

Always wear safety glasses when using compressed air.

Remove dirt, oil or grease from commutator using a clean cloth soaked in suitable solvent. Dry well using a clean and dry cloth.

Clean engine ring gear teeth and drive unit (clutch).

NOTE: Bushings or bearings must not be cleaned with grease dissolving agents.

Immerse all metal components in cleaning solution. Dry using a clean and dry cloth.

Inspection

Armature

NOTE: An ohmmeter may be used for the following testing procedures, except for the one concerning the shorted windings in the armature.

Check the commutator for roughness, burnt or scored surface. If necessary, turn the commutator on a lathe, enough to remove grime only.

Check the commutator for mica depth. If the depth is less than 0.20 mm (.008 in), undercut the mica. Be sure that no burrs are left and no copper dust remains between the segments after the undercutting operation is completed.

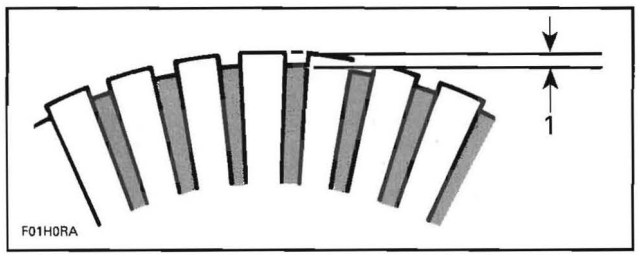

1. *Commutator undercut 0.20 mm (.008 in)*

Check the commutator out-of-round condition with V Blocks and an indicator. If the commutator out-of-round is more than 0.40 mm (.016 in), the commutator should be turned on a lathe.

Check commutator outer diameter. If less than specified value, replace.

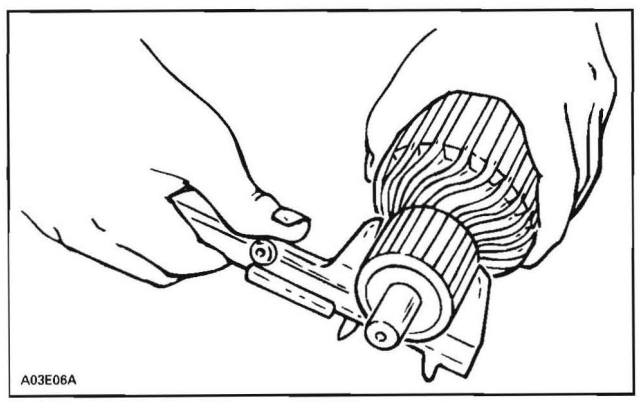

MODEL	WEAR LIMIT
All models	27 mm (1.063 in)

Test for Ground Circuit in the Armature

Use growler test probes. Check between armature core and the commutator bars. If growler lamp turns on, bars are grounded. If so, replace armature.

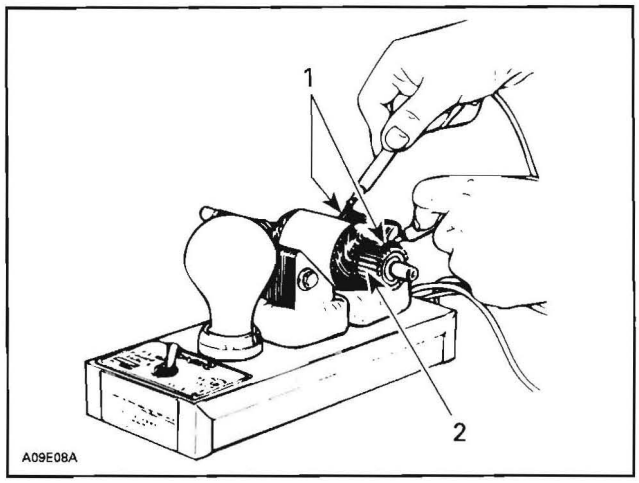

1. Test probes
2. Commutator bars

Test Armature for Shorted Winding

When the armature is rotated in the growler with a steel strip (hacksaw blade) held above it, the strip will vibrate over that area of the armature which has short circuit. Replace armature if so.

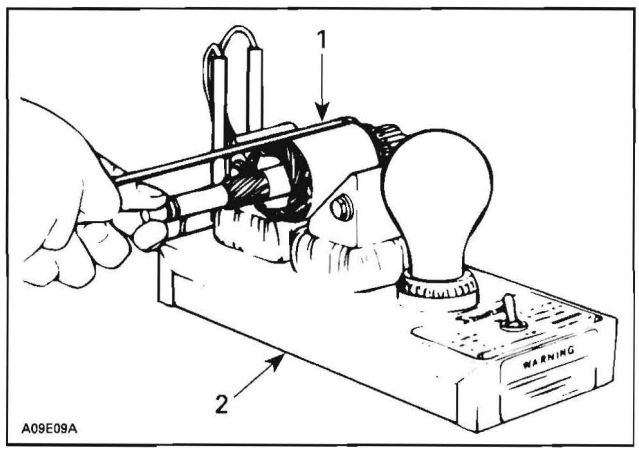

1. Steel strip (hack-saw blade)
2. Growler

Test the Armature for Open Circuit

Use growler test probes. Place one test probe on a commutator bar and the other test probe on the neighboring bar. Repeat this operation for all bars, moving one test probe at a time. If the growler lamp does not turn on, the armature circuit between these 2 bars is opened. The armature should be replaced or repaired; open circuits most often occur at the commutator riser where coils are soldered. (Burnt commutator bars are usually an indication of an open-circuit armature coil).

Brush Holder

Check the brush holder for insulation using growler test probes. Place one test probe on the insulated brush holder and the other test probe on the brush holder plate. If the growler lamp turns on, the brush holder has to be repaired or replaced.

Brush Length

Measure brush length. If less than the specified value, replace them.

MODEL	LENGTH	
	NEW	WEAR LIMIT
All	10 mm (.400 in)	6 mm (.236 in)

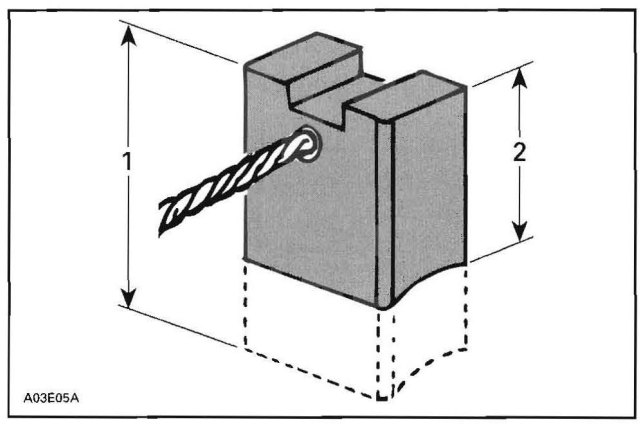

TYPICAL
1. New
2. Wear limit

End Housing

Check the mica insulation of the positive brush and also the roller bearing condition. Replace, if necessary.

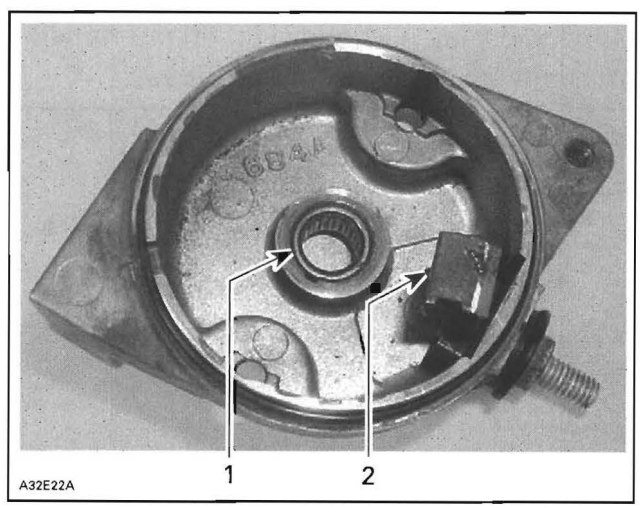

1. Roller bearing
2. Positive brush

Overrunning Clutch

The pinion of the overrunning clutch should turn smoothly in a clockwise direction, and should not slip in a counterclockwise direction. If defective, replace.

Check the pinion teeth for wear and damage. If defective, replace.

Assembly

Reverse the order of disassembly to reassemble starter. However, attention should be paid to the following operations.

Prior to assembling, coat sliding surfaces on armature shaft splines, overrunning clutch and bushing with synthetic grease (P/N 413 711 500).

After placing collar **no. 3** on armature shaft **no. 11**, fit new snap ring **no. 2** on armature shaft, then make sure that it is properly secured.

Slide collar **no. 3** over snap ring **no. 2** and secure in place by punching it at two or three places.

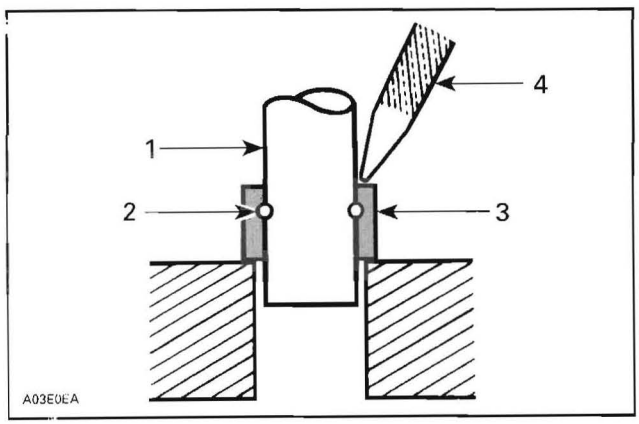

1. Armature shaft
2. Snap ring
3. Collar
4. Punch

Starter Housing Assembly and Starter Housing

Align previously traced indexing marks.

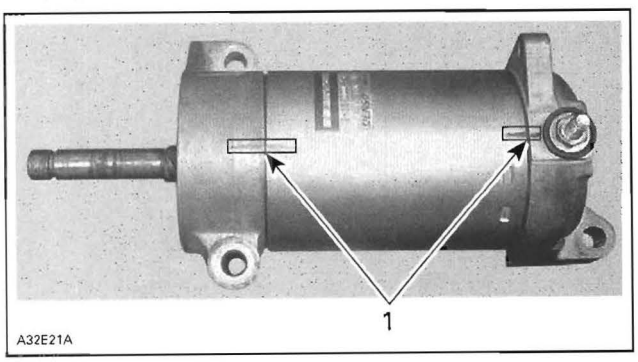

TYPICAL
1. Aligned indexing marks

Open brushes and slide over commutator.

Align end frame locating notch with yoke locating protrusion and properly sit brush holder **no. 13** into housing **no. 14**.

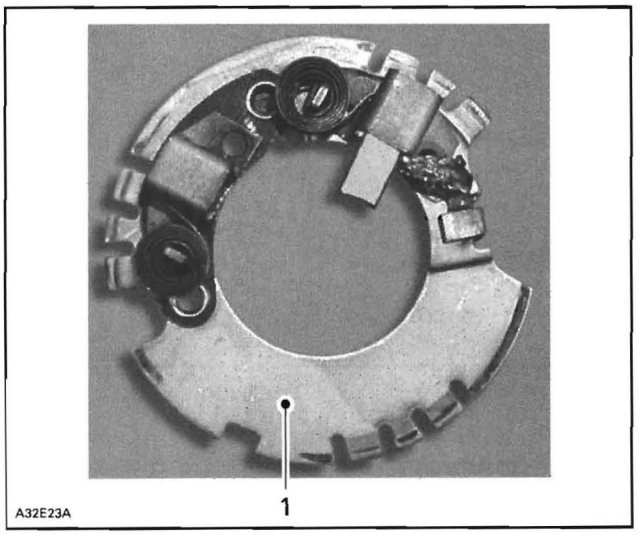

1. Brush holder

To ease end frame installation, retain brush holder with a small screwdriver while installing armature assembly.

CAUTION: Make sure to place two end housings on a flat surface before tightening the through bolts.

CAUTION: Make sure end frame fits perfectly on yoke.

Installation

Torque screws as shown.

300F Models

– Make sure that starter/support plate and engine mating surfaces are free of grime. Serious trouble may arise if starter is not properly aligned.

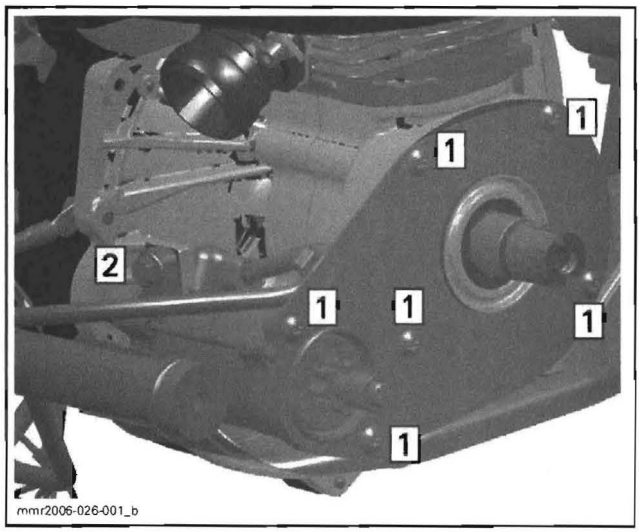

*Step 1: Torque to 16 N•m (142 lbf•**in**)*
*Step 2: Torque to 15 N•m (133 lbf•**in**)*

All Models

– Connect the RED battery cable to the large terminal of the starter.

⚠ WARNING

Always disconnect ground cable first and connect last.

– Torque large terminal nut as shown.

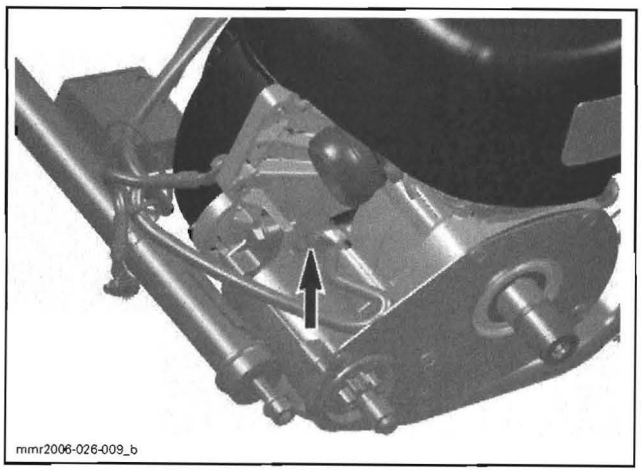

*300F MODELS— TORQUE TO 7 N•M (62 LBF•**IN**)*

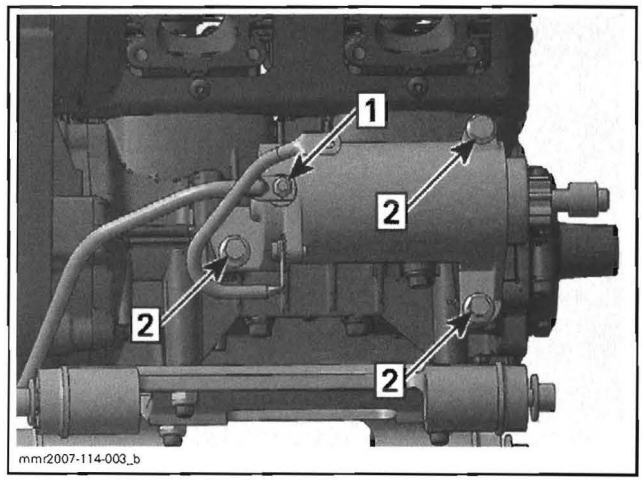

550F MODELS
1. *Torque to 7 N•m (62 lbf•**in**)*
2. *Torque to 15 N•m (133 lbf•**in**)*

STARTING SYSTEM (V800)

SERVICE TOOLS

Description	Part Number	Page
ECM adapter	420 277 010	411
engine lifting tool	529 036 022	417
multimeter Fluke 111	529 035 868	411

SERVICE TOOLS – OTHER SUPPLIER

Description	Part Number	Page
Snap-on remote starter solenoid switch	MT302A	412

SERVICE PRODUCTS

Description	Part Number	Page
dielectric grease	293 550 004	417

GENERAL

First ensure the problem is not related to engine mechanical components. If not, test the starting system.

Causes of problems are not necessarily related to starter but may be due to a burnt fuse, faulty battery, relay, ignition switch, engine stop switch, starting solenoid, electrical wires, connections or the ECM.

Check all connections, cables and wires. Tighten any loose connections. Replace any chafed wires/cables.

Tools

For most accurate measurements, use the multimeter Fluke 111 (P/N 529 035 868).



529 035 868

To probe the ECM connector terminals, use the ECM adapter (P/N 420 277 010) to prevent damaging terminals. Refer to *ENGINE MANAGEMENT* for more information.

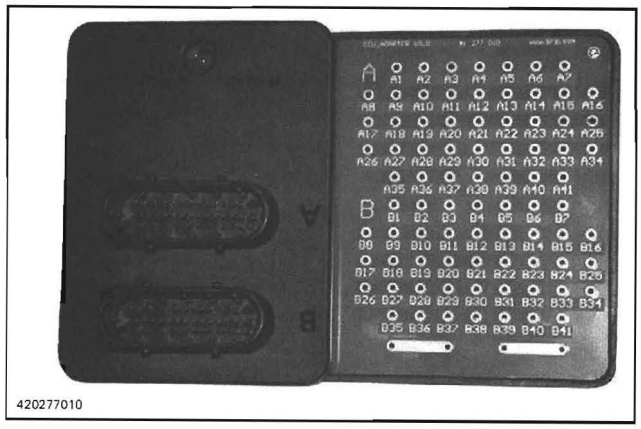

420277010

TROUBLESHOOTING

ENGINE CRANKING CONDITIONS

The following conditions must be met to allow engine cranking:

- engine stop switch in RUN position
- tether cap is on its post
- ECM is powered
- EMS tracking connector is connected

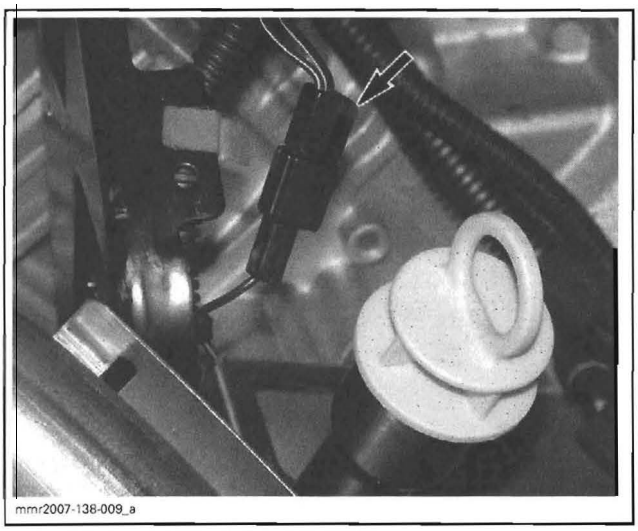

CONNECTOR BESIDES OIL DIPSTICK

– ignition switch turned to START and held.

STARTING SYSTEM TEST

First check battery condition. Refer to *CHARGING SYSTEM*.

Power Circuit Test

To quickly bypass starting solenoid and test the electric starter circuit (battery, cables and electric starter), do the following.

Use a Snap-on remote starter solenoid switch (P/N MT302A).

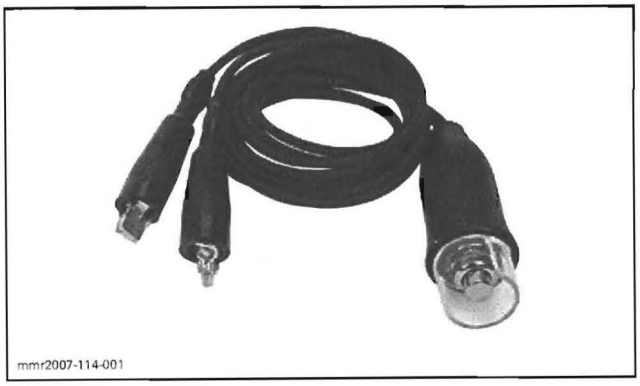

Carefully connect clips to of solenoid posts.

⚠ WARNING

Pay attention to avoid sparks.

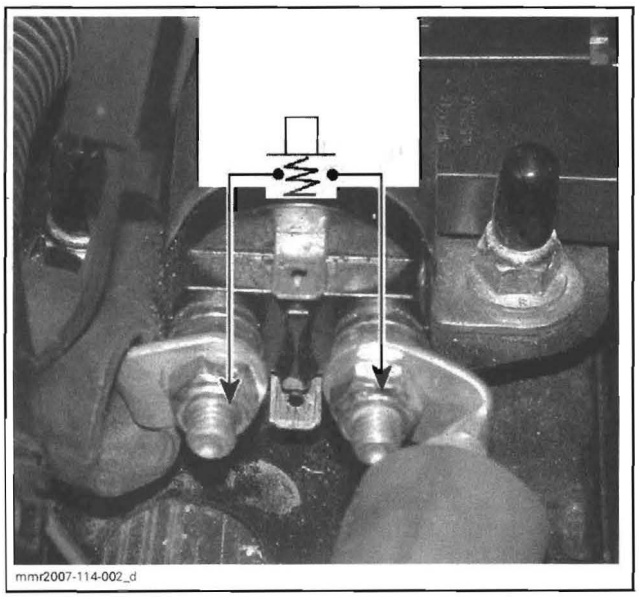

Press and hold tool switch.

If engine does not crank (or slowly cranks), check the following:
– starter and battery cables/connections
– electric starter.

If engine normally cranks, perform the *CONTROL CIRCUIT TEST*.

Control Circuit Test

Ensure both connectors are plugged to solenoid.

Install tether cord on its post and set cut-out switch to RUN.

Turn ignition key to START and hold it for the measurement.

Read voltage.

SOLENOID CIRCUIT TEST		VOLTAGE
ORANGE/BLACK wire (connected to solenoid)	Battery ground	Battery voltage

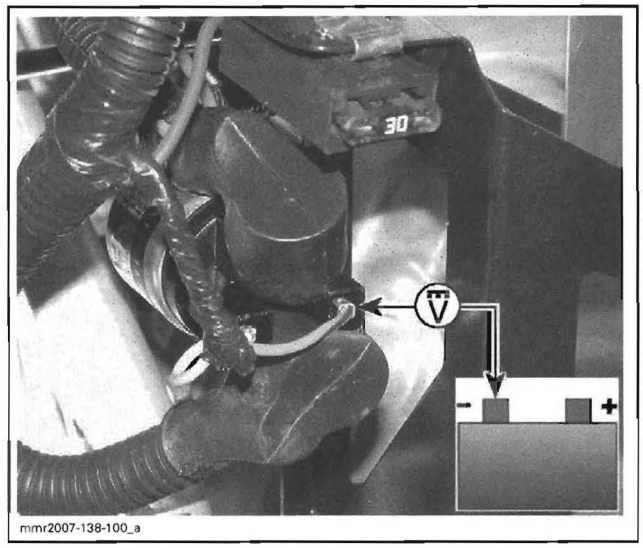

mmr2007-138-100_a

If voltage is adequate:
- It validates the supply circuit and solenoid winding are good.
- Ensure tether cord switch and cut-out switch are good. Refer to *IGNITION SYSTEM*.
- Perform the *ECM GROUND SWITCHING TEST* below.

If voltage is NOT adequate, disconnect the indicated wire from solenoid.

Read voltage as before.

SOLENOID CIRCUIT TEST		VOLTAGE
BEIGE wire	Battery ground	Battery voltage

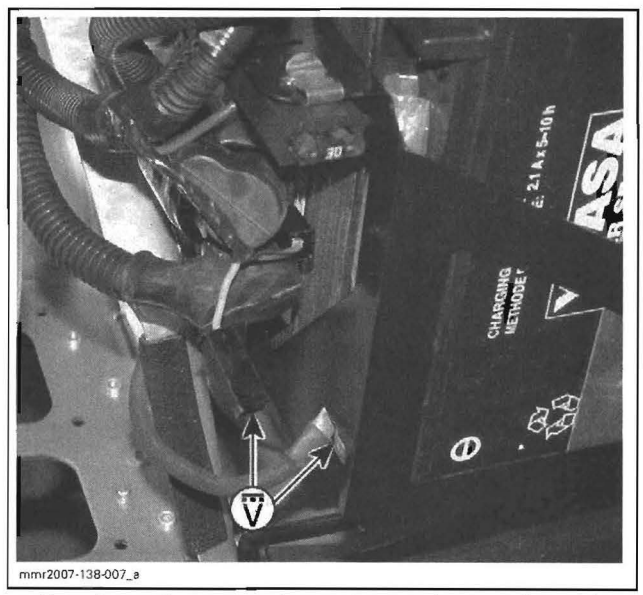

mmr2007-138-007_a

- If voltage is now adequate, replace solenoid.
- If voltage is NOT adequate, check supply circuit (relay R1, ignition switch and wiring/connectors).

ECM Ground Switching Test

NOTE: Tether cord and cut-out switch position do not matter for this test.

⚠ WARNING

Engine is likely to crank but will not run in this test. Pay attention to rotating parts.

Ensure both connectors are plugged to solenoid.

Install a jumper as indicated.

Turn ignition key to START and hold it for the measurement.

Read voltage.

JUMPER	
ORANGE/BLACK wire (connected to solenoid)	Battery ground

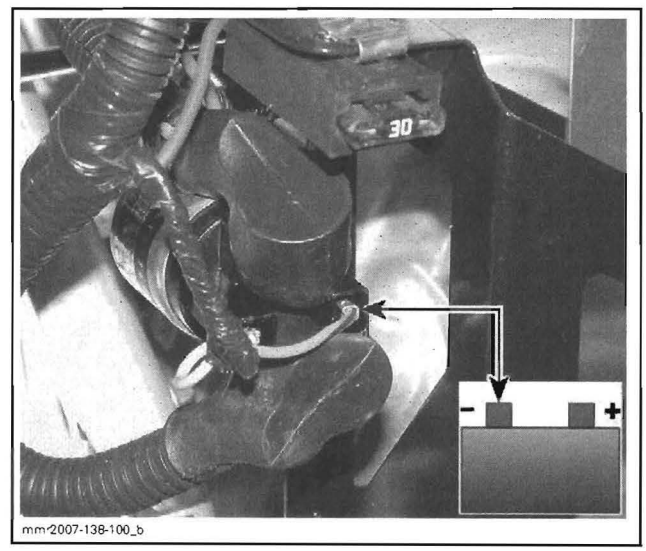

mmr2007-138-100_b

If starter turns, try a new ECM. Refer to *ENGINE MANAGEMENT*.

If solenoid does not engage, perform a solenoid dynamic test.

PROCEDURES

BATTERY

To check battery condition, refer to *CHARGING SYSTEM* section.

FUSES

Make sure the charging system fuse besides battery is in good condition. If the fuse tests good, continue with the next tests.

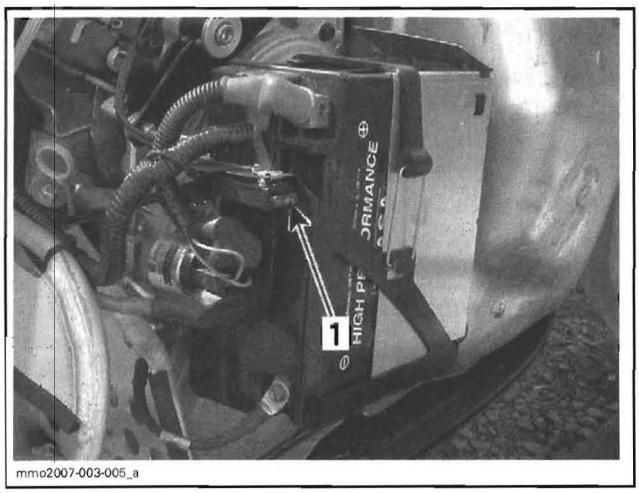

1. Charging system fuse

NOTE: The solenoid may be the cause of a burnt fuse. If the solenoid test good, one of the accessory may be defective.

DIODE

Diode Installation

First ensure diode is not reverted. If so, engine will not crank.

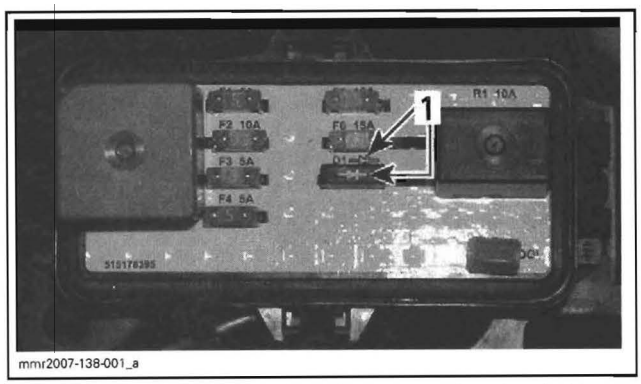

1. Symbol on diode in same direction as symbol on fuse holder

Diode Test

Test diode as follows.

Remove diode and lay down on a non-metallic table.

Set multimeter as shown.

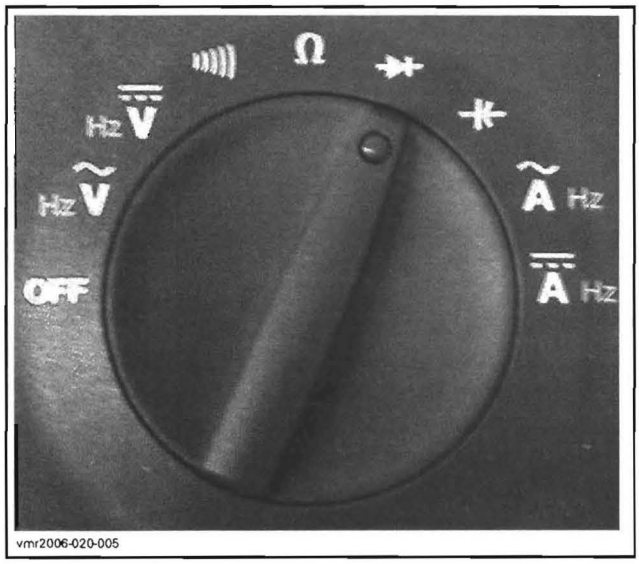

Probe diode paying attention to proper polarity.

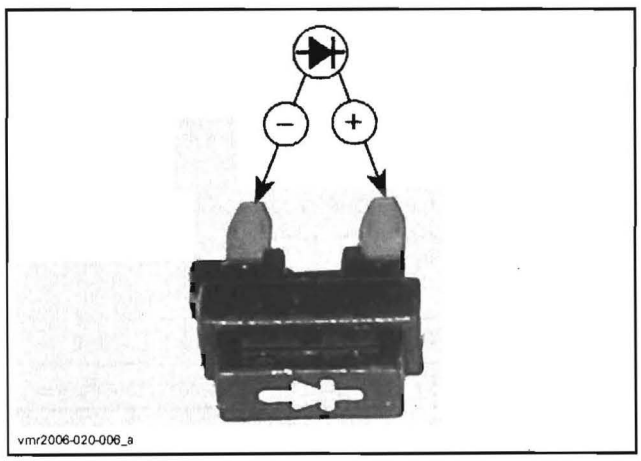

MUST BE OPEN CIRCUIT

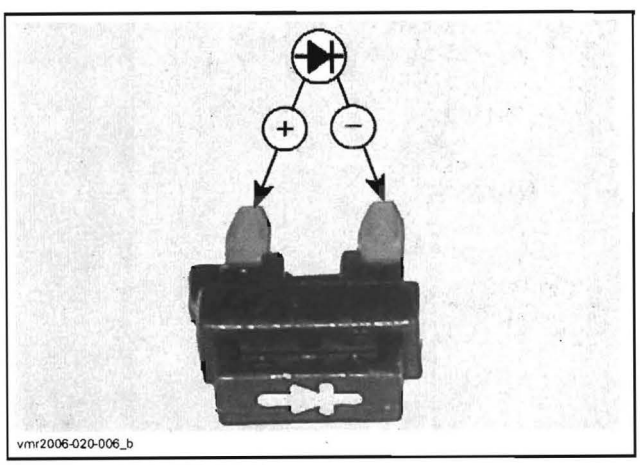

MUST BE AROUND 0.5 V

If diode fail any test, replace it.

NOTE: Ensure to install diode in the proper position.

ENGINE CONTROL MODULE (ECM)

ECM Initialization

To validate ECM initializes (turns on), refer to ignition switch in *IGNITION SYSTEM*.

TETHER CORD SWITCH AND ENGINE CUT-OUT SWITCH

Refer to *IGNITION SYSTEM*.

IGNITION SWITCH

If engine does not crank when turning it to START, test the switch. Refer to *IGNITION SYSTEM*.

STARTING SOLENOID

Inspect connections and clean as necessary.

Static Test: Continuity

Disconnect terminals from solenoid.

With a multimeter, check primary winding resistance as follows.

SOLENOID PRIMARY WINDING		RESISTANCE @ 20°C (68°F)
Terminal A	Terminal B	Approximately 7.5 Ω



Check for stuck solenoid plunger. Disconnect battery ground cable and measure resistance as follows.

SOLENOID PLUNGER		RESISTANCE
Battery post	Starter post	Open circuit (0L)

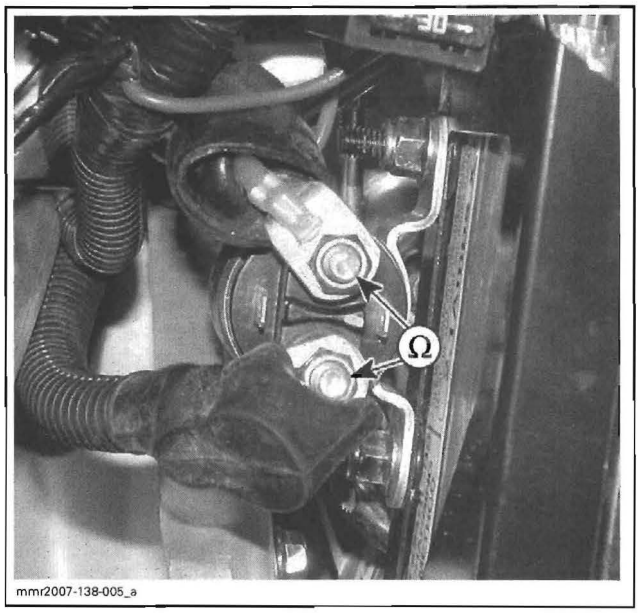

If any measurement is out of specification, replace solenoid.

Reconnect battery ground cable and solenoid connectors.

Dynamic Test

To prevent engine to run in the following test, fully squeeze and hold throttle to set engine in drowned mode.

Turn ignition key to START and hold. While engine is cranking, measure the voltage drop as follows.

SOLENOID		MEASUREMENT
Battery post	Starter post	0.2 Vdc max.

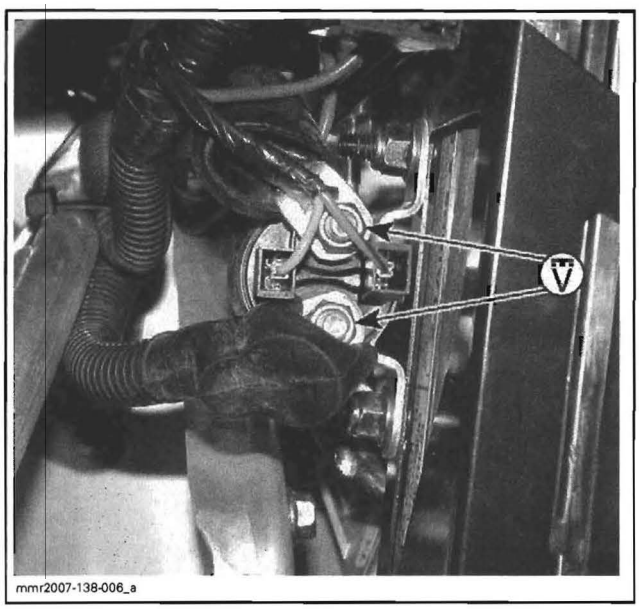
mmr2007-138-006_a

If voltage is out of specification, replace solenoid.

If solenoid tests good, check the electric starter.

ELECTRIC STARTER

Starter Test

Using booster cables, carefully supply current from the battery directly to the starter. Connect the BLACK (-) cable first. Then connect the remaining jumper cable from the battery then to the starter.

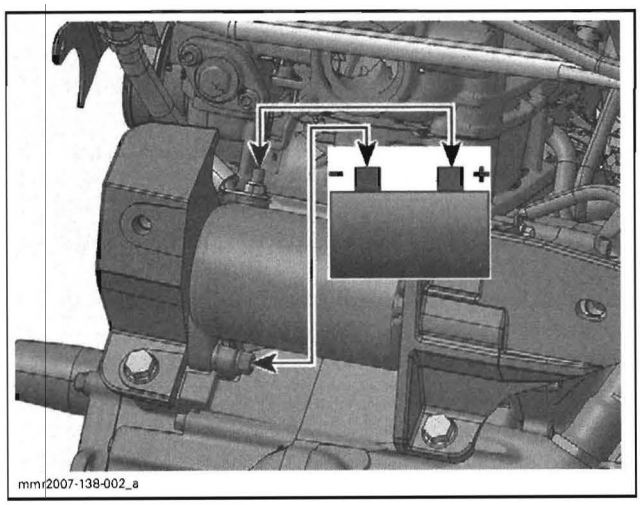

mmr2007-138-002_a

If starter turns ensure the cables/connections from solenoid to starter are in good condition.

If starter does not turn, replace starter.

Starter Removal

Turn OFF ignition switch.

Remove RH side panel. Refer to *BODY*.

Remove muffler. Refer to *EXHAUST SYSTEM*.

Disconnect BLACK (-) cable from battery.

⚠ WARNING

Always disconnect BLACK (-) cable first and reconnect last.

Disconnect ground cable from engine.

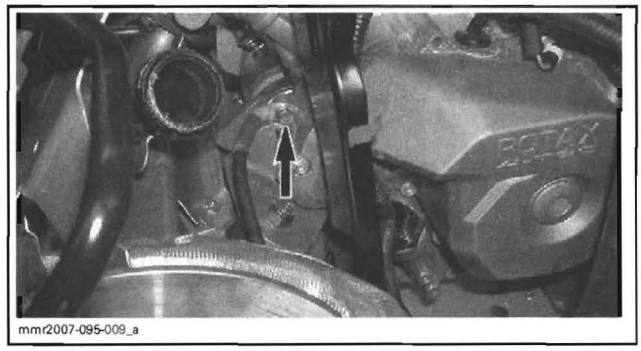
mmr2007-095-009_a

Unscrew engine support nuts.

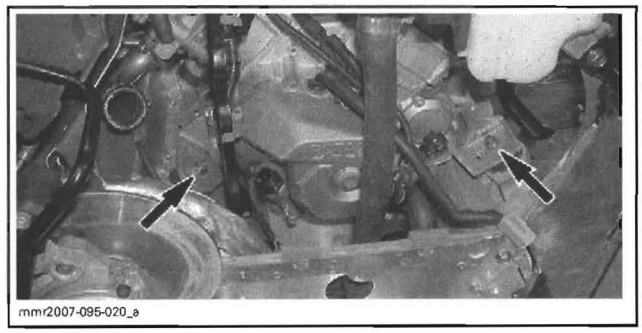
mmr2007-095-020_a

Remove LH side panel and hood.

Remove air intake silencer. Refer to *AIR INTAKE SYSTEM*.

Remove drive and driven pulleys. Refer to *DRIVE SYSTEM*.

Unscrew engine stopper.

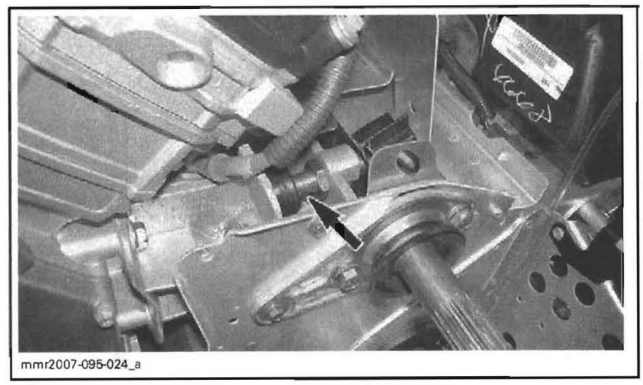
mmr2007-095-024_a

Unscrew engine support nuts.

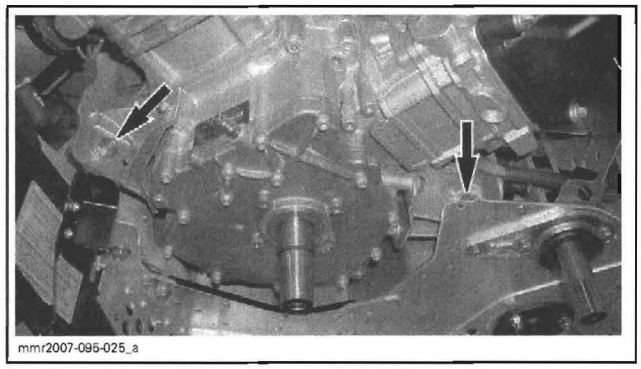

Install engine lifting tool (P/N 529 036 022). Refer to *ENGINE REMOVAL AND INSTALLATION.*

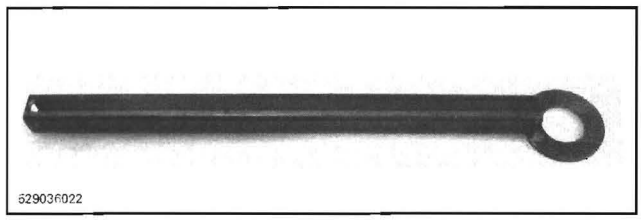

Remove LH rear engine support.

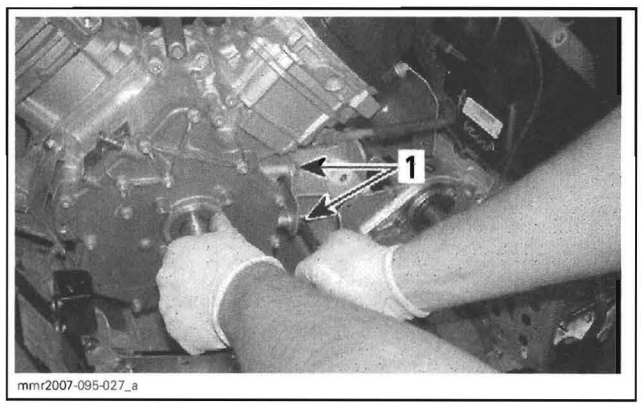

1. LH rear engine support screws

Clean starter area.

Remove starter mount screw.

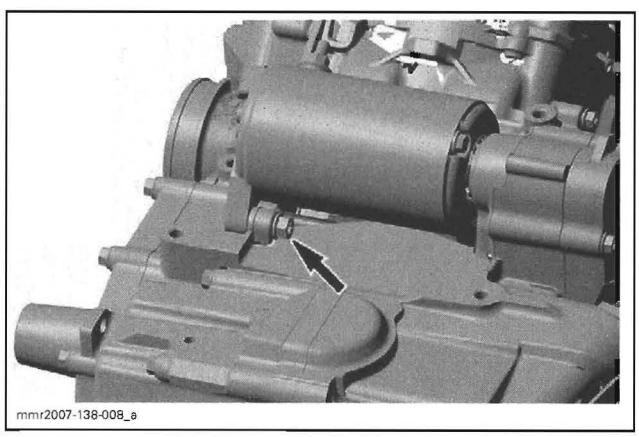

TYPICAL — SOME PARTS REMOVED FOR CLARITY PURPOSE ONLY

Slightly lift engine to allow starter removal. Pull starter out.

Disconnect RED cable from starter.

Starter Installation

Installation is the reverse of removal procedure. However, pay particular attention to the following.

Make sure that starter and engine mating surfaces are free of debris. Serious problem may arise if the starter is not properly aligned.

Connect the RED (+) cable to the starter and torque nut to 6 N•m (53 lbf•**in**). Apply dielectric grease (P/N 293 550 004) on terminal and nut.

Push starter in place and align mounting ear to install screw.

Torque starter screw to 25 N•m (18 lbf•ft).

Properly torque engine support screws. Refer to *ENGINE REMOVAL AND INSTALLATION.*

Last connect BLACK cable to battery.

⚠ WARNING

Always connect BLACK (-) cable last. Whenever connecting the RED (+) cable to the starter motor, make sure the battery cables are disconnected to prevent electric shock.

Test starter operation.

ROTAX ELECTRONIC REVERSE (300F/550F)

SERVICE TOOLS

Description	Part Number	Page
multimeter Fluke 111	529 035 868	419

GENERAL

For best results, use the multimeter Fluke 111 (P/N 529 035 868).



529 035 868

There is 3 main components used for the RER system : the RER switch, the MPEM and the RER trigger coil.

The MPEM receives signals from the trigger coils for the following functions:

- Forward engine rotation.
- Reverse engine rotation.

The MPEM recognizes a signal sent by the RER switch.

When switch is activated and engine is running, MPEM cuts off ignition. Therefore, engine RPM gradually drops. When engine reaches a low threshold RPM, MPEM sends an ignition spark at a great advance creating a thrust which reverses engine rotation.

In reverse operation, the RER trigger coil is used to give the ignition signal to the MPEM.

Under a threshold low RPM or above drive pulley engagement speed, the RER function is disabled.

TROUBLESHOOTING

RER Does Not Respond When Depressing RER Button

- Check if engine RER switch works properly.
- Check main wiring harness (resistor/capacitor).

Engine Stops After Pressing RER Button

- This confirms that RER switch works.
- Check RER trigger coil.

RER Works Erratically

- Check engine compression. A low compression engine may result in RER working erratically making you think the problem is an electronic problem.
- Check piston condition. Remove exhaust system and carburetor. Verify piston condition through the intake and exhaust ports. Look for scoring on piston skirt. Scored piston skirt may result in RER working erratically making you think the problem is an electronic problem.
- Check RER switch.
- Faulty capacitor/resistor in wiring harness.

TESTING PROCEDURES

RER Switch

Unplug steering connector.

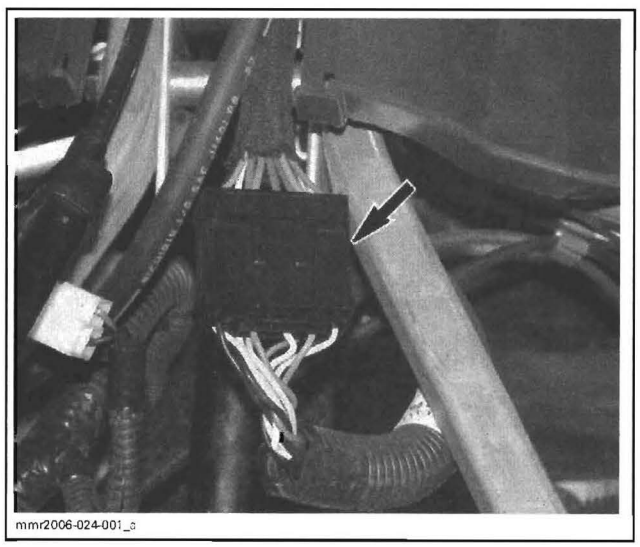

mmr2006-024-001_a

Check switch as follows.

SWITCH	WIRE	RESISTANCE
Released	RED/GREY and BEIGE	High value or infinite (0L)
Pushed and held		0.2 Ω (closed)

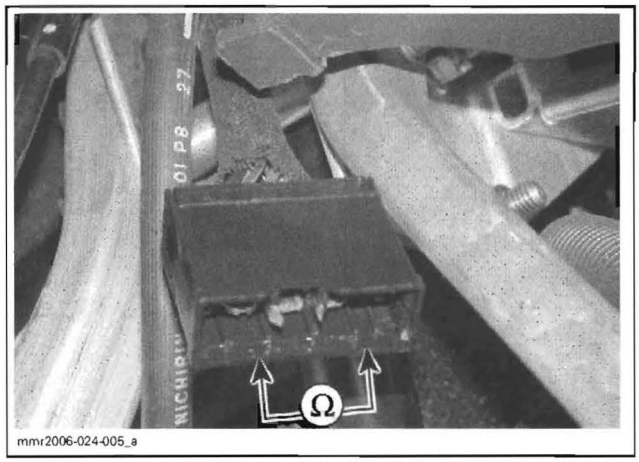

mmr2006-024-005_a

If readings are out of specification, check switch wiring/terminals and if good, replace switch.

A switch may pass the test and still cause erratic or no operation of RER because of moisture/water in switch. To check, perform the following test.

Reconnect steering harness connector.

Start engine and check voltage as follows.

WIRE		VOLTAGE
BEIGE	Engine ground	5 Vdc

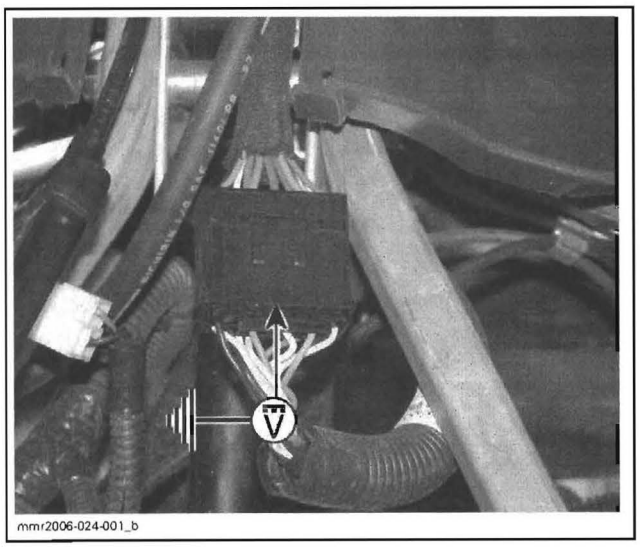

mmr2006-024-001_b

If voltage is within specification, there is no moisture/water in switch.

If voltage is lower than specification, there is moisture/water in the switch.

NOTE: If voltage is less than approximately 3.5 Vdc the RER system will not work.

Unplug steering connector and restart engine to read voltage again.

⚠ WARNING

Engine cut-out switch is not operational when steering harness connector is unplugged. Use ignition switch or tether cord to stop engine. Never use vehicle with this connector unplugged.

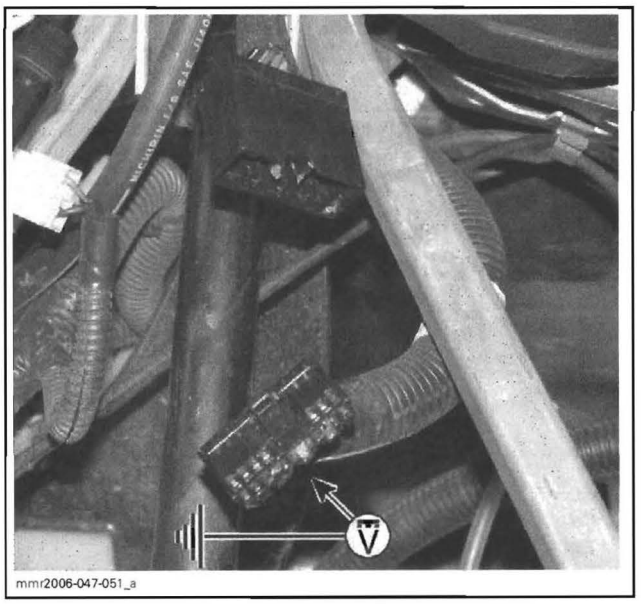

mmr2006-047-051_a

If voltage is now within specification, problem is in switch or wiring/connectors going to switch. Try blowing compressed air in several directions into switch housing.

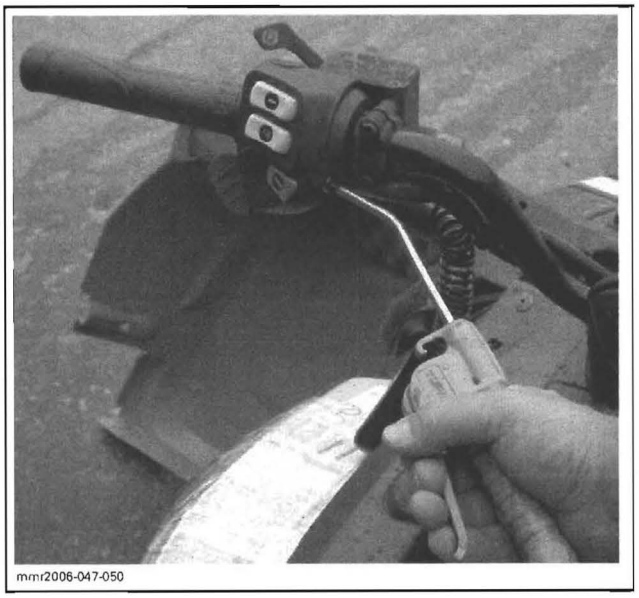
mmr2006-047-050

Reconnect connectors.

If voltage is still under specification, check RER switch and its wiring. If good, check main wiring harness as described further in this section.

RER Trigger Coil

NOTE: RER trigger coil is used only when engine is in reverse operation.

Disconnect 4-pin connector from MPEM.

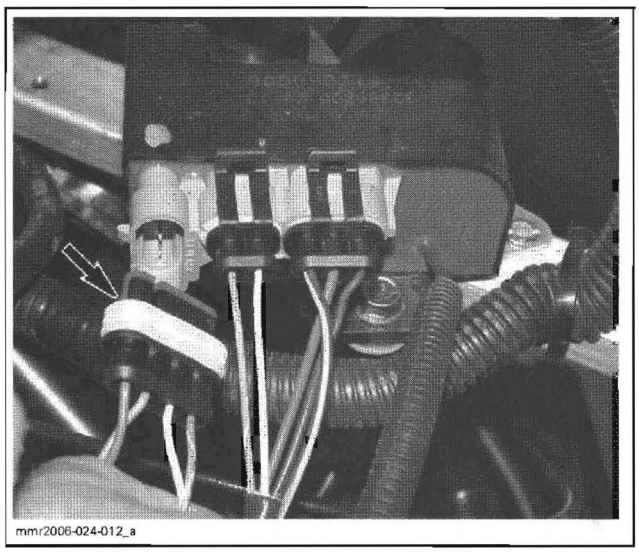

RER TRIGGER COIL CONNECTOR

Check the resistance and the voltage for RER trigger coil.

TEST	CONTINUITY	OUTPUT
TEST PROBES	BLUE/YELLOW and WHITE/YELLOW wires	BLUE/YELLOW and WHITE/YELLOW wires
RESISTANCE	160 to 180 Ω	—
VOLTAGE	—	0.15 to 0.35 Vac
BLUE/YELLOW and WHITE/YELLOW wires	Voltage testing: Manually crank engine with the spark plug installed. Always repeat the procedure 3 times.	

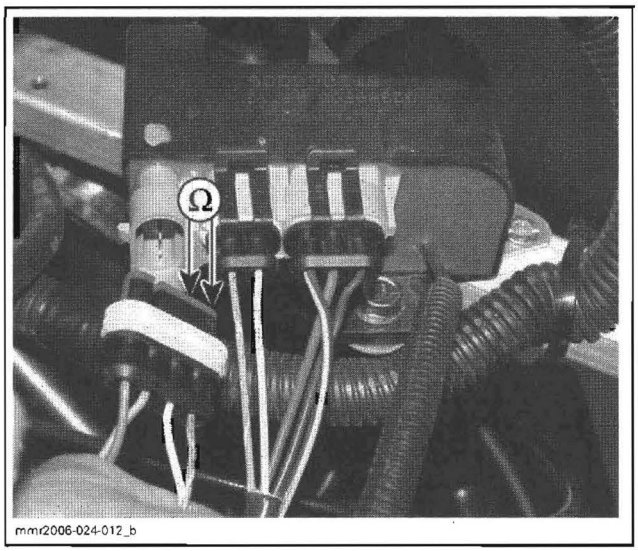

RER TRIGGER COIL — RESISTANCE TEST

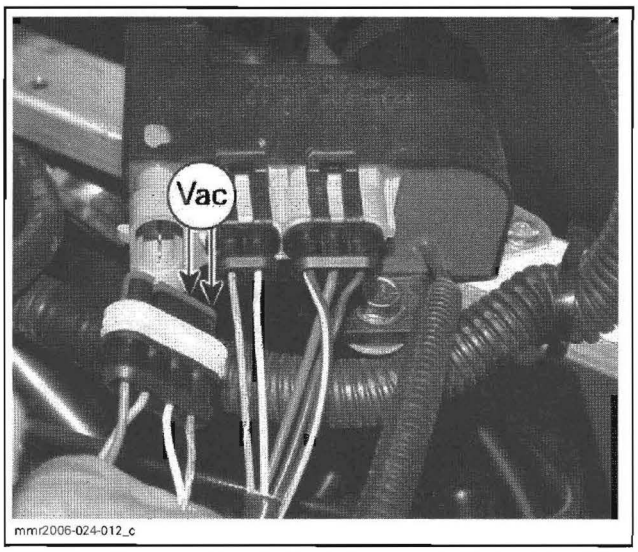

RER TRIGGER COIL — VOLTAGE TEST

If trigger coil is out of specification, replace it.

Main Wiring Harness

When testing wiring harness for continuity or short circuit, be aware there is a capacitor/resistor inside main wiring harness on BEIGE wire (refer to *WIRING DIAGRAMS*). Therefore, its continuity cannot be checked as usual. Check as described here.

Start engine and check voltage as follows.

WIRE		VOLTAGE
BEIGE	Engine ground	5 Vdc

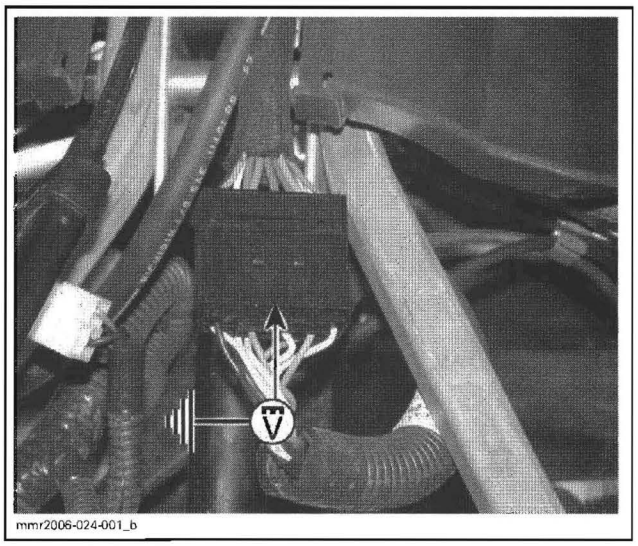
mmr2006-024-001_b

If there is no voltage, MPEM can be suspected.

While engine is still running, press and HOLD RER switch for at least 5 seconds then release switch. Voltage should begin somewhere close to 1.5 Vdc and gradually increase to 5 Vdc within approximately 10 seconds. If so, harness, resistor and capacitor are in good condition.

If voltage does not reach 5 Vdc, or goes to 5 Vdc quite faster than 10 seconds, unplug steering connector and restart engine to read voltage again.

⚠ WARNING

Engine cut-out switch is not operational when main harness connector is unplugged. Use ignition switch or tether cord to stop engine. Never use vehicle with this connector unplugged.

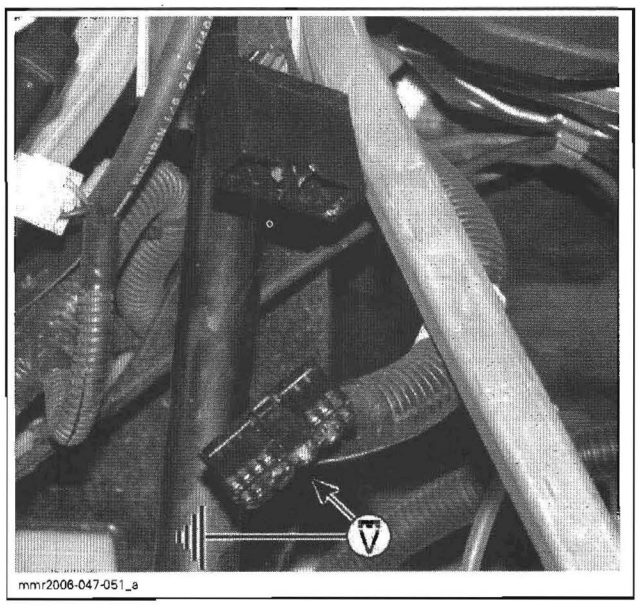
mmr2006-047-051_a

If voltage is now within specification, problem is in switch or wiring/connectors going to switch. See *RER SWITCH* above.

Reconnect connectors.

LIGHTS, INSTRUMENTS AND ACCESSORIES

SERVICE TOOLS

Description	Part Number	Page
multimeter Fluke 111	529 035 868	423
supply harness	529 035 869	428–429, 432–433, 437, 439–440

SERVICE TOOLS – OTHER SUPPLIER

Description	Part Number	Page
Fluke rigid back probe	TP88	423

GENERAL

NOTE: On applicable models, it is a good practice to check for fault codes using B.U.D.S. software as a first troubleshooting step. Refer to *EMS DIAGNOSTIC AND COMMUNICATION TOOLS*.

⚠ WARNING

It is recommended to always disconnect the battery (if so equipped) when replacing any electric or electronic parts. Always disconnect battery exactly in the specified order, BLACK (-) cable first. Do not place tools on battery.

During assembly/installation, use the torque values and service products as in the exploded views.

Clean threads before applying a threadlocker. Refer to SELF-LOCKING FASTENERS and LOCTITE APPLICATION at the beginning of this manual for complete procedure.

⚠ WARNING

Torque wrench tightening specifications must be strictly be adhered to. Locking devices (e.g.: locking tabs, elastic stop nuts, self-locking fasteners, cotter pins, etc.) must be installed or replaced with new ones where specified. If the efficiency of a locking device is impaired, it must be renewed.

Diagnostic Tools

For best results, use the multimeter Fluke 111 (P/N 529 035 868).

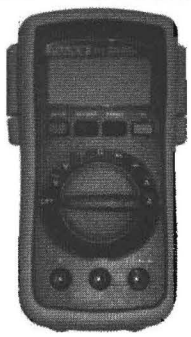

529 035 868

To easily probe wire terminals through the back of their connectors, Fluke rigid back probe (P/N TP88) or an equivalent can be used.

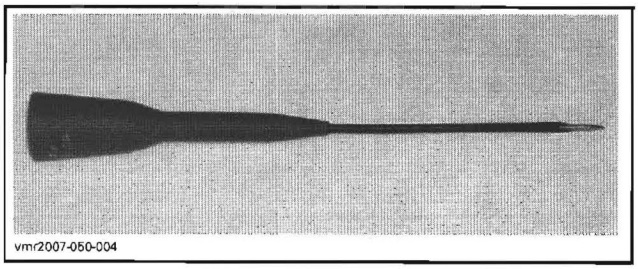

They can be inserted at the end of the standard probes of the Fluke 111 multimeter.

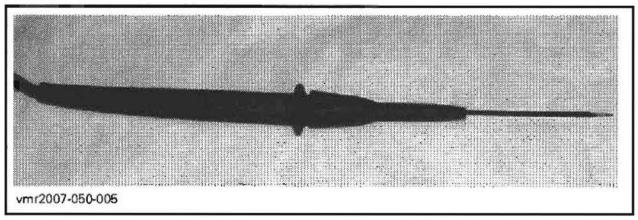
vmr2007-050-005

FUSES

Check fuse condition and if filament is melted.

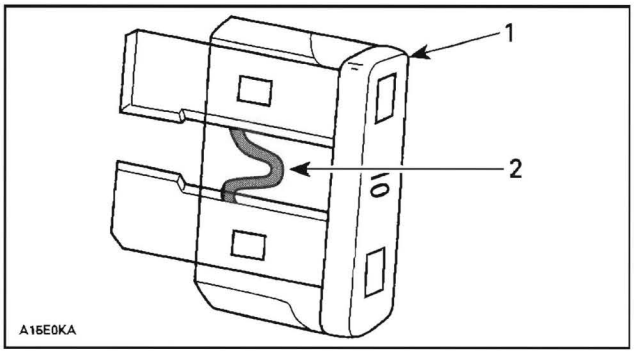

1. Fuse
2. Check if melted

CAUTION: When replacing a fuse, do not use a higher rated fuse as this can cause severe damage to electric components and/or fire.

⚠ WARNING

If fuse has burnt out, source of malfunction should be determined and corrected before restarting.

Fuse Description

300F and 550F Models

MODEL	FUSE	DESCRIPTION	LOCATION
Manual start	20 A	Ground protection	Behind RH footrest
Electric start	30 A	Charging system	Top of battery
	20 A	Ground protection	

V800 Models

FUSE	DESCRIPTION	LOCATION
30 A	Charging system	On battery support

FUSE	DESCRIPTION	LOCATION	
5 A	Fuel injectors	F1	Fuse box
10 A	Fuel pump/ignition coil	F2	
5 A	Engine Control Module (ECM)/Crankshaft Position Sensor (CPS)	F3	
5 A	Cluster/reverse alarm/ speed sensor/relay	F4	
15 A	Heated grips and thumb/power outlet/ visor outlet/taillight	F5	
15 A	Headlamp	F6	

Fuse Location

300F and 550F Models

Ground Protection Fuse

CAUTION: This fuse should always be disconnected before doing any maintenance under the hood. This is to prevent any unexpected electrical activation.

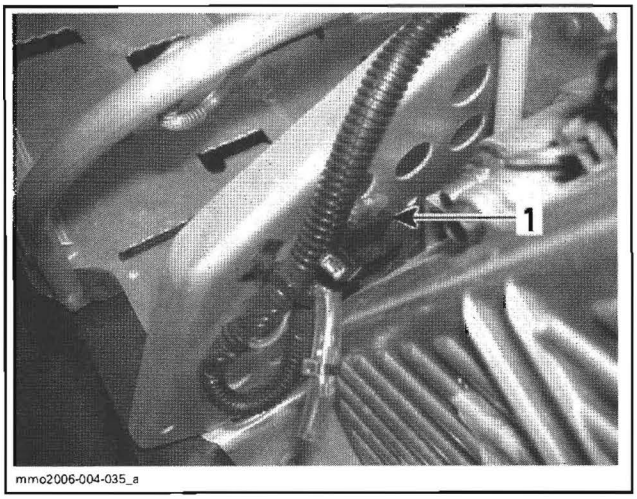

MANUAL START MODELS — BEHIND RH FOOTREST
1. Ground protection fuse

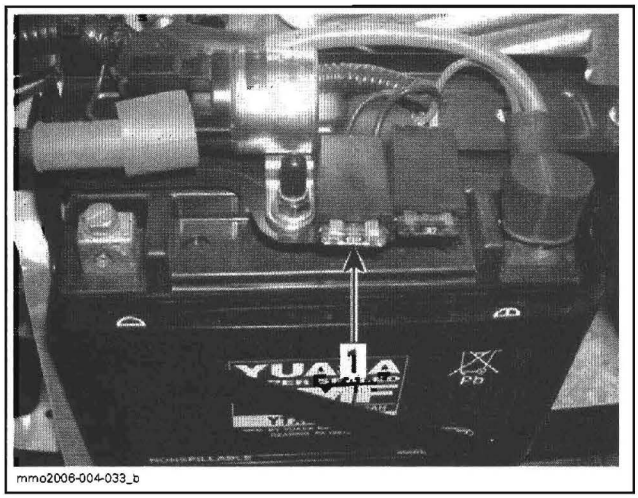

ELECTRIC START MODELS
1. Ground protection fuse

Charging System Fuse

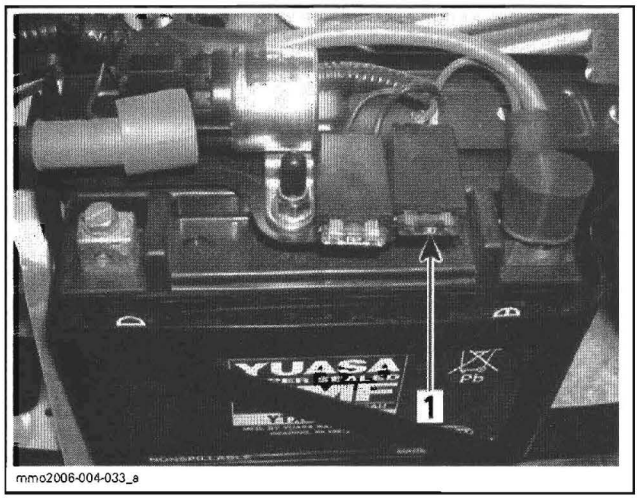

ELECTRIC START MODELS
1. Charging system fuse

V800 Models

Fuse Box

Open side panels.

Open and remove front hood.

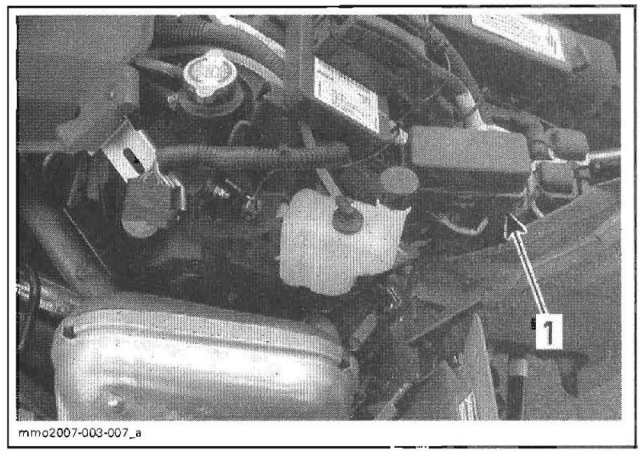

RH SIDE OF VEHICLE
1. Fuse box

To open fuse box push on cover tabs and pull cover.

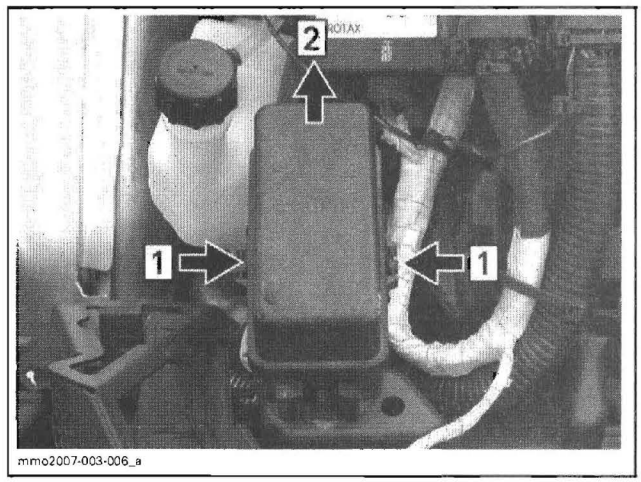

FUSE BOX COVER
Step 1: Push on tabs
Step 2: Pull cover

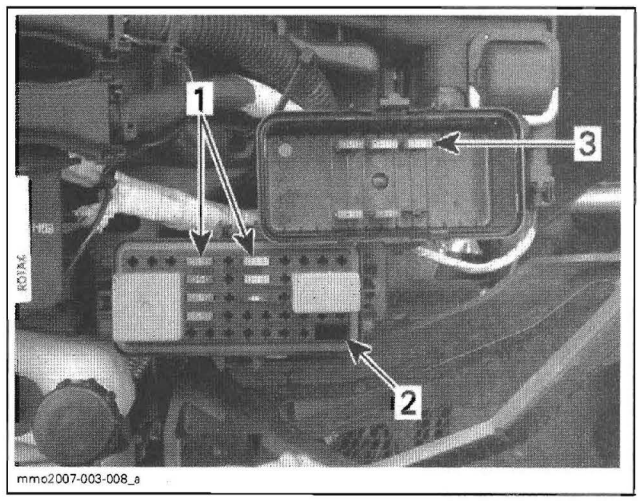

1. Fuses
2. Fuse remover/installer tool
3. Spare fuses

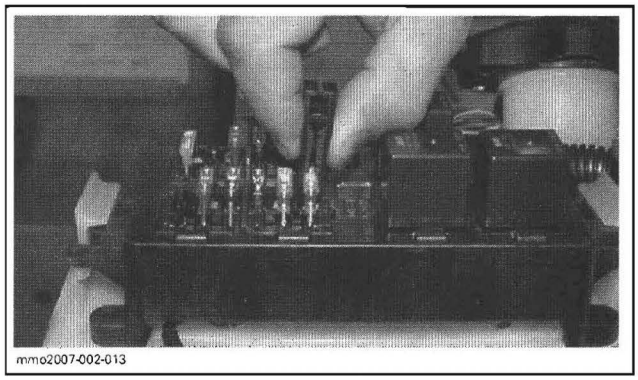
mmo2007-002-013

TYPICAL — REMOVE FUSE USING TOOL

Charging System Fuse

CAUTION: This fuse should always be disconnected before doing any maintenance under the hood. This is to prevent any unexpected electrical activation.

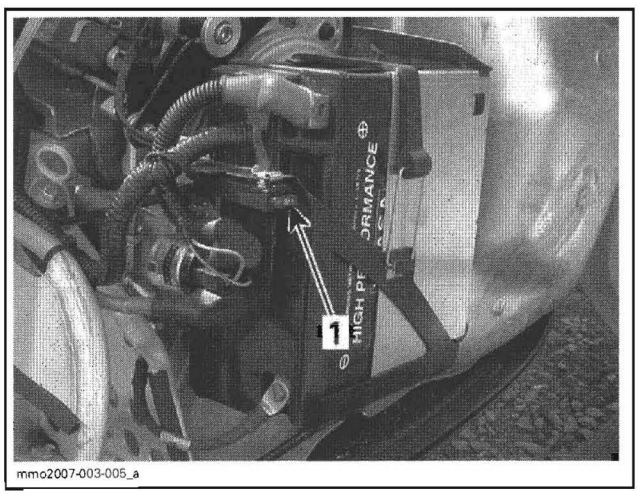

mmo2007-003-005_a

1. Charging system fuse

DIAGNOSTIC

POWER DISTRIBUTION

NOTE: The following diagrams show how the electrical current is distributed to the lights and accessories.

When there is no power, check:
- fuse(s)
- battery (electric start models)
- charging generator coil
- voltage regulator
- wiring harness.

Also ensure to check the circuit ground wires. Refer to *CHARGING SYSTEM* and *WIRING DIAGRAMS*.

300F and 550F Models

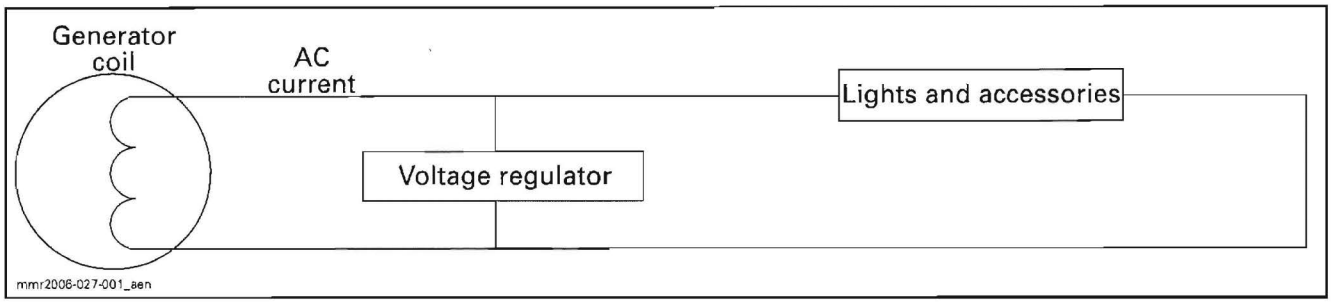

MANUAL START MODELS

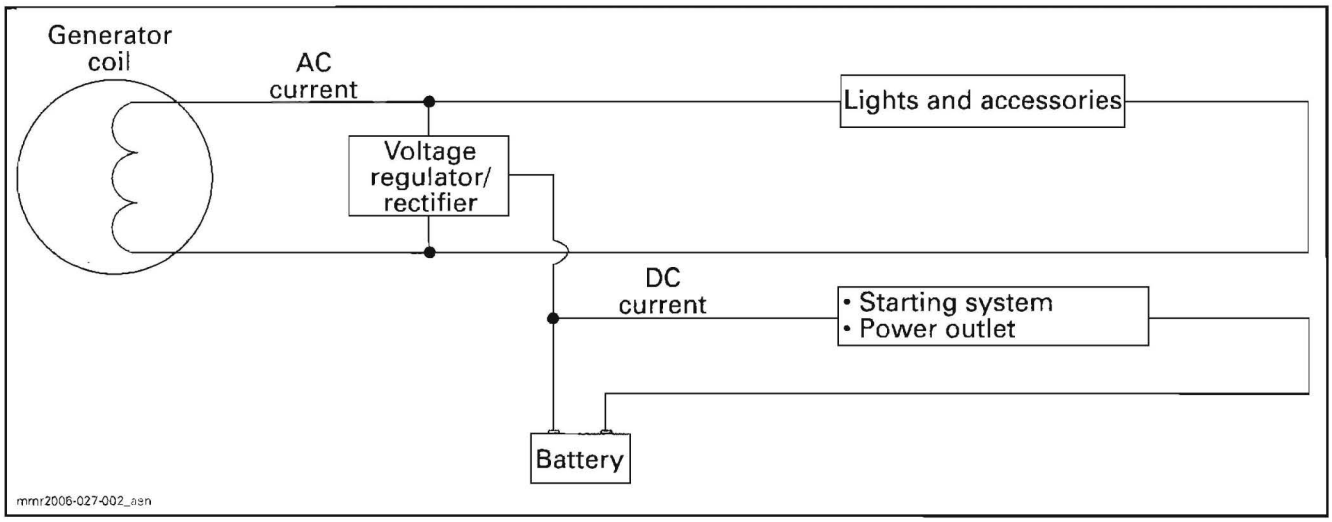

ELECTRIC START MODELS

V800 Models

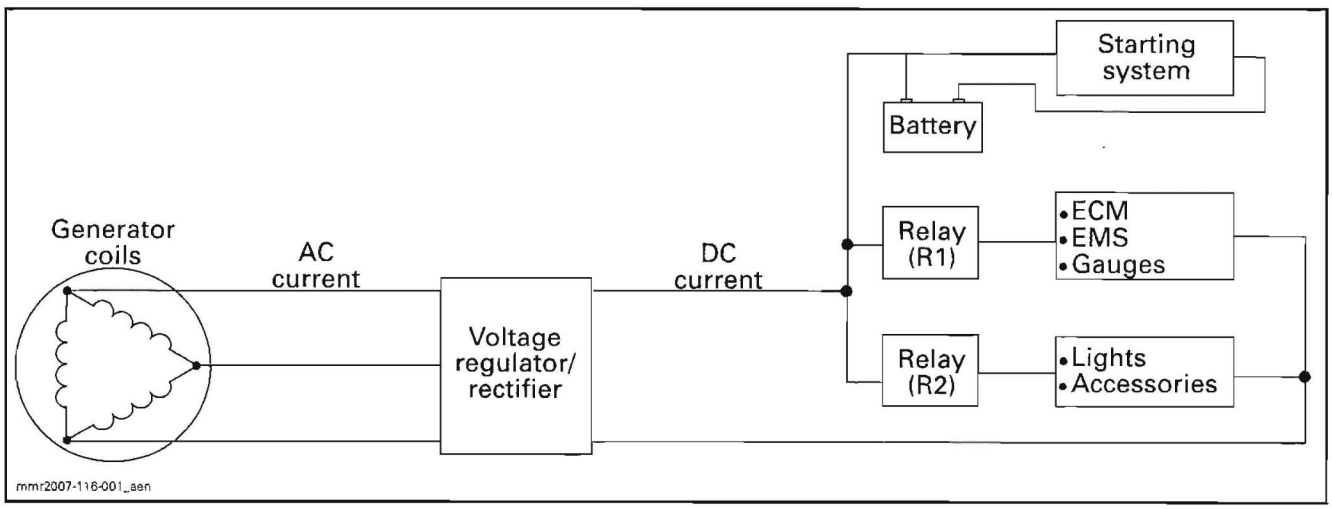

LIGHTING AND ACCESSORIES SYSTEM TESTING

300F and 550F Models

To provide power to lighting and accessories systems, it is necessary to start engine.

V800 Models

To provide power to lighting and accessories systems, do the following.

Remove the 6-pin diagnostic connector from protective cap on vehicle.

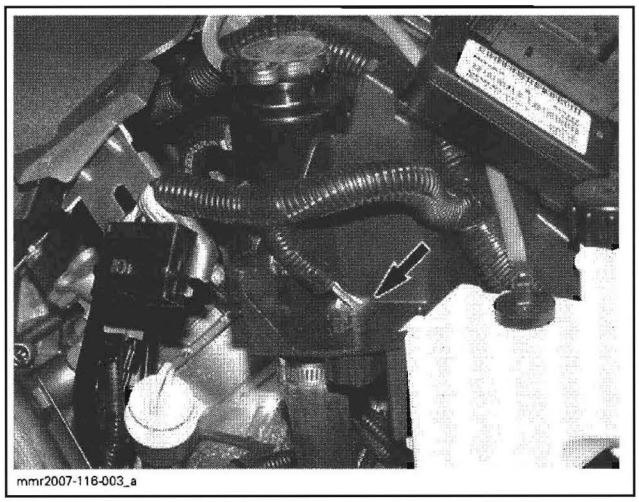
mmr2007-116-003_a

Connect supply harness (P/N 529 035 869) to the 6-pin connector of vehicle.

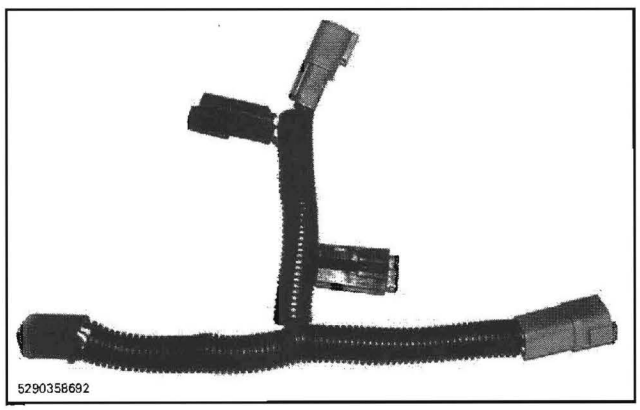
5290358692

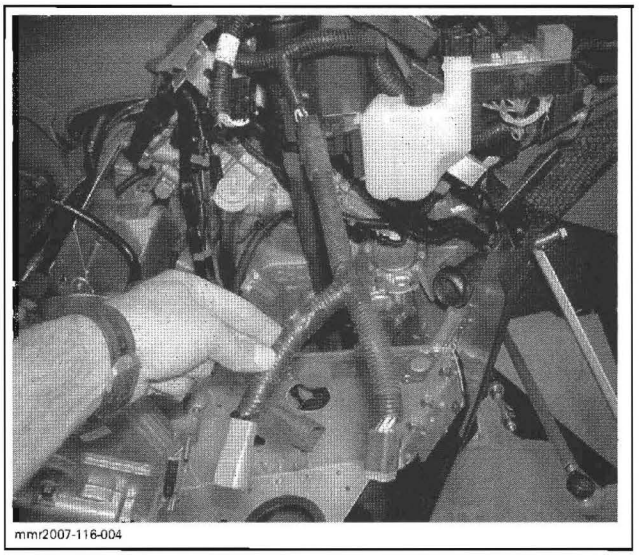
mmr2007-116-004

NOTE: The use of the supply harness will keep the ECM ON to give you more time to work. Not using it will make the ECM shuts-off after approximately 30 seconds.

Use the wiring diagram in *WIRING DIAGRAMS* section to troubleshoot lighting and accessories systems.

Once testing is done, disconnect supply harness from vehicle. Reconnect the 6-pin connector in its cap.

PROCEDURES

RELAY

V800 Models

See illustration below for relays identification as used in this manual and the *WIRING DIAGRAMS*.

NOTE: Relays may be inverted by 180° at installation and they will work correctly. Ensure to align tabs of relay with terminals of fuse holder at installation.

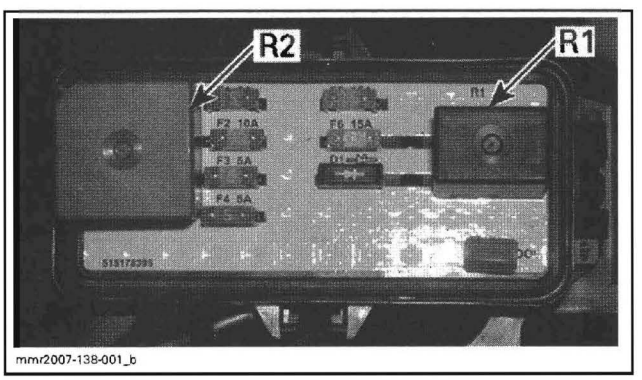

mmr2007-138-001_b

R1: ECM, EMS and gauges
R2: Lights and accessories

A quick way to check a relay is to remove it and bypass it with a jumper. If the components then work, relay is likely to be faulty. Try a new relay. See illustrations to find where to bypass the relays.

NOTE: Keep in mind that the wiring going to the relay winding or going to the ECM can be faulty.

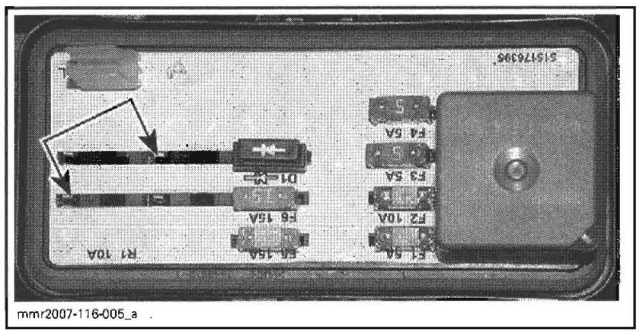

RELAY R1 (ECM, EMS AND GAUGES)

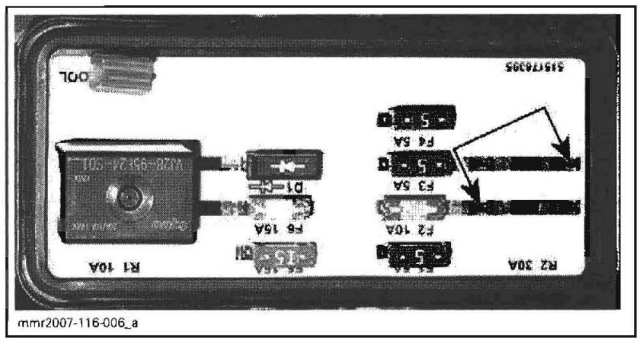

RELAY R2 (LIGHTS AND ACCESSORIES)

HEADLAMP

Test

Disconnect headlamp connector.

Using a multimeter, measure the voltage on headlamp connector as follows.

300F and 550F Models

Start engine and rev to approximately 5000 RPM to read voltage.

Read voltage at headlamp connector as follows.

SWITCH POSITION	WIRE COLOR (HEADLAMP CONNECTOR)		VOLTAGE
LO beam	GREY/VIOLET	YELLOW/BLACK	13.8 Vac
HI beam	GREY	YELLOW/BLACK	

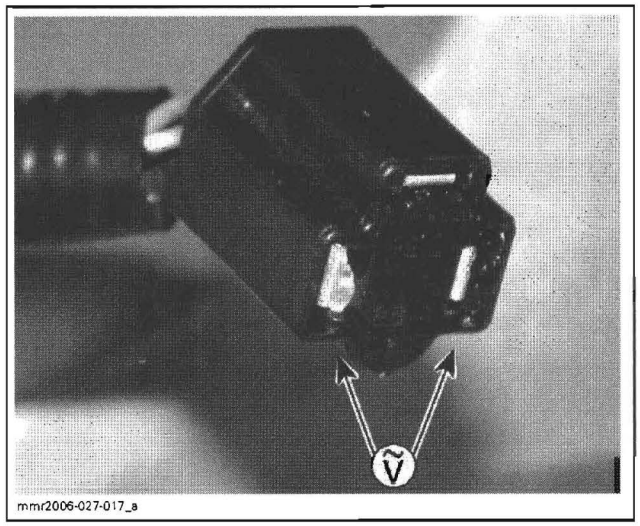

V800 Models

Install the supply harness (P/N 529 035 869) (refer to *LIGHTING AND ACCESSORIES SYSTEM TESTING* for detailed instructions) to continuously feed the electrical system.

Read voltage at headlamp connector as follows.

SWITCH POSITION	WIRE COLOR (HEADLAMP CONNECTOR)		VOLTAGE
LO beam	GREY/VIOLET	YELLOW/BLACK	Battery voltage (Vdc)
HI beam	GREY	YELLOW/BLACK	

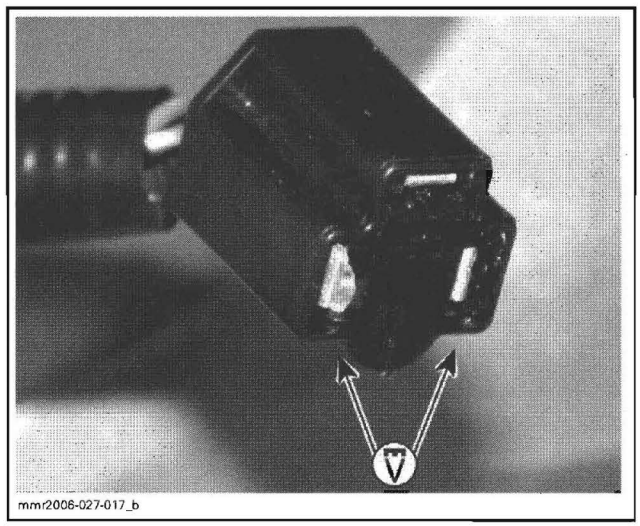

All Models

- Voltage is good:
  - Change headlamp bulb(s).
- No voltage: do the following until problem is solved.
  - Check appropriate fuse. Refer to *WIRING DIAGRAMS*.
  - Check battery (electric start models)

- Check appropriate relay (if applicable). Refer to *POWER DISTRIBUTION* above.
- Check headlamp dimmer switch.
- Check wiring harness and connectors.
- Check voltage regulator/rectifier. Refer to *CHARGING SYSTEM*.
- Check generator/stator coils. Refer to *CHARGING SYSTEM*.

Removal

Remove hood.

Remove adjustment screw.

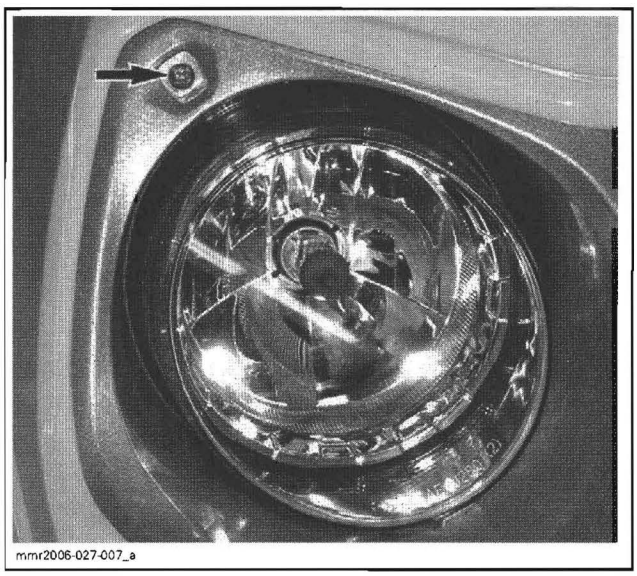
mmr2006-027-007_a

Disconnect headlamp.

Remove push nuts then pull out headlamp housing.

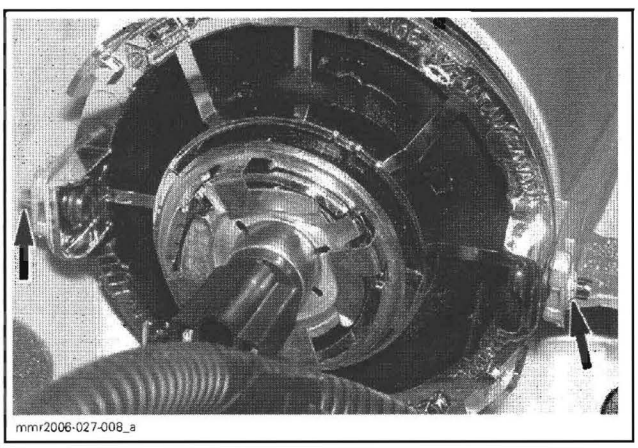
mmr2006-027-008_a

Installation

Reverse the removal procedure.

Ensure to install new push nuts.

Bulb Replacement

Unplug burnt bulb connector.

Turn bulb retainer ring counterclockwise to unlock. Detach the bulb and replace.

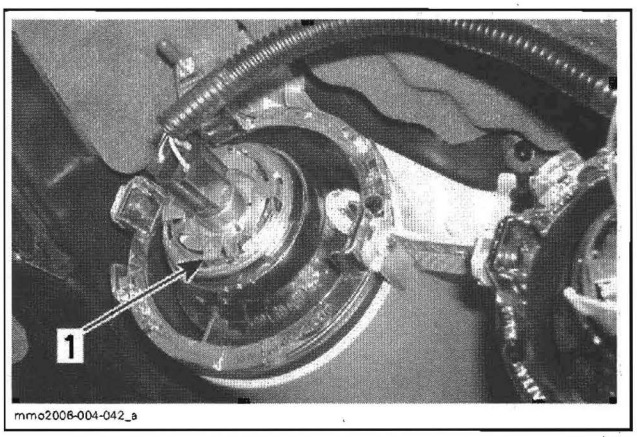

mmo2006-004-042_a

1. Locking ring

CAUTION: Never touch glass portion of an halogen bulb with bare fingers, as it shortens its operating life. If by mistake glass is touched, clean it with isopropyl alcohol which will not leave a film on the bulb. After locking ring installation, ensure bulb is properly secured in place.

Properly reinstall removed parts.

Headlamp Beam Aiming

Turn screw (on each headlamp) as necessary to adjust beam height.

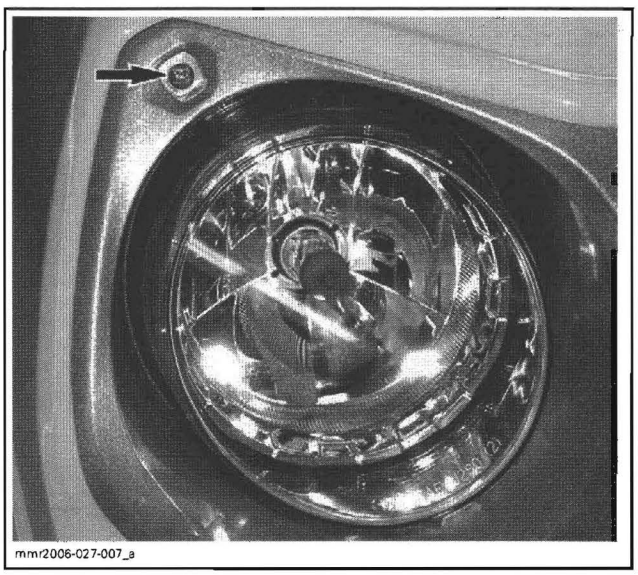
mmr2006-027-007_a

Beam aiming is correct when center of high beam is 25 mm (1 in) below the headlamp horizontal center line, scribed on a test surface, 381 cm (12 ft 6 in) away.

Place the vehicle on a flat surface perpendicular to test surface (wall or screen) and 381 cm (12 ft 6 in) away from it.

Rider or equivalent weight must be on the vehicle.

Select **high** beam.

Measure headlamp center distance from ground. Scribe a line at this height on test surface (wall or screen). Light beam center should be 25 mm (1 in) below scribed line.

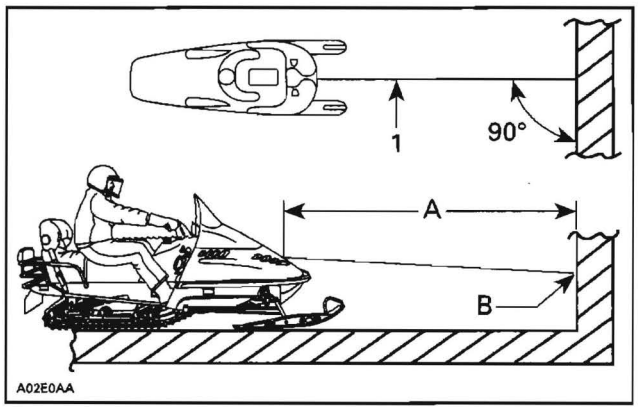

TYPICAL
1. Headlamp center line
A. 381 cm (12 ft 6 in)
B. 25 mm (1 in) below center line

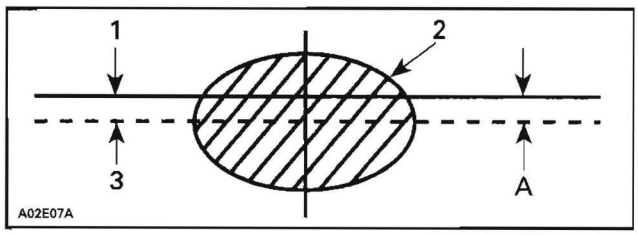

1. Headlamp horizontal
2. Light beam (high beam) (projected on the wall)
3. Light beam center
A. 25 mm (1 in)

HEADLAMP DIMMER SWITCH

Disconnect steering connector.

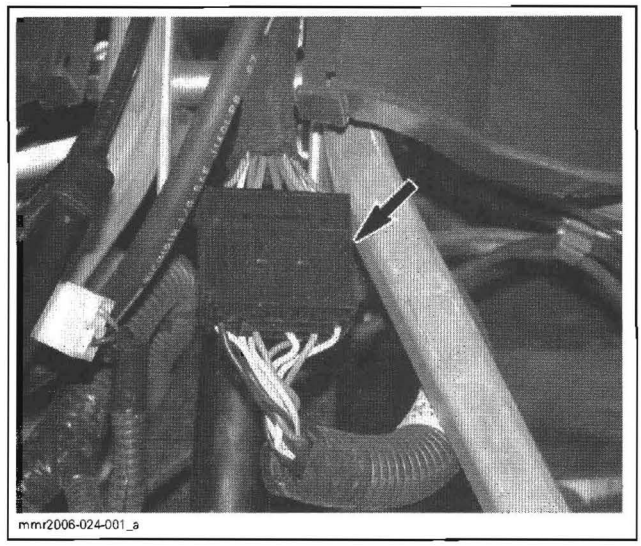

Check switch continuity.

LIGHT SWITCH POSITION	WIRE COLOR		RESISTANCE @ 20°C (68°F)
LO beam	GREY/ VIOLET	RED/ ORANGE	0.5 Ω max.
HI beam	GREY		

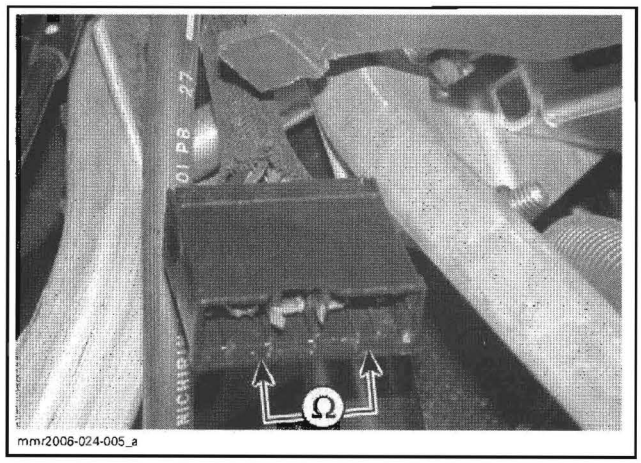

If any value is out of specification, check wiring/connectors going to switch. If they are good, replace switch.

If switch tests good, ensure wiring/connector is good from steering connector through hood connector then to headlamp.

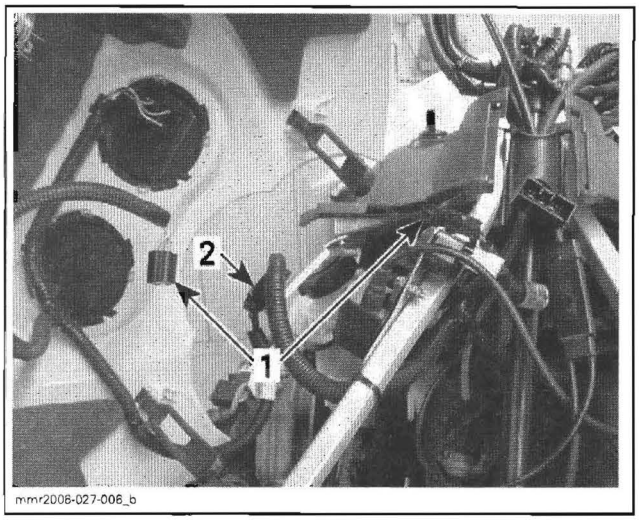

1. Steering connector and headlamp connector
2. Hood connector

If their wiring/connectors are good, refer to *POWER DISTRIBUTION.*

NOTE: When replacing switch, ensure to properly position connectors on switch as shown.

CAUTION: Black and white could be installed at the wrong position. Also pay attention that the white connector could be installed in the reverse position. Refer to illustrations.

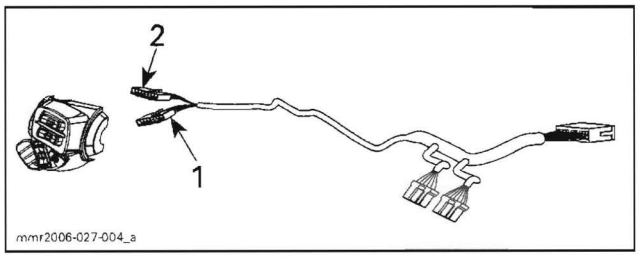

1. WHITE connector
2. BLACK connector

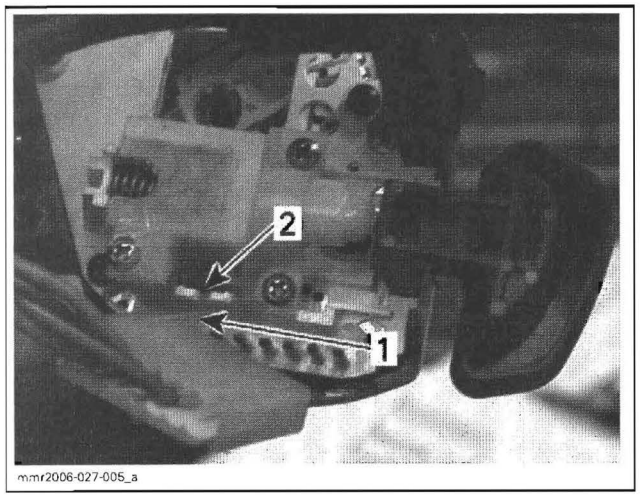

ALIGN RIDGE BETWEEN TABS
1. Ridge
2. Tabs

TAILLIGHT/BRAKE LIGHT

Test

NOTE: For the brake light, verify first the condition of the brake light switch prior to proceed with the following tests. Refer to *COUNTERSHAFT AND BRAKE* section.

Remove taillight bulb. Refer to *BULB REPLACEMENT.*

Using a multimeter, measure the voltage in bulb socket as follows.

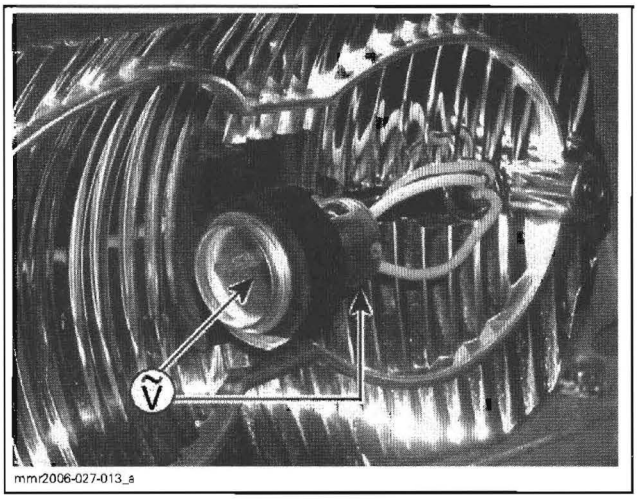

NOTE: For the brake light, ensure to depress brake lever to read voltage.

300F and 550F Models

Start engine and rev to approximately 5000 RPM to read voltage.

TAILLIGHT		VOLTAGE
YELLOW wire terminal	Socket shell (YELLOW/BLACK)	13.8 Vac
BRAKE LIGHT		
WHITE wire terminal	Socket shell (YELLOW/BLACK)	

V800 Models

Install the supply harness (P/N 529 035 869) (refer to *LIGHTING AND ACCESSORIES SYSTEM TESTING* for detailed instructions) to continuously feed the electrical system and to prevent ECM to automatically shut down after approximately 30 seconds of its activation.

TAILLIGHT		VOLTAGE
YELLOW wire terminal	Socket shell (YELLOW/BLACK)	Battery voltage (Vdc)
BRAKE LIGHT		
WHITE wire terminal	Socket shell (YELLOW/BLACK)	

All Models

– Voltage is good:
  • Change taillight bulb.
– No voltage:

1-Up Seat Models

• Remove seat and and lift RH side of trunk.

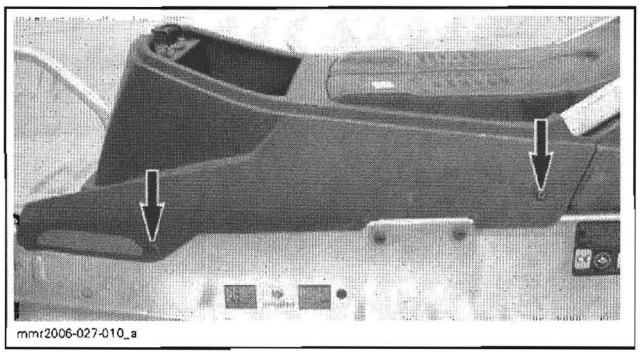
mmr2006-027-010_a

• Disconnect taillight connector.

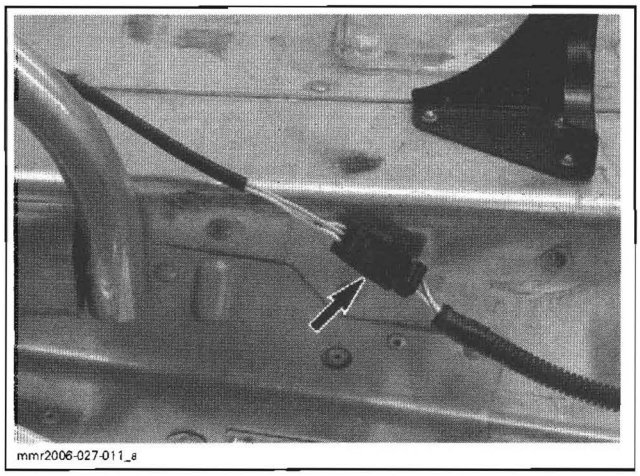
mmr2006-027-011_a

2-Up Seat Models

• Open seat storage compartment cover.
• Disconnect taillight connector.

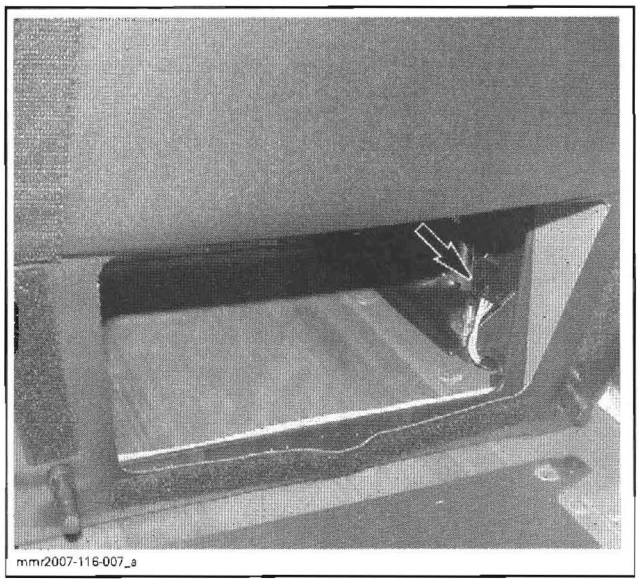
mmr2007-116-007_a

300F and 550F Models

• Start engine and rev to approximately 5000 RPM to read voltage on connector from main harness.

NOTE: For the brake light, ensure to depress brake lever to read voltage.

TAILLIGHT		VOLTAGE
YELLOW	YELLOW/BLACK	13.8 Vac
BRAKE LIGHT		
WHITE	YELLOW/BLACK	

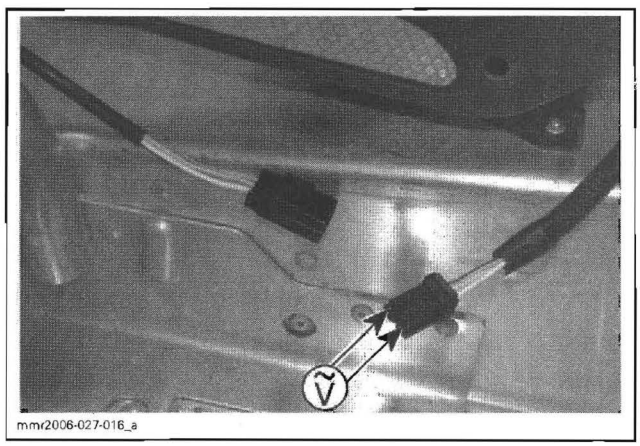

mmr2006-027-016_a

V800 Models

• Install the supply harness (P/N 529 035 869) (refer to *LIGHTING AND ACCESSORIES SYSTEM TESTING* for detailed instructions) to continuously feed the electrical system and to prevent ECM to automatically shut down after approximately 30 seconds of its activation.

NOTE: For the brake light, ensure to depress brake lever to read voltage.

TAILLIGHT		VOLTAGE
YELLOW	YELLOW/BLACK	Battery voltage (Vdc)
BRAKE LIGHT		
WHITE	YELLOW/BLACK	

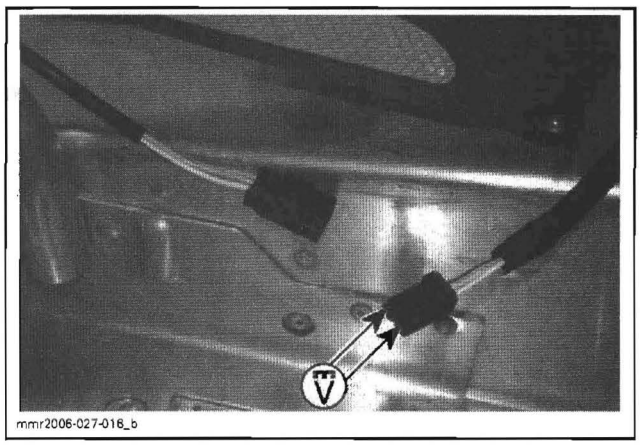

TYPICAL

All Models

- If voltage is good, check rear light wiring/connector going to taillight and if adequate, replace rear light. If voltage is not good, refer to *POWER DISTRIBUTION.*

Bulb Replacement

Unscrew lens screws to expose bulb.

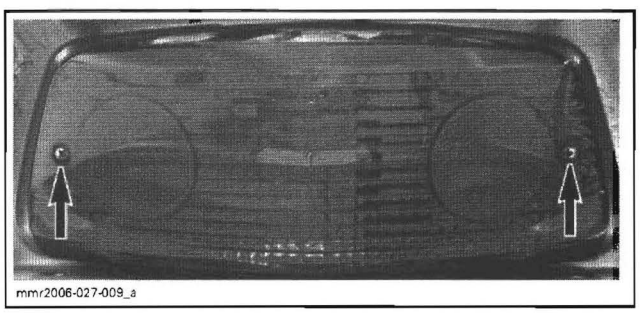

Push the bulb in and hold while turning counterclockwise to release.

Install the new bulb by first pushing in while turning clockwise.

Reinstall lens.

Removal

1-Up Seat Models

Remove seat and lift RH side of trunk.

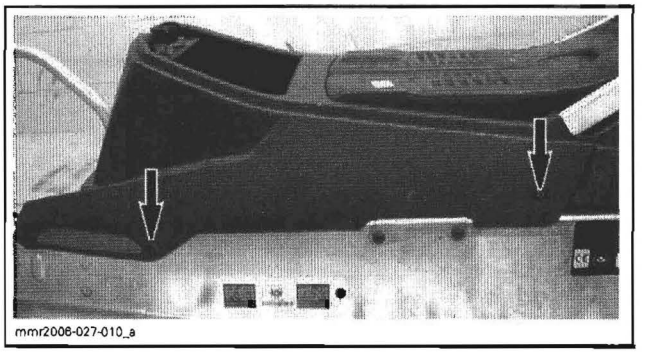

Disconnect taillight connector.

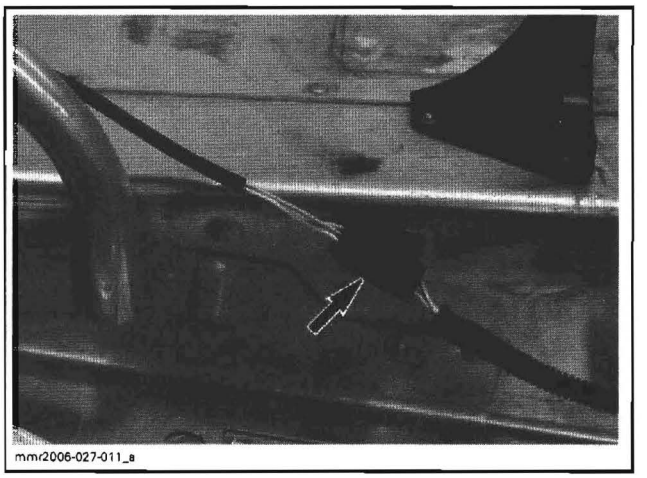

2-Up Seat Models

Open seat storage compartment cover.

Disconnect taillight connector.

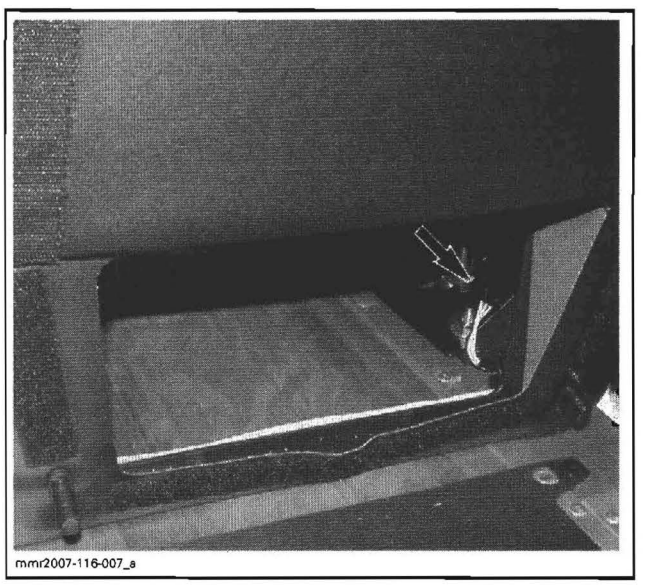

Remove seat.

All Models

Remove the wires from connector. Use a small tool extract the wires from the connector.

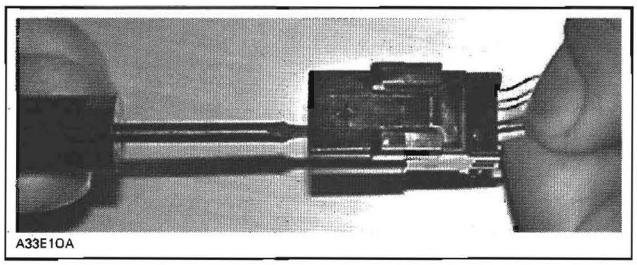

Unscrew taillight lens and pull the wires out.

Installation

The installation is the reverse of the removal procedure.

Reconnect wires as follows.

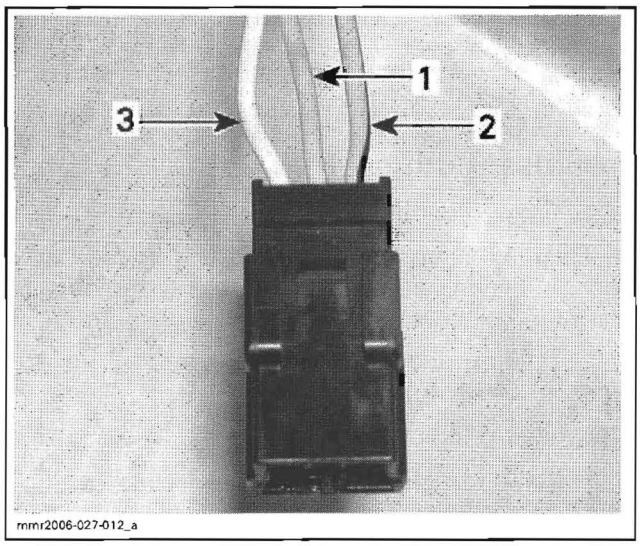

1. YELLOW/BLACK
2. YELLOW
3. WHITE

SPEEDOMETER (if so equipped)

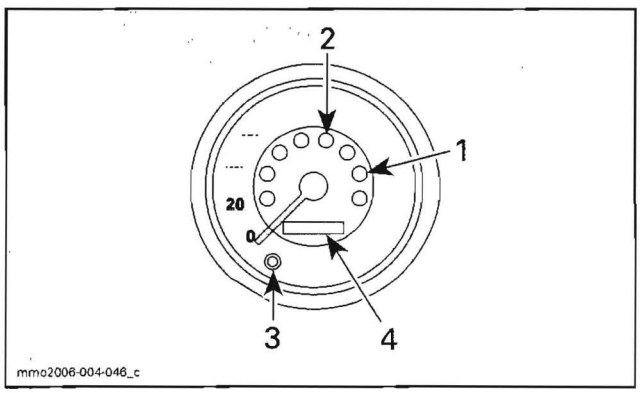

300F AND 550F MODELS
1. Reverse (RER) pilot lamp
2. High beam pilot lamp
3. Mode button
4. Multifunction display

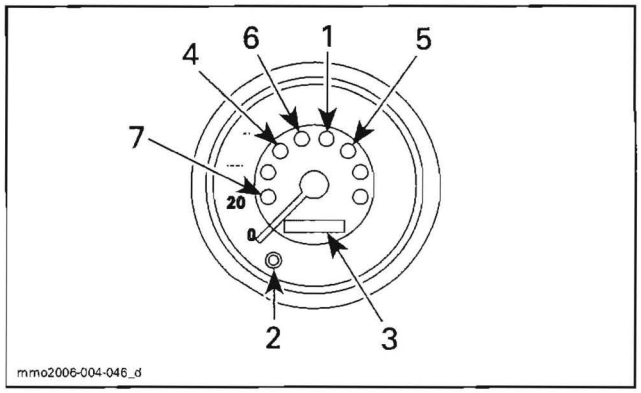

V800 MODELS
1. High beam pilot lamp
2. Mode button
3. Multifunction display
4. Engine oil pressure pilot lamp
5. Low battery voltage pilot lamp
6. Engine overheat pilot lamp
7. Check engine pilot lamp

Speedometer Overview

Unit Selection (MPH vs km/h)

The speedometer is factory preset in miles but it is possible to change it to kilometer reading, refer to the following procedure.

NOTE: Speedometer, odometer and trip meter will have their units (kilometer or miles) changed all together.

Stop engine.

Open LH and RH side panels.

Unplug hood harness.

Open hood.

Underneath hood, look for:

- 1 circuit male connector housing with BLACK/GREY wire
- 1 circuit female connector housing with YELLOW/BLACK wire.

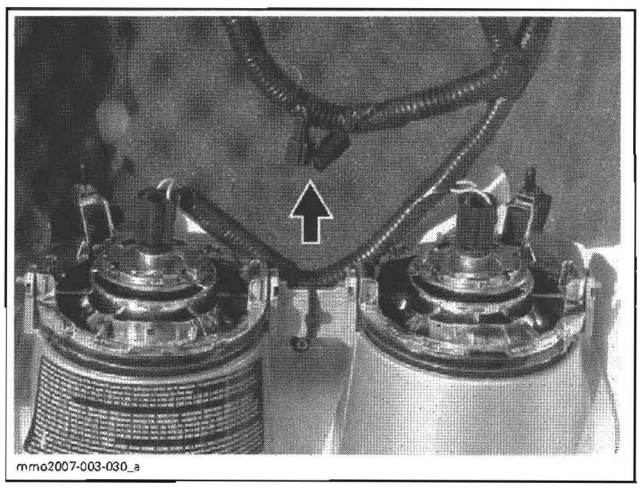

CONNECTOR LOCATION

Plug connectors together to change units from miles to kilometers.

Unplug to return to miles reading.

Mode Button

Depress mode button to change multifunction display.

Multifunction Display

NOTE: Each time engine is started, display shows odometer.

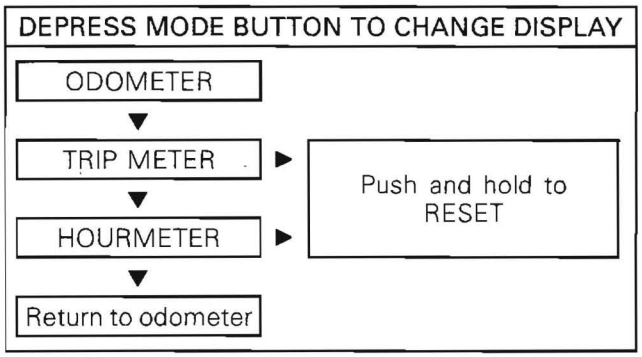

Speedometer Pinout

300F and 550F Models

FUNCTION	PIN
Power 12 Vac (+)	8
Ground	10, 11, 23
RER signal	22
Speed sensor supply (+)	7
Speed sensor signal	6
MPH/Km/h setting	5
Tachometer RPM signal	4
Power supply to tachometer	9
Tachometer control wires	18, 19, 20, 21
HI beam signal	15
Not used	16

V800 Models

FUNCTION	PIN
Power 12 Vdc (+)	8
Ground	11
Speed sensor signal	6
MPH/Km/h setting	5
Tachometer RPM signal	7
Tachometer control wires	18, 19, 20, 21
HI beam signal	15
EMS signal	1
Engine overheat signal	2
Engine oil pressure signal	14
Low battery voltage signal	12

Troubleshooting

SCALE Appears in Multifunction Display

The display selector button is stuck in the down position or was depressed while the engine was started.

Stop engine and press/release button several times to unstick it.

Start engine to retry.

NO LIGHTS in Speedometer and Needle Does Not Move

OBSERVATION	POSSIBLE CAUSE
Speedometer does not turn on	Defective lighting generator coil
	Wiring/connectors
	Defective speedometer

Disconnect speedometer connector.

Start engine and read voltage from vehicle harness as follows.

SPEEDOMETER CONNECTOR (harness side)		VOLTAGE
Pin 8	Pin 11	**300F/550F:** 13.8 Vac **V800:** Battery voltage (Vdc)

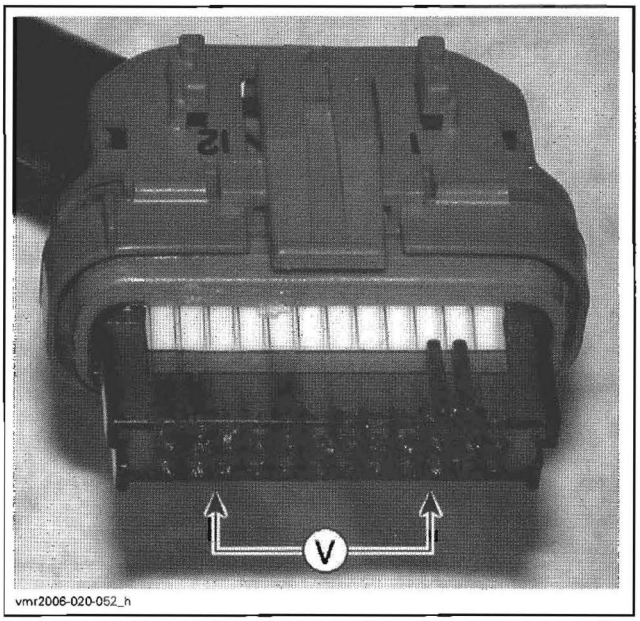

If there is voltage, replace speedometer.

If there is no voltage, recheck voltage as follows.

SPEEDOMETER CONNECTOR (harness side)		VOLTAGE
Pin 8	Engine ground	**300F/550F:** 13.8 Vac **V800:** Battery voltage (Vdc)

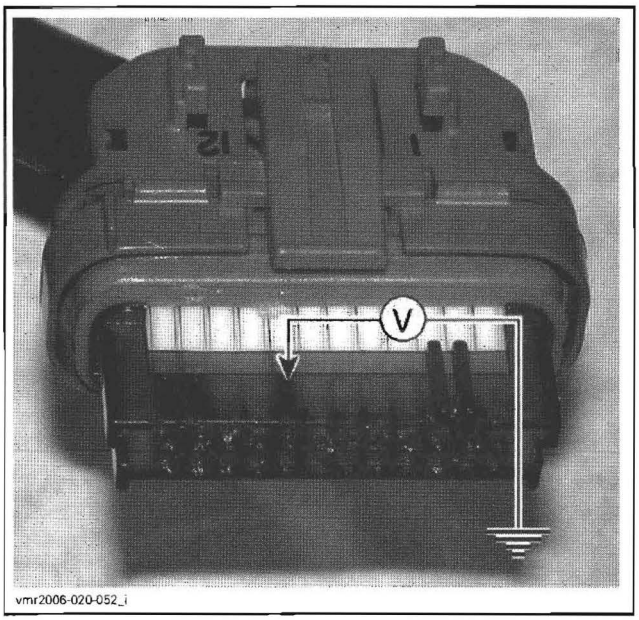

If voltage is not good, check/repair wiring/or connectors from magneto. If good, check lighting generator coil.

If voltage is good, check ground circuit (pin 11) wiring/connectors.

LIGHTS ARE LIT in Speedometer and Needle Does Not Move

Check speed sensor. See below.

If speed sensor tests good, replace speedometer.

Reconnect connector.

Calibration of a New Speedometer

When installing a new speedometer, it is necessary to set it in accordance with the drive axle sprocket used on the vehicle.

CAUTION: If the following operation is not done right the first time, it cannot be repeated. Speedometer calibration can be set only once. Learn the procedure thoroughly before doing it.

Proceed as follows:

IMPORTANT: The following illustrations are examples only. Enter the exact value required for the specific model you are working on.

- First count number of teeth on sprocket and note it.

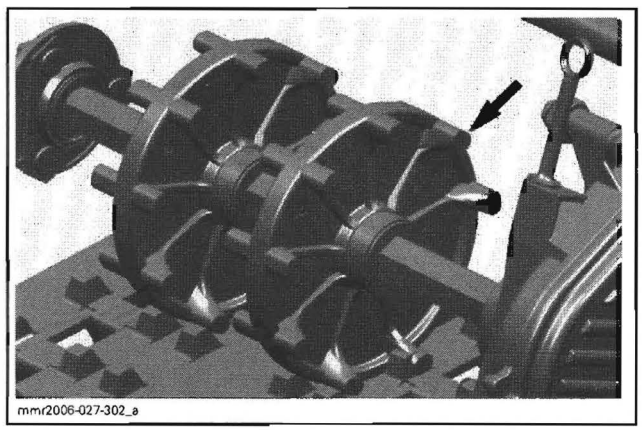

- Ensure speedometer connector is installed.

300F and 550F Models

- Start engine.

V800 Models

- Install the supply harness (P/N 529 035 869) (refer to *LIGHTING AND ACCESSORIES SYSTEM TESTING* for detailed instructions) to continuously feed the electrical system.

All Models

- Look at speedometer ▶ Speedometer lights flash and PAUSE appears.

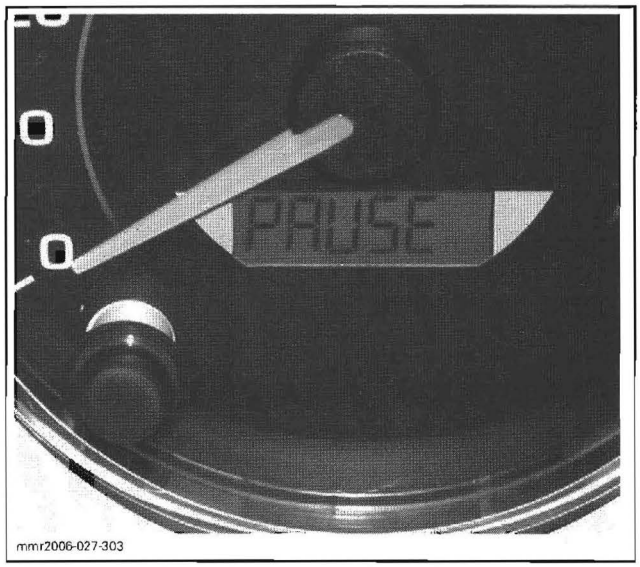

– Available values will scroll automatically. ► 1st digit indicates the number of teeth on sprocket.

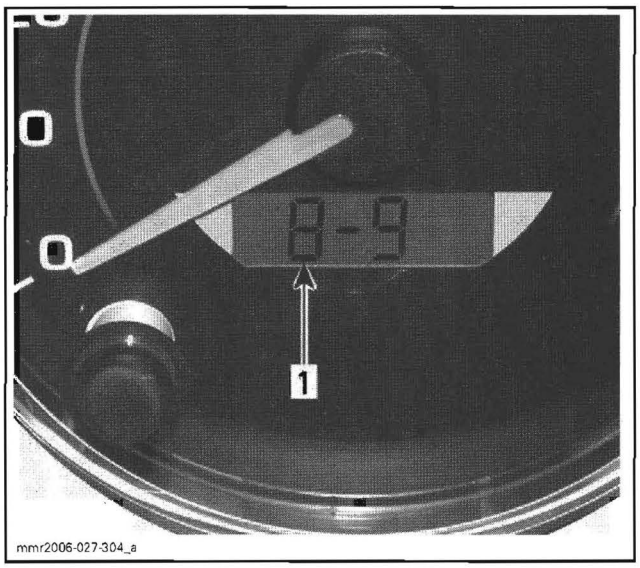

1. Number of teeth on sprocket

– When the proper number is displayed. ► Press MODE button and HOLD 5 seconds to set that value.

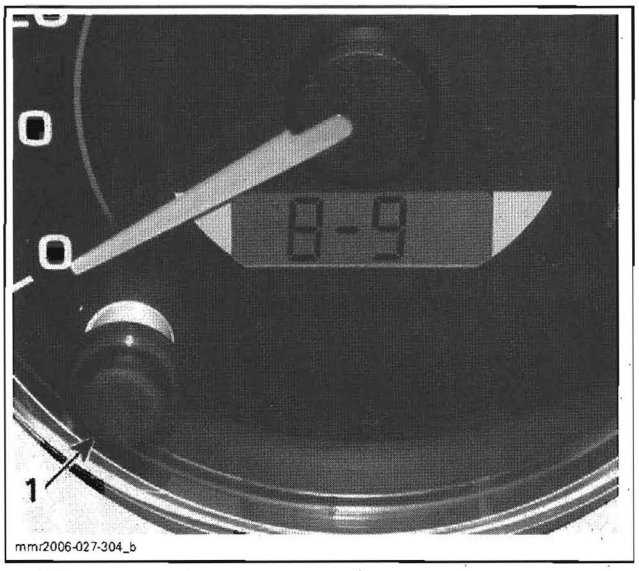

1. HOLD 5 seconds to set

– Lights flashing will stop. ► Speedometer now begins to operate normally.

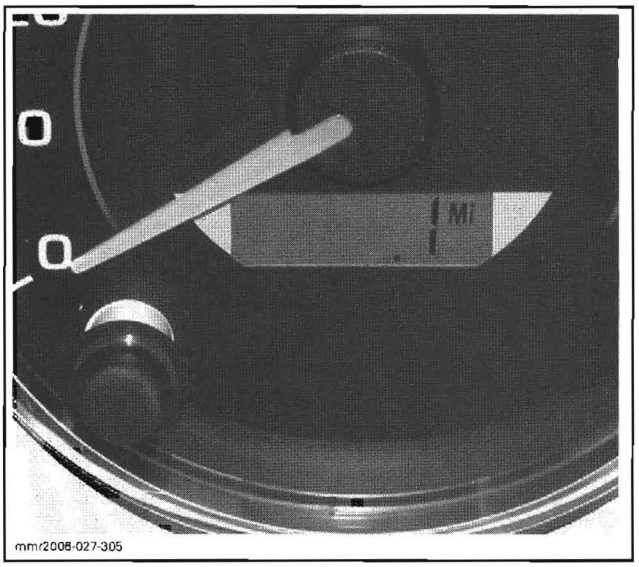

– Procedure is over.
– Stop engine.

NOTE: At some point, 0-0 will be displayed. Do not use, it is intended for manufacturer only. If inadvertently used, speedometer will exit programming mode without causing problems. Restart procedure.

Speedometer Calibration Display

To know the actual calibration of a speedometer, proceed as follows.

– Ensure speedometer connector is installed.

300F and 550F Models

– Start engine.

V800 Models

– Install the supply harness (P/N 529 035 869) (refer to *LIGHTING AND ACCESSORIES SYSTEM TESTING* for detailed instructions) to continuously feed the electrical system.

All Models

– Look at speedometer. ▶ The calibration will be visible a brief moment.

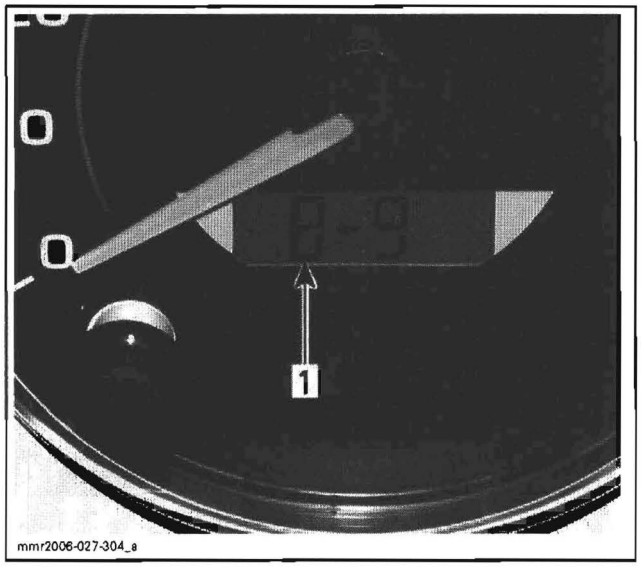

1. Number of teeth on sprocket

– Stop engine.

NOTE: Speedometer calibration cannot be set to a different value.

Zeroing Needle on Electronic Speedometer or Tachometer

If needle is not pointing to zero on any electronic speedometer or tachometer, adjust it as follows.

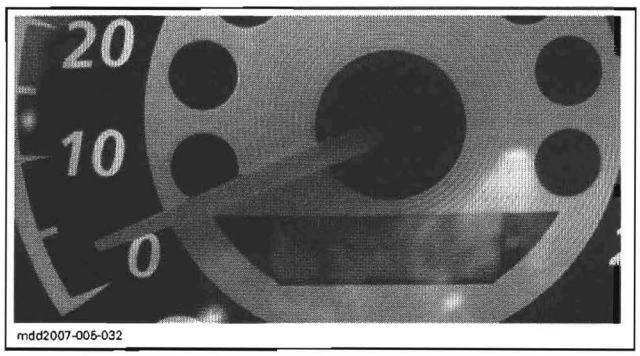

MISALIGNED NEEDLE

IMPORTANT: First ensure gauges are OFF.

300F and 550F Models

Push and hold MODE button on speedometer **while** starting engine.

V800 Models

Push and hold MODE button on speedometer **while** installing supply harness (P/N 529 035 869).

Push and hold MODE button on speedometer **while** pressing start/RER button.

All Models

In a few seconds "SCALE" should be displayed on gauge.

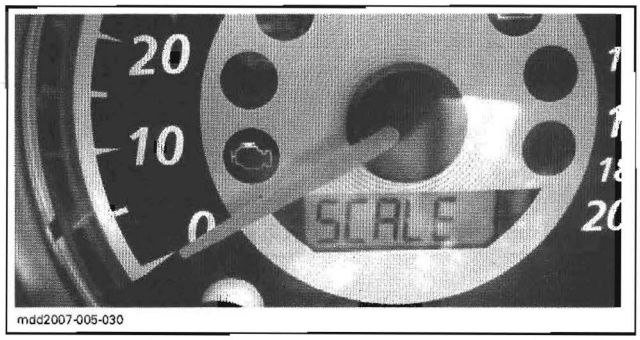

Release mode button then, SCALE will disappear.

A set of brackets will be displayed along with a dash going in a circle clockwise then counterclockwise.

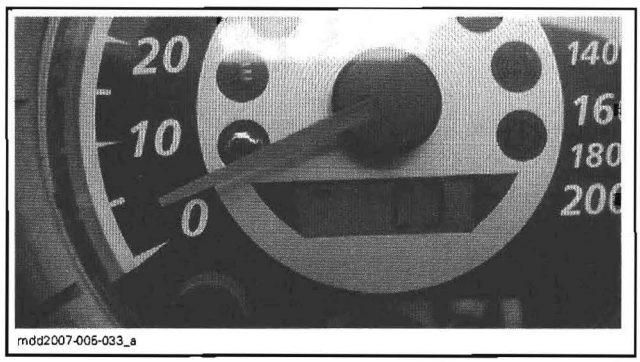

Then, the brackets and moving dash will revert their position. The moving dash will go clockwise then counterclockwise.

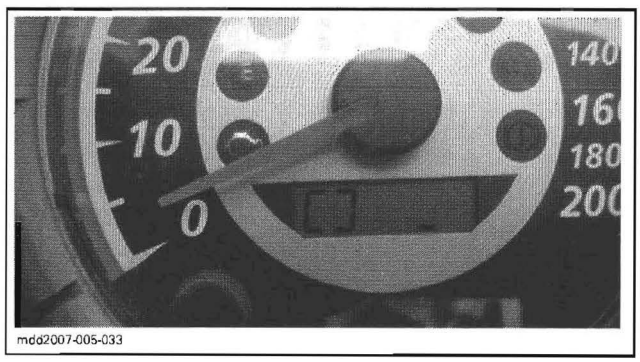

This cycle will repeat.

To adjust the **speedometer** needle, push MODE button while the moving dash is on left side.

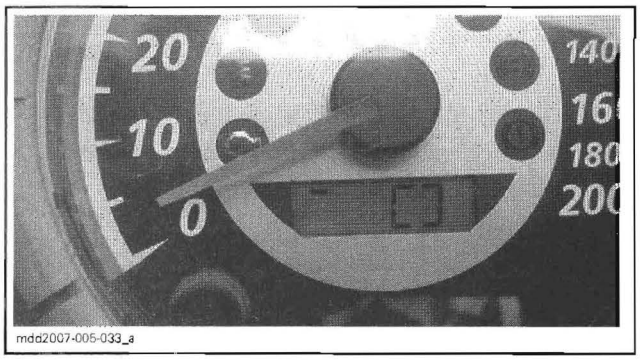

TO ADJUST SPEEDOMETER NEEDLE

To adjust the **tachometer** needle, push MODE button while the moving dash is on right side.

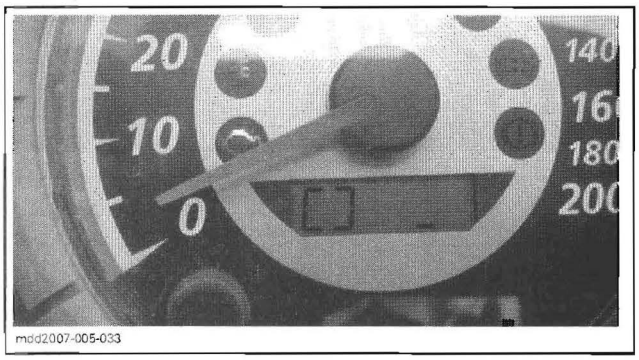

TO ADJUST TACHOMETER NEEDLE

To move needle **clockwise**, wait until the moving dash is going clockwise then push and hold mode button until needle is properly aligned.

To move needle **counterclockwise**, wait until the moving dash is going counterclockwise then push and hold mode button until needle is properly aligned.

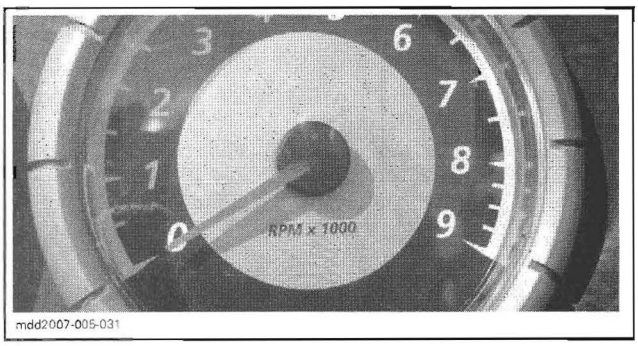

PROPERLY ALIGNED NEEDLE

Release mode button. After a few seconds, gauge will return to normal operation. The new needle position is now set.

Remove supply harness.

SPEED SENSOR

Static Test

Locate speed sensor.

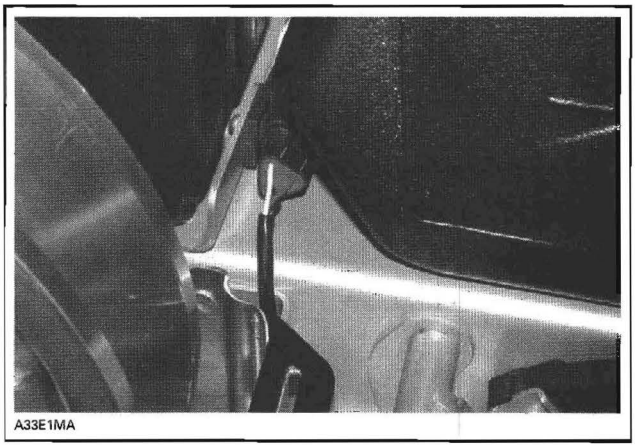

TYPICAL

300F and 550F Models

Start engine for the procedure.

⚠ WARNING

Be very careful when working besides the rotating driven pulley.

V800 Models

Install the supply harness (P/N 529 035 869) (refer to *LIGHTING AND ACCESSORIES SYSTEM TESTING* for detailed instructions) to continuously feed the electrical system.

All Models

Use a multimeter and set it to Vdc.

Back-probe connector and read voltage as follows.

MODEL	SPEED SENSOR CONNECTOR (sensor side)		VOLTAGE
All	RED	BLACK	Battery voltage

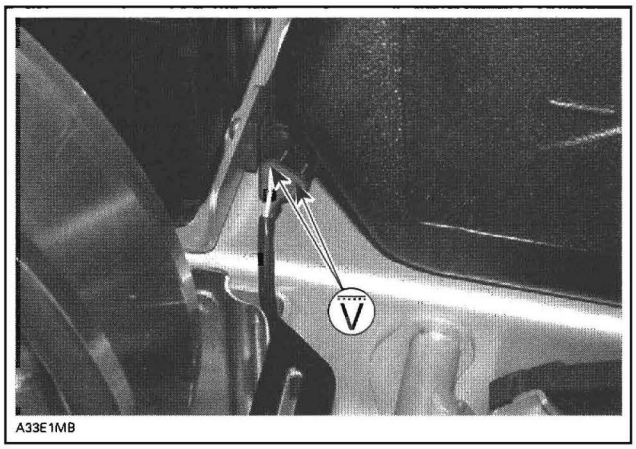

If voltage is not good, check fuses, relay (if applicable) and wiring/connectors.

NOTE: On 300F and 550F models, the speedometer receives AC from magneto, converts it to DC and then supplies Vdc to the speed sensor. When the related wiring tests good and there is still no voltage to speed sensor, try a new speedometer.

If voltage is good, do the following test.

Lift rear of vehicle and safely block.

⚠ WARNING

Before starting engine, ensure track is free of particles which could be thrown out while track is rotating. Keep hands, tools, feet and clothing clear of track. Ensure no one is standing in close proximity to the vehicle. Never rotate at high speed.

Start engine and slightly accelerate engine so that track rotates SLOWLY. Back-probe connector and read voltage.

SPEED SENSOR CONNECTOR (harness side)		VOLTAGE
RED	WHITE	Alternate reading of: battery voltage, approx. 0 Vdc, battery voltage and so on

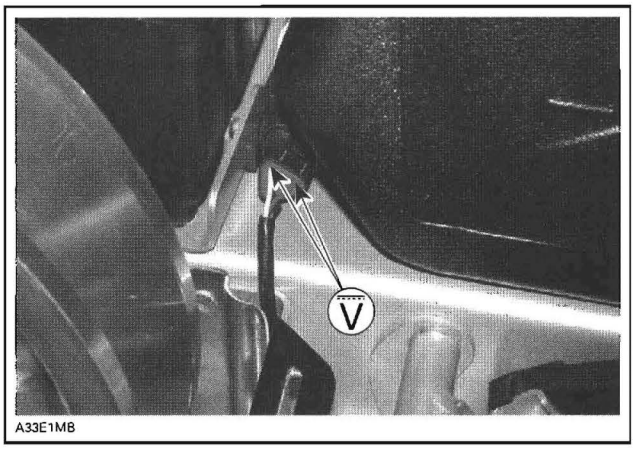

NOTE: Since we measure pulsating voltage, the numeric display will continuously change. The analog display may be easier to follow.

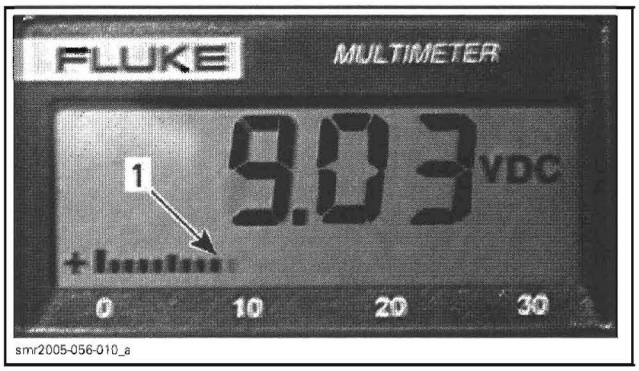

1. Analog display

If voltage is appropriate, check/repair wiring/connector between sensor and Speedometer. If it is good, try a new speedometer.

If voltage is wrong, try a new sensor.

TACHOMETER (if so equipped)

Tachometer Pinout

300F and 550F Models

FUNCTION	PIN
Power 12 Vdc (+) from speedometer	9
Ground	10
Control wires from speedometer	18, 19, 20, 21

V800 Models

FUNCTION	PIN
Power 12 Vdc (+)	9
Ground	10
Control wires from speedometer	18, 19, 20, 21

Test

No Light but the Needle Moves

300F and 550F Models

The tachometer power is supplied from the speedometer. The speedometer receives AC from magneto, converts it to DC and then supplies Vdc to the tachometer. Check the voltage between pins 9 and 10 of tachometer.

The obtained value should be 12 Vdc. If not, check connections and wiring harness. Also refer to *POWER DISTRIBUTION*.

When the related wiring tests good and there is still no voltage to tachometer, try a new speedometer.

V800 Models

The tachometer power is supplied through the main wiring harness. Check the voltage between pins 9 and 10 of tachometer.

The obtained value should be 12 Vdc. Otherwise, check connections and wiring harness. Also refer to *POWER DISTRIBUTION*.

All Models

If the voltage is good, replace the tachometer.

The Needle Does not Move

No lights in tachometer, see above

With lights in tachometer, check wire connections on pin 18, 19, 20 and 21.

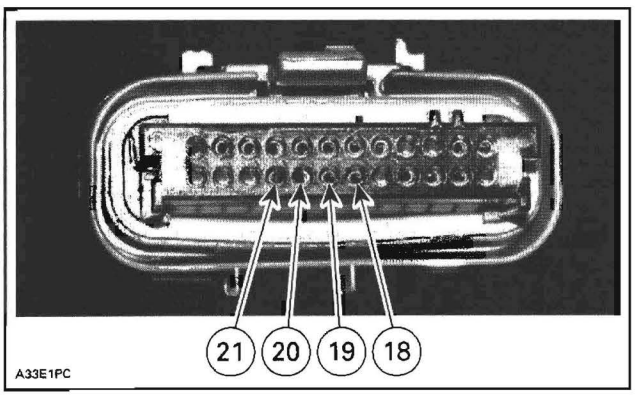

If they test good, try a new tachometer.

Crazy Needle

Check wire connections on pin 18, 19, 20 and 21.

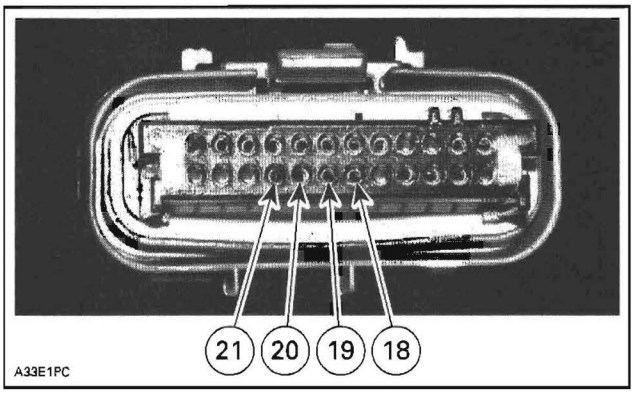

If they test good, try a new tachometer.

Zeroing Needle on Electronic Tachometer

Refer to procedure in *SPEEDOMETER* above.

HEATING ELEMENTS

NOTE: All measurements must be performed at 21°C (70°F).

Throttle Lever

Unplug connector under steering cover.

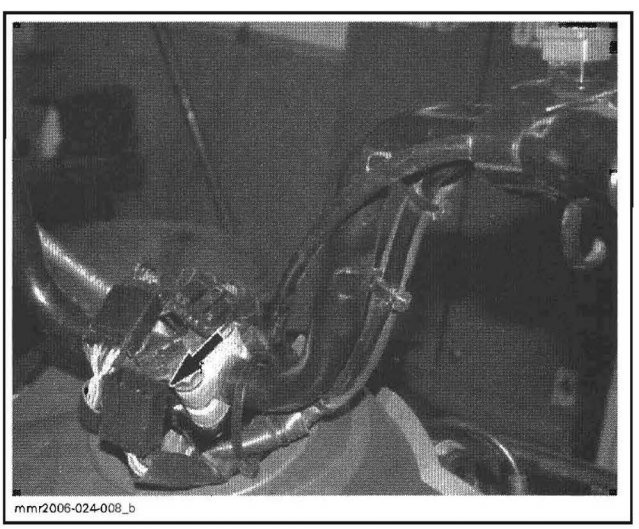

Check heating element as follows.

INTENSITY	ELEMENT TERMINAL		RESISTANCE @ 20°C (68°F)
LOW	BROWN/ YELLOW	YELLOW	18.5 Ω
HIGH	BROWN		4.2 Ω

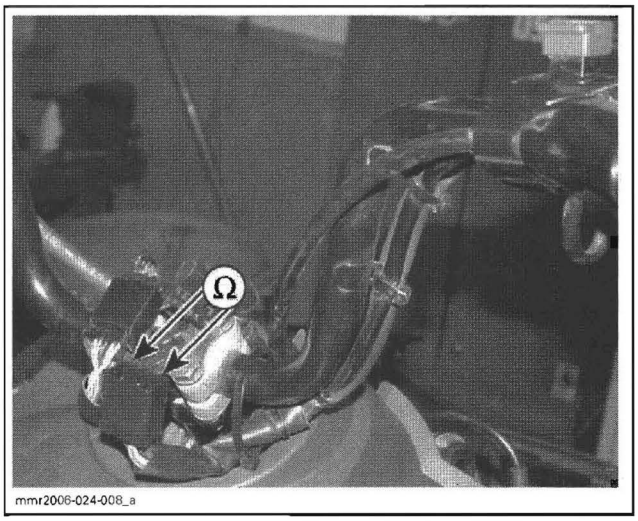

If readings are out of specifications, check/repair wiring and if good, replace throttle lever.

If readings are within specifications, check switch continuity as follows.

Disconnect steering connector.

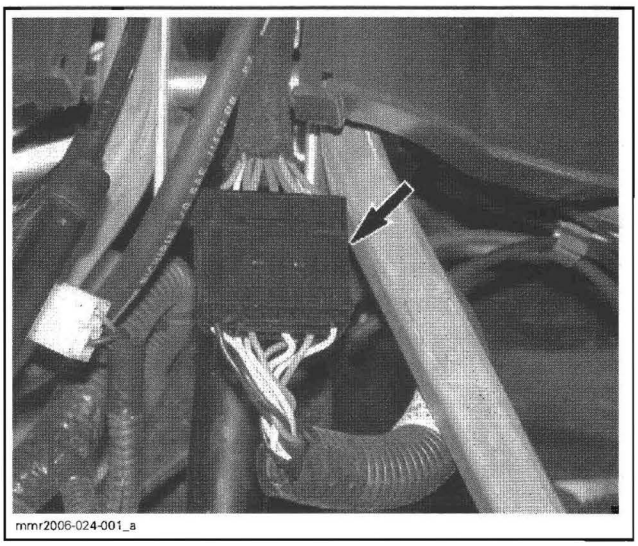

SWITCH POSITION	LARGE CONNECTOR	SMALL CONNECTOR	RESISTANCE @ 20°C (68°F)
LOW	RED/ YELLOW	BROWN/ YELLOW	0.5 Ω max.
HIGH		BROWN	

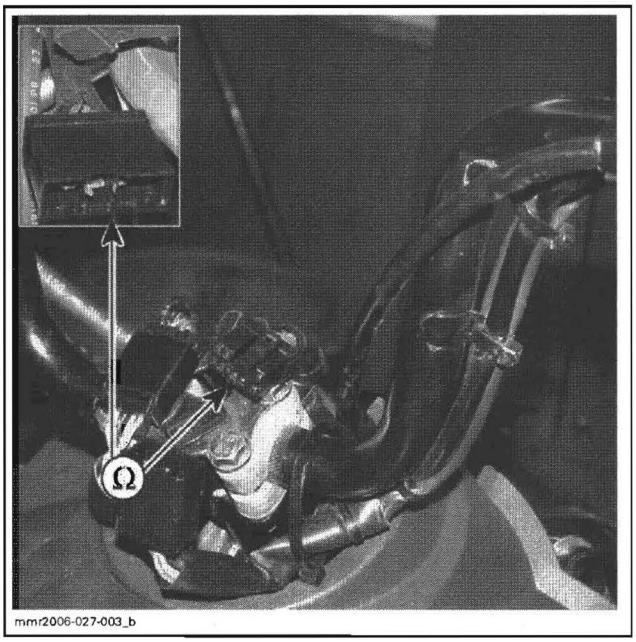

If switch is out of specifications, replace switch.

If switch test good, refer to *POWER DISTRIBUTION.*

Reconnect connectors.

Handlebar Grip

Unplug connector under steering cover.

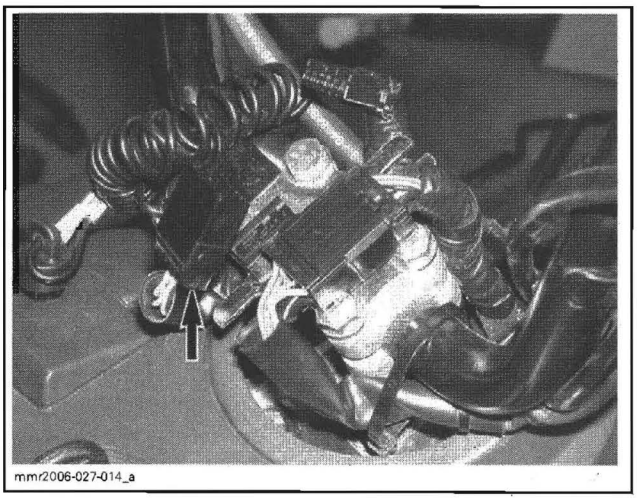

Check heating element as follows.

LH Heating Grip

INTENSITY	WIRE OF ELEMENT CONNECTOR		RESISTANCE @ 20°C (68°F)
LOW	ORANGE/ VIOLET	BLACK	15.2 Ω
HIGH	ORANGE	BLACK	7.6 Ω

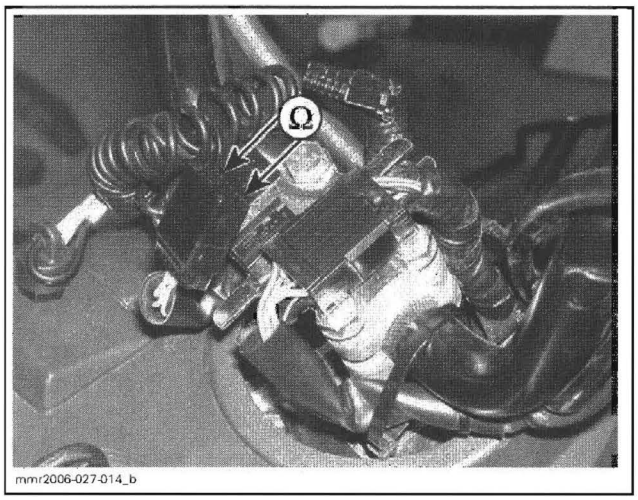

RH Heating Grip

INTENSITY	WIRE OF ELEMENT CONNECTOR		RESISTANCE @ 20°C (68°F)
LOW	ORANGE/ VIOLET	BLACK	15.2 Ω
HIGH	ORANGE	BLACK	7.6 Ω

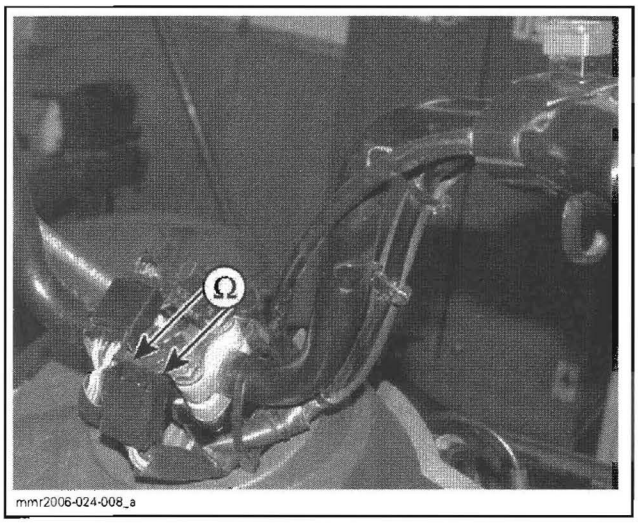

If readings are out of specifications, check/repair wiring going to heating grip and if good, replace handlebar grip.

If readings are within specifications, check switch continuity as follows.

Disconnect steering connector.

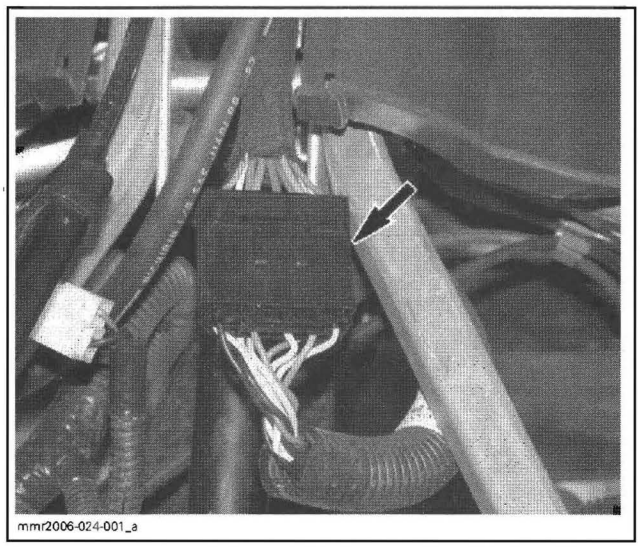

SWITCH POSITION	WIRE IN LARGE CONNECTOR	PIN IN SMALL CONNECTOR	RESISTANCE @ 20°C (68°F)
LOW	RED/ YELLOW	ORANGE/ VIOLET	0.5 Ω max.
HIGH		ORANGE	

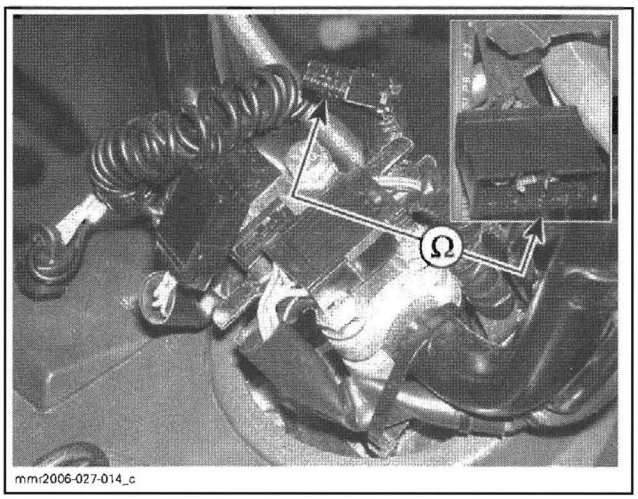

If switch is out of specifications, check wiring/ connectors going to switch. If they are good, replace switch.

If switch test good, refer to *POWER DISTRIBUTION* in this section.

Reconnect connectors.

BEEPER

Test

Unplug connector from beeper.

Using jumper wires, connect battery positive post to beeper positive tab.

NOTE: On manual start models, use any external 12 V battery.

Connect battery negative post to beeper negative tab.

CAUTION: To avoid beeper damage, ensure that polarity is respected.

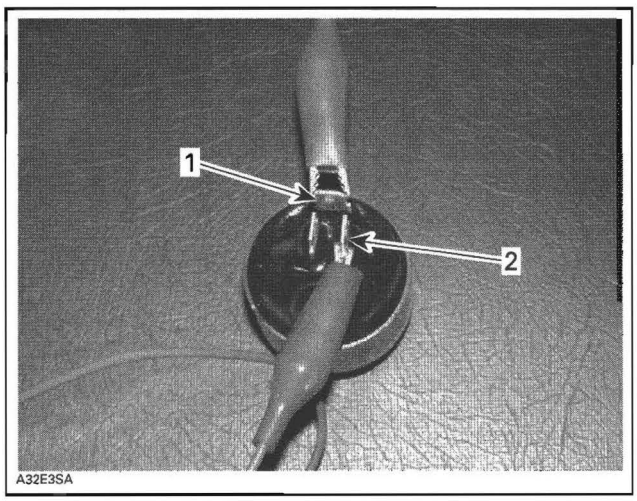

TYPICAL — 12-VOLT BATTERY PLUGGED TO BEEPER
1. Beeper positive tab
2. Beeper negative tab

A continuous sound should be heard. Otherwise, replace beeper.

If the beeper is good, check accessory fuse, connectors/wiring harness (from MPEM and also beeper ground wires). If everything tests good, MPEM can be suspected.

Removal

The beeper is located near the ignition coil.

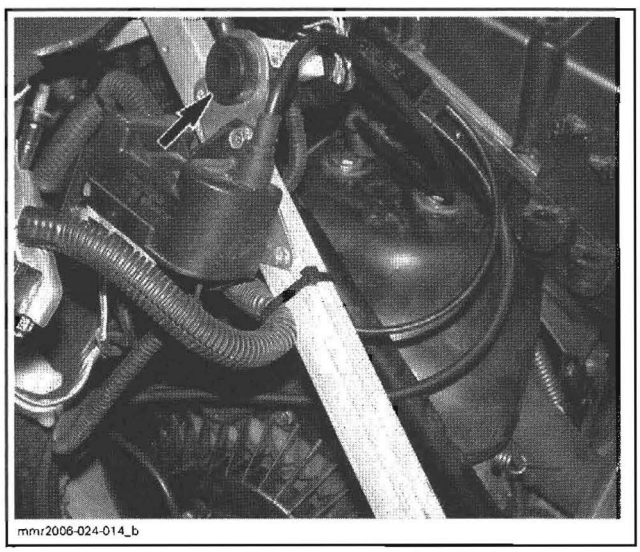

Unplug connector from beeper.

Unscrew retaining ring then remove beeper.

Installation

To install beeper, reverse the removal procedure.

PILOT LAMPS (models without speedometer)

Identification

High Beam

This pilot lamp will light up when headlamp is on HIGH beam.

300F and 550F Models

Reverse (RER)

This pilot lamp will light up when reverse is selected.

V800 Models

Engine Oil Pressure

This pilot lamp will light up when engine oil pressure is too low. Stop vehicle in a safe place then, check oil level and replenish as described in *ENGINE OIL LEVEL*.

Restart engine, oil pilot lamp must turn off after few seconds. If oil pilot lamp still lights up, inspect lubrication system.

Engine Overheat

If this lamp blinks (1 short and 1 long beep will also be heard), the engine is overheating, reduce snowmobile speed and run snowmobile in loose snow or stop engine immediately and allow engine to cool. Check cooling system.

Engine Management System (EMS)

If this lamp is blinking, it indicates that an engine fault code is present.

Test

Disconnect appropriate pilot lamp connectors.

NOTE: Some lamps need to be manually set so that they turn on. For example, set headlamp to high beam to supply its pilot lamp.

Start engine and rev to approximately 5000 RPM to read voltage on connectors. On V800 models turn ignition key briefly to START.

PILOT LAMP CONNECTORS	VOLTAGE
	300F/550F: 13.8 Vac **V800:** Battery voltage (Vdc)

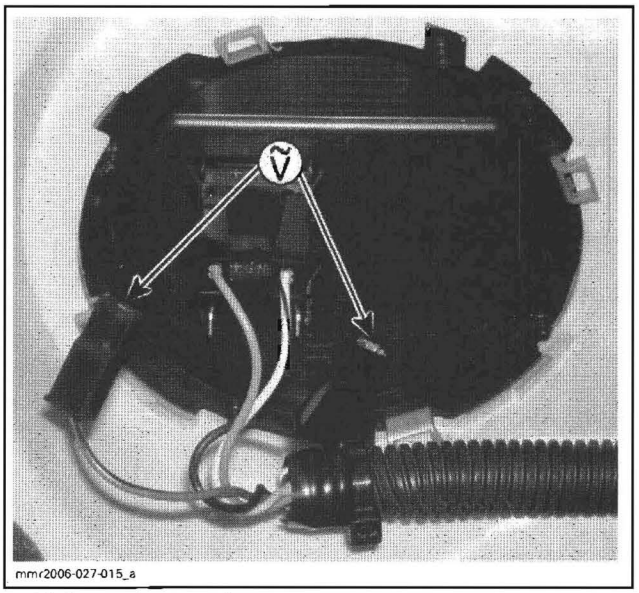

- Voltage is good:
  - Change pilot lamp.
- No voltage:
  - Check wiring/connectors of the appropriate circuit.

12-VOLT POWER OUTLET

Test

First, try another accessory (DC current), if it does not work, check power outlet.

Remove power outlet.

Unplug the power outlet connectors.

Turn ignition key to ON. On V800 models, start engine.

Measure the voltage as follows.

MODELS	WIRES		VOLTAGE
300F/550F	RED/BLUE	BLACK	12 - 14.5 Vdc
V800	RED/YELLOW		

- No voltage:
  - Check appropriate fuse(s) and relays 1 and 2 (if applicable), connectors and wiring harness.
- Voltage is good:
  - After checking the accessories, change the visor outlet.

VISOR OUTLET (if so equipped)

Test

First, try another accessory, if it does not work, check visor outlet.

NOTE: Pay attention that 300F and 550F models supply AC while V800 models supply DC.

Unplug the visor connector.

Start engine.

Check voltage as follows.

WIRES		VOLTAGE
RED/YELLOW	BLACK	**300F/550F:** 12 - 14.5 Vac **V800:** 12 - 14.5 Vdc

- No voltage:
  - Check fuse(s) and relays 1 and 2 (if applicable), connectors and wiring harness.
- Voltage is good:
  - Replace power outlet.

DRIVE BELT

SERVICE TOOLS

Description	Part Number	Page
belt tension tester	414 348 200	450
driven pulley opening tool	529 017 200	447

APPLICATION CHART

MODEL	P/N	MINIMUM WIDTH (wear limit)
300F	417 300 326	32.80 mm (1.291 in)
550F	415 060 600	32.30 mm (1.272 in)
V800	417 300 197	34.90 mm (1.374 in)

DRIVE BELT

Drive Belt Removal

Open the LH side panel and remove the belt guard.

Screw the driven pulley opening tool (P/N 529 017 200) or the drive belt installer/expander (included in the tool box) in any threaded holes of driven pulley and tighten to fully open the pulley.

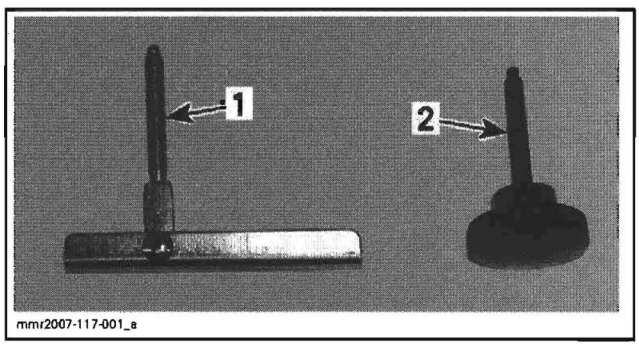

1. *Drive belt installer/expander*
2. *Driven pulley opening tool*

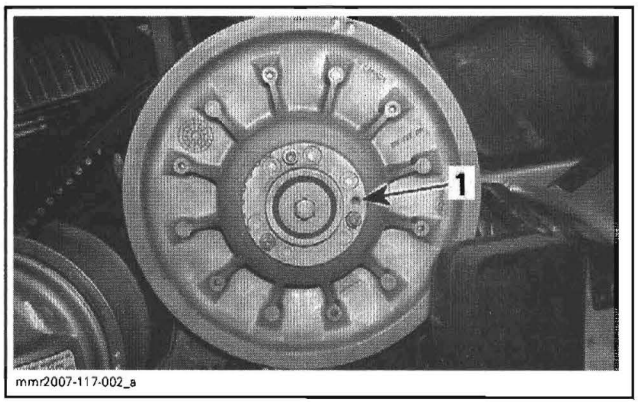

TYPICAL
1. *Threaded hole*

To remove belt, slip the belt over the top of driven pulley.

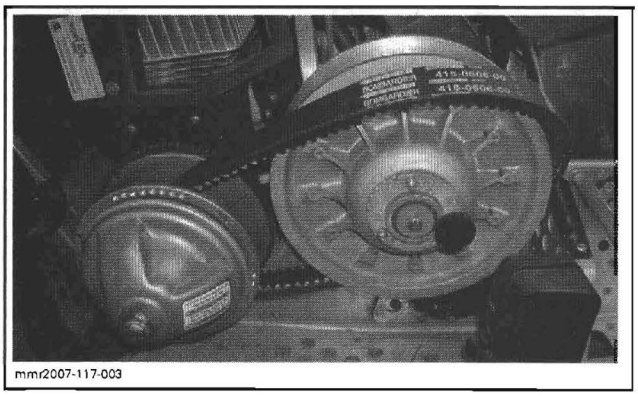

TYPICAL

Drive Belt Inspection

Inspect belt for cracks, fraying or abnormal wear (uneven wear, wear on one side, missing cogs, cracked fabric). If abnormal wear is noted, probable cause could be pulley misalignment, excessive RPM with frozen track, fast starts without warm-up period, burred or rusty sheave, oil on belt or distorted spare belt.

Check drive belt width. Replace the drive belt if width is under minimum recommended width (see *APPLICATION CHART* above).

Drive Belt Installation

The installation is the reverse of the removal procedure. However, pay attention to the following.

NOTE: The drive belt height and deflection must be checked each time a new drive belt is installed and should be rechecked after 50 km (30 miles).

The maximum drive belt life span is obtained when the drive belt is installed as shown. This will ensure that correct direction of rotation is respected.

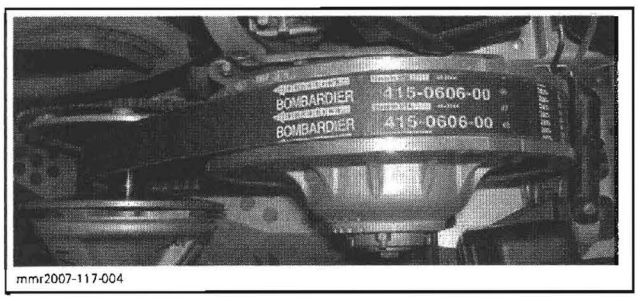

mmr2007-117-004

CORRECT

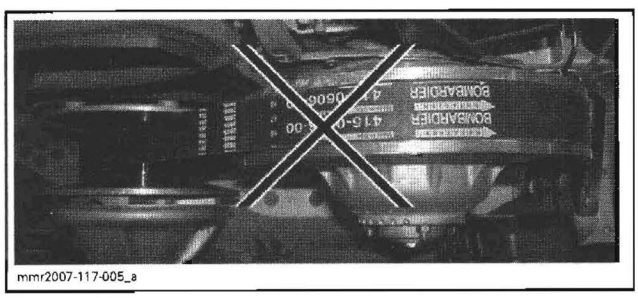
mmr2007-117-005_a

INCORRECT

CAUTION: Do not force or use tools to pry the belt in place, as this could cut or break the cords in the belt.

Install the drive belt between drive pulley sheaves.

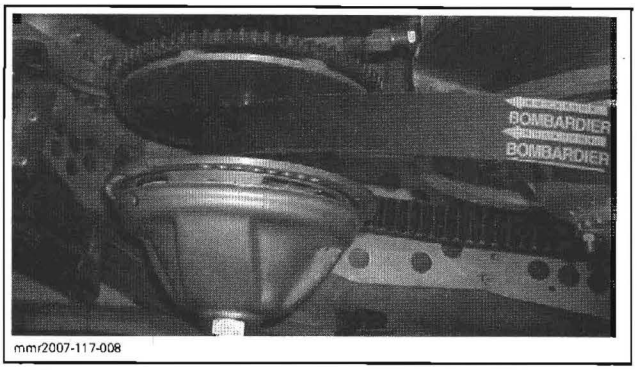

mmr2007-117-008

TYPICAL

Insert, by the top, the belt between driven pulley sheaves. Finish with the bottom.

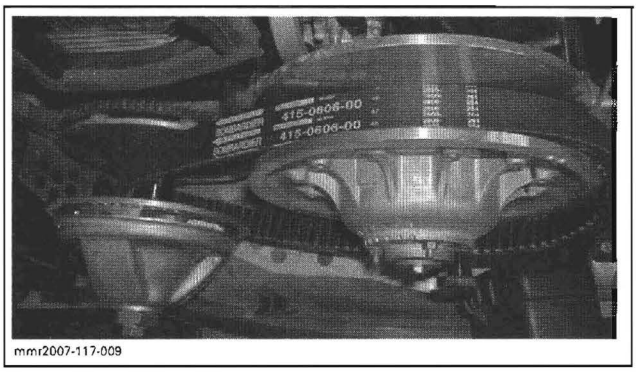

mmr2007-117-009

TYPICAL

Adjust belt then install belt guard and close LH side panel.

Drive Belt Height Adjustment

Before checking the belt height, ensure that a good-condition proper belt (refer to the *APPLICATION CHART*) is installed.

Check pulley alignment. Refer to *PULLEY ALIGNMENT.*

To obtain maximum vehicle performance, the drive belt cord should be flush with driven pulley edge. Adjust as required.

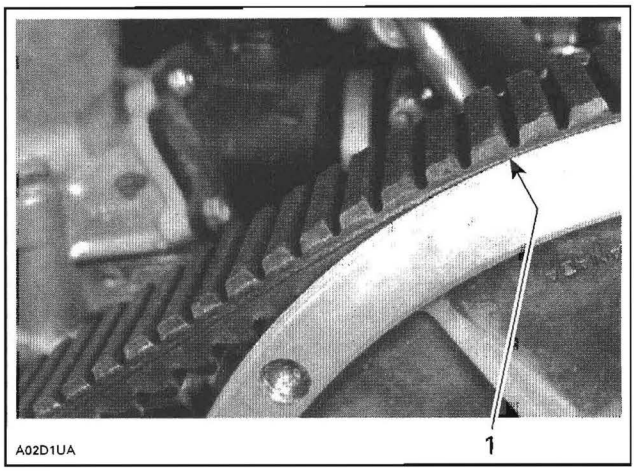

TYPICAL
1. Flush

To Lower Drive Belt In the Driven Pulley:

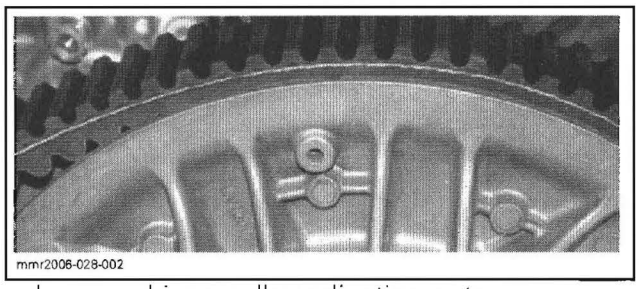

– Loosen driven pulley adjusting nuts.

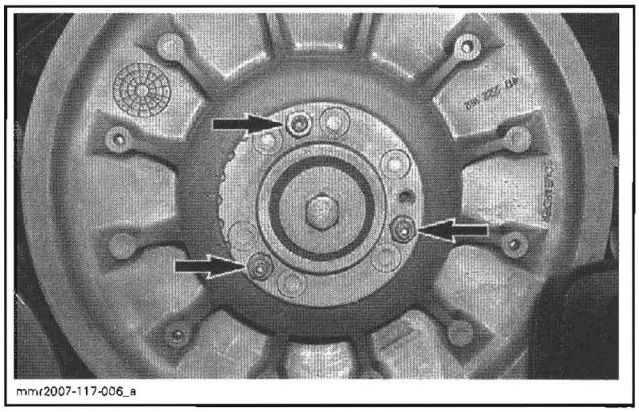

300F AND 500F MODELS

– Turn Allen screws clockwise. Turn Allen screws 1/4 turn at a time, then rotate driven pulley to allow drive belt to settle in pulley. Check height, repeat as required.
– Torque adjusting nuts to 7.5 N•m (66 lbf•**in**).

To Raise Drive Belt In the Driven Pulley:

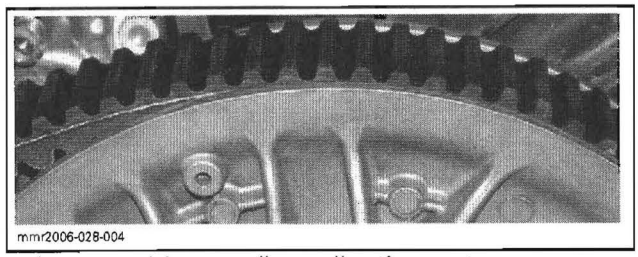

– Loosen driven pulley adjusting nuts.

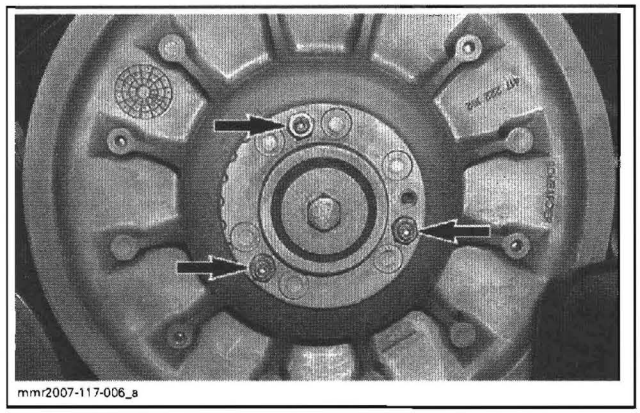

300F AND 500F MODELS

– Turn Allen screws counterclockwise. Turn Allen screws 1/4 turn at a time, then rotate driven pulley to allow drive belt to settle in pulley. Check height, repeat as required.
– Torque adjusting nuts to 10 N•m (89 lbf•**in**).

Drive Belt Deflection (reference only)

Before checking the belt deflection, ensure vehicle has the proper belt (refer to the *APPLICATION CHART*).

Adjust pulley belt height. Refer to *DRIVE BELT HEIGHT*.

To obtain maximum vehicle performance, the belt deflection must be adjusted according to specifications shown in the accompanying chart.

MODEL	DEFLECTION† mm (in)	FORCE kg (lb)
All models	32 ± 5 (1.260 ± .197)	11.3 (25)

† FOR REFERENCE ONLY

Wooden Stick and Spring Scale Method

Position a reference rule on drive belt.

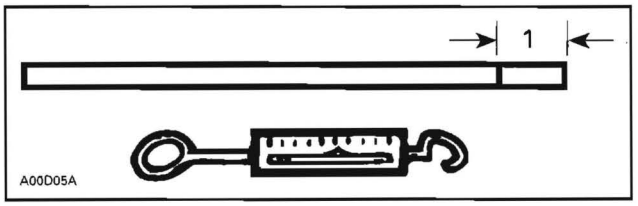

1. Mark specified deflection

Using spring scale and stick, apply specified force on drive belt halfway between pulleys as shown.

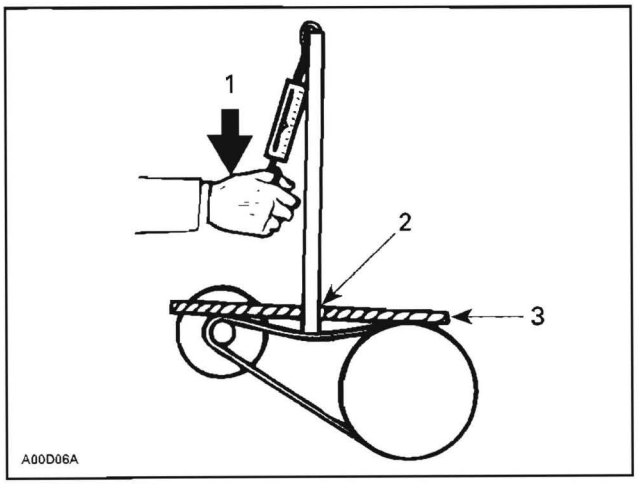

1. Force
2. Read deflection here
3. Reference rule

Belt Tension Tester Method

Position a reference rule on drive belt.

Use the belt tension tester (P/N 414 348 200).

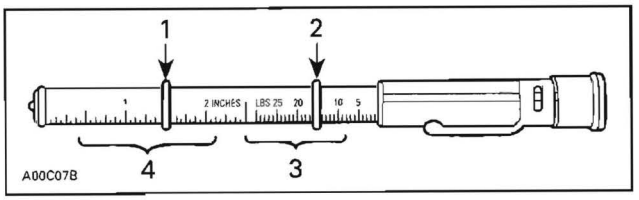

1. Lower O-ring
2. Upper O-ring
3. Force (read down)
4. Deflection (read up)

1. Slide lower O-ring of deflection scale to specified measure.
2. Slide upper O-ring to 0 (zero) on the force scale.
3. Apply pressure until lower O-ring is flush with edge of rule and read force on the upper scale at top edge of O-ring.

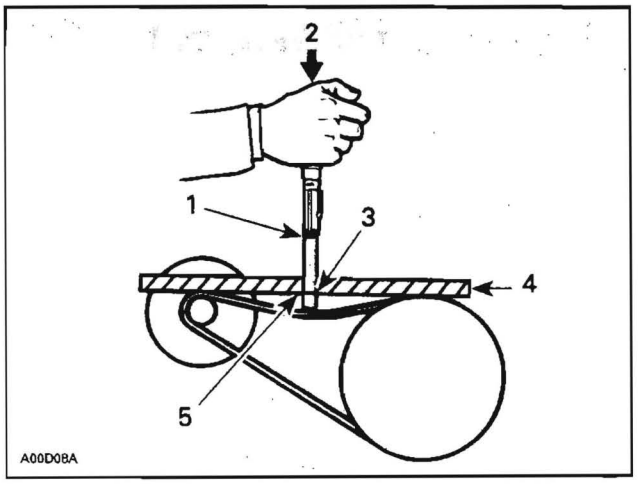

1. Upper O-ring — force
2. Force
3. Lower O-ring — deflection
4. Reference rule
5. Deflection

DRIVE PULLEY (BOMBARDIER LITE)

SERVICE TOOLS

Description	Part Number	Page
drive pulley holder	529 027 600	453–455
drive pulley puller	529 022 400	454–456
pulley holder	529 035 826	454–455
spring cover tool	529 027 300	456

SERVICE PRODUCTS

Description	Part Number	Page
Loctite 271 (red)	293 800 005	457
pulley flange cleaner	413 711 809	454–455

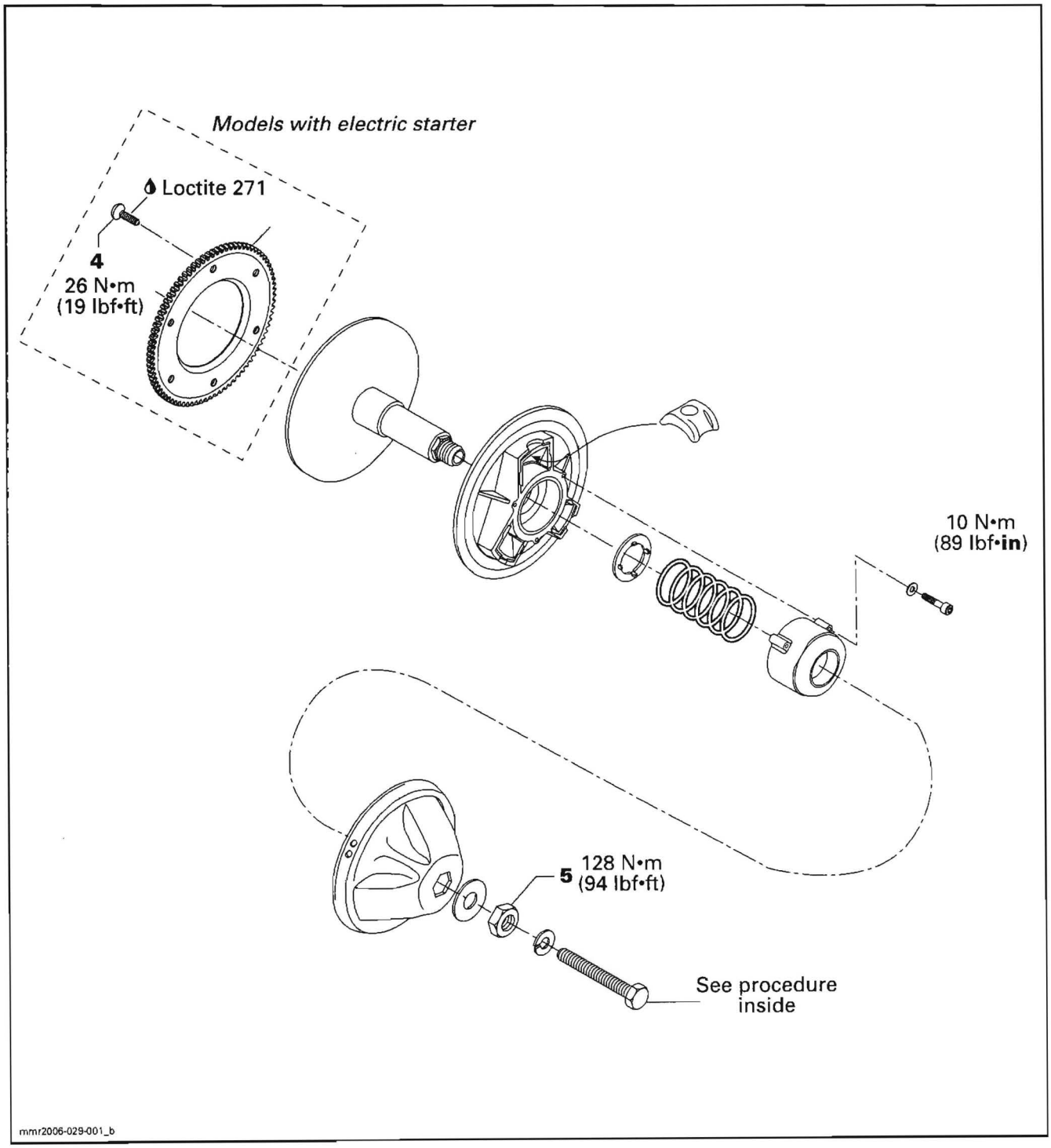
Models with electric starter
Loctite 271
4
26 N•m
(19 lbf•ft)
10 N•m
(89 lbf•in)
5
128 N•m
(94 lbf•ft)
See procedure
inside
mmr2006-029-001_b

GENERAL

NOTE: Refer to *TECHNICAL SPECIFICATIONS* to identify the snowmobile drive pulley type.

⚠ WARNING

Never start engine when the pulley guard is removed.

Some drive pulley components (return spring, calibration disk) can be changed to improve vehicle performance in high altitude regions. A service bulletin gives information about calibration according to altitude.

CAUTION: Such modifications should only be performed by experience mechanics since they can greatly affect vehicle performance.

⚠ WARNING

Any drive pulley repairs must be performed by an authorized Ski-Doo dealer. Subcomponent installation and assembly tolerances require strict adherence to procedures detailed.

⚠ WARNING

Never use an impact wrench to remove or install the drive pulley.

⚠ WARNING

The drive pulley assembly is a precisely balanced unit. Never replace parts with used parts from another drive pulley assembly.

During assembly/installation, use the torque values and the service products as in the exploded view.

Clean threads before applying a threadlocker. Refer to *SELF-LOCKING FASTENER* and *LOCTITE APPLICATION* at the beginning of this manual for complete procedure.

⚠ WARNING

Torque wrench tightening specifications must strictly be adhered to.
Locking devices (e.g.: locking tabs, elastic stop nuts, self-locking fasteners, cotter pins, etc.) must be installed or replaced with new ones where specified. If the efficiency of a locking device is impaired, it must be renewed.

PROCEDURES

FIXED AND SLIDING SHEAVES

Sheave Inspection

Check surface of sliding sheave and fixed sheave for scratches, excessive wear or other damages. Replace if necessary.

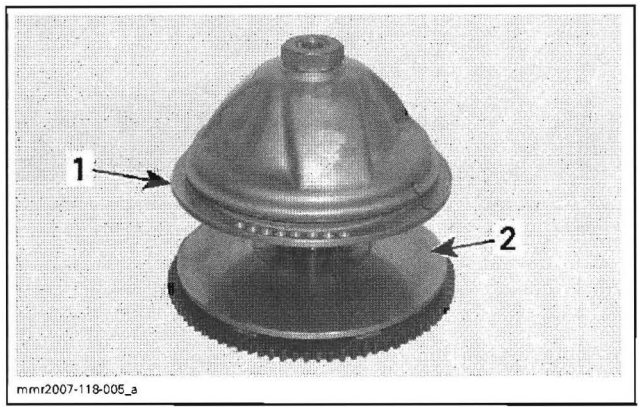

1. Sliding sheave
2. Fixed sheave

Check sliding half for excessive lateral play and fixed half shaft for scratches. Replace as required.

Sheave Removal (drive pulley)

Open the LH side panel to remove the belt guard and the drive belt.

Using the drive pulley holder (P/N 529 027 600), hold the drive pulley to remove the drive pulley bolt and its lock washer.

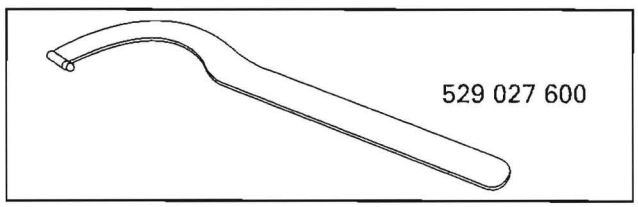

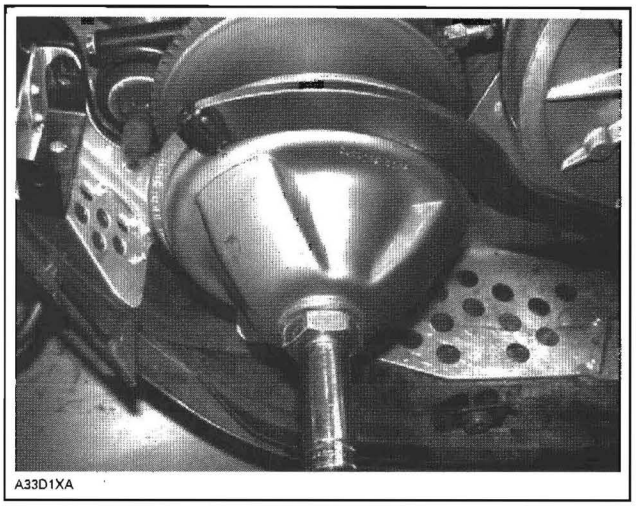
A33D1XA

TYPICAL

With the drive pulley holder still installed, install the drive pulley puller (P/N 529 022 400) through the drive pulley.

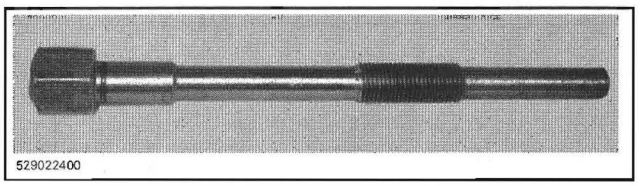
529022400

Hold the drive pulley and screw in the puller then remove drive pulley.

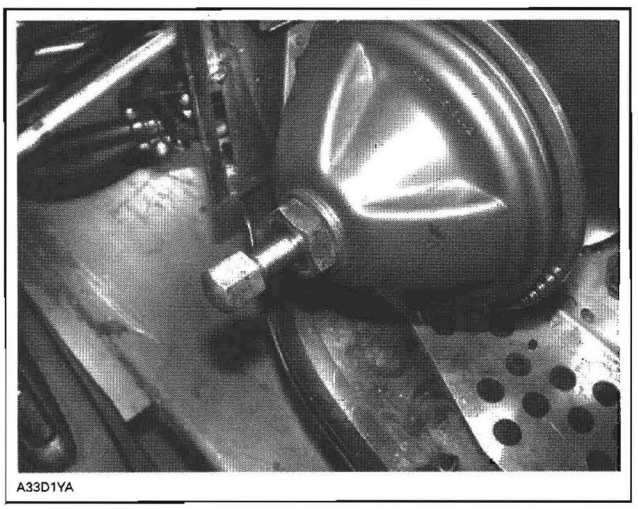
A33D1YA

TYPICAL

Sheave Cleaning

Clean pulley faces and shaft with fine steel wool and clean dry cloth. Clean sliding sheave bushing with clean dry cloth.

Remove grease or oil with pulley flange cleaner (P/N 413 711 809).

Sheave Installation (drive pulley)

Clean crankshaft taper and inner pulley taper with pulley flange cleaner (P/N 413 711 809).

Install the drive pulley bolt and its lock washer.

Hold the drive pulley with the drive pulley holder (P/N 529 027 600) then torque bolt to 90 N•m (66 lbf•ft).

Install drive belt and belt guard.

Raise and block the rear of the vehicle and support it with a mechanical stand.

⚠ WARNING

Make sure the track is free of particles that could be thrown out while track is rotating. Keep hands, tools, feet and clothing clear of track. Ensure nobody is standing near the vehicle.

Accelerate the vehicle at low speed (maximum 30 km/h (20 MPH)) and apply the brake, repeat 5 times.

Retorque bolt to 95 N•m (70 lbf•ft).

⚠ WARNING

After 10 hours of operation the transmission system of the vehicle must be inspected to ensure the retaining screw is properly torqued.

GOVERNOR CUP

Governor Cup Removal

Remove drive pulley from engine. Refer to *FIXED AND SLIDING SHEAVES*.

Remove governor cup nut. Two methods can be used to unscrew the nut.

With pulley holder:

– Install the pulley holder (P/N 529 035 826) in a vice.

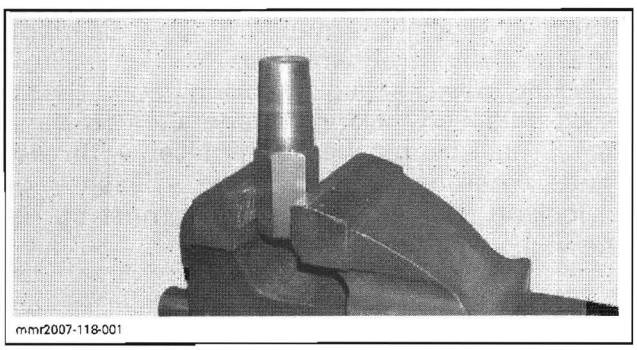
mmr2007-118-001

– Install the drive pulley on it.

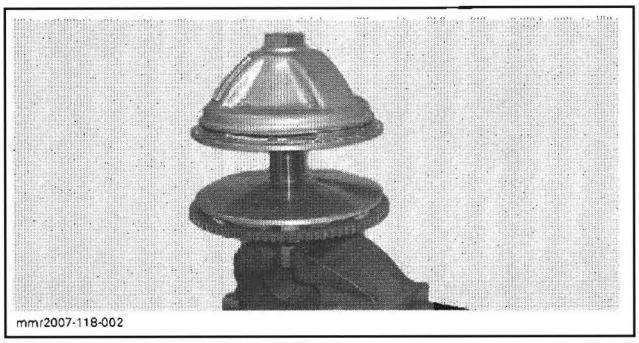
mmr2007-118-002

– Unscrew nut on the top of drive pulley. Remove washer.

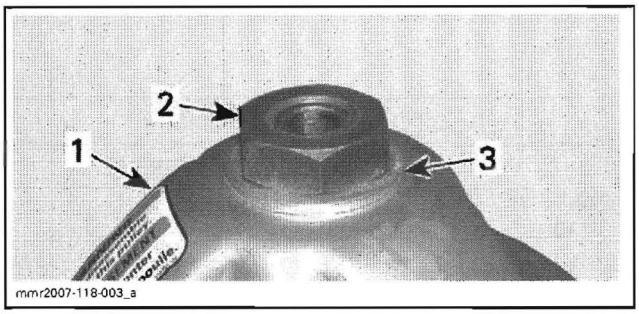

mmr2007-118-003_a

1. *Governor cup*
2. *Nut*
3. *Washer*

– To remove the pulley holder from fixed sheave, use the drive pulley puller (P/N 529 022 400).

Without pulley holder:

– Install the governor cup nut in a vice.

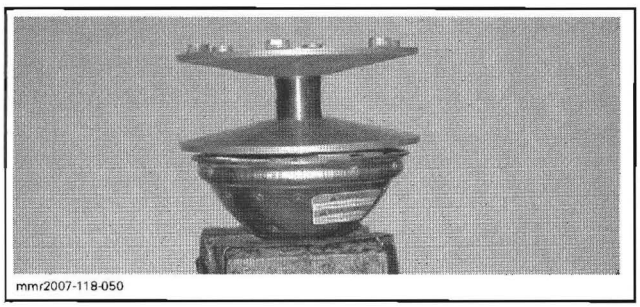
mmr2007-118-050

– Use the drive pulley holder (P/N 529 027 600) to loosen nut.

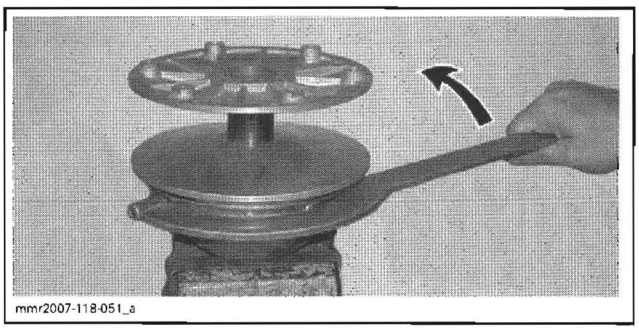
mmr2007-118-051_a

Remove the governor cup.

Governor Cup Inspection

Check the hexagonal opening of governor cup for excessive wear or looseness.

Governor Cup Installation

NOTE: Even if two methods can be used to unscrew the governor cup nut, the following procedure is the only one (the one and only) method to tighten governor cup nut properly.

Install the pulley holder (P/N 529 035 826) in a vice.

Clean pulley holder taper and the inner taper of fixed sheave with pulley flange cleaner (P/N 413 711 809).

Install fixed sheave on tool and sliding sheave on fixed sheave shaft.

When assembling pulleys, align marks on governor cup and pulley sheaves.

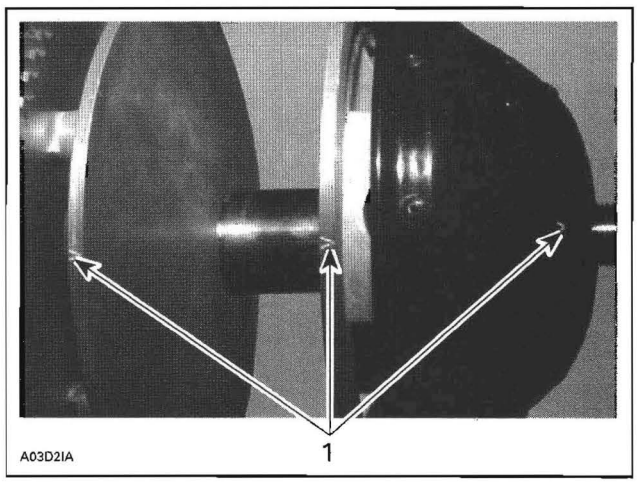

1. *Alignment marks*

Install washer and nut.

Tighten nut to 128 N•m (94 lbf•ft).

To remove the pulley holder from fixed sheave, use the drive pulley puller (P/N 529 022 400).

CENTRIFUGAL WEIGHT

Centrifugal Weight Removal

Remove governor cup, see above for procedure.

Identify blocks and their respective positive positions for reassembly.

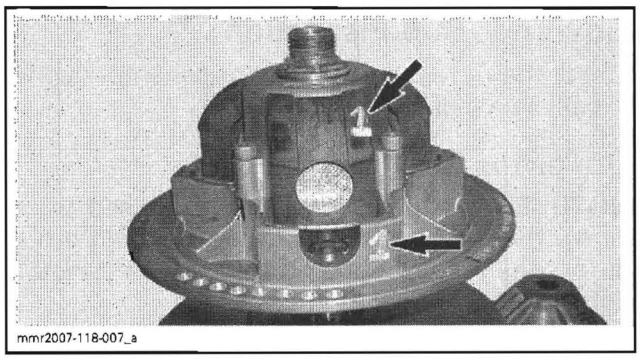

MARK EACH WITH A MARKER

Remove blocks with their calibration weights.

Centrifugal Weight Installation

The installation is the reverse of the removal procedure. However, pay attention to the following.

Make sure to install blocks at their original position and with their curved end toward governor cup. See following illustration.

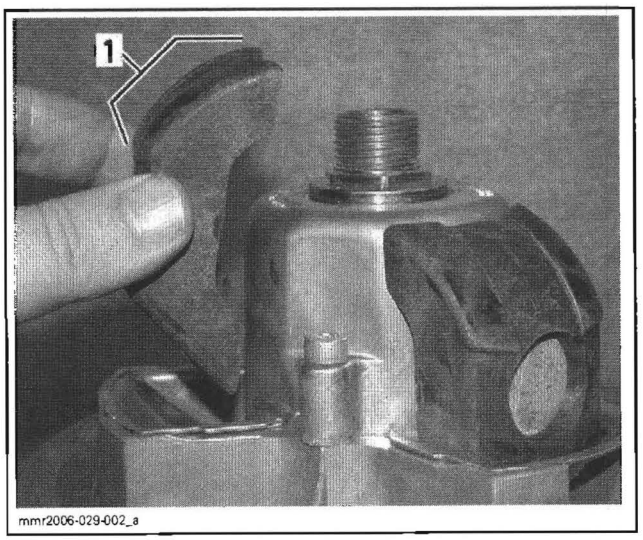

1. *Curved end of block*

Centrifugal Weight Calibration

Use the following table to calibrate this drive clutch properly.

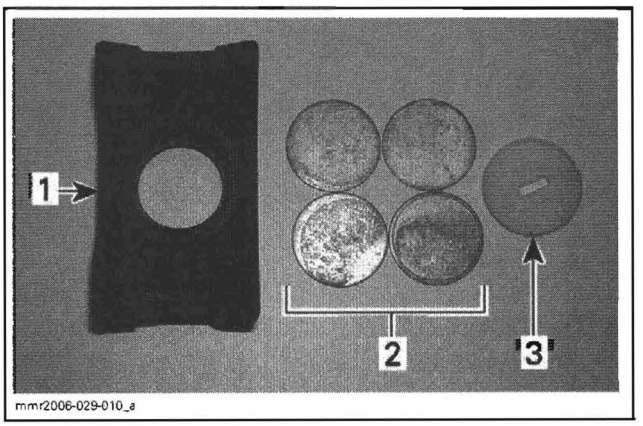

1. *Block*
2. *Weights*
3. *Cap*

FACTORY CALIBRATION			
ENGINE TYPE	CALIBRATION WEIGHT		
	WASHERS BY BLOCK	WASHER PART NUMBER	WEIGHT PER WASHER
300F	5	417 114 400	3.4 gr
550F	1	417 120 400	21 gr
	3	417 114 400	3.4 gr

SPRING

Spring Removal

Remove governor cup and centrifugal weights.

Install the spring cover tool (P/N 529 027 300) with the drive pulley puller (P/N 529 022 400) on spring cover.

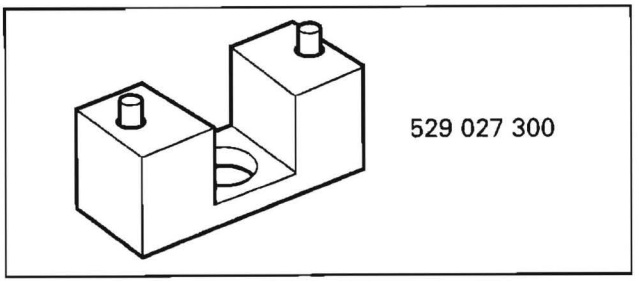

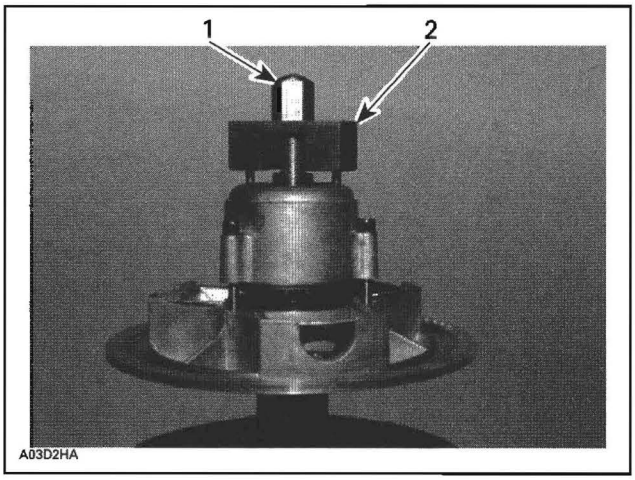

1. Drive pulley puller tool
2. Spring cover tool

Screw puller (hand tight) to hold spring cover and remove screws holding spring cover.

Slowly unscrew puller to release spring pressure.

Remove spring cover, spring and spring seat.

Spring Installation

Install spring seat then the spring and its cover.

RING GEAR

Ring Gear Removal

Remove drive pulley from engine. Refer to *FIXED AND SLIDING SHEAVES*.

To remove the ring gear, use a heat gun to break the threadlocker on ring gear screws before unscrewing.

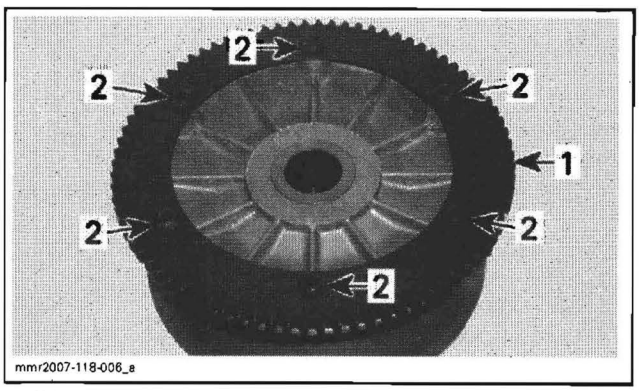

1. Ring gear
2. Ring gear screws

CAUTION: If a tool other than a heat gun is used, do not exceed 150°C (300°F).

Unscrew ring gear screws.

Ring Gear Installation

To assemble ring gear on drive pulley, clean threads on back of fixed sheave and threads of screws.

Apply Loctite 271 (red) (P/N 293 800 005) on screw threads and torque them to 26 N•m (19 lbf•ft).

DRIVE PULLEY (TRA IV)

SERVICE TOOLS

Description	Part Number	Page
bushing installer	529 031 200	468
digital inductive tachometer	529 014 500	461
drive pulley holder	529 035 674	462–464
drive pulley puller	529 022 400	463
large bushing extractor tool	529 035 931	468
slider shoe fork	529 005 500	464
spring compressor	529 036 012	466, 468

SERVICE PRODUCTS

Description	Part Number	Page
Loctite 609	413 703 100	468
pulley flange cleaner	413 711 809	464, 468

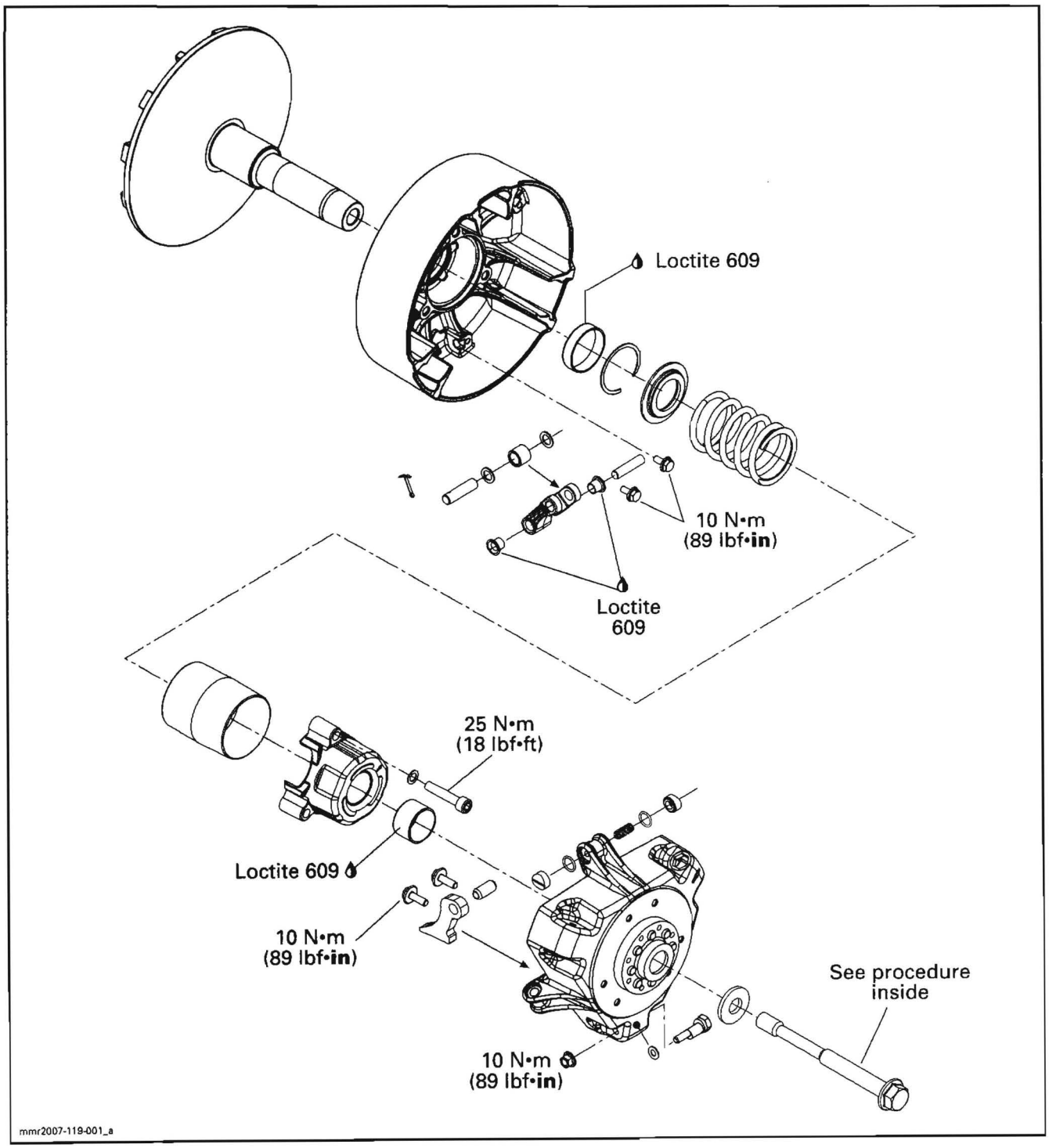
Loctite 609
10 N•m
(89 lbf•in)
Loctite
609
25 N•m
(18 lbf•ft)
Loctite 609
10 N•m
(89 lbf•in)
See procedure
inside
10 N•m
(89 lbf•in)
mmr2007-119-001_a

GENERAL

NOTE: Refer to *TECHNICAL SPECIFICATIONS* to identify the snowmobile drive pulley type.

⚠ WARNING

Never start engine when the pulley guard is removed.

TRA drive pulley stands for Total Range Adjustable drive pulley.

NOTE: This is a lubrication free drive pulleys. Always refer to appropriate *PARTS CATALOG* for replacement part. Most parts of TRA IV are not interchangeable with those of the other TRA pulley type.

Some drive pulley components (return spring, ramp) can be changed to improve vehicle performance in high altitude regions. A service bulletin will give information about calibration according to altitude.

⚠ WARNING

Any drive pulley repairs must be performed by an authorized BRP snowmobile dealer. Sub-component installation and assembly tolerances require strict adherence to procedures detailed.

CAUTION: Such modifications should only be performed by experienced mechanics since they can greatly affect vehicle performance. Verify spring specifications before installation. Do not only refer to the spring color code.

⚠ WARNING

Never use any type of impact wrench at drive pulley removal and installation.

⚠ WARNING

The drive pulley assembly is a precisely balanced unit. Never replace parts with used parts from another drive pulley assembly.

During assembly/installation, use the torque values and the service products as in the exploded view.

Clean threads before applying a threadlocker. Refer to *SELF-LOCKING FASTENER* and *LOCTITE APPLICATION* at the beginning of this manual for complete procedure.

⚠ WARNING

Torque wrench tightening specifications must strictly be adhered to.
Locking devices (e.g.: locking tabs, elastic stop nuts, self-locking fasteners, cotter pins, etc.) must be installed or replaced with new ones where specified. If the efficiency of a locking device is impaired, it must be renewed.

PROCEDURES

CALIBRATION SCREWS

Calibration Screw Adjustment

The drive pulley is factory calibrated to transmit maximum engine power at a predefined RPM. Factors such as ambient temperature, altitude or surface condition may vary this critical engine RPM thus affecting snowmobile efficiency.

This adjustable drive pulley allows setting maximum engine RPM in the vehicle to maintain maximum power.

NOTE: Use the digital inductive tachometer (P/N 529 014 500) for engine RPM adjustment.

Calibration screws should be adjusted so that actual maximum engine RPM in vehicle matches the maximum horsepower RPM given in *TECHNICAL SPECIFICATIONS*.

NOTE: The adjustment has an effect on high RPM only.

To adjust, modify ramp end position by turning calibration screws.

Calibration screw has a notch on top of its head.

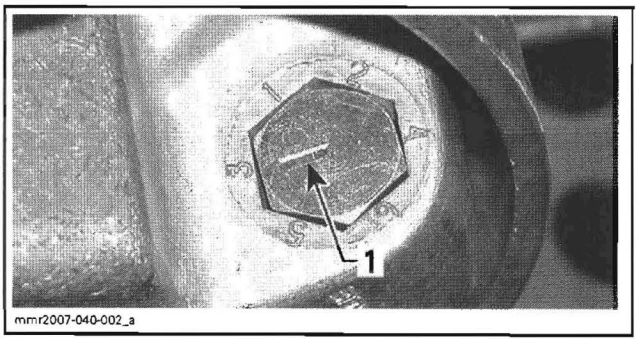

1. Notch

Governor cup has 6 positions numbered 1 to 6.

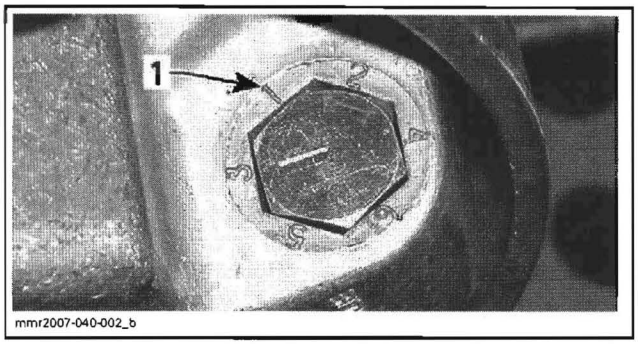

1. Position 1

Each number modifies maximum engine RPM by about 200 RPM.

Lower numbers decrease engine RPM in steps of 200 RPM and higher numbers increase it in steps of 200 RPM.

Example:

Calibration screw is set at position 3 and is changed to position 5. So maximum engine RPM is increased by about 400 RPM.

To Adjust:

Just loosen locking nut enough to pull calibration screw **partially** out and adjust to desired position. Do not completely remove the locking nut. Torque locking nuts to 10 N•m (89 lbf•**in**).

CAUTION: Do not completely remove calibration screw otherwise its inside washer will fall off.

CAUTION: Always adjust all 3 calibration screws and make sure they are all set at the same number.

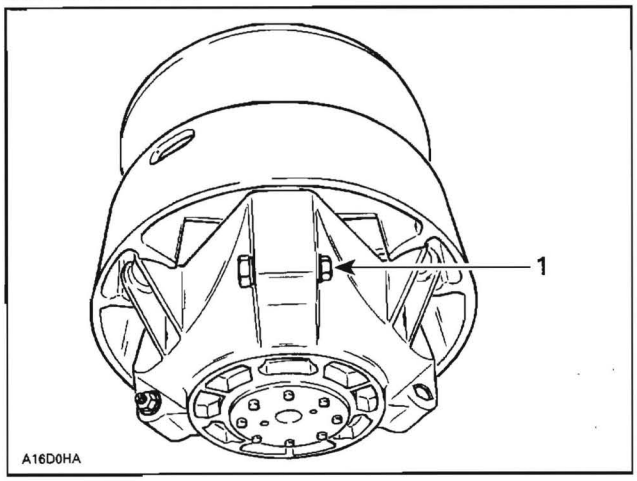

TYPICAL
1. Loosen just enough to permit rotating of calibration screw

Calibration Screw Replacement

When installing calibration screw, make sure to install washer as shown.

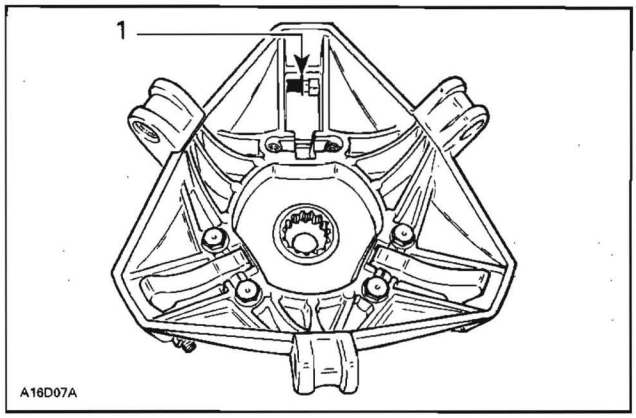

TYPICAL
1. Washer

Torque locking nut to 10 N•m (89 lbf•**in**).

FIXED AND SLIDING SHEAVES

Sheave Inspection

Check surface of sliding sheave and fixed sheave for scratches, excessive wear or other damages. Replace if necessary.

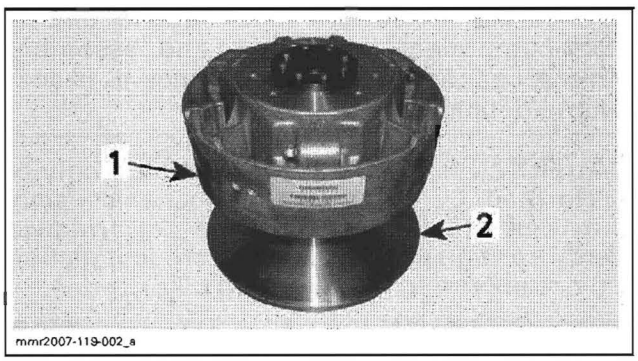

1. Sliding sheave
2. Fixed sheave

Check fixed sheave shaft for scratches. Replace as required.

Sheave Removal (drive pulley)

Open the LH side panel to remove the belt guard and the drive belt.

Secure drive pulley holder (P/N 529 035 674) over a sliding half tower.

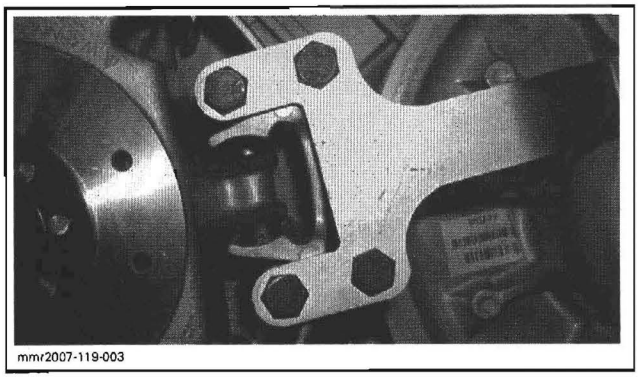
mmr2007-119-003

Remove drive pulley screw.

⚠ WARNING

Never use any type of impact wrench at drive pulley removal and installation.

Install the drive pulley puller (P/N 529 022 400).

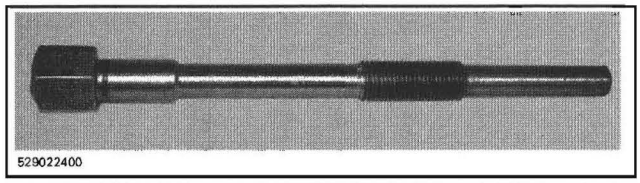
529022400

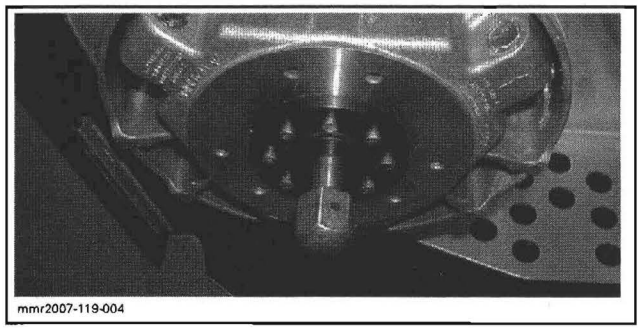
mmr2007-119-004

CAUTION: These pulleys have metric threads. Do not use imperial threads puller. Always tighten puller by hand to ensure that the drive pulley has the same type of threads (metric vs imperial) prior to fully tightening.

Retain drive pulley with the drive pulley holder (P/N 529 035 674) and screw in the puller then remove drive pulley.

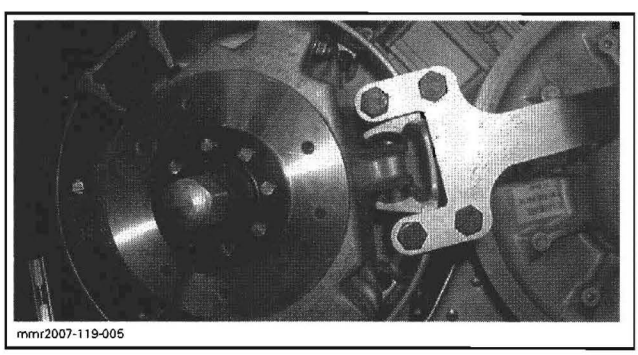
mmr2007-119-005

Sheave Disassembly

To separate fixed sheave from sliding sheave, screw puller into fixed sheave shaft about 13 mm (1/2 in). Raise drive pulley and hold it by the sliding sheave while knocking on puller head to disengage fixed sheave.

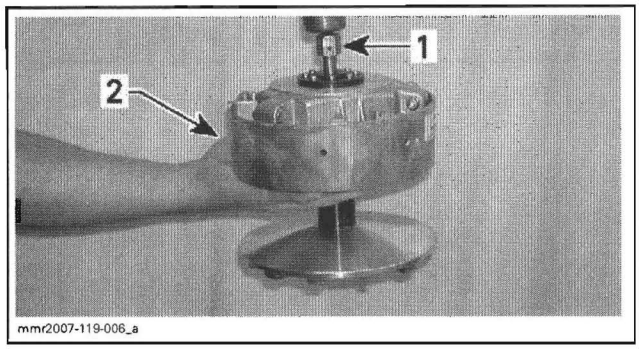

mmr2007-119-006_a

TYPICAL
1. *Puller*
2. *Holding sliding sheave*

NOTE: If the separation of fixed sheave from sliding sheave is hard, use a heat gun and slightly heat the governor cup to expand its taper.

CAUTION: Never use any type of torch to heat governor cup.

Sheave Cleaning

Clean pulley sheaves and shaft with fine steel wool and dry cloth.

Remove all hardened oil deposits that have baked on crankshaft and pulley tapered surfaces with coarse or medium steel wool and/or sand paper no. 600.

CAUTION: Do not use any other type of abrasive.

Sheave Assembly

The assembly is the reverse of the disassembly procedures. However pay attention to the following.

Make sure to align the sliding sheave mark with the fixed sheave mark.

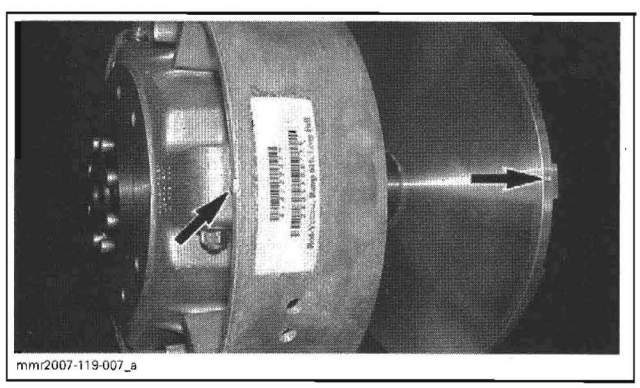
mmr2007-119-007_a

Using a plastic hammer, strike hub firmly 2 or 3 times to ensure proper seating of cones.

Sheave Installation (drive pulley)

⚠ WARNING

Do not apply antiseize or any lubricant on crankshaft and drive pulley tapers.

Parts must be at room temperature before cleaning.

Using a paper towel with pulley flange cleaner (P/N 413 711 809), clean crankshaft tapered end and the taper inside the fixed sheave of the drive pulley, crankshaft threads and retaining screw threads.

Before installation of drive pulley, clean also crankshaft threads and retaining screw threads.

CAUTION: Avoid contact between cleaner and crankshaft seal because damage may occur.

Reclean mounting surfaces with paper towel and cleaning solvent.

Wipe off the mounting surfaces with a clean, dry paper towel.

CAUTION: Mounting surfaces must be free of any oil, cleaner or towel residue.

Install drive pulley on crankshaft extension.

Install a new conical spring washer with its concave side towards drive pulley then install screw.

⚠ WARNING

Never substitute conical spring washer and/or screw with jobber ones. Always use BRP genuine parts for this particular case.

Using the drive pulley holder (P/N 529 035 674), torque screw to 90 N•m (66 lbf•ft).

Install drive belt and guard.

Raise and block the rear of the vehicle and support it with a mechanical stand.

⚠ WARNING

Ensure that the track is free of particles which could be thrown out while track is rotating. Keep hands, tools, feet and clothing clear of track. Ensure nobody is standing near the vehicle.

Accelerate the vehicle at low speed (maximum 30 km/h (20 MPH)) and apply the brake, repeat 5 times.

Retorque screw to 95 N•m (70 lbf•ft).

⚠ WARNING

After 10 hours of operation the transmission system of the vehicle must be inspected to ensure the retaining screw is properly torqued.

GOVERNOR CUP

Governor Cup Removal

Remove drive pulley. Refer to *FIXED AND SLIDING SHEAVES* at the beginning of this section.

Carefully lift governor cup until slider shoes come to their highest position into guides.

Hold a slider shoe set then carefully lift its housing and

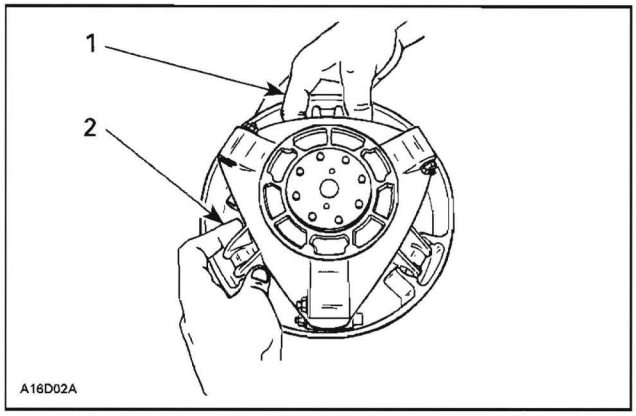

1. Hold slider shoes
2. Lift one housing at a time

Install a slider shoe fork (P/N 529 005 500). Proceed the same way for other housings lifting one at a time.

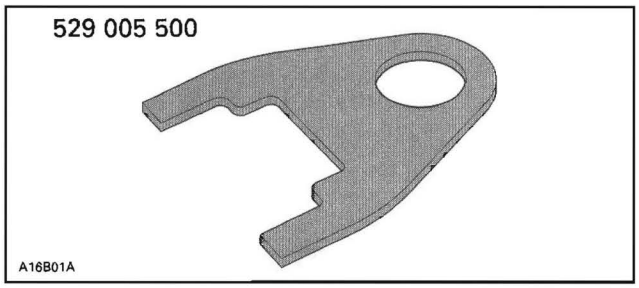

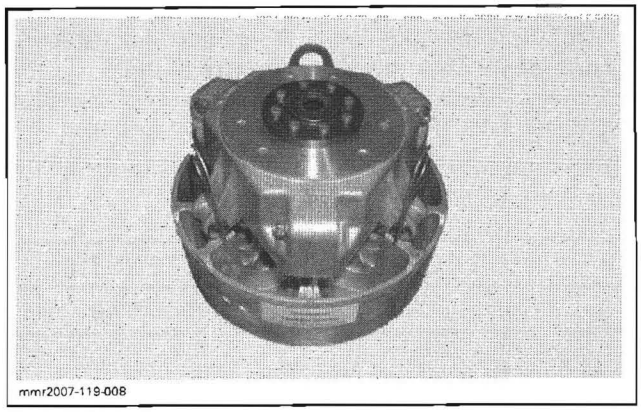
mmr2007-119-008

When all slider shoes are held with the forks, remove the governor cup.

Governor Cup Inspection

Check the governor cup for cracks or other visible damages. Replace if necessary.

Check slider shoes for wear. Replace if groove is not apparent on top.

Check if O-rings are cracked, cut or crushed. Replace as required.

Governor Cup Installation

The installation is the reverse of the removal procedure. However, pay attention to the following.

Align governor cup mark with the one on the sliding sheave.

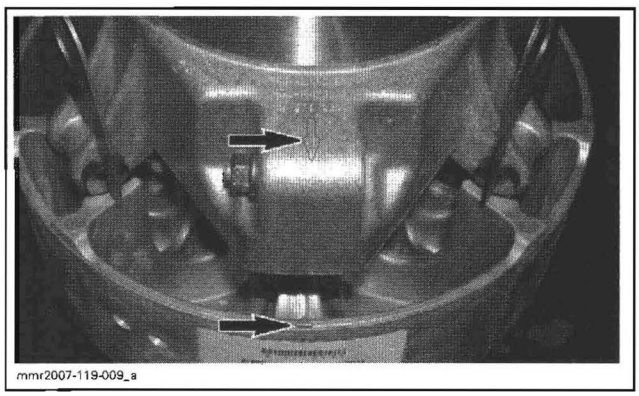
mmr2007-119-009_a

RAMPS

Ramp Removal

Remove the drive pulley. Refer to *FIXED AND SLIDING SHEAVES*.

Remove governor cup from sliding sheave.

Unscrew bolts holding ramps on governor cup.

Ramp Inspection

Check ramps for wear. Replace as required.

Ramp Installation

The installation is the reverse of the removal procedure. However, pay attention to the following.

CAUTION: Always replace all ramps and all dowel tubes at the same time and make sure to use identical ramps.

Insert dowel tube from chamfered side. Make sure ramp is centered on dowel tube.

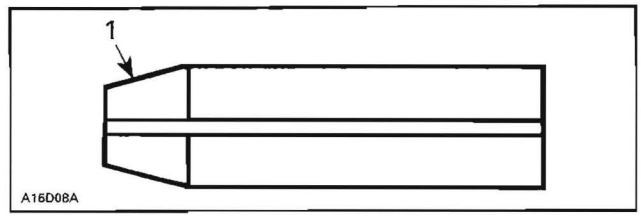

1. Chamfered side

Position dowel tube split at the angle A.

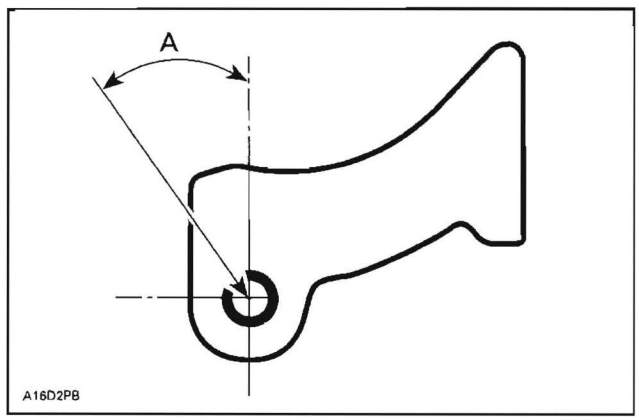

MODEL	ANGLE (A)
TRA IV	45 ± 3°

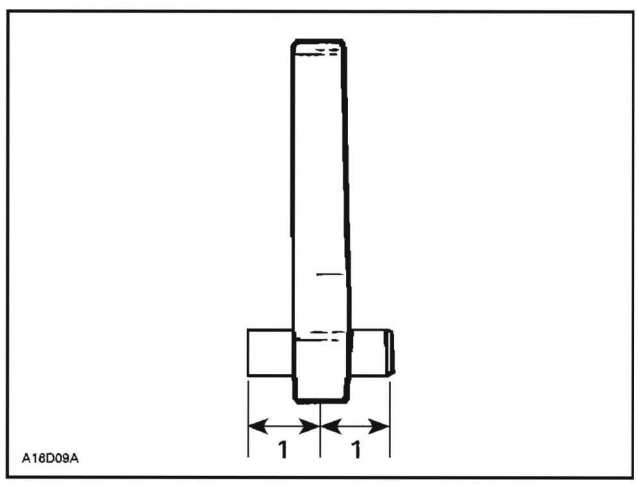

1. Equal distance

Torque screws to 10 N•m (89 lbf•**in**).

SPRING

Spring Removal

Remove drive pulley and separate sliding sheave and fixed sheave.

⚠ WARNING

Clutch spring is very strong. Never attempt to remove spring cover without the recommended tools.

Use spring compressor (P/N 529 036 012).

Install support guide.

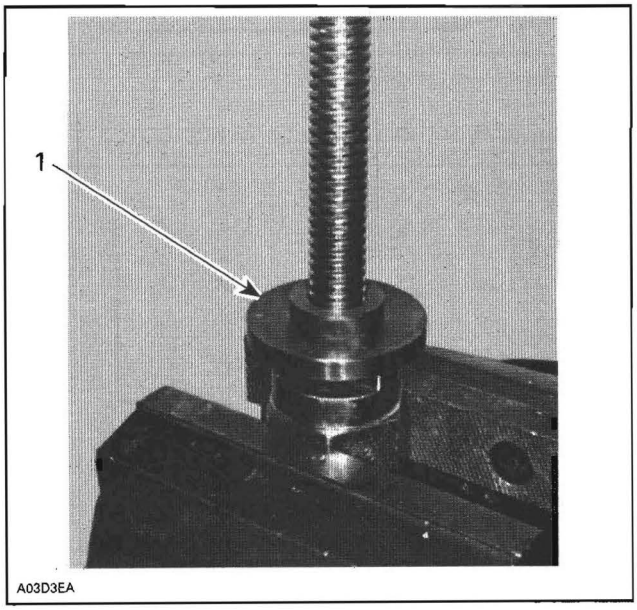

1. Support guide

Install sliding sheave then a second support guide. These support guides will prevent bushing damages.

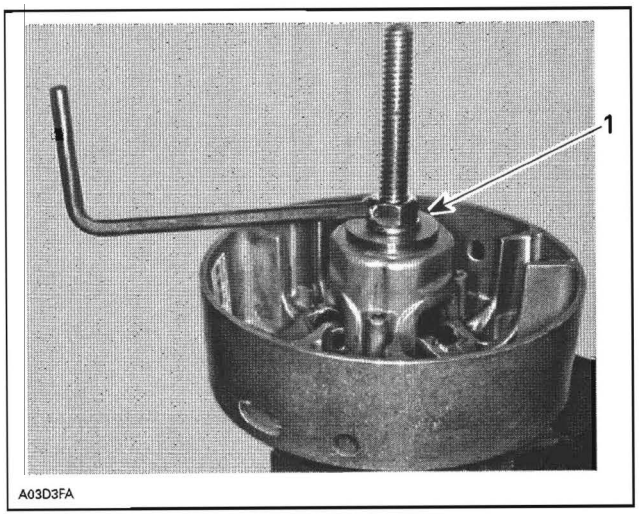

1. Support guide

Completely remove all 3 Allen screws retaining spring cover then unscrew compressor.

Spring Inspection

Check spring color code and its free length. Replace if necessary.

COLOR CODE	FREE LENGTH
RED/YELLOW	87.90 mm (3.461 in)

Spring Installation

For installation, reverse the removal procedure.

To install spring cover, use the spring compressor (P/N 529 036 012).

Align balance marks before installing spring cover.

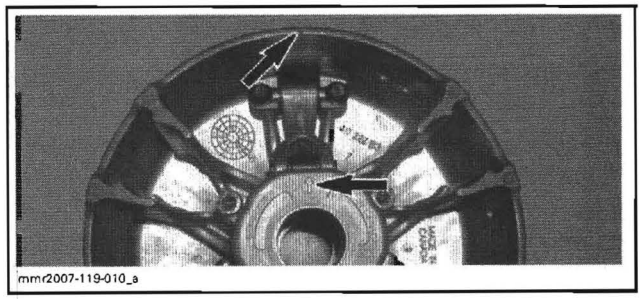

ALIGN BALANCE MARKS

Tighten screws to proper torque as mentioned in exploded view.

CENTRIFUGAL LEVERS

Lever Removal

Remove the drive pulley. Refer to *FIXED AND SLIDING SHEAVES*.

Remove governor cup from sliding sheave.

Remove screws securing centrifugal levers on sliding sheave.

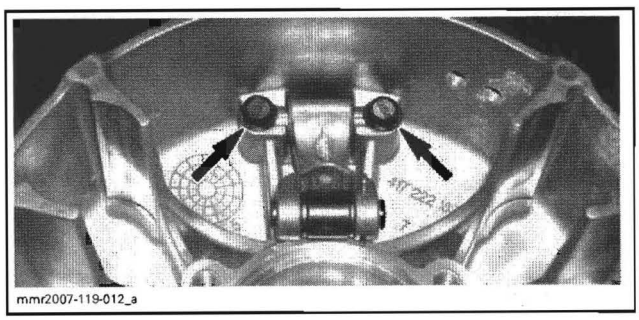

Lever Inspection

Check centrifugal lever for crack, distortion or other damages.

Check roller for roundness of external diameter.

Check if the roller turns freely.

Check thrust washers for wear (thickness).

Check lever screw heads for wear.

Check ramp bushings for wear.

Lever Installation

Always use the same roller pin as originally installed when servicing. Different types have different weights for calibration purpose. Refer to *TECHNICAL SPECIFICATIONS*.

While installing levers, make sure that the curved sides of the levers are outwards as shown.

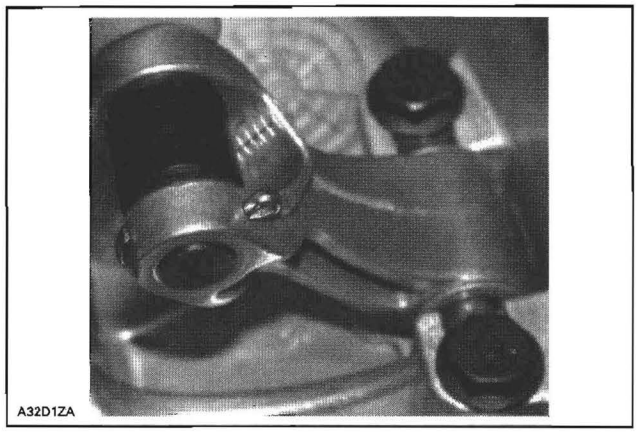
A32D1ZA

Always install levers so that cotter pins are on the side shown here. Besides install cotter pin head on top when lever is sat at bottom of sliding half. Bend cotter pin ends to sit perfectly against lever.

⚠ WARNING

Whenever replacing centrifugal levers, always replace all 3 at the same time. Otherwise, the drive pulley will be unbalanced (because of lever differences).

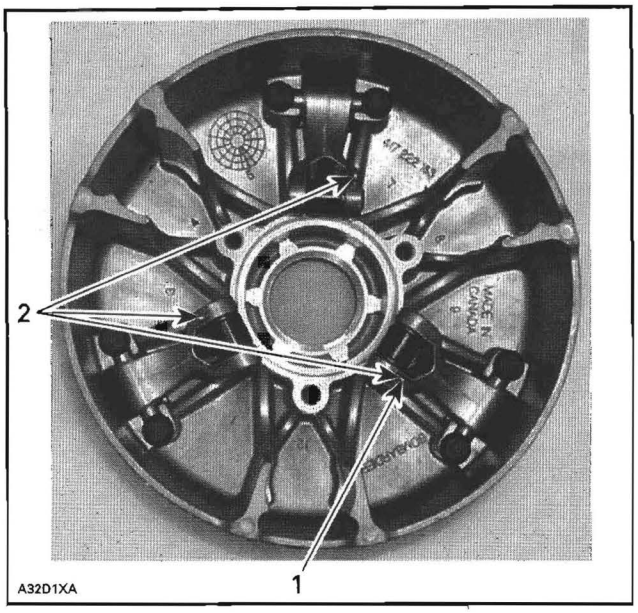

1. Head on top
2. All on the same side

CAUTION: Lever assemblies must be installed so that cotter pins are on the same side.

Torque screws as per the exploded view.

CAUTION: Lever and rollers must move easily after installation.

BUSHING

Bushing Cleaning

Only use petroleum based cleaner when cleaning bushings.

CAUTION: Do not use acetone to clean bushing.

Bushing Inspection

Visually inspect coating. Replace if worn.

Bushing Removal

Spring Cover Bushing

Under normal use there is no need to replace this bushing.

In case of replacement, it's recommended to replace spring cover.

Sliding Half Bushing

NOTE: In case of worn out bushing, it is advisable to replace complete whole sliding sheave assembly as replacing just the bushing may reduce the drive pulley performance.

Remove circlip from the sliding sheave.

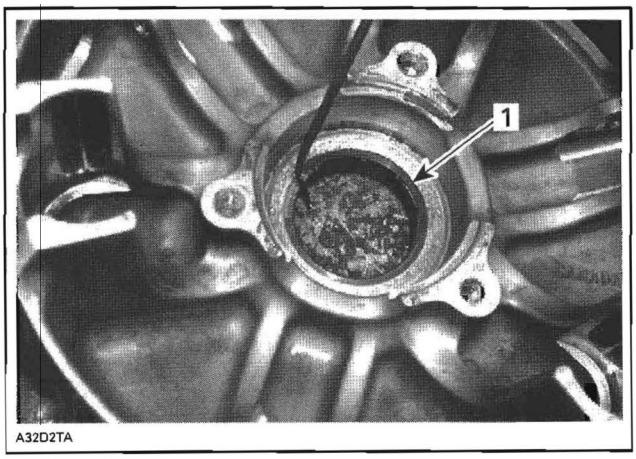

1. Circlip

Secure the spring compressor (P/N 529 036 012) in a vise, place the bushing installer (P/N 529 031 200) and the sliding sheave on it.

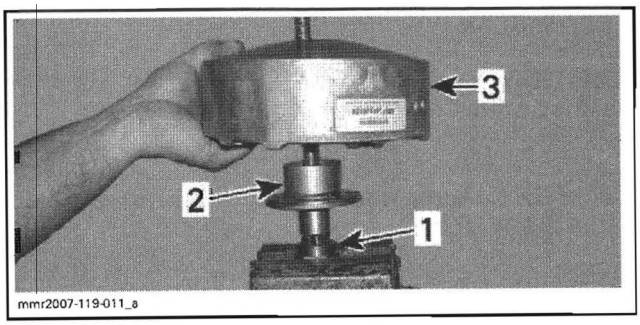

1. Spring compressor
2. Bushing installer
3. Sliding sheave

Use the large bushing extractor tool (P/N 529 035 931) to press out old bushing.

NOTE: Make sure to use the large bushing extractor tool (P/N 529 035 931) as marked; to remove the bushing press using the side marked "OUT", as shown below in the picture.

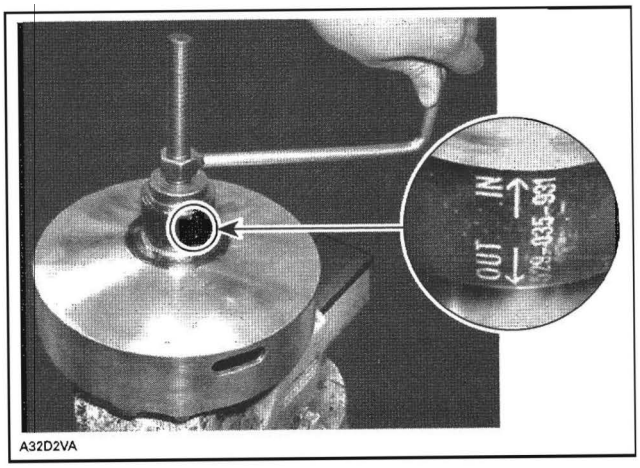

Use a soft sand paper to clean sliding half bushing mounting surface.

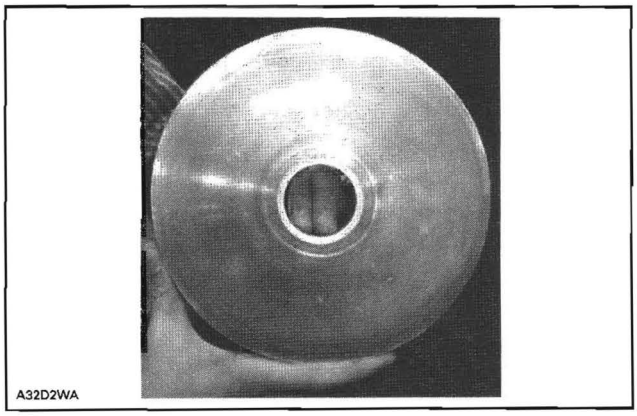

Clean sliding half bushing mounting surface with pulley flange cleaner (P/N 413 711 809).

Bushing Installation

To install a new bushing, secure the spring compressor (P/N 529 036 012) in a vise and mount the sliding sheave.

Coat bushing outside diameter with Loctite 609 (P/N 413 703 100).

Insert the bushing from inner side of sliding sheave.

Mount the large bushing extractor tool (P/N 529 035 931) with side marked "IN" to press in a new bushing.

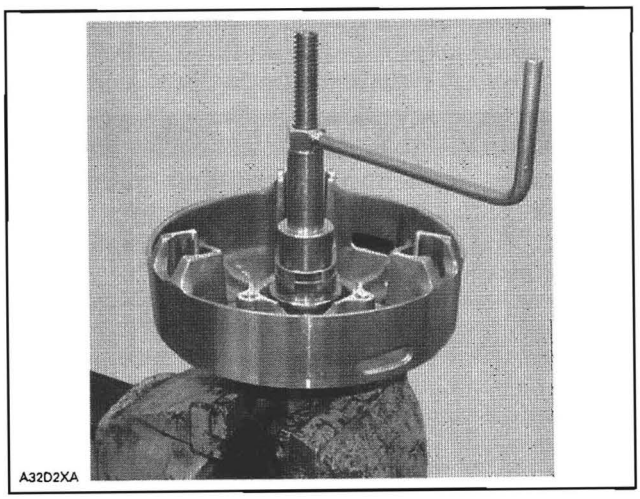

NOTE: Make sure that the bushing is well seated on the sliding sheave.

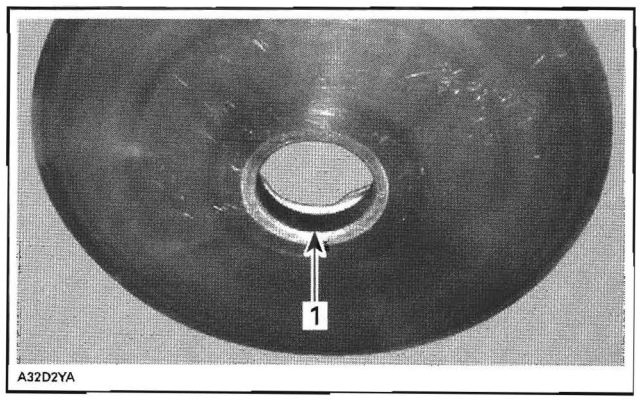

1. Bushing

Install the circlip.

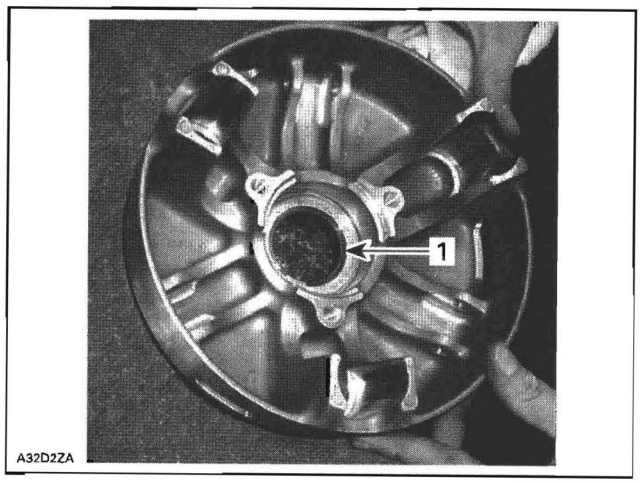

1. Circlip

DRIVEN PULLEY (LPV 27 AND LPV VSA)

SERVICE TOOLS

Description	Part Number	Page
bushing extractor/installer	529 031 300	477
clutch spring compressor	529 036 012	473–477
crankshaft protector	420 876 552	477
large bushing extractor	529 031 100	476
large bushing extractor	529 035 575	476–477

SERVICE PRODUCTS

Description	Part Number	Page
Loctite 380 (Black Max)	413 408 300	477
Loctite 767 (antiseize lubricant)	293 800 070	475
pulley flange cleaner	413 711 809	473, 477

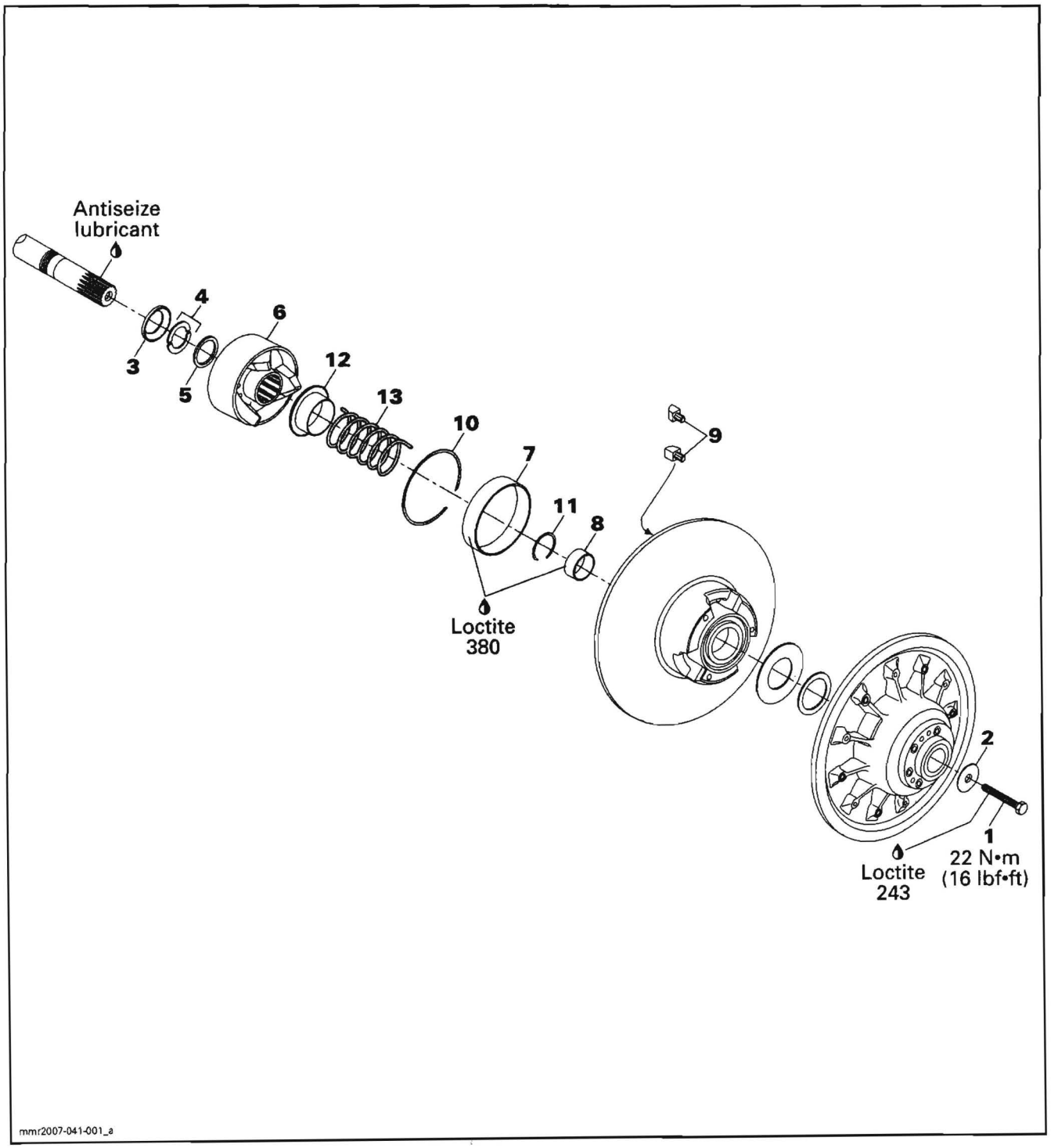
Antiseize lubricant
4
6
3
12
5
13
10
9
7
11
8
Loctite 380
2
1
22 N•m (16 lbf•ft)
Loctite 243
mmr2007-041-001_a

GENERAL

During assembly/installation, use the torque values and the service products as in the exploded views.

Clean threads before applying a threadlocker. Refer to *SELF-LOCKING FASTENERS* and *LOCTITE APPLICATION* at the beginning of this manual for complete procedure.

⚠ WARNING

Torque wrench tightening specifications must strictly be adhered to.
Locking devices (e.g.: locking tabs, elastic stop nuts, self-locking fasteners, cotter pins, etc.) must be installed or replaced with new ones where specified. If the efficiency of a locking device is impaired, it must be renewed.

⚠ WARNING

Never start engine when the pulley guard is removed.

⚠ WARNING

The driven pulley is a precisely balanced unit. Never replace parts with used parts from another driven pulley.

Driven Pulley Application

MODEL	PULLEY TYPE
300F and 550F	LPV 27
V800	LPV VSA

PROCEDURES

FIXED AND SLIDING SHEAVES

Sheave Cleaning

Use pulley flange cleaner (P/N 413 711 809) to clean pulley sheaves.

Sheave Removal (driven pulley)

Remove guard and drive belt from vehicle.

Remove pulley retaining screw **no. 1** and shouldered washer **no. 2** then pull the driven pulley from the countershaft.

Take care not to lose spacer **no. 3**.

Sheave Disassembly

Use clutch spring compressor (P/N 529 036 012).

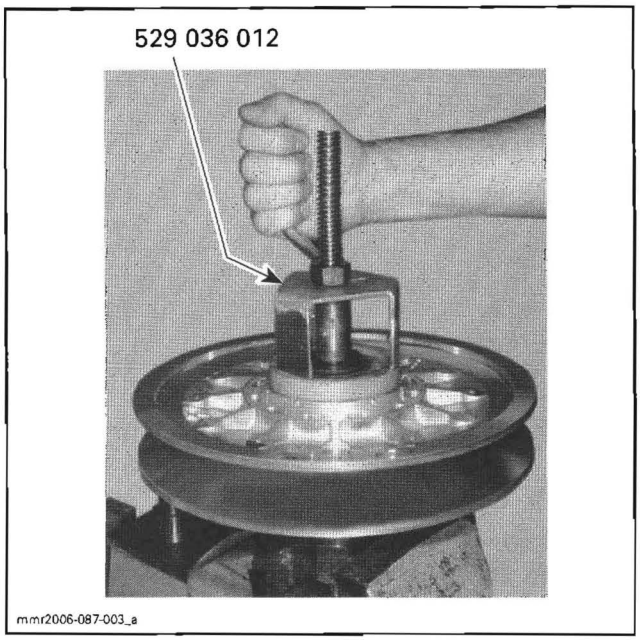

TYPICAL

⚠ WARNING

Driven pulley cam is spring loaded, use above mentioned tool. Make sure the cam follows the compressor while unscrewing. If cam gets stuck, leave 1 mm (1/32 in) gap between cam and compressor and carefully free up cam by rotating the sliding sheave back and forth. Resume unscrewing once the cam is free to follow the compressor.

Remove half keys **no. 4** and spacer **no. 5** to disassemble the cam **no. 6** and pulley sheaves.

Sheave Inspection

Inspect sheaves for abnormal wear or cracks.

Slider Shoe

BLACK slider shoe = forward.

RED slider shoe = reverse.

Check cam slider shoes **no. 9** for wear. Replace when inside edge thickness of cam slider shoe slope base is worn to 1 mm (.039 in) or less.

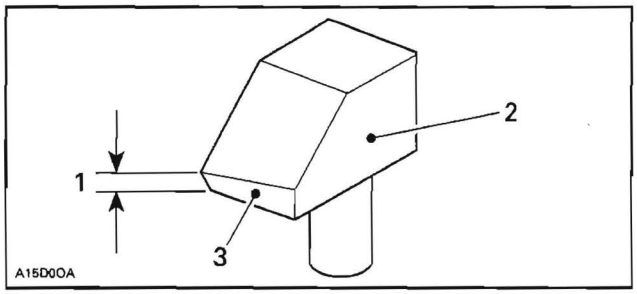

1. *Measure thickness of slope base here*
2. *Sliding pulley side*
3. *Slope base*

Sheave Assembly

Slider Shoe

When replacing slider shoes **no. 9**, always install a new set (3 shoes) to maintain equal pressure on the cam.

Install slider shoes as per following photo. RED slider shoes are being used for reverse and BLACK ones for forward.

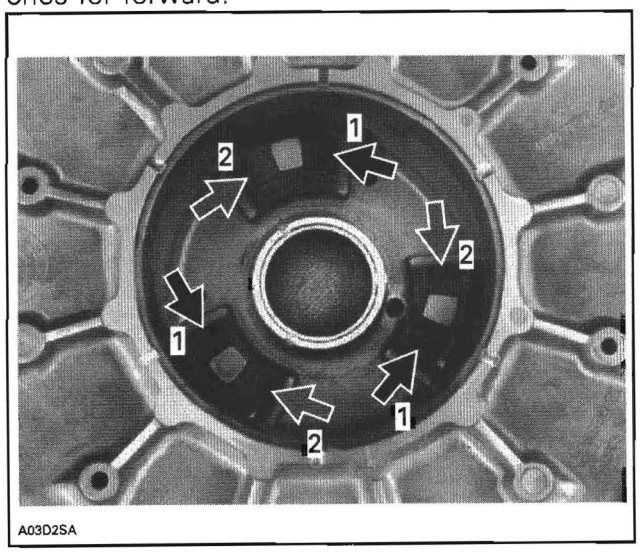

1. *BLACK slider shoe*
2. *RED slider shoe*

Cam and Spring

Make sure to install proper cam. Refer to *TECHNICAL SPECIFICATIONS*.

Cam angle is identified on cam.

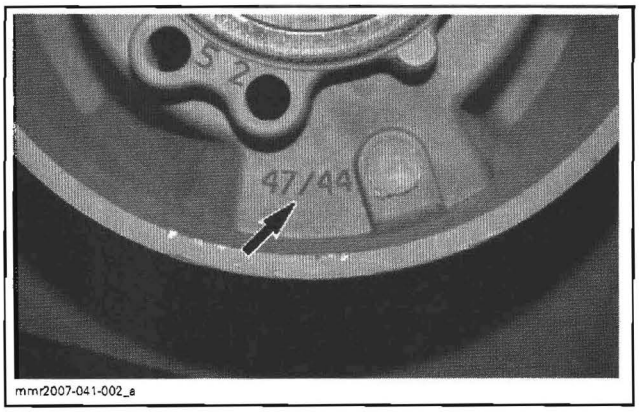

Install the recommended spring.

Single-Stud Spring

If a single-stud spring is used, the stud must be inserted in one of the 3 sliding sheave's holes.

Enter the other end of the spring in the sliding sheave location hole.

Compress cam using the clutch spring compressor (P/N 529 036 012).

Install spacer **no. 5** then secure cam with half keys **no. 4**, as shown in the next photo.

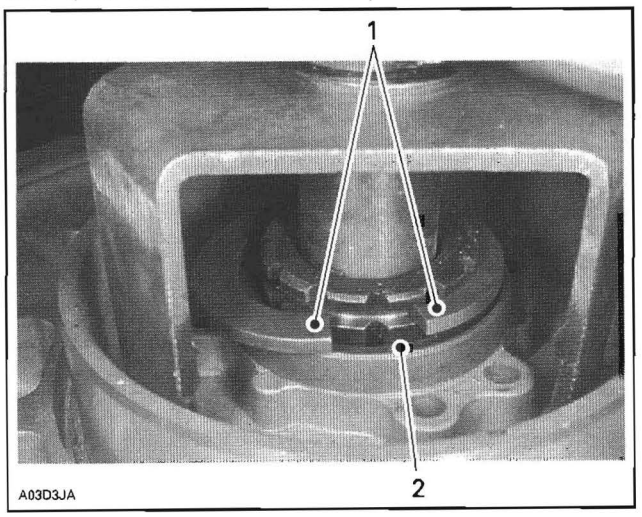

1. *Half keys inserted into shaft groove*
2. *Spacer recess facing half keys*

Double Opened Ends Spring

If a spring opened at both ends is used, do the following:

1. Select the appropriate spring locating hole on the cam to enter one end of the spring.

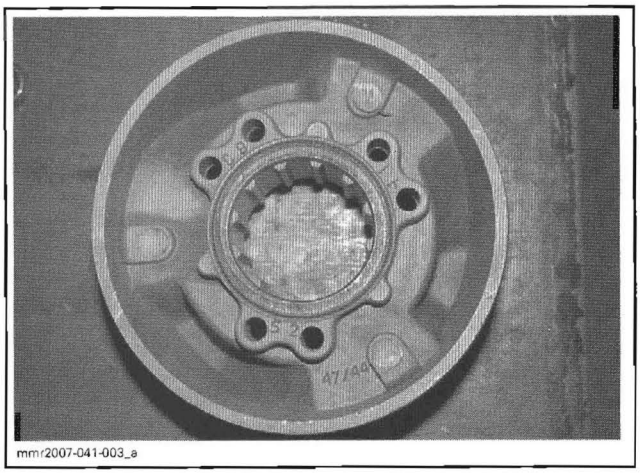

NOTE: When no preload is required, use hole no. 6 and DO NOT rotate the sheave (skip operation no. 3). When applying 6.8 kg (15 lb) of preload on a PINK spring, use hole no. 4 and DO rotate the sheave (perform operation no. 3).

2. Enter the other end of the spring in the sliding sheave location hole.

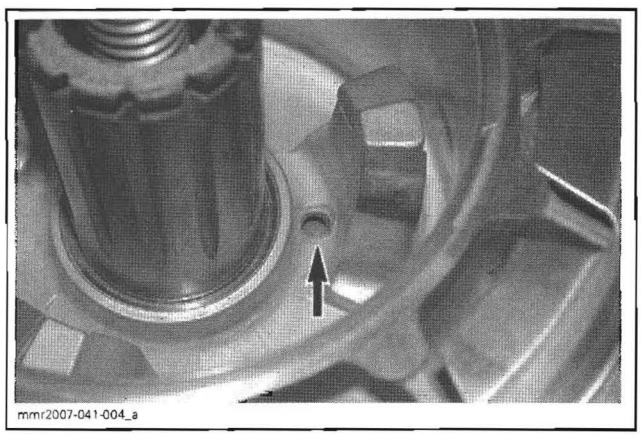

3. When torsion preload is required, turn the sliding sheave exactly 120° (1/3 turn) counterclockwise.

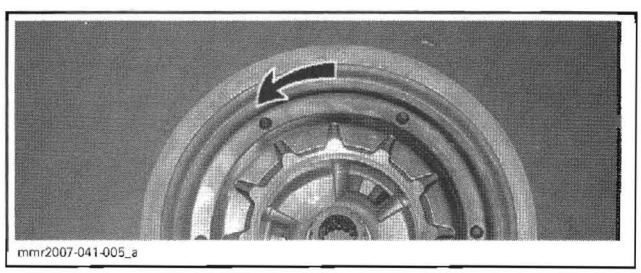

4. Insert cam in driven pulley while still holding preload, using the clutch spring compressor (P/N 529 036 012).
5. Install spacer **no. 5** then secure cam with half keys **no. 4**, as shown in the next photo.

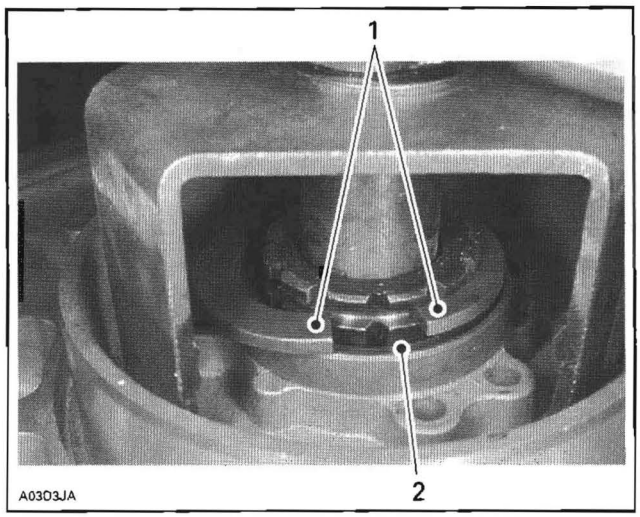

1. Half keys inserted into shaft groove
2. Spacer recess facing half keys

6. Using a fish scale hooked to a sliding sheave balancing hole, measure the force required to turn the sliding sheave counterclockwise. Also measure the force required by the sheave to return to its original position. Calculate the average of both forces.
7. If preload is too low, use a higher number. If preload is too high, use a smaller number.

Sheave Installation (driven pulley)

Apply Loctite 767 (antiseize lubricant) (P/N 293 800 070) on countershaft splines.

Reinstall the pulley on the countershaft by reversing the removal procedure.

Torque pulley retaining screw **no. 1** to 22 N•m (16 lbf•ft).

Sheave Adjustment (driven pulley)

Refer to *PULLEY ALIGNMENT* and *DRIVE BELT* to perform adjustments.

CAUTION: Drive belt and pulley alignment must always be checked whenever pulleys have been removed, replaced or disassembled.

BUSHING

Bushing Cleaning

During break-in period (about 10 hours of use), teflon from bushing **no. 7** and **no. 8** moves to cam or shaft surface. A teflon over teflon running condition occurs, leading to low friction. So it is normal to see gray teflon deposit on cam or shaft. Do not remove that deposit, it is not dust.

When a dust deposit has to be removed from the cam or the shaft, use dry cloth to avoid removing transferred teflon.

Bushing Inspection

Check the bushings **no. 7** and **no. 8** for cracks, scratch and for free movement when assembled to fixed sheave **no. 12**.

Using a dial bore gauge measure bushing diameter. Measuring point must be at least 5 mm (1/4 in) from bushing edge.

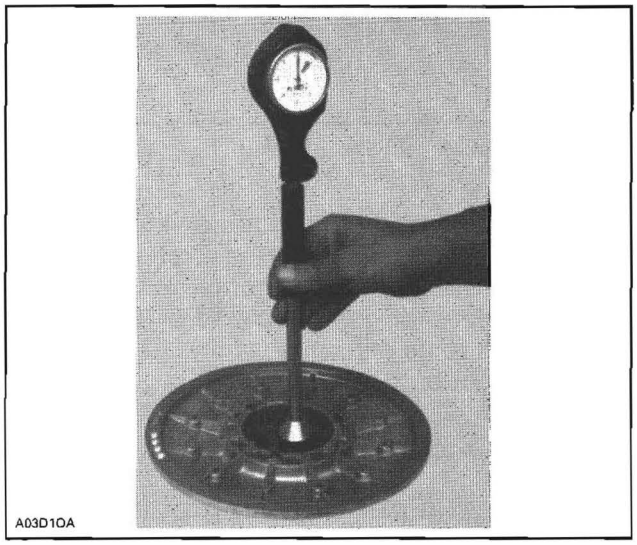

Replace bushing(s) if worn more than specified.

DRIVEN PULLEY BUSHING WEAR LIMIT mm (in)	
Small bushing	38.30 (1.508)
Large bushing	108.2 (4.260)

Bushing Replacement

Large Bushing

Remove circlip **no. 10**.

Remove two slider shoes.

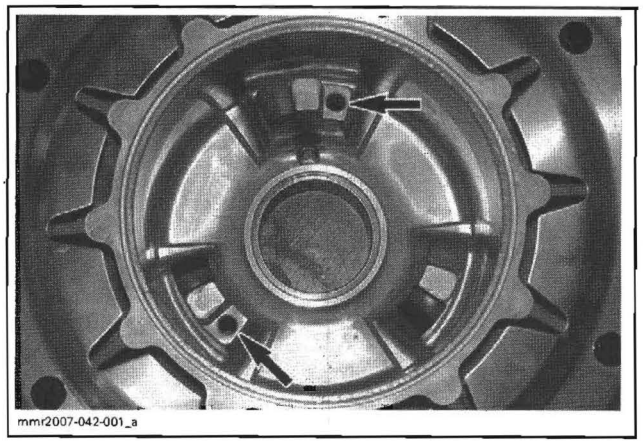

Install the support plate included in the large bushing extractor (P/N 529 031 100) inside sliding sheave.

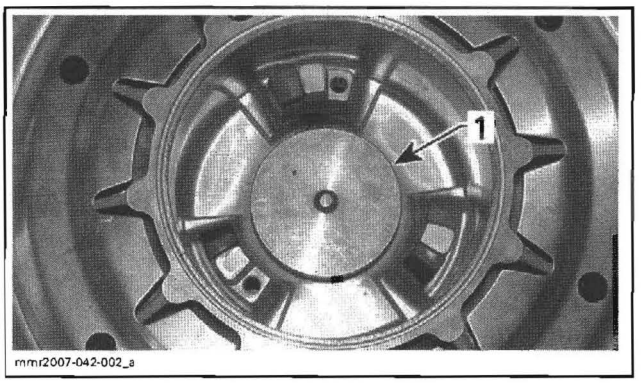

1. Support plate

Place the large bushing extractor (P/N 529 035 575) below bushing and screw the threaded rod of the clutch spring compressor (P/N 529 036 012) in the large bushing extractor hole until the end of threaded rod reaches against the support plate.

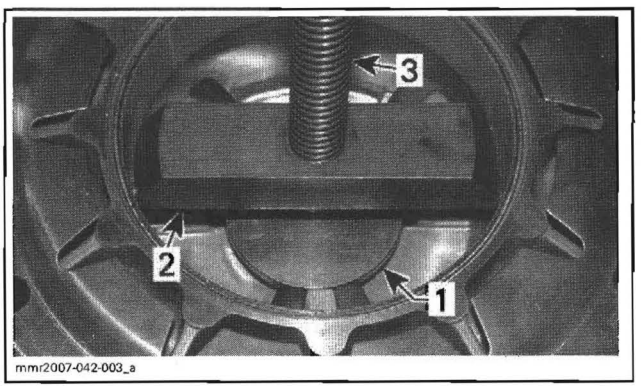

TYPICAL
1. Support plate
2. Large bushing extractor
3. Threaded rod of spring compressor

Mount the clutch spring compressor head in a vise.

Using a heat gun, heat bushing to break the adhesive product.

Turn pulley sheave by hand to extract old bushing.

Before bushing installation, clean residues of adhesive product by using pulley flange cleaner (P/N 413 711 809).

On threaded rod install both sleeves and one spacer included with the clutch spring compressor (P/N 529 036 012).

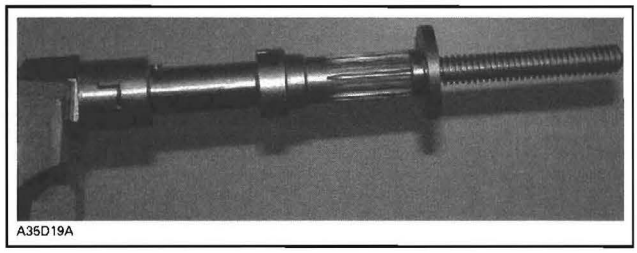
A35D19A

Coat bushing outside diameter with Loctite 380 (Black Max) (P/N 413 408 300). Place new bushing on sliding sheave and slightly tap to engage squarely the bushing in the sliding.

Install the sliding pulley on threaded rod and screw in the large bushing extractor (P/N 529 035 575).

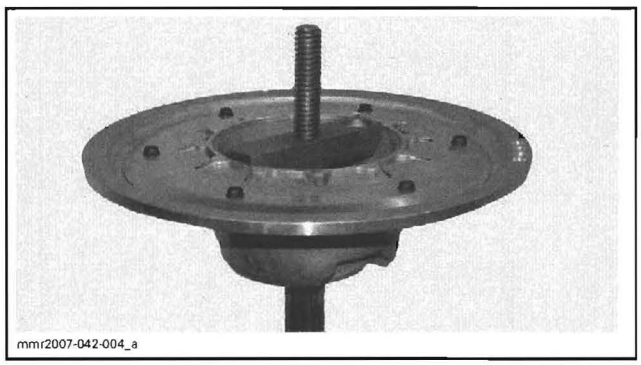
mmr2007-042-004_a

Turn pulley sheave by hand to insert the new bushing.

IMPORTANT: Change the position of extractor often to push the bushing straight.

Install circlip.

Small Bushing

Remove circlip **no. 11**.

Using a press, extract the small bushing. Push the bushing out of its location by using a pipe with proper diameter.

Clean residues of adhesive product by using pulley flange cleaner (P/N 413 711 809).

Coat bushing outside diameter with Loctite 380 (Black Max) (P/N 413 408 300).

Using a press and the bushing extractor/installer (P/N 529 031 300) with crankshaft protector (P/N 420 876 552), insert small bushing in its location.

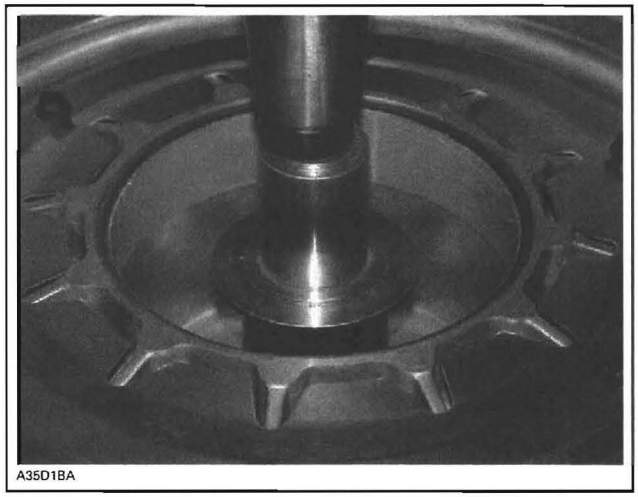
A35D1BA

Install circlip.

PULLEY ALIGNMENT

SERVICE TOOLS

Description	Part Number	Page
alignment bar	529 035 831	480
driven pulley opening tool	529 017 200	480

GENERAL

Pulley alignment must be seasonally checked to ensure the highest efficiency of the transmission system. Furthermore, optimum drive belt operation and minimal wear will be obtained only with proper pulley alignment.

⚠ WARNING

Failure to correctly perform pulley alignment may cause the vehicle to creep forward at idle.

PROCEDURES

W AND Z MEASUREMENTS

W = Distance between both pulley shafts (center to center).

Z = Distance between both pulleys.

Remove guard, drive belt and air silencer.

Loosen lock nut.

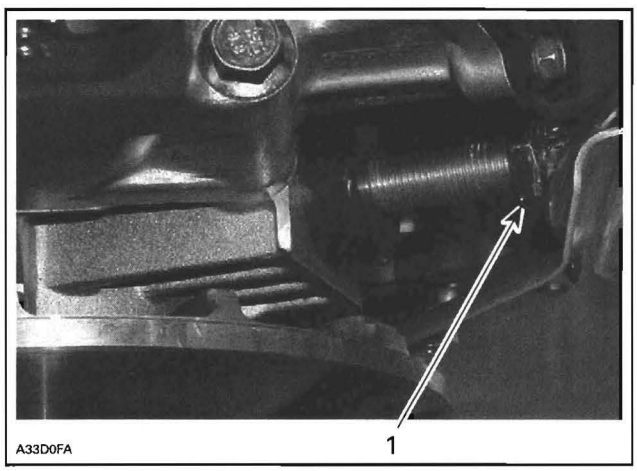

1. Lock nut

Untighten torque rod using a long 8 mm Allen key.

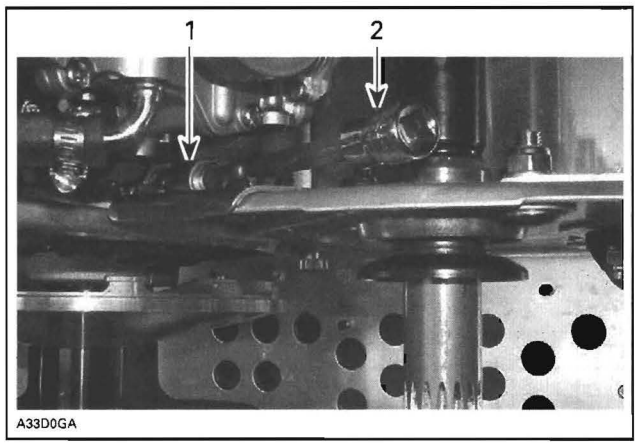

TYPICAL
1. Torque rod
2. 8 mm Allen key

Measure the distance between both pulleys to know if the engine and the frame are positioned correctly.

NOTE: The pulley distance is not adjustable.

MEASUREMENT		
MODELS	W mm (in)	Z mm (in)
300F	250.0 ± 0.5 (9.84 ± .02)	18.75 (0.738)
550F	257.5 ± 0.5 (10.138 ± .02)	26.25 (1.033)
V800		20.00 (.787)

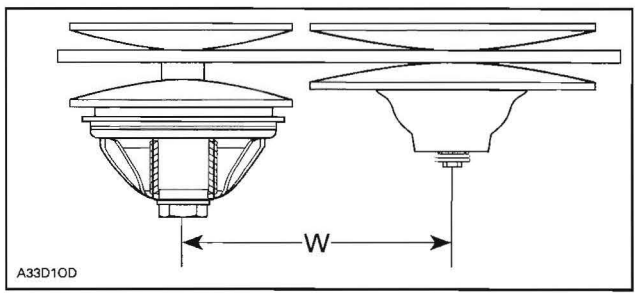

TYPICAL
W = Distance between both pulley shaft (center to center)

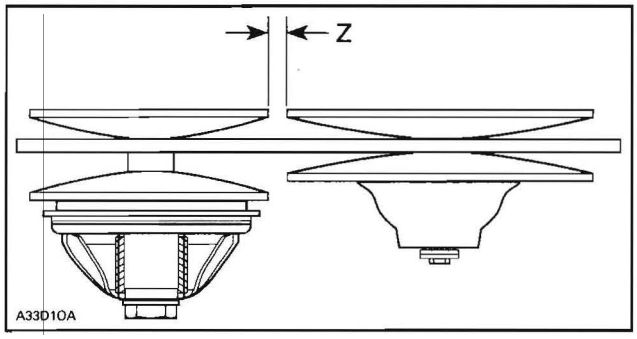

TYPICAL
Z = Distance between both pulleys

X MEASUREMENT

X = Distance between alignment bar and drive pulley fixed sheave edge, measured between pulleys.

By using driven pulley opening tool (P/N 529 017 200) push the sliding half to open the driven pulley.

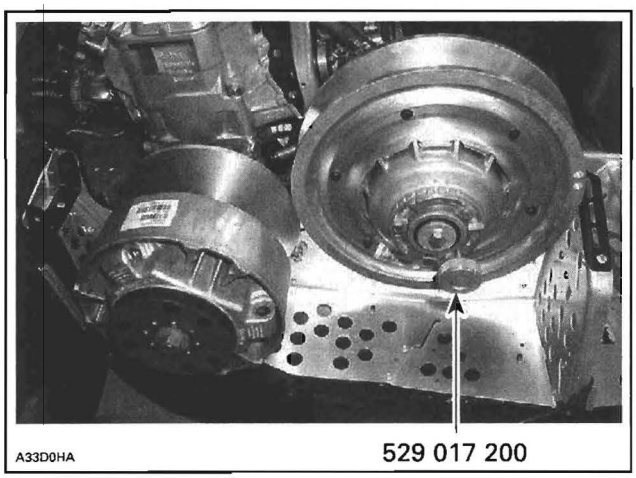

DRIVEN PULLEY OPENING TOOL

Insert the alignment bar (P/N 529 035 831) into the pulleys as shown.

NOTE: Driven pulley must be in open position. Use the same tool as for belt removal.

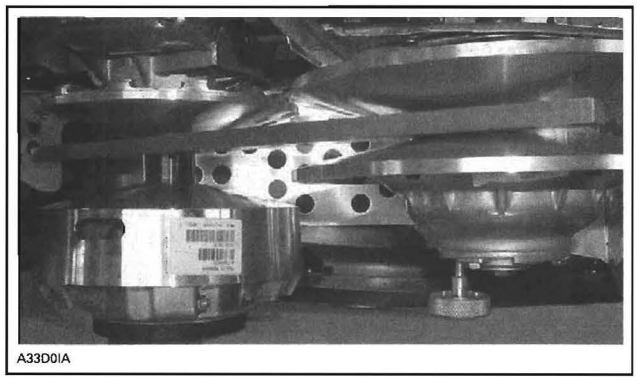

TYPICAL — ALIGNMENT BAR IN PULLEYS

Always measure distances X from the farther alignment bar side (including its thickness to the fixed sheave inner edge).

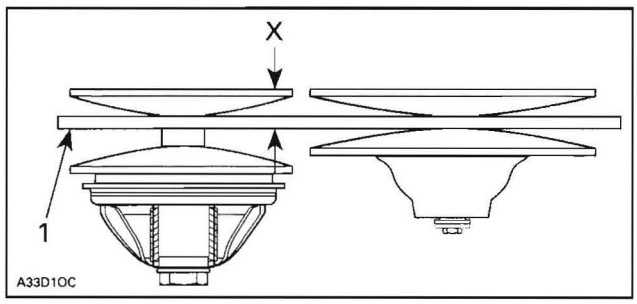

TYPICAL
1. Alignment bar

MEASUREMENT (X)		
MODELS	DISTANCE mm (in)	
	MINIMUM	MAXIMUM
300F	32.9 (1.295)	33.9 (1.335)
550F	32.9 (1.295)	33.9 (1.335)
V800	36.5 (1.44)	37.5 (1.48)

If an alignment is necessary, remove driven pulley and add or remove shim(s) as required to obtain the specified alignment.

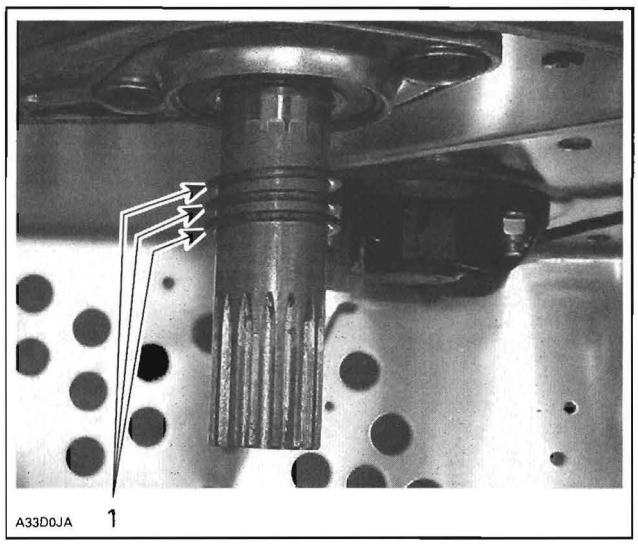

1. Shims

CAUTION: The total shim thickness should never be less than 2 mm (.079 in).

Use the following table to choose the proper shim(s).

SHIM CHART	
P/N	SHIM THICKNESS mm (in)
504 112 000	0.42 ± 0.05 (.017 ± .002)
417 300 265	1.02 ± 0.10 (.040 ± .004)
417 300 252	2.06 ± 0.15 (.081 ± .006)

After alignment, hand tighten the torque rod so it slightly contacts engine crankcase. Do not over tighten, it will modify pulley alignment.

When the alignment is done, refer to *DRIVE BELT* to adjust the drive belt.

COUNTERSHAFT AND BRAKE

SERVICE TOOLS

Description	Part Number	Page
countershaft bearing remover/installer	529 035 699	491

SERVICE PRODUCTS

Description	Part Number	Page
DOT 4 brake fluid GTLMA	293 600 062	485
DOT 4 brake fluid SRF	293 600 063	485
Loctite 609	413 703 100	490
Loctite 767 (antiseize lubricant)	293 800 070	487

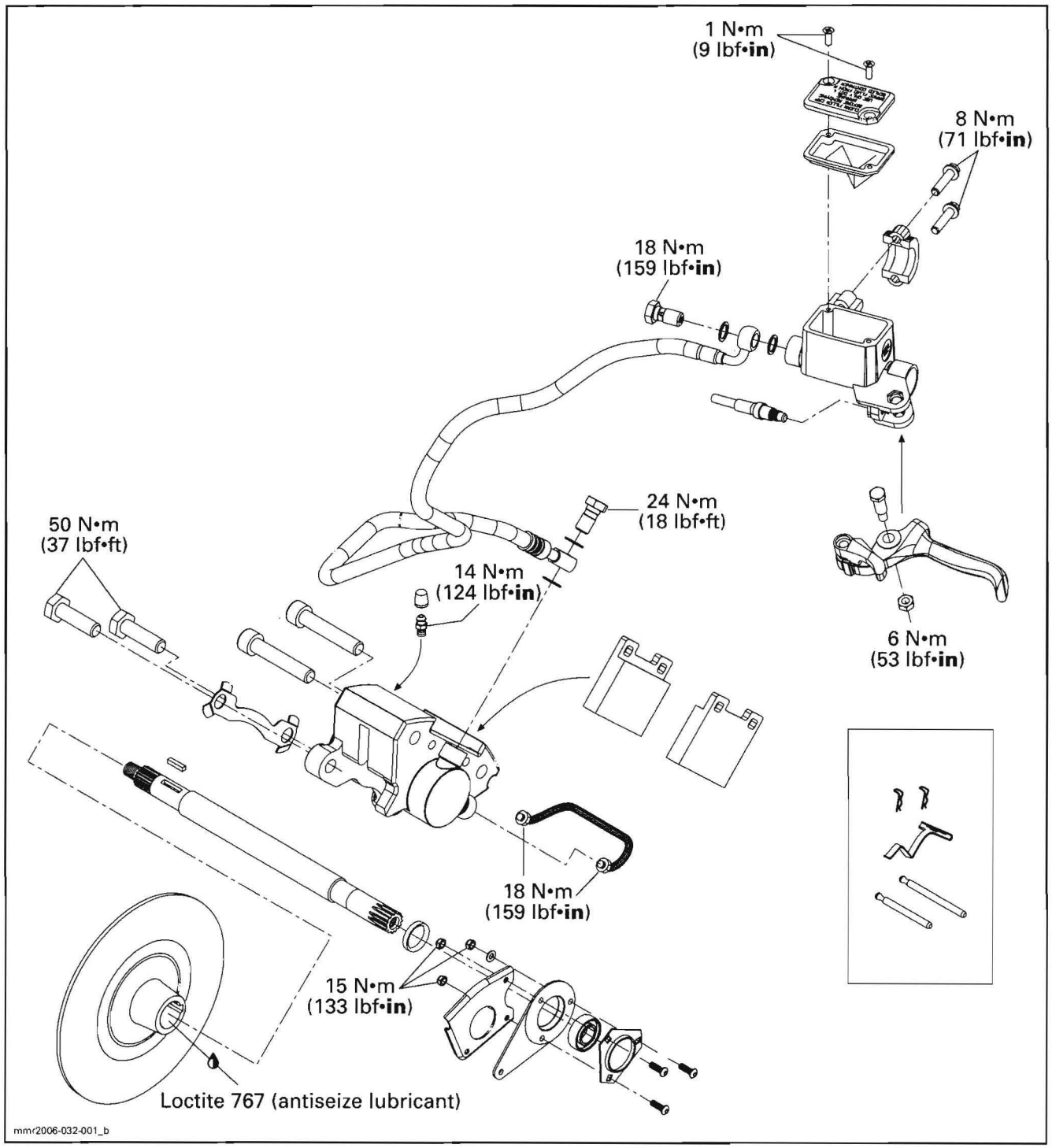
1 N•m
(9 lbf•in)
8 N•m
(71 lbf•in)
18 N•m
(159 lbf•in)
24 N•m
(18 lbf•ft)
50 N•m
(37 lbf•ft)
14 N•m
(124 lbf•in)
6 N•m
(53 lbf•in)
18 N•m
(159 lbf•in)
15 N•m
(133 lbf•in)
Loctite 767 (antiseize lubricant)
mmr2006-032-001_b

GENERAL

During assembly/installation, use torque values and service products as in the exploded view.

Clean threads before applying a threadlocker. Refer to *SELF-LOCKING FASTENERS* and *LOCTITE APPLICATION* at the beginning of this manual for complete procedure.

⚠ WARNING

Torque wrench tightening specifications must strictly be adhered to.
Locking devices (e.g.: locking tabs, elastic stop nuts, self-locking fasteners, cotter pins, etc.) must be installed or replaced with new ones where specified. If the efficiency of a locking device is impaired, it must be renewed.

⚠ WARNING

A contaminated brake disc or pad reduces stopping power. Discard contaminated pads and clean contaminated disc with a high quality brake degreasing agent.

CAUTION: Avoid spilling brake fluid on plastic, rubber or painted parts. Protect these parts with a rag when servicing brake system.

CAUTION: To avoid serious damage to the brake system, use only DOT 4 brake fluid from a sealed container. Do not use brake fluid taken from old or already opened containers, nor mix different fluids for topping off.

CAUTION: Sealing washers must be discarded and replaced with new ones every time a Banjo fitting is unscrewed.

PROCEDURES

BRAKE FLUID

The brake fluid must be changed in accordance with the maintenance chart.

Recommended Fluid

Always use brake fluid meeting the specification DOT 4 such as DOT 4 brake fluid GTLMA (P/N 293 600 062) or DOT 4 brake fluid SRF (P/N 293 600 063) sold by BRP.

Fluid Level

With the vehicle on a level surface, position steering in straight-ahead position to ensure reservoir is level. Check brake fluid level, the reservoir is full when the fluid reaches the top of window.

Brake Fluid Replacement

Draining

Remove reservoir cover with its diaphragm.

Connect a clear hose to caliper bleeding screw.

Loosen bleeding screw and pump brake lever until no more fluid flows out of bleeding screw.

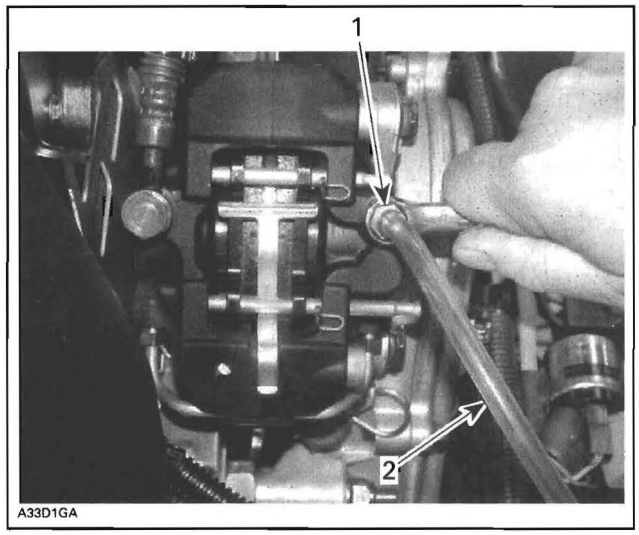

TYPICAL
1. *Open bleeding screw*
2. *Clear hose to catch used brake fluid*

Filling and Bleeding

Close bleeding screw.

Fill reservoir with DOT 4 brake fluid.

Unscrew bleeding screw until brake fluid freely flows out of hose. Close bleeding screw. Refill reservoir when the fluid level is low to prevent air into system.

Pump up system pressure with brake lever until resistance is felt.

Squeeze brake lever and open bleeding screw. When lever touches the handlebar, do not release lever and close bleeding screw.

Repeat the procedure until no more air bubbles appear in the hose and brake lever is not spongy.

BRAKE PADS

Inspection

Brake pads must be replaced when lining is 1 mm (1/32 in) thick or less or if the groove, on lining pad, is not visible.

CAUTION: Brake pads must always be replaced in pairs.

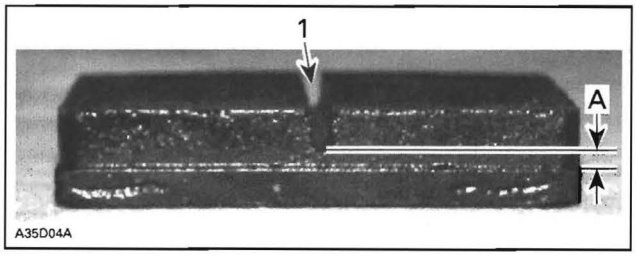

1. Groove on pad lining
A. Brake pad minimum thickness 1 mm (1/32 in)

Inspect brake disc at the same time.

Removal

Brake pads removal procedure is as follows:

– Remove clips that retain pad pins.

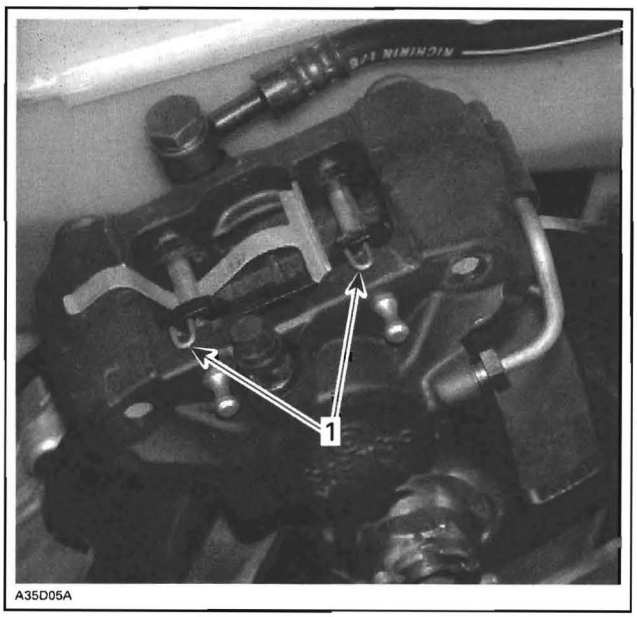

TYPICAL
1. Clips

– Hold pad spring and pull pad pins out of caliper.

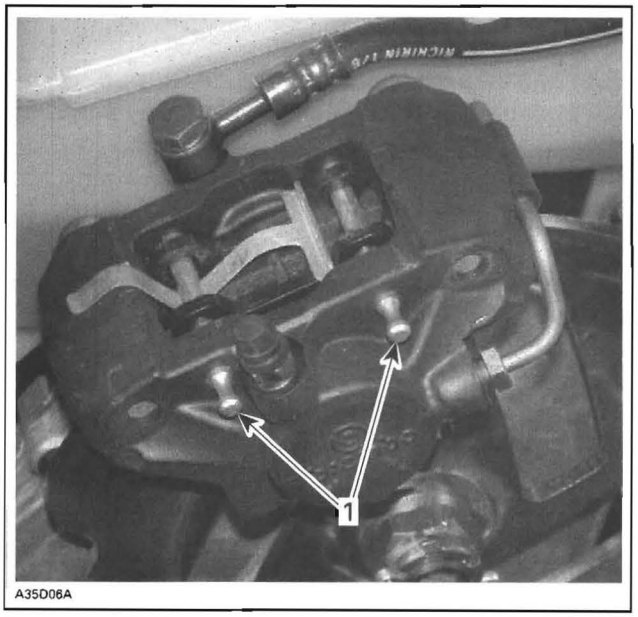

TYPICAL
1. Pad pins

– Remove pad spring.

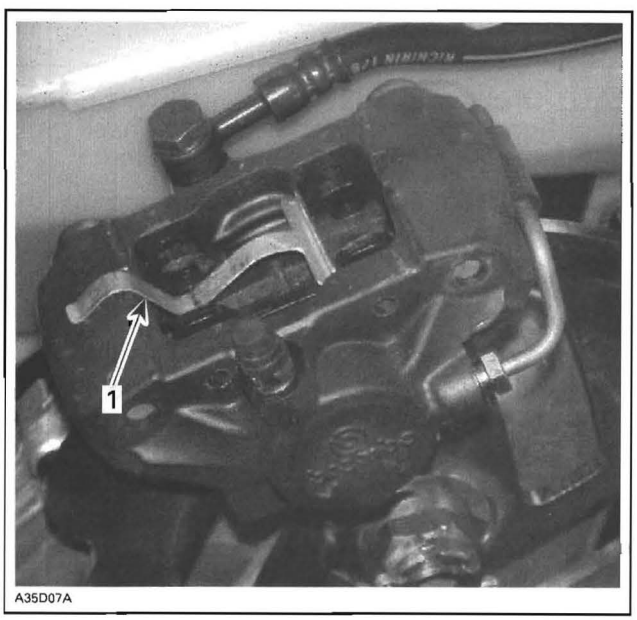

TYPICAL
1. Pad spring

– Insert a flat screwdriver between brake disc and brake pad to compress caliper piston. Pay attention to avoid scratching brake disc.
– Remove the brake pads.

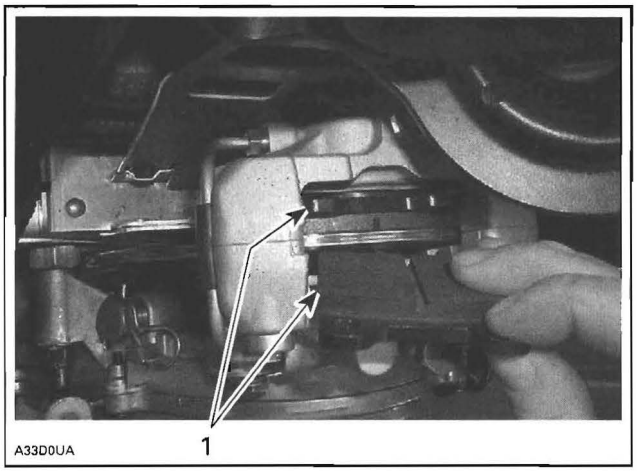

TYPICAL
1. Brake pad

Installation

Install:
- new brake pads
- pad spring and push 2 pins to lock the brake pads
- both clips in the pin holes.

⚠ WARNING

Avoid getting fluid, oil or grease on brake pads. Contaminated brake pads can affect stopping capacities.

Press the brake lever until both new pads are touching the brake disc.

Center the brake disc into the caliper. Refer to *CALIPER*.

BRAKE DISC

Inspection

The brake disc can be inspected without removing it from the vehicle.

Check for scoring, cracking or bending, replace as required.

Measure brake disc thickness. The minimum thickness should be 4.3 mm (.169 in). If the brake disc is out of specification, replace it with a new one.

CAUTION: Brake disc should never be machined.

Removal

Remove chaincase. Refer to *CHAINCASE*.

Using a small tool, remove the circlip on countershaft.

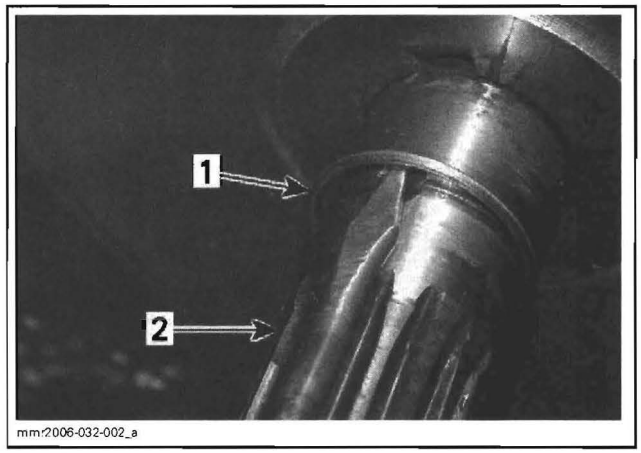

TYPICAL
1. Circlip
2. Countershaft

Remove brake disc from countershaft. Pay attention not to lose the Woodruff key.

Installation

Apply Loctite 767 (antiseize lubricant) (P/N 293 800 070) on shaft.

The disc hub exceeds the disc more from one side than from the other. Install disc with the longer exceeding portion toward driven pulley.

Reinstall all removed parts.

CALIPER

Removal

300F and 550F Models

Place a container under caliper. Unscrew the bleeding screw and drain the brake system. Do not remove the bleeding screw completely during draining.

To completely drain the brake fluid, continuously press the brake lever until all fluid has escaped.

When the system is empty, remove the Banjo fitting. Discard the sealing washers.

Unscrew screws and remove locking tab to pull out caliper from chaincase.

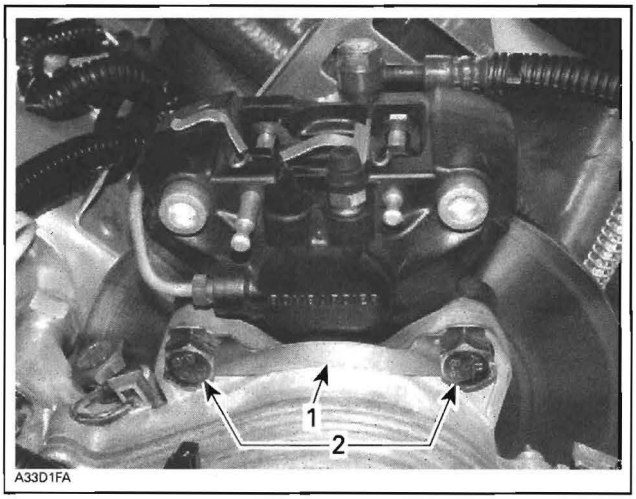

TYPICAL
1. *Locking tab*
2. *Screws*

CAUTION: Do not let the caliper hang by the hose and do not stretch or twist the hose.

V800 Models

Remove battery. Refer to *CHARGING SYSTEM*.

Place a container under caliper. Unscrew the bleeding screw and drain the brake system. Do not remove the bleeding screw completely during draining.

To completely drain the brake fluid, continuously press the brake lever until all fluid has escaped.

When the system is empty, remove the Banjo fitting. Discard the sealing washers.

Unscrew bolt that attach the link rod to reverse lever.

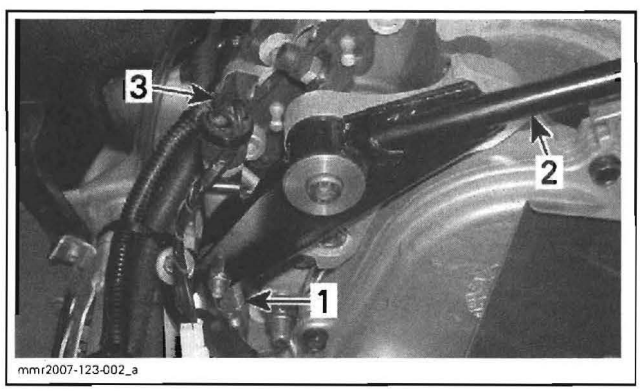

1. *Link rod*
2. *Reverse lever*
3. *Chaincase*

Unscrew bolts retaining reverse lever support and caliper to chaincase.

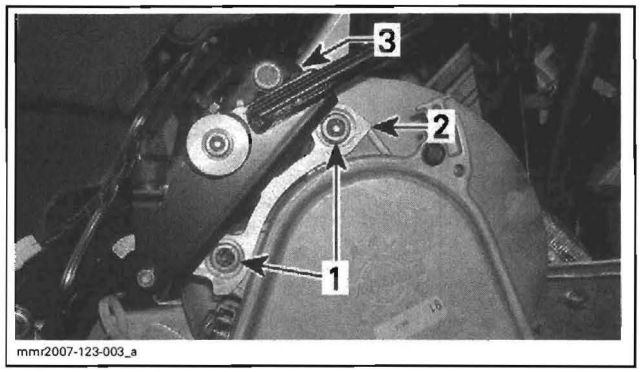

1. *Retaining bolts*
2. *Reverse lever support*
3. *Caliper*

Remove caliper.

CAUTION: Do not let the caliper hang by the hose and do not stretch or twist the hose.

Inspection

Check pistons for scratches, rust or other damages. If so, replace the caliper as an assembly.

NOTE: Only brake pads are available as spare parts.

Installation

Push pistons all the way in to allow caliper installation over brake disc.

Install the Banjo fitting with two new sealing washers.

Fasten caliper on chaincase. Do not forget to install and fold locking tab over caliper bolt (**300F and 550F models**).

Fill the brake system and bleed it. Refer to *MAINTENANCE* in this section.

The brake disc must be centered in caliper. Apply brake then check for proper brake disc positioning.

Push on appropriate caliper piston in order to move pad inward allowing proper brake disc positioning.

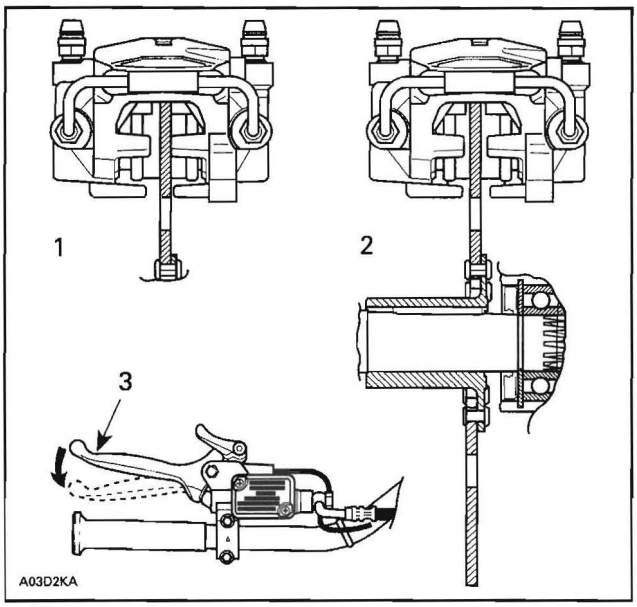

TYPICAL
1. *Brake disc not centered*
2. *Brake disc centered*
3. *Apply brake before checking*

Apply brake then recheck.

MASTER CYLINDER

Removal

The master cylinder is located on the LH side of handlebar. To remove it, unscrew both screws retaining the brake lever to the handlebar.

Place a container under Banjo fitting then unscrew it. Discard the sealing washers.

Installation

The installation is the reverse of removal procedure. Pay attention to the following.

Always use new sealing washers during installation.

Install clamp with its arrow pointing at downwards. Tighten to 8 N•m (71 lbf•**in**) lower screw before upper one.

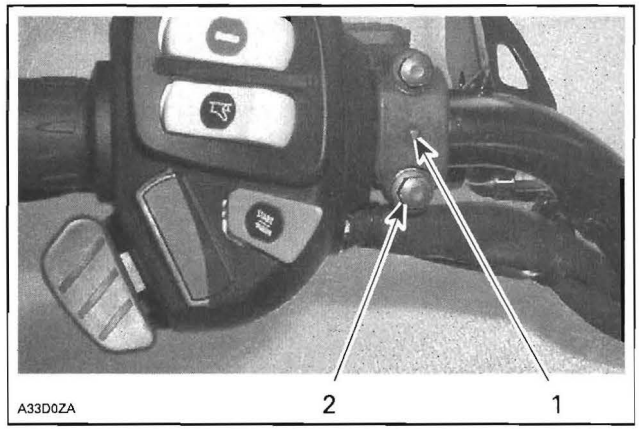

TYPICAL
1. *Arrow on upper clamp pointing downwards*
2. *Tighten lower screw first*

Bleed the brake system. Refer to *MAINTENANCE* in this section.

BRAKE LIGHT SWITCH

Switch Voltage Test

Remove taillight bulb.

Using a multimeter, measure the voltage in bulb socket as follows.

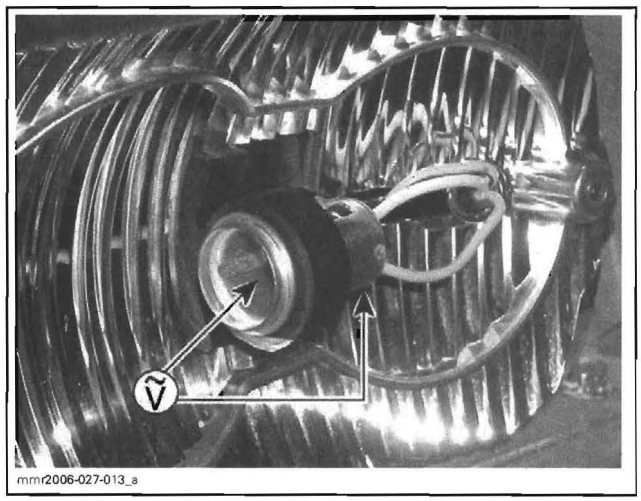

Start engine and read voltage. Apply brake and hold for measurement.

TAILLIGHT SOCKET		VOLTAGE
WHITE wire terminal	Socket shell (YELLOW/BLACK)	12 Vac

– Voltage is good:
  • Brake switch is in good condition.
– No voltage:
  • Check brake light switch resistance.

Switch Resistance Test

Disconnect steering connector.

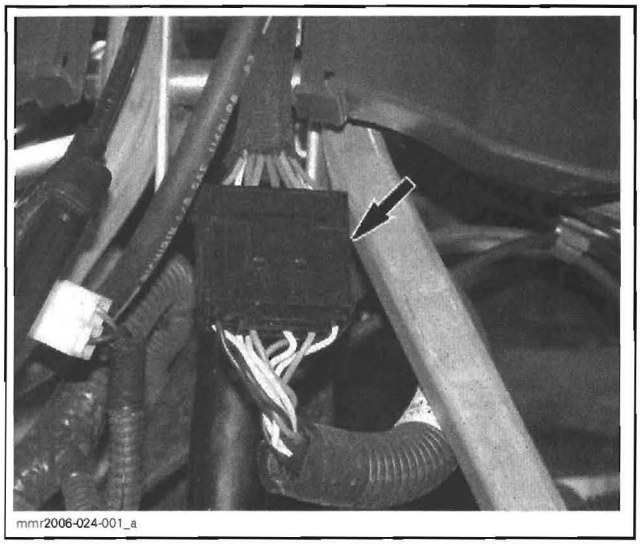

Validate switch operation with an ohmmeter.

SWITCH	TERMINAL		RESISTANCE
Released	WHITE	RED/YELLOW (small terminal)	Infinite (0L)
Pushed and held			0.2 Ω (closed)

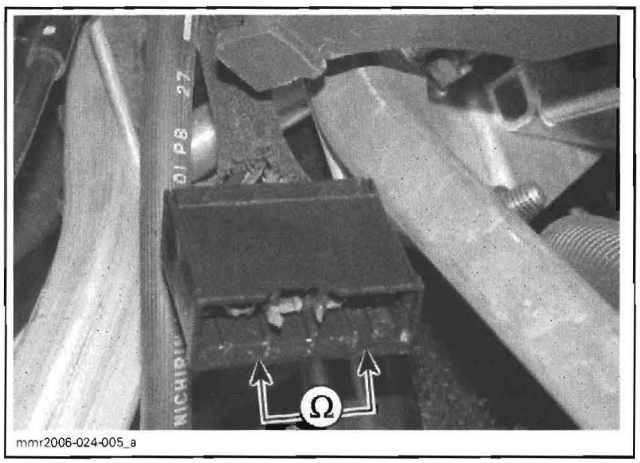

If readings do not correspond to the above specifications, check wiring/connectors going to switch. If they are good, replace switch.

If resistance test is good and the voltage test failed, there is a wire/connection problem between brake switch and taillight.

Removal

The brake light switch is located near the brake lever. To remove the switch, do the following.

Disconnect the switch.

Take out the master cylinder from the handlebar.

Fix the master cylinder in a rigid way preferably in a vise.

Pull out the switch wire and rubber cover.

Activate the parking brake.

Unscrew the switch body pay attention to apply a torque in axial direction with steps of little torque angles and pay attention to not apply a force in radial direction (flexion). The switch is delicate and can be easily snapped.

NOTE: In case of accidental breakage while removing switch body from master cylinder ensure to thoroughly restore and clean threads as needed before installing new switch.

Installation

NOTE: The brake light switch is not adjustable.

Remove the glue remaining with alcohol on a piece of cotton and then clean the seat threads.

Put the switch on the seat, rotating it only for 1 or 1.5 turns.

Put one drop of Loctite 609 (P/N 413 703 100) on the free switch threads.

Screw the switch by hand until it is in a correct position.

For safety reasons, check the activation of the switch by pulling the brake lever. In case of no switch activation, repeat all the procedure replacing a new switch.

NOTE: If parking brake release during the mounting operations, set the master cylinder in a sloping position (with lever on the top) and hold the master cylinder lever for 45 minutes.

Reinstall the master cylinder on the handlebar taking it in a horizontal position avoiding the risk of glue contamination for the switch rod.

Release the parking brake.

Wait 24 hours to allow glue to set.

Recheck if switch is working properly.

COUNTERSHAFT

Removal

Remove the driven pulley, refer to *DRIVEN PULLEY*.

Unbolt bearing support.

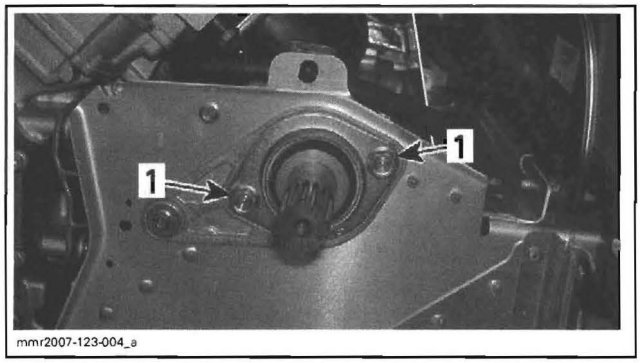

TYPICAL
1. Bearing support bolts

Release tension of drive chain

Remove chaincase cover, cotter pin, castle nut, upper sprocket and countershaft spacer.

By the LH side of vehicle, pull the countershaft with its bearing out of vehicle.

Inspection

Check countershaft for bending, rust or other damages. Replace if necessary.

Check condition of countershaft splines and threads. Replace countershaft if necessary.

Installation

The installation is the reverse of removal procedure.

NOTE: Always install a new bearing when countershaft is removed. Refer to *COUNTERSHAFT BEARING*.

COUNTERSHAFT BEARING

Removal

Remove the driven pulley, refer to *DRIVEN PULLEY*.

Unbolt bearing support. Install the countershaft bearing remover/installer (P/N 529 035 699).

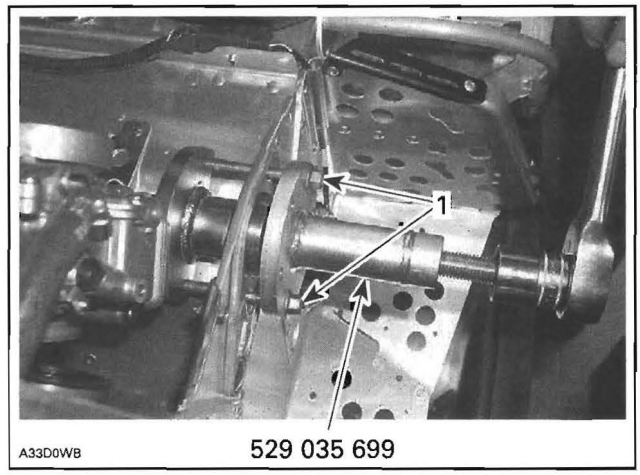

TYPICAL
1. Screws replacing bearing support screws

Tighten the countershaft bearing remover/installer bolt to pull the bearing out of it housing.

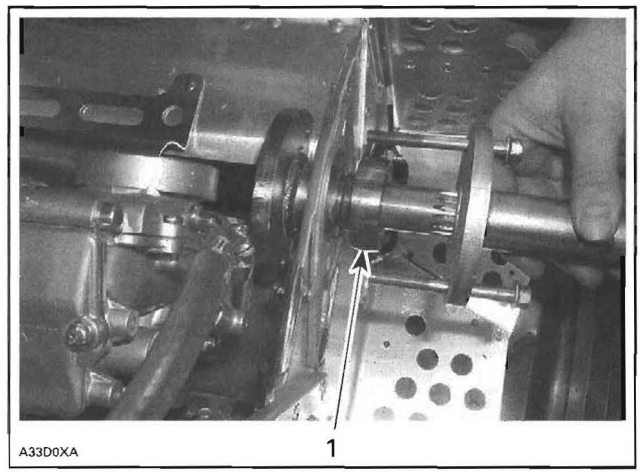

TYPICAL
1. Bearing

Installation

To install bearing on countershaft, use the countershaft bearing remover/installer (P/N 529 035 699) and some flat washers of 3 mm (1/8 in) total thickness. Using original retaining screw and shouldered washer tighten until bearing rests against circlip.

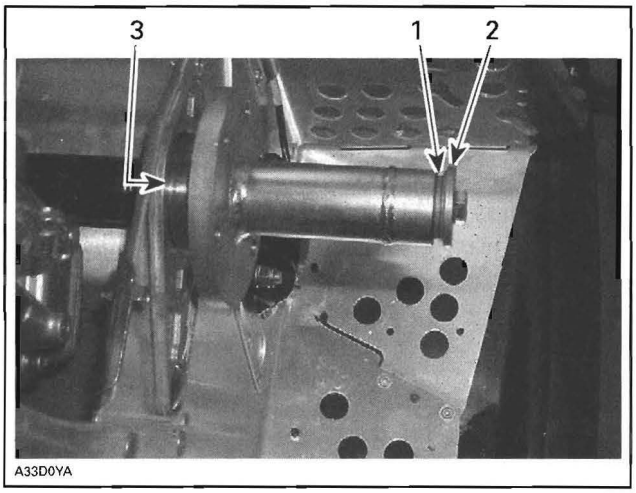

TYPICAL
1. *Washers use as a 3 mm (1/8 in) spacer*
2. *Original retaining screw and shouldered washer*
3. *Bearing against circlip*

Ensure that countershaft is properly aligned, then tighten 3 retaining screws.

NOTE: A misaligned countershaft will result in difficulty to center the bearing in its support.

CHAINCASE (300F AND 550F)

SERVICE TOOLS

Description	Part Number	Page
drive axle holder	529 007 200	498

SERVICE PRODUCTS

Description	Part Number	Page
Loctite 271 (red)	293 800 005	499–500
ThermoLube synthetic grease	293 700 417	500
XP-S chaincase oil	413 801 900	495
XP-S synthetic chaincase oil	413 803 300	495

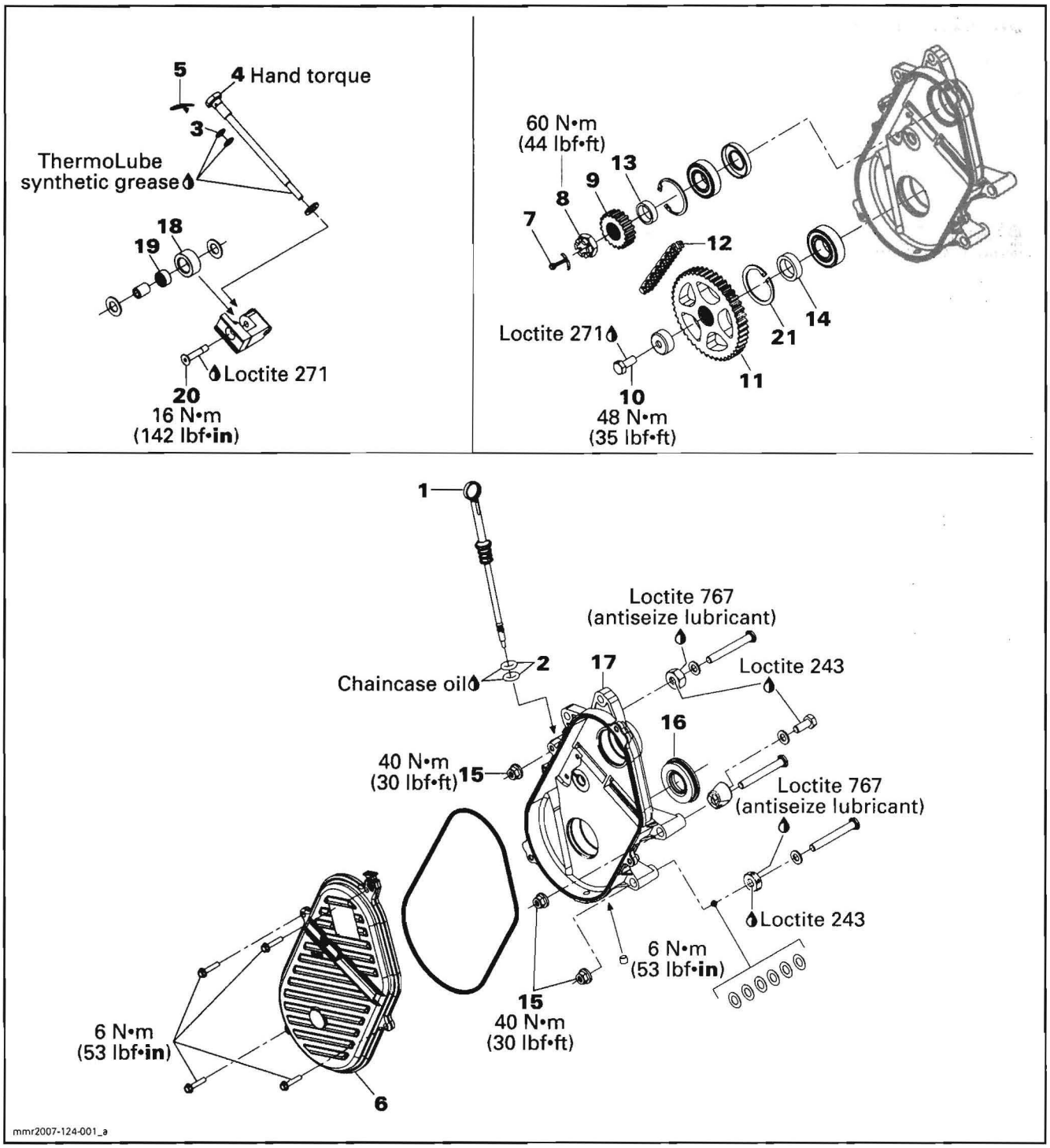
5
4 Hand torque
3
ThermoLube
synthetic grease
18
19
20
Loctite 271
16 N•m
(142 lbf•in)
60 N•m
(44 lbf•ft)
13
9
8
7
12
Loctite 271
21
14
11
10
48 N•m
(35 lbf•ft)
1
Loctite 767
(antiseize lubricant)
2
17
Chaincase oil
Loctite 243
16
40 N•m
(30 lbf•ft)
15
Loctite 767
(antiseize lubricant)
Loctite 243
6 N•m
(53 lbf•in)
15
40 N•m
(30 lbf•ft)
6 N•m
(53 lbf•in)
6
mmr2007-124-001_a

GENERAL

During assembly/installation, use the torque values and service products as in the exploded view.

Clean threads before applying a threadlocker. Refer to *SELF-LOCKING FASTENERS* and *LOCTITE APPLICATION* at the beginning of this manual for complete procedure.

⚠ WARNING

Torque wrench tightening specifications must strictly be adhered to.
Locking devices (e.g.: locking tabs, elastic stop nuts, self-locking fasteners, cotter pin, etc.) must be installed or replaced with new ones where specified. If the efficiency of a locking device is impaired, it must be renewed.

MAINTENANCE

CHAINCASE OIL

Recommended Oil

NOTE: Do not mix different oil (mineral and synthetic) for topping off.

Use XP-S chaincase oil (P/N 413 801 900) or XP-S synthetic chaincase oil (P/N 413 803 300).

Oil Level Verification

With the vehicle on a level surface, check the oil level by removing dipstick **no. 1**. Oil level must be between lower and upper marks.

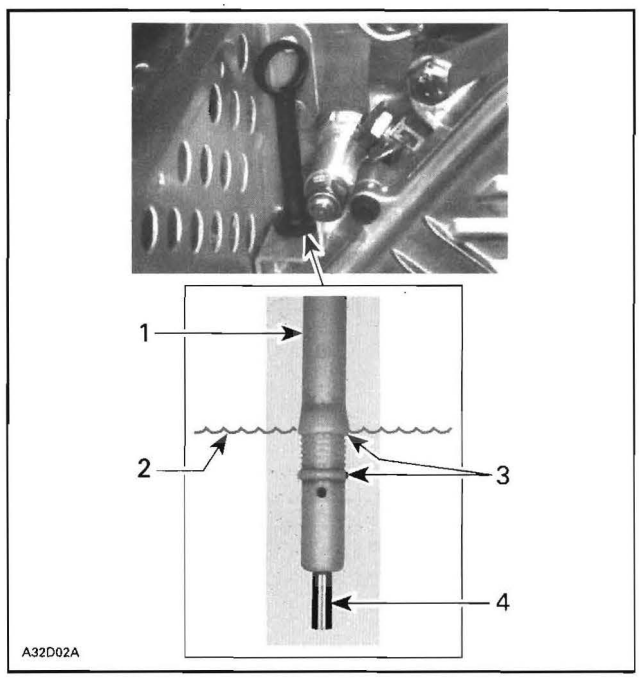

TYPICAL
1. Dipstick
2. Oil level
3. Level between marks
4. Magnet

NOTE: It is normal to find metallic particles stuck to dipstick magnet. If bigger pieces of metal are found, remove the chaincase cover and inspect the chaincase parts.

Remove metal particles from magnet.

Refill to upper mark. See *RECOMMENDED OIL* for the proper chaincase oil to use.

CAUTION: Use only the recommended types of oil when servicing. Do not mix synthetic oil with other types of oil.

Check O-rings **no. 2**. If the O-rings are brittle, hard or otherwise damaged, replace them.

Draining Procedure

Place a drain pan under chaincase drain plug area.

Remove dipstick **no. 1**.

Using an Allen key, remove the drain plug.

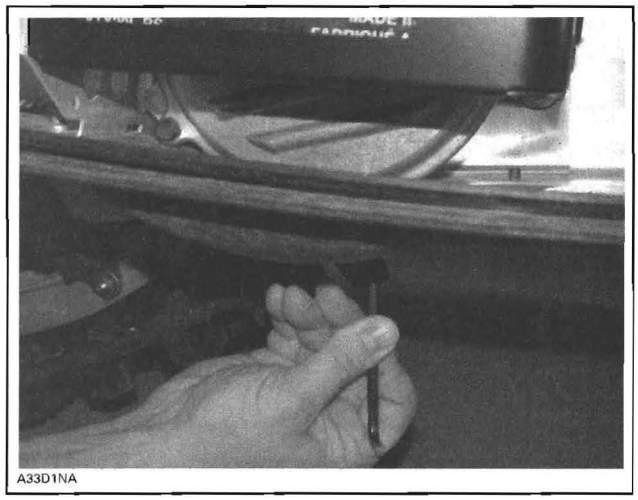
A33D1NA

Wait a while to allow oil to flow out of chaincase.

Install drain plug and torque it to 6 N•m (53 lbf•**in**).

Filling Procedure

Place the vehicle on a level surface.

Using a funnel, pour 250 mL (8.5 U.S. oz) of chaincase oil.

Check oil level with the dipstick and add oil if necessary. The level must be between lower and upper dipstick's marks.

DRIVE CHAIN ADJUSTMENT

NOTE: Brake disc key must be in good condition before checking if chain is loose.

Before performing the drive chain adjustment, check the tensioner adjustment screw O-ring(s) **no. 3** and replace if necessary.

Fully tighten tensioner adjustment screw **no. 4 BY HAND**. The tensioner adjustment screw shoulder and the washer must be in contact with the chaincase housing.

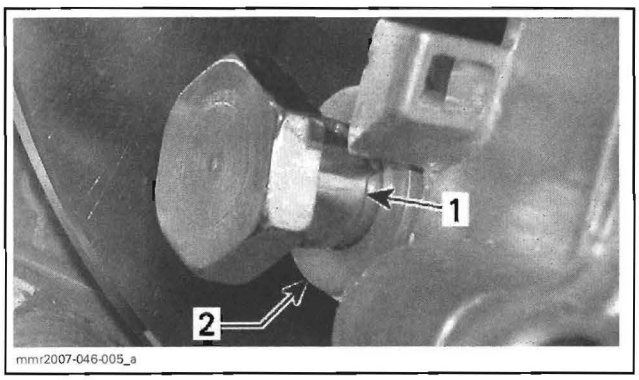

mmr2007-046-005_a

1. Shoulder of tensioner adjustment screw
2. Washer

When done, back off only far enough for hair pin **no. 5** to engage in locking hole.

This initial adjustment should provide 3 - 5 mm (1/8 - 13/64 in) free-play when measured at the outer circumference of the brake disc.

CAUTION: Free-play must not exceed 5 mm (13/64 in), readjust if necessary.

⚠ WARNING

If the specified free-play is not reached with the tensioner screw fully tightened, replace chain and check the condition of sprockets.

PROCEDURES

CHAINCASE

Removal

Drain chaincase oil.

Remove battery and battery rack (if so equipped) to gain access, refer to *STARTING SYSTEM*.

Remove the muffler spring locates on the RH side of chaincase.

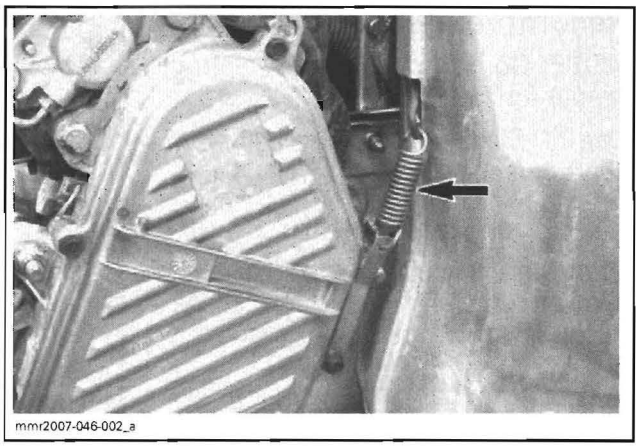
mmr2007-046-002_a

Apply parking brake.

Remove chaincase cover **no. 6**.

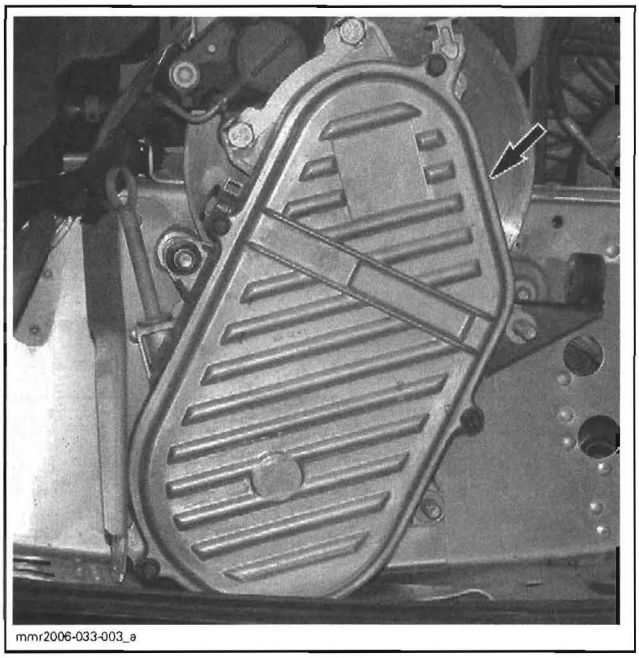
mmr2006-033-003_a

Remove the lower sprocket bolt **no. 10**.

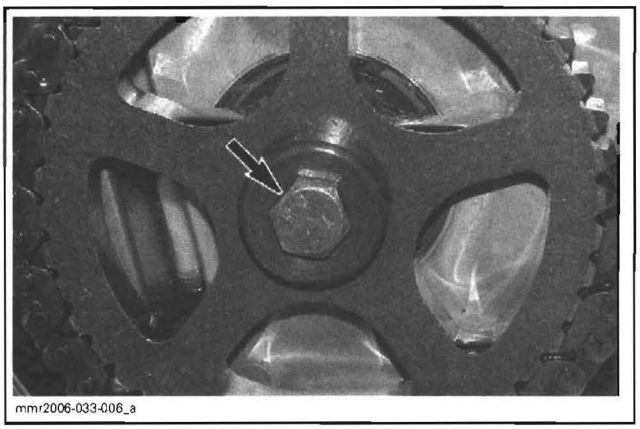
mmr2006-033-006_a

Remove cotter pin **no. 7**.

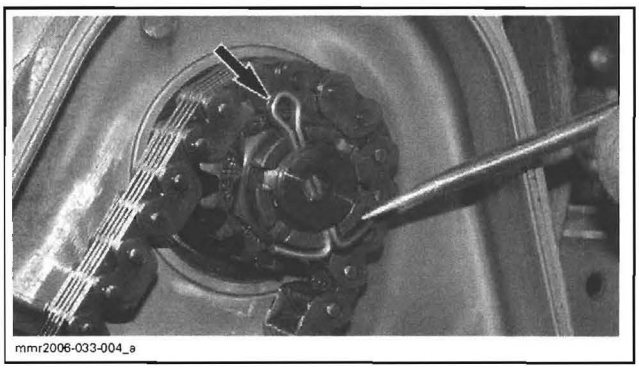
mmr2006-033-004_a

Upper sprocket nut **no. 8**.

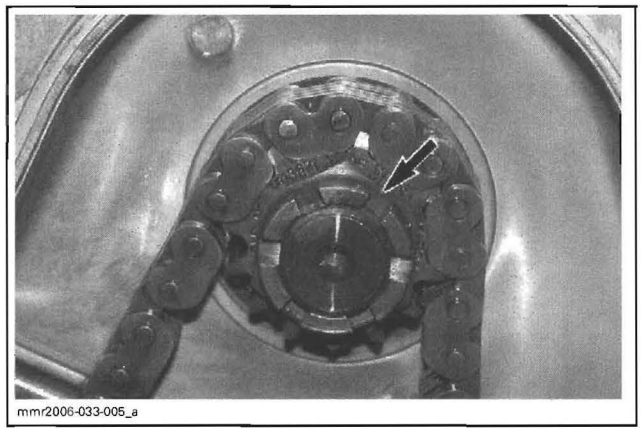
mmr2006-033-005_a

Remove hair pin **no. 5** from tensioner adjustment screw.



mmr2006-033-002_a

Release drive chain tension by unscrewing tensioner adjustment screw **no. 4**.

Remove the upper socket **no. 9** and the lower sprocket **no. 11** as well as chain **no. 12** simultaneously.

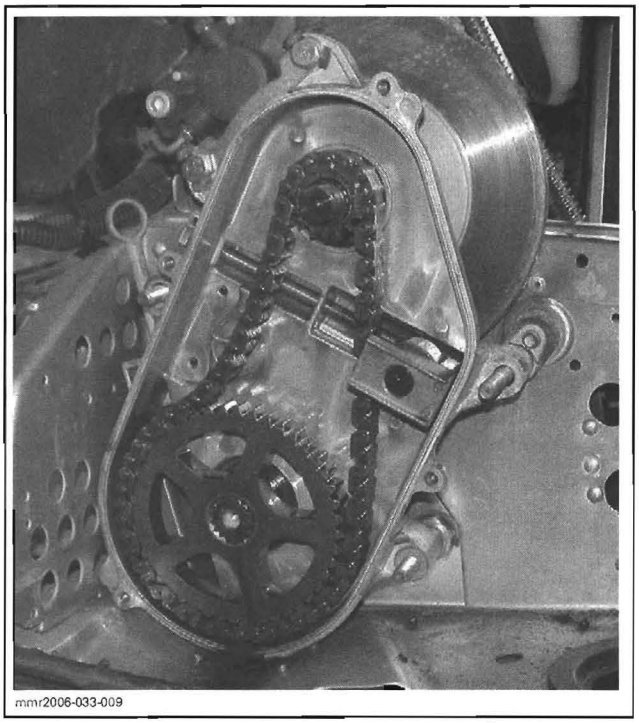
mmr2006-033-009

Remove the countershaft spacer **no. 13**.

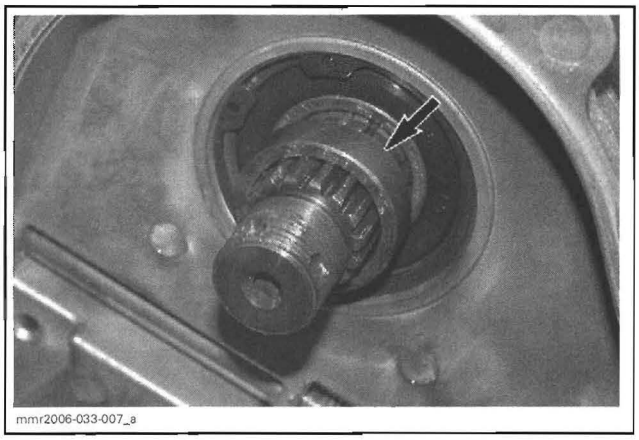
mmr2006-033-007_a

Then remove the drive axle spacer **no. 14**.

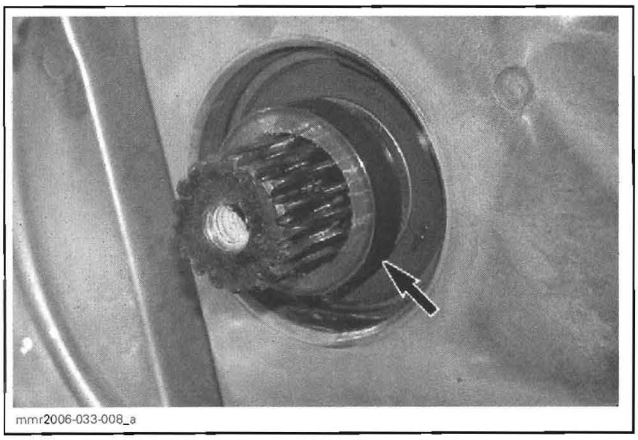
mmr2006-033-008_a

Near drive axle, remove the circlip **no. 21** from chaincase housing.

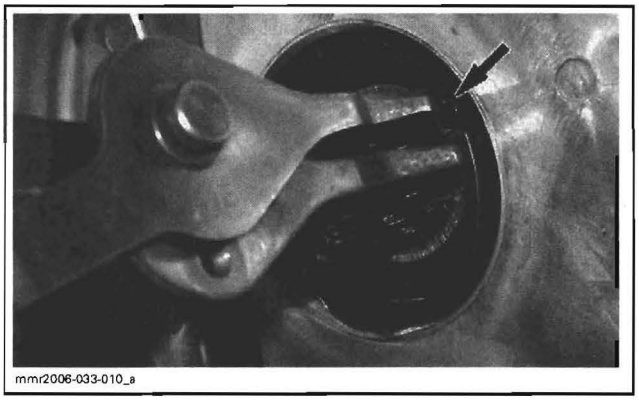
mmr2006-033-010_a

Release parking brake.

Remove nut(s) **no. 15** that retain chaincase to frame.

Unfold locking tab then remove caliper retaining screws.

Hold the drive axle in place by using the drive axle holder (P/N 529 007 200).

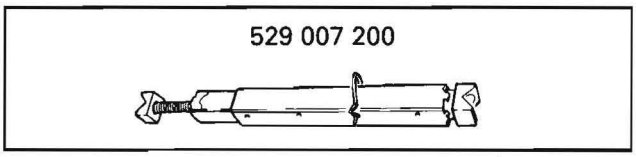

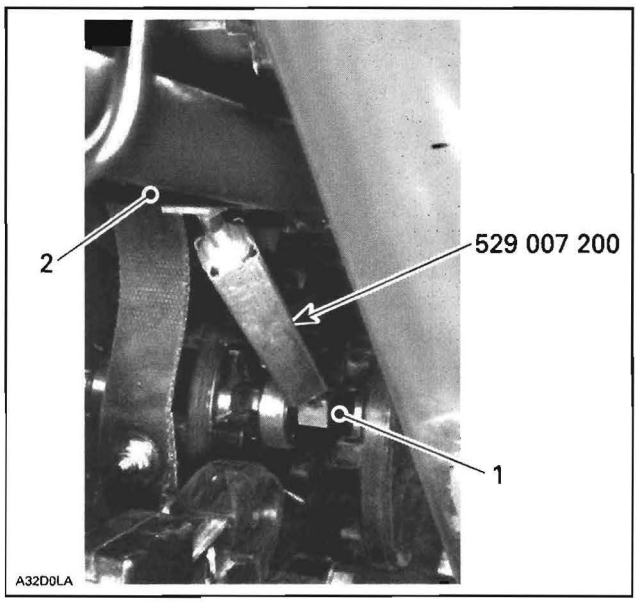

TYPICAL
1. Drive axle
2. Suspension front arm

Pry out drive axle oil seal **no. 16** from chaincase.

Pull chaincase from drive axle and countershaft.

Using 2 large prybars inserted between chaincase housing **no. 17** and frame, pry complete assembly from vehicle.

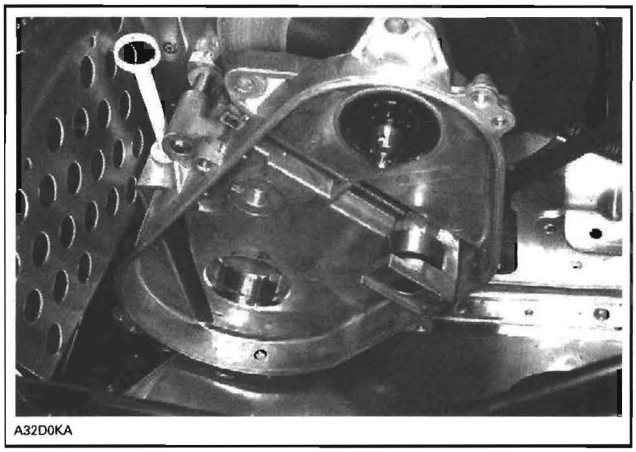
A32D0KA

TYPICAL — CHAINCASE HOUSING REMOVAL

Inspection

Visually inspect the chain and sprockets for wear, cracked, damaged or missing links. If a problem is detected, replace drive chain and sprockets as an assembly.

Check the drive chain deflection. If the deflection is greater than 38 mm (1-1/2 in) without the chain tensioner, replace the chain.

Check for worn or defective bearings.

Check chain tensioner roller **no. 18** for wear or other damages. If the roller does not turn smoothly, replace the needle bearing **no. 19**.

Installation

Reverse removal procedure and pay attention to the following.

When installing chaincase housing, use the following sequence to tighten chaincase nuts.

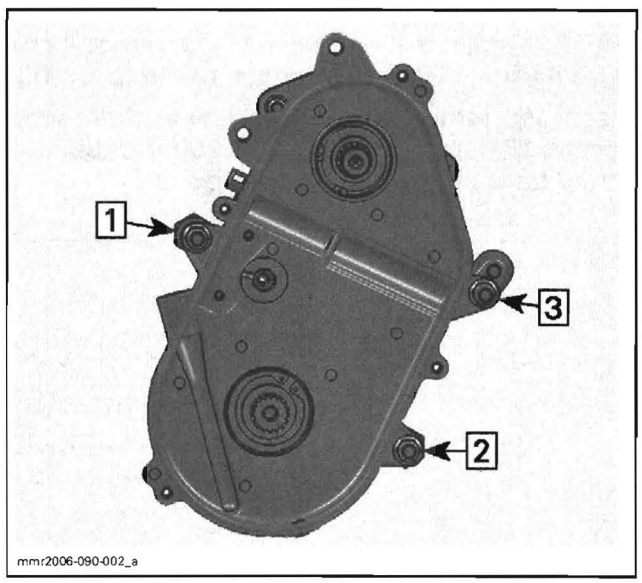

mmr2006-090-002_a

Using an appropriate pusher, press the oil seal **no. 16** into chaincase hub. Oil seal must fit flush with the chaincase edge.

Install the circlip **no. 21** in chaincase housing.

CAUTION: It is of the utmost importance to install the circlip otherwise damage to the chaincase components may occur.

Position the sprockets **no. 9** and **no. 11** with the backside of writing facing the chaincase cover. Sprocket hub faces toward chaincase.

Install the castellated nut **no. 8** and torque to 60 N•m (44 lbf•ft).

Apply Loctite 271 (red) (P/N 293 800 005) on lower sprocket screw threads and torque to 48 N•m (35 lbf•ft).

Install new cotter pin **no. 7** in the position shown.

CAUTION: When removing a cotter pin always replace with a new one. Cotter pin will rub on chaincase cover if installed otherwise.

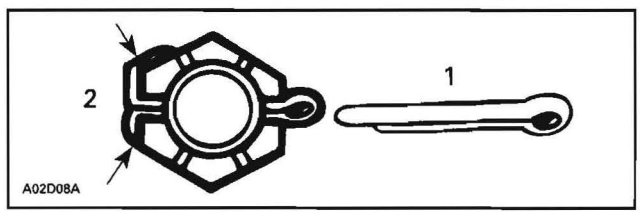

A02D08A

1. *New*
2. *Fold cotter pin over castellated nut flats only*

Check if chain tensioner screw is screwed correctly.

Install chaincase cover and torque its screws to 6 N•m (53 lbf•**in**).

Adjust drive chain. Refer to *DRIVE CHAIN ADJUSTMENT* at the beginning of this section.

CHAIN TENSIONER

Removal

Drain chaincase oil.

Remove battery and battery rack (if so equipped) to gain access, refer to *STARTING SYSTEM*.

Remove the muffler spring located on the RH side of chaincase.

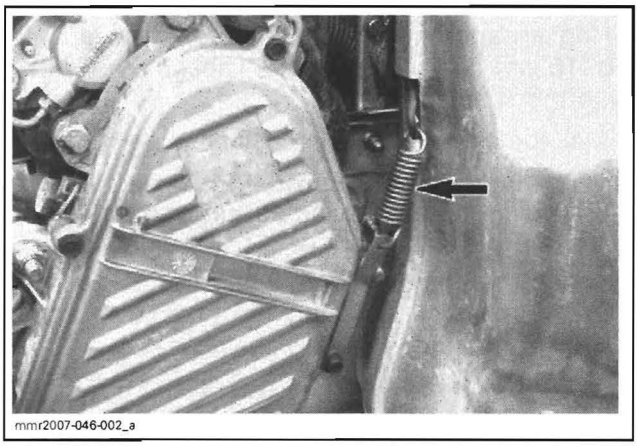
mmr2007-046-002_a

Remove chaincase cover **no. 6**.

Remove hair pin **no. 5**.

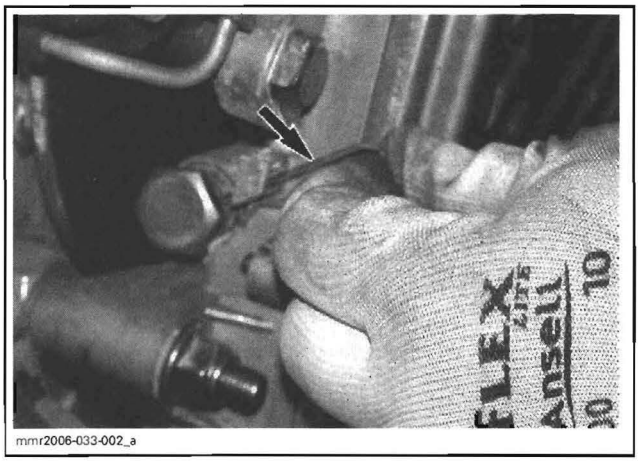

mmr2006-033-002_a

Unscrew tensioner adjustment screw **no. 4** completely.

Pull the tensioner adjustment screw to separate it from tensioner.

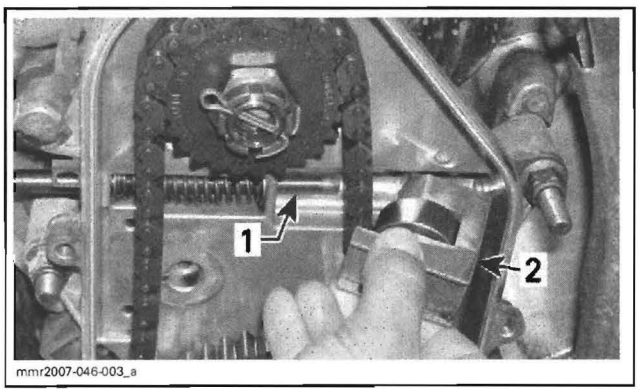

mmr2007-046-003_a

TYPICAL
1. *Tensioner adjustment screw*
2. *Tensioner*

Inspection

Check chain tensioner roller **no. 18** for wear or other damages. If the roller does not turn smoothly, replace the needle bearing **no. 19**. See procedure further.

Check O-rings **no. 3** on tensioner adjustment screw. Replace them if necessary.

Check threads of tensioner adjustment screw for damages or wear. Replace the screw if necessary and check chaincase housing for damages.

Installation

The installation is the reverse of the removal procedure. However, pay attention to the following.

Apply ThermoLube synthetic grease (P/N 293 700 417) on threads and O-rings of tensioner adjustment screw.

Check if chain tensioner screw is screwed correctly.

Adjust drive chain tension. Refer to *DRIVE CHAIN ADJUSTMENT* at the beginning of this section.

Install all removed parts.

CHAIN TENSIONER ROLLER BEARING

Removal

Remove the chain tensioner, see procedure above.

Heat the roller screw **no. 20** to break the threadlocker.

Remove the needle bearing from the roller.

Installation

The installation is the reverse of the removal procedure. However, pay attention to the following.

Clean and remove grease on screw then apply Loctite 271 (red) (P/N 293 800 005) under the screw head only, **none on threads**.

CHAINCASE (V800)

SERVICE TOOLS

Description	Part Number	Page
drive axle holder	529 007 200	508

SERVICE PRODUCTS

Description	Part Number	Page
Loctite 271 (red)	293 800 005	511
ThermoLube synthetic grease	293 700 417	511
XP-S synthetic chaincase oil	413 803 300	503

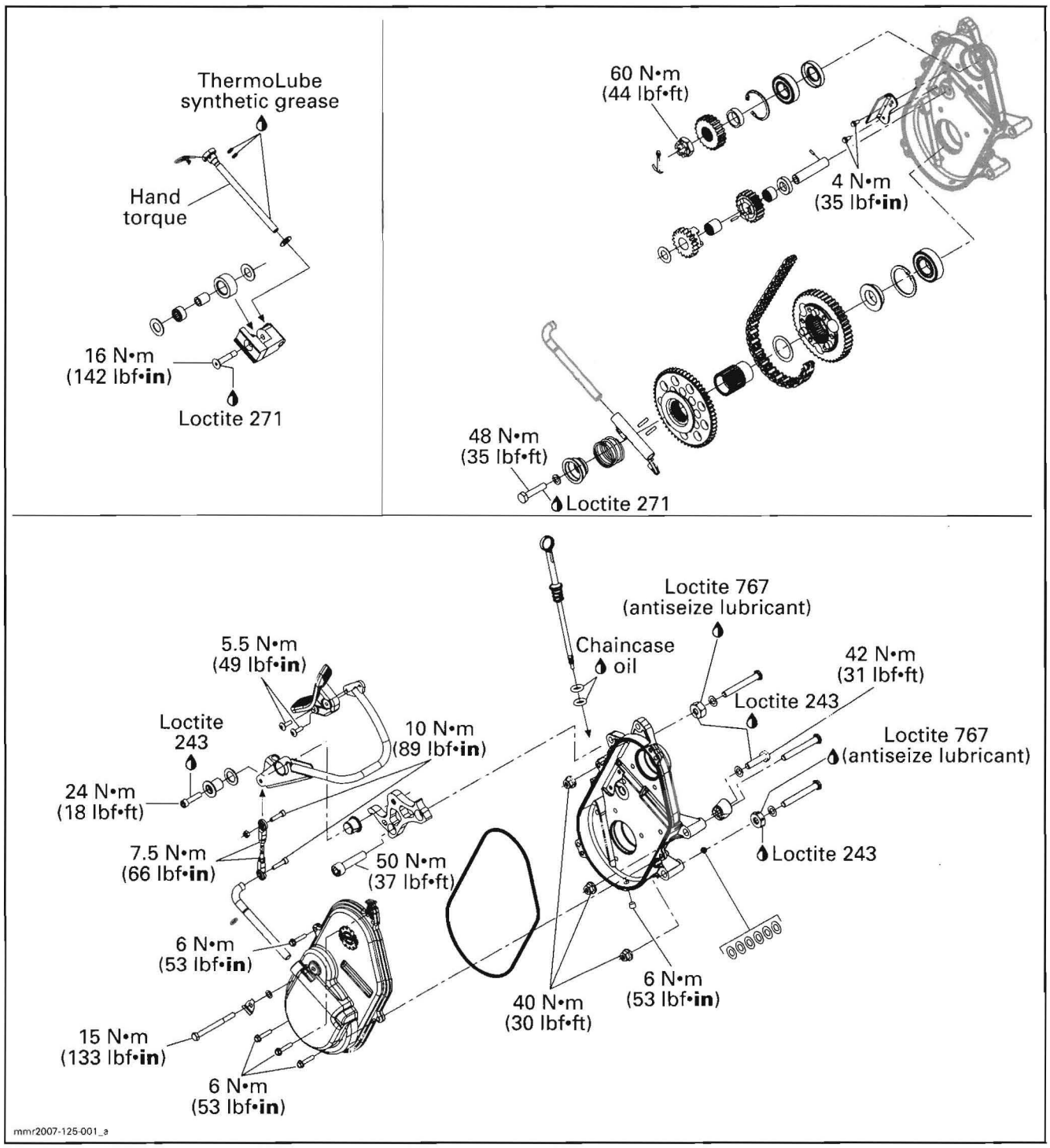
ThermoLube synthetic grease
Hand torque
16 N•m (142 lbf•in)
Loctite 271
60 N•m (44 lbf•ft)
4 N•m (35 lbf•in)
48 N•m (35 lbf•ft)
Loctite 271
Loctite 767 (antiseize lubricant)
Chaincase oil
5.5 N•m (49 lbf•in)
Loctite 243
10 N•m (89 lbf•in)
24 N•m (18 lbf•ft)
7.5 N•m (66 lbf•in)
50 N•m (37 lbf•ft)
6 N•m (53 lbf•in)
15 N•m (133 lbf•in)
6 N•m (53 lbf•in)
40 N•m (30 lbf•ft)
6 N•m (53 lbf•in)
42 N•m (31 lbf•ft)
Loctite 243
Loctite 767 (antiseize lubricant)
Loctite 243
mmr2007-125-001_a

GENERAL

During assembly/installation, use the torque values and service products as in the exploded view.

Clean threads before applying a threadlocker. Refer to *SELF-LOCKING FASTENERS* and *LOCTITE APPLICATION* at the beginning of this manual for complete procedure.

⚠ WARNING

Torque wrench tightening specifications must strictly be adhered to.
Locking devices (e.g.: locking tabs, elastic stop nuts, self-locking fasteners, cotter pin, etc.) must be installed or replaced with new ones where specified. If the efficiency of a locking device is impaired, it must be renewed.

MAINTENANCE

CHAINCASE OIL

Recommended Oil

NOTE: Do not mix different oil (mineral and synthetic) for topping off.

Use XP-S synthetic chaincase oil (P/N 413 803 300).

Oil Level Verification

With the vehicle on a level surface, check the oil level by removing dipstick. Oil level must be between lower and upper marks.

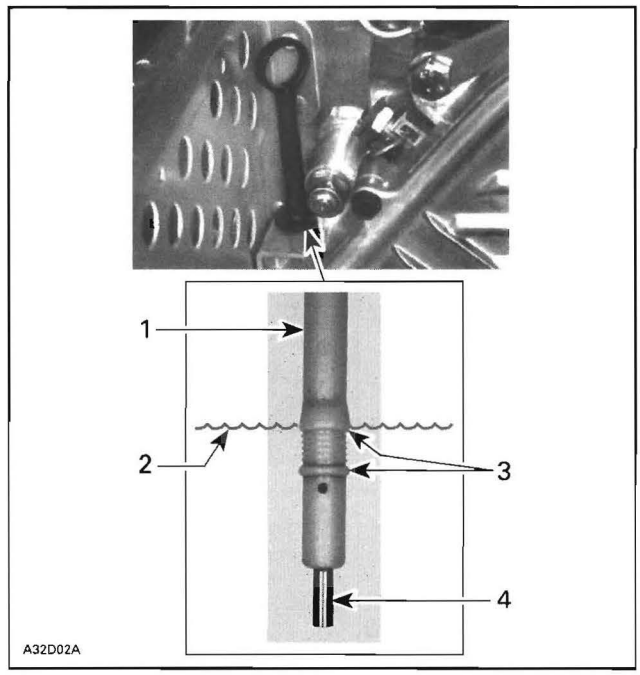

TYPICAL
1. *Dipstick*
2. *Oil level*
3. *Level between marks*
4. *Magnet*

NOTE: It is normal to find metallic particles stuck to dipstick magnet. If bigger pieces of metal are found, remove the chaincase cover and inspect the internal parts.

Remove metal particles from magnet.

Refill to upper mark. See *RECOMMENDED OIL* for the proper chaincase oil to use.

CAUTION: Use only the recommended type of oil when servicing. Do not mix synthetic oil with other types of oil.

Check O-rings. If the O-rings are brittle, hard or otherwise damaged, replace them.

Draining Procedure

Place a drain pan under chaincase drain plug area.

Remove dipstick.

Using an Allen key, remove the drain plug.

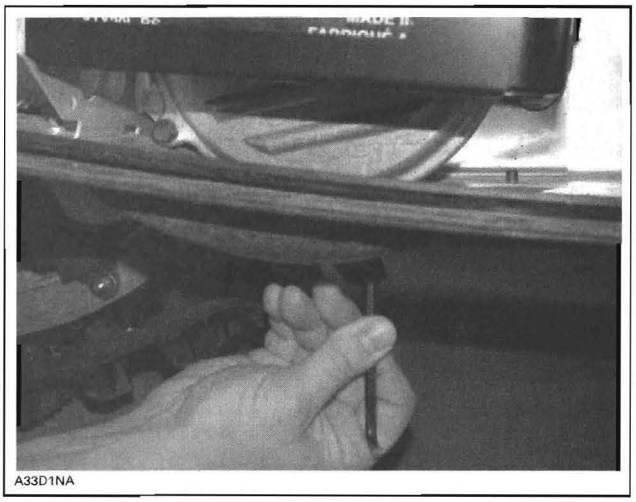
A33D1NA

Wait a while to allow oil to flow out of chaincase.

Install drain plug and torque it to 6 N•m (53 lbf•**in**).

Filling Procedure

Place the vehicle on a level surface.

Using a funnel, pour 250 mL (8.5 U.S. oz) of chaincase oil.

Check oil level with the dipstick and add oil if necessary. The level must be between lower and upper dipstick's marks.

DRIVE CHAIN ADJUSTMENT

NOTE: Brake disc key must be in good condition before checking if chain is loose.

Before performing the drive chain adjustment, check the tensioner adjustment screw O-ring(s) and replace if necessary.

Fully tighten tensioner adjustment screw **BY HAND**. The tensioner adjustment screw shoulder and the washer must be in contact with the chaincase.

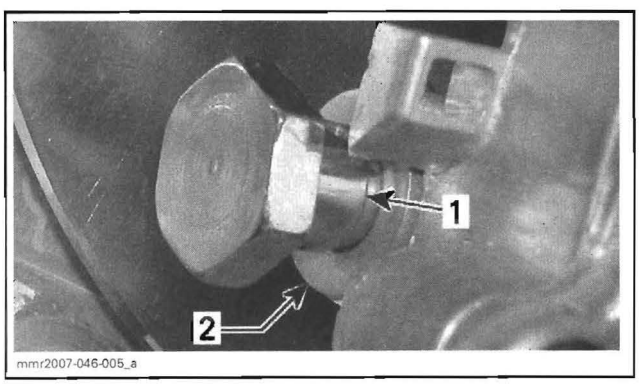

mmr2007-046-005_a

1. Shoulder of tensioner adjustment screw
2. Washer

When done, back off only far enough for hair pin to engage in locking hole.

This initial adjustment should provide 3 - 5 mm (1/8 - 13/64 in) free-play when measured at the outer circumference of the brake disc.

CAUTION: Free-play must not exceed 5 mm (13/64 in), readjust if necessary.

⚠ WARNING

If the specified free-play is not reached with the tensioner screw fully tightened, replace chain and check the condition of sprockets.

PROCEDURES

REVERSE LEVER

Removal

Remove bolt and nut that attach the link rod to reverse lever.

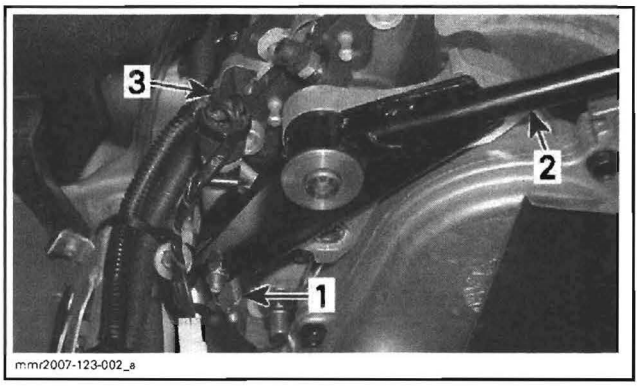

mmr2007-123-002_a

1. Link rod
2. Reverse lever
3. Chaincase

Loosen screw retaining reverse lever to support.

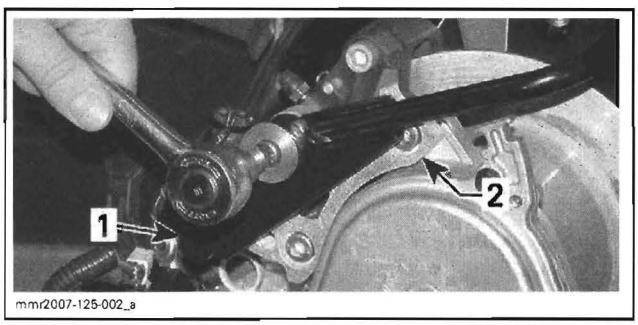

mmr2007-125-002_a

1. Reverse lever
2. Support

Inspection

Check the bushing between reverse lever and its support for wear. Replace as required.

Installation

For installation, reverse the removal procedure. However, pay attention to the following.

To connect the link rod to reverse lever, refer to *LINK ROD* below.

LINK ROD

Inspection

Check link rod for excessive play, bent or other damages. Replace as required.

Removal

Loosen socket screw that attach the link rod to reverse lever.

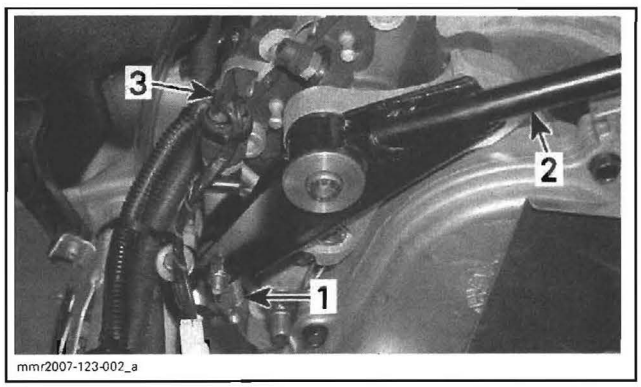

1. Link rod
2. Reverse lever
3. Chaincase

Remove the lower socket screw securing link rod to reverse fork arm.

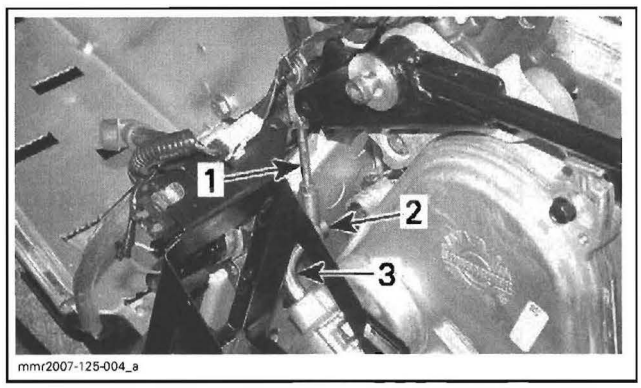

1. Link rod
2. Lower socket screw
3. Reverse fork arm

Remove the link rod.

Installation

The installation is the reverse of the removal procedure. However, pay attention to the following.

CAUTION: The bolt that attach link rod to reverse lever must be installed with it head facing tunnel. Otherwise, the reverse lever support will be damaged and the reverse system will not work correctly.

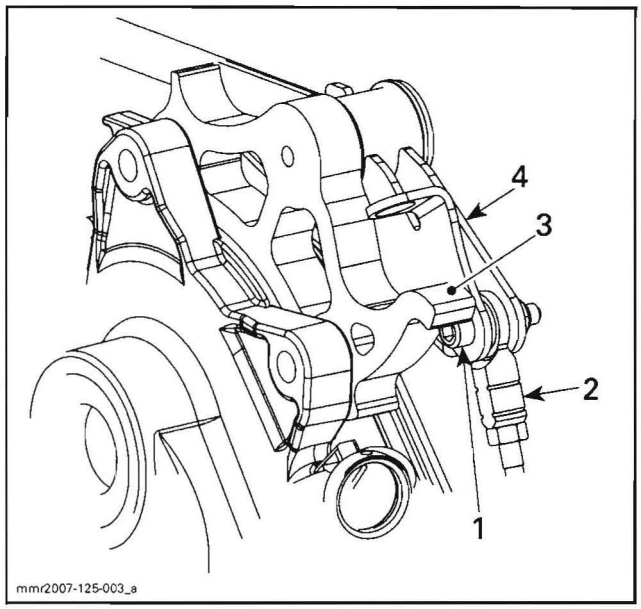

LINK ROD BOLT INSTALLATION
1. Head of bolt facing tunnel
2. Link rod
3. Reverse lever support
4. Reverse lever

Perform a link rod adjustment if one of these components is changed:
- chaincase cover
- chaincase
- reverse lever
- reverse fork arm
- link rod.

Adjustment

Place the reverse lever in forward position.

Unscrew both jam nuts.

Screw link rod until the head of socket screw comes into contact with the stop of reverse lever support. A gap of 0 to 0.3 mm (0 to .012 in) should be obtained between the socket screw head and the stop.

Torque jam nuts to 7.5 N•m (66 lbf•**in**).

CHAINCASE COVER

Removal

Drain chaincase oil. Refer to *DRAINING PROCEDURE* in *MAINTENANCE*.

Remove the battery and its rack.

Unscrew bolt and nut that attach the link rod to reverse lever.

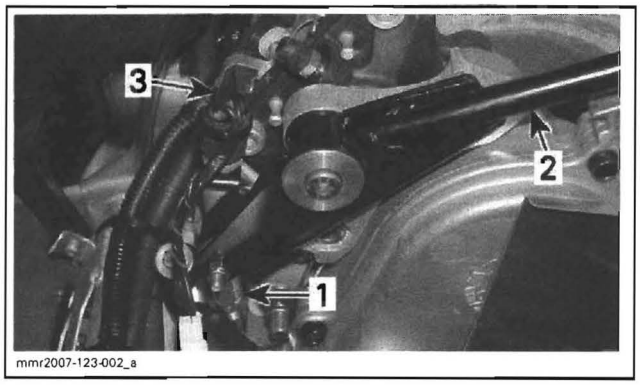

1. *Link rod*
2. *Reverse lever*
3. *Chaincase*

Unlock locking tab and unscrew the reverse axle screw.

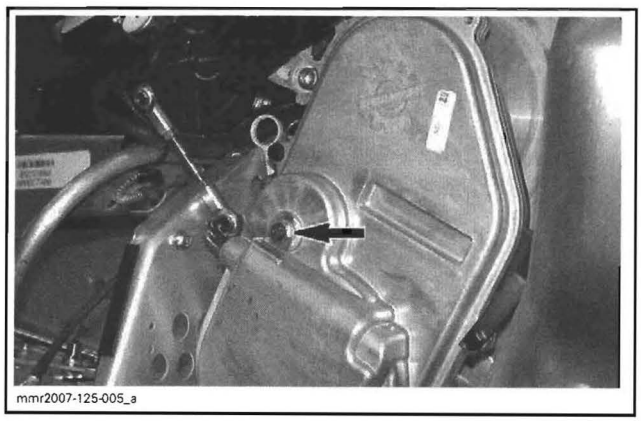

Remove the chaincase cover screws.

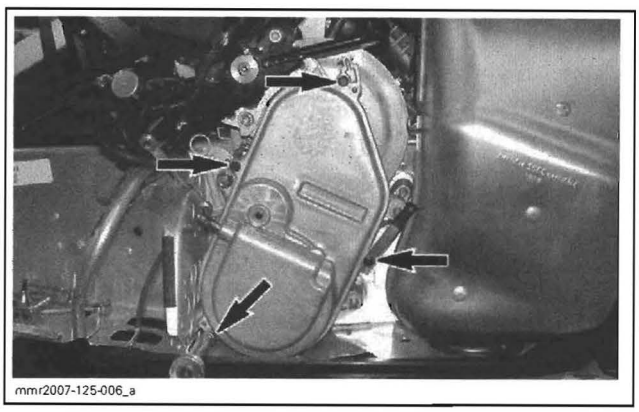

Pull cover and move it upwards to disengage reverse fork from sliding gear.

Inspection

Check cover for cracks or other damages. Replace if necessary.

Installation

Install cover. Make sure reverse fork tabs are inserted in the sliding gear groove.

If the cover is properly installed, a gap of 1 mm (.039 in) should be left between cover and chaincase (chaincase cover gasket space).

Tightening sequence for cover screws is as per following illustration.

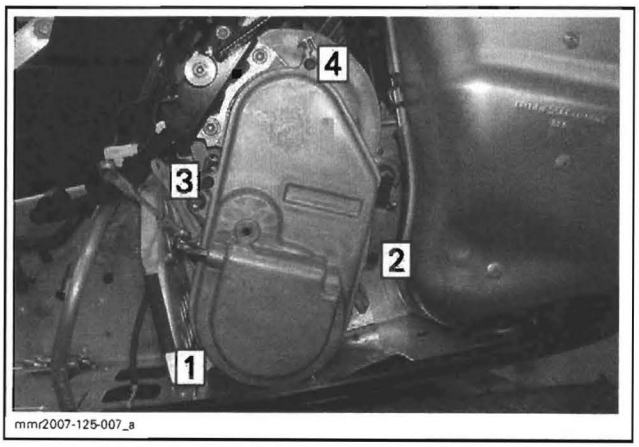

Install all other removed parts.

CHAINCASE

Removal

Drain chaincase oil.

Remove battery and battery rack (if so equipped) to gain access, refer to *STARTING SYSTEM*.

Remove the muffler spring located on the RH side of chaincase.

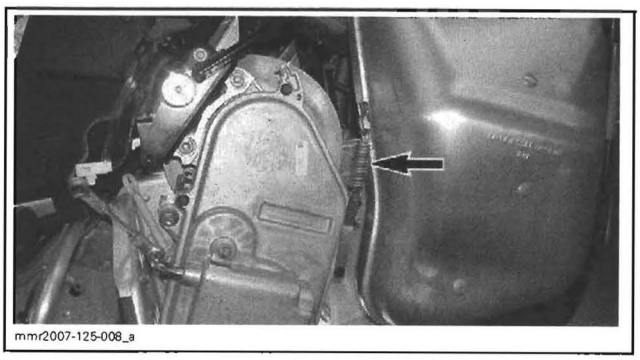

Apply parking brake.

Remove chaincase cover.

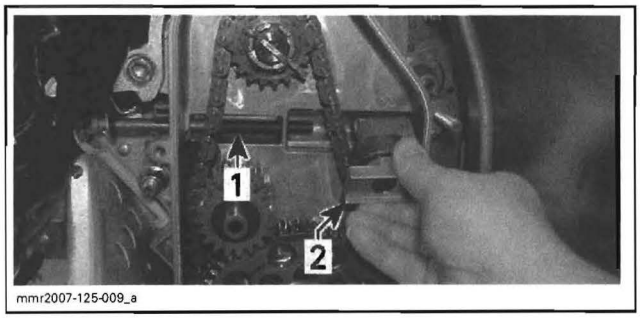

TYPICAL
1. *Tensioner adjustment screw*
2. *Tensioner*

Remove the lower sprocket bolt, cup and spring.

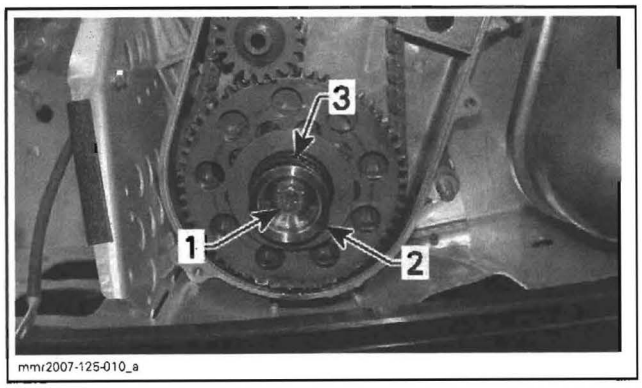

1. *Lower sprocket bolt*
2. *Cup*
3. *Spring*

Remove the sliding gear.

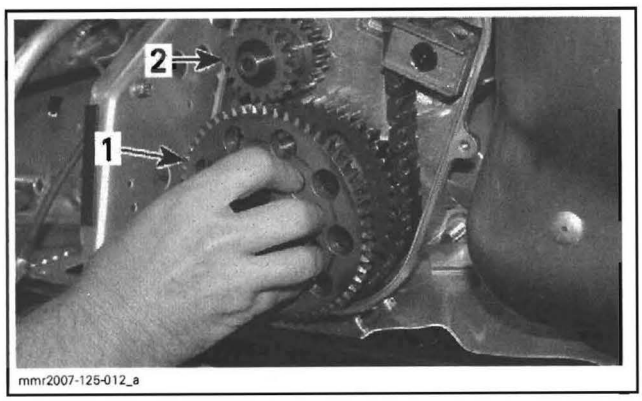

1. *Sliding gear*
2. *Reverse axle*

Remove the coupling shaft and its washer.

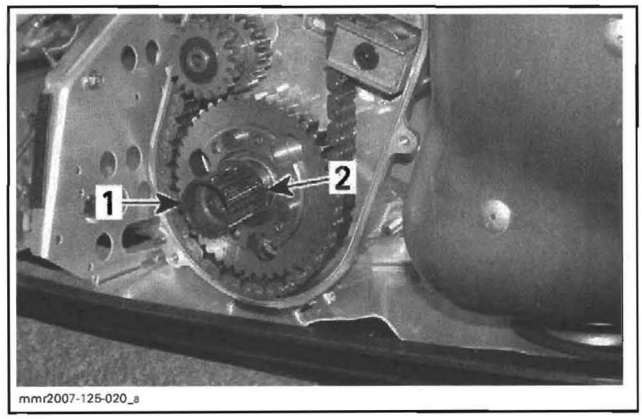

1. *Coupling shaft*
2. *Washer*

At the top, remove cotter pin and sprocket nut.

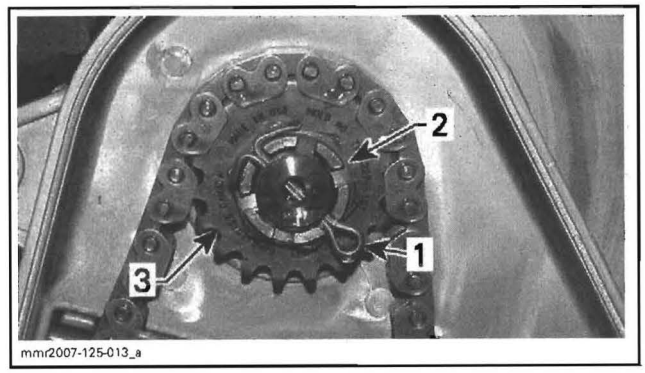

1. *Cotter pin*
2. *Sprocket nut*
3. *Sprocket*

Remove hair pin from tensioner adjustment screw.

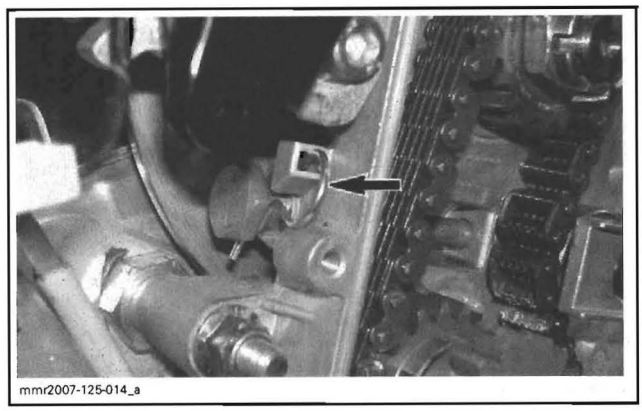

Release drive chain tension by unscrewing tensioner adjustment screw.

Remove the reverse axle assembly. Do not loose washer.

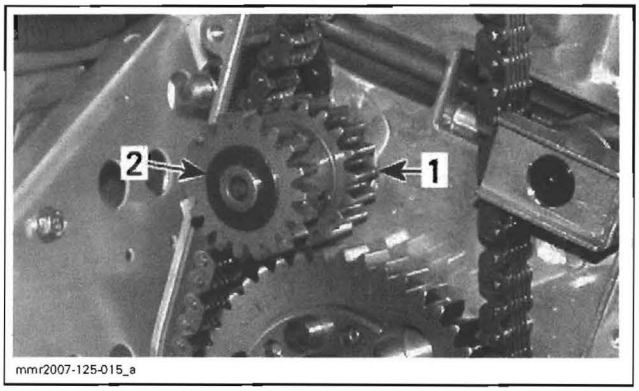

1. Reverse axle assembly
2. Washer

Remove the upper socket and the lower fixed sprocket as well as chain simultaneously.

Remove the countershaft spacer.

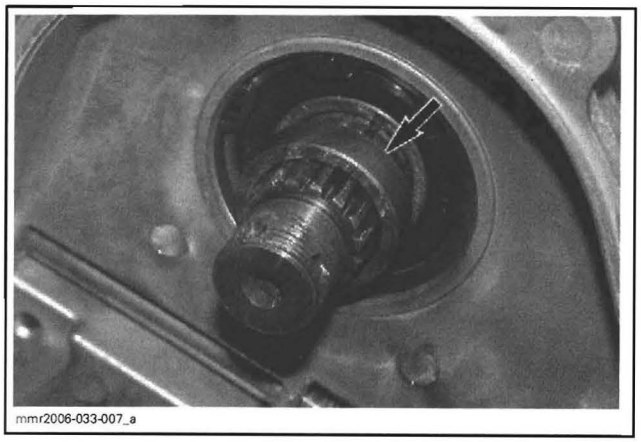

Then remove the drive axle spacer.

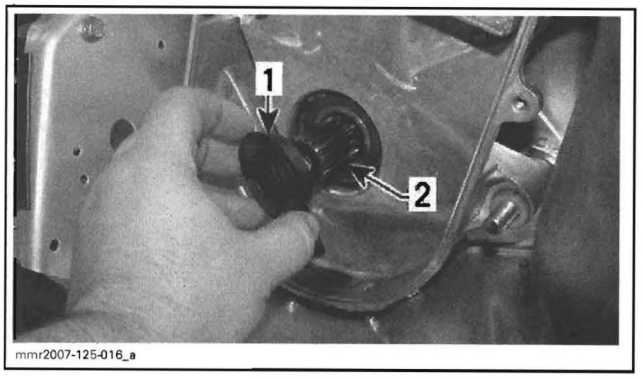

1. Drive axle spacer
2. Drive axle

Near drive axle, remove the circlip from chaincase.

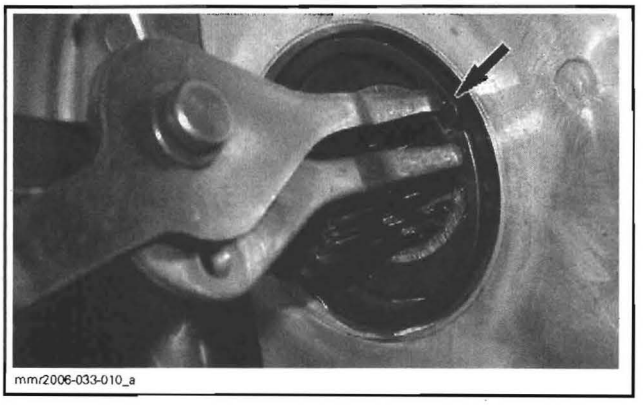

Release parking brake.

Remove socket screws that attach reverse lever support and caliper to chaincase.

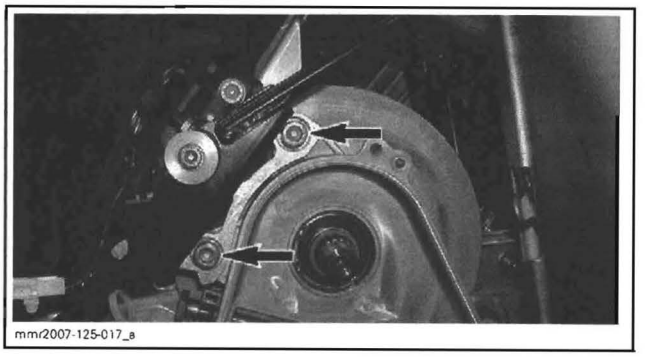

Remove nut(s) that retain chaincase to frame.

Hold the drive axle in place by using the drive axle holder (P/N 529 007 200).

529 007 200

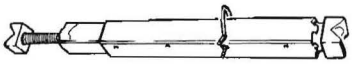

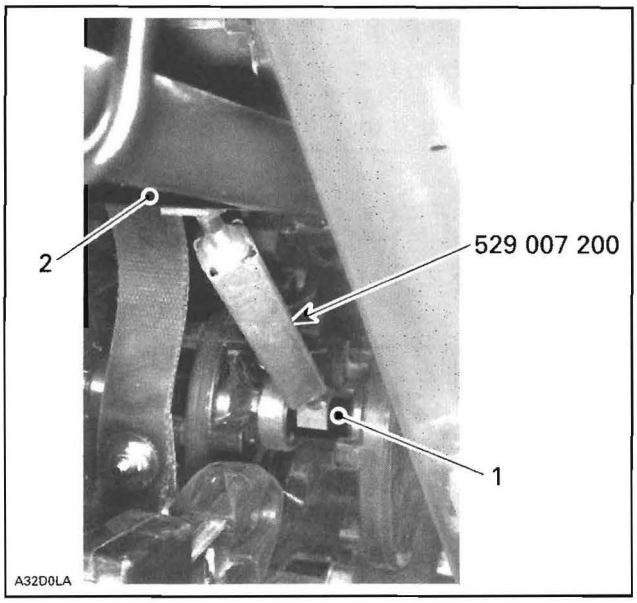

TYPICAL
1. Drive axle
2. Suspension front arm

Pry out drive axle oil seal from chaincase.

Pull chaincase from drive axle and countershaft.

Using 2 large prybars inserted between chaincase and frame, pry complete assembly from vehicle.

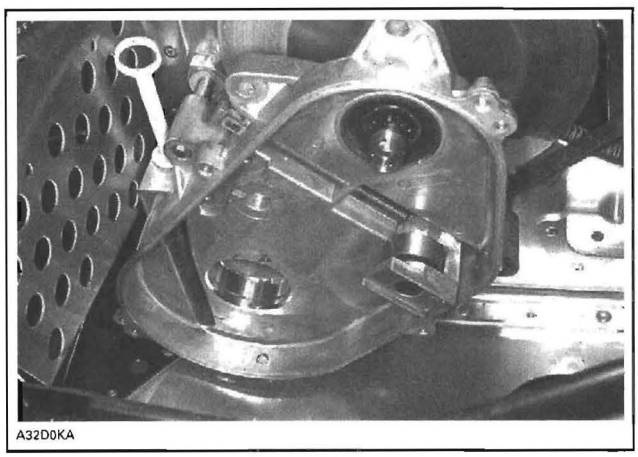

TYPICAL — CHAINCASE REMOVAL

NOTE: When removing chaincase, do not remove shims. If their removal is necessary, note package shim thickness for each stud.

Inspection

Visually inspect the chain and sprockets for wear, cracked, damaged or missing links. If a problem is detected, replace drive chain and sprockets as an assembly.

Check the drive chain deflection. If the deflection is greater than 38 mm (1-1/2 in) without the chain tensioner, replace the chain.

Check for worn or defective bearings.

Check chain tensioner roller for wear or other damages. If the roller does not turn smoothly, replace the needle bearing.

Check the chain slider for wear. Replace chain slider if maximum wear is 1.0 mm (.039 in) at contact point on slider.

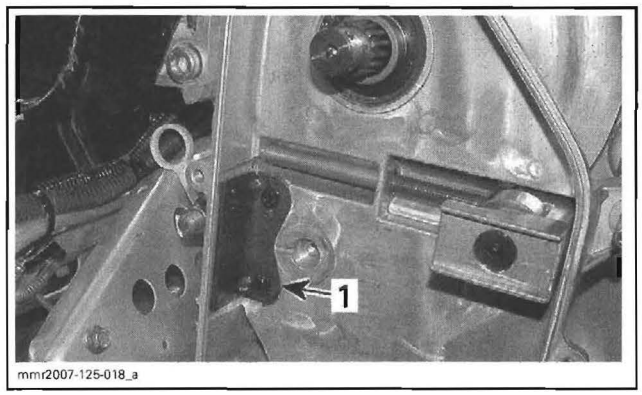

1. Chain slider

Installation

Reverse removal procedure and pay attention to the following.

When installing chaincase, use the following sequence to tighten chaincase nuts. Reinstall the same thickness of shims on each stud.

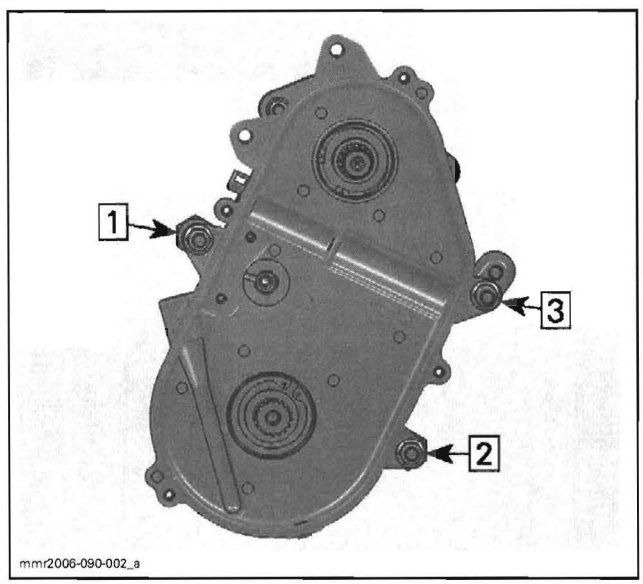

Using an appropriate pusher, press the oil seal into chaincase hub. Oil seal must fit flush with the chaincase edge.

Install the circlip in chaincase.

CAUTION: It is of the utmost importance to install the circlip otherwise damage to the chaincase components may occur.

Install the drive axle spacer with its large outer diameter outside.

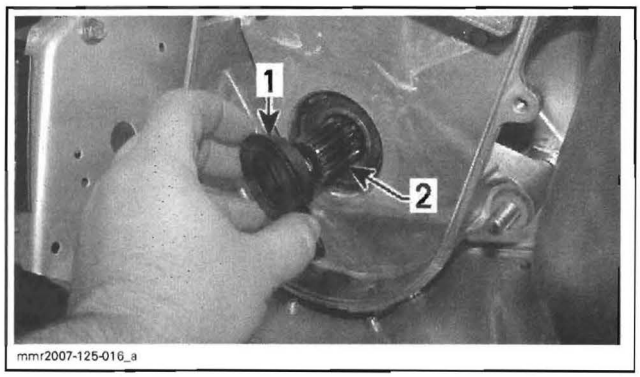

1. Drive axle spacer
2. Drive axle

Position the sprockets with the backside of writing facing the chaincase cover. Sprocket hub faces toward chaincase.

Install upper and lower fixed sprockets with chain.

Install the reverse axle. Make sure to properly position the axle pin in chaincase slot.

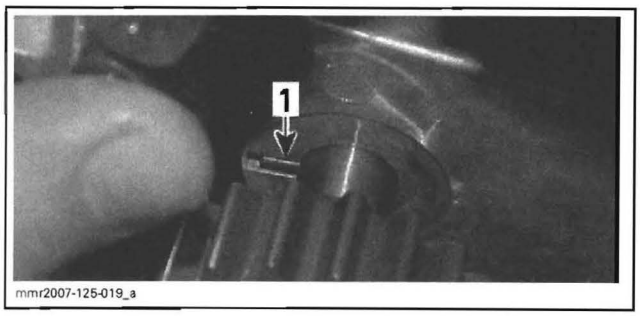

1. Axle pin in chaincase slot

Position the sliding gear and install spring, cup and lower sprocket bolt. Make sure position pins of fixed gear are inserted in position holes of sliding gear.

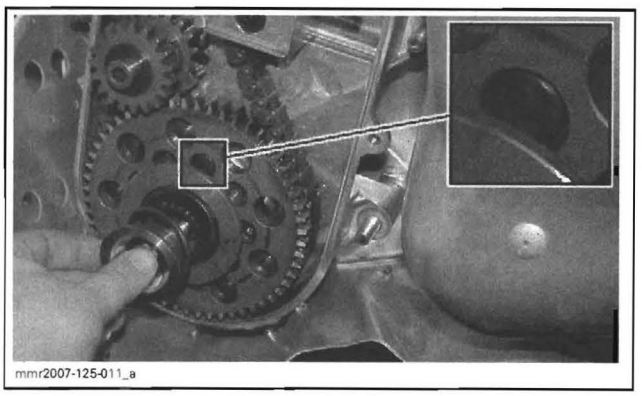

Torque lower sprocket bolt to 48 N•m (35 lbf•ft).

Install the upper sprocket nut and torque to 60 N•m (44 lbf•ft).

Install **new** cotter pin in the position shown.

CAUTION: When removing a cotter pin always replace with a new one. Cotter pin will rub on chaincase cover if installed otherwise.

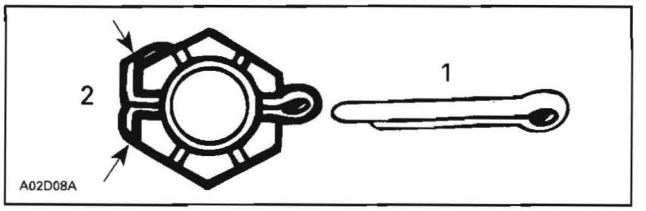

1. New
2. Fold cotter pin over upper sprocket nut flats only

Check if the bearing screw on chain tensioner is tightened correctly.

Install chaincase cover. Refer to *CHAINCASE COVER* above for proper procedure.

Adjust drive chain. Refer to *DRIVE CHAIN ADJUSTMENT* at the beginning of this section.

CHAIN TENSIONER

Removal

Remove chaincase cover.

Remove hair pin.

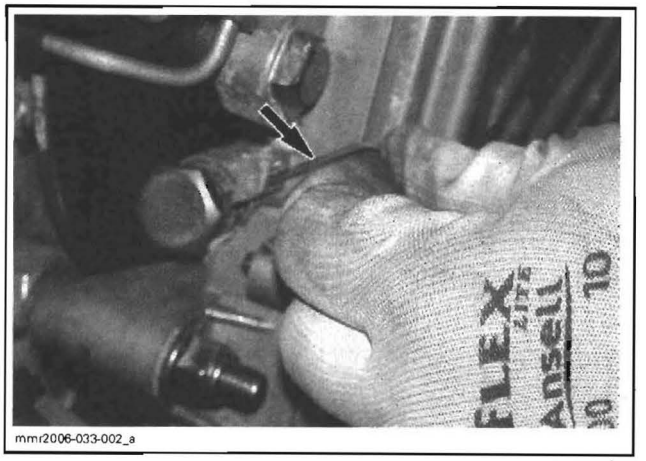

Unscrew tensioner adjustment screw completely.

Pull the tensioner adjustment screw to separate it from tensioner.

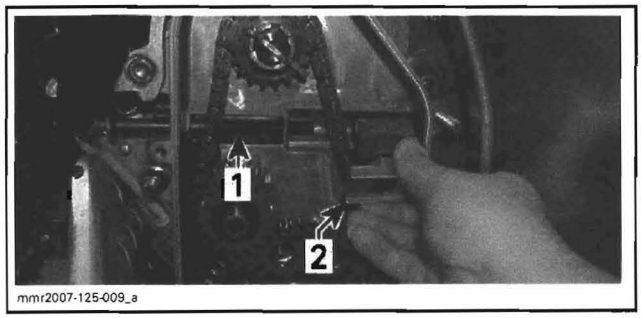

TYPICAL
1. *Tensioner adjustment screw*
2. *Tensioner*

Inspection

Check chain tensioner roller for wear or other damages. If the roller does not turn smoothly, replace the needle bearing. See procedure further.

Check O-rings on tensioner adjustment screw. Replace them if necessary.

Check threads of tensioner adjustment screw for damages or wear. Replace the screw if necessary and check chaincase for damages.

Installation

The installation is the reverse of the removal procedure. However, pay attention to the following.

Apply ThermoLube synthetic grease (P/N 293 700 417) on threads and O-rings of tensioner adjustment screw.

Check if chain tensioner screw is screwed correctly.

Adjust drive chain tension. Refer to *DRIVE CHAIN ADJUSTMENT* at the beginning of this section.

Install all removed parts.

CHAIN TENSIONER ROLLER BEARING

Removal

Remove the chain tensioner, see procedure above.

Heat the roller screw to break the threadlocker.

Remove the needle bearing from the roller.

Installation

The installation is the reverse of the removal procedure. However, pay attention to the following.

Clean and remove grease on screw then apply Loctite 271 (red) (P/N 293 800 005) under the screw head only, **none on threads**.

DRIVE AXLE

SERVICE TOOLS

Description	Part Number	Page
drive axle sprocket adjuster kit	861 725 700	515

SERVICE PRODUCTS

Description	Part Number	Page
ThermoLube synthetic grease	219 700 417	515

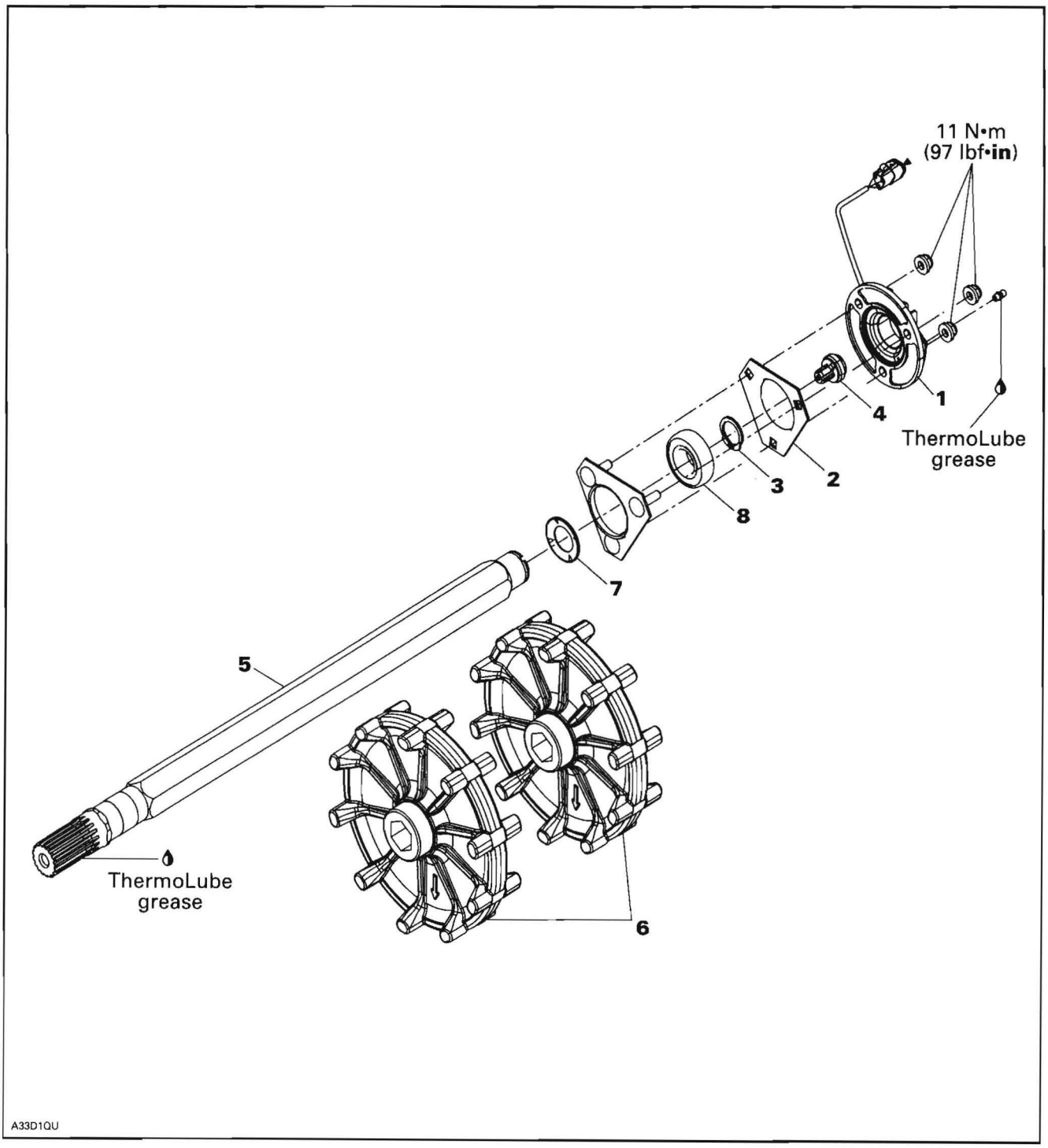
11 N•m
(97 lbf•in)
1
4
ThermoLube
grease
3
2
8
7
5
ThermoLube
grease
6
A33D1QU

GENERAL

During assembly/installation, use torque values and service products as in the exploded view.

Clean threads before applying a threadlocker. Refer to *SELF-LOCKING FASTENERS* and *LOCTITE APPLICATION* at the beginning of this manual for complete procedure.

⚠ WARNING

Torque wrench tightening specifications must strictly be adhered to.
Locking devices (e.g.: locking tabs, elastic stop nuts, self-locking fasteners, cotter pins, etc.) must be installed or replaced with new ones where specified. If the efficiency of a locking device is impaired, it must be renewed.

Sprocket/Track Alignment

CAUTION: Do not tamper with sprocket/track alignment if frame or suspension is damaged.

Sprockets may be repositioned to fit lugs without removing drive axle.

Use drive axle sprocket adjuster kit (P/N 861 725 700).

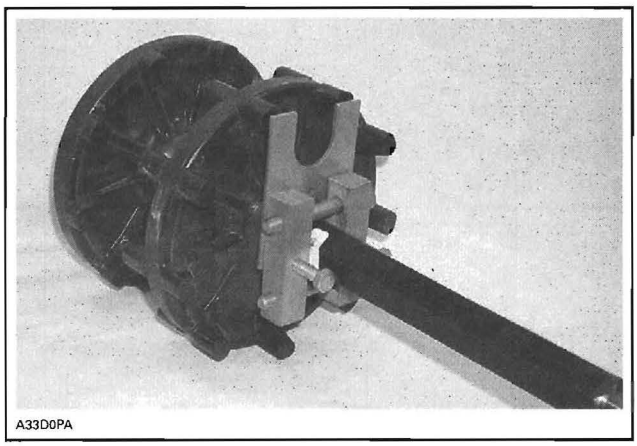
A33D0PA

PROCEDURES

DRIVE AXLE

Removal

Remove battery (if so equipped) to gain access.

Drain oil from chaincase.

Raise and block rear of vehicle off the ground.

Remove rear suspension. Refer to *REAR SUSPENSION*.

Remove driven pulley. Refer to *DRIVEN PULLEY*.

Remove speedometer sensor **no. 1**, outer flange **no. 2** and speedometer adapter **no. 4** from drive axle **no. 5**.

On models without speedometer, remove plastic cover and bearing outer flange **no. 2**.

Remove circlip **no. 3**.

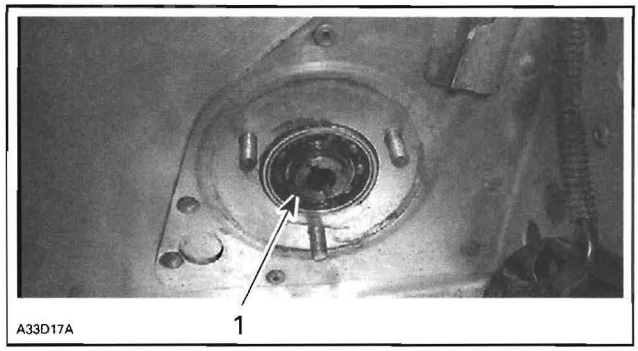

A33D17A

1. Circlip

Apply parking brake.

Remove chaincase cover, chain and sprockets then the circlip on drive axle. Refer to *CHAINCASE (300F AND 550F)* or *CHAINCASE (V800)*.

Release drive axle sprocket from track and at the same time, push the drive axle **no. 5** toward the right side. Drive axle bearing in chaincase will fall off.

Remove bearing and move the drive axle towards the left side to remove it from vehicle.

Inspection

Check drive axle for bending, wear or other damages. Replace as required.

Installation

The installation is the reverse of the removal procedure. However, pay attention to the following.

On models with speedometer, index speedometer magnetic adapter **no. 4** in drive axle and push until it is completely inserted in its hole.

The drive axle bearing in chaincase must have its seal facing cover.

Fill chaincase with recommended chaincase oil. Refer to the appropriate section.

Lubrication

Lubricate end housing bearing with ThermoLube synthetic grease (P/N 219 700 417). Continue lubricating until grease flows out of the pilot hole on speedometer sensor or plastic cover.

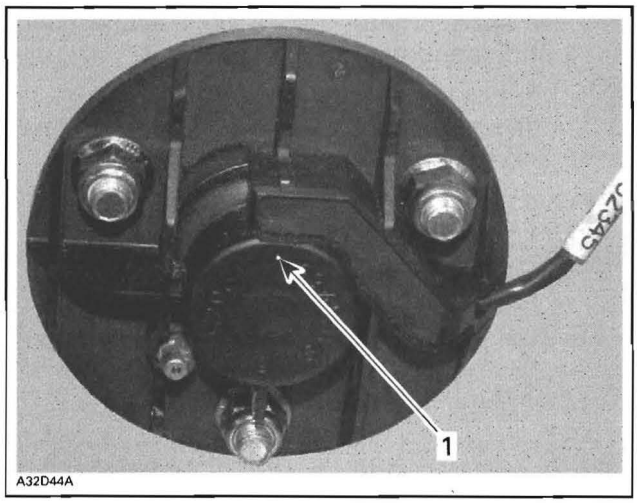

SPEEDOMETER SENSOR SHOWN
1. Lubricate until grease flows out here

DRIVE AXLE BEARING

Removal

Remove drive axle from vehicle.

Using a suitable puller, remove bearing **no. 8** from drive axle.

Inspection

Before removing bearing from drive axle, check if it turns smoothly and freely. Replace if necessary.

Installation

Install bearing protector **no. 7** and one bearing flange **no. 2** on drive axle. Install bearing protector so that its flat side is against bearing.

Using a press and a suitable pipe, push the bearing. Always push bearing by inner race. Push bearing until it leans on its protector.

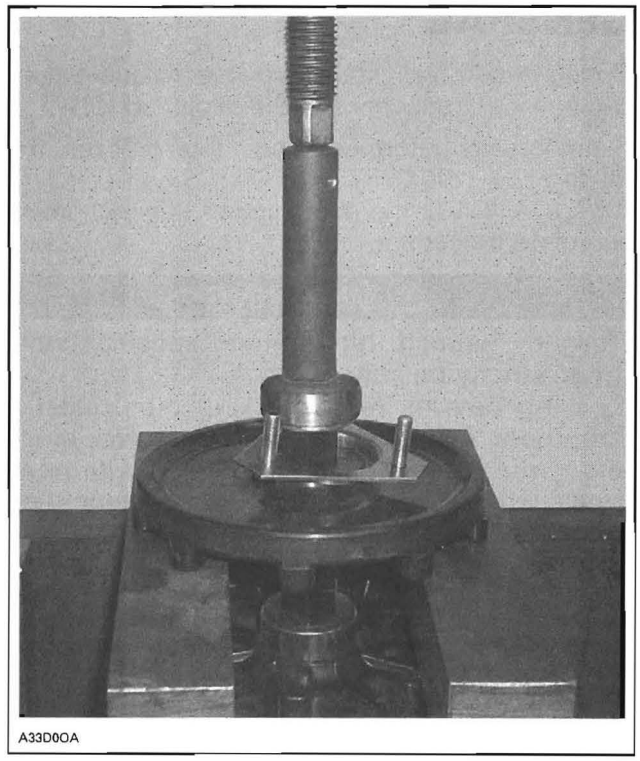

TYPICAL

Install drive axle and all other removed parts.

SPROCKETS

Removal

Remove drive axle from vehicle.

To remove press fit sprockets **no. 6**, use a press as illustrated.

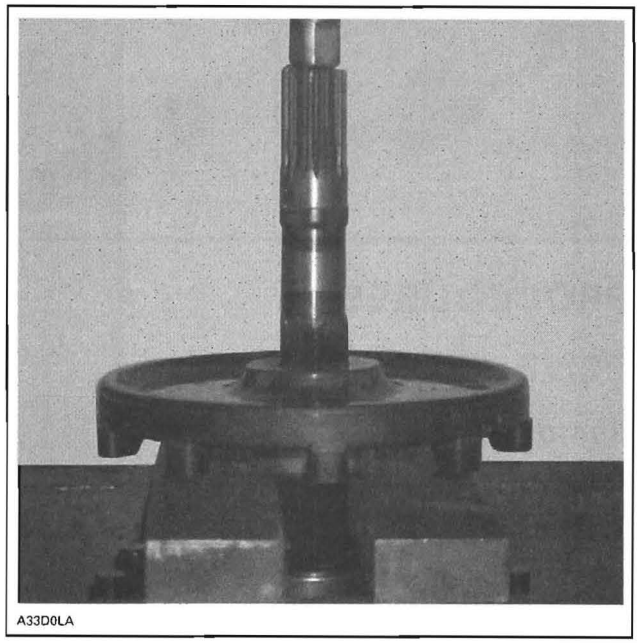

TYPICAL — SUPPORT SPROCKET NEAR HUB

Installation

CAUTION: The same sprocket must not be pressed twice on the axle.

To assemble press fit sprockets no. 6, use a press and a suitable pipe as illustrated.

CAUTION: Never allow sprockets to contact the press plates and never support sprockets with blocks. Always press on center hub with appropriate pipe.

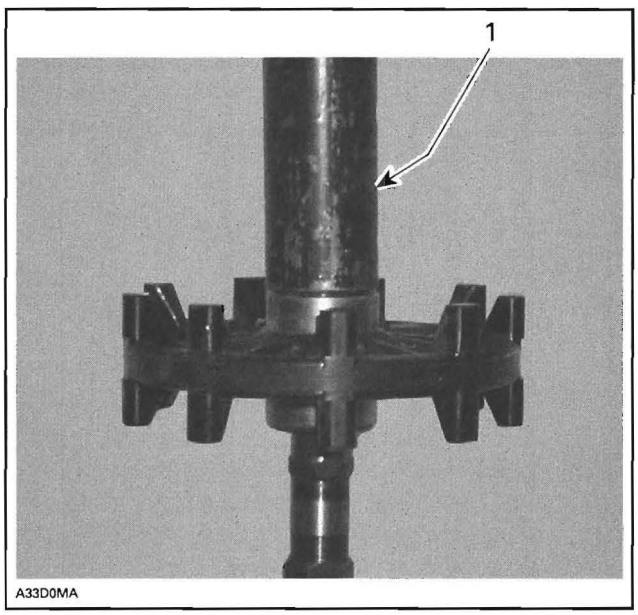

TYPICAL
1. Pipe

Ensure to align indexing marks of each sprocket when assembling.

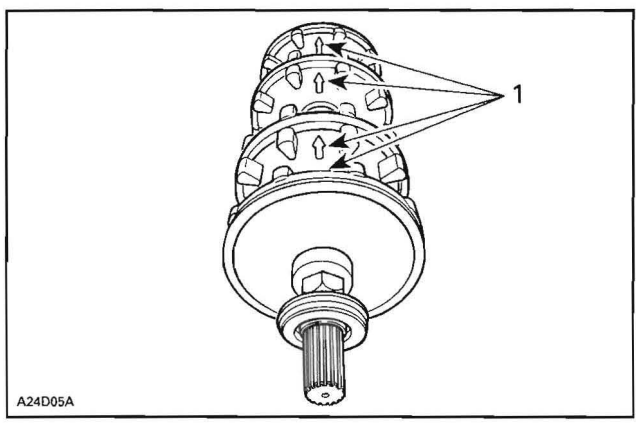

TYPICAL
1. Indexing marks aligned

Sprockets must be assembled according to the following dimensions measured from drive axle end.

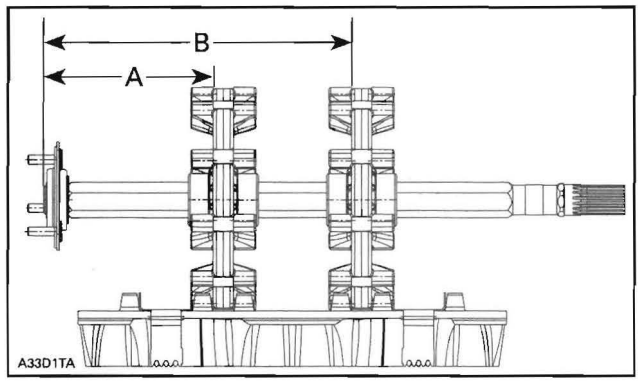

MEASURE FROM END OF DRIVE AXLE
A. 150.8 mm (5.937 in)
B. 273.8 mm (10.790 in)

TRACK

SERVICE TOOLS

Description	Part Number	Page
belt tension tester	414 348 200	520
cleat remover	529 028 700	519
narrow-cleat installer	529 028 800	519

TRACK

Track Inspection

Visually inspect track for:
- cuts and abnormal wear
- broken rods
- broken or missing track cleats.

If track is damaged or rods are broken, replace track. For damaged or missing cleats, replace by new ones.

⚠ WARNING

Do not operate a snowmobile with a cut, torn or damaged track.

Track Cleat Replacement

- Raise rear of vehicle off the ground and lift snow guard then hand rotate track to expose a cleat to be replaced.
- Use track cleat remover (P/N 529 028 700) for all models.

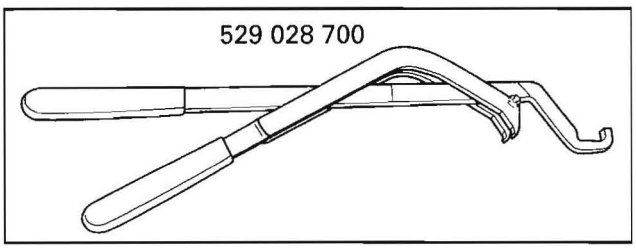

- Place new cleat in position on the track and using the narrow-cleat installer (P/N 529 028 800) bend cleat then push tabs into rubber.

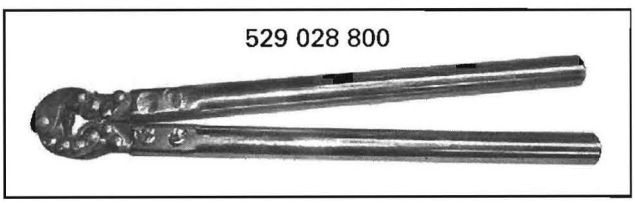

- Re-open installer, then position cleat tabs on open end of tool and squeeze tabs until they are indented in rubber.

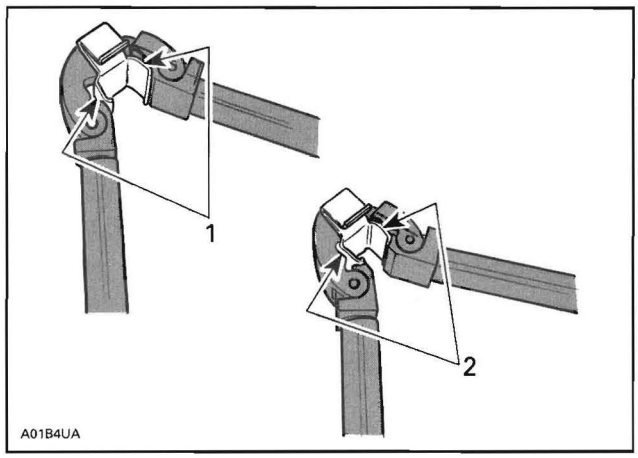

TYPICAL
1. Position cleat
2. Push tabs into rubber

Track Removal

Remove the following parts:
- rear suspension (refer to *SUSPENSION*)
- drive axle (refer to *DRIVE AXLE*)
- track.

Track Installation

Reverse the removal procedure.

NOTE: When installing the track, respect rotation direction indicated by an arrow on track thread.

Check sprocket/track alignment as described in *DRIVE AXLE*.

Track Adjustment

Track tension and alignment are interrelated. Do not adjust one without checking the other. Track tension procedure must be carried out prior to track alignment.

Tension

NOTE: Ride the snowmobile in snow about 15 to 20 minutes prior to adjusting track tension.

Lift snowmobile by a rope, chain or lift strap hooked to rear bumper.

Allow the rear suspension to fully extend and check gap halfway between front and rear idler wheels. Measure between slider shoe bottom and inside of track. The gap should be as given in the following table. If the track tension is too loose, track will have a tendency to thump.

TRACK ADJUSTMENT	
TRACK ADJUSTMENT FORCE	7.3 kgf (16 lbf)
TRACK MINIMUM DEFLECTION	30.00 mm (1.181 in)
TRACK MAXIMUM DEFLECTION	35.00 mm (1.378 in)

The belt tension tester (P/N 414 348 200) may be used to measure deflection as well as force applied.

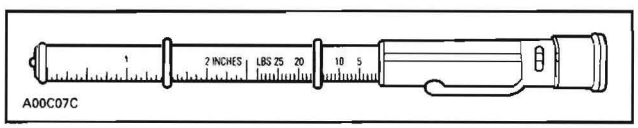

BELT TENSION TESTER

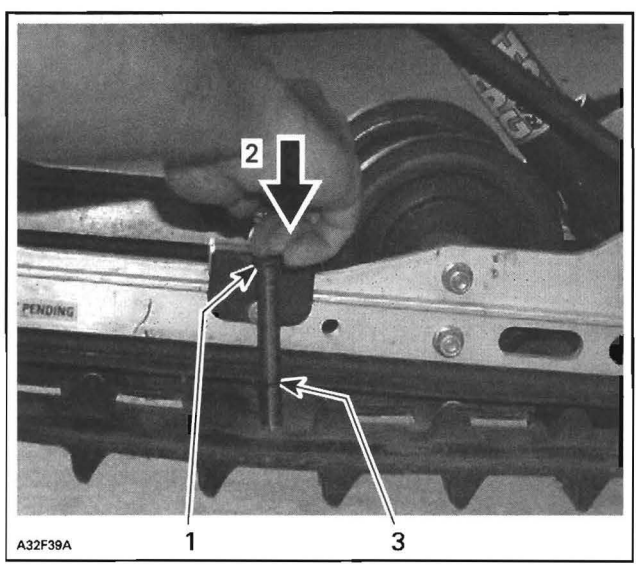

1. *Tool top O-ring positioned at 7.3 kgf (16 lbf)*
2. *Apply pressure on tool until it contacts the upper O-ring*
3. *Measured track deflection*

CAUTION: Too much tension will result in power loss and excessive stresses on suspension components.

To adjust tension, do the following:
- Remove wheel caps.
- Loosen the rear idler wheel retaining screws.
- Turn adjustment screws to adjust.

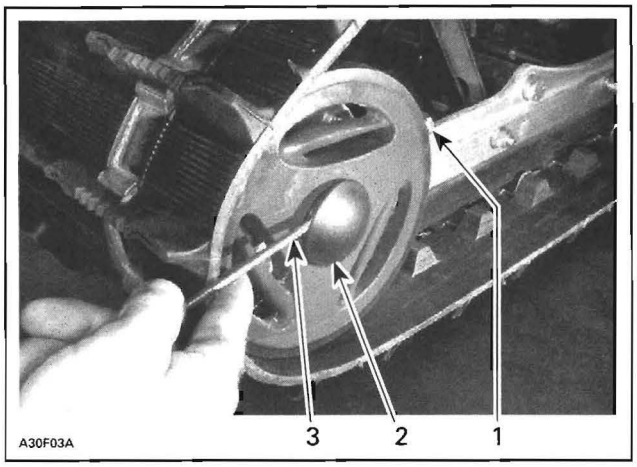

TYPICAL
1. *Adjustment screw*
2. *Retaining screw*
3. *Wheel cap removal*

Alignment

⚠ WARNING

Before checking track alignment, ensure that the track is free of all particles which could be thrown out while track is rotating. Keep hands, tools, feet and clothing clear of track. Ensure no one is standing in close proximity to the vehicle. Never rotate at high speed.

Start the engine and accelerate slightly so that track barely turns. This must be done in a short period of time (1 to 2 minutes).

Check that the track is well centered; equal distance on both sides between edges of track guides and slider shoes.

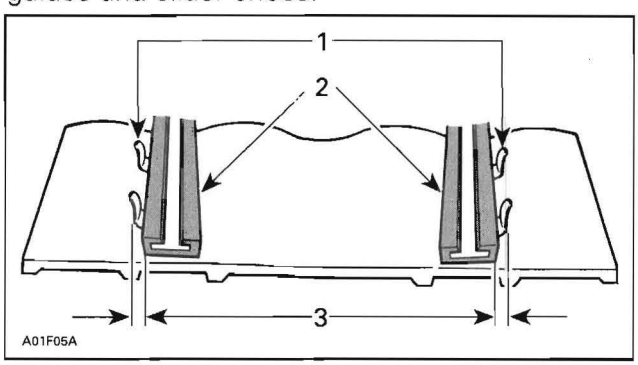

1. *Guides*
2. *Slider shoes*
3. *Equal distance*

To correct, stop engine, loosen rear wheel screws, then tighten the adjustment screw on side where the slider shoe is the farthest from the track insert guides.

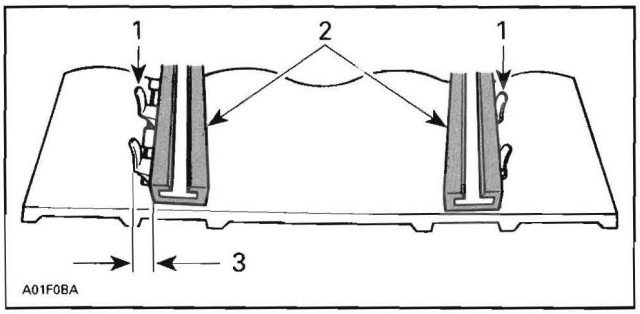

1. Guides
2. Slider shoes
3. Tighten on this side

Restart engine, rotate track slowly and recheck alignment. If the satisfactory alignment is achieved, then tighten the idler wheel retaining screws to 48 N•m (35 lbf•ft). Reinstall the wheel caps.

TRACTION ENHANCING PRODUCTS (studs)

Important Safety Rules

⚠ WARNING

To prevent serious injury to individuals near the snowmobile:

- **NEVER stand behind or near a moving track.**
- **ALWAYS use a wide-base snowmobile stand with a rear deflector panel.**
- **When the track is raised off the ground, only run it at lowest possible speed.**

Centrifugal force could cause debris, damaged or loose studs, pieces of torn track, or an entire severed track to be violently thrown backwards out of the tunnel with tremendous force, possibly resulting in the loss of a leg or other serious injury.

Effects of Studding on the Life of the Snowmobile

The use of traction enhancing products can increase the load and the stress on certain snowmobile components, as well as the vibration level. This can cause premature wear on parts such as belts, brake lining, bearings, chain, and chaincase sprockets, and shorten track life. For this reason, it is even more important to follow the detailed maintenance program given in the *MAINTENANCE CHART.*

Studs can also cause serious damage to the snowmobile if it is not equipped with the tunnel protectors designed for the particular model. Damage to the electrical wiring or perforation of the heat exchangers are potential hazards, that could cause the engine to overheat and be severely damaged.

⚠ WARNING

If tunnel protectors are excessively worn or not installed, the gas tank could be punctured, causing a fire.

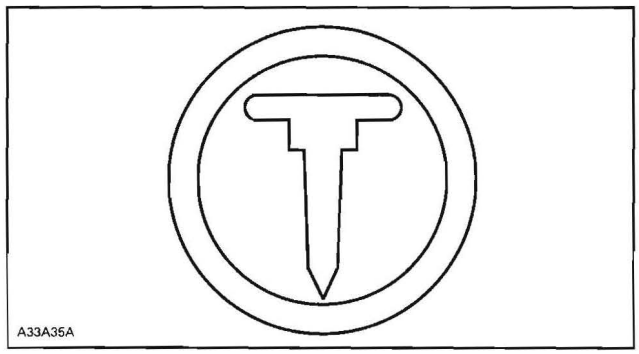

APPROVED TRACKS CAN BE IDENTIFIED BY THIS SYMBOL

Maintenance/Replacement

A visual inspection of the track should be performed before each use.

Look for any defects, such as:

- perforations in the track
- tears in the track (particularly around traction product holes)
- lugs that are broken or torn off, exposing portion of rods
- delamination of the rubber
- broken rods
- broken studs
- bent studs
- studs that are torn off the track
- missing track guide(s).

Replace broken or damaged studs immediately. If the track shows signs of deterioration, it must be replaced immediately. In doubt, replace the track.

⚠ WARNING

Riding with a damaged track or studs could lead to loss of control, resulting in a risk of serious injury or death.

Stud Installation

To install studs, refer to the manufacturer's instructions.

The installation of tunnel protector kit is necessary when installing studs. Use the following table to determine the proper kit.

PROTECTOR KIT			
TRACK	PROFILE HEIGHT	Up to 31.8 mm (1.25 in)	
	TRACK LENGTH	3.07 and 3.45 m (121 and 136 in)	
MODELS		300F and 550F	V800
KIT NUMBER		860 200 010	860 200 013

FRONT SUSPENSION

SERVICE TOOLS

Description	Part Number	Page
spring compressor tool	529 036 007	524

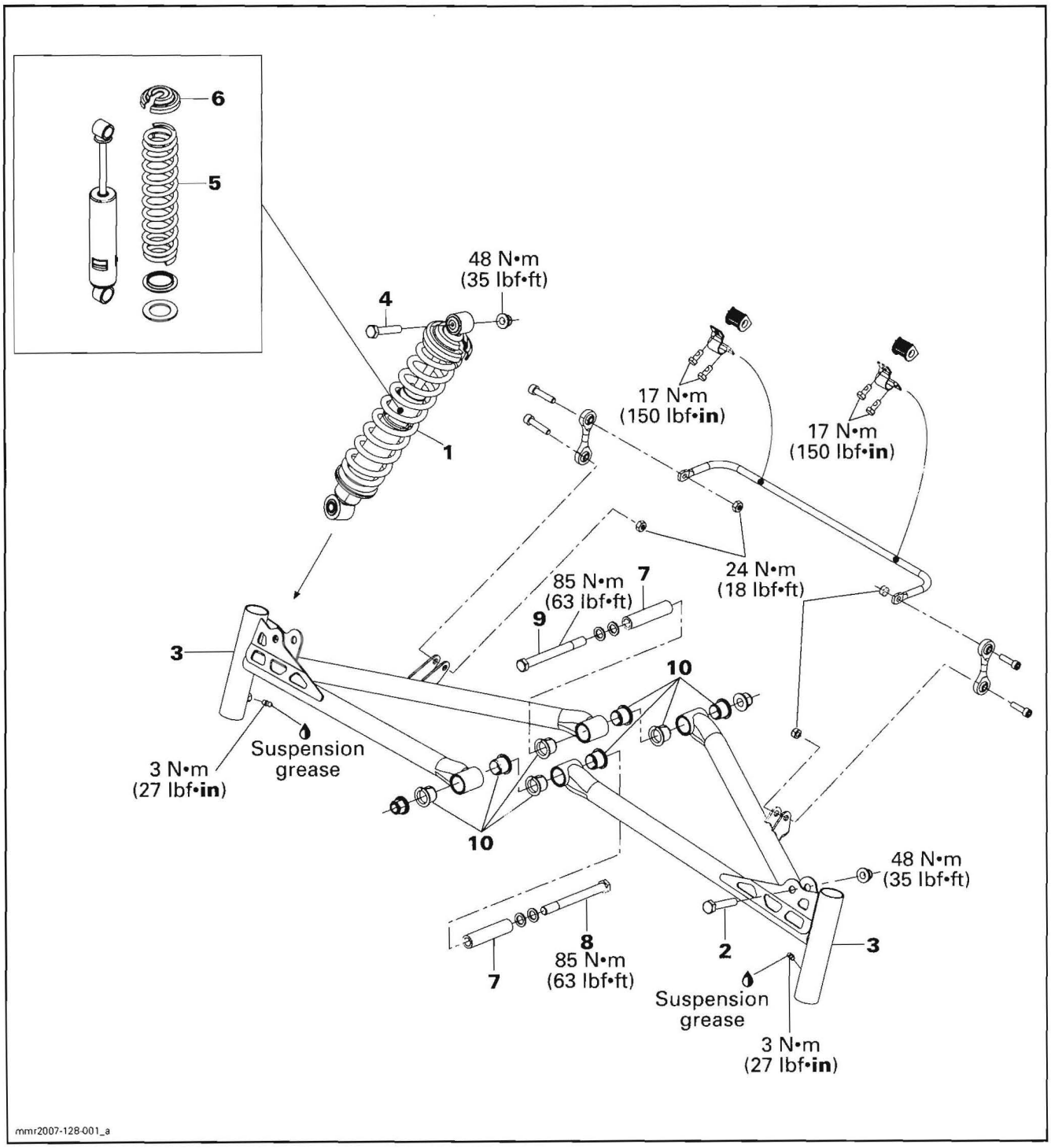

GENERAL

The procedure explained below is the same for the RH and LH sides unless otherwise noted.

During assembly/installation, use torque values and service products as in the exploded view.

Clean threads before applying a threadlocker. Refer to *SELF-LOCKING FASTENERS* and *LOCTITE APPLICATION* at the beginning of this manual for complete procedure.

⚠ WARNING

Torque wrench tightening specifications must strictly be adhered to.
Locking devices (e.g.: locking tabs, elastic stop nuts, self-locking fasteners, cotter pins, etc.) must be installed or replaced with new ones where specified. If the efficiency of a locking device is impaired, it must be renewed.

PROCEDURES

SHOCK ABSORBER AND SPRING

Removal

Lift front of vehicle until shock absorbers **no. 1** are fully extended and skis are off the ground.

Remove bolt **no. 2** that attach the shock absorber to the suspension arm **no. 3**.

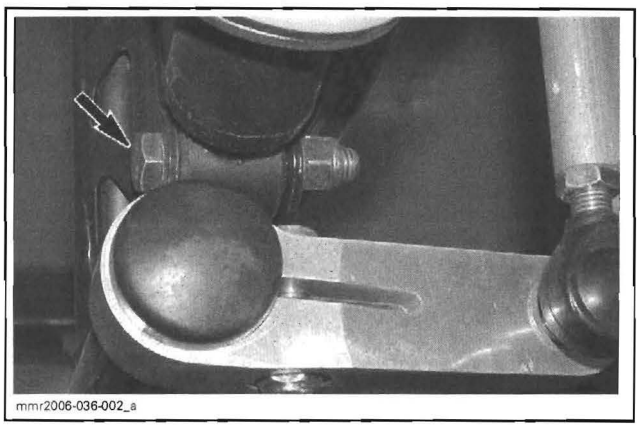
mmr2006-036-002_a

Remove the upper shock absorber bolt **no. 4** retaining shock absorber to frame.

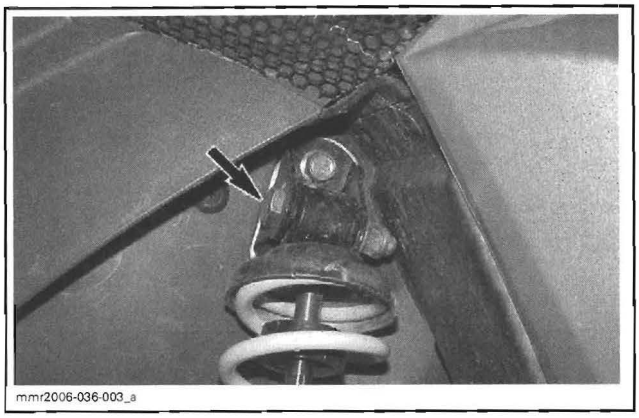
mmr2006-036-003_a

Disassembly

To remove spring **no. 5** from the shock absorber, use the spring compressor tool (P/N 529 036 007).

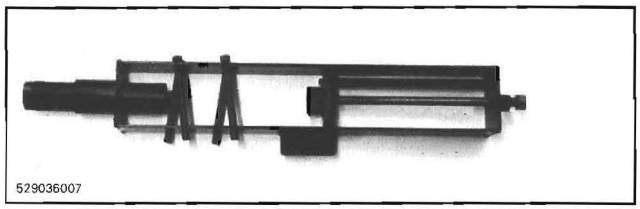
529036007

Place the tool in a vise.

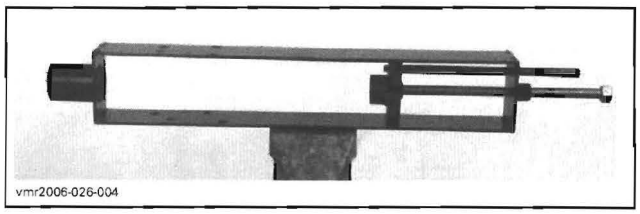
vmr2006-026-004

Position the shock absorber in the tool and install the spring compressor pins.

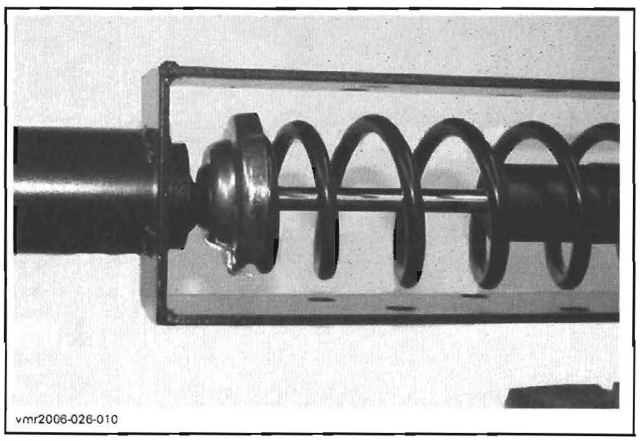
vmr2006-026-010

TYPICAL

Tighten the spring tool screw until the spring **no. 5** is sufficiently compressed to remove spring locking devices.

Remove spring stopper **no. 6** then release the spring compressor tool screw.

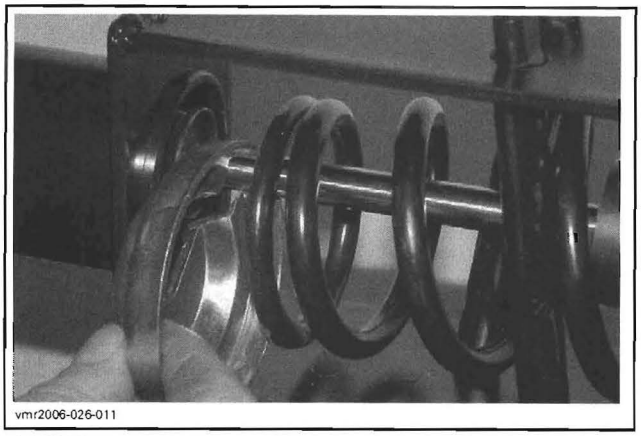

TYPICAL

Inspection

Inspect the spring **no. 5** for damage. Replace if necessary.

Inspect shock for oil leakage. Extend and compress the piston several times over its entire stroke. Check that it moves smoothly and with uniform resistance with rod up. Any of the following conditions will denote a defective shock:

- A skip or hang up when reversing stroke at mid travel.
- Seizing or binding conditions except at extreme end of either stroke.
- A gurgling noise after completing one full compression and extension stroke.

Replace shock if any of these conditions are found.

Assembly and Installation

For assembly and installation, reverse the disassembly and removal procedures.

SUSPENSION ARM

Inspection

Check suspension arm **no. 3** for distortion or damage. Replace if necessary.

Move suspension arm from side to side then up and down. There should be no noticeable loose. Replace bushings **no. 10** and/or sleeves **no. 7** if necessary.

NOTE: A play of 1 or 2 mm (.039 or .079 in) is acceptable when the suspension arm is moved forward and backward.

Check sleeves **no. 7** inside suspension arm attachments for wear or damage. These sleeves can be checked only when the suspension arm is removed.

Removal

Remove the bolt **no. 2** that attach the shock absorber **no. 1** to the suspension arm **no. 3**.

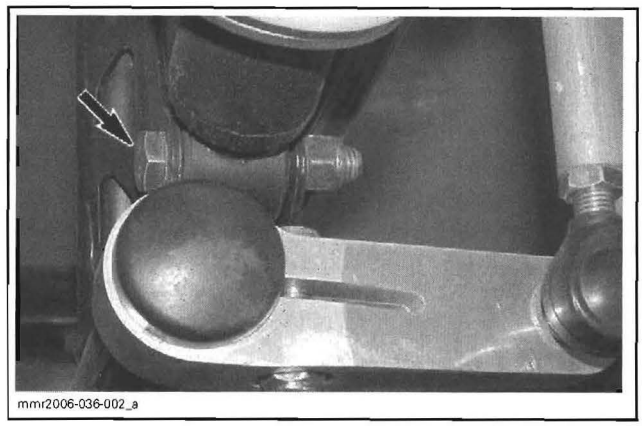

If applicable, detach stabilizer bar from lower suspension arm. Refer to *STABILIZER BAR* further in this section.

Remove ski leg from suspension arm.

Unscrew the front bolt **no. 8** retaining suspension arm to frame. Open the front cover to reach the nut.

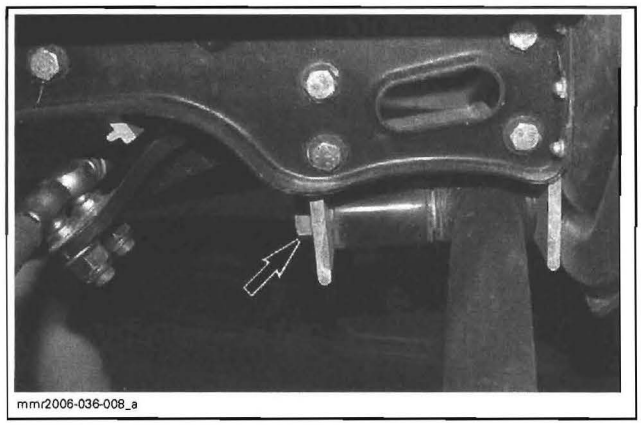

FRONT SUSPENSION ARM BOLT

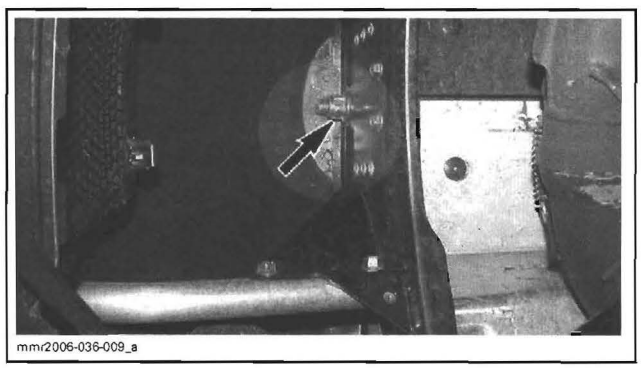

NUT INSIDE FRONT COMPARTMENT

Remove the rear suspension arm bolt **no. 9**.

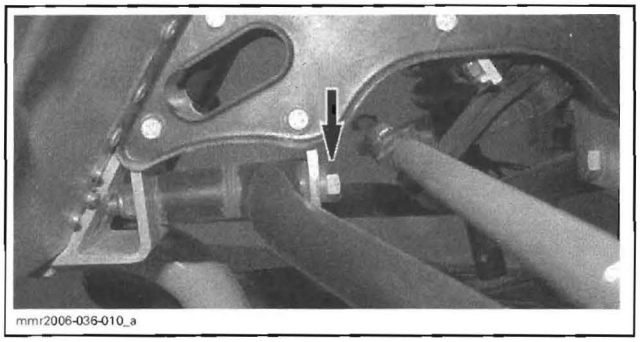

Remove suspension arm from vehicle.

Installation

Install suspension arms in accordance with the following illustration.

NOTE: The RH arm must be installed in front of LH arm.

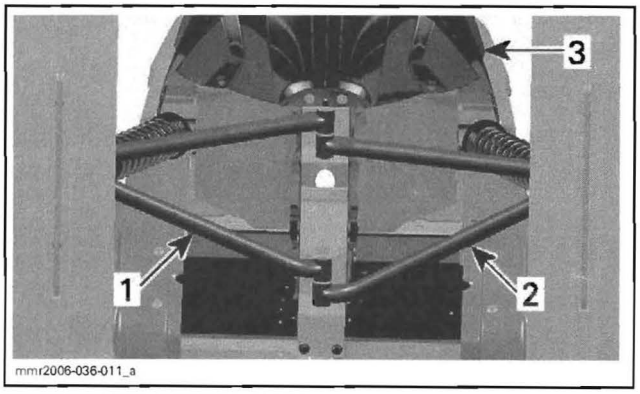

UNDERNEATH BOTTOM PAN
1. *RH suspension arm*
2. *LH suspension arm*
3. *Bottom pan*

Torque suspension arm bolts to 85 N•m (63 lbf•ft).

Install all other removed parts.

STABILIZER BAR

Removal

Remove shock absorbers.

Unscrew the upper bolt of double ball joint.

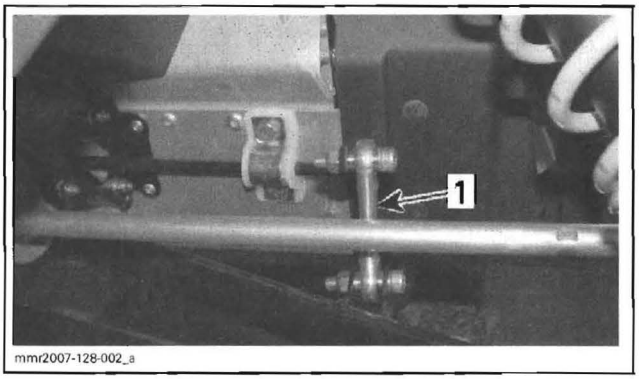

LH SIDE SHOWN
1. *Double ball joint*

Remove clamps holding stabilizer bar bushings from frame.

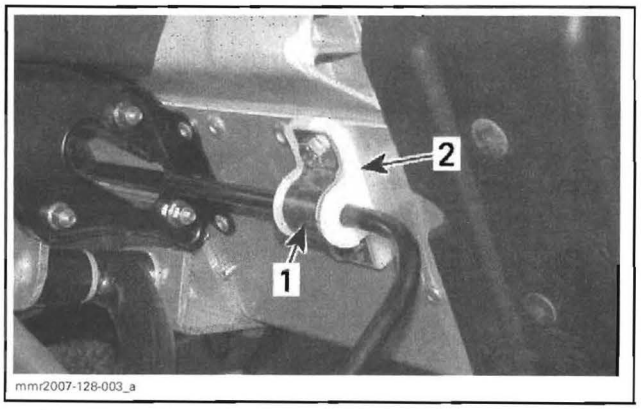

1. *Clamp*
2. *Bushing*

Lift front of vehicle enough so that stabilizer bar can be rotated downward to allow to slide it out.

Installation

Ensure to properly position stabilizer bar before insertion in frame.

Before attaching double ball joint to stabilizer bar, verify if all ball joints move smoothly and freely. Replace if necessary.

Secure double ball joints to stabilizer bar.

Install shock absorbers.

REAR SUSPENSION (SC)

SERVICE PRODUCTS

Description	Part Number	Page
Loctite 243 (blue)	293 800 060	540
suspension synthetic grease	293 550 033	537–538

RAILS AND IDLER WHEELS

All Models except Tundra

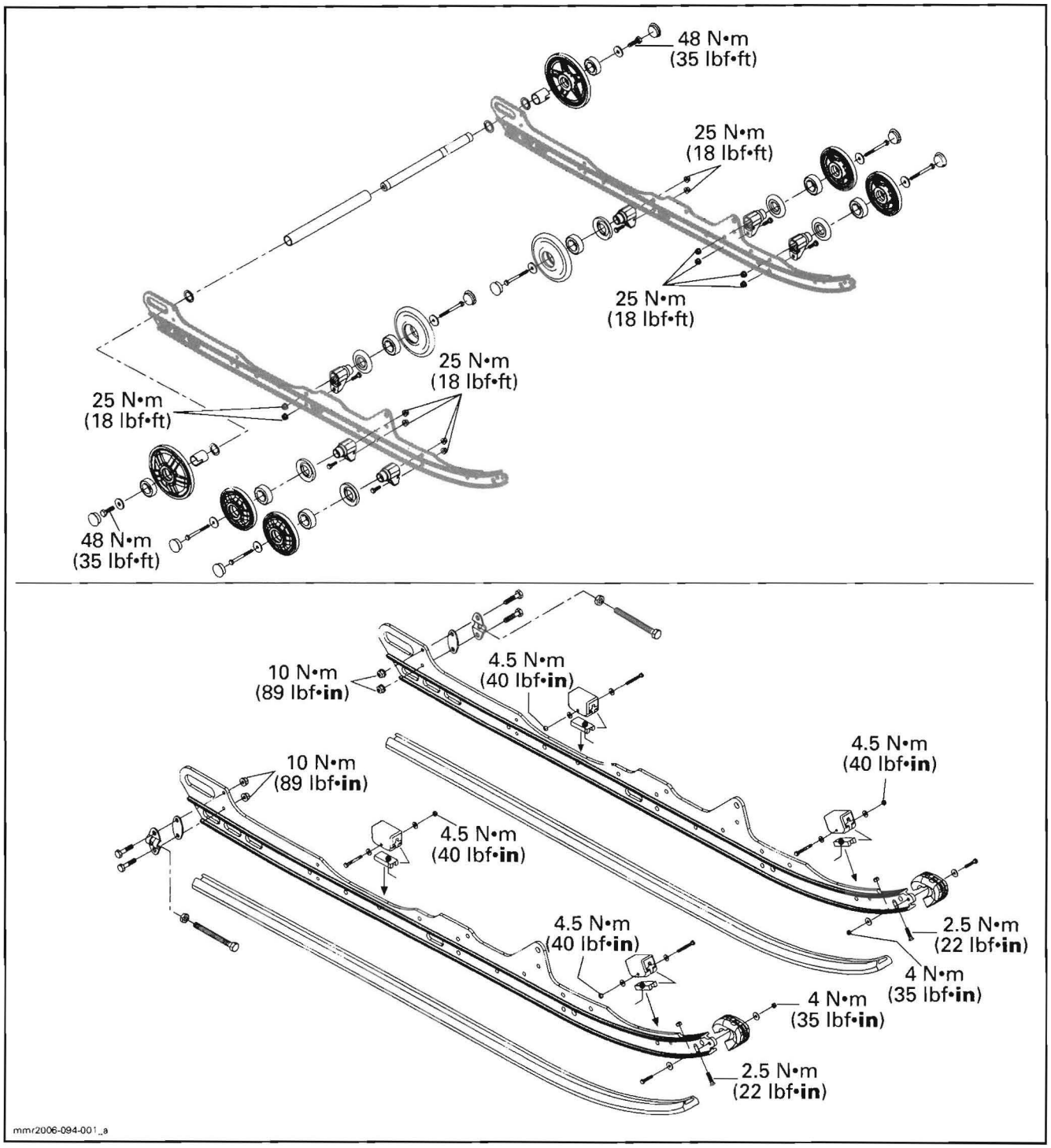

Tundra only

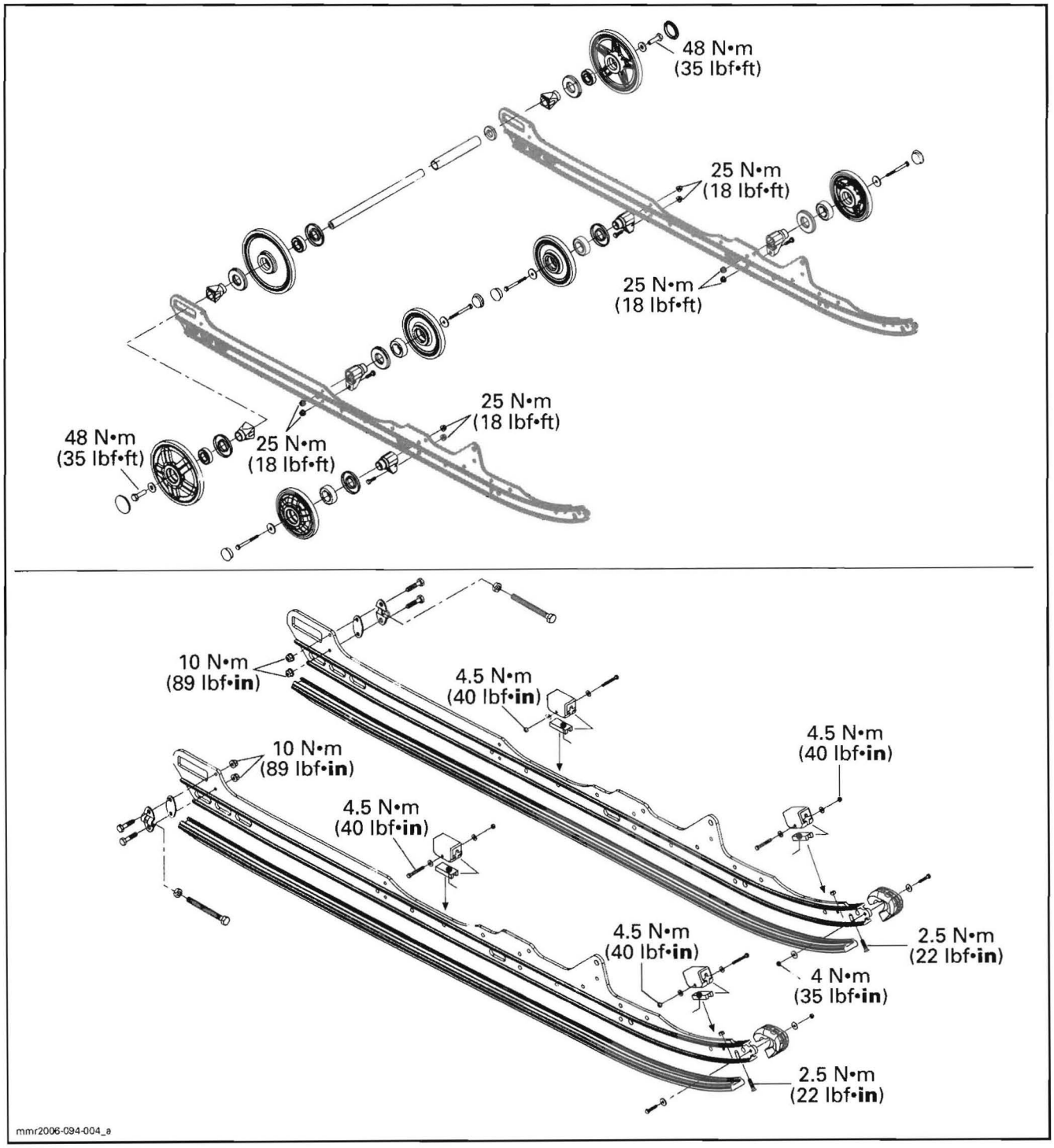
48 N•m
(35 lbf•ft)
25 N•m
(18 lbf•ft)
25 N•m
(18 lbf•ft)
25 N•m
(18 lbf•ft)
48 N•m
(35 lbf•ft)
25 N•m
(18 lbf•ft)
10 N•m
(89 lbf•in)
4.5 N•m
(40 lbf•in)
4.5 N•m
(40 lbf•in)
10 N•m
(89 lbf•in)
4.5 N•m
(40 lbf•in)
4.5 N•m
(40 lbf•in)
2.5 N•m
(22 lbf•in)
4 N•m
(35 lbf•in)
2.5 N•m
(22 lbf•in)
mmr2006-094-004_a

ARMS AND SHOCK ABSORBERS

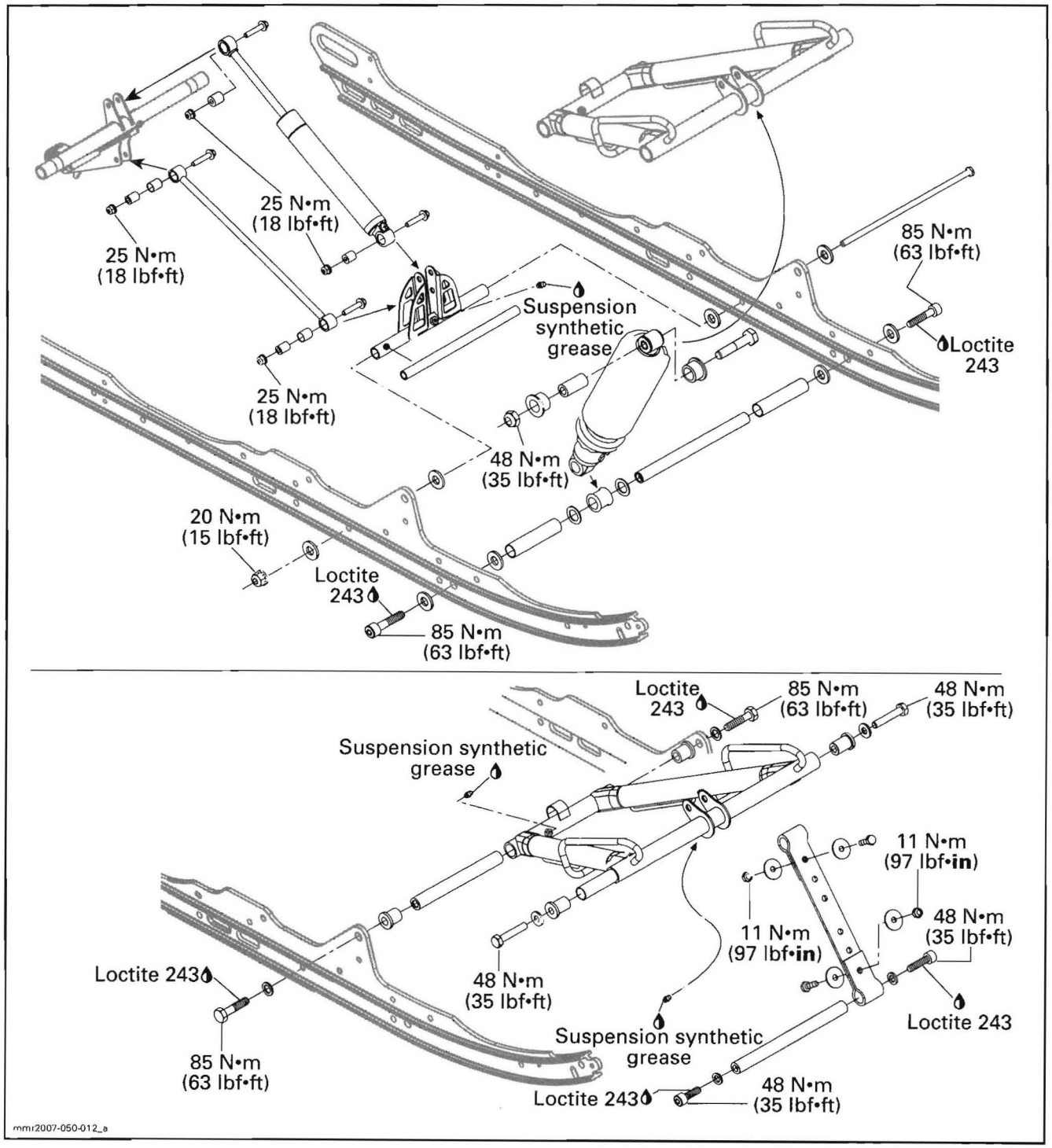

REAR ARM, SPRINGS AND TOP IDLER WHEELS

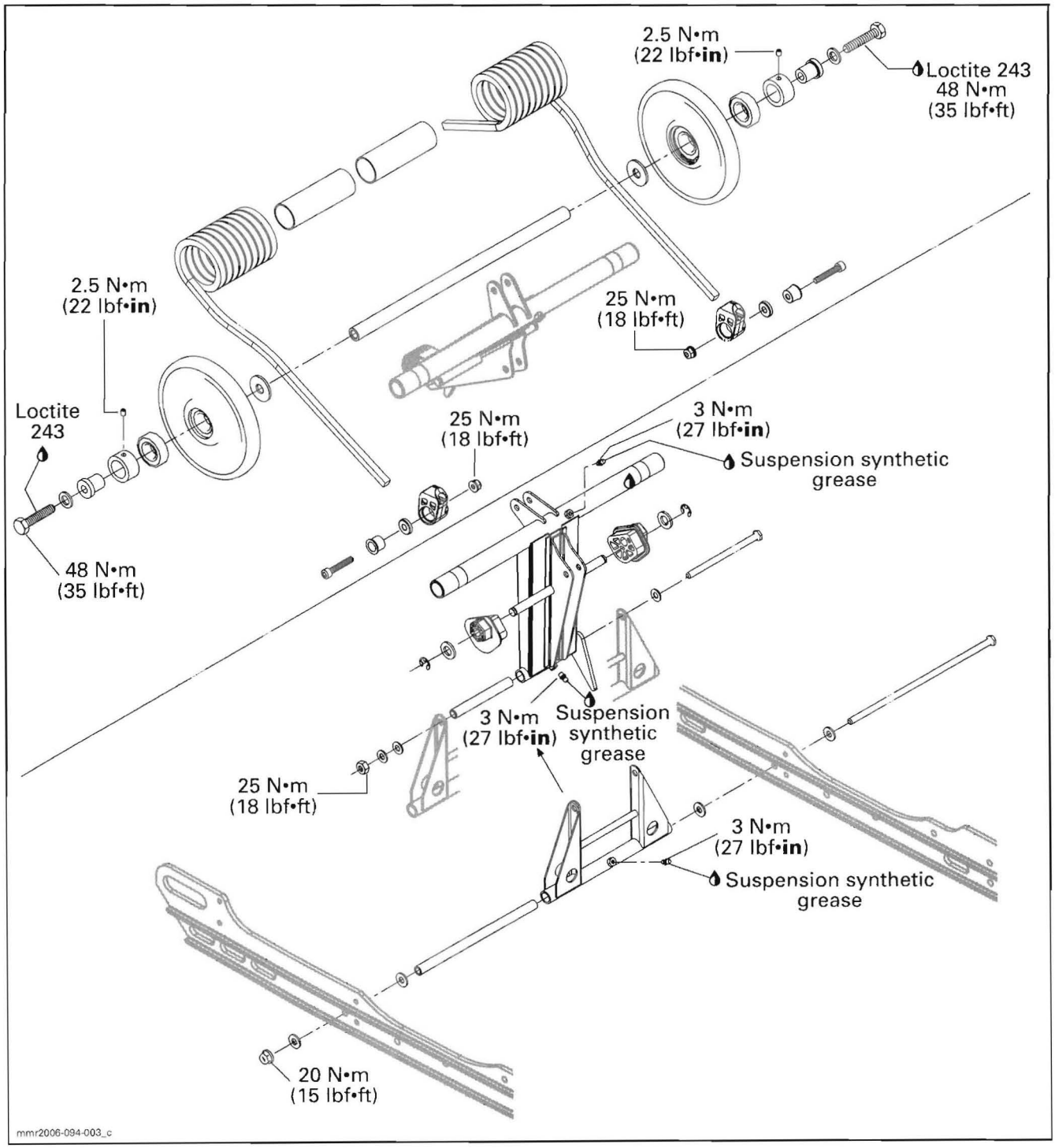

GENERAL

NOTE: Refer to *TECHNICAL SPECIFICATIONS* to identify the snowmobile suspension type.

During assembly/installation, use torque values and service products as in the exploded view(s).

Clean threads before applying a threadlocker. Refer to *SELF-LOCKING FASTENERS* and *LOCTITE APPLICATION* at the beginning of this manual for complete procedure.

⚠ WARNING

Torque wrench tightening specifications must strictly be adhered to.
Locking devices (e.g.: locking tabs, elastic stop nuts, self-locking fasteners, cotter pins, etc.) must be installed or replaced with new ones where specified. If the efficiency of a locking device is impaired, it must be renewed.

Suspension Adjustment

To adjust the rear suspension, refer to the appropriate *OPERATOR'S GUIDE*.

PROCEDURES

NOTE: The following components can be removed with suspension in place. For suspension assembly removal, refer to *SUSPENSION ASSEMBLY* further in this section.

REAR AXLE

Removal

Lift rear of vehicle and support it off the ground.

Remove rear idler wheel screws on rear axle.

Completely loosen track tension by unscrewing both adjustment screws.

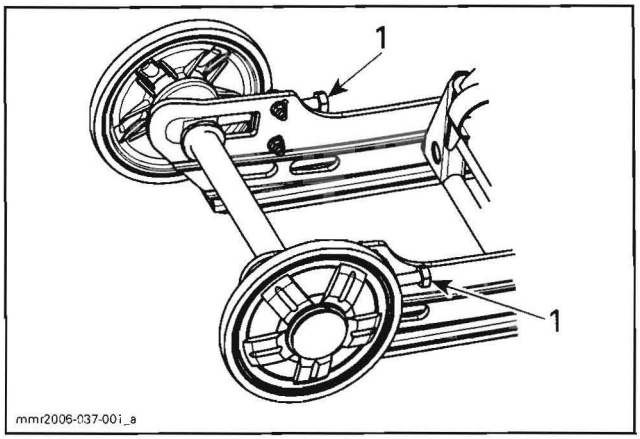

1. Adjustment screws

Remove rear idler wheel screws on rear axle.

Pull out rear axle from RH side of vehicle.

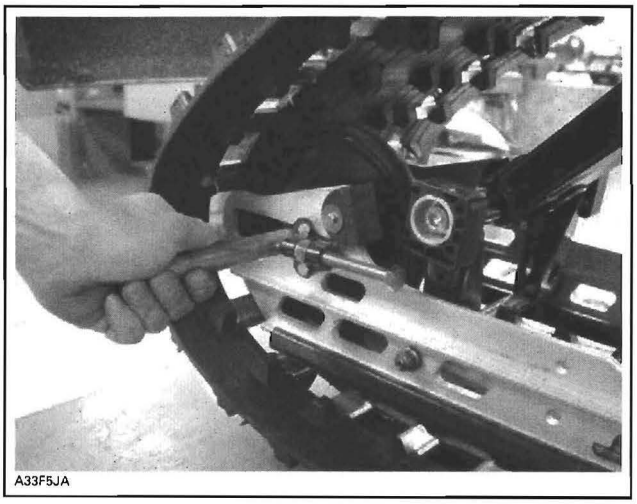

TYPICAL — PULL OUT REAR AXLE

Installation

Installation is the reverse of removal procedure. Pay attention to the following details.

Hole of outer bushing must face adjustment screw.

Make sure to reinstall washer on each side of runner.

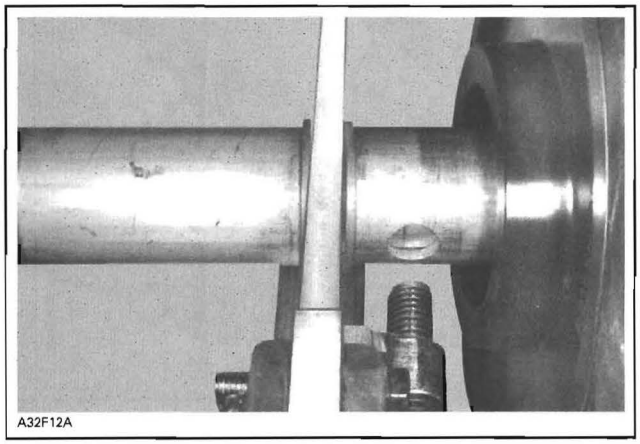

OUTER BUSHING POSITION

Adjust track tension. Refer to *TRACK* section.

REAR SHOCK ABSORBER

Removal

Lift rear of vehicle and support it off the ground.

Remove shock upper and lower bolt and nut.

NOTE: If necessary, to ease shock removal, unfasten one end of stopper strap to release shock pressure.

Remove rear shock absorber.

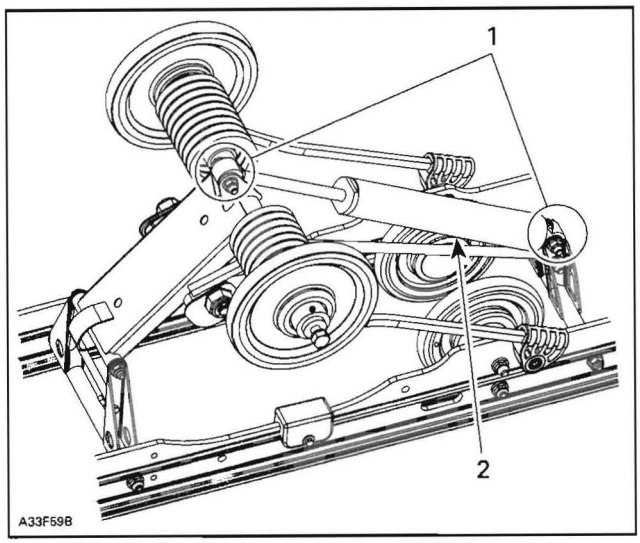

TYPICAL
1. *Upper/lower bolt and nut*
2. *Rear shock absorber*

Installation

Installation is the reverse of removal procedure.

CAUTION: Take care not to damage grease fitting.

When installing the lower bolt of shock, do not forget washers on both sides.

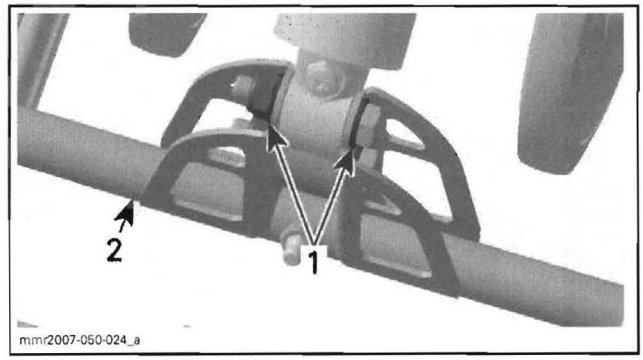

1. *Flat washers*
2. *Pivot arm*

THROTTLE ROD

Removal

Lift rear of vehicle and support it off the ground.

Remove the rear shock absorber.

Unscrew the upper bolt securing throttle rod to rear arm.

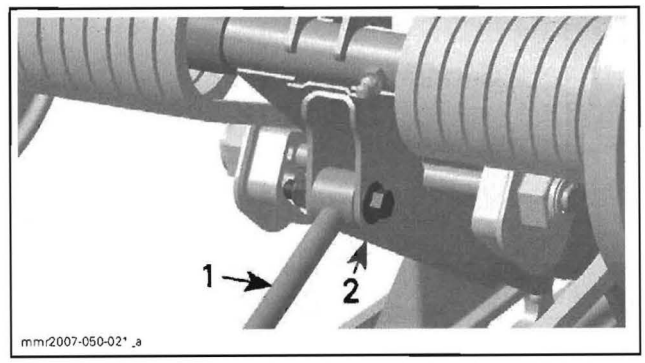

1. *Throttle rod*
2. *Rear arm*

Remove the lower bolt, both washers and nut.

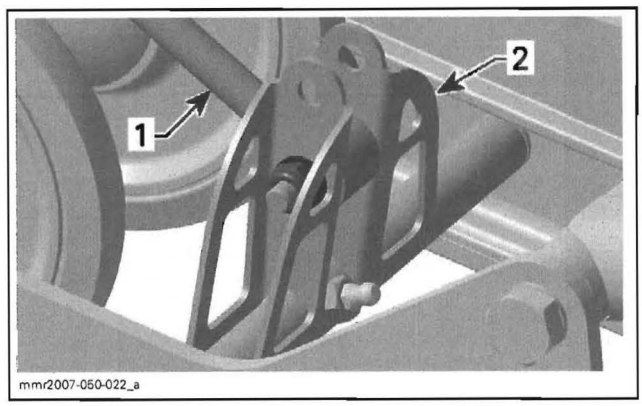

1. *Throttle rod*
2. *Pivot arm*

Remove the throttle rod.

Installation

Installation is the reverse of removal procedure.

When installing the lower bolt of throttle rod, do not forget washers on both sides.

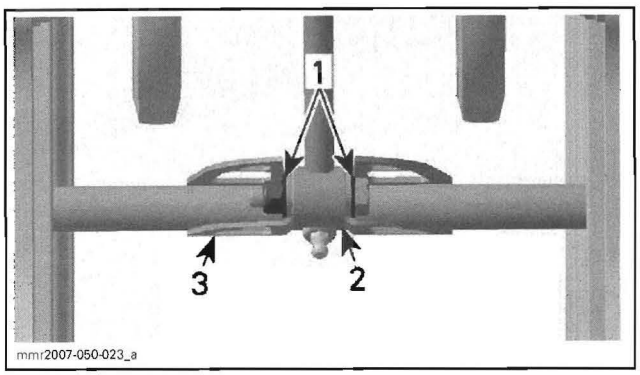

1. Flat washers
2. Throttle rod
3. Pivot arm

FRONT SHOCK ABSORBER

Removal

Lift rear of vehicle and support it off the ground.

Unfasten one end of stopper strap to release shock pressure.

Unbolt front shock from the top.

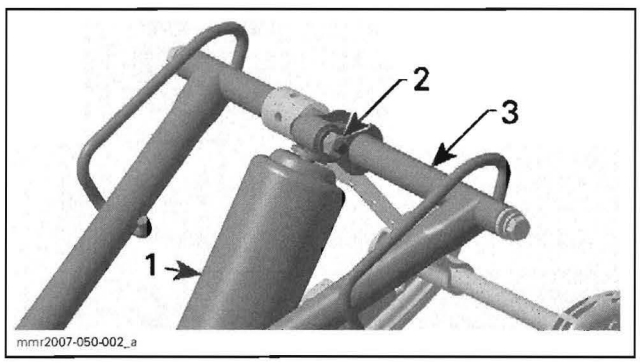

TYPICAL
1. Front shock
2. Top shock bolt and nut
3. Front arm

Remove the front idler wheels to gain access to the axle retaining self-locking screws.

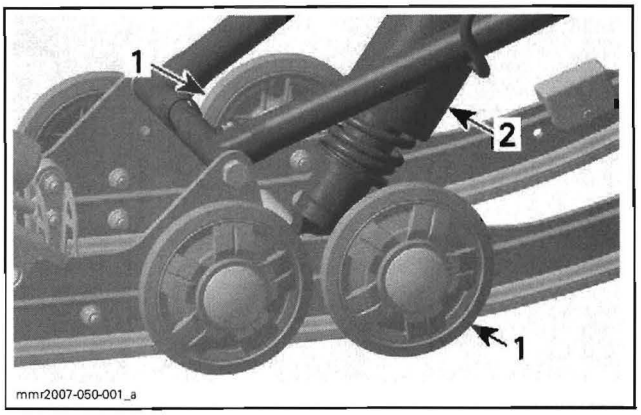

TYPICAL
1. Front idler wheels
2. Front shock

Unbolt axle screws and slide out axle to remove shock.

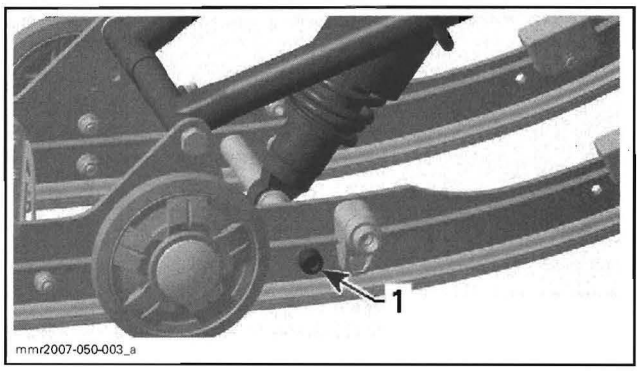

TYPICAL
1. Axle screw

Installation

Installation is the reverse of removal procedure.

REAR SPRING

Removal

Lift rear of vehicle and support it off the ground.

Decrease spring preload by turning cams accordingly.

Unbolt rear arm top axle from chassis.

Remove spring supports.

⚠ WARNING

Supports are spring loaded.

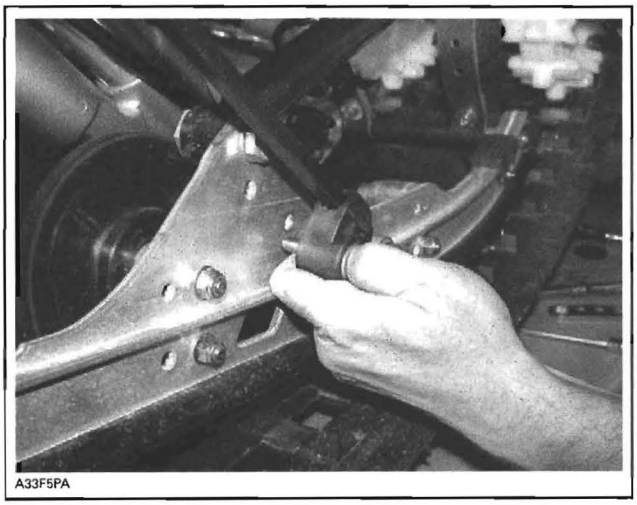

TYPICAL — REMOVE SPRING SUPPORTS

Loosen set screw from locking rings.

Remove the following on both sides:
- locking ring
- top idler wheel
- spring.

Installation

Installation is the reverse of removal procedure. Pay attention to the following details.

At assembly, respect THIS SIDE OUT inscription on top idler wheels.

At assembly, make sure that spring end is in cam adjuster.

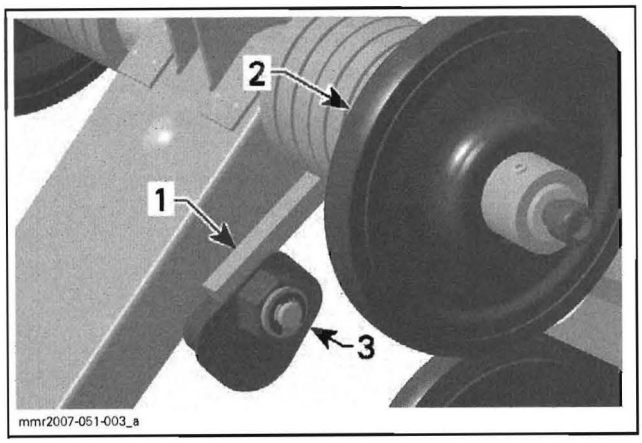

RH SIDE SHOWN
1. *Spring end*
2. *Top idler wheel*
3. *Cam adjuster*

CAUTION: To avoid track damage, spring supports must be mounted upward.

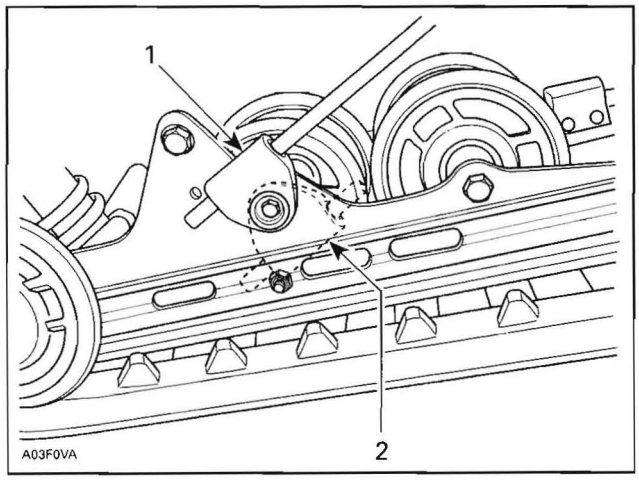

TYPICAL — RIGHT SIDE SHOWN
1. *Right position: upward*
2. *Wrong position*

SLIDER SHOE

Inspection

Replace slider shoes when the wear reach 1 - 2 mm (.040 - .079 in) beyond the moulding line.

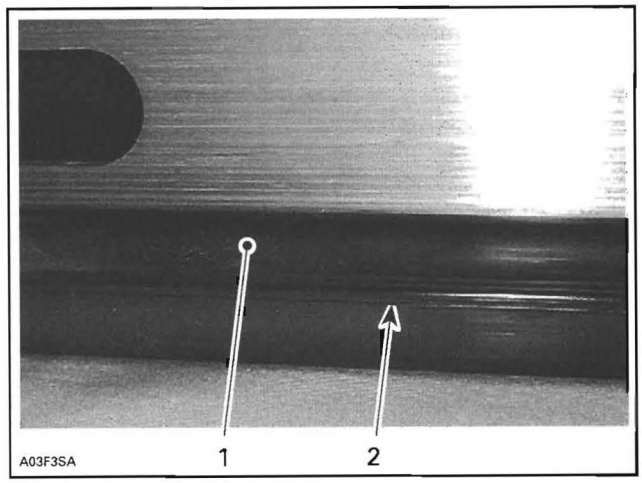

TYPICAL
1. *Slider shoe*
2. *Molding line*

CAUTION: Slider shoes must always be replaced in pairs.

Removal

Lift rear of vehicle and support it off the ground.

Completely loosen track tension.

Remove front runners nut and screw.

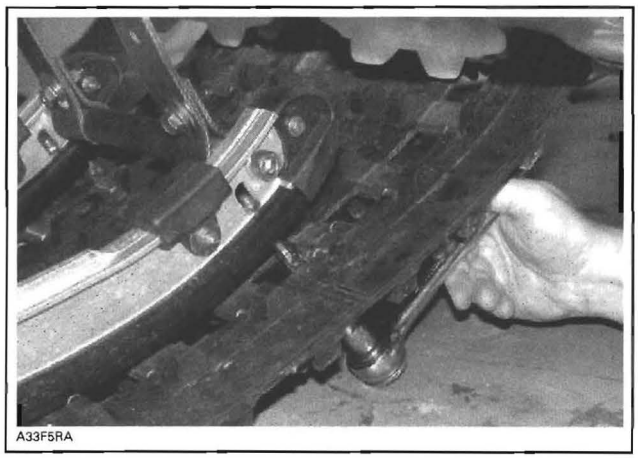
A33F5RA

TYPICAL — REMOVE NUT AND SCREW

Align track window with slider shoe.

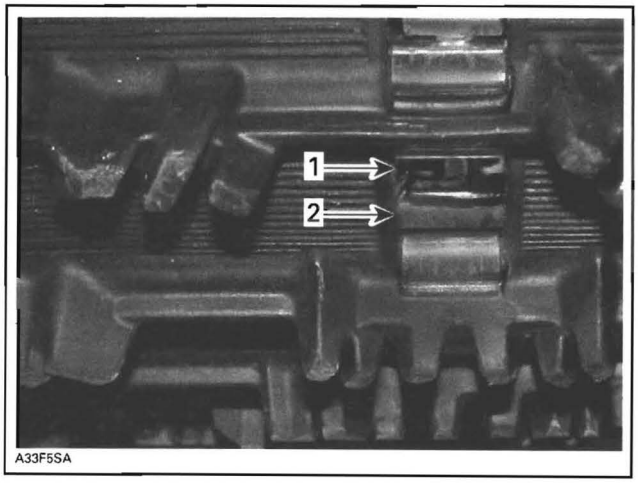

A33F5SA

TYPICAL
1. Track window
2. Slider shoe

Using a pry bar or screw driver, push slider shoe until it comes in contact with track.

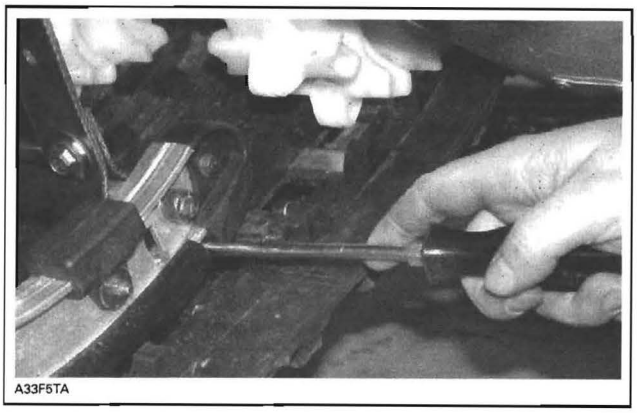
A33F5TA

TYPICAL — PUSH ON SLIDER SHOE

Using locking pliers, pull slider shoe through track window to remove.

NOTE: If necessary, lubricate track window to facilitate slider shoe removal.

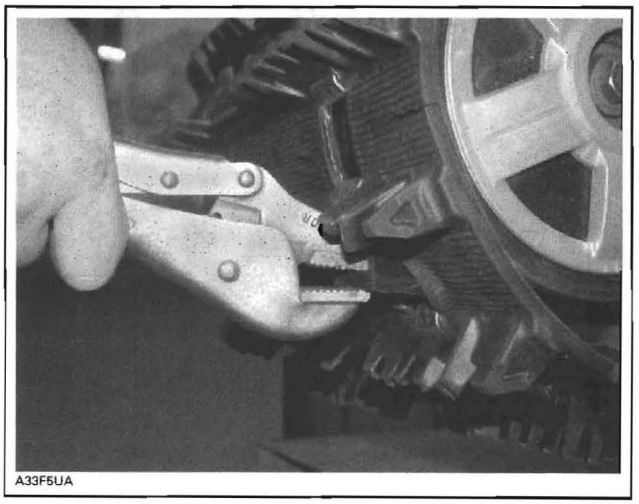
A33F5UA

TYPICAL — PULL ON SLIDER SHOE TO REMOVE

Installation

Installation is reverse of removal procedure. Pay attention to the following details.

Make sure to insert slider shoe end with hole first.

FRONT ARM

Removal

Lift rear of vehicle and support it off the ground.

Remove the following:
- shock upper bolt and nut
- front arm lower bolts and washers
- unfasten one end of stopper strap
- remove front arm upper bolts, nuts and washers.

Remove front arm.

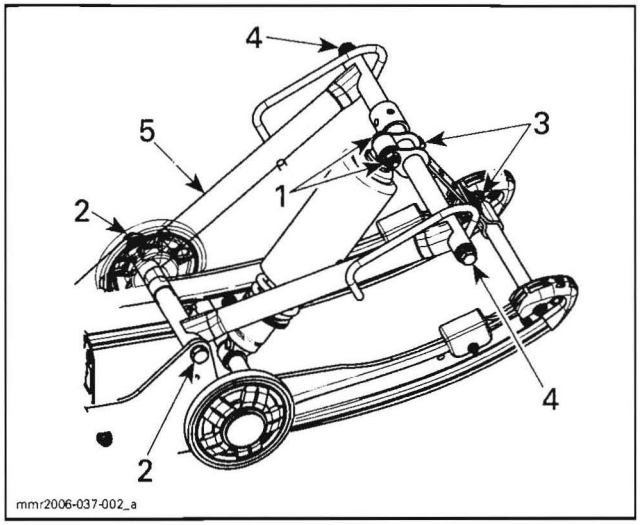

1. *Shock upper bolt and nut*
2. *Front arm lower bolts and washers*
3. *Unfasten one end of stopper strap*
4. *Front arm upper bolts, nuts and washers*
5. *Front arm*

Installation

Installation is reverse of removal procedure.

Lubrication

Lubricate front arm at grease fittings using suspension synthetic grease (P/N 293 550 033).

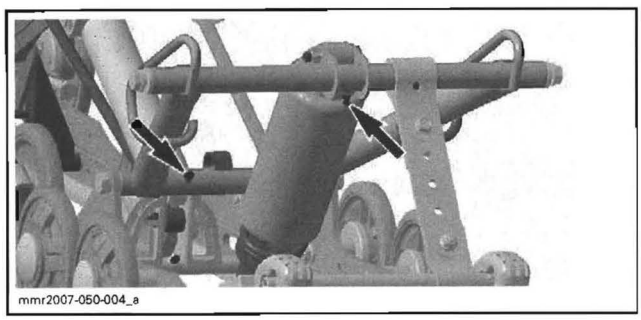

REAR ARM

Removal

For rear arm removal, remove the following:

- shock upper bolt and nut

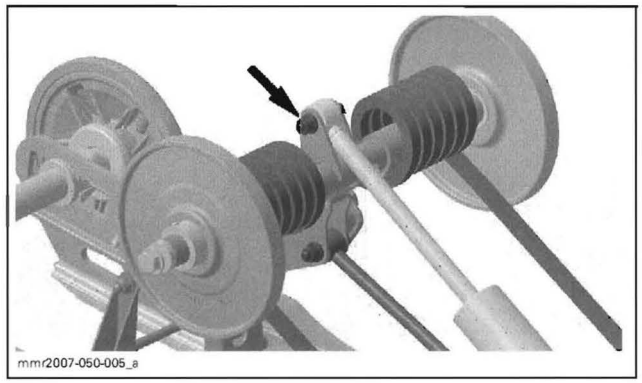

- throttle rod upper bolt and nut

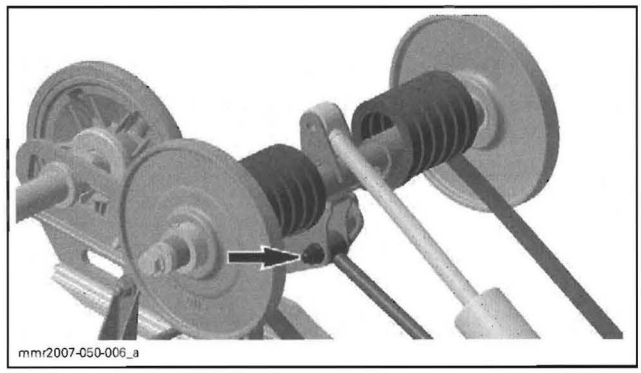

- rear springs (refer to procedure above in this section)

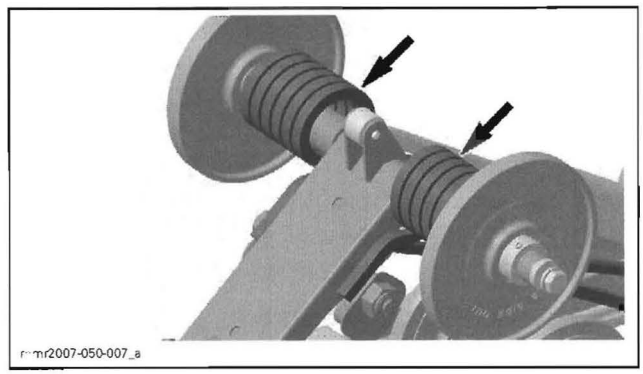

- screws, washers and nuts holding rear arm to pivot arm.

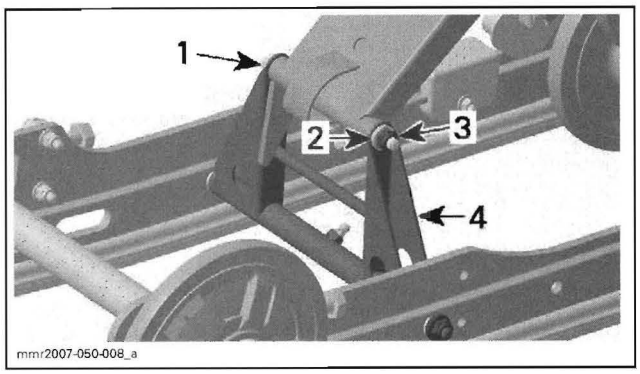

1. *Screw with washer*
2. *Washers (2)*
3. *Nut*
4. *Pivot arm*

Remove rear arm.

For pivot arm removal, remove bolt, nut and washers holding pivot arm to runners.

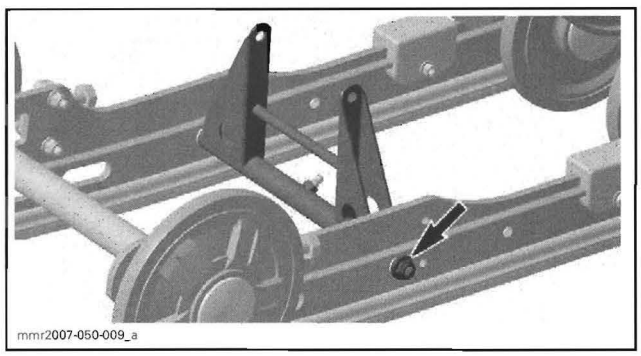

Remove pivot arm.

Installation

Installation is reverse of removal procedure. Pay attention to the following details.

At installation, rear arm stroke limiter must be on rear side.

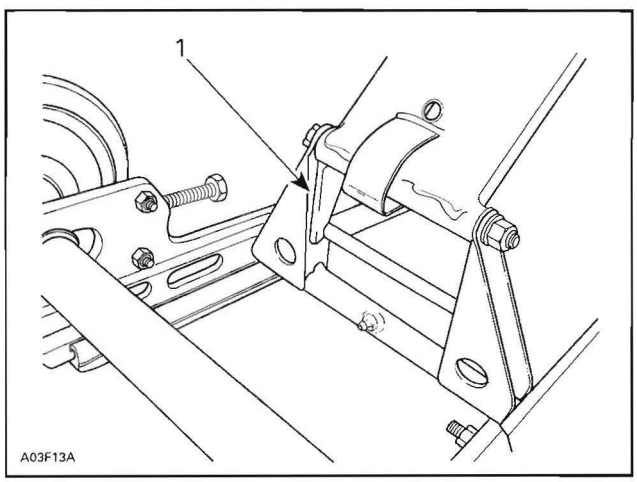

1. *Stroke limiter on rear side*

Lubrication

Lubricate rear arm at grease fittings using suspension synthetic grease (P/N 293 550 033).

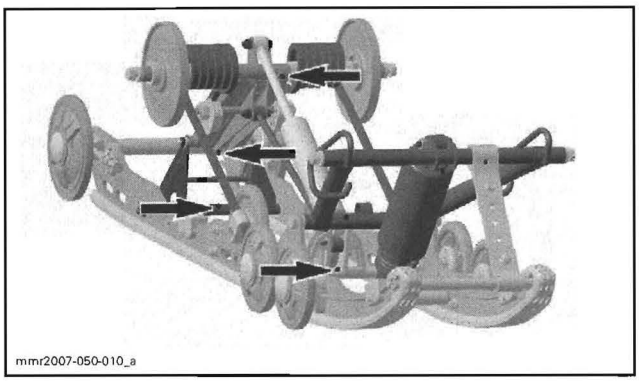

IDLER WHEELS

Refer to illustration for idler wheels position at installation.

All Models except Tundra

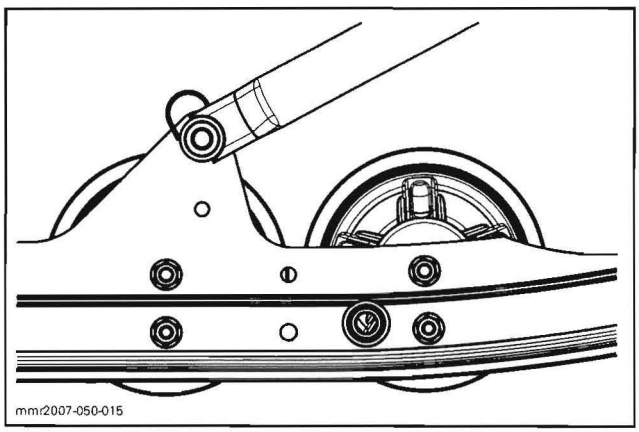

Tundra Only

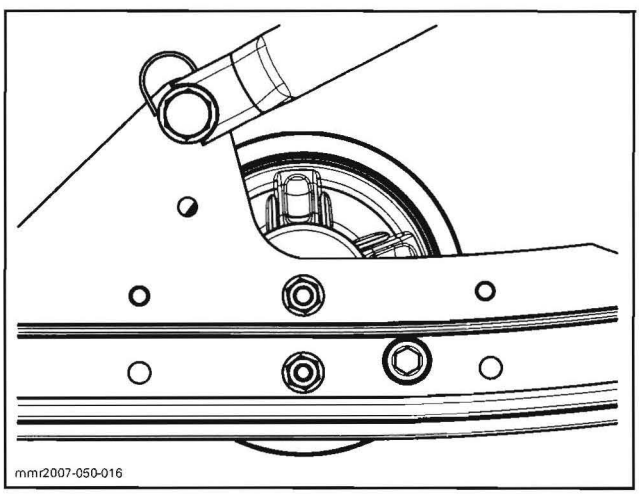

STOPPER STRAP

Inspect strap for wear or cracks, bolt and nut for tightness. If loose, inspect hole for deformation. Replace as required.

Make sure it is attached through proper hole from the end.

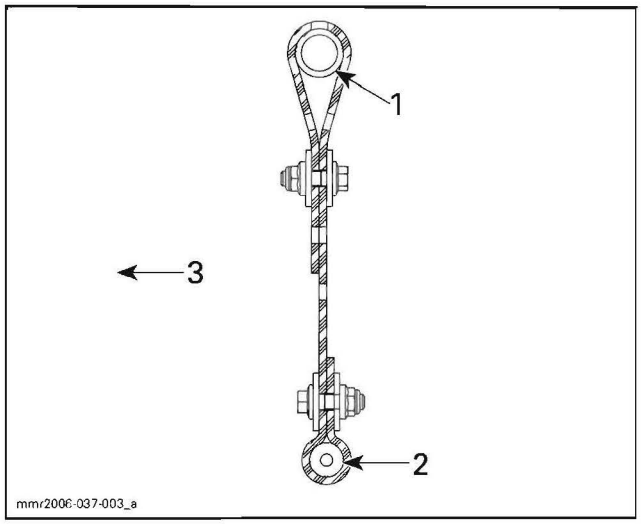

POSITION 3-2
1. Front arm (top)
2. Front axle
3. Rear of vehicle

SUSPENSION ASSEMBLY

Removal

Lift rear of vehicle and support it off the ground.

Completely loosen track tension.

Remove rear arm top axle bolts from chassis, using the following procedure.

- Unscrew one of the socket screws securing the rear arm top axle to frame.

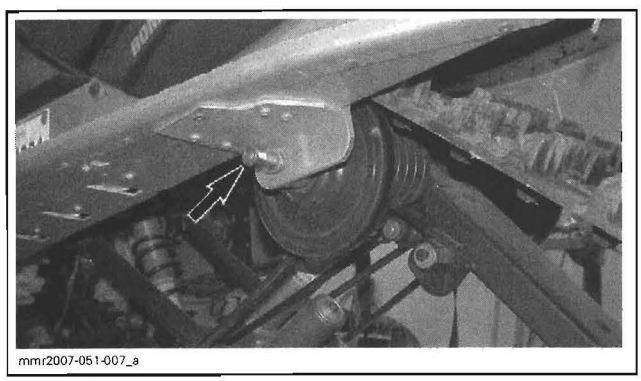

TYPICAL

- Replace this socket screw with an hexagonal bolt (longer than socket screw) and a nut.
- Screw the hexagonal bolt completely and lock it with the nut.

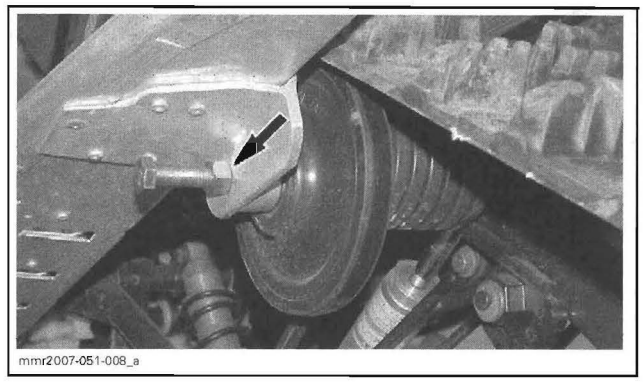

TYPICAL

- Unscrew the socket screw on the other side then unlock nut and remove the hexagonal bolt.

Remove bolts retaining front arm to tunnel.

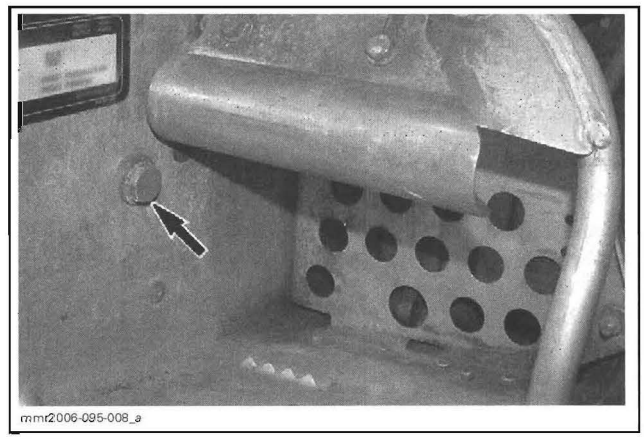

TYPICAL

Lift rear of vehicle until front arm as enough clearance to pass underneath tunnel.

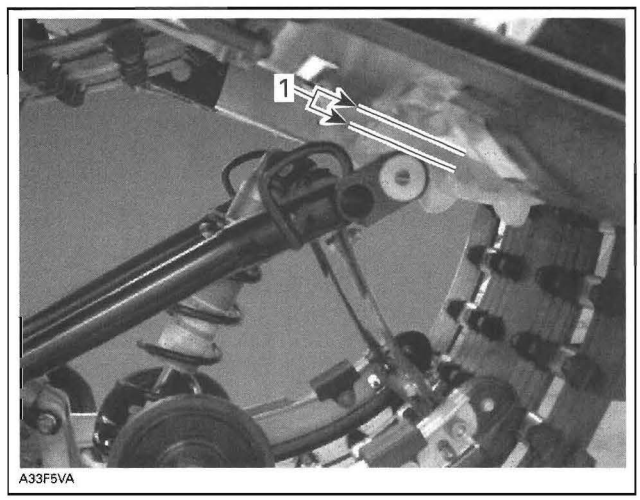

TYPICAL
1. Enough clearance

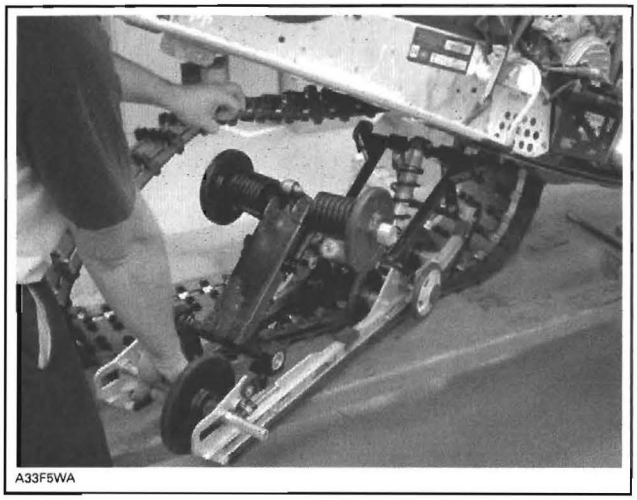

TYPICAL — REMOVE SUSPENSION

Installation

Installation is the reverse of removal procedure. Pay attention to the following details.

Inspect track thoroughly before reinstalling suspension. Refer to *TRACK*.

Install suspension into track with front portion first.

Apply Loctite 243 (blue) (P/N 293 800 060) on threads of socket screws and torque them to 85 N•m (63 lbf•ft).

Adjust track tension.

REAR SUSPENSION (SC-4)

SERVICE PRODUCTS

Description	Part Number	Page
Loctite 243 (blue)	293 800 060	552
suspension synthetic grease	293 550 033	550

RAILS AND IDLERS WHEELS

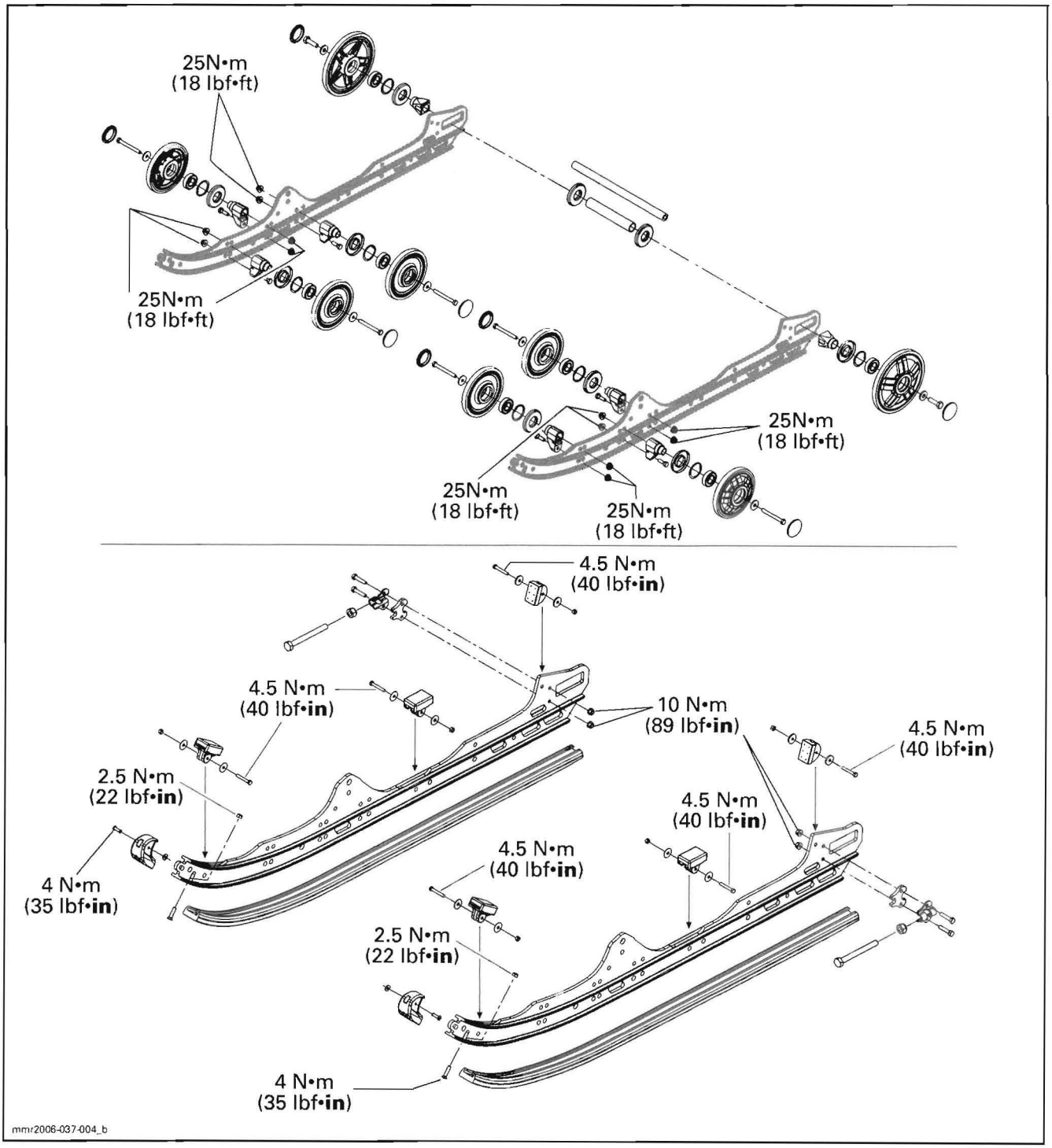

FRONT ARM AND SHOCK ABSORBERS

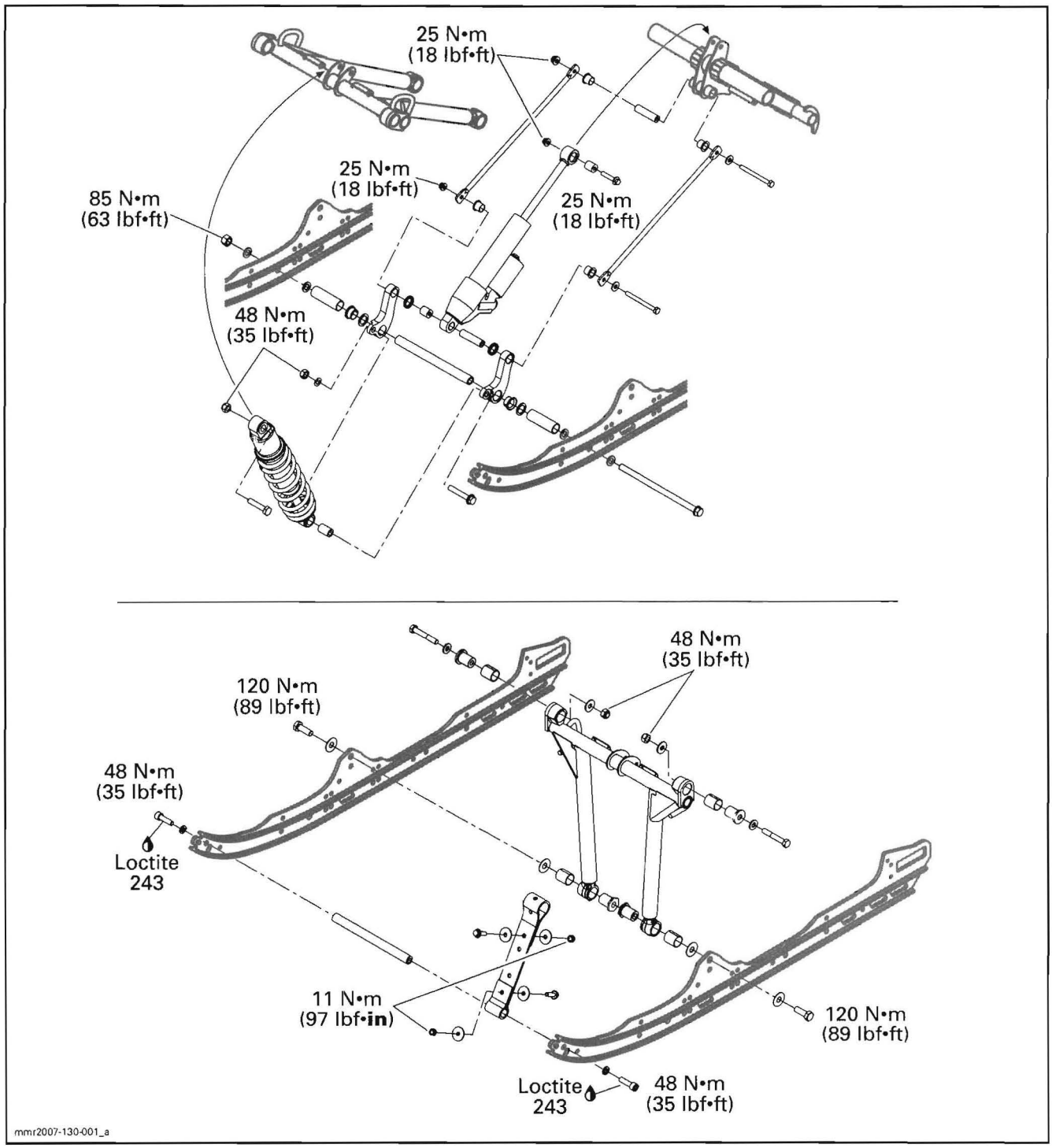

REAR ARM, SPRINGS AND IDLER WHEELS

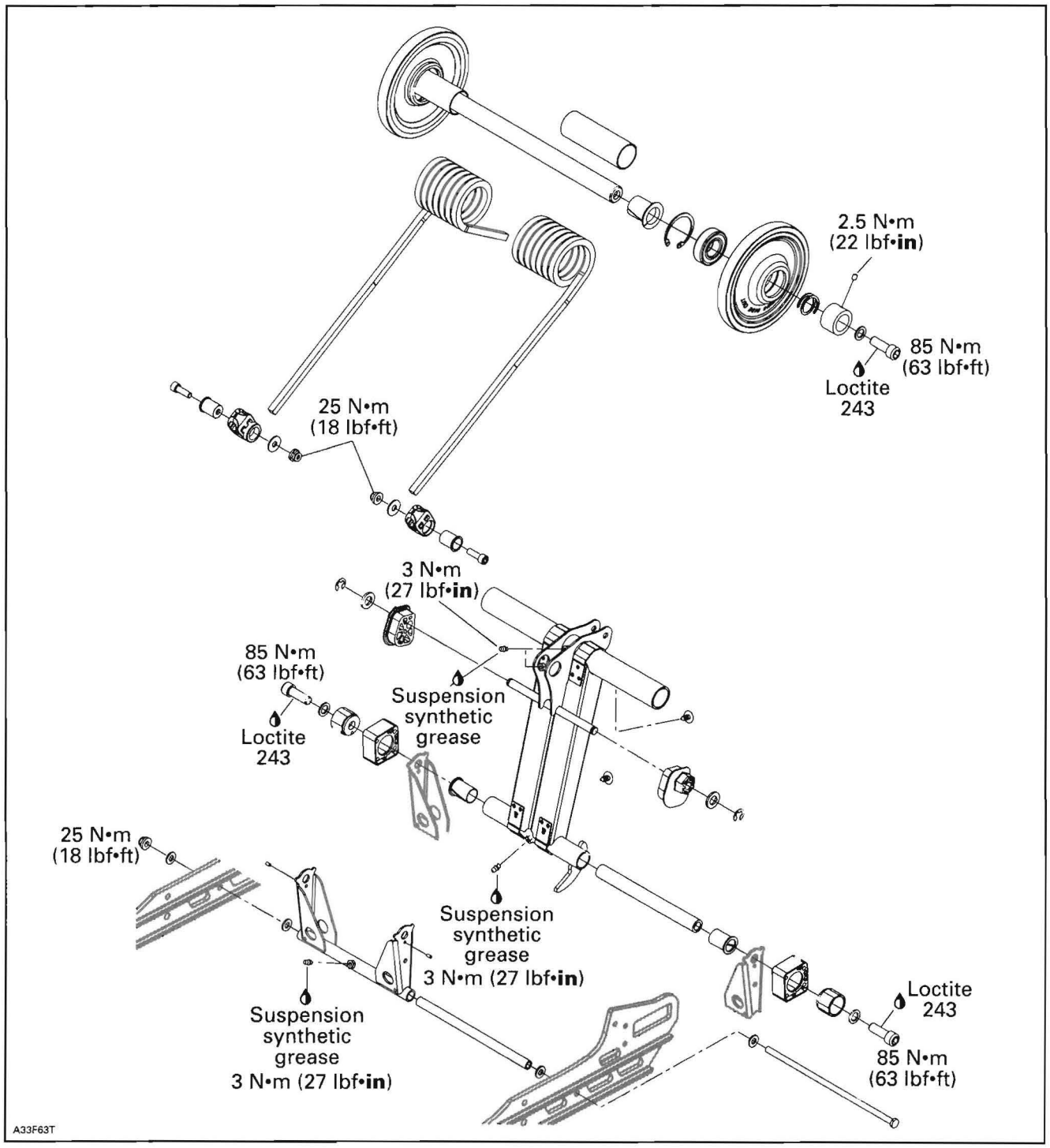

GENERAL

NOTE: Refer to *TECHNICAL SPECIFICATIONS* to identify the snowmobile suspension type.

During assembly/installation, use torque values and service products as in the exploded view(s).

Clean threads before applying a threadlocker. Refer to *SELF-LOCKING FASTENERS* and *LOCTITE APPLICATION* at the beginning of this manual for complete procedure.

⚠ WARNING

Torque wrench tightening specifications must strictly be adhered to.
Locking devices (e.g.: locking tabs, elastic stop nuts, self-locking fasteners, cotter pins, etc.) must be installed or replaced with new ones where specified. If the efficiency of a locking device is impaired, it must be renewed.

Suspension Adjustment

To adjust the rear suspension, refer to the appropriate *OPERATOR'S GUIDE*.

PROCEDURES

NOTE: The following components can be removed with suspension in place. For suspension assembly removal, refer to *SUSPENSION ASSEMBLY* further in this section.

REAR AXLE

Removal

Lift rear of vehicle and support it off the ground.

Remove screws on rear axle.

Completely loosen track tension.

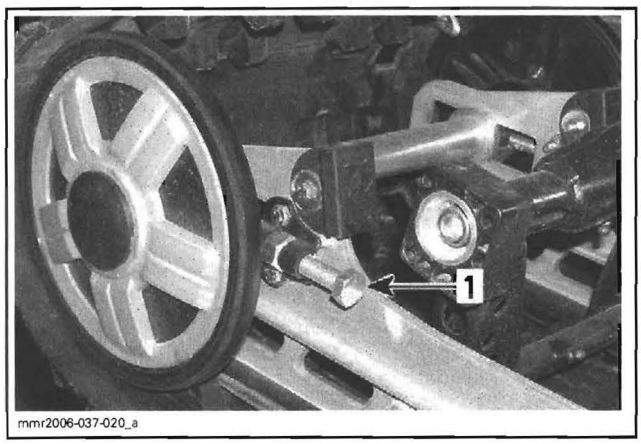

1. Completely loosen track tension

Remove the following:
- rear idler wheels
- idler wheels bearing protector
- idler wheels spacer.

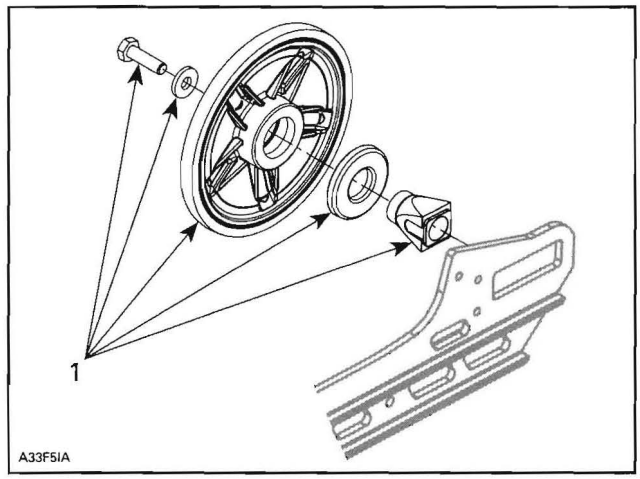

ON BOTH SIDES
1. Remove the following

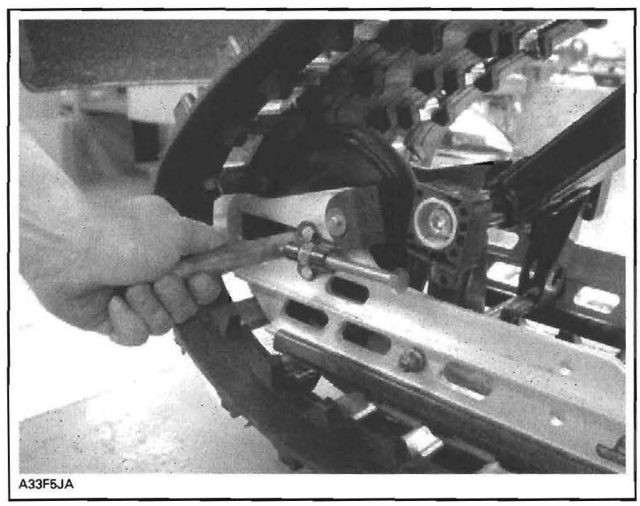

TYPICAL — PULL OUT REAR AXLE

Installation

Installation is reverse of removal procedure.

REAR SHOCK ABSORBER

Removal

Lift rear of vehicle and support it off the ground.

NOTE: If necessary, to ease shock removal, unfasten one end of stopper strap to release shock pressure.

Remove bolts and nuts from shock.

NOTE: If necessary, remove idler wheel(s) to ease lower shock component removal.

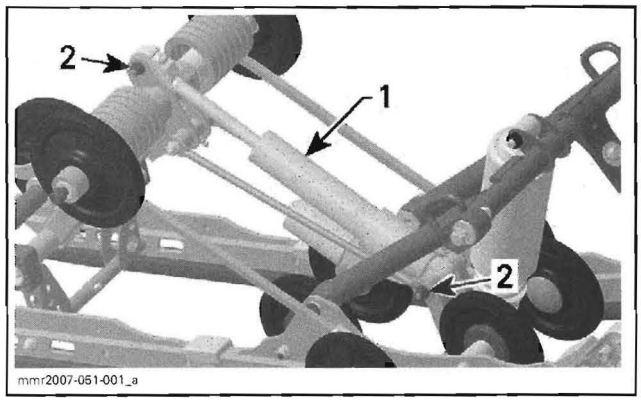

TYPICAL
1. *Rear shock absorber*
2. *Remove bolts and nuts*

Using a punch, remove lower shock bar axle.

Pay attention to plastic spacers.

Remove shock.

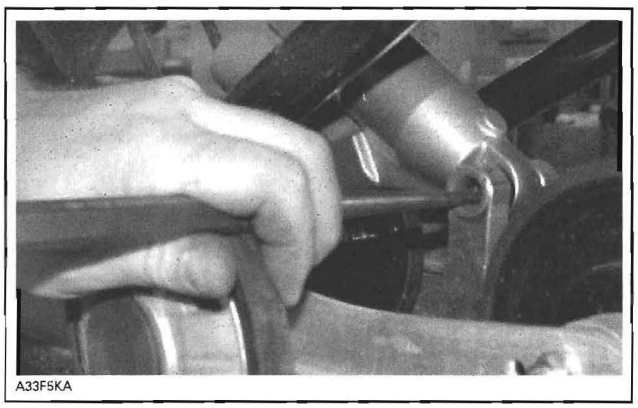

REMOVE BAR AXLE

Installation

Installation is reverse of removal procedure. Pay attention to the following details.

To ease shock installation, secure upper shock first.

CAUTION: Make sure shock bar axle is aligned with swivel bushings before inserting it.

If the shock absorber has a remote reservoir, make sure to install the shock so that reservoir is facing down.

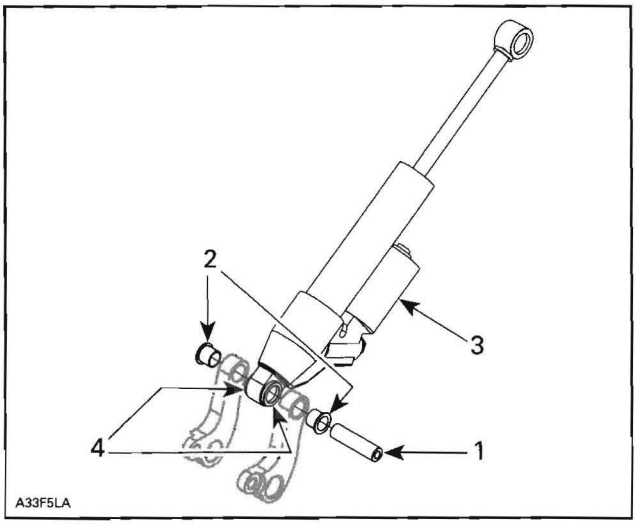

TYPICAL
1. *Bar axle*
2. *Swivel bushings*
3. *Shock reservoir position*
4. *Plastic spacers*

FRONT SHOCK ABSORBER

Removal

Lift rear of vehicle and support it off the ground.

Unfasten one end of stopper strap.

Remove bolts and nuts from shock.

NOTE: If necessary, remove idler wheel(s) to ease lower shock component removal.

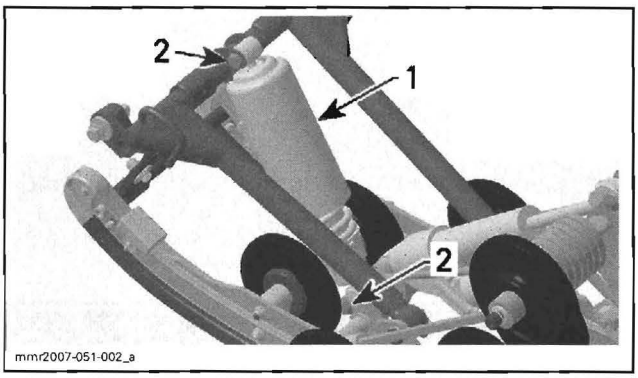

TYPICAL
1. *Front shock absorber*
2. *Remove bolts and nuts*

Installation

Installation is reverse of removal procedure. Pay attention to the following details.

Shock absorber nuts should be on the RH side.

Install shock rod upwards.

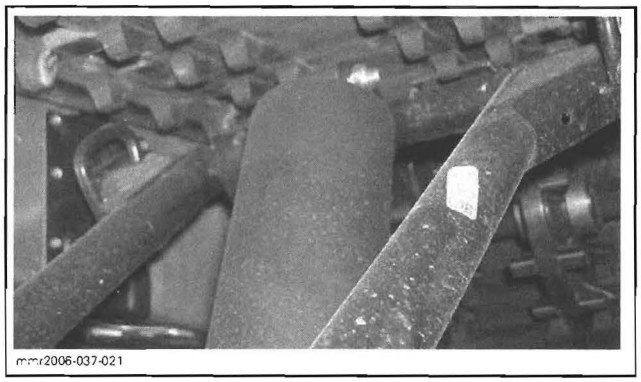

TYPICAL

REAR SPRING

Removal

Lift rear of vehicle and support it off the ground.

Decrease spring preload by turning cams accordingly.

Loosen rear arm top axle from chassis.

Remove idler wheels to have access to spring support screws.

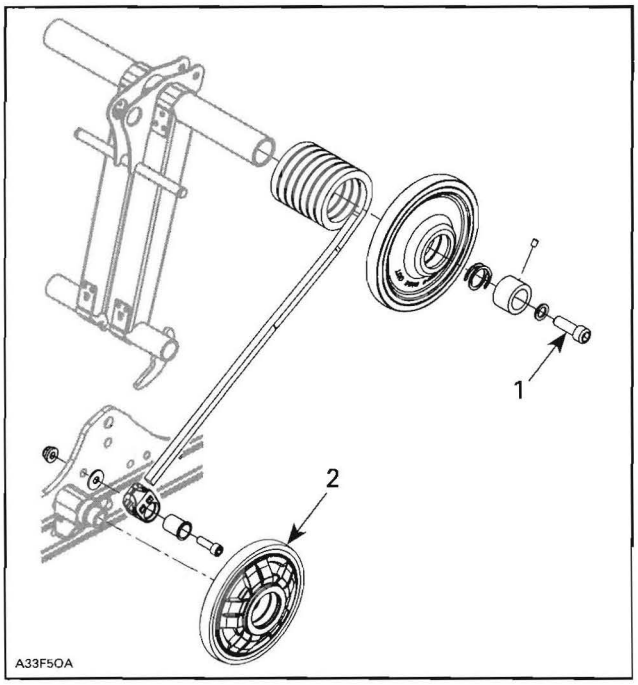

1. Loosen rear arm top axle from chassis
2. Remove idler wheels

Remove spring supports.

⚠ WARNING

Supports are spring loaded.

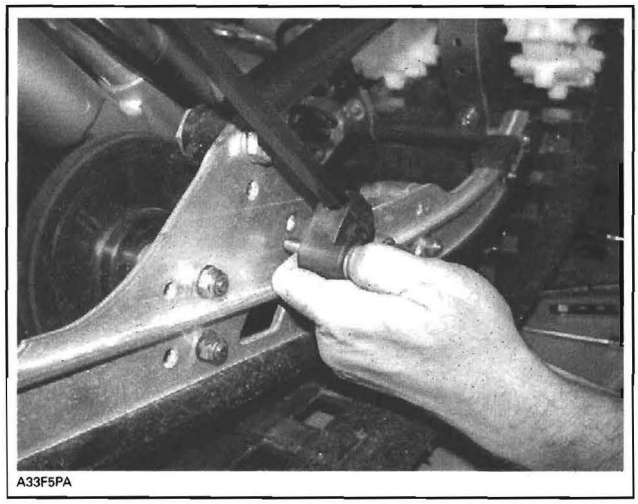

TYPICAL

Remove screws and washers from rear arm top axle.

Loosen set screw from locking rings.

Remove the following on both sides:
- locking ring
- axle spring
- top idler wheel
- rear spring.

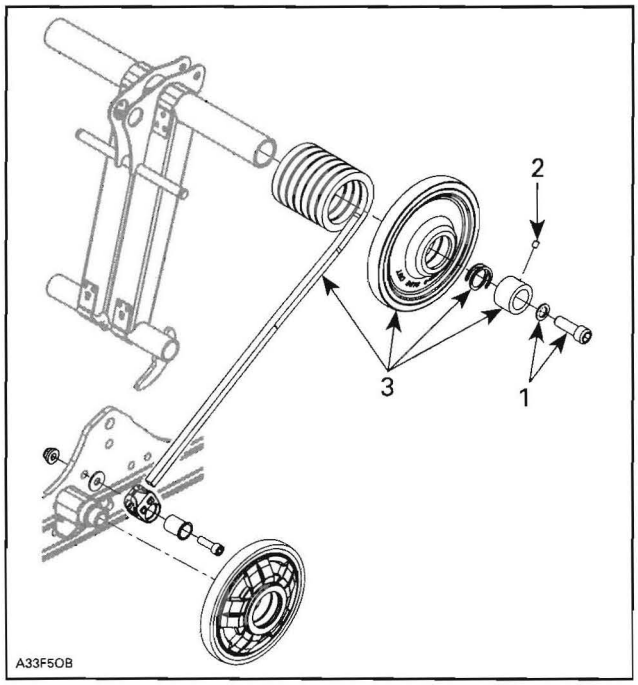

ON BOTH SIDES
1. Remove screws
2. Loosen set screw
3. Remove the following

Installation

Installation is reverse of removal procedure. Pay attention to the following details.

Respect THIS SIDE OUT inscription on top idler wheels.

Make sure that spring end is in cam adjuster.

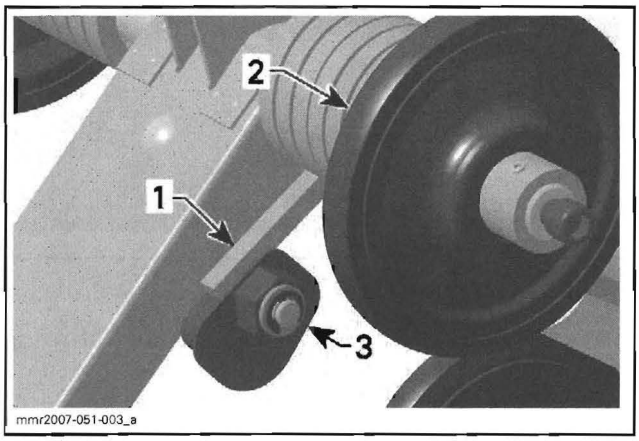

RH SIDE SHOWN
1. *Spring end*
2. *Top idler wheel*
3. *Cam adjuster*

CAUTION: To avoid track damage, spring supports must be mounted upward.

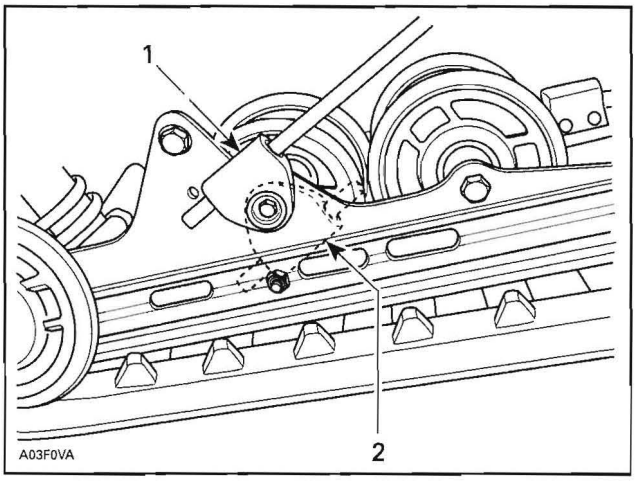

TYPICAL — RIGHT SIDE SHOWN
1. *Right position: upward*
2. *Wrong position*

SLIDER SHOE

Inspection

Replace slider shoes when the wear reach 1 - 2 mm (.040 - .079 in) beyond the moulding line.

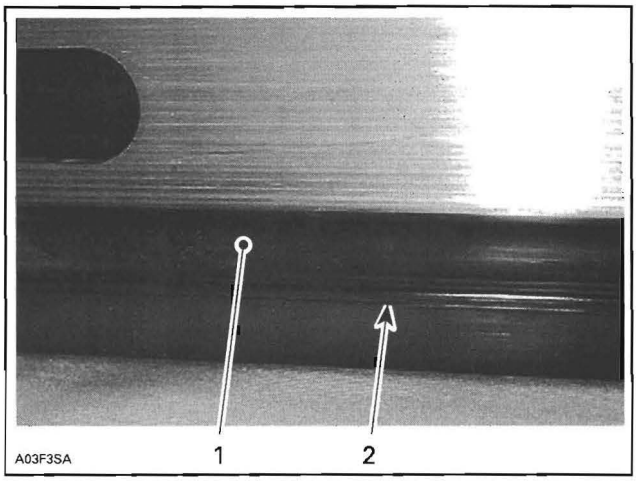

TYPICAL
1. *Slider shoe*
2. *Molding line*

CAUTION: Slider shoes must always be replaced in pairs.

Removal

Lift rear of vehicle and support it off the ground.

Completely loosen track tension.

Remove nut and screw of each runner.

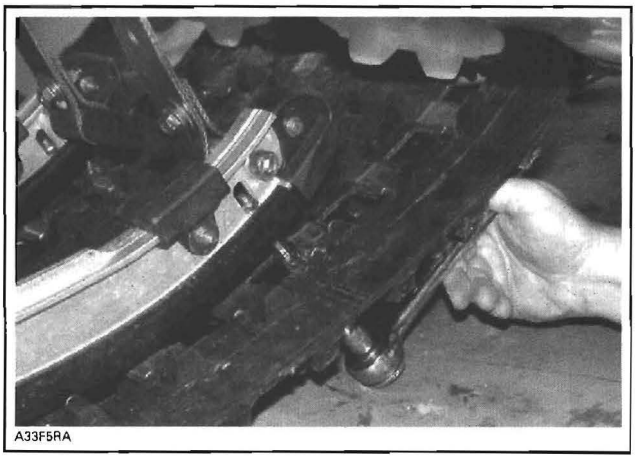

REMOVE NUT AND SCREW OF EACH RUNNER

Align track window with slider shoe.

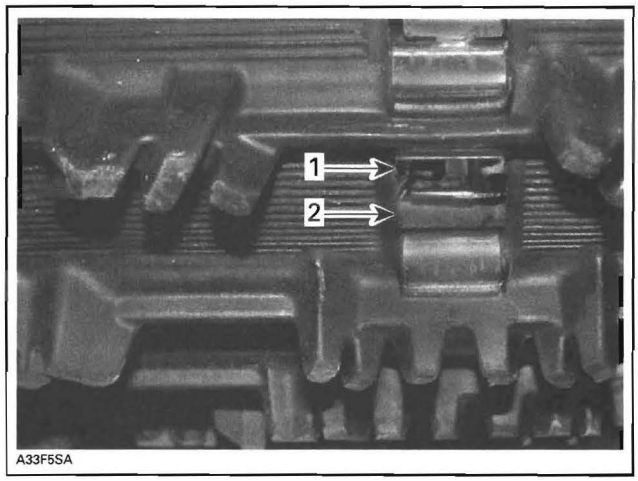

TYPICAL
1. *Track window*
2. *Slider shoe*

Using a pry bar or screwdriver, push slider shoe until it comes in contact with track.

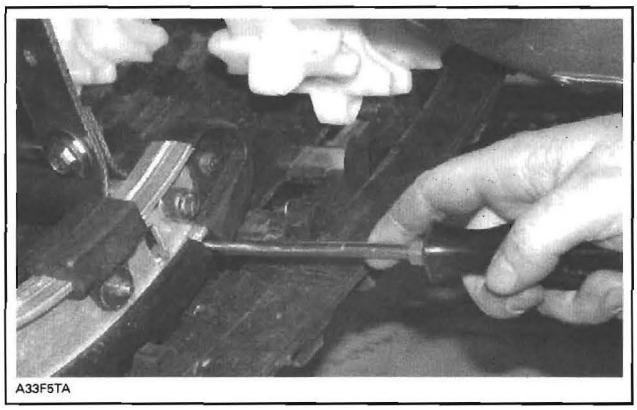

PUSH ON SLIDER SHOE

Using locking pliers, pull slider shoe thru track window to remove.

NOTE: If necessary, lubricate track window to facilitate slider shoe removal.

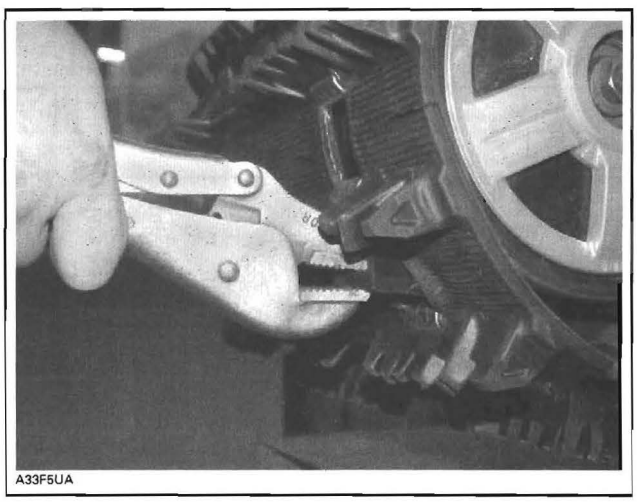

PULL ON SLIDER SHOE TO REMOVE

Installation

Installation is reverse of removal procedure. Pay attention to the following details.

Make sure to insert slider shoe end with hole first.

FRONT ARM

Removal

Lift rear of vehicle and support it off the ground.

Remove the shock upper bolt and its nut.

Remove both front idler wheels.

To gain access to the front arm lower bolts, remove the spring supports.

⚠ WARNING

Supports are spring loaded.

Unscrew and remove the front arm lower bolts and washers.

Unfasten one end of the stopper strap(s).

Remove front arm upper bolts, nuts and washers.

Remove front arm.

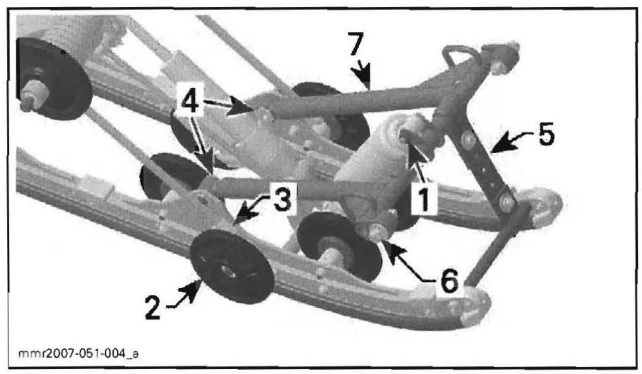

SUSPENSION REMOVED FOR CLARITY
1. *Shock upper bolt and nut*
2. *Front idler wheels*
3. *Spring supports*
4. *Front arm lower bolts and washers*
5. *Unfasten one end of stopper straps*
6. *Front arm upper bolts, nuts and washers*
7. *Front arm*

Installation

Installation is reverse of removal procedure. Pay attention to the following details.

To properly hold front arm axles when applying tightening torque to front arm lower bolts, it may be necessary to remove idle wheels.

REAR ARM

Removal

NOTE: Rear arm can be removed with suspension assembly in place.

For rear arm removal, remove the following:
- shock upper bolt and nut
- rear springs (refer to procedure above in this section)
- screws and washers holding rear arm to pivot arm.

For pivot arm removal, remove bolts, nuts and washers holding pivot arm to runners.

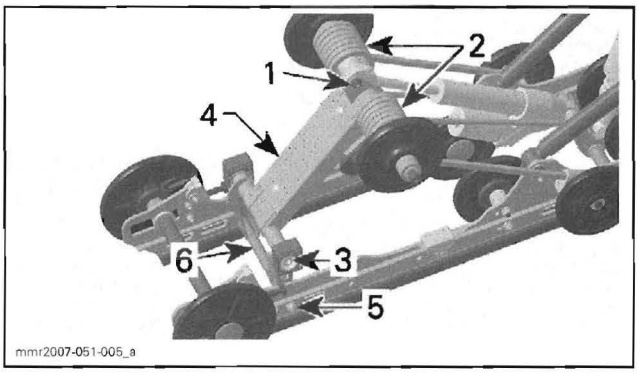

SUSPENSION REMOVED FOR CLARITY
1. *Shock upper bolt and nut*
2. *Rear springs*
3. *Rear arm/pivot arm screws and washers*
4. *Rear arm*
5. *Pivot arm/runner bolts, nuts and washers*
6. *Pivot arm*

Installation

Installation is reverse of removal procedure. Pay attention to the following details.

Pivot arm grease fitting must be towards the front of the vehicle.

At installation, rear arm stroke limiter must be on rear side.

Insert dowel pin into pivot arm hole, dowel pin must exceed block guide by 2 to 2.3 mm (.079 to .091 in).

Lubrication

Lubricate pivot arm and rear arm at grease fittings using suspension synthetic grease (P/N 293 550 033).

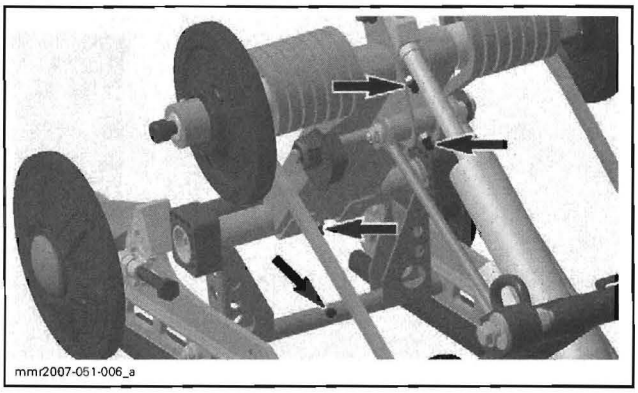

TYPICAL

COUPLING BLOCK

Both coupling blocks are identified R or L (right or left) and have position number (from 1 to 4). At installation make sure to install proper block on proper side with the same adjustment position on both sides.

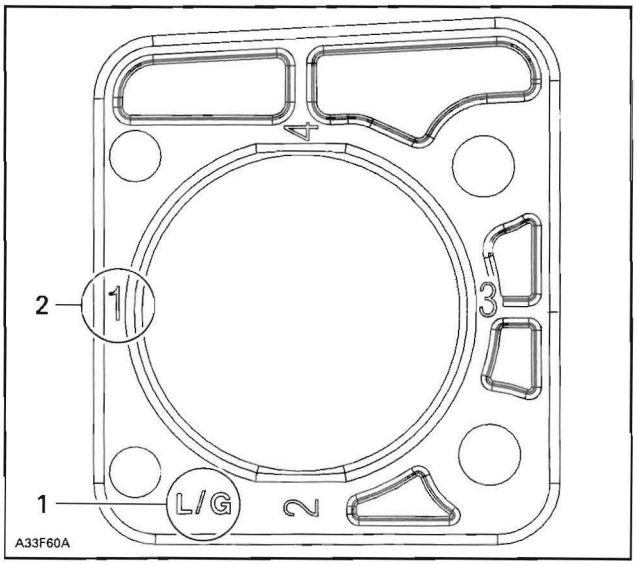

TYPICAL
1. *Blocks are identified R or L (right or left)*
2. *Blocks position number (from 1 to 4)*

MODELS	BLOCK POSITION
Freestyle Session (300F)	1
Freestyle Session (550F) Freestyle Park Legend Trail	4

IDLER WHEELS

Refer to illustration for idler wheels position at installation.

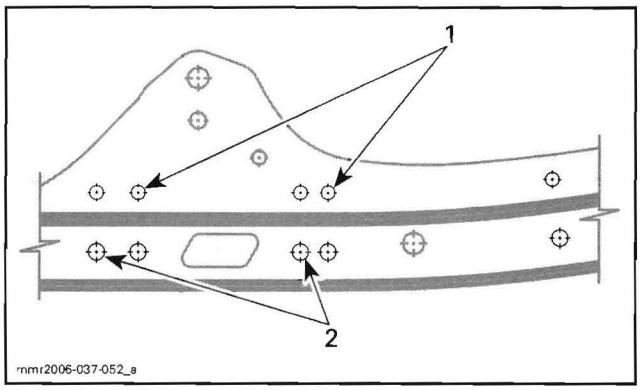

1. *RH side wheels position*
2. *LH side wheels position*

STOPPER STRAP

Inspect strap for wear or cracks, bolt and nut for tightness. If loose, inspect hole for deformation. Replace as required.

Make sure it is attached through proper hole from the end.

Torque nut to 11 N•m (97 lbf•**in**).

Freestyle Session (300F)

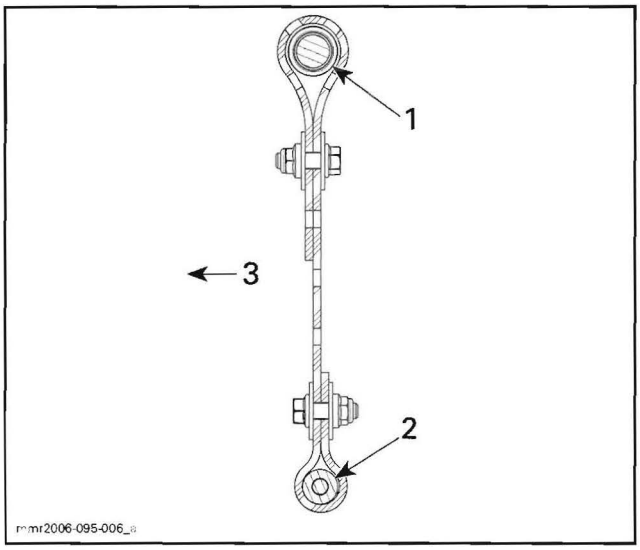

POSITION 4-2
1. *Front arm (top)*
2. *Front axle*
3. *Rear of vehicle*

All Other Models

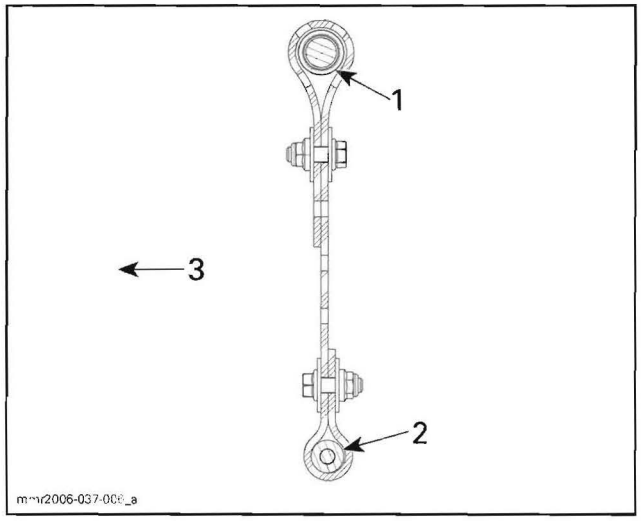

1. *Front arm (top)*
2. *Front axle*
3. *Rear of vehicle*

SUSPENSION ASSEMBLY

Removal

Lift rear of vehicle and support it off the ground.

Completely loosen track tension.

Remove rear arm top axle bolts from chassis. Use the following procedure to remove bolts easily.

- Unscrew one of the socket screws securing the rear arm top axle to frame.

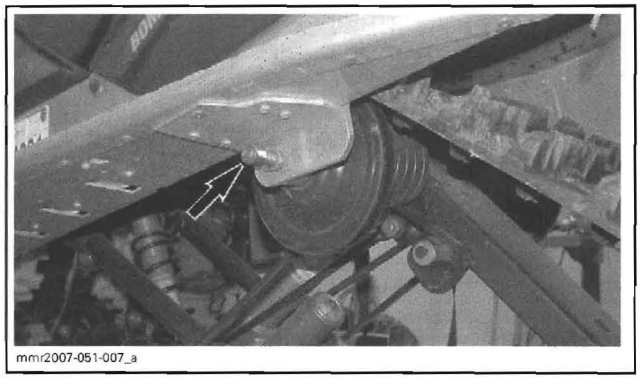

- Replace this socket screw with an hexagonal bolt (longer than socket screw) and a nut.
- Screw the hexagonal bolt completely and lock it with the nut.

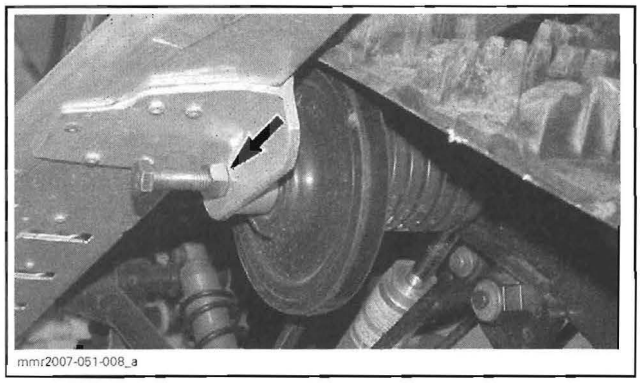

– Unscrew the socket screw on the other side then unlock nut and remove the hexagonal bolt.

Remove bolts retaining front arm to tunnel.

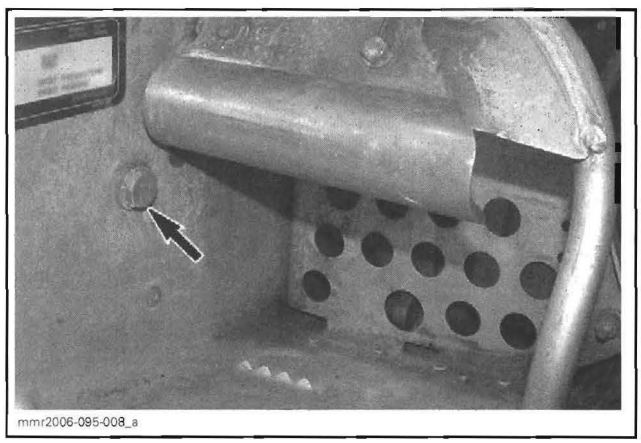

TYPICAL

Lift rear of vehicle until front arm as enough clearance to pass underneath tunnel.

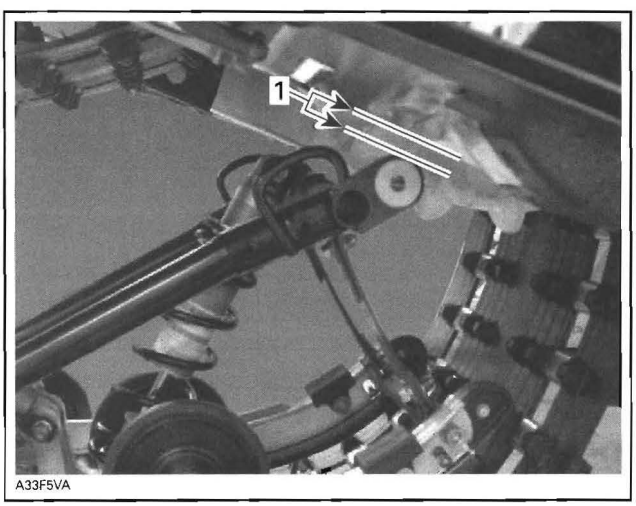

TYPICAL
1. Enough clearance

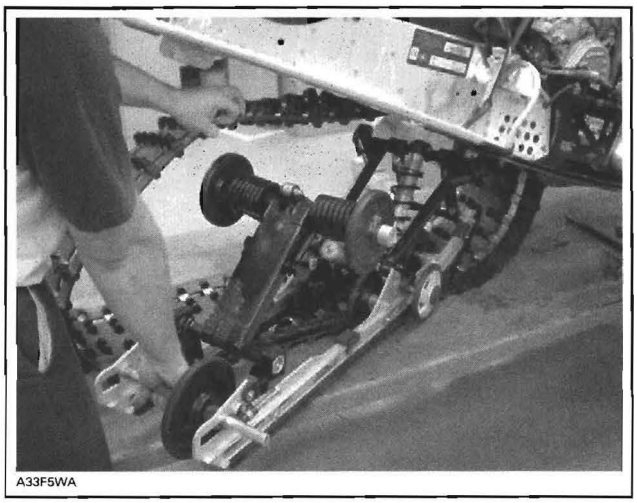

TYPICAL — REMOVE SUSPENSION

Installation

Installation is the reverse of removal procedure. Pay attention to the following details.

Inspect track thoroughly before reinstalling suspension. Refer to *TRACK*.

Install suspension into track with front portion first.

Apply Loctite 243 (blue) (P/N 293 800 060) on threads of socket screws and torque them to 85 N•m (63 lbf•ft).

Adjust track tension.

SHOCK ABSORBER INSPECTION AND SERVICING

HYDRAULIC SHOCK ABSORBER

Shock Absorber Removal

Remove shock absorber from vehicle and spring from shock. Refer to the appropriate subsection.

Shock Absorber Inspection

Secure the shock body end in a vise with its rod upward.

CAUTION: Do not clamp directly on shock body.

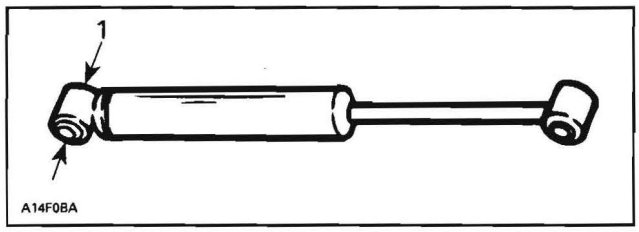

1. Clamp

Examine shock for leaks. Extend and compress the piston at least 5 complete strokes with its rod upward.

After, check that shock moves smoothly and with uniform resistance over its entire stroke.

NOTE: For the first 5 complete strokes, it could be normal to note uneven resistance.

Check the following conditions that will denote a defective shock:

- A skip or a hang back when reversing stroke at mid travel.
- Seizing or binding condition except at extreme end of either stroke.
- Oil leakage.
- A gurgling noise, after completing one full compression and extension strokes.

If suspecting a shock is freezing, proceed as follows:

Place shock in a freezer (temperature below 0°C (32°F)) for 4 hours.

Push down on rod and note its resistance. If shock is frozen it will be much more difficult to compress than one in normal condition.

Renew if any faults are present.

GAS SHOCK ABSORBER (HPG type)

Shock Absorber Removal

Remove shock absorber from vehicle and spring from shock. Refer to the appropriate subsection.

Shock Absorber Inspection

Because of gas pressure, strong resistance is felt when compressing shock.

To inspect shock operation, or if suspecting an internal leak between oil chamber and gas chamber, check shock as follows:

Install shock in a vise clamping on its bottom eyelet with its rod upward. Verify the compression stroke when the rod is fully extended.

Completely push down the shock rod then release.

The shock should extend unassisted. Rod must come out at a steady speed. If speed suddenly increases particularly at end of extension, replace shock.

If suspecting a shock is freezing, proceed as follows:

Place shock in a freezer (temperature below 0°C (32°F)) for 4 hours.

Push down on rod and note its resistance. If shock is frozen it will be much more difficult to compress than one in normal condition.

STEERING AND HANDLEBAR

SERVICE TOOLS

Description	Part Number	Page
insertion tool	529 035 897	561

SERVICE TOOLS – OTHER SUPPLIER

Description	Part Number	Page
AMP multilock-terminal housing extraction tool	755430-2	560

SERVICE PRODUCTS

Description	Part Number	Page
ThermoLube synthetic grease	219 700 417	566

300F Models

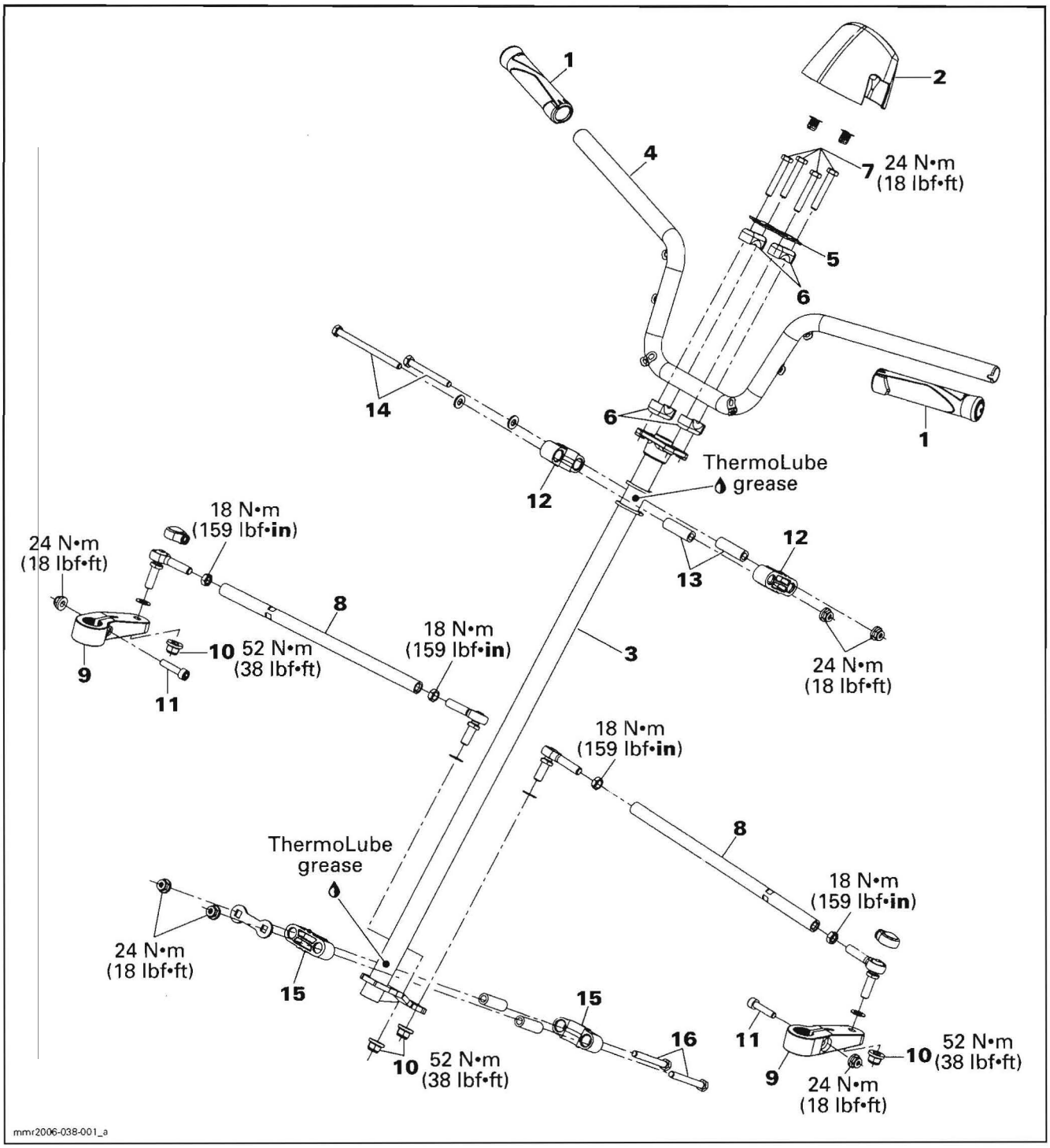
1
2
4
7 24 N•m (18 lbf•ft)
5
6
14
6
1
12
ThermoLube grease
18 N•m (159 lbf•in)
24 N•m (18 lbf•ft)
12
13
8
10 52 N•m (38 lbf•ft)
18 N•m (159 lbf•in)
3
9
11
24 N•m (18 lbf•ft)
18 N•m (159 lbf•in)
8
ThermoLube grease
18 N•m (159 lbf•in)
24 N•m (18 lbf•ft)
15
15
16
11
10 52 N•m (38 lbf•ft)
9
24 N•m (18 lbf•ft)
mmr2006-038-001_a

550F Models

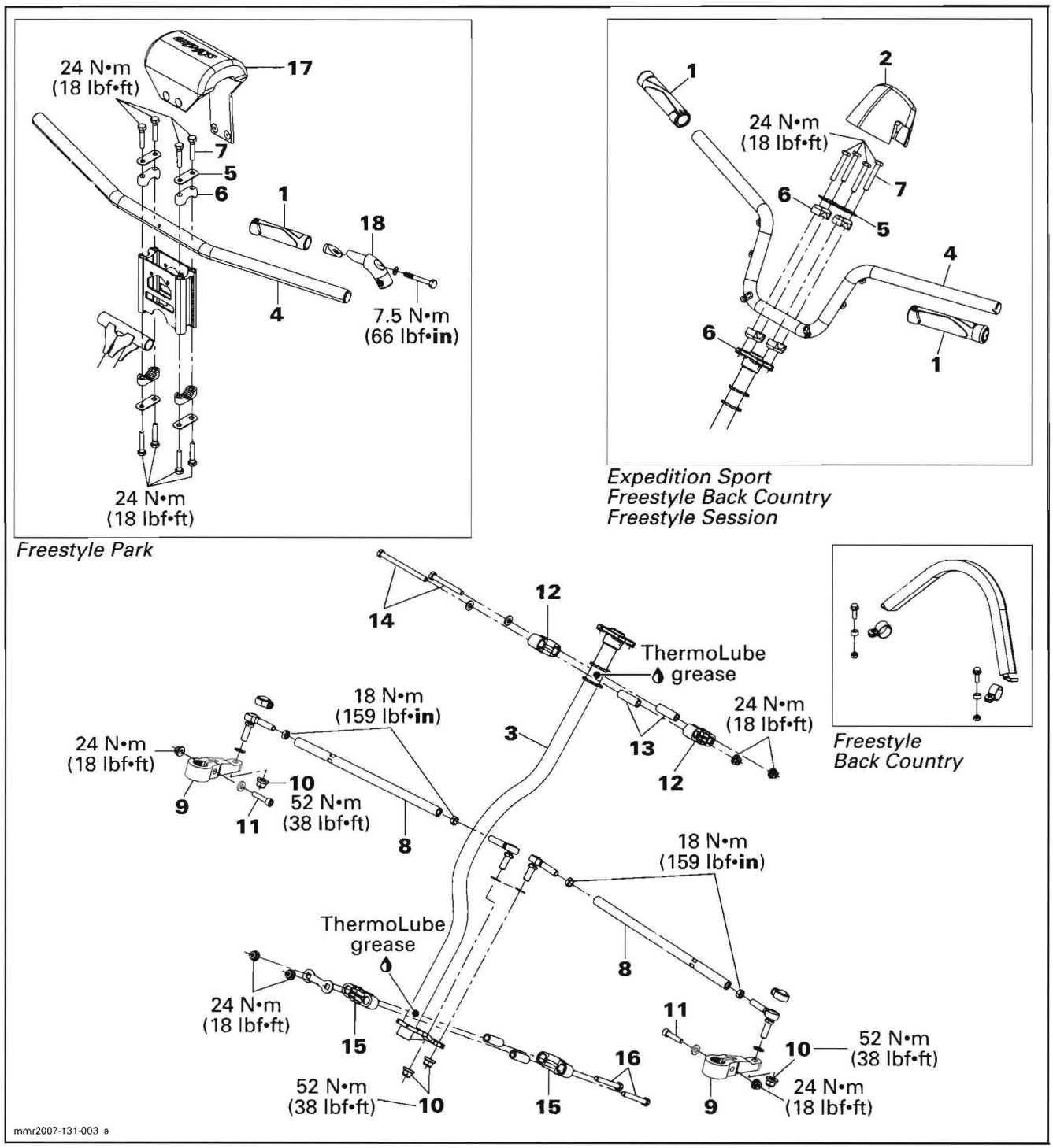
24 N•m
(18 lbf•ft)
17
7
5
6
1
18
4
7.5 N•m
(66 lbf•in)
24 N•m
(18 lbf•ft)
Freestyle Park
1
2
24 N•m
(18 lbf•ft)
7
6
5
4
6
1
Expedition Sport
Freestyle Back Country
Freestyle Session
14
12
ThermoLube
grease
18 N•m
(159 lbf•in)
24 N•m
(18 lbf•ft)
3
13
24 N•m
(18 lbf•ft)
12
10
9
11
52 N•m
(38 lbf•ft)
8
18 N•m
(159 lbf•in)
ThermoLube
grease
8
24 N•m
(18 lbf•ft)
15
11
10
52 N•m
(38 lbf•ft)
16
52 N•m
(38 lbf•ft)
10
15
9
24 N•m
(18 lbf•ft)
Freestyle
Back Country
mmr2007-131-003 a

V800 Models

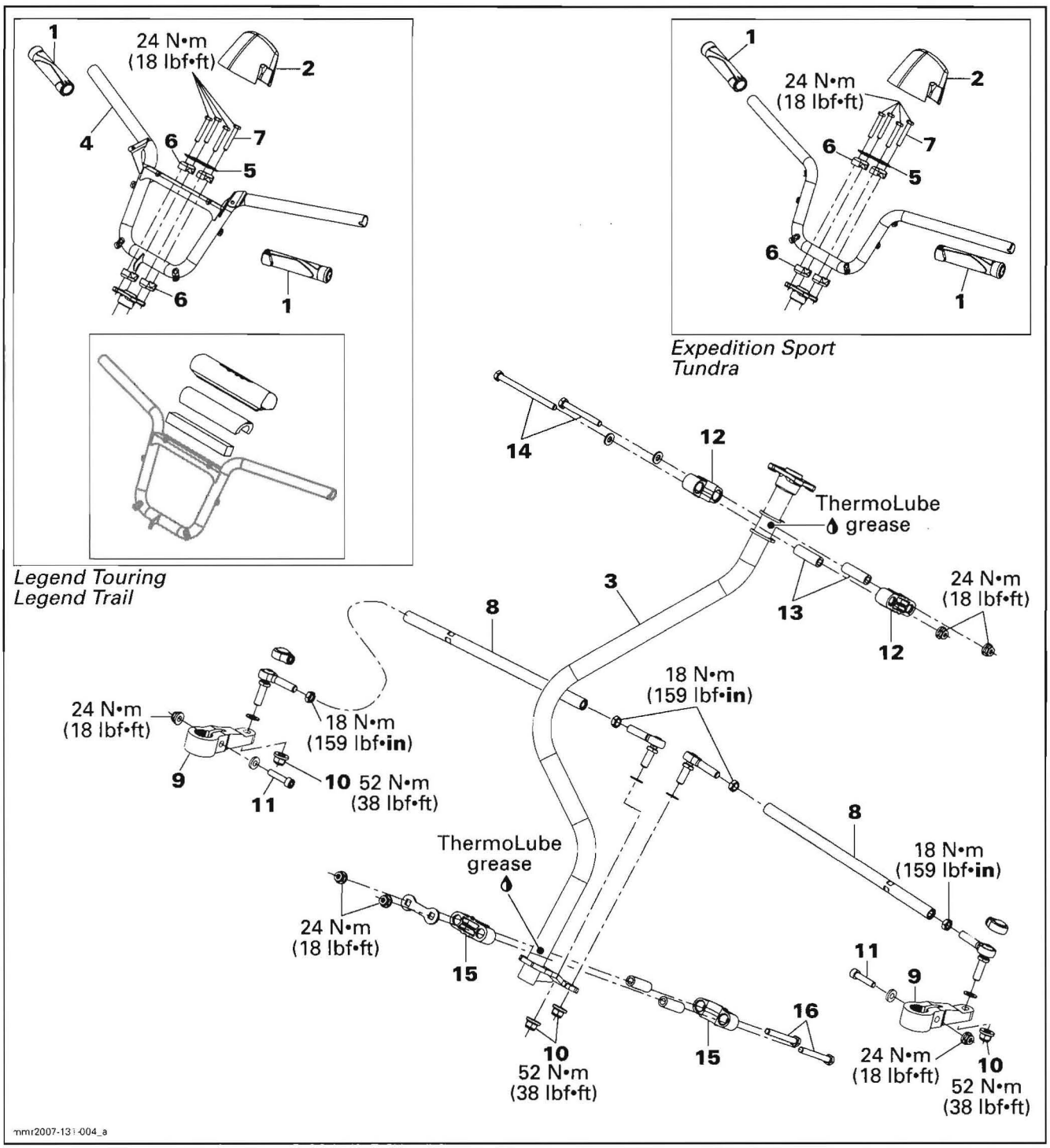
1
24 N•m
(18 lbf•ft)
2
4
6
7
5
6
1
Legend Touring
Legend Trail
1
24 N•m
(18 lbf•ft)
2
6
7
5
6
1
Expedition Sport
Tundra
14
12
ThermoLube
grease
3
8
13
24 N•m
(18 lbf•ft)
12
18 N•m
(159 lbf•in)
24 N•m
(18 lbf•ft)
18 N•m
(159 lbf•in)
9
10 52 N•m
(38 lbf•ft)
11
8
ThermoLube
grease
18 N•m
(159 lbf•in)
24 N•m
(18 lbf•ft)
15
11
9
16
10
52 N•m
(38 lbf•ft)
15
24 N•m
(18 lbf•ft)
10
52 N•m
(38 lbf•ft)
mmr2007-131-004_a

GENERAL

During assembly/installation, use the torque values and service products as in the exploded view(s).

Clean threads before applying a threadlocker. Refer to *SELF-LOCKING FASTENERS* and *LOCTITE APPLICATION* at the beginning of this manual for complete procedure.

⚠ WARNING

Torque wrench tightening specifications must strictly be adhered to.
Locking devices (e.g.: locking tabs, elastic stop nuts, self-locking fasteners, cotter pins, etc.) must be installed or replaced with a new ones where specified. If the efficiency of a locking device is impaired, it must be renewed.

PROCEDURES

HANDLEBAR GRIP

NOTE: To verify heating elements, refer to *LIGHTS, INSTRUMENTS AND ACCESSORIES.*

Removal

To easily remove a worn or defective grip **no. 1**, cut it with a kife.

NOTE: If grip is to be reused, use the following procedure.

CAUTION: Removing grip from handlebar might damage the heating element. Do not remove needlessly.

Throttle Side:

Remove handlebar cap **no. 2** or steering padding **no. 17** then unplug RH harness on top of steering column **no. 3**. Cut locking ties retaining RH harness to handlebar **no. 4**.

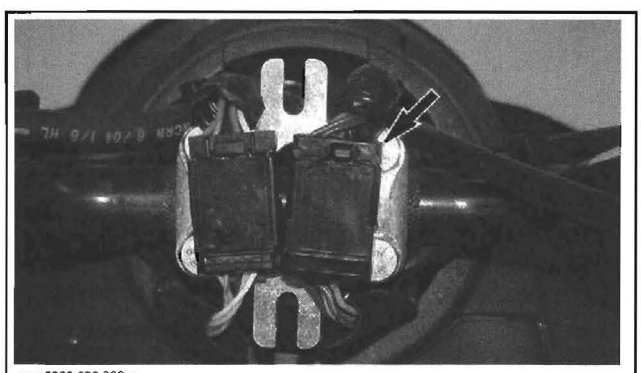
mmr2006-038-003_a

TYPICAL

Remove circlip from throttle cable.

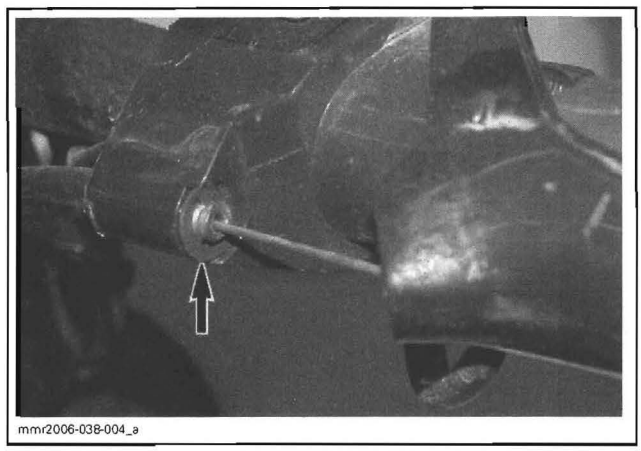
mmr2006-038-004_a

TYPICAL

Unfasten throttle cable from throttle lever, then pull out cable from throttle lever housing.

Loosen set screw retaining throttle lever housing to handlebar.

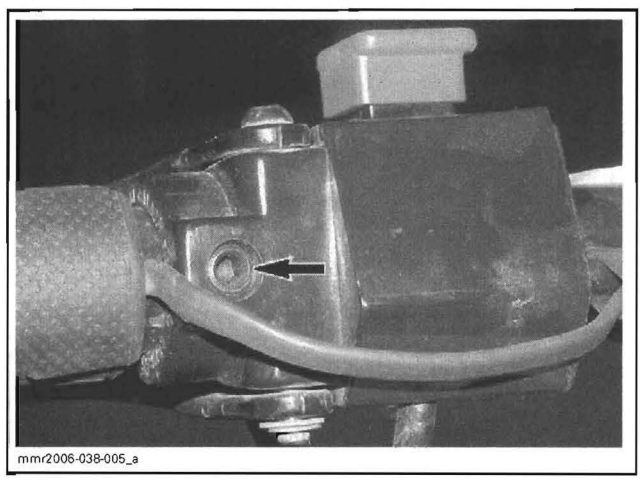
mmr2006-038-005_a

TYPICAL

Move throttle lever housing to create a gap with grip.

On **FREESTYLE Park**, remove J-hook **no. 18** from the end of grip.

Insert the open side of a 23 mm (7/8 in) wrench against the inner end of grip.

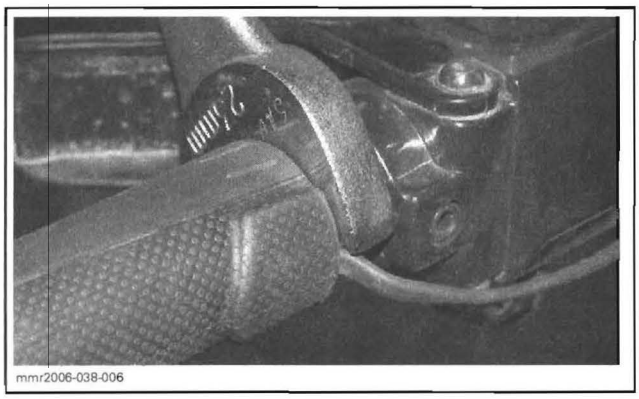

TYPICAL

CAUTION: Pay attention not to damage wires with the wrench.

Using a plastic hammer, tap on the side of the wrench end to make the grip slide out.

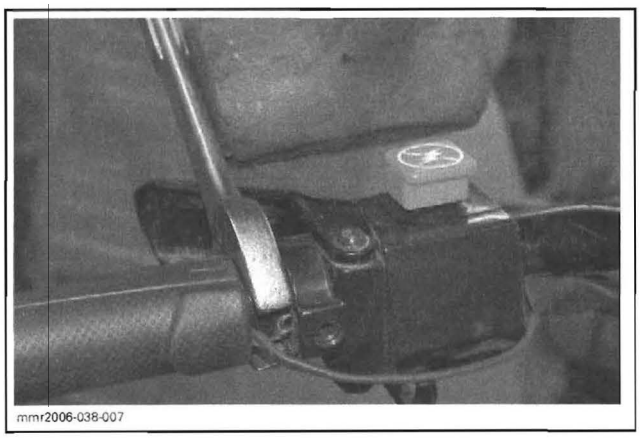

TYPICAL

Cut locking ties on harness.

Using a tool such as the AMP multilock-terminal housing extraction tool (P/N 755430-2), push the 3 wires of the grip harness out of connector housing. Note the position of the wires for reinstallation.

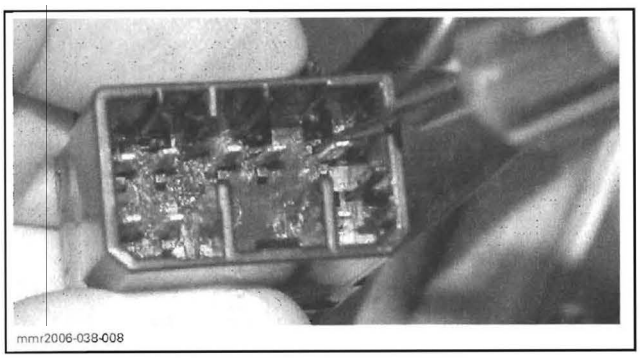

TYPICAL

Pull grip harness out of throttle lever housing.

Brake Side:

Unplug connector from brake light switch located on master cylinder.

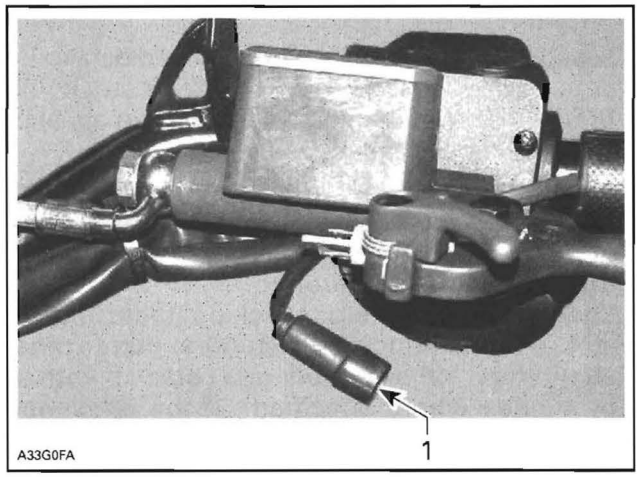

TYPICAL
1. Connector unplugged

Remove handlebar cap **no. 2** then unplug LH harness on top of steering column. Cut locking ties retaining brake light switch/grip harness to handlebar.

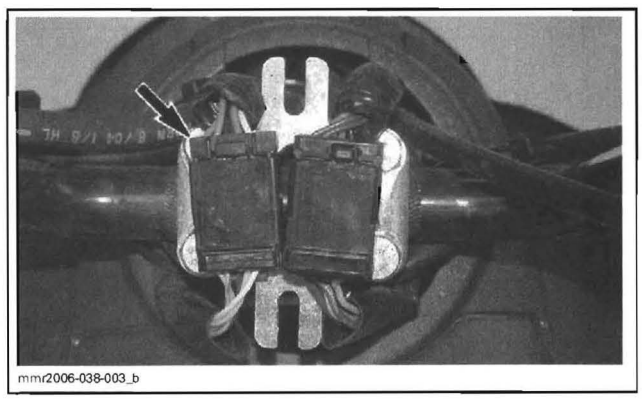

TYPICAL

Using a tool such as the AMP multilock-terminal housing extraction tool (P/N 755430-2), push the 3 wires of the grip harness out of connector housing. Note the position of the wires for reinstallation.

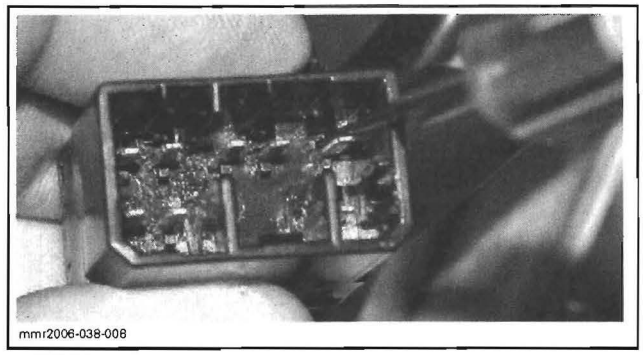

TYPICAL

Pull grip wires out of brake light switch/grip harness.

On **FREESTYLE Park**, remove J-hook **no. 18** from the end of grip.

Insert the open side of a 23 mm (7/8 in) wrench against the inner end of grip.

CAUTION: Pay attention not to damage wires with the wrench.

Using a plastic hammer, tap on the side of the wrench end to make the grip sliding out.

Installation

Installation is the opposite procedure of the removal but pay attention to the following.

Clean handlebar ends and inside of grip with isopropyl alcohol. Let dry before installation.

CAUTION: Handlebar end and inside of grip must be clean and dry before installing grip to ensure proper adhesion.

Position grip on handlebar with its harness aligned towards the front of the vehicle.

Use the insertion tool (P/N 529 035 897) to properly install grip.

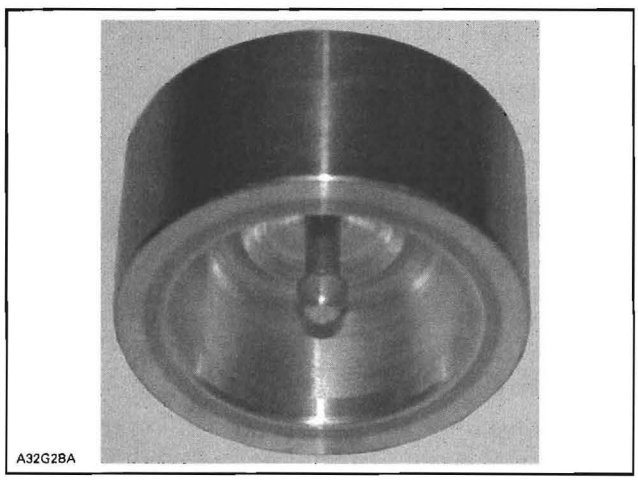

CAUTION: Installing grip without the insertion tool is likely to damage its heating element.

Position the insertion tool at the outside end of grip.

Using a plastic hammer, tap on tool to push grip on. Continue to tap until grip bottoms.

Properly route harness then reinstall removed parts.

Reinstall terminals and replug connectors. Test grips to ensure they heat properly.

HANDLEBAR

Removal

NOTE: If the handlebar **no. 4** must be changed, remove all components (handle grip, throttle lever housing, etc.) before removing it from vehicle.

Remove handlebar cover **no. 2** or steering padding **no. 17**.

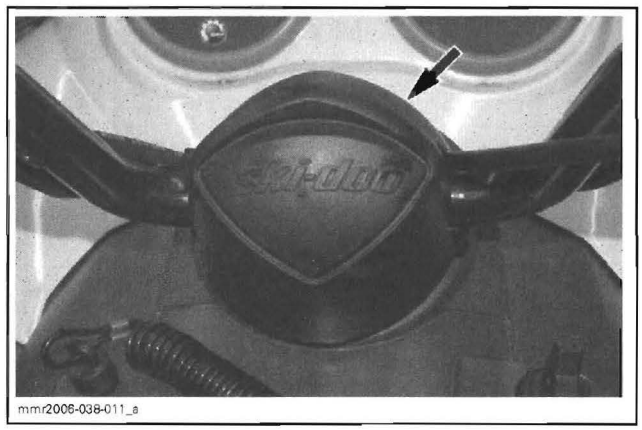

TYPICAL — HANDLEBAR COVER SHOWN

Unplug connectors.

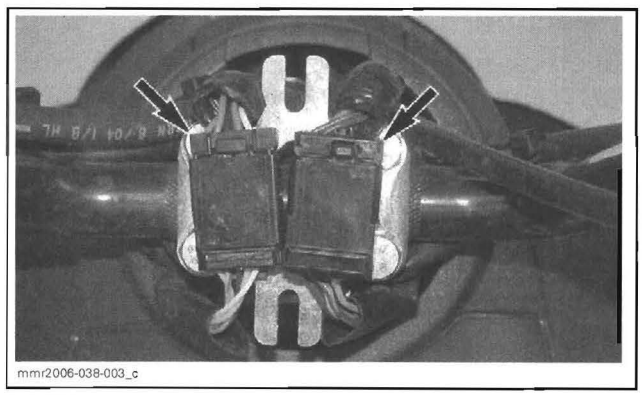

TYPICAL

Using a small tool, unclip connector housings from the reinforcement plate **no. 5**.

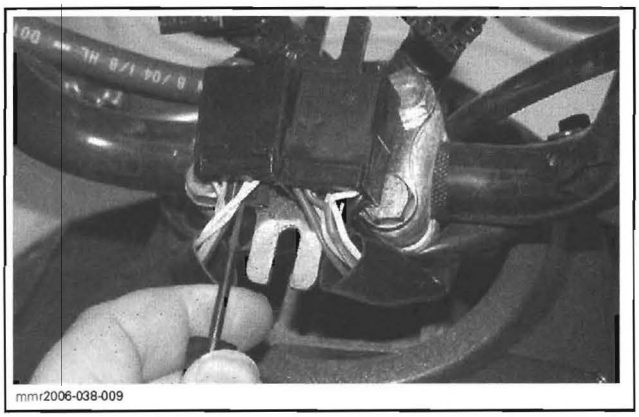
mmr2006-038-009

TYPICAL

Remove handlebar bolts, reinforcement plate and handlebar clamps. Cut locking ties retaining harness to handlebar.

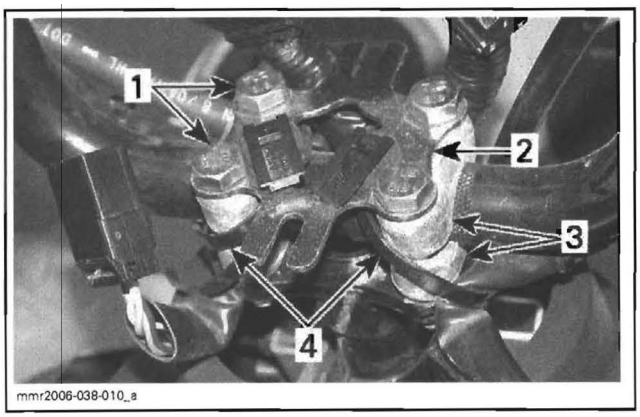

mmr2006-038-010_a

TYPICAL
1. *Handlebar bolts*
2. *Reinforcement*
3. *Handlebar clamps*
4. *Cut these locking ties*

Inspection

Inspect the handlebar for damage, cracks or bending, replace if any of these problems is detected.

Check handlebar clamps **no. 6** for cracks or distortion, replace if necessary.

Installation

The installation is the reverse of the removal procedure. However pay attention to the following.

Install all handlebar bolts **no. 7** before torquing them. Torque to 24 N•m (18 lbf•ft).

NOTE: When installing the reinforcement plate, position its holes or the connector supports rearward.

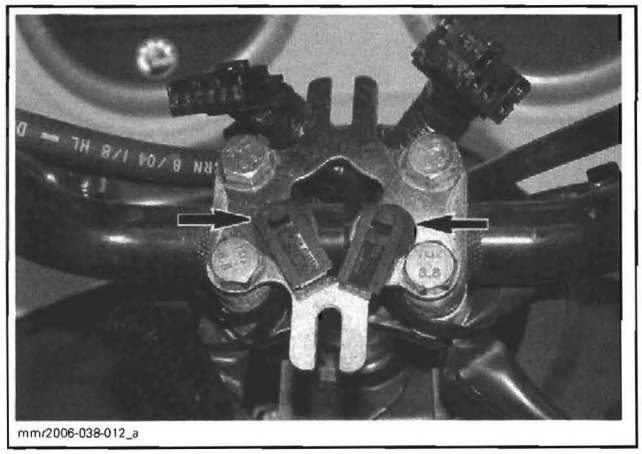
mmr2006-038-012_a

TYPICAL

HANDLEBAR EXTENSION

FREESTYLE Park

Removal

Remove handlebar from handlebar extension.

Unscrew bolts retaining the extension to steering column.

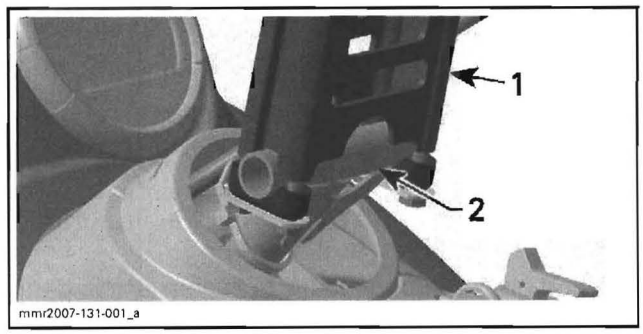

mmr2007-131-001_a

TYPICAL
1. *Handlebar extension*
2. *Steering column*

Remove handlebar extension from vehicle.

Inspection

Check handlebar extension for cracks, bend or other damages. Replace defective parts.

⚠ WARNING

Do not try to repair a defective handlebar extension.

Installation

The installation is the reverse of the removal procedure. However, pay attention to the following.

When installing handlebar extension, ensure to position the rounded opening at the bottom and to tilt the extension so that it rests against steering support stopper.

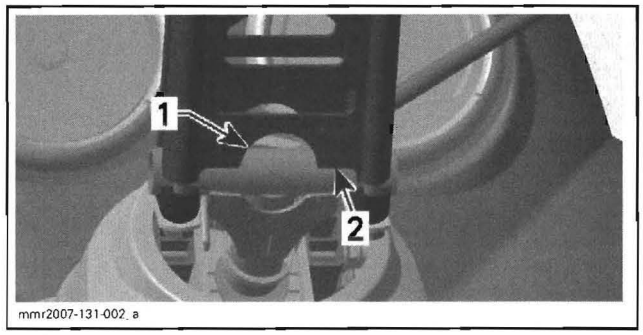

1. Opening here
2. Extension against stopper

TIE-ROD

NOTE: Use same procedure for RH and LH side.

Inspection

Check tie-rod ends for looseness. If play is excessive, replace tie-rod **no. 8**.

Check if the tie-rod is bent, cracked or otherwise damaged. Replace if necessary.

Removal

Separate the tie-rod end from steering arm **no. 9**.

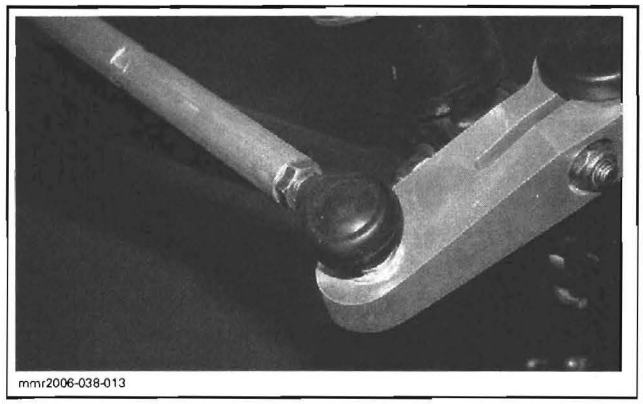

Then separate the other end of tie-rod from steering column **no. 3**.

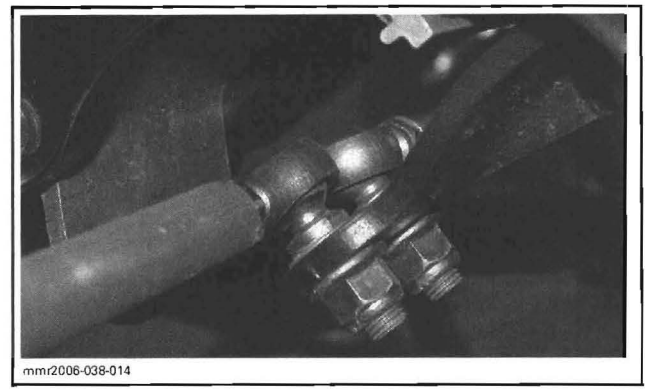

Installation

The maximum external threaded length not engaged in the tie rod must not exceed 20 mm (25/32 in).

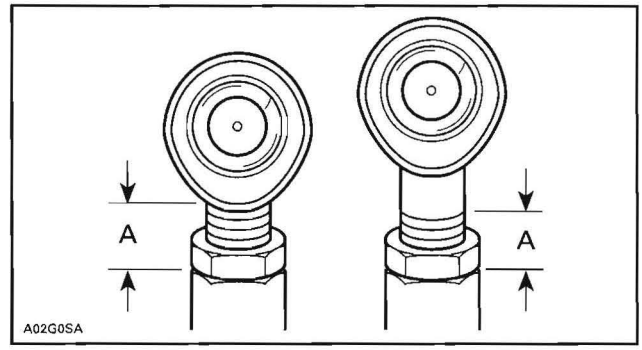

A. 20 mm (25/32 in)

Install tie-rod with the groove on steering arm side. Do not forget to place a hardened washer between tie-rod end and steering arm as well as tie-rod end and steering column.

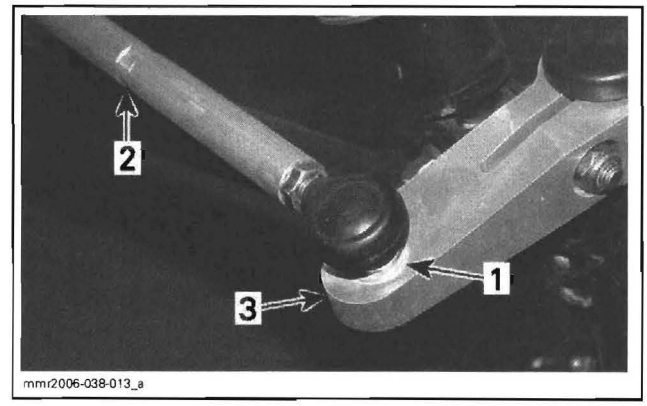

1. Hardened washer
2. Tie-rod groove
3. Steering arm

Install nuts **no. 10** retaining tie-rod. Torque them to 52 N•m (38 lbf•ft).

Complete the procedure by performing the steering alignment, refer to *SKI AND STEERING ALIGNMENT*.

STEERING ARM

Removal

Separate tie-rod **no. 8** from steering arm **no. 9**.

Remove ski leg cap.

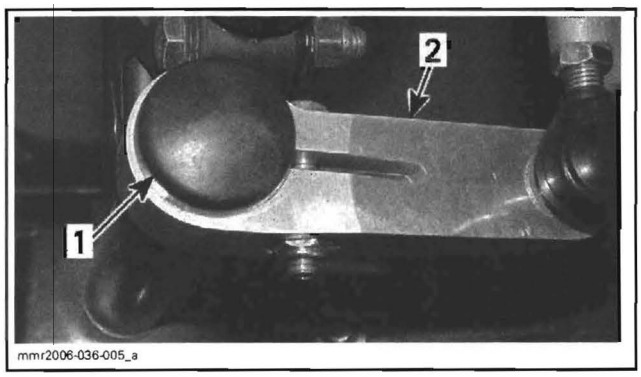

1. Ski leg cap
2. Steering arm

To maintain correct steering alignment when reassembly, scribe a mark on the steering arm and ski leg before disassembly.

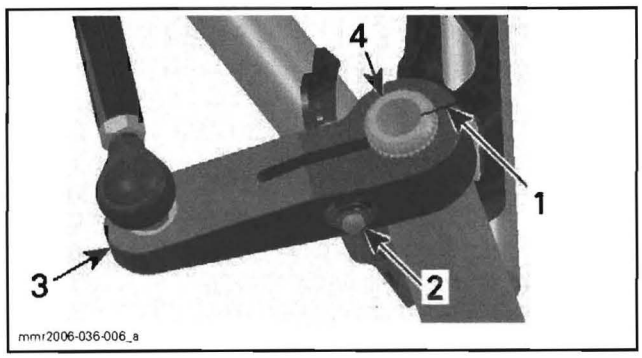

1. Scribed mark
2. Steering arm bolt
3. Steering arm
4. Ski leg

Remove steering arm from ski leg.

Inspection

Check splines on steering arm and on ski leg. If a worn spline is found, replace the part with a new one.

Installation

The installation is the reverse of the removal procedure. However, pay attention to the following.

If a new part is installed, use the following illustration to position the steering arm correctly.

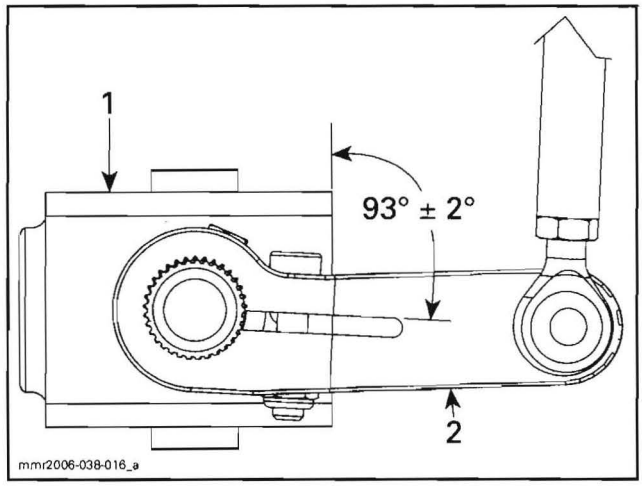

1. Ski leg base
2. Steering arm

Torque steering arm bolt **no. 11** to 24 N•m (18 lbf•ft).

STEERING COLUMN

Removal

Lower Section

Separate both tie-rods from steering column.

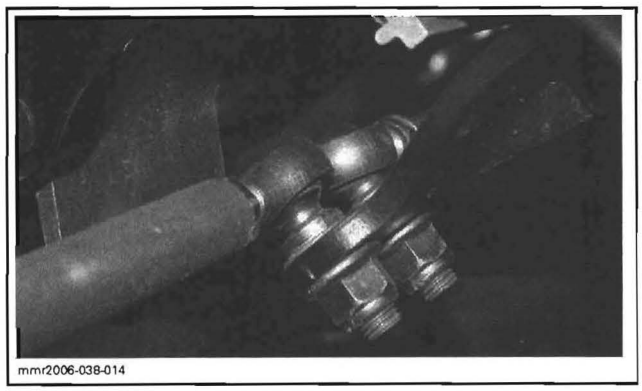

Remove hood, muffler and exhaust pipe.

Drill rivets (4) that attach right and left bottom pans to lower cross member arms.

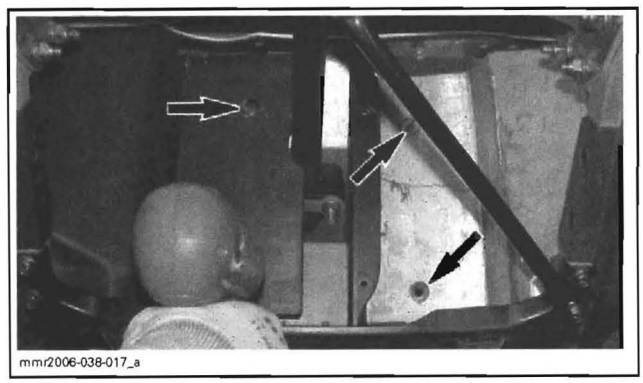

Move both bottom pan on the side to allow an access to the lower section of steering column.

Remove nuts, stopper plate, halves housings with bushings and bolts.

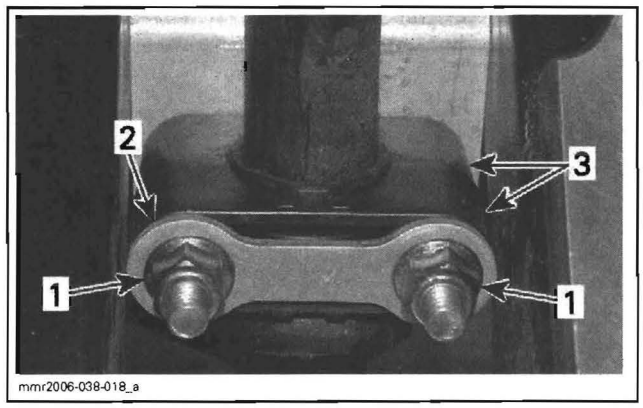

1. Nuts
2. Stopper plate
3. Halves housing with bushings

Upper Section

Remove console, refer to *BODY*.

Remove cable protector by pulling it.

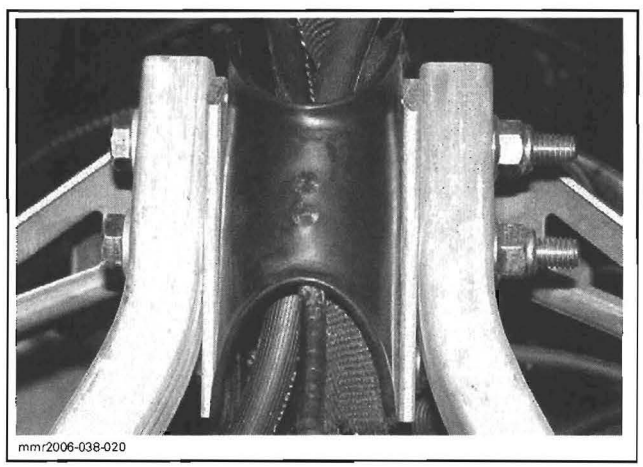

Remove handlebar **no. 4** from steering column **no. 3**, refer to *HANDLEBAR*.

On RH side of vehicle, remove the front bolt of console support and loosen the rear one.

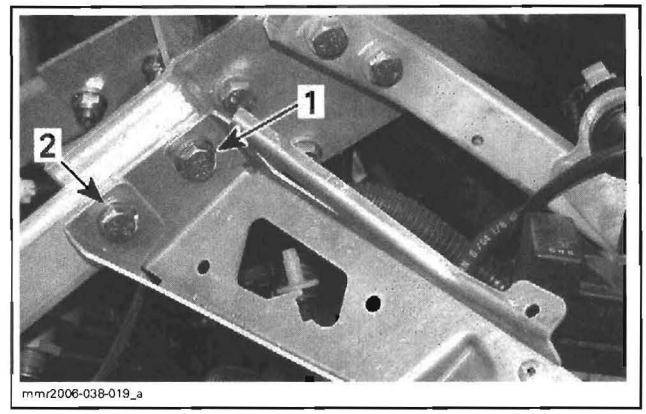

1. To remove
2. Loosen this bolt

Remove bolts retaining the both upper cross member arms to the retaining block.

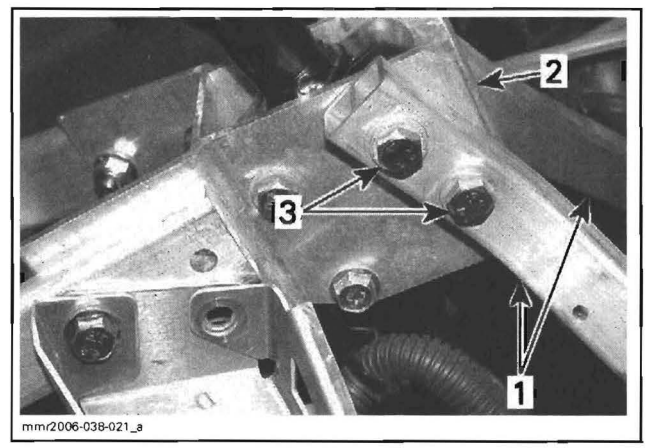

1. Upper cross member arms
2. Retaining block
3. Bolts to remove

Remove the rear bolt holding halves housings and steering column.

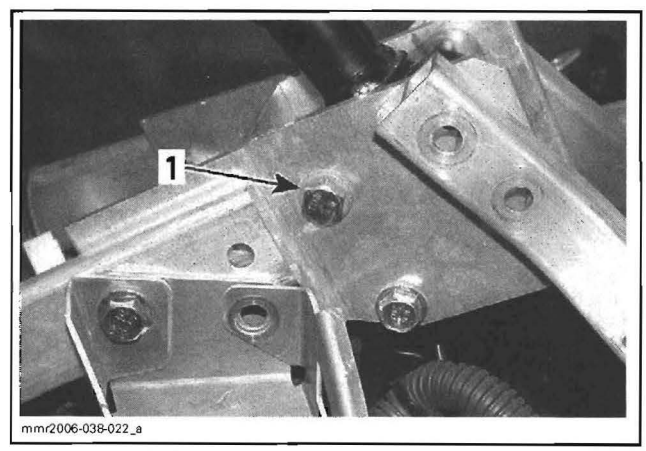

1. Remove this bolt

Remove halves housings **no. 12** and bushings **no. 13** from steering column then pull steering column downward.

Inspection

Check steering column for crack, bend or other damage. Replace if necessary.

Installation

The installation is the reverse of the removal procedure. However, pay attention to the following.

Upper Section

Apply ThermoLube synthetic grease (P/N 219 700 417) on steering column before installing halves housings **no. 12**.

Torque retaining block bolts **no. 14** to 24 N•m (18 lbf•ft).

Lower Section

Apply ThermoLube synthetic grease (P/N 219 700 417) on steering column before installing halves housings **no. 15**.

Torque bolts **no. 16** to 24 N•m (18 lbf•ft).

Install tie-rods, refer to *TIE-ROD* above in this section.

SKIS AND STEERING ALIGNMENT

SERVICE PRODUCTS

Description	Part Number	Page
suspension grease	293 550 033	570–571

Molded Ski Type

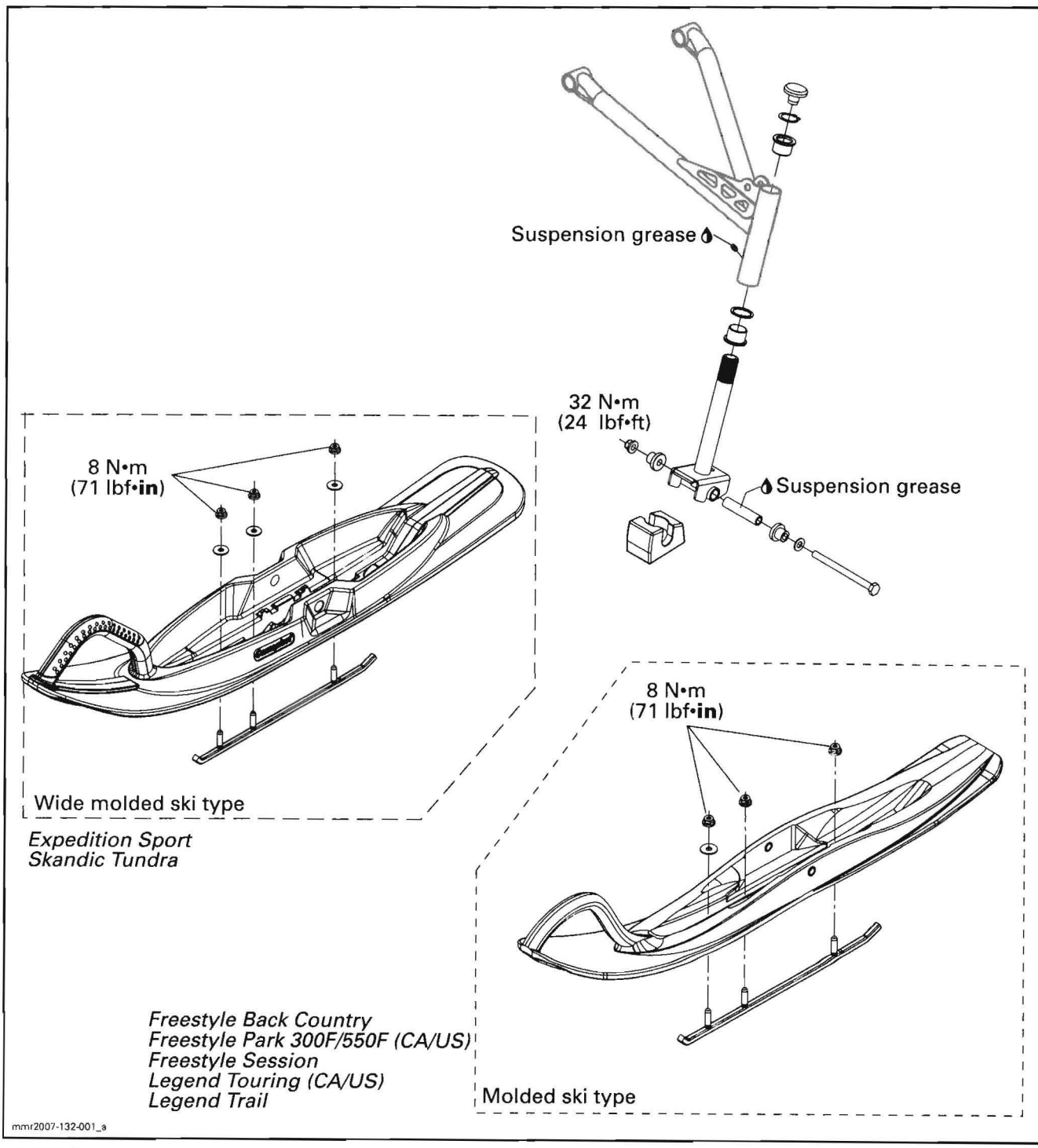

Pilot Ski Type

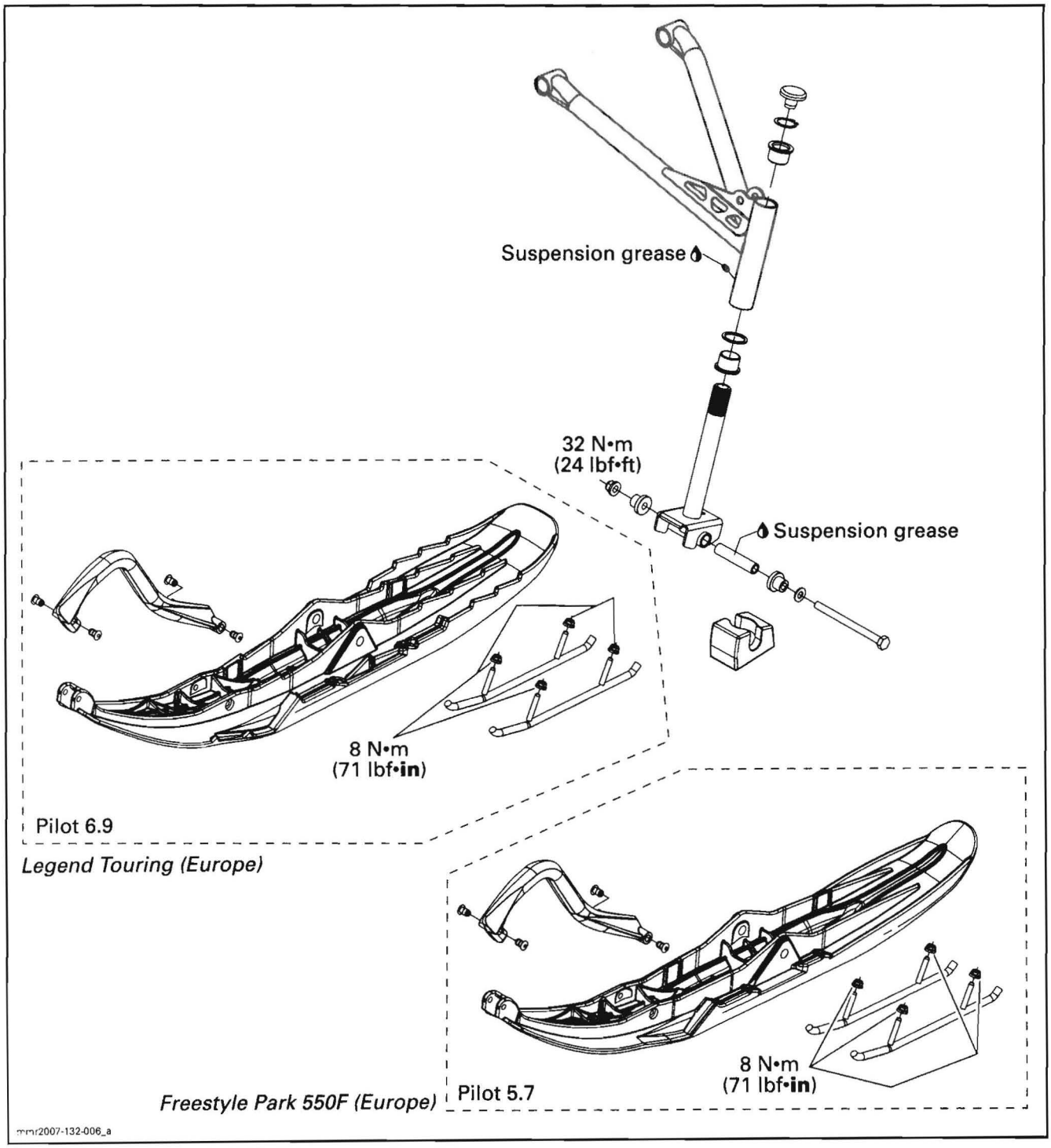

GENERAL

During assembly/installation, use the torque values and service products as in the exploded view(s).

Clean threads before applying a threadlocker. Refer to *SELF-LOCKING FASTENERS* and *LOCTITE APPLICATION* at the beginning of this manual for complete procedure.

⚠ WARNING

Torque wrench tightening specifications must strictly be adhered to.
Locking devices (e.g.: locking tabs, elastic stop nuts, self-locking fasteners, cotter pins, etc.) must be installed or replaced with a new ones where specified. If the efficiency of a locking device is impaired, it must be renewed.

PROCEDURES

SKI RUNNER

Inspection

Lift the front of vehicle and check ski runners for wear or damages (missing or broken carbide). Replace if necessary.

Removal

Lift the front of vehicle and support it off ground.

Unscrew the ski runner nuts then remove ski runners.

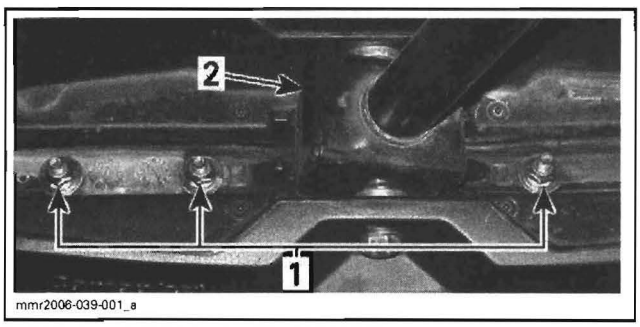

TYPICAL — WIDE MOLDED SKI TYPE
1. *Ski runner nuts*
2. *Ski leg*

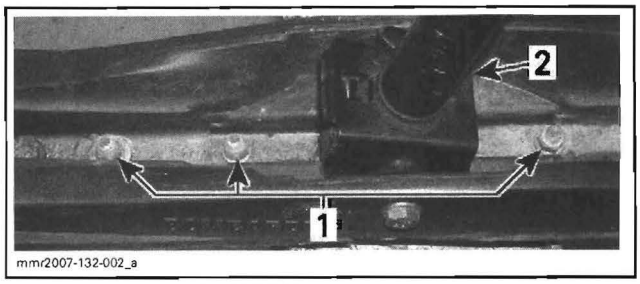

TYPICAL — MOLDED SKI TYPE
1. *Ski runner nuts*
2. *Ski leg*

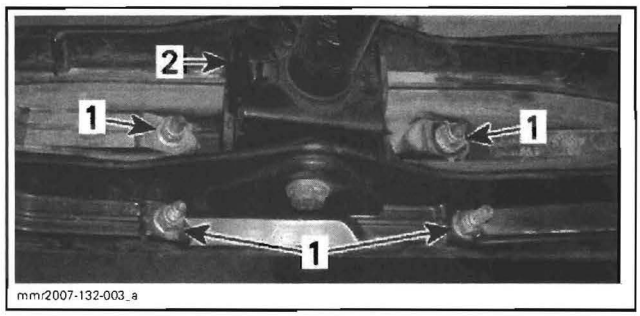

TYPICAL — PILOT SKI TYPE
1. *Ski runner nuts*
2. *Ski leg*

Installation

The installation is the reverse of the removal procedure.

NOTE: On **Tundra and Expedition models**, do not forget washers between ski and ski runner nuts.

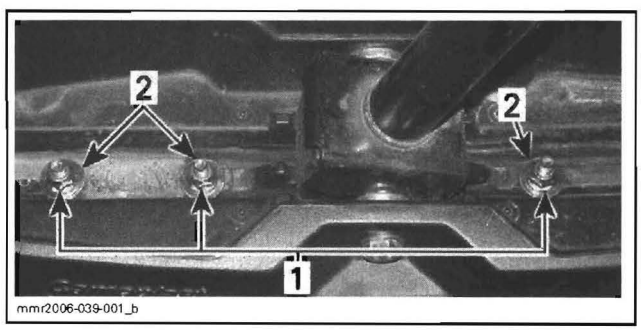

1. *Ski runner nuts*
2. *Washers*

Torque ski runner nuts to 8 N•m (71 lbf•**in**).

SKI

Inspection

Check skis and runners for wear, replace as necessary.

Check condition of ski stopper. Replace it when deteriorated.

Removal

Lift front of vehicle and support it off ground.

Unscrew nut then pull ski bolt out. Remove ski from vehicle.

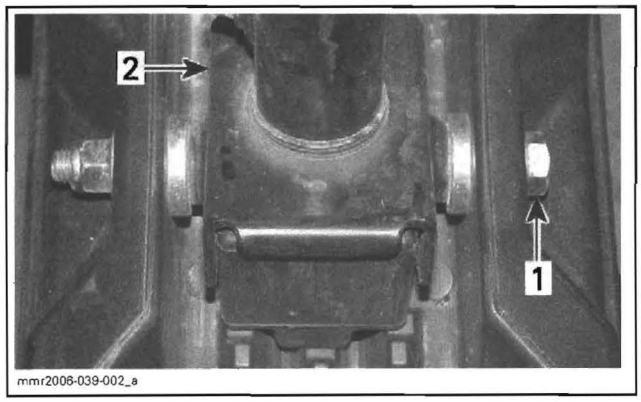

TYPICAL
1. Ski bolt
2. Ski leg

Installation

Make sure bushings are installed in ski holes.

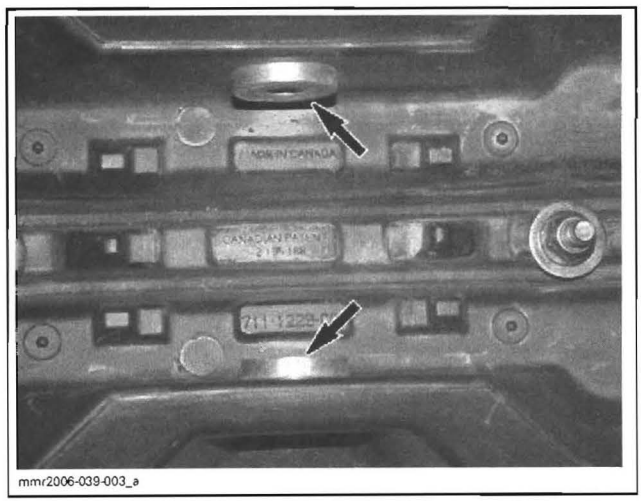

Position the ski stopper. The higher part of ski stopper must be installed towards the front of vehicle.

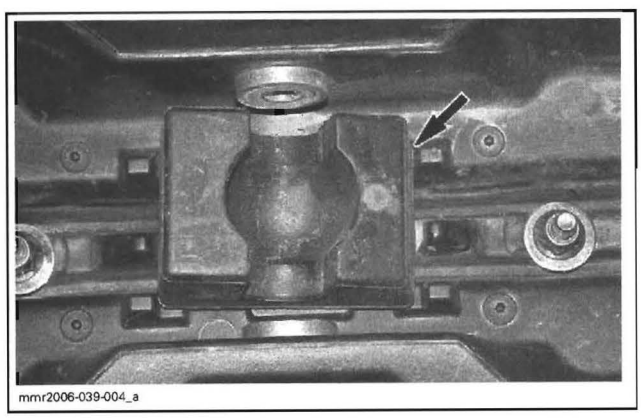

Apply suspension grease (P/N 293 550 033) on spacers and also on inner tube of ski leg.

Place bushings into ski holes.

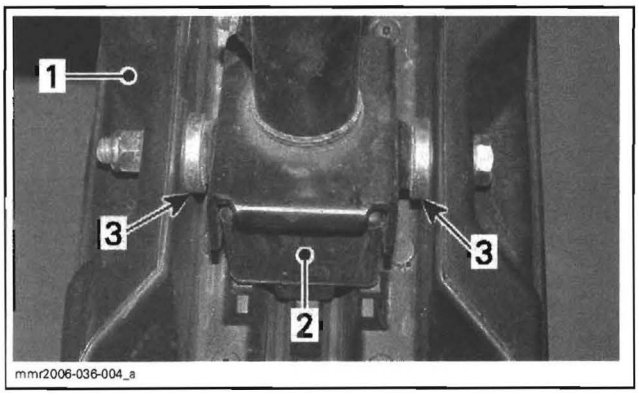

1. Ski
2. Ski leg
3. Bushings

Install ski bolt and torque it to 32 N•m (24 lbf•ft).

Legend Touring (EUROPE)

It is possible to change the ski stance from narrow to wide or vise versa, follow the procedure as given below.

Ensure ski leg bushings are still on ski legs.

Install ski stopper.

Determine the ski stance. Install the spacer inside for a narrow adjustment and outside for a wide adjustment.

⚠ WARNING

Ensure to place spacer on proper side of ski leg on both skis.

Install ski bolt and torque it to 32 N•m (24 lbf•ft).

SKI HANDLE (for Pilot ski types)

Removal

Remove ski from vehicle.

Using a 9 mm (3/8 in) bit, remove ski handle rivets. Drill the head of rivet only off, do not try to drill all the way through the rivet. Angle the drill bit to reduce the chance of spinning the rivet in the ski.

Remove handle from ski.

Place handle in hot water for 10 minutes then using a punch, drive the inner part of rivet out of handle.

Installation

To install rivets, use a C-clamp and a short 10 mm socket.

Place a rivet in position and insert it into ski and ski handle. Repeat the procedure for the other side.

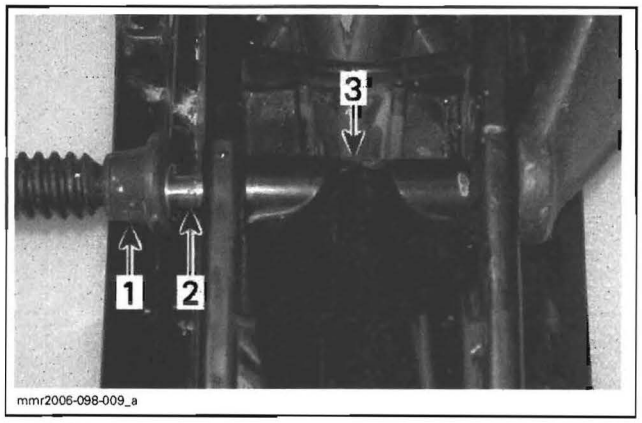

1. *C-clamp*
2. *Rivet*
3. *Handle*

When both rivets are installed, use a short 10 mm socket to push rivet heads against ski.

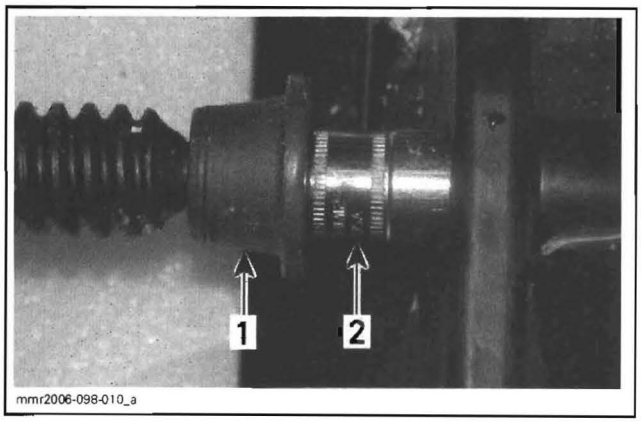

1. *C-clamp*
2. *10 mm socket*

SKI LEG

Inspection

Check ski legs for cracks, bend or other damages. Replace if necessary.

Move ski legs to feel bushings wear. If the play appears important, remove ski legs and check bushings visually. Replace them if necessary.

Removal

Remove ski from ski leg.

Remove cap and circlip.

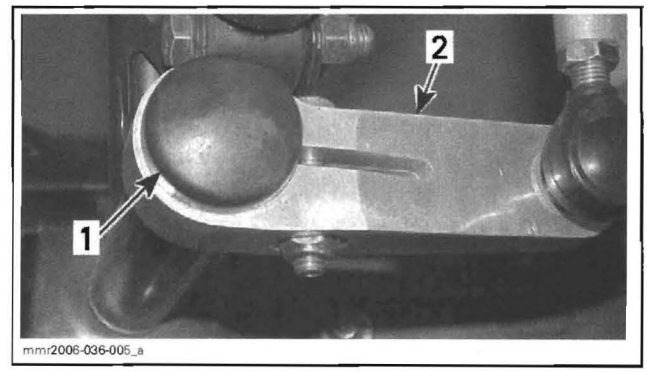

1. *Ski leg cap*
2. *Steering arm*

Scribe marks on steering arm and ski leg before separating them.

Loosen steering arm bolt and pull up steering arm.

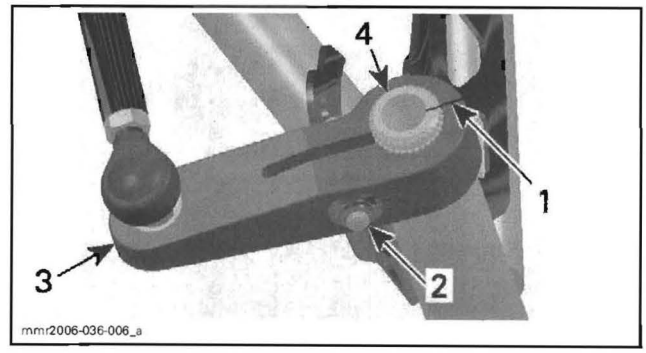

1. *Scribed mark*
2. *Steering arm bolt*
3. *Steering arm*
4. *Ski leg*

Installation

The installation is the reverse of the removal procedure. Pay attention to the following.

Lubricate the ski leg with suspension grease (P/N 293 550 033).

Torque steering arm bolt to 24 N•m (18 lbf•ft).

STEERING ALIGNMENT

Ski alignment is performed by adjusting length of left and right tie-rods. To do this, use the following procedure:

- Leave the vehicle on the ground.
- Position handlebar so that it is straight ahead position by measuring from the extremities of the grips to the rear most edge of the tunnel, as shown.

NOTE: The reference point must be the same to each side.

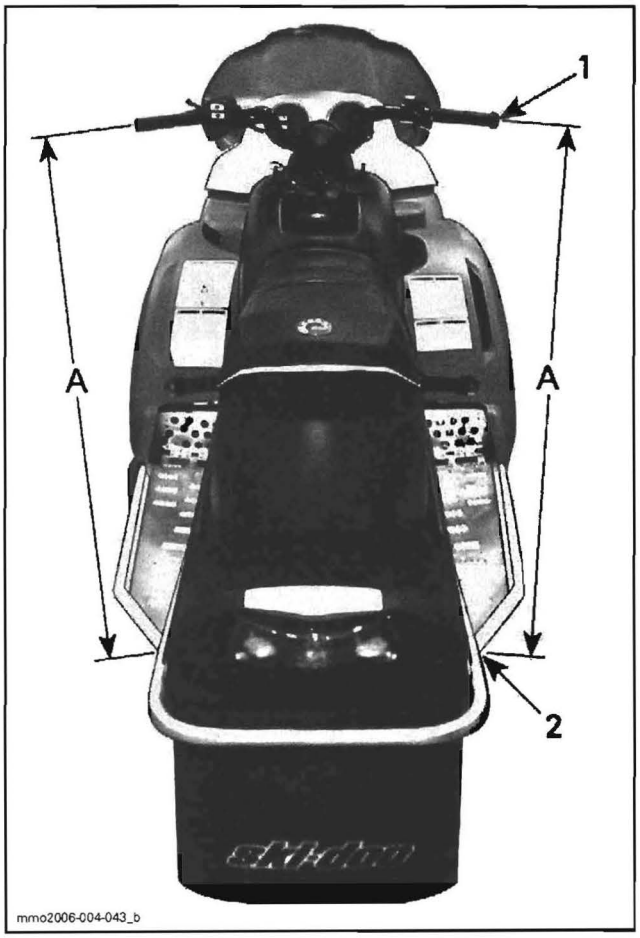

1. Equal distance "A" on each side
2. Same reference point

– Verify if skis are in straight-ahead position, place a straight edge against pre-adjusted track and measure distance between front and rear ski runner nuts and straight edge.
– When skis are in straight ahead position, adjust the toe-out. Use the following illustration and this equation to determine the perfect steering alignment.

A – B = C

C = 5 mm (.197 in).

For **molded ski type**: The moulding line at the center of ski is used as reference point. Always use this line to align skis.

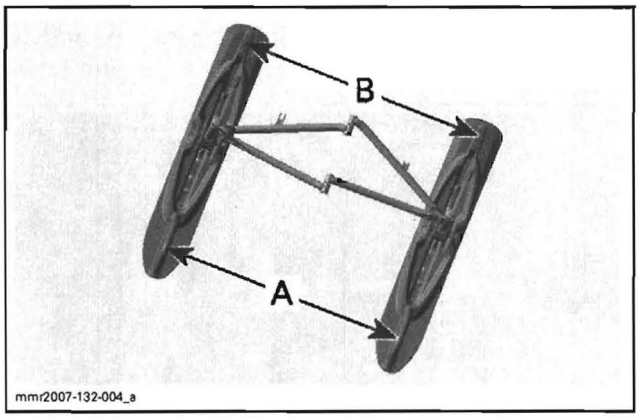

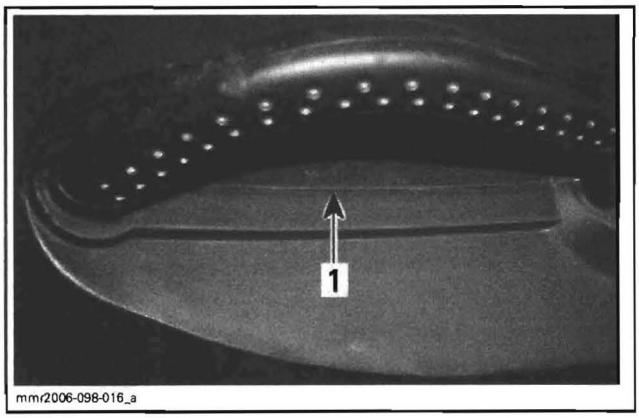

1. Moulding line

For **Pilot ski type**: Use the recesses to measure the difference between skis.

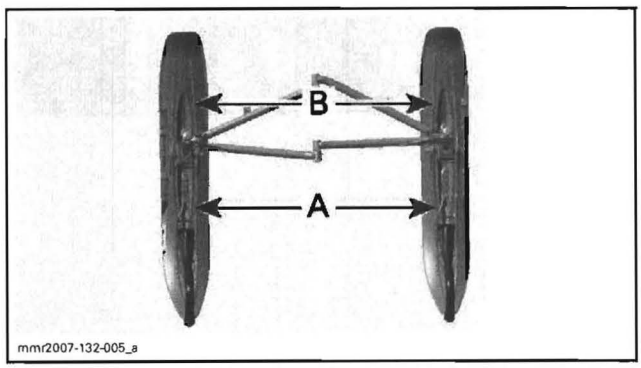

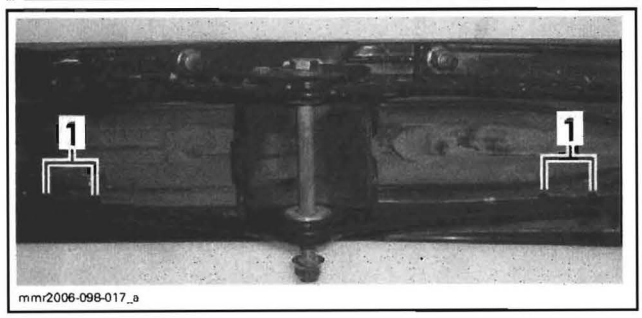

RH SKI SHOWN
1. Recesses

If adjustment is needed, loosen tie-rod jam nuts then turn tie-rods to change its length. Retighten jam nuts and torque them to 18 N•m (159 lbf•**in**).

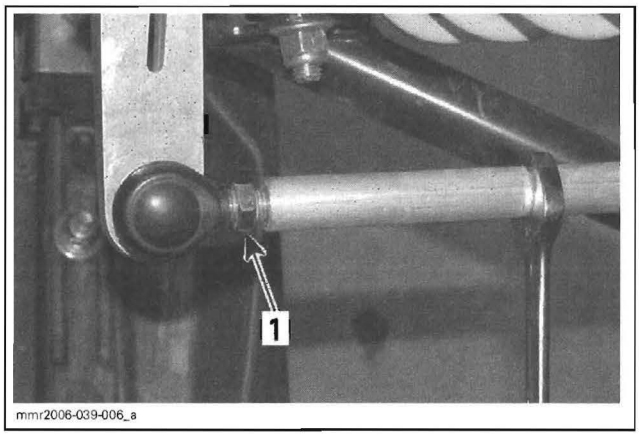

1. Jam nut

⚠ WARNING

Never lengthen tie-rod so that the external unengaged threaded portion of tie-rod end exceed 20 mm (25/32 in).

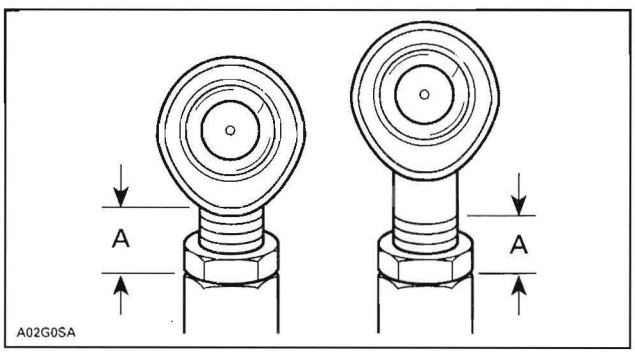

A. 20 mm (25/32 in) maximum

BODY

SERVICE TOOLS

Description	Part Number	Page
adjustment wrench	529 035 891	577
Supertanium™ drill bit	529 031 800	576

SERVICE TOOLS – OTHER SUPPLIER

Description	Part Number	Page
Arrow tacker	T-50	578

ADJUSTMENT

SEAT LATCH

All Models except Expedition Sport and Legend Touring

Position the seat latch in accordance with the following illustration.

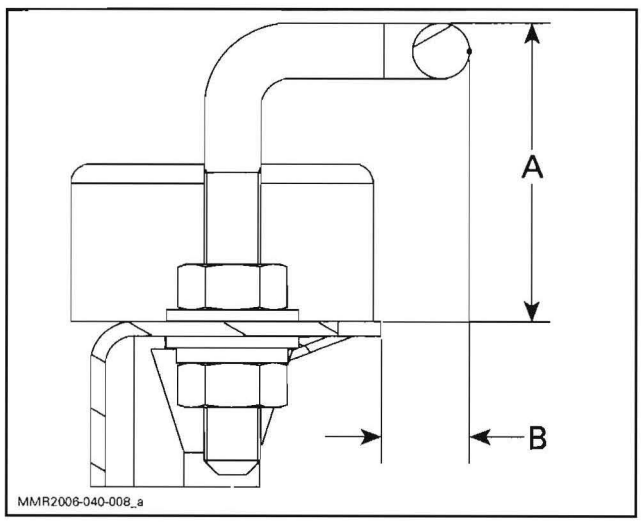

A. 31.7 mm (1.248 in)
B. 9.3 mm (.366 in)

Torque nuts to 7.5 N•m (66 lbf•**in**).

PARTS REPLACEMENT

DECAL

To remove a decal; heat old decal with a heat gun and peel off slowly.

Using isopropyl alcohol, clean the surface and dry thoroughly.

Apply liquid soap to new decal and carefully position the decal. Using a sponge or a squeegee, remove the air bubbles and surplus water working from the center toward the edges. Allow to air dry.

CAUTION: Do not apply isopropyl alcohol or solvent directly on decals. Use only in a well ventilated area.

SIDE PANEL

Removal

NOTE: Use same procedure on RH or LH side.

Unlatch side panel.

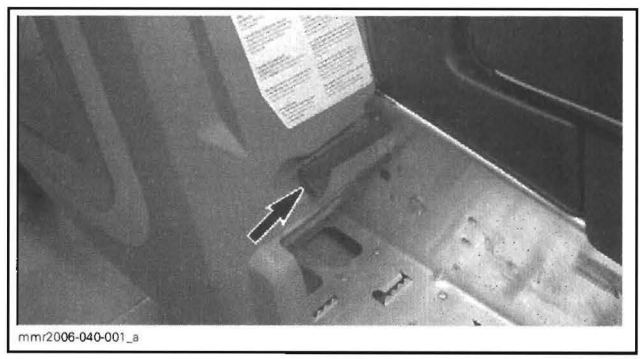

Remove both hinge locks.

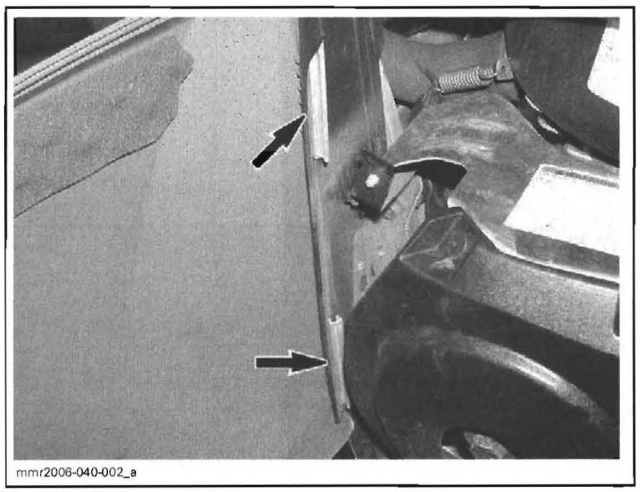

Remove side panel.

Installation

The installation is the reverse of the removal procedure.

HOOD

Removal

Open side panels and unlatch hood.

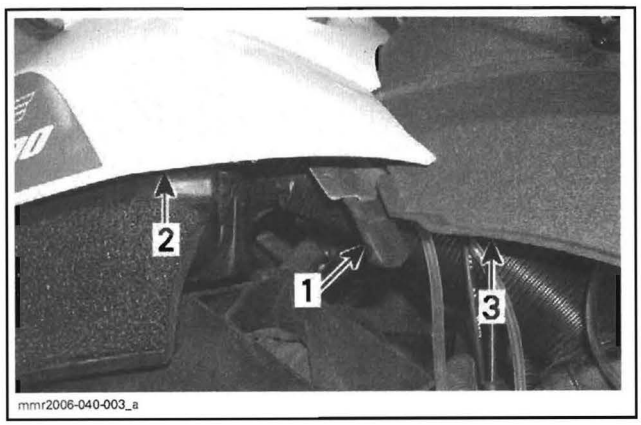

1. *Hood latch*
2. *Hood*
3. *Console*

On RH side, unplug hood harness.

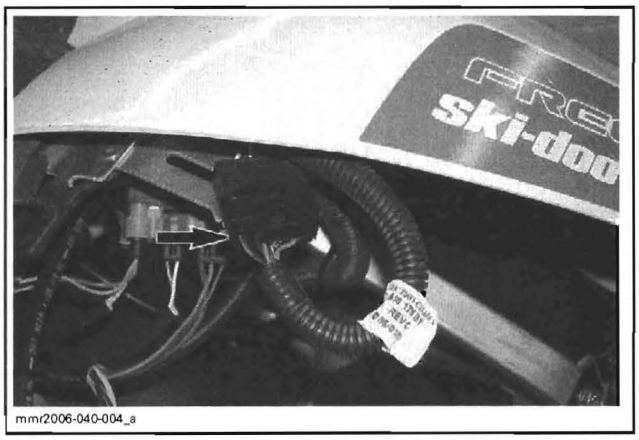

Remove hood.

Installation

The installation is the reverse of removal procedure.

BOTTOM PAN

Removal

Remove hood and front bumper.

Using Supertanium™ drill bit (P/N 529 031 800), drill all rivets retaining bottom pan.

Remove bottom pan.

Installation

The installation is the reverse of removal procedure.

WINDSHIELD

Removal

Remove hood.

Inside hood, remove windshield latches.

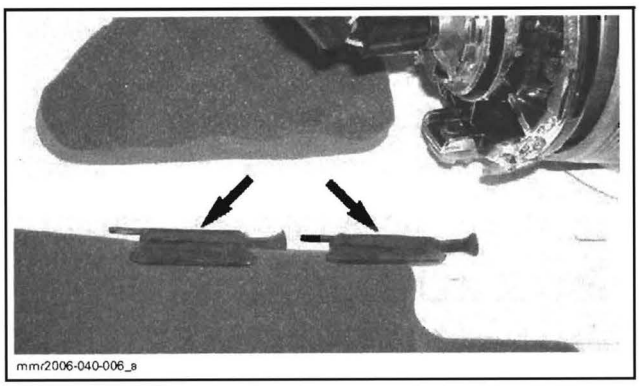

Pull the bottom part of windshield until its pins come out of rubber grommets.

Installation

The installation is the reverse of removal procedure.

CONSOLE

Removal

Remove hood.

Drill both rivets retaining console to console supports.

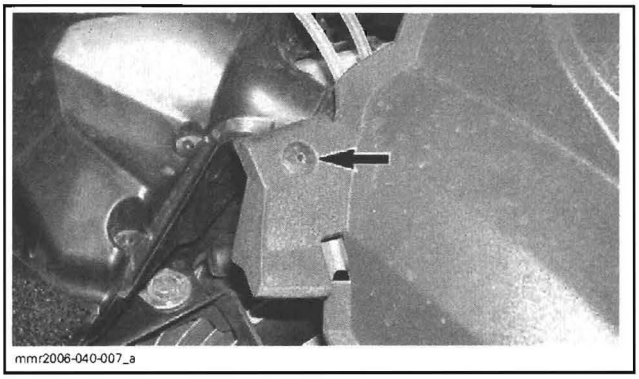
mmr2006-040-007_a

Remove fuel tank cap.

Using the adjustment wrench (P/N 529 035 891), unscrew the fuel tank nut.

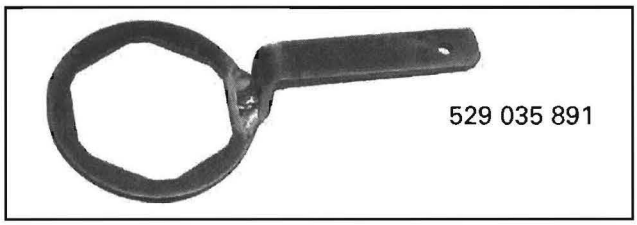

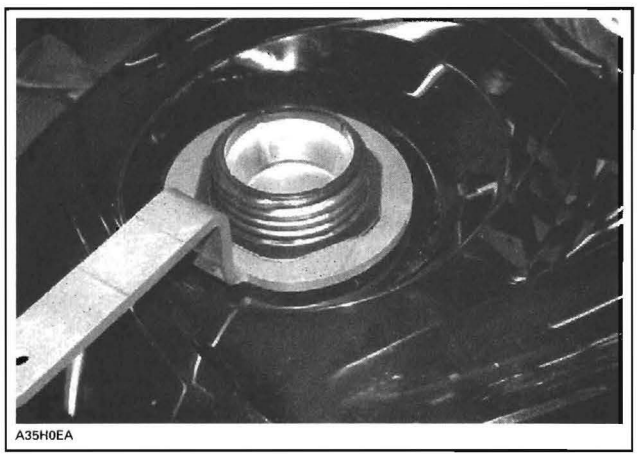
A35H0EA

TYPICAL

Lift up the console.

Remove choke lever and ignition switch then unplug the tether cut-out switch.

Remove console.

Install fuel tank cap.

Installation

The installation is the reverse of removal procedure.

SEAT

Removal

All Models except Expedition Sport and Legend Touring

Push seat latch while gently lifting rear of seat.

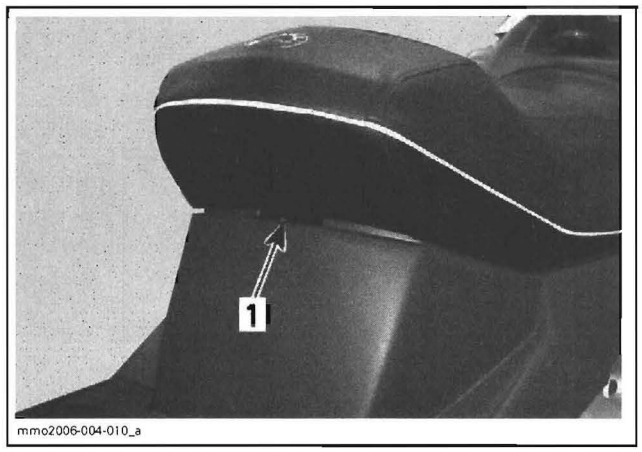

mmo2006-004-010_a

1. Seat latch

Pull seat backwards.

Expedition Sport and Legend Touring

Unfasten bucklets then pull on seat panel.

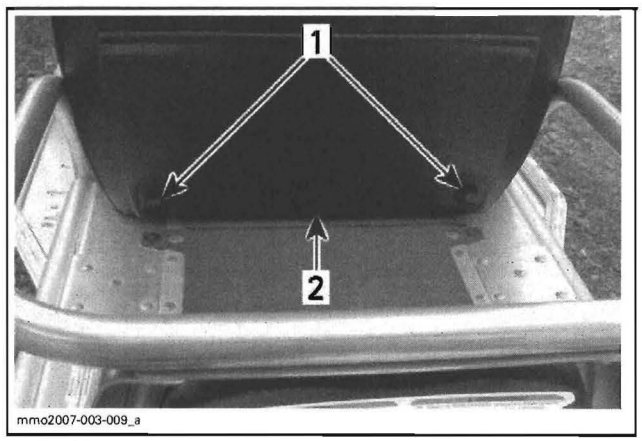

mmo2007-003-009_a

1. Bucklets
2. Seat panel

Disconnect the brake light/taillight connector.

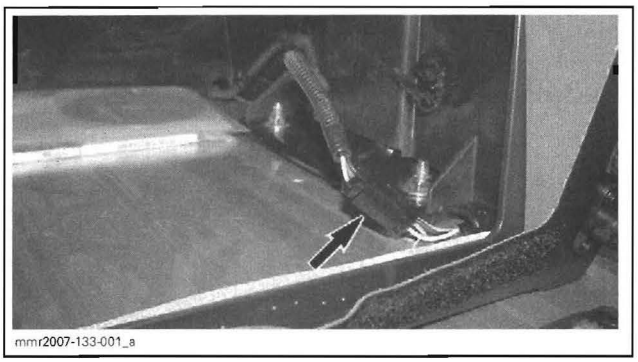

Unscrew and remove 4 nuts securing seat to frame.

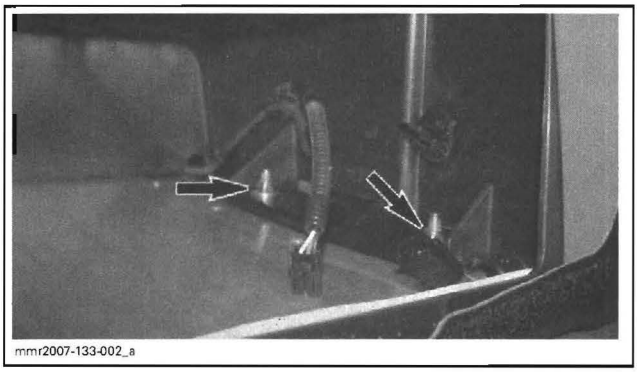

RH SIDE SHOWN

Lift the rear of seat and move it backwards.

Installation

All Models except Expedition Sport and Legend Touring

Insert front tabs into seat hooks. When seat rests in its position, firmly push seat down to latch.

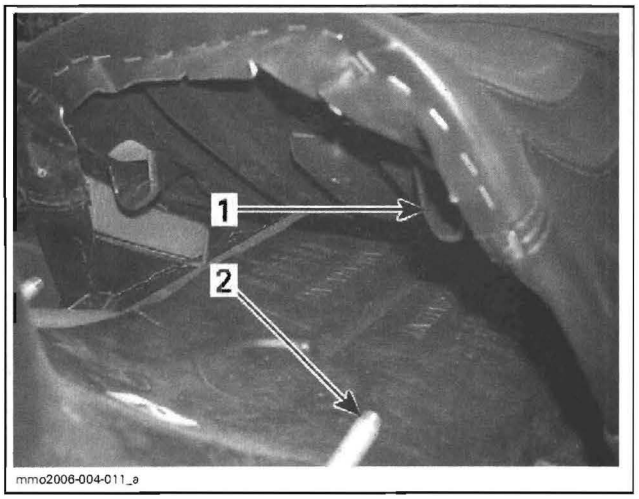

1. *Front tab*
2. *Seat hook*

NOTE: A distinctive snap will be felt. Double check that seat is secure by giving it a tug to confirm proper latching.

Expedition Sport and Legend Touring

Insert front and side tabs into seat hooks.

Install washers and nuts securing seat to frame and tighten nuts to 11 N•m (97 lbf•**in**).

Connect the brake light/taillight connector.

BACKREST

Removal

Remove screws retaining backrest to backrest arms.

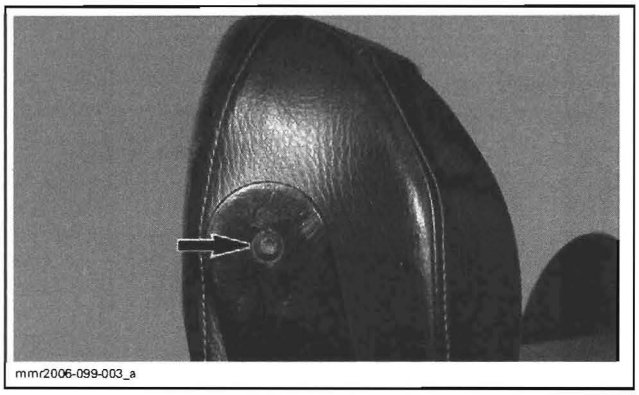

TYPICAL

Move away backrest arms to remove backrest.

Installation

The installation is the reverse of the removal procedure.

SEAT COVER

Replacement

Remove seat.

Remove the old seat cover. Check the foam and replace it if necessary.

Install staples with an electric tacker such as Arrow tacker ETN-50 or with a manual tacker such as Arrow tacker (P/N T-50).

NOTE: For an easier installation, it is highly recommended to use an electric tacker.

Ensure that the seat rest firmly against a hard surface such as a piece of wood. This is done to get the staples completely pushed in place.

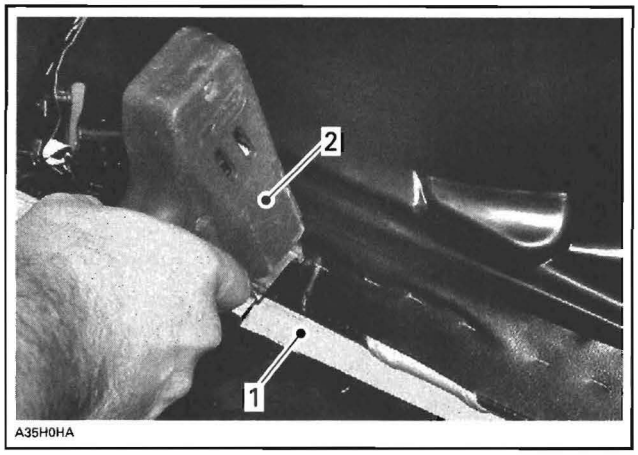

TYPICAL
1. *Piece of wood*
2. *Tacker*

After seat cover installation, cut all around the excess of material.

TRUNK

All Models except Expedition Sport and Legend Touring

Removal

Remove seat.

Remove screws retaining trunk to frame.

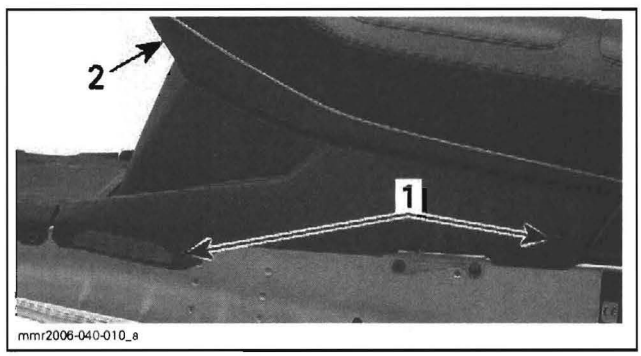

1. *Trunk screws (two on each side)*
2. *Seat*

Unsnap wiring harness from rear RH corner.

Remove trunk.

Installation

The installation is the reverse of the removal procedure.

CLEANING

Seat

It is recommended to clean the seat with a solution of warm soapy water, using a soft clean cloth.

CAUTION: Avoid use of harsh detergents such as strong soaps, degreasing solvents, abrasive cleaners, paint thinners, etc. that may cause damage to the seat cover.

Plastic

Clean the vehicle thoroughly, removing all dirt and grease accumulation.

To clean use a soft clean cloth and either soapy water or isopropyl alcohol.

To remove grease, oil or glue use isopropyl alcohol.

CAUTION: Do not apply isopropyl alcohol or acetone directly on decals.

CAUTION: The following products must not be used to clean or wax any of the plastic components used on the vehicles:

- gasoline
- brake fluid
- kerosene
- diesel fuel
- lighter fluid
- varsol
- naphtha
- acetone
- strong detergents
- abrasive cleaners
- waxes containing an abrasive or a cleaning agent in their formula.

Apply wax on glossy finish only. Protect the vehicle with a cover to prevent dust accumulation during storage.

CAUTION: If for some reason the snowmobile has to be stored outside, it is preferable to cover it with an opaque tarpaulin. This will prevent the sun rays from affecting the plastic components and the vehicle finish.

REPAIR

The very first step before repairing plastic materials is to find out exactly which type of material is involved.

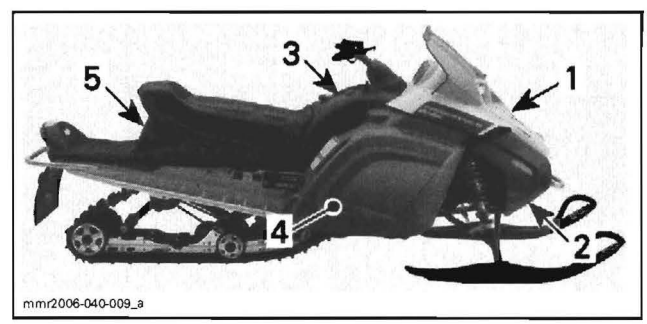

PLASTIC PARTS		
PARTS		MATERIAL
1	Hood	Polyethylene HDPE
2	Bottom pan	Polypropylene
3	Console	Polyethylene HDPE
4	Side panel	Polyethylene HDPE
5	Trunk	Polypropylene

CAUTION: Some repair products are not compatible with certain plastics.

⚠ WARNING

Windshields must never be repaired by welding or otherwise.

For repair, refer to a specialized shop.

The following company provides a complete line of products to repair plastic materials:

CREST INDUSTRIES, INC.
Trenton, MI 48183
Phone: (734) 479-4141
Toll Free: 1 800 822-4100
Fax: (734) 479-4040
E-Mail: info@crestauto.com
www.crestauto.com

FRAME

SERVICE TOOLS

Description	Part Number	Page
Supertanium drill bit	529 031 800	585

SERVICE PRODUCTS

Description	Part Number	Page
XP-S synthetic chaincase oil	413 803 300	585

300F Equipped Models

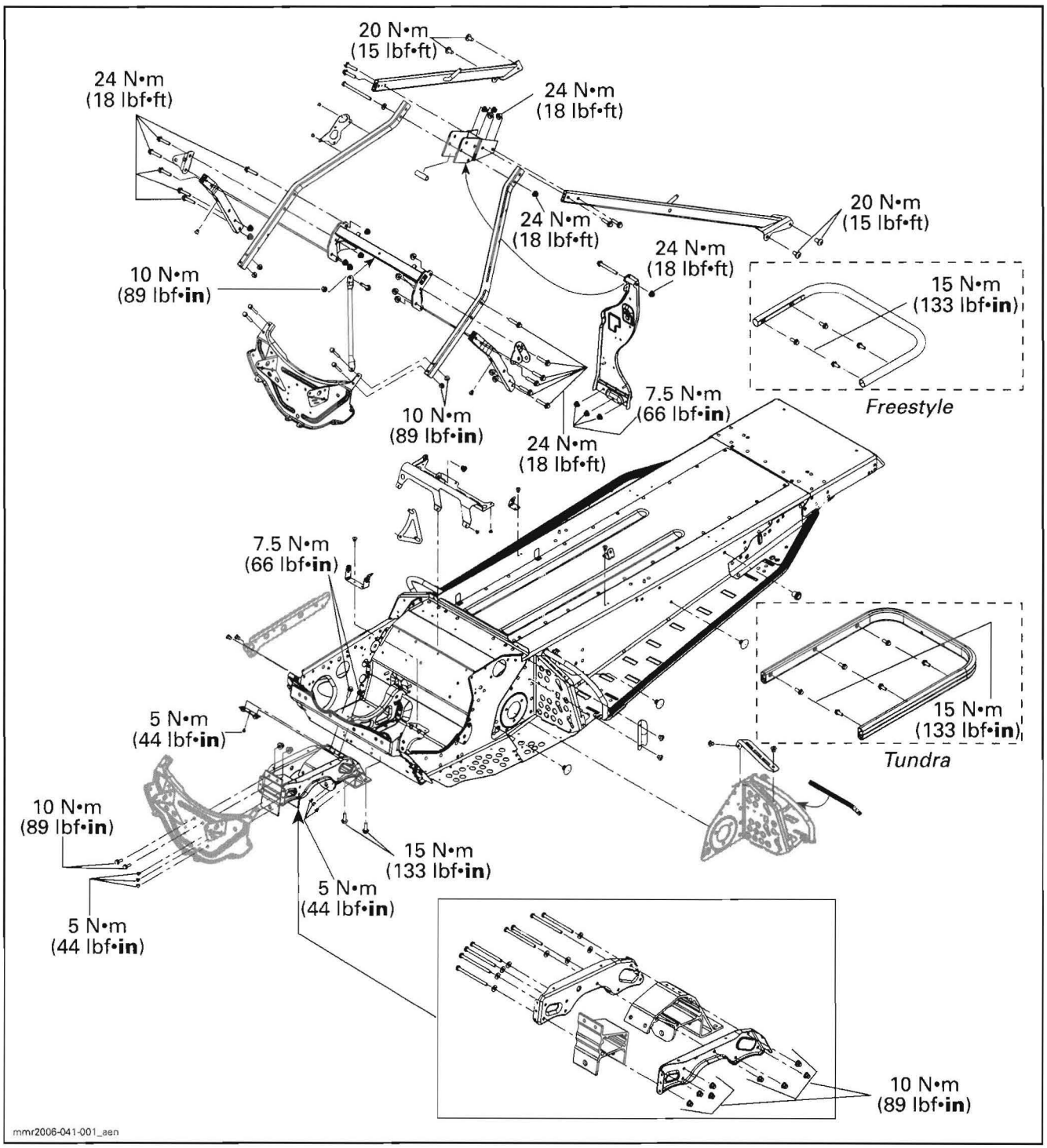

500F Equipped Models

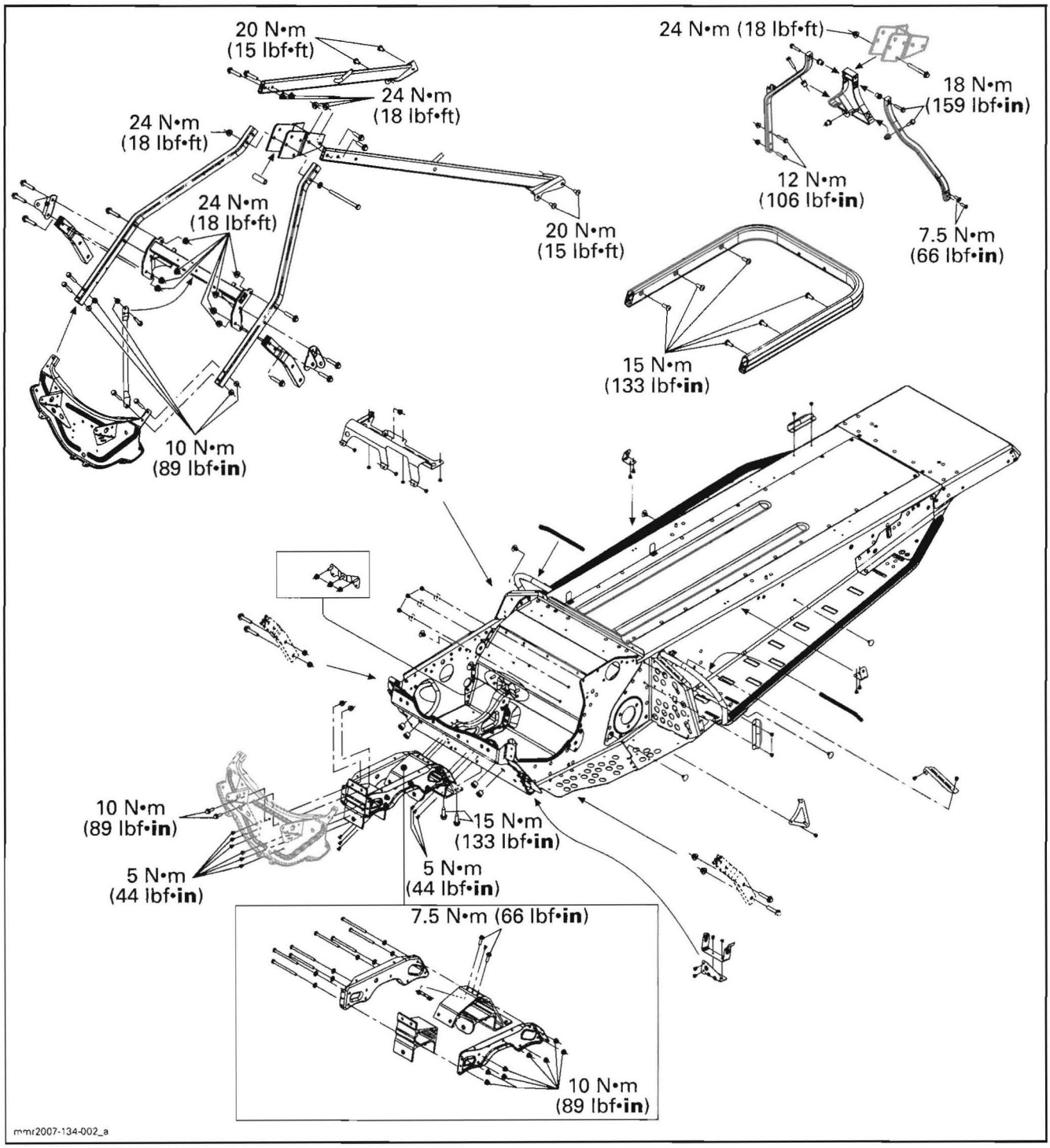

V800 Equipped Models

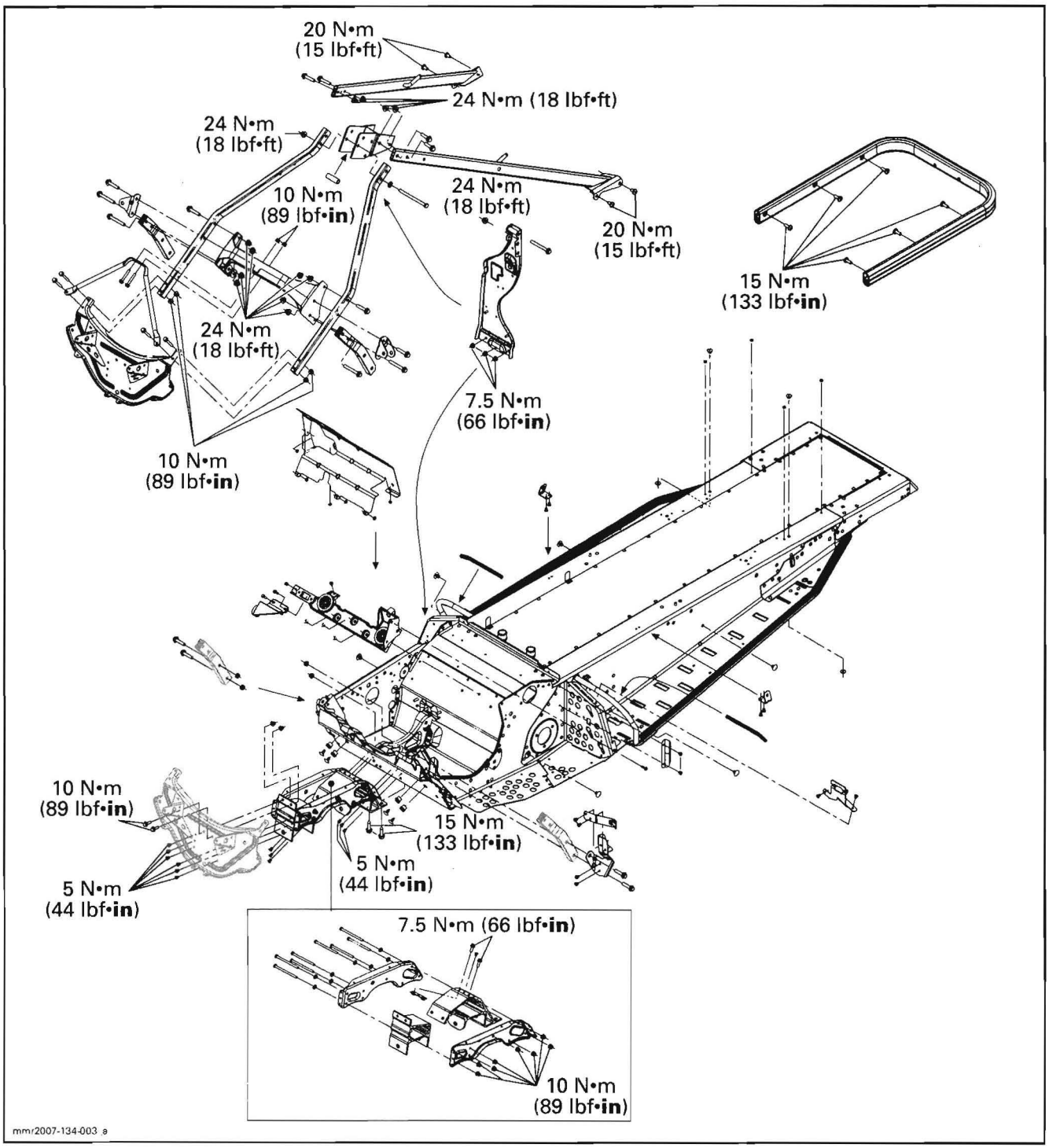

GENERAL

RIVET DRILLING PROCEDURE

Self-Piercing Rivets

When drilling self-piercing rivets, use the Supertanium drill bit (P/N 529 031 800), available in a 5 mm (3/16 in) size and shipped in packs of 2.

For proper drilling instructions and to prevent premature wear, follow the procedure below.

- Always use a variable speed drill.
- Maintain a slow to medium speed at all times when drilling. The proper speed is attained when a constant chip is ejected.

NOTE: To increase bit life, use XP-S synthetic chaincase oil (P/N 413 803 300) as a cutting oil.

CAUTION: High speed drilling will cause excessive heat which may destroy the cutting edge of the bit; therefore, avoid using pneumatic drills.

- Cut rivet using a chisel.
- Remove riveted part.
- Drive out remaining rivet head using a punch.

Pop Rivets

- Always drill rivet head.
- When rivet is located on plastic part, use pliers to avoid rivet turning and heating plastic.
- Use a small punch to push the rivet end.

PROCEDURES

FRAME

Cleaning

Clean frame and tunnel with appropriate cleaners and rinse with high pressure hose.

NOTE: For bare aluminum frames use only aluminum cleaner and follow instructions on container.

CAUTION: Never direct high-pressure water jet towards decals. They will peel off.

Touch up all metal spots where paint has been scratched off. Spray all bare metal parts of vehicle with metal protector.

Welding

CAUTION: No welding should be done on aluminum frame except if mentioned or required on a BRP bulletin.

FRONT BUMPER

Removal

Open the front compartment cover.

Remove bolts that attach front bumper to front plate.

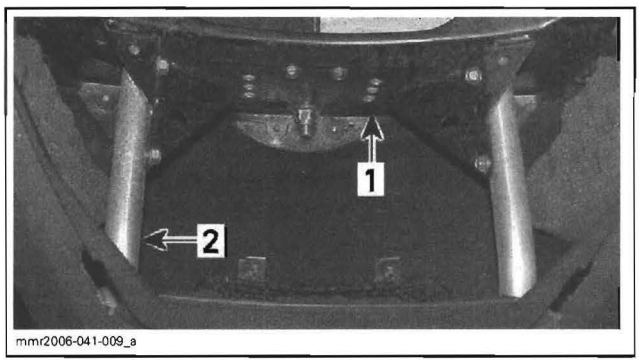

1. Front plate
2. Front bumper

Pull bumper to remove it from vehicle.

Installation

Insert bumper through the front bottom pan opening.

Install all bolts before torquing them to 8 N•m (71 lbf•**in**).

REAR BUMPER

Removal

Underneath the rear portion of frame, remove screws retaining rear bumper to tunnel.

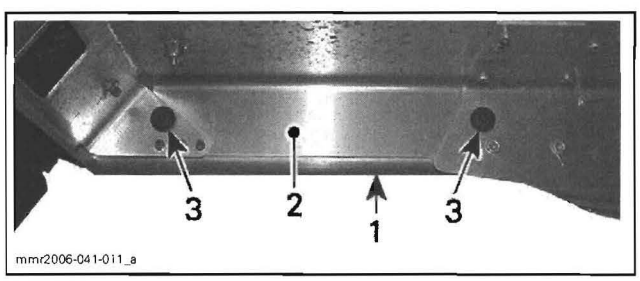

TYPICAL
1. Rear bumper
2. Tunnel
3. Rear bumper screws

NOTE: Some models use 4 screws and other models 6 screws to secure the rear bumper.

Remove rear bumper from vehicle.

Installation

The installation is the reverse of the removal procedure.

Torque screws to 15 N•m (133 lbf•**in**).

FRONT PLATE

Removal

Remove the bottom pan. Refer to *BODY*.

Drill the 6 rivets retaining the front plate to suspension arm front support.

Remove bolts retaining the front plate to suspension arm front support.

Remove bolts retaining the front plate to upper tubes.

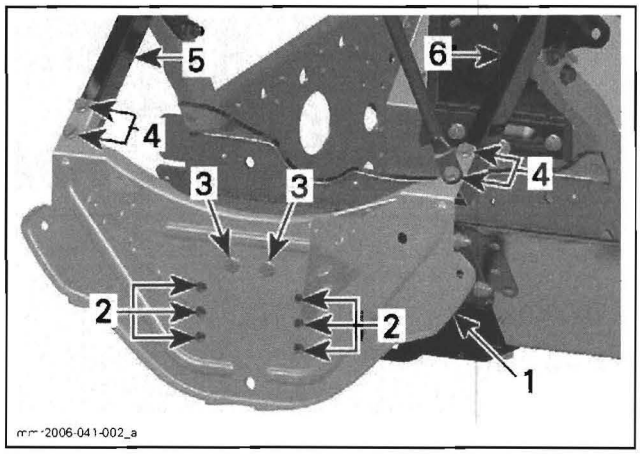

1. *Front plate*
2. *Rivets to be drilled*
3. *Suspension arm support bolt*
4. *Upper tube bolts*
5. *Right upper tube*
6. *Left upper tube*

Installation

Install suspension arm front support bolts and upper tube bolts. Do not torque yet.

Replace rivets with the following fasteners:

QUANTITY	FASTENERS DESCRIPTION
6	Hexagonal bolt M5 x 14 (P/N 207 151 444)
6	Elastic flanged nut M5 (P/N 233 251 414)

NOTE: Install new bolts with their heads outside.

Torque all bolts to 5 N•m (44 lbf•**in**).

Install all other removed parts.

SIDE PLATE

Removal

NOTE: Use the same procedure for both sides.

Remove shock absorber, suspension arm and bottom pan.

Drill rivets retaining the cross member side plate to front plate.

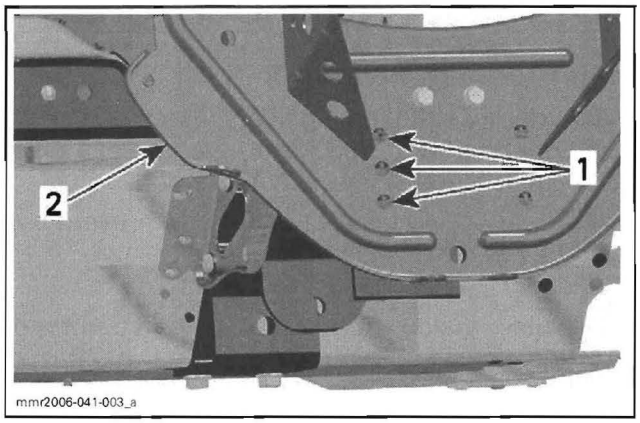

1. *Rivets to drill*
2. *Front plate*

Drill rivets that attach the side plate to the frame.

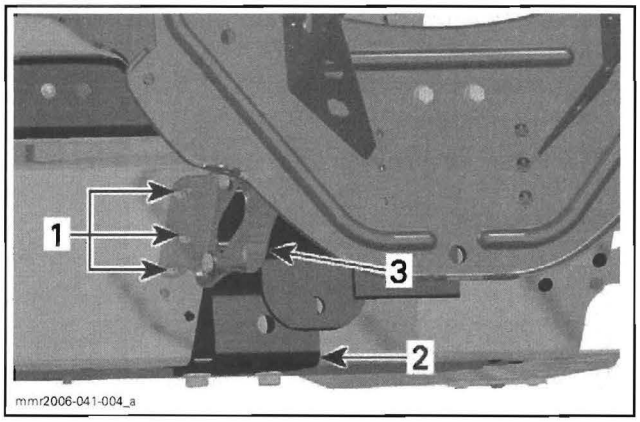

1. *Rivets to drill*
2. *Suspension arm rear support*
3. *RH side plate*

Remove all side plate bolts. Pay attention not to lose washers on both sides.

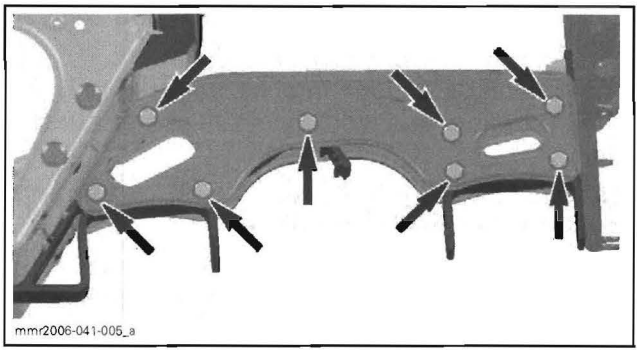

Installation

Install side plate bolts with washers, do not torque yet.

Attach the side plate to the frame. Replace rivets with the following fasteners:

QUANTITY	FASTENERS DESCRIPTION
3	Hexagonal bolt M5 x 14 (P/N 207 151 444)
3	Elastic flanged nut M5 (P/N 233 251 414)

NOTE: Install new bolts with their heads pointing towards the front of vehicle.

Install the side plate to the front plate. Replace rivets with the following fasteners:

QUANTITY	FASTENERS DESCRIPTION
3	Hexagonal bolt M5 x 14 (P/N 207 151 444)
3	Elastic flanged nut M5 (P/N 233 251 414)

NOTE: Install new bolts with their heads pointing towards the front of vehicle.

For alignment purpose, install a straight steel rod of 13 mm dia. x 40 cm (1/2 in dia. x 16 in) through front plate and suspension arm supports.

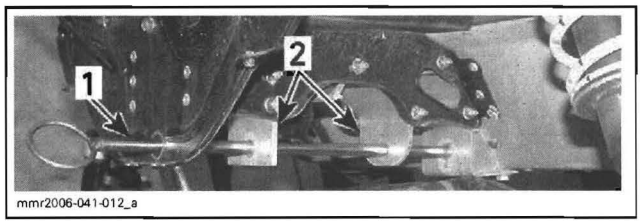

1. *Straight steel rod*
2. *Suspension arm supports*

Torque all bolts to 5 N•m (44 lbf•**in**).

Remove steel rod.

Install all other removed parts.

SUSPENSION ARM SUPPORT

Removal

Remove suspension arms. Refer to *FRONT SUSPENSION*.

Remove the bottom pan. Refer to *BODY*.

Front Support

Unscrew and remove bolts retaining suspension arm support to front plate.

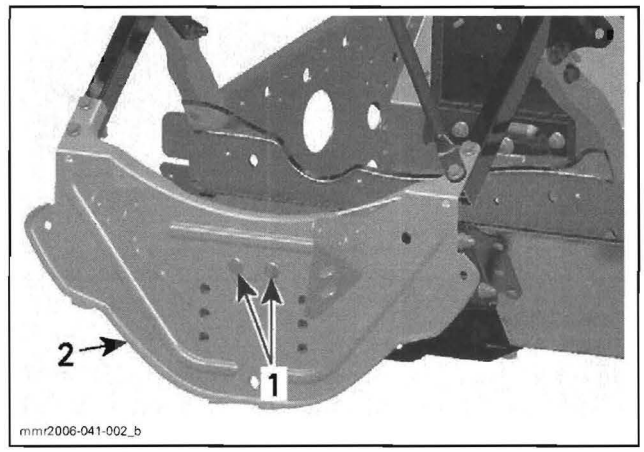

1. *Suspension arm support bolts*
2. *Front plate*

Remove side plate bolts that attach suspension arm support. Pay attention not to lose washers.

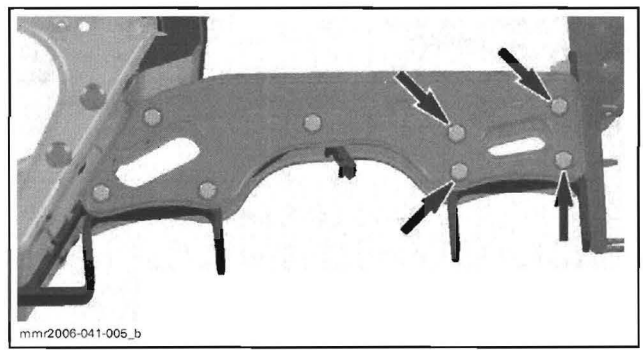

Remove suspension arm support.

Rear Support

Detach steering column from suspension arm support.

Inside engine compartment, remove both screws and drill the rivet that attach the top of suspension arm support to frame (between steering column and engine).

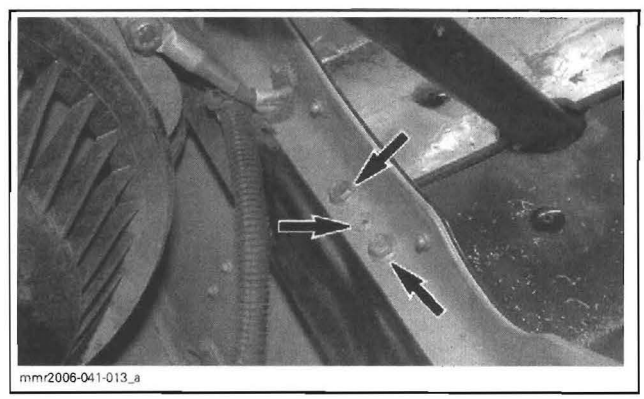

Underneath vehicle, remove bolts retaining the rear part of suspension arm support to frame.

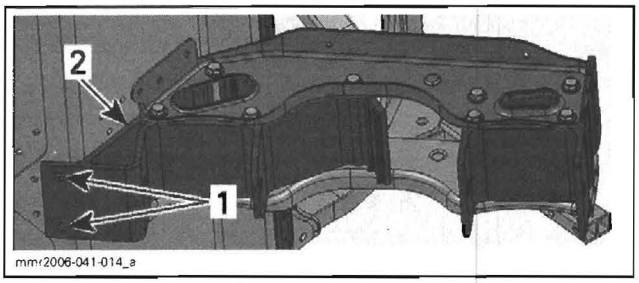

1. Remove bolts locate here
2. Suspension arm support

Remove side plate bolts that attach suspension arm support. Pay attention not to lose washers.

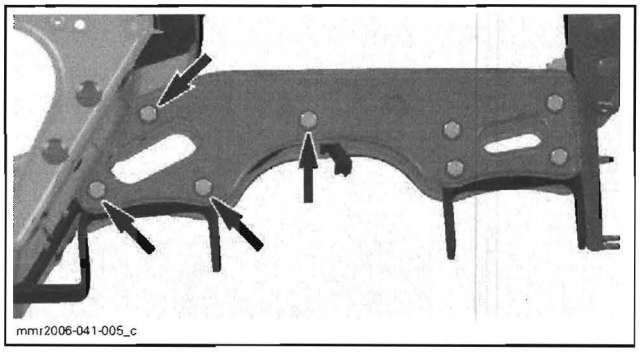

Remove suspension arm support.

Installation

Front Support

Install all bolts but do not torque yet.

For alignment purpose, install a straight steel rod of 13 mm dia. x 40 cm (1/2 in dia. x 16 in) through front plate and suspension arm supports.

Torque all bolts.

Remove steel rod and install all removed parts.

Rear Support

Install all bolts. Do not torque yet.

Replace the rivet with an hexagonal bolt M5 x 14 (P/N 207 151 444) and an elastic flanged nut M5 (P/N 233 251 414).

For alignment purpose, install a straight steel rod of 13 mm dia. x 40 cm (1/2 in dia. x 16 in) through front plate and suspension arm supports.

Torque all bolts.

Remove steel rod and install all removed parts.

UPPER TUBE

NOTE: Use the same procedure for the RH and LH upper tubes.

Removal

Remove bolts that attach the cross member arm to the retaining block.

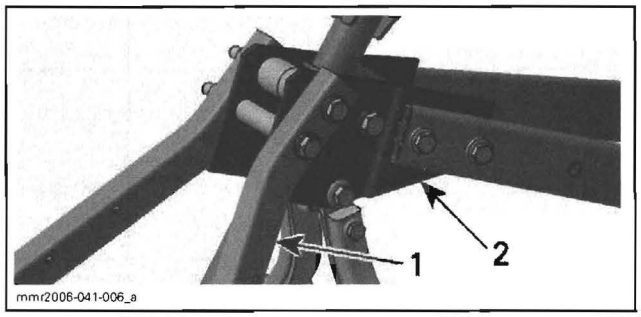

1. LH upper tube
2. Retaining block

Unscrew bolts retaining upper cross member to upper tube.

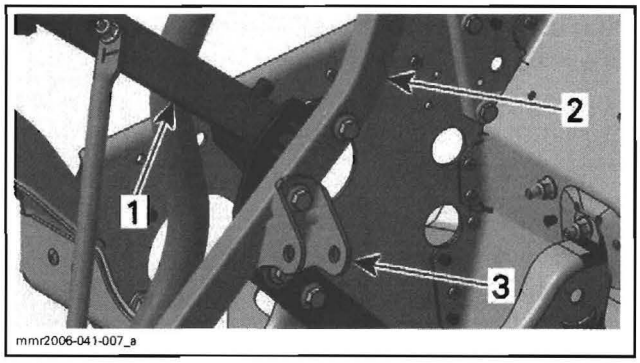

1. Upper cross member
2. LH upper tube
3. LH shock absorber attachment

Remove bolts retaining the upper tube to the front plate.

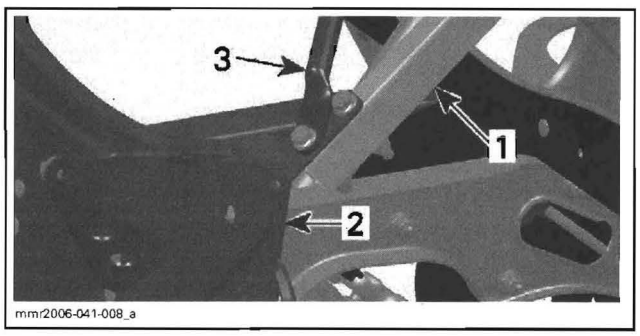

1. LH upper tube
2. Front plate
3. Brace (s)

Installation

Install all bolts before torquing them. Refer to exploded views at the beginning of this section.

Install all other removed parts.

300F MODELS

MODEL			FREESTYLE SESSION	TUNDRA
ENGINE				
Engine type			277	
Number of cylinder			1	
Bore	Standard	mm (in)	72 (2.835)	
	1er oversize	mm (in)	72.25 (2.844)	
	2nd oversize	mm (in)	72.50 (2.854)	
Stroke		mm (in)	66.00 (2.598)	
Displacement		cm^3 (in^3)	268.70 (16.397)	
Compression ratio			11.2 ± 0.5	
Maximum power engine speed		± 100 RPM	6950	
Combustion chamber volume		cc	25.35 to 27.35	
Piston ring type		1st	Semi-trapezoidal	
		2nd	Rectangular	
Ring end gap	New	mm (in)	Semi-trapezoidal: 0.250 to 0.400 (.0098 to .0157) Rectangular: 0.200 to 0.350 (.0079 to .0138)	
	Wear limit	mm (in)	1.0 (.039)	
Ring/piston groove clearance	New	mm (in)	0.030 to 0.700 (.0012 to .0276)	
	Wear limit	mm (in)	0.2 (.0079)	
Piston/cylinder wall clearance	New	mm (in)	0.080 ± 0.020 (.0031 ± .0008)	
	Wear limit	mm (in)	0.2 (.0079)	
Piston skirt wear	Wear limit	mm (in)	0.15 (.006)	
Cylinder head warpage	Wear limit	mm (in)	0.5 (.02)	
Cylinder taper	New (max.)	mm (in)	0.05 (.0020)	
	Wear limit	mm (in)	0.10 (.0039)	
Cylinder out of round	New (max.)	mm (in)	0.01 (.0004)	
	Wear limit	mm (in)	0.08 (.0031)	
Maximum crankshaft end play	New (max.)	mm (in)	0.3 (.012)	
Maximum crankshaft deflection at PTO	Wear limit	mm (in)	0.06 (.0024)	
Connecting rod big end axial paly	New	mm (in)	0.200 to 0.527 (.0079 to .0208)	
	Wear limit	mm (in)	1.2 (.0472)	
COOLING SYSTEM				
Type			Fan cooled	
Axial fan belt adjustment	Deflection	mm (in)	9.5 ± 1.5 (.374 ± .059)	
	Force	kgf (lbf)	5.0 (11.0)	
LUBRICATION SYSTEM				
Injection oil	Type		XP-S mineral injection oil	
	Quantity	L (U.S. oz)	3.5 (118.4)	

MODEL			FREESTYLE SESSION	TUNDRA
FUEL SYSTEM				
Carburetor type			VM34	
Main jet			200	
Needle jet			O-6	
Pilot jet			40	
Jet needle identification and clip position			6DH4 – 3	
Slide cut-away			2.5	
Idle throttle slilde height			1.6 ± 0.1 (.063 ± .004)	
Float adjustment		mm (in)	24.90 ± 1 (.980 ± .040)	
Air or pilot screw adjustment		± 1/16 turn	2	
Idle speed		± 200 RPM	1650	
Gas type			Unleaded	
Pump octane number	Inside North America ((R+M)/2)		87 or higher	
	Outside North America (RON)		92 or higher	
Fuel tank capacity		L (U.S. gal)	34 (9)	
Gas/oil ratio			Injection	
ELECTRICAL SYSTEM				
Magneto generator output			340 W @ 6000 RPM	
Ignition type			CDI	
Spark plug	Make and type		NGK BR9ES	
	Gap	mm (in)	0.40 to 0.50 (.016 to .020)	
Ignition timing BTDC		mm (in)	3.61 (.142) @ 3500 RPM	
Trigger coil		Ω	160 to 180	
Generating coil	Low speed	Ω	6.3	
	High speed	Ω	7.7	
Lighting coil		Ω	0.145 to 0.175	
High tension coil	Primary		N.A.	
	Secondary		N.A.	
Battery			12 V, 18 A•h (if applicable)	
Headlamp		W	60/55 (H4)	
Taillight and stoplight		W	8/26	
Fuse	Starter solenoid	A	30 (if applicable)	

MODEL			FREESTYLE SESSION	TUNDRA
DRIVE SYSTEM				
Chaincase oil	Type		XP-S synthetic chaincase oil	
	Quantity	mL (U.S. oz)	250 (8.5)	
Chain drive ratio			15/45	
Chain	Pitch	in	3/8	
	Type/links qty/plate qty		Silent 72/13	
Drive pulley type			Bombardier Lite	
Drive pulley calibration	Clutch engagement	± 100 RPM	3300	
	Spring color		Pink/Yellow	
	Spring free length	mm (in)	—	
	Weight 417 120 400 = 21 g 417 114 400 = 3.4 g		5 x 3.4 g	
	Block		1 x 417 118 100	
	Cap		1 x 417 114 500	
Driven pulley	Type		LPV 27	
	Spring color		Brown	
	Cam angle		44°	
Pulley distance	Z	mm (in)	18.75 (0.738)	
Offset	X	mm (in)	33.4 ± 0.5 (1.315 ± 0.2)	
Drive belt part number		P/N	417 300 326	
Drive belt	Width	mm (in)	35.20 (1.386)	
	Wear limit	mm (in)	32.80 (1.291)	
Drive belt adjustment	Deflection	mm (in)	32 ± 5 (1.260 ± .197)	
	Force	kgf (lbf)	11.34 (25)	
Track	Width	mm (in)	381 (15)	406.4 (16)
	Length	m (in)	3.08 (121)	3.46 (136)
	Profile height	mm (in)	18.4 (.725) (EUR): 22.2 (.875)	31.8 (1.25)
Track adjustment	Deflection	mm (in)	30 to 35 (1.181 to 1.378)	
	Force	kgf (lbf)	7.3 (16)	
BRAKE SYSTEM				
Brake lining thickness	Service limit	mm (in)	1 (.039)	
Brake fluid	Type		DOT 4	
	Quantity	mL (U.S. oz)	60 (2.0)	

MODEL		FREESTYLE SESSION	TUNDRA
SUSPENSION			
FRONT			
Suspension type		Single A-arm	
Suspension maximum travel	mm (in)	160 (6.3)	
Shock absorber type		Motion control	
Sway bar type		—	
REAR			
Suspension type		SC-4	SC-136
Suspension maximum travel	mm (in)	381 (15)	330 (13)
Shock absorber type	Center	Motion control	
	Rear	Motion control (EUR): H.P.G.	H.P.G.
Stroke limiter standard position		4–2	3–2
STEERING SYSTEM			
Ski type		Blow mold (EUR): Blow mold (wide)	Blow mold (wide)
Toe-out	mm (in)	5 (.197)	
Camber		0°	
VEHICLE INFORMATIONS			
Mass (dry)	kg (lb)	167 (368)	172 (379)
Length	m (in)	2.85 (112)	3.03 (119) (EUR): 3.09 (122)
Width	m (in)	0.97 (38)	1.00 (39.4)
Height	m (in)	1.17 (46)	1.30 (51)
Ski stance (carbide to carbide)	m (in)	0.82 (32)	
MATERIAL			
Frame		Aluminum	
Bottom pan		Polypropylene	
Hood		Polyethylene HDPE	
Side panels		Polyethylene HDPE	
Console		Polyethylene HDPE	
Trunk		Polypropylene	

550F MODELS

MODEL			FREESTYLE			EXPEDITION
			PARK	SESSION	BACK COUNTRY	SPORT
ENGINE						
Engine type			552			
Number of cylinder			2			
Bore	Standard	mm (in)	76 (2.992)			
	1er oversize	mm (in)	76.25 (3.002)			
	2nd oversize	mm (in)	76.5 (3.012)			
Stroke		mm (in)	61.00 (2.402)			
Displacement		cm^3 (in^3)	553.40 (33.771)			
Compression ratio			10.50 ± 0.5			
Maximum power engine speed		± 100 RPM	6900			6950
Combustion chamber volume		cc	35.54			
Piston ring type		1st	Semi-trapezoidal			
		2nd	Rectangular			
Ring end gap	New	mm (in)	0.40 to 0.55 (.016 to .022)			
	Wear limit	mm (in)	1.0 (.039)			
Ring/piston groove clearance	New	mm (in)	0.04 to 0.08 (.0016 to .0030)			
	Wear limit	mm (in)	0.2 (.0079)			
Piston/cylinder wall clearance	New	mm (in)	0.150 ± 0.030 (.0059 ± .0012)			
	Wear limit	mm (in)	0.2 (.0079)			
Piston skirt wear	Wear limit	mm (in)	0.15 (.006)			
Cylinder head warpage	Wear limit	mm (in)	0.5 (.02)			
Cylinder taper	New (max.)	mm (in)	0.05 (.0020)			
	Wear limit	mm (in)	0.10 (.0039)			
Cylinder out of round	New (max.)	mm (in)	0.01 (.0004)			
	Wear limit	mm (in)	0.08 (.0031)			
Maximum crankshaft end play	New (max.)	mm (in)	0.3 (.012)			
Maximum crankshaft deflection at PTO	Wear limit	mm (in)	0.06 (.0024)			
Connecting rod big end axial paly	New	mm (in)	0.200 to 0.530 (.0079 to .0209)			
	Wear limit	mm (in)	1.2 (.0472)			
COOLING SYSTEM						
Type			Fan cooled			
Axial fan belt adjustment	Deflection	mm (in)	9.5 ± 1.5 (.374 ± .059)			
	Force	kgf (lbf)	5.0 (11.0)			
LUBRICATION SYSTEM						
Injection oil	Type		XP-S mineral injection oil			
	Quantity	L (U.S. oz)	3.5 (118.4)			

MODEL			FREESTYLE			EXPEDITION
			PARK	SESSION	BACK COUNTRY	SPORT
FUEL SYSTEM						
Carburetor type			VM30			
Main jet			190			
Needle jet			P-7			
Pilot jet			45			
Jet needle identification and clip position			MY			
Slide cut-away			2.5			
Idle throttle slilde height			1.5 ± 0.1 (.059 ± .004)			
Float adjustment		mm (in)	23.90 ± 1 (.941 ± .040)			
Air or pilot screw adjustment		± 1/16 turn	2			
Idle speed		± 200 RPM	1650			
Gas type			Unleaded			
Pump octane number	Inside North America ((R+M)/2)		87 or higher			
	Outside North America (RON)		92 or higher			
Fuel tank capacity		L (U.S. gal)	34 (9)			
Gas/oil ratio			Injection			
ELECTRICAL SYSTEM						
Magneto generator output			340 W @ 6000 RPM			
Ignition type			CDI			
Spark plug	Make and type		NGK BR9ES			
	Gap	mm (in)	0.40 to 0.50 (.016 to .020)			
Ignition timing BTDC		mm (in)	2.77 (.109) @ 3500 RPM			
Trigger coil		Ω	160 to 180			
Generating coil	Low speed	Ω	6.3			
	High speed	Ω	7.7			
Lighting coil		Ω	0.145 to 0.175			
High tension coil	Primary		N.A.			
	Secondary		N.A.			
Battery			12 V, 18 A•h (if applicable)			
Headlamp		W	60/55 (H4)			
Taillight and stoplight		W	8/26			
Fuse	Starter solenoid	A	30 (if applicable)			

MODEL			FREESTYLE			EXPEDITION
			PARK	SESSION	BACK COUNTRY	SPORT
DRIVE SYSTEM						
Chaincase oil	Type		XP-S synthetic chaincase oil			
	Quantity	mL (U.S. oz)	250 (8.5)			
Chain drive ratio			21/43		19/43	
Chain	Pitch	in	3/8			
	Type/links qty/plate qty		Silent 74/13		Silent 72/13	
Drive pulley type			Bombardier Lite			
Drive pulley calibration	Clutch engagement	± 100 RPM	3300		2700	
	Spring color		Purple/Yellow		Yellow/Green	
	Spring free length	mm (in)	158 (6.22)		—	
	Weight 417 120 400 = 21 g 417 114 400 = 3.4 g		1 x 21 g + 3 x 3.4 g			
	Block		1 x 417 118 100			
	Cap		1 x 417 114 500			
Driven pulley	Type		LPV 27			
	Spring color		Brown			
	Cam angle		44°			
Pulley distance	Z	mm (in)	26.25 (1.033)			
Offset	X	mm (in)	33.4 ± 0.5 (1.315 ± 0.2)			
Drive belt part number		P/N	415 060 600			
Drive belt	Width	mm (in)	34.70 (1.366)			
	Wear limit	mm (in)	32.30 (1.272)			
Drive belt adjustment	Deflection	mm (in)	32 ± 5 (1.260 ± .197)			
	Force	kgf (lbf)	11.34 (25)			
Track	Width	mm (in)	381 (15)		406.4 (16)	
	Length	m (in)	3.08 (121)		3.46 m (136 in)	
	Profile height	mm (in)	31.8 (1.25)	22.2 (.874)	31.8 (1.25)	
Track adjustment	Deflection	mm (in)	30 to 35 (1.181 to 1.378)			
	Force	kgf (lbf)	7.3 (16)			
BRAKE SYSTEM						
Brake lining thickness	Service limit	mm (in)	1 (.039)			
Brake fluid	Type		DOT 4			
	Quantity	mL (U.S. oz)	60 (2.0)			

MODEL		FREESTYLE			EXPEDITION
		PARK	SESSION	BACK COUNTRY	SPORT
SUSPENSION					
FRONT					
Suspension type		Single A-arm			
Suspension maximum travel	mm (in)	160 (6.3)			
Shock absorber type		H.P.G.	Motion Control	H.P.G.	Motion Control
Sway bar type		Link	—	Link	—
REAR					
Suspension type		SC-4		SC-136	
Suspension maximum travel	mm (in)	381 (15)		330 (13)	
Shock absorber type	Center	H.P.G.	Motion Control	H.P.G.	Motion Control
	Rear	H.P.G.	Motion Control	H.P.G.	
Stroke limiter standard position		4–2		3–2	
STEERING SYSTEM					
Ski type		Blow mold (EUR): Pilot 5.7	Blow mold		Blow mold (wide)
Toe-out	mm (in)	5 (.197)			
Camber		0°			
VEHICLE INFORMATIONS					
Mass (dry)	kg (lb)	186 (410)		188 (414)	218 (481)
Length	m (in)	2.85 (112)		3.03 (119) (EUR): 3.09 (122)	
Width	m (in)	1.13 (44.6)			
Height	m (in)	1.14 (45)	1.17 (46)	1.14 (45)	1.30 (51)
Ski stance (carbide to carbide)	m (in)	0.99 (39) (EUR): 0.96 (37.7)	0.99 (39)	0.99 (39) (EUR): 0.96 (37.7)	
MATERIAL					
Frame		Aluminum			
Bottom pan		Polypropylene			
Hood		Polyethylene HDPE			
Side panels		Polyethylene HDPE			
Console		Polyethylene HDPE			
Trunk		Polypropylene			

V800 MODELS

MODEL				LEGEND		SKANDIC	EXPEDITION
				TOURING	TRAIL	TUNDRA	SPORT
ENGINE							
Engine type				ROTAX 810			
				4-stroke, Single Over Head Camshaft (SOHC), liquid cooled			
Number of cylinders				2			
Number of valves				8 valves (mechanical adjustment)			
Bore			mm (in)	91 (3.58)			
Stroke			mm (in)	61.5 (2.42)			
Displacement				800 cm^3 (48.82 in^3)			
Compression ratio				10.3:1			
Decompressor type				N.A.			
Maximum HP RPM			RPM	7250			
Intake valve opening				5° BTDC			
Intake valve closing				45° ABDC			
Exhaust valve opening				50° BBDC			
Exhaust valve closing				0° ATDC			
Valve clearance	Intake		mm (in)	0.06 to 0.14 (.0024 to .0055)			
	Exhaust		mm (in)	0.11 to 0.19 (.0043 to .0075)			
Valve stem diameter	Intake	New	mm (in)	4.966 to 4.980 (.1955 to .1960)			
		Service limit	mm (in)	4.930 (.1941)			
	Exhaust	New	mm (in)	4.956 to 4.970 (.1951 to .1957)			
		Service limit	mm (in)	4.930 (.1941)			
Valve guide diameter		New	mm (in)	5.006 to 5.018 (.1971 to .1976)			
		Service limit	mm (in)	5.050 (.1988)			
Valve spring free length		New	mm (in)	40.81 (1.607)			
		Service limit	mm (in)	39.00 (1.535)			
Valve seat contact width	Intake	New	mm (in)	1.05 to 1.35 (.041 to (.053)			
		Service limit	mm (in)	1.8 (.070)			
	Exhaust	New	mm (in)	1.25 to 1.55 (.049 to .061)			
		Service limit	mm (in)	2 (.078)			
Rocker arm bore diameter		New	mm (in)	12.036 to 12.050 (.4739 to .4744)			
		Service limit	mm (in)	12.060 (.4748)			
Rocker arm shaft diameter		New	mm (in)	12.000 to 12.018 (.4724 to .4731)			
		Service limit	mm (in)	11.990 (.4720)			
Piston measurement		New	mm (in)	90.950 to 90.966 (3.5807 to 3.5813)			
Piston/cylinder clearance		New	mm (in)	0.027 to 0.057 (.0011 to .0023)			
		Service limit	mm (in)	0.100 (.0040)			
Piston ring type		1st		Upper compression ring, rectangular			
		2nd		Lower compression ring, tapered face			
		3rd		Oil scraper ring			

MODEL				LEGEND		SKANDIC	EXPEDITION
				TOURING	TRAIL	TUNDRA	SPORT
ENGINE (cont'd)							
Ring end gap	Rectangular	New	mm (in)	0.20 to 0.40 (.008 to .016)			
	Taper-face	New	mm (in)	0.20 to 0.40 (.008 to .016)			
	Oil scraper ring	New	mm (in)	0.20 to 0.70 (.008 to .028)			
	All	Service limit	mm (in)	1.5 (.059)			
Ring/piston groove clearance	Rectangular	New	mm (in)	0.030 to 0.070 (.0012 to .0028)			
		Service limit	mm (in)	0.150 (.0059)			
	Taper-face	New	mm (in)	0.020 to 0.060 (.0008 to .0024)			
		Service limit	mm (in)	0.150 (.0059)			
	Oil scraper ring	New	mm (in)	0.010 to 0.180 (.0004 to .0071)			
		Service limit	mm (in)	0.250 (.0098)			
Cylinder bore		New	mm (in)	90.993 to 91.007 (3.5823 to 3.5829)			
Cylinder taper		Maximum New	mm (in)	0.038 (.0015)			
		Service limit	mm (in)	0.090 (.0035)			
Cylinder out of round		Maximum New	mm (in)	0.015 (.0006)			
		Service limit	mm (in)	0.020 (.0008)			
Camshaft main bearing journal	Timing chain side	New	mm (in)	34.959 to 34.975 (1.3763 to 1.3770)			
		Service limit	mm (in)	34.950 (1.3760)			
	Spark plug side	New	mm (in)	21.959 to 21.980 (.8645 to .8654)			
		Service limit	mm (in)	21.950 (.8642)			
Camshaft main bearing journal bore	Timing chain side	New	mm (in)	35.000 to 35.025 (1.3780 to 1.3789)			
		Service limit	mm (in)	35.040 (1.3795)			
	Spark plug side	New	mm (in)	22.000 to 22.021 (.8661 to .8670)			
		Wear limit	mm (in)	22.040 (.8677)			
Camshaft lobe	Intake valve	New	mm (in)	32.11 to 32.31 (1.2642 to 1.2721)			
		Service limit	mm (in)	32.09 (1.2634)			
	Exhaust valve	New	mm (in)	31.94 to 32.14 (1.2575 to 1.2654)			
		Service limit	mm (in)	31.92 (1.2567)			
Crankshaft main journal diameter MAG/PTO side		New	mm (in)	42.024 to 42.040 (1.6545 to 1.6551)			
		Service limit	mm (in)	42.000 (1.6535)			
Crankshaft radial play MAG/PTO side		Service limit	mm (in)	0.07 (.0031)			
Crankshaft main journal diameter PTO support bearing		New	mm (in)	34.024 to 34.040 (1.3395 to 1.3402)			
		Service limit	mm (in)	34.010 (1.3390)			
Crankshaft radial play PTO support bearing		Service limit	mm (in)	0.10 (.0039)			
Crankshaft pin diameter		New	mm (in)	40.009 to 40.025 (1.5752 to 1.5758)			
		Service limit	mm (in)	39.990 (1.5744)			
Crankshaft deflection	MAG/PTO	New	mm (in)	0.050 (.002)			
Crankcase plain bearing	MAG/PTO	Service limit	mm (in)	42.100 (1.658)			
PTO cover plain bearing		Service limit	mm (in)	34.120 (1.343)			
Connecting rod big end diameter		Service limit	mm (in)	40.100 (1.579)			
Connecting rod big end radial play		Service limit	mm (in)	0.09 (.0035)			

MODEL				LEGEND		SKANDIC	EXPEDITION
				TOURING	TRAIL	TUNDRA	SPORT
ENGINE (cont'd)							
Connecting rod big end axial play	New		mm (in)	0.200 to 0.500 (.008 to .020)			
	Service limit		mm (in)	0.600 (.024)			
Connecting rod small end diameter	New		mm (in)	20.010 to 20.020 (.7878 to .7882)			
	Service limit		mm (in)	20.060 (.7898)			
Piston pin diameter	New		mm (in)	19.996 to 20.000 (.7872 to .7874)			
	Service limit		mm (in)	19.980 (.7866)			
Connecting rod small end radial play	Service limit		mm (in)	0.080 (.0035)			
COOLING SYSTEM							
Coolant	Type			Ethyl glycol and distilled water (50%/ 50%). Use premix coolant from BRP (P/N 219 700 362) or coolant specifically formulated for aluminum engines			
	Quantity		L (U.S. gal.)	4.00 (1.06)	3.8 (1)	4.00 (1.06)	
Thermostat opening temperature			°C (°F)	75 (167)			
Radiator cap opening pressure			kPa (PSI)	110 (16)			
LUBRICATION SYSTEM							
Lubrication	Type			Wet sump. Replaceable oil filter			
	Oil filter			BRP Rotax paper type, replaceable			
	Engine oil pressure	Minimum		350 kPa (51 PSI) at 6000 RPM			
	Engine oil	Capacity (oil change with filter)		2 L (2.11 quarts)			
		Recommended		XP-S 0W40 synthetic oil or an equivalent			
FUEL SYSTEM							
Throttle body type				Dell'Orto			
Idle speed			± 200 RPM	1400			
Gas type				Unleaded			
Pump octane number	Inside North America ((R+M)/2)			87 or higher			
	Outside North America (RON)			92 or higher			
Fuel tank capacity			L (U.S. gal)	34 (9)			
ELECTRICAL SYSTEM							
Magneto generator output			W	420 @ 6000 RPM			
Ignition type				CDI (Capacity Discharge Ignition)			
Spark plug	Make and type			NGK DCPR8E			
	Gap		mm (in)	0.75 (.0303)			
Ignition timing				Not adjustable			
Crankshaft position sensor (CPS)			Ω	774 to 946 @ 20°C (68°F)			
			Vac	2.3 @ 20°C (68°F)			
Battery				12 V, 21 A•h			
Headlamp			W	60/55 (H4)			
Taillight and stoplight			W	8/26			
Fuse	Starter solenoid		A	30 (if applicable)			

MODEL			LEGEND		SKANDIC	EXPEDITION
			TOURING	TRAIL	TUNDRA	SPORT
DRIVE SYSTEM						
Chaincase oil	Type		XP-S synthetic chaincase oil			
	Quantity	mL (U.S. oz)	250 (8.5)			
Chain drive ratio			21/44 (forward) 21/56 (reverse)		19/44 (forward) 19/56 (reverse)	
Chain	Pitch	in	3/8			
	Type/links qty/plate qty		Silent 74/13			
Drive pulley type			TRA IV			
Drive pulley calibration	Clutch engagement	± 100 RPM	2100			
	Spring color		Red/Yellow			
	Spring length	mm (in)	87.9 (3.461)			
	Pin		Hollow (P/N 417 222 594)			
	Ramp		607			
	Screw position		3			
Driven pulley type	Type		LPV VSA			
	Spring preload		0			
	Cam angle		44°			
Pulley distance Offset	Z	mm (in)	20.0 (.787)			
	X	mm (in)	37.0 ± 0.5 (1.457 ± 0.2)			
Drive belt part number		P/N	417 300 197			
Drive belt	Width	mm (in)	37.3 (1.469)			
	Wear limit	mm (in)	34.9 (1.374)			
Drive belt adjustment	Deflection	mm (in)	32 ± 5 (1.260 ± .197)			
	Force	kgf (lbf)	11.30 (24.91)			
Track	Width	mm (in)	381 (15) (EUR): 406.4 (16)	381 (15)	406.4 (16)	
	Length	m (in)	3.46 (136)	3.07 (121)	3.46 (136)	
	Profile height	mm (in)	22.2 (.874) (EUR): 31.8 (1.25)	22.2 (.874)	31.8 (1.25)	
Track adjustment	Deflection	mm (in)	30 to 35 (1.181 to 1.378)			
	Force	kgf (lbf)	7.3 (16)			
BRAKE SYSTEM						
Brake lining thickness		mm (in)	1 (.039)			
Brake fluid	Type		DOT 4			
	Quantity	mL (U.S. oz)	60 (2.0)			

MODEL		LEGEND		SKANDIC	EXPEDITION
		TOURING	TRAIL	TUNDRA	SPORT
SUSPENSION					
FRONT					
Suspension type		Single A-arm			
Suspension maximum travel	mm (in)	160 (6.3)			
Shock absorber type		Motion control			
Sway bar type		Link		—	
REAR					
Suspension type		SC-136	SC-4	SC-136	
Suspension maximum travel	mm (in)	330.7 (13)	381 (15)	330.7 (13)	
Shock absorber type	Center	Motion control			
	Rear	H.P.G.	Motion control	H.P.G.	
Stroke limiter standard position		3–2			
STEERING SYSTEM					
Ski type		Blow mold (EUR): Pilot 6.9	Blow mold	Blow mold (wide)	
Toe-out	mm (in)	5 (.197)			
Camber		0°			
VEHICLE INFORMATIONS					
Mass (dry)	kg (lb)	231 (509)	222 (489)	222 (489)	231 (509)
Length	m (in)	3.03 (119) (EUR): 3.09 (122)	2.85 (112)	3.03 (119)	
Width	m (in)	1.13 (44.6) (EUR): 1.17 (45.9)	1.13 (44.6)		
Height	m (in)	1.30 (51)	1.245 (49)	1.30 (51)	
Ski stance (carbide to carbide)	m (in)	0.99 (39)		0.82 (32)	0.99 (39)
MATERIAL					
Frame		Aluminum			
Bottom pan		Polypropylene			
Side panels		Polyethylene HDPE			
Hood		Polyethylene HDPE			
Console		Polyethylene HDPE			
Trunk		Polypropylene			

ELECTRICAL CONNECTORS

SERVICE TOOLS

Description	Part Number	Page
crimp pliers	529 035 730	612
crimper die	529 035 906	610
crimping tool	529 035 909	610

SERVICE TOOLS – OTHER SUPPLIER

Description	Part Number	Page
Snap-on screwdriver	TT600-4	607
Snap-on screwdriver	TT600-5	605–606
Snap-on terminal remover	TT600-1	609
tool AMP	755430-2	607–608

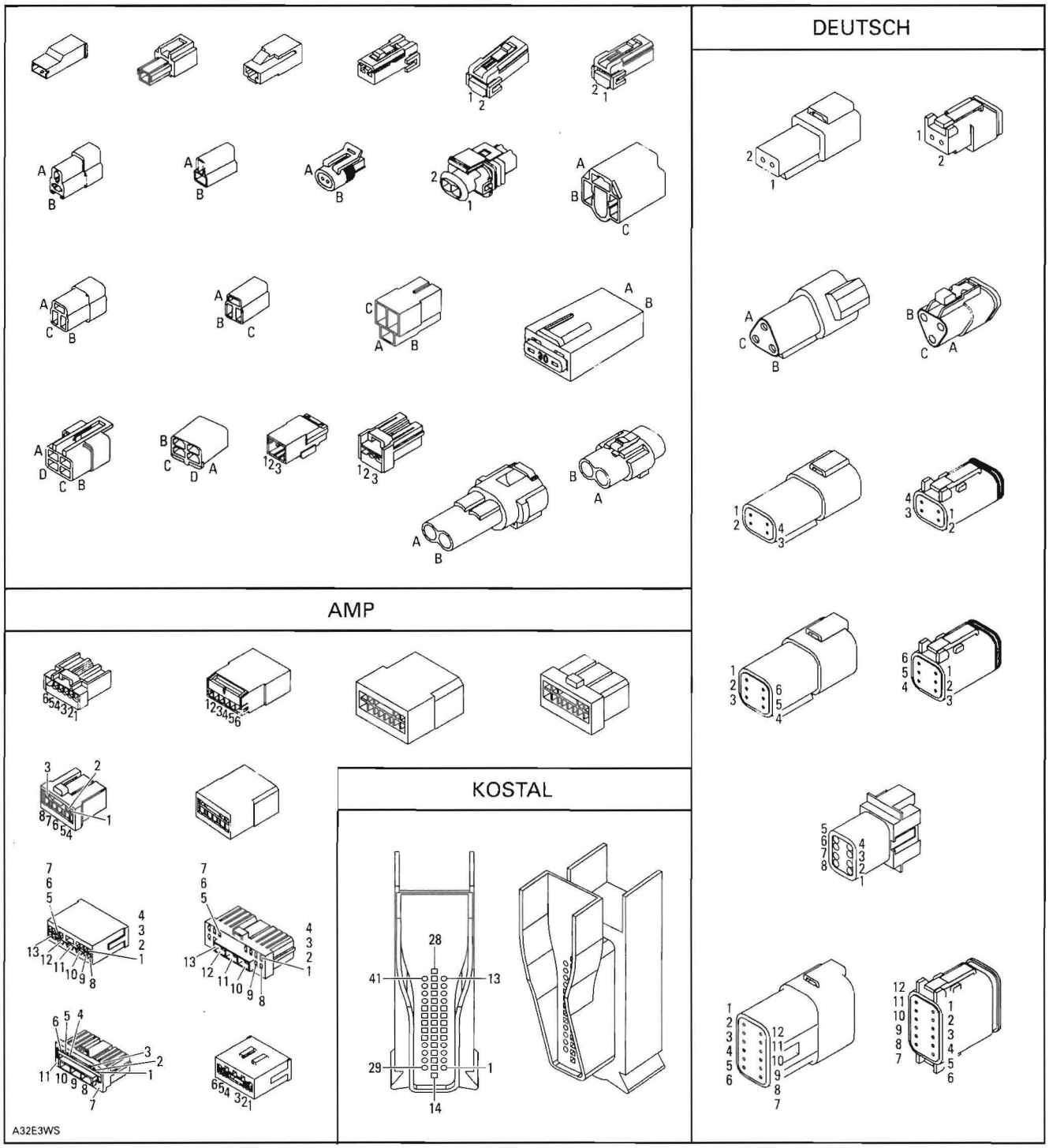
DEUTSCH
AMP
KOSTAL
A32E3WS

PROCEDURES

TAB AND RECEPTACLE CONNECTORS

Always unplug connectors by pulling on housing not on wire.

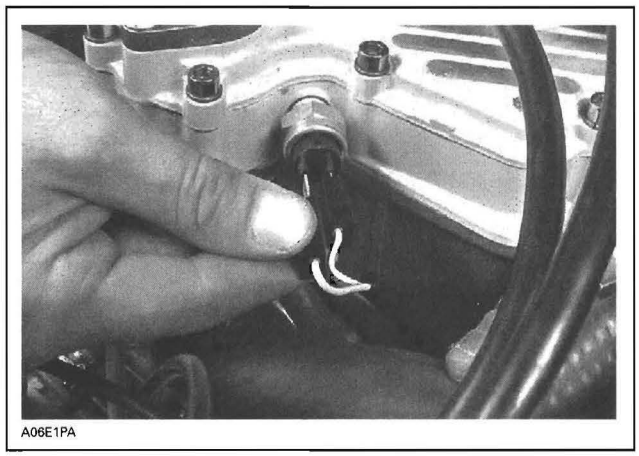

TYPICAL

Removal

It is locked in its housing by a spring tab on its side.

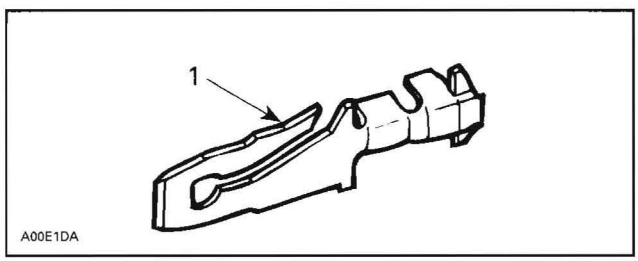

TAB CONNECTOR
1. Locking tab

- Insert Snap-on screwdriver (P/N TT600-5) from opposite side of wire and pry locking tab.
- While holding locking tab pried, pull connector toward wire side.

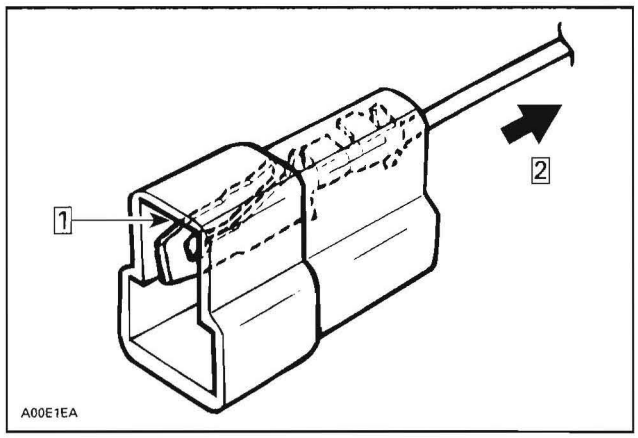

Step 1: Insert screwdriver here
Step 2: Pull this side

Installation

Prior to installing, make sure locking tab is sufficiently lifted to properly lock.

Insert tab and receptacle connectors in their respective housings as shown in following illustrations. Push sufficiently so that they snap. Try pulling wire to ensure they are properly locked.

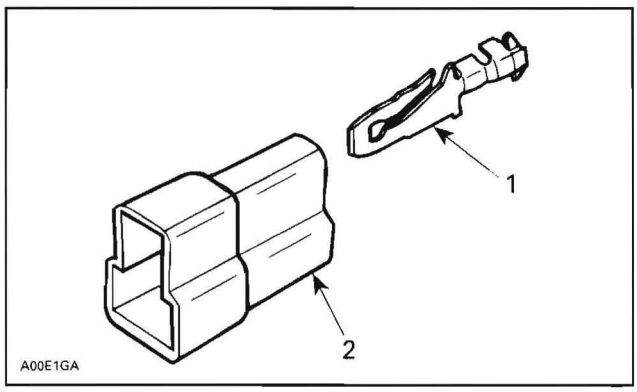

1. Tab
2. Housing

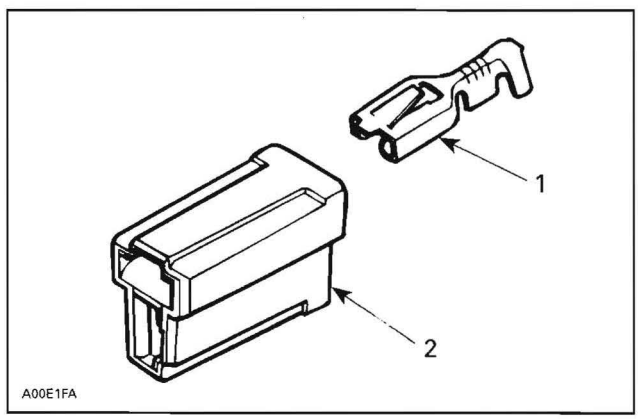

TYPICAL
1. Receptacle
2. Housing

⚠ WARNING

Keep wires away from any rotating, moving, heating, vibrating or sharp edge. Use proper fastening devices as required.

LOCKING RECEPTACLE CONNECTOR

Removal

– Insert Snap-on screwdriver (P/N TT600-5) in access opening then pull housing toward wire side.

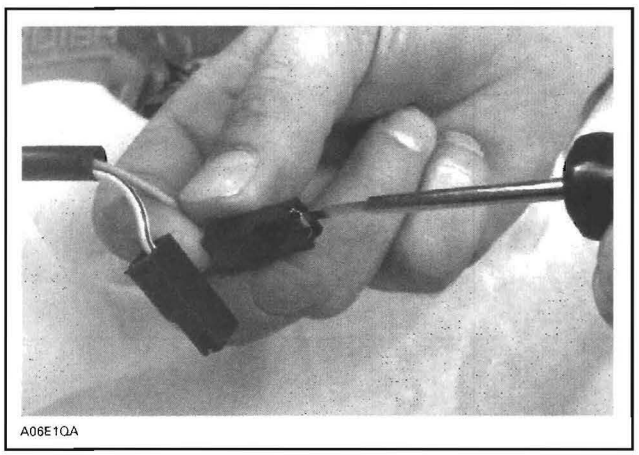
A06E1QA

DEUTSCH CONNECTORS

Female Housing

To remove:

– Insert Snap-on screwdriver (P/N TT600-5) under lock and twist to lift it.

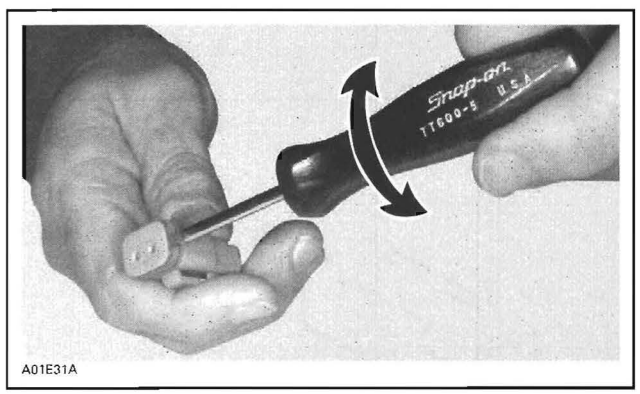

A01E31A

– Pry tab to free connector then pull wire out of housing.

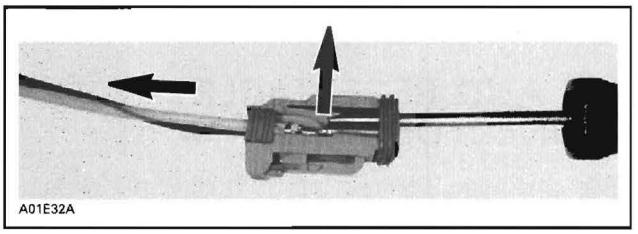
A01E32A

FEMALE CONNECTOR HOUSING — CUT-AWAY

Male Housing

To remove:

– Using a small hook, pull out the lock.

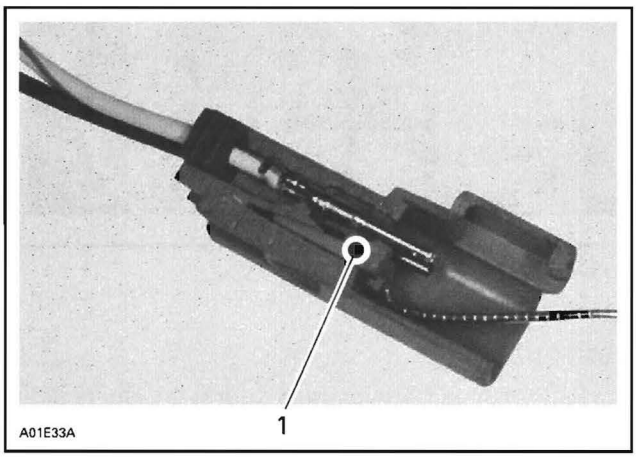

A01E33A

1. Lock

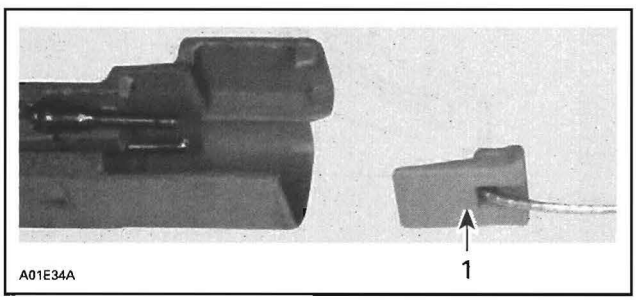

A01E34A

1. Lock

– Pry tab to free connector then pull wire out of housing.

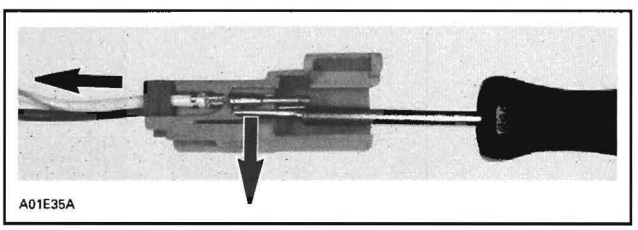
A01E35A

MALE CONNECTOR HOUSING — CUT-AWAY

PACKARD CONNECTOR

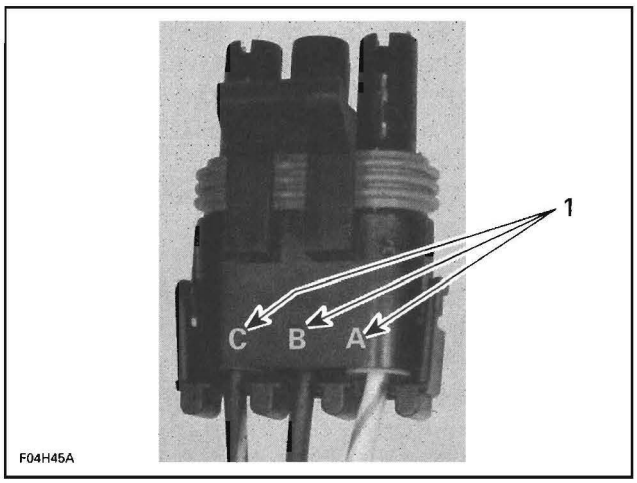

VIEW OF A 3-PIN PACKARD CONNECTOR
1. Identification letters

To remove terminal from Packard connector, use Snap-on screwdriver (P/N TT600-4) tool.

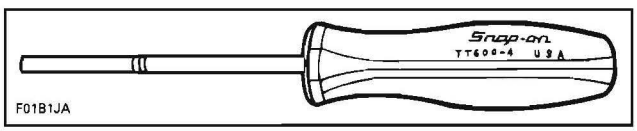

AMP MULTILOCK CONNECTOR

Female Terminal Housing

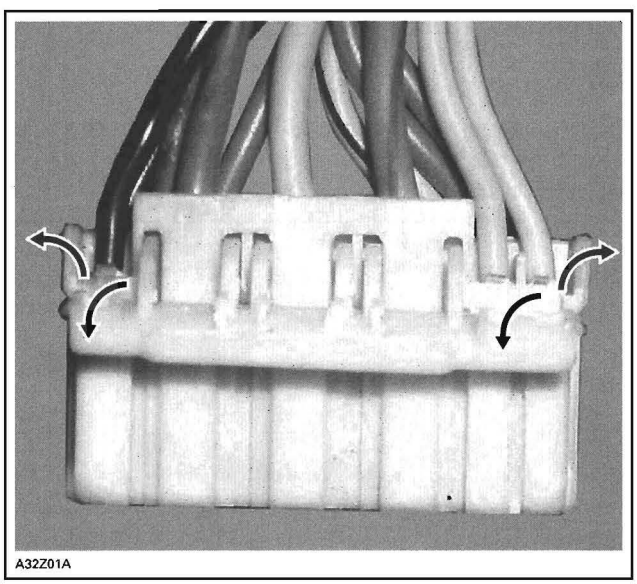

To remove:

– Insert tool AMP (P/N 755430-2) under lock and twist to lift it.

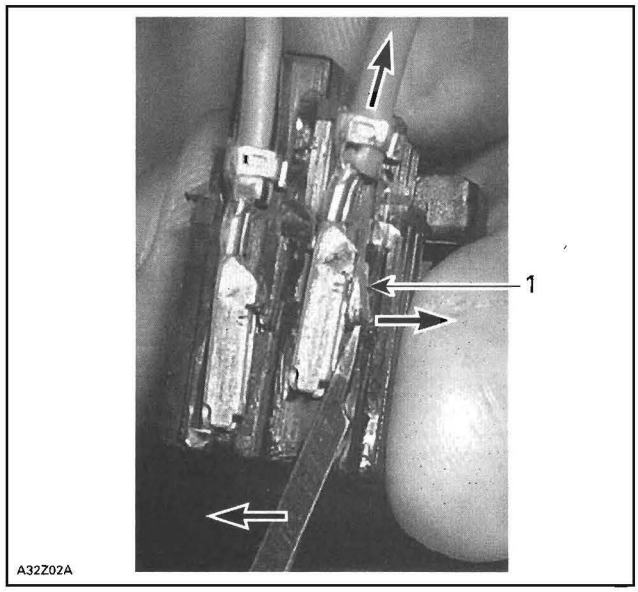

FEMALE TERMINAL HOUSING — CUT-AWAY
1. Lock

Female terminals can be removed from housing with sharp head pin.

Male Terminal Housing

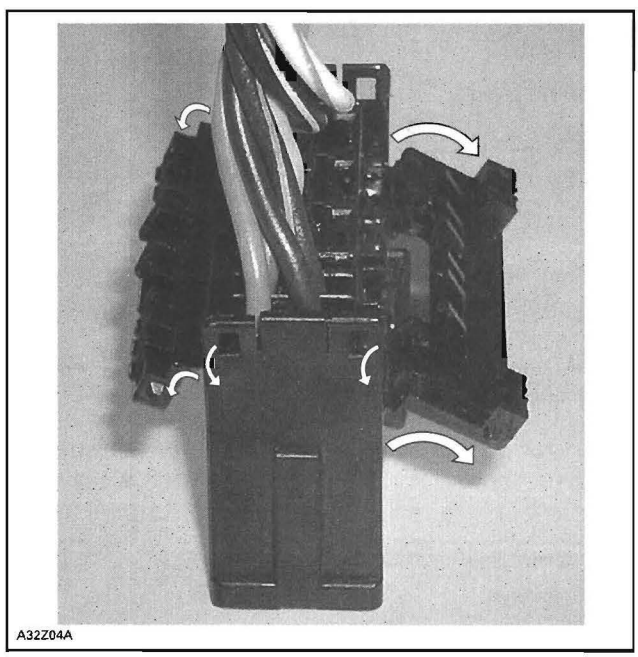

To remove:

– Insert tool AMP (P/N 755430-2) under lock and twist to lift it.

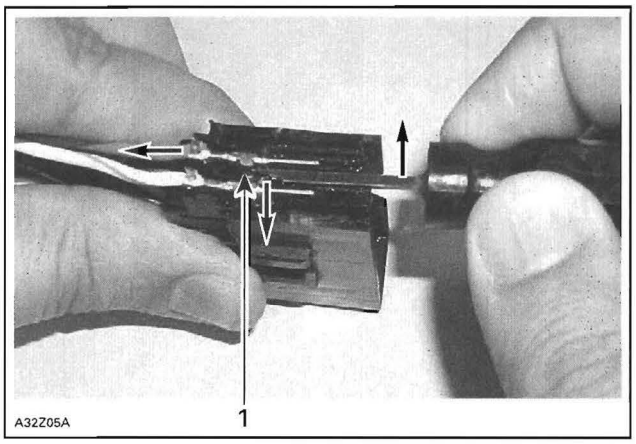

MALE TERMINAL HOUSING — CUT-AWAY
1. Lock

AMP 8-CIRCUIT CONNECTOR

Pry housing to release lock.

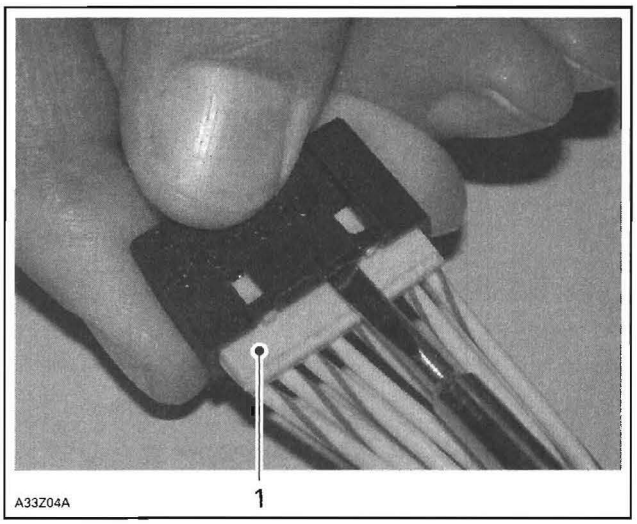

1. Lock

Insert tool AMP (P/N 755430-2) under tab and pry it to free connector. Pull on the female terminal wire to remove female terminal from housing.

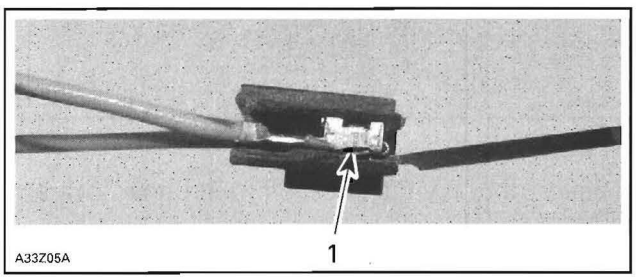

AMP 8-CIRCUIT CONNECTOR — CUT-AWAY
1. Tab

ECM CONNECTORS

There are two ECM connectors used and they are connected on the ECM. The engine harness female connector is connected on the module male connector "A" and the vehicle system control harness female connector is connected to the module male connector "B". The ECM connectors have 41 pins.

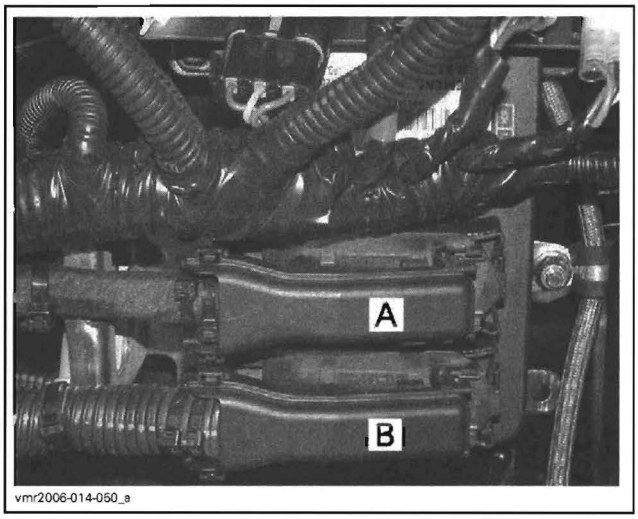

For probing techniques and tool, refer to *ENGINE MANAGEMENT*.

CAUTION: Do not disconnect the ECM connectors needlessly. They are not designed to be disconnected/reconnected frequently.

Terminal Removal

Unlock the connector cover by pushing in the tabs on top of the connector with a flat screwdriver to be able to flip the top cover up.

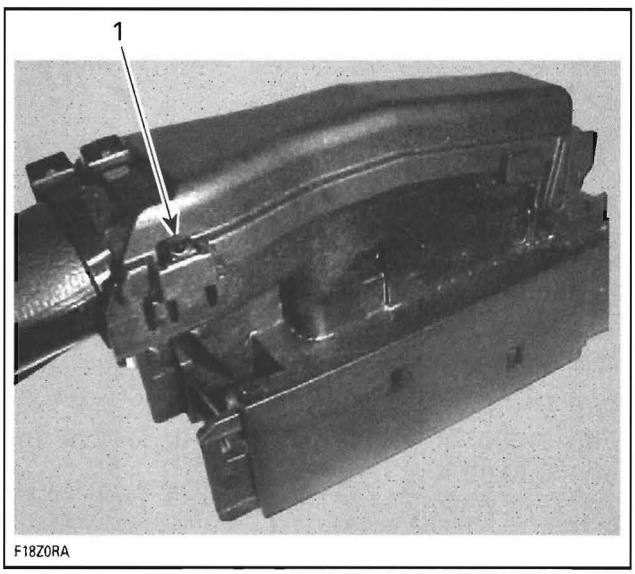

1. Push in tab

Lift the cover by pushing it forward.

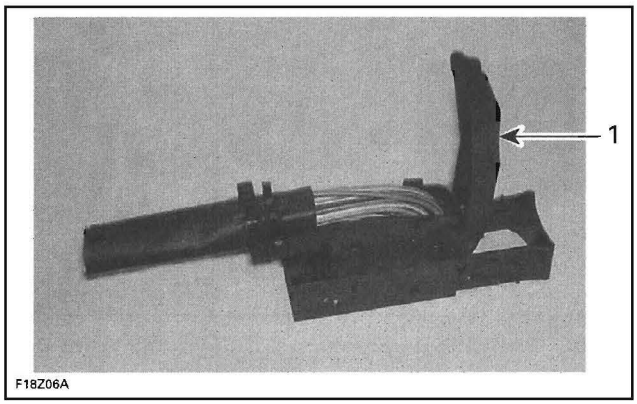

1. Cover

Cut both tie raps that secure the harness to the connector.

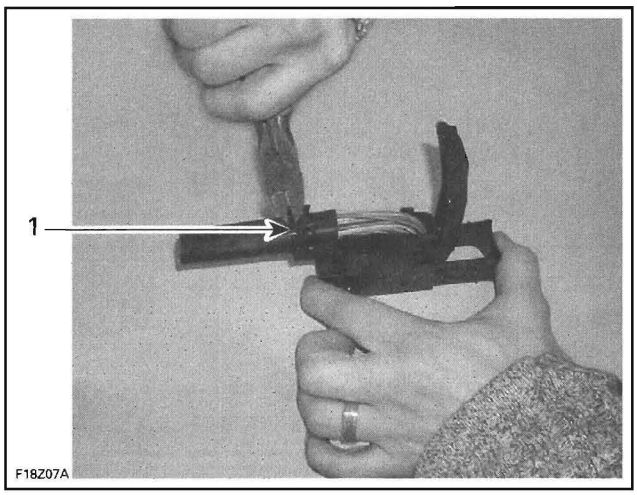

1. Tie raps

Turn the connector over and remove the orange locking tab by pushing and then pulling toward the wire harness.

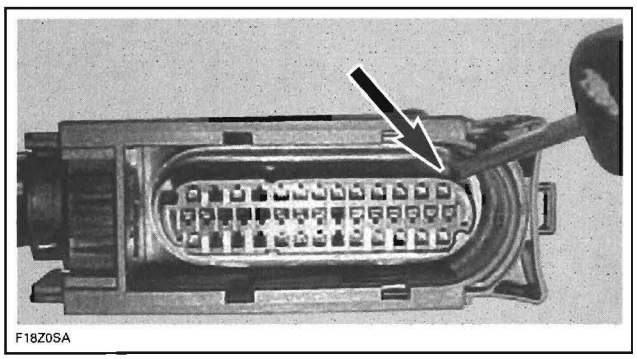

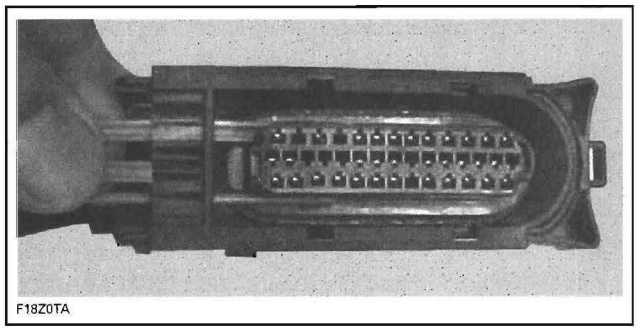

Use a Snap-on terminal remover (P/N TT600-1) tool (or a 0.76 mm (.030 in) oxyacetylene torch tip cleaner or a no. 68 drill bit) must be inserted into the terminal cavity to release the locking tab from the connector.

CAUTION: Using a tool tip larger than 0.76 mm (.030 in) may damage the terminal.

Insert the tool tip into the terminal cavity as shown, and locate its wire in the back of the connector. You may have to pry the tool tip against the locking tab to release it, then remove the terminal from the connector.

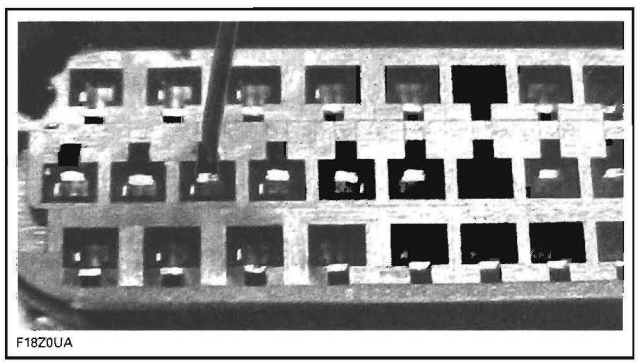

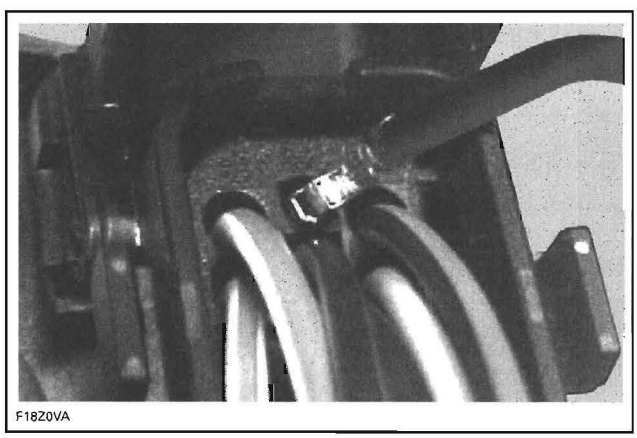

Check the locking tab on the terminal, it may have to be bent out a little so it will lock in its cavity when it is re-inserted.

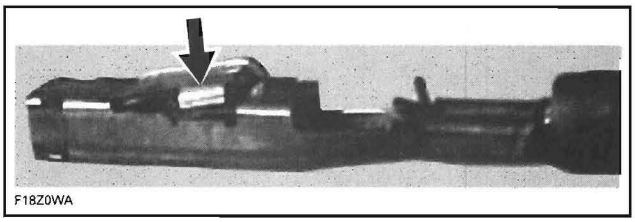
F18Z0WA

If the wire is in good condition but the terminal is rusted or corroded, remove defective terminal and crimp a new one. If wire and terminal are defective, replace with a new genuine wire and new terminal and crimp them together as explained below.

IMPORTANT: Use genuine wires only. Otherwise wires will not fit properly.

When re-inserting the terminal, the locking tab must be installed facing the smaller cutout of the terminal cavity.

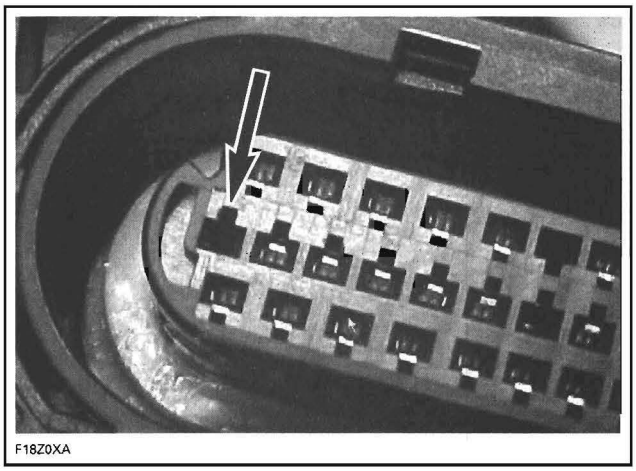
F18Z0XA

Insert the terminal, ensuring the locking tab snaps into its cavity.

Re-install the orange locking tab, attach the 2 tie raps, and close the connector cover.

Terminal Crimping (Kostal)

To crimp a new connector terminal, use the crimping tool (P/N 529 035 909) and the crimper die (P/N 529 035 906).

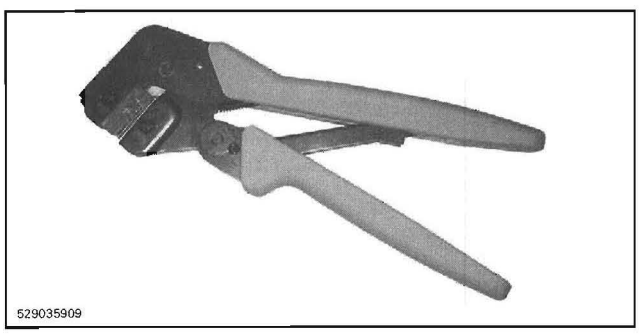
529035909

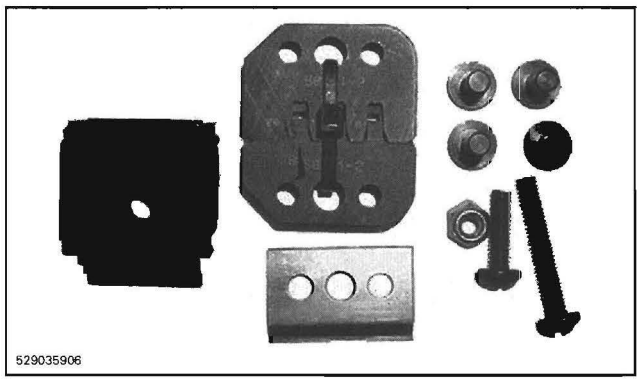
529035906

To properly crimp the wires, strictly follow this procedure.

Strip the wire to a maximum of 3 mm (1/8 in).

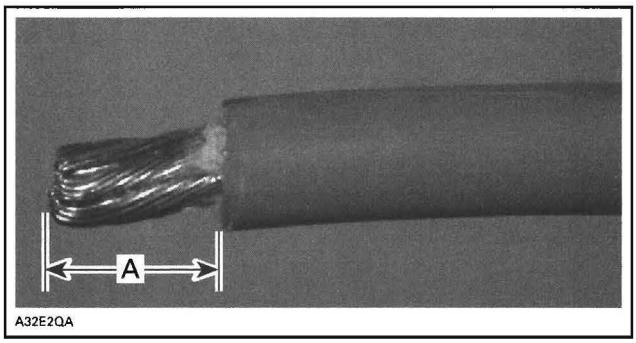

A32E2QA

TYPICAL
A. 3 mm (1/8 in) max.

Position wire in terminal.

Squeeze the terminal tabs with your fingers to temporarily retain terminal in place.

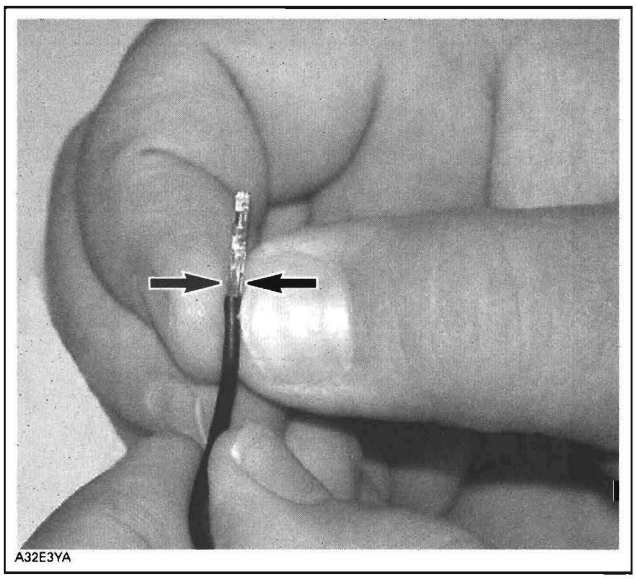
A32E3YA

Insert terminal with wire in crimping pliers and position so that top of terminal tabs are flush with pliers edge or a little bit lower as shown.

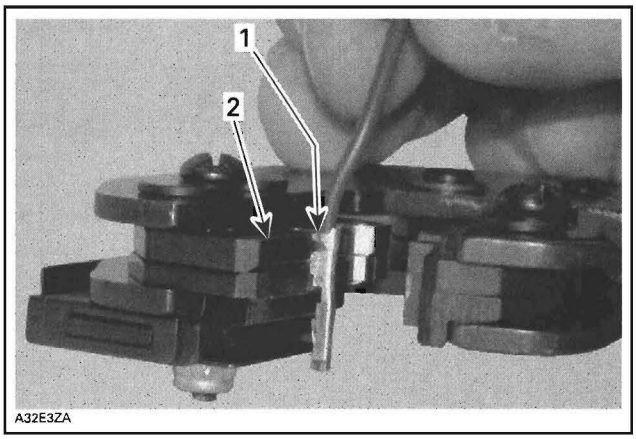

1. *Top of terminal tabs*
2. *Align tabs with pliers edge*

Crimp terminal. Ensure no tiny wire goes out of terminal. This might cause strange problems of the electrical system.

Lubrication

Do not apply any product to the pins of the connector on the ECM.

MULTIFUNCTION SPEEDOMETER CONNECTOR

Firmly push down tab and hold to unlock connector while pulling it out.

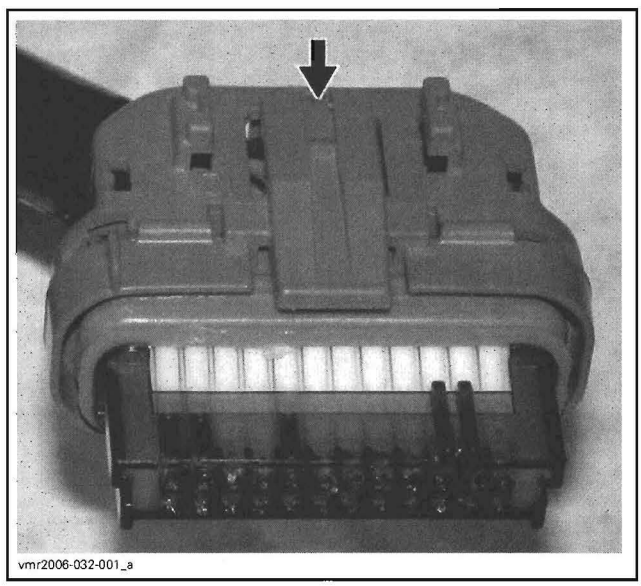

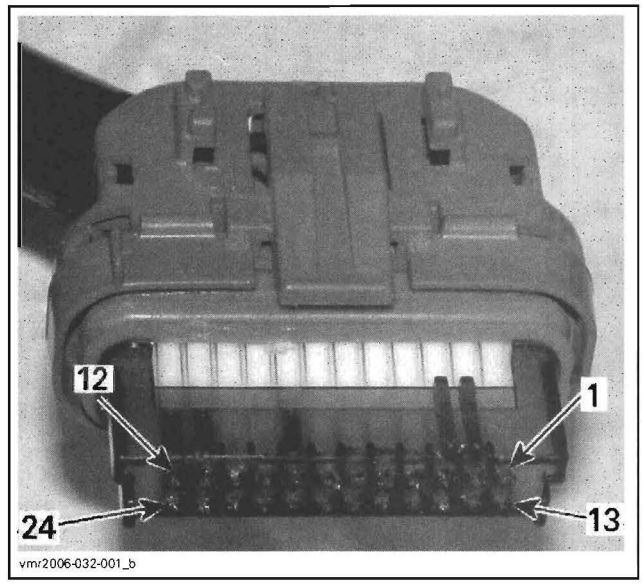

CONNECTOR PINOUT

Push on both tabs to remove retainer.

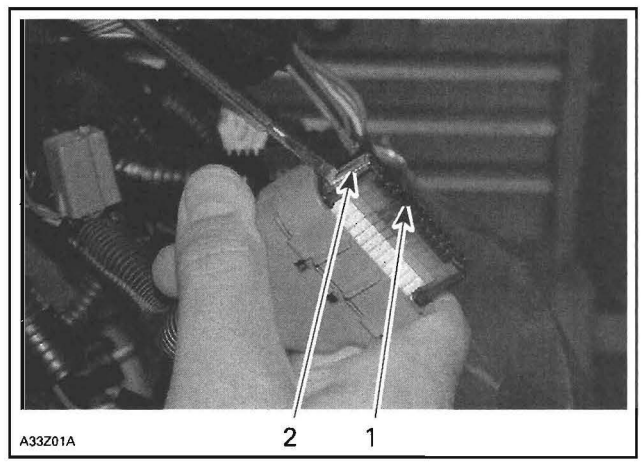

TYPICAL
1. *Retainer*
2. *Tab (one on each side)*

Open housing by lifting 4 tabs.

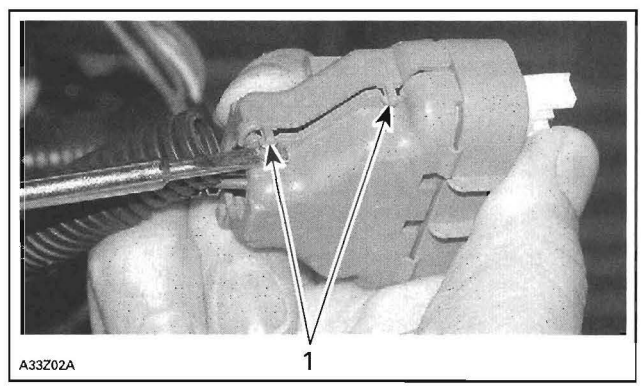

TYPICAL
1. *Tabs (2 on each side)*

Lift the top plastic lock of the female terminal to be removed and hold in position. Lift the female terminal to unlock from the housing and push out of housing.

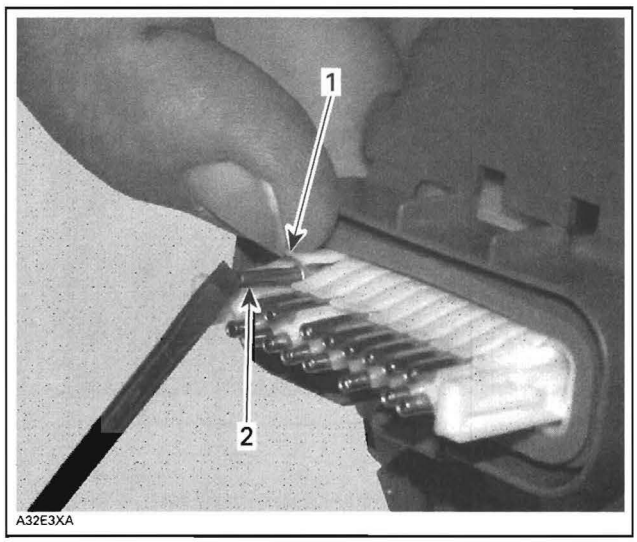

TYPICAL
1. Lift and hold plastic lock
2. Lift to unlock and push out

BATTERY CABLE TERMINAL

Terminal Installation

Carefully strip the wire approximately to 10 mm (1/2 in) in length, using a wire stripping tool or sharp blade/knife.

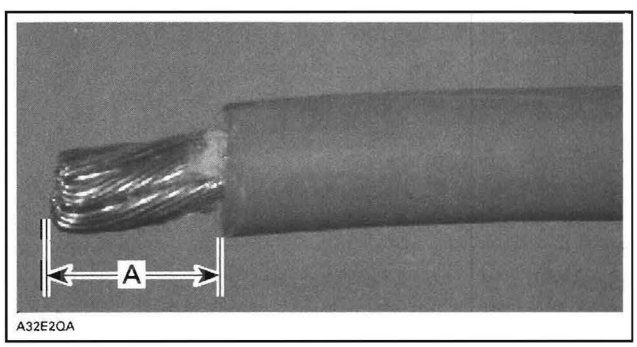

A. 10 mm (1/2 in)

NOTE: Make sure not to cut wire strands while stripping the wire.

Install the appropriate terminal on the wire according to the requirement. Refer to appropriate *PARTS CATALOG*.

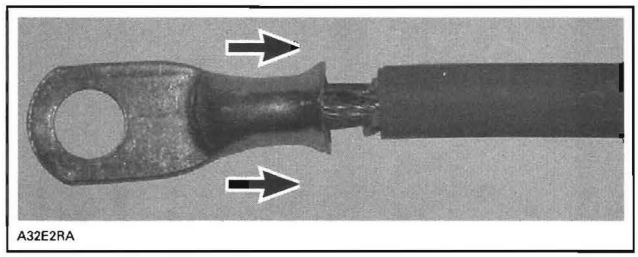

INSTALLATION OF TERMINAL

Follow the instructions provided with the crimp pliers (P/N 529 035 730) to select the proper position of the tool.

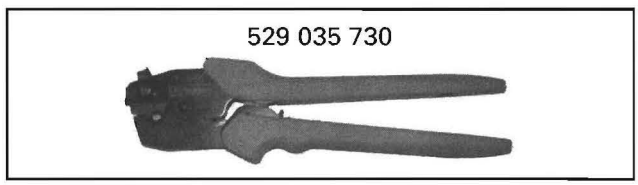

NOTE: Different wires require different crimp pliers settings, so make sure to follow the instruction supplied with the tool.

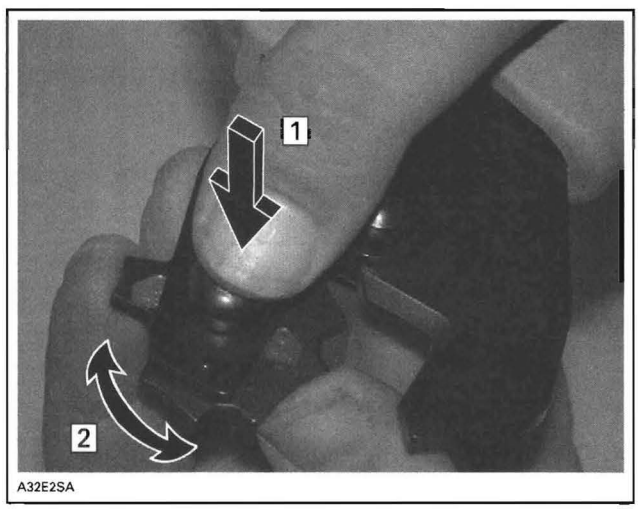

POSITIONING THE CRIMP PLIERS
Step 1: Press
Step 2: Rotate

After positioning the crimp pliers, crimp the terminal already installed on wire.

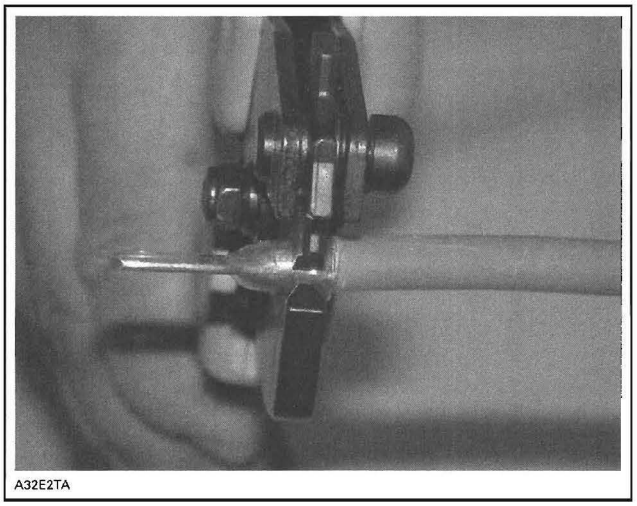
A32E2TA

CRIMPING OF WIRE

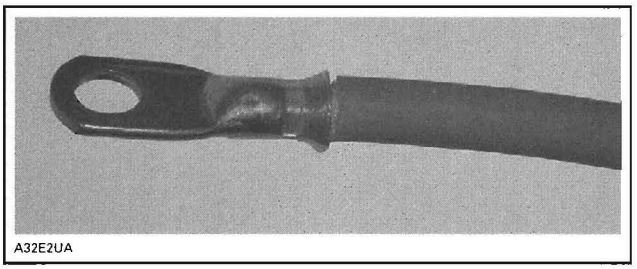
A32E2UA

PROPERLY CRIMPED WIRE

To verify, if the wire is properly crimped, apply some pulling force on wire and the terminal at the same time from both directions.

CAUTION: Never solder the wire to the terminal. Soldering can change the property of the wire and it can become brittle and break.

Install the protective heat shrink rubber tube on the terminal. Heat the heat shrink rubber tube using the heat gun so that it grasps the wire and the terminal.

CAUTION: Make sure that the protective heat shrink rubber tube has been properly installed and no part of wire is exposed.

LEGEND/TUNDRA

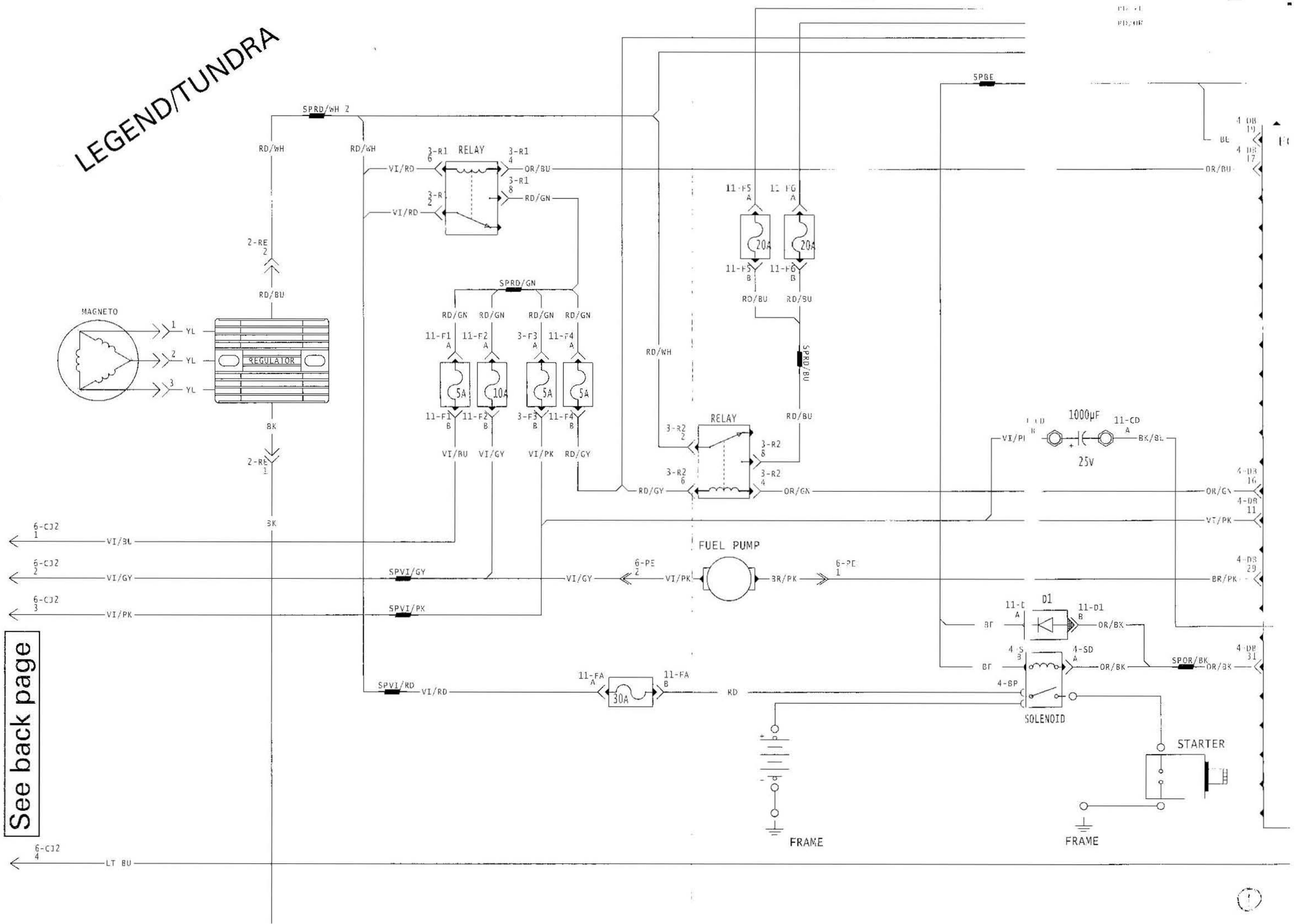

See back page

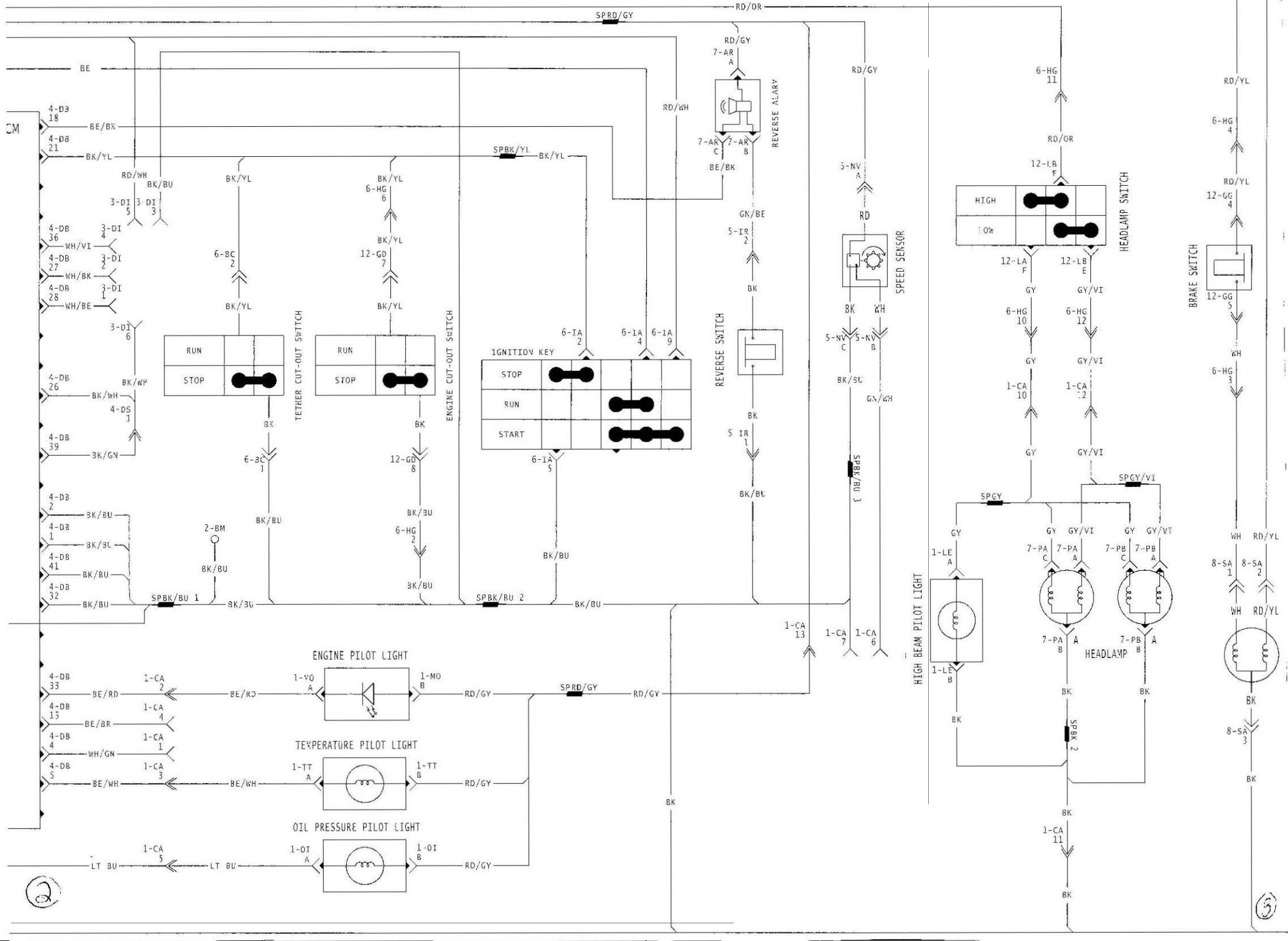
SPRD/GY
RD/OR
BE
RD/WH
RD/GY
7-AR A
REVERSE ALARM
7-AR C
7-AR B
BE/BK
4-DB 18
BE/BK
4-DB 21
BK/YL
SPBK/YL
BK/YL
RD/WH
BK/BU
3-DI 5
3-DI 3
BK/YL
6-HG 6
BK/YL
12-GD 7
4-DB 36
WH/VI
3-DI 4
4-DB 27
WH/BK
3-DI 2
4-DB 28
WH/BE
3-DI 1
6-BC 2
BK/YL
BK/YL
3-DI 6
RUN
STOP
TETHER CUT-OUT SWITCH
RUN
STOP
ENGINE CUT-OUT SWITCH
IGNITION KEY
STOP
RUN
START
6-IA 2
6-IA 4
6-IA 9
6-IA 5
REVERSE SWITCH
GN/BE
5-IR 2
BK
5-IR 1
BK/BU
5-NV A
RD
SPEED SENSOR
BK
WH
5-NV C
5-NV B
BK/BU
GN/WH
SPBK/BU 3
4-DB 26
BK/WH
BK/WP
4-DS 1
4-DB 39
BK/GN
BK
6-BC 1
BK/BU
BK
12-GD 8
BK/BU
6-HG 2
BK/BU
4-DB 2
BK/BU
4-DB 1
BK/BU
4-DB 41
BK/BU
4-DB 32
BK/BU
2-BM
BK/BU
SPBK/BU 1
BK/BU
SPBK/BU 2
BK/BU
1-CA 13
1-CA 7
1-CA 6
6-HG 11
RD/OR
12-LB F
HIGH
LOW
HEADLAMP SWITCH
12-LA F
12-LB E
GY
GY/VI
6-HG 10
6-HG 12
GY
GY/VI
1-CA 10
1-CA 12
GY
GY/VI
SPGY/VI
SPGY
GY
GY
GY/VI
GY
GY/VI
1-LE A
7-PA C
7-PA A
7-PB C
7-PB A
HIGH BEAM PILOT LIGHT
1-LE B
7-PA B
7-PB B
HEADLAMP
BK
BK
BK
SPBK 2
BK
1-CA 11
BK
RD/YL
6-HG 4
RD/YL
12-GG 4
BRAKE SWITCH
12-GG 5
WH
6-HG 3
WH
RD/YL
8-SA 1
8-SA 2
WH
RD/YL
BK
8-SA 3
BK
ENGINE PILOT LIGHT
4-DB 33
BE/RD
1-CA 2
BE/RD
1-VO A
1-MO B
RD/GY
SPRD/GY
RD/GY
4-DB 15
BE/BR
1-CA 4
TEMPERATURE PILOT LIGHT
4-DB 4
WH/GN
1-CA 1
4-DB 5
BE/WH
1-CA 3
BE/WH
1-TT A
1-TT B
RD/GY
OIL PRESSURE PILOT LIGHT
1-CA 5
LT BU
LT BU
1-OI A
1-OI B
RD/GY
BK
2
5

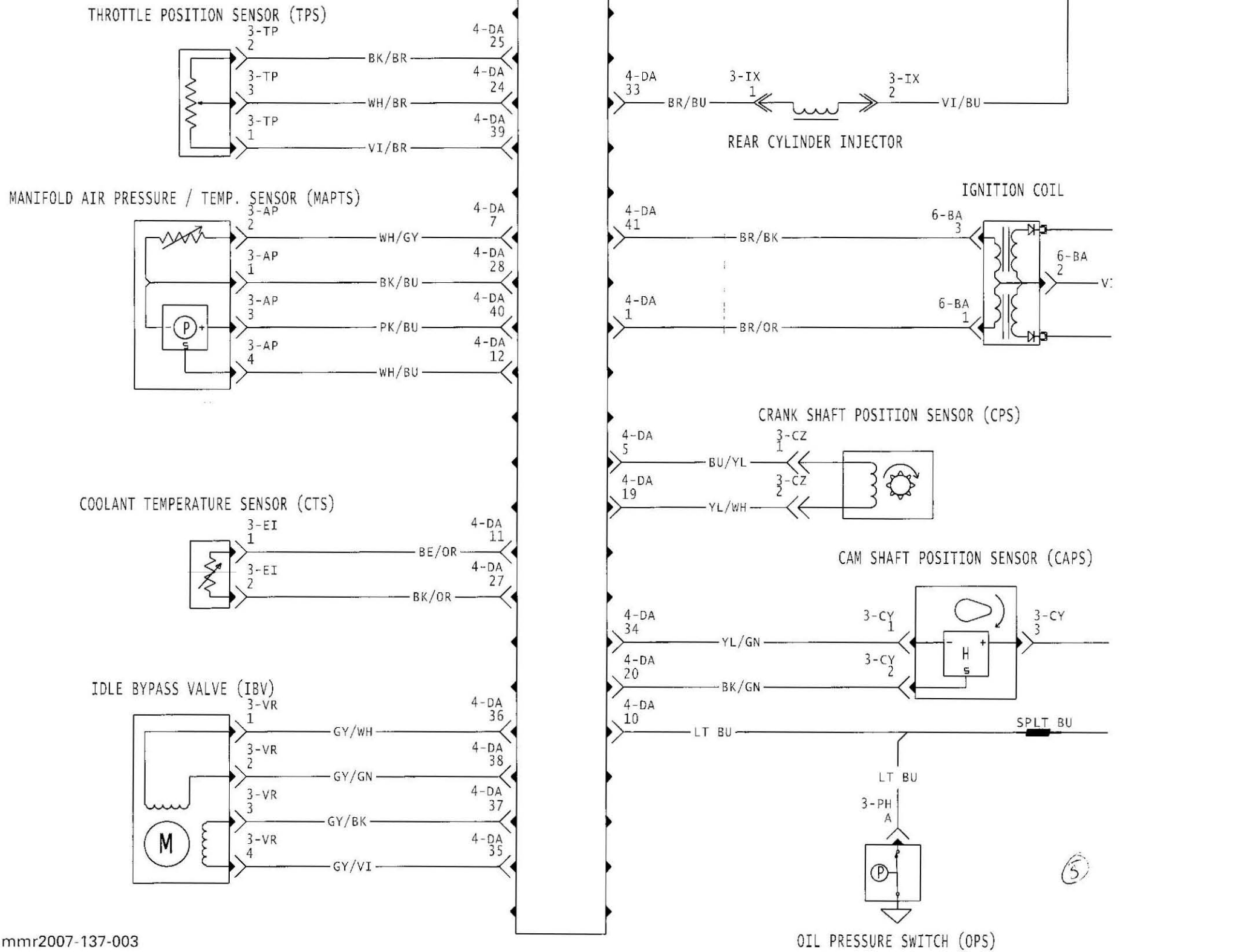

mmr2007-137-003

(V800)

ECM

A

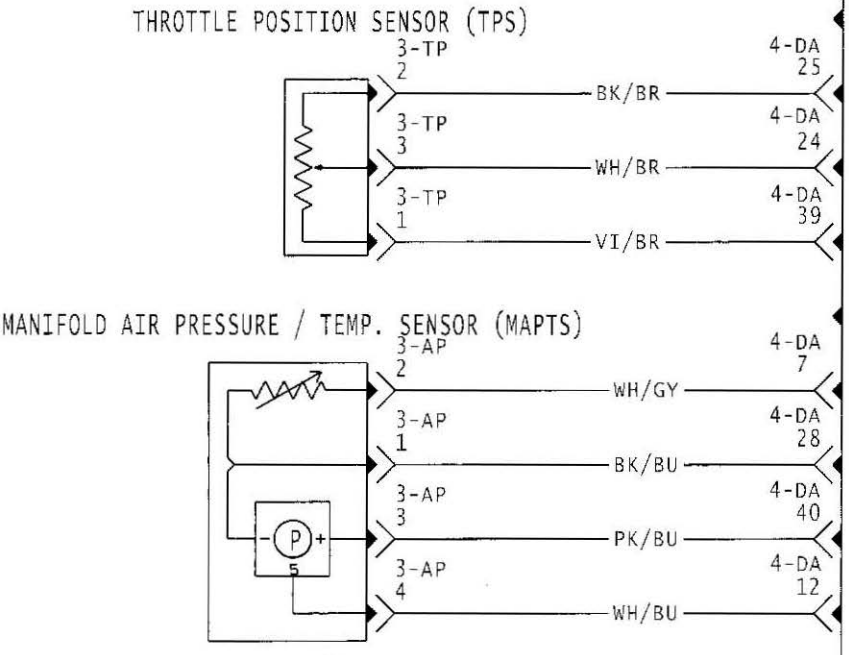
THROTTLE POSITION SENSOR (TPS)
3-TP 2
BK/BR
4-DA 25
3-TP 3
WH/BR
4-DA 24
3-TP 1
VI/BR
4-DA 39
MANIFOLD AIR PRESSURE / TEMP. SENSOR (MAPTS)
3-AP 2
WH/GY
4-DA 7
3-AP 1
BK/BU
4-DA 28
3-AP 3
PK/BU
4-DA 40
3-AP 4
WH/BU
4-DA 12
5

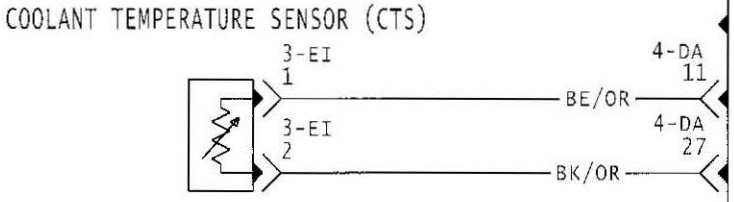
COOLANT TEMPERATURE SENSOR (CTS)
3-EI 1
BE/OR
4-DA 11
3-EI 2
BK/OR
4-DA 27

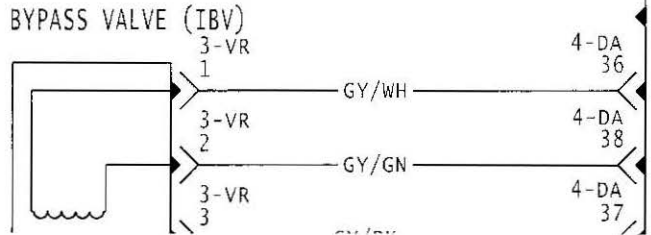
IDLE BYPASS VALVE (IBV)
3-VR 1
GY/WH
4-DA 36
3-VR 2
GY/GN
4-DA 38
3-VR 3
4-DA 37

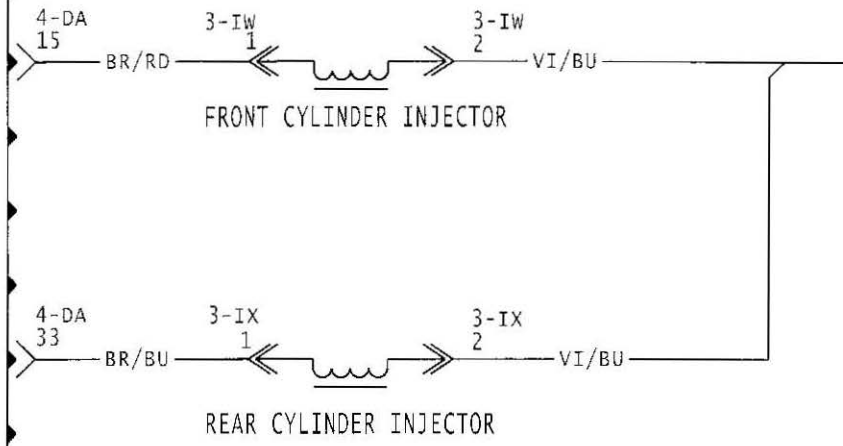
4-DA 15
BR/RD
3-IW 1
3-IW 2
VI/BU
FRONT CYLINDER INJECTOR
4-DA 33
BR/BU
3-IX 1
3-IX 2
VI/BU
REAR CYLINDER INJECTOR

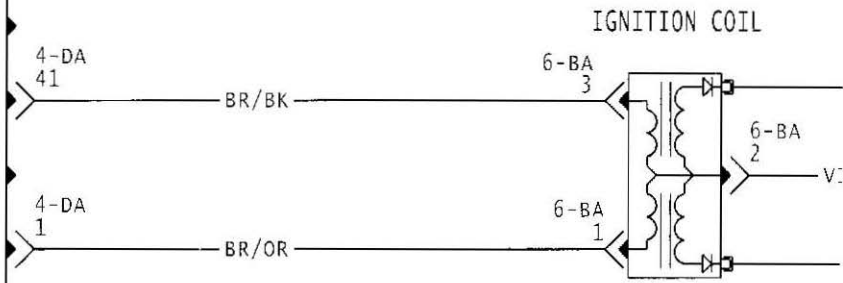
IGNITION COIL
4-DA 41
BR/BK
6-BA 3
6-BA 2
4-DA 1
BR/OR
6-BA 1

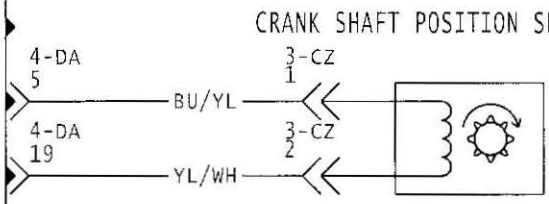
CRANK SHAFT POSITION SENSOR (CPS)
4-DA 5
BU/YL
3-CZ 1
4-DA 19
YL/WH
3-CZ 2

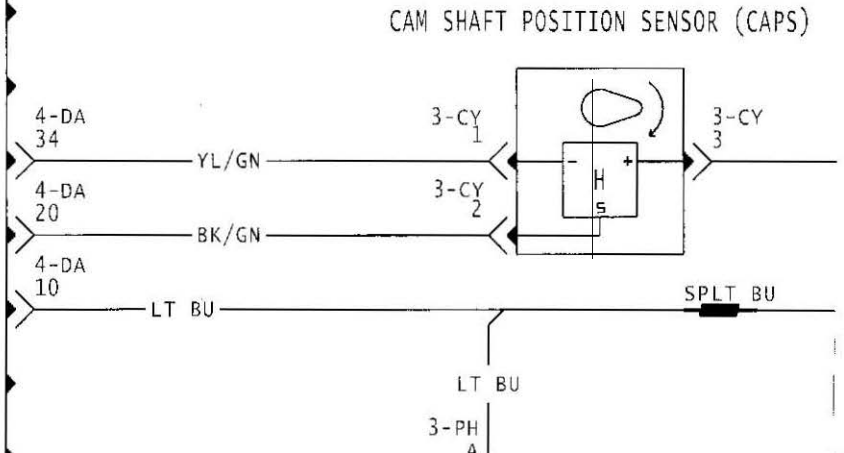
CAM SHAFT POSITION SENSOR (CAPS)
4-DA 34
YL/GN
3-CY 1
3-CY 3
4-DA 20
BK/GN
3-CY 2
4-DA 10
LT BU
SPLT BU
LT BU
3-PH

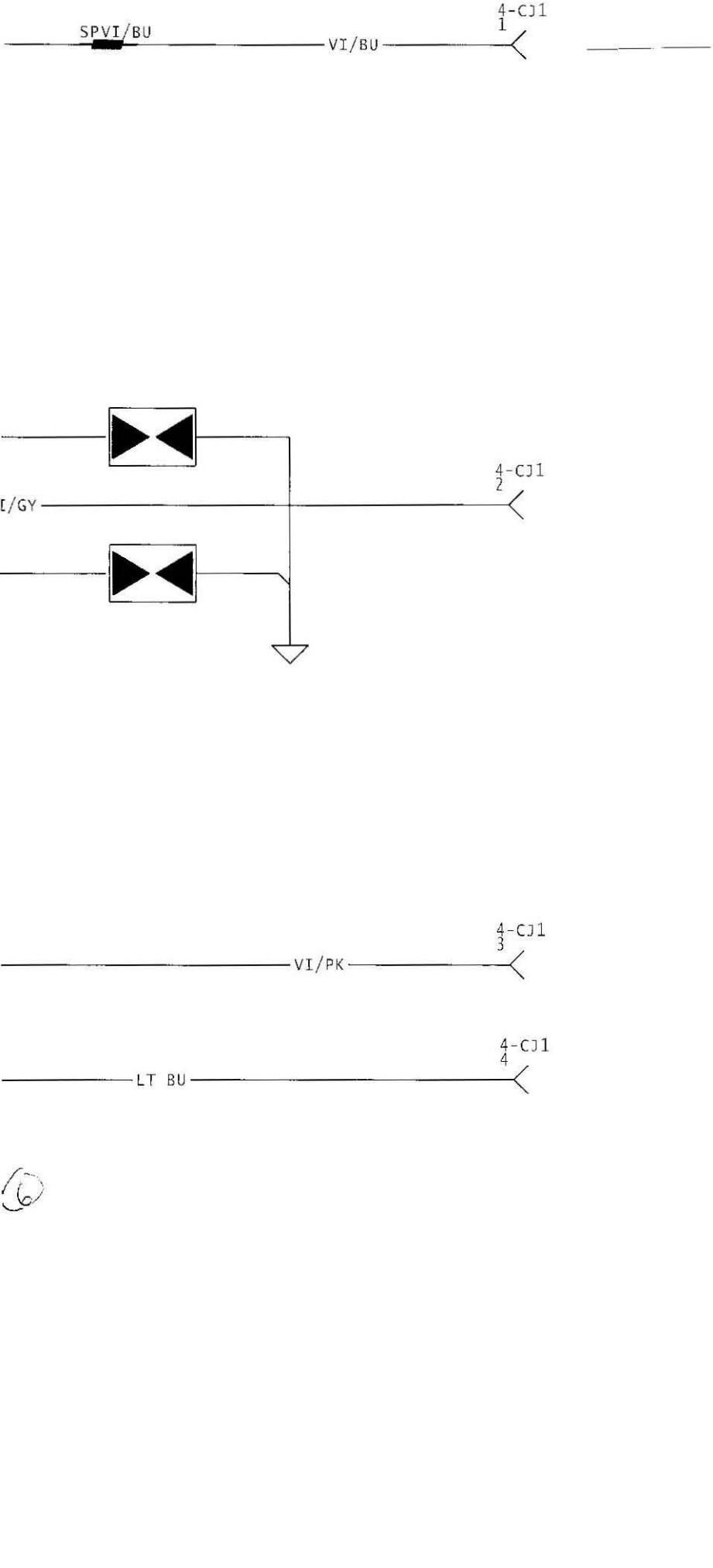
SPVI/BU
VI/BU
4-CJ1
1
I/GY
4-CJ1
2
VI/PK
4-CJ1
3
LT BU
4-CJ1
4

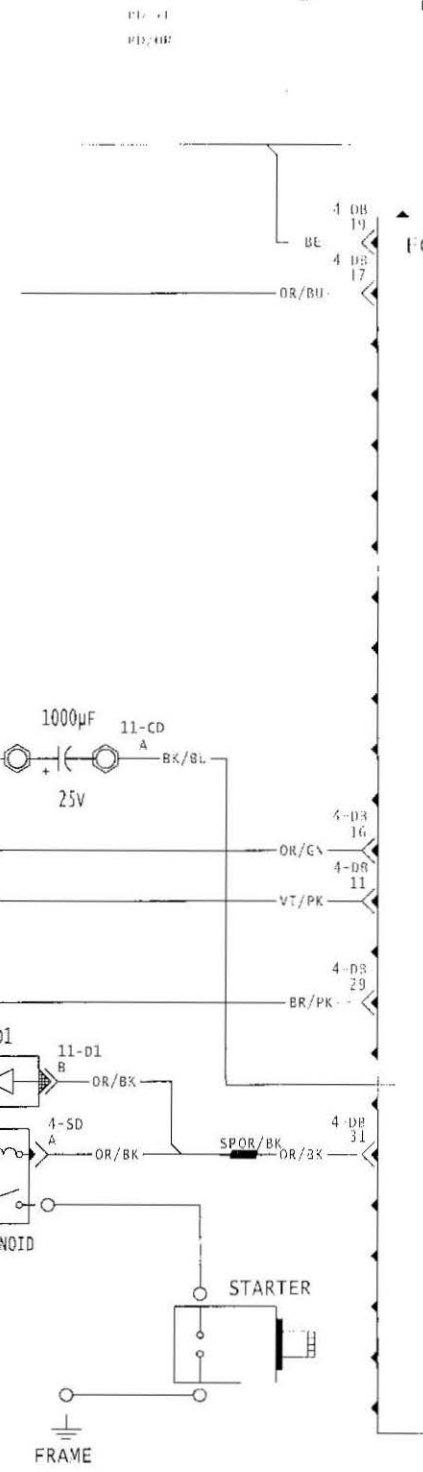
4-DB
19
BE
4-DB
17
OR/BU
1000μF
11-CD
A
BK/BL
25V
4-DB
16
OR/GN
4-DB
11
VT/PK
4-DB
29
BR/PK
11-D1
B
OR/BK
4-SD
A
OR/BK
SPOR/BK
4-DB
31
OR/BK
STARTER
FRAME

FREESTYLE/TUNDRA/EXPEDITION (300F/550F)

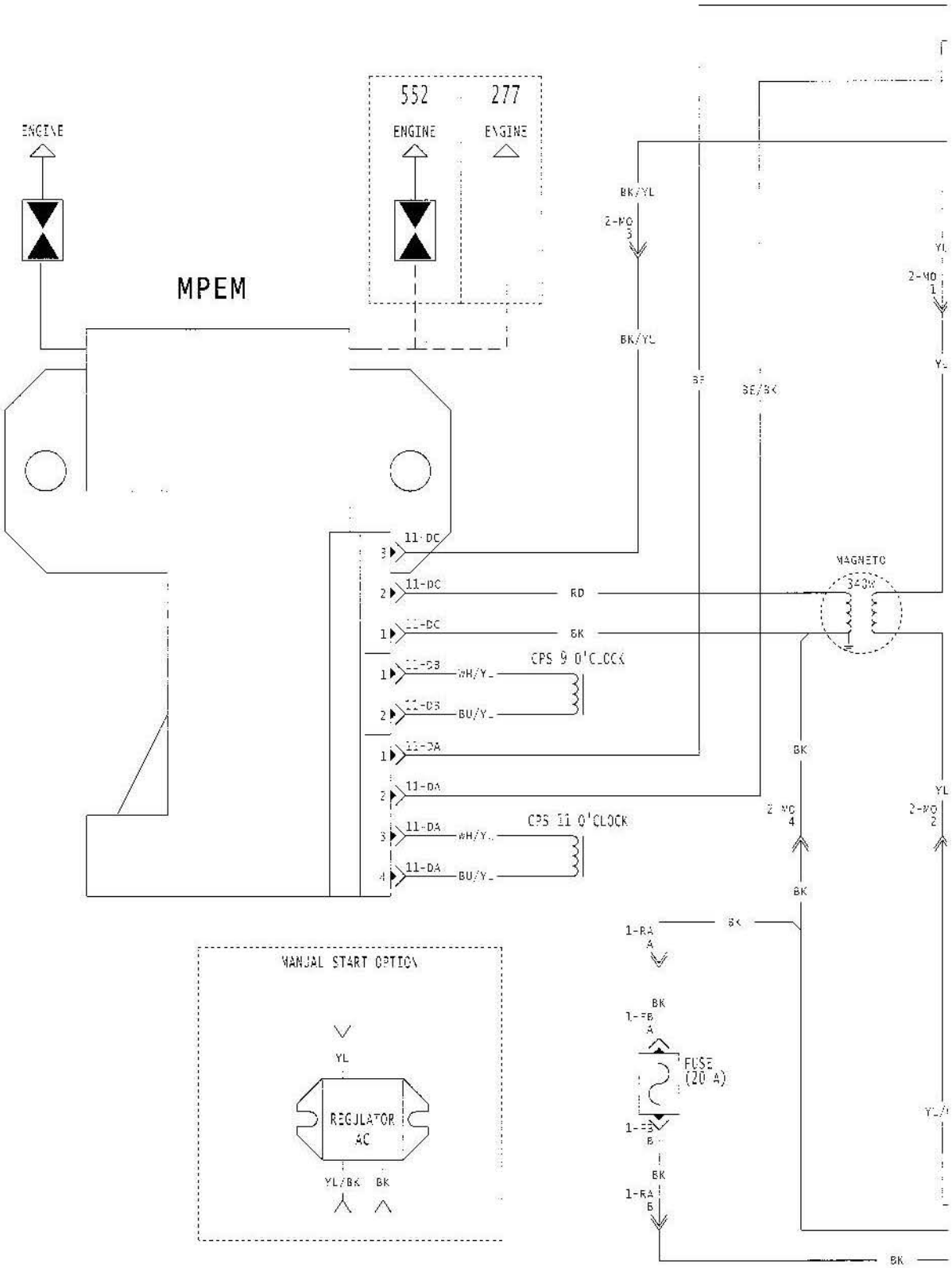

mmr2007-137-001

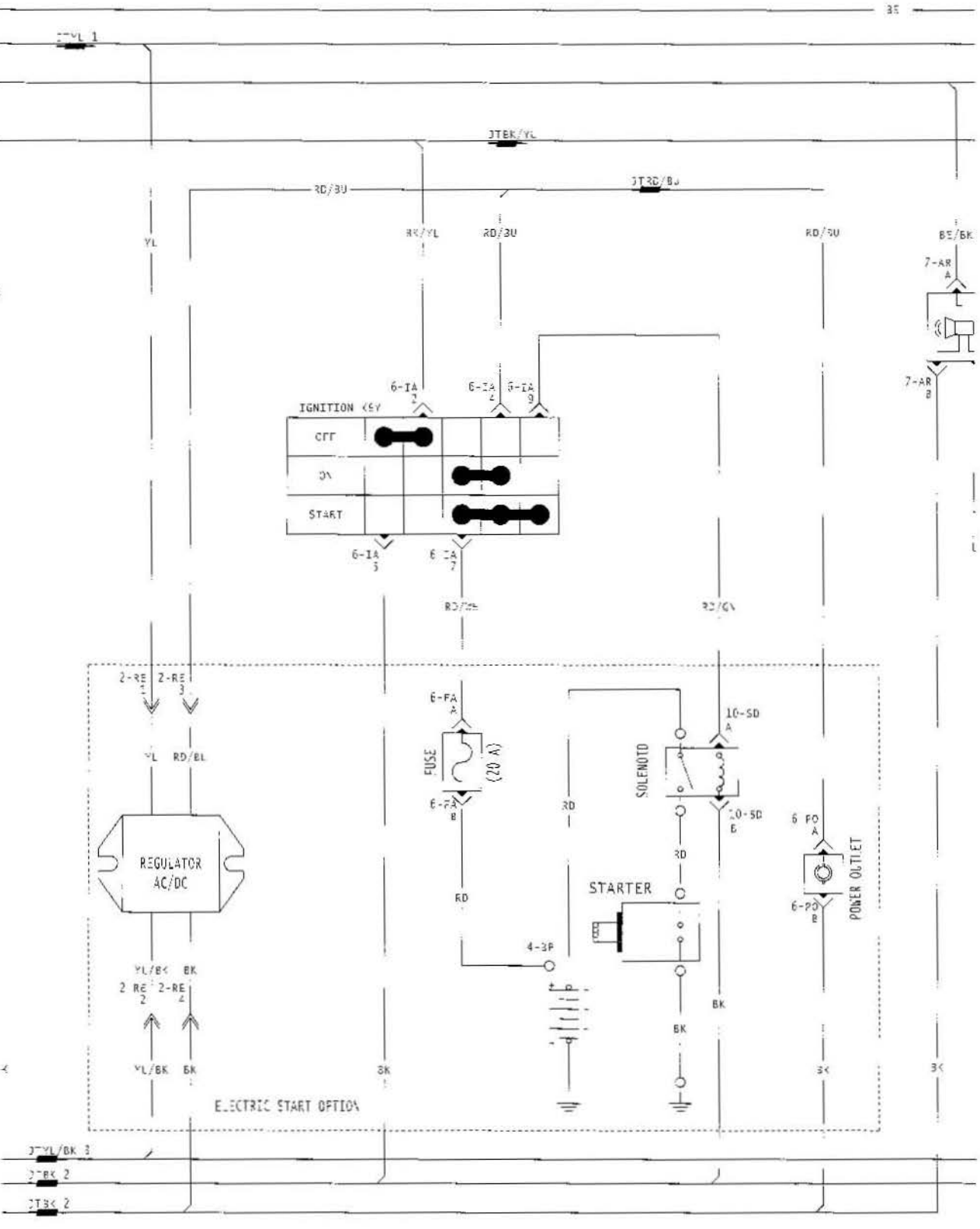

IGNITION KEY
OFF
ON
START
FUSE
(20 A)
SOLENOID
STARTER
REGULATOR
AC/DC
POWER OUTLET
ELECTRIC START OPTION

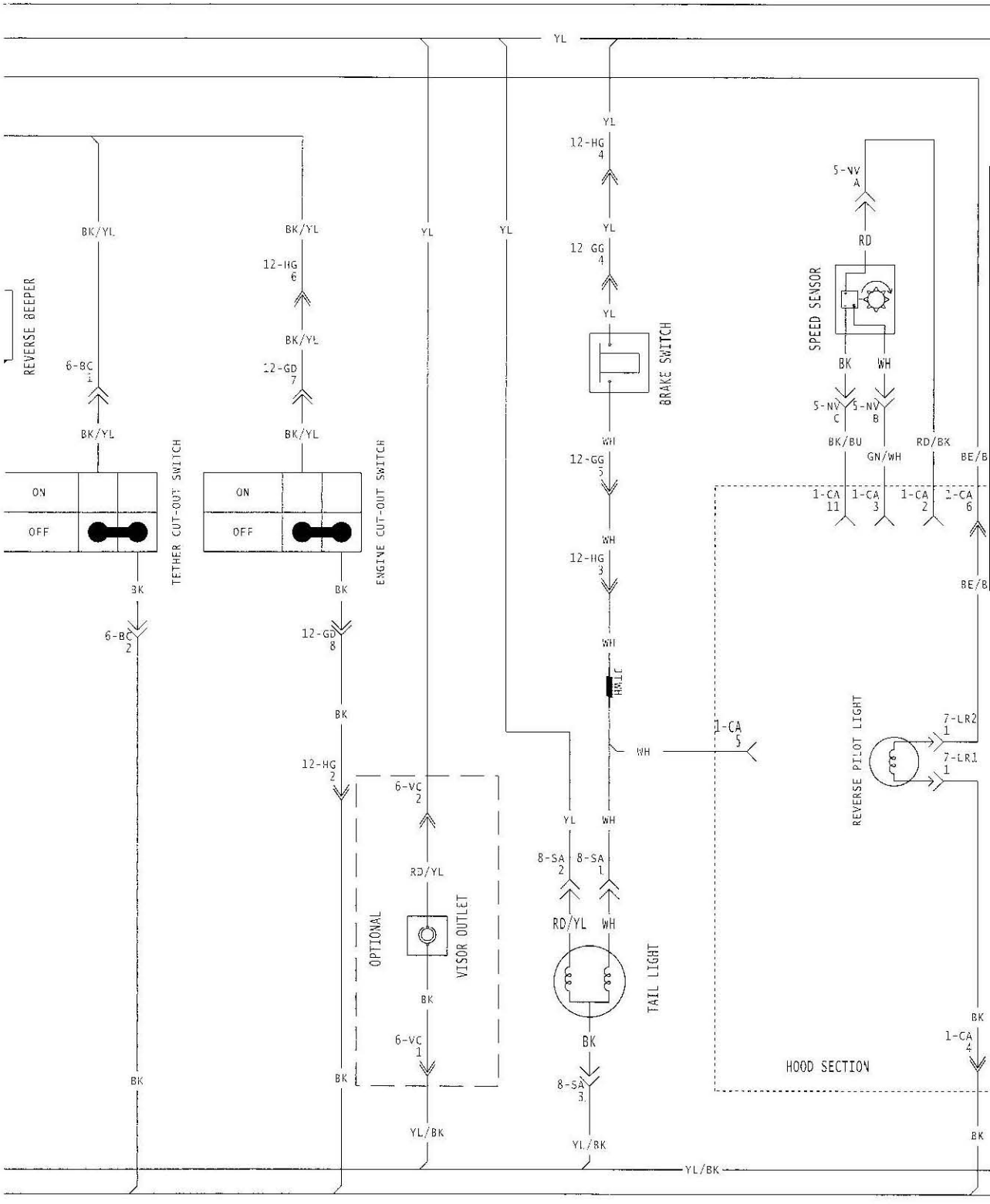
YL
BK/YL
REVERSE BEEPER
6-BC 1
BK/YL
TETHER CUT-OUT SWITCH
ON
OFF
BK
6-BC 2
BK
BK/YL
12-HG 6
BK/YL
12-GD 7
BK/YL
ENGINE CUT-OUT SWITCH
ON
OFF
BK
12-GD 8
BK
12-HG 2
6-VC 2
RD/YL
OPTIONAL
VISOR OUTLET
BK
6-VC 1
YL/BK
YL
YL
12-HG 4
YL
12 GG 4
YL
BRAKE SWITCH
WH
12-GG 5
WH
12-HG 3
WH
DIODE
WH
1-CA 5
YL
WH
8-SA 2
8-SA 1
RD/YL
WH
TAIL LIGHT
BK
8-SA 3
YL/BK
5-NV A
RD
SPEED SENSOR
BK
WH
5-NV C
5-NV B
BK/BU
GN/WH
RD/BK
BE/B
1-CA 11
1-CA 3
1-CA 2
1-CA 6
BE/B
REVERSE PILOT LIGHT
7-LR2 1
7-LR1 1
BK
1-CA 4
HOOD SECTION
BK
YL/BK

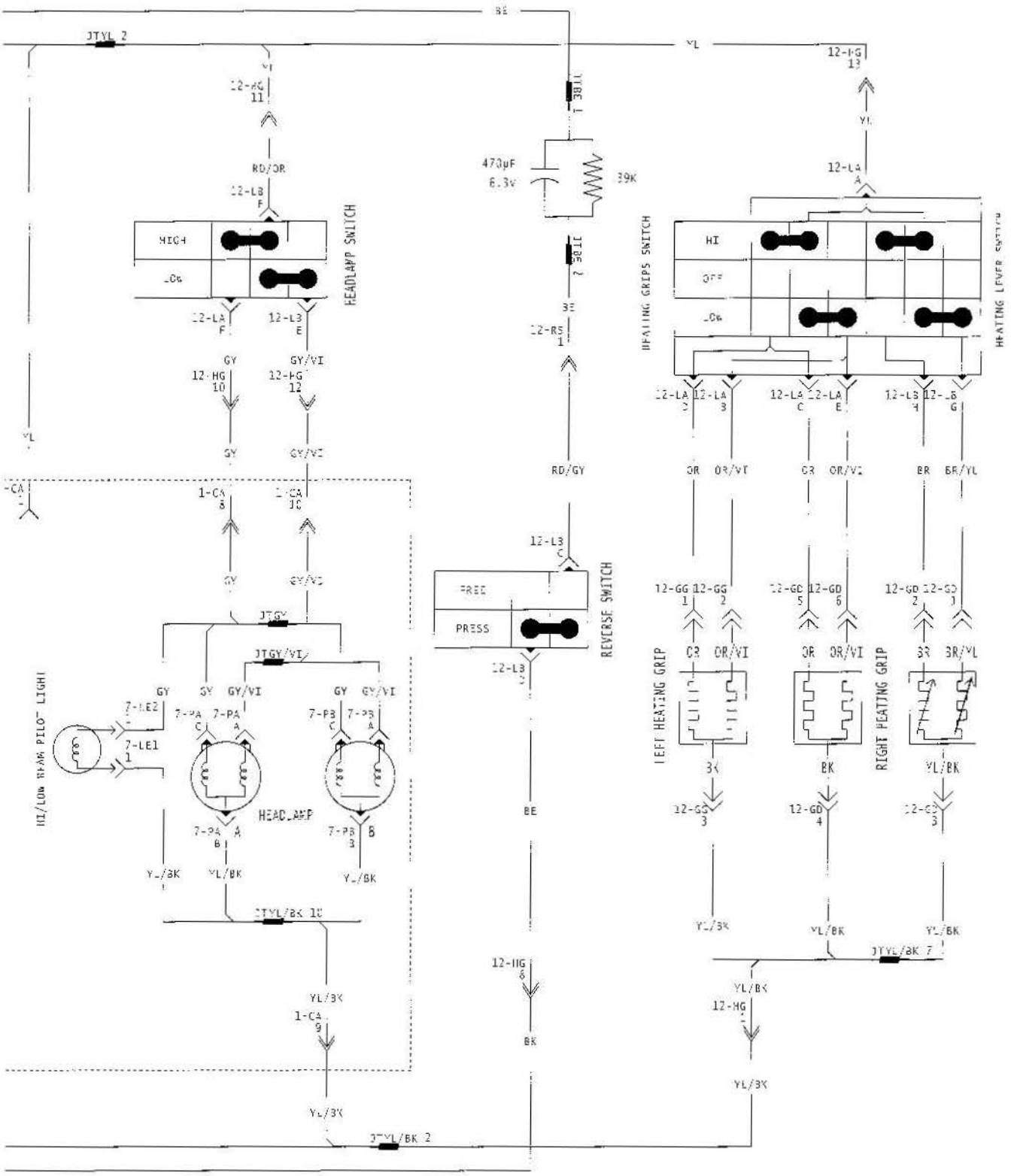

HEADLAMP SWITCH
HIGH
LOW
HEATING GRIPS SWITCH
HI
OFF
LOW
HEATING LEVER SWITCH
REVERSE SWITCH
FREE
PRESS
LEFT HEATING GRIP
RIGHT HEATING GRIP
HI/LOW BEAM PILOT LIGHT
HEADLAMP
470μF
6.3V
39K

4

SPEEDOMETER / TACHOMETER OPTION

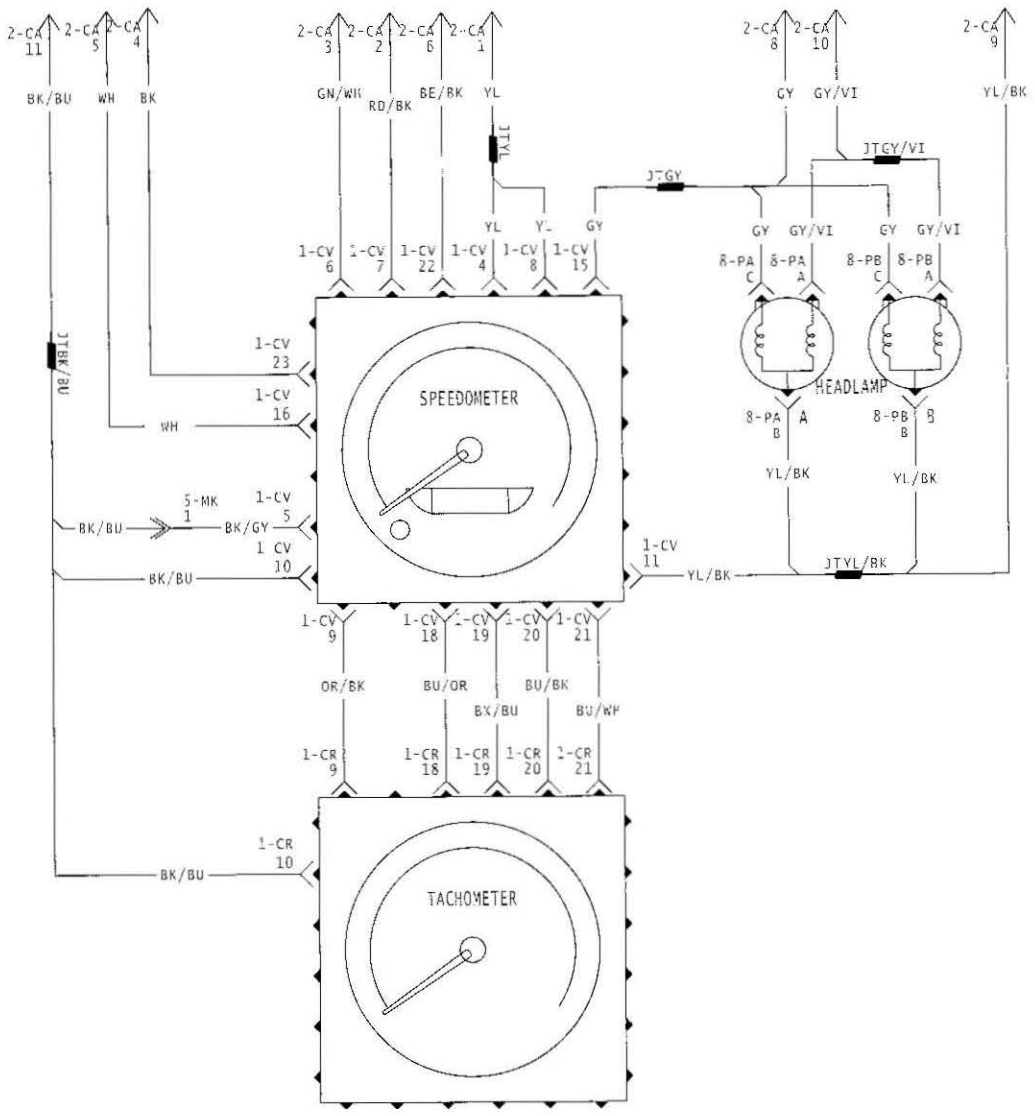

HEATING LEVER

2008 REV XP POWER TEK ELECTRIC START

