VOLUME 1

SHOP MANUAL

Ski-doo®

BOMBARDIER

ÉLAN II LT
TUNDRA E/E LT/LE/SLE
TOURING S/SL
FORMULA 380/500
SKANDIC

1996

484 0628 00

ski-doo®

1996
Shop Manual

VOLUME 1

ELAN
TUNDRA II LT
TOURING E / LE / LE LT / SLE
FORMULA S / SL
SKANDIC 380/ 500

EXCELLENCE IN SERVICE

Legal deposit :

National Library of Quebec
2nd trimester 1995
National Library of Canada

All rights reserved. No parts of this manual may be reproduced in any form without the prior written permission of Bombardier Inc.
@Bombardier Inc. 1995

Printed in Canada
Q* Registered trademarks of Bombardier Inc.

This document contains the trademarks of the following companies :

Loctite® is a trademark of Loctite Corporation
Metton® is a trademark of Hercules Inc.
Molykote® is a trademark of Dow Corning Corporation
Silastic® is a trademark of Dow Corning Corporation
Snap-on" is a trademark of Snap-on Tools Corporation
Versilube® is a trademark of General Electric Company

TABLE OF CONTENTS

SECTION	SUB-SECTION	PAGE
SAFETY NOTICE		III
1996 BOMBARDIER SNOWMOBILES SHOP MANUAL VOLUME 1 (INTRODUCTION)		IV
01 SERVICE TOOLS AND SERVICE PRODUCTS	01- Service tools	01-01-1
	02 - Service products	01-02-1
02 LUBRICATION AND MAINTENANCE	01- Lubrication and maintenance	02-01-1
03 TROUBLESHOOTING	00 - Table of contents	03-00-1
	01 - Engine	03-01-1
	02 -Fuel and oil systems	03-02-1
	03-Transmission and brake systems	03-03-1
	04 -Electrical system	03-04-1
	05 -Suspension system and track	03-05-1
04 ENGINE	00 -Table of contents	04-00-1
	01 -247 and 277 engine types	04-01-1
	02-377, 443and 503 engine types	04-02-1
	03- Leaktest and engine dimension measurement	04-03-1
	04 - CDI system	04-04-1
	05 -Oil injection system	04-05-1
	06 -Axial fan cooling system	04-06-1
	07 -Rewind starter	04-07-1
	08 -Carburetor and fuel pump	04-08-1
	09 -Fuel tank and throttle cable	04-09-1
05 TRANSMISSION	00 -Table of contents	05-00-1
	01 -Drive belt	05-01-1
	02 - Drive pulley	05-02-1
	03 -Driven pulley	05-03-1
	04 -Pulley distance and alignment	05-04-1
	05-Brake	05-05-1
	06- Chaincase	05-06-1
	07 - Gearbox	05-07-1
	08 -Drive chain	05-08-1
06 ELECTRICAL	00 -Table of contents	06-00-1
	01 -Wiring diagrams (see Annexes at the end of this manual)	06-01-1
	02 -ignition timing	06-02-1
	03-Sparkplugs	06-03-1
	04 - Battery	06-04-1
	05 -Electric starter	06-05-1
	06 -Testing procedure	06-06-1

TABLE OF CONTENTS

SECTION	SUB-SECTION	PAGE
07 REAR SUSPENSION	00- Table of contents	07-00-1
	01- Bogie wheels	07-01-1
	02 -Torque reaction suspension	07-02-1
	03 -SC-10 Sport and Touring suspension	07-03-1
	04 -Rear axle	07-04-1
	05 -Drive axle	07-05-1
	06 - Track	07-06-1
08 STEERING/ FRONT SUSPENSION	00 -Table of contents	08-01-1
	01 -Steering system	08-02-1
	02 -Suspension and ski system	08-02-1
09 BODY/FRAME	00 -Table of contents	09-01-1
	01 - Body	09-02-1
	02 - Frame	08-02-1
10 TECHNICAL DATA	01 - SI metric information guide	10-01-1
	02 - Engines	10-02-1
	03 - Vehicles	10-03-1
	04 - Technical data legends	10-04-1
ANNEXES (Wiring diagrams)		

SAFETY NOTICE

This manual has been prepared as a guide to correctly service and repair 1996 Ski-Doo snowmobiles.

This edition was primarily published to be used by snowmobile mechanics who are already familiar with all service procedures relating to Bombardier made snowmobiles.

Please note that the instructions will apply only if proper hand tools and special service tools are used.

This shop manual uses technical terms which may be slightly different from the ones used in parts catalog.

It is understood that this manual may be translated into another language. In the event of any discrepancy, the English version shall prevail.

The content depicts parts and /or procedures applicable to the particular product at its time of manufacture. It does not include dealer modifications, whether authorized or not by Bombardier, after manufacturing the product.

In addition, the sole purpose of the illustrations throughout the manual, is to assist identification of the general configuration of the parts. They are not to be interpreted as technical drawings or exact replicas of the parts.

The use of Bombardier parts is most strongly recommended when considering replacement of any component. Dealer and /or distributor assistance should be sought in case of doubt.

The engines and the corresponding components identified in this document should not be utilized on product(s) other than those mentioned in this document.

Torque wrench tightening specifications must be strictly adhered to. Locking devices (ex. : locking tab, elastic stop nut, etc.) must be installed or replaced with new ones, where specified. If the efficiency of a locking device is impaired, it must be renewed.

This manual emphasizes particular information denoted by the wording and symbols ;

◆ WARNING : Identifies an instruction which, **if not followed, could cause serious personal injury including possibility of death.**

▼ **CAUTION : Denotes an instruction which, if not followed, could severely damage vehicle components.**

O **NOTE :** Indicates supplementary information needed to fully complete an instruction.

Although the mere reading of such information does not eliminate the hazard, your understanding of the information will promote its correct use. Always use common shop safety practice.

This information relates to the preparation and use of Bombardier snowmobiles and has been utilized safely and effectively by Bombardier Inc.. However, Bombardier Inc. disclaims liability for all damages and / or injuries resulting from the improper use of the contents. We strongly recommend that any services be carried out and / or verified by a highly skilled professional mechanic. It is understood that certain modifications may render use of the vehicle illegal under existing federal, provincial and state regulations.

INTRODUCTION

This *Shop Manual VOLUME 1* covers the following Bombardier made 1996 snowmobiles :

MODELS	MODEL NUMBER
ÉLAN®	3053
TUNDRA* II LT	3264
TUNDRA* II LT (Sweden)	3265
SKANDIC* 380 (Canada)	1534
SKANDIC* 380 (U.S.)	1535
SKANDIC* 380 (Sweden)	1536
SKANDIC* 500 (Canada)	1531
SKANDIC* 500 (U.S.)	1532
SKANDIC* 500 (Sweden)	1533
TOURING* E (Canada)	1530
TOURING* E LT (Canada)	1542
TOURING* E LT (Sweden)	1543
TOURING* LE (Canada)	1527
TOURING* LE (U.S.)	1528
TOURING* LE (Sweden)	1529
TOURING* SLE (Canada)	1524
TOURING* SLE (U.S.)	1525
TOURING* SLE (Sweden)	1526
FORMULA* S (Canada)	1523
FORMULA* S (Sweden)	1541
FORMULA* SL (Canada)	1521
FORMULA* SL (U.S.)	1522
FORMULA* SL (Sweden)	1540

*Trademarks of Bombardier Inc.

LIST OF MODELS GROUPED BY COMMUN CHASSIS

S-Series consists of :

Touring E / LE / LE LT / SLE

Skandic 380 / 500

Formula S / SL

(TYPICAL)

S-SERIES

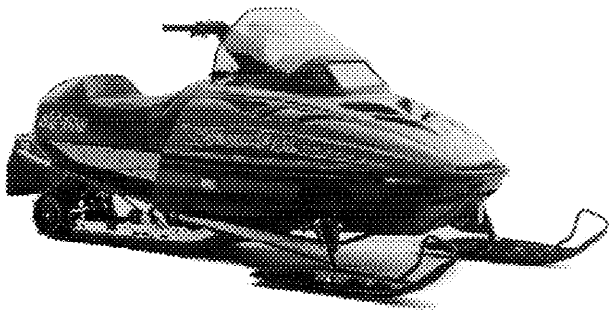

A003 000 002

Each vehicle has its particular vehicle serial number

Serial Number Meaning :

0000 00000
Modelno. Vehicle no,

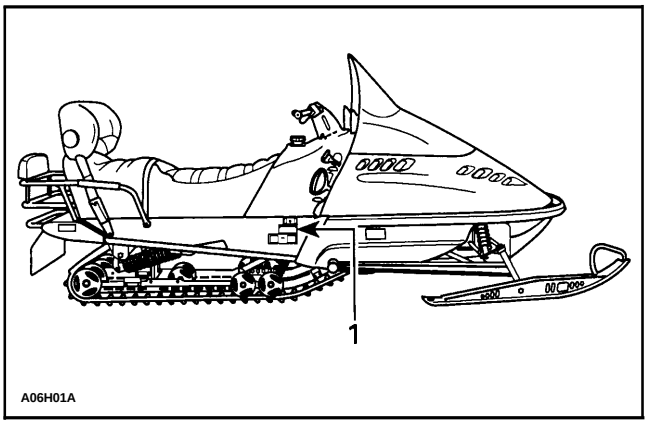

TYPICAL
1. Vehicle serial number

The engine also has a serial number.

Fan-Cooled Engines

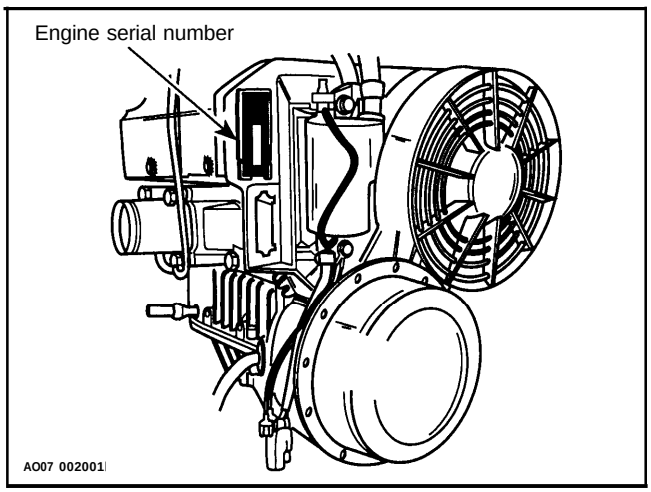

ARRANGEMENT OF THE MANUAL

The manual is divided into 10 major sections :

01 SERVICE TOOLS **AND SERVICE PRODUCTS**

02 LUBRICATION AND MAINTENANCE

03 TROUBLESHOOTING

04 ENGINE

05 TRANSMISSION

06 ELECTRICAL

07 REAR SUSPENSION

08 STEERING/ FRONT SUSPENSION

09 BODY/ FRAME

10 TECHNICAL DATA

ANNEXES

Each section is divided in various sub-sections, and again, each sub-section has one or more division.

This *Shop Manual* uses technical terms wich may be slightly different from the ones in the parts catalog.

TYPICAL PAGE

Page heading indicates section and sub-section detailed.

Sub-sectIon title indicates beginning of the sub-section.

Sub-title at top right corner of exploded view indicates pertaining models.

Exploded viev assits you in identifying par and related positions.

Drop represents a liquid product to be applied to a surface. In this case Loctite 271 to screw threads.

Bold face number indicates special procedure concerning this part.

Dotted box contains parts of a particular model, in this case the short track models only.

Illustration number for publishing process.

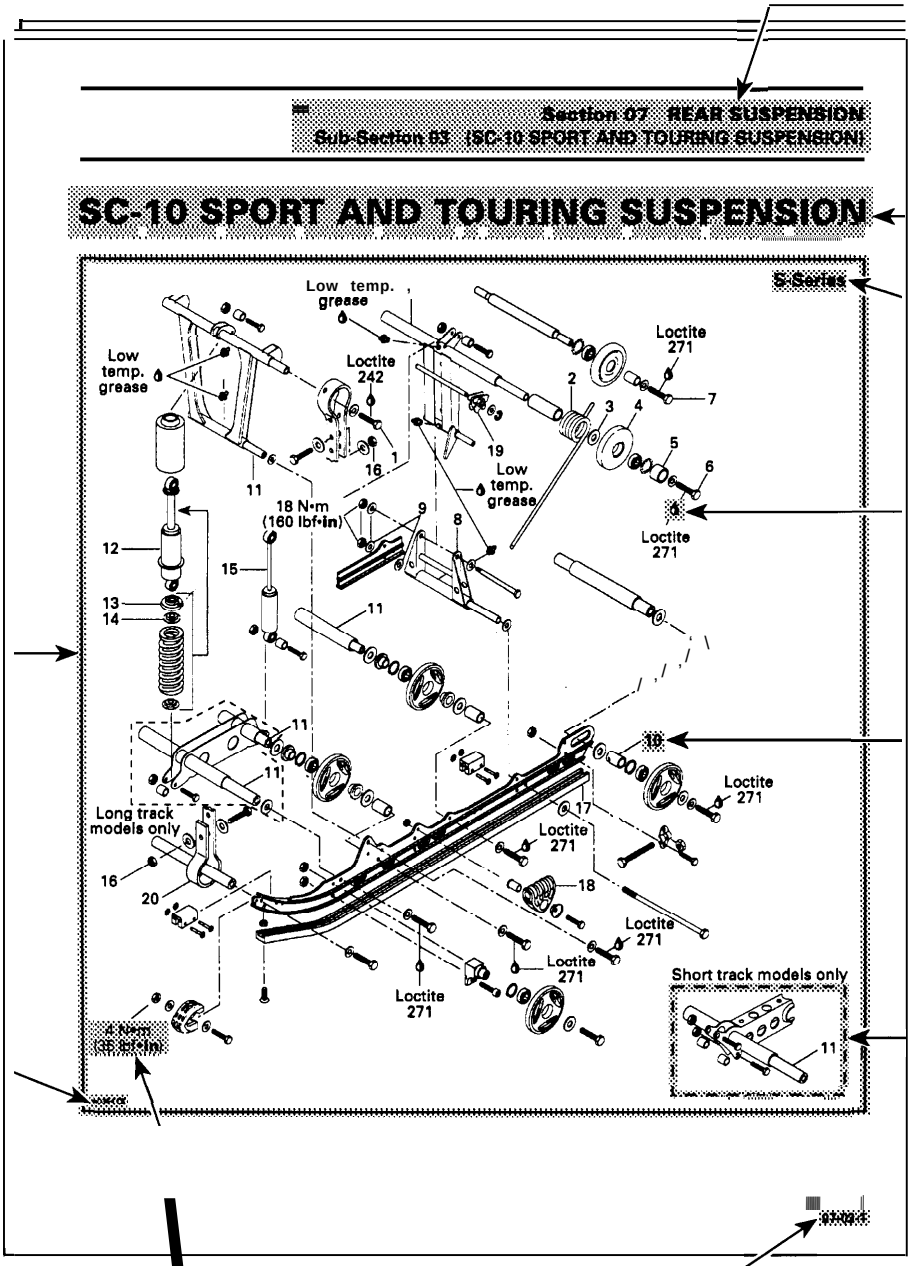

Tightening torque nearby fastener. In this case, nut must be torqued to *4* N•m or 35 lbf•**in**.

▼CAUTION : Pay attention to torque **specifications.** Some of these are in **lbf•in** instead of **lbf•ft.** Use appropriate torque wrench.

Page numbering system :
07 : REAR SUSPENSION section
03 : SC-1 O SPORT AND TOURING SUSPENSION sub-section
1 : First page of this sub-section

A01A1QS

TYPICAL PAGE

"Side view" caption at top helps you in understanding illustration,

Detailed view of illustration.

Sub-title beginning w ıart reference numbe ɔf sub-section explod view followed by part name(s).

Italic bold face type setting indicates a particular procedure concerning a model.

Illustration always follows text to whic it pertains.

Italic bold face settir in this case indicate that particular procedure for B-series is finishec so from this point, all models are concerned.

Reference to look up a certain section and sub-section (TRACK 07-09). In this case it concerns track adjustment.

Title indicates main procedure to be carried-out.

"Typical" caption at top left corner indicates a general view which does not represent full detail. In this case, track is not illustrated even if the adjustment can be made when installed.

Section 07 REAR SUSPENSION
Sub-Section 08 (DRIVE AXLE)

Side view

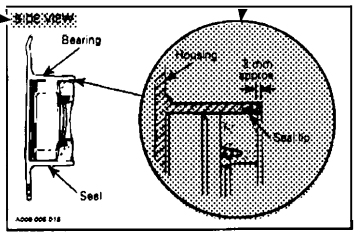

3. Retainer Ring

Make sure that welded nuts are toward inside of tunnel

B-Series

When installing end bearing housing, ensure to position grease fitting on top. This is required to have proper alignment with access hole.

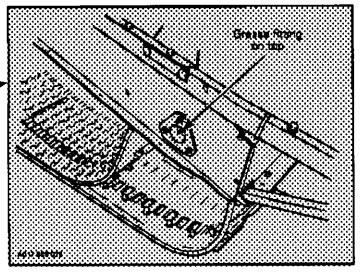

All Models

Lock drive axle sprocket with a circlip (use new cotter pin on Élan)

Reinstall the chaincase cover (if applicable).

Refill with chaincase 011. Refer to TECHNICAL DATA 10

Install the suspension. Refer to TRACK 07-09 and adjust track tension and carry out track alignment procedure

LUBRICATION

15, Grease **Fitting**

Lubricate end housing bearing with low temperature grease (P/ N 4137061 00).

ADJUSTMENT

Sprockat / Track Alignment

CAUTION: Do not tamper with sprocket/track alignment if frame **or suspension is damaged.**

All Models Except Élan

Sprockets might berepositioned to fit track holes (lugs on liquid cooled models and Skandic II 503 R SLT) without removing drive axle

Use drive axle sprocket adjuster kit (P/N 861 7257 00).

TYPICAL

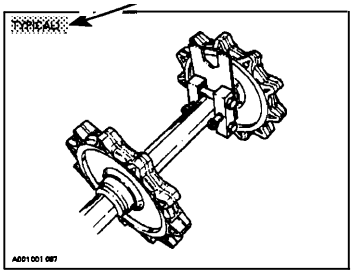

07.08-9

AOIAIRS

GENERAL INFORMATION

The information and component / system descriptions contained in this manual are correct at time of publication. Bombardier Inc. however, maintains a policy of continuous improvement of its products without imposing upon itself any obligation to install them on products previously manufactured.

Due to late changes, it may have some differences between the manufactured product and the description and /or specifications in this document.

Bombardier Inc. reserves the right at any time to discontinue or change specifications, designs, features, models or equipment without incurring obligation.

USEFUL PUBLICATIONS

Refer to *Parts Catalogs* to order the right parts,

PARTS CATALOG	
MODELS	**P / N**
ÉLAN	480140200
FORMULA S FORMULA SL FORMULA SLS	480140700
SKANDIC 380 SKANDIC 500 TOURING E / LT TOURING LE TOURING SLE	480140400
TUNDRA II LT	480140300

Use *Too/s and Accessories Catalog* to order the tools you need. See also SERVICE TOOLS 01-01.

1994 TOOLS AND ACCESSORIES (P/ N 4801343 00).

Use *Specification Book/et* to find rapidly the right specs.

1990-1996 SPECIFICATION BOOKLET (P/ N 4801400 00).

ILLUSTRATIONS AND PROCEDURES

The illustrations show the typical construction of the different assemblies and, in all cases, may not reproduce the full detail or exact shape of the parts shown, however, they represent parts which have the same or a similar function.

CAUTION : Most components of those vehicles are built with parts dimensioned in the metric system. Most fasteners are metric and must not be replaced by customary fasteners or vice versa. Mismatched or incorrect fasteners could cause damage to the vehicle or possible personal injury.

As many of the procedures in this manual are interrelated, we suggest, that before undertaking any task, you read and thoroughly understand the entire section or sub-section in which the procedure is contained.

A number of procedures throughout the book require the use of special tools. Before commencing any procedure, be sure that you have on hand all the tools required, or approved equivalents.

The use of RIGHT and LEFT indications in the text, always refers to driving position (when sitting on vehicle).

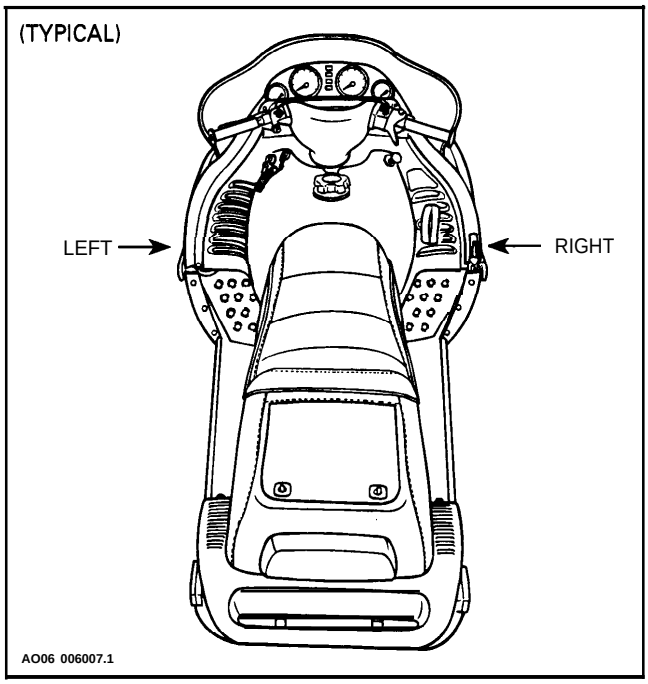

Technical Publications
Bombardier Inc.
Valcourt (Quebec) Canada

SERVICE TOOLS

ENGINE (Mandatory service tools)

0 NOTE : Reversal numbers (example : ❑) correspond to those of the *Ski-Doo Service Tools Order Form* and to those of the *Tools and Service Products Catalog.*

Degree wheel **1**

(P/ N 4143529 00)

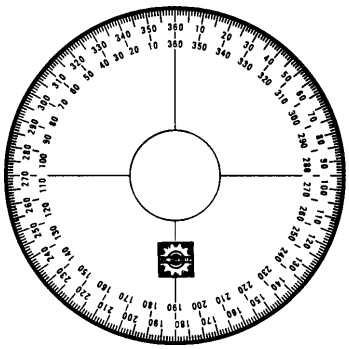

A000 001111

APPLICATION

454, 494, 582, 583 and 670 engines.

Hose pincher (2) **2**

(p/ N 5290099 00)

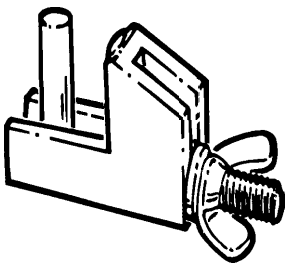

A001 001090

APPLICATION

All vehicles.

Large hose pincher

(p/ N 5290304 00)

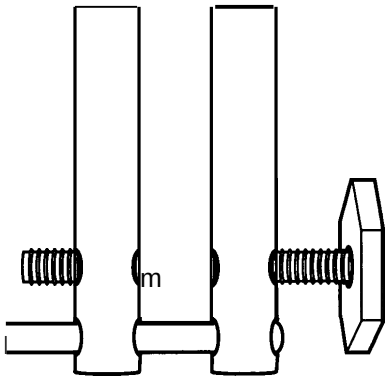

F01B234

APPLICATION

All vehicles.

Fan Holder ❑

(p/ N 4208763 57)

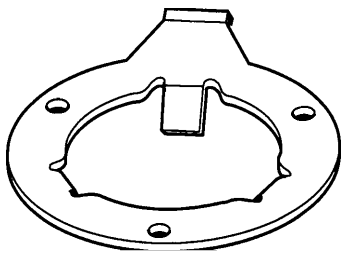

A000 002026

APPLICATION

377, 443 and 503 engines.

Magneto puller ring ❑

(p/ N 4208760 80)

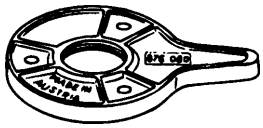

A000 002063

APPLICATION

All engines except 247.

Magneto puller **5**

(p/ N 5290225 00)

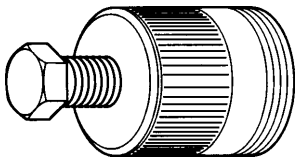

A000 002046

APPLICATION

All engines except 247.

Aligning pin (4) ❑

(p/ N 5290189 00)

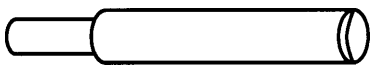

A000 000049

APPLICATION

467 and 582 engines.

ENGINE (Mandatory service tools)

Pusher **7**
(washer under impeller of cooling system)
(p/ N 5290207 00)

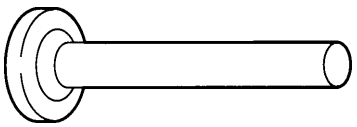

A000 002125

APPLICATION
Rotary valve engines.

Rotary valve shaft pusher
(p/ N 4208766 12)

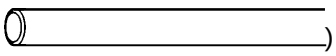

A000 002015

APPLICATION
Rotary valve engines.

Rotary valve seal pusher
(p/ N 4208766 07)

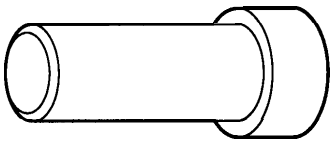

A000 002034

APPLICATION
Rotary valve engines.

Seal pusher
(p/ N *4208765* 12)

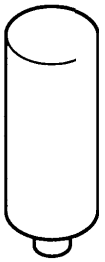

A000 002115

APPLICATION
Rotary valve engines.

Rotary valve shaft seal pusher
(p/ N 4208770 50)

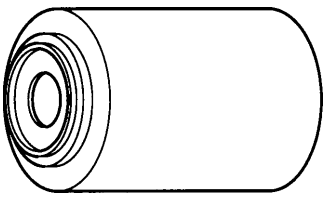

A000 002033

APPLICATION
Rotary valve engines.

Bearing pusher **12**
(p/ N 4208765 00)

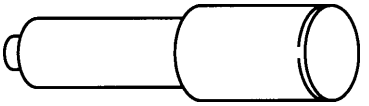

A000 001091

APPLICATION
Rotary valve engines.

Crankshaft locking tool **13**
(P/ N 4208766 40)

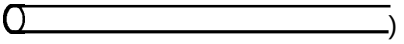

A000 002039

APPLICATION
All engines.

ENGINE (Mandatory service tools)

Engine leak tester kit

(P / N 8617390 00)

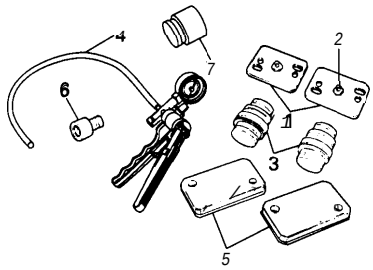

A01B2D4

APPLICATION

All engines.

Parts included in the kit:

1) Exhaust oulet plug (2)
(P/ N 5290109 00)
2) Air valve (4)
(P/ N 7420600 04)
3) Intake manifold plug *(2)*
(P / N *5290110* 00)
4) Air pump (1)
(p/ N 5290111 00)
5) RAVE system plug (2)
(p/ N 5290112 00)
6) Adapter (2)
(p/ N 5172349 00)
7) Intake manifold plug -779
(p/ N 5290305 00)
8) 2-1/4 in plug (1)
(p/ N 5290211 00)
9) 2-3/4 in plug (1)
(p/ N 5290212 00)
10) Plates (2)
(p/ N 5290213 00)
11) Radiator plug (1)
(P/ N 5290214 00)
12) Clamp (1)
(p/ N 4088035 00)

NOTE : Must maintain a pressure of 5 lb during 3 minutes. Never pressurize over 5 lb.

Piston pin puller **16**

(p/ N 5290290 00)

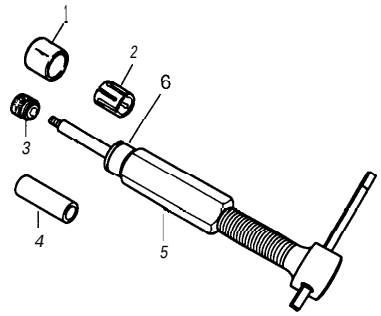

A001 001161

APPLICATION

All engines.

Parts included :

1) Locating sleeve
(p/ N 5290238 00)
2) Expansion sleeve
(p/ N 5290237 00)
3) Stopper
(p/ N 5290277 02)
4) Adaptor
(p/ N 5290236 00)
5) Extractor
(p/ N 5290277 00)
6) Bushing
(p/ N 5290277 03)

Rubber pad **17**

(p/ N 5290234 00)

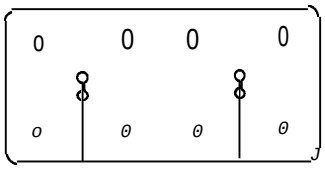

A001 001156

APPLICATION

All cageless bearing engines (277 and 503).

Rotary valve shaft spring compressor **18**

(P/ N 5290291 *00)*

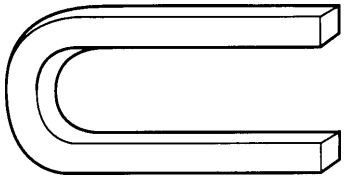

A000 002126

APPLICATION

All rotary valve engines.

ENGINE (Optional service tools)

The following tools are highly recommended to optimize your basic tool kit and reduce tear down time on the applicable models you are servicing most frequently.

1- Puller assembly **200**

(p/ N 4208762 98)
For 779 :
(p/ N 4208776 35)
With 145 mm screw :
(P/ N 4209407 55)

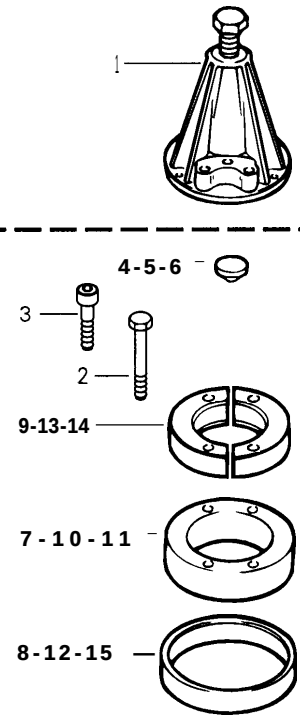

A000 002129

APPLICATION
All engines.

2- Screw M8 x 70 (4)	P / N 420841201
All engines except 247.	
3- Screw M8 x 40 (4)	P / N 420840681
247, 277, 467 and 670 engines.	
4- Crankshaft protector PTO	P / N 420876552
All engines except 247.	
5- Crankshaft protector MAG	P / N 420976890
247 engine.	
6- Crankshaft protector MAG	P / N 420876557
All engines except 247.	
7- Distance ring	P / N 420876560
All engines except 247 and 277.	
8- Puller ring	P / N 420977480
All engines.	
9- Half ring ass'y	P / N 420276025
All engines except 377, 503 and 779.	
10- Distance ring	P / N 420876565
377 and 503 engines.	
11- Distance ring	P / N 420876569
377, 443, 503, 582, 583 and 670 engines.	
12- Puller ring	P / N 420977490
All engines.	
13- Half ring ass'y	P / N 420977475
All engines except 247 and 779.	
14- Half ring ass'y	P / N 420977479
779 engine.	
15- Puller ring	P / N 420977494
779 engine.	

ENGINE (Optional service tools)

Piston circlip installer **202**

All engines except *670*
(P / N *5290169* 00)

670 engine
(p/ N 2908770 16)

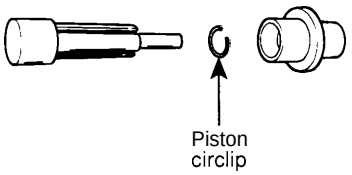

A001 001061

APPLICATION

All engines.

Piston pin / connecting rod centering tool **203**

(P/ N 5290091 00)

NOTE : New diameter is 9.65 mm *(0.380").*

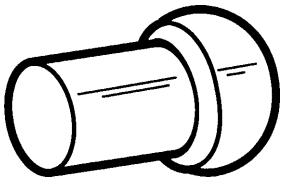

A001 001063

APPLICATION

All engines.

Ring compressor

A) (p/N4208760 90) (62 mm) **204**

B) (p/N 4208769 74) (69.5 mm) **205**

C) (p / N 4208769 70) (72 mm) **206**

D) (p~N4208769 72) (76 mm) **207**

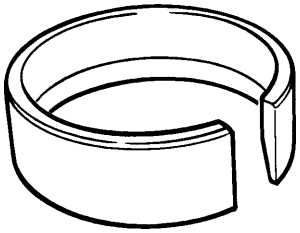

A001 001065

APPLICATION

A) 377 engine.

B) 467 engine.

C) 503 engine.

D) 582 and 583 engines.

Magneto coil centering ring **209**

(p/ N 4208769 22)

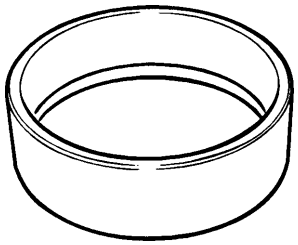

A001 001067

APPLICATION

All engines with Nippondenso CDI (160 W).

Seal sleeve

(P/ N 4209779 10) (PTO) **210**

(p/ N 4202769 00) (MAG) **211**

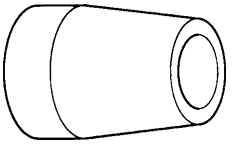

A000 002013

APPLICATION

247 engine.

Engine seal pusher **212**

(P/ N 4209779 *20)*

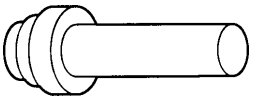

A000 002031

APPLICATION

247 engine.

Polyamid ring pusher **213**

(P / N 4202769 30)

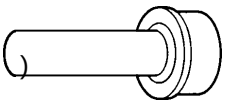

A000 002035

APPLICATION

247 engine.

ENGINE (Optional service tools)

Magneto housing holder **215**

(p/ N 4209765 50)

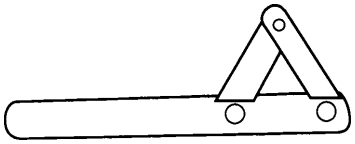

A000 002067

APPLICATION

247 engine.

Crankshaft feeler gauge **216**

(p/ N 4208766 20)

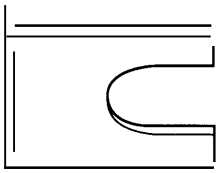

A000 002037

APPLICATION

377, 443 and 503 engines.

Crankshaft distance gauge **217**

(p/ N 4208768 22)

A000 002081

APPLICATION

377 and 443 engines.

Crankshaft distance gauge **218**

(P/ N 4208768 24)

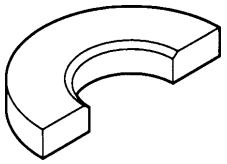

A000 002118

APPLICATION

503 engine.

Cylinder aligning tool

A) (P/N 4208769 02) **220**
(on exhaust side)

B) (p/N 4208761 71) **221**
(on intake side)

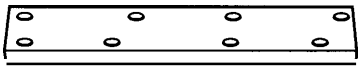

A000 001008

APPLICATION

A) 467, 582, 583 and 670 engines.

B) 377, 443 and 503 engines.

Mikuni carburetor tool kit **222**

(p/ N 4041120 00)

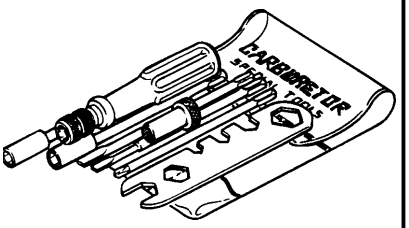

A000 001087

APPLICATION

All models.

Circuit tester (continuity light) **223**

(P / N 4140122 00)

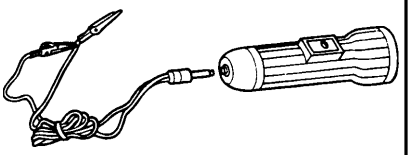

A000 002073

APPLICATION

All vehicles.

Piston ring expander **224**

(P /N 5290097 00)

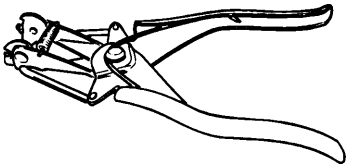

A001 001088

APPLICATION

All engines.

Stroboscopic timing light **225**

(p/ N 5290092 00)

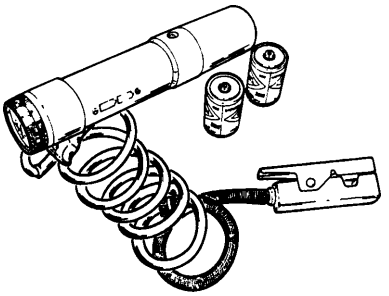

A001 001092

APPLICATION

All engines.

ENGINE (Optional service tools)

RAVE movement indicator **226**

(p/ N 8617258 00)

Parts included in the kit :

1) Indicator guide
(p/ N 5290113 00)

2) Indicator
(P/ N 4208766 40)

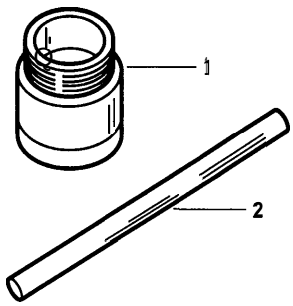

A018 001001

APPLICATION

583, 670 and 779 engines.

Air pressure gauge, 0-200 inch of water **227**

(P/ N 5290104 00)

Adaptor 1/4-1/8 NPT **228**

(p/ N 5290105 00)

NOTE : Fits on air pump from kit (P/ N 861 7256 00).

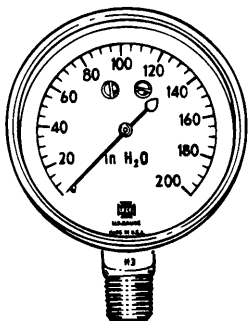

A018 001003

APPLICATION

583, 670 and 779 engines.

Dial indicator (TDC gauge) **230**

(P/ N414 1047 00)

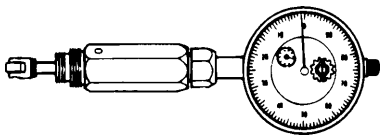

A000 001086

APPLICATION

All engines.

Seal protector sleeve **231**

(p/ N 4208769 80)
(for 10 mm shaft)

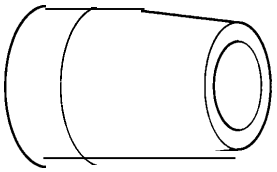

A000 002013

APPLICATION

467, 582, 583 and 670 engines.

Magneto puller **233**

(p/ N 4209762 35)

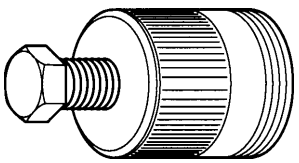

A000 002046

APPLICATION

247 engine.

Injection pump gear holder **234**

(p/ N 4208766 95)

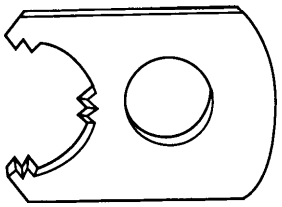

A000 001109

APPLICATION

253, 377, 443 and 503 engines.

Injection pump gear holder **235**

(p/ N 4202779 05)

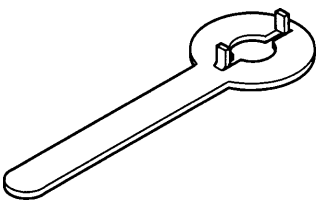

A000 002042

APPLICATION

467, 582, 583, 670 and 779 engines.

Bombardier ignition tester **236**

(p/ N419 0033 00)

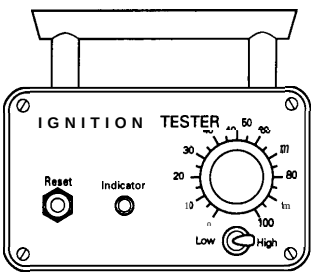

A000 002058

APPLICATION

All engines.

ENGINE (Optional service tools)

Digital / induction type tachometer **237**

(p/ N 5290145 00)

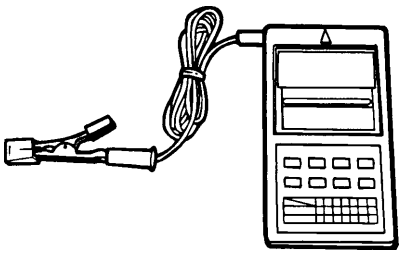

F001 001052

APPLICATION

All engines.

Connecting rod holder **238**

(p/ N 4209779 00)

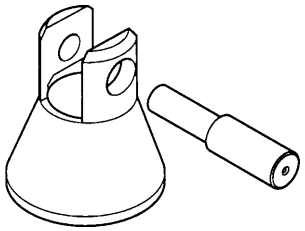

A000 002023

APPLICATION

247 engine.

Fluke multimeter **242**

(P/ N 5290220 00)

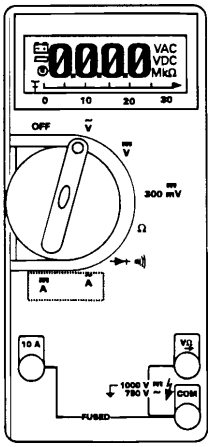

F001 001060

APPLICATION

All models.

MAG seal pusher **243**

(p/ N 4202778 75)

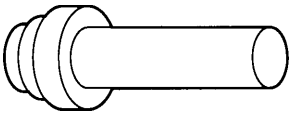

A000 002031

APPLICATION

277 engine.

PTC seal pusher **244**

(p/ N 420 8766 60)

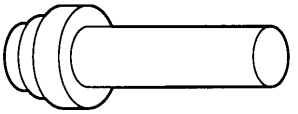

A000 002031

APPLICATION

277 engine.

Base puller plate kit **245**

(p/ N 5290249 00)

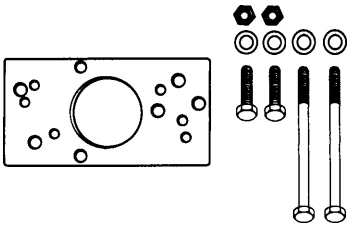

AO05 002022

APPLICATION

277 engine.

Insertion jig **247**

(P /N 4208765 16)

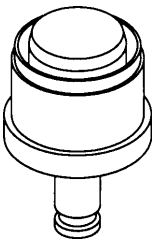

A000 002137

APPLICATION

779 engine,

ENGINE (Optional service tools)

Insertion jig **248**

(P/ N 4208765 14)

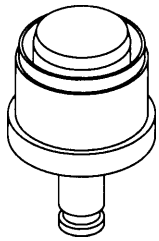

A000 002138

APPLICATION

454 and 670 engines.

Handle for insertion jig **249**

(p/ N 4208776 50)

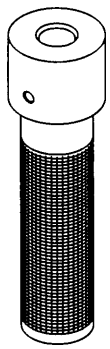

AOOC3V4

APPLICATION

454, 670 and 779 engines.

Exhaust spring installer/ remover **253**

(p/ N 5290281 00)

A000 002136

APPLICATION

All models.

TRANSMISSION (Mandatory service tools)

Clutch holder **51**

(p/ N 5290064 00)

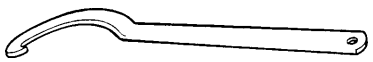

A001 001041

APPLICATION

All TRA drive pulleys.

Clutch holder **51**

(p/ N 5290276 00)

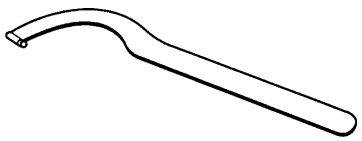

A002 001003

APPLICATION

Bombardier Lite drive pulley.

Drive pulley puller **53**

(P/ N 5290275 00)

Consists of :

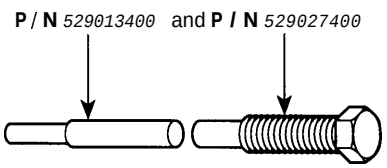

A000 002009

APPLICATION

277 engine.

TRA drive pulley puller **75**

(P/ N 5290224 00)

A006 001001

APPLICATION

TRA drive pulley for the 670-779 engines.

TRA drive pulley puller **56**

(N/ p 5290079 00)

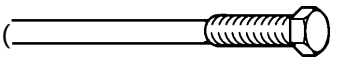

A018 001004

APPLICATION

TRA drive pulley (except 670 and 779 engines).

Forks (3) **57**

(N/ p 5290055 00)

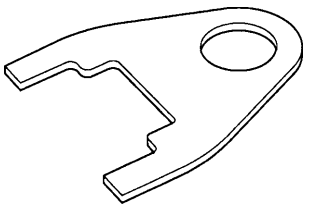

A016 001001

APPLICATION

All vehicles equipped with a TRA drive pulley.

Drive belt installer **58**

(p/ N 5290172 00)

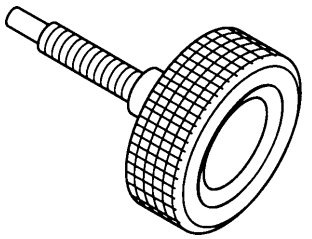

A000 000046

APPLICATION

All vehicles except Elan and Tundra II.

Alignment bar

A) (P/N 5290267 00) **59**

B) (P/N 5290269 00)

C) (p/N 5290282 00)

D) (P/N 5290283 00)

E) (p/N 5290300 00)

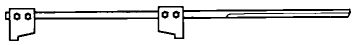

A001 001157

APPLICATION

A) F-Series and S-Series with 503.

B) Tundra II LT.

C) Alpine II.

D) Elan.

E) S-Series with 377 engine.

TRANSMISSION (Mandatory service tools)

Spring scale hook **62**

(p/ N 5290152 00)

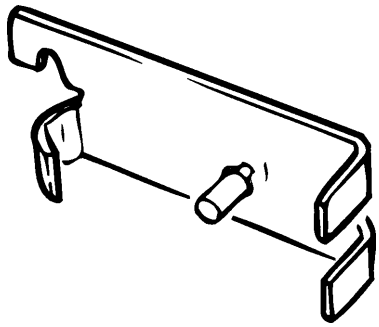

A001 001043

APPLICATION

S and F Series and Alpine II models.

Belt tension adjuster tool **63**

(p/ N 5290087 00)

Consist of :

3 mm Allen key
(p/ N 5290089 00)

Socket (P/ N 5290090 00)

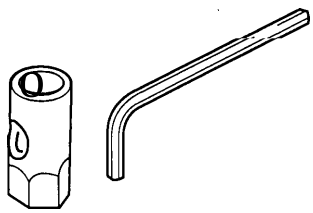

A015 001004

APPLICATION

All vehicles except Elan, Tundra II, Skandic WT and Ski Hill SP.

Spring compressor / TRA clutch flare tool **64**

(p/ N 5290186 00)

Parts included in the kit :

1) Spring compressor (P/ N 5290151 00)

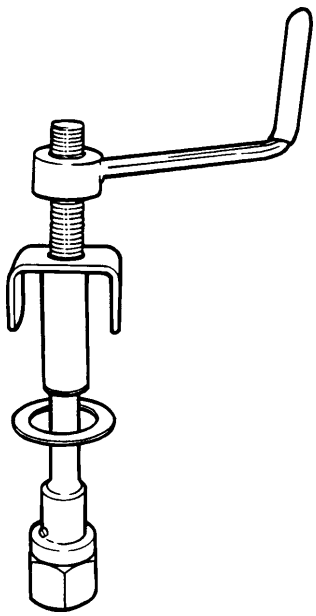

A001 001111

APPLICATION

S and F-Series and Alpine II driven pulley type.

All TRA pulley.

Spring compressor / TRA clutch flare tool **64**

(p/ N 5290186 00)

Parts included in the kit :

2) TRA clutch spring cover bushing flare tool

A) INTERIOR flare tool
(p/ N 5290180 00)
EXTERIOR flare tool
(p/ N 5290181 00)

NOTE : Letter B stamper on tools,

B) INTERIOR flare tool
(p/ N 5290182 00)
EXTERIOR flare tool
(p/ N 5290183 00)

NOTE : Letter B stamper on tools.

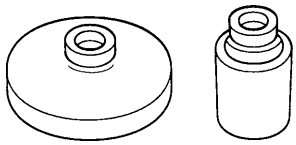

A001 001123

APPLICATION

A) TRA pulley (25 mm shaft).

B) TRA pulley (27 mm shaft).

TRANSMISSION (Mandatory service tools)

Spring compressor / TRA clutch flare tool **64**

(p/ N 5290186 00)

Parts included in the kit:

3) Washer (2)

(p/ N 7329000 15)

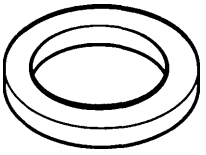

A001 001137

APPLICATION

All applications.

Spring compressor / TRA clutch flare tool **64**

(p/ N 5290186 00)

Parts included in the kit :

4) **TRA** clutch outer half bushing flare tool

INTERIOR flare tool
(p/ N 5290184 00)

EXTERIOR flare tool
(P/ N 5290185 00)

NOTE : Letter C stamper on tools.

b @

A001 001126

APPLICATION

All TRA drive pulleys.

Shock spring remover kit **65**

(p/ N 5290271 00)

Pin

(p/ N414 5284 00)

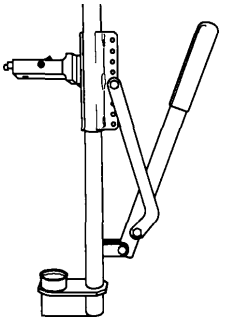

A001 001166

APPLICATION

All suspensions with coil spring.

Tension tester **74**

(P/ N 4143482 00)

A000 002007

APPLICATION

All models,

Countershaft bearing installer

(p/ N 5290302 00)

A000 000045

APPLICATION

S and F Series.

Countershaft bearing remover

(P/ N 5290301 00)

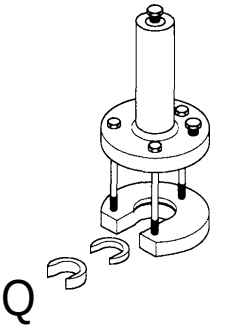

AOOA274

APPLICATION

S and F series.

Spring cover tool

(p/ N 5290273 00)

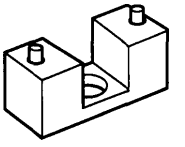

A001 001166

APPLICATION

Tundra II and 377 equipped S-Series drive pulley.

Transmission adjuste **76**

(p/ N 5290285 00)

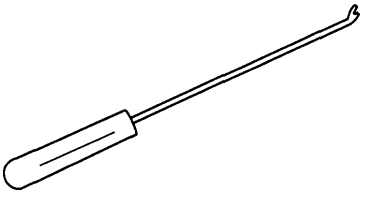

A000 003033

APPLICATION

F-Series equipped with reverse gear.

TRANSMISSION (Optional service tools)

Alignment tool **306**
(P/ N 4204760 10)

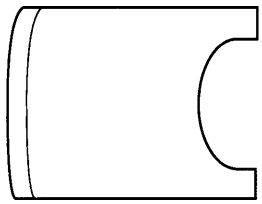

A000 002049

APPLICATION
Skandic WT gearbox.

Cam pusher **309**
(p/ N 5290129 00)

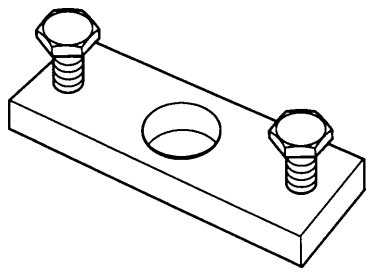

A018 001006

APPLICATION
Tundra II LT.

Drive pulley puller **318**
(P/ N 5290231 00)

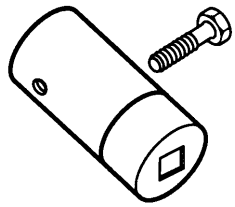

A000 002127

APPLICATION
Elan.

SUSPENSION (Optional service tools)

A) Track cleat remover **345**

(P /N 5290082 00)

Pins **346**

(p/ N 5290082 04)

NOTE : Pins can be rotated 180° depending on whether the tool is used by a left-hander or right-hander.

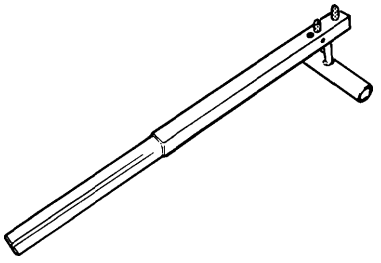

A001 001055

B) Track cleat remover **254**

(P /N 5290287 00)

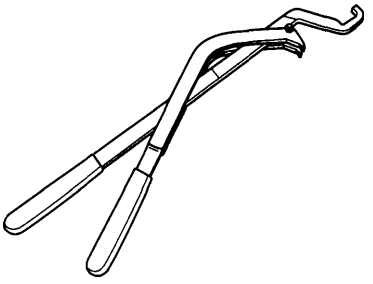

A001 005074

APPLICATION

A) Elan and Tundra II LT.

B) All others models.

Camber alignment too **343**

(p/ N 5290216 00)

NOTE : Angle finder with a magnet base must be used.

Suggestion : K-D tool no. 2968

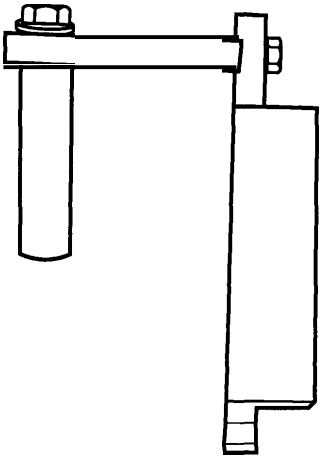

A006 001002

APPLICATION

All DSA front suspensions.

Track tension gauge **342**

(P /N 5290215 00)

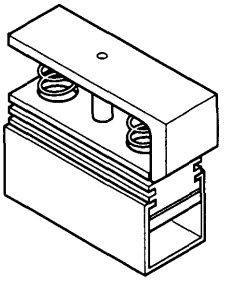

A000 001141

APPLICATION

All models except Elan.

Track cleat installer

A) (p/N 5290085 00) **347**

B)(P / N 5290288 00) **255**

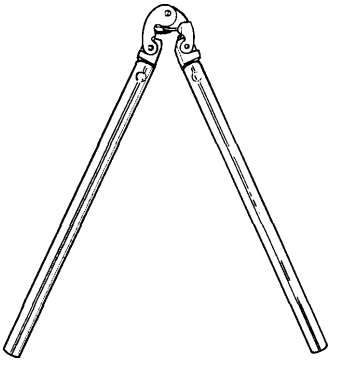

A001 001056

APPLICATION

A) Elan and Tundra.

B) All other models.

Dome guide

(p/ N 529026500

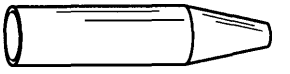

A006 006047

APPLICATION

MX Z T / A shocks.

Piston guide

(p/ N 5290266 00)

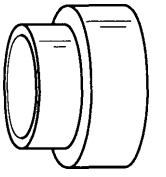

A006 005 048

APPLICATION

MX Z T / A shocks.

VEHICLES (Optional service tools)

Protective mat
(P / N 529 0306 00)

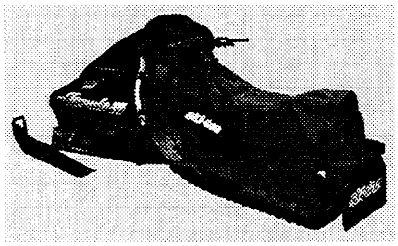

A01B454

APPLICATION
All vehicles.

SERVICE PRODUCTS

MANDATORY SERVICE PRODUCTS

0 NOTE : Reversal numbers (example : ❑) correspond to those of the Ski-Doo Service Tools Order Form and to those of the *Tools and Service Products Catalog.*

Loctite® is a trademarks of Loctite corporation.

Dow Corning® is a trademarks of Dow Corning Corporation.

151

Retaining compound

(P / N 413703f 00)

Loctite® RC / 609:
Retaining compound (10 mL)
(green)

A00B254

APPLICATION

Used for retaining bushings, bearings in slightly worn housing or on shaft,

152

Paste gasket

(P / N 4137027 00)

Loctite® 515 :
Gasket eliminator (50 mL)

A000 ml

APPLICATION

Crankcase halves transmission and gearbox mating surfaces.

154

Medium-strength thread locker

(P / N 4137030 00)

Loctite® 242 :
Threadlocker (10 mL)
(blue, medium strength)

A00B324

APPLICATION

Flywheel nut. crankcase studs, etc.

155

High strength thread locker

(P / N 4137074 00)

Loctite® 271 :
Threadlocker (10 mL)
(red, high strength)

(TYPICAL)

A00B204

APPLICATION

Fasteners and studs up to 1" diameter,

156

Chisel gasket / paint remover

(P / N 4137085 00)

Loctite® 79040 Chisel
510 g (18 oz)

A000 001 129

APPLICATION

Clean mating surfaces of cylinders and crankcase. Remove carbon in combustion chambers.

157

Cleaning solvent

(P / N 4137082 00)

Loctite® 755-59
340 g (12 oz)

A000 001130

APPLICATION

Clean carburetor parts and degrease all oily surfaces.

OPTIONAL SERVICE PRODUCTS

Silicone dielectric grease **350**
(3 Oz)
(P/ N413 7017 00)

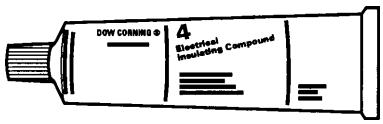

AOOB1X4

APPLICATION

On all electric connections. High tension coil and spark plug connections. Connector housings, etc.

Grease tube LMZ no. 1 **351**
(400 g)
(f' /N 4137075 oo)

A000 001070

APPLICATION

Mainly used between regulators or rectifiers and upper column to transfer the heat build-up and to assure a good ground.

Chaincase oil (250 mL) **353**
(p/ N413 8019 00)

A000 001099

APPLICATION

Chaincase lubricant on Elan and Tundra II LT.

Synthetic chaincase oil **354**
(P/ N 4138028 00)

A01B4Q4

APPLICATION

Chaincase lubricant on all models except Élan and Tundra II LT.

Blizzard oil **355**
(12 x 500 mL)
(P/ N 4960144 00)

A000 001098

APPLICATION

All models.

Injection oil

(p/ N 4960133 00) **356**
(12 x 1 liter)

(p/ N 4960140 00) **357**
(3x 4 liters)

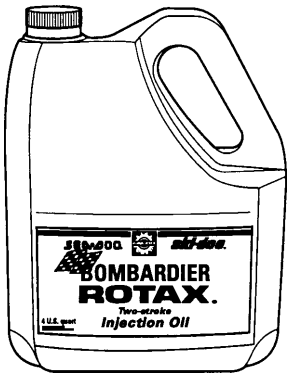

FOO1 001044

APPLICATION

All engines.

OPTIONAL SERVICE PRODUCTS

Pipe sealant **358**

(p/ N413 7023 00)
Loctite 592 (50 mL)

A000 001104

APPLICATION

Engine plugs and senders.

High temperature thread locker **359**

(P/ N 4208997 88)
Loctite 648 (green)
(5 g)

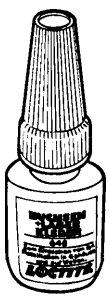

A000 001121

APPLICATION

For RAVE valve rod distance nut on 583, 670 and 779 engines.

Anti-seize lubricant **362**

(p/ N413 7010 00)
Loctite anti-seize lubricant 454 g (16 oz)

FOO1 001043

APPLICATION

Unpainted surfaces of drive pulley countershaft.

Bearing grease **363**
(400 g)

(P/N 4137061 oo)

A000 001093

APPLICATION

For idler bearings, ski legs, leaf spring cushion pads, seal interior lips, rear hub bearings, bogie wheels, countershaft bearings, etc.

Storage oil **364**
(350 g **spray can)**

(P/N *4960141* 00)

A000 001116

APPLICATION

All models.

Degreaser **365**

(p/ N413 7084 00)
Permatex® 48 TA
433 g (15 oz)

A000 001126

APPLICATION

Engine, chaincase, pulleys and any greasy surfaces.

OPTIONAL SERVICE PRODUCTS

Gel instant adhesive **366**

(P/ N 4137083 00)

Loctite 454-40
20 g (.70 oz)

A000 001132

APPLICATION

Isolating foam, rubber strip.

Tough adhesive **367**

(p/ N413 4083 00)

Loctite Black Max 38004
3 mL (.1 O oz)

A000 001133

APPLICATION

Shifter boot or grip.

Stripped threads repair kits **368**

(p/ N413 7086 00)

Loctite 81668

Form-A-thread 81668

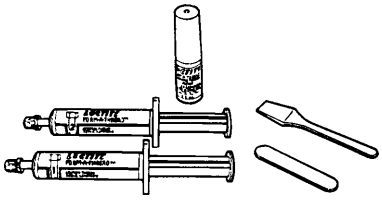

A000 000055

APPLICATION

Repair damaged threads of grade 5 (English) or 8.8 (metric) maximum. Do not use in applications where temperatures will exceed 149°C (300°F) or on critical assemblies.

HYLOMAR sealant (loo g) **369**

(p/ N 4137071 00)

A000 001123

APPLICATION

To form an oil resistant seal (ex : transmission).

Paint for frame touch-up **370**

(p/ N413 4010 00)

Black semi-gloss
(spray can)

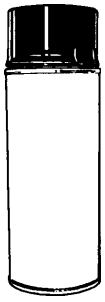

A000 001125

APPLICATION

All models with a black frame.

General purpose instant adhesive (495) **373**

(p/ N413 7032 00)

A000 001103

APPLICATION

Rubber to metal bonding and most hard plastic

Sealant Dow Corning 736 **374**

(P/ N413 7092 00)

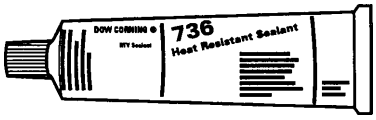

A000 001138

APPLICATION

All models.

Fuel stabilizer **375**

(P/ N413 4086 00)

A000 001139

APPLICATION

All models.

Molykote 111 **376**

(P/ N413 7070 00)

AOOB3W4

APPLICATION

Rotary valve shaft seals.

OPTIONAL SERVICE PRODUCTS

Shock oil
(1 liter)

(p/ N413 7094 00)

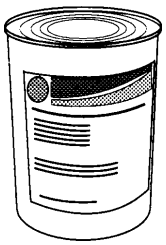

A06FOP4

APPLICATION

MX Z T / A shocks.

Penetrating lubricant

(p/ N 2936000 16)

AOO1 001169

APPLICATION

Steering ball joints on all models.

LUBRICATION AND MAINTENANCE CHART

		①	②	③	④	⑤	⑥	REFER TO
	Starting Rope Condition						✔	—
	Engine Head Nuts	✔			✔			Appropriate section : See Top End
	Engine Mount Nuts	✔			✔			Appropriate section : See ENGINE SUPPORT AND MUFFLER
	Exhaust System	✔		✔				Appropriate section: See ENGINE SUPPORT AND MUFFLER
	Engine Lubrication					✔		This section no. 1
	Cooling System Condition	✔			✔			Sub-section 04-06
	Coolant Replacement (Except Fan Cooled)						✔	Page 04-09-5
	Condition of Seals						✔	Sub-section 04-03
	Injection Oil Filter Condition (Except Élan)			✔				Page 04-07-1
	Injection Oil Filter Replacement (Except Élan)						✔	Sub-section 04-05
	Oil Injection Pump Adjustment (Except Élan)	✔			✔			Page 04-05-5
	Fuel Stabilizer					✔		This section no. 2
	Fuel Filter Replacement						✔	This section no. 3
	Fuel Lines and Connections	✔					✔	Sub-section 04-09
	Carburetor Adjustment	✔			✔			Page 04-08-8
	Throttle Cable Inspection	✔			✔		✔	Sub-section 04-09
	Air Filter Cleaning			✔				This section no. 4
	Drive Belt Condition	✔	✔					This section no. 5
	Condition of Drive and Driven Pulleys	✔		✔		✔		Sub-sections 05-02 and 03-03
	Cleaning of Drive and Driven Pulleys						✔	Sub-sections 05-02 and 03-03
	Retorquing of Drive Pulley Screw	✔						Sub-section 05-02
	Driven Pulley Preload	✔			✔			Sub-section 05-03
	Brake Condition	✔	✔					Sub-section 05-05
	Brake Adjustment			✔				Sub-section 05-05
	Lubrication of Ratchet Wheel or Fluid Change (Except Élan)						✔	Sub-section 05-05
	Drive Chain Tension	✔		✔				Sub-sections 05-06 and 05-07
	Countershaft Lubrication (S and F Series)	✔		✔		✔		Sub-section 05-05
	Chaincase / Gearbox Oil Level	✔		✔		✔		Sub-sections 05-06 and 05-07
	Lubrification of drive axle bearing	✔		✔		✔		Sub-section 07-05

		①	②	③	④	⑤	⑥	REFER TO
	Handlebar Bolts. Retorque to 26 N•m (19 lbf•ft)	✔						Page 08-01-1
	Steering and Front Suspension Mechanism	✔		✔		✔		Sub-sections 08-01 and 08-02
	Wear and Condition of Skis and Runners	✔	✔					Sub-section 08-02
	Steering and Ski Leg Camber Adjustment	✔		✔				Sub-section 08-01
	Suspension Adjustments (Except Elan)	AS REQUIRED						Section 07: See appropriate sub-section and *Operator's Guide*
	Suspension Lubrication			✔		✔		Section 07: See appropriate sub-section
	Suspension Condition	✔			✔			Section 07: See appropriate sub-section
	Suspension Stopper Strap Condition (Except Elan)				✔			Section 07: See appropriate sub-section
	Track Condition	✔		✔				Sub-section 07-06
	Track Tension and Alignment	✔	AS REQUIRED					Sub-section 07-06
	Spark Plugs*	✔						Sub-section 06-03
	Engine Timing	✔					✔	Sub-section 06-02
	Battery Condition	✔		✔		✔		Sub-section 06-04
	Headlight Beam Aiming				✔			Page 09-01-1
	Wiring Harnesses, Cables and Lines	✔		✔				Page 09-01-13
	Operation of Lighting System (HI / LO Beam, Brake Light, etc.) Test Operation of Emergency Cut-Out Switch and Tether Cut-Out Switch	✔	✔			✔		*Operator's Guide*
	Rags in Air Intake and Exhaust System					✔	✔	This section no. 6
	Engine Compartment	✔		✔				This section no. 7
	General Inspection	✔		✔		✔		This section no. 8

* Before installing new spark plugs at pre-season preparation, it is suggested to burn excess storage oil by starting the engine with the old spark plugs. Only perform this operation in a well ventilated area.

① 10-HOUR INSPECTION (To be performed by dealer)

② WEEKLY OR EVERY 240 km (150 mi)

③ MONTHLY OR EVERY 800 km (500 mi)

④ ONCE A YEAR OR EVERY 3200 km (2000 mi)

⑤ STORAGE

⑥ PRE-SEASON PREPARATION (To be performed by dealer)

NO. 1 ENGINE LUBRICATION

Engine internal parts must be lubricated to protect them from possible rust formation during the storage period.

To perform the storage procedures, proceed as follows :

Start the engine and allow it to run at idle speed until the engine reaches its operating temperature,

◆ WARNING : Ensure the track is **free of all particles which could be thrown out while it is rotating. Keep hands, tools, feet and clothing clear of track. Ensure no one is standing in close proximity to the vehicle.**

Stop the engine.

All Models Except Mach Z

To prevent fuel from draining, primer button should be pushed all the way in.

Disconnect the outlet primer hose from the primer valve (straight coupling).

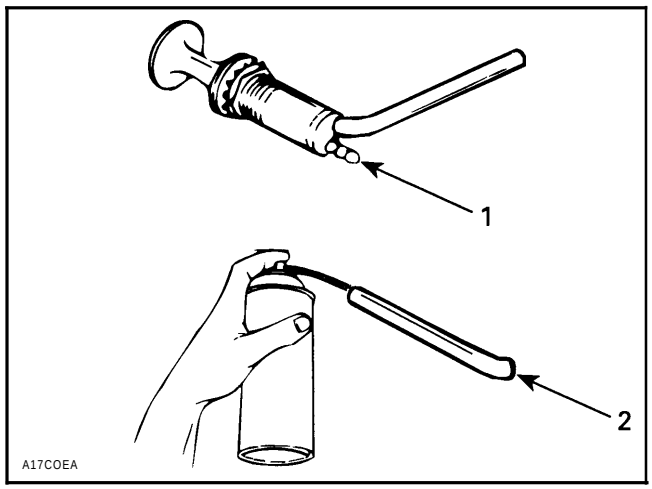

1. Straight coupling
2. To intake manifold

Insert storage oil (P/ N 4960141 00) nozzle into primer outlet hose.

Mach Z Only

Remove air silencers to spray storage oil into each carburetor bore.

All Models

Restart engine and run at idle speed.

Inject storage oil until the engine stalls or until a sufficient quantity of oil has entered the engine (approximately half a can).

With the engine stopped, remove the spark plug and spray storage oil (P/ N 4960141 00) into each cylinder.

Crank slowly 2 or 3 revolutions to lubricate cylinders.

Reinstall the spark plugs and the outlet primer hose or air silencers.

● **WARNING : This procedure must only be performed in a well ventilated area. Do not run engine during storage period.**

NO. 2 FUEL STABILIZER

A fuel stabilizer (P/N 4134086 00) can be added in fuel tank to prevent fuel deterioration and avoid draining fuel system for storage. Follow manufacturer's instructions for proper use.

If above fuel stabilizer is not used, drain fuel system including fuel tank and carburetor(s).

▼ CAUTION : **Fuel stabilizer should be added prior engine** lubrication to ensure carburetor(s) protection **against varnish deposit.**

NO. 3 FUEL FILTER REPLACEMENT

On all models except Elan and Alpine II, drain fuel tank.

On all models, remove fuel line grommet from fuel tank and pull out inlet fuel line from tank.

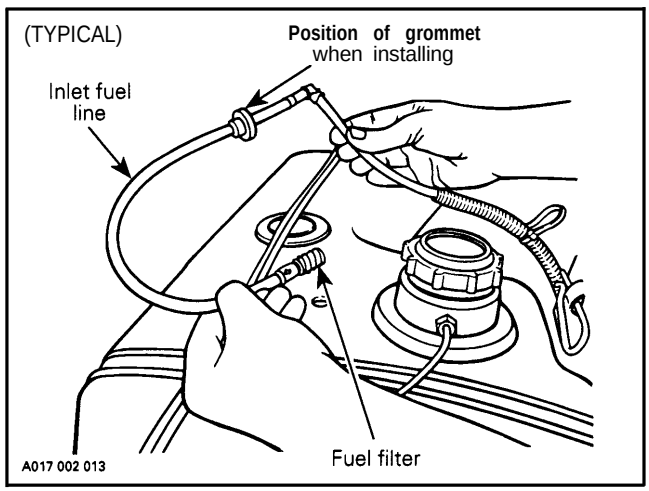

Replace fuel filter. To facilitate the fuel line installation, slide grommet on fuel line about 50 mm (2 in) away from elbow then install grommet on fuel tank and push elbow through grommet.

NO. 4 AIR FILTER CLEANING

S-Series

Lift hood and remove air filter from air intake silencer.

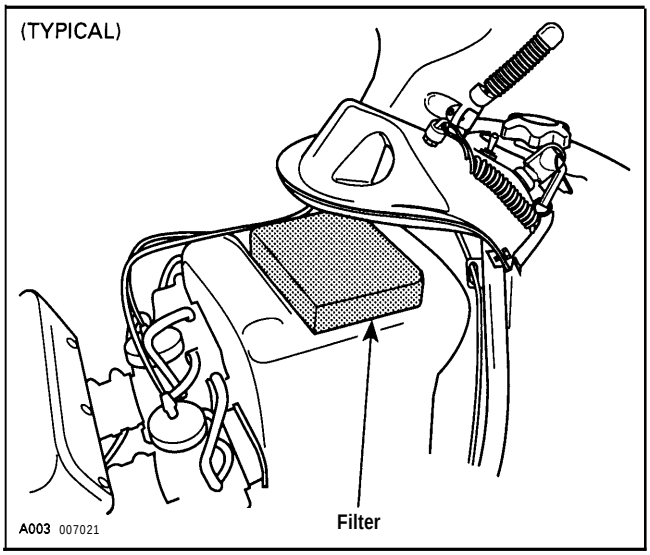

To clean the filter, shake the snow out of it then, dry it out.

F-Series

Lift hood and remove air filter(s) from air intake silencer.

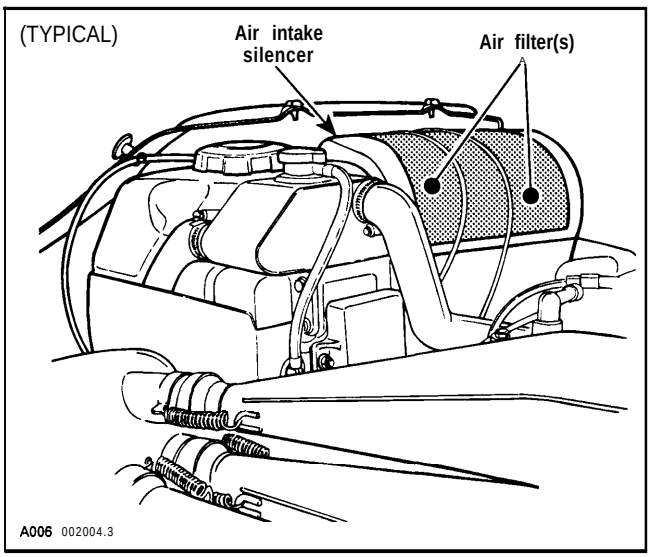

Shake the snow out of filter(s) then, dry it out.

All Models

Check that the air box is clean and dry then properly reinstall the filter.

CAUTION : These snowmobiles **have been calibrated with the filter installed. Operating the snowmobile without it may cause engine damage.**

Tundra II LT

Air filter is located on lower side portion of air intake silencer. Lift hood and remove belt guard. Gently pull air filter sideward.

Ensure it is clean and dry. Shake snow out. Clean with a solvent and dry as necessary

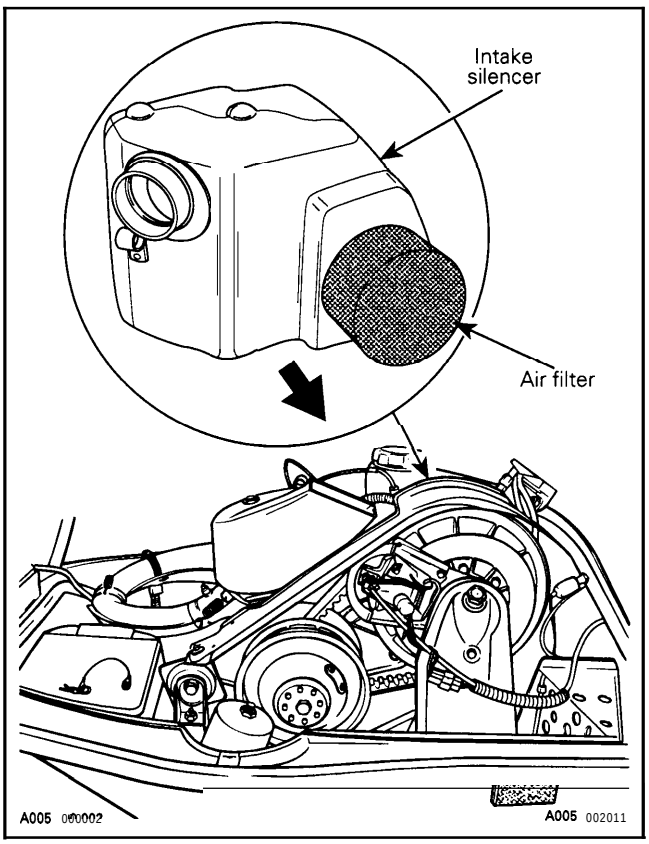

NO. 5 DRIVE BELT CONDITION

Inspect belt for cracks, fraying or abnormal wear (uneven wear, wear on one side, missing cogs, cracked fabric). If abnormal wear is noted, probable cause could be pulley misalignment, excessive RPM with frozen track, fast starts without warm-up period, burred or rusty sheave, oil on belt or distorted spare belt.

Check the drive belt width. Replace the drive belt if width is less than the minimum width recommended in DRIVE BELT 05-01.

NO. 6 RAGS IN AIR INTAKE AND EXHAUST SYSTEM

At storage preparation, block air intake hole and exhaust system hole using clean rags.

Remove those rags at pre-season preparation.

NO. 7 ENGINE COMPARTMENT

Keep clean of grass, twigs, cloth, etc. These are combustible under certain conditions.

NO. 8 GENERAL INSPECTION

Grease or oil at all recommended lubrication points. Wipe off surplus.

Block air intake hole and exhaust system hole using clean cloths.

Remove any dirt or rust.

To clean the entire vehicle, use only flannel clothes or Kimtowels® wipers no. 58-380 from Kimberly-Clark.

CAUTION : It is necessary to use flannel cloths or" Kimtowels" wipers on windshield and hood to avoid damaging further surfaces to clean.

To clean the entire vehicle, including metallic parts with a **thick** coat of grease, use " Endust" imported by Bristol Myers, available at hardware stores or supermarkets.

To clean the entire vehicle, including metallic parts with a **thin** coat of grease, use "Simple Green" from Sunshine Makers Inc., available at hardware stores or at automotive parts retailer,

To remove scratches on windshield or hood : Start with "Slip Streamer Motorcycle Windshield Heavy Duty Scratch, Remover". Finish with "Slip Streamer Motorcycle Cleaner and Polish".

NOTE : The latest product may be use alone if only light scratches are noticeable.

CAUTION : Never clean plastic parts or hood with strong detergent, decreasing agent, paint thinner, acetone, products containing chlorine, etc.

Inspect the hood and repair any damage. Touch up all metal spots where paint has been scratched off. Spray all metal parts including shock chromed rods with antirust product (P/ N 2936000 06). Wax the hood and the painted portion of the frame for better protection.

NOTE : Apply wax on glossy finish only. Protect the vehicle with a cover to prevent dust accumulation during storage.

CAUTION : The snowmobile has to be stored in a cool and dry place and covered with an opaque tarpaulin This will prevent sun rays and grime from affecting plastic components and vehicle finish.

TABLE OF CONTENTS

ENGINE **03-01-1**

FUEL AND OIL SYSTEMS 03-02-1

TRANSMISSION AND BRAKE SYSTEM **03-03-1**

TRANSMISSION **03-03-1**

BRAKE SYSTEM **03-03-7**

MECHANICAL BRAKE **03-03-7**

HYDRAULIC BRAKE **03-03-7**

MECHANICAL AND HYDRAULIC BRAKES **03-03-8**

ELECTRICAL SYSTEM **03-04-1**

SUSPENSION SYSTEM AND TRACK **03-05-1**

ENGINE

The following chart is provided to help in diagnosing the probable source of troubles. It should be used as a guideline. Some causes or corrections may not apply to a specific model.

SYMPTOM	**ENGINE BACKFIRES.**
CONDITION	NORMAL USE.
Test / Inspection	**1) Check spark plug(s).** a) Carbon accumulation caused by defective spark plug(s). *Clean carbon accumulation and replace spark plug(s).*
	2) **Check cooling system.** a) **Loose fan belt.** *Adjust or replace fan belt (refer to technical data 10).* b) Low antifreeze level. *Adjust antifreeze level. Then check clamps or hoses.* *c)* Defective tank cap. *Replace cap.* d) **Air** in system. *Bleed system.*
	3) **Check ignition timing.** a) **Timing is too advanced.** *Set timing according to specifications (refer to technical data 10).*

SYMPTOM	ENGINE SUDDENLY TURNS OFF.
CONDITION	NORMAL USE.
Test / Inspection	**1) Perform engine leak test (tool P / N 8617390 00). Refer to engine leak verification flow chart. Check possible piston seizure.** a) **Damaged gasket and/or seal.** *Replace defective parts.*
	2) **"Four-corner" seizure of piston(s).** a) Accelerating too fast when engine is cold. Piston expands faster than cylinder. *Replace piston(s). Ask driver to refer to warm-up procedure in* Operator's Guide.
	3) **Piston(s) seizure on exhaust side (color on piston dome is correct).** a) Kinked fuel tank vent tube. *Relocate fuel tank vent tube.* b) Leaks at fuel line connections. *Replace defective lines.* c) Fuel does not flow through carburetor(s) (plastic particles in needle area and / or varnish formation in carburetor(s)). *Clean carburetor(s).* d) Spark plug heat range is too warm. *Install sparkplug(s) with appropriate heat range (refer to technical data 10).* e) Improper ignition timing. *Adjust according to specifications (refer to technical data 10).* f) Restriction in exhaust system. *Replace.* *g)* Compression ratio is too high. *Install genuine parts.* h) Carburetor calibration is too lean. *Adjust according to specifications (refer to technical data 10).* i) Improper rotary valve timing or improper valve. *Adjust according to specifications (refer to technical data 10) and/or install Bombardier's recommended rotary valve.* j) Poor quality oil. Use *Bombardier Rotax oil.* k) Leaks at air intake silencer. *Replace air intake silencer grommets.*

	4) **Melted and / or perforated piston dome; melted section at ring end gap.** a) When piston reaches TDC, mixture is ignited by heated areas in combustion chamber. This situation is due to an incomplete combustion of a poor quality oil. *Clean residue accumulation in combustion chamber and replace piston(s). Use Bombardier Rotax oil.* b) Spark plug heat range is too high. *Install recommended sparkplug(s) (refer to technical data 10).* *c)* Ignition timing is too advanced. *Adjust according to specifications (refer to technical data 10).* d) Inadequate fuel quality. Use *appropriate fuel.* *e)* Carburetion is too lean. *Adjust according to specifications (refer to technical data 10).*
	5) **Seized piston all around the circumference (dry surface).** a) Lack of oil, damaged oil line or defective injection pump. *Replace defective part(s).*
	6) **Grooves on intake side of piston only.** a) Oil film eliminated by water (snow infiltration in engine). *Replace piston(s) and check if intake system leaks.*
	7) **Piston color is dark due to seizure on intake and exhaust sides.** a) Broken or loose fan belt. *Replace fan belt or adjust its tension (refer to technical data 10).* b) Cooling system leaks and lowers coolant level. *Tighten clamps or replace defective parts. Add antifreeze in cooling system until appropriate level is reached.* *c)* Accumulation of foreign particles in needle and /or main jet area. *Clean carburetor(s).*
	8) **Cracked or broken piston(s).** a) Cracked or broken piston(s) due to excessive piston / cylinder clearance or engine overreving. *Replace piston(s). Check piston / cylinder clearance (refer to technical data 10). Adjust drive pulley according to specifications (refer to technical data 10) and/or clean pulley sheaves if they are contaminated with greasy particles.*
SYMPTOM	**PISTON RING AND CYLINDER SURFACES ARE GROOVED.**
CONDITION	NORMAL USE.
Test / Inspection	**1) Check oil quality.** a) Poor oil quality. *Use Bombardier Rotax oil.*
	2) **Check injection pump and its hoses.** a) Inadequate injection pump adjustment and / or defective hoses. *Adjust pump according to specifications (refer to Engine section 04) and/ or replace hoses.*
	3) **Check fuel / oil premix (Élan).** a) Inadequate fuel / oil mixture. *Drain fuel tank. Use manufacturer's recommended mixture (refer to fuel and oil section in* Operator's Guide).

SYMPTOM	ENGINE DOES NOT OFFER MAXIMUM POWER AND / OR DOES NOT REACH MAXIMUM OPERATING RPM.
CONDITION	NORMAL USE.
Test / Inspection	**1) Check spark plug condition.** a) Fouled spark plug(s). *Replace.*
	2) **Check if there is water in fuel.** a) There is water in fuel. *Drain fuel system, then fill it with appropriate fuel.*
	3) **Check items listed in "Engine runs out of fuel" (refer to fuel and oil system sub-section 02).**
	4) Check carburetor adjustments and cleanliness. a) Inadequate carburetor adjustments or dirt accumulation. *Adjust according to specifications (refer to technical data 10) or clean.*
	5) **Check drive belt.** a) Worn belt. *Replace belt if width is 3 mm (1/8") less than nominal dimension (refer to technical data 10).*
	6) **Check track adjustment.** a) Too much tension and / or improper alignment. *Align track and adjust its tension to specifications (refer to technical data 10).*
	7) Check drive pulley. a) Improper calibration screw adjustments (TRA pulley) and/or worn bushing(s). *Adjust according to specifications (refer to technical data 10) and/or replace bushing(s).*
	8) **Check driven pulley.** a) Worn bushing and / or spring tension. *Replace spring and /or adjust its tension according to specifications (refer to technical data 10).*
	9) **Check exhaust system.** a) Restriction. *Replace.*
	10) Check ignition timing. a) Decrease in power due to retarded ignition. *Adjust according to specification (refer to technical data 10).*
	11) Check engine compression. a) Worn piston(s) and ring(s). *Replace (refer to technical data 10 for specification).*
	12) **Check engine cooling system.** a) Engine overheats. Improper fan belt tension. *Adjust fan belt (refer to technical data 10).* b) Antifreeze level is low, cap fails to pressurize system or air circulates through lines. *Adjust level, replace cap or bleed cooling system.*

SYMPTOM	ENGINE DETONATION AT MAXIMUM RPM.
CONDITION	NORMAL USE.
Test / Inspection	**1) Check which type of fuel is used.** a) Octane number is too low and /or alcohol level is too high. *Use recommended fuel type.*
	2) **Check spark plug type.** a) Improper spark plug heat range. *Install recommended sparkplug(s) (refer to technical data 10).*
	3) **Check exhaust system.** a) Too much restriction. *Replace.*
	4) **Check ignition timing.** a) Timing is too advanced. *Adjust according to specification (refer to technical data 10).*
	5) **Check carburetion.** a) Fouled and / or improper carburetor components. *Clean or replace according to specification (refer to technical data 10).*
	6) **Check compression ratio and squish area.** a) Compression ratio is too high. *Install genuine parts.*
SYMPTOM	**ENGINE TURNS OVER BUT FAILS TO START.**
CONDITION	NORMAL USE.
Test / Inspection	**1) Check switches.** a) Ignition switch, emergency cut-out switch or tether switch is in the OFF position. *Place all switches in the RUN or ON position.*
	2) **Check fuel level.** a) Mixture not rich enough to start cold engine. *Check fuel tank level and use primer.*
	3) **Check spark plug.** a) Defective spark plug (no spark). *Replace spark plug(s).*
	4) **Check amount of fuel on spark plug.** a) Flooded engine (spark plug wet when removed). *Do not overprime. Remove wet sparkplug(s), turn ignition switch to OFF and crank engine several times. Install clean dry sparkplug. Start engine following usual starting procedure.*
	5) **Check fuel lines.** a) No fuel to the engine (spark plug dry when removed). *Check fuel tank level; turn fuel valve on if applicable; check fuel filter, replace if clogged; check condition of fuel and impulse lines and their connections.*
	6) **Check engine compression.** a) Insufficient engine compression. *Replace defective part(s) (ex.: piston(s), ring(s), etc.).*

SYMPTOM	IRREGULAR ENGINE IDLE.
CONDITION	NORMAL USE AFTER ENGINE WARM UP.
Test / Inspection	**1) Check primer.** a) Fuel leaks at primer nipple which is mounted to carburetor. *Replace.*
	2) **Check choke.** a) Choke plunger may be partially opened. *Readjust.*
	3) **Check carburetor adapter.** a) Air enters through a crack. *Replace.*
	4) **Check air screw position.** a) Inadequate fuel / air mixture. *Adjust according to specifications (refer to technical data 10).*
	5) **Check ignition system trigger coil air gap.** a) Air gap is too large. *Adjust according to specifications (refer to technical data 10).*
	6) **Check dimension of pilot jet.** a) Inadequate fuel / air mixture. *Adjust according to specifications (refer to technical data 10).*
	7) **Pet-form engine leak test (tool P / N 8617390 00).** a) Leaking gaskets allow air to enter in engine. *Replace defective parts.*
SYMPTOM	**HIGH ENGINE OPERATING TEMPERATURE.**
CONDITION	NORMAL USE.
Test / Inspection	**1) Check temperature gauge sensor.** a) False reading. *Replace.*
	2) **Check fan belt.** a) Belt slides because it is too loose. *Adjust according to specifications (refer to technical data 10).*
	3) **Verify antifreeze level and check if there is air infiltration in the system or if there are leaks in gasket areas.** a) Low antifreeze level or air in system. *Add antifreeze until recommended level is reached, bleed system and/or tighten clamps at fitting.*
	4) **Check if antifreeze flows through system properly.** a) Foreign particles and / or broken coolant pump impeller. *Clean cooling system and/ or replace coolant pump impeller.*
	5) **Check thermostat.** a) Thermostat reacts slowly or not at all. *Replace.*

	6) Check antifreeze concentration. a) Antifreeze concentration is too high. *Adjust concentration according to Bombardier's recommendations.*
	7) **Check tank cap.** a) Cap does not hold pressure. *Replace.*
	8) **Check carburetion.** a) Improperly adjusted or inadequate carburetor components. *Adjust according to specifications (refer to technical data 10) or replace inadequate component(s).*
	9) **Check cylinder head gaskets.** a) Worn gaskets. *Replace.*
	10) **Check ignition timing.** a) Ignition timing is too advanced. *Adjust according to specifications (refer to technical data 10).*
	11) Check if there are leaks at air intake silencer and / or engine crankcase. a) Leak(s). *Repair or replace.*
	12) **Check condition and heat range of spark plug(s).** a) Melted spark plug tip or inadequate heat range. *Replace.*
SYMPTOM	**ENGINE EQUIPPED WITH "RAVE" VALVE DOES NOT REACH ITS FULL OPERATING RPM (500 TO 1000 RPM SLOWER).**
CONDITION	NORMAL USE.
Test / Inspection	**1) Check "RAVE" valve pistons.** a) Valve piston(s) is (are) too far out. *Screw valve piston(s) to bottom.*
	2) **Check "RAVE" valve stems.** a) Bent "RAVE" valve stem(s). *Replace.*
	3) **Check "RAVE" valves.** a) Jamed valve(s). *Clean.*
	4) Check tension of "RAVE" springs. a) Inadequate spring tension. *Replace.*
	5) **Check "RAVE" pressure holes.** a) Clogged holes. *Clean.*
	6) Check clamps or sleeves. a) Damaged clamp(s) or sleeve(s). *Replace.*

SYMPTOM	**ENGINE EQUIPPED WITH "RAVE". ENGINE HESITATES AT MID-SPEED AND REACHES MAXIMUM PERFORMANCE ONLY AFTER A WHILE.**
CONDITION	NORMAL USE.
Test / Inspection	**1) Check "RAVE" valve spring(s).** a) Spring tension is too weak or spring(s) is (are) broken. *Replace.*
	2) **Check "RAVE" valve cover red adjustment screws.** a) Adjustment screw(s) is (are) too loose. *Fully tighten.*
	3) **Check "RAVE" valve movement ("RAVE" movement indicator P / N 8617258 00).** a) Valve(s) is (are) stuck in open position. *Clean.*
SYMPTOM	**REWIND STARTER ROPE DOES NOT REWIND.**
CONDITION	NORMAL USE.
Test / Inspection	**1) Check rewind spring.** a) Broken spring. *Replace spring.*
SYMPTOM	**REWIND STARTER PAWL DOES NOT ENGAGE.**
CONDITION	NORMAL USE.
Test / Inspection	**1) Check stopper spring.** a) Broken stopper spring. *Replace.*
	2) **Check pawl and pawl lock.** a) Pawl and pawl lock have stuck together because of heat. *Replace.*
	3) **Check pawl and rope sheave.** a) Pawl and rope sheave have stuck together because of heat. *Replace.*

SYMPTOM	**ENGINE PINGING.**
CONDITION	NORMAL USE.
Test / Inspection	**1) Check fuel lines.** a) Bent fuel lines (preventing fuel from flowing through). *Relocate or replace fuel lines.*
	2) **Check if carburetor(s) is (are) clean.** a) Dirt prevents fuel from flowing through. *Clean.*
	3) Check ignition timing. a) Timing is too advanced. *Adjust according to specifications (refer to technical data 10).*
	4) **Check compression ratio.** a) Compression ratio is too high. *Replace inadequate part(s) to obtain manufacturer's recommended compression ratio or use a higher grade fuel.*
SYMPTOM	**ENGINE GENERATES A LOT OF VIBRATIONS.**
CONDITION	NORMAL USE.
Test / Inspection	**1) Check engine supports.** a) Loose broken supports or interference between support(s) and chassis. *Retighten to specification (refer to technical data 10) or replace.*
	2) **Check drive pulley (refer to: vibrations coming from drive pulley).**
	3) Check carburetor synchronization. a) Throttle slide heights are adjusted differently and / or throttle slide openings are unsynchronized. *Adjust throttle slide heights and throttle cable.*

NOTE : For fan cooled engines, ignore information pertaining to coolant system and crankcase rotary valve gear reservoir.

ENGINE LEAK VERIFICATION FLOW CHART

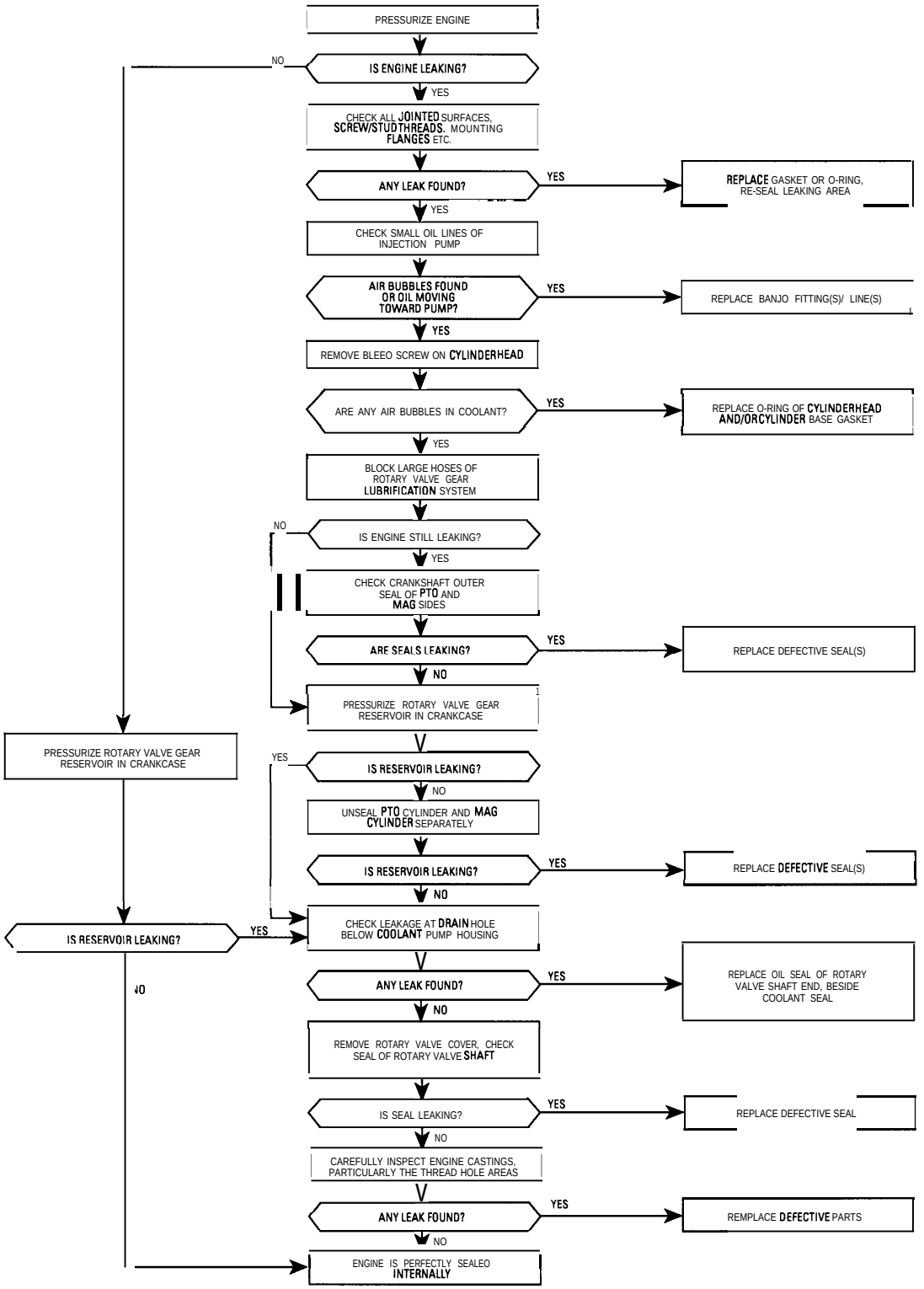

FUEL AND OIL SYSTEMS

The following chart is provided to help in diagnosing the probable source of troubles. It should be used as a guideline, Some causes or corrections may not apply to a specific model.

SYMPTOM	**HIGH FUEL CONSUMPTION (OR RICH MIXTURE).**
CONDITION	NORMAL USE.
Test / Inspection	**1) Check fuel tank.** a) Perforated fuel tank. *Replace fuel tank.*
	2) **Check fuel pump reservoir and carburetor fittings.** a) Leaking fittings. *Replace defective part.*
	3) **Check primer.** a) Fuel flows through primer while engine runs. *Replace primer.*
	4) **Check float height in carburetor(s).** a) Fuel level is too high in float bowl(s). *Adjust according to specifications (refer to technical data 10).*
	5) **Check needle valve.** a) Foreign particles prevent needle valve(s) from closing and / or worn seating area. *Clean or replace needle valve(s), then clean seating area.*
	6) **Check H.A.C. system.** a) Connection to atmosphere is plugged. *Clean.* b) Leakage in H.A.C. to carburetor tube. *Replace.* *c)* Leak in H.A.C. sealed chamber. *Replace.* d) H.A.C. frozen. *Replace.*
SYMPTOM	**FUEL LEAKS IN ENGINE BASE WHEN ENGINE IS STOPPED.**
CONDITION	NORMAL USE.
Test / Inspection	**1) Check items 3,4 and 5 of “High fuel consumption”.**
	2) Check fuel pump diaphragm. a) Cracked diaphragm. *Replace.*

SYMPTOM	ENGINE LACKS POWER OR STALLS AT HIGH RPM.
CONDITION	NORMAL USE.
Test / Inspection	1) **Check fuel tank vent hose.** a) Kinked or clogged hose. *Relocate or replace.*
	2) **Check fuel filter.** a) Clogged filter. *Replace.*
	3) **Check fuel lines.** a) Kinked or clogged lines. *Relocate or replace.*
	4) **Check fuel pump flow.** a) Dried diaphragm. *Replace.*
	5) **Check if carburetor(s) is (are) clean.** a) Varnish. *Clean.*
SYMPTOM	**HIGH INJECTION OIL CONSUMPTION.**
CONDITION	NORMAL USE.
Test / Inspection	**1) Check oil injection pump adjustment.** a) Oil injection pump adjusted too rich. *Adjust.*
	2) **Check injection oil lines and their fitting.** a) Leaking lines and / or cover. *Replace defective part(s).*
	3) **Check injection pump cover gasket.** a) Worn gasket. *Replace.*
	4) **Pressurize crankcase rotary valve gear reservoir.** a) Leaking gasket(s). *Replace gasket(s).*

SYMPTOM	**ENGINE RUNS OUT OF FUEL (OR LEAN MIXTURE).**
CONDITION	NORMAL USE.
Test / Inspection	**1) Check fuel filter ball located in fuel tank. Ball must move freely.** a) Corrosion due to oxidation at installation. *Replace fuel filter.*
	2) **Check if lines are perforated or kinked and make sure they do not leak at fittings.** a) Lines are too big for their fittings or are improperly rooted. *Replace or properly relocate lines.*
	3) **Check fuel pump outlet flow.** a) Dirt clogging fuel pump lines or torn membrane. *Clean or replace fuel pump.*
	4) **Check carburetor needle valve(s).** a) Dirt (varnish, foreign particle) clogging fuel line inlets. *Clean.*
	5) **Check main jet.** a) Dirt (varnish, foreign particle) accumulation at main jet. *Clean.*
	6) Check float height in carburetor bowl(s). a) Running out of fuel at high speed because float height is too low. *Adjust float lever height according to specification.*
	7) **Check H.A.C. system.** a) Plugged hole in air jet inlet, *Clean.* b) H.A.C. frozen. *Replace.*

TRANSMISSION AND BRAKE SYSTEM

The following charts are provided to help in diagnosing the probable source of troubles. It should be used as a guideline. Some causes or corrections may not apply to a specific model.

TRANSMISSION

SYMPTOM	**THE SNOWMOBILE ACCELERATES SLOWLY, ESPECIALLY WHEN IT IS STOPPED.**
CONDITION	NORMAL USE.
Test / Inspection	**1) Check drive belt condition.** a) Belt is too narrow (drive belt engagement is higher in drive pulley). *Replace belt if width is 3 mm (1/8") less than a new one (refer to technical data 10).*
	2) **Check distance between pulleys and / or drive belt deflection.** a) Distance is too small between pulleys or deflection is too high (drive belt engagement is higher in drive pulley). *Adjust distance between pulleys and/ or drive belt deflection according to specifications (refer to technical data* 10).
	3) Check driven pulley sliding half play. a) Jammed sliding half. *Replace.*
	4) **Check spring tension of driven pulley sliding half.** a) Sliding half rotation is accelerated when spring tension is too weak. *Adjust according to specifications (refer to technical data 10).*
	5) **Refer to "Vibrations originating from driven pulley" and check items listed.**
	6) Check drive pulley spring tension. a) Spring tension is too weak. *Replace.*
SYMPTOM	**ENGINE MAXIMUM RPM IS TOO HIGH AND TOP SPEED IS NOT REACHED.**
CONDITION	NORMAL USE.
Test / Inspection	**1) Check items 1, 2 and 3 of "The snowmobile accelerates slowly, especially when it is stopped".**
	2) Check driven pulley spring tension. a) Spring tension is to stiff. *Adjust according to specification (refer to technical data 10).*
	3) **Check position of the calibration screws. (TRA drive pulley)** a) Selected numbers are too high. *Adjust according to specification (refer to technical data 10).*
	4) **Refer to "Vibrations originating from driven pulley" and check items listed.**

SYMPTOM	**LOOSENESS IS FELT IN DRIVE SYSTEM WHEN ACCELERATING/ DECELERATING.**
CONDITION	NORMAL USE.
Test / Inspection	**1) Check drive chain tension.** a) Drive chain is too loose. *Adjust.*
	2) **Check play of driven pulley Woodruff key (aluminum frame models)** a) Worn Woodruff key or keyway. *Replace.*
SYMPTOM	**VIBRATIONS ORIGINATING FROM DRIVEN PULLEY.**
CONDITION	NORMAL USE.
Test / Inspection	**1) Check drive belt.** a) Belt width is uneven at many places. *Replace (refer to technical data 10 for the part number).*
	2) **Check tightening torque of drive pulley screw.** a) Moving governor cup. *Retighten bolt.*
	3) **Spring cover bolts.** a) Spring cover moves and restrains sliding half movement. *Retighten bolts.*
	4) **Check spring cover (TRA TYPE) and / or outer half bushings.** a) Excessive gap between bushings and inner half shaft, thus restraining sliding half movements. *Replace bushing(s) (IMPORTANT : flare edges of each bushing using appropriate tool (TRA model).*
	5) **Check sliding half slider shoes.** a) Worn slider shoes. *Replace.*
SYMPTOM	**VIBRATIONS ORIGINATING FROM DRIVEN PULLEY.**
CONDITION	NORMAL USE.
Test / Inspection	**1) Check sliding half play.** a) Sliding half runout. *Replace sliding half bushing.*
	2) **Check sliding half and fixed half straightness.** a) Sliding half/ fixed half runout. *Replace.*
	3) **Check cam slider shoes.** a) One or two slider shoes out of three are broken. *Replace.*

SYMPTOM	**PULLEYS DO NOT DOWN SHIFT PROPERLY.**
CONDITION	NORMAL USE.
Test / Inspection	**1) Check driven pulley spring tension.** a) Spring tension is too weak. *Adjust according to specifications (refer to technical data 10).*
	2) **Refer to "Vibrations coming from driven pulley" and check items listed.**
	3) Check drive pulley bushings (cleanliness, wear, etc.). a) Bushings stick to fixed half pulley shaft. *Clean or replace.*
	4) **Check driven pulley spring tension.** a) Spring tension is too weak. *Replace.*
SYMPTOM	**IT IS DIFFICULT TO ENGAGE TRANSMISSION IN FORWARD OR REVERSE GEAR.**
CONDITION	NORMAL USE.
Test / Inspection	**1) Check position of gear shift lever adjustment screw.** a) Improper adjustment. *Adjust according to specifications (refer to transmission section 05).*
SYMPTOM	**UNEVEN BELT WEAR ON ONE SIDE ONLY.**
CONDITION	NORMAL USE.
Test / Inspection 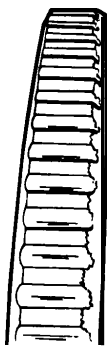 AOOO 003009	**1) Check tightening torque of engine mount bolts.** a) Loose engine mount. *Tighten engine mount nuts/bolts equally.*
	2) **Check pulley alignment.** a) Pulley misalignment. *Align pulleys.*
	3) **Check drive belt contact area on pulleys.** a) Rough or scratched pulley surfaces. *Repair or replace pulley half.*
	4) **Check driven pulley sliding half play.** a) Driven pulley bushing worn. *Replace bushing.*

SYMPTOM	**BELT GLAZED EXCESSIVELY OR HAVING BAKED APPEARANCE.**
CONDITION	NORMAL USE.
Test / Inspection 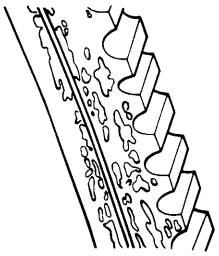 A000 003 010	**1) Check if drive pulley bushings are worn.** a) Insufficient pressure on belt sides. *Replace bushing.*
	2) Check condition of drive pulley fixed half shaft. a) Rusted drive or driven pulley shafts. *Clean shaft with fine steel woof and lubricate with low temperature grease (If applicable only).*
	3) Check if pulley halves are clean. a) Oil on pulley surfaces. *Clean pulley halves.*
	4) Check pulley calibration. a) Improper pulley calibration. *Calibrate according to specification.*
SYMPTOM	**BELT WORN EXCESSIVELY IN TOP WIDTH.**
CONDITION	NORMAL USE.
Test / Inspection 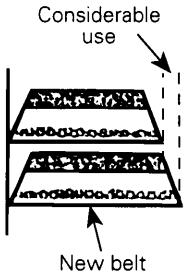 A000 003 011	**1) Check drive pulley.** a) Excessive slippage due to irregular outward actuation movement of drive pulley. *Carry out drive pulley inspection.*
	2) Check drive belt identification number. a) Improper belt angle. (wrong type of belt). *Replace belt with an appropriate drive belt.*
	3) Check drive belt width. a) Considerable use. *Replace belt if 3 mm (1/8") less than recommended width (see Technical data 10).*

SYMPTOM	BELT WORN NARROW IN ONE SECTION.
CONDITION	NORMAL USE.
Test / Inspection	**1) Check track tension / alignment.** a) Frozen or too tight track. *Liberate track from ice or check track tension and alignment.*
	2) **Check drive pulley.** a) Drive pulley not functioning properly. *Repair or replace drive pulley.*
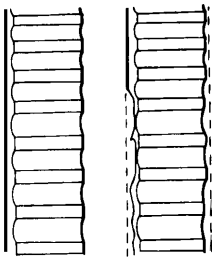	*3)* **Check idle speed.** a) Engine idle speed too high. *Adjust according to specification.*
	4) **Check drive belt length.** a) Incorrect belt length. *Replace belt with an appropriate drive belt (refer to technical data 10).*
	5) **Check distance between pulleys.** a) Incorrect pulley distance. *Readjust according to specification.*
	6) **Check belt deflection.** a) Deflection is too small. *Adjust according to specification.*
A000 003012	*7)* **Check if parking brake is released.** a) Parking brake is engaged. *Release parking brake.*

SYMPTOM	BELT SIDES WORN CONCAVE.
CONDITION	NORMAL USE.
Test / Inspection	**1) Check pulley half surfaces.** a) Rough or scratched pulley half surfaces. *Repair or replace.*
	2) **Check drive belt identification number.** a) Unspecified type of belt. *Replace belt with an appropriate drive belt (refer to technical data 10).*
A000 003013	

SYMPTOM	BELT DISINTEGRATION.
CONDITION	NORMAL USE.
Test / Inspection	**1) Check drive belt identification number.** a) Excessive belt speed. *Using unspecified type of belt. Replace belt with proper type of belt (refer to technical data 10).*
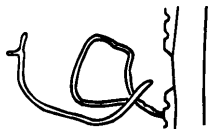	**2) Check if pulley halves are clean.** a) Oil on pulley surfaces. *Clean pulley surfaces with fine emery cloth and wipe clean using alcohol and a cloth.*
A000 003015	

SYMPTOM	**BELT EDGE CORD BREAKAGE.**
CONDITION	NORMAL USE.
Test / Inspection 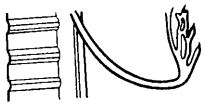 A000 003 015	**1) Check pulley alignment.** a) Pulley misalignment. *Align pulley according to specifications (refer to technical data 10).*
SYMPTOM	**FLEX CRACKS BETWEEN COGS.**
CONDITION	NORMAL USE.
Test / Inspection 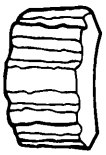 A000 003 016	**1) Check drive belt condition.** a) Considerable use, belt wearing out. *Replace.*
SYMPTOM	**SHEARED COGS, COMPRESSION SECTION FRACTURED OR TORN.**
CONDITION	NORMAL USE.
Test / Inspection 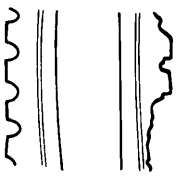 A000 003 017	**1) Check drive belt rotational direction.** a) Improper belt installation. *Replace.*
	2) Check if drive belt rubs against components. a) Belt rubbing on stationary object. *Relocate components.*
	3) Check drive pulley. a) Violent engagement of drive pulley. *Check drive pulley engagement speed, drive pulley bushings and components.*
SYMPTOM	**BELT "FLIP-OVER" AT HIGH SPEED.**
CONDITION	NORMAL USE.
Test / Inspection 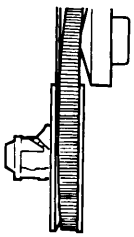 A000 003 018	**1) Check pulley alignment.** a) Pulley misalignment. *Align pulley according to specifications (refer to technical data 10).*
	2) Check drive belt identification number. a) Using unspecified type of belt. *Replace belt with an appropriate drive belt.*

BRAKE SYSTEM

MECHANICAL BRAKE

SYMPTOM	**BRAKE DOES NOT ADJUST AUTOMATICALLY.**
CONDITION	NORMAL USE.
Test / Inspection	**1) Check ratchet wheel spring.** a) Broken ratchet wheel tag. *Replace.*
	2) **Check mobile pad stud.** a) Stud rotates in pad. *Replace.*
SYMPTOM	**BRAKE HANDLE DOES NOT RETURN COMPLETELY.**
CONDITION	NORMAL USE.
Test / Inspection	**1) Check brake return spring.** a) Broken return spring. *Replace.*
	2) Check if brake cable moves freely in its housing. a) Brake cable movement is limited due to oxidation or dirt accumulation. *Replace.*
	3) Check distance between brake lever and caliper. a) Distance is too wide. *Adjust according to specifications (refer to transmission section 05).*

HYDRAULIC BRAKE

SYMPTOM	**SPONGY BRAKE CONDITION.**
CONDITION	NORMAL USE.
Test / Inspection	*Replace brake fluid and bleed system. If problem still occurs, replace master cylinder.*
SYMPTOM	**BRAKE FLUID LEAKING.**
CONDITION	NORMAL USE.
Test / Inspection	**1) Check for loosen hose connectors.** *Retighten.*
	2) **Check for damaged hose, master cylinder and caliper.** *Replace part(s) and check for proper mounting.*

MECHANICAL AND HYDRAULIC BRAKES

SYMPTOM	**BRAKE SYSTEM IS NOISY.**
CONDITION	NORMAL USE.
Test / Inspection	**1) Check brake pad thickness.** a) Pads are worn up to wear warner. *Replace.*

ELECTRICAL SYSTEM

The following chart is provided to help in diagnosing the probable source of troubles. It should be used as a guideline. Some causes or corrections may not apply to a specific model.

SYMPTOM	**STARTER DOES NOT TURN.**
CONDITION	NORMAL USE.
Test / Inspection	**1) Check fuse.** a) Burnt fuse. *Check wiring condition and replace fuse.*
	2) **Check continuity of starter switch contact points.** a) Poor contact of starter switch contact points. *Repair or replace switch.*
	3) **Check continuity between starter switch and solenoid.** a) Open circuit between starter switch and solenoid switch. *Repair.*
SYMPTOM	**STARTER TURNS ; BUT DOES NOT CRANK THE ENGINE.**
CONDITION	NORMAL USE.
Test / Inspection	**1) Check battery capacity.** a) Shorted battery cell(s). *Replace.*
	2) **Check battery charge.** a) Weak battery. *Recharge.*
	3) **Check wire connection.** a) Inadequate connection (too much resistance). *Clean and reconnect.*
	4) **Check solenoid switch contact disc.** a) Burnt or poor contact of solenoid switch contact disc. *Replace solenoid switch.*
	5) **Check continuity of solenoid switch pull-in winding.** a) Open circuit of solenoid switch pull-in winding. *Replace solenoid switch.*
	6) **Check continuity of solenoid switch hold-in winding.** a) Open circuit of solenoid switch hold-in winding. *Replace solenoid switch.*
	7) **Check brushes.** a) Poor contact of brushes. *Replace brushes.*
	8) **Check commutator.** a) Burnt commutator. *Turn commutator in lathe.*

	9) Check height of commutator mica. a) Commutator mica too high. *Undercut mica.*
	10) Check field coil resistance. a) Shorted field coil. *Repair or replace yoke.*
	11) Check armature resistance. a) Shorted armature. *Repair or replace armature.*
	12) **Check tension of brush springs.** a) Weak brush spring tension. *Replace springs.*
	13) **Check yoke assembly magnets.** a) Weak magnets. *Replace yoke assembly.*
	14) **Check if bushings are worn.** a) Worn bushings. *Replace bushings.*
SYMPTOM	**STARTER TURNS, BUT OVERRUNNING CLUTCH PINION DOES NOT MESH WITH RING GEAR.**
CONDITION	**NORMAL USE.**
Test / Inspection	**1) Check clutch pinion gear.** a) Worn clutch pinion gear. *Replace clutch.*
	2) **Check clutch.** a) Defective clutch. *Replace clutch.*
	3) **Check movement of clutch on splines.** a) Poor movement of clutch on splines. *Clean and correct.*
	4) **Check clutch bushing.** a) Worn clutch bushing. *Replace clutch.*
	5) **Check starter bushings.** a) Worn starter bushing(s). *Replace bushing(s).*
	6) **Check ring gear.** a) Worn ring gear. *Replace ring gear.*

SYMPTOM	**ELECTRIC STARTER KEEPS TURNING WHEN ENGINE IS STARTED.**
CONDITION	**NORMAL USE.**
Test / Inspection	**1) Check clutch.** a) Jammed clutch pinion gear. *Replace or clean.*
	2) **Check movement of clutch on splines.** a) Clutch is stuck on splines. *Clean.*
	3) **Check ignition switch.** a) Ignition switch does not return to its ON position or is short-circuited. *Adjust retaining screw or replace switch.*
	4) **Check solenoid.** a) Shorted solenoid switch winding(s). *Replace solenoid switch.*
	5) **Check solenoid switch contacts.** a) Melted solenoid switch contacts. *Replace solenoid switch.*
	6) **Check starter switch.** a) Starter switch returns poorly. *Replace ignition switch.*
SYMPTOM	**NOISE OCCURENCE WHEN STARTING ENGINE.**
CONDITION	**NORMAL USE.**
Test / Inspection	**1) Check if ring gear is well mounted to drive pulley inner half.** a) Loose and /or broken bolts. *Retighten bolts using thread locker or replace ring gear and drive pulley inner half.*
SYMPTOM	**ELECTRIC STARTER SOMETIMES DOES NOT WORK WHEN TURNING IGNITION SWITCH.**
CONDITION	**NORMAL USE.**
Test / Inspection	**1) Check battery cables and starter wires.** a) Corroded and/or loose connection(s). *Clean and/ or retighten.*
	2) **Check fuse.** a) Oxidized fuse. *Clean.*
	3) **Check wiring harness connections.** a) Oxidized connections. *Clean or replace defective terminals.*
	4) **Check ignition switch.** a) Defective contacts in ignition switch. *Replace.*
	5) **Check solenoid of electric starter.** a) Shorted solenoid wiring harness or eroded contact washer. *Replace.*

SYMPTOM	**HEADLAMP NOT LIGHTING.**
CONDITION	**WHITE BULB.**
Test / Inspection	**1) Check bulb.** a) Gas leak. *Replace bulb.*
CONDITION	**BROKEN ELEMENT.**
Test / Inspection	**1) Check for loose headlamp housing and bulb socket.** a) Vibration problem. *Tighten headlamp mounting screws. Lock bulb in socket. Replace bulb.*
CONDITION	**MELTED FILAMENT (ENDS OF ELEMENT HOLDER) AND BLACK BULB.**
Test / Inspection	**1) Check voltage at headlamp at different speeds. It must not be above 15 VAC.** O **NOTE:** If quartz halogen bulb is involved, ensure that voltage regulatorP/N41O908900 is used. a) Excessive voltage in lighting circuit. *Replace voltage regulator and ensure proper grounding. Retest.*
SYMPTOM	**HEADLAMP DIMING.**
CONDITION	**NORMAL USE.**
Test / Inspection	**1) Check voltage at headlamp at different speeds. It must not be below 11 VAC.** a) Insufficient voltage in lighting circuit. *Replace voltage regulator and retest.*
	2) **Visually inspect wiring harness for damaged and / or melted wires and / or bad wire terminal crimping and / or connections.** a) Heating, rotating or sharp part in contact with harness. Improper harness routing. *Repair/replace damaged wires and/or terminals. Reroute harness where necessary.*
	3) **On manual start models : Verify if there is an interconnection between AC and DC current.** a) Rusted or loose retaining screws. *Clean, apply lithium grease (LMZ1) and firmly tighten screws.*
	4) **On electrical start models : Verify if there is an interconnection between AC and DC current.** a) Faulty installation of optional equipment. *Find optional equipment connected directly to DC ground (BK wire or chassis) or to any DC hot wire (RD, RD / BL). Disconnect and reconnect to AC current (YL and YL / BK wires).*
	5) **Verify of optional electric accessories are overloading the magneto / generator.** a) Excessive electrical load to magneto / generator. *Reduce the electrical load by removing excess accessories. Reconnect as recommended by manufacturer.*
	6) **Hot Grips brand : Verify if they were connected in parallel by mistake.** a) Excessive electrical load to magneto/generator. *Reconnect as recommended by manufacturer.*
	7) **Bombardier heating grips: Verify if the return wires of the elements were grounded to the chassis by mistake.** a) Faulty installation of optional equipment. *Reconnect as recommended by manufacturer.*

	8) Verify if heating grips installation overloads the magneto / generator capacity (ex : Élan). a) Excessive electrical load to magneto / generator. *Reduce the electrical load by removing accessories.*
SYMPTOM	**FALSE FUEL AND /OR TEMPERATURE GAUGE READINGS.**
CONDITION	**NORMAL USE.**
Test / Inspection	**1) Verify if gauge was connected on DC current by mistake (in case of optional installation).** a) Faulty installation of optional equipment. *Find optional wires connected directly to DC ground (BK wire to chassis) or to any DC hot wire (RD, RD/ BL). Disconnect and reconnect to AC current (YL and YL / BK wires).*
	2) **Verify sender unit for free movement and / or correct arm position.** a) Defective or damaged part. *Correct or replace sender unit.*
	3) **Verify sender unit/ gauge wiring harness condition.** a) Heating, rotating or sharp part in contact with harness. Improper harness routing. *Replace or repair damaged wires. Reroute where necessary.*
SYMPTOM	**ENGINES DOES NOT START - NO SPARK AT SPARK PLUG.**
CONDITION	**AT ENGINE CRANKING.**
Test / Inspection	**1) Verify spark plug condition.** a) Defective, improperly set, worn-out, fouled. *Identify source of problem and correct. Replace sparkplug.*
	2) **Verify spark plug cap resistance with an ohmmeter.** a) Defective part. *Replace cap.*
	3) **Verify if problem originated from electrical system wiring harness and/or accessories and / or ignition cut-out switches by unplugging the 4-wire connectors between the magneto / generator and the vehicle wiring harness. Check condition of connectors.** a) Heating, rotating or sharp part in contact with harness. Improper harness routing. Defective switch. Corroded connector terminals. *Replace or repair damaged wires. Reroute where necessary. Replace defective switch. Clean terminals and apply silicone dielectric grease.*
	4) **Verify trigger coil resistance with an ohmmeter and connector condition.** a) Defective coil. Corroded connector terminals. *Replace defective coil. Clean terminals and apply silicone dielectric grease.*
	5) **Verify condition of ignition coil.** a) Mechanically damaged part. Vibration problem. Electrically damaged part. *Tighten mounting screws. Replace ignition coil.*
	6) **Verify condition of ignition generator coils.** a) Mechanically damaged part. Vibration problem. Electrically damaged part. *Tighten mounting screws. Replace coils.*
	7) **Verify CDI (Capacitor discharge ignition) module.** a) Mechanically damaged part. Vibration problem. Electrically damaged part. *Tighten mounting screws. Replace CDI module, retest and verify ignition timing.*

SYMPTOM	**ENGINE STALLS.**
CONDITION	**AT LOW SPEED.**
Test / Inspection	**1) Verify items 4,5 and 6 above.**
SYMPTOM	**IRREGULAR ENGINE SPEED.**
CONDITION	**AT HIGH SPEED.**
Test / Inspection	**1) Verify items 4,5 and 6 above.**
CONDITION	**AT LOW SPEED.**
Test / Inspection	**1) Verify items 4 and 5 above and trigger coil / flywheel protrusion air-gap.** a) Air-gap too large. *Readjust air-gap.*
SYMPTOM	**ENGINE IS MISFIRING - ERRATIC SPARK AT SPARK PLUG.**
CONDITION	**RIDING ON WET SNOW.**
Test / Inspection	**1) Verify if spark plug wires and / or spark plug cap seals are sealing-out moisture.** a) Defective wires and/or seals. *Replace defective part.*
	2) **Verify if ignition system wiring harness connectors are in good condition and / or are sealing-out moisture.** a) Loose connectors, corroded terminals or defective parts. *Clean terminals and apply silicone dielectric grease. Replace defective parts.*
CONDITION	**NORMAL USE.**
Test / Inspection	**1) Verify misfiring by observing flash of stroboscopic timing light ; unplug connectors between magneto / generator and vehicle wiring harness to isolate problem. Check condition of connectors.** a) Defective spark plug and / or cables / caps. Defective electrical system wiring harness and /or accessories and / ignition cut-out switches. Condition of connector terminals. *Replace defective parts and /or repair damaged wires. Replace defective switch. Clean terminals and apply silicone dielectric grease.*
CONDITION	**RIDING IN DEEP AND THICK SNOW.**
Test / Inspection	**1) Perform all verifications outlined under “Engine does not start - no spark at spark plug”.**
	2) Verify spark plug(s). Proceed with spark plug analysis in order to identify source of problem. a) Defective and/or worn spark plug(s) and /or cable(s) and/or cap(s). *Replace defective part(s). Proceed with ignition system testing procedures. Perform engine analysis.*

SYMPTOM	**FOULED (BLACK) SPARK PLUG TIP.**
CONDITION	**NORMAL USE.**
Test / Inspection	**1) Check carburetor(s).** a) Carburetion is too rich. *Adjust according to specifications (refer to technical data 10).*
	2) **Check injection oil consumption.** a) Injection pump flow is too high. *Adjust according to specification or replace.*
	3) **Check oil quality.** a) Poor oil quality that creates deposits. *Use Bombardier oil.*
	4) **Check engine compression.** a) Leaking piston ring(s). *Replace.*
SYMPTOM	**SPARK PLUG TIP(S) IS (ARE) LIGHT GREY.**
CONDITION	**NORMAL USE.**
Test / Inspection	**1) Refer to "Engine slows down or stops at high RPM" and check items listed.**
	2) Check spark plug heat range. a) Spark plug heat range is too high. *Replace by Bombardier's recommended sparkplug (refer to technical data 10).*
	3) **Check if air intake silencer leaks.** a) Air surplus coming from opening(s) located between halves. *Seal.*
	4) Check carburetor adapter collars. a) Loose collar(s). *Tighten.*
	5) **Check carburetor adapter(s).** a) Cracked or deformed adapter(s). *Replace.*
SYMPTOM	**BRAKE LIGHT REMAINS ON.**
CONDITION	**NORMAL USE.**
Test / Inspection	**1) Check if bulb is properly installed.** a) Bulb is not installed correctly (contact elements are reversed). *Install bulb correctly.*
	2) **Check brake switch.** a) Switch contact remains closed. *Adjust brake cable or brake switch.*

SYMPTOM	**REAR LIGHT BULB FLASHES.**
CONDITION	**NORMAL USE.**
Test / Inspection	**1) Check bulb tightness in housing.** a) Looseness at bulb contact elements. *Install bulb correctly.*
	2) **Check if rear light is properly connected.** a) Connector housing is partially connected. *Install connector housing properly.*
	3) **Check continuity of wires.** a) Corroded terminals and / or broken wires. *Replace terminal(s) or crimp defective wires.*
SYMPTOM	**TACHOMETER DOES NOT WORK.**
CONDITION	**NORMAL USE.**
Test / Inspection	**1) Check fuse.** a) Burnt fuse. *Replace.*
	2) **Check continuity of wires.** a) Corroded terminals and / or broken wires. *Replace terminal(s) or crimp defective wires.*

SUSPENSION SYSTEM AND TRACK

The following chart is provided to help in diagnosing the probable source of troubles. It should be used as a guideline. Some causes or corrections may not apply to a specific model.

SYMPTOM	**REAR SUSPENSION BOTTOMS OUT.**
CONDITION	**NORMAL USE.**
Test / Inspection	**1) Check rear spring preload or rear arm spring preload.** a) Spring tension is too low. *Increase rear arm spring preload.*
SYMPTOM	**SLIDER SHOES WEAR OUT PREMATURELY.**
CONDITION	**NORMAL USE.**
Test / Inspection	**1) Check track tension.** a) Pressure is too great on slider shoes. *Adjust according to specifications (refer to technical data 10). Replace defective parts.*
SYMPTOM	**TRACK CLEATS BECOME BLUE.**
CONDITION	**NORMAL USE.**
Test / Inspection	**1) Check track tension.** a) Pressure is too great on cleats. *Adjust according to specifications (refer to technical data 10).*
	2) **Check slider shoes and / or suspension retaining screws.** a) Worn slider shoes or lost retaining screws. *Replace defective parts and/ or tighten loose screws.*
SYMPTOM	**NOISE OR VIBRATIONS ORIGINATING FROM THE TRACK.**
CONDITION	**NORMAL USE.**
Test / Inspection	**1) Check slide suspension retaining bolts.** a) Missing bolt(s) allowing movement of certain components which in turn interfere with track rotation. *Replace missing bolt(s).*
	2) **Check condition of idler wheel(s).** a) Idle wheel rubber is damaged. *Replace.*
	3) **Check guide cleats.** a) Top portion of guide cleat(s) is bent. *Replace.*
	4) **Check sprockets.** a) One or various teeth of drive shaft sprockets are broken. *Replace sprocket(s).*
	5) **Check track rods and/ or internal traction teeth.** a) One or various track rods and /or teeth are broken. *Replace track.*

SYMPTOM	**DERAILING TRACK.**
CONDITION	**NORMAL USE.**
Test / Inspection	**1) Check track tension.** a) Track is too loose. *Adjust.*
	2) **Check if track and slider shoes are properly aligned.** a) Improper alignment. *Adjust.*
SYMPTOM	**REAR SUSPENSION IS LOW OR TOO STIFF.**
CONDITION	**NORMAL USE.**
Test / Inspection	**1) Check track tension.** a) Track is too tight. *Adjust.*
	2) **Check if axles are properly lubricated.** a) Improper lubrication and/or contaminated grease (sticky oil sludge). *Clean and/ or lubricate.*
	3) **Check rear spring preload.** a) Insufficient preload. *Increase preload using shock adjustment cams.*
SYMPTOM	**WHEN HANDLEBAR IS TURNED, SNOWMOBILE TURNS BEARLY OR NOT AT ALL.**
CONDITION	**NORMAL USE.**
Test / Inspection	**1) Check ski runner condition.** a) Worn ski runners. *Replace.*
	2) **Check tension of front spring adjustment cams.** a) Insufficient ski pressure on the ground. *Increase spring preload.*
	3) **Check if front arm stopper strap is too long.** a) Insufficient ski pressure on the ground. *Shorten stopper strap.*
	4) **Check front arm spring tension.** a) Insufficient ski pressure on the ground. *Slacken spring tension.*

SYMPTOM	**HANDLE BAR IS DIFFICULT TO TURN.**
CONDITION	**NORMAL USE.**
Test / Inspection	**1) Check position of front spring adjustment cams.** a) More pressure on the ground when cam increases spring preload. *Reduce front spring preload.*
	2) **Check position of stopper strap.** a) More weight when stopper strap is short. *Lengthen front arm stopper strap.*
	3) **Check position of front arm shock adjustment cam(s).** a) When spring tension is weak, more weight is transferred to the skis. *Increase spring preload.*
	4) **Check condition of ball joints.** a) Corrosion restrains movement. *Lubricate or replace.*
	5) **Check swing arm camber (liquid cooled models).** a) Too much ski leg inclination. *Adjust camber to 0° ± .5°.*
SYMPTOM	**THE SNOWMOBILE IS UNSTABLE (IT MOVES FROM LEFT TO RIGHT AND VICE VERSA).**
CONDITION	**NORMAL USE.**
Test / Inspection	**1) Check ski runner condition.** a) Worn or bent ski runners. *Replace ski runners.*
	2) **Check ski alignment.** a) Improper ski alignment. *Align skis in order to obtain proper toe-out (opening) (to adjust, refer to section 08 Steering system).*
	3) **Check if bushings are too loose in steering system.** a) Bushings are too loose. *Replace.*

TABLE OF CONTENTS

247 AND 277 ENGINE TYPES 04-01-1

ENGINE REMOVAL AND INSTALLATION 04-01-1
REMOVAL FROM VEHICLE 04-01-2
ENGINE SUPPORT AND MUFFLER DISASSEMBLY AND ASS EMILY 04-01-2
INSTALLATION ON VEHICLE 04-01-2
REMOVAL FROM VEHICLE 04-01-4
ENGINESUPPORTAND MUFFLER DISASSEMBLY AND ASSEMBLY 04-01-4
INSTALLATION ON VEHICLE 04-01-4

TOP END 04-01-5
TROUBLESHOOTING 04-01-6
TOP END REMOVAL (WITHOUT REMOVING ENGINE FROM CHASSIS) 04-01-6
CLEANING 04-01-6
DISASSEMBLY 04-01-7
INSPECTION 04-01-8
ASSEMBLY 04-01-8

BOTTOM END 04-01-11
CLEANING 04-01-12
DISASSEMBLY 04-01-12
inspection 04-01-13
ASSEMBLY 04-01-13

MAGNETOANDCOOLINGSYSTEM 04-01-15
CLEANING 04-01-16
DISASSEMBLY 04-01-16
REPAIR 04-01-16
ASSEMBLY 04-01-17

377,443 AND503 ENGINE TYPES 04-02-1

ENGINE REMOVALAND INSTALLATION 04-02-1
ENGINE REMOVAL AND INSTALLATION 04-02-3

TOP END 04-02-4
CLEANING 04-02-5
DISASSEMBLY 04-02-5
INSPECTION 04-02-6
ASSEMBLY 04-02-6

BOTTOM END 04-02-10
CLEANING 04-02-11
DISASSEMBLY 04-02-11
inspection 04-02-11
ASSEMBLY 04-02-11

LEAK TEST AND ENGINE DIMENSION MEASUREMENT 04-03-1

LEAK TEST 04-03-1
PREPARATION 04-03-1
PROCEDURE 04-03-1
FINALIZING REASSEMBLY 04-03-4
COOLING SYSTEM LEAKTEST 04-03-4

ENGINE DIMENSION MEASUREMENT 04-03-5
CYLINDER TAPER 04-03-5
CYLINDER OUTOFROUND 04-03-5
CYLINDER/PISTON CLEARANCE 04-03-5
RING/ PISTON GROOVE CLEARANCE 04-03-6
RING END GAP 04-03-6
CRANKSHAFT DEFLECTION 04-03-6
CONNECTING RODBIGENDAXIAL PLAY 04-03-7
CONNECTING ROD/PISTON PIN CLEARANCE 04-03-7
CONNECTING ROD/CRANKPIN CLEARANCE 04-03-8
CRANKSHAFT END-PLAY 04-03-8
CRANKCASE/ ROTARY VALVE GAP 04-03-9
CHECKING SURFACE FLATNESS 04-03-10
RECTIFYING SURFACES 04-03-10
CHECKING CRANKSHAFTALIG NMENT 04-03-11

CDISYSTEM 04-04-1

NIPPONDENSO IGNITION SYSTEM WITH SINGLE GENERATING COIL 04-04-1
CLEANING 04-04-2
DISASSEMBLY 04-04-2
REPAIR 04-04-2
ASSEMBLY 04-04-4

DUCATI IGNITION SYSTEM 04-04-5
CLEANING 04-04-6
DISASSEMBLY 04-04-6
REPAIR 04-04-6
ASSEMBLY 04-04-7

OIL INJECTION SYSTEM 04-05-1

OIL INJECTION PUMP 04-05-1
OIL PUMP IDENTIFICATION 04-05-3
CLEANING 04-05-3
DISASSEMBLY 04-05-3
ASSEMBLY 04-05-3
ADJUSTMENT 04-05-3
CHECKING OPERATION 04-05-4

AXIAL FAN COOLING SYSTEM 04-06-1
CLEANING 04-06-2
DISASSEMBLY AND ASSEMBLY 04-06-2

REWIND STARTER 04-07-1
REMOVAL 04-07-2
DISASSEMBLY 04-07-2
ASSEMBLY 04-07-2
INSTALLATION 04-07-3

CARBURETORAND FUEL PUMP 04-08-1
MIKUNI FLOATCARBURETOR 04-08-1
REMOVAL 04-08-3
CLEANING AND INSPECTION 04-08-3
DISASSEMBLY AND ASSEMBLY 04-08-3
CARBURETOR FLOAT LEVELADJ USTMENT 04-08-4
INSTALLATION 04-08-5
CARBURETOR ADJUSTMENTS 04-08-6
PRELIMINARY IDLE SPEEDADJ USTMENT 04-08-8
IDLE SPEED FINAL ADJUSTM EAT 04-08-9
CHOKE 04-08-9
FUEL PUMP 04-08-10
REMOVAL 04-08-11
PUMP VERIFICATION 04-08-11
DISASSEMBLY 04-08-11
CLEANING AND INSPECTION 04-08-11
ASSEMBLY 04-08-12
INSTALLATION 04-08-12

FUELTANKANDTHROTTLE CABLE 04-09-1

247 AND **277** ENGINE TYPES

ENGINE REMOVAL AND INSTALLATION

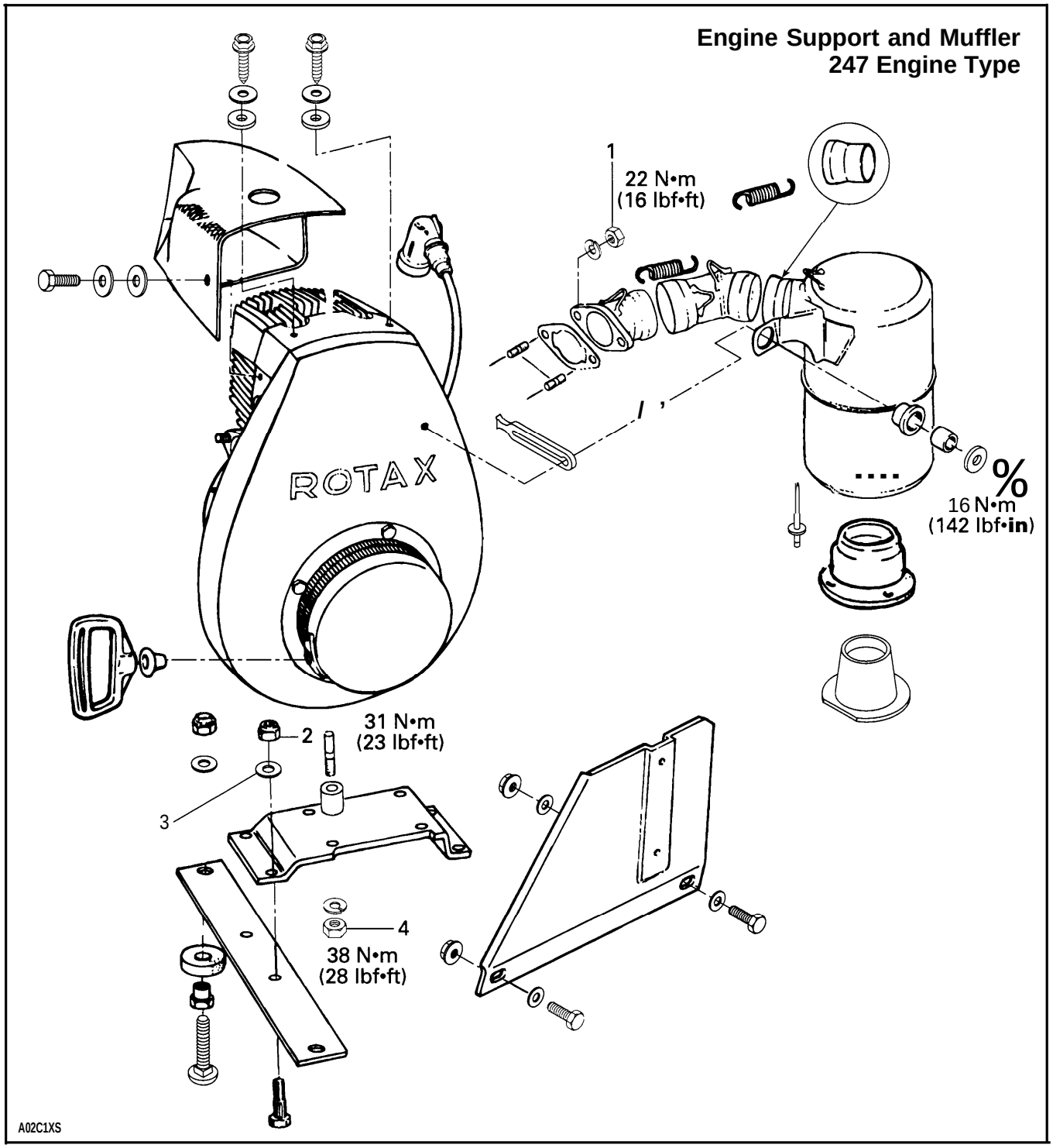

REMOVAL FROM VEHICLE

Remove or disconnect the following then lift engine from vehicle :

— console

— pulley guards

—drive belt

— muff ler

— primer hose

— decompressor cable

— throttle cable

—fuel lines

— impulse line

— electrical connectors

— separate steering column support at upper column

— engine mount nuts

ENGINE SUPPORT AND MUFFLER DISASSEMBLY AND ASSEMBLY

1,2,3,4, Manifold Nut, Engine Support Nut, Engine Mount Nut and Hardened Washer

Torque the manifold nuts to 22 N•m (16 lbf•ft).

Torque the engine support nuts to 31 N•m (23 lbf•ft).

Torque the engine mount nuts to 38 N•m (28 lbf•ft).

INSTALLATION ON VEHICLE

To install engine on vehicle, reverse removal procedure. However, pay attention to the following :

—Check tightness of engine mount nuts, and drive pulley screw.

— After throttle cable installation, check maximum throttle slide opening.

— Check pulley alignment and drive belt tension.

— Should a light exhaust leak is experienced at muffler ball joint, Dow Corning sealer no. 736 RTV(P/N413 7092 00) can be used. However after some hours of use, carbon deposits accumulation should seal joint.

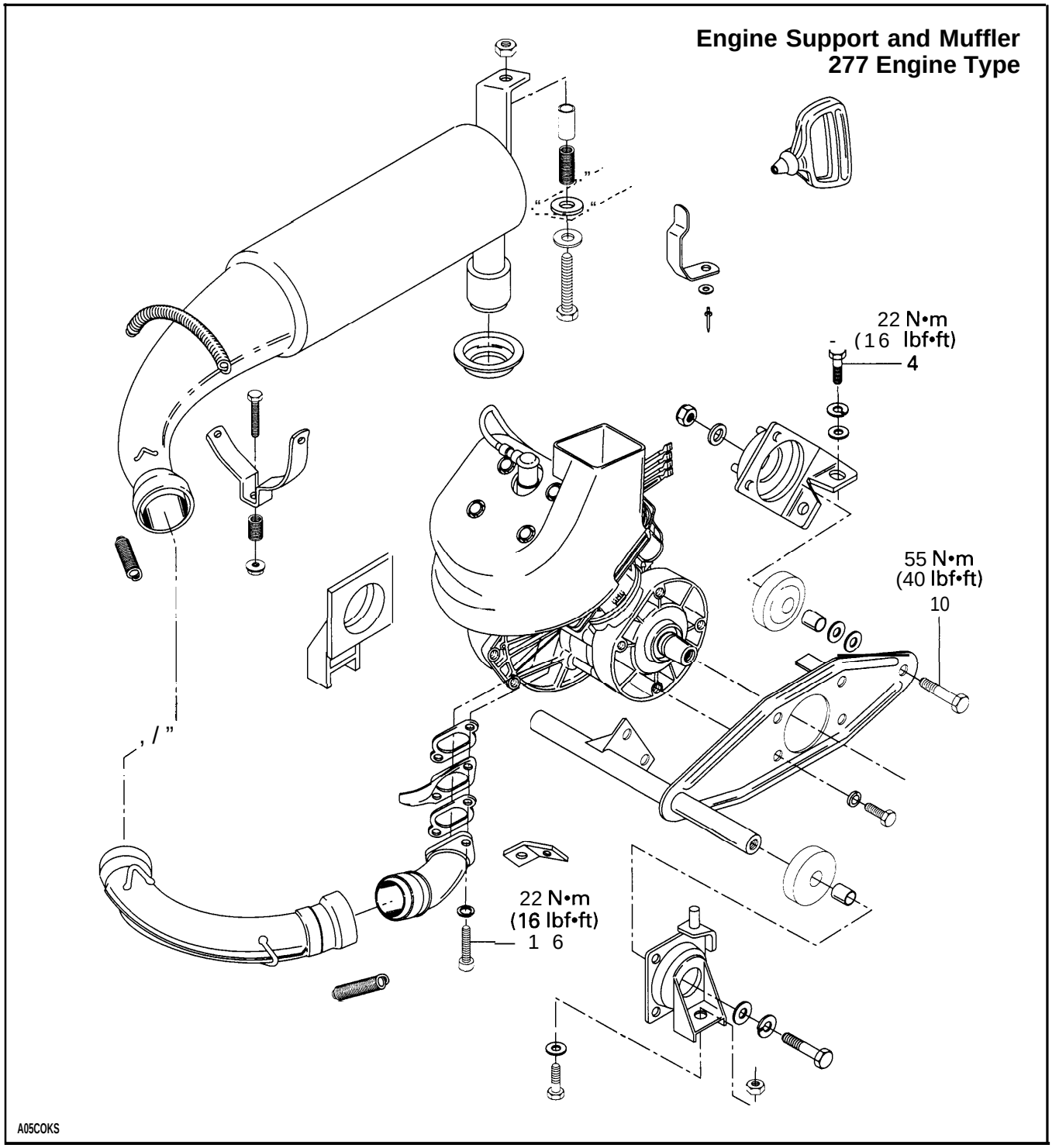
Engine Support and Muffler
277 Engine Type
22 N•m
(16 lbf•ft)
4
55 N•m
(40 lbf•ft)
10
22 N•m
(16 lbf•ft)
16
A05COKS

REMOVAL FROM VEHICLE

Remove or disconnect the following then lift engine from vehicle :

— belt guard

—drive belt

— muffler

— carburetor

— decompressor cable

— oil injection pump cable

— oil injection inlet fitting

— impulse line

— electrical connectors

— hood retaining cable

— engine mount nuts

ENGINE SUPPORT AND MUFFLER DISASSEMBLY AND ASSEMBLY

4,10,16, Screw

Torque the manifold screws to 22 N•m (16 lbf•ft).

Torque the engine support screws to 55 N•m (40 lbf•ft).

Torque the engine mount screws to 22 N•m (16 lbf•ft).

INSTALLATION ON VEHICLE

To install engine on vehicle, reverse removal procedure. However, pay attention to the following :

—Check tightness of engine mount nuts, and drive pulley screw.

— After throttle cable installation, check maximum throttle slide opening.

— Check pulley alignment and drive belt tension.

— Should a light exhaust leak is experienced at muffler ball joint, Dow Corning sealer no. 736 RTV(P/N413 7092 00) can be used.

TOP END

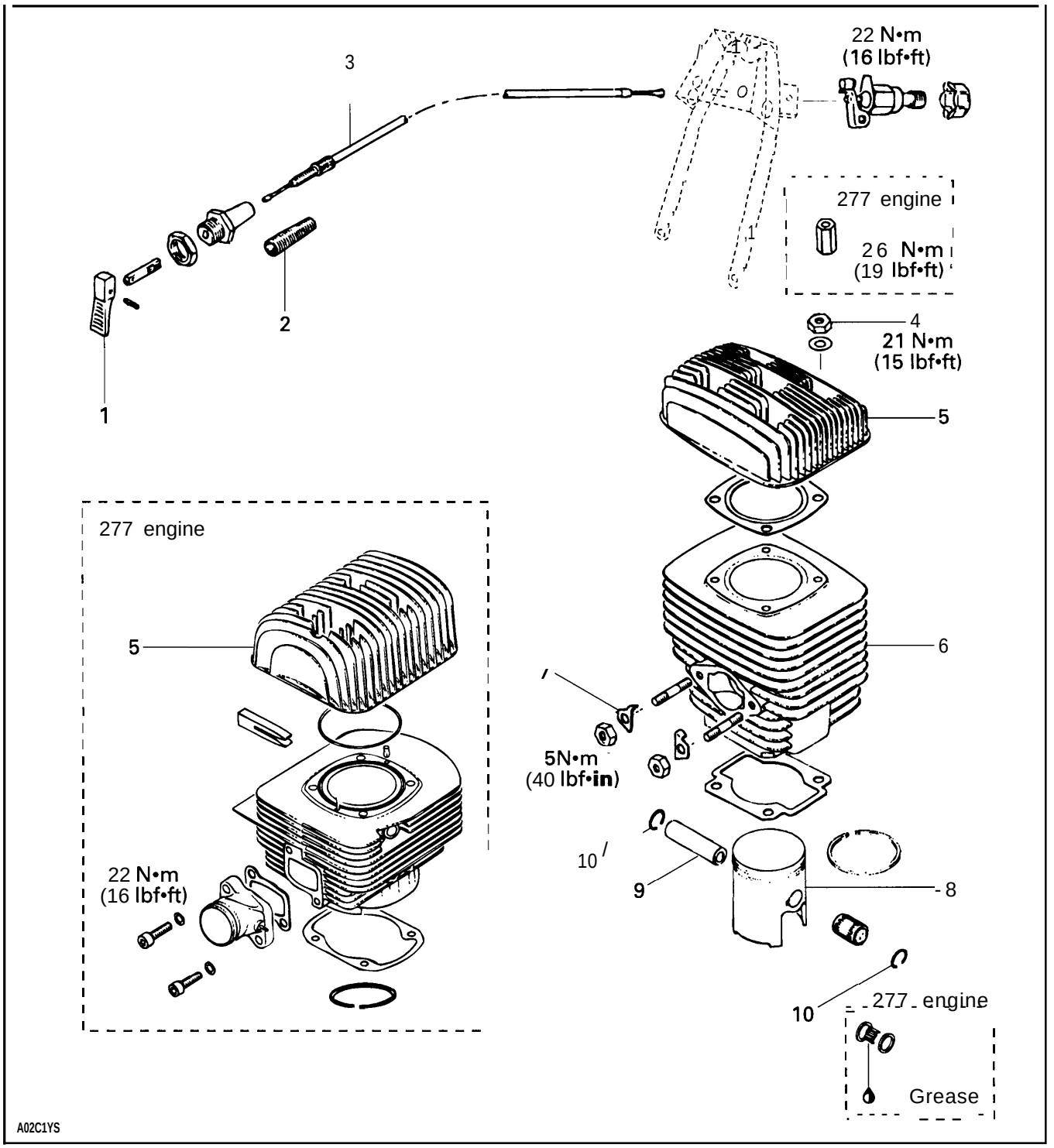
3
22 N•m
(16 lbf•ft)
277 engine
26 N•m
(19 lbf•ft)
2
1
4
21 N•m
(15 lbf•ft)
5
277 engine
5
6
5N•m
(40 lbf•in)
10
9
8
22 N•m
(16 lbf•ft)
10
277 engine
Grease
A02C1YS

TROUBLESHOOTING

Before completely disassemble engine, check airtightness. Refer to LEAK TEST AND ENGINE DIMENSION MEASUREMENT 04-03.

NOTE : The following procedures can be done without removing the engine from chassis.

TOP END REMOVAL (without removing engine from chassis)

247 ***Engine Type***

Remove the following then lift cylinder head and cylinder :

— console

— pulley guards

— spark plug

— air duct

— muffler, connecting tube and exhaust socket

— spark plug cable clamp from fan cowl

— primer hose from carburetor

— untighten rubber flange collar then move carburetor

— steering column U-bolt at upper column and spirol pin, washer and short tie rod from bottom end

— air deflector and decompressor cable at cylinder

—4 nuts retaining fan cowl and move it sideway until it is against the voltage regulator

— move steering column toward left to clear engine top end

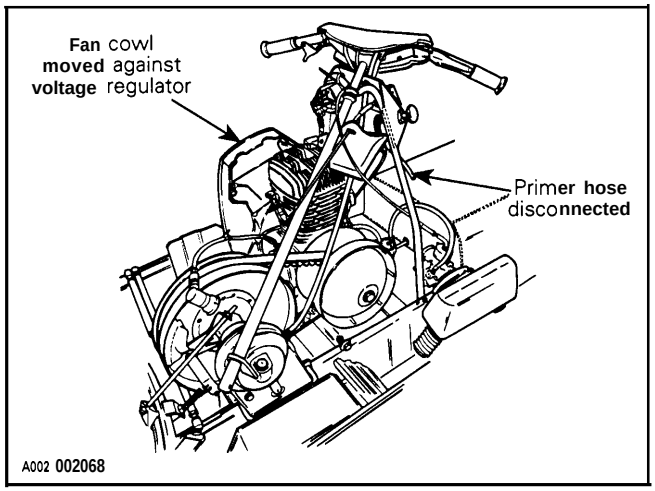

277 ***Engine Type***

Remove the following then lift cylinder head and cylinder :

— belt guard

— carburetor

— exhaust system

— spark plug

— oil injection inlet

—fan cowl and hood cable

— decompressor cable at cylinder

— cylinder head nuts and washers

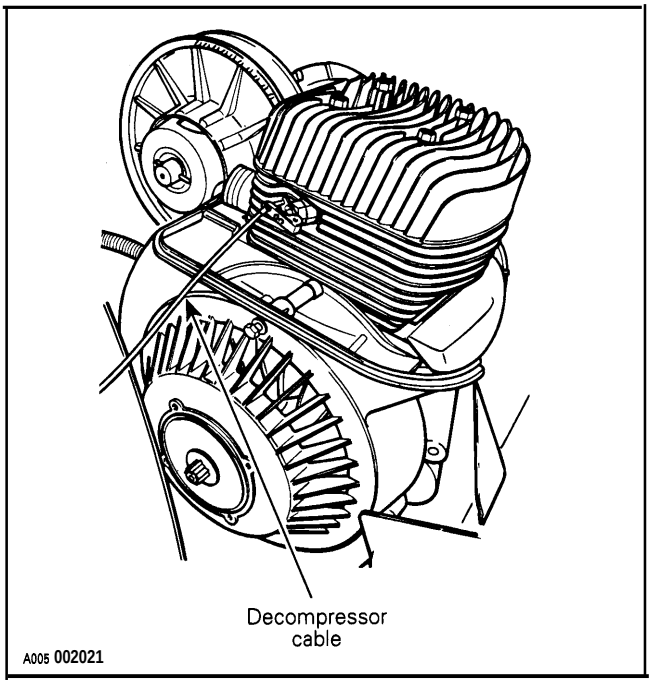

CLEANING

All Models

Discard all gaskets.

Clean all metal components in a non-ferrous metal cleaner.

Scrape off carbon formation from cylinder exhaust port, cylinder head and piston dome using a wooden spatula.

NOTE : The letters “AUS” (over an arrow on the piston dome) must be visible after cleaning.

Clean the piston ring grooves with a groove cleaner tool, or with a piece of broken ring.

DISASSEMBLY

8,9,10, Piston, Piston Pin and Circlip

247 Engine Type Only

Place a clean cloth over crankcase, then with a pointed tool inserted in piston notch, remove circlip from piston.

To remove piston pin, use piston pin puller (P/N 529 0210 00) as follows :

— Fully screw puller handle.

— Insert puller end into piston pin.

— Screw (LH threads) extracting nut.

— Hold puller firmly and rotate puller handle counter-clockwise to pull' piston pin.

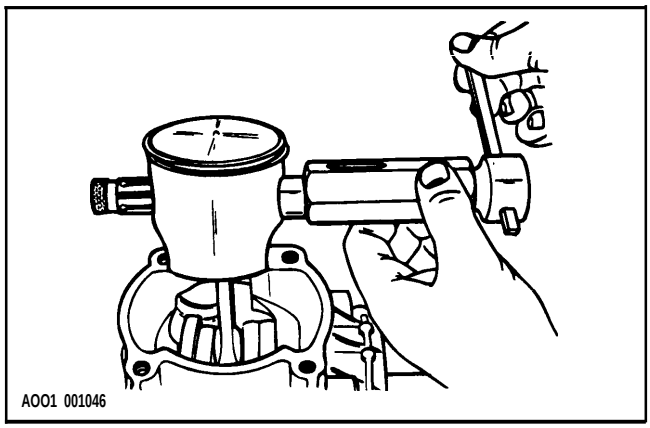

NOTE : 0.5 mm oversize piston and rings are Unavailable if necessary.

277 *Engine Type*

On this engine, piston pin needle bearing is mounted without a cage.

— Use piston pin puller (P / N 5290210 00) along with expansion sleeve and locating sleeve.

— Place a clean cloth or rubber pad (P / N 5290234 00) over crankcase to prevent circlips from falling into crankcase. Then with a pointed tool inserted in piston notch, remove circlips from piston.

— Insert piston pin puller (P/N 529 0210 00) then install expansion sleeve over puller rod.

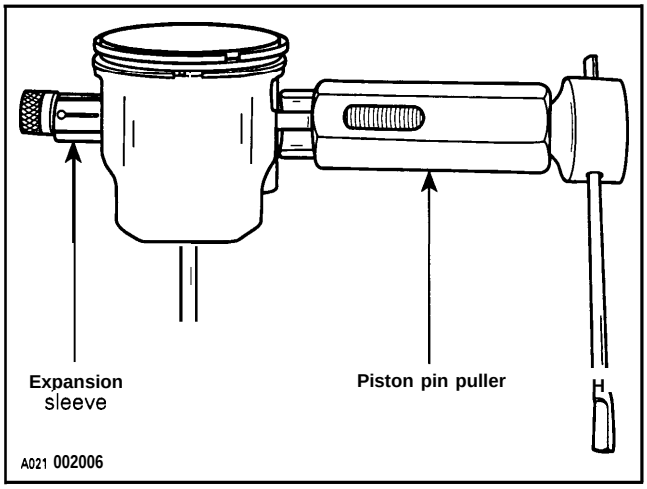

— Pull out piston pin by unscrewing puller until first thread of puller rod aligns with 277 mark.

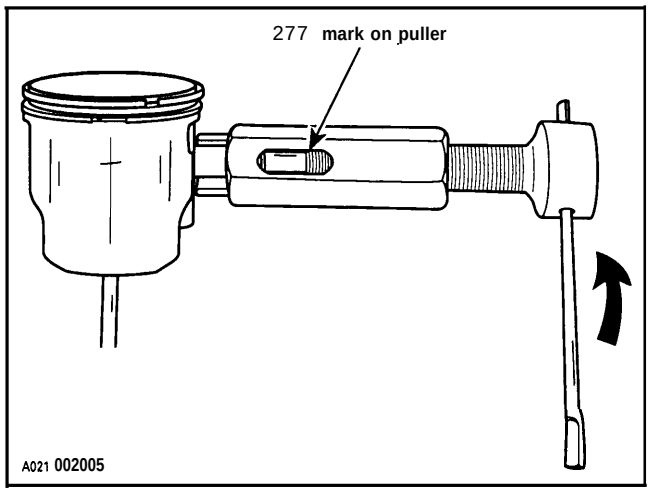

— Screw in puller in order to remove it from piston.

— Remove piston from connecting rod.

— Install locating sleeve. Then push needle bearings along with thrust washers using a 21 mm (.826 in) diameter pusher.

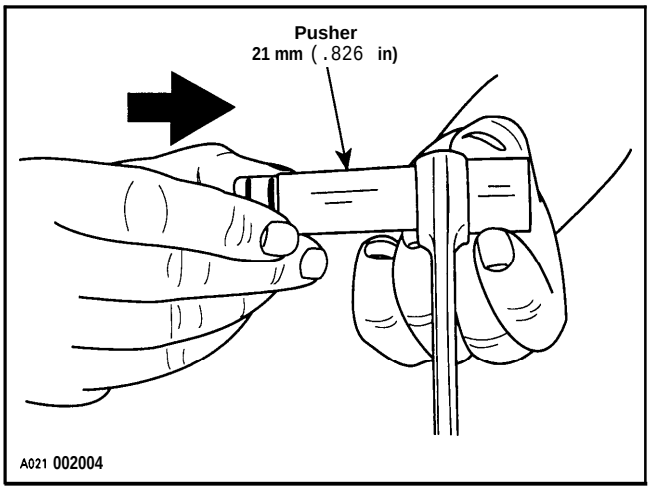

NOTE : 0.25 and 0.5 mm oversize pistons and rings are available if necessary.

Use a locking tie to fasten all needles and thrust washers along with sleeves.

INSPECTION

Refer to LEAK TEST AND ENGINE DIMENSIONS MEASUREMENT 04-03.

ASSEMBLY

277 Engine Type Only

When reinstalling original needle bearings, make sure that 31 needles are inserted between expansion sleeve and locating sleeve.

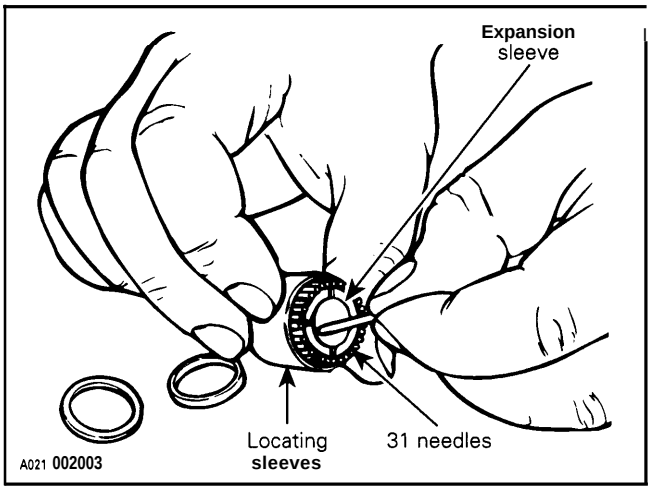

– Grease thrust washers and install them on each end of needles.

— Using a 21 mm (.826 in) diameter pusher, insert needles into connecting rod.

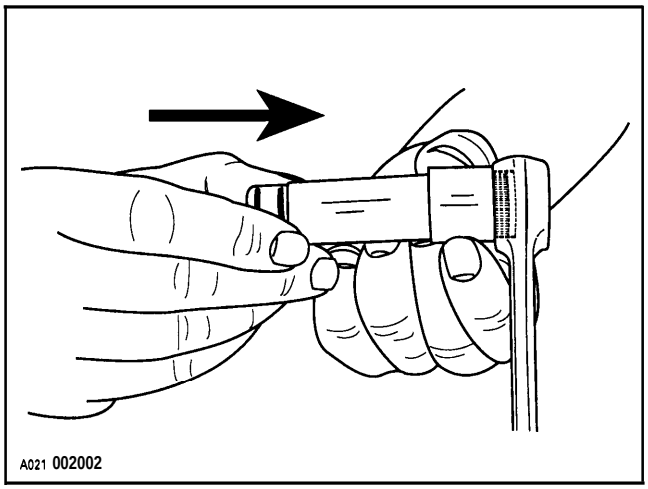

— Mount piston over connecting rod with the letters “AUS” (over an arrow on the piston dome) facing in the direction of exhaust port (see illustration below).

— Install piston pin puller (P/N 5290210 00) and turn handle” until piston pin is correctly positioned in piston.

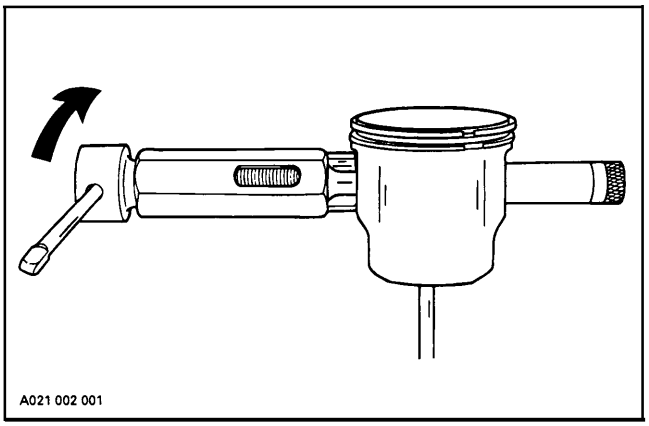

— Remove piston pin puller and expansion sleeve.

— Install circlips as described below.

When installing new needle bearing, insert needles with thrust washers. Instead of expansion sleeve, needles are held in place by 2 inner plastic cage halves.

— Use piston pin puller (P/N 5290210 00) to insert piston pin. Plastic halves should come off piston. If not, pull them using a long nose pliers.

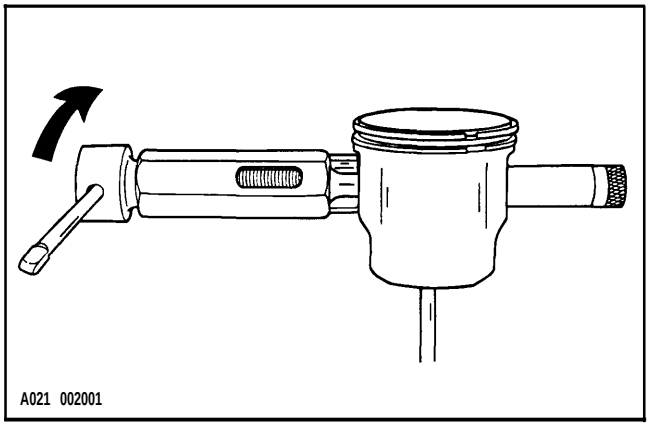

- Install circlips as described below.

8,9,10, Piston, Piston Pin and Circlip

247 Engine Type Only

At assembly, place the piston over the connecting rod with the letters "A US" (over an arrow on the piston dome) facing in direction of the exhaust port.

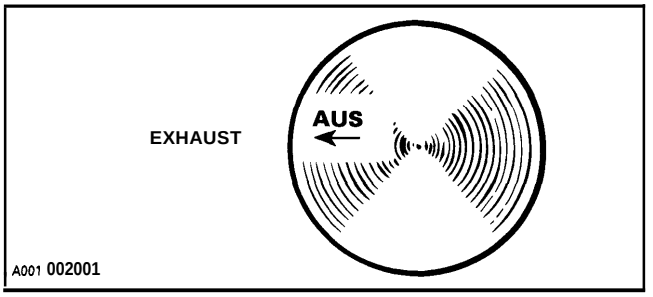

To center the piston pin with the connecting rod bearing, use centering tool (P/ N ***5290091 00).***

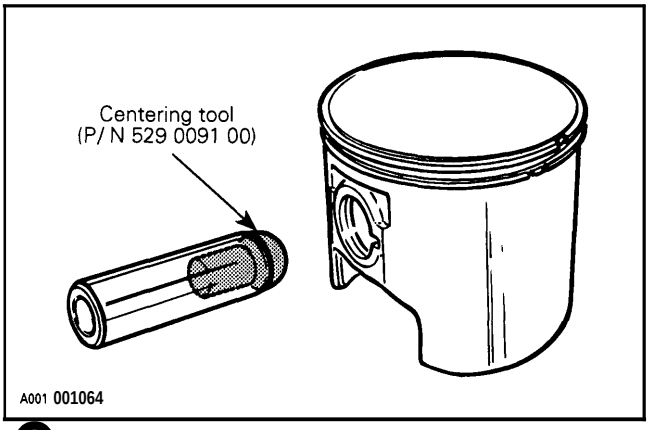

NOTE : The circlip on the opposite side can be installed before pin installation, the tool will easily go out.

To minimize the effect of acceleration forces on circlip, install each circlip so the circlip break is at 6 o'clock as illustrated. Use piston circlip installer (P/ N 5290086 00).

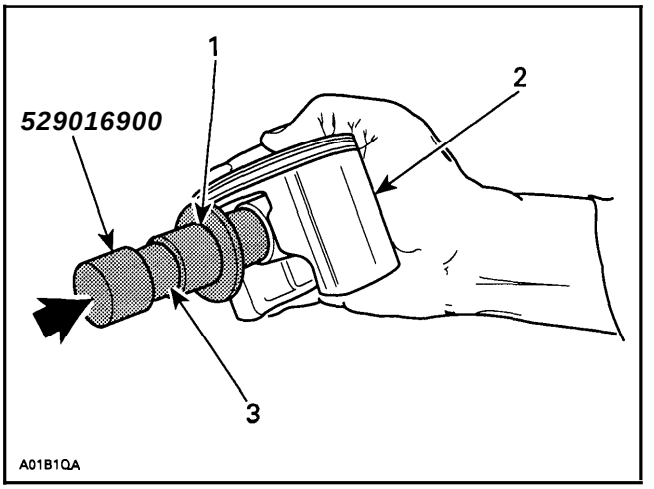

1. Place circlip in
2. Restrain
3. Oil

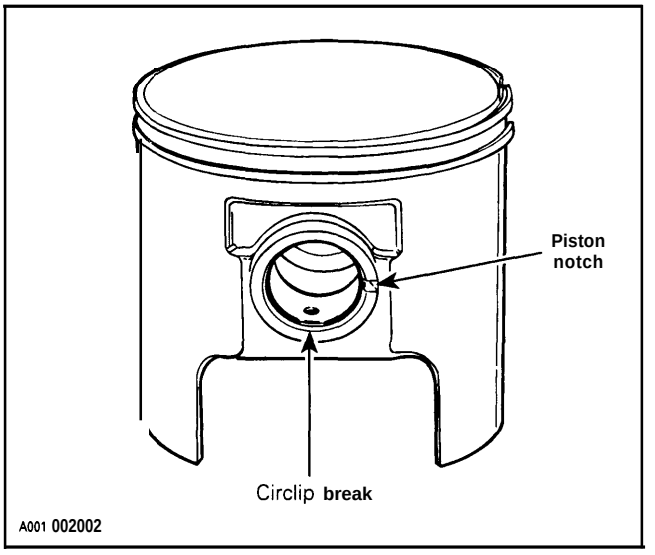

CAUTION : **Circlips** must not move freely in the groove after installation. If so, replace them.

6, Cylinder

All Models

Before inserting piston in the cylinder, lubricate the cylinder with new injection oil or equivalent,

Spare parts pistons and cylinders are identified with a green or red dot, it is important to match piston and cylinder with the same color.

4,5, Nut and Cylinder Head

Position cylinder head on cylinder with fins in line with crankshaft center line. Cross torque retaining nuts to 21 N•m (15 lbf•ft) for 247 engine type and 26 N•m (19 lbf•ft) for 277 engine type.

7, Locking Tab

Locking tab should be replaced if bent more than 3 times. If in doubt replace.

1,2,3, Lever, Spring and Decompressor Cable

From OFF position, pull lever to feel a light resistance. A gap of 1.5 mm (1/16 in) is required.

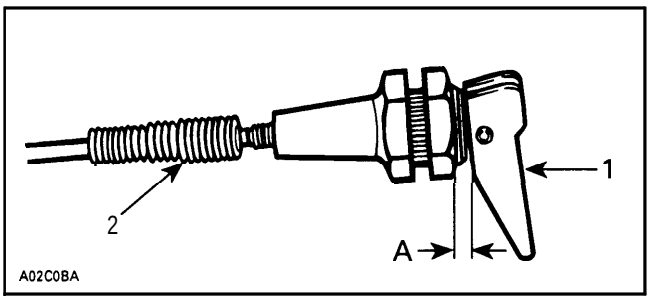

1. OFF position
2. Adjustment s/eeve
A. 1.5 mm (1/16 in)

To adjust, turn adjustment sleeve clockwise to increase free-play or counterclockwise to reduce.

BOTTOM END

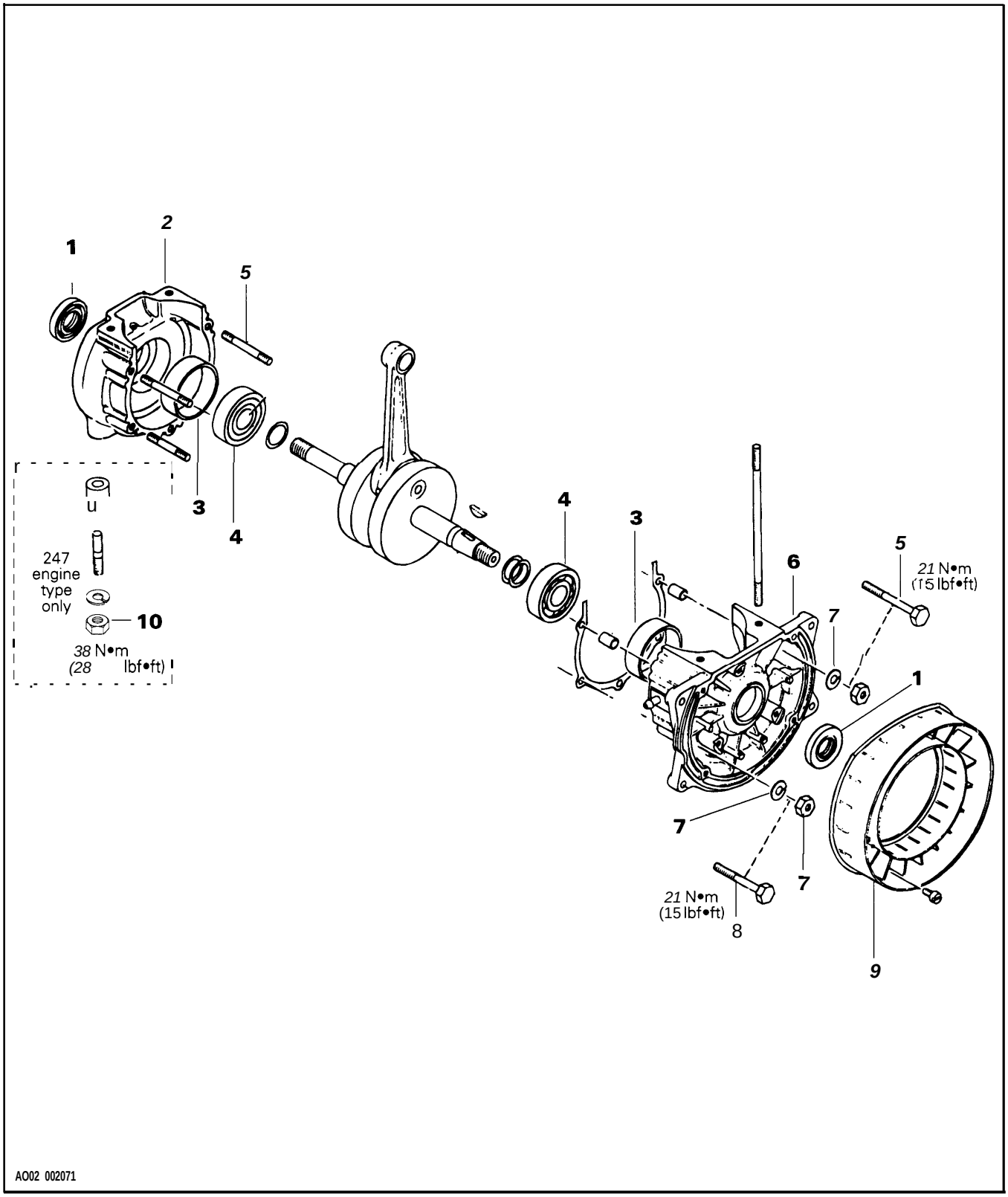
1
2
5
3
4
u
247
engine
type
only
10
38 N•m
(28 lbf•ft)
4
3
6
5
21 N•m
(15 lbf•ft)
7
1
7
7
21 N•m
(15 lbf•ft)
8
9
AO02 002071

NOTE : Engine must be removed from chassis to perform the following procedures.

CLEANING

Discard all oil seals and gaskets.

Clean all metal components in a non-ferrous metal cleaner.

DISASSEMBLY

Genera I

To remove drive pulley, refer to DRIVE PULLEY 05-02.

To remove magneto, refer to MAGNETO in this section.

2,6, Crankcase Half

247 ***Engine Type***

When disassembling crankcase halves, do not heat the crankcase. If heat is necessary, temperature must not exceed 55°C (130"F).

277 ***Engine Type***

Heat to 11 O-120°C (230-248°F) all around bearing seat on PTO side. Install puller (P/ N 4208762 98) to plate (P/ N 5290249 00) with washer under screw heads and extract PTO side crankcase half.

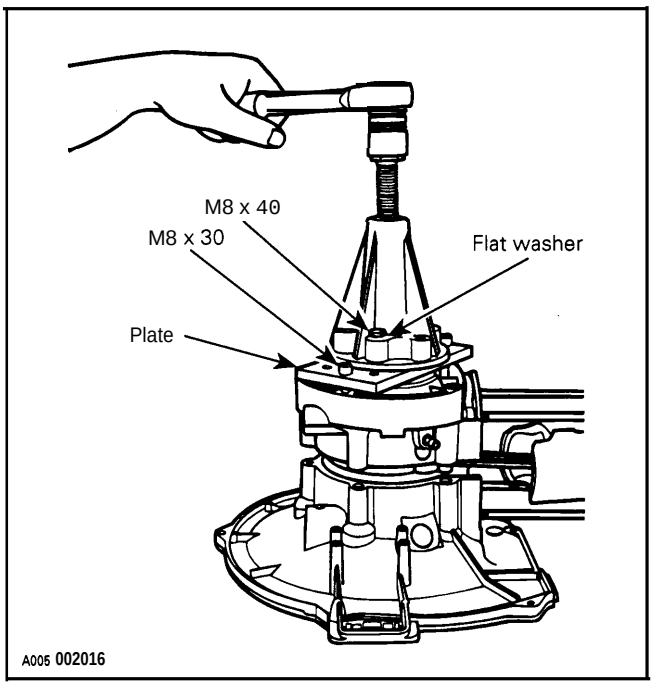

Heat to 110-120°C (230-248°F) all around bearing seat on MAG side. Install puller with plate, long bolts M8 x 110 mm and flat washers. Extract MAG side crankcase half.

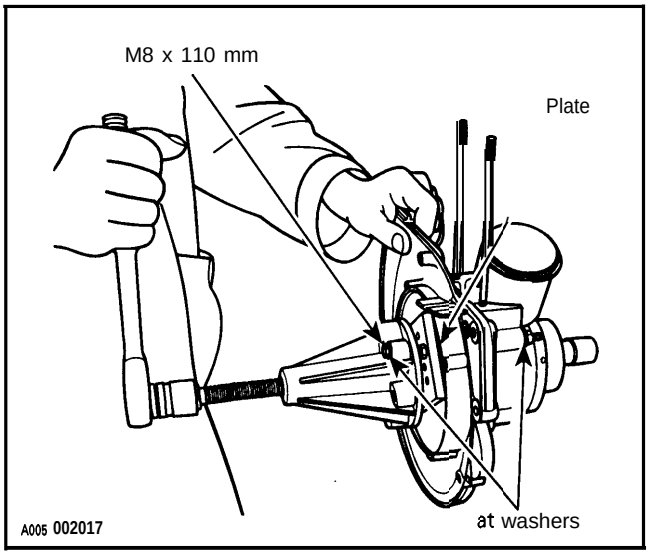

247 Engine Type

3, Polyamid Ring

Do not remove polyamid rings unless necessary.

To remove, heat slightly with a butane torch then pry out using a screwdriver.

All Engines

1, Seal

To remove seals, push from outside the crankcase towards the inside.

4, Ball Bearing

To remove bearing from crankshaft use a protective cap and special puller as illustrated.

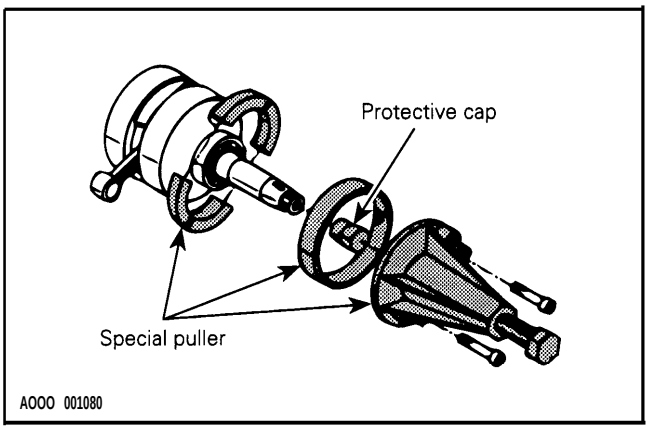

INSPECTION

Refer to ENGINE D MENSIONS MEASUREMENT 04-05.

ASSEMBLY

4, Bearing

Smear antiseize lubricant (P / N413 7010 00) on part of crankshaft where bearing fits.

Prior to installation, place bearings into an oil container and heat the oil to 75°C (167°F) for 5 to 10 min. This will expand bearings and ease installation.

Install bearings with groove outward.

O NOTE : Crankshaft end play requires adjustment only when crankshaft and / or crankcase is replaced. Prior to magneto side bearing installation, determine crankshaft end play and install required shim(s) on crankshaft extension. For the crankshaft end play adjustment procedure, refer to LEAK TEST AND ENGINE DIMENSION MEASUREMENT 04-03.

3, Polyamid Ring

247 ***Engine Type***

To install polyamid ring, apply oil on outside diameter then use polyamid ring pusher (P / N 4202769 30).

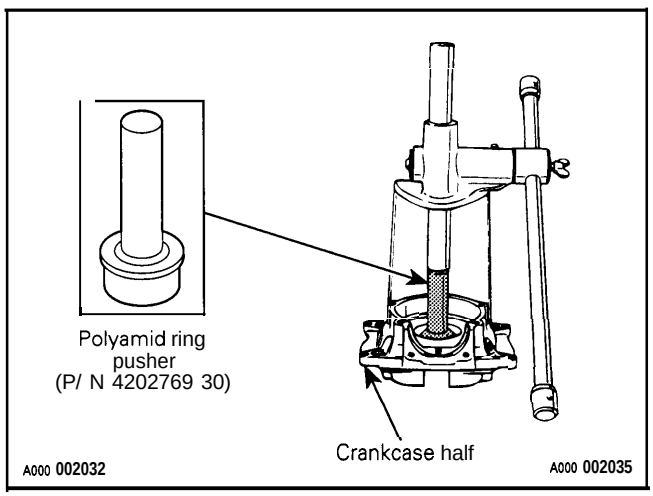

Install as illustrated.

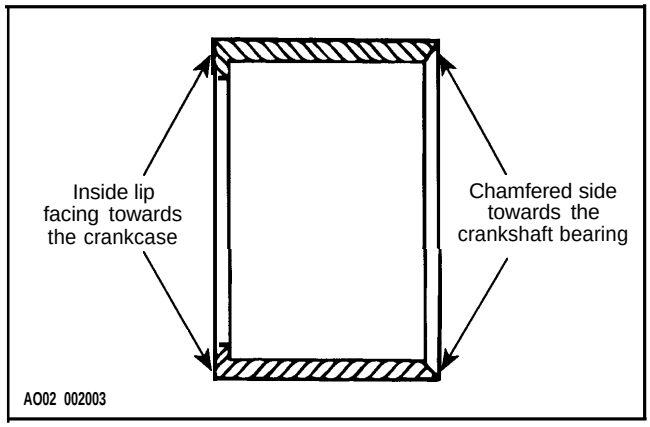

1, Seal

To install new seal into crankcase use oil seal pusher (P/ N 4209779 20).

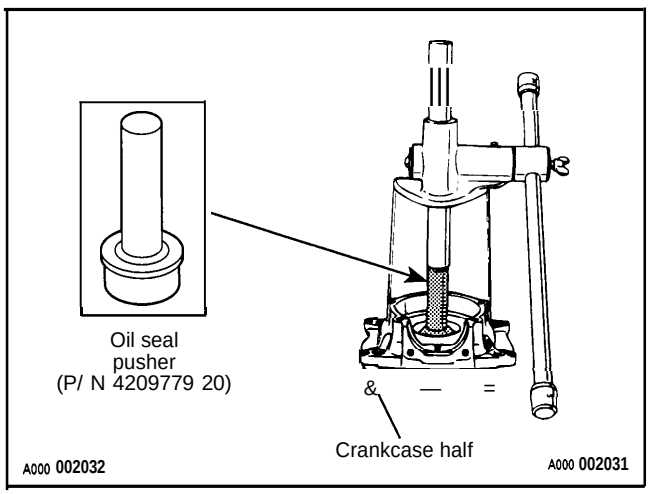

Also, prior to crankcase adjoining, install a protector sleeve on each crankshaft extension to prevent oil seal damage. Apply a light coat of lithium grease on seal lip. Spray some new injection oil on all moving parts of the crankshaft.

▼ CAUTION : To ensure appropriate crankshaft bearing lubrication, seal outer surface must be pressed on seal crankcase shoulder.

277 ***Engine Type***

Install crankshaft seals with pusher (P/ N 4202778 75) for MAG side seal and (P/N 4208766 60) for PTO side seal.

Using a press, install crankshaft into MAG side crankcase half.

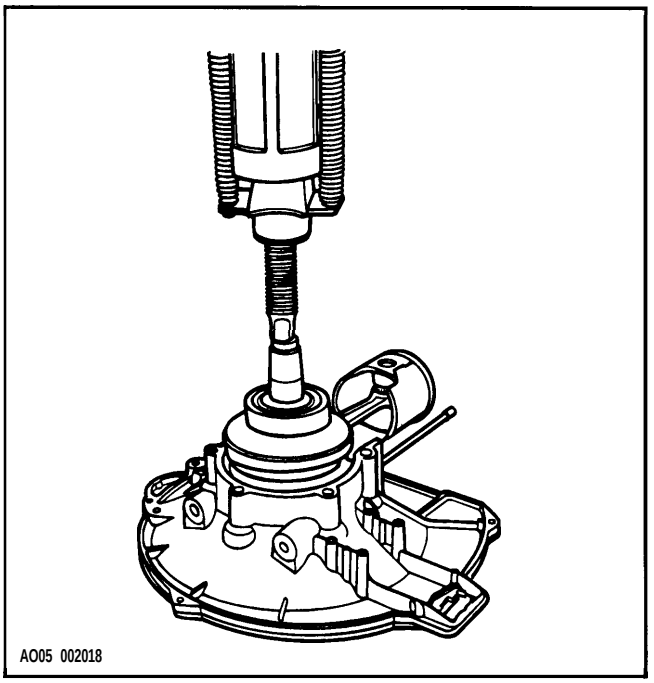

Press down PTO side crankcase half onto crankshaft using appropriate spacer(s).

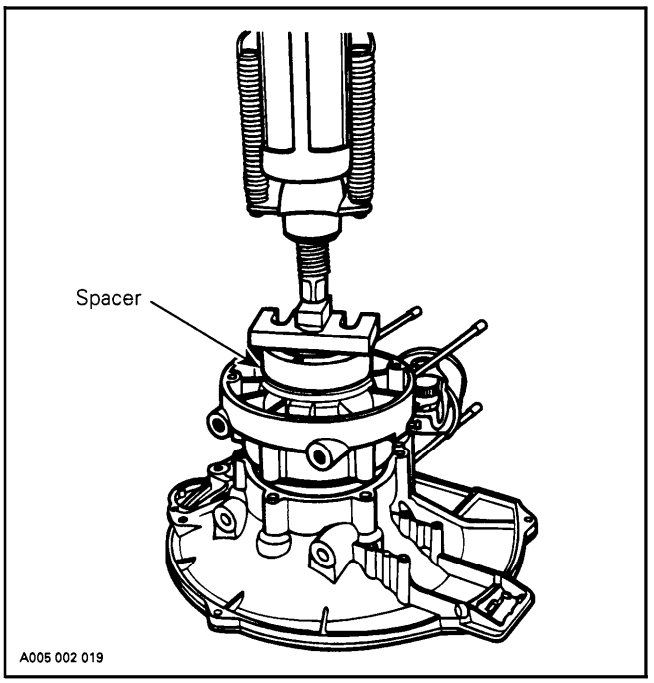

5,7,8, Stud or Screw and Nut

247 Engine Type

Torque the nuts or screw to 21 N•m 15 lbf•ft) fo!low-ing illustrated sequence,

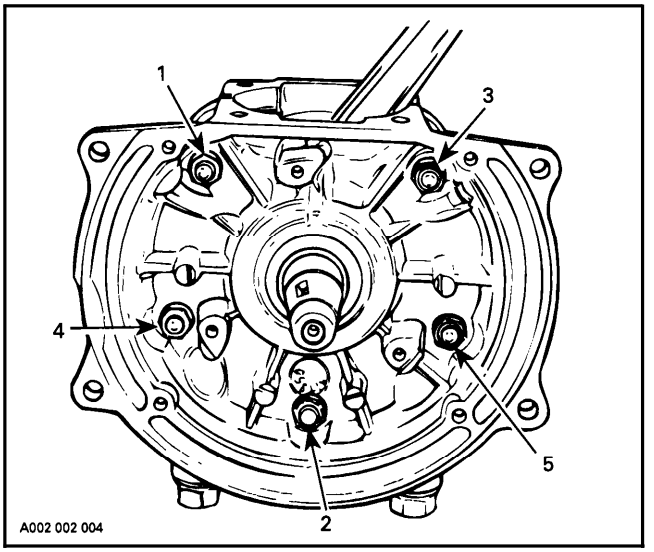

277 ***Engine Type***

Torque screws to 22 N•m (16 lbf•ft) following above sequence.

247 ***Engine Type***

10, Engine Mount Nut

Torque the engine mount nuts to 38 N•m (28 lbf•ft).

9, Labyrinth Ring

Position labyrinth ring with bevelled side on top.

To install magneto, refer to MAGNETO in this section.

MAGNETO AND COOLING SYSTEM

Refer to CDI MAGNETO 04-04 for 277 engine type.

247 Engine Type

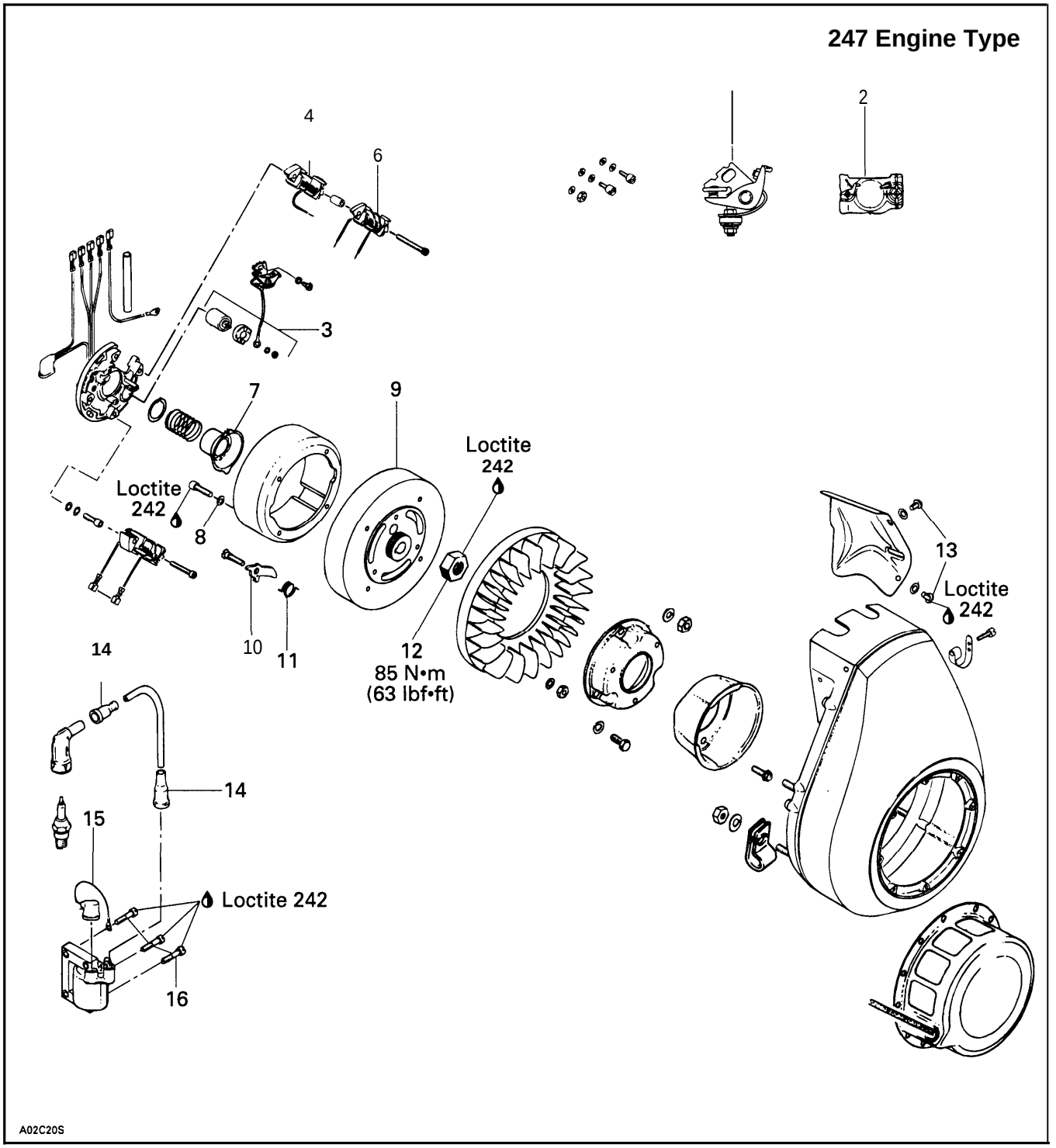

NOTE : The following procedures can be done without removing the engine from chassis.

CLEANING

Clean all metal components in a non-ferrous metal cleaner.

CAUTION : Clean armature using only a clean cloth.

DISASSEMBLY

To gain access to magneto assembly, remove :

— muffler
— upper column
— air duct
— air deflector
— spark plug cable clamp
— fan cowl
— starting pulley
— pulley spacer

NOTE : Before disassembling magneto, indexing marks should be located to facilitate reassembly.

12, Magneto Retaining Nut

To remove magneto retaining nut :

— Lock crankshaft with magneto housing holder (P / N 420 9765 50) as illustrated.
— Remove magneto retaining nut.

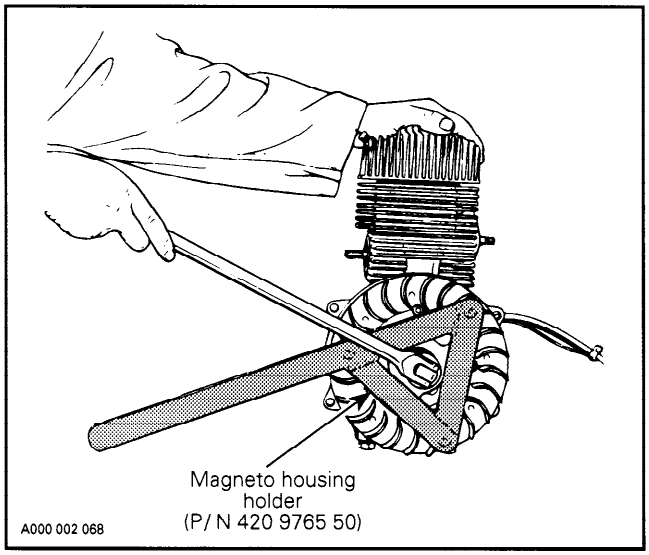

NOTE : To correctly remove a threadlocked fastener it is first necessary to tap on the fastener to break threadlocker bond. This will eliminate the possibility of thread breakage.

NOTE : Crankshaft can be locked with crankshaft locking tool (P / N 420 8766 40) inserted in pulsation line fitting.

9, Flywheel

To remove flywheel : use flywheel puller (P / N 420 9762 35) and flywheel holder (P / N 420 9765 50) as illustrated or crankshaft locking tool (P / N 420 8766 40).

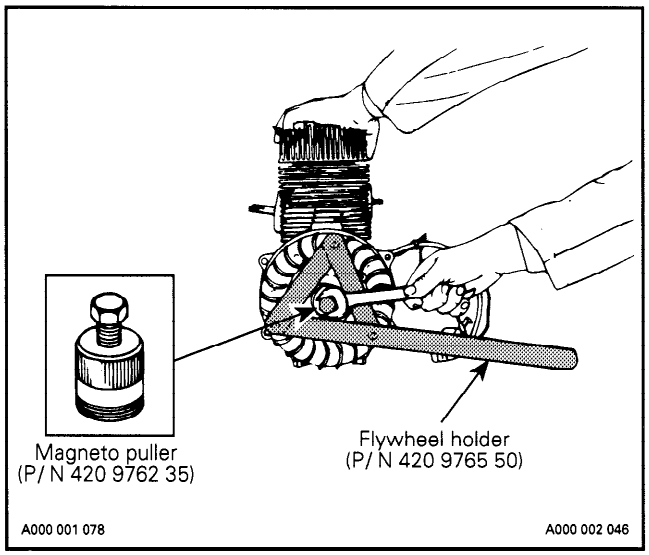

Tighten puller nut and, at same time, tap on bolt head using a hammer to release flywheel from its taper.

REPAIR

3, Condenser

To replace a condenser :

— Unscrew condenser nut and remove both black leads.
— Drive the condenser out of the armature plate using a suitable pusher.
— To reinstall, reverse procedure.

1,2, Contact Breaker and Lubricating Wick

When replacing contact breaker :

— Apply a light coat of grease on lubricating wick.
— Clean breaker points with acetone, alcohol or ether.

4,5,6, Generating Coil, Lighting Coil and Brake Lighting Coil

Whenever a coil is replaced, the air gap (distance between magnet and coil end) must be adjusted.

To check air gap, insert a feeler gauge of 0.25-0.38 mm (.010 in - .015 in) between magnet and coil ends. If necessary to adjust, slacken retaining screws and relocate coil.

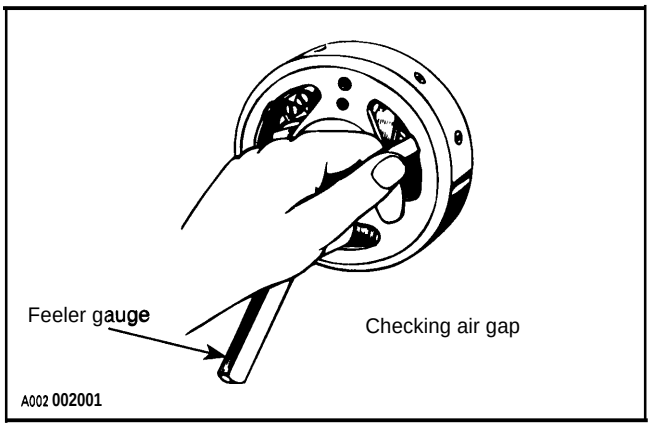

ASSEMBLY

Clean crankshaft extension (taper).

Apply Loctite 242 (P/N 4137030 00).

Position magneto on crankshaft with the keyway and the cam notch indexed as illustrated :

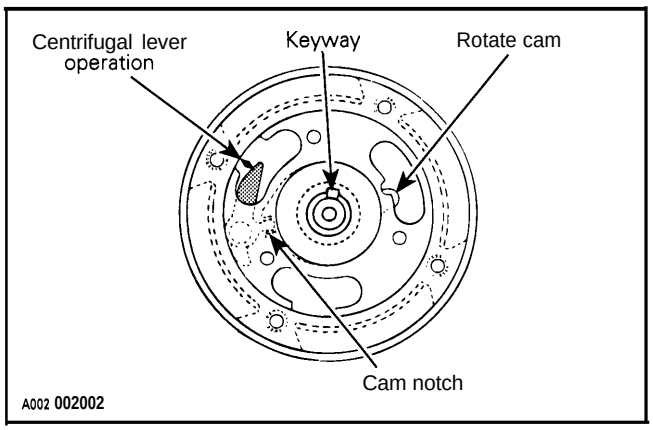

7,10, Breaker Cam and Centrifugal Lever

Rotate breaker cam to check centrifugal lever operation.

11, Centrifugal Lever Spring

At assembly, apply a small amount of low temperature grease (P/ N 4137061 00) into spring seating.

8,13,16, Magneto Ring Screw, Air Deflector Screw and Junction Box Screw

At assembly of air deflector, magneto and junction box, apply Loctite 242 (P/ N 4137030 00) on screw threads.

12, Magneto Housing Nut

At assembly, thoroughly clean threads and apply Loctite 242 (P/ N 4137030 00), then torque retaining nut to 85 N•m (63 lbf•ft).

14,15, Protection Cap and Mass Cable

At reassembly, coat all electric connections with silicone dielectric grease (P / N 413 7017 00) to prevent corrosion or moisture from penetrating.

CAUTION : Do not use silicone SEALANT, this product will corrode contacts.

For ignition timing adjustment refer to IGNITION TIMING 06-02.

377,443 AND 503 ENGINE TYPES

ENGINE REMOVAL AND INSTALLATION

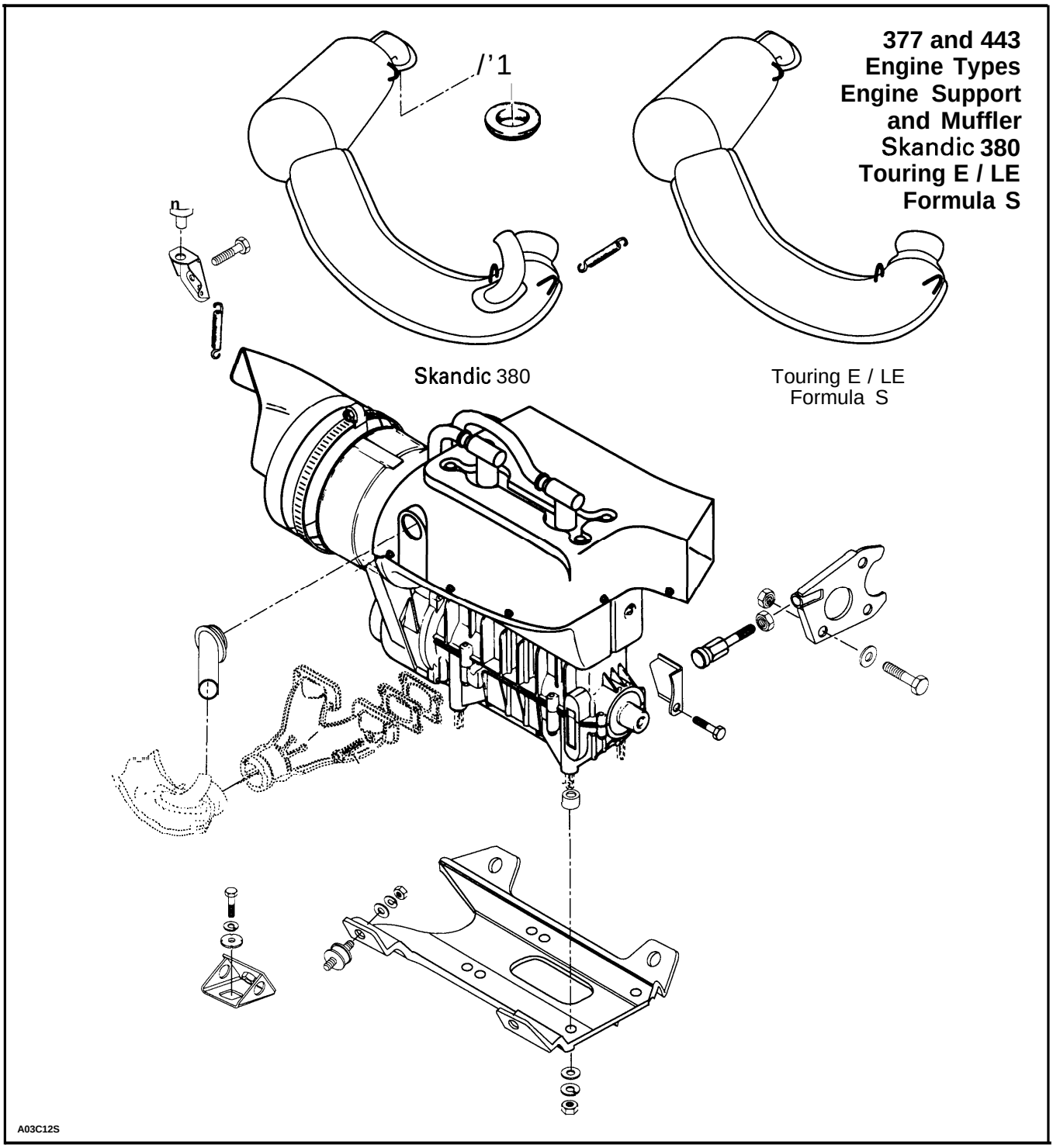

503 Engine Type Engine Support and Muffler
Skandic 500
Touring SLE
Formula SL

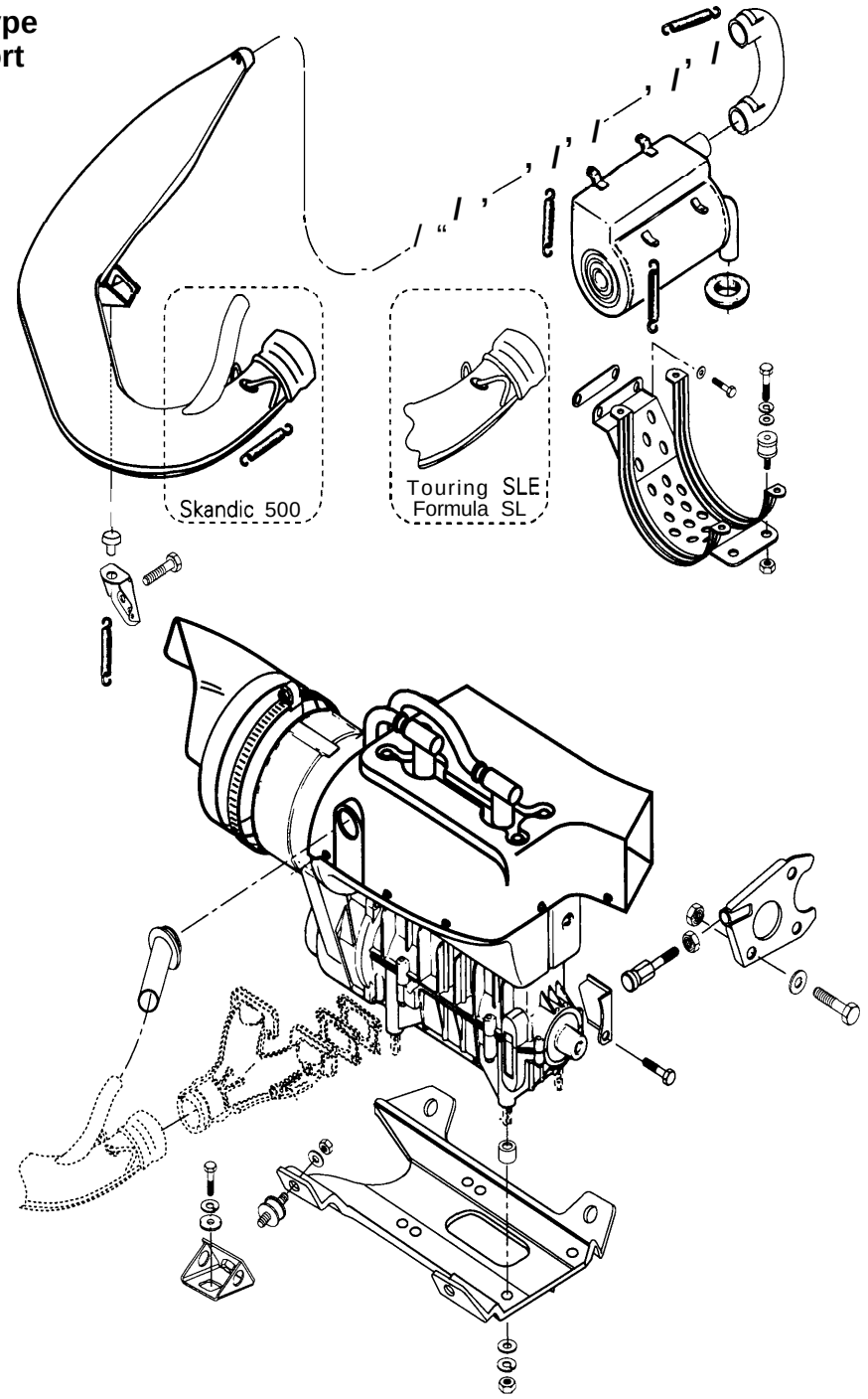

A003 002 039

ENGINE REMOVAL AND INSTALLATION

Disconnect or remove the following :

● WARNING : Before disconnecting any electrical wire in starter system always first disconnect the BLACK negative battery cable (on electric starting models).

— negative cable from battery (on electric starting models)

— belt guard

— drive belt

—drive pulley using appropriate puller, refer to 05-02 DRIVE PULLEY

— air silencer and carburetors

— impulse line from engine crankcase

— 4-connector housing

— exhaust pipe and exhaust cooling hose on so equipped models

— oil pump inlet tube and plug it

— oil pump cable

— hood retaining cable

TOP END

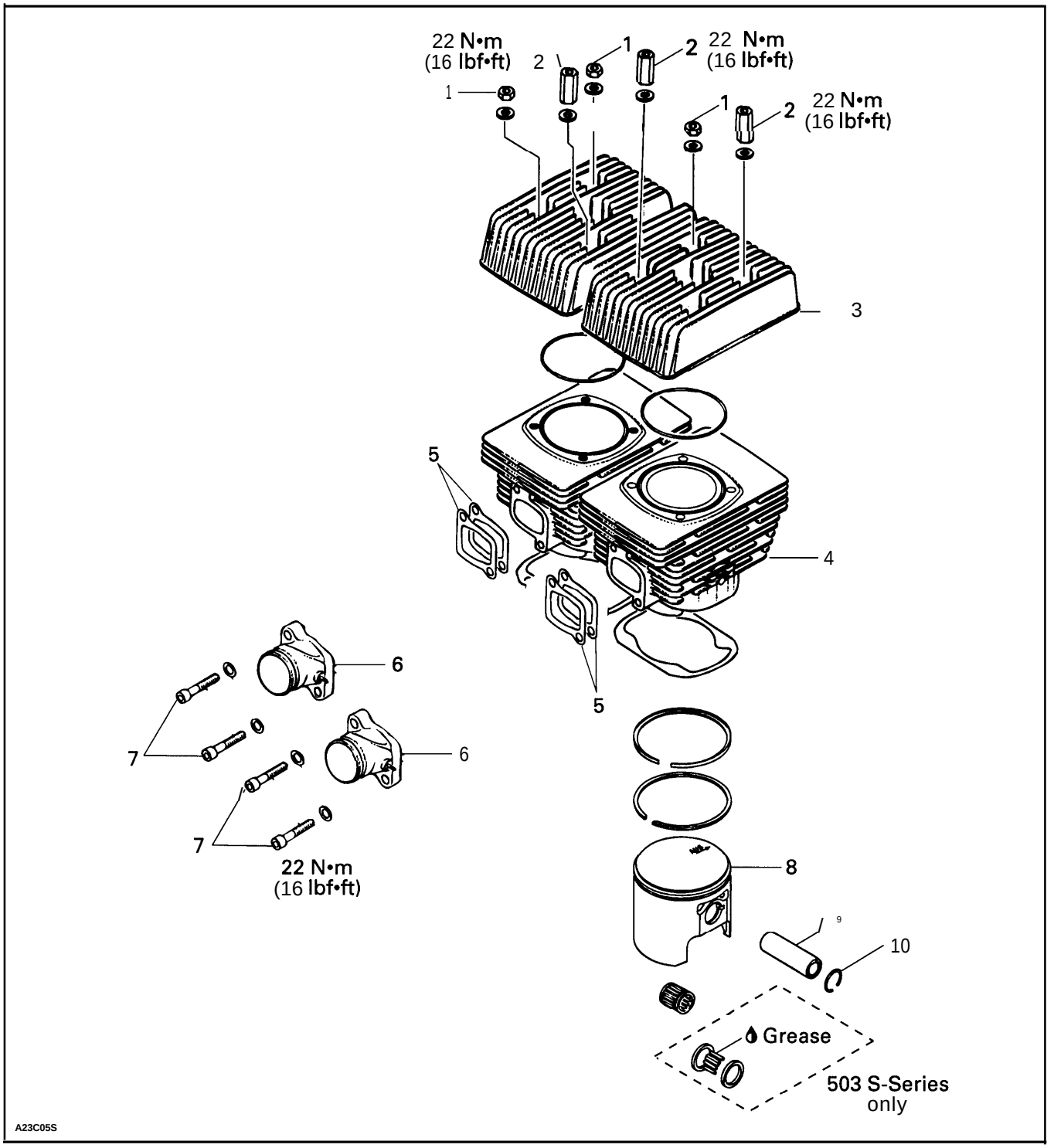
22 N•m
(16 lbf•ft)
1
2
22 N•m
(16 lbf•ft)
1
2
22 N•m
(16 lbf•ft)
3
5
4
5
6
7
6
7
22 N•m
(16 lbf•ft)
8
9
10
Grease
503 S-Series
only
A23C05S

NOTE : The following procedures can be done without removing the engine from chassis.

CLEANING

Discard all gaskets. Use Gasket Remover (P/ N 413 7085 00) to clean mating surfaces.

Clean all metal components in a non-ferrous metal cleaner.

Scrape off carbon formation from cylinder exhaust port, cylinder head and piston dome using a wooden spatula.

NOTE : The letters “AUS” and arrow on the piston dome must be visible after cleaning.

Clean the piston ring grooves with a groove cleaner tool, or with a piece of broken ring.

DISASSEMBLY

8,9,10, Piston, Piston Pin and Circlip

All Engines Except 503

Place a clean cloth over crankcase to prevent circlips from falling into crankcase. Then with a pointed tool inserted in piston notch, remove circlip from piston.

To remove piston pin, use piston pin puller (P/N 529 0210 00) as follows :

— Fully screw puller handle.

— Insert puller end into piston pin.

— Screw (LH threads) extracting nut.

— Hold puller firmly and rotate puller handle counter-clockwise to pull piston pin.

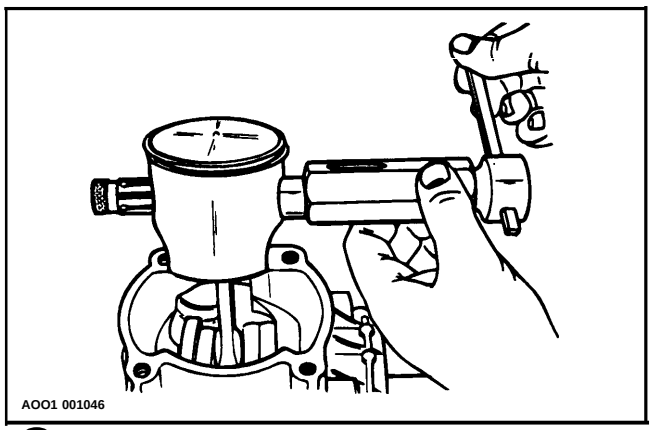

NOTE : The PTO cylinder or fan housing have to be removed to give access to MAG piston pin with the puller.

503 ***Only***

On theses 503 engines, piston pin needle bearing is mounted without a cage.

Use piston pin puller (P/ N 5290210 00) along with expansion sleeve and locating sleeve.

— Place a clean cloth or rubber pad (P / N 5290234 00) over crankcase to prevent circlips from falling into crankcase. Then with a pointed tool inserted in piston notch, remove circlips from piston.

— Insert piston pin puller (P/N 529 0210 00) then install expansion sleeve over puller rod.

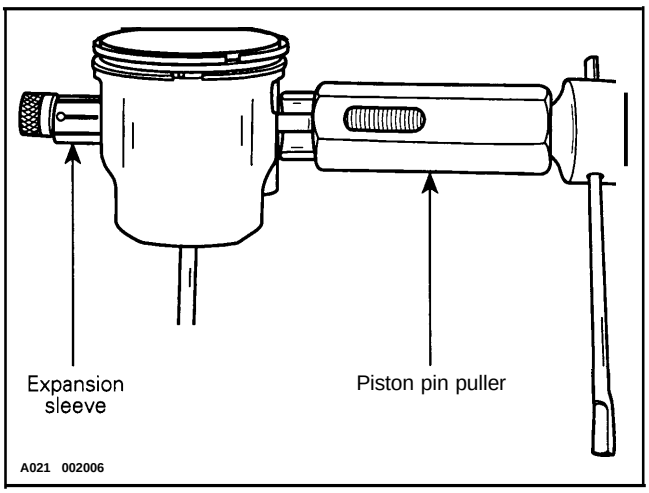

– Pull out piston pin by unscrewing puller until first thread of puller rod aligns with 503 mark.

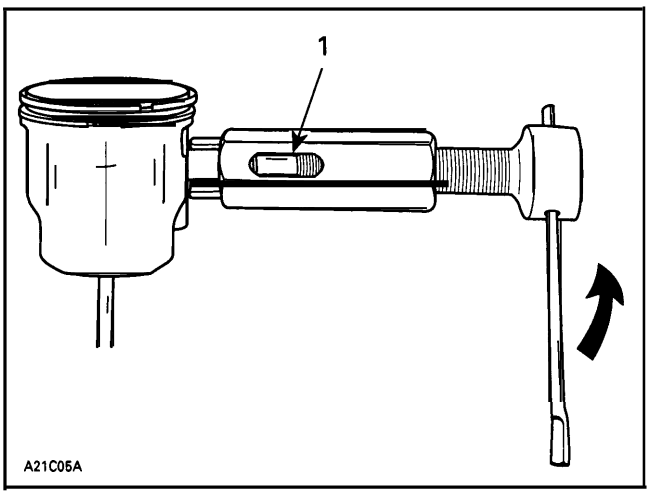

1. 503 *mark on puller*

— Screw in puller in order to remove it from piston.

— Remove piston from connecting rod.

— Install locating sleeve. Then push needle bearings along with thrust washers using a 21 mm (.826 in) diameter pusher.

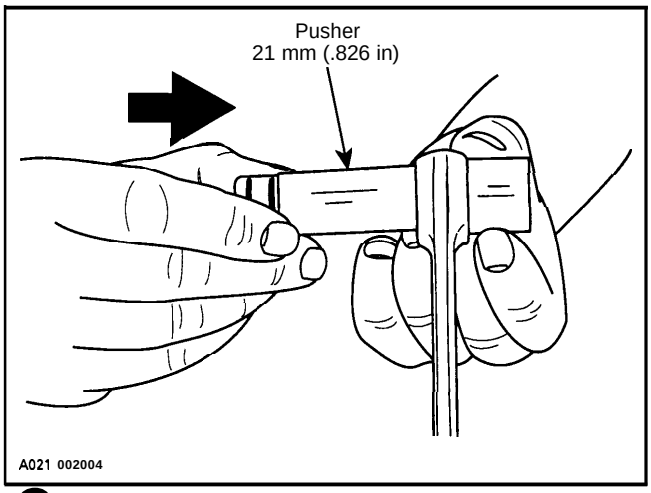

NOTE : 0.25 and 0.5 mm oversized piston and rings are available if necessary,

Use a locking tie to fasten all needles and thrust washers along with sleeves.

INSPECTION

Refer to ENGINE DIMENSIONS MEASUREMENT 04-03.

ASSEMBLY

503 ***Only***

When reinstalling original needle bearings, make sure that 31 needles are inserted between expansion sleeve and locating sleeve.

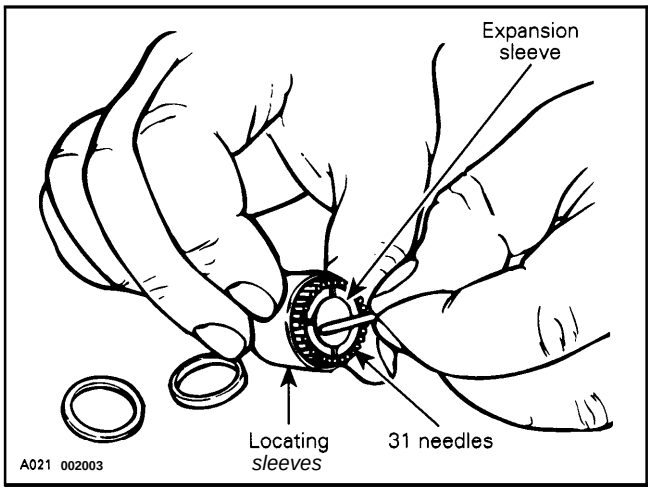

— Grease thrust washers and install them on each end of needles.

- Using a 21 mm (.826 in) diameter pusher, insert needles into connecting rod.

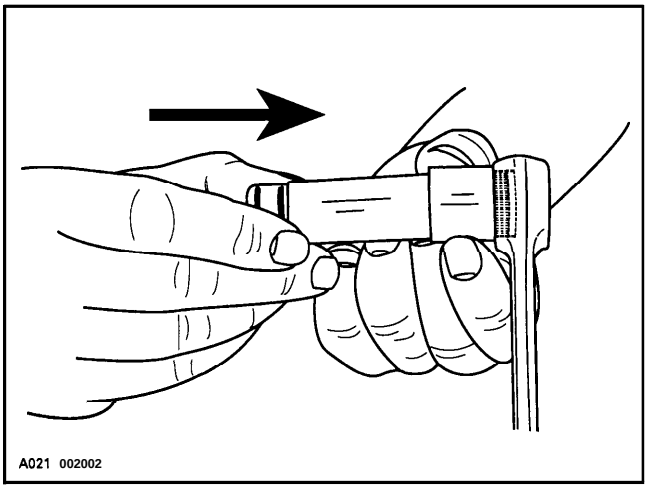

— Mount piston over connecting rod with the letters “AUS” (over an arrow on the piston dome) facing in the direction of exhaust port (see illustration below).

— Install piston pin puller (P/N 5290210 00) and turn handle until piston pin is correctly positionned in piston.

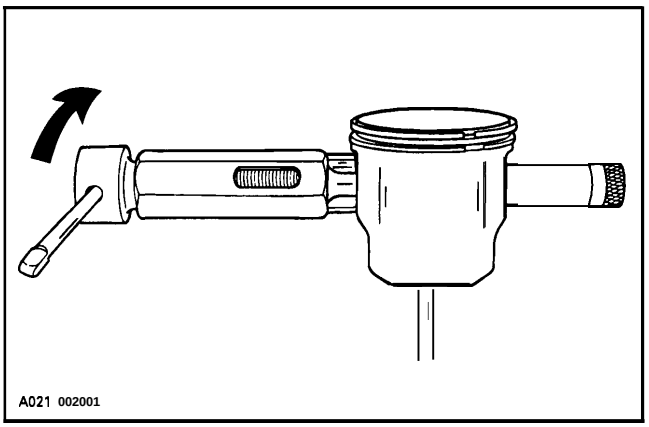

— Remove piston pin puller and expansion sleeve.

— Install circlips as described below.

When installing new needle bearing, insert needles with thrust washers. Instead of expansion sleeve, needles are held in place by 2 inner plastic cage halves.

— Use piston pin puller (P/ N 5290210 00) to insert piston pin. Plastic halves should come off piston. If not, pull them out using long nose pliers.

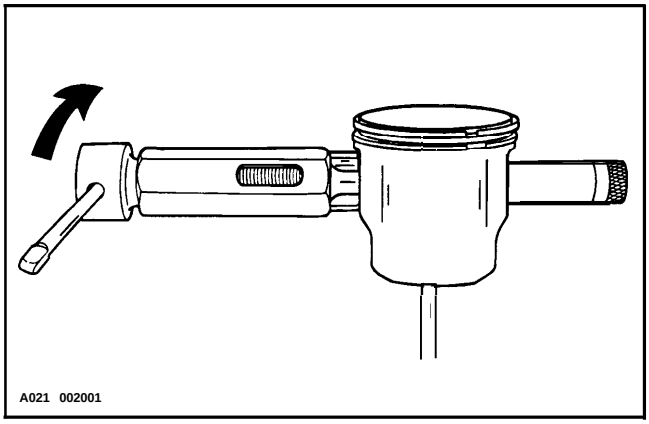

– Install circlips as described below.

8,10, Piston and Circlip

At assembly, place the pistons over the connecting rods with the letters “AUS” (over an arrow on the piston dome) facing in the direction of the exhaust port.

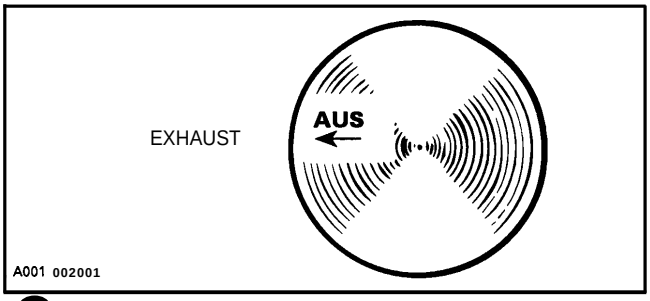

NOTE : Spare parts pistons and cylinders are identified with a green or red dot, it is important to match the piston with the cylinder of the same color.

All Engines Except 503

To center the piston pin with the connecting rod bearing, use centering tool (P/ N 5290091 00)

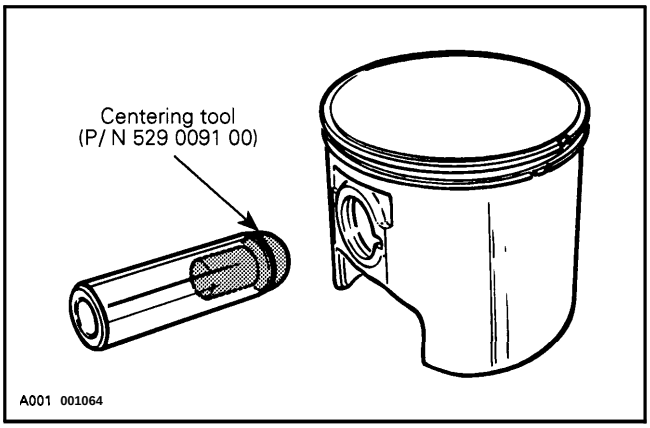

NOTE : The circlip on the opposite side can be installed before pin installation, the tool will easily go out.

All Models

To minimize the effect of acceleration forces on circlip, install each circlip so the circlip break is at 6 o’clock as illustrated. Use piston circlip installer (P/ N 5290086 00).

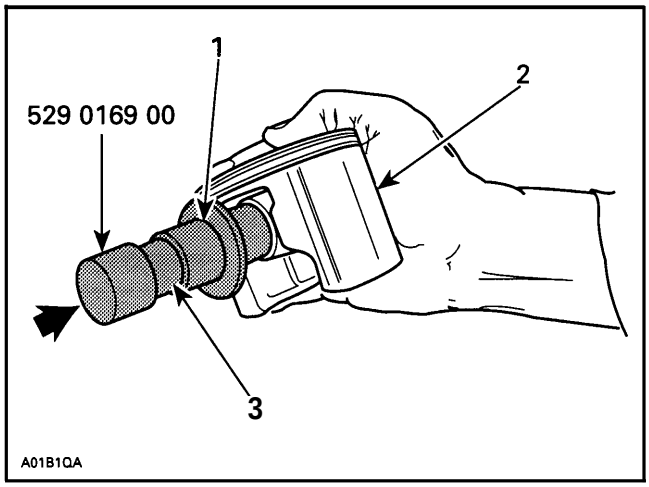

1. Place circlip in
2. Restrain
3. Oil

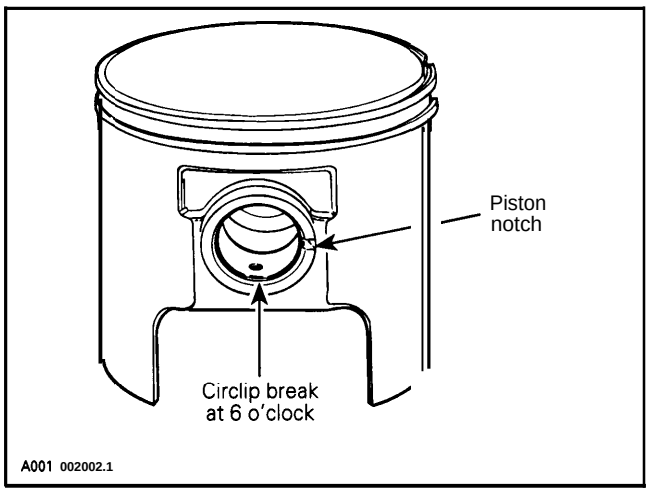

CAUTION : **Circlips** must not move freely in the groove after installation. If so, replace them.

4,8, Cylinder and Piston

NOTE : Be sure to restore the chamfer around all cylinder sleeve port openings.

Before inserting piston in cylinder, lubricate the cylinder with new injection oil or equivalent.

Install proper ring compressor on piston assembly.

ENGINE TYPE	RING COMPRESSOR P/N
377	420876090
503	420876970

NOTE : The ring compressor will not fit on over size pistons.

3,4,6, Cylinder Head, Cylinder and Intake Socket

Check flatness of intake sockets.

Refer to ENGINE DIMENSION MEASUREMENT 04-03 and look for checking surface flatness,

At cylinder and/or cylinder head installation, use aligning tool or exhaust manifold itself to ensure sealing of intake manifold and exhaust before tightening cylinder head nuts.

ENGINE TYPE	ALIGNING TOOL P/N
377, 443 and 503	420876171

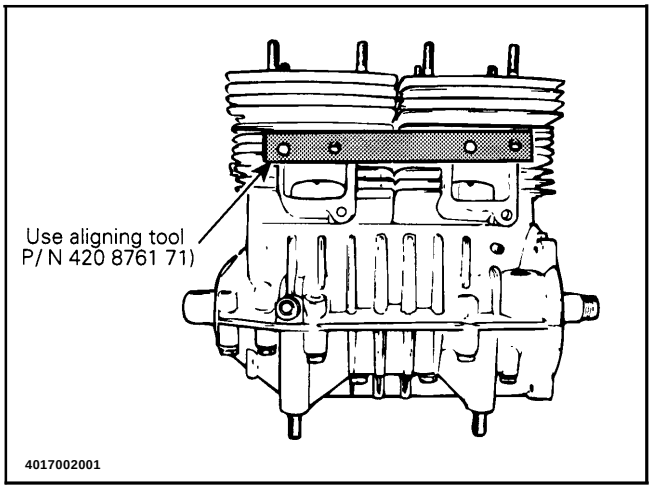

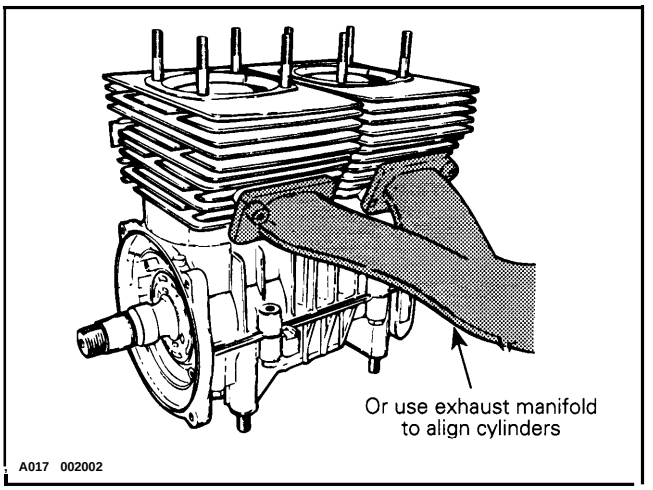

6,8, Nut and Distance Nut

Position distance nuts as illustrated.

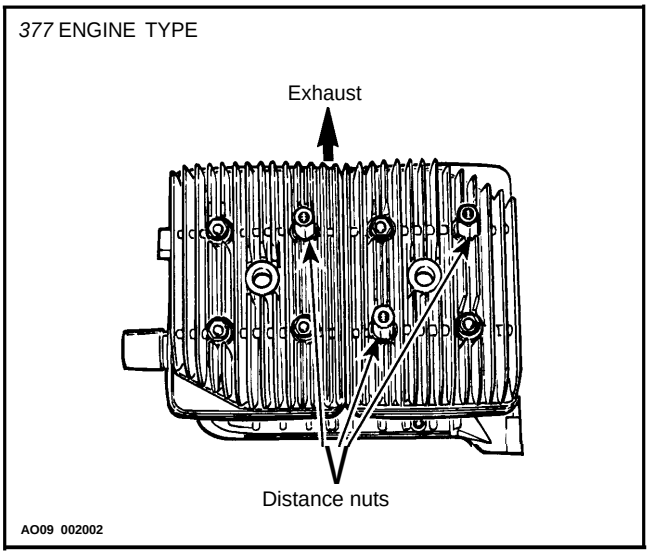

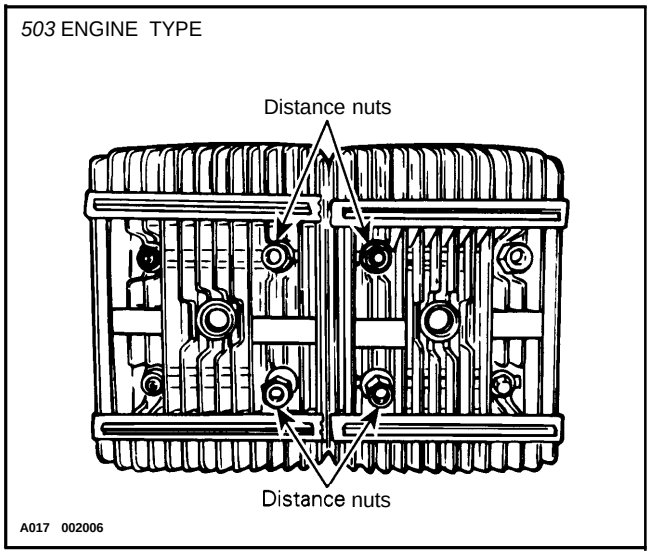

Cross torque cylinder head nuts to 22 N•m (16 lbf•ft) ; torque each cylinder head individually.

Install armature plate, fan housing and then air deflector.

5, Intake Manifold Gasket

Install a gasket on each side of the air deflector.

7, Intake Socket Bolt

Torque intake Socket bolts to 22 N•m (16 lbf•ft).

BOTTOM END

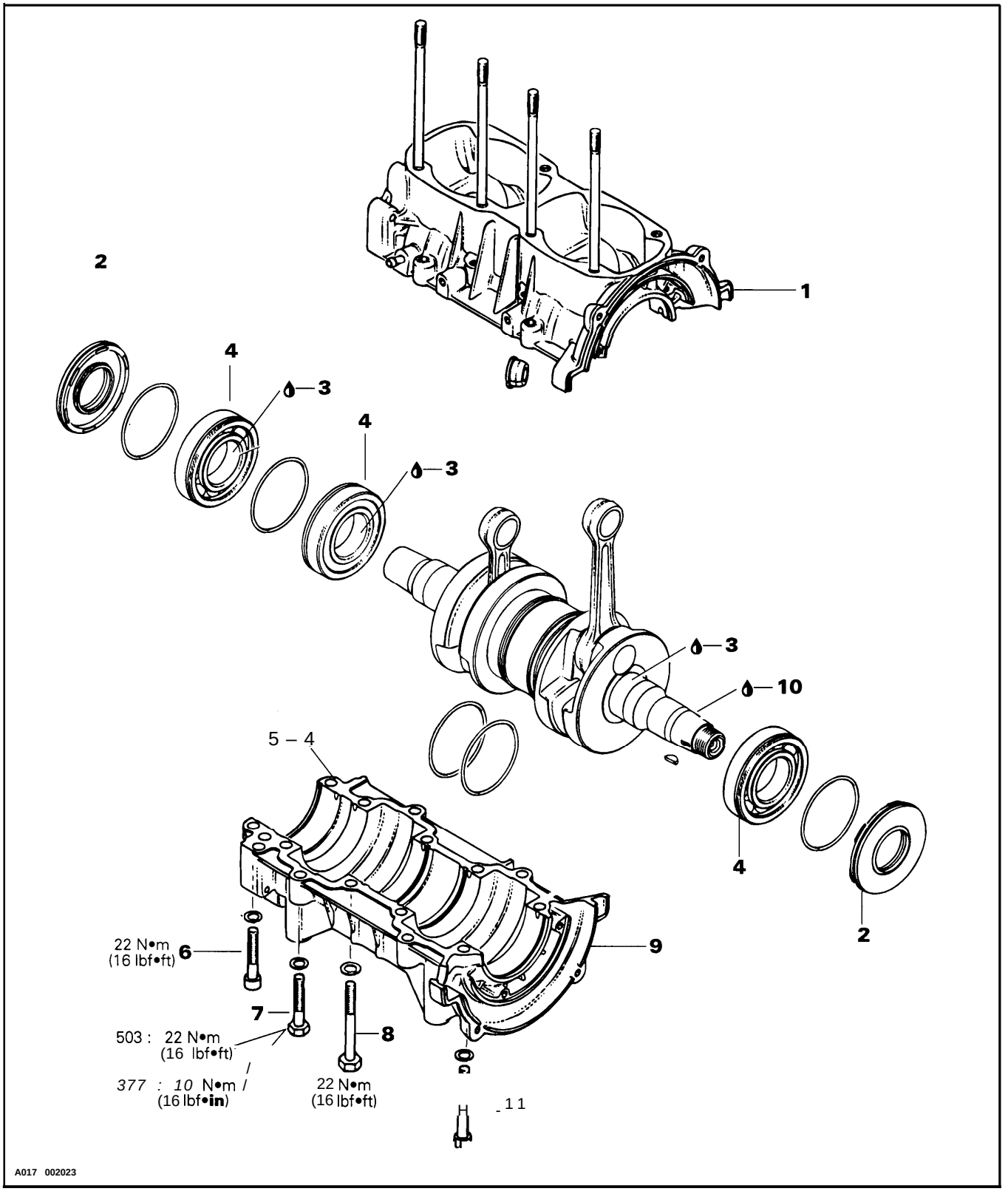
2
1
4
3
4
3
3
10
5 – 4
4
2
22 N•m
(16 lbf•ft)
6
9
7
503 : 22 N•m
(16 lbf•ft)
8
377 : 10 N•m
(16 lbf•in)
22 N•m
(16 lbf•ft)
11
A017 002023

NOTE : Engine must be removed from chassis to perform the following procedures.

CLEANING

Discard all seals, gaskets and O-rings.

Clean all metal components in a non-ferrous metal cleaner. Use gasket remover (P/ N 4137085 00) accordingly.

10, Loctite 242

Remove all trace of Loctite from crankshaft taper.

Remove old sealant from crankcase mating surfaces with Bombardier gasket remover (P/ N 4137085 00).

CAUTION : Never use a sharp object to scrape away old sealant as score marks incurred are detrimental to crankcase sealing.

DISASSEMBLY

General

To remove drive pulley, refer to DRIVE PULLEY 05-02.

To remove magneto, refer to CDI MAGNETO 04-04.

4, Ball Bearing

To remove bearings from crankshaft, use a protective cap and a special puller, as illustrated.

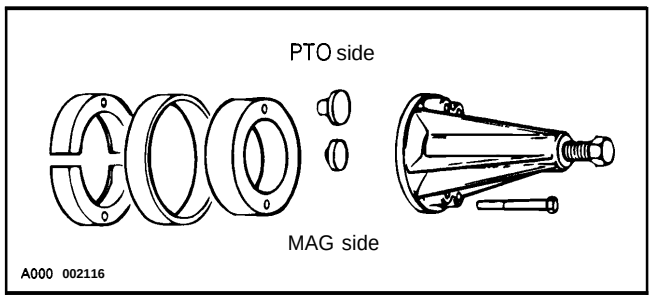

INSPECTION

Refer to ENGINE DIMENSIONS MEASUREMENT 04-03.

ASSEMBLY

3,4, Antiseize Lubricant and Ball Bearing

Smear antiseize lubricant(P/N413 7010 00) on part of crankshaft where bearing fits.

PTO Side Bearings

To check proper clearance between bearing and counterweight, use feeler gauge (P/ N 4208766 20).

Mount second bearing with distance gauge (P/ N 420 8768 22) for 377 and 443 and (P/ N 4208768 24) for 503 for proper positioning.

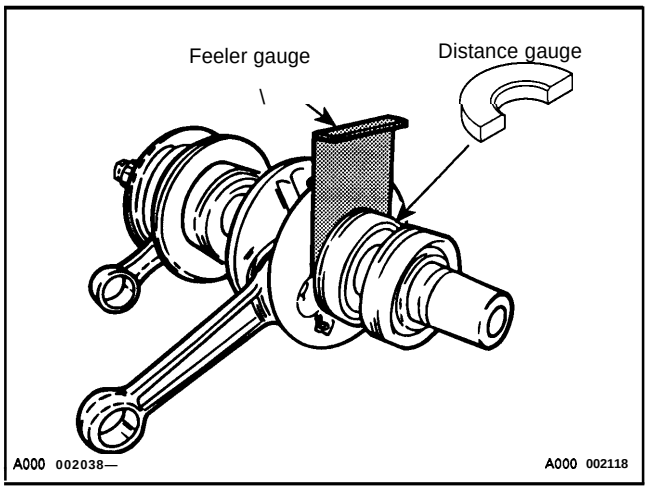

Prior to installation, place bearings into an oil container filled with oil heated to 75°C (167”F).

This will expand bearings and ease installation. Install bearings with groove as per exploded view.

Bearings are pressed on crankshaft until they rest against radius. These radius maintain the gap needed for bearings lubrication.

2, Seal

At seal assembly, apply a light coat of lithium grease on seal lip.

For bearing lubrication purpose, a gap of 1.0 mm (.040 in) must be maintained between seals and bearings.

When installing plain oil seals (seal without locating ring or without spacing legs), ensure to maintain 1.0 mm (.040 in) gap.

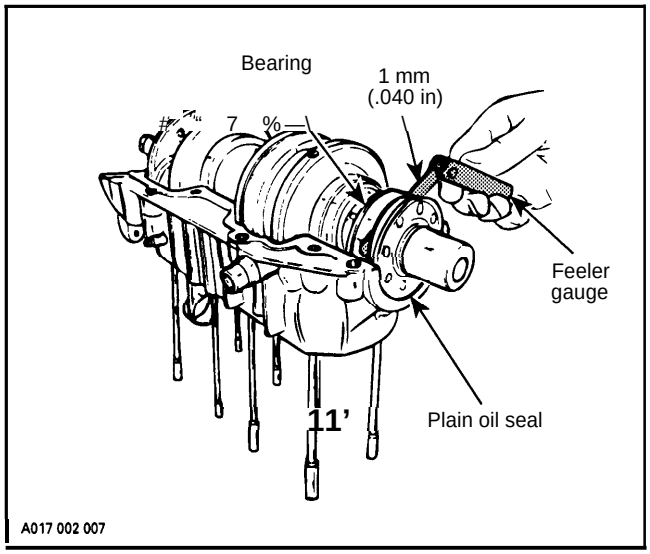

1,9, Upper Crankcase and Lower

Crankcase halves are factory matched and therefore, are not interchangeable as single halves.

5, Paste Gasket

Prior to joining of crankcase halves, spray some new injection oil (or equivalent) on all moving parts of the crankshaft. Spray Activator (P/ N 413 7081 00) on mating surfaces to ensure paste gasket will fully cured. It increases cure speed and gap filling capability,

Then apply paste gasket (P/ N 4137027 00) on crankcase mating surfaces.

Position the crankcase halves together and tighten bolts by hand then install and tighten armature plate on magneto side to correctly align the crankcase halves.

6,7,8,11, Crankcase Bolt

503 ***Engine Type***

Torque bolts to 22 N•m (16 lbf•ft) following illustrated sequence.

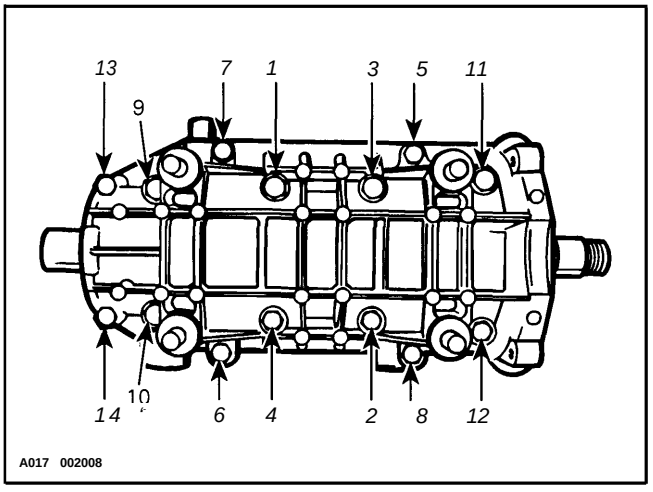

377 ***and 443 Engines***

Torque screws to proper torque in the following sequence.

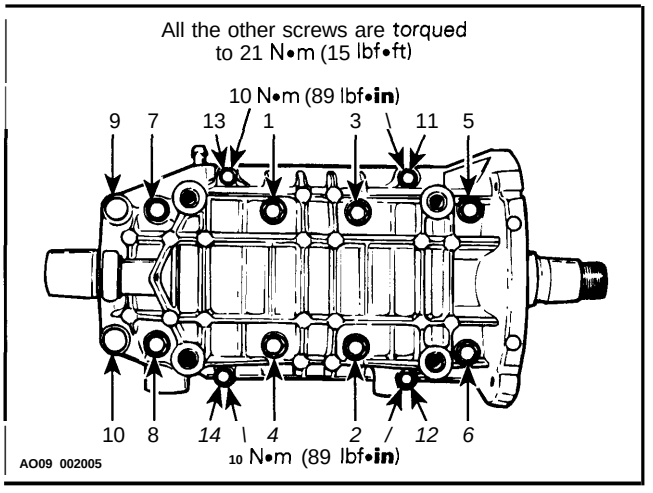

All Engines

To install magneto, refer to CDI MAGNETO 04-04.

LEAK TEST AND ENGINE DIMENSION MEASUREMENT

LEAK TEST

The following gives verification procedures for liquid cooled engines though it also applies to fan cooled engines. For FC engines, do not consider information pertaining to coolant system and crankcase rotary valve gear reservoir / components.

On twin-cylinder engines, each cylinder can not be verified individually due to leakage from one cylinder to the other through rotary valve (except on engines with separate intake manifolds). Besides, on FC engines, leak will occur through labyrinth sleeve in center of crankshaft.

PREPARATION

1. Remove tuned pipe / muffler and exhaust manifold.
2. Install plug(s) over exhaust flange(s). Tighten with previously removed screws.
3. On engines with RAVE system, remove RAVE valves and install plugs over flanges. Tighten with previously removed screws.
4. Remove carburetor(s).
5. Insert plug(s) in intake rubber boot(s). Tighten with clamps already there.
6. Using a hose pincher(s) (P/N 5290099 00), block impulse hose(s).

NOTE : Do not block large hoses of rotary valve gear lubrication system.

7. Install air pump on any valve of exhaust plug.

NOTE : If necessary, lubricate air pump piston with mild soap.

CAUTION : Using hydrocarbon lubricant (such as engine oil) will damage rubber seal of pump piston.

8. Rotate crankshaft so that piston goes to B.D.C. (Bottom Dead Center) on side where the pump is installed. This will open exhaust port.
9. Activate pump and pressurize engine to 140 in H_2O (5 PSI). Do not exceed this pressure.
10. Engine must stand this pressure during 3 minutes.

    If pressure drops before 3 minutes, check tester kit by spraying a soapy solution on pump piston, all plugs and fittings.

    — If tester kit is leaking, bubbles will indicate where leak comes from.

    — If tester kit is not leaking, check engine as per following procedure.

PROCEDURE

NOTE : A flow chart has been prepared as a visual reference. See last page of sub-section ENGINE 03-01.

Using flow chart and following text, pressurize area to be tested and spray soapy solution at the indicated location.

TEST PRESSURE : 140 in H_2O (5 PSI) for 3 minutes

— If there is a leak at the tested location, it is recommended to continue testing next items before overhauling engine. There is a possibility of more than one leak.

— If there is no leak at the tested location, continue pumping to maintain pressure and continue with next items until leak is found.

Engine

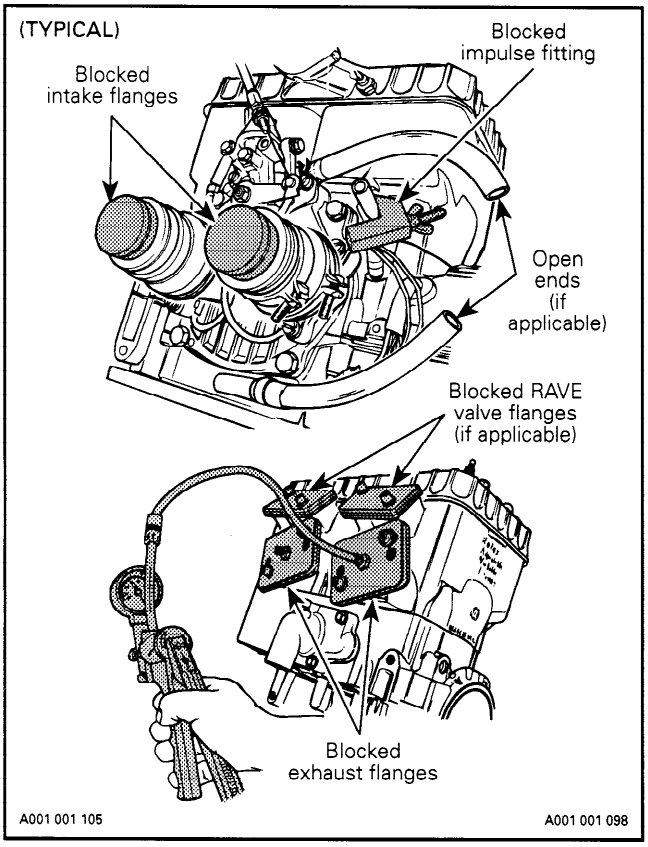

When exhaust manifold is installed, use rubber plug. (In this case it is not necessary to move piston to B.D.C.).

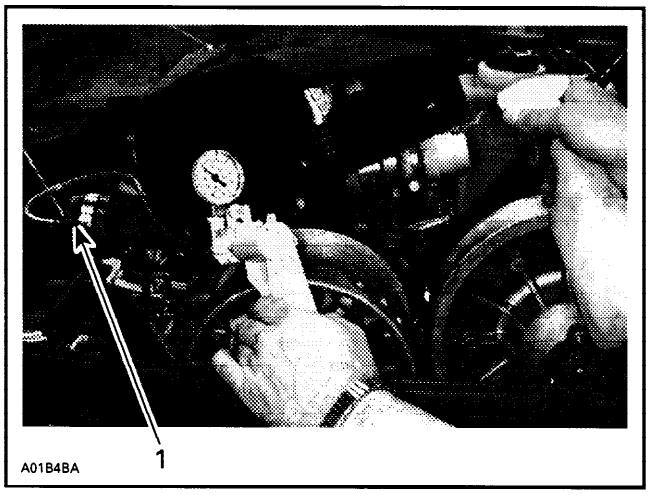

1. Rubber Plug

Check the following :

1. All jointed surfaces and screw / stud threads of engine :
   — spark plug base, insulator
   — cylinder head
   — decompressor valve (247 and 277 types only)
   — cylinder base
   — crankcase halves (joint)
   — rotary valve cover
   — oil injection pump mounting flange (O-ring, seal)
   — coolant pump housing
   — bleed screws / plugs
2. Small injection oil lines coming from pump.

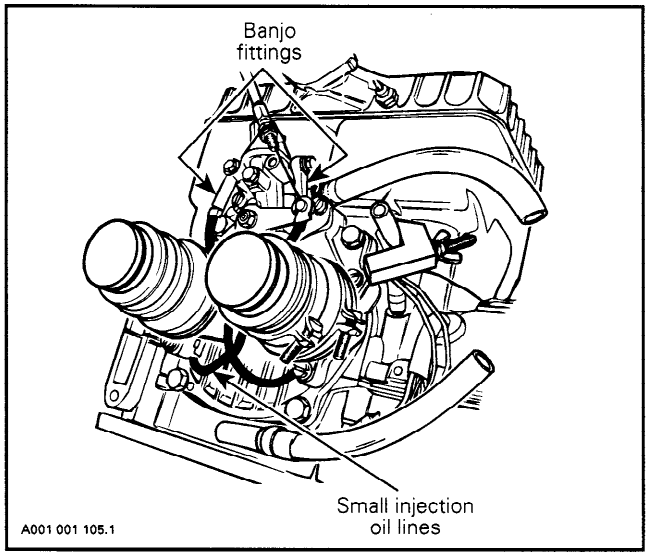

Check for air bubbles or oil column going toward pump. It indicates defective check valve in banjo fitting (or lines).

3. Remove cooling system cap.

Check for air bubbles in antifreeze. It indicates defective cylinder head O-ring or cylinder base gasket.

4. Block both hoses of rotary valve gear lubrication system with hose pincers.

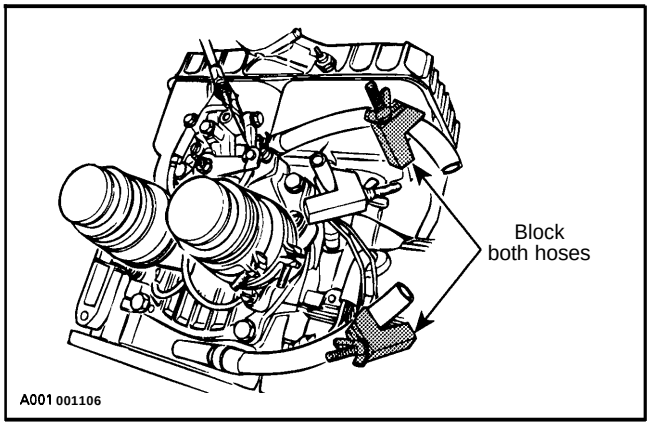

If leakage stops, ignore remaining items and check crankcase rotary valve gear reservoir as per Crankcase Rotary Valve Gear Reservoir of this section.

5. Remove clutch then check crankshaft outer seal.
6. Remove rewind starter and magneto system then check crankshaft outer seal.
7. Check crankcase rotary valve gear reservoir.

Crankcase Rotary Valve Gear Reservoir

Block one hose of rotary valve gear lubrication system with a hose pincer and install an adapter in remaining hose.

Install air pump on adapter and pressurize as before.

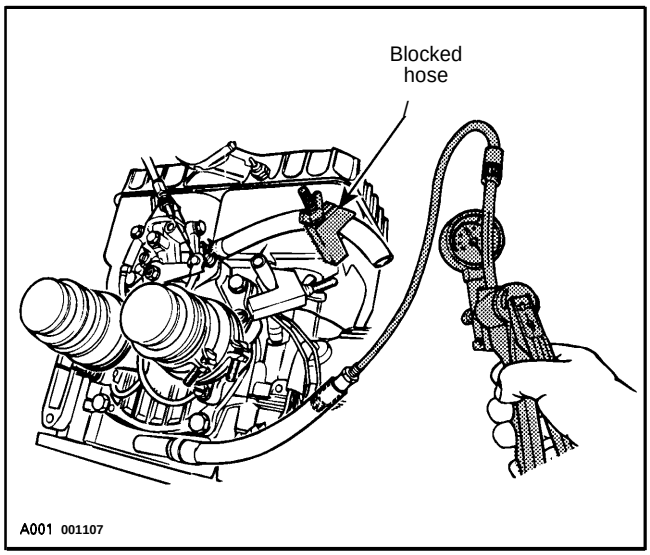

1. Remove a spark plug or any plug of leak tester kit on PTO side.

   If pressure drops, it indicates defective crankshaft inner seal on PTO side.

2. Remove a spark plug or any plug of leak tester kit on MAG side.

   If pressure drops, it indicates defective crankshaft inner seal on MAG side.

3. Check drain hole below coolant pump housing with soapy water.

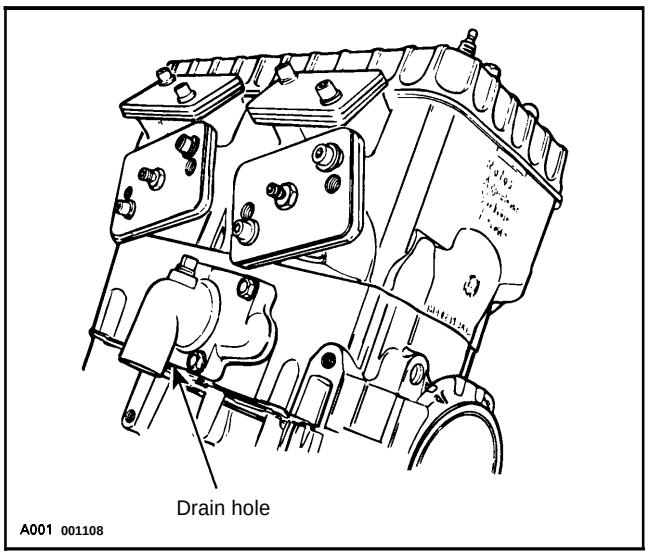

If there is a leak, it indicates defective seal of rotary valve shaft (oil seal beside coolant seal).

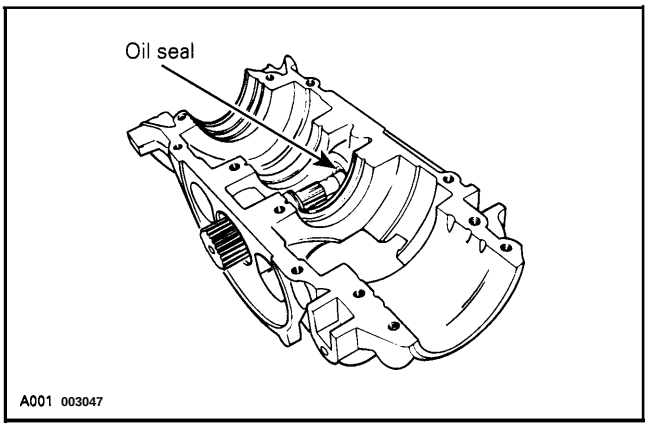

4. Remove rotary valve cover and check for leak of rotary valve seal with soapy water.

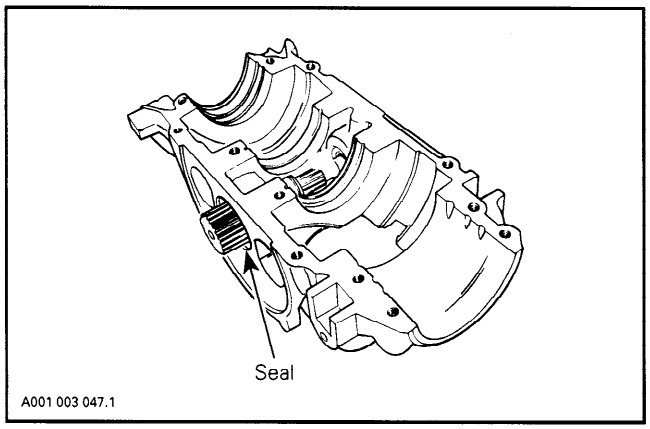

5. If leak still persists, it indicates a defective casting somewhere in engine.

   Disassemble engine and carefully check for defects in castings. Pay attention to tapped holes which may go through engine sealed area and thus leading to leakage.

FINALIZING REASSEMBLY

After reassembling engine, always recheck for leakage.

COOLING SYSTEM LEAK TEST

Use special plug (radiator cap) (P / N 529 0214 00) and pressurize to 15 PSI.

Check all hoses and cylinder / base for coolant leaks. Spray a soap / water solution and look for presence of air bubbles. Refer to LIQUID COOLING SYSTEM 04-09 for exploded views.

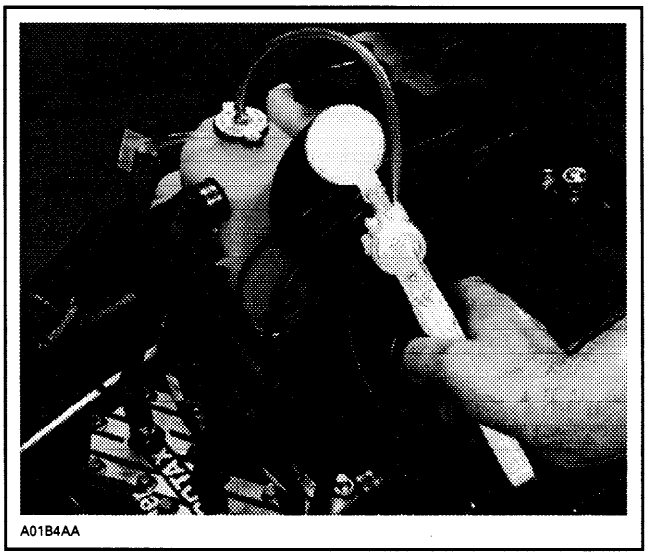

TYPICAL

ENGINE DIMENSION MEASUREMENT

This section covers all engine types.

CYLINDER TAPER

ENGINE TYPE	MAXIMUM
All	0.08 mm (.003 in)

Compare cylinder diameter 16 mm (5/8 in) from top of cylinder to just below its intake port area.

On rotary valve engines, measure just below auxiliary transfer port, facing exhaust port. If the difference exceeds the specified dimension the cylinder should be rebored and honed or should be replaced.

NOTE : Be sure to restore the chamfer around all cylinder sleeve port openings.

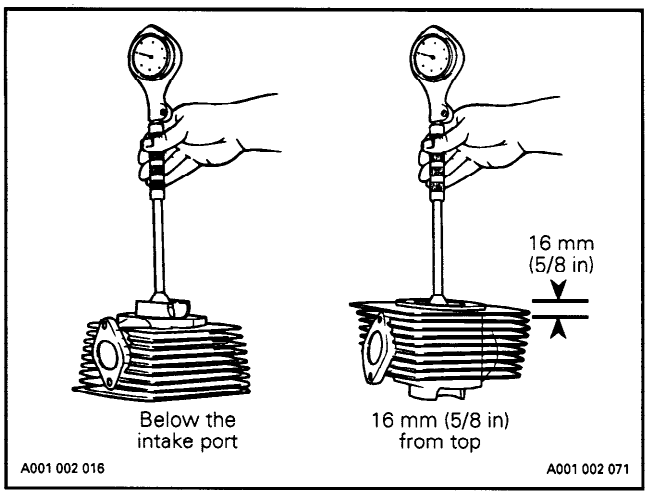

CYLINDER OUT OF ROUND

ENGINE TYPE	MAXIMUM
All	0.05 mm (.002 in)

Measuring 16 mm (5/8 in) from top of cylinder with a cylinder gauge, check if the cylinder out of round is more than the specified dimension. If larger, cylinder should be rebored and honed or should be replaced.

NOTE : Be sure to restore the chamfer around all cylinder sleeve port openings.

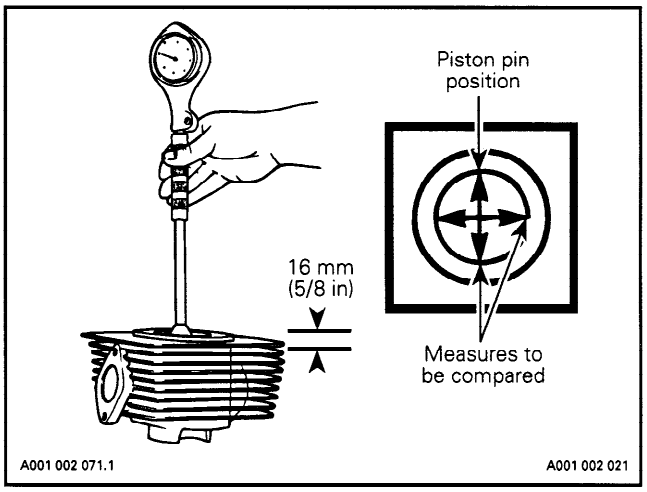

CYLINDER / PISTON CLEARANCE

Measurement (used parts)

Check cylinder taper and out-of-round as described above before proceeding with piston / cylinder clearance.

To accurately determine piston to cylinder clearance, the piston should be measured under the axis hole and 90° to piston pin axis. Find the biggest diameter.

The cylinder should be measured 16 mm (5/8 in) below its top edge. Find the smallest diameter.

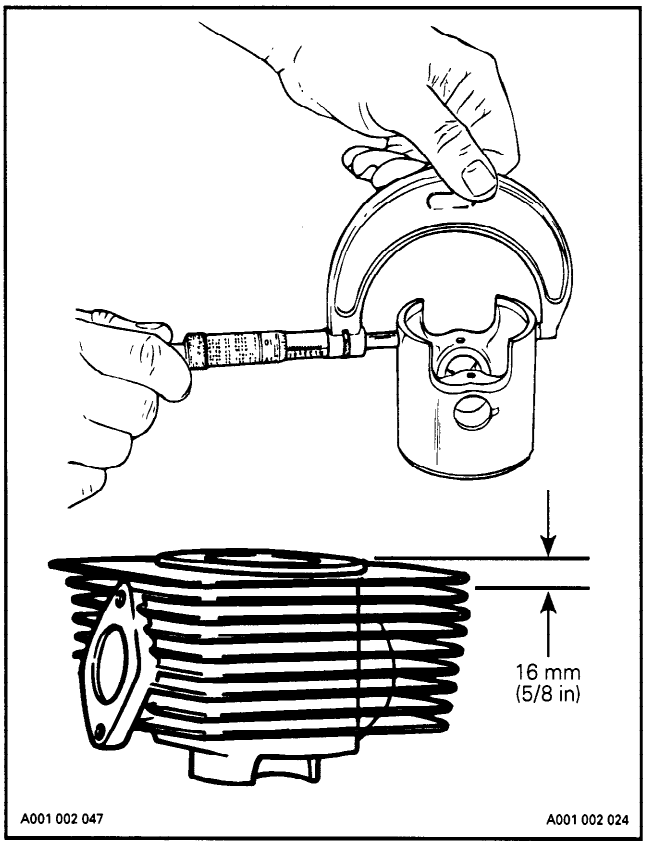

The difference between these 2 measurements should be within specified tolerance. Refer to TECHNICAL DATA 10-02,

Measurement (fitting new parts)

With an inside micrometer, measure cylinder diameter above the exhaust port,

With a micrometer, measure the piston diameter perpendicularly (90°) to piston axis and 3 mm (1/8 in) above bottom edge.

The difference of both measurements is the clearance.

RING / PISTON GROOVE CLEARANCE

Using a feeler gauge check clearance between rectangular ring and groove. Replace piston. If clearance exceeds specified tolerance. Refer to TECHNICAL DATA 10-02.

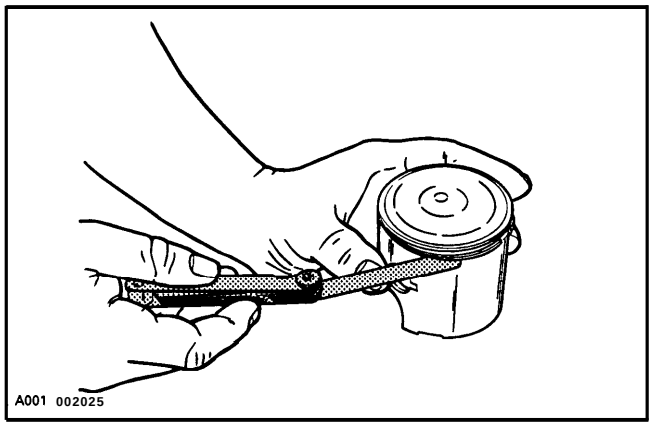

RING END GAP

Position ring half way between transfer ports and intake port. On rotary valve engines, position ring just below transfer ports.

NOTE : In order to correctly position the ring in the cylinder, use piston as a pusher.

Using a feeler gauge, check ring end gap. Replace ring. If gap exceeds specified tolerance, refer to TECHNICAL DATA 10-02,

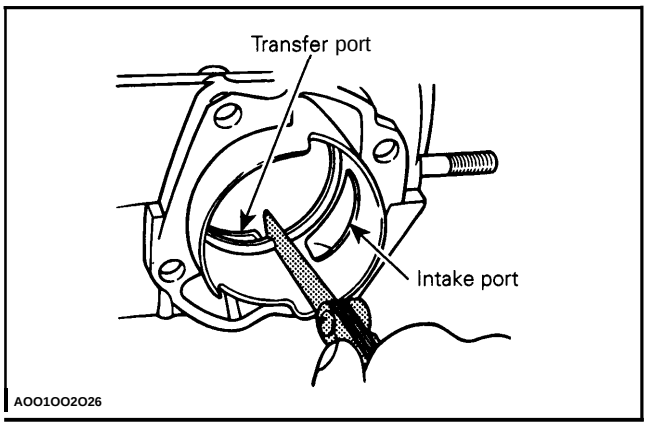

CRANKSHAFT DEFLECTION

Crankshaft Deflection in Mid of Crankshaft

ENGINE TYPE	MAXIMUM IN MID OF CRANKSHAFT
All	0.08 mm (0.0031 in)

Crankshaft deflection can also be measured each end with a dial indicator.

First, check deflection with crankshaft in engine. If deflection exceeds the specified tolerance, it can be either bearing wear or bent crankshaft. Remove crankshaft bearings and check deflection again on V-shaped blocks at A measurement as illustrated.

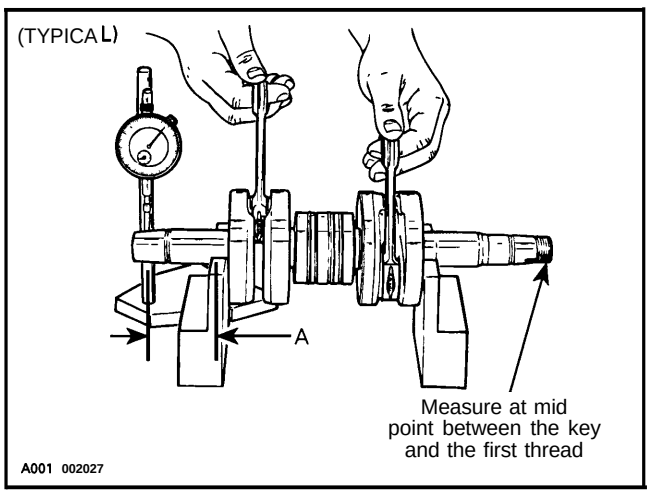

Crankshaft Deflection on PTO Side

ENGINE TYPE	DISTANCE A mm (in)	MAXIMUM ON PTO SIDE mm (in)
377, 443	75.5 (2.972)	0.05 (.002)
454, 494, 582 and 583	86 (3.386)	0.06 (.002)
503	82.5 (3.248)	
670	100 (3.937)	
599, 779	94.5 (3.720)	0.03 (.001)

Crankshaft Deflection on MAG Side

ENGINE TYPE	MAXIMUM ON MAG SIDE mm (in)
All except 779	0.03 (.001)
779	0.05 (.002)

NOTE : Crankshaft deflection can not be correctly measured between centers of a lathe.

If the deflection exceeds the specified tolerance, crankshaft should be repaired or replaced.

CONNECTING ROD BIG END AXIAL PLAY

ENGINE TYPE	NEW PARTS MIN. – MAX.	WEAR LIMIT
247, 277, 377 443 and 503	0.20 - 0.53 mm (.008 - .021 in)	1.00 mm (.039 in)
454, 494, 582, 583, 670 and 779	0.40 - 0.75 mm (.016 - .029 in)	1.20 mm (.047 in)

Using a feeler gauge, measure distance between thrust washer and crankshaft counterweight. If the distance exceeds specified tolerance, repair or replace the crankshaft.

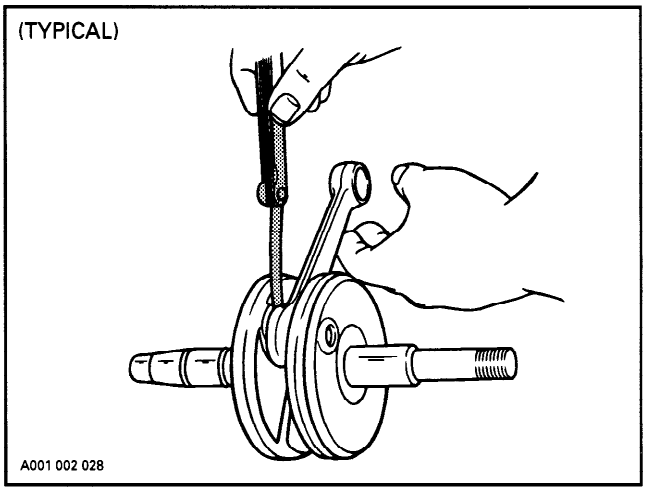

CONNECTING ROD / PISTON PIN CLEARANCE

Measure piston pin with its needle bearing . Compare to inside diameter of connecting rod.

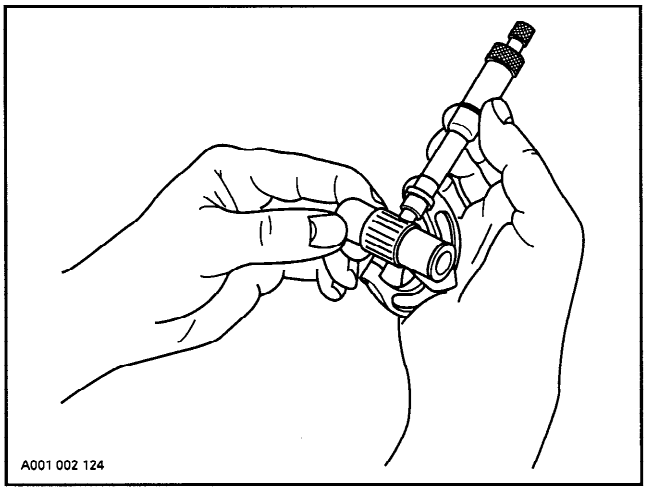

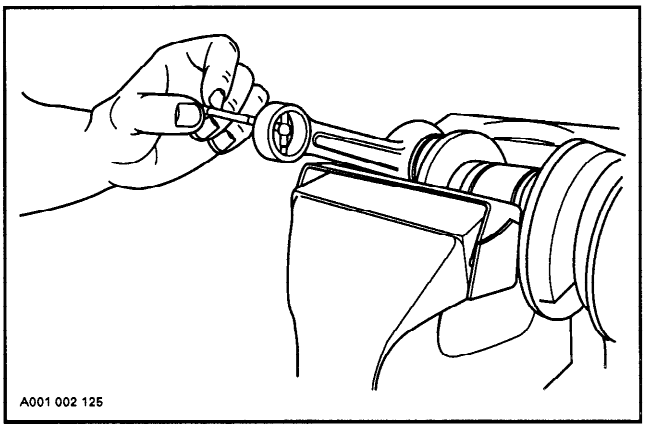

ENGINE TYPE	NEW PARTS MIN. - MAX.	WEAR LIMIT
All	**0.03-0.012** mm (.0001 -.0005 in)	0.015 mm (.0006 in)

CONNECTING ROD / CRANKPIN CLEARANCE

ENGINE TYPE	NEW PARTS MIN. - MAX.	WEAR LIMIT
247	0.020-0.032 mm (.0008 -.0013 in)	0.05 mm (.0020 in)
277	0.020-0.030 mm (.0008 -.0012 in)	
177, 443 and 503	0.020-0.033 mm (.0008 -.0013 in)	
454, 494, 582,, 583, 670 and 779	0.038-0.050 mm (.001 5-.0020 in)	**0.06** mm (.0024 in)

CRANKSHAFT END-PLAY

247 and 277 Engine Types

ENGINE TYPE	MINIMUM	MAXIMUM
247 and 277	0.10 mm (.004 in)	0.30 mm (.012 in)

Adjustment

Crankshaft end-play is adjusted with shims located between crankshaft and magneto side bearing.

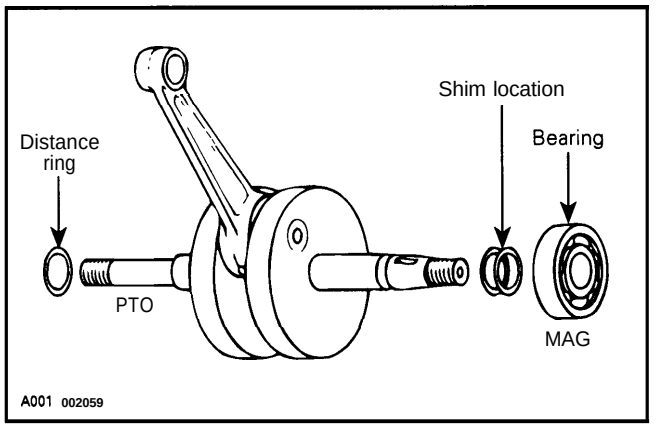

▼ CAUTION : Always install end-play adjustment shims on the magneto side between bearing and crankshaft counterweight.

The following is required for the adjustment procedure :

— adjustment shims (refer to parts catalog)

thicknesses available : 0.10 mm (.004 in)
0.20 mm (.008 in)
0.30 mm (.012 in)
0.50 mm (.020 in)
1.00 mm (.040 in)

— micrometer

— vernier

Total shim thickness needed for the end-play adjustment is determined with the following procedure :

a) Measure crankcase halves as illustrated (M_1 and M_2).

A standard compressed crankcase gasket will have a 0.30 mm (.012 in) thickness (M_3). **Add these** measurements to obtain **dimension** A.

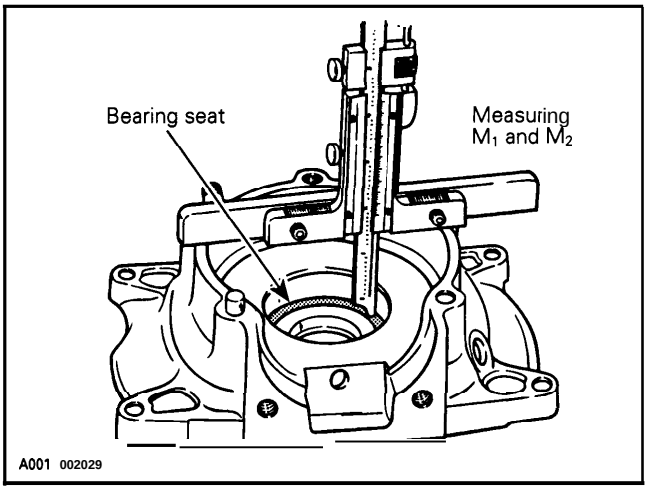

b) Measure the thickness of each bearing (M_4 and M_5).

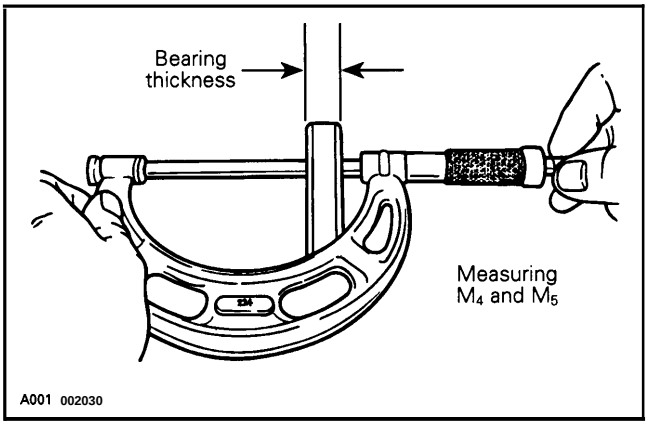

c) Measure distance between bearing shoulders on crankshaft (M_6).

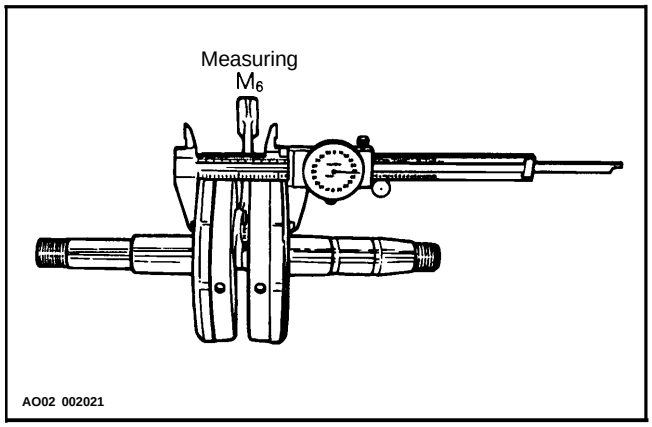

d) Measure the distance ring (MJ and adjustment shims thickness (M_8). Add **these** measurements to obtain dimension B.

e) From dimension A, subtract dimension B.

The result is the actual crankshaft end-play that must be within specification.

If the result is over specification, add adjustment shim(s) to reach this specification.

If the result is under specification, remove adjustment shim(s) to reach this specification.

To Summarize

$A = M_1 + M_2 + M_3$

$B = M_4 + M_5 + M_6 + M_7 + M_8$

A – B = Actual end-play that must be within specification.

M_8 is the dimension that must be adjusted to obtain the specified crankshaft end-play.

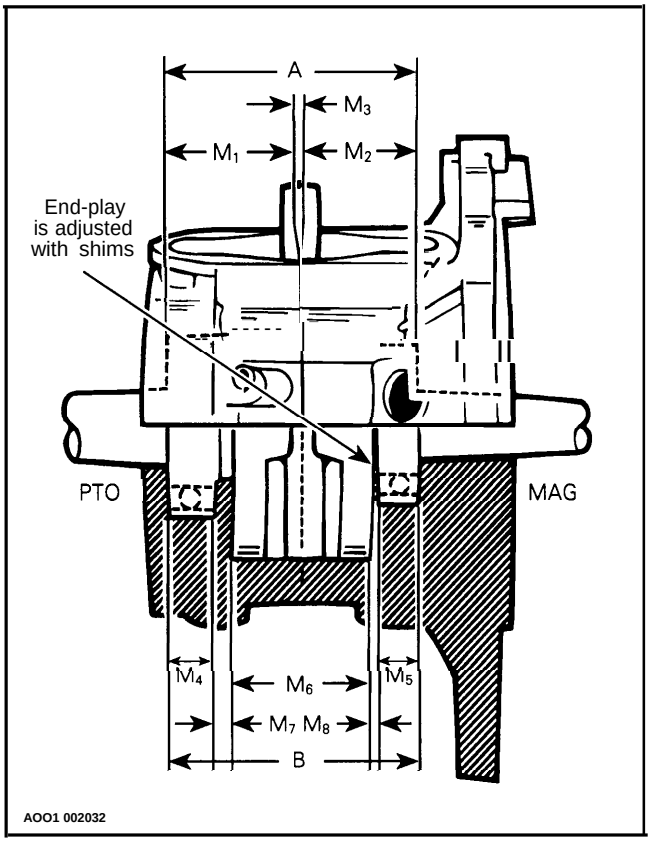

377,443,454,494,503, 582,583,670,779 Engine Types

End-play is not adjustable but it should be between 0,10-0.30 mm **(.004 -.012** in).

CRANKCASE / ROTARY VALVE GAP

ENGINE TYPE	MINIMUM	MAXIMUM
Liquid cooled engines	0.27 mm (0.01 1 in)	0.40 mm (0.016 in)

First Method

To measure this gap use a feeler gauge inserted between rotary valve and upper crankcase with the rotary valve cover in place without its O-ring. Check the most surface as possible. Follow the same procedure with the lower crankcase.

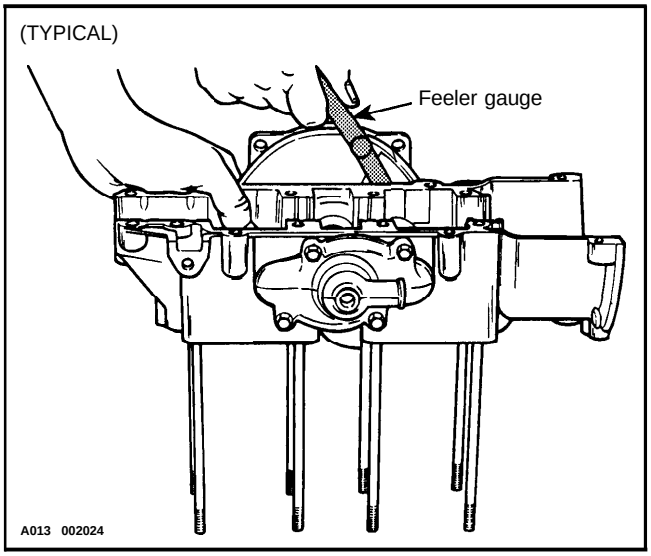

The gap can be measured with the engine installed on vehicle. Use 45° bent blade feeler gauge (Snap-On FB300A) inserted through intake socket of valve cover.

If gap is under tolerances, rotary valve cover can be refaced to increase clearance.

If gap is over tolerances, cover replacement may be necessary. Check if surfaces on crankcase halves are damaged, replacement wear plate is available.

Second Method

Remove rotary valve cover and its O-ring.

Use the following type of solder :

— rosin core

—diameter : 0.5 mm (0.020 in)

— electronic application (available at electronic stores)

Install 2 short pieces (13 mm (1/2 in) long) of solder directly on rotary valve, one above and one below rotary valve gear. Apply grease to hold solder in position.

Reinstall cover in place WITHOUT its O-ring and torque screws to 20 N•m (15 lbf•ft).

Remove cover then clean and measure compressed solder thickness, it must be within the specified tolerance.

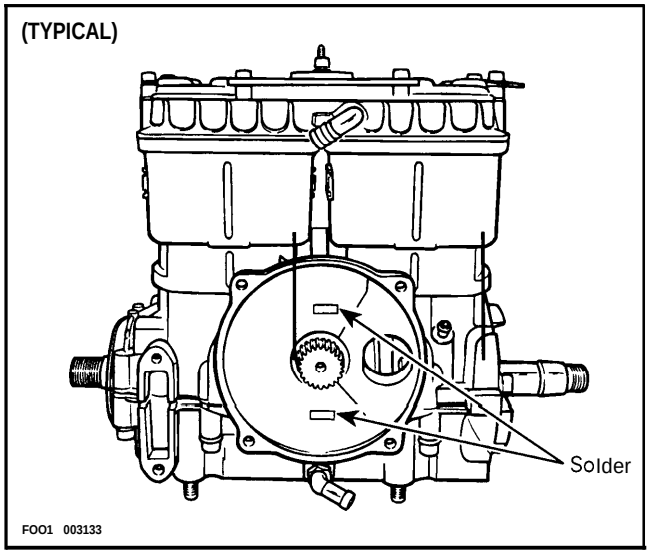

CHECKING SURFACE FLATNESS

Intake manifold, intake manifold cover, rotary valve cover can be checked for perfectly mating surfaces.

Lay part on a surface plate (marble, mirror or thick glass plate).

Holding down one end of part, try pushing down the other end.

If any play is felt, part must be rectified.

RECTIFYING SURFACES

Stick a fine sand paper sheet on the surface plate then lightly oil the sand paper.

Rub manifold mating surface on sand paper using 8-figure movements.

Sand until mating surface is perfectly straight.

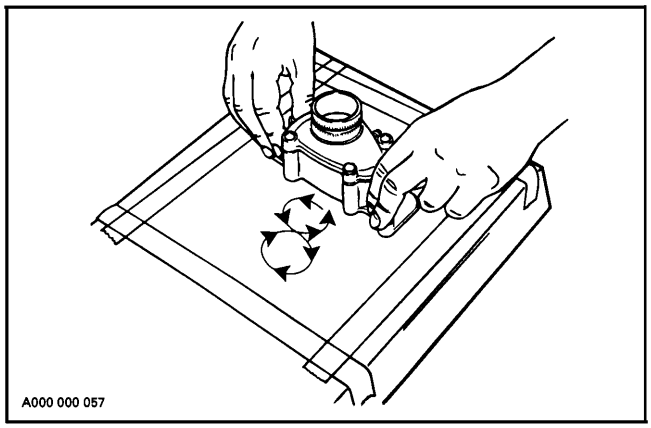

CHECKING CRANKSHAFT ALIGNMENT

Install a degree wheel (P/N 4143529 00) on crankshaft end.

Remove both spark plugs.

Install a TDC gauge (P/N 4141047 00) in spark plug hole on MAG side,

Bring MAG piston at top dead center.

Rotate degree wheel (not crankshaft) so that 360° mark aligns with center of crankcase. Scribe a mark on crankcase.

Remove TDC gauge and install it on PTO side.

Bring PTO piston to top dead center.

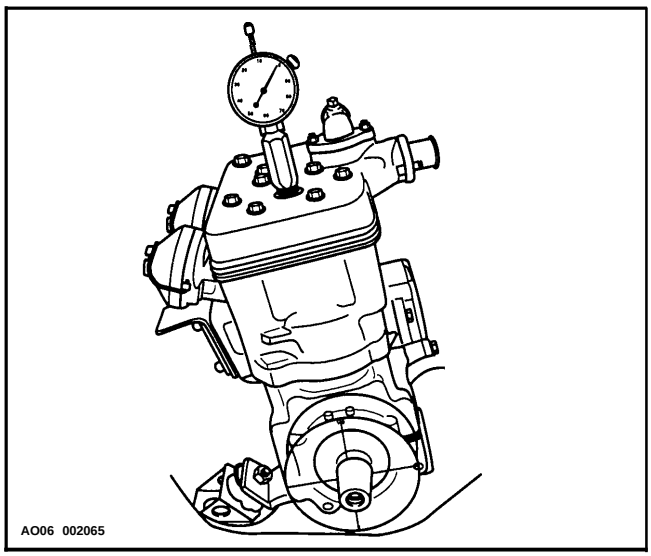

Interval between cylinders must be exactly 180°, 120° for 779 engine.

Any other reading indicates a misaligned crankshaft.

CDI SYSTEM

NIPPONDENSO IGNITION SYSTEM WITH SINGLE GENERATING COIL

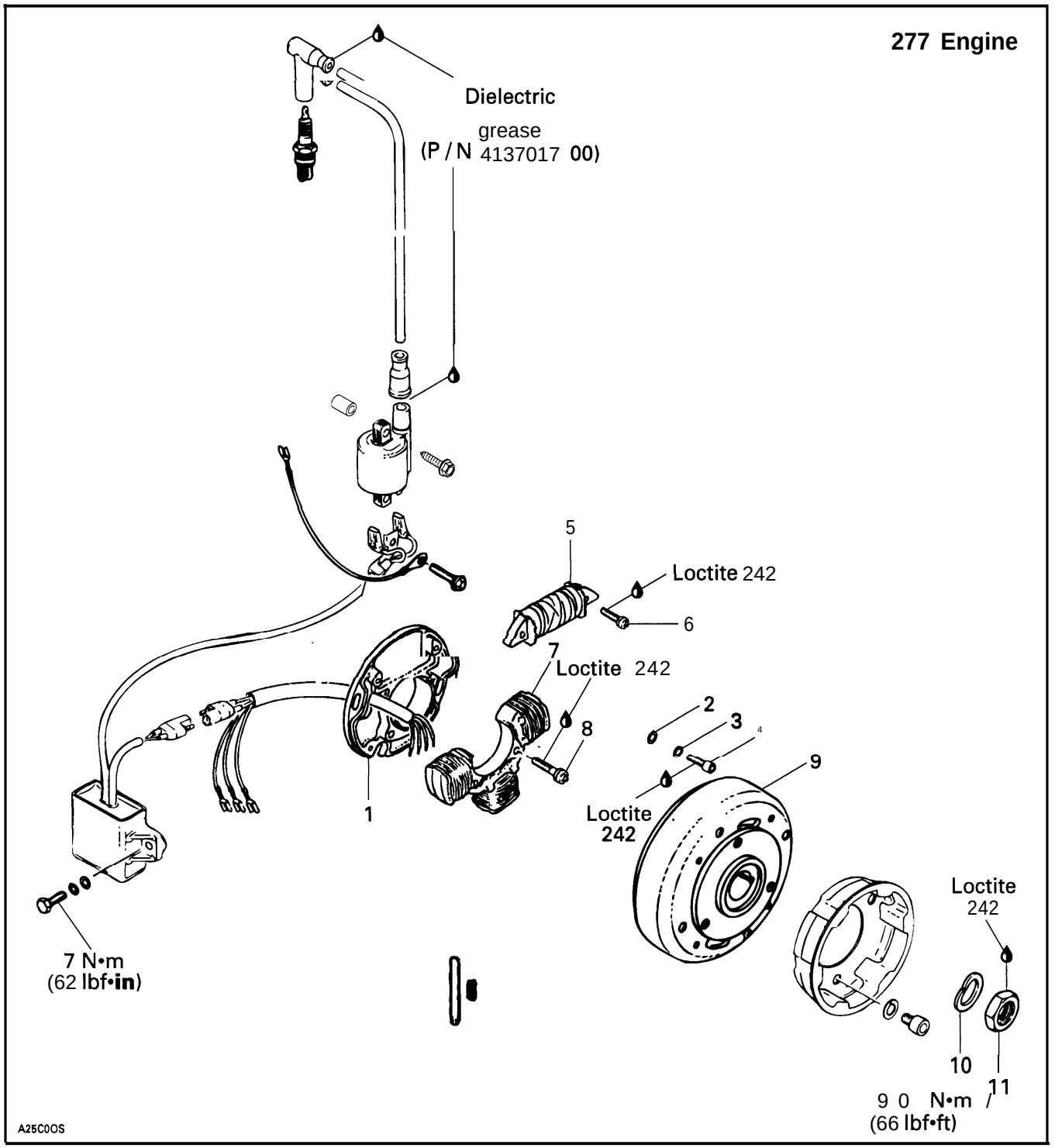

NOTE : The following procedures can be done without removing the engine from chassis.

CLEANING

Clean all metal components in a non-ferrous metal cleaner.

CAUTION : Clean armature and magneto using only a clean cloth.

DISASSEMBLY

11, Magneto Flywheel Nut

To gain access to magneto assembly, remove the following parts as needed on different engines :

— tuned pipe and muffler

— oil injection pump mounting plate from rewind starter

— rewind starter

— starting and V-belt pulleys

NOTE : Before disassembling armature plate, indexing marks should be scribed to facilitate reassembly.

To remove magneto flywheel retaining nut, install puller ring (P / N 420 8760 80) and M8 x 20 screws.

— Remove magneto flywheel nut, using a 30 mm socket machined to 40 mm (1.580 in) outside diameter by 16 mm (5/8 in) long.

NOTE : To correctly remove a threadlocked fastener it is first necessary to tap on the fastener to break threadlocker bond. This will eliminate the possibility of thread breakage.

9, Magneto Flywheel

To remove magneto flywheel, install the magneto puller (P / N 529 0225 00).

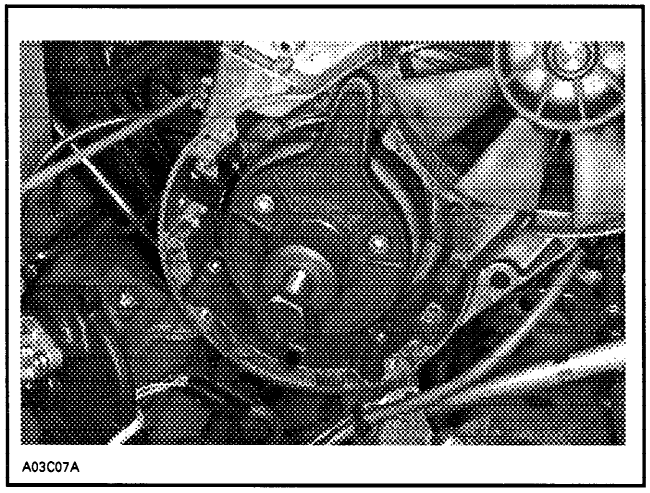

A03C07A

TYPICAL

— Tighten puller bolt and at same time, tap on bolt head using a hammer to release magneto flywheel from its taper.

REPAIR

2, Ignition Generator Coil

To replace generator coil :

— Heat the armature plate to 93°C (200°F) around the screw holes to break the threadlocker bond.

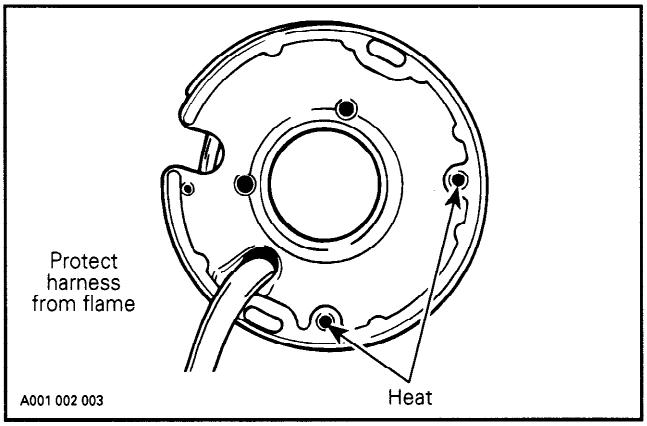

A001 002 003

CAUTION : Protect harness from flame.

— Remove screws.

— Uncrimp and unsolder BLACK / RED wire from coil terminal.

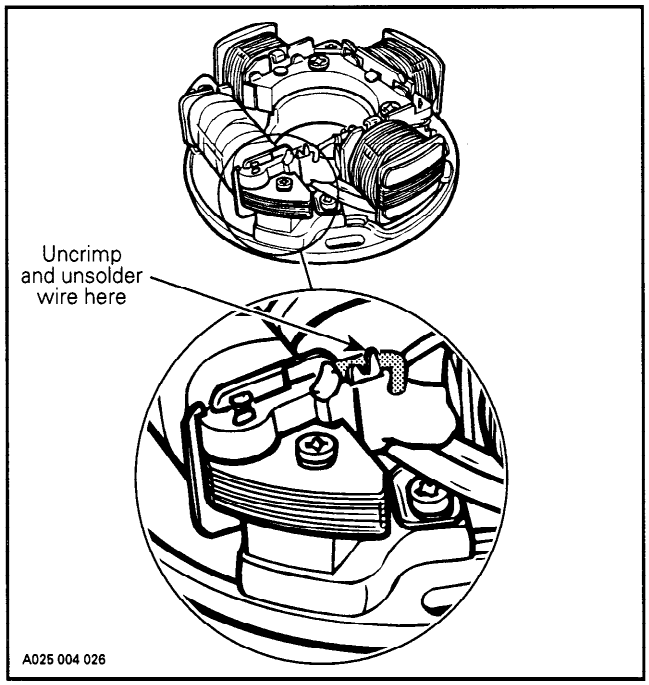

A025 004 026

— Strip end of old wire then crimp and solder on new coil.

6,8, Screw and Loctite 242 (Blue)

Apply Loctite 242 (blue) to screws and install the new coil on armature plate.

Use magneto coil centering tool (P/ N 4208769 22) and install it so that it fits around armature plate before tightening screws.

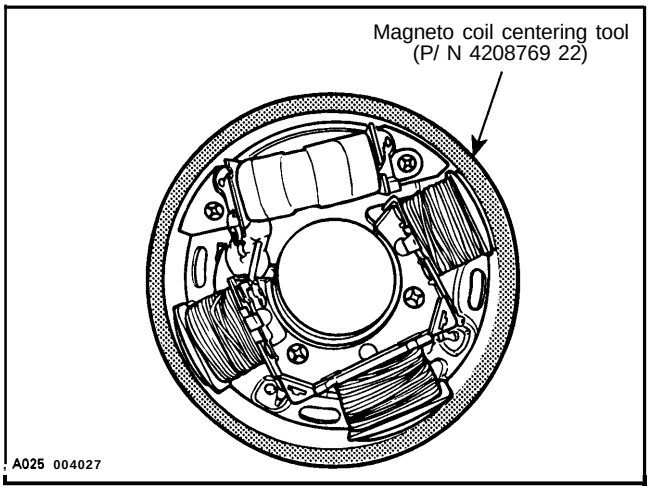

CAUTION : Before reinstalling the magneto, remove the loose epoxy from harness.

7, Lighting Generator Coil

To replace lighting generator coil :

— Heat the armature plate to 93°C (200°F) around the screw holes to break the threadlocker bond.

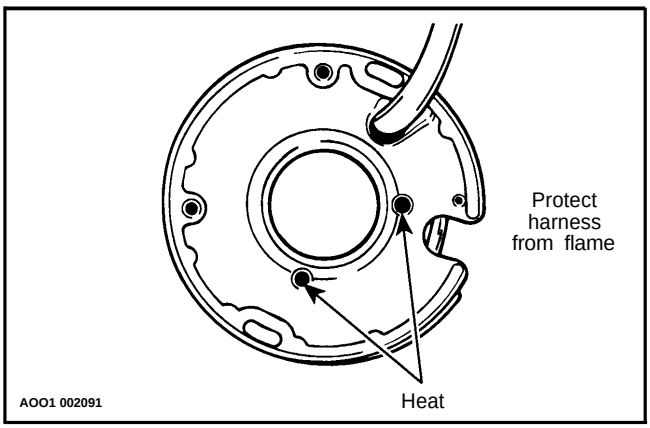

CAUTION : Protect harness from flame.

— Remove screws.

— Uncrimp and unsolder YELLOW and YELLOW/ BLACK wires from coil terminals.

— Uncrimp and unsolder ground wire (BLACK) from coil core.

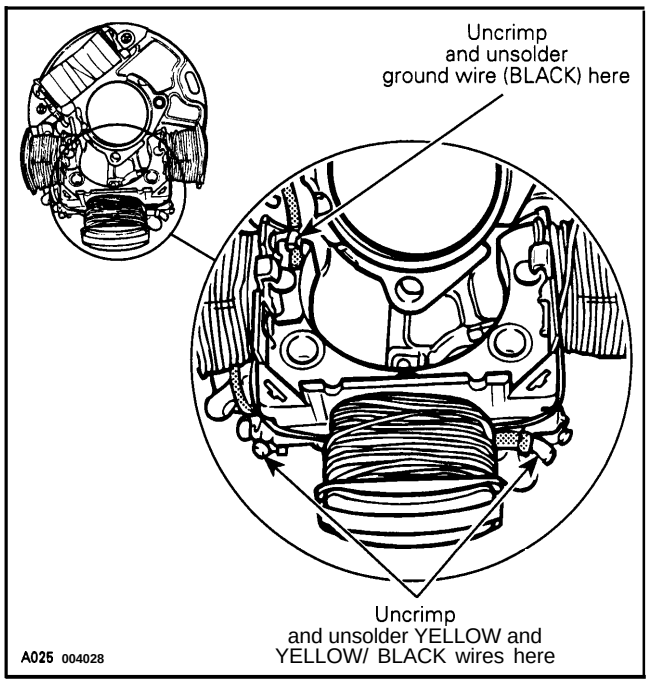

– Position new coil, crimp and solder all wires.

8, Lighting Generator Coil Screw

— Prior to assembly, apply Loctite 242 (blue).

Use magneto coil centering tool (P/ N 4208769 22) and install it so that it fits around armature plate before ightening screws.

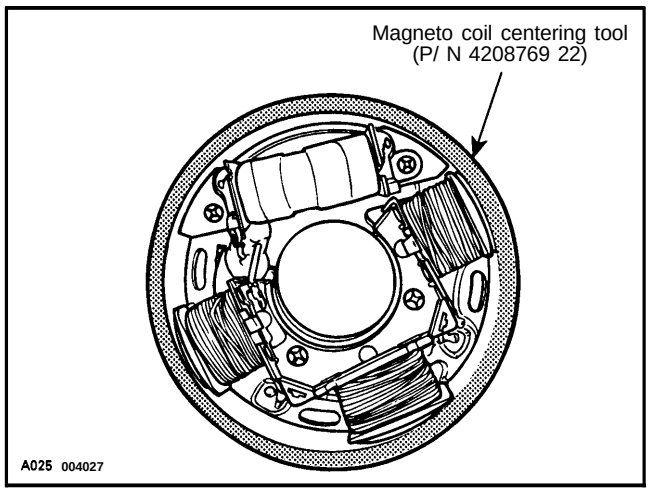

CAUTION : Before reinstalling magneto, remove the loose epoxy from harness.

ASSEMBLY

1,2,3,4, Armature Plate, Washer, Lock Washer and Screw

Position the armature plate on the crankcase, aligning the marks on both parts.

Put a drop of Loctite 242 (blue) on screw threads and tighten.

Clean crankshaft extension (taper).

Apply Loctite 242 (blue) on taper.

9,10,11, Flywheel, Lock Washer and Nut

Position Woodruff key, magneto flywheel and lock washer on crankshaft.

Clean nut threads and apply Loctite 242 (blue) before tightening nut.

Torque nut to 90 N•m (66 lbf•ft).

At reassembly coat all electric connections with silicone dielectric grease (P/ N 4137017 00) to prevent corrosion or moisture penetration.

CAUTION : Do not use silicone “sealant”, this product will corrode contacts.

Ignition Timing

Check ignition timing as described in IGNITION TIMING 06-02.

DUCATI IGNITION SYSTEM

377, 503 **Engines**

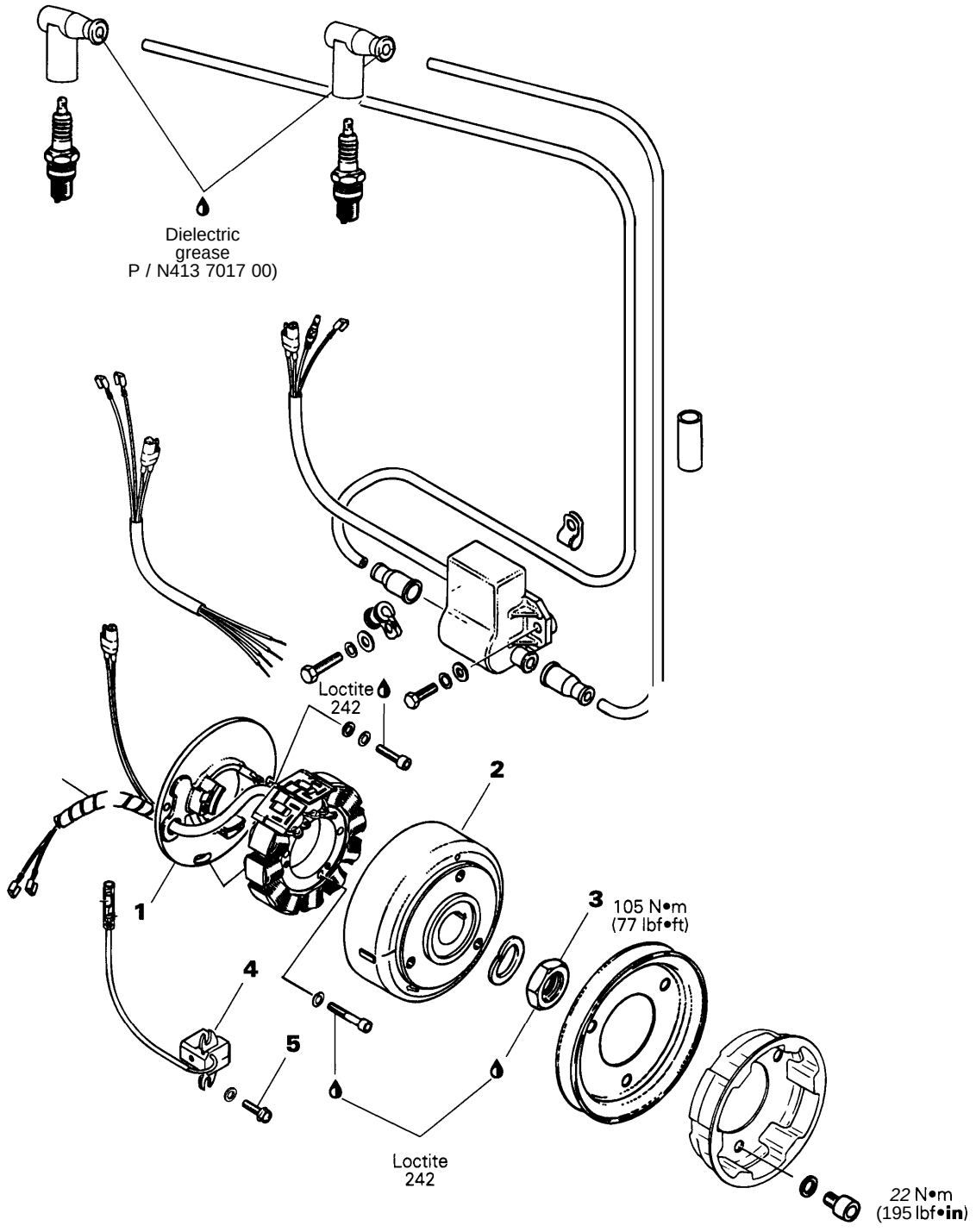

A025 004029

NOTE : The following procedures can be done without removing the engine from chassis.

CLEANING

Clean all metal components in a non-ferrous metal cleaner.

CAUTION : Clean armature and magneto using only a clean cloth.

DISASSEMBLY

3, Magneto Flywheel Nut

To gain access to magneto assembly, remove the following parts as needed on different engines :

— tuned pipe and muffler

— oil injection pump mounting plate from rewind starter

— rewind starter

— starting and V-belt pulleys

NOTE : Before disassembling armature plate, indexing marks should be scribed to facilitate reassembly.

To remove magneto flywheel retaining nut, install puller ring (P / N 420 8760 80) and M8 x 20 screws.

— Remove magneto flywheel nut, using a 30 mm socket machined to 40 mm (1.580 in) outside diameter by 16 mm (5/8 in) long.

NOTE : To correctly remove a threadlocked fastener it is first necessary to tap on the fastener to break threadlocker bond. This will eliminate the possibility of thread breakage.

2, Magneto Flywheel

To remove magneto flywheel, install the magneto puller (P / N 529 0225 00).

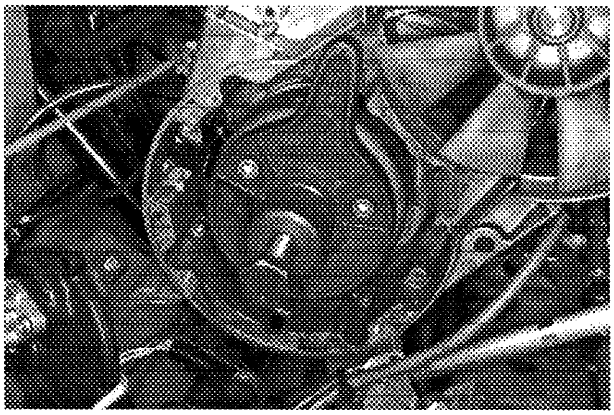

A03C07A

— Tighten puller bolt and at the same time, tap on bolt head using a hammer to release magneto flywheel from its taper.

REPAIR

2, Ignition Generator Coil

To replace generator coil :

— Heat the armature plate to 93°C (200°F) around the screw holes to break the threadlocker bond.

4,9, Trigger Coil and Screw

To replace trigger coil :

— Disconnect trigger coil wire (RED).

— Remove grommet from crankcase where trigger coil wire exits magneto housing.

— Remove retaining screws.

— Remove trigger coil and carefully pull wire.

— Install new trigger coil and other parts removed.

Adjustment

Whenever the trigger coil or the magneto flywheel is removed or replaced, the air-gap between the trigger coil and the flywheel protrusion must be checked and adjusted. The purpose of this adjustment is to obtain the minimum clearance between these parts - without touching at any RPM - so that the trigger coil produces its proper electrical output. Ignition timing must also be checked.

Proceed as follows :

1. Rotate flywheel so that one protrusion aligns with trigger coil.
2. Using a feeler gauge of 0.45 mm (.018 in) to 0.55 mm (.022 in) thick, check air-gap between center pole of trigger coil and flywheel protrusion.
3. If necessary, adjust by slackening retaining screws and moving trigger coil toward or away of protrusion.
4. Retighten screws and recheck air-gap.

Adjusting trigger coil air-gap.

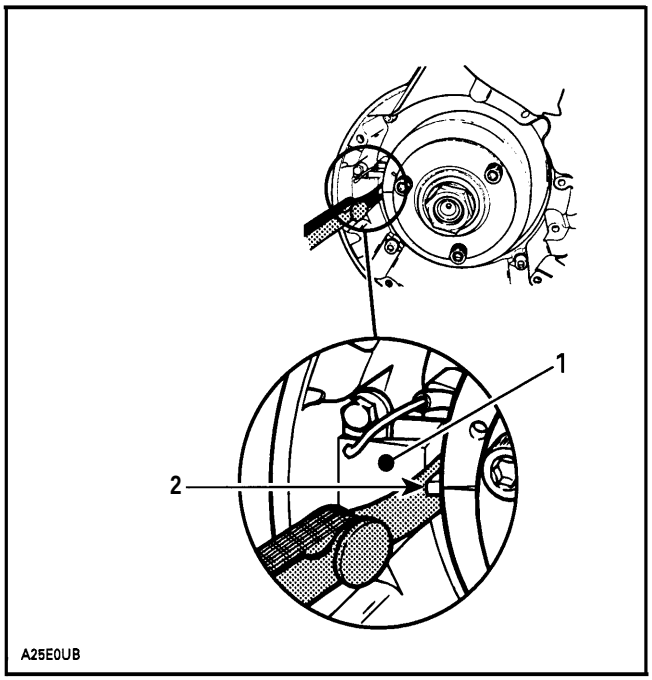

1. Trigger coil
2. Flywheel protrusion

1, Armature with Armature Plate

To replace armature :

— disconnect the 2-wire connector (GREEN and WHITE wires).

— Disconnect YELLOW/ BLACK and YELLOW wires.

— Remove grommet from crankcase where magneto harness exits magneto housing.

— Remove armature plate retaining screws.

— Remove armature plate with armature and carefully pull wires.

— Install new parts and other parts removed.

ASSEMBLY

2,3, Magneto Flywheel and Nut

Clean crankshaft extension (taper).

Apply Loctite 242 (blue) on taper.

Position Woodruff key, flywheel and lock washer on crankshaft.

Clean nut threads and apply Loctite 242 (blue) before tightening nut to 105 N•m (77 lbf•ft).

At reassembly coat all electric connections with silicone dielectric grease (P/ N 4137017 00) to prevent corrosion or moisture penetration.

CAUTION : Do not use silicone “sealant”, this product will corrode contacts.

Ignition Timing

Check as described in IGNITION TIMING 06-02.

OIL INJECTION SYSTEM

OIL INJECTION PUMP

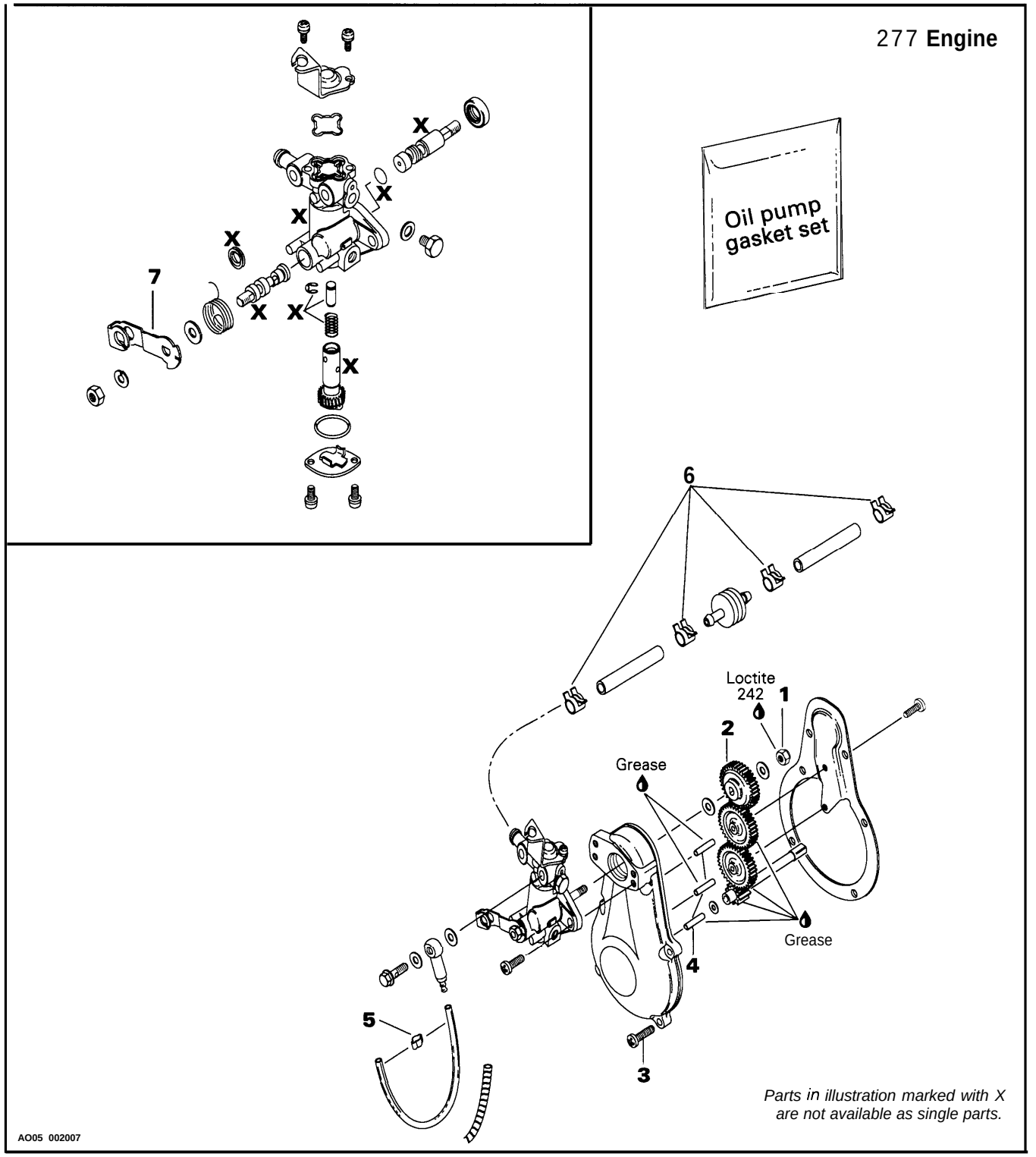

Parts in illustration marked with X are not available as single parts.

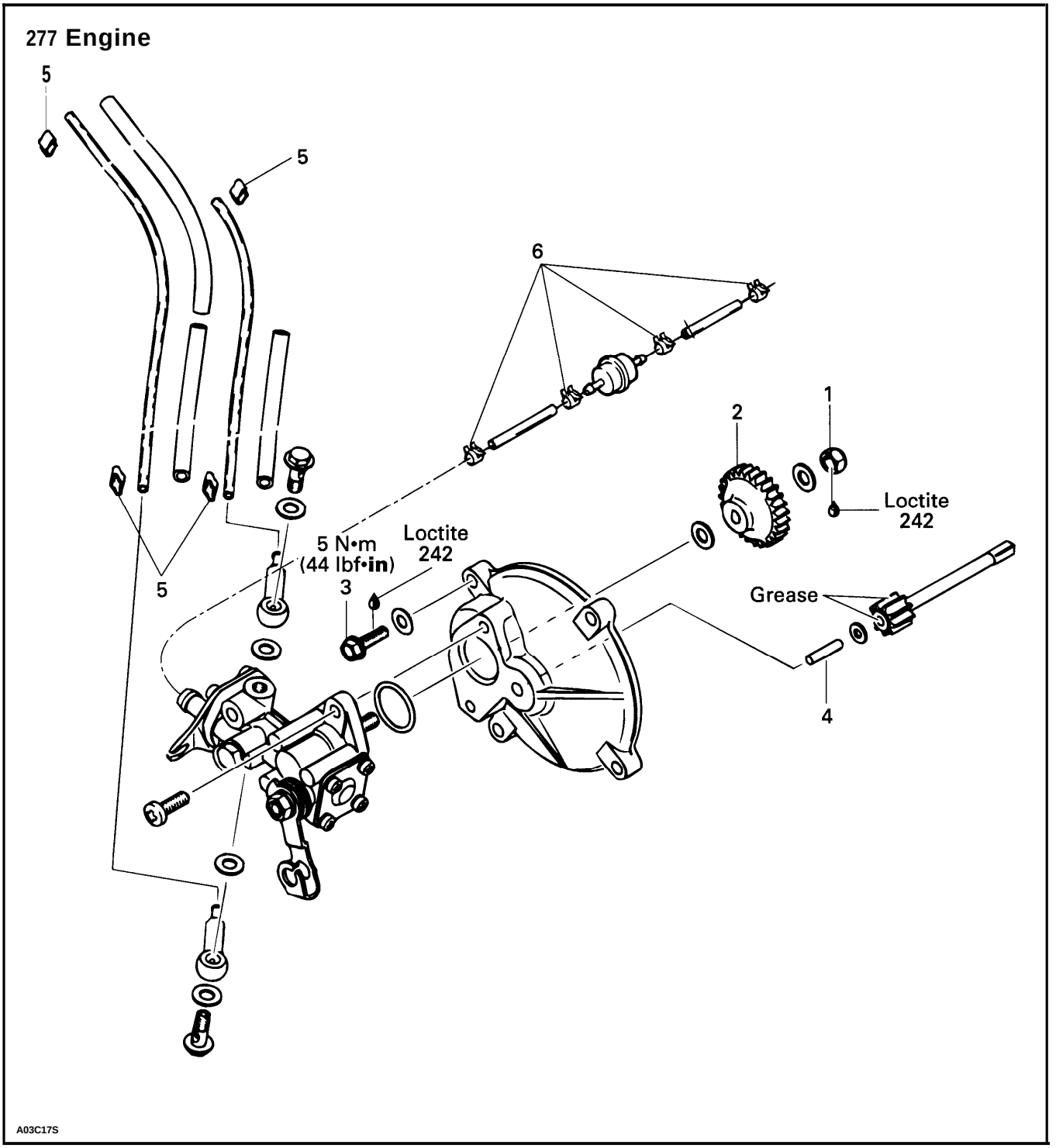
277 Engine
5
5
6
1
2
Loctite
242
5 N•m
(44 lbf•in)
Loctite
242
3
5
Grease
4
A03C17S

OIL PUMP IDENTIFICATION

7, Pump Lever

Different engines need different pumps. Oil pumps are identified on their levers.

CAUTION : Always mount proper pump on engine.

ENGINE TYPE	OIL PUMP IDENTIFICATION
277	**135** T
377	L4
443	E4
503	E4

NOTE : The following procedures can be done without removing the engine from chassis.

CLEANING

Clean all metal components in a non-ferrous metal cleaner.

DISASSEMBLY

NOTE : Some oil pump components are not available as single parts.

1,2, Gear Retaining Nut and Oil Pump Gear

To remove gear retaining nut, first extract the needle roller with pliers then lock gear in place using one of the following gear holder :

ENGINE TYPE	TOOL P / N
377 / 443/ 503	420876695

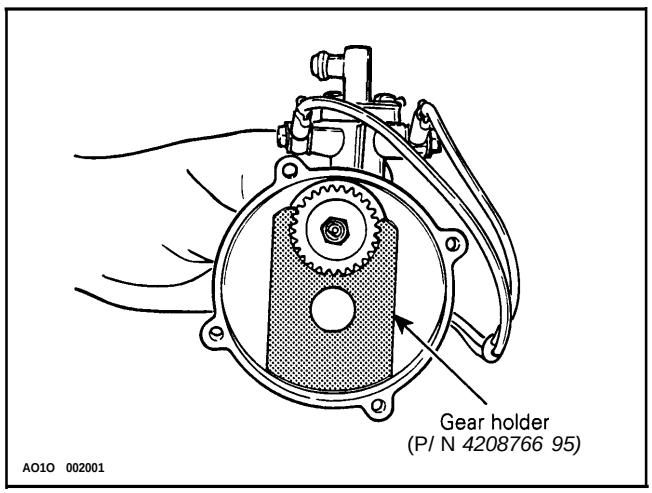

ASSEMBLY

2, Oil Pump Gear

At gear assembly, apply a light coat of low temperature grease (P/ N 4137061 00) on gear teeth,

4, Needle Roller

The needle roller must be engaged as deep as possible in the pump mounting flange.

5,6, Spring Clip and Clamp

Always check for spring clips and clamps tightness.

3, Screw

Torque to 5 N•m (44 lbf•in).

All Models

Make sure cable barrel is well seated in oil pump lever.

Secure barrel with plastic washer and circlip.

Verify cable and oil pump lever operation.

ADJUSTMENT

Prior to adjusting the pump, make sure all carburetor adjustments are completed.

Synchronizing Pump with Carburetor :

Eliminate the throttle cable free-play by pressing the throttle lever until a light resistance is felt, then hold in place. The aligning marks on the pump casting and on the lever must align. If not, loosen the adjuster nut and adjust accordingly.

Retighten the adjuster nut.

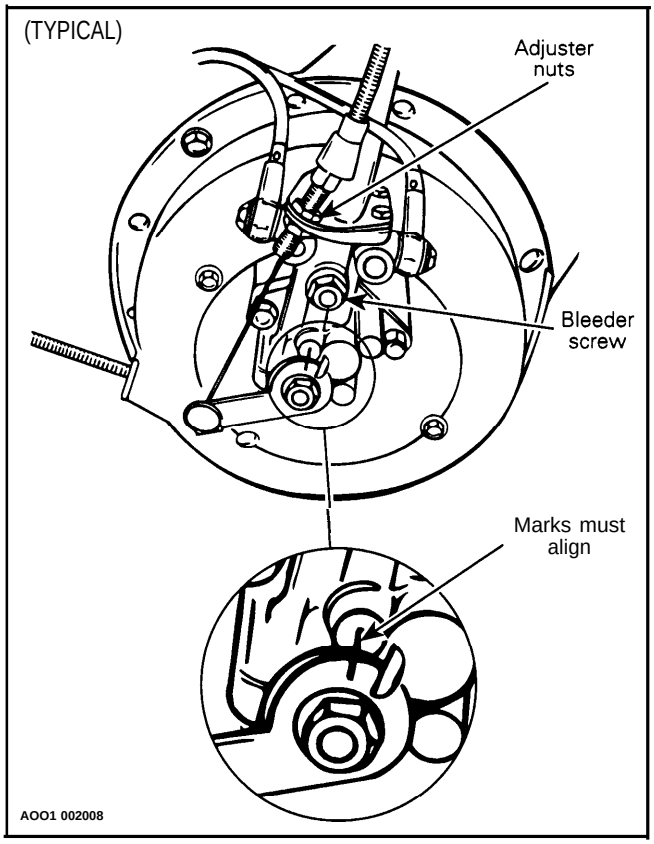

CAUTION : Proper oil injection pump adjustment is very important. Any delay in the opening of the pump can result in serious engine damage.

To Bleed Oil Lines :

All oil lines should be full of oil. If required, bleed the main oil line (between tank and pump) by loosening the bleeder screw until all air has escaped from the line.

Make sure the tank is sufficiently filled.

Check the small oil lines (between pump and intake manifold). If required, fill the lines by running the engine at idle speed while holding the pump lever in fully open position.

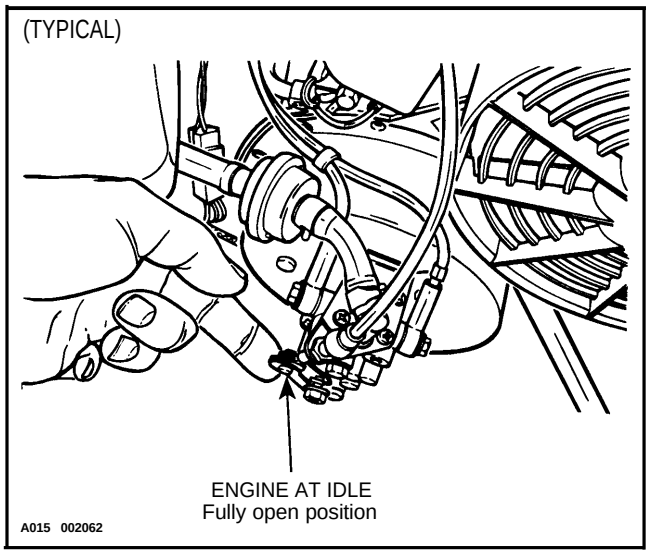

WARNING : Ensure not to operate carburetor throttle mechanism. Secure the rear of the vehicle on a stand.

CHECKING OPERATION

On Vehicle

NOTE : Main oil line must be full of oil. See bleeding procedure above.

Lift rear of vehicle and support with a mechanical stand. Unbolt banjo fittings from pump. Start engine and stop it as soon as it fires.

Check that oil level in small oil lines is passed banjo fittings end by about 25 mm (1 in) (this will be indicated by a clear section of small oil lines of about 25 mm (1 in)). Repeat the procedure until this condition is attained.

Reconnect banjo fittings with a washers on each side, start engine and run at idle while holding the pump lever in fully open position. Oil columns must advance into small oil lines.

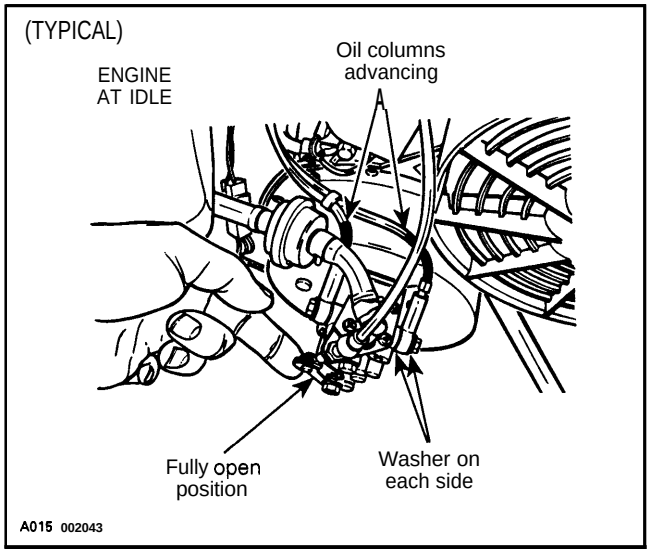

If not, remove pump assembly and check the pump gear and drive shaft (if applicable) for defects, replace as necessary. Test pump as describes below.

NOTE : Through normal use, oil level must not drop in small tubes. If oil drops, verify check valve operation in banjo fittings. Replace as necessary.

Oil Pump Test Bench

Connect a hose filled with injection oil to main line fitting. Insert other hose end in an injection oil container. Using a counterclockwise rotating drill rotate pump shaft. Oil must drip from outer holes while holding lever in a fully open position. If not replace pump,

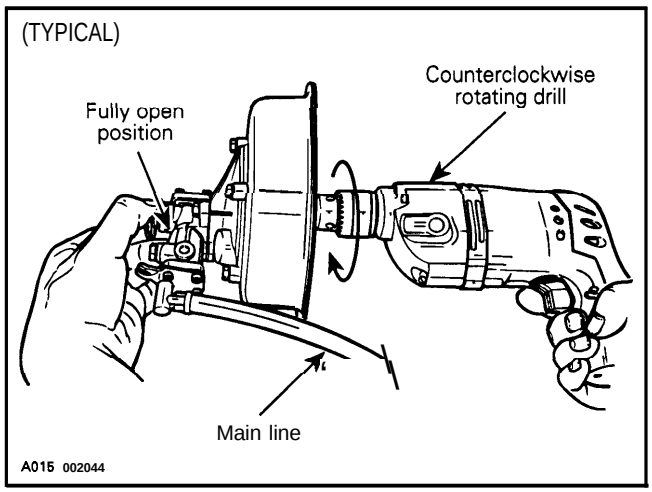

AXIAL FAN COOLING SYSTEM

NOTE : For 247 and 277 engine radial fan cooling system, refer to 247 and 277 engine types 04-01.

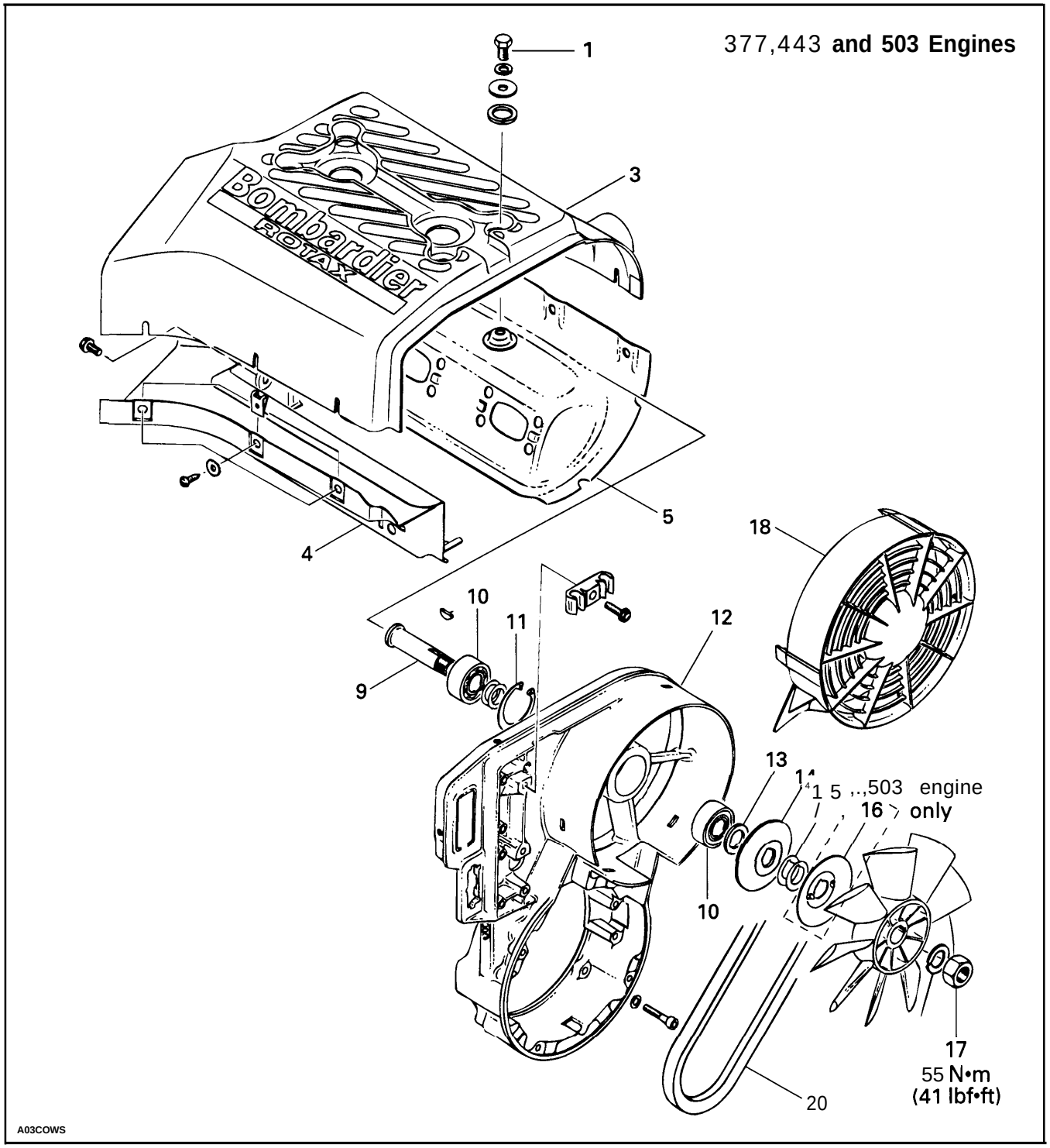

O NOTE : The following procedures can be done without removing engine from chassis.

CLEANING

Clean all metal components in a non-ferrous metal cleaner.

DISASSEMBLY AND ASSEMBLY

17, Fan Nut

Remove fan protector

To remove or install fan pulley retaining nut, lock fan pulley with special holder wrench (P/ N 4208763 57). At assembly, torque nut to 65 N•m (48 lbf•ft).

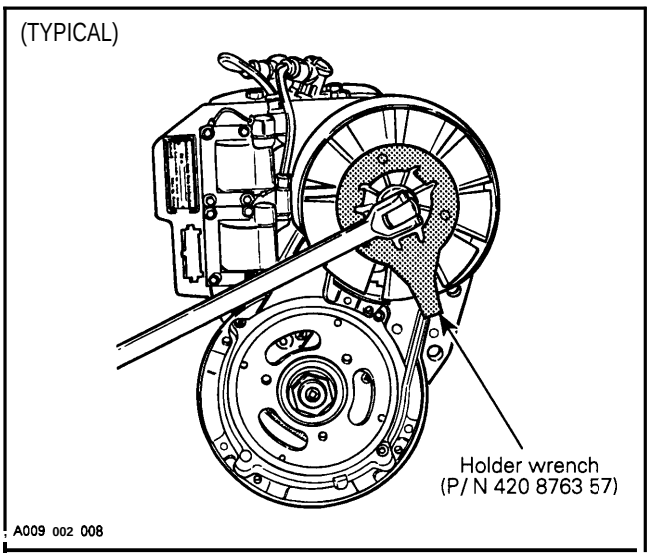

13,14,15,16,20, Distance Sleeve, Pulley Halves, Shim and V-belt

Fan belt deflection must be as specified when applying the proper force midway between pulleys.

ENGINE TYPE	BELT DEFLECTION	FORCE APPLIED
377, 443	8.5 mm (1 1/32 in)	5 kg (11 lb)
503	9.5 mm (3/8 in)	

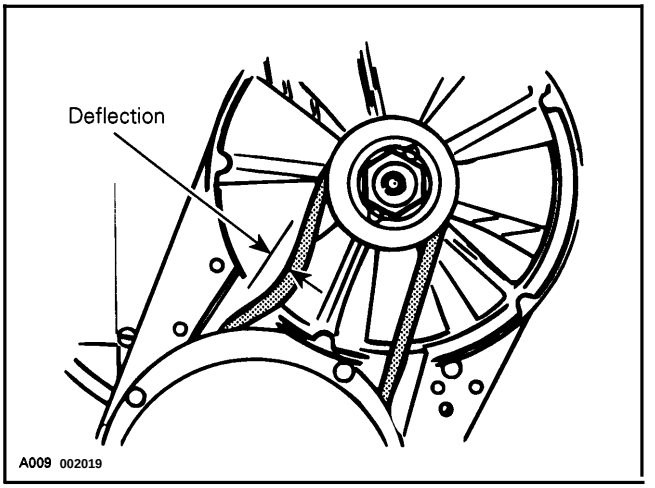

To adjust tension, add or remove shim(s) between pulley halves. Install excess shim(s) between distance sleeve and half pulley (housing side).

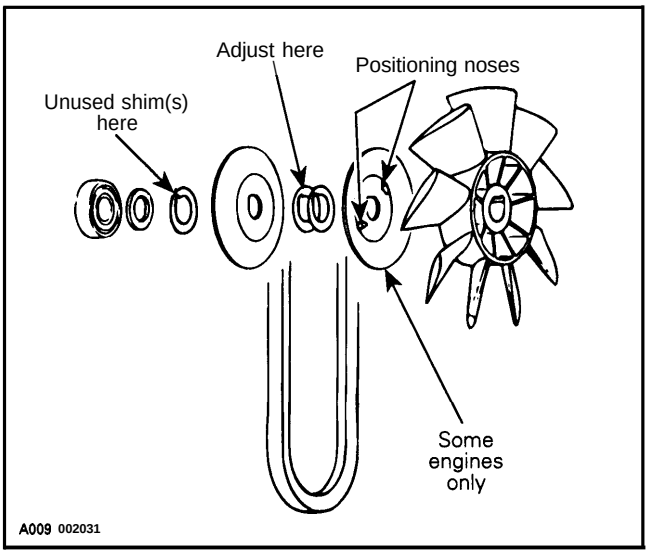

Some engines have a separate metal pulley half instead of using back of fan as pulley half. On first mentioned engines, select pulley halves so that the one with 2 positioning noses will be on fan side. Ensure to insert these noses into fan notches.

9, Fan Shaft

Using a press, drive the fan shaft out.

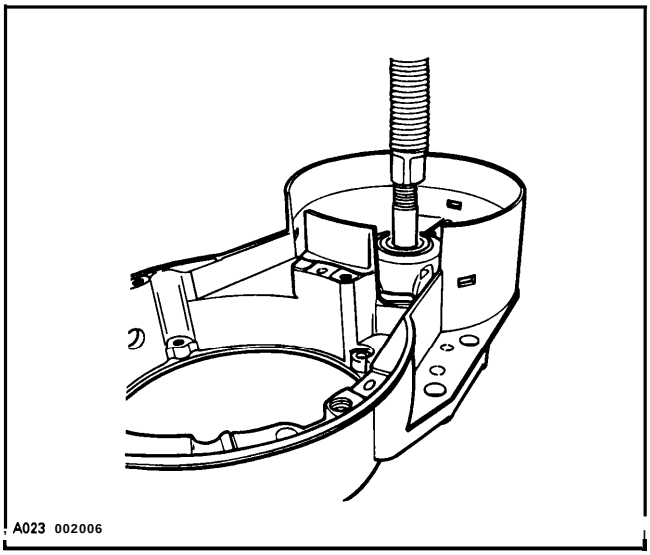

10,12, Bearing and Fan Housing

Support fan housing with a ring. With a punch, working all around bearing inner race, drive bearing out of fan housing. Keep shims for installation.

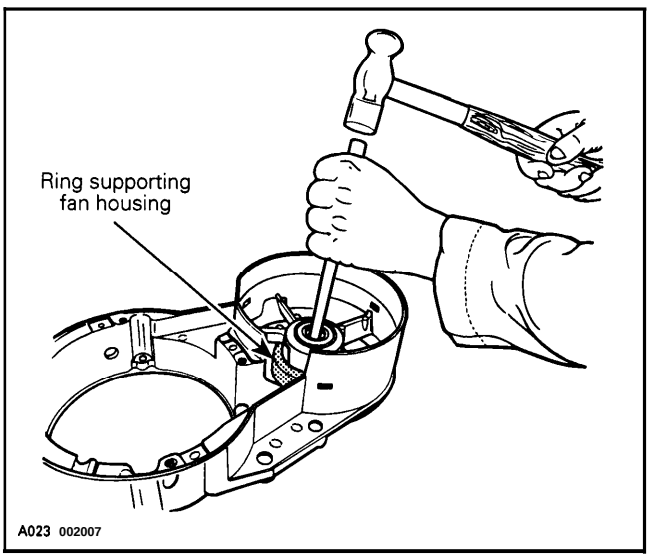

10,11, Bearing and Circlip

Remove circlip then remaining bearing.

To install, press one bearing in place then install circlip and shims. Press the other bearing from opposite side until it is flush with housing, Press fan shaft from engine side of fan housing. Check for free rolling action.

1,2,3, Screw, Loctite 242 (Blue) and Cylinder Cowl

At assembly, apply a light coat of Loctite 242 (blue) on threads. It should be noted that to correctly remove a threadlocked screw, it is first necessary to slightly tap on screw head to break threadlocker bond. This will eliminate the possibility of screw breakage.

6,7,8, Rivet, Washer and Air Duct

Check for damage or permanent deformation.

Air duct can be removed by drilling out rivets.

▼ CAUTION : At reassembly, use only closed end rivets to avoid rivet ends from falling into magneto.

Install washer over air duct.

On all engines, check fit of engine air duct with hood air duct, Adjust hood as necessary.

4,5, Cylinder Cowl

A gasket must be placed on both sides (inner and outer) of intake and exhaust holes of cylinder cowl.

18, Fan Protector

Reinstall properly.

◆ WARNING : Always reinsta I fan protector after servicing.

REWIND STARTER

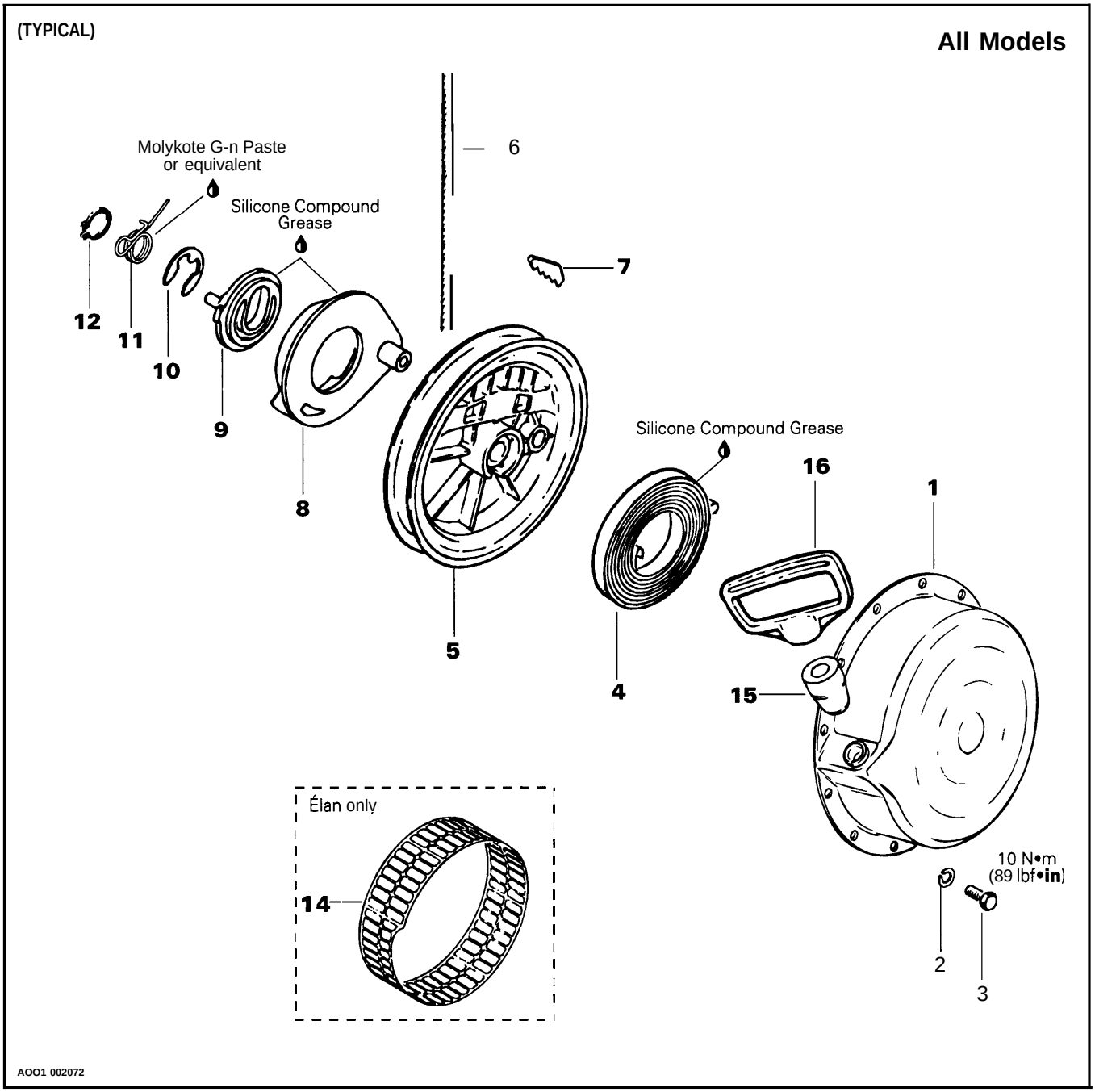

REMOVAL

16, Starter Grip

Using a small screwdriver, extract rope knot from starter grip. Cut rope close to knot.

1,2,3, Starter Housing, Lock Washer and Screw

Remove screws and washers securing rewind starter to engine then remove rewind starter.

On fan cooled models with oil injection pump remove pump from rewind starter cover.

DISASSEMBLY

To remove rope from rewind starter mechanism :

8,9,10,11,12, Pawl, Pawl Lock, Circlip, Locking Spring and Locking Ring

— First remove locking ring, locking spring, circlip, pawl lock and pawl.

1,5, Starter Housing and Rope Sheave

— Remove sheave from starter housing.

6,7, Starter Rope and Key

— Disengage key and pull out rope.

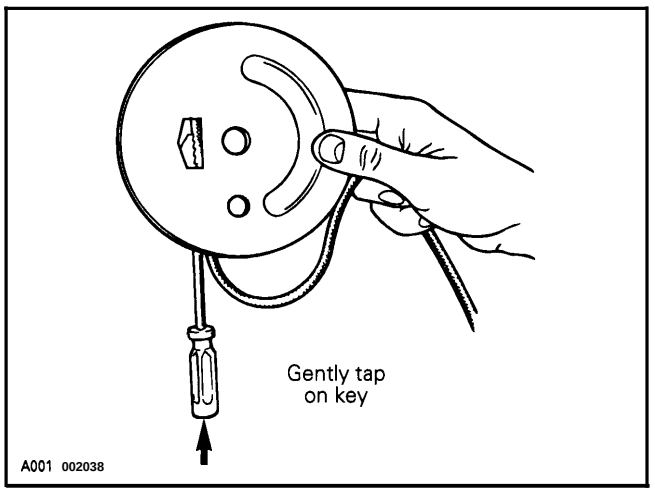

ASSEMBLY

4,18, Rewind Spring and Silicone Compound Grease

At assembly, position spring outer end into spring guide notch then wind the spring counterclockwise into guide.

◆ WARNING : Since the spring is tightly wound inside the guide it may fly out when rewind is handled. Always handle with care.

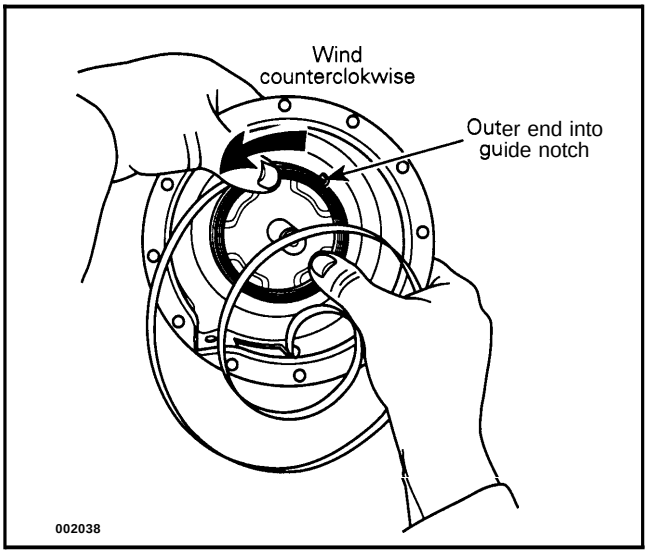

O NOTE : Due to dust accumulation, rewind starter must be periodically cleaned, inspected and relubricated.

▼ CAUTION : It is of the utmost importance that the rewind starter spring(s) be lubricated periodically using specific lubricants. Otherwise, rewind starter component life will be shortened and / or rewind starter will not operate properly under very cold temperatures.

Lubricate spring assembly with silicone compound grease (P/ N 4208970 61) and position into starter housing as illustrated.

▼ CAUTION : This lubricant must NOT be used on rewind starter locking spring as it does not stay on under vibration.

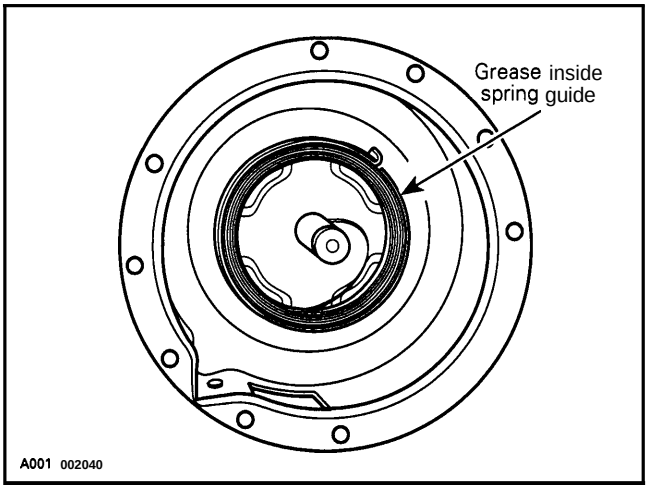

CAUTION : The use of standard multi-purpose grease could result in rewind starter malfunction.

5,6,7, Rope Sheave, Starter Rope and Key

To install a new rope : insert rope into sheave orifice and lock it with the key as illustrated.

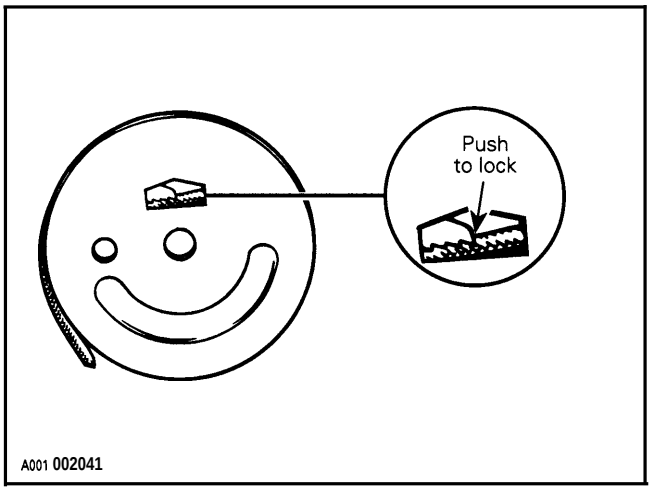

To adjust rope tension :

Wind rope on sheave and place rope sheave into starter housing making sure that the sheave hub notch engages in the rewind spring hook.

Rotate the sheave counterclockwise until rope end is accessible through starter housing orifice.

Pull the rope out of the starter housing and temporarily make a knot to hold it.

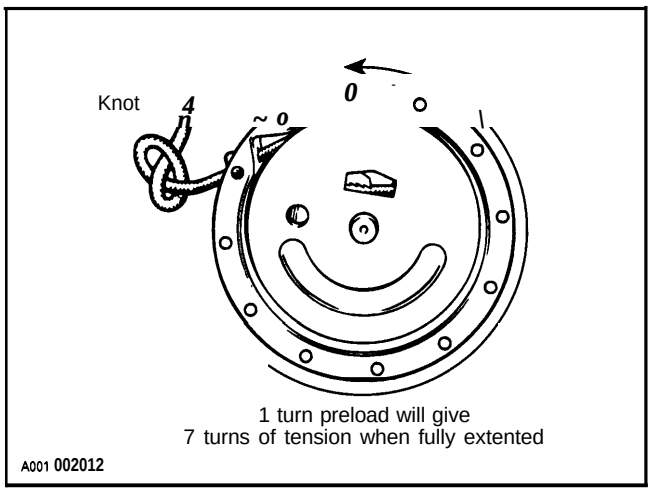

8,9,10, Pawl, Pawl Lock and Circlip

Position pawl, pawl lock and circlip.

11,17, Locking Spring and Molykote G-n Paste

Install locking spring and lubricate with MO LYKOTE G-n paste from Dow Corning® or equivalent.

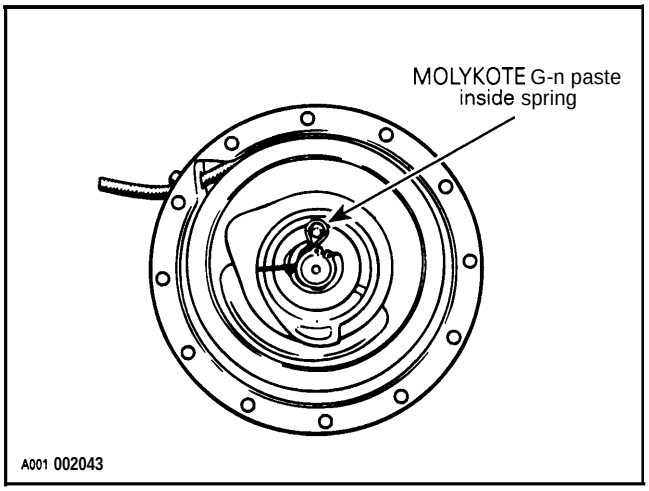

Install locking ring.

CAUTION : This lubricant must NOT be used on rewind springs as it does not stay on when dry.

INSTALLATION

On fan cooled models with oil injection pump, reinstall oil pump on rewind starter assembly.

Reinstall rewind starter assembly on engine.

6, Starter Rope

Thread starter rope through rope guide when applicable.

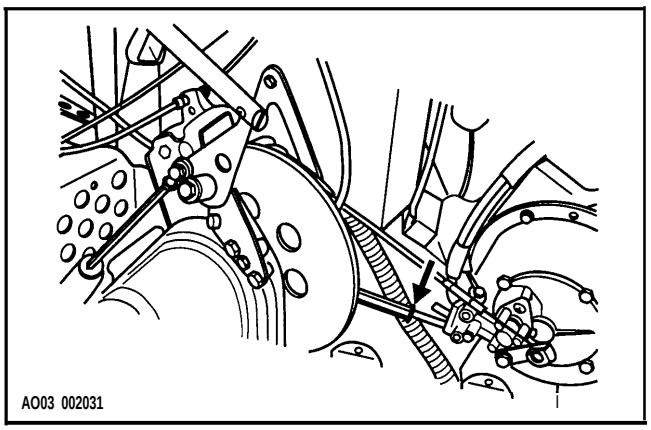

16, Starter Grip

Prior to installing starter grip on new rope, it is first necessary to fuse the rope end with a lit match. Pass rope through rubber buffer and starter grip and tie a knot in the rope end. Fuse the knot with a lit match then insert rope end down and pull the starter grip over the knot.

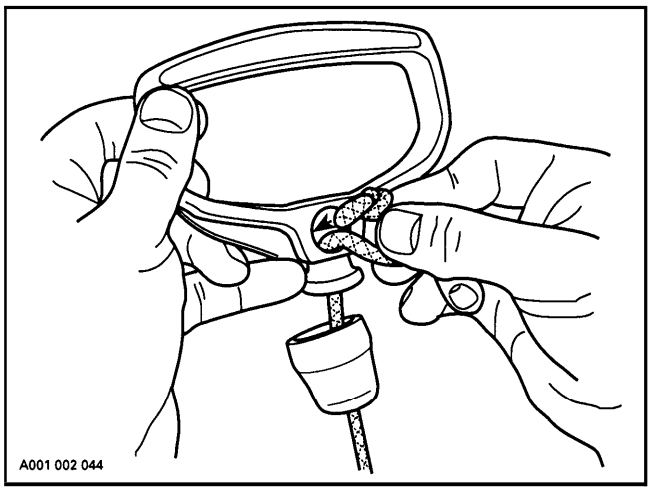

CARBURETOR AND FUEL PUMP

MIKUNI FLOAT CARBURETOR

List of engines and their respective carburetors

ENGINE TYPE	CARBURETOR MIKUNI NO.
247	VM 28-470
277	VM 34-443
377	PTO : VM 30-188 MAG : VM 30-188
443	PTO : VM 34-467 MAG : VM 34-468
503	PTO : VM 34-465 MAG : VM 34-466

Carburetor VM 28-470

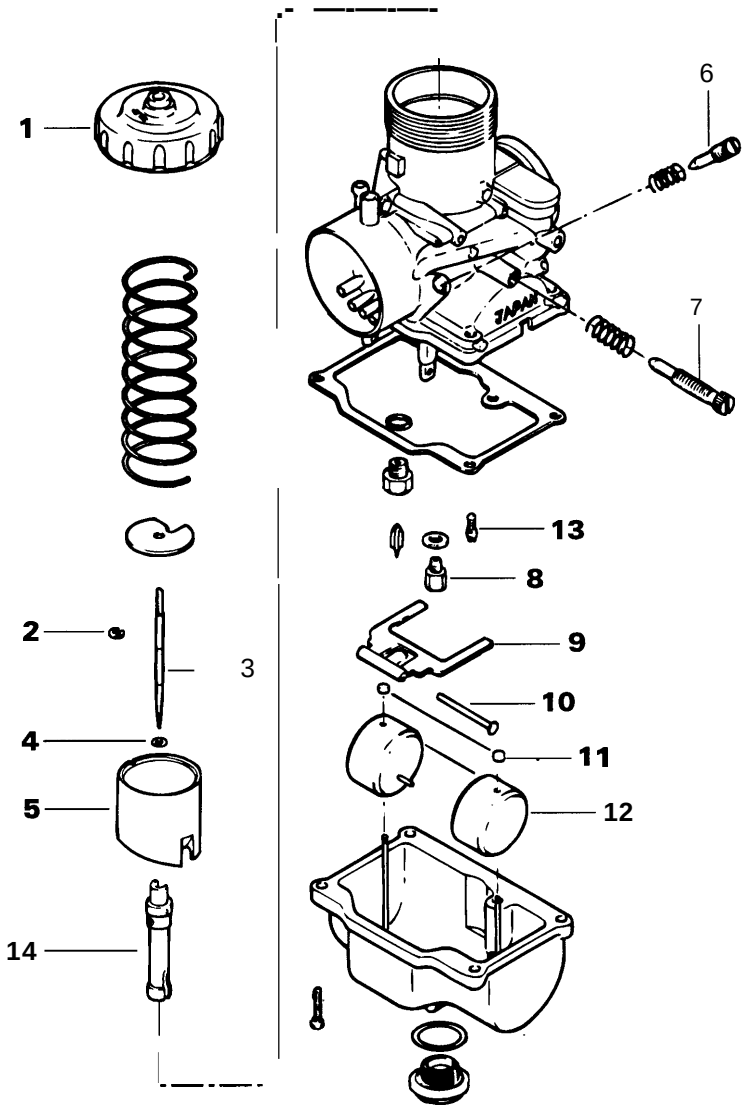

AO02 002073

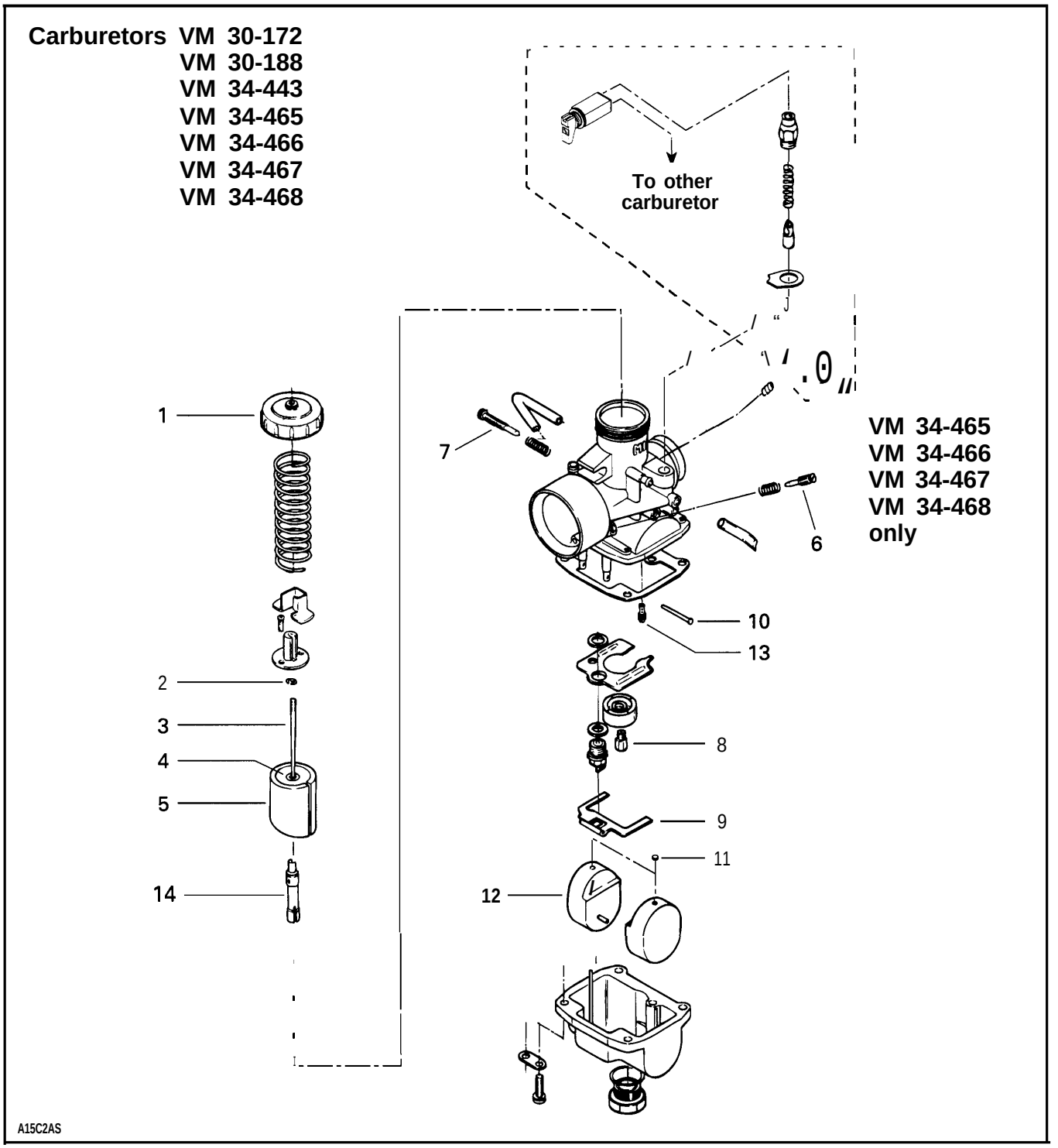
Carburetors VM 30-172
VM 30-188
VM 34-443
VM 34-465
VM 34-466
VM 34-467
VM 34-468
To other carburetor
VM 34-465
VM 34-466
VM 34-467
VM 34-468
only
1
2
3
4
5
6
7
8
9
10
11
12
13
14
A15C2AS

REMOVAL

Élan Only

Remove console.

All Models

Remove air silencer(s). For S-Series, see BATTERY 06-04.

Disconnect fuel inlet line.

Disconnect primer line from carburetor on some models.

Disconnect choke cable on some models.

1,5, Cover and Throttle Slide

Unscrew carburetor cover then pull out throttle slide from carburetor.

WARNING : Exercise care when handling throttle slide. Scratches incurred may cause throttle slide to stick open in operation.

Disconnect throttle cable from throttle slide.

Untighten rubber flange clamps then remove carburetor from engine.

CLEANING AND INSPECTION

The entire carburetor should be cleaned with a general solvent and dried with compressed air before disassembly.

CAUTION : Heavy duty carburetor cleaner may be harmful to the float material and to the rubber parts, O-rings, etc. Therefore, it is recommended to remove those parts prior to cleaning.

Carburetor body and jets should be cleaned in a carburetor cleaner following manufacturer's instructions.

WARNING : Solvent with a low flash point such as gasoline, naphtha, benzol, etc., should not be used as they are flammable and explosive.

Check inlet needle tip condition. If worn, the inlet needle and seat must be replaced as a matched set.

NOTE : Install needle valve for snowmobile carburetor only. It is designed to operate with a fuel pump system.

Check throttle slide for wear. Replace as necessary.

11,12, Cap and Float

Check for fuel inside float.

If fuel is noticed :

— Check cap for fuel tightness ; replace as necessary.

— Check float for cracks or other damage affecting fuel tightness ; replace as necessary.

DISASSEMBLY AND ASSEMBLY

NOTE : To ease the carburetor disassembly and assembly procedures it is recommended to use carburetor tool kit (P/ N 4041120 00).

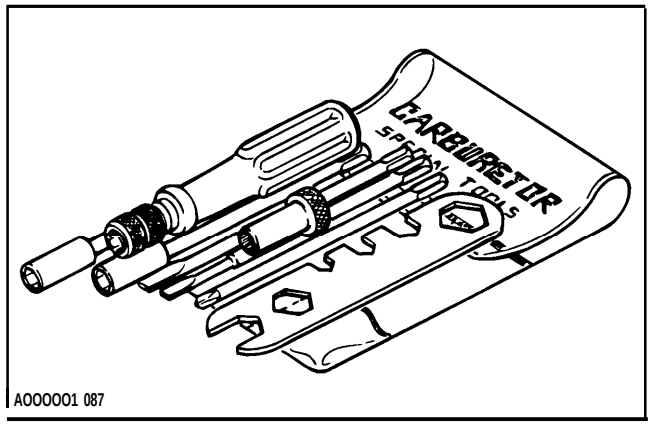

2,3, E-clip and Needle

All Models Except Élan

Remove screws from needle retaining plate to withdraw the needle.

The position of the needle in the throttle slide is adjustable by means of an E-clip inserted into 1 of 5 grooves located on the upper part of the needle. Position 1 (at top) is the leanest, 5 (at bottom) the richest.

NOTE : The last digit of the needle identification number gives the recommended position of the E-clip **from the top** of the needle.

Example : **6DH4-3**

Needle identification

Recommended position of the E-clip **from top**

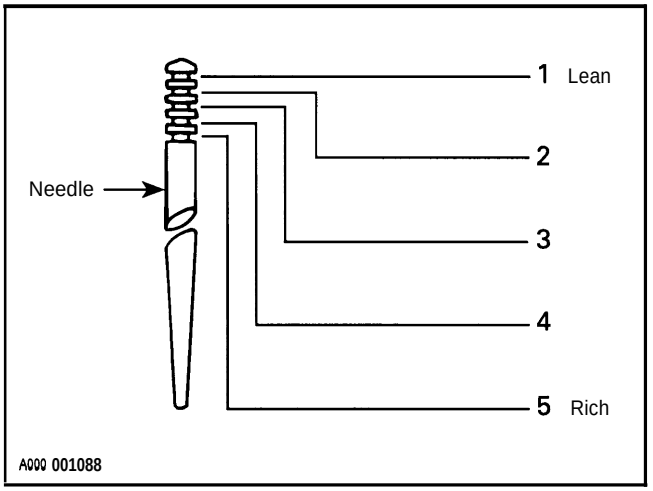

5, **Throttle Slide**

The size of the throttle slide cut-away affects the fuel mixture between 1/8 to 1/2 throttle opening. A certain amount of richness is needed for that particular range because this is where the transition from the low speed to the high speed circuit takes place.

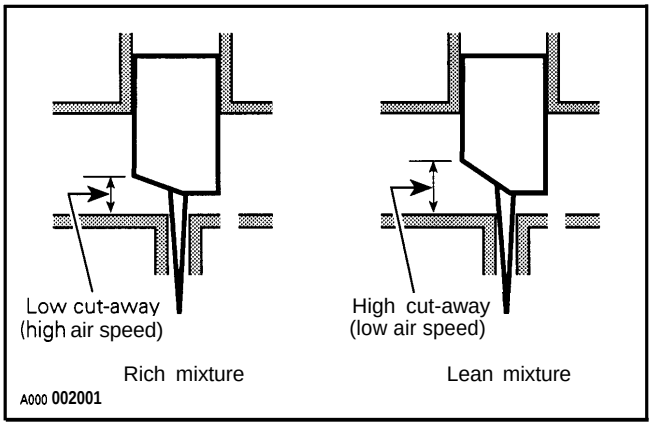

8, **Main Jet**

The main jet installed in the carburetor has been selected for a temperature of -20°C (0°F) at sea level. Different jetting can be installed to suit temperature and / or altitude changes. Always check spark plug tip and / or piston dome color to find out correct jetting.

CARBURETOR FLOAT LEVEL ADJUSTMENT

9,10, Float Arm and Float Arm Pin

Correct fuel level in float chamber is vital toward maximum engine efficiency. To check for correct float level proceed as follows :

— Remove float bowl and gasket from carburetor.

—With carburetor chamber upside-down on a level surface, measure height H between bowl seat and top edge of float arm._

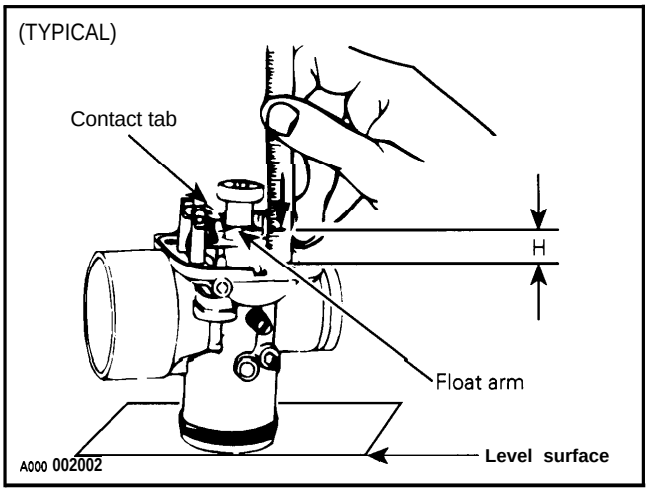

Float arm height dimensions :

CARBURETOR MODEL	FLOAT HEIGHT H ±1 mm	(± .040 in)
VM 28	17.3	(.681)
VM 30 VM 34	23.9	(.941)

To Adjust Height H :

— Bend the contact tab of float arm until the specified height is reached.

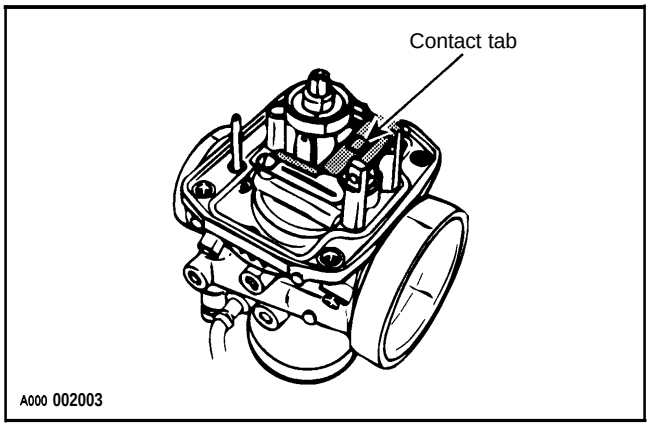

The illustration below shows which part of the carburetor begins and to stops to function at different throttle slide openings.

Note that the wider part of symbol corresponds to the opening mostly affected. For instance, throttle slide cut-away begins to function at close position but it is most effective at 1/4 opening and decreases up to 1/2 opening.

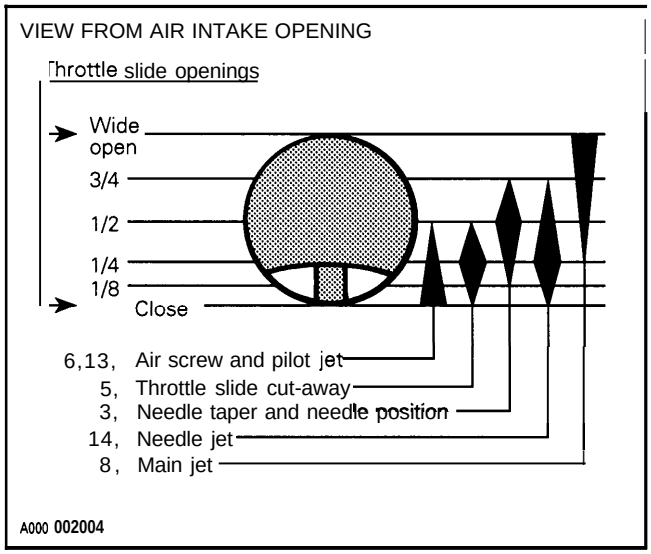

NOTE: For fine tuning refer to TECHNICAL DATA section 10 and to SPARK PLUG 06-03.

NOTE : For high altitude regions, the *High Altitude Technical Data* (P/N 484062400 and 484 054500 for binder) gives information about calibration according to altitude and temperature.

INSTALLATION

CAUTION : Never allow throttle slide(s) to snap shut.

To install carburetor on engine, inverse removal procedure.

However, pay attention to the following :

— Inspect throttle cable and housing prior to installation.

On applicable models, make sure to align tab of carburetor and air intake silencer (if applicable) with notch of adaptor(s). On applicable models, install adaptor with up mark facing up.

CAUTION : The rubber flange must be checked for cracks and /or damage. At assembly, the flange must be perfectly matched with the air intake manifold or severe engine damage will occur.

Install clamps in a way that their tightening bolts are staggered — not aligned.

Offset Post Retaining

Élan Only

When installing throttle cable end in throttle slide, hook up cable in throttle slide.

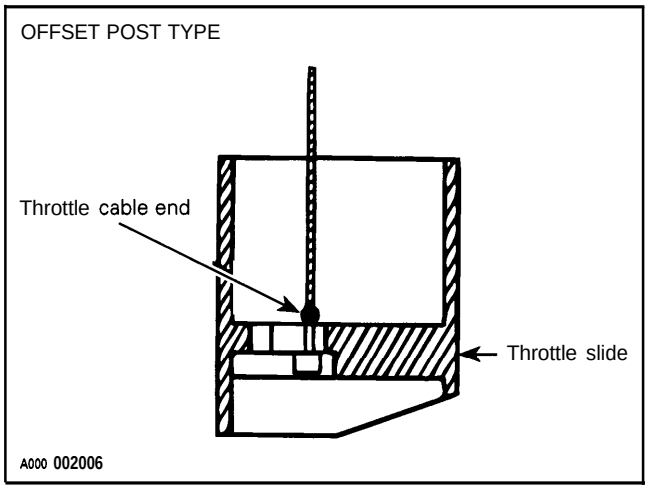

Center Post Retaining (all other models)

Hook throttle cable into the needle retainer plate.

NOTE : Do not obstruct hole in throttle slide when installing needle retaining plate. This is important to allow air escaping through and thus allowing a quick response.

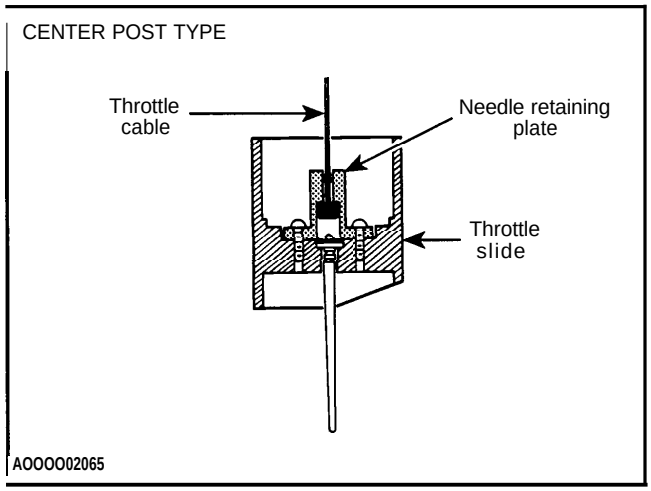

3,4, **Needle and Nylon Packing**

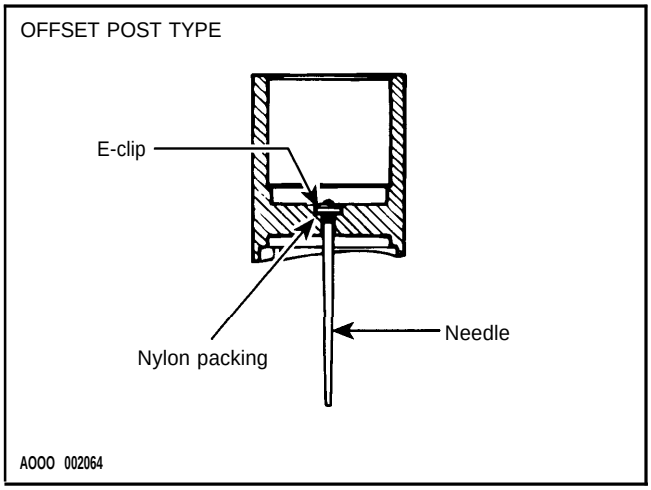

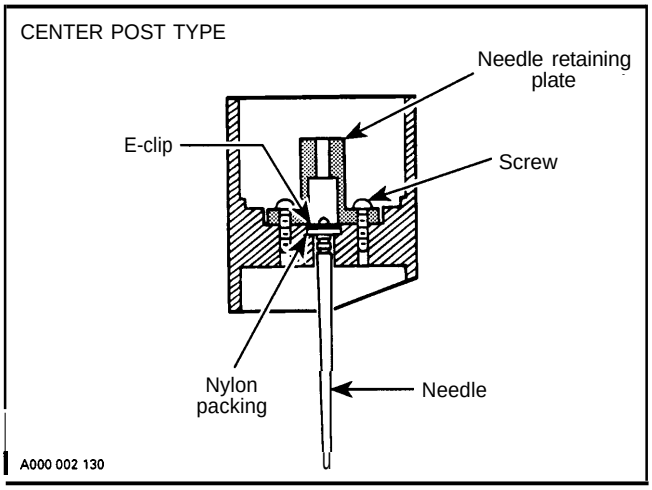

Make sure the nylon packing is installed on all applicable throttle slides.

CAUTION : Serious engine damage can occur if this notice is disregarded.

CARBURETOR ADJUSTMENTS

Élan

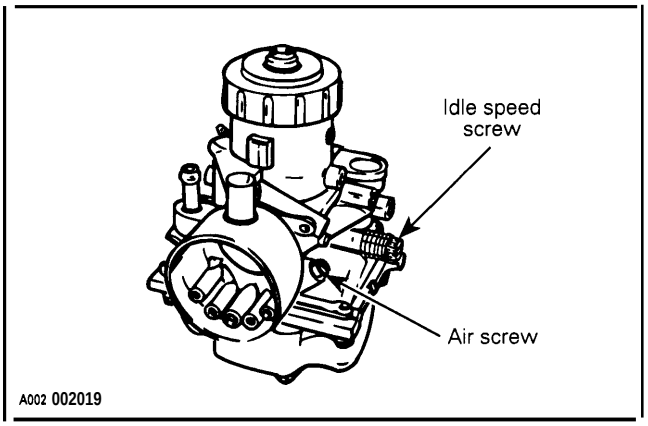

All Other Models

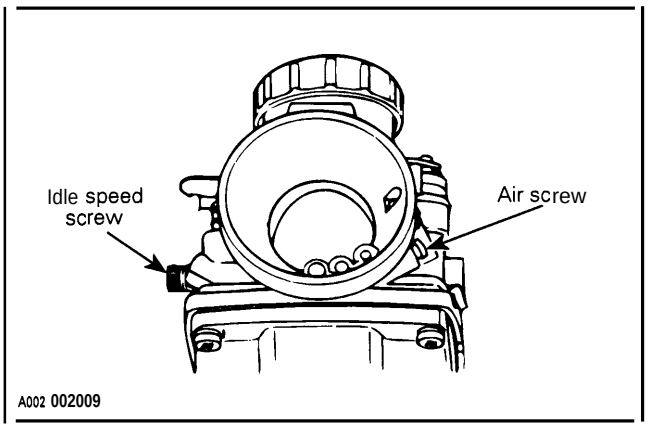

6, **Air Screw Adjustment**

Completely close the **air screw** (until a slight seating resistance is felt) then back off as specified.

Turning screw in clockwise enrichners mixture and conversely, turning it out counterclockwise leans mixture.

Refer to TECHNICAL DATA section 10 for the specifications.

Carburetor Synchronization

Twin Cylinder Models Only

Both carburetor slides must start to open at the same time.

Completely unscrew idle speed screw on both carburetors.

Unlock cable adjustment lock nut then screw in adjuster until throttle slide buttoms out. Proceed the same for both carburetors.

Unscrew cable adjuster to eliminate all cable play but without raising throttle slide, Proceed with care on both carburetors then tighten jam nuts. Both carburetor slide must start to open at the same time, depress throttle lever to check it and turn cable adjuster as required.

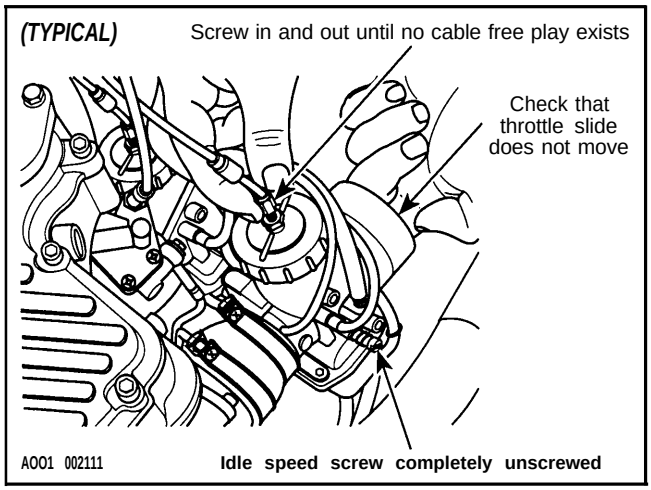

Check throttle slide position at wide open throttle. Throttle slide must be flush with carburetor **inlet** bore. At that same position, check that throttle slide does not contact carburetor cover. Turn cable adjuster and recheck synchronisation.

CAUTION : If the throttle slide rests against the carburetor cover at full throttle opening, this will create too much strain and may damage the throttle cable or other components in throttle mechanism.

Throttle Slide Adjustment

WARNING : Ensure the engine is turned OFF, prior to performing the throttle slide adjustment.

For maximum performance, correct carburetor throttle slide adjustment is critical.

The following method should be used with engine turned off:

— **Idle speed** screw must be completely unscrewed. It must not contact throttle slide.

Turn the **idle speed screw** clockwise until it contacts the throttle slide then continue turning 2 additional turns.

On twin carburetor models: Repeat on the other one. This will ensure identical throttle slide preliminary idle setting. Recheck carburetor synchronization. Adjust idle by turning both idle speed screws of the same amount,

CAUTION : On twin carburetor models, make sure both carburetors start to operate simultaneously. Beside do not interchange carburetors, the jetting may be different on each side. A red dot is printed on one carburetor and on the engine. Match the carburetor and the engine dots when applicable.

CAUTION : On oil injection models, the oil injection pump adjustment must be checked each time carburetor is adjusted. Refer to OIL INJECTION SYSTEM 04-05.

Tundra II LT

Throttle slide must be 1.5 mm (1/16 in) lower than the top of carburetor **inlet** bore.

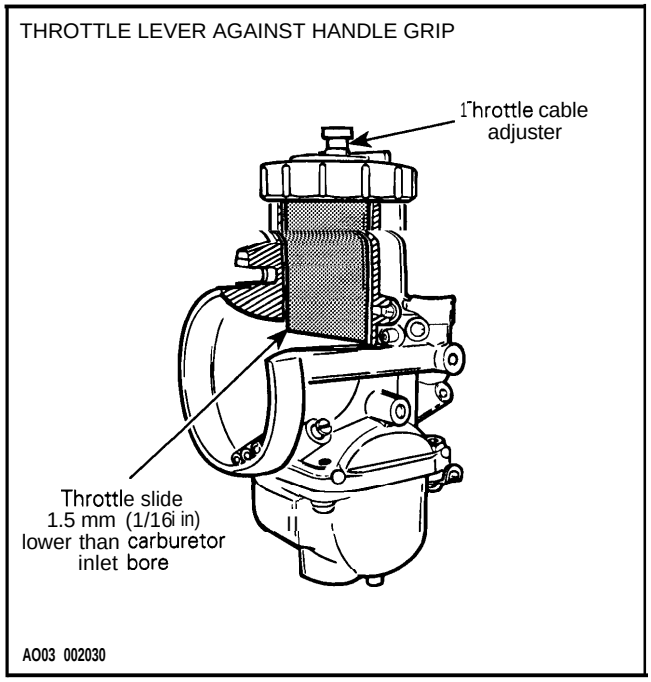

All Models Except Tundra II LT

Throttle slide flush with carburetor inlet bore.

THROTTLE LEVER AGAINST HANDLE GRIP

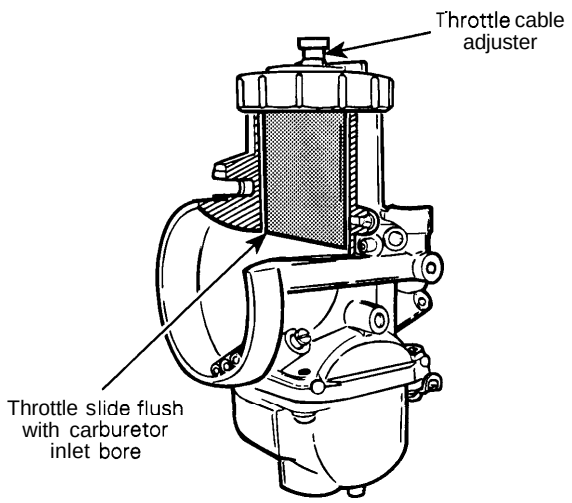

A001 002074

All Models

Once carburetor adjustment is performed, check that with the throttle lever fully depressed, there is a free play between the carburetor cover and top of throttle slide.

THROTTLE LEVER AGAINST HANDLE GRIP

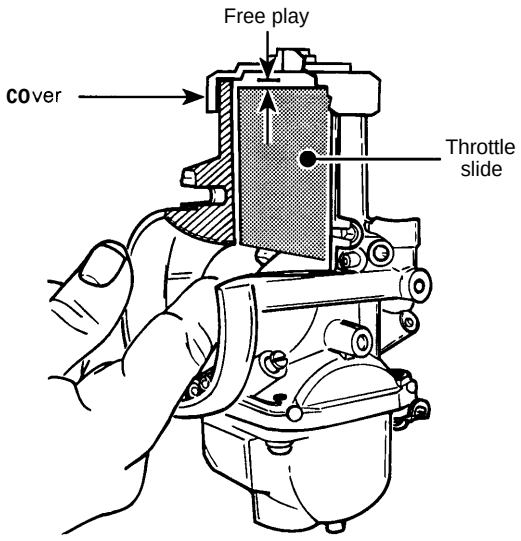

A000 002123

◆ **WARNING : This gap is very important. If the throttle slide rests against the carburetor cover at full throttle opening, this will create too much strain and may damage the throttle cable or other components in throttle mechanism.**

On twin-carburetor models : Recheck carburetor synchronization.

▼ **CAUTION : On oil injection models, the oil injection pump adjustment must be checked each time carburetor is adjusted. Refer to OIL INJECTION SYSTEM 04-05.**

PRELIMINARY IDLE SPEED ADJUSTMENT

Adjust throttle slide height (see table) by turning idle speed screw no. 7.

Final adjustment (engine running at idle speed) should be within 1/2 turn of idle speed screw from preliminary adjustment.

Models	Throttle Slide Height mm (in)
Tundra II LT, Skandic 380, Touring E / LE / SLE, Formula S, Alpine II	**1.3 (.051)**
Élan, Touring SLE Skandic 500, Formula SL	1.5 (.059)
Touring LE	1.8 **(,071)**

(TYPICAL)

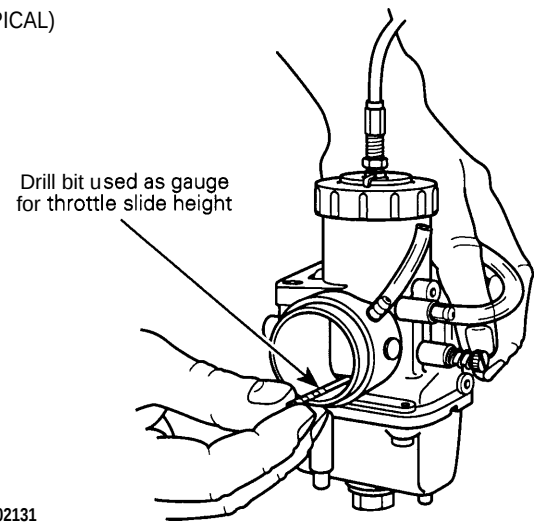

A001 002131

IDLE SPEED FINAL ADJUSTMENT

7, **Idle Speed Screw**

Check idle speed screw straightness. Replace as necessary.

Start engine and allow it to warm then adjust idle speed to specifications by turning idle speed screw clockwise to increase engine speed or counterclockwise to decrease it.

O **NOTE : On twin-carburetor models :** Turn adjustment screw the same amount to keep carburetors synchronized.

Refer to TECHNICAL DATA section 10 for the specifications.

▼ CAUTION : **Do not attempt to set the idle speed by using the air screw. Severe engine damage can occur.**

CHOKE

Touring LE / SLE, Skandic 500 and Formula SL

Choke Plunger Adjustment

Adjust cable length to obtain the following plunger/ adaptor distance. Retighten lock nut.

CARBURETOR	PLUNGER / ADAPTOR DISTANCE ±0.3 mm (±.012 in)
PTO	32.5 (1 .280)
MAG	31.3 (1 .232)

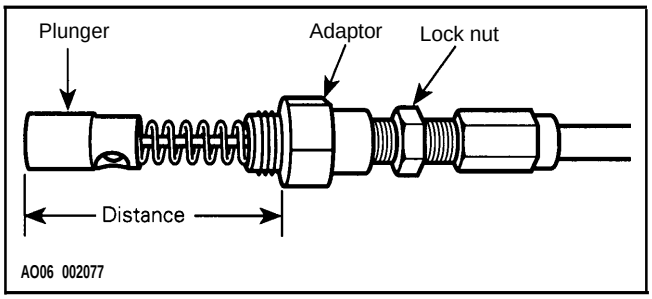

FUEL PUMP

Elan and Tundra LT

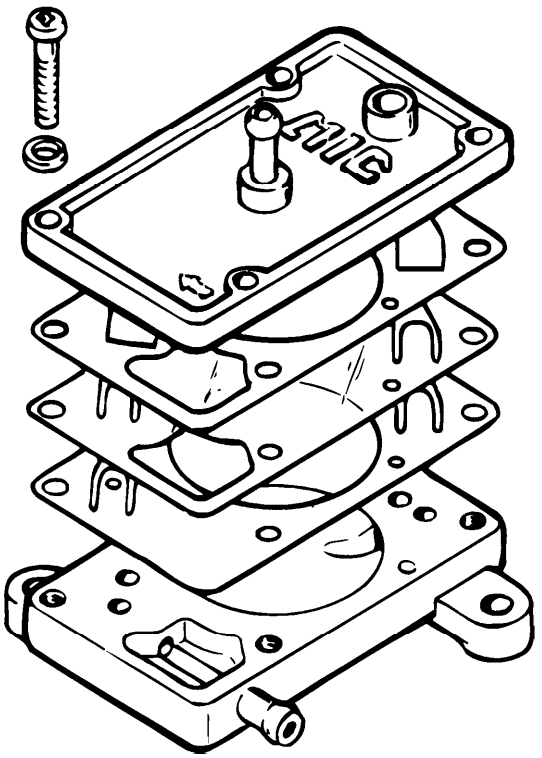

A000 002076

S-Series

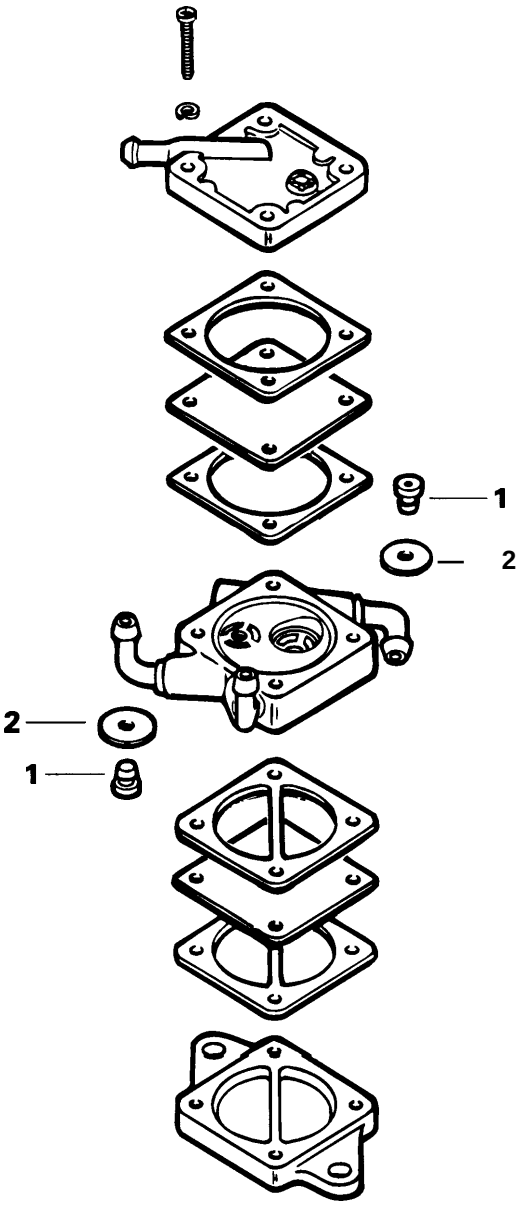

A000 002119

REMOVAL

Install a hose pincer (P / N 5290099 00) on fuel supply line close to pump inlet.

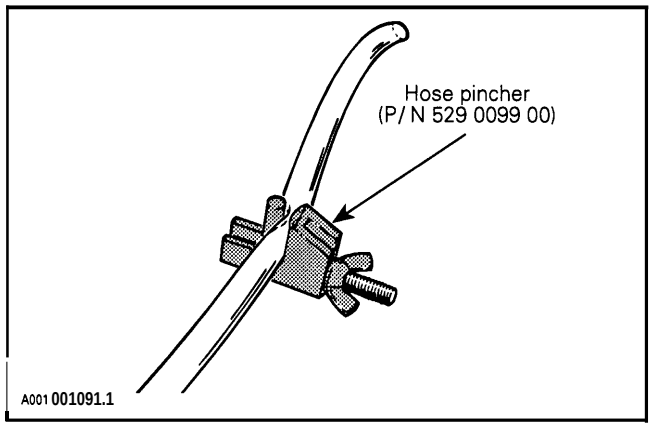

Disconnect fuel outlet line(s).

Disconnect impulse line.

Remove screws (or nuts if applicable) securing fuel pump.

LOW-SUPPLY FUEL PUMP WITH SINGLE OUTLET

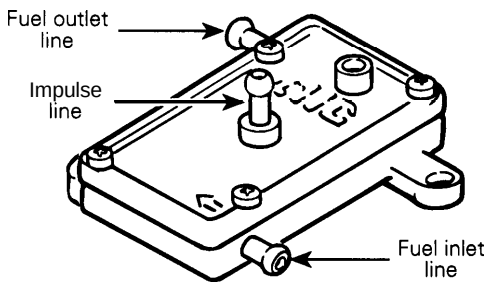

HIGH-SUPPLY FUEL PUMP WITH TWIN OUTLETS

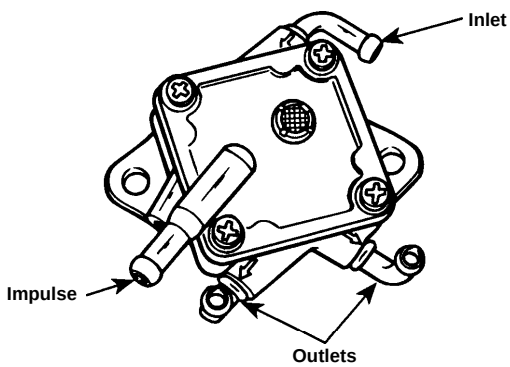

PUMP VERIFICATION

Check fuel pump valves operation as follows :

Connect a clean plastic tubing to the inlet nipple and alternately apply pressure and vacuum with the mouth. The inlet valve should release with pressure and hold under vacuum.

Repeat the same procedure at the outlet nipple. This time the outlet valve should hold with pressure and release under vacuum.

O **NOTE : On model** fitted with 2 outlets, plug 1 outlet with finger while checking outlet valve.

Check impulse diaphragm and gasket on high-supply fuel pump with twin outlets as follows :

Connect a clean plastic tubing to the impulse nipple and plug vent hole on top cover. Either apply pressure or vacuum. The diaphragm / gasket must not leak.

DISASSEMBLY

1,2, Grommet and Valve (high-supply pump with twin outlets only)

Do not disassemble valves unless replacement is necessary.

CLEANING AND INSPECTION

The entire pump should be cleaned with general purpose solvent before disassembly.

Fuel pump components should be cleaned in general purpose solvent and dried with compressed air.

● **WARNING : Solvent with a low flash point such as gasoline, naphtha, benzol, etc., should not be used as each is flammable and explosive.**

Inspect diaphragm. The pumping area should be free of holes, tears or imperfections. Replace as needed.

High-supply pump with twin outlets : Thoroughly clean filter on top cover. Replace filter if necessary.

ASSEMBLY

To install a new valve, proceed as follows :

— Place new valve flat on its seat.

— Slightly oil taper tip of grommet.

— Push grommet with a rotational movement until it crosses its housing.

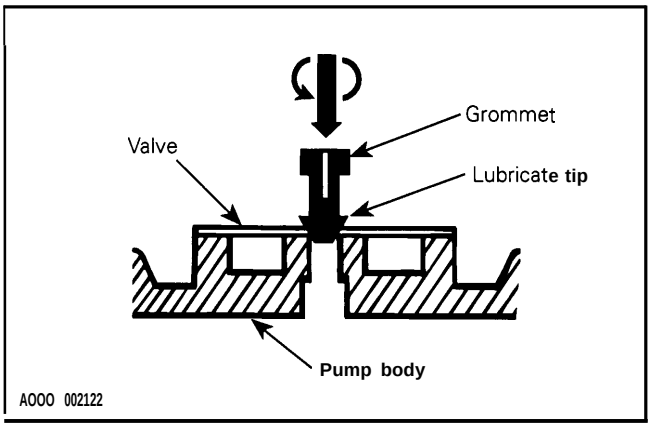

When assembling pump, ensure to properly position stages together. Refer to previous illustrations if necessary.

INSTALLATION

To install, inverse removal procedure.

WARNING : Pressure test to ensure there is no leak **in fuel system.**

FUEL TANK AND THROTTLE CABLE

Fuel Tank Lines

◆ **WARNING : When draining a fuel tank or whenever a fuel line is disconnected, obstruct line with a hose pincher (P / N 5290099 00) or equivalent device. Fuel is flammable and explosive under certain conditions. Ensure work area is well ventilated. Do not smoke or allow open flames or sparks in the vicinity.**

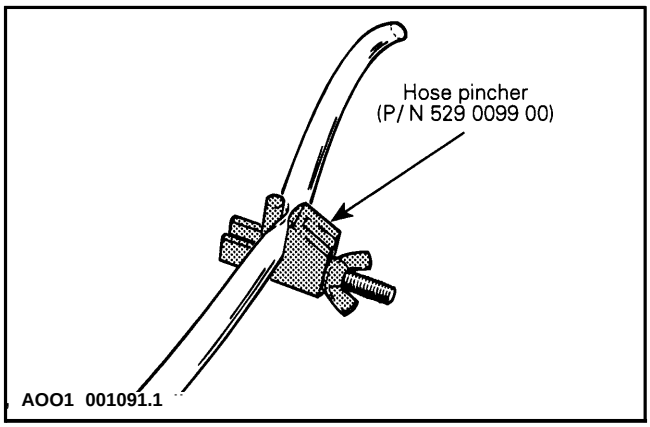

Impulse / Fuel Lines Spring Clips (All Models)

Always reposition spring clips after any repair to prevent possible leaks.

Throttle Cable Circlip at Handlebar (All Models)

Put silicone grease (P/ N 4137017 00) around cable barrel. Locate circlip as per illustration.

◆ WARNING : If this procedure is disregarded, throttle might be half-open at normally closed position and the engine will speed **up when starting.**

Élan Only

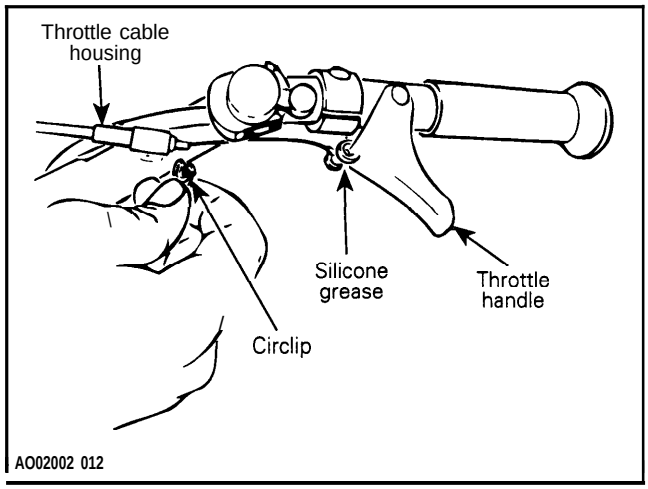

Models with Easy Action Throttle Lever

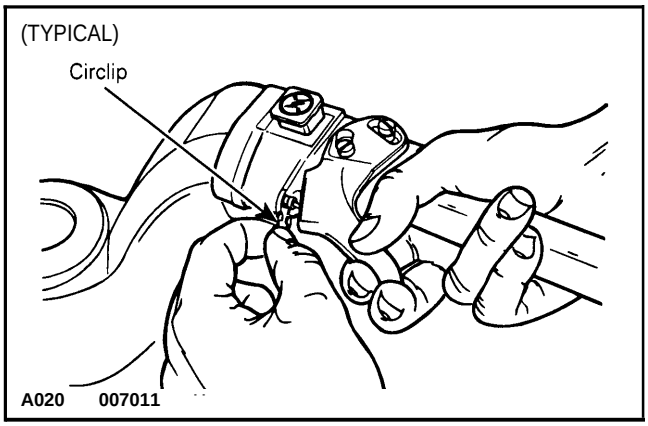

Other Models

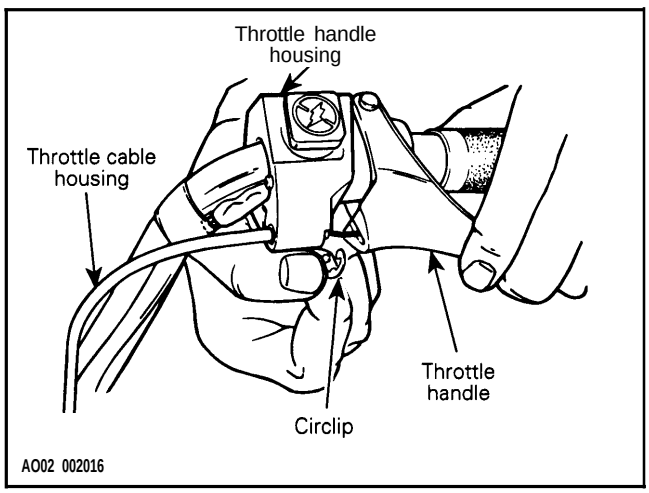

Throttle Cable Retainer

Tundra II LT Models

The retainer must be pushed on the throttle handle tab until it sits properly.

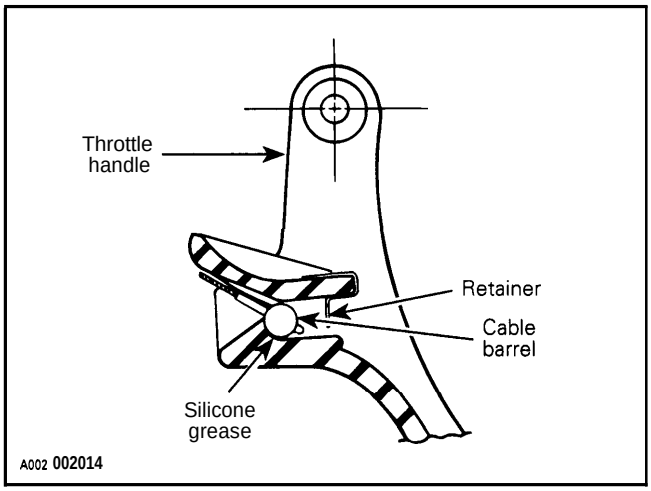

Throttle Cable O-ring and Retaining Ring at Carburetor (some models)

Locate O-ring outside of carburetor cover and retaining ring inside.

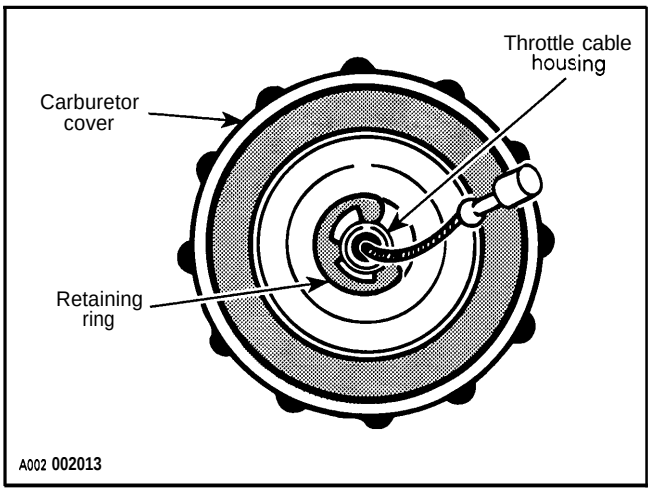

Adjust throttle cable as specified in CARBURETOR AND FUEL PUMP 04-08.

Throttle Cable Routing

CAUTION : Check that throttle cable is routed away from sharp, edges, hot or vibrating parts. When turning steering while engine is running, idle speed must not vary.

TABLE OF CONTENTS

DRIVE BELT **05-01-1**

1996 APPLICATION CHART **05-01-1**
ROTATION DIRECTION 05-01-1
DRIVE BELT DEFLECTION MEASUREMENT 05-01-2
DEFLECTION ADJUSTMENT 05-01-3

DRIVE PULLEY **05-02-1**

BOMBARDIER LITE DRIVE PULLEY **05-02-1**
GENERAL 05-02-2
REMOVAL 05-02-2
DISASSEMBLY 05-02-2
CLEANING 05-02-3
INSPECTION 05-02-3
ASSEMBLY 05-02-3
INSTALLATION 05-02-3
ADJUSTMENT 05-02-3

BOMBARDIER LITE **05-02-4**
GENERAL 05-02-5
REMOVAL 05-02-5
DISASSEMBLY 05-02-5
CLEANING 05-02-6
INSPECTION 05-02-6
ASSEMBLY 05-02-6
INSTALLATION 05-02-6

TRA **05-02-7**
GENERAL 05-02-8
REMOVAL 05-02-8
DISASSEMBLY 05-02-8
CLEANING 05-02-9
INSPECTION 05-02-10
ASSEMBLY 05-02-13
INSTALLATION 05-02-15
DRIVE PULLEY ADJUSTMENT 05-02-15

DRIVEN PULLEY 05-03-1
REMOVAL 05-03-2
DISASSEMBLY 05-03-2
INSPECTION 05-03-2
ASSEMBLY 05-03-2
INSTALLATION 05-03-2
ADJUSTMENT 05-03-3
REMOVAL 05-03-5
DISASSEMBLY 05-03-5
INSPECTION 05-03-6
ASSEMBLY 05-03-6
INSTALLATION 05-03-7
ADJUSTMENT 05-03-7
REMOVAL 05-03-10
DISASSEMBLY 05-03-10
CLEANING 05-03-10
INSPECTION 05-03-10
ASSEMBLY 05-03-11
INSTALLATION 05-03-11
ADJUSTMENT 05-03-11

PULLEY DISTANCE AND ALIGNMENT 05-04-1
GENERAL 05-04-1
GENERAL PROCEDURE 05-04-1
PULLEY ALIGNMENT AND DISTANCE SPECIFICATIONS CHART 05-04-3

BRAKE 05-05-1
DRUM BRAKE 05-05-1
INSPECTION 05-05-2
INSTALLATION 05-05-2
LUBRICATION 05-05-2
ADJUSTMENT 05-05-2
DISC BRAKE 05-05-4
REMOVAL 05-05-6
DISASSEMBLY 05-05-7
CLEANING 05-05-7
INSPECTION 05-05-7
ASSEMBLY 05-05-7
INSTALLATION 05-05-8
ADJUSTMENT 05-05-9

CHAINCASE **05-06-1**
REMOVAL 05-06-2
DISASSEMBLY 05-06-2
INSPECTION 05-06-2
ASSEMBLY 05-06-3
INSTALLATION 05-06-3
ADJUSTMENT 05-06-3
REMOVAL 05-06-5
DISASSEMBLY 05-06-5
INSPECTION 05-06-5
GEAR RATIO MODIFICATION 05-06-5
ASSEMBLY 05-06-6
INSTALLATION 05-06-6
ADJUSTMENT 05-06-7
REMOVAL 05-06-9
INSPECTION 05-06-9
GEAR RATIO MODIFICATION 05-06-9
INSTALLATION 05-06-9
DRIVE CHAIN ADJUSTMENT 05-06-10
ADJUSTMENT 05-06-11

GEARBOX **05-07-1**

2-SPEED GEARBOX **05-07-1**
DISASSEMBLY 05-07-2
INSPECTION 05-07-2
ASSEMBLY 05-07-3
ADJUSTMENT 05-07-4
OIL CHANGE 05-07-5

DRIVE CHAIN **05-08-1**
GENERAL 05-08-1
SILENT CHAIN 05-08-1
CHAIN ATTACHMENT 05-08-1
CHAIN SEPARATION 05-08-1

DRIVE BELT

1996 APPLICATION CHART

MODEL	PART NUMBER	WIDTH (NEW) ±0.25 mm (.01() in)	MINIMUM WIDTH (WEAR LIMIT)
ELAN	570041100	30.2 mm (1-3/16”)	26.4 mm (1-3/64”)
TUNDRA II LT	414827600	33.3 mm (1-5/16”)	30 mm (1-3/16”)
S-SERIES	414883300	34.3 mm (1-27/64”)	32 mm (1-1/4”)

ROTATION DIRECTION

The maximum drive belt life span is obtained when the drive belt is installed as shown. This will ensure that correct direction of rotation is respected.

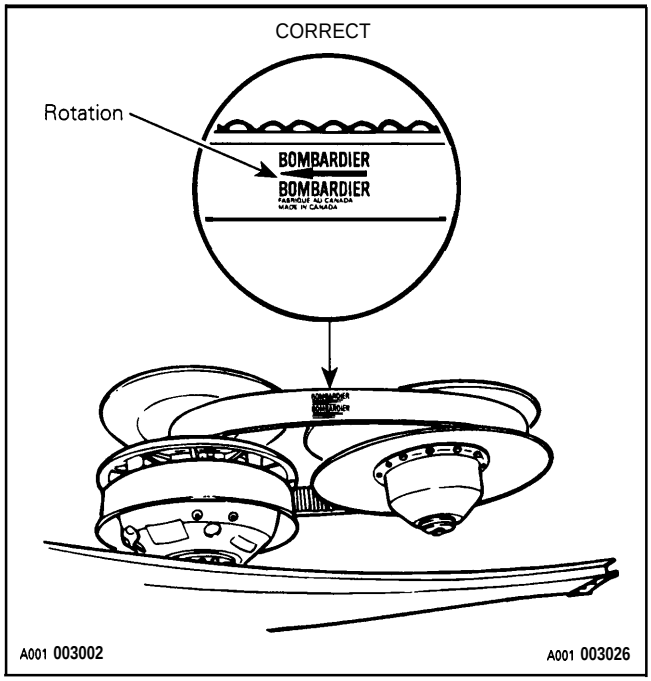

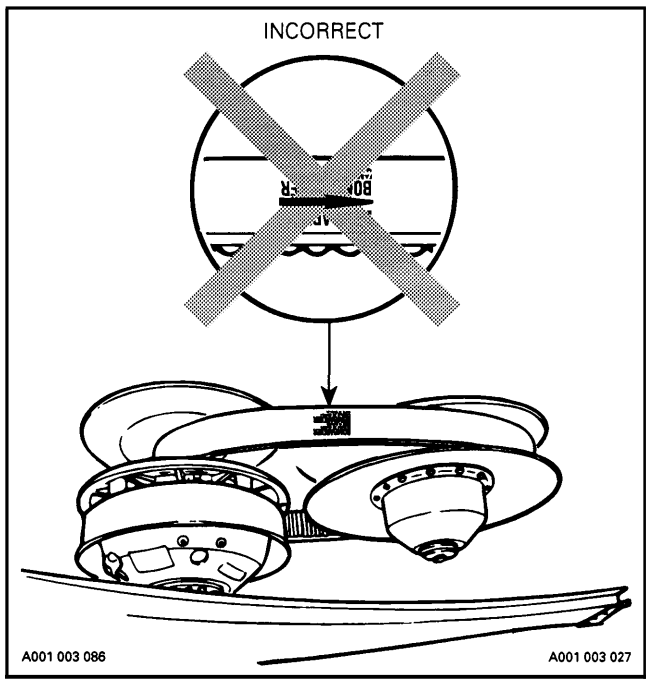

0 **NOTE : For** used drive belt, mark and reinstall in the same position.

DRIVE BELT DEFLECTION MEASUREMENT

NOTE : The drive belt deflection measurement must be performed each time a new drive belt is installed.

NOTE : To obtain an accurate drive belt deflection measurement, it is suggested to allow a break-in period of 50 km (30 mi).

Before checking the belt deflection, ensure vehicle has the proper belt (Refer to the application chart).

Adjust pulley distance and alignment. Refer to 05-04 PULLEY DISTANCE AND ALIGNMENT.

To obtain maximum vehicle performance, the belt tension must be adjusted according to specifications shown in the accompanying chart.

MODEL	DEFLECTION mm (in)	FORCE kg (lb)	HEIGHT† OVER DRIVEN PULLEY
Élan	33 ± 3 (1-19/64 ± 1/8)	5 (11)	0 - 1.5 mm (0 - 1/16")
Tundra II LT, S-Series	32 ± 5 (1-1/4 ± 13/64)	6.8 (15)	0 - 1.5 mm (0 - 1/16")

† For reference only

To Check Tension

Position a reference rule on drive belt.

Wooden Stick and Spring Scale Method :

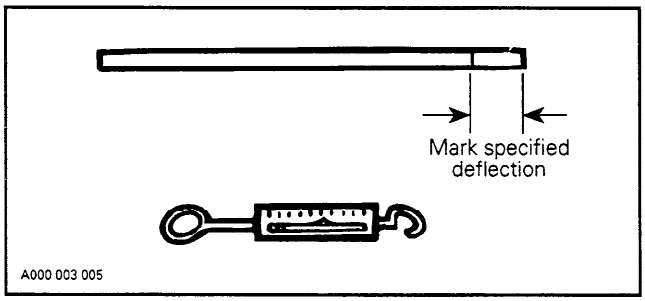

Using spring scale and stick, apply specified force on drive belt halfway between pulleys as shown.

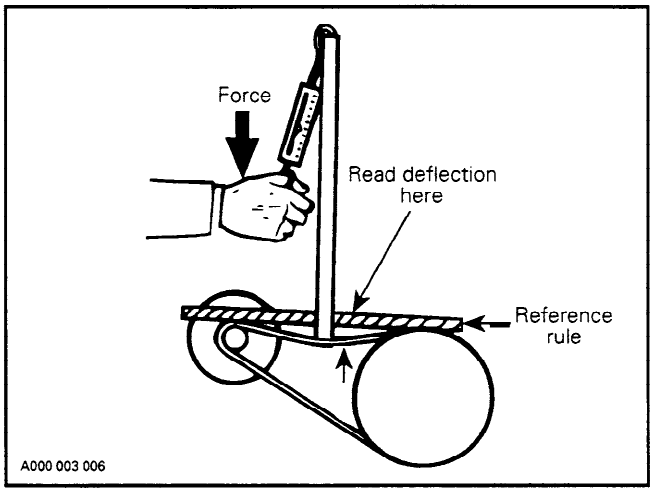

Or use the belt tension tester (P / N 414 3482 00).

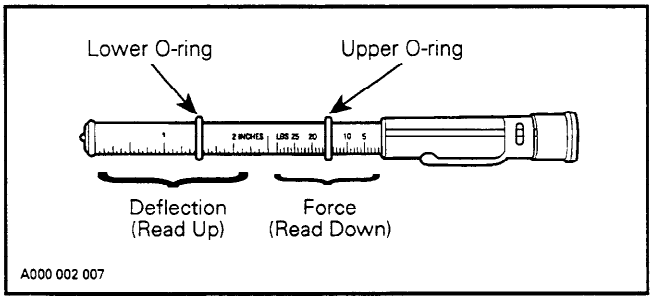

1. Slide lower O-ring of deflection scale to specified measure.
2. Slide upper O-ring to zero on the force scale.
3. Apply pressure until lower O-ring is flush with edge of rule and read force on the upper scale at top edge of O-ring.

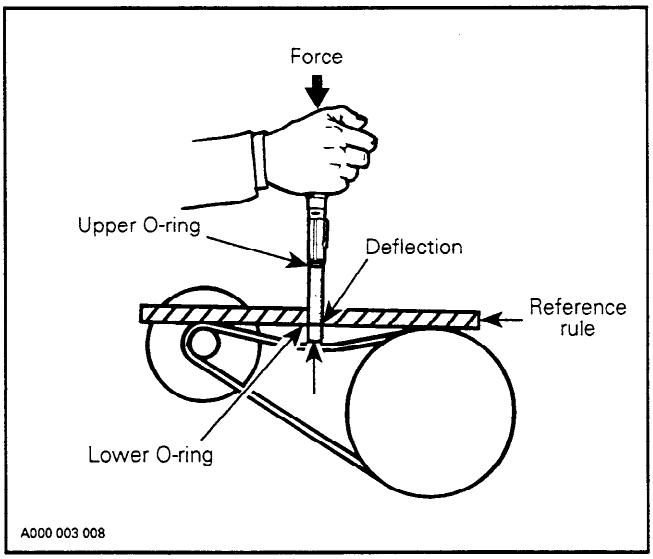

DEFLECTION ADJUSTMENT

Élan

Drive belt deflection is adjusted by moving chaincase.

To do so, loosen the chaincase retaining U-clamp and screw or unscrew the chaincase adjusting bolt.

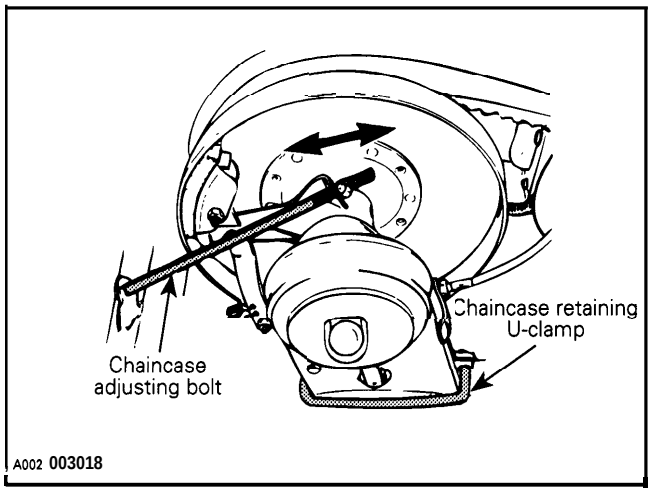

Adjust pulley distance according to specification, refer to PULLEY DISTANCE AND ALIGNMENT 05-04 and measure drive belt deflection. Readjust pulley distance if required then tighten retaining U-clamp.

Tundra II LT

Drive belt deflection is adjusted by moving chaincase.

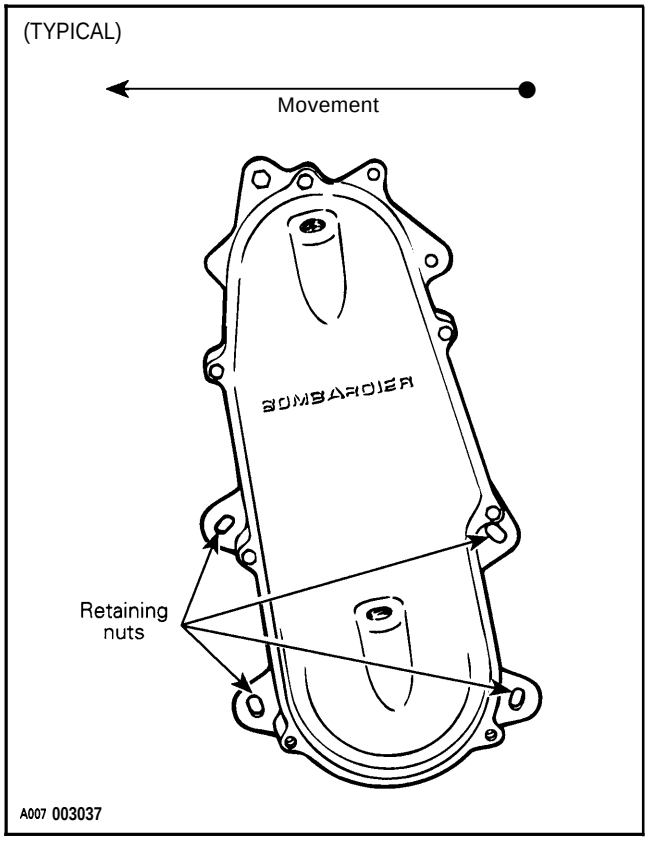

To do so, loosen the 4 chaincase retaining nuts, unlock and raise driven pulley support.

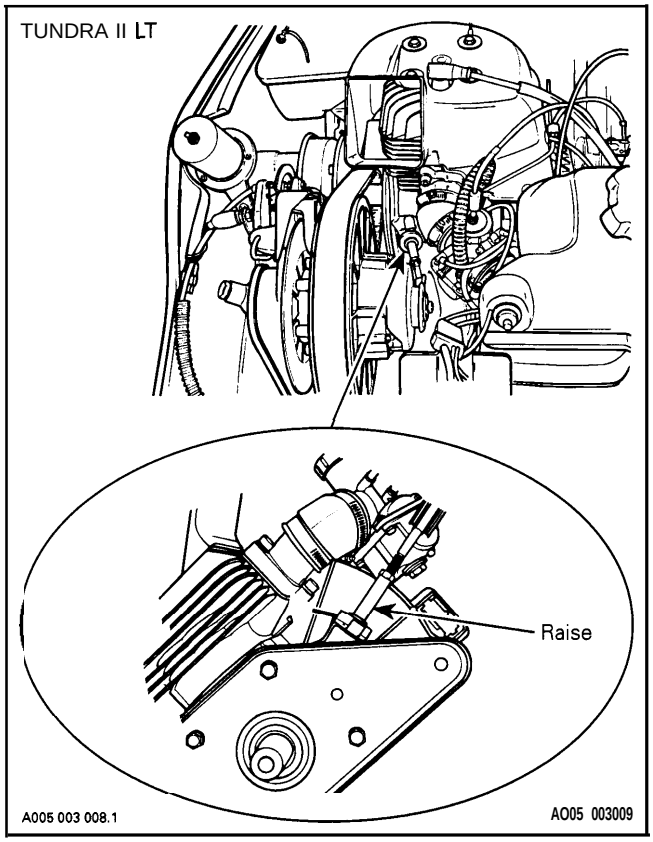

Adjust pulley distance according to specification, refer to PULLEY DISTANCE AND ALIGNMENT 05-04 and measure drive belt deflection. Readjust pulley distance if required, then tighten the 4 nuts. Adjust driven pulley support and lock it to engine,

S-Series

Adjust pulley distance according to specification, refer to PULLEY DISTANCE AND ALIGNMENT 05-04, then adjust drive belt deflection using Allen screw, as shown.

To increase deflection : turn Allen screws clockwise.

To decrease deflection : turn Allen screws **counter-clockwise.**

NOTE : Turn Allen screws 1/4 turn at a time, then rotate driven pulley to allow drive belt to settle in pulley. Check deflection, repeat as required,

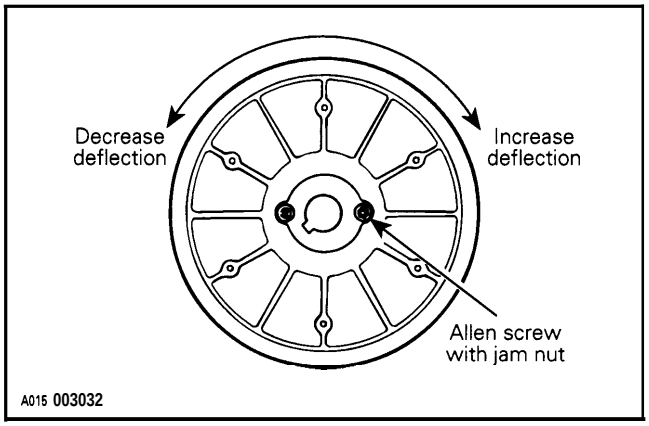

Allen screws should be restrained while tightening jam nut to prevent throwing adjustment out. Use drive belt tension adjuster (P/ N 5290087 00).

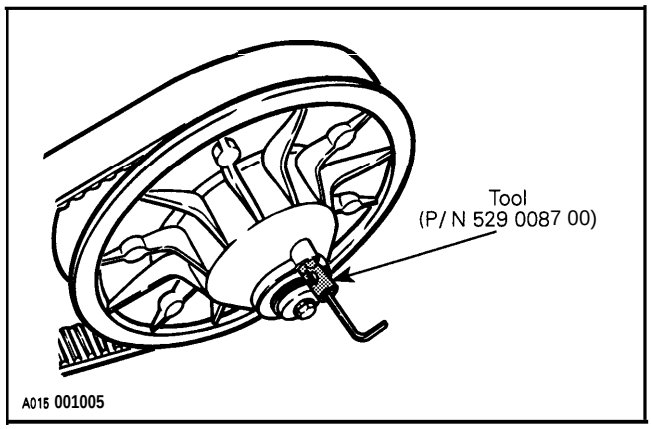

Restrain Allen screws with the wrench and tighten nut with the socket using socket handle provided in tool box.

NOTE : After belt deflection adjustment is performed, the height of the top of the drive belt over the driven pulley should be according to specifications (see table above). If not, check pulley distance and make sure proper belt is used.

DRIVE PULLEY

BOMBARDIER LITE DRIVE PULLEY

NOTE : This is a lubrication free drive pulley.

O

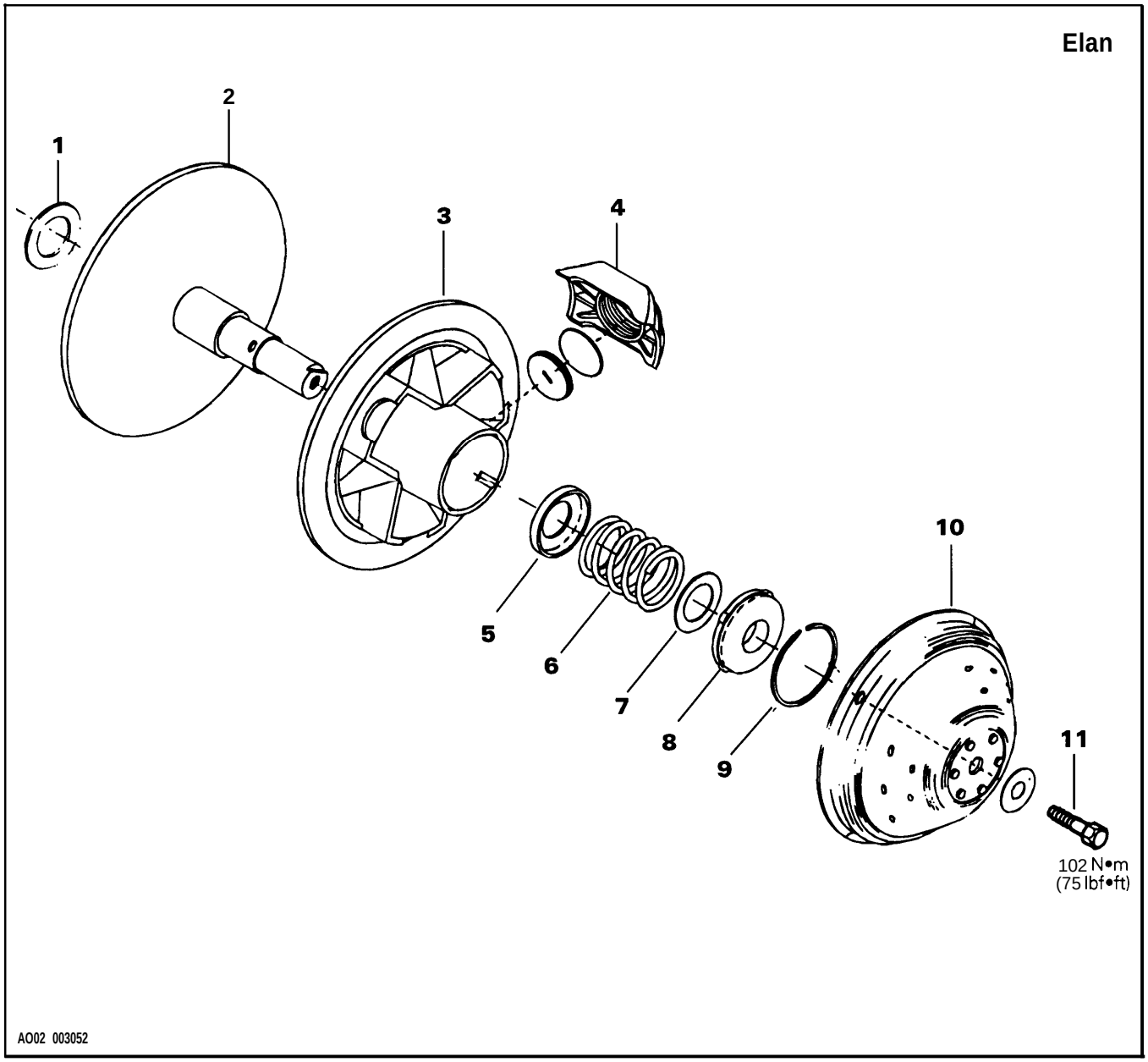

GENERAL

Some drive pulley components (return spring, calibration disk) can be changed to improve vehicle performance in high altitude regions. The *High Altitude Technical Data* booklet (P/ N 484062400 and 484054500 for binder) gives information about calibration according to altitude.

CAUTION : Such modifications should only be performed by experience mechanics since they can greatly affect vehicle performance.

WARNING : Any drive pulley repairs must be performed by an authorized Bombardier snowmobile dealer, or other such qualified person. Subcomponent installation and assembly tolerances require strict adherence to procedures detailed.

REMOVAL

3,10,11, Sliding Half, Governor Cup and Cap Screw

Lock the crankshaft by using one of the following method :

Insert the crankshaft locking tool (P/ N 4208766 40) into the impulse hole of the engine. Slowly rotate the crankshaft until it locks into position.

CAUTION : Do **not use any type of pin other than the tool (P/ N 4208766 40).**

Or:

Install clutch holder (P/ N 5290276 00).

Identify blocks with their respective positions for reassembly.

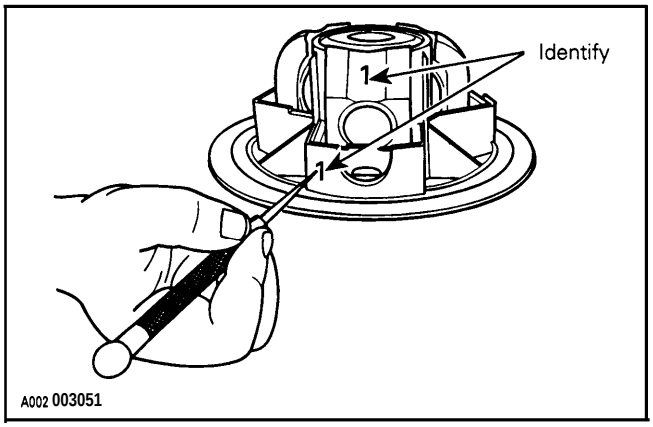

2, **Fixed Half**

To remove the fixed half, slide drive pulley puller (P / N 5290231 00) over shaft. Attach with nut and bolt, as illustrated. The fixed half can then be removed with a 1/2 in ratchet. (Unscrew counterclockwise).

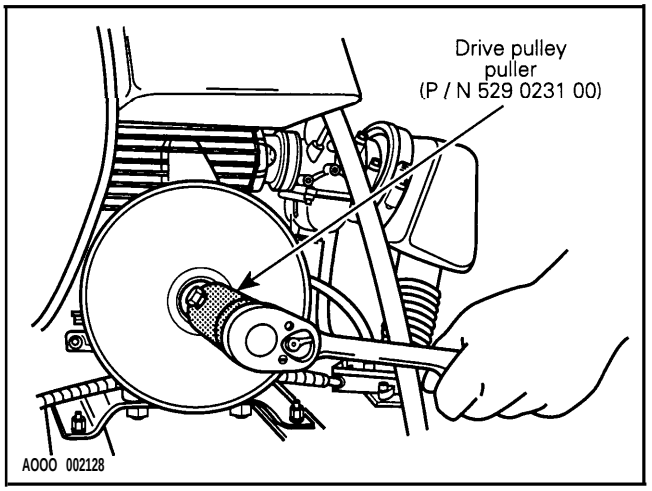

DISASSEMBLY

5,6,7,8,9, **Spring Seat, Spring, Shim, Spring Stopper and Locking Ring**

Using spring compressor (P/ N 5290151 00) and a bushing, push spring stopper to remove locking ring.

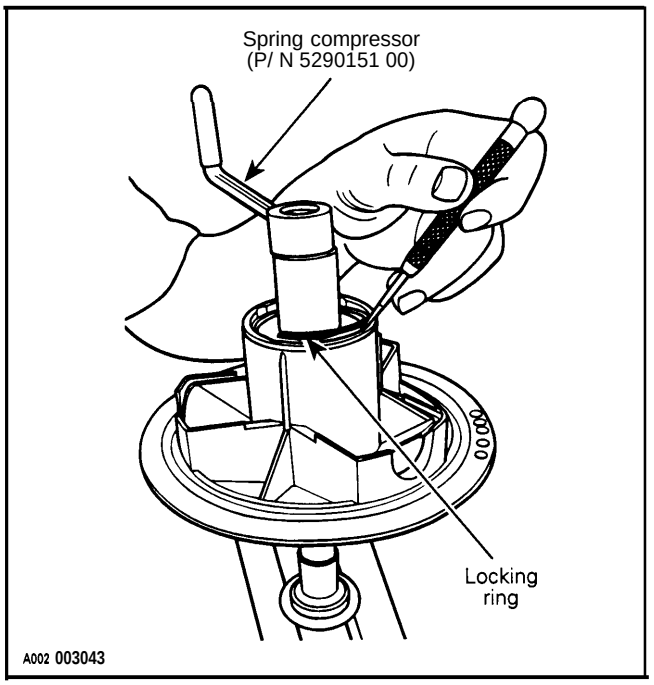

CLEANING

2,3, **Sliding Half and Fixed Half**

Clean pulley faces and shaft with fine steel wool and clean dry cloth. Clean sliding half bushing with clean dry cloth.

INSPECTION

Drive pulley should be inspected annually.

2,3, **Sliding Half and Fixed Half**

Check sliding half for excessive lateral play and fixed half shaft for scratches. Replace as required.

ASSEMBLY

4, **Block**

Make sure to install blocks at their original position and with their curved end toward governor cup. There must be 6 calibration disks per block under the nylon threaded plug.

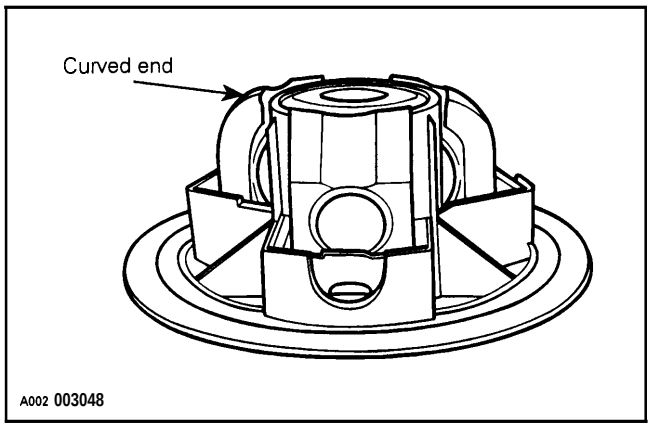

INSTALLATION

1, **Shim (alignment)**

This shim is used to obtain correct pulley alignment, refer to PULLEY DISTANCE AND ALIGNMENT 05-04.

2, **Fixed Half**

Lock crankshaft in position as explained in removal procedure. Make sure crankshaft is rotated 45° **counterclockwise from TDC position.**

Clean crankshaft extension and apply antiseize **lubricant (P/ N 413 7010 00) then install fixed half on extension.**

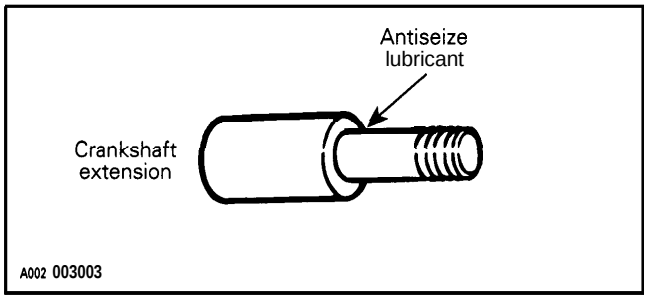

To tighten fixed half, use drive pulley puller (P/N 529 0231 00) as shown in the removal procedure.

3,10,11, Sliding Half, Governor Cup and Cap Screw

When installing governor cup, align ramps with blocks. Also align V-marks.

Turn governor cup to engage notches.

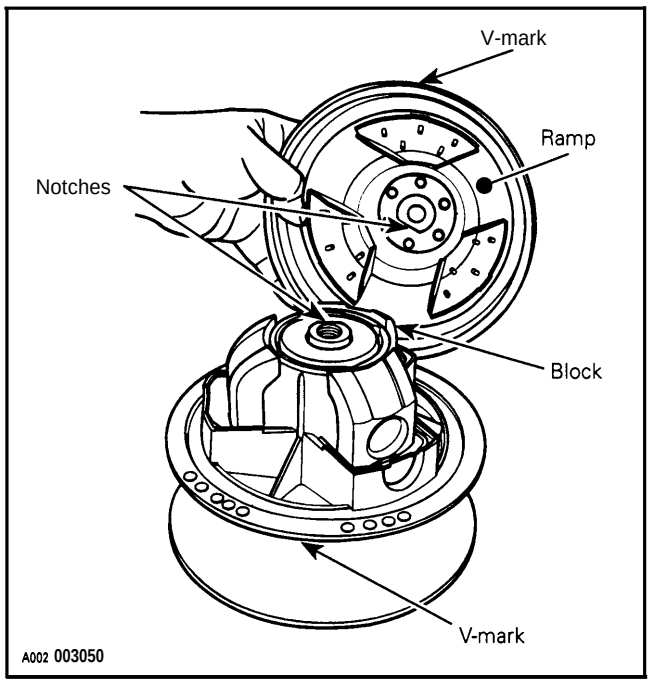

Position the cap screw and torque to 102 N•m (75 lbf•ft).

Install drive belt, pulley guard and close hood. Accelerate vehicle and bring at intermediate speed then at the same time apply brake. Repeat 2 or 3 times. Stop engine and retorque cap screw.

ADJUSTMENT

1, **Shim (alignment)**

For pulley alignment procedure, refer to PULLEY DISTANCE AND ALIGNMENT 05-04.

BOMBARDIER LITE

NOTE : This is a lubrication free drive pulley.

O

Tundra II LT
377 Engine S-Series

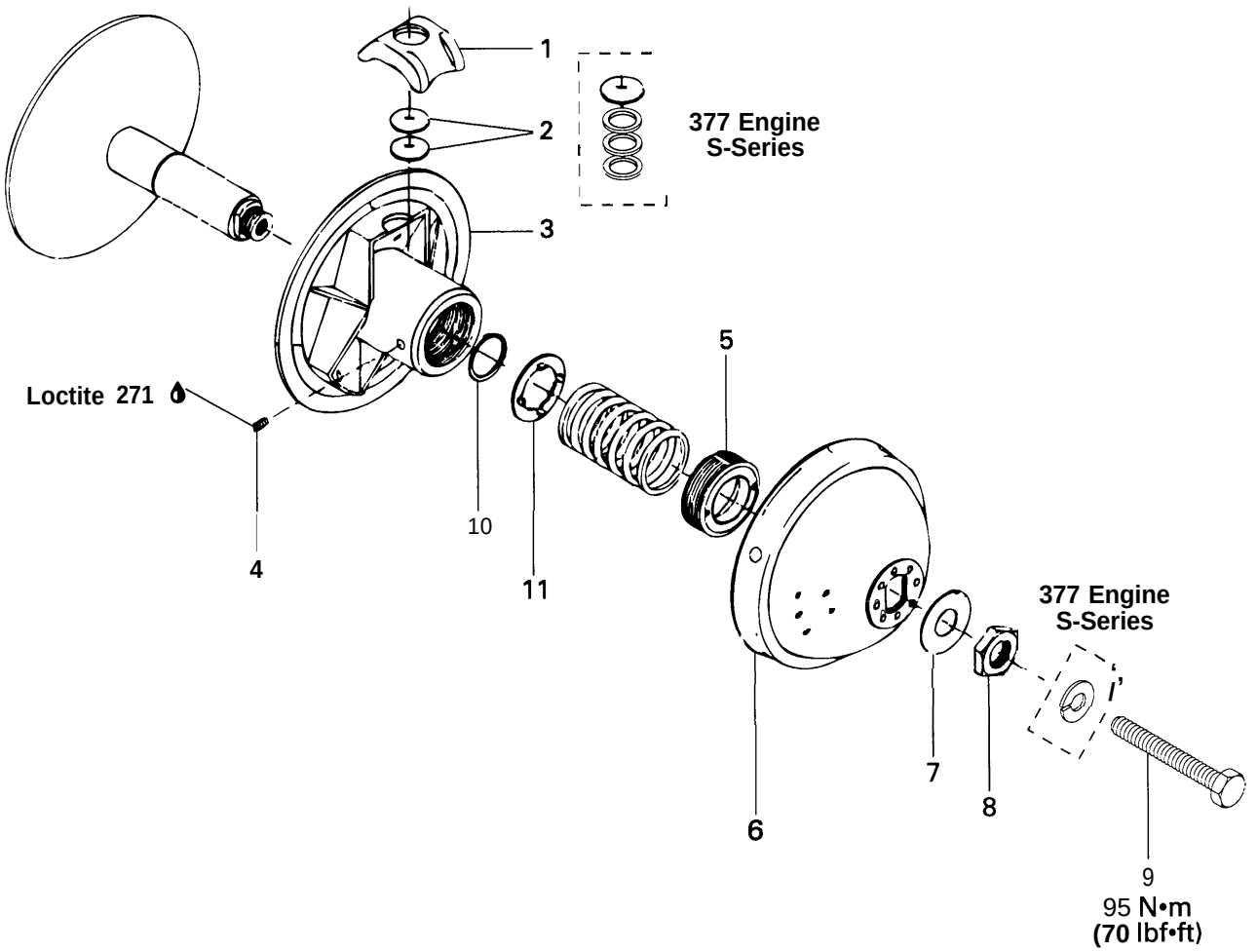

A05D0IS

GENERAL

Some drive pulley components (return spring, calibration disk) can be changed to improve vehicle performance in high altitude regions. The *High Altitude Technical Data* booklet (P/N 484062400 and 484054500 for binder) gives information about calibration according to altitude.

CAUTION : Such modifications should only be performed by experience mechanics since they can greatly affect vehicle performance.

WARNING : Any drive pulley repairs must be performed by an authorized Bombardier snowmobile dealer, or other such qualified person. Sub-component installation and assembly tolerances requ-ire strict adherence to procedures-detailed.

REMOVAL

9, Retaining Screw

Use clutch holder (P/ N 5290276 00).

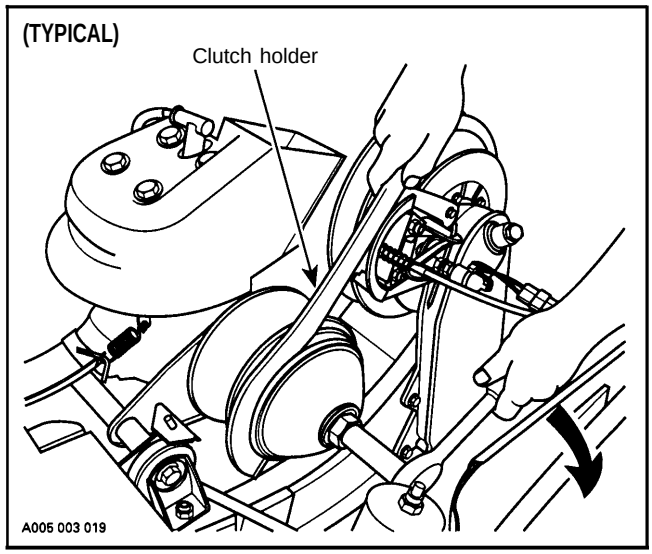

Remove retaining screw.

Insert drive pulley puller (P/ N 5290275 00) with its screw then remove drive pulley.

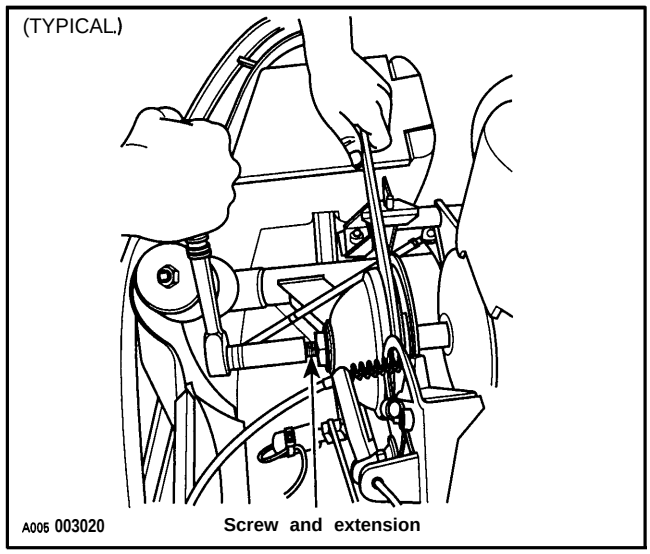

NOTE : Drive pulley puller (P/N 5290275 00) includes screw (P/ N 5290274 00) and extension (P/ N 5290134 00).

DISASSEMBLY

3,6,7,8, **Sliding Half, Governor Cup, Tab Washer and Nut**

Use clutch holder (P/ N 5290276 00) then unscrew nut, Remove tab washer.

Mark governor cup and sliding half for proper indexing at reassembly.

1,3, Block and Sliding Half

Identify blocks and their respective positive positions for reassembly.

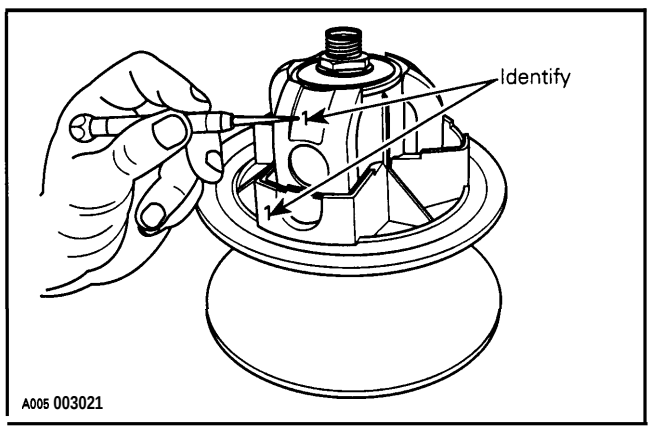

2, Nylon Threaded Plug

These are calibration parts. Refer to 10 TECHNICAL DATA.

4,5, Set Screw and Spring Cover

Unscrew set screw then use spring cover tool (P / N 529 0273 00) to unscrew spring cover.

Mount tool in a vise for cover hand-unscrewing.

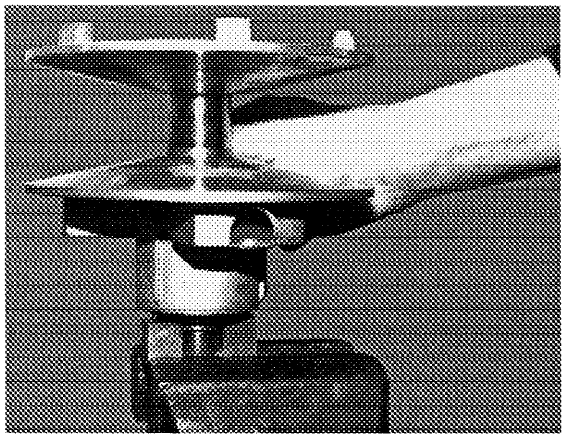

A05D0MA

10,11, Circlip and Washer

Remove washer then circlip.

CLEANING

Clean pulley faces and shaft with fine steel wool and clean dry clutch. Clean sliding half bushing with clean dry cloth.

INSPECTION

Check sliding half for excessive lateral play and fixed half shaft for scratches. Replace as required.

ASSEMBLY

10,11, Circlip and Washer

Install circlip then washer.

1,5, Block and Spring Cover

Make sure to install blocks at their original position and with their curved end toward governor cup.

Screw spring cover down to 2 to 3 mm (1/16 to 1/8 in) out of sliding half. Apply Loctite 271 on screw threads. Install set screw aligned with spring cover slot.

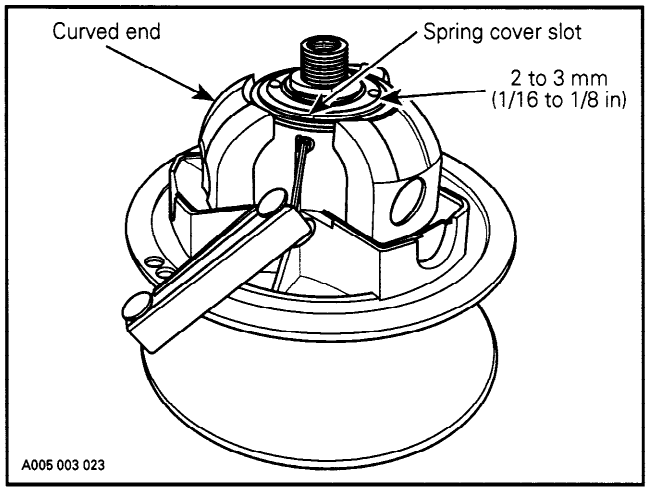

A005 003 023

8, Nut

Tighten nut to 128 N•m (95 lbf•ft).

INSTALLATION

Torque screw to 105 N•m (77 lbf•ft).

Install drive belt and belt guard.

Raise and block the rear of the vehicle and support it with a mechanical stand.

◆ WARNING : Ensure that the track is free of particles which could be thrown out while track is rotating. Keep hands, tools, feet and clothing clear of track. Ensure nobody is standing near the vehicle.

Accelerate the vehicle at intermediate speed and apply the brake, repeat 5 times.

Reduce the screw torque to 85 N•m (63 lbf•ft) then, retorque to 95 N•m (70 lbf•ft).

◆ WARNING : After 10 hours of operation the transmission system of the vehicle must be inspected to ensure the retaining screw is properly torqued.

TRA

NOTE : This is a lubrication free drive pulley.

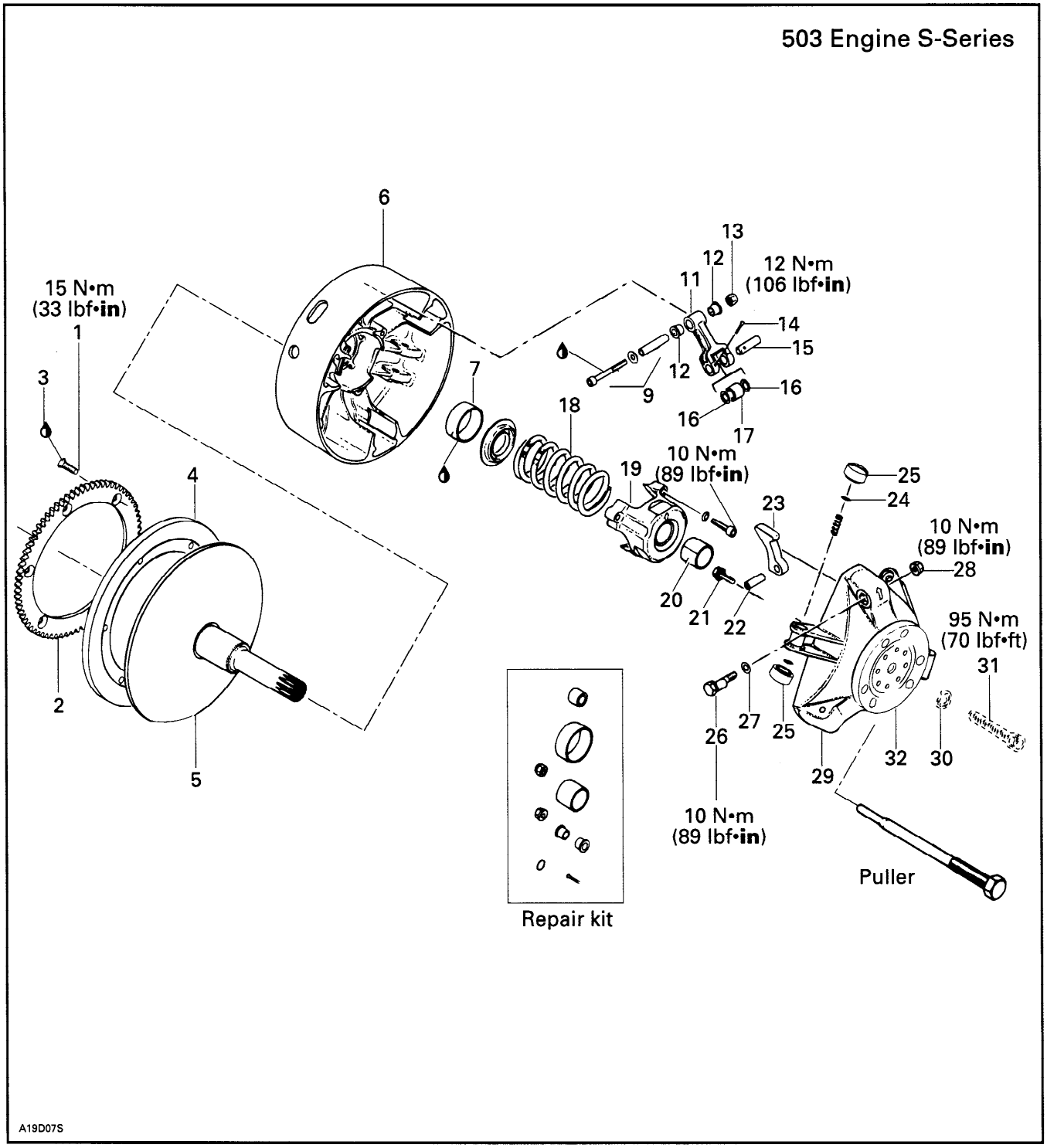

GENERAL

Some drive pulley components (return spring, ramp) can be changed to improve vehicle performance in high altitude regions. The *High Altitude Technical Data* booklet (P / N 484 0624 00 and 484 0545 00 for binder) gives information about calibration according to altitude.

CAUTION : Such modifications should only be performed by experience mechanics since they can greatly affect vehicle performance.

NOTE : TRA clutch stands for Total Range Adjustable clutch.

WARNING : Any drive pulley repairs must be performed by an authorized Bombardier snowmobile dealer, or other such qualified person. Sub-component installation and assembly tolerances require strict adherence to procedures detailed.

REMOVAL

30,31, Conical Spring Washer and Screw

Use clutch holder (P / N 529 0064 00).

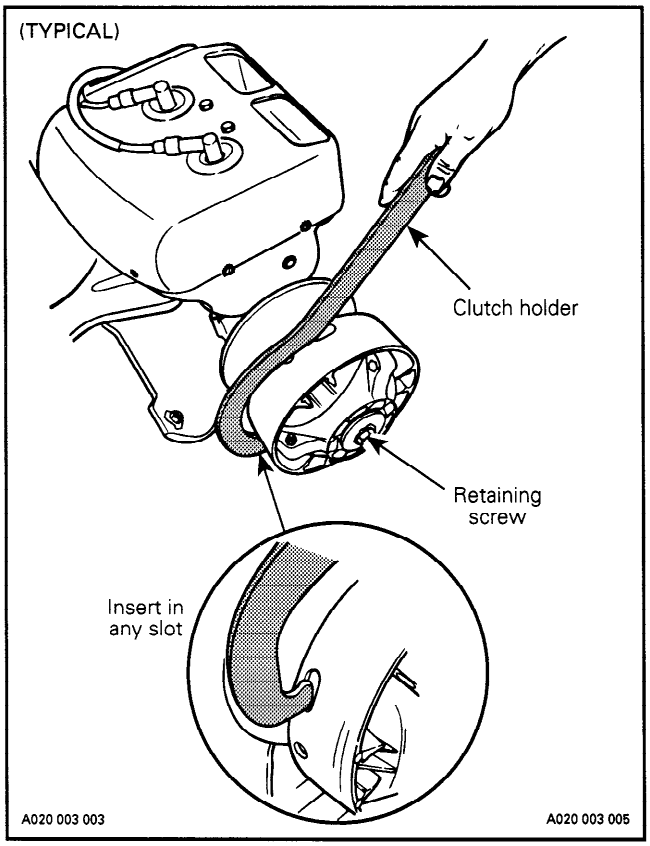

NOTE : Sliding half can be removed while fixed half remains on crankshaft.

WARNING : Never use any type of impact wrench at drive pulley removal and installation.

Remove retaining screw.

To remove drive pulley ass'y and / or fixed half from engine, use puller (P / N 529 0079 00).

CAUTION : These pulleys have metric threads. Do not use imperial threads puller. Always tighten puller by hand to ensure that the drive pulley have the same type of threads (metric vs imperial) prior to fully tighten.

To Remove Drive Pulley Ass'y :

Retain drive pulley with clutch holder.

Install puller in pulley shaft then tighten, at the same time, knock slightly on puller head to disengage pulley from engine crankshaft.

DISASSEMBLY

1,2, Screw and Ring Gear

CAUTION : Retaining screws must be heated before disassembly.

5,6, Fixed and Sliding Half or Flywheel

CAUTION : Do not tap on governor cup.

Screw puller into fixed half shaft about 13 mm (1/2 in). Raise drive pulley and hold it by the sliding half while knocking on puller head to disengage fixed half.

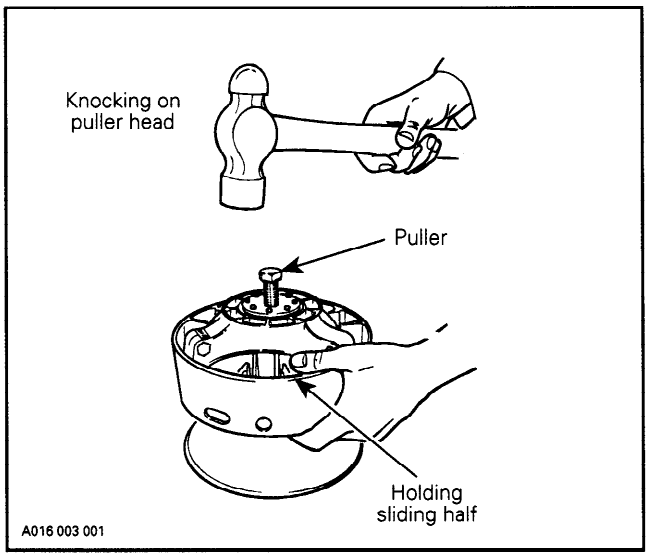

NOTE : No components marking is required before disassembling this drive pulley since it has factory mark and arrows as indexing reference.

25,29, **Slider Shoe and Governor Cup**

Carefully lift governor cup until slider shoes come at their highest position into guides.

Hold a slider shoe set then carefully lift its housing and remove them. Proceed the same way for other housings lifting one at a time.

32, Cushion Drive

CAUTION : Do not disassemble cushion drive. Governor cup and cushion drive are factory balanced as an assembly.

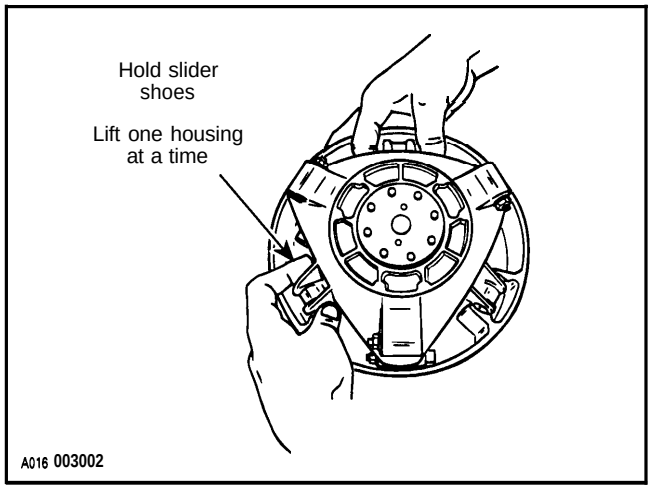

NOTE : **To ease disassembly, forks (P/N 529 0055 00) should be used to hold slider shoes prior to removing governor cup.**

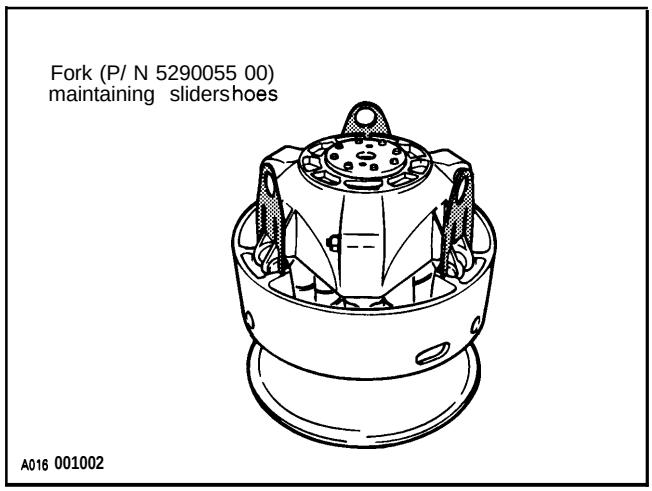

19, Spring Cover Ass'y

It is pushed by clutch spring pressure.

WARNING : **Clutch spring is very strong. Never attempt to remove spring cover without the recommended tools.**

Use spring compressor (P/ N 5290151 00).

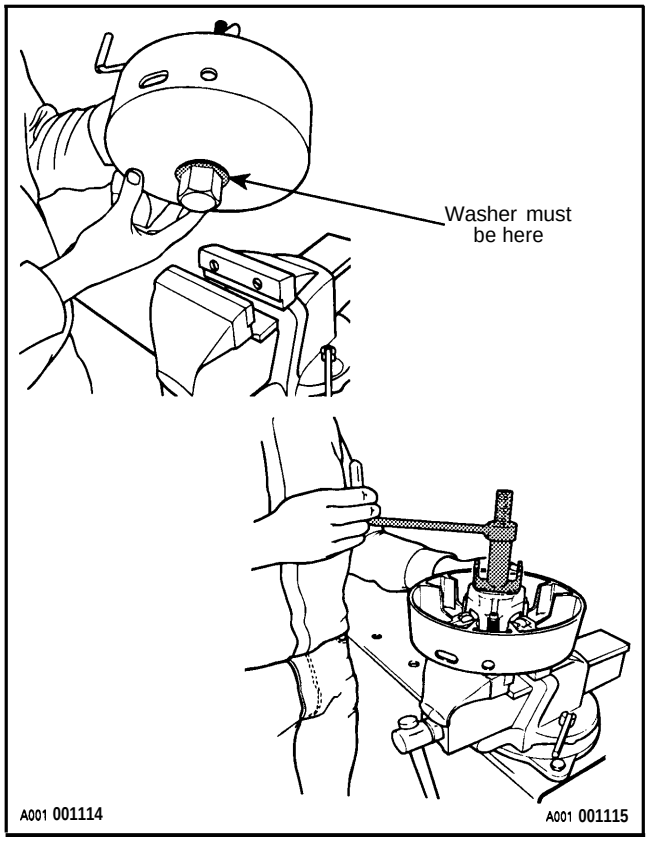

Install tools as shown. Remove 3 Allen screws retaining spring cover then unscrew compressor.

CLEANING

5,6, **Fixed and Sliding Half**

Clean pulley faces and shaft with fine steel wool and dry cloth.

5, **Fixed Half and Crankshaft End**

Parts must beat room temperature before cleaning.

Using a paper towel with cleaning solvent (P/N 413 7082 00), clean crankshaft tapered end and the taper inside the fixed half of the drive pulley, crankshaft threads and retaining screw threads.

WARNING : This procedure must be performed in a well ventilated area.

CAUTION : Avoid contact between cleaner and crankshaft seal because damage may occur.

Remove all harden oil deposits that have baked on crankshaft and pulley tapered surfaces with coarse or medium steel wool and /or sand paper no. 600.

CAUTION : Do not use any other type of abrasive.

Reclean mounting surfaces with paper towel and cleaning solvent (P/ N 4137082 00).

Wipe off the mounting surfaces with a clean, dry paper towel.

CAUTION : **Mounting surfaces must be free of any oil, cleaner or towel residue.**

INSPECTION

Drive pulley should be inspected annually.

16,17, Thrust Washer and Roller

Check roller for roundness of external diameter. Check thrust washer for thickness wear. Replace as required.

CAUTION : Ensure rollers are in good condition. Replace as required.

9,12, Fitting Bolt Ass'y and Flanged Bushing

Check for wear, replace as required. When installing old style flanged bushing (made of black plastic), use a size "O" (letter) drill bit to ream inside diameter.

24,25, **O-ring and Slider Shoe**

Check if O-rings are cracked, cut or crushed. Replace as required.

Check slider shoes for wear. Replace if groove is not apparent on top.

5,29, **Fixed Half and Governor Cup**

Inspect splines and free play between both parts. Maximum free-play is 0.5 mm (.020 in) measured at calibration screw radius. Replace if required.

7,20, **Sliding Half and Spring Cover Kahrlon Bushing**

Visually inspect kahrlon coating. Replace if worn.

Sliding Half Bushing Replacement

Use a suitable pusher to remove the old bushing. Clean sliding half with ethyl alcohol.

CAUTION : **Bushing must be bonded with retaining compound (P/ N 413 7031 00) then flared to prevent displacement in sliding half.**

To flare bushing, use spring compressor (P/N 529 0151 00) and appropriate flare tools.

FLARE TOOL	STAMPED LETTER	P/N
INTERIOR	C	**529018400**
EXTERIOR	C	529018500

Apply retaining compound (P/ N 4137031 00) outside of bushing then insert into its housing making sure there is the same distance both sides.

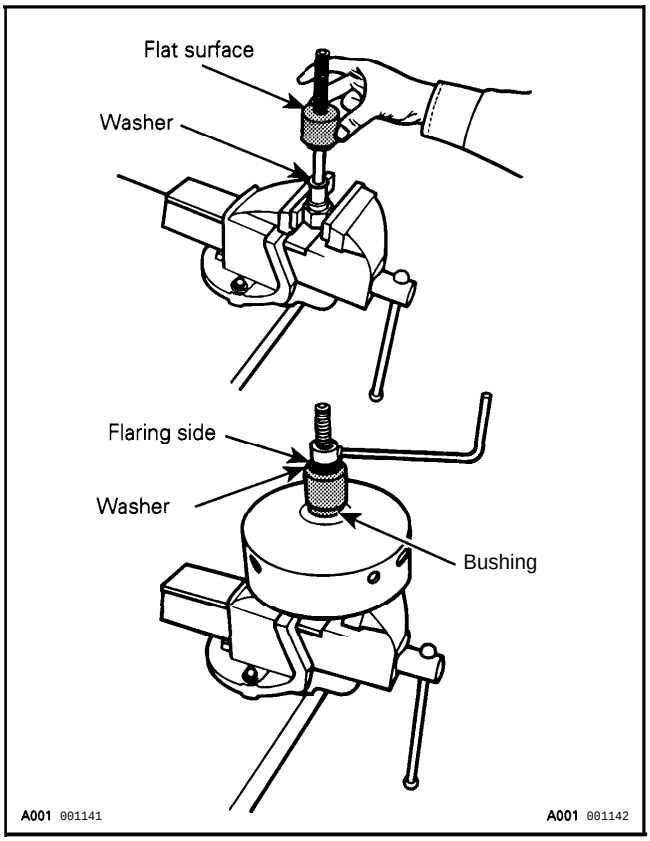

Then flare bushing.

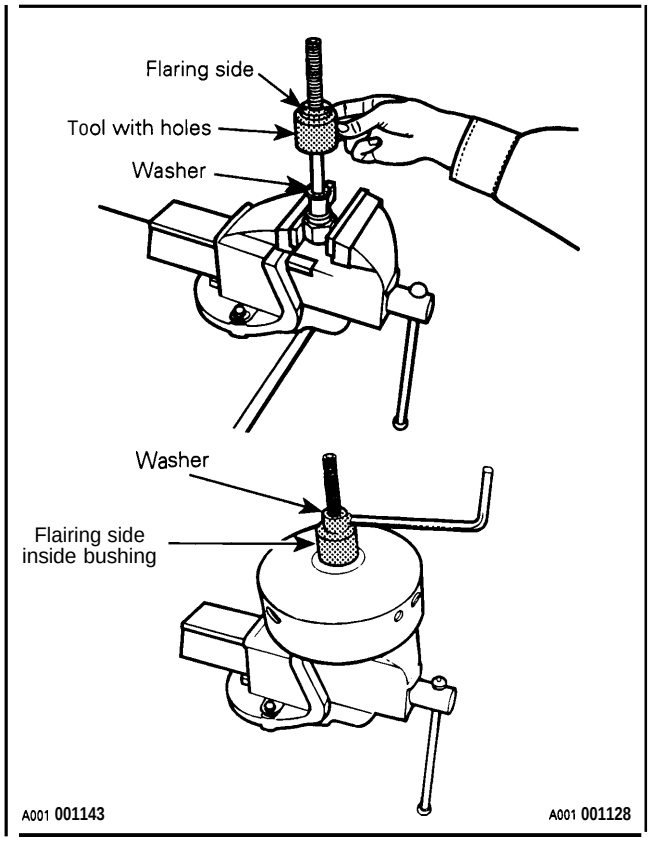

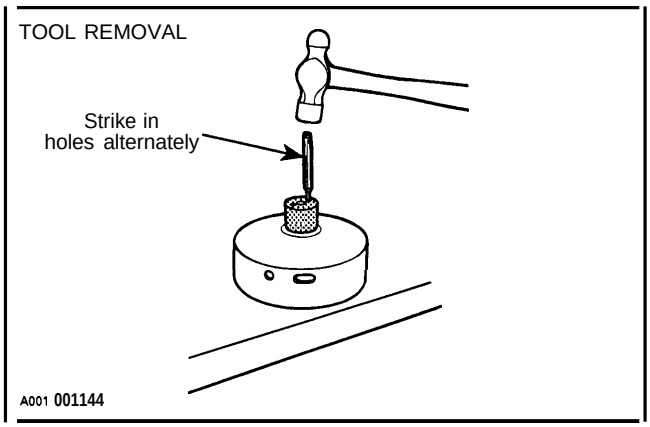

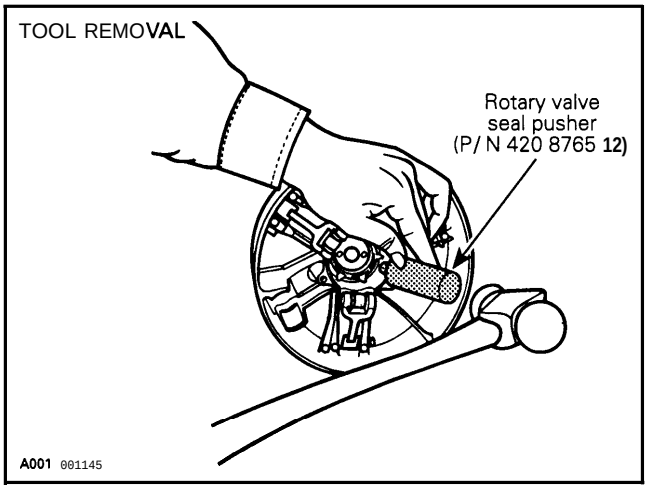

CAUTION : Do not install sliding half on a vise to remove remaining tool.

Spring Cover Bushing Replacement

Use a gauge chisel to remove old bushing.

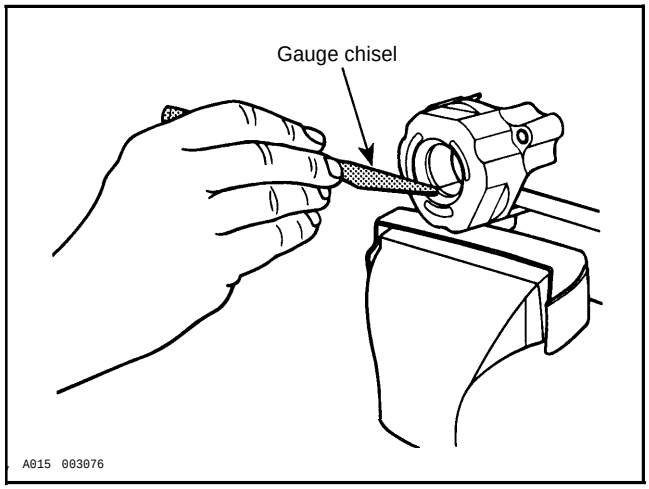

CAUTION : Bushing must be bonded with retaining compound then flared to prevent displacement in spring cover.

Apply retaining compound outside of bushing. Insert flush to spring cover from the outside not the spring side, with spring compressor (P/ N 5290151 00) and appropriate flare tools.

FLARE TOOL	STAMPED LETTER	MODEL	P / N
INTERIOR	A	ALL EXCEPT F-Series (25 mm ø)	529018000
INTERIOR	B	F-Series (27 mm ø)	529018200
EXTERIOR	A	ALL EXCEPT F-Series (25 mm ø)	529018100
EXTERIOR	B	F-Series (27 mm ø)	529018300

CAUTION : Insert bushing from spring side (in terior) of spring cover.

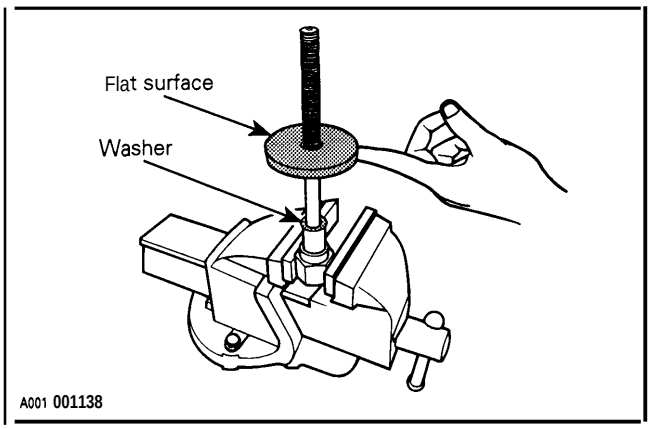

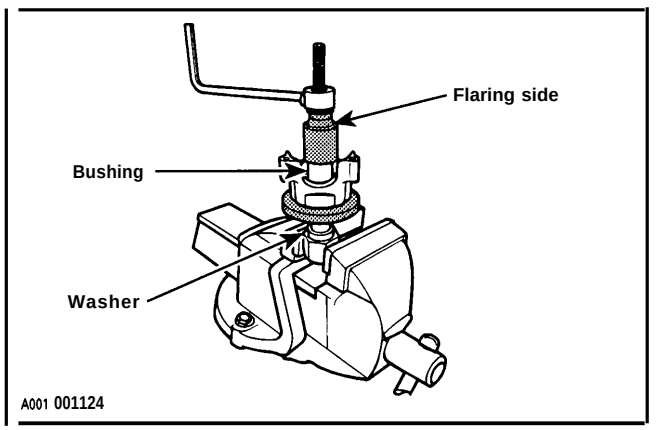

Then, flare bushing.

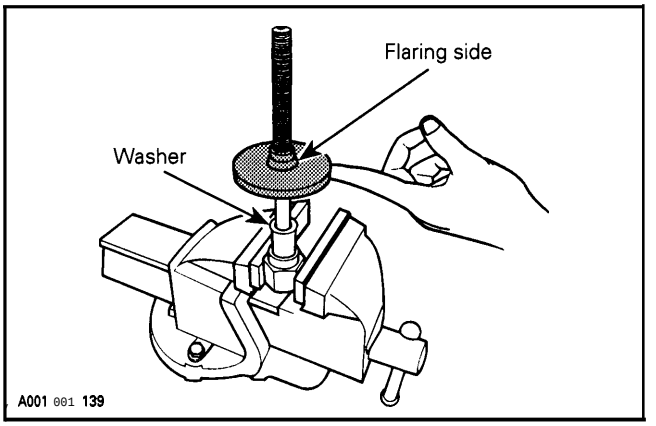

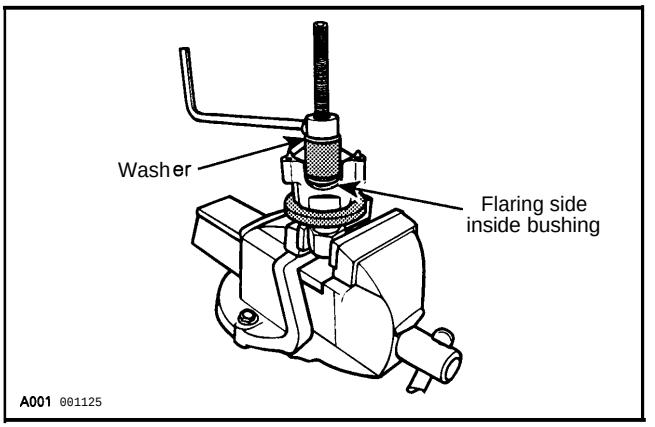

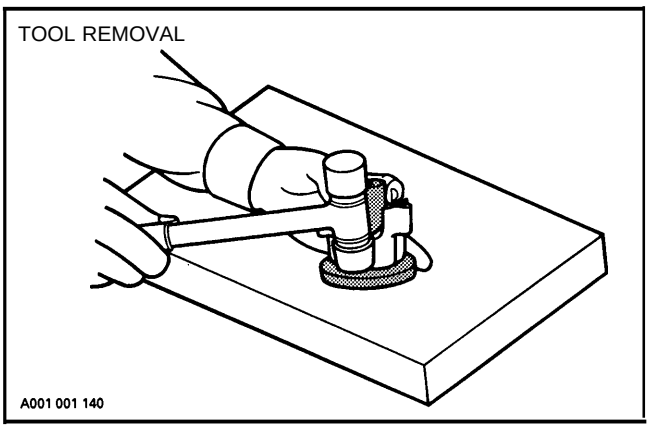

ASSEMBLY

O **NOTE : This drive pulley is lubrication free. Do not lubricate any component.**

1,2,3,4, Screw, Ring Gear, Loctite 271 and Flywheel

Apply Loctite 271 (P/N 4137029 00) on threads and head countersink then torque to 15 N•m (133 lbf•**in**)

26,27,28, **Calibration Screw, Washer and Locking Nut**

When installing calibration screw, make sure to install washer as shown.

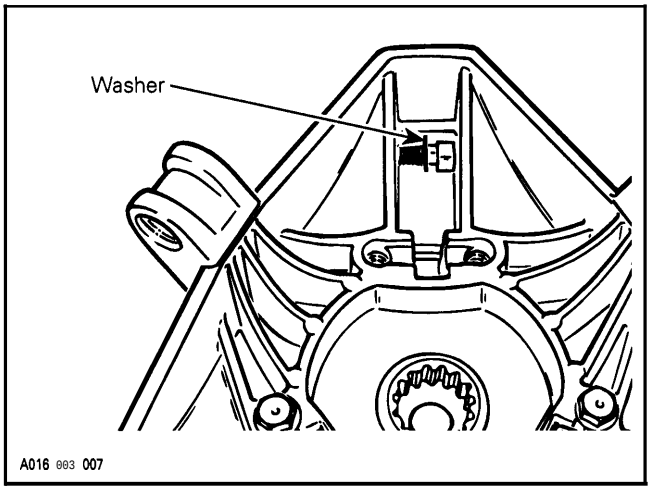

Torque locking nut to 10 N•m (89 lbf•**in**)

15, Pin

Always use the same type of pin as originally installed when servicing. Different types have different weights for calibration purpose. Refer to TECHNICAL DATA 10.

21,22,23, Ramp, Dowel Tube and Screw

Insert dowel tube from chamfered side. Make sure ramp is centered on dowel tube.

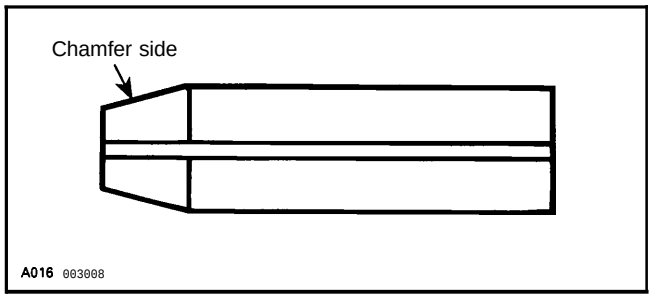

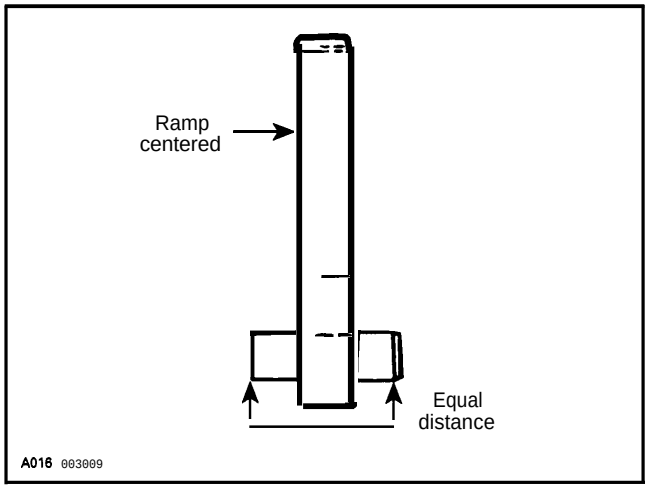

▼ **CAUTION : Dowel tube split must be installed against screw head or nut to block properly and prevent from turning.**

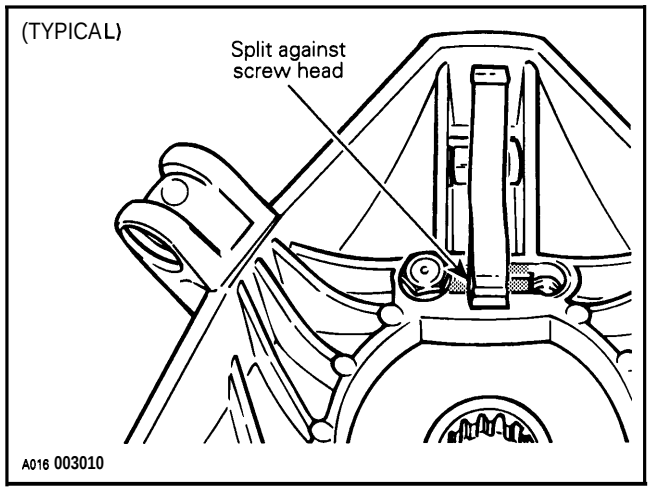

Torque screws to 10 N•m (89 lbf•**in**).

9,11,13,14, Screw, Lever Ass'y, Nut and Cotter Pin

Always install lever assemblies so that cotter pins are at the shown side, Besides install cotter pin head on top when lever is sat at bottom of sliding half. Bend cotter pin ends to sit perfectly against lever.

◆ WARNING : **Whenever replacing centrifugal levers, always replace all 3 at the same time. Otherwise, clutch misbalancing will occur because of levers difference.**

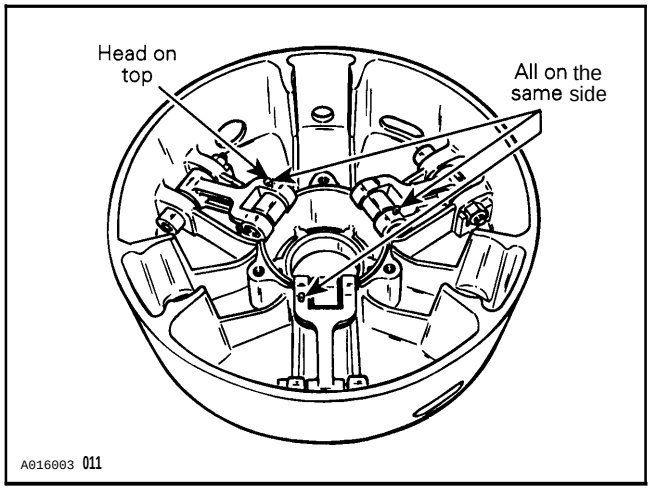

CAUTION : Lever assemblies must be installed so that cotter pins are on the same side.

Torque nuts to 12 N•m (106 lbf•**in**).

CAUTION : Lever ass'y and rollers must move easily after installation.

5,6,18,19, Fixed Half, Sliding Half, Spring, Spring Cover and Screw

To install spring cover, use spring compressor (P/N 5290151 00).

Assemble fixed and sliding halves. Note that fixed halves have different cone angle, Match cone angle with crankshaft.

Lift sliding half against spring cover and align spring cover arrow with sliding half mark.

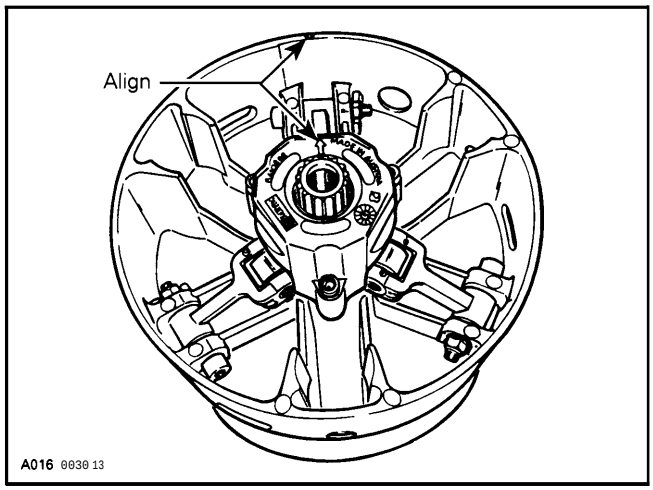

Install and torque screws to 10 N•m (89 lbf•**in**).

6,25,29, Sliding Half, Slider Shoe and Governor Cup

To install governor cup, use following tool :

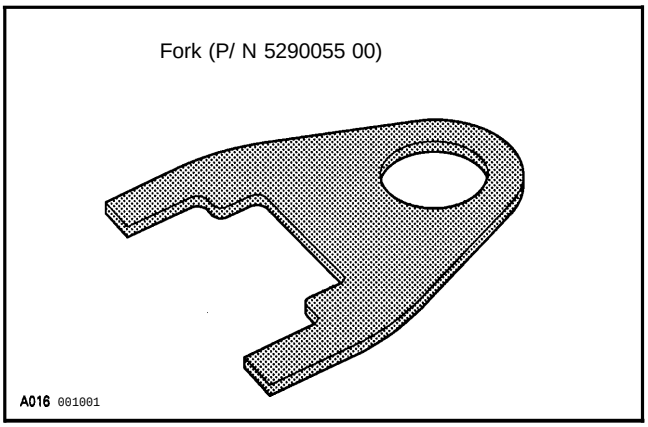

Insert spring and slider shoes into governor cup so that groove in each slider shoe is vertical to properly slide in guides.

CAUTION : Make **sure O-rings are installed on slider shoes and their grooves are positioned vertically.**

Install fork (P/ N 5290055 00) into slider shoe grooves to maintain them for governor cup installation. Proceed on 3 set of slider shoes.

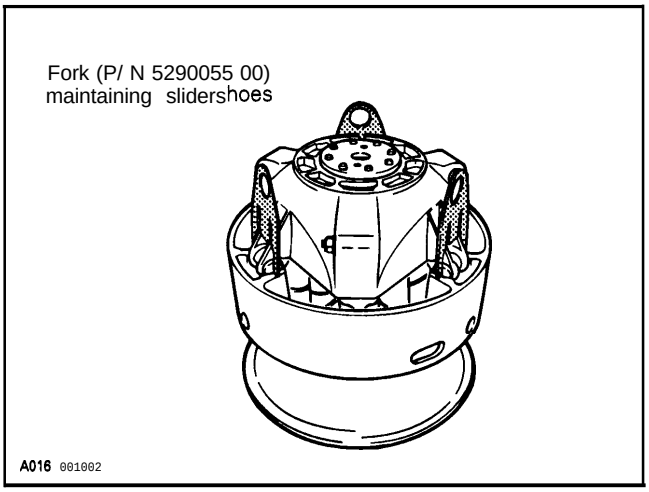

Make sure to align governor cup arrow with sliding half and fixed half mark.

NOTE : If fixed half has no mark, align governor cup mark with segment no. 1 of inner half. Segments are identified on engine side.

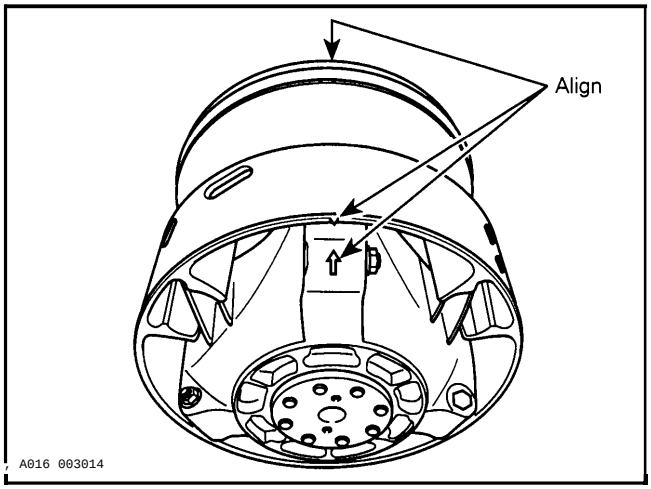

Carefully slide governor cup into sliding half. Align mark of governor cup with mark of fixed half,

Remove forks and push governor cup so that its splines engage with fixed half shaft splines.

CAUTION : Make **sure splines of both parts are fully engaged.**

INSTALLATION

WARNING : Do not apply antiseize or any lubricant on crankshaft and drive pulley tapers.

WARNING : Never use any type of impact wrench at drive pulley removal and installation.

Clean mounting surfaces as described in CLEANING above.

Drive Pulley Assry

The installation procedure must be strictly adhered to as follows.

Lock crankshaft in position as explained in removal procedure.

Install drive pulley on crankshaft extension.

Install conical washer with its concave side towards drive pulley then install screw.

WARNING : Never substitute lock washer and/or screw with jobber ones. Always use Bombardier genuine parts for this particular case.

Torque screw to 105 N•m (77 lbf•ft).

Install drive belt and belt guard.

Raise and block the rear of the vehicle and support it with a mechanical stand.

WARNING : Ensure that the track is free of particles which could be thrown out while track is rotating. Keep hands, tools, feet and clothing clear of track. Ensure nobody is standing near the vehicle.

Accelerate the vehicle at intermediate speed arm apply the brake, repeat 5 times.

Reduce the screw torque to 85 N•m (63 lbf•ft) then, retorque to 95 N•m (70 lbf•ft).

WARNING : After 10 hours of operation the transmission system of the vehicle must be inspected to ensure the retaining screw is properly torqued.

DRIVE PULLEY ADJUSTMENT

The drive pulley is factory calibrated to transmit maximum engine power at a predefined RPM. Factors such as ambient temperature, altitude or surface condition may vary this critical engine RPM thus affecting snowmobile efficiency.

This adjustable drive pulley allows setting maximum engine RPM in the vehicle to maintain maximum power.

Calibration screws should be adjusted so that actual maximum engine RPM in vehicle matches with the maximum horsepower RPM given in TECHN I CAL DATA 10.

- **NOTE :** Use precision digital tachometer for engine RPM adjustment.
- **NOTE :** The adjustment has an effect on high RPM only.

To adjust, modify ramp end position by turning calibration screws.

26,28,29, **Calibration Screw, Locking Nut and Governor Cup**

Calibration screw has a notch on top of its head.

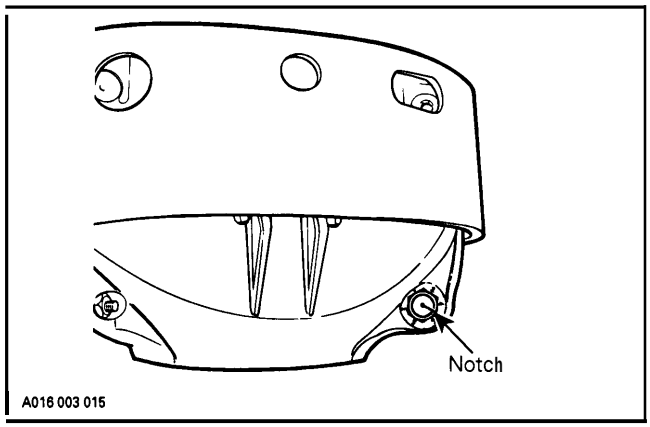

Governor cup has 6 positions numbered 2 to 6. Note that in position 1 the number is substituted by a dot (due to its location on casting).

See TECHNICAL DATA 10 for original setting.

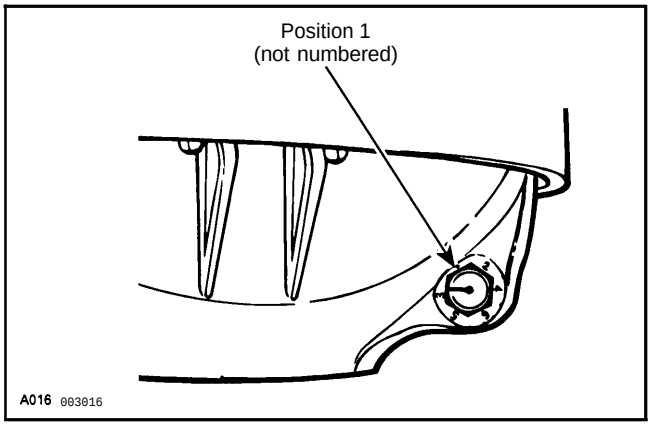

Each number modifies maximum engine RPM by about **200** RPM.

Lower numbers decrease engine RPM in steps of 200 RPM and higher numbers increase it in steps of 200 RPM.

Example :

Calibration screw is set at position 4 and is changed to position 6. So maximum engine RPM is increased of 400 RPM.

To Adjust :

Just loosen locking nut enough to pull calibration screw **partially out and-adjust to-desired position. Do not completely remove the locking nut. Torque locking nuts to 10** N•m **(89** lbf•**in**).

CAUTION : Do not completely remove calibration screw or its inside washer will fall off.

CAUTION : Always adjust all 3 calibration screws and make sure they are all set at the same number.

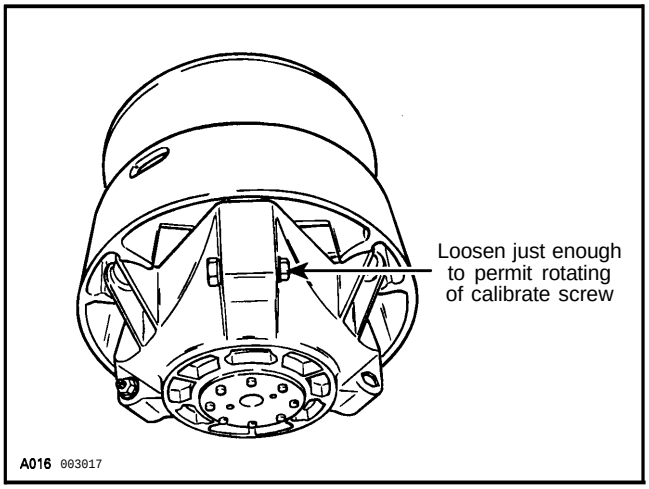

DRIVEN PULLEY

Elan

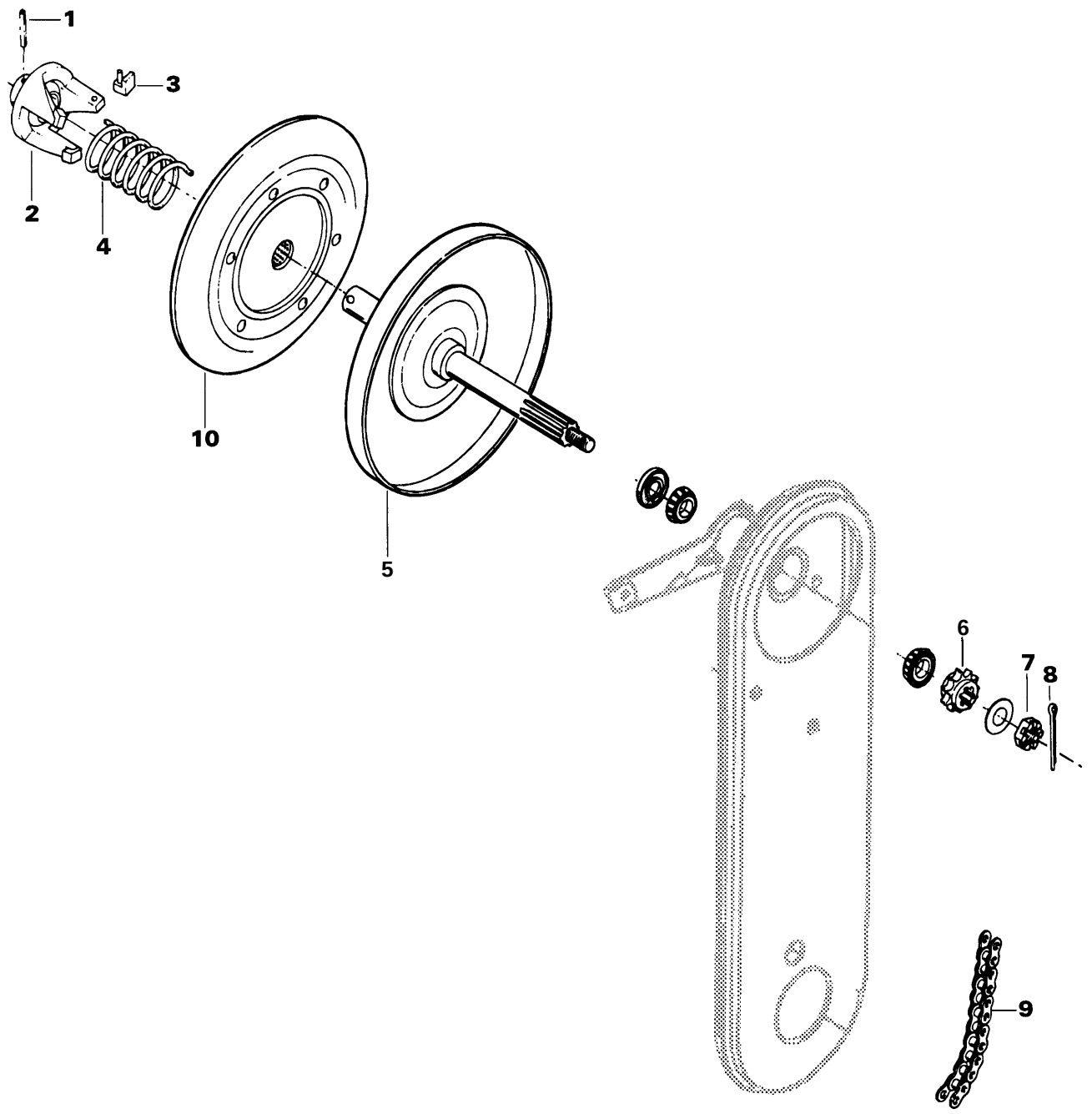

A002 003037

NOTE : Driven pulley components (cam, shoes, spring, etc.) except fixed half can be serviced without removing the whole driven pulley from chaincase. Simply remove roll pin as explained in disassembly portion.

REMOVAL

Pulley Guard and Drive Belt

Remove.

Steering Column Bolts

Slacken.

9, Drive Chain

Release tension.

7,8, Castellated Nut and Cotter Pin

Remove from fixed half shaft.

9, Drive Chain

Attach to frame to prevent from falling inside chaincase.

Driven Pulley Assembly

Pull toward engine and remove from vehicle.

DISASSEMBLY

1,2, Outer Cam and Roll Pin

Use a pin punch to remove roll pin from the outer cam.

3, Cam Slider Shoe

Heat surrounding area, cam slider shoe will come off.

INSPECTION

3, Cam Slider Shoe

Slider shoe must be replaced when dimple in the working surface is barely visible or worn to less than **0.5** mm (.020 in) deep. See illustration.

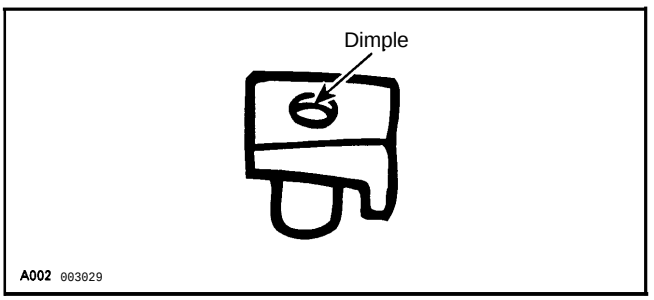

10, Sliding Half

See Formula driven pulley below for sliding half radial play measurement.

ASSEMBLY

3, Cam Slider Shoe

When replacing slider shoes, always install a new set (3 shoes) to maintain equal pressure on the cam.

5, Fixed Half Shaft

Thoroughly clean the fixed half shaft.

Apply a light film of low-temperature grease(P/N413 7061 00) on the shaft. Always wipe off surplus.

NOTE : Activate the sliding half several times to distribute lubricant over full length of shaft. Be careful that lubricant does not get on inner halves of pulley.

Assemble driven pulley components by reversing disassembly procedure.

INSTALLATION

Install a new upper chaincase oil seal.

Reinstall the driven pulley on vehicle by reversing the removal procedure.

6,9, Sprocket and Chain

With drive chain tension released, hold upper sprocket and chain in position then insert assembled driven pulley shaft through chaincase and sprocket.

7, Castellated Nut

Install spring washer and castellated nut.

Tighten castellated nut fully then back off nut 1/6 of a turn.

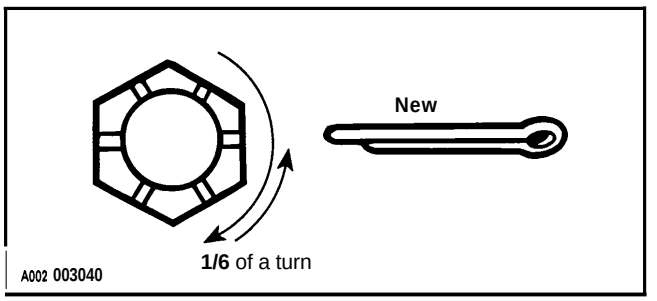

CAUTION : It is important that nut is backed off or damage may occur due to a burnt or seized bearing.

8, Cotter Pin

Lock assembly in position with a new cotter pin.

9, Drive Chain

Check chain tension.

ADJUSTMENT

4, Release Spring

Spring Torsional Pre-Load

In order to measure driven pulley spring torsional preload, pulley halves must be separated. To do this, insert length of 3 mm (1/8 in) dia. rod between the halves. Check tension using a fish scale positioned 90° with pulley axle.

Take a measurement when opening driven pulley and another one when driven pulley begins to close after a rotation of 10 mm (3/8 in). Spring pre-load is the average measurement between these 2.

$$\frac{\text{1st measurement (when opening)} + \text{2nd measurement (when closing)}}{2} = \text{Spring pre-load}$$

Example : 3.8 kg (8.4 lb) (when opening) + 3.4 kg (7.9 lb) (when closing) = 3.6 kg (8 lb) Actual spring pre-load

$$\frac{3.8\ \text{kg} + 3.4\ \text{kg}}{2} = 3.6\ \text{kg}$$

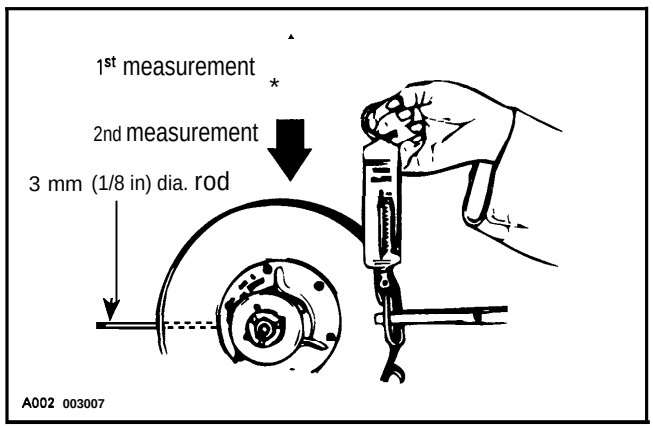

Spring pre-load should be 3.6 kg (8 lb).

To correct spring pre-load, relocate spring end in sliding pulley half, moving it clockwise to decrease the pre-load or counterclockwise to increase it.

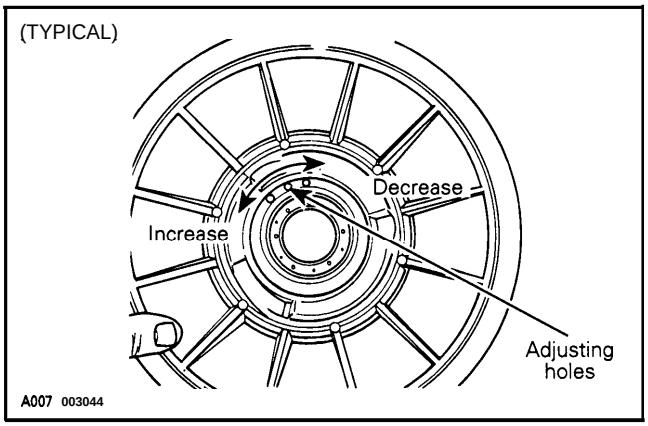

NOTE : Always recheck torsional spring pre-load after adjusting.

Chaincase

Check oil level and refill as required. Refer to CHAINCASE 05-06.

Pulley Alignment and Drive Belt Deflection

Refer to PULLEY ALIGNMENT 05-04 and DRIVE BELT 05-01 to perform adjustments.

CAUTION : Drive belt and pulley adjustments must **always be** checked whenever pulleys **have been removed, replaced or disassembled.**

Tundra II LT

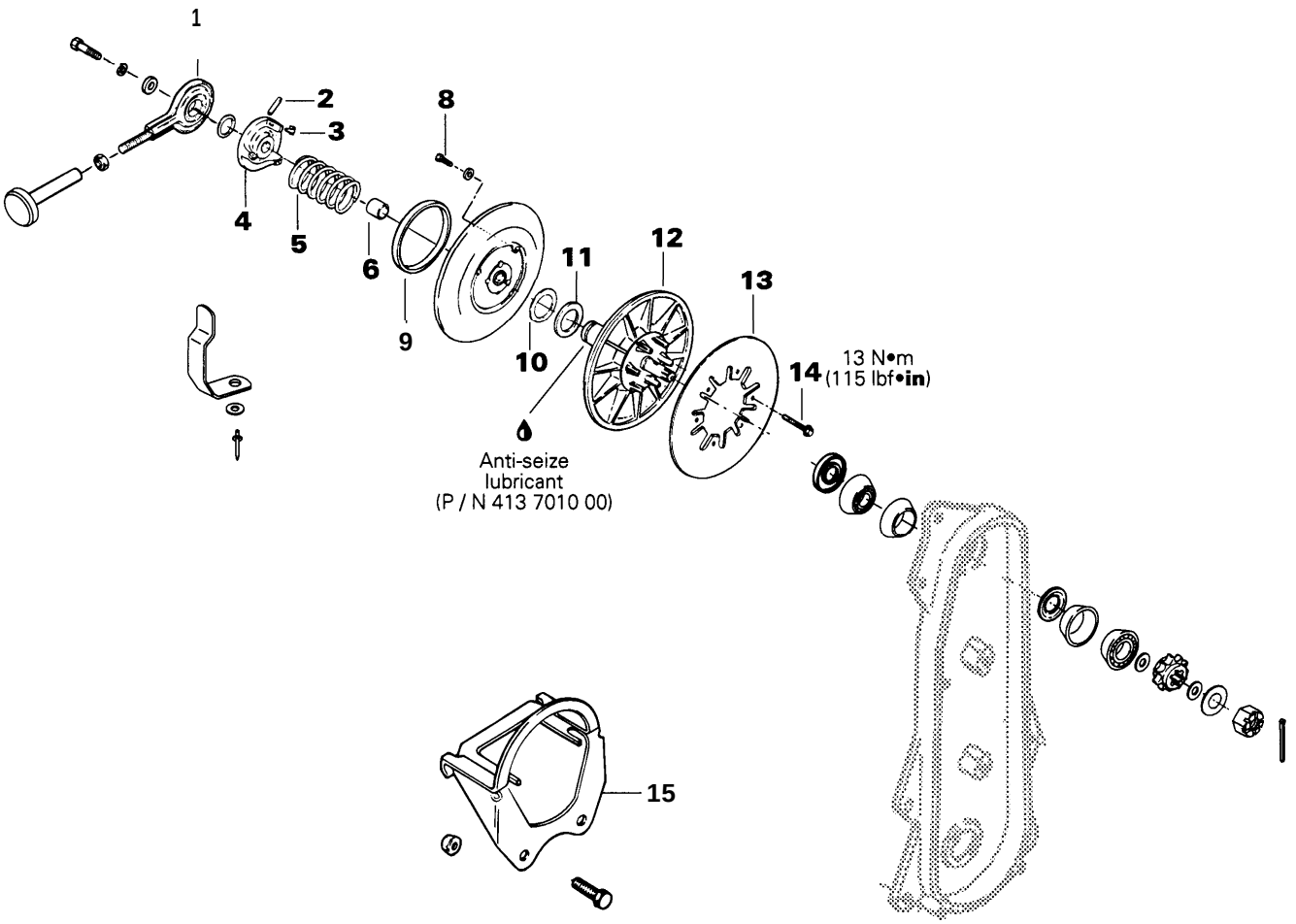

AO09 003026

NOTE : Driven pulley components (support, cam, shoes, etc.) can be serviced without removing the whole driven pulley from chaincase. Refer to the following procedures but neither remove brake caliper nor open chaincase for those cases.

REMOVAL

To remove driven pulley from chaincase, follow this procedure.

Belt Guard and Drive Belt

Remove from vehicle.

13, Brake Support

Remove from chaincase with brake ass'y.

1, Countershaft Support

Free countershaft support from support clamp.

To remove driven pulley support use support puller (P/ N 5290135 00).

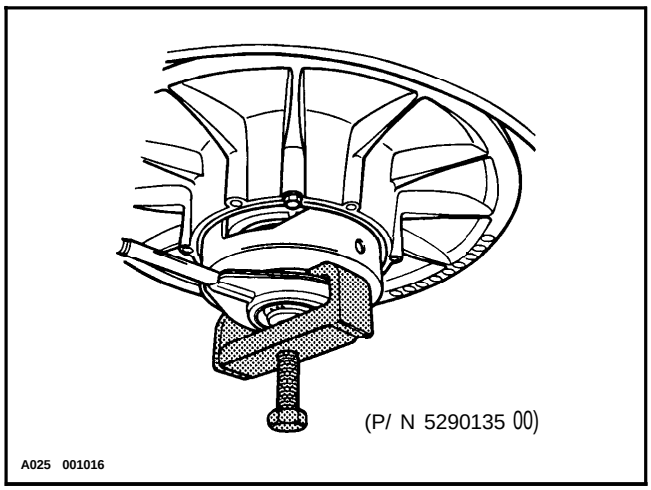

Chaincase

Open chaincase and drain oil. Unlock and remove upper sprocket.

The following is required to have enough space to remove driven pulley from chaincase :

Slacken upper retaining screws of steering column.

Disconnect carburetor boots from intake manifold and air intake silencer.

Disconnect impulse hose from engine.

Disconnect oil injection supply line at injection pump and plug line to prevent draining.

Remove screws retaining rear engine support to chassis.

Tip engine forward just enough to allow driven pulley removal from chaincase. Block in this position.

NOTE : In some cases, chaincase retaining screws might have to be slackened to allow pivoting of chaincase. In this case, note position of alignment shims. Besides, air intake silencer and oil injection reservoir might have to be slightly moved to get enough space to pull driven pulley.

DISASSEMBLY

Chaincase and Driven Pulley

Remove bearing cone.

Knock driven pulley shaft with a plastic hammer and pull driven pulley out.

1, support

Remove support using a suitable puller.

2,4, Roll Pin and Outer Cam

Remove roll pin and slide outer cam out of pulley shaft.

Install tool (P/ N 5290129 00), reinstall washer, lock washer and screw. Tighten tool screws alternately then remove roll pin.

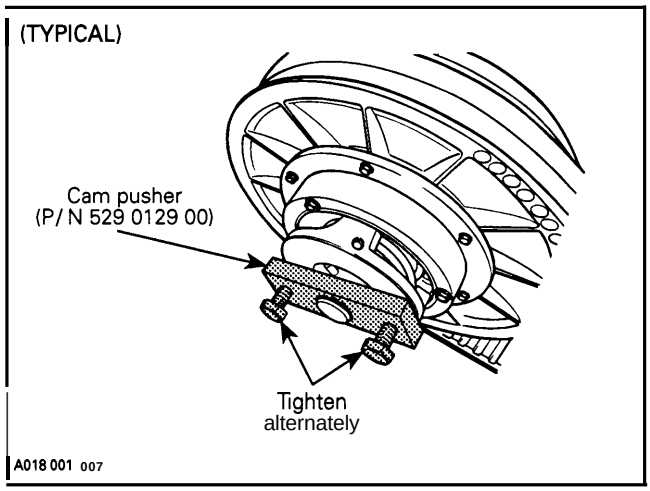

Note spring original setting (adjusting hole in sliding half).

INSPECTION

6,9, Sliding Half Bushing and Bushing

Check bushings for wear. See F-Series driven pulley below.

To disassemble a worn bushing (small), use a press and a suitable pusher.

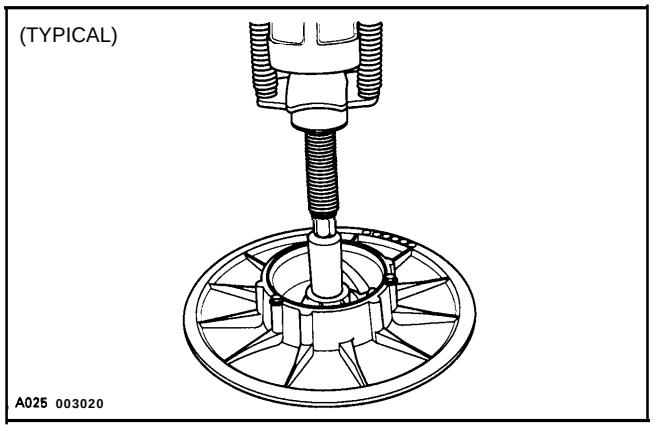

Remove 3 screws and washers and pry large bushing out.

3, Slider Shoe

Check cam slider shoes for wear. Replace when inside edge of cam slider shoe slope is worn to 1 mm (.039 in) or less.

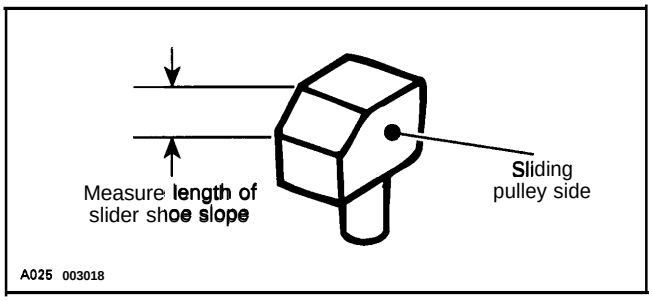

ASSEMBLY

6, Sliding Half Bushing

Clean mounting surfaces with Loctite Safety Solvent. Using a press and a suitable pusher, install bushing as illustrated.

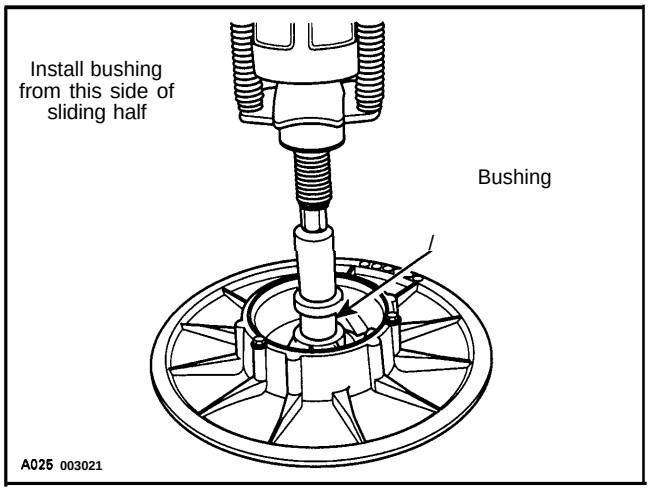

After bushing installation, try fixed half shaft inside bushing. If it is too tight, use burnishing bar (P/N 529 0264 00) then retry. If it is still too tight, use burnishing bar with oil on it.

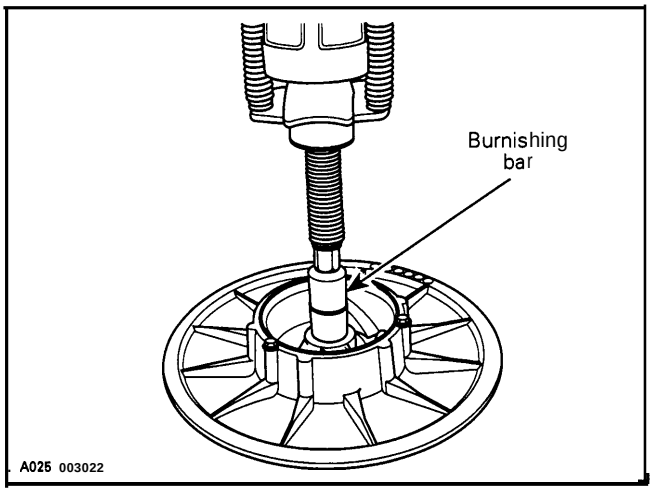

8,9, Screw and Bushing

Align notches with screw positions and press down. Torque screws to 5 N•m (44 lbf•in).

3, Slider Shoe

When replacing slider shoes, always install a new set (3 shoes) to maintain equal pressure on the cam.

12, Fixed Half Shaft

Thoroughly clean the fixed half shaft. Remove rust with no. 320 grit sand paper.

Apply a light film of antiseize lubricant (P/N 4137010 00) on the shaft. Always wipe off surplus.

NOTE : Activate the sliding half several times to distribute lubricant over full length of shaft. Be careful that lubricant does not get on inner halves of pulley.

13,14, Brake Disc and Screw

Install brake disc on fixed half and torque screws to 13 N•m (1 15 lbf•in).

Assemble driven pulley components by reversing the disassembly procedure.

2,4,5, Roll Pin, Outer Cam and Spring

One of its ramps facing upwards, hold sliding half with welding clamps. Install spring into sliding half at its original setting (previously noted adjusting hole). Insert other spring end in outer cam and turn clockwise until a slider shoe corresponds with the ramp facing upwards. Push cam all the way in then install roll pin coated with antiseize lubricant (P/ N 4137010 00).

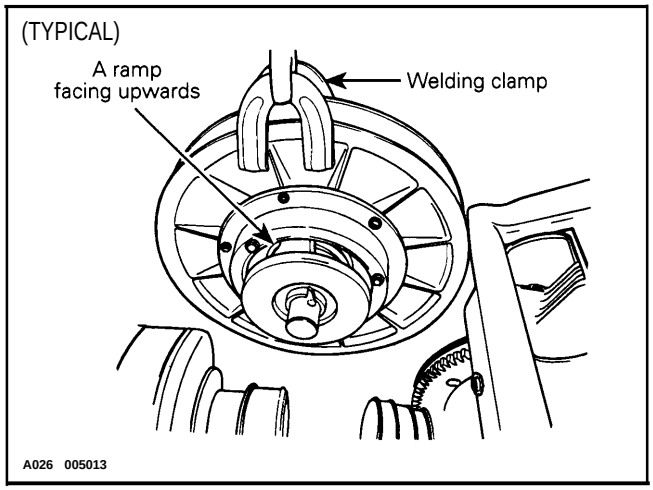

INSTALLATION

Driven Pulley and Chaincase

Install a new upper chaincase oil seal and a new chaincase cover seal.

Reinstall the driven pulley on vehicle by reversing the removal procedure.

NOTE : If chaincase screws have been slack-ened, chaincase can be reinstalled to its initial position by securing driven pulley support before tightening chaincase retaining screws. Make sure to install alignment shims as noted at removal.

CAUTION : Bleed oil injection pump on models that injection oil supply line has been re-**moved. Refer to INJECTION OIL SYSTEM 04-05.**

ADJUSTMENT

10,11, Shim

NOTE : The following adjustment must be performed with a new drive belt.

For best performance, particularly at starting, top of drive belt should be flush with top of driven pulley halves.

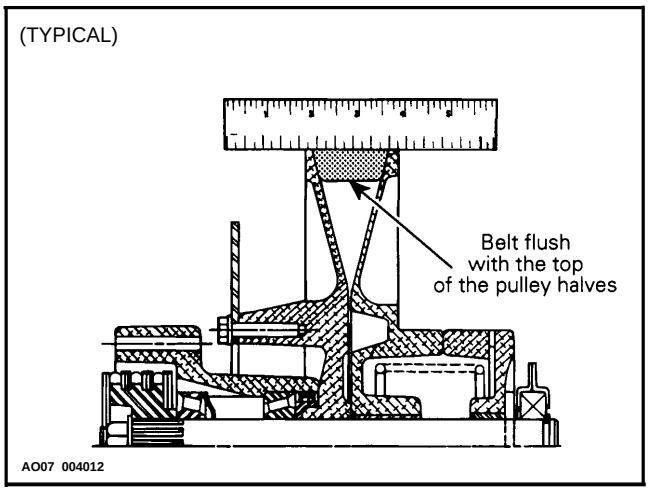

Shim(s) no. 10 and no. 11 provide belt height adjustment between pulley halves. Adding shim lower the belt in driven pulley while removing shim raise the belt. Adjust properly.

5, Spring

Spring Torsional Pre-Load

To check spring pre-load adjustment, use spring scale hook (P/ N 5290065 00) and a spring scale.

Install the hook on the sliding half with the spring scale perpendicular with pulley axle.

Take a measurement when opening driven pulley and another one when driven pulley begins to close after a rotation of 10 mm (3/8 in). Spring pre-load is the average measurement between these 2.

$$\frac{\text{1st measurement (when opening)} + \text{2nd measurement (when closing)}}{2} = \text{Spring pre-load}$$

Example : $\frac{\text{3.8 kg (8.4 lb) (when opening)} + \text{3.4 kg (7.9 lb) (when closing)}}{2} = \text{3.6 kg (8 lb) Actual spring pre-load}$

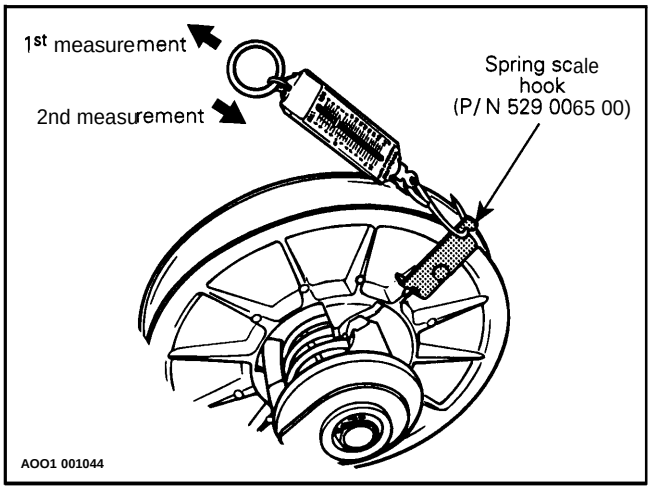

Spring pre-load should be as TECHNICAL DATA section 10.

To adjust spring pre-load relocate spring end in sliding pulley, moving it clockwise to decrease the pre-load and counterclockwise to increase it.

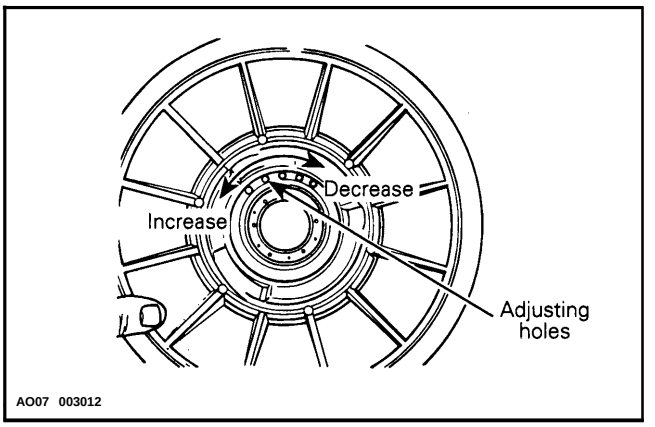

NOTE : Always recheck torsional pre-load after adjusting.

Chaincase

Check oil level and refil as required. Refer to CHAINCASE 05-06.

Pulley Alignment and Drive Belt Deflection

Refer to PULLEY DISTANCE AND ALIGNMENT 05-04 and DRIVE BELT 05-01 to perform adjustments.

CAUTION : Drive belt and pulley adjustments must always be checked whenever pulleys have been removed, replaced or disassembled.

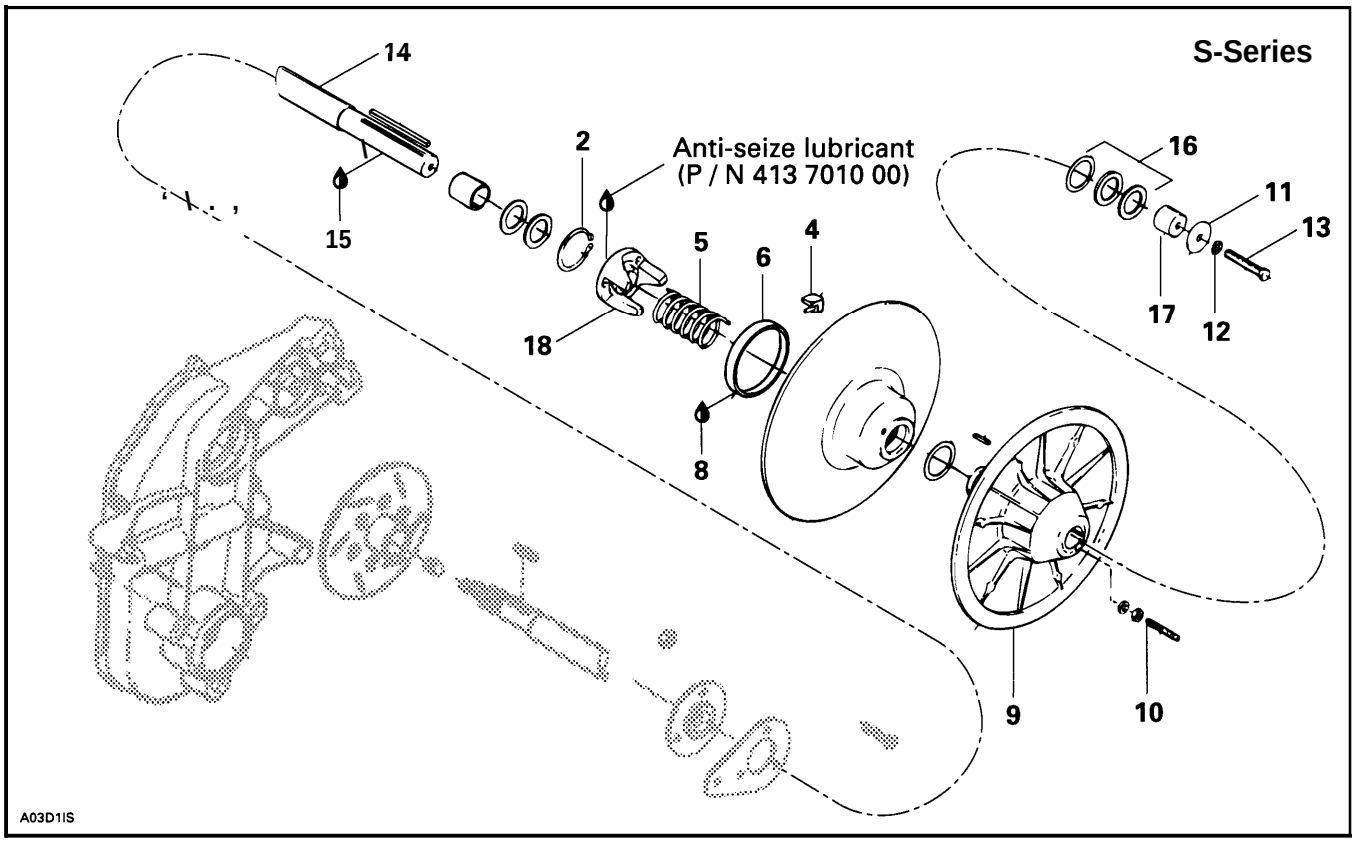
S-Series
14
15
2
Anti-seize lubricant
(P / N 413 7010 00)
18
5
6
4
8
16
11
13
17
12
9
10
A03D1IS

REMOVAL

Belt Guard and Drive Belt

Remove from vehicle.

11,12,13,16,17, Washer, Lock Washer, Screw, Shim and Extension

Remove the cap screw, pull the driven pulley from the counters haft.

14, Countershaft (Liquid Cooled Models Only)

Should removal be required, refer to BRAKE 05-05 then look for Countershaft and Brake Disc Removal.

DISASSEMBLY

2, Snap Ring

Use spring compressor (P/ N 5290151 00).

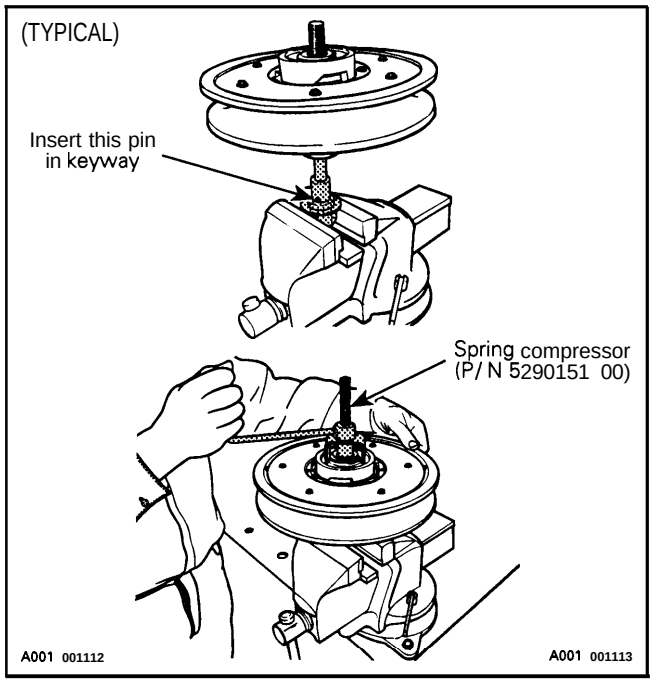

Remove snap ring to disassemble the outer cam and the 2 pulley halves.

WARNING : Driven pulley cam is spring loaded, use above mentioned tool.

CLEANING

7, Small Bushing

Only clean it using petroleum based solvent such as Varsol.

CAUTION : Do not use acetone.

6, Large Bushing

During break-in period (about 10 hours of use), teflon from bushing moves to cam surface. A teflon over teflon running condition occurs, leading to low friction. So it is normal to see gray teflon deposit on cam. Do not remove that deposit, it is not dust.

When a dust deposit has to be removed from the cam, use dry cloth to avoid removing transferred teflon.

INSPECTION

6,7, Bushings

Check for cracks, scratch and for free movement when assembled to fixed half.

6, Large Bushing

That bushing is made of teflon coated porous bronze. Wear limit is attained when 80% of surface is bronze.

7, Small Bushing

Under normal use there is no need to replace this bushing.

4, Slider Shoe

Check cam slider shoes for wear. Replace when inside edge of cam slider shoe slope base is worn to 1 mm (.039 in) or less.

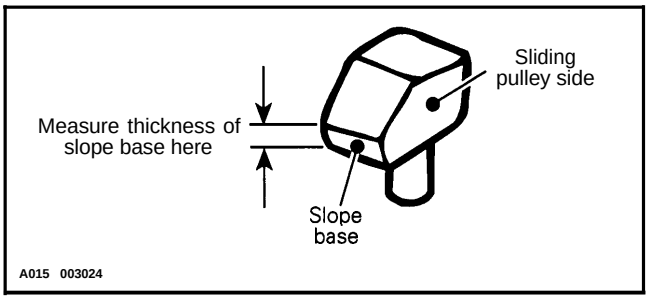

ASSEMBLY

4, Cam Slider Shoe

When replacing slider shoes, always install a new set (3 shoes) to maintain equal pressure on the cam.

Assemble driven pulley components by reversing the disassembly procedure.

18, Cam

Coat cam interior with antiseize lubricant.

INSTALLATION

14, Countershaft

CAUTION : Always apply antiseize lubricant (P / N 4137010 00) on the countershaft before final pulley installation.

Should installation procedure be required, refer to BRAKE 05-05 then look for **Brake Disc** and Countershaft Bearing Adjustment.

Reinstall the pulley on the countershaft by reversing the removal procedure.

Check end play of driven pulley on countershaft by pushing pulley towards outer housing so that the inner shims (P/ N 5041082 00) contact it. Measure end play at the mounting screw end between shim(s) and pulley. See illustration.

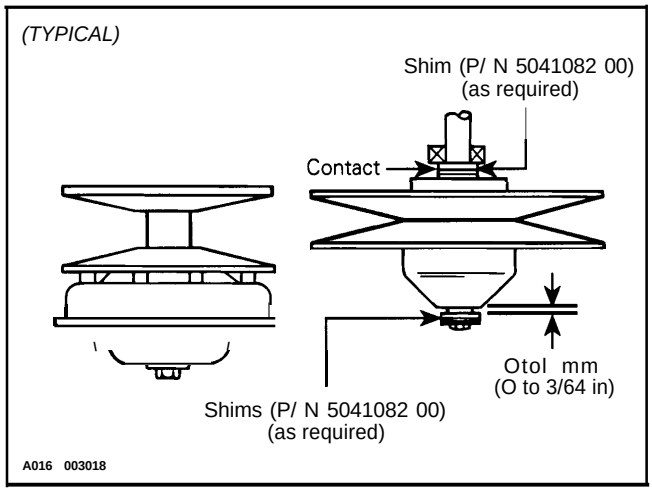

13, Pulley Retaining Screw

Torque to 25 N•m (18 lbf•ft).

ADJUSTMENT

Refer to PULLEY DISTANCE AND ALIGNMENT 05-04 to adjust pulley distance. Adjust drive belt height between pulley halves to obtain specified belt deflection.

5, Spring

Spring Torsional Pre-Load

To check spring pre-load adjustment, use spring scale hook (P/ N 5290065 00) and a spring scale.

Remove drive belt.

Install the hook on the sliding half. Preventing fixed half from turning, pull sliding half with the spring scale perpendicular with pulley axle.

Take a measurement when opening driven pulley and another one when driven pulley begins to close after a rotation of 10 mm (3/8 in). Spring pre-load is the average measurement between these 2.

$$\frac{\text{1st measurement (when opening)} + \text{2nd measurement (when closing)}}{2} - \text{Spring pre-load}$$

Example : 3.8 kg (8.4 lb) (when opening) + 3.4 kg (7.9 lb) (when closing) / 2 = 3.6 kg (8 lb) Actual spring pre-load

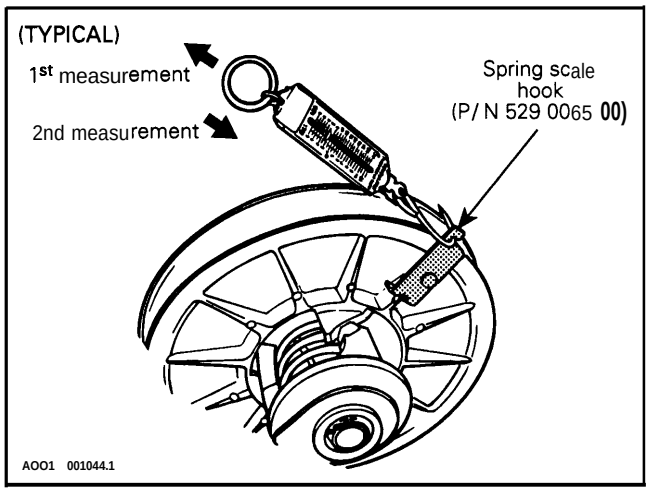

To adjust spring pre-load, relocate spring end in cam, moving it clockwise to increase the pre-load and counterclockwise to decrease it. Refer to 10 TECHNICAL DATA.

NOTE : If spring pre-load can not be adjusted, try to relocate the other end of spring in sliding pulley (holes A, B, C).

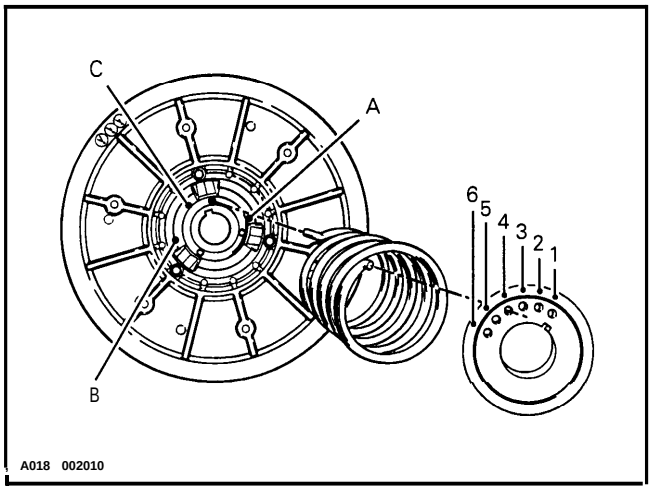

Letters and numbers shown in illustration are actual letters and numbers embossed on parts.

NOTE : Always recheck torsional pre-load after adjusting.

Pulley Alignment and Drive Belt Deflection

Refer to PULLEY DISTANCE AND ALIGNMENT 05-04 and DRIVE BELT 05-01 to perform adjustments.

CAUTION : Drive belt and **pulley adjustments must always be checked whenever pulleys have been removed, replaced or disassembled.**

3, Outer Cam

Make sure to install proper cam. Refer to TECHNICAL DATA.

Cam angle is identified on cam.

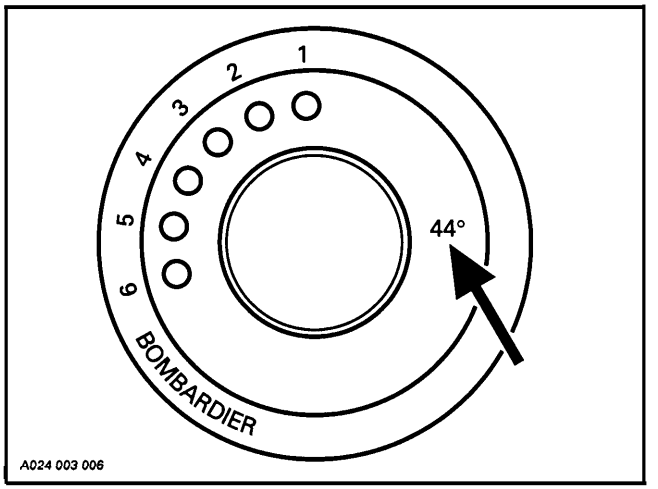

NOTE : For high altitude regions, the *High Altitude Technical Data Book/et* (P/N 484062400 and 4840545 00 for binder) gives information about calibration according to altitude.

PULLEY DISTANCE AND ALIGNMENT

GENERAL

The pulley distance we will refer to, in this section, is the space separating the drive and driven pulley outside diameters (Z measurement).

This basic distance is provided as an assembly guide and indicates the dimensions between which satisfactory belt deflection will be obtained.

Both pulley distance adjustment and pulley alignment must be carried out to ensure the highest efficiency of the transmission system. Furthermore, optimum drive belt operation and minimal wear will be obtained only with proper pulley alignment.

CAUTION : Before checking pulley adjustment, the rear suspension must be mounted on the vehicle and track tension / alignment must be done. Always check pulley adjustment after suspension is adjusted.

WARNING : Failure to correctly perform pulley alignment may cause the vehicle to creep forward at idle.

All pulley alignment specifications refer to :

X = Distance between straight bar and drive pulley fixed half edge, **measured between pulleys.**

Y = Distance between straight bar and drive pulley fixed half edge, **measured at the end of straight bar.**

Z = Distance between outside diameter of pulleys.

NOTE : The Élan drive and driven pulleys are inverted compared with other models.

GENERAL PROCEDURE

Remove belt guard and drive belt.

By turning and pushing the sliding half, open the driven pulley. Insert a straight bar 9.5 mm (.375 in) square, 48 cm (19 in) long or the proper alignment template into the opened driven pulley.

Measuring Procedure

Using Straight Bar :

Always measure distances X and Y from the farther straight bar side (including its thickness to the fixed half edge.)

Élan

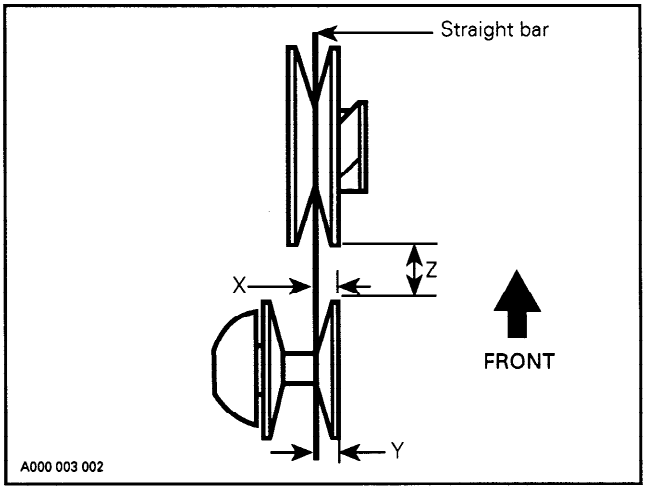

All Others

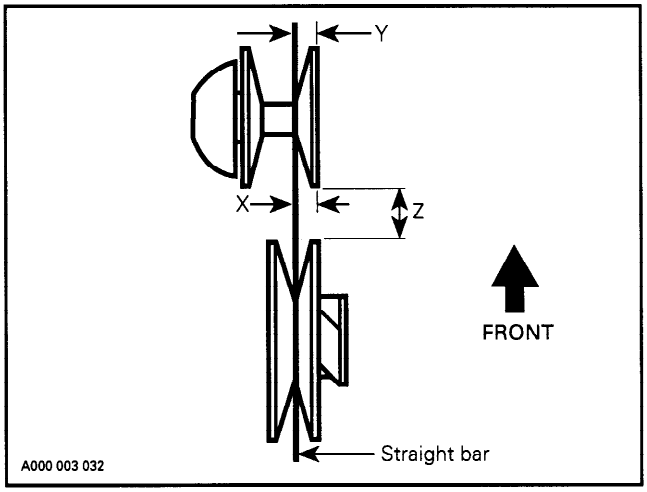

On all models except Élan, the distance Y **must** exceed distance X to compensate for the twist due to the engine torque.

Nominal Value Procedure and Quick Alignment and Distance Check

Alignment template tabs must fully contact fixed half of drive pulley.

Pulley distance is correct when tab contacts both pulley halves.

Refer to below chart for proper alignment template.

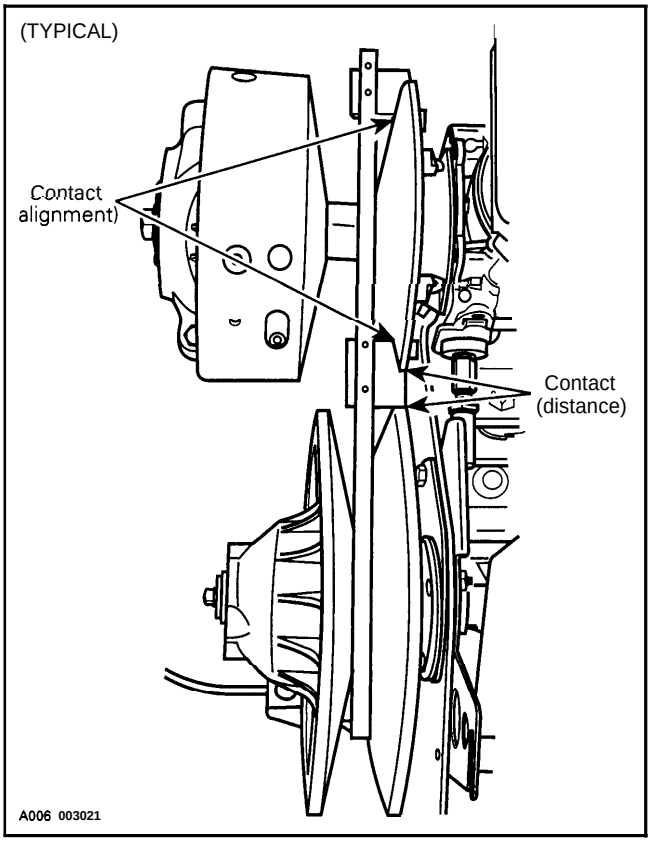

Élan Only

Alignment template must clear rivets and seat on sliding half shoulder and not on shaft.

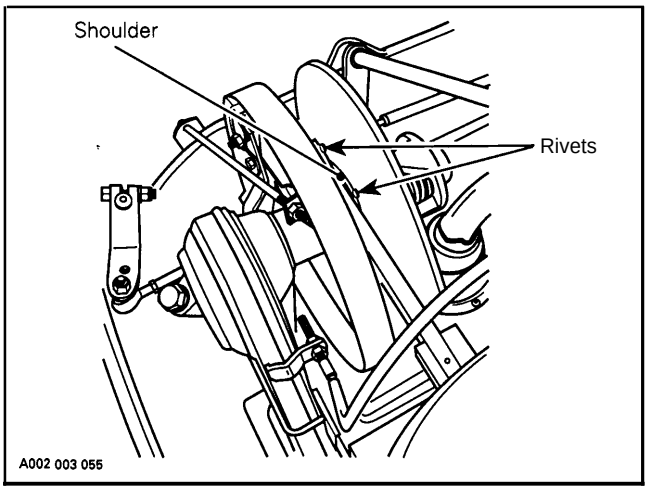

Tundra II LT Only

Bottom of alignment template must not seat on shaft nor fixed half shoulder and shim(s).

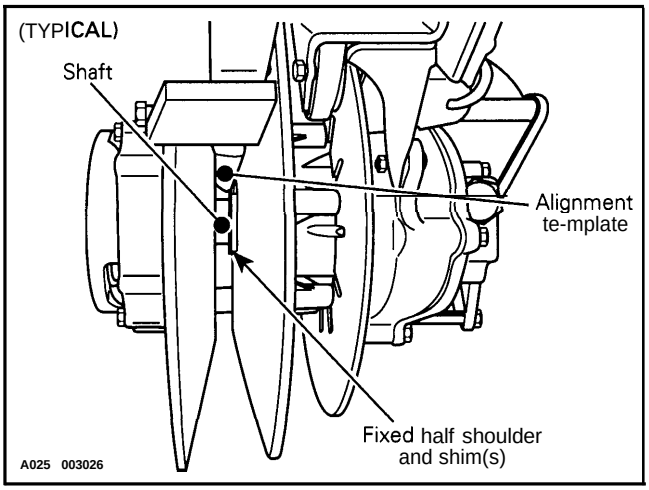

Drive Belt Deflection

NOTE : When pulley distance and alignment are adjusted to specifications, refer to DRIVE BELT 05-01 to adjust drive belt deflection.

CAUTION : This section deals mainly with adjustment procedures. For complete assembly requirements, refer to the proper ENGINE or TRANSMISSION installation section.

PULLEY ALIGNMENT AND DISTANCE SPECIFICATIONS CHART

MODEL	PULLEY DISTANCE	OFFSET		ALIGNMENT TEMPLATE
	z	x	Y-x	①
	+ O, – 1 mm (+ 0,-0.040 in)	± 0.50 mm (0.020 in)	± ().5 mm (0.020 in)	P / N
Élan	45.78 (1.802)	34.44 (1.356)	o	529028300
Tundra II LT	37.0 (1 .460	36.0 (1 .420)	0 to 1.5 mm (O to 0.060 in)	529026900
Bombardier Lite Equipped S-Series	25.0 (0.984)	33.4 (1.315)	1.0 (0.040)	529030000
TRA Equipped S-Series	16.5 (0.650)	35.0 (1.380)	1.5 (0.060)	529026700

① Alignment templates have been made according to pulley alignment nominal values. However, they do not take into account allowed tolerances for alignment specifications. They are used as GO / NO GO gauges for quick alignment and pulley distance check and as templates to reach alignment nominal values.

Elan 250

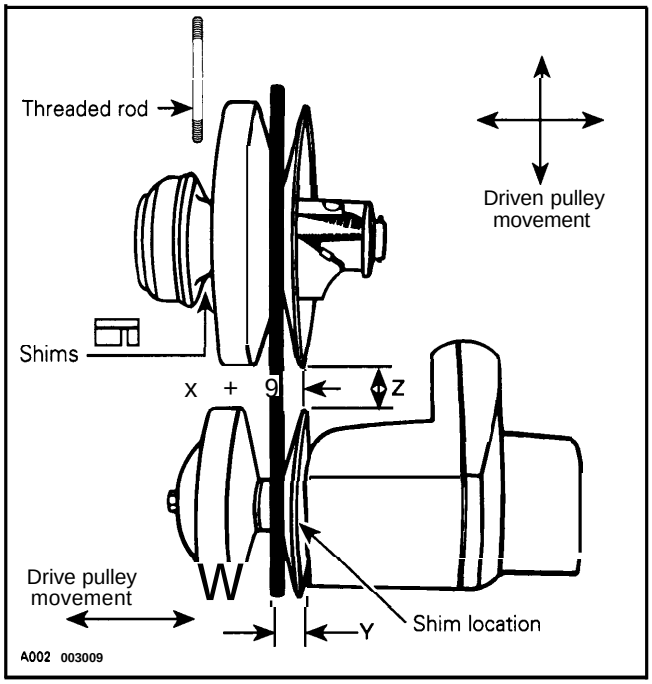

Pulley Distance Adjustment Method

With the threaded rod and nut located between chaincase and frame, shift chaincase to obtain the specified distance.

Pulley Alignment Methods

Drive Pulley Movement

If drive pulley is too far in, remove drive pulley and add shim(s) on crankshaft. Use shim (P/ N 5040820 00).

CAUTION : Never use more than 5 shims on crankshaft.

WARNING : Always torque drive pulley bolt within specifications. Refer to DRIVE BELT 05-01.

Driven Pulley Movement

If driven pulley is too far in, add shim(s) between frame and chaincase. Use shim (P/ N 5040504 00), 0.81 mm (.032 in) thickness.

Tundra II LT

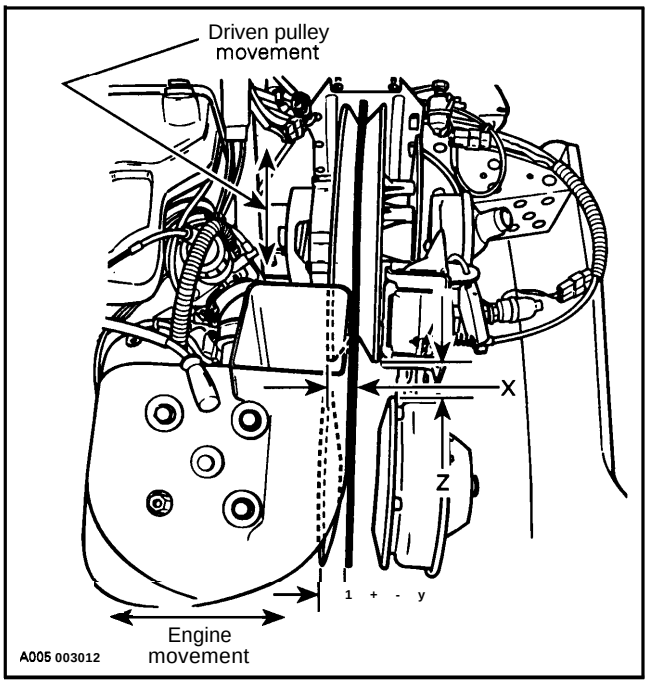

CAUTION : The rear suspension must be mounted on the vehicle and track tension and alignment must be done to provide the right frame width.

Pulley Distance Adjustment Method

Slacken the 4 chaincase retaining bolts, unlock and raise pulley support.

Move chaincase to obtain specific adjustment and adjust driven pulley support length accordingly (light contact).

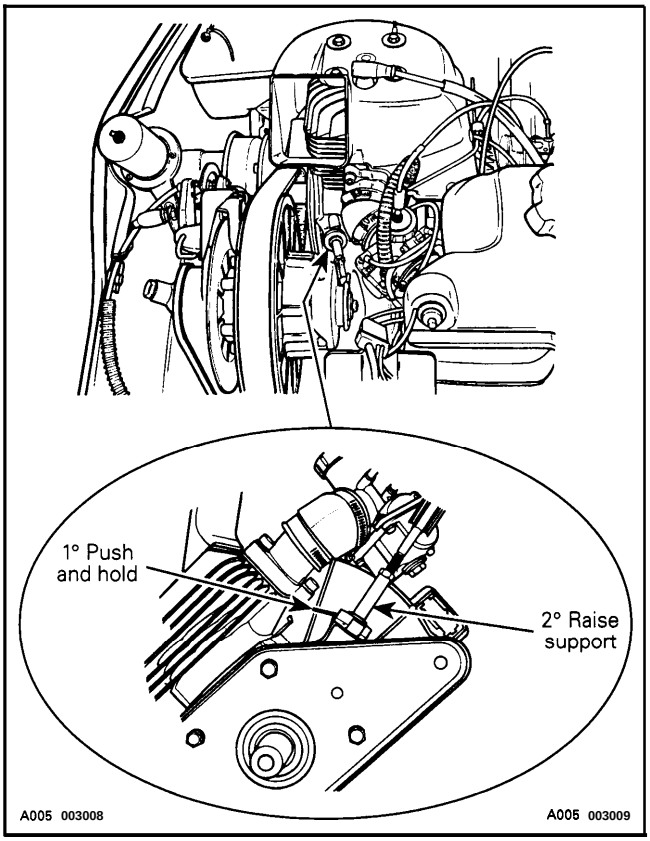

Pulley Alignment Method

Engine Movement

Slacken the support retaining bolts and install engine support positioner (P/ N 529 0245 00) to keep from altering distance between both supports.

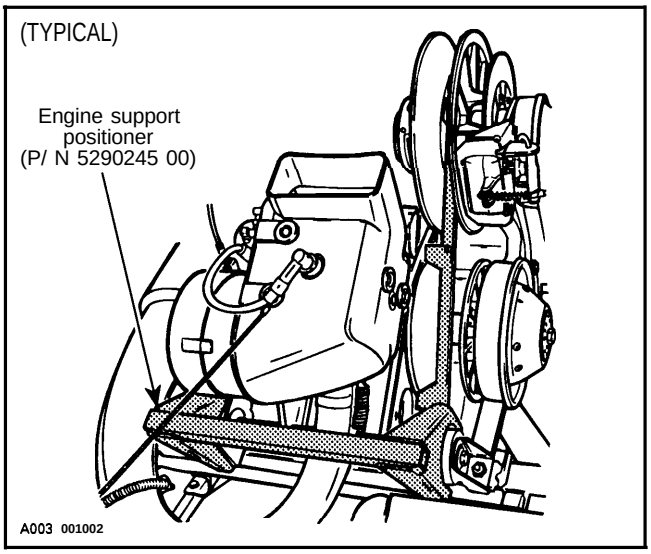

Move the engine to obtain specified pulley alignment, torque engine support bolts to 55 N•m (41 lbf•ft) and remove engine support positioner.

Driven Pulley Movement

Shims can be mounted between chaincase and frame. Use shim (P/ N 5040398 00), 0.53 mm (,021 in) thick.

S-Series

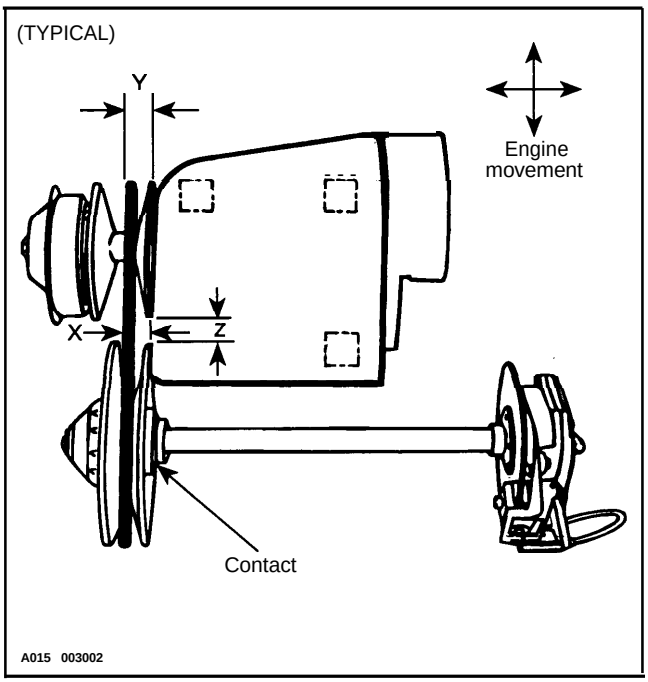

0 **NOTE :** Prior to performing pulley adjustment, loosen torque rod nut to allow engine movement. Engine brackets" have tendency to stick to frame, work engine loose prior to aligning.

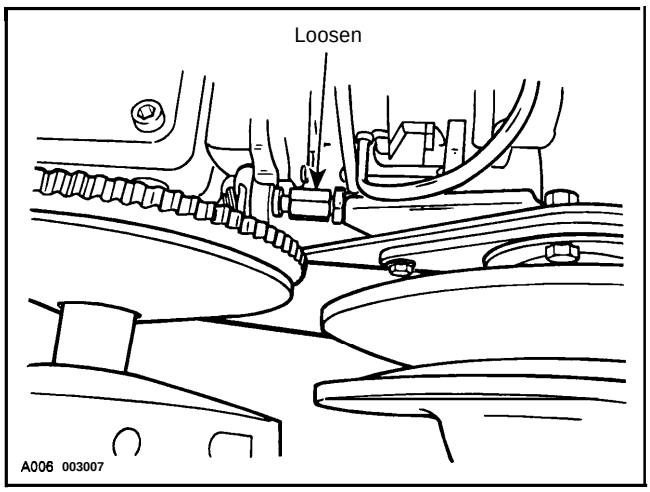

Pulley Distance Adjustment Method

Engine Movement

The engine bracket has slotted mounting holes. Move engine to obtain specified distance between pulleys.

Pulley Alignment Method

Driven Pulley Movement

When engine slotted mounting holes do not allow to set proper pulley offset **(X),** adjust with shims (P/ N 5041082 00) between pulley and countershaft bearing support (pulley pushed toward brake disc).

Engine Movement

Loosen the 4 bolts retaining engine bracket to the frame. Position engine to obtain the specified alignment,

0 **NOTE :** After adjustment, just tighten torque rod nut so it sits against washer. Do not over tighten, it will disalign pulleys,

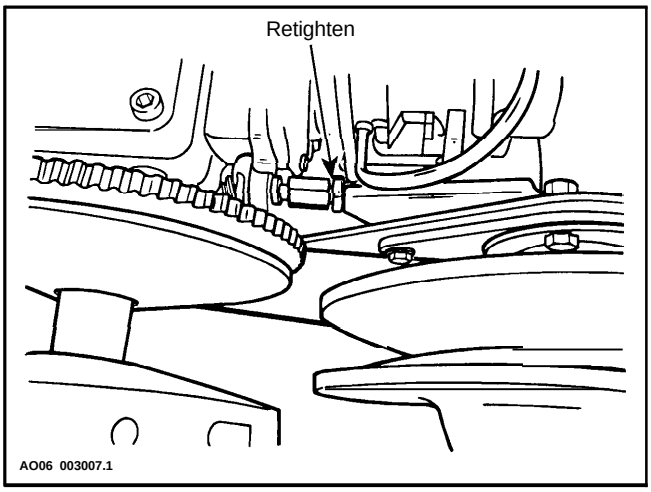

BRAKE

DRUM BRAKE

Elan

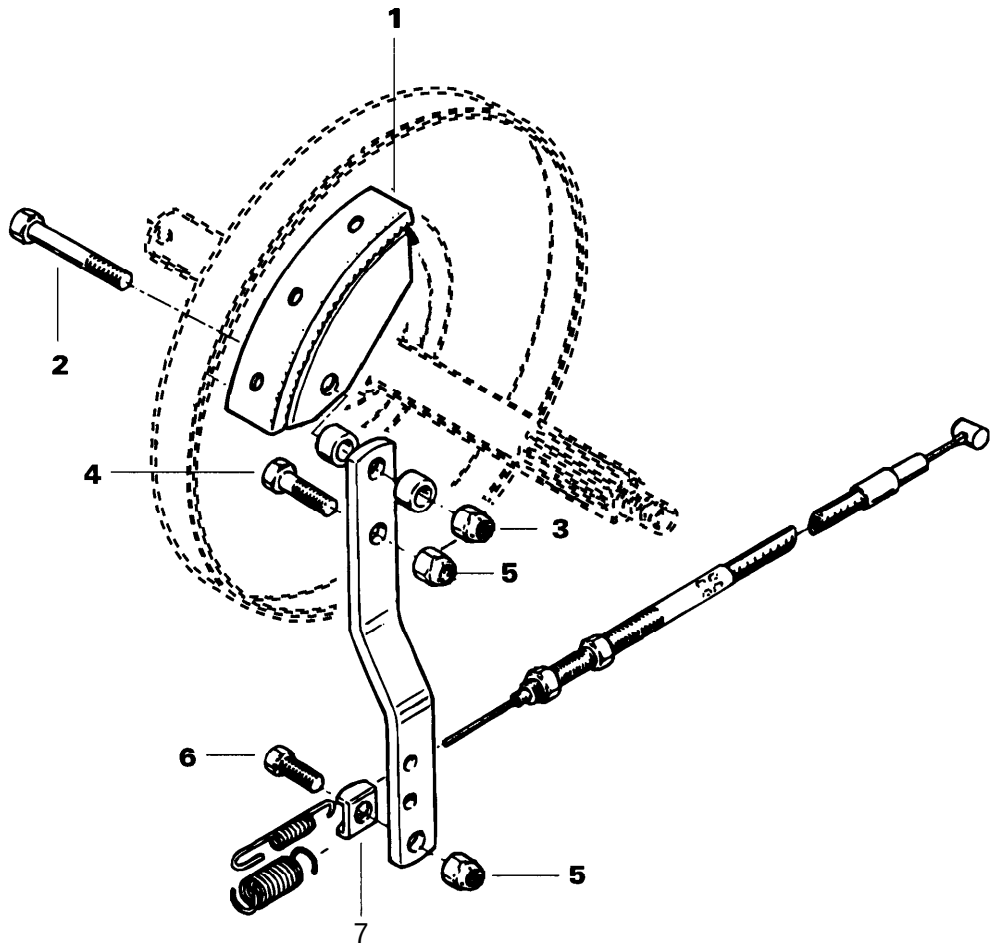

AO02 003041

INSPECTION

1, Brake Shoe

Check brake lining for wear. Replace if brake lining thickness is less than 3 mm (1/8 in).

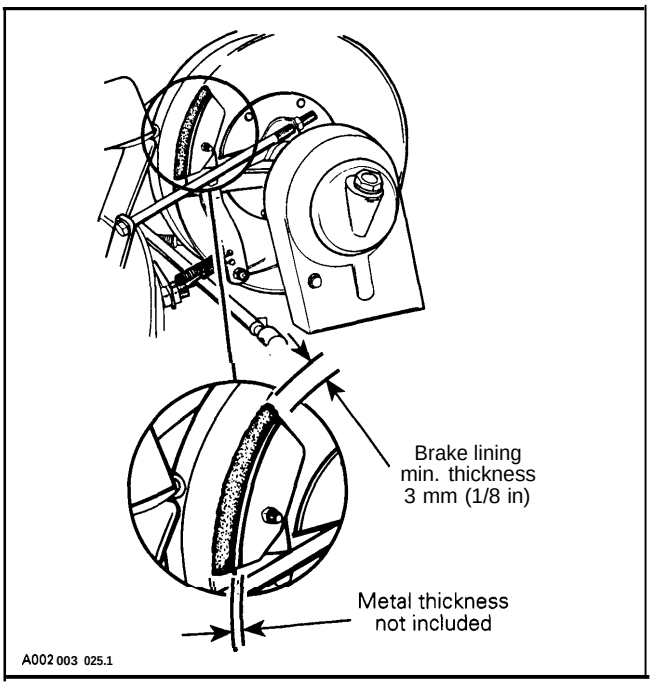

NOTE : If traces of oil are found on lining and/or pulley, check chaincase seal for leaks or incorrect installation; Replace or repair as needed. Wipe all traces of oil from pulley. Install new brake shoe.

INSTALLATION

2,3, Shoe Retaining Bolt and Nut

When torquing shoe retaining nut, shoe must pivot when slight pressure is applied.

4,5, Lever Retaining Bolt and Nut

When attaching brake lever assembly to chaincase bracket, tighten nut until all side play is eliminated and brake lever can still pivot freely.

LUBRICATION

NOTE : Lubricate all moving metal parts of brake with light machine oil.

WARNING : Avoid getting oil on brake shoe. Do not lubricate or apply antirust or antifreeze solution in cable.

5,6,7, Nut, Bolt and Cable Retaining Bracket

Brake cable must form a loop around the bolt so that the cable may be firmly pinched between the bolt head and the bracket.

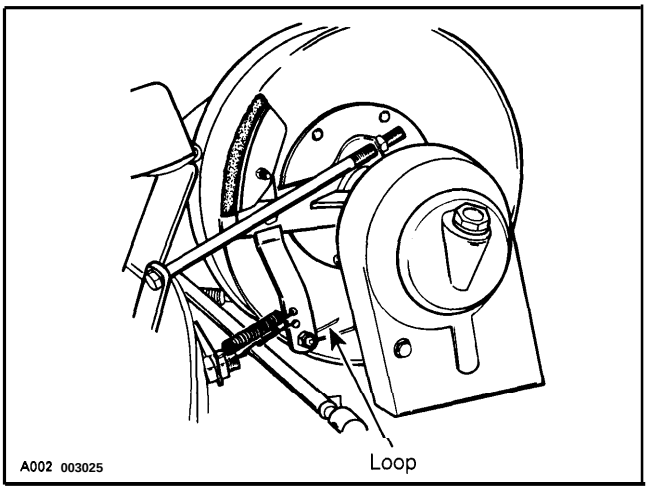

NOTE : When replacing brake cable, adjust the length of the loop so that the cable adjusting nuts are halfway on their threads. This will allow adequate final adjustment.

ADJUSTMENT

Brake Handle

Adjust so that brake applies fully when brake handle is 25 mm (1 in) from handlebar grip.

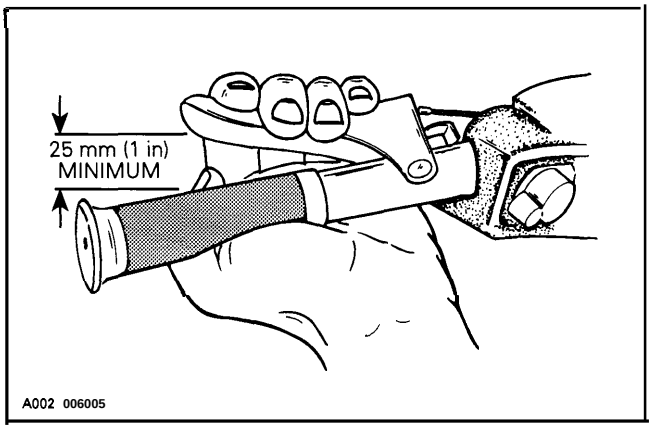

NOTE : Prior to cable installation, make sure cable housing adjusting nuts are located halfway on adjuster threads.

If a final adjustment is indicated, use housing adjusting nuts.

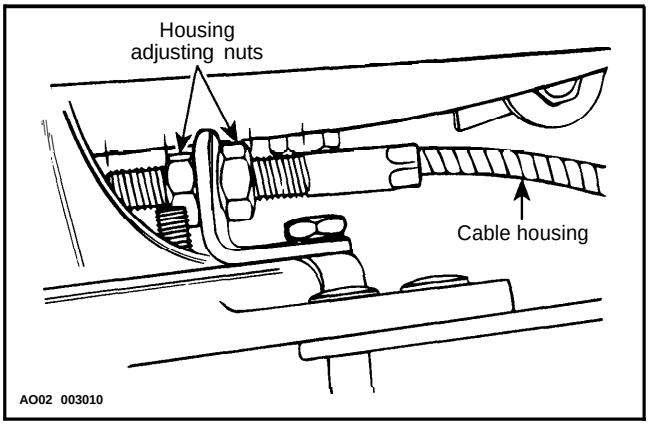

Brake Light Operation

To check operation :

Pull the brake handle and check that a light resistance is felt while rotating the driven pulley, This is the position where the switch should have lit the brake light,

To adjust :

— Loosen the brake switch lock nut.

— Holding brake handle at the lit position, unscrew the switch to put on the light or screw it in to put it out.

DISC BRAKE

Tundra II LT

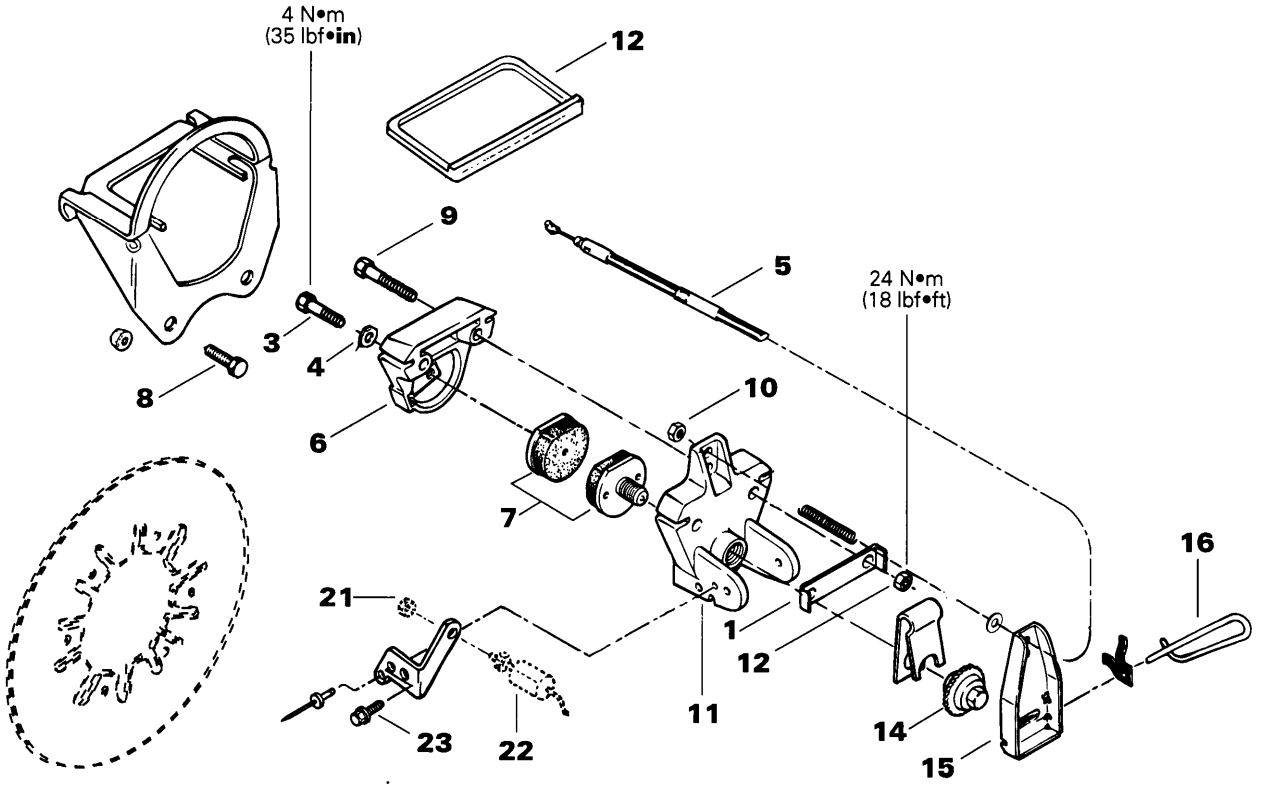

AO09 003024

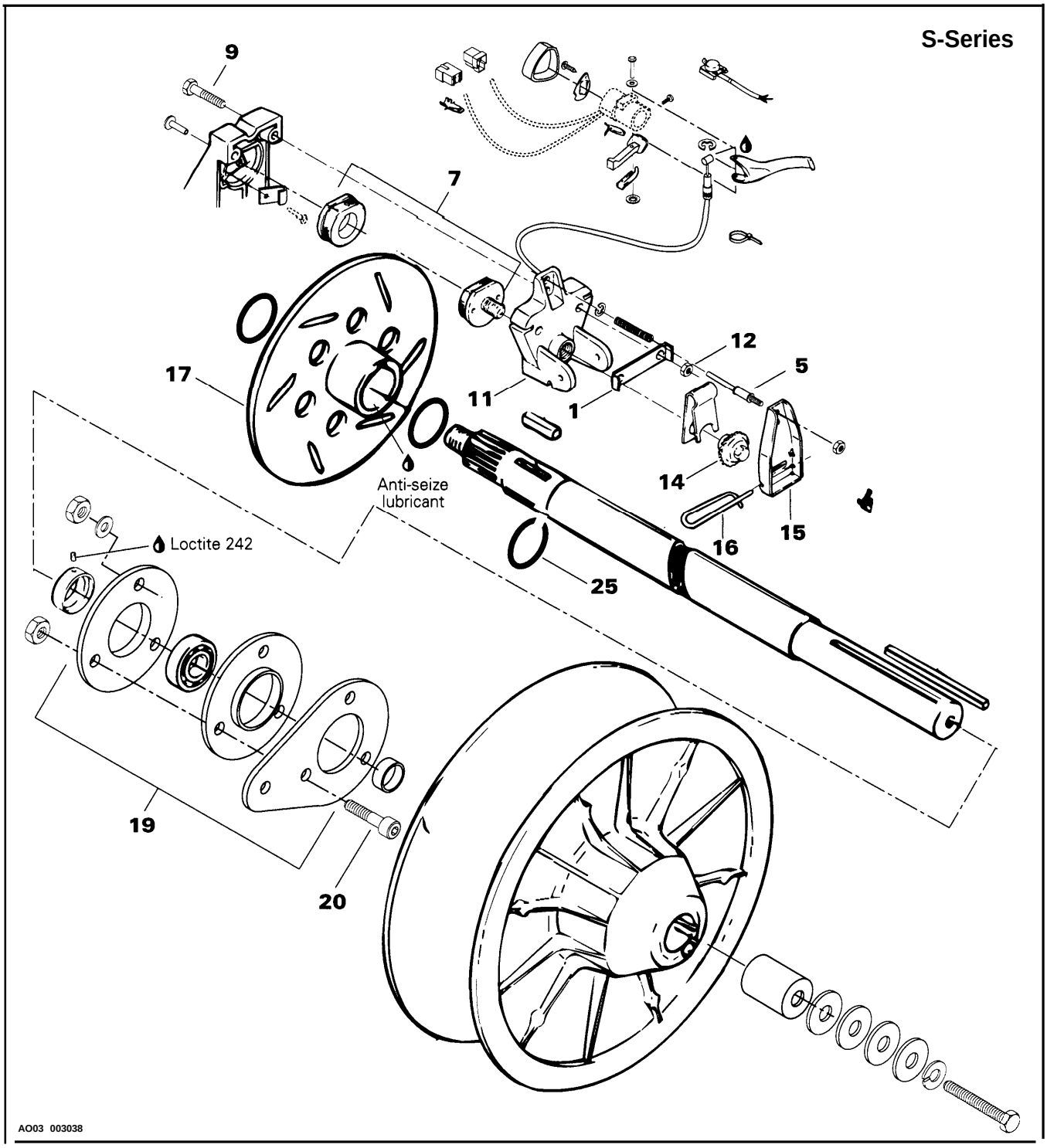
S-Series
9
7
12
5
17
11
1
14
Anti-seize
lubricant
Loctite 242
16
15
25
19
20
AO03 003038

REMOVAL

Tundra II LT

The split caliper type brake should be removed from chaincase as an assembly. Proceed as follows :

— Remove belt guard.

— Disconnect brake cable.

— Remove bolts **no. 8** securing brake support to chaincase.

— Slide brake caliper ass'y out of brake support.

— To remove brake disc, refer to DRIVEN PULLEY 05-03.

BRAKE DISC REMOVAL

S-Series

Brake disc can be withdraw without removing caliper. Proceed as follows :

— Remove belt guard, belt and driven pulley.

— Remove air silencer.

— Remove clip **no. 25** on countershaft.

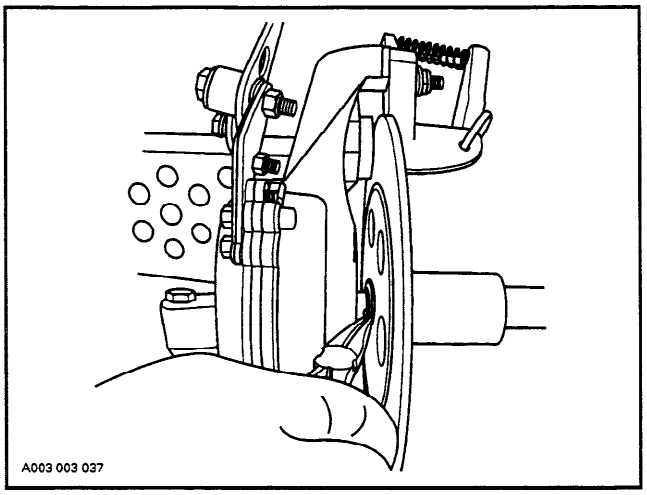

— Unbolt bearing support from chassis.

— Open chaincase and remove upper sprocket.

— Pull countershaft toward driven pulley side to free from chaincase and disc.

— Remove disc.

COUNTERSHAFT REMOVAL

S-Series

Proceed the same as for brake disc removal but unlock bearing collar on driven pulley side.

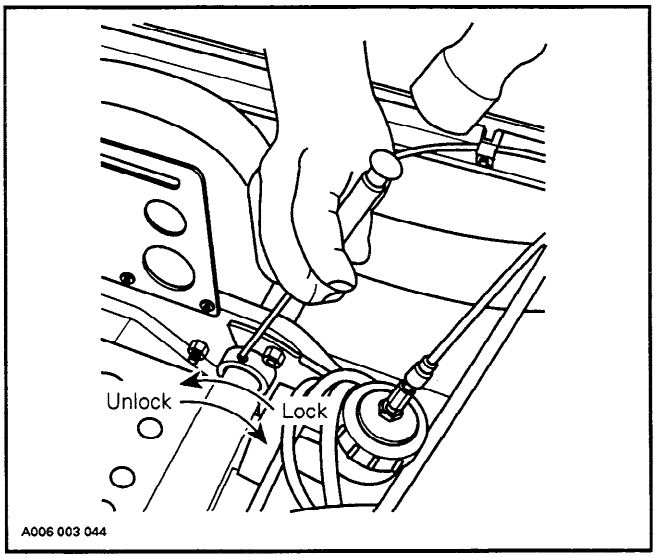

Unbolt bearing plates then push bearing to driven pulley side out of countershaft, using remover (P / N 529 0301 00). Begin with only the remover then add a spacer of diffrent width as the bearing comes out.

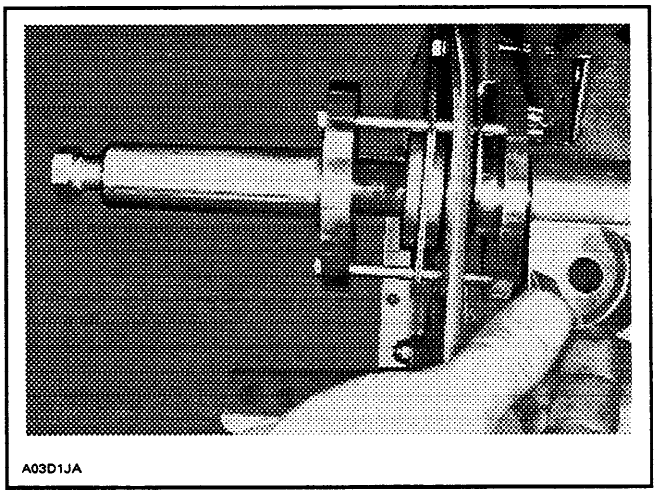

To install bearing on coutershaft, use installer (P / N 529 0302 00).

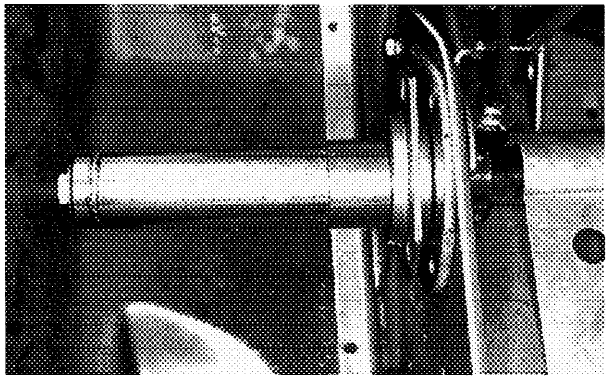

A03D1KA

DISASSEMBLY

7,15,16,23, Brake Pad, Brake Lever, Pin and Screw

All Models

Pull pin out off caliper and remove lever.

On Tundra II LT, remove self-tapping screw. Unscrew ratchet wheel in order to remove moving pad.

Remove fixed pad.

S-Series

Fixed pad is riveted to chaincase on these models. Caliper must be split to remove moving pad. To removed fixed pad, drill out its rivet then pry disc in order to remove fixed pad.

All Models

CLEANING

Clean all metal components in a general purpose solvent. Thoroughly dry all components before assembling.

CAUTION : Do not clean brake pads in solvent. Soiled brake pads must be replaced by new ones.

INSPECTION

7, Brake Pad Thickness

Brake pads must be replaced when **fixed** pad projects only 1 mm (1/32 in) from caliper.

CAUTION : Brake pads must always be replaced in pairs.

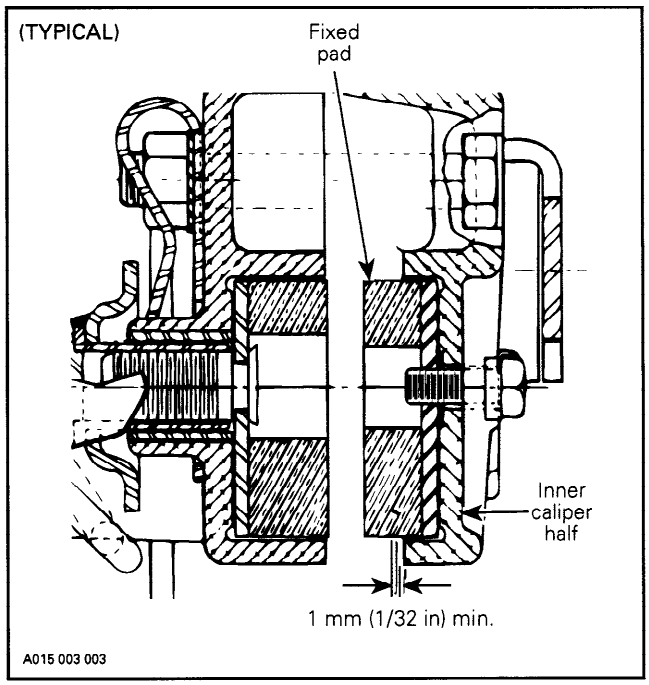

A015 003 003

Brake Disc

Check for scoring, cracking or heat discoloration, replace as required. Refer to DRIVEN PULLEY 05-03 for procedures on applicable models.

CAUTION : Brake disc should never be machined.

ASSEMBLY

14, Ratchet Wheel

Apply low temperature grease (P / N 413 7061 00) on threads and spring seat prior to installing. Fully tighten then back off one turn.

16, Pin

Install so that it can only be removed upward. Lock it in the caliper casting notch.

3,4,7, Screw, Locking Tab and Fixed Brake Pad

Tundra II LT

Torque screw to 4 N•m (35 lbf•in). Bend locking tab over a flat of screw head.

2,7, Nut and Fixed Brake Pad

S-Series

Torque nut to 8 N•m (71 lbf•in).

1,6,11,12, Locking Tab, Inner, Outer Caliper and Nut

Tundra II LT

Assemble both caliper halves. Insert bolts, locking tab, then nuts. Torque nuts to 24 N•m (18 lbf•ft). Caliper half side slots must align to allow proper sliding in brake support. Bend locking tab over a flat of each nut.

Install rubber slider **no.** 12 lubricated with shortening (cooking fat) into side slots of caliper. It must be installed so that the raised edge is upward and on the same side of nuts as shown.

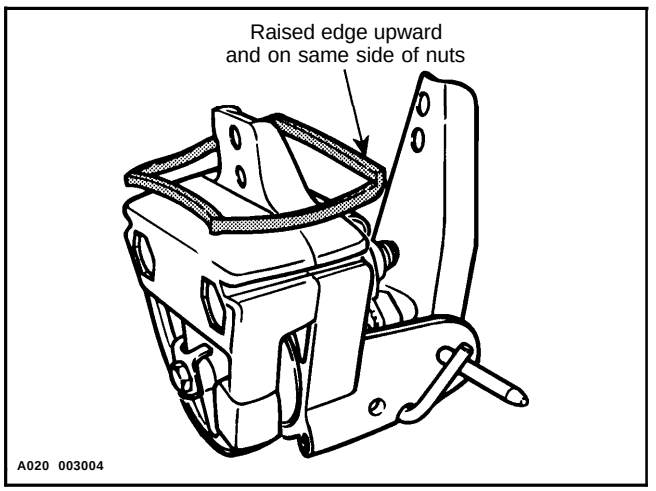

CAUTION : Positioning of rubber slider is important to avoid the possibility of damage against locking tab edges.

INSTALLATION

To install brake, reverse removal procedure paying attention to the following.

WARNING : Avoid getting oil on brake pads. Do not lubricate or apply antirust or antifreeze solution in brake cable.

17, Brake Disc

S-Series

The brake disc must be floating on countershaft for efficient operation of brake.

Apply antiseize lubricant (P/N 4137010 00) on shaft and check that disc slides freely.

The disc hub exceeds the disc more from one side than from the other. Install disc with the longer exceeding portion toward driven pulley.

Push O-rings inside disc hub.

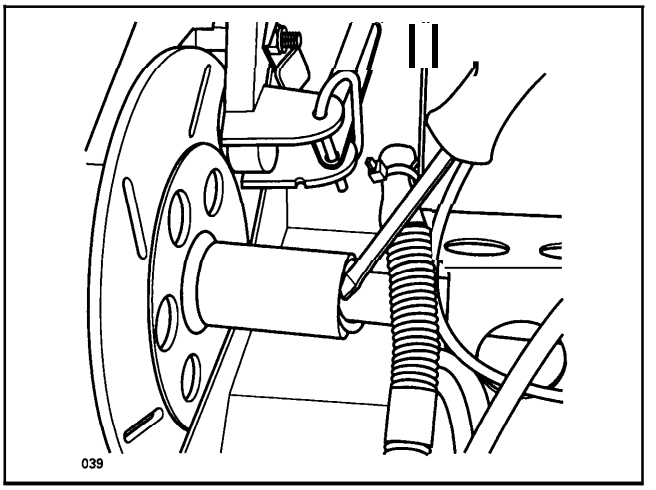

Countershaft Bearing Adjustment

S-Series

Insert countershaft (with brake disc) from chaincase side through countershaft support (driven pulley side), then insert into chaincase.

Install countershaft bearing no. 19 and ensure that countershaft is properly aligned, then tighten 3 retaining screws.

NOTE : A misaligned countershaft will result in difficulty to center the bearing in its support.

Refer to DRIVE AXLE 05-05 then look **Chaincase Perpendicularity Adjustment.**

Torque castellated nut of upper sprocket to 53 N•m (39 lbf•ft).

CAUTION : Upper sprocket castellated nut must be tightened before adjusting bearing collar.

Slide collar no. 18 towards bearing and turn, by hand, to engage the eccentric. This should require about a quarter turn.

Turn collar in direction of countershaft rotation until collar and inner race lock together.

Insert a punch into collar hole and strike sharply in the same direction to lock firmly.

Apply medium strength threadlocker (P/N 4137030 00) on set screw threads, then tighten.

Close chaincase referring to CHAINCASE 05-06.

1,11,12, Locking Tab, Outer Caliper and Nut

S-Series

Install caliper retaining bolts.

Assemble outer caliper. Install locking tab then nuts. Torque nuts to 24 N•m (18 lbf•ft). Bend locking tab over a flat of each nut.

5,10, Brake Cable and Nut

Insert brake cable into upper hole in brake lever and caliper. Install nut and tighten until a few threads exceed.

◆ WARNING : At least 3 threads must exceed the elastic stop nut.

ADJUSTMENT

Brake

All Models

Fully depress brake handle several times to obtain 13 mm (1/2 in) between brake handle and handlebar grip when brake is fully applied.

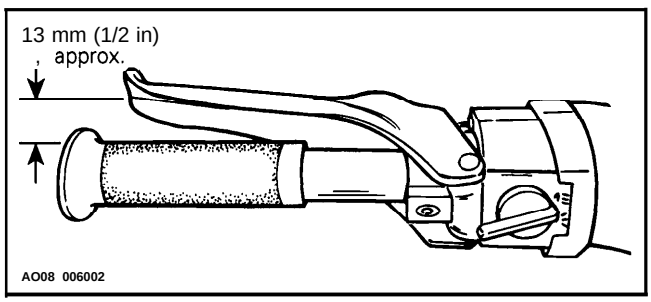

Should this adjustment be unattainable, retighten nut **no. 10** as needed.

Brake Light

All Models Except Tundra II LT

Brake light should light up before brake pads touch brake disc. To adjust, unscrew nut **no. 10** until brake light goes on.

◆ WARNING : **At least one full thread must exceed the elastic stop nut.**

Check brake adjustment as described above.

O **NOTE : If brake light adjustment is unattainable while respecting brake adjustment, ratchet wheel may be too far** out. If so, tighten ratchet wheel.

Tundra II LT

Brake light should light up before brake pads touch brake disc. To adjust, unlock nut no. 21 and turn brake switch no. 22 accordingly. Lock in position by tightening nut **no. 21.**

CHAINCASE

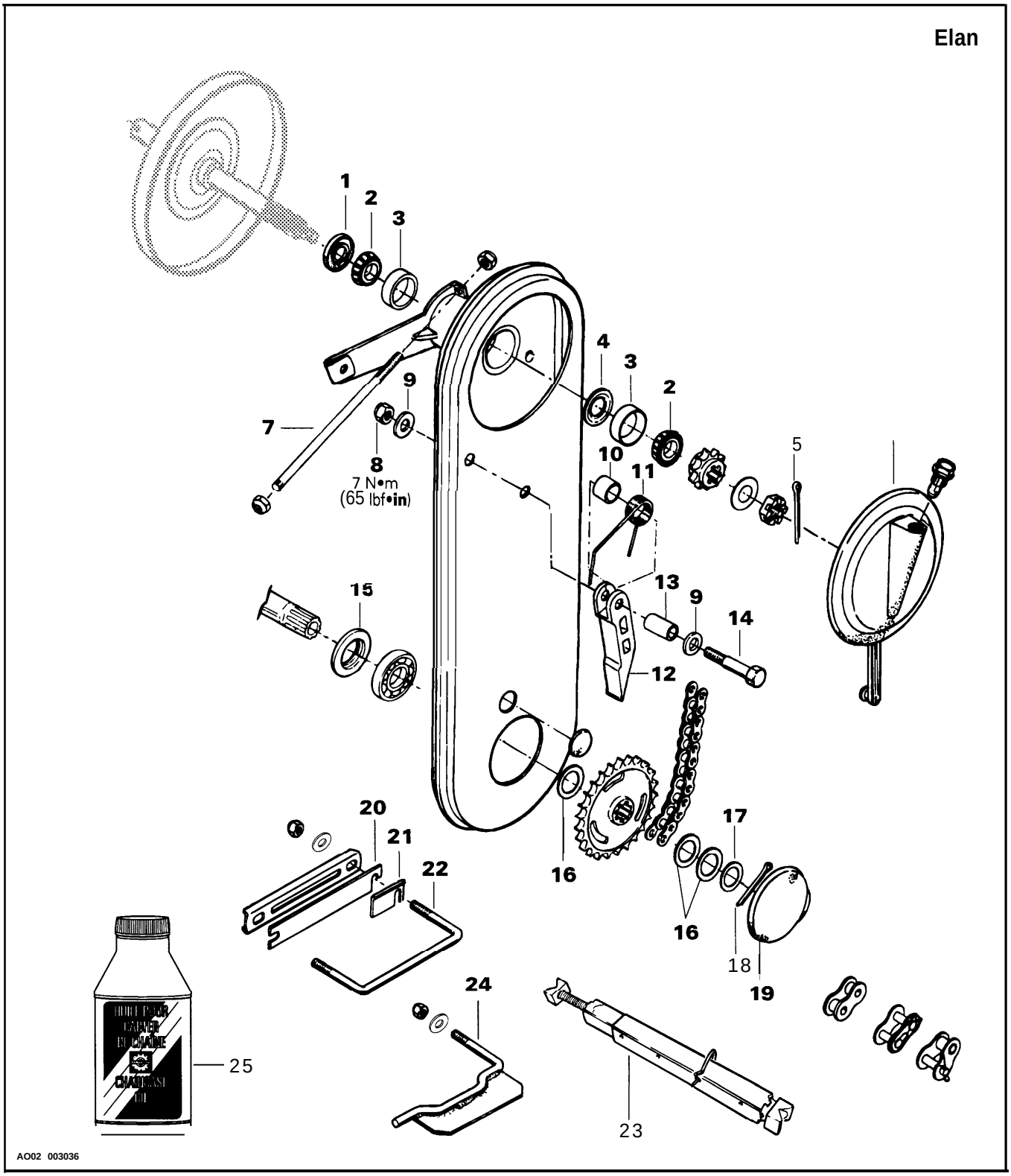
Elan
1
2
3
4
3
2
9
7
8
7 N•m
(65 lbf•in)
10
11
5
13
9
14
15
12
20
21
22
16
17
16
18
19
24
25
23
AO02 003036

REMOVAL

Chaincase and Driven Pulley Assembly

Chaincase and driven pulley are removed from vehicle as a complete assembly. Proceed as follows :

Remove tool box, pulley guard and drive belt.

6,8 to 14, Inspection Cover and Tensioner Assembly

Remove inspection cover and hold tensioner assembly. Remove chain tensioner bolt, elastic stop nut and fiber washers. Remove tensioner assembly from chaincase.

15,25, Lower Oil Seal and Chaincase Oil

Pry lower oil seal from chaincase and drain oil.

Brake Cable

Disconnect from chaincase.

16,17,18,19, Spacer, Shim, Lower Sprocket Cotter Pin and Access Plug

Pry out access plug, remove cotter pin, shim and spacers.

7, Threaded Rod

Disconnect from chaincase.

22,24, U-clamp and Bracket

From the inner side of the frame, remove the nut securing chaincase lower bracket and remove bracket. Remove the nuts, washers and U-clamp holding the chaincase to frame.

20,21, Shim

Remove and save for installation.

23, Drive Axle Holder

Release track tension and use drive axle holder (P/ N 5290072 00),

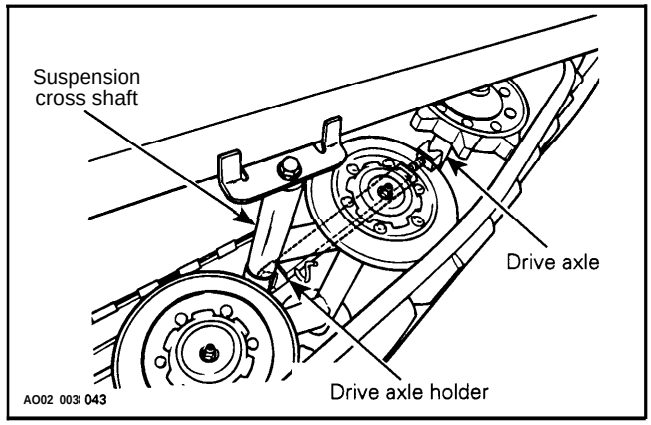

Chaincase and Driven Pulley Assembly

Using two large screwdrivers inserted between chaincase and frame, pry complete assembly from vehicle.

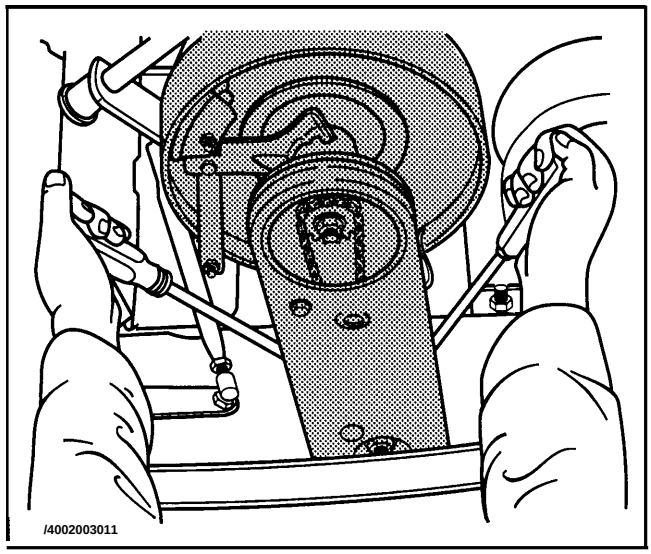

DISASSEMBLY

Disassemble driven pulley from chaincase. Refer to DRIVEN PULLEY 05-03.

INSPECTION

Visually inspect chain for cracked, damaged or missing link rollers. Check for defective bearing cones, bearing cups and oil deflector. Inspect sprockets and chain tensioner assembly for wear.

◆ WARNING : **If chain deflection is greater than 38 mm (1.5 in) (without chain tensioner), replace chain and check condition of sprockets.**

ASSEMBLY

2,3,4, Bearing Cone, Bearing Cup and Oil Deflector

Position oil deflector ring then sit bearing cup in chaincase aperture as shown.

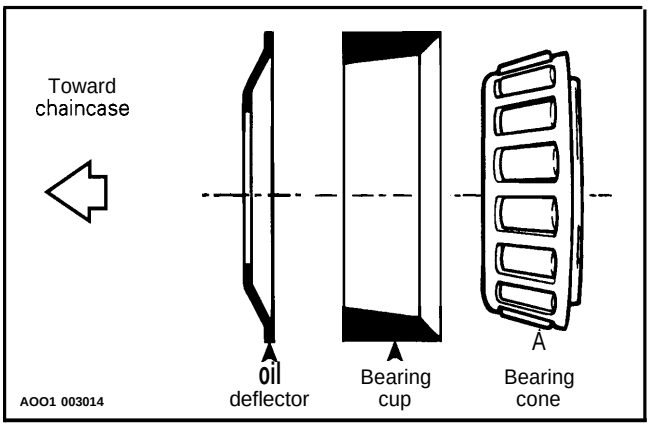

1, Oil Seal

Using an appropriate pusher, press new oil seal into chaincase hub. Oil seal must sit flush with case hub edge.

INSTALLATION

To install chaincase driven pulley assembly, reverse removal procedure paying special attention to the following :

5,18, Cotter Pin

Install new cotter pins.

CAUTION : **When removing a cotter pin always replace with a new one.**

15, Lower Oil Seal

Install new oil seal into chaincase **flange as** shown.

NOTE : A gap of approximately 1.6 mm (1/16 in) should exist between the end of chaincase flange and oil seal.

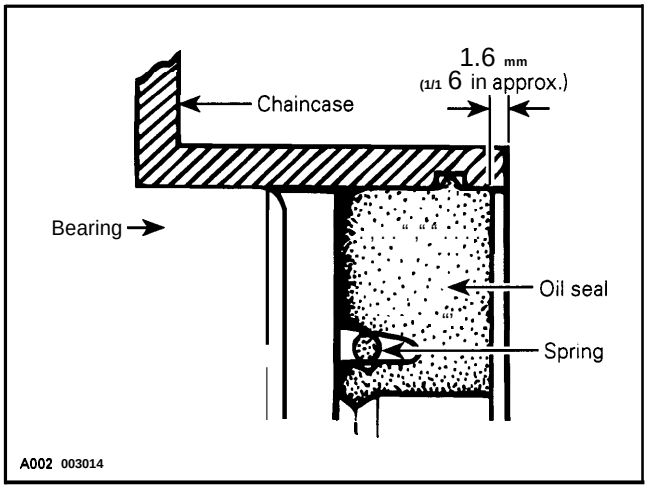

25, Chaincase Oil

Remove filler cap and pour 200 mL (7 fl. oz) of chaincase oil (P/ N 4138019 00) into chaincase.

NOTE : Chaincase **oil capacity is 200** mL **(7** fl. oz).

Check the oil level by removing the chaincase oil level plug.

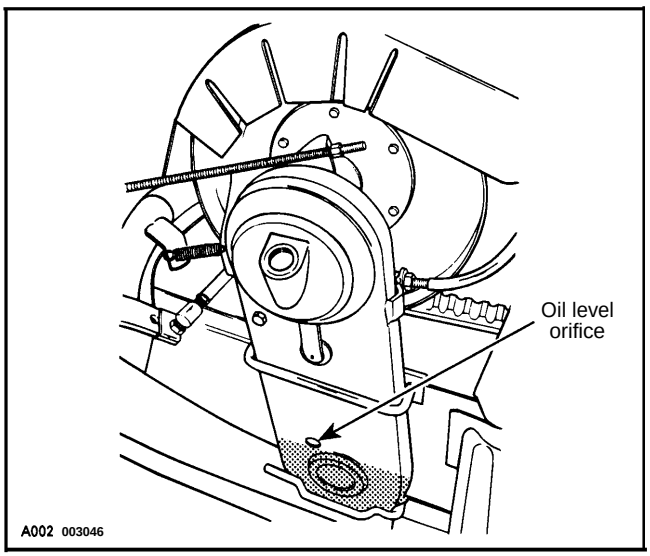

ADJUSTMENT

Pulley Alignment

Refer to PULLEY DISTANCE AND ALIGNMENT 05-04.

Brake Operation and Brake Light

Refer to BRAKE 05-05.

Track Tension and Alignment

Refer to TRACK 07-06.

Tundra II LT

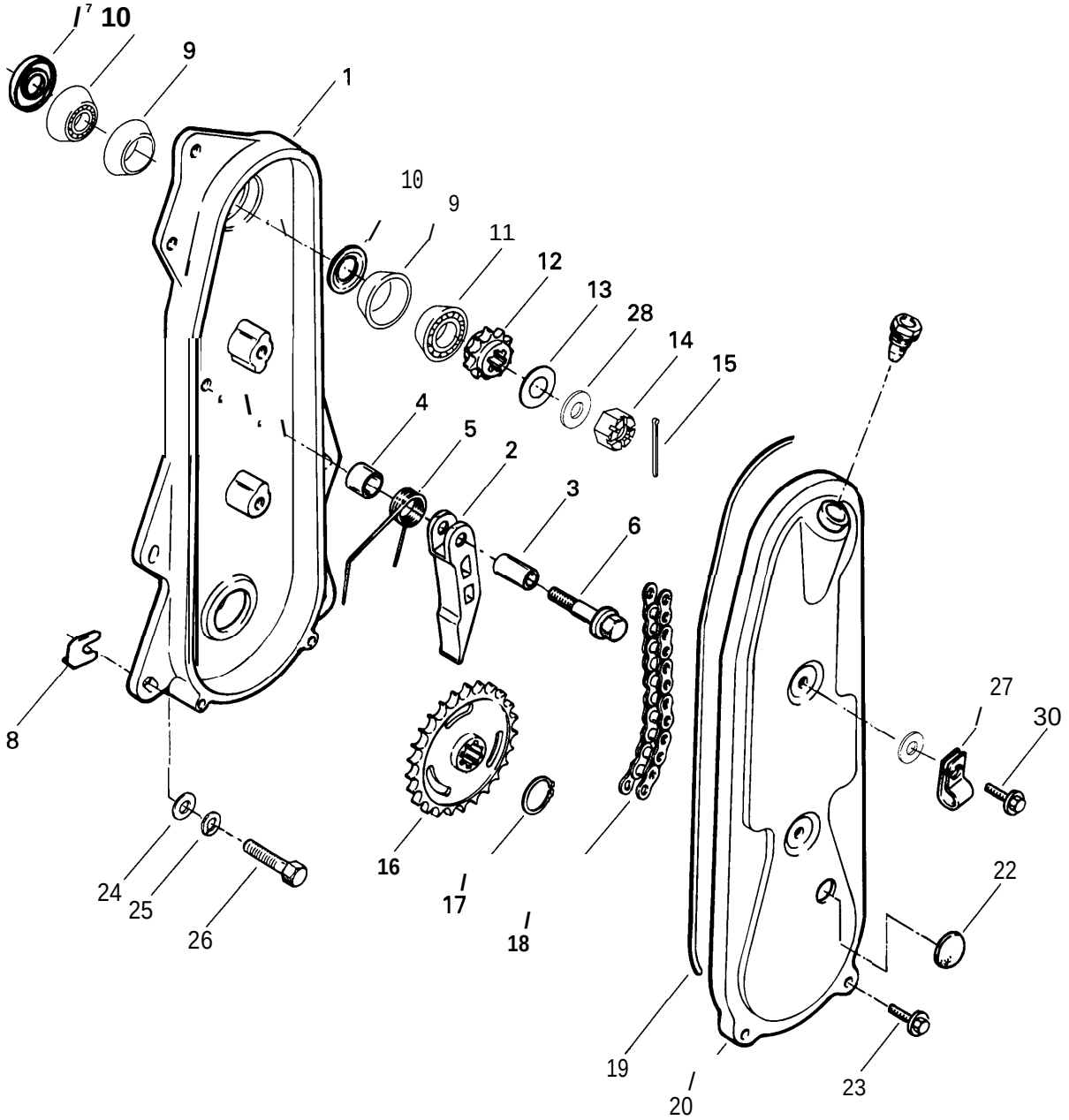

A03DOQS

REMOVAL

Chaincase and driven pulley can be removed from the vehicle as an assembly. "

Remove belt guard and drive belt.

Unlock and raise driven pulley support.

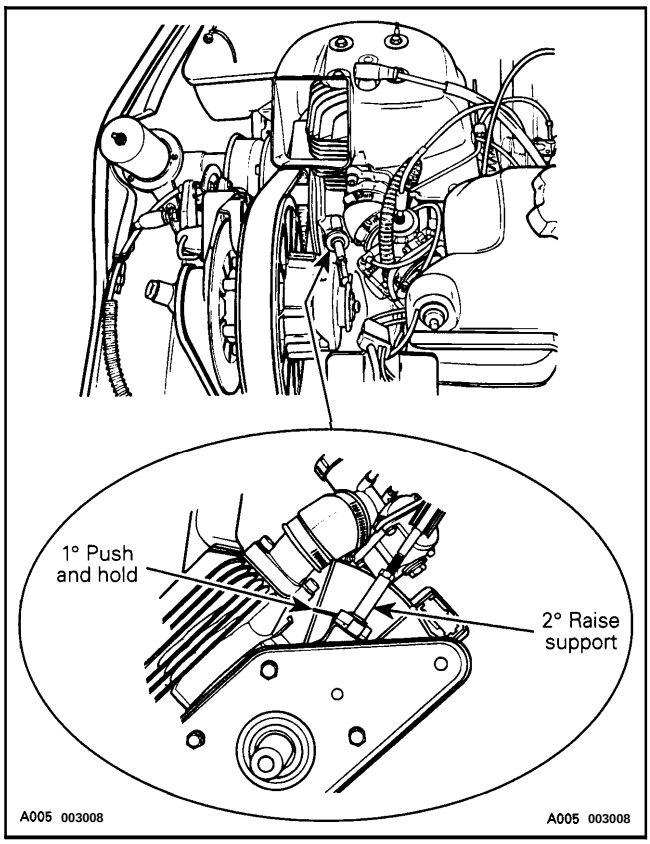

0 **NOTE : On electric starting model, disconnect and remove battery from its rack.**

▼ **CAUTION : Be careful not to ground positive terminal with the chassis. Always disconnect BLACK negative cable first.**

21, Chaincase Cover

Remove and drain oil.

14, Drive Axle Oil Seal

Pry out from chaincase.

6,9 to 13,15,16, Sprockets, Tensioner Assembly and Chain

Unscrew the bolt on the upper sprocket and remove circlip **on the bottom** one. Remove chain tensioner assembly, then simultaneously remove chain and both sprockets.

17,18,19, Washer and Cap Screw

Remove the 4 cap screws securing chaincase **to frame. Save alignment shims for installation.**

22, Drive Axle Holder

Release track tension, use drive axle holder (P/ N 529 0072 00).

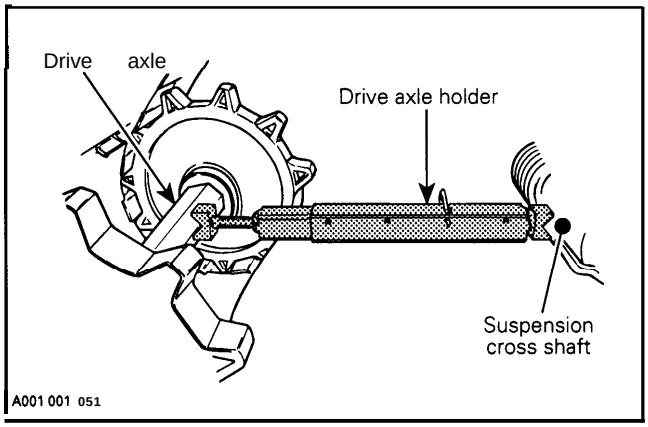

Chaincase and Driven Pulley Assembly

Using 2 large screwdrivers inserted between chaincase and frame, pry complete assembly from vehicle.

DISASSEMBLY

Disassemble driven pulley from chaincase. Refer to DRIVEN PULLEY 05-03.

INSPECTION

Visually inspect the chain for cracked, damaged or missing link rollers. Check for defective bearings, sprockets and worn chain tensioner components.

● WARNING : **If chain deflection is greater than 38 mm (1.5 in) (without chain tensioner), replace chain and check condition of sprockets.**

GEAR RATIO MODIFICATION

For particular applications, the number of teeth of the sprockets can be increased or decreased on lower and upper sprockets.

Available lower sprocket : 27 teeth

Available upper sprockets : 11, 12, 15 teeth

Available chains : 62, 64 links

The chain length may be affected depending the combination of lower/ upper sprockets as follows :

GEAR RATIO / CHAIN LENGTH CHART		
GEAR RATIO	CHAIN LENGTH (LINKS)	STANDARD ON
11 /27*	62	OPT.
14/25	62	Tundra II LT

OPT. = Optional

* Chaincase protector no. 8 is mandatory with this sprocket.

▼ CAUTION : Such modifications should only be performed by experienced mechanics since they can greatly affect vehicle performance.

O **NOTE :** For high altitude regions, the *High Altitude Technical Book/et* (P/N 484062400 and P / N 484054500 for binder) gives information about calibration according to altitude.

ASSEMBLY

2,3,4,5, Bearing, Spacer, Oil Retainer Ring and Bearing

Position oil deflector ring then sit bearing in chaincase aperture. Install spacer then the other bearing.

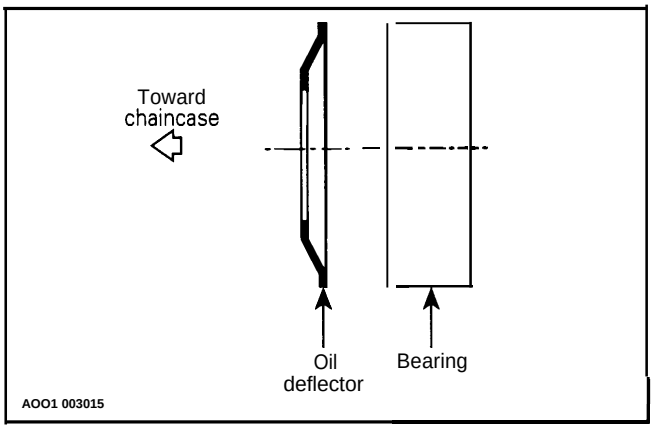

1, Oil Seal

Using an appropriate pusher, press new oil seal into chaincase hub. Oil seal must sit flush with case hub edge.

INSTALLATION

Reverse removal procedure. Pay particular attention to the following :

7, Castelleted Nut

Torque to 14 N•m (124 lbf•in), slacken then retorque to 0.5-2.5 N•m (5-22 lbf•in).

8, Protector

In case of a vehicle equipped with an 11 teeth sprocket, check the wear of protectors. Replace if required.

20, Gasket

Grease new gasket with petroleum jelly, or other suitable product, and install gasket making sure gasket it does not shift from its correct position. Tighten bolts evenly.

O **NOTE : Bottom pan has an emboss below chaincase housing to ease installation.**

23, Chaincase Oil

Remove filler cap and pour 200 mL (7 fl. oz) of chaincase oil (P/ N 4138019 00) into chaincase.

O **NOTE : Chaincase oil capacity is 200 mL (7 fl. oz).**

Check the oil level by removing the chaincase oil level plug.

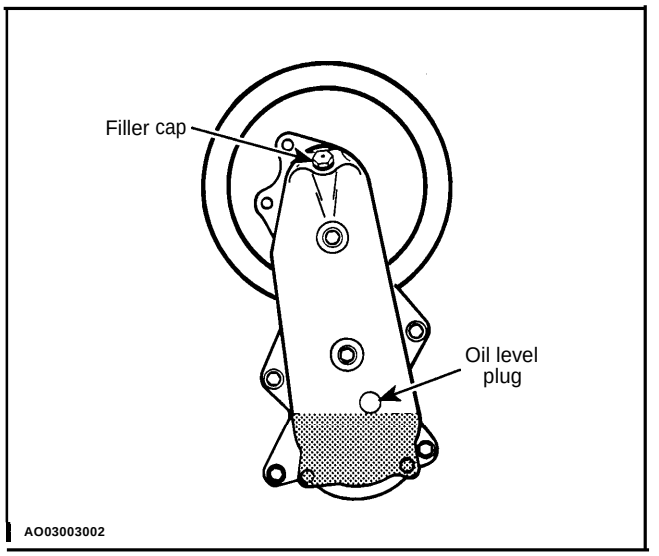

The oil should be leveled with the bottom of the oil level orifice.

Reinstall battery and connect cables on electric starting model.

▼ **CAUTION : Always connect positive RED cable first to prevent sparks.**

ADJUSTMENT

Pulley Alignment

Refer to PULLEY DISTANCE AND ALIGNMENT 05-04.

Track Tension and Alignment

Refer to TRACK 07-06.

S-Series Without Reverse Gear

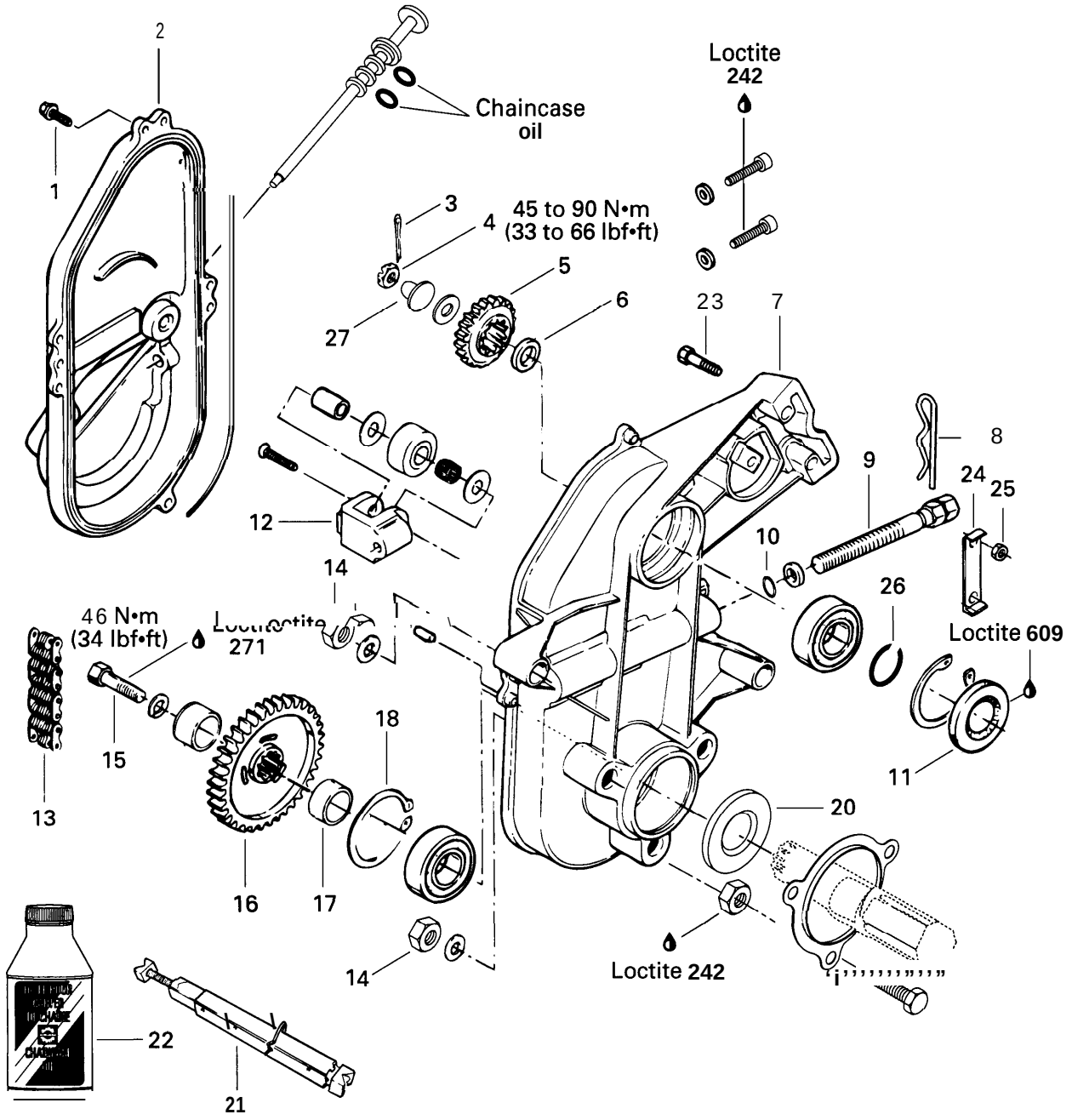

REMOVAL

To remove chaincase proceed as follows.

Remove tuned exhaust pipe and muffler.

◆ WARNING : Never **remove exhaust components when engine is hot.**

8,9,12, Hair Pin, Adjustment Screw and Chain Tensioner

Remove hair pin. Release drive chain tension by unscrewing tensioner adjustment screw.

1,2, Chaincase Cover and Screw

Drain oil by removing chaincase cover.

3,4,5,6,13,16,17, Cotter Pin, Nut, Sprocket, Shim and Drive Chain

Remove cotter pin, nut, washer retaining upper sprocket and screw retaining lower sprocket. Pull sprockets and drive chain simultaneously. Remove shims.

O **NOTE : Should** countershaft **removal be required, refer to BRAKE 05-05 then look** for **Brake disc.**

S-Series Only

26, Circlip

Remove circlip. Refer to BRAKE 05-05 then lock for **brake disc.**

All Models

14, Nut

Remove 5 nuts. Three nuts are behind the lower sprocket.

23,24,25, Screw, Locking Tab and Nut

Unfold locking tab, unscrew nuts then remove caliper retaining screws.

21, Drive Axle Holder

Release track tension, use drive axle holder (P/ N 529 0072 00).

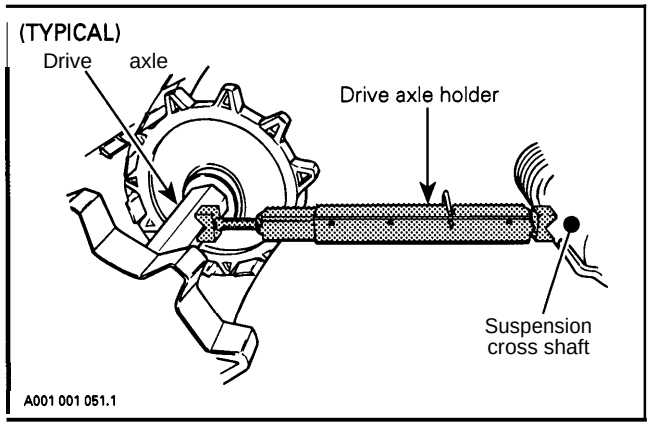

20, Drive Axle Oil Seal

Pry out from chaincase.

Pull chaincase from drive axle and countershaft.

7, Chaincase

Using 2 large screwdrivers inserted between chaincase and frame, pry complete assembly from vehicle.

INSPECTION

Visually inspect the chain for cracked, damaged or missing links. Check for worn or defective bearings, sprockets and chain tensioner components.

● **WARNING : If chain deflection is greater than 38 mm (1.5 in) (without chain tensioner), replace chain and check condition of sprockets.**

GEAR RATIO MODIFICATION

For particular applications, the number of teeth of the sprockets can be increased or decreased on lower and upper sprockets.

Refer to TECHNICAL DATA 10 for gear ratios.

▼ **CAUTION : Gear ratio modifications should only be performed by experienced mechanics since they can greatly affect vehicle performance.**

O **NOTE : For high altitude regions, the** *High Altitude Technical Book/et* (P/N 484062400 and P / N 484054500 for binder) gives information about calibration according to altitude.

INSTALLATION

Reverse removal procedure and pay attention to the following. Replace oil seals, gaskets and O-rings.

Refer to DRIVE AXLE 07-05 for drive axle axial play adjustment.

11, Oil Seal

Clean chaincase bore with Loctite Safety Solvent (p/ N 413 708200) then apply Loctite 609 to oil seal mounting surface (outside).

Using an appropriate pusher, press the oil seal into chaincase hub. Oil seal must fit flush with the chaincase edge.

NOTE : Should installation procedure for countershaft be required, refer to BRAKE 05-05 then look for **Brake disc and Countersh aft bearing adjustment.**

5,16, Sprockets

Position the sprockets with the writing facing the chaincase cover.

S-Series Only

27, Conical Spring Washer

Install washer with its concave side towards drive pulley.

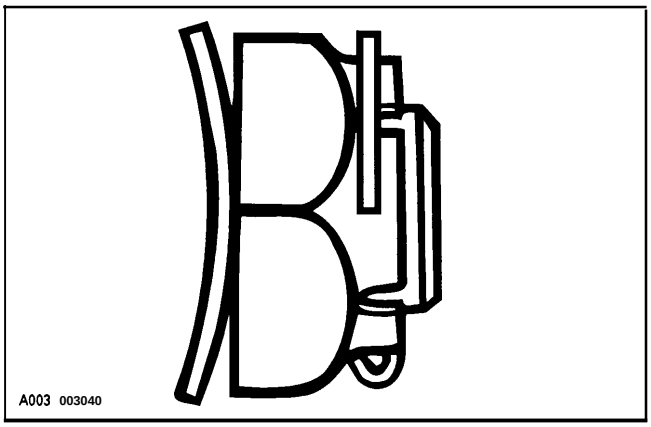

All Models

4, Upper Sprocket Castellated Nut

Torque to 45 to 90 N•m (33 to 66 lbf•ft).

Install new cotter pin in the position shown.

CAUTION : When removing a cotter pin always replace with a new one.

CAUTION : Cotter pin will rub on chaincase cover if installed otherwise.

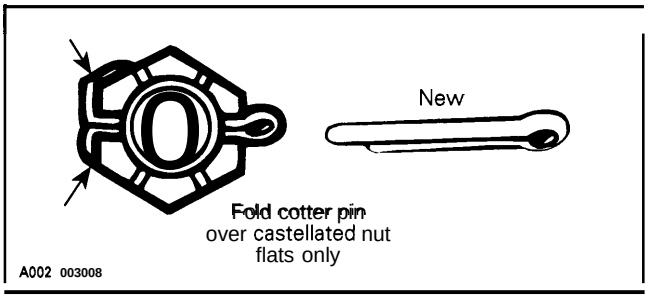

18, Circlip

CAUTION : It is of the utmost importance to install the circlip otherwise damage to the chaincase components may occur.

DRIVE CHAIN ADJUSTMENT

10, O-ring

Replace O-ring on tensioner adjustment screw. Fully tighten tensioner adjustment screw **by hand, then back off** only far enough for hair pin to engage in locking hole.

This initial adjustment should provide 3-5 mm (1/8-13/64 in) free-play when measured at the outer circumference of the brake disk.

CAUTION : Free-play must not exceed 5 mm (13/64 in), readjust if necessary.

WARNING : If the specified free-play is not reached with the tensioner screw fully tightened, replace chain and check the condition of sprockets.

22, Chaincase Oil

Pour 250 mL (8.5 fl. oz) of chaincase oil (P / N 4138019 00) into chaincase.

O **NOTE :** Chaincase **oil capacity is 250** mL **(8.5** fl. oz).

Check oil level with the dipstick **unscrewed then add if** required.

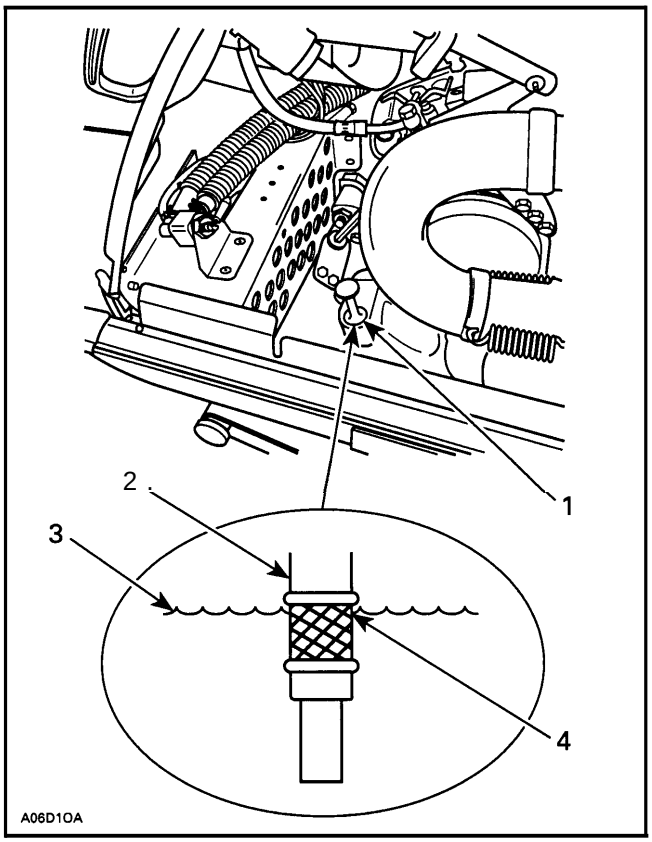

TYPICAL

1. Dipstick
2. Dipstick
3. Oil level
4. Level between marks

O **NOTE :** Chaincase **must be in its proper position** when checking oil level.

ADJUSTMENT

Pulley Alignment

Refer to PULLEY DISTANCE AND ALIGNMENT 05-04.

Track Tension and Alignment

Refer to TRACK 07-06.

GEARBOX

2-SPEED GEARBOX

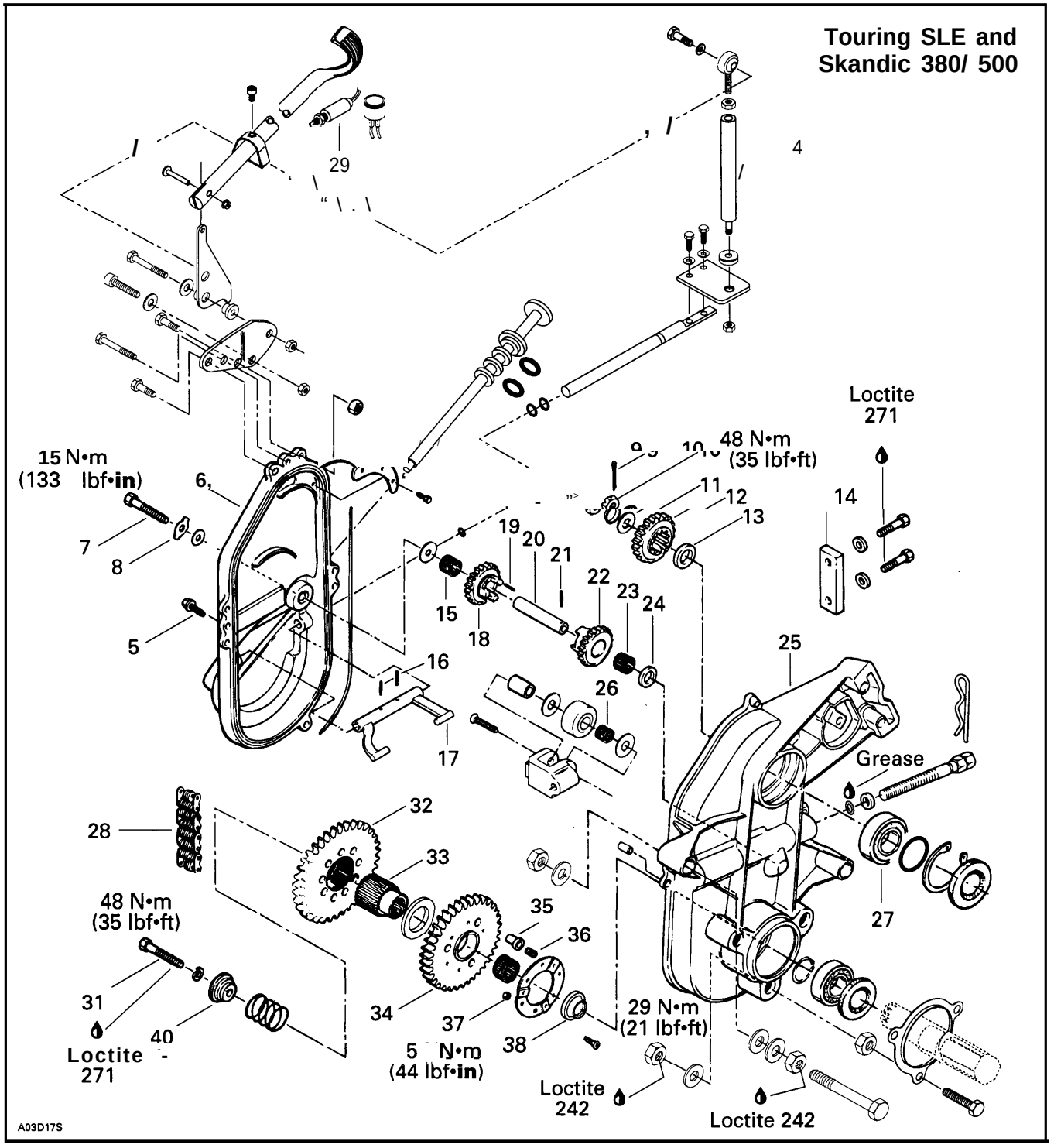

DISASSEMBLY

O **NOTE : It is possible to see the sliding gear in motion through oil gauge hole.**

5,6,7, Screw, Gearbox Cover and Screw

Unbolt gear shift linkage from shifter.

Unscrew cover screws as well as reverse shaft screw.

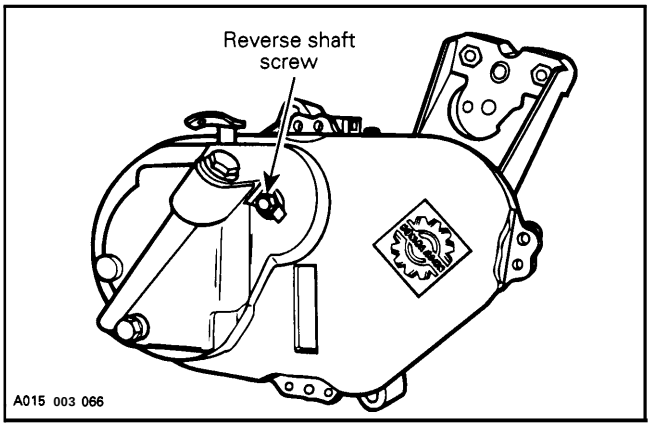

Separate cover from housing and move it toward the front in order to disengage fork from sliding gear.

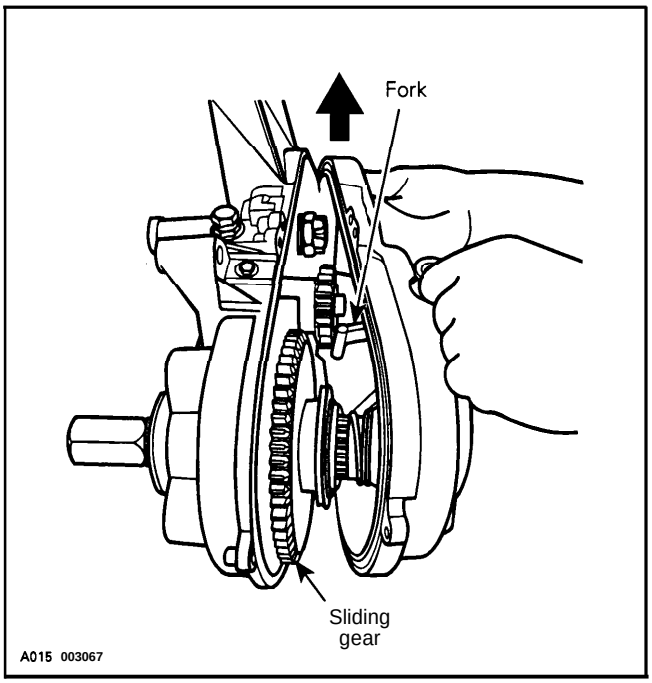

31,32, Screw and Sliding Gear

Slacken chain tension, unscrew sliding gear retaining screw, then remove sliding gear.

18,20, Reverse Gear and Reverse Axle

First remove 19-tooth reverse gear and then remove reverse axle.

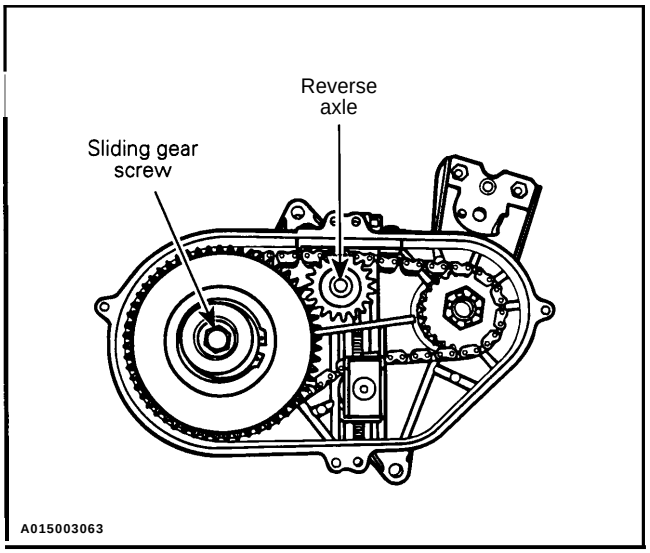

28,33,34,38, Chain, Coupling Shaft, Sprocket and Spacer

Remove coupling shaft, 44-tooth sprocket, spacer and chain.

10,12, Castellated Nut and Sprocket

First unscrew castellated nut, then remove 22-tooth sprocket.

16,17, Spring Pin and Fork

Force 2 spring pins out to disengage fork from its axle.

INSPECTION

14, Chain Slider

Replace slider if maximum wear is 1.0 mm **(.039 in) at contact point.**

15,23,26,27,30,37, Bearing

Check bearing condition. There must be no discoloration, missing rollers, broken cages, etc.

Sprockets and Gears

Check teeth.

ASSEMBLY

Reinstall drive shaft.

25, Gearbox **I-lousing**

Reinstall gearbox housing.

O NOTE : Adjustment screw can only be installed when housing is removed.

Do not reuse removed oil seals. Replace them by new ones.

Install drive axle with track then bearing and circlip in chaincase bore. Install spacer no. 38 with its large outer diameter against sprocket, 44-tooth sprocket **no.** 34, coupling shaft no. **33, cap no. 40 and screw no. 31.**

Place a 25 cm (1 O-inch) rule against sprockets. Maximum allowable offset is 1 mm (.040 in).

A) If upper sprocket too far in, possible causes are :

1) Countershaft bearing on driven pulley side may be too far in. To check, pull out bearing using countershaft bearing remover (P/N 529 0301 00) then recheck sprocket alignment. Use bearing installer (P / N 529 0302 00) to reposition bearing. Bearing housing (triangle) must be against frame without preload.
2) Add shim(s) between chaincase and frame and reposition bearing on driven pulley side accordingly.

B) If upper sprocket is too far out, check:

If there are too many shims between chaincase and frame. Remove shims accordingly and reposition bearing on driven pulley side.

34,35,36,37, **Sprocket, Drive Pin, Spring and Bearing**

Press needle bearing in 44-tooth sprocket. Assemble drive pins and their spring on 44-tooth sprocket. Tighten to 5 N•m (44 lbf•**in**) in a criss-cross sequence.

19,20,22,23,24, Spring Pin, Reverse Axle, Sprocket, Bearing and Ring

Insert spring pin in reverse axle up to inside diameter. Press needle bearing in 19-tooth sprocket. Install ring and 19-tooth sprocket on reverse axle.

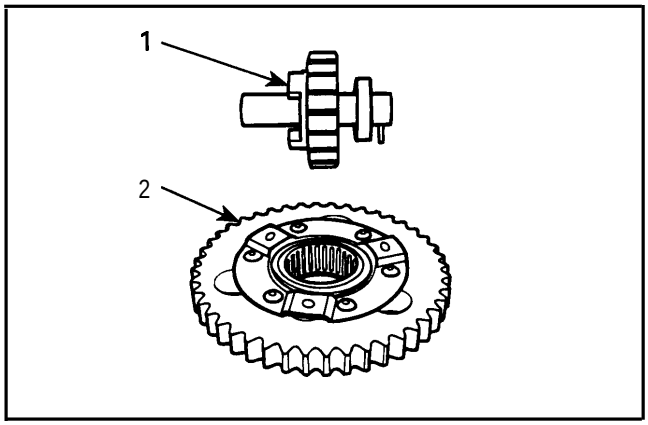

9,10,11,12,13, Cutter Pin, Castellated Nut, Washer, Sprocket and Shim

Install shim, 22-tooth sprocket (drive) and washer then tighten castellated nut. Secure with a new cotter pin.

28,32,33,38, **Chain, Sliding Gear, Coupling Shaft and Spacer**

Install chain, 44-tooth sprocket and its spacer. Spacer's large outer diameter must be against sprocket. Insert coupling shaft in 44-tooth sprocket.

15,18, Needle Bearing and Reverse Gear

Install needle bearing (wider one) in reverse gear.

18,21, Reverse Gear and Alignment Rod

Install reverse axle (assembly) making sure to properly position spring pin in housing slot. Install alignment rod, reverse gear and spacer. Drive sprocket hole and driven gear hole must be aligned to insert alignment rod.

9,16,17, Chain Tensioner, Spring Pin, Fork and Fork Axle

Mount chain tensioner (assembly) to adjustment screw already fixed to gearbox. Assemble fork to axle using spring pins. Apply grease on O-rings.

6, Cover

Join cover (assembly) to housing by passing fork tabs behind sliding sprocket thrust washer.

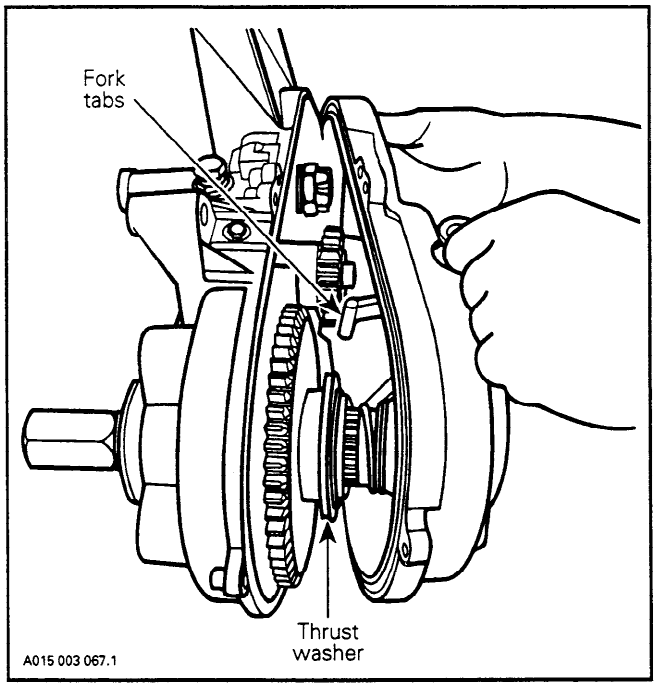

CAUTION : Gearbox cover must completely lay against housing.

5,7,8, Screws and Locking Tab

Tighten screws in a criss-cross sequence starting with the one above reverse axle. Install reverse shaft screw and bend locking tab against screw head flat. Bolt shift linkage to shifter.

ADJUSTMENT

28, Chain

Fully tighten adjustment screw by hand, then back off only far enough for hair pin to engage in locking hole.

4, Gear Shift Linkage

1. Check proper fit of handle in console.
2. Shift into reverse gear.

NOTE : If it is impossible to shift into reverse gear, shorten tie-rod and try again. If it is impossible, check if the cover to inspect components.

3. Completely slacken ball joint lock nut on the gear shift linkage.
4. Using tool (P/N 529 0303 00) to push and hold down tie-rod plate to make sure transmission is in reverse gear. Pull shifter handle in reverse position making sure all slack is removed. Lengthen tie-rod until it contacts the rubber washer then add an additional turn.

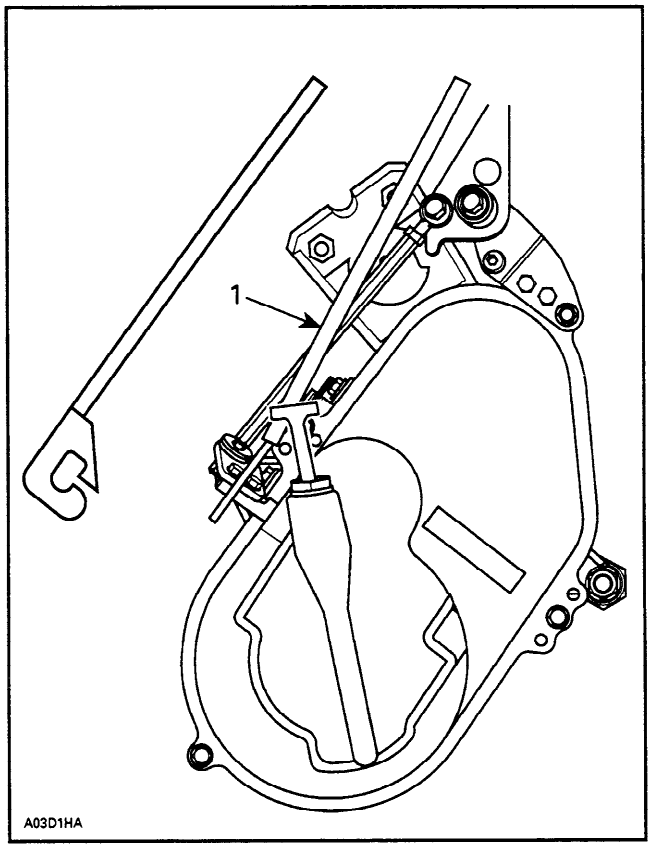

1. Tool

NOTE : It is normal to feel a light friction when shifting into gear.

5. Statically test transmission operation in forward and reverse positions.
6. Hold linkage and tighten ball joint jam nut.

29, Alarm Switch

Adjust backup alarm so that it sounds when transmission is in reverse gear while engine is running.

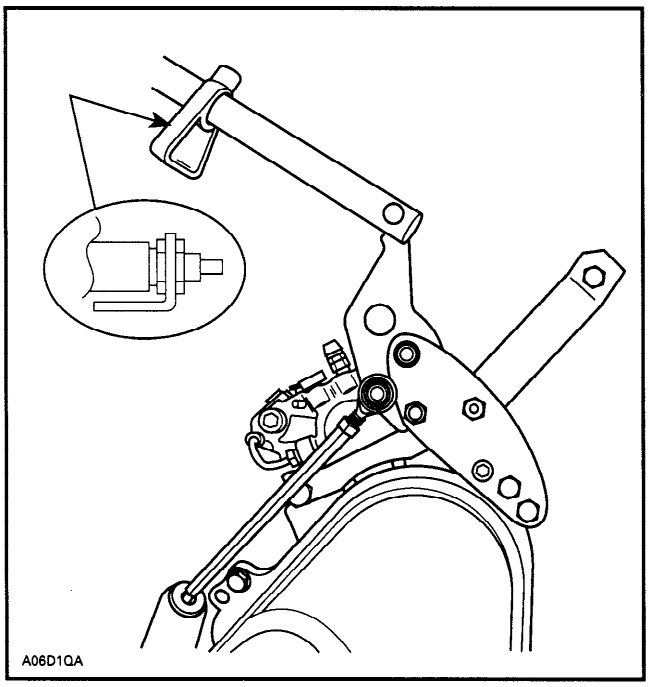

OIL CHANGE

Place a container under bottom pan (gearbox side).

Unbolt gear shift linkage from fork axle. Unbolt and remove cover by separating it from housing and by moving it toward the front in order to release fork from sliding sprocket.

Clean cover interior.

NOTE : It is normal to find metallic particles stuck to dipstick magnet. If bigger pieces of metal are found, disassemble and check all parts.

Reinstall cover as previously described during assembly.

Fill housing with chaincase oil (P / N 413 8019 00). Oil capacity is 250 mL (8.5 oz).

Check oil level with dipstick. With dipstick unscrewed, oil level must be between MIN. and MAX. marks.

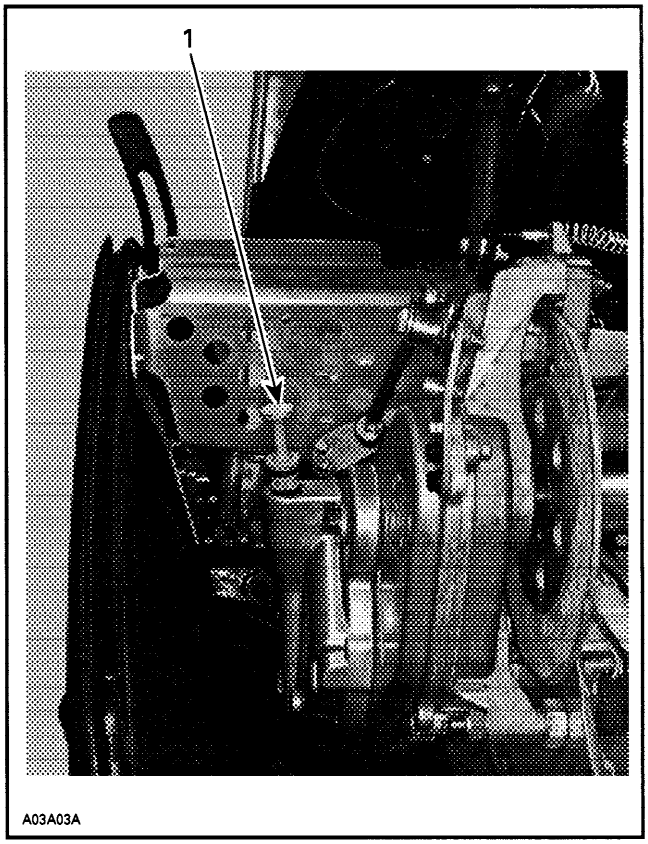

1. Dipstick

Shifter can be put in reverse position to ease removal of dipstick.

DRIVE CHAIN

GENERAL

Bombardier drive chains exist in 2 types, for proper use refer to TECHNICAL DATA 10.

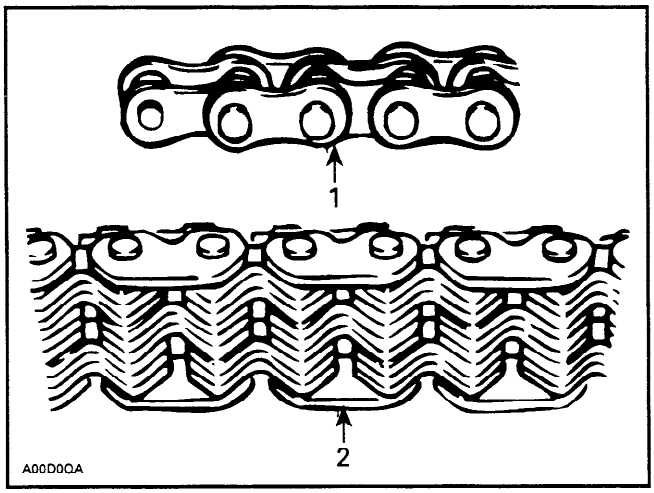

1. 1/2 in single
2. 3/8 in silent chain

SILENT CHAIN

For 1996 there are 2 types of silent chain. One is 11-link wide and the other (stronger) is 13-link wide. Do not interchange sprockets. Fit chain on sprockets to make sure using right ones according to width.

NOTE : No work (separation, lengthening) can be done on the silent chain type.

CHAIN ATTACHMENT

When joining chain ends, the open end of the circlip must be on opposite side of chain rotation. The circlip should also be facing the outer side of chaincase.

WARNING : Always ensure that the connecting link circlip is in good condition and is properly secured.

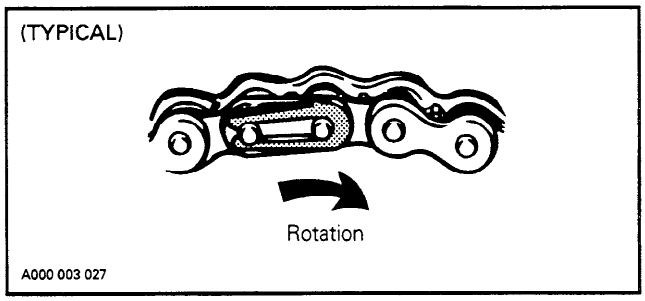

CHAIN SEPARATION

When separating an endless chain, always use a chain bearing pin extractor. Also, make sure to remove one complete link.

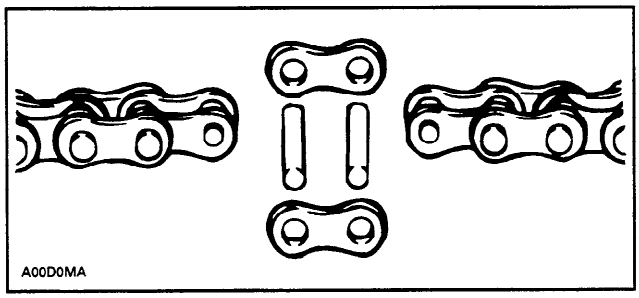

NOTE : Chain connecting link should only be used to lengthen or shorten a chain when changing the number of teeth of sprocket(s). A stretched chain must never be shortened because the chain pitch has changed (increased) and will not properly match the sprocket pitch, causing premature wear.

NOTE : Refer to CHAINCASE 05-06, for chain length according to gear ratio of each specific vehicle.

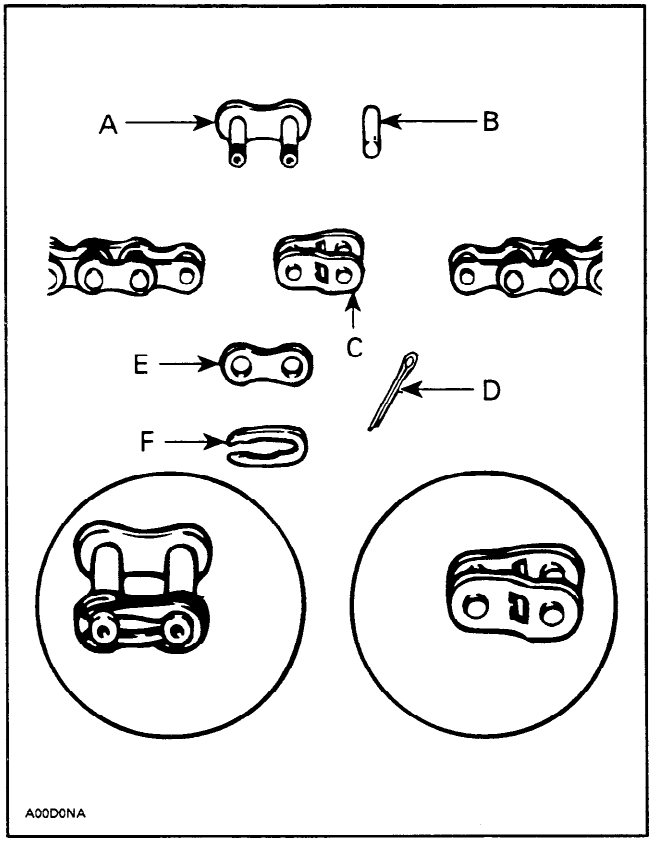

LENGTHENING 1/2 LINK
A. Connecting link
B. Link pin
C. Cranked link
D. Cotter pin
E. Outer link
F. Circlip

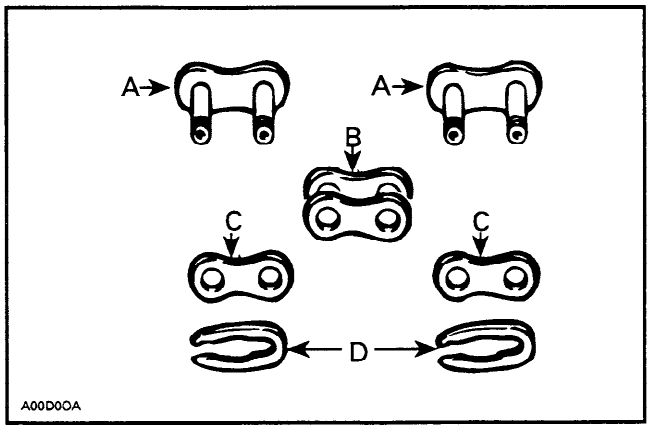

LENGTHENING 1 LINK
A. Connecting link
B. Inner link
C. Outer link
D. Circlip

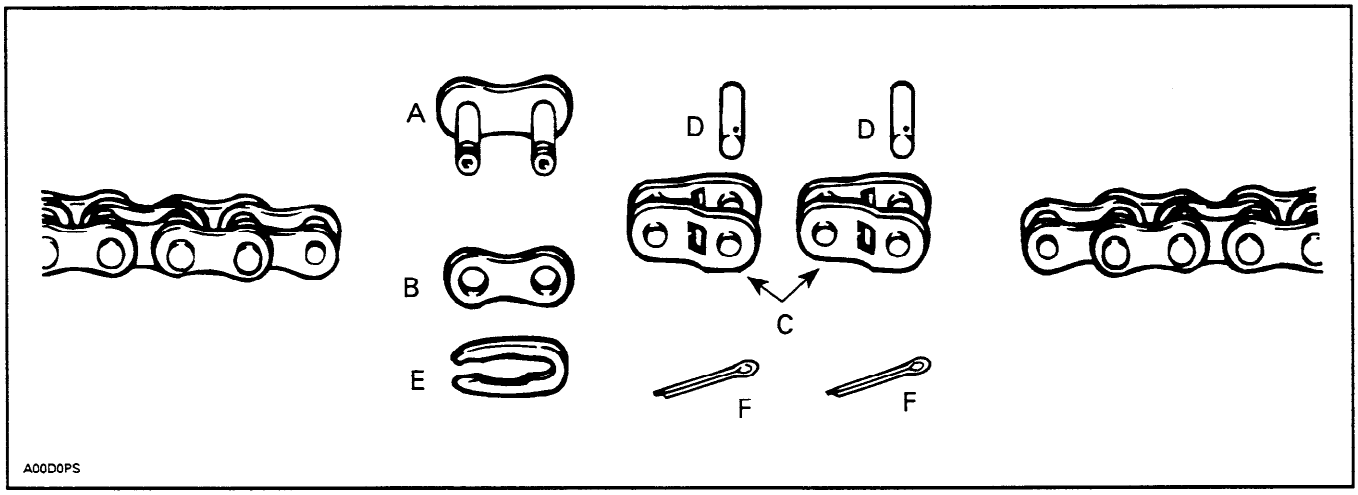

LENGTHENING 1-1/2 LINK
A. Connecting link
B. Outer link
C. Cranked link
D. Link pin
E. Circlip
F. Cotter pin

TABLE OF CONTENTS

WIRING DIAGRAMS **06-01-1**
CHART CODES 06-01-1
UNPLUGING CONNECTORS 06-01-3
TAB AND RECEPTACLE CONNECTORS REMOVAL 06-01-3
TAB AND RECEPTACLE CONNECTORS INSTALLATION 06-01-4
ACCESSORIES INSTALLATION 06-01-5

IGNITION TIMING **06-02-1**
BREAKER-POINT IGNITION SYSTEM **06-02-1**
247 ENGINE TYPE 06-02-1
NIPPONDENSO CDI SYSTEM (WITHOUT TRIGGER COIL) **06-02-3**
277 ENGINE TYPE 06-02-3
DUCATI CDI SYSTEM **06-02-6**
377, 443 AND 503 ENGINE TYPES 06-02-6

SPARK PLUGS **06-03-1**
BOSCH SPARK PLUG **06-03-1**
BOSCH SPARK PLUG NUMBERING SYSTEM 06-03-1
1996 REFERENCE CHART 06-03-1
DESIGN SYMBOLS USED ON BOSCH SPARK PLUGS **06-03-2**
NGK SPARK PLUG **06-03-3**
NGK SPARK PLUG NUMBERING SYSTEM 06-03-3
1996 REFERENCE CHART 06-03-3
DESIGN SYMBOLS USED IN NGK SPARK PLUGS **06-03-4**
THREAD DIAMETER **06-03-4**
CONSTRUCTION **06-03-4**
HEAT RATING NUMBERS **06-03-4**
REACH **06-03-4**
FIRING END CONSTRUCTION **06-03-4**
DISASSEMBLY 06-03-5
HEAT RANGE 06-03-5
FOULING 06-03-5
SPARK PLUG ANALYSIS 06-03-5
SPARK PLUG INSTALLATION 06-03-6
SPARK PLUG TIGHTENING TORQUE 06-03-6

BATTERY **06-04-1**
REMOVAL 06-04-1
CLEANING 06-04-1
INSPECTION 06-04-2
HYDROMETER TEST 06-04-2

BATTERY STORAGE 06-04-2
ACTIVATION OF NEW BATTERY 06-04-3
SERVICING 06-04-5
TIPS FOR CHARGING A USED BATTERY 06-04-5
BATTERY CHARGING EQUIPMENT 06-04-6
INSTALLATION OF BATTERY 06-04-7

ELECTRIC STARTER 06-05-1
REMOVAL 06-05-2
DISASSEMBLY 06-05-2
CLEANING AND INSPECTION 06-05-4
ASSEMBLY 06-05-4
INSTALLATION 06-05-5
CLEANING AND INSPECTION 06-05-6
CLEANING 06-05-6
INSPECTION 06-05-6
SOLENOID SWITCH 06-05-7

TESTING PROCEDURE 06-06-1
GENERAL 06-06-1
USE OF BOMBARDIER IGNITION TESTER 06-06-2
BOSCH BREAKER-POINT IGNITION SYSTEM TESTING (APPLICABLE TO 247 ENGINE TYPE) ... 06-06-4
MAGNETO OUTPUT (IGNITION GENERATOR COIL) 06-06-4
LIGHTING GENERATOR COIL OUTPUT 06-06-4
RESISTANCE MEASUREMENTS 06-06-6
NIPPONDENSO CDI SYSTEM TESTING 06-06-7
IGNITION COIL OUTPUT 06-06-7
IGNITION MODULE OUTPUT 06-06-7
MAGNETO OUTPUT 06-06-8
LIGHTING GENERATOR COIL OUTPUT 06-06-9
SUMMARY TABLE 06-06-9
RESISTANCE MEASUREMENTS 06-06-10
DUCATI CDI SYSTEM TESTING 06-06-12
TRIGGER COIL OUTPUT 06-06-12
MAGNETO OUTPUT 06-06-12
IGNITION COIL OUTPUT 06-06-13
IGNITION MODULE 06-06-13
LIGHTING GENERATOR COIL OUTPUT 06-06-13
SUMMARY TABLE 06-06-14
RESISTANCE MEASUREMENTS 06-06-15
VOLTAGE REGULATOR INSPECTION 06-06-16
INSPECTION OF AC CIRCUIT ISOLATION 06-06-17
INSPECTION 06-06-17

WIRING DIAGRAMS

MODEL	WIRING DIAGRAM PAGE	HEADLIGHT (watt)	TAILLIGHT (watt)	ELECTRICAL SYSTEM OUTPUT (watt)
Élan	Annex 1	60 / 55 hal.	8 / 27	75 / 23
Tundra II LT	Annex 2	60 / 55 hal.	8 / 27	160
Formula S / SL, Skandic 380 / 500	Annex 3	60 / 55 hal.	8 / 27	240
Touring E / LE / SLE / E LT	Annex 4	60 / 55 hal.	8 / 27	240

hal. = halogen

CHART CODES

Wiring Color Code

The first color of a wire is the main color, second color is the stripe.

Example : YL / BK is a YELLOW wire with a BLACK stripe.

COLOR CODE	
BK - BLACK	GN - GREEN
WH - WHITE	GY - GREY
RD - RED	VI - VIOLET
BL - BLUE	OR - ORANGE
YL - YELLOW	BR - BROWN

Following table shows wire colors related to electrical circuits.

WIRE COLORS	ELECTRICAL CIRCUIT	ADDITIONAL INFORMATION
BLACK / YELLOW	ENGINE SHUT OFF – Key switch – Tether cord switch – Emergency switch	Must be grounded to stop engine.
BLACK (small)	Ground for shut off	
BLACK (Big)	Ground for starter (–)	
YELLOW YELLOW / BLACK	12 volts (A.C.)	If shorted, magneto stops producing electricity.
RED	12 volts (D.C.) (+) For starter motor	
RED / GREEN	12 volts (D.C.) (+) For starter solenoid	
RED / BLUE	12 volts (D.C.) (+) Rectifier output	
GREY	12 volts (A.C.) High beam	Current returns by YELLOW / BLACK wire connected to headlamp.
VIOLET / GREY	12 volts (A.C.) Low beam	
WHITE	12 volts (A.C.) Brake light	Current returns by YELLOW / BLACK wire connected to taillight.
WHITE / RED	12 volts (A.C.) Low oil level	Current returns by YELLOW / BLACK wire connected to oil level sensor.
BLUE	12 volts (A.C.) Fuel level indicator	Current returns by YELLOW wire connected to fuel level sensor.
ORANGE	12 volts (A.C.) Heated grips (max.)	Current returns by YELLOW / BLACK wire connected to heating elements.
ORANGE / VIOLET	12 volts (A.C.) Heated grips (min.)	
BROWN	12 volts (A.C.) Heated throttle level (max.)	
BROWN / YELLOW	12 volts (A.C.) Heated throttle level (min.)	
GREEN	12 volts (A.C.) Temperature gauge	Current returns by YELLOW wire connected to sensor.
VIOLET	12 volts (A.C.) Engine overheating light	

Connector Location

Connectors on wiring diagrams carry the letter C followed by a number. Use this code with wiring diagram legend to find connector location on vehicle.

UNPLUGING CONNECTORS

Always unplug connectors by pulling on housing not on wire. This is particularly important with connectors on temperature sender and heating element switches.

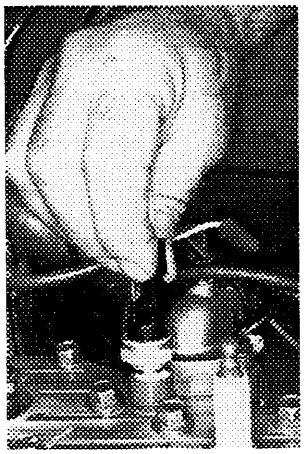

A06E1PA

TAB AND RECEPTACLE CONNECTORS REMOVAL

Tab Connector

It is locked in its housing by a spring tab on its side. Removal is done by squeezing this tab.

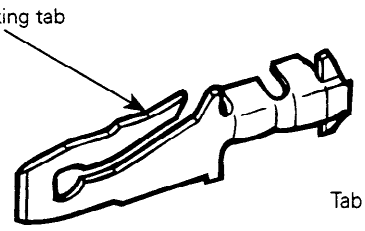

A000 004 049

To remove :

— Insert a screwdriver or Snap-on TT 600-5 from side opposite of wire and pry locking tab.

— While holding locking tab pryed, pull connector toward wire side.

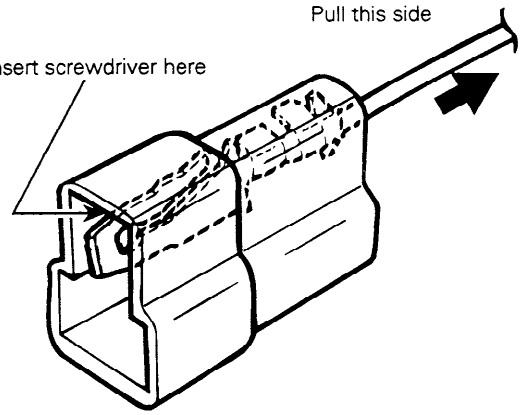

A000 004 050

Receptacle Connector

It is locked in its housing by a small tab on top. Removal is done by squeezing this tab.

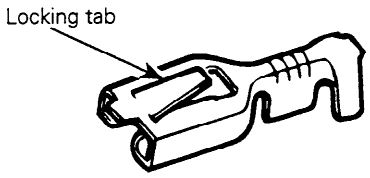

A000 004 047

To remove :

— Insert a small screwdriver or Snap-on TT 600-5 in access opening, opposite of wire side, between receptacle and its housing and squeeze locking tab.

— While holding locking tab squeezed, pull connector toward wire side.

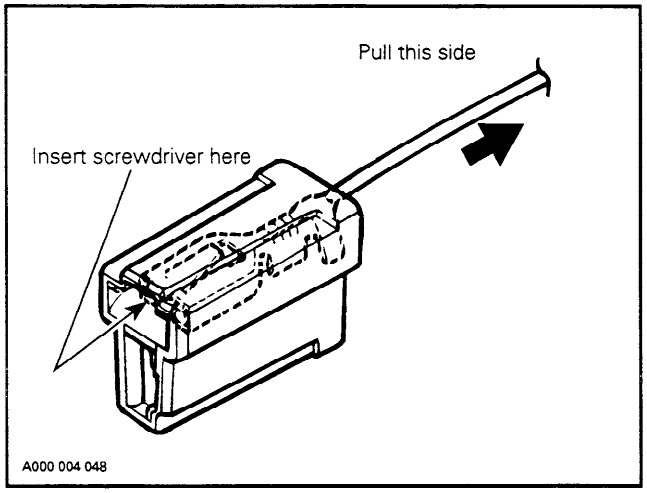

Locking Receptacle Connector

To remove:

— Insert tool Snap-on TT 600-5 in access opening then pull housing toward wire side.

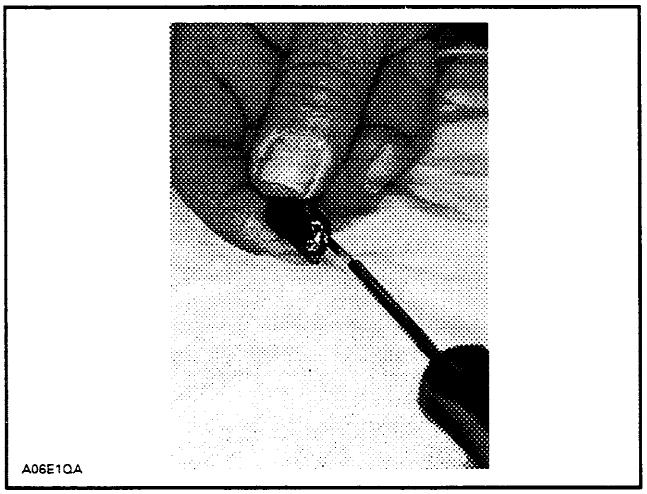

TAB AND RECEPTACLE CONNECTORS INSTALLATION

Prior to installing, make sure locking tab is sufficiently lifted to properly lock.

Insert tab and receptacle connectors in their respective housings as shown in following illustrations. Push sufficiently so that they snap. Try pulling wire to ensure they are properly locked.

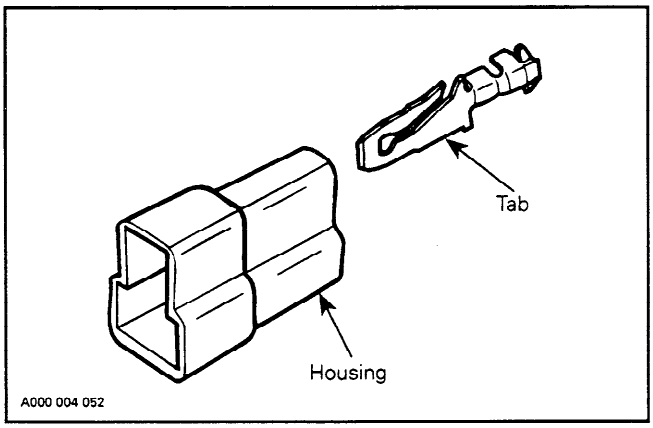

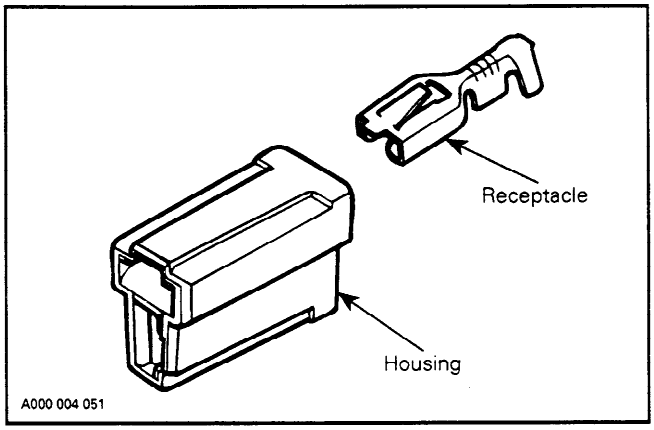

ACCESSORIES INSTALLATION

On all **electric start models** : The direct current (DC) utilizes the snowmobile frame as ground "wire" while all alternating current (AC) consumers (lights, heated grips, fuel gauge, etc.) utilize a separate ground wire.

Never interconnect AC and DC grounds as an AC voltage drop will result. When installing accessories on **any** snowmobile, connect their wires directly to the YELLOW and YELLOW / BLACK lighting coil wires.

Even if **manual start models** have an AC ground to the chassis (on voltage regulator), all accessories utilize a ground wire isolated from chassis. When an electric starter kit is installed, the voltage regulator and its ground wire are replaced by a voltage rectifier / regulator unit permitting a completely isolated AC circuit.

◆ **WARNING : Never secure electrical wires / cables with fuel lines. Keep wires away from any rotating, moving, heating, vibrating or sharp edge. Use proper fastening devices as required.**

IGNITION TIMING

BREAKER-POINT IGNITION SYSTEM

247 ENGINE TYPE

Two methods are detailed in this section ; the first using the **timing marks**, stamped on the engine, the second using a **Top Dead Center gauge**.

Timing Marks Procedure

1. Disconnect spark plug wire and remove spark plug.
2. Remove rewind starter assembly from engine then remove the starting pulley from flywheel.
3. Rotate flywheel until breaker points, visible through flywheel opening, are fully opened. Adjust points gap to 0.30-0.40 mm (0.012-0.016 in) using a feeler gauge and a screwdriver as illustrated.

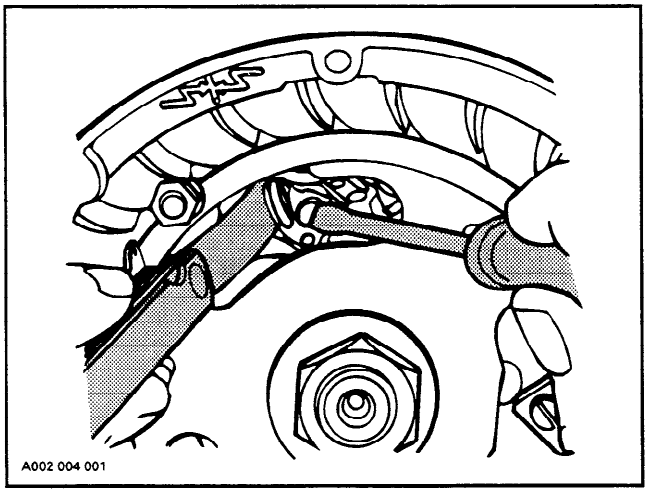

NOTE : Breaker points gap may change upon tightening. Always recheck after tightening.

4. Disconnect connector housing at engine then connect one lead of a test light (ex. : flashlight type (P / N 414 0122 00) to the BLACK wire leading from engine. Connect other to ground (metallic portion of the engine).
5. Rotate flywheel until timing marks align. Slacken the 3 armature plate retaining screws then rotate armature plate until test light fluctuates.

Retighten retaining screws at this position.

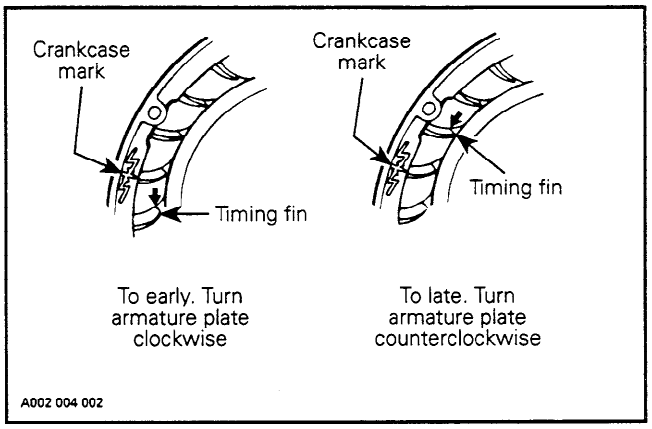

NOTE : The arrow (embossed on the fan) indicates the timing fin.

NOTE : Ignition timing may change upon tightening armature plate screws. Always recheck after tightening.

Top Dead Center Gauge Procedure

The first 4 steps are the same as timing marks procedure.

5. Install and adjust TDC gauge on engine as follows :

— Rotate flywheel clockwise until piston is just Before Top Dead Center.

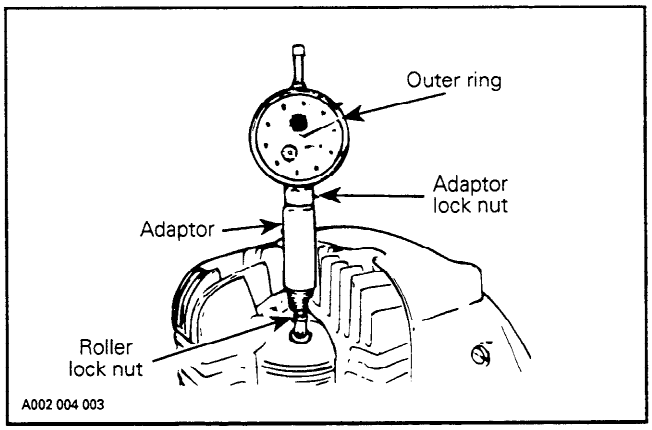

— Loosen adaptor lock nut then holding gauge with dial face toward magneto, screw adaptor in spark plug hole.

— Slide gauge far enough into adaptor to obtain a reading then finger tighten adaptor lock nut.

— Rotate flywheel until piston is at Top Dead Center.

— Unlock outer ring of dial and turn it until "0" (zero) on dial aligns with pointer.

— Lock outer ring in position.

6. Slacken the 3 armature plate retaining screws and turn timing instrument on.
7. Rotate flywheel counterclockwise until dial reads :

   3.98 ± 0.25 mm BTDC*
   (0.157 ± .010 in)

   * BTDC : Before Top Dead Center.

Slightly rotate armature plate until timing instrument switch off. Retighten retaining screws.

NOTE : Hold advance mechanism centrifugal lever in full advance position (toward magneto rim) to perform dynamic timing.

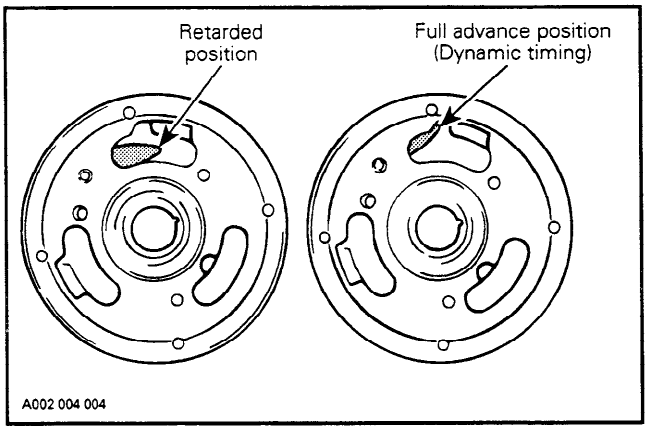

NOTE : Ignition timing may change upon tightening armature plate screws. Always recheck after tightening.

Edge Gap Verification

By following either of the 2 procedures herein mentioned the edge gap should automatically be adjusted. However, if the edge gap is to be verified, proceed as follows :

From timing marks, rotate flywheel clockwise 1/4 of a turn (hold advance mechanism centrifugal lever in full advance position toward magneto rim to perform dynamic edge gap verification), then slowly turn flywheel back counterclockwise until timing instrument fluctuates.

At this point check the distance between ignition generator coil end and magnet (edge gap), with a nonmagnetic strip of appropriate width.

ENGINE TYPE	DYNAMIC EDGE GAP
247	7 - 10 mm 9/32 - 25/64 in)

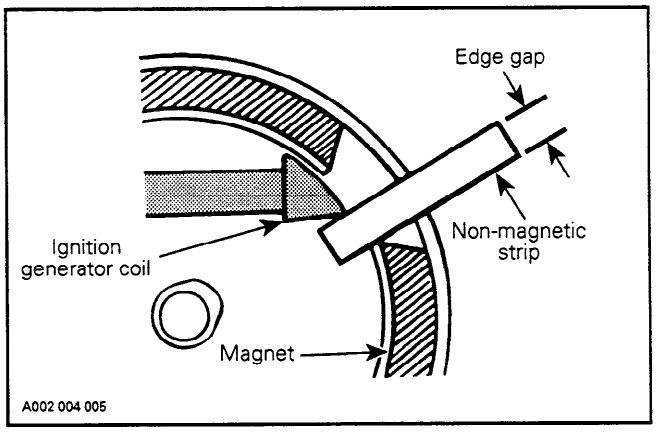

If edge gap is more or less than specified, the problem lies with engine internal components (crankshaft out of alignment, broken Woodruff key, loose breaker cam, etc.) ; corrective measures should be applied.

NIPPONDENSO CDI SYSTEM (WITHOUT TRIGGER COIL)

277 ENGINE TYPE

The 277 engine type uses a single coil ignition system. Refer to CDI SYSTEM 04-06 for more informations.

This section is mainly divised in 2 parts, the first one using a Top Dead Center gauge **to verify the magneto flywheel timing mark position**. The second one using a stroboscopic timing light **to check ignition timing**.

Flywheel timing mark position verification is required to :

1. Troubleshoot a missing or broken magneto flywheel Woodruff key.
2. Troubleshoot a magneto flywheel corresponding to a different engine type.
3. Scribe the timing mark on a new service magneto flywheel.

Always verify magneto flywheel timing mark position before checking ignition timing.

Verifying Magneto Flywheel Timing Mark Position.

1. Disconnect spark plug wire and remove spark plug.
2. Install and adjust TDC gauge on engine as follows :

— Rotate magneto flywheel clockwise until piston is just Before Top Dead Center.

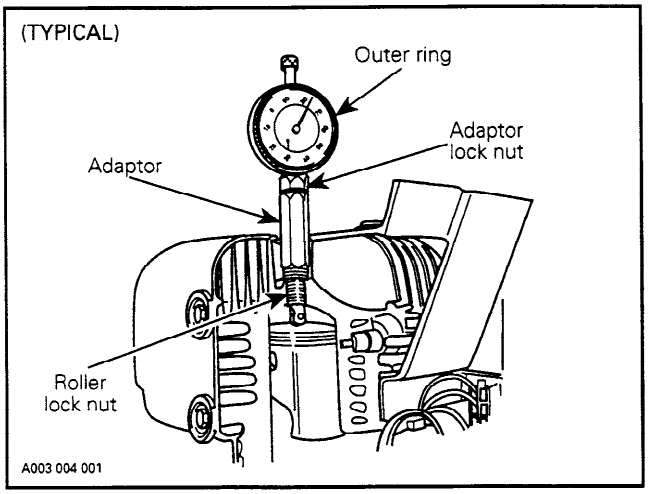

— Loosen adaptor lock nut then holding gauge with dial face toward magneto, screw adaptor in spark plug hole.

— Slide gauge far enough into adaptor to obtain a reading then finger tighten adaptor lock nut.

— Rotate magneto flywheel clockwise until piston is at Top Dead Center.

— Unlock outer ring of dial and turn it until "0" (zero) on dial aligns with pointer.

— Lock outer ring in position.

3. From this point, rotate magneto flywheel back 1/4 turn then rotate it clockwise to reach the specified position. Refer to 10 THECHNICAL DATA.

Check if yellow fin aligns with mark on fan cowl.

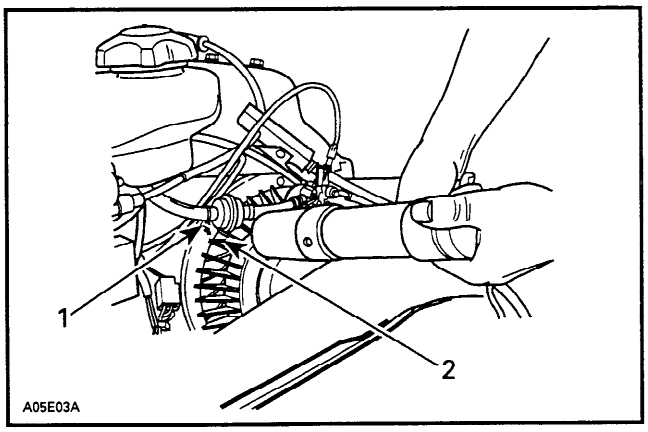

1. Fan cowl timing mark
2. Yellow fin

If marks do not align, there is something wrong with fan mounting. Check Woodruff key and fan.

CAUTION : Always check the timing with a stroboscopic timing light at 6000 RPM after the marks have been checked.

Checking Ignition Timing

NOTE : To perform this procedure we strongly recommend a stroboscopic timing light which is able to exceed 6000 RPM.

To check ignition timing, use a timing light (P / N 529 0092 00).

NOTE : This timing light is battery powered (2 alkaline batteries, type C) and therefore needs no auxiliary power supply. If a different timing light requiring auxiliary power supply is used on manual start models, use a separate battery to power timing light.

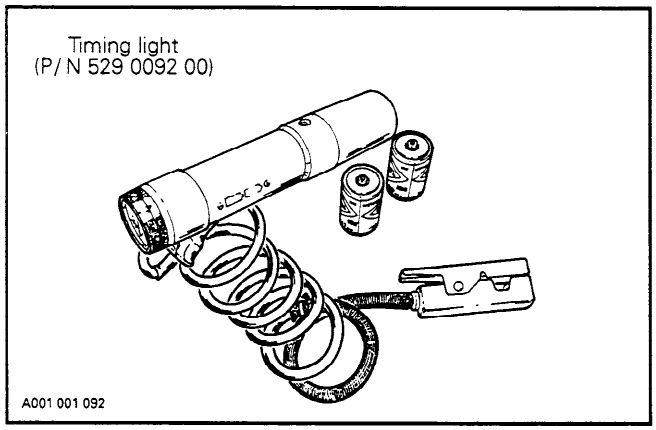

The ignition components are affected by temperature variation, therefore, timing must be checked when engine is cold, after idling for a MAXIMUM of 20 seconds.

NOTE : On applicable models, turn heating grips off prior to checking ignition timing.

1. Connect timing light pick-up to the spark plug lead. Use a digital induction type tachometer (P / N 529 0145 00).

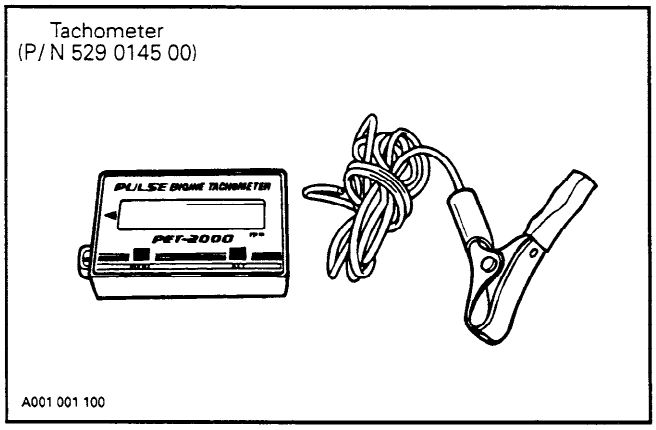

Connect tachometer wire to spark plug wire or aim tachometer toward spark plug wire without using any connection wire.

WARNING : Place ski tips against a wall, raise rear of vehicle on a stand so that track does not contact the ground. Do not allow anyone in front or behind the vehicle while engine is running. Keep clear of track and do not wear loose clothing which can get caught in moving parts.

2. Start the engine and point timing light straight in line with the fan cowl timing mark. Bring engine to 6000 RPM for a brief instant.

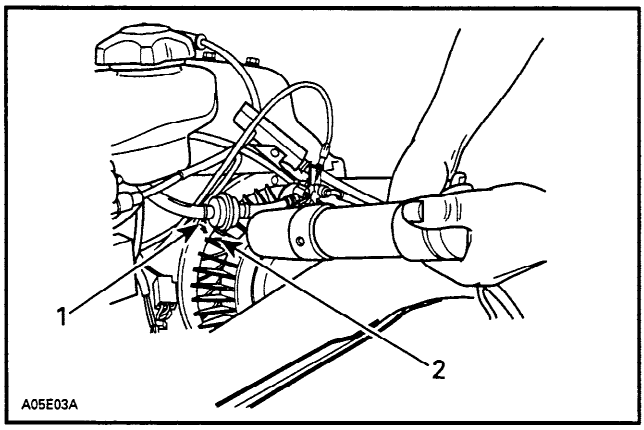

1. Fan cowl timing mark
2. Yellow fin

3. Check if the yellow fin aligns with the fan cowl timing mark. Tolerance is ± 1°.

NOTE : On the NIPPONDENSO ignition system, timing advance decreases as engine speed increases. When marks are aligned at 6000 RPM, spark occurrence is still Before Top Dead Center.

If the yellow fin aligns with the fan cowl timing mark, timing is correct.

If timing adjustment is required, rewind starter and starter pulley have to be removed. For removal procedure, refer to CDI SYSTEM 04-06.

IGNITION TIMING ADJUSTMENT

Timing is performed by moving armature plate, clockwise to retard spark occurrence, counterclockwise to advance.

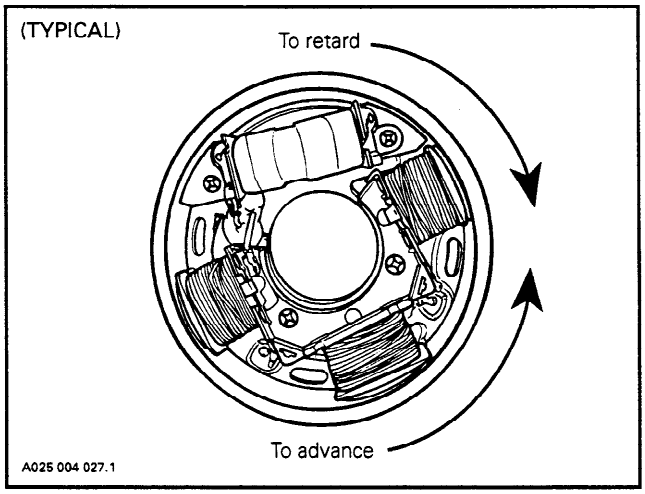

To adjust, loosen 3 armature plate retaining screws and lightly rotate armature plate in proper direction.

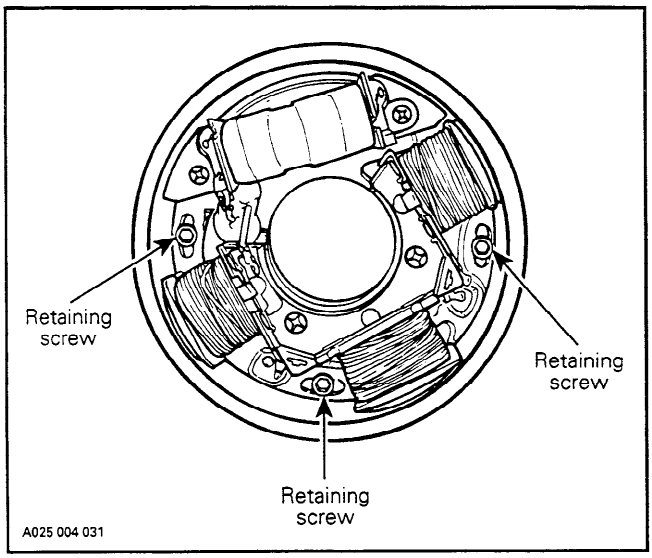

Refer to the difference between the fan cowl timing mark and the yellow fin to determine the amount of rotation.

When the yellow fin is on **left** side of fan cowl timing mark, it indicates too **advanced** timing.

In this case, turn armature plate clockwise.

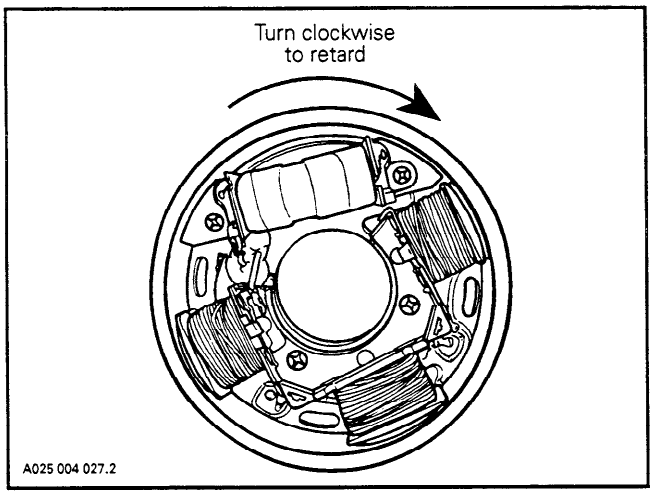

When the yellow fin is on **right** side of fan cowl timing mark, it indicates **retarded timing**.

In this case, turn armature plate counterclockwise.

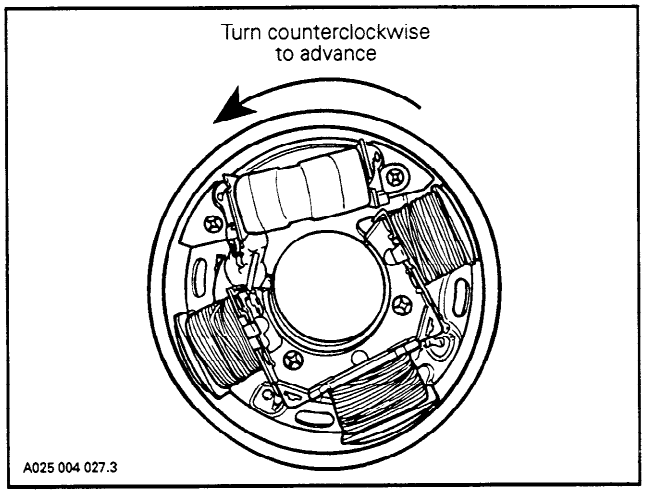

After adjustment, tighten armature plate retaining screws.

CAUTION : Make sure armature plate screws are well secured. Armature plate screws must have medium strength threadlocker (P / N 413 7030 00) applied before tightening.

Reinstall removed parts.

Recheck ignition timing (make sure engine is cold).

DUCATI CDI SYSTEM

377, 443 AND 503 ENGINE TYPES

Proper ignition timing is determined by trigger coil position.

If for any reason, ignition timing accuracy is suspected, it can be verified as follows.

Verifying Magneto Flywheel Timing Mark Position

Prior to checking the timing, it may be necessary to verify the position of the timing mark on the magneto flywheel, for the following reasons :

1. To detect a missing or broken magneto flywheel Woodruff key which would allow a change of timing to occur, with eventual break down of the engine.
2. To correctly locate and mark a timing mark on a new service magneto flywheel.
3. To verify the correct location of the factory timing mark.
4. To detect a wrong magneto flywheel.

To verify the position of the timing mark on the magneto flywheel, proceed as follows :

1. Clean the area around the spark plugs, and remove them.
2. Remove the rewind starter from the engine.
3. Install the TDC gauge in the spark plug hole, (magneto / generator side) and adjust as follows :
   a. Position the magneto flywheel at approximately TDC.

INSTALLATION OF TDC GAUGE

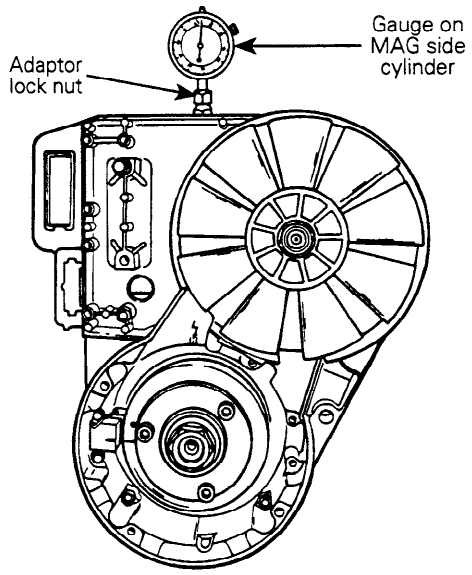

A017 004 034

   b. Assemble the gauge to the adaptor and tighten the roller lock nut. Do not tighten the adaptor lock nut.
   c. Screw the adaptor into the spark plug hole and tighten to prevent movement in the plug hole.
   d. Position the dial face toward the magneto / generator. Move the gauge down until the needle just begins to move, then move down a further 5 or 6 mm (approximately 1/4 in). Tighten adaptor lock nut by hand.
4. Locate the piston TDC position as follows :
   a. Slowly rotate the magneto flywheel back and forth across TDC while observing the needle. Note that the needle stops moving only as the piston is changing direction.
   b. Rotate the dial face so that "0" is in line with the needle when it stops moving.
   c. Again, slowly rotate the magneto flywheel back and forth across TDC and adjust the dial face to "0", until the needle always stops exactly at "0" before changing direction.
   d. "0" now indicates exact TDC.

5. Verify the position of the timing mark on the magneto flywheel as follows :

NOTE : When checking timing, certain procedures require that the magneto flywheel be turned in a clockwise direction, viewed facing the magneto / generator. If it is necessary to turn back (counterclockwise) for any reason, rotate the magneto flywheel at least one-quarter turn counterclockwise, and then rotate it clockwise. The last magneto flywheel movement when making a critical check must always be in a clockwise direction, to ensure that the slack in engine moving parts is taken-up.

a. Rotate the magneto flywheel counterclockwise, one-quarter turn then carefully rotate it clockwise until the needle indicates the specified measurement. Refer to 10 TECHNICAL DATA.
b. Verify that the magneto flywheel mark perfectly aligns with the mark on the trigger coil, refer to illustration.
c. If the marks do not align, check magneto flywheel and trigger coil part numbers and check Woodruff key condition. If all parts are the appropriate ones and if Woodruff key is in good condition, continue the procedure.

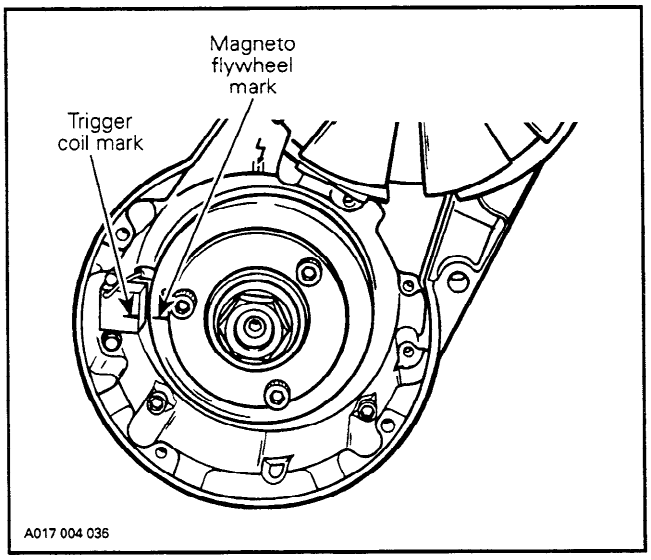

NOTE : These marks can not be used to check dynamic (with engine running) ignition timing with a timing light : a new mark must be scribed on magneto flywheel for this purpose.

6. Scribe a new mark on magneto flywheel as follows.
   a. Remove the fan cover from the engine.
   b. Maintain magneto flywheel so that previous marks remain aligned.
   c. Scribe or punch a mark on magneto flywheel so that it perfectly aligns with the arrow on crankcase, refer to illustration. This new timing mark should be used for future timing checks (dynamic timing).
   d. Reinstall rewind starter.
   e. Check the timing with a timing light.

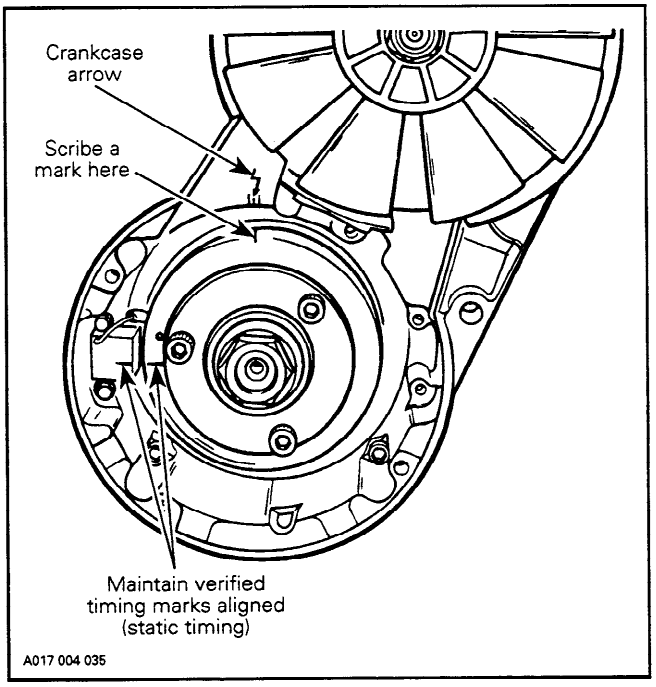

Checking Ignition Timing

Use timing light (P / N 529 0092 00).

To check the ignition timing, refer to illustration and proceed as follows :

NOTE : Engine should be cold when checking timing. Do not idle engine for more than 20 seconds and make checks quickly.

WARNING : Place ski tips against a wall, raise rear of vehicle on a stand, so that track does not contact the ground. Do not allow anyone in front of or behind the vehicle while engine is running. Keep clear of track and do not wear loose clothing which can get caught in moving parts.

1. Connect the timing light pick-up to a spark plug cable and the power connections to the battery.

NOTE : To avoid an incorrect reading due to parallax, view the magneto flywheel and the crankcase timing marks in a straight line.

2. Start the engine and raise the engine speed at least to 2000 RPM while observing the timing marks, refer to illustration. The magneto flywheel mark scribed previously and the crankcase arrow should be perfectly aligned. If the marks do not align, a faulty trigger coil (check proper grounding of coil) or a faulty CDI module could be the cause : substitute one part at a time and recheck timing marks (check connectors condition prior to substituting any part).

NOTE : Ignition timing may be verified when engine speed is anywhere within 2000-6000 RPM.

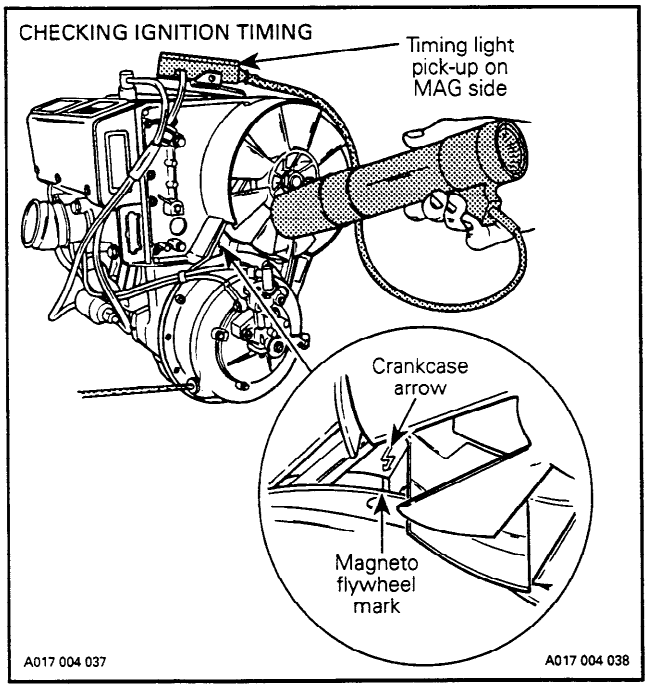

3. Install parts which were removed.

SPARK PLUGS

NOTE : The 1996 Bombardier snowmobiles covered in this manual are using 2 spark plug brands, Bosch and NGK spark plugs.

BOSCH SPARK PLUG

Élan

BOSCH SPARK PLUG NUMBERING SYSTEM

The heat range identification system is :

High number → hot plug
Low number → cold plug

1996 REFERENCE CHART

Bosch spark plug used on the 1996 Élan snowmobile :

– M 7 A

DESIGN SYMBOLS USED ON BOSCH SPARK PLUGS

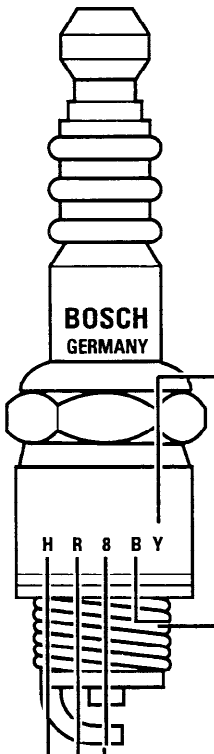

C Copper core center electrode
X Wide gap .044 in (1.1 mm)
Y Wide gap .060 in (1.5 mm)
0 1 2 3 4 5 Special shell or electrode designs

Thread Reach

A Thread reach .460 in standard electrode
B Thread reach .460 in extended tip electrode
C Thread reach 3/4 in regular electrode
D Thread reach 3/4 in extended tip
E Thread reach 3/8 in regular
F Thread reach 3/8 in extended tip electrode
H Thread reach 3/4 in extra extended tip
L Extra extended tip
P Platinum electrode
S Silver electrode

Heat Range

B SAE connector for 7 mm diameter cable
C SAE connector for 5 mm diameter cable
E Surface gap
R Resistor
S Mini-plug

Thread

D 18 mm thread diameter tapered seat
F 14 mm thread diameter 5/8 in hexagonal
H 14 mm thread diameter tapered seat
M 18 mm thread diameter
W 14 mm thread diameter

A001 004 047

NGK SPARK PLUG

All Models Except Élan

NGK SPARK PLUG NUMBERING SYSTEM

Bombardier is using the NGK spark plug type on most of the 1996 snowmobile models.

The heat range identification system is :

High number → cold plug
Low number → hot plug

1996 REFERENCE CHART

NGK spark plugs used on 1996 Bombardier snowmobiles covered in this manual :

– BR9ES

DESIGN SYMBOLS USED IN NGK SPARK PLUGS

PREFIX — SUFFIX

B R 9 E S - 15

WIDE GAP

- 10 : 1.0 mm (.040")
- 11 : 1.1 mm (.044")
- 13 : 1.3 mm (.050")
- 14 : 1.4 mm (.055")
- 15 : 1.5 mm (.060")
- 20 : 2.0 mm (.080")

Thread diameter

- **A** : 18 mm
- **B** : 14 mm
- **C** : 10 mm
- **D** : 12 mm
- **E** : 8 mm
- **J** : 12 mm x 19 mm reach

Construction

- **M** : Compact Type
- **P** : Projected Insulator Type
- **R** : Resistor Type
- **U** : Surface Discharge
- **Z** : Inductive Suppressor Type

Heat rating numbers

- 2 Hot
- 4
- 5
- 6
- 7
- 8
- 9
- 10 Cold

Reach

- **E** : 19 mm (3/4")
- **F** : Taper Seat
- **H** : 12.7 mm (1/2")
- **L** : 11.2 mm (7/16")
- **Z** : 21 mm

Blank

18 mm ⌀ 12 mm

14 mm ⌀ 9.5 mm (3/8")

Firing end construction

- **A** : Special Design
- **B** : Single Ground special alloy
- **C** : Dual Ground special alloy
- **G** : Racing Type
- **GV** : Racing Version of V-Type
- **L** : Half Heat Range
- **S** : Standard Center Electrode
- **V** : Fine Wire Center Electrode
- **X** : Booster Gap
- **Y** : V-Grooved Center Electrode

CROSSCUTS AND GAP STYLES OF SPARK PLUGS

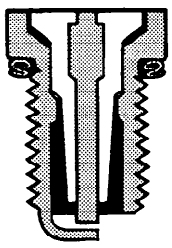
Standard Type

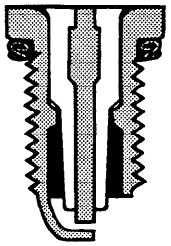
Projected Insulator Type

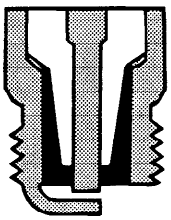
Taper Seat Type

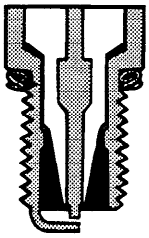
V-Type

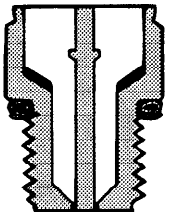
Surface Discharge Type

A001 004 061

DISASSEMBLY

First unscrew the spark plug 1 turn.

Clean the spark plug and cylinder head with pressurize air then completely unscrew.

◆ WARNING : Whenever using compressed air, always wear protective eye wear.

HEAT RANGE

The proper operating temperature or heat range of the spark plugs is determined by the spark plug ability to dissipate the heat generated by combustion.

The longer the heat path between the electrode tip to the plug shell, the hotter the spark plug operating temperature will be – and inversely, the shorter the heat path, the colder the operating temperature will be.

A “cold” type plug has a relatively short insulator nose and transfers heat very rapidly into the cylinder head.

Such a plug is used in heavy duty or continuous high speed operation to avoid overheating.

The “hot” type plug has a longer insulator nose and transfers heat more slowly away from its firing end. It runs hotter and burns off combustion deposits which might tend to foul the plug during prolonged idle or low speed operation.

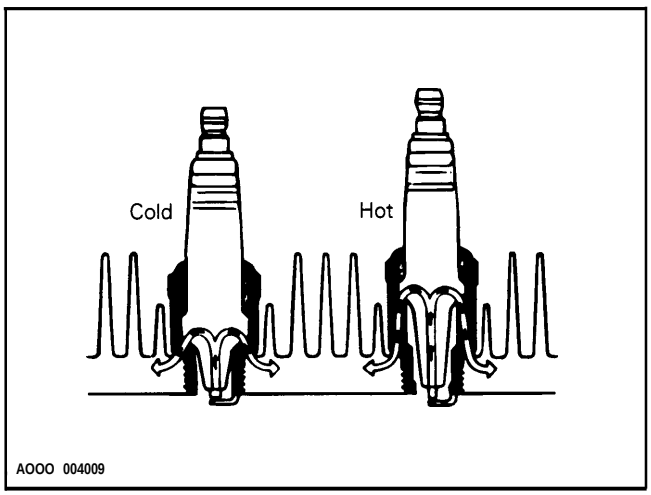

▼ CAUTION : Severe engine damage might occur if a wrong heat range plug is used.

A too “hot” plug will result in overheating and pre-ignition, etc.

A too “cold” plug will result in fouling (shorting the spark plug) or may create carbon build up which can heat up red-hot and cause pre-ignition or detonation.

FOULING

Fouling of the spark plug is indicated by irregular running of the engine, decreased engine speed due to misfiring, reduced performance, and increased fuel consumption. This is due to a loss of compression. Other possible causes are : prolonged idling, or running on a too rich mixture due to a faulty carburetor adjustment or incorrect fuel and /or fuel mixing. The plug face of a fouled spark plug has either a dry coating of soot or an oily, glossy coating given by an excess either of oil or of oil with soot. Such coatings form a conductive connection between the center electrode and ground.

SPARK PLUG ANALYSIS

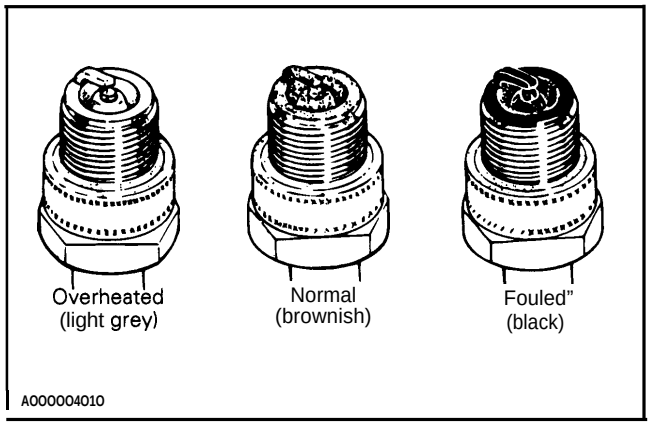

The plug face (and piston dome) reveals the condition of the engine, operating condition, method of driving and fuel mixture. For this reason it is advisable to inspect the spark plug at regular intervals, examining the plug face (i.e. the part of the plug projecting into the combustion chamber) and the piston dome.

SPARK PLUG INSTALLATION

Prior to installation make sure that contact surfaces of the cylinder head and spark plug are free of grime.

1. Using a wire feeler gauge, set electrode gap according to 10 TECHNICAL DATA.
2. Apply antiseize lubricant (P/N 4137010 00) over the spark plug threads to prevent possible seizure.
3. Hand screw spark plug into cylinder head and tighten with a torque wrench and a proper socket.

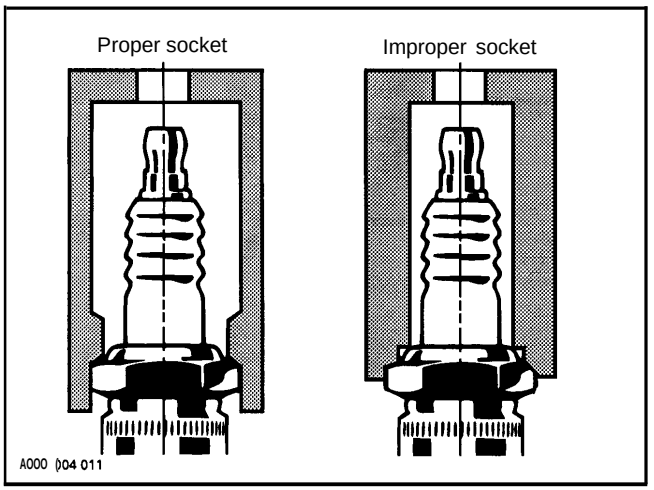

SPARK PLUG TIGHTENING TORQUE

Models	Spark plugs	Torque N•m (lbf•ft)
Élan	Bosch M7A or NGK A6	37 (27)
All other models	NGK	27(20)

BATTERY

REMOVAL

All Models

◆ WARNING : Battery BLACK negative cable must always be disconnected first and connected last.

◆ WARNING : Never charge or boost battery while installed on vehicle.

Remove belt guard.

Unfasten spark plug cables from fan housing. Unplug spark plug caps.

Remove throttle cable and primer hose attachment from air silencer.

Unplug CDI box harness connector.

Slacken collar on carburetor adaptors. Remove air silencer. CDI box will come along with.

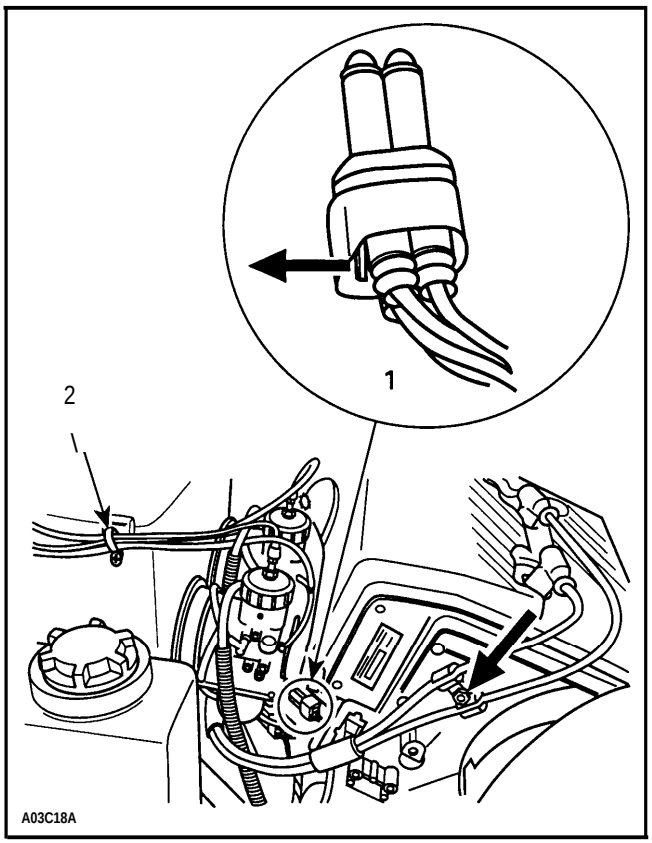

1. CDI box harness connector
2. Attachment

Unfasten retaining strips.

Open strips and lift battery protective boot.

Remove vent tube.

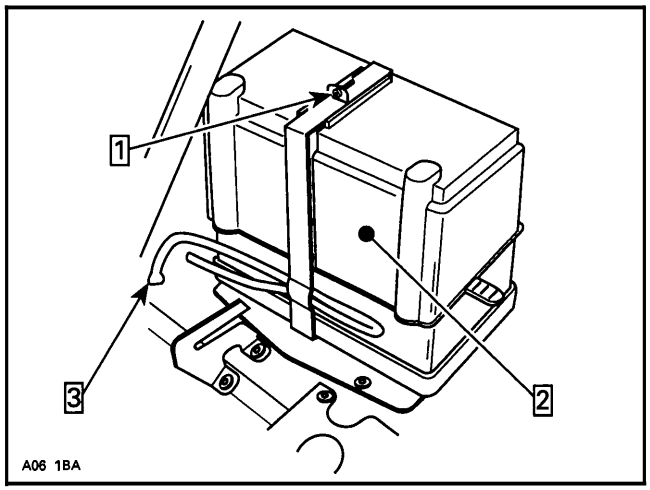

Step 1 : Unfasten and open
Step 2 : Lift protective boot
Step 3 : Remove vent tube

All Models

Withdraw battery from vehicle being careful not lean it so that electrolyte flows out of vent tube.

▼ CAUTION : Should any electrolyte spillage occur, immediately wash off with a solution of baking soda and water to prevent damage to vehicle components.

CLEANING

Clean the battery, battery casing, vent tube, caps, cables and battery posts using a solution of baking soda and water.

▼ CAUTION : Do not allow cleaning solution to enter battery interior since it will destroy the electrolyte.

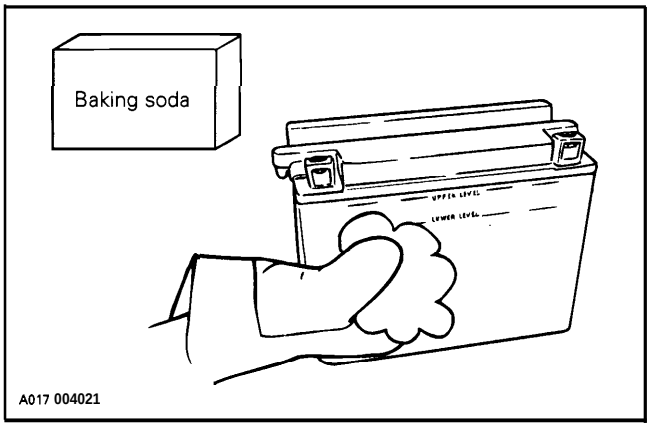

Remove corrosion from battery cable terminals and battery posts using a firm wire brush.

INSPECTION

Visually inspect battery casing for cracks or other possible damage. If casting is damaged, replace battery and thoroughly clean battery tray and close area with water and baking soda.

◆ WARNING : Should the battery casing be damaged, wear a suitable pair of non-absorbent gloves when removing the battery by hand.

Inspect battery posts for security of mounting.

Inspect for cracked or damaged battery caps, replace defective caps.

◆ WARNING : Battery caps do not have vent holes. Make sure that vent tube is not obstructed.

HYDROMETER TEST

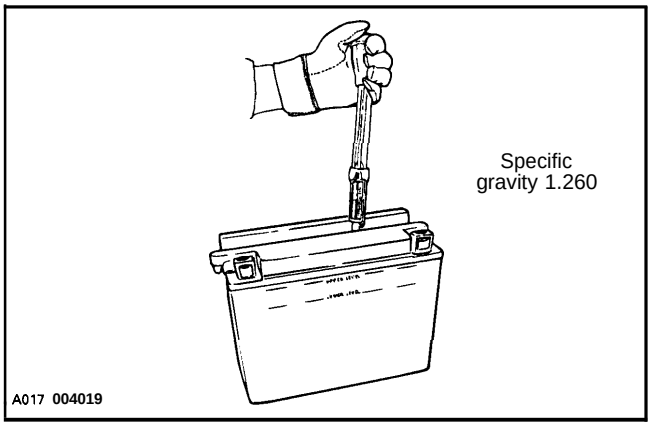

A hydrometer measures the charge of a battery in terms of specific gravity of the electrolyte. Most hydrometers give a true reading at 27°C (80°F).

In order to obtain correct readings, adjust the initial reading by adding .004 points to the hydrometer readings for each 5.5°C (1 0°F) above **27°C (80°F)** and by subtracting .004 point for every 5.5°C (1 0°F) below **27°C (80°F)**.

This chart will be useful to find the correct reading.

ELECTROLYTE TEMPERATURE		OPERATION TO PERFORM		
"c	"F			
38	100	add	.008	to the reading
32	90		.004	
27	80	correct reading		
21	70	substract	.004	from the reading
16	60		,008	
10	50		.012	
4	40		.016	
-1	30		.020	
-7	20		.024	
-12	10		.028	
-18	0		.032	
-23	-10		.036	
-29	-20		.040	
-34	-30		.044	
-40	-40		.048	

EXAMPLE NO. 1

Temperature below **27°C (80°F)**:
Hydrometer Reading : 1.250
Electrolyte temperature : - 7°C (20°F)
Subtract .024 Sp.Gr.
Corrected Sp.Gr. is 1.226

EXAMPLE NO. 2

Temperature above **27°C (80°F)**:
Hydrometer Reading : 1.235
Electrolyte temperature : 38°C (1 OO"F)
Add .008 Sp.Gr.
Corrected Sp.Gr. is 1.243

▼ CAUTION : Do not install a partially charged battery on a snowmobile since the casing might crack at freezing temperature. The following chart shows the freezing point of the electrolyte in relation to the charge of the battery.

Temperature - Corrected Specific Gravity	Battery Charge	Freezing Point of Electrolyte
1.260	Fully Charged	- 59°C (- 74°F)
1.230	3/4 Charged	-400C (- 40°F)
1.200	1/2 Charged	- 27°C (- 16°F)
1.170	1/4 Charged	- 18°C (0°F)
1.110	Discharged	- 70C (+19°F)

BATTERY STORAGE

Disconnect and remove battery from the vehicle.

Check electrolyte level in each cell, add distilled water up to upper level line.

▼ CAUTION : Do not overfill.

The battery must always be stored in fully charged condition. If required, charge until specific gravity of 1.260 is obtained,

▼ CAUTION : Battery electrolyte temperature must not exceed 50°C (122°F). The casing should not feel hot.

Clean battery terminals and cable connections using a wire brush. Apply a light coat of dielectric grease (P/ N 4137017 00) or petroleum jelly on terminals.

Clean battery casing and caps using a solution of baking soda and water. Do not allow cleaning solution to enter battery, otherwise it will destroy the electrolyte. Rinse battery with clear water and dry well using a clean cloth.

Store battery on a wooden shelf in a cool dry place. Such conditions reduce self-discharging and keep fluid evaporation to a minimum.

During the storage period, recheck electrolyte level and specific gravity readings at least every 40 days. As necessary, keep the battery at its upper level line and near full charge as possible (trickle charge).

ACTIVATION OF NEW BATTERY

● WARNING : Never charge or boost battery while installed on vehicle.

▼ CAUTION : Prior to charging the battery, always remove it from the vehicle to prevent electrolyte spillage.

A new battery is factory fresh dry charged. For storage purposes, it is fitted with a temporary sealing tube.

Do not remove the sealing tube or loosen battery caps unless activation is desired.

In case of accidental premature removal of caps or sealing tube, battery should be given a full charge.

Perform the following operations anytime a new battery is to be installed,

1. Remove the sealing tube from the vent elbow. Install vent tube, included in the battery kit, to battery elbow.

● WARNING : Failure to remove the sealing tube could result in an explosion.

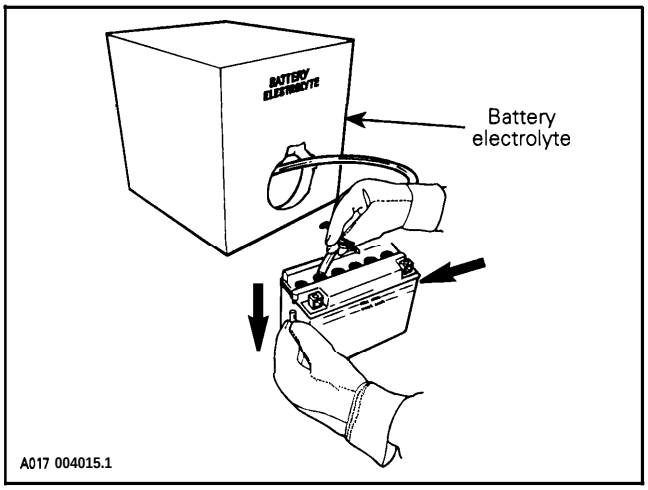

2. Remove caps and fill battery to UPPER LEVEL line with electrolyte (specific gravity : 1.260 at 20°C (68°F)).
3. Allow the battery to stand for 30 minutes MINIMUM so that electrolyte soak through battery cells.

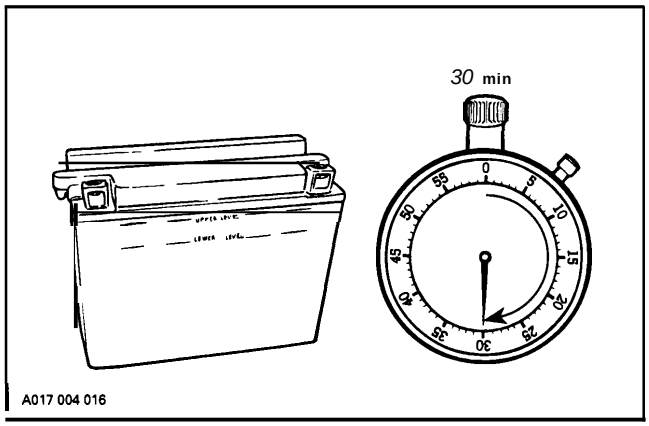

4. Allow gas bubbles to escape by lightly shaking battery by hand.

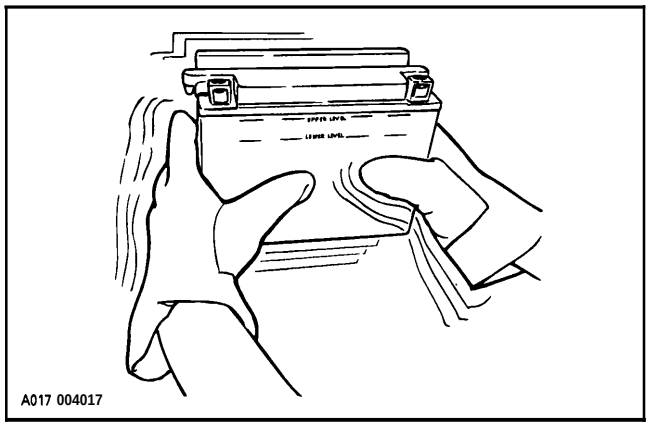

5. Readjust the electrolyte level to the UPPER LEVEL line.

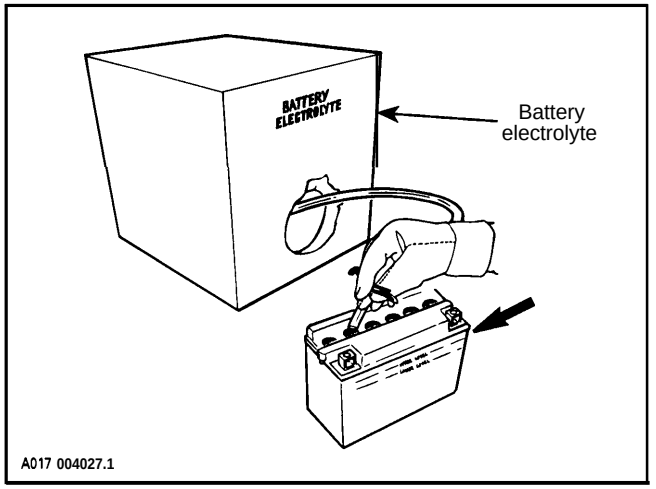

6. Connect a 2 A battery charger for 10 to 20 hours.

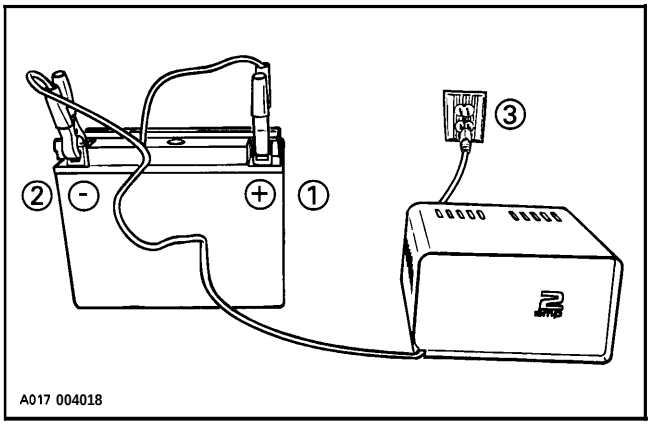

▼ CAUTION : If charging rate raises higher than 2.4 A reduce it immediately. If cell temperature rises higher than 50°C (122°F) (if the casing feels hot) discontinue charging temporarily or reduce the charging rate.

◆ WARNING : Gases given off by a battery being charged are highly explosive. Always charge in a well ventilated area. Keep battery away from cigarettes or open flames. Always turn battery charger off prior to disconnecting cables. Otherwise a spark will occur and battery might explode.

7. Disconnect battery charger.

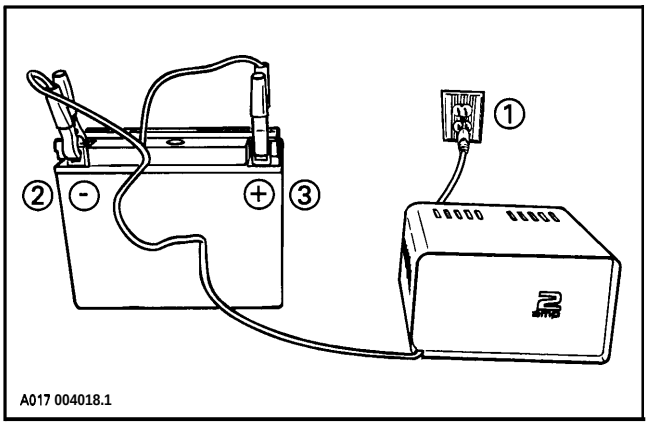

8. Test battery state of charge. Use a hydrometer.

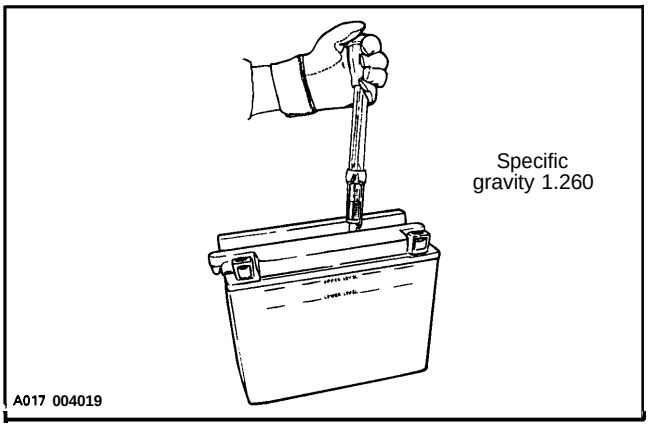

9. Let battery settles for one hour.

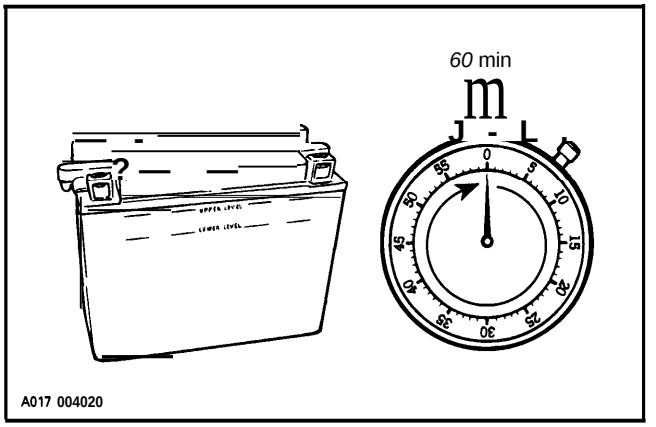

10. Allow gas bubbles to escape by lightly shake battery.

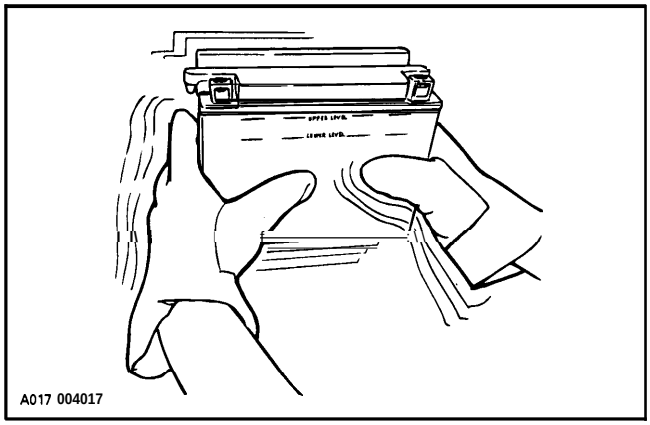

1. Readjust electrolyte level.

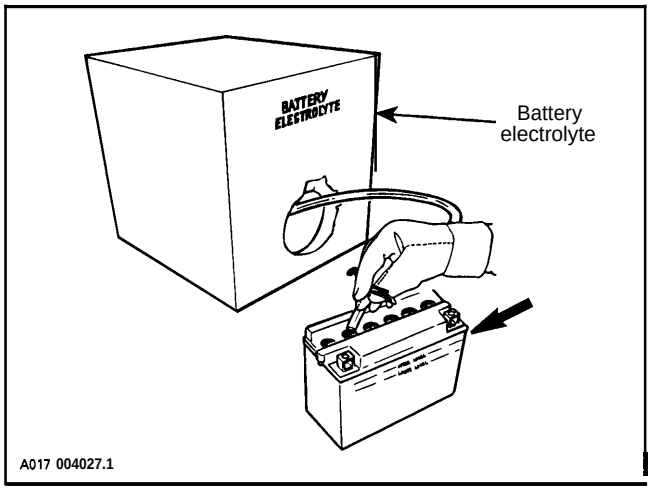

12. Reinstall caps and clean any electrolyte spillage using a solution of baking soda and water.

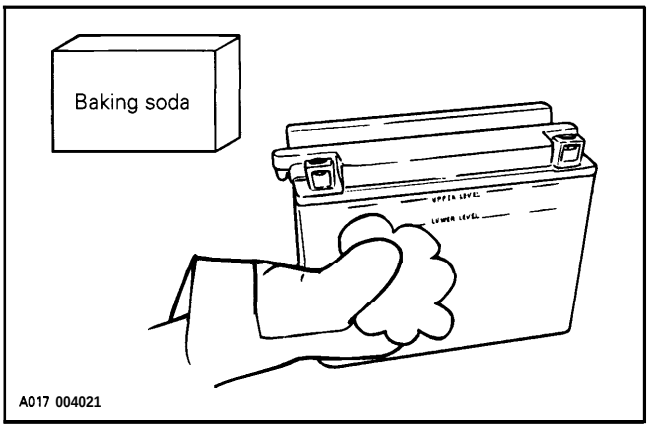

CAUTION : Do not allow cleaning solution to enter battery interior since it will destroy the electrolyte.

NOTE : It is recommended to verify the battery charge once a month. If necessary, fully charge battery.

SERVICING

Electrolyte Level

Since a battery has been activated (see above), add distilled water to top up electrolyte.

TIPS FOR CHARGING A USED BATTERY

CAUTION : Prior to charging the battery, always remove it from the vehicle to prevent electrolyte spillage.

For best results, battery should be charged when the electrolyte and the plates are at room temperature. A battery that is cold may not accept current for several hours after charging begun.

Do not charge frozen battery. If the battery charge is very low, the battery may freeze. If it is suspected to be frozen, keep it in a heated area for about two hours before charging.

WARNING : Do not place battery near open flame.

The time required to charge a battery will vary depending some factors such as :

— Battery temperature : The charging time is increased as the temperature goes down. The current accepted by a cold battery will remain low. As the battery warms up, it will accept a higher rate of charge.

— State of charge : Because the electrolyte is nearly pure water in a completely discharged battery, it cannot accept current as well as electrolyte. This is the reason the battery will not accept current when the charging cycle first begins. As the battery remains on the charger, the current from the charger causes the electrolytic acid content to rise which makes the electrolyte a better conductor and then, the battery will accept a higher charging rate.

—Type of charger: Battery chargers vary in the amount of voltage and current that they can supply. Therefore, the time required for the battery to begin accepting measurable current will also vary.

Charging a Very Flat or Completely Discharged Battery :

Unless this procedure is properly followed, a good battery may be needlessly replaced.

— Measure the voltage at the battery posts with an accurate voltmeter. If it is below 10 volts, the battery will accept current at very low rate, in term of milliamperes, because electrolyte is nearly pure water as explained above. It could be some time before the charging rate increases. Such low current flow may not be detectable on some charger ammeters and the battery will seem not to accept any charge.

— Only for this particular case, set the charger to a high rate.

O NOTE : Some chargers have a polarity protection feature which prevents charging unless the charger leads are connected to the correct battery terminals. A completely discharged battery may not have enough voltage to activate this circuitry, even though the leads are connected properly. This will make it appear that the battery will not accept a charge. Follow the charger manufacturer's instruction telling how to bypass or override this circuitry so that the charger will turn on and charge a low-voltage battery.

— Since the battery chargers vary in the amount of voltage and current they provide, the time required for the battery to accept measurable charger current might be up to approximatively 10 hours or more.

— If the charging current is not up to a measurable amount at the end of about 10 hours, the battery should be replaced.

— If the charging current is measurable before the end or at the end of about 10 hours, the battery is good and charging should be completed in the normal manner as specified in Activation of a new battery.

— It is recommended that any battery recharged by this procedure be load tested prior to returning it to service.

BATTERY CHARGING EQUIPMENT

The battery charger should have an adjustable charging rate. Variable adjustment is preferred, but a unit which can be adjusted in small increments is acceptable.

The battery charger must be equipped with an ammeter capable of accurately measuring current of less than one ampere.

If the present charger is not adjustable to the proper current values, a rheostat can be connected in series with the battery to provide adjustment. 12 Ohm, 50 watt rheostats, such as OH MITE -0314 or MALLORY 50K 12P, are available from electronic parts supply shops and they are suitable for use with most chargers if the peak current is to be held below 2 amps.

If you need an accurate ammeter, we recommend the use of : SHURITE -5202 (O to 3 amps) or -5203 (O to 5 amps) available from electronic pa& supply shops.

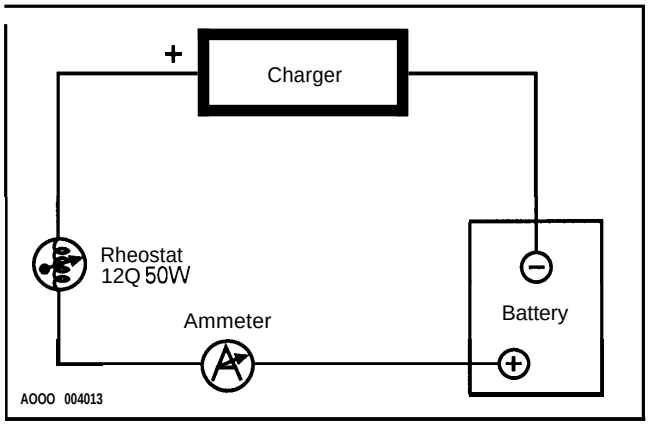

For a service application and a permanent installation, both ammeter and rheostat can be built into a small box adjacent to your charger.

▼ CAUTION : Adequate ventilation MUST be provided to cool the rheostat.

Charging 2 or More Batteries at a Time

Connect all positives together and use a charger with a capacities (rated) equal to : number of battery to be charged multiply by 2A.

For example : charging five batteries at a time requires a 10 A rated charger (5 x 2 A = 10 A).

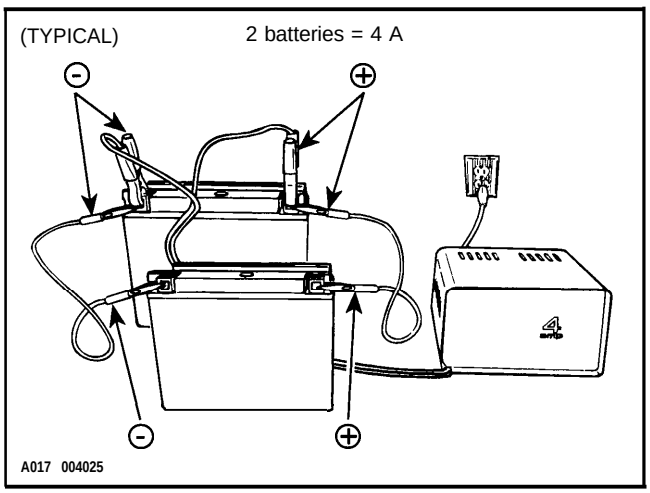

INSTALLATION OF BATTERY

Ensure vent tube is properly installed on battery elbow, then install protective boot over battery.

Bent rear strip by 15° to facilitate installation. That strip can also be taped on its hook portion so it stays in place.

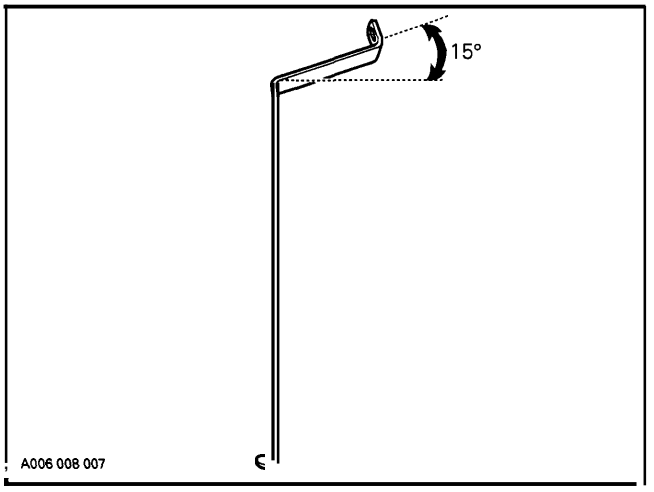

Close and fasten retaining strips.

Connect vent tube to vehicle fitting on front frame.

Route RED positive cable behing retaining strip and connect it to positive battery terminal.

Connect BLACK negative cable LAST.

CAUTION : Negative battery terminal should always be disconnected FIRST and reconnected LAST.

Apply silicone dielectric grease (P/ N 4137017 00) on battery posts and connectors.

Connect vent tube to vehicle fitting on front frame.

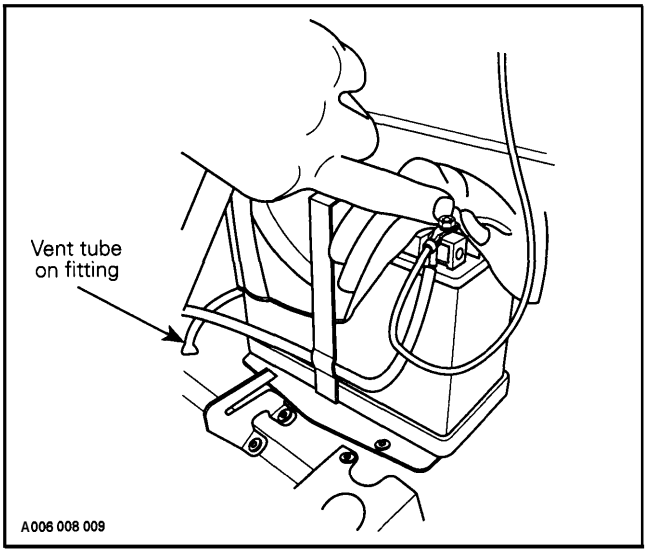

Ensure that vent tube is not kinked or blocked.

Reinstall air silencer.

Fasten spark plug cables to fan housing.

Reinstall throttle cable and primer hose attachment to air silencer. See removal illustration.

ELECTRIC STARTER

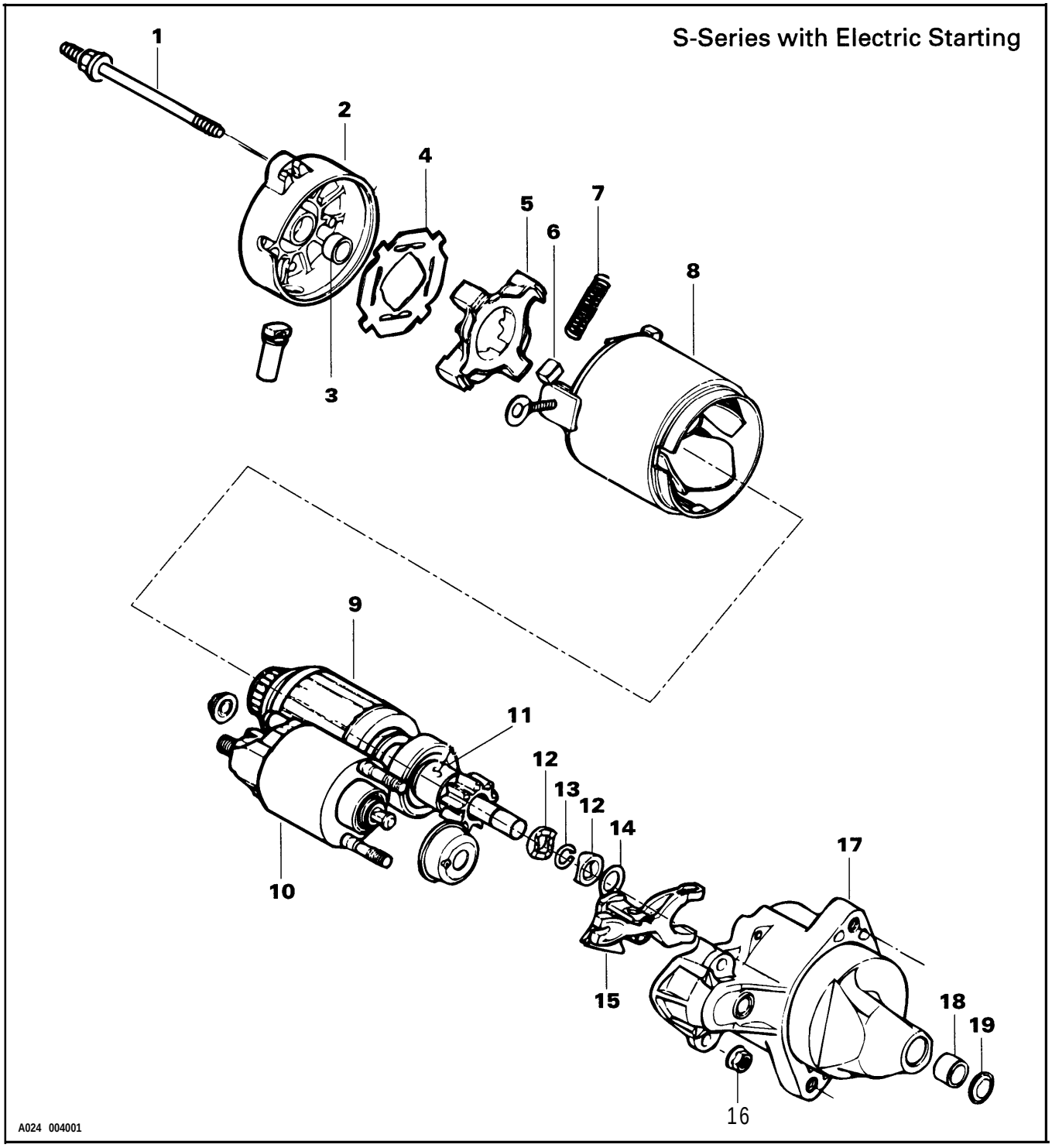

REMOVAL

— Disconnect BLACK ground cable from battery.

— Disconnect RED positive cable from battery.

◆ WARNING : Always disconnect ground cable first and connect last.

— Disconnect RED cable and RED/ GREEN wire from starter solenoid switch.

— Remove starter from engine.

DISASSEMBLY

Disconnect bare wire linking starter and solenoid.

10,15,16, Solenoid Switch, Drive Lever and Nut

Remove nuts then solenoid switch by lifting and pulling to disengage from drive lever.

1,2,8,17, Screw, End Frame, Yoke and Drive Housing

Unscrew starter longer screws then pull yoke with end frame to separate from drive housing.

9,14,15, Armature, Thrust Washer and Drive Lever

Pull armature with drive lever being careful not to lose thrust washer at shaft end.

4,5,7, Insulator, Brush Holder and Spring

Remove insulator then brush springs being careful not to lose them since they will be projected out.

Pull brush holder from yoke.

11,12,13, Overrunning Clutch, Circlip and Stop Collar

Insert blade of a small screwdriver between stop collars.

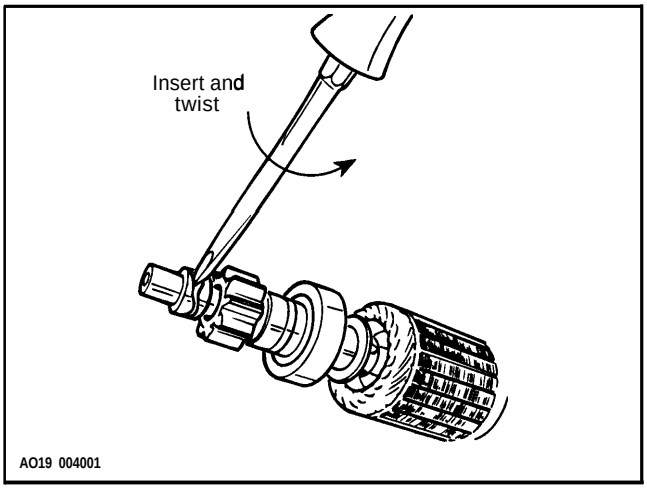

Twist screwdriver to separate stop collars thus giving access to circlip.

Remove outer collar, circlip then inner collar.

Remove overrunning clutch.

18,19, Bushing (drive housing) and Cover

Check the wear on bushing by measuring the amount of radial play between the armature shaft and the bushing.

The radial play should not exceed 0.20 mm (0.008 in). If greater, replace the bushing. To replace, press out the old one toward bushing cover and press in a new one with a bushing pusher. The correct size of the bushing pusher to use is given on next illustration.

▼ CAUTION : Support drive housing adequately to prevent damage when pressing bushing.

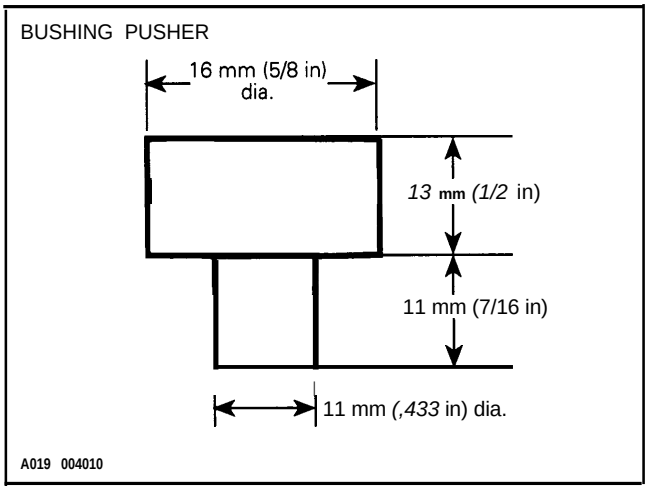

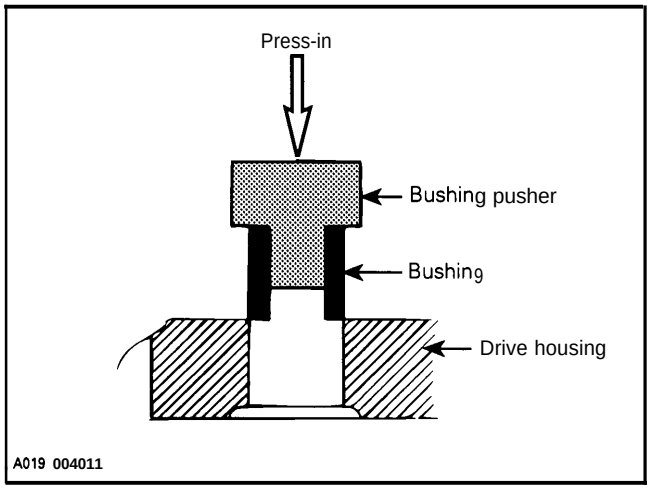

Install bushing cover then, using a punch, stake bushing cover in place.

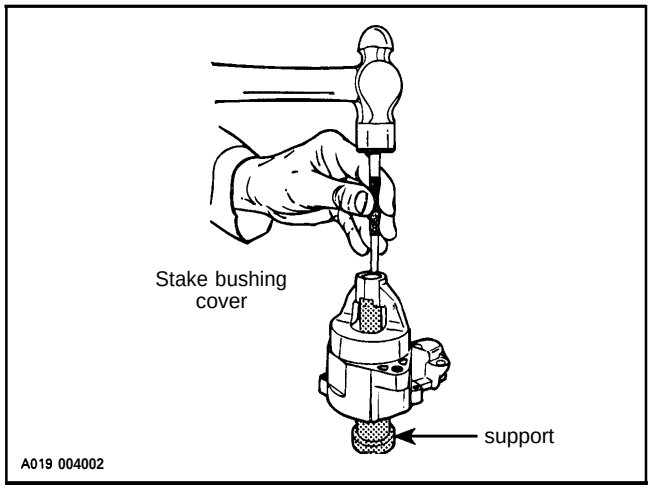

3, Bushing (end frame)

Check the wear on bushing by measuring the amount of radial play between the armature shaft and the bushing.

The radial play should not exceed 0.20 mm (.008 in). If greater, replace bushing as follows :

Using a 12 mm tap, cut threads into bushing so that the tap contacts the end frame. Continue to rotate tap until the bushing comes free.

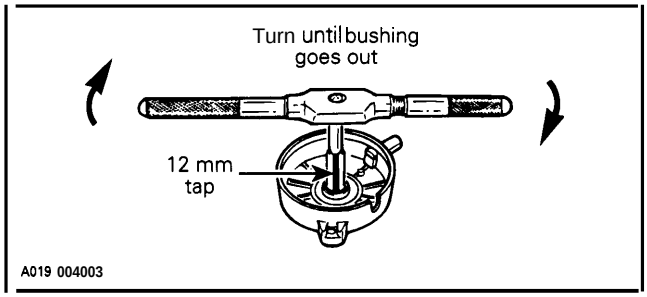

To install new bushing, use the same bushing pusher as for drive housing bushing installation.

6, Brush

To replace, proceed as follows :

Cut brush wire close to connector at the welded portion.

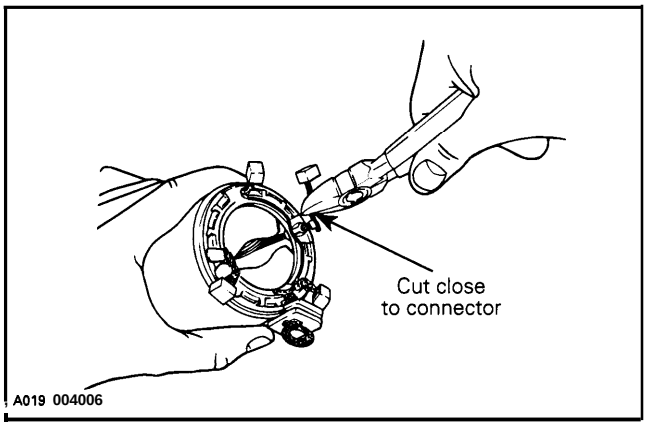

Remove burrs with a file on the remaining welded portion.

CAUTION : Be careful not to damage plastic portion of yoke.

Place spare brush plate edge against yoke connector edge (welded portion).

Crimp plate over yoke connector with a pair of pliers.

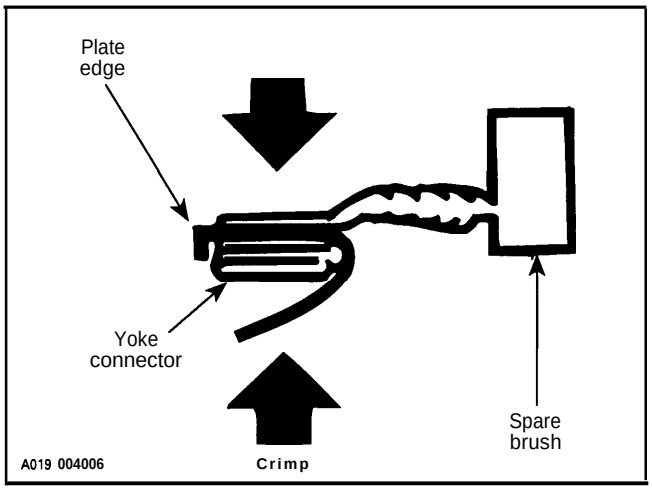

Solder the crimped portion.

CAUTION : Do not overheat and quickly perform soldering to prevent solder from flowing to the brush through the wire. Preferably use a heat sink.

CLEANING AND INSPECTION

Refer to the end of this sub-section.

ASSEMBLY

Prior to assembling, coat sliding surfaces and moving parts on armature shaft splines, overrunning clutch, solenoid switch plunger, drive lever and bushings with G.E. Versilube G 321 (P/N 4137040 00) lubricant.

Proceed as follows for assembling.

Secure drive housing in a vise.

CAUTION : Do not overtighten since housing might be damaged.

12,13, Stop Collar and Circlip

Install overrunning clutch onto armature shaft. Insert inner collar onto shaft. Install a new circlip.

CAUTION : Always install a new circlip when servicing.

Insert outer collar being careful to match protrusions with notches of collars,

Using a pair of pliers on each side of stop collars, squeeze evenly until collars sit over circlip.

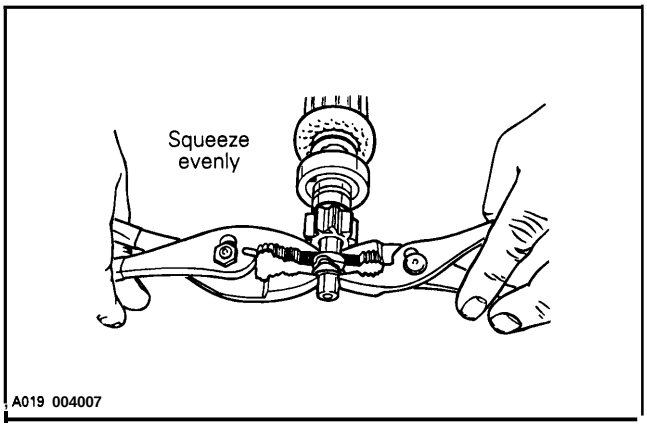

12,14,15,17, Stop Collar, Thrust Washer, Drive Lever and Drive Housing

Install thrust washer against outer stop collar. Place drive lever onto overrunning clutch then insert into drive housing.

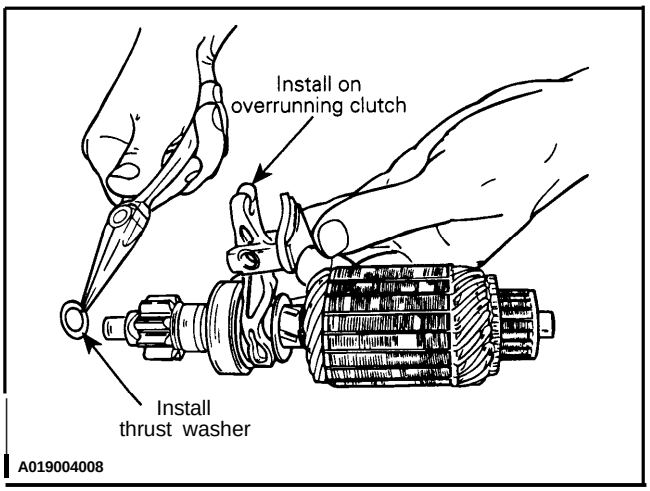

5,6,7,8,9, Brush Holder, Brush, Spring, Yoke and Armature

Slide yoke over armature.

Install brush holder then brushes in their housings. Insert springs as follows : place one end of spring against brush, compress, then push the other end of spring onto its housing. Repeat for remaining springs.

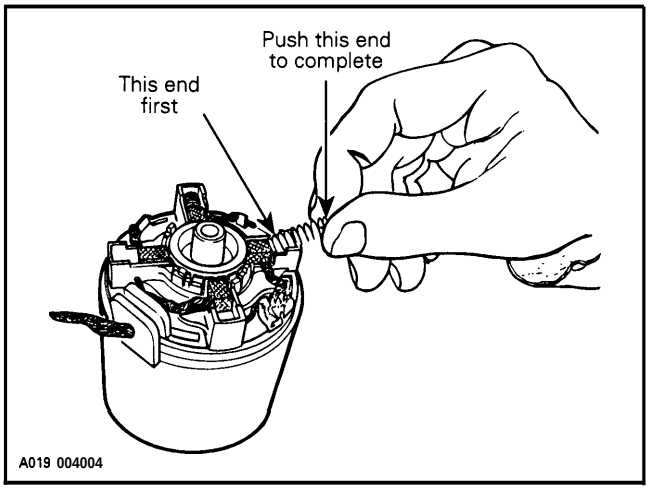

1,2,4, Screw, End Frame and Insulator

Secure insulator over brushes and springs. Properly install end frame and tighten screws.

10,15,17, Solenoid, Drive Lever and Drive Housing

Insert solenoid plunger inside of drive lever fork and secure to drive housing.

Connect starter bare wire to solenoid.

NOTE : Connect this wire on the shorter solenoid stud.

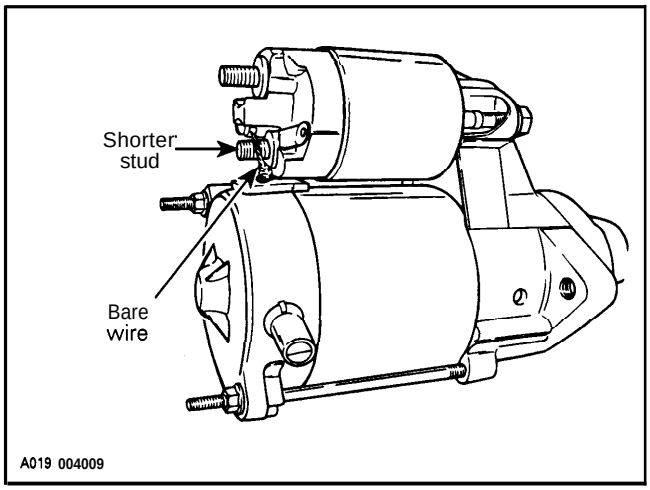

INSTALLATION

Make sure that starter and engine mating surfaces are free of grime. Serious trouble may arise if starter is not properly aligned.

Install starter.

NOTE : Check proper engaging depth of starter pinion teeth to ring gear teeth (see illustration). Install hardened washers (P/ N 5030079 00) between engine and starter support and / or starter bracket accordingly.

CAUTION : All starter and starter bracket fasteners must be secured with Loctite 271 (P/N 4137074 00).

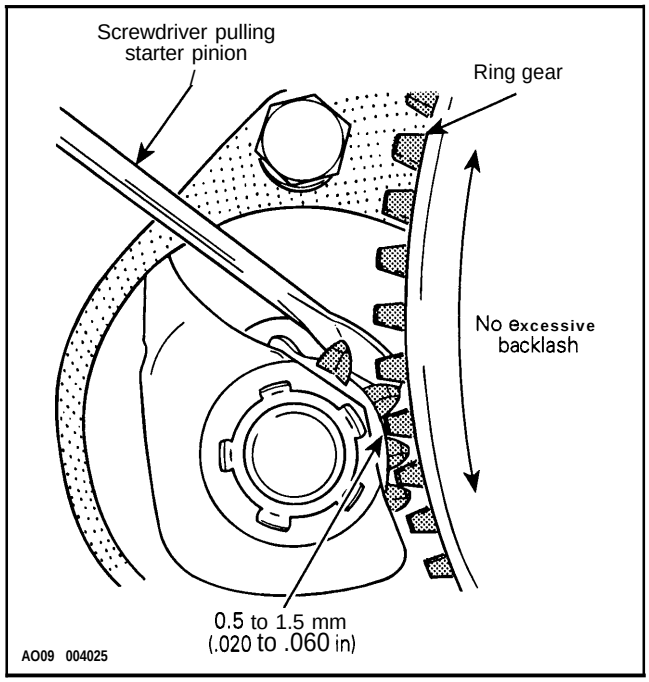

Connect the RED battery cable and the red wire to the large terminal of the solenoid. Connect RED/ GREEN wire to small terminal of solenoid.

Connect BLACK cable to battery.

WARNING : Always disconnect ground cable first and connect last.

CLEANING AND INSPECTION

CLEANING

CAUTION : Armature starter yoke ass'y and drive unit assembly must not be immersed in cleaning solvent.

Clean brushes and holder with a clean cloth soaked in solvent. Brushes must be dried thoroughly with a clean cloth.

Blow brush holder clean using compressed air,

WARNING : Always wear safety goggles when using compressed air.

Remove dirt, oil or grease from commutator using a clean cloth soaked in suitable solvent. Dry well using a clean, dry cloth.

Clean engine starter gear teeth and drive unit (clutch).

NOTE : Bushings must not be cleaned with grease dissolving agents.

Immerse all metal components in cleaning solution. Dry using a clean, dry cloth.

INSPECTION

Armature

NOTE : An ohmmeter may be used for the following testing procedures, except for the one concerning the shorted windings in the armature.

Check the commutator for roughness, burnt or scored surface. If necessary, turn the commutator on a lathe, enough to remove grime only.

Check the commutator for mica depth. If the depth is less than 0.20 mm (0.008 in), undercut the mica. Be sure that no burrs are left and no copper dust remains between the segments after the undercutting operation is completed.

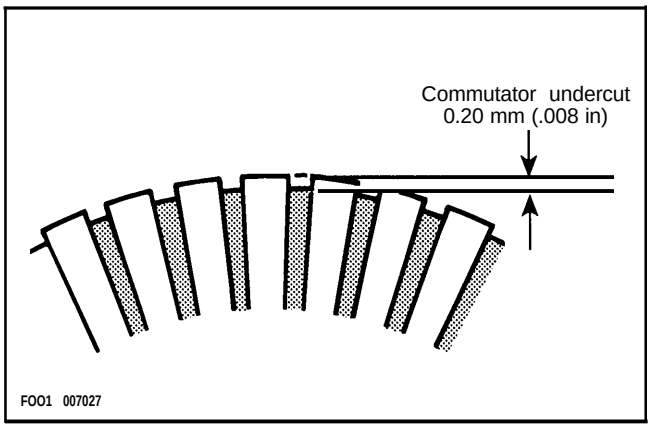

Check the commutator out-of-round condition with V Blocks and an indicator. If the commutator out-of-round is more than 0.40 mm (.016 in), the commutator should be turned on a lathe.

Check commutator outer diameter. If less than specified value, replace.

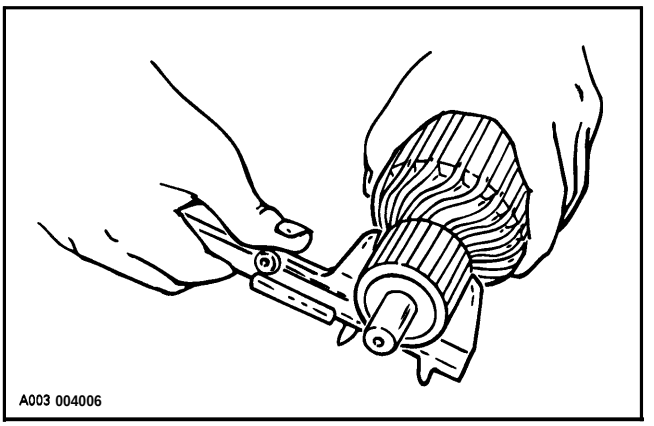

MODEL	WEAR LIMIT
S- Series	27 mm (1 .063 in)

Test for Ground Circuit in the Armature :

Use growler test probes. Check between armature core and the commutator bars. If growler lamp turns on, bars are grounded.

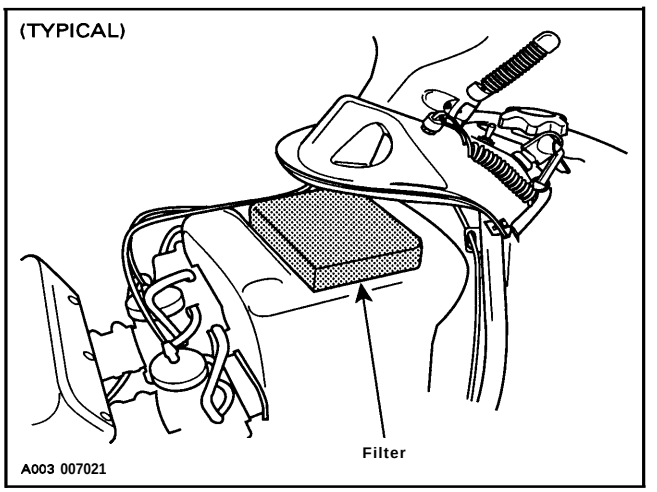

Test Armature for Shorted Winding :

When the armature is rotated in the growler with a steel strip (hack-saw blade) held above it, the strip will vibrate over that area of the armature which has short circuited.

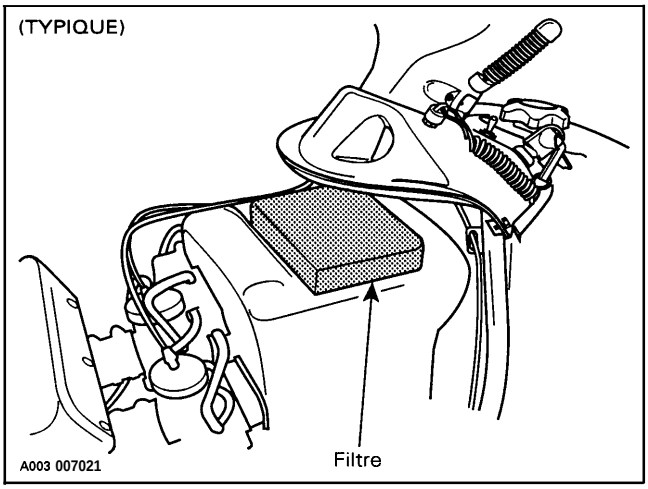

Test the Armature for Open Circuit:

Use growler test probes. Place one test probe on a commutator bar and the other test probe on the neighboring bar. Repeat this operation for all bars, moving one test probe at a time. If the growler lamp does not turn on, the armature circuit between these two bars is opened. The armature should be replaced or repaired ; open circuits most often occur at the commutator riser where coils are soldered. (Burnt commutator bars are usually an indication of an open-circuited armature coil.)

Field Windings and Brushes

Test the Field Winding for Open Circuit

Use growler test probes. Place one test probe on the negative brush and the other test probe on the yoke. If growler lamp does not turn on, the field winding has an open-circuit. The yoke has to be repaired or replaced.

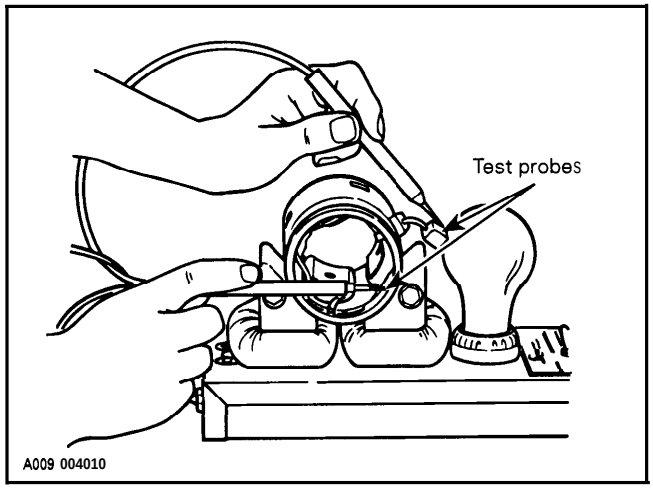

Check the dynamic brake winding for open circuit by placing one test probe on the positive brush and the other probe on the negative brush.

If growler lamp does not turn on, the winding circuit is open-circuit and the yoke has to be repaired or replaced.

Brush Holder

Check the brush holder for insulation using growler test probes. Place one test probe on the insulated brush holder and the other test probe on the brush holder plate. If the growler lamp turns on, the brush holder has to be repaired or replaced.

Brush Length

Measure brush length. If less than the specified value, replace them,

MODEL	LENGTH	
	New	Wear limit
S-Series	10 mm (.400 in)	6 mm (.236 in)

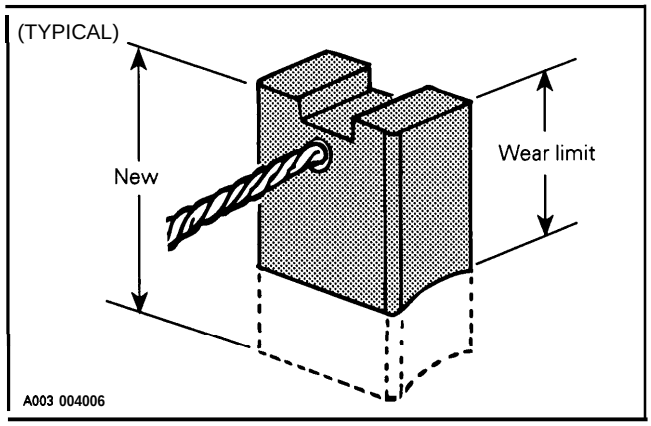

Overrunning Clutch

The pinion of the overrunning clutch should turn smoothly in the clockwise direction, and should not slip in a counterclockwise direction. If defective, replace.

Check the pinion teeth for wear and damage. If defective, replace.

SOLENOID SWITCH

Inspect connections and clean as necessary. Solenoid switch condition can be checked with an ohmmeter. Install test probes on large connectors of solenoid when it is activated (+ on RED / GREEN wire and – on solenoid body).

IMPORTANT: No current must be present on large cables when using ohmmeter, otherwise meter could be damaged.

TESTING PROCEDURE

GENERAL

Three types of ignition systems are found on ROTAX engines covered by this manual ; one breaker-point ignition system and 2 Capacitor Discharge Ignition (CDI) systems. The following chart gives the engine types with their implemented system.

ENGINE TYPE	IGNITION SYSTEM	CHARGING SYSTEM OUTPUT
247	BOSCH (Breaker-point)	75/ 23
277	① NIPPONDENSO (CDI) SINGLE COIL	160
377, 443 and 503	② DUCATI (ADC)	240

CDI System Identification

Nippondenso

The NIPPONDENSO CDI system has a separate ignition coil which is mounted on fan housing.

Ignition module is connected to a single ignition generator coil via a 2-wire connector (BLACK and BLACK/RED wires).

277 Engine

Ignition module stamped P / N : 070000-1960

Ignition coil stamped P / N : 129700-2480

Flywheel stamped P / N : 032700-4380

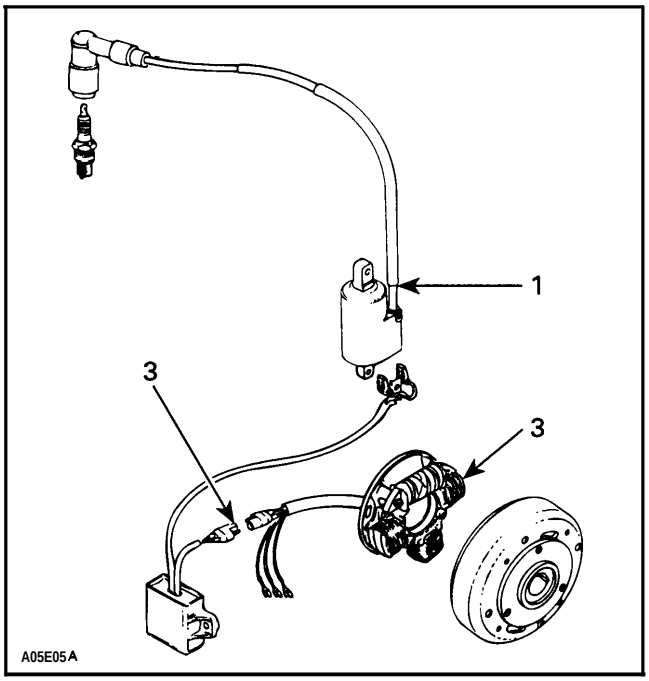

① ***NIPPONDENSO CDI*** *SINGLE COIL SYSTEM*

1. Seperate ignition coil mounted on fan housing
2. Two-wire connector (BLACK and BLACK/RED wires)
3. Single ignition generator coil

Ducati

The DUCATI CD I system has a combined ignition module / ignition coil which are mounted on air silencer, below carburetor(s).

Ignition module is connected to the ignition generator coils via a 2-wire connector (G REEN and WHITE wires).

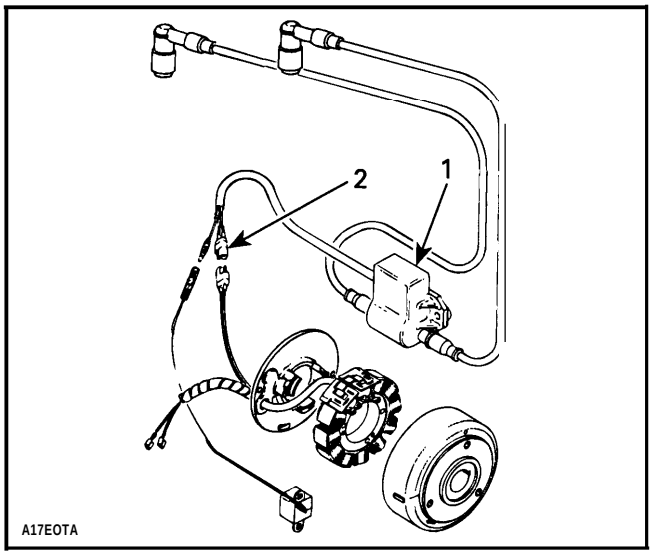

② *DUCATI CDI SYSTEM*

1. Combined ignition module / ignition coil mounted on air silencer below carburetor(s)
2. Two-wire connector (GREENI WHITE wires)

Ignition System Testing Sequence

When dealing with ignition problems, the following items should be verified in this order.

Nippondenso and Bosch

1. Spark occurrence / spark plug condition.
2. Electrical connections.
3. Engine stop / tether cord switches.
4. Ignition coil output.
5. Ignition module output (not applicable to 247 engine type).
6. Magneto output (ignition generator coil).

CAUTION : Whenever replacing a component in ignition system, check ignition timing.

Ducati

1. Spark occurrence / spark plug condition.
2. Electrical connections.
3. Engine stop / tether cord switches.
4. Trigger coil output.
5. Magneto output (ignition generator coil).
6. Ignition coil output.
7. Ignition module.

All Systems

The first 2 items can be checked with known automotive equipment and other items as follows.

Engine Stop / Tether Cut-Out Switches Verification

Engine Stop Switch

Unplug stop switch connector from main harness then using an ohmmeter, connect test probes to BLACK/ YELLOW and BLACK wires.

Measure resistance, it must be an open circuit in its operating position and close to O ohm when depressed.

Tether Cut-Out Switch

Unplug tether cut-out switch connector from main harness then using an ohmmeter, connect test probes to BLACK / YELLOW and BLACK wires.

Measure resistance, it must be an open circuit when cap is over switch and close to O ohm when removed.

Magneto System Verification

System verification can be performed using the Bombardier ignition tester (P/ N 4190033 00), a digital ohmmeter or by substituting parts.

USE OF BOMBARDIER IGNITION TESTER

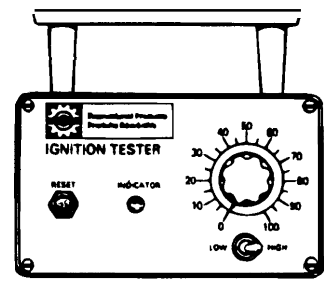

NOTE : For more information about operating and maintenance of the tester, refer to its instruction manual.

Test Condition

All tests are performed on the vehicle at cranking speed.

Vigorous manual cranking against compression causes the flywheel to snap over, raising the output higher than by cranking without compression, therefore, do not remove spark plug.

Test values listed are taken against compression.

Always crank vigorously as in actual starting.

Always proceed in the following order :

1. Connect tester P and N clip leads as illustrated for each specific test.
2. Follow test procedure sequence.
3. After every test that lights the indicator lamp, reset the indicator circuit by depressing the reset button.

Analysis of Test Results

Indicator Lamp Lights at Specific Setting

Output is as specified. Test results should repeat 3 times. If readings do not repeat, output is erratic and cause should be investigated (loose connections or components etc.).

Indicator Lamp Lights at Lower Setting

This indicates that the output is less than that designed to operate in a satisfactory manner. However, before coming to the conclusion of a faulty condition, be certain that correct engine cranking conditions were met before condemning the tested part.

Indicator Lamp Does Not Light

One component is defective. Proceed as instructed to find defective component.

Intermittent Ignition Problems

In dealing with intermittent problems there is no easy diagnosis. For example, problems that occur only at normal engine operating temperature have to be tested under similar conditions.

In most cases of temperature and/or vibration failure, only parts replacement can solve the problem as most of these failures return to normal when engine is not running.

Multiple Problems

There is always the possibility of more than one faulty part. If after a component has been replaced, the problem still persists, carefully repeat the complete test procedure to find the other faulty part.

BOSCH BREAKER-POINT IGNITION SYSTEM TESTING
(Applicable to 247 Engine Type)

NOTE : Ensure ignition cut-out switches are properly working and they are in the ON position prior to performing the following tests.

MAGNETO OUTPUT
(Ignition Generator Coil)

1) Disconnect BLUE and BLACK wires terminal no. 15 of ignition coil.

2) Connect tester wires then set switch and dial as follows :

Tester wires	Component wires	Tester switch position	Tester dial position
N	Engine ground	HIGH	75
P	BLACK and BLUE wires of magneto harness		

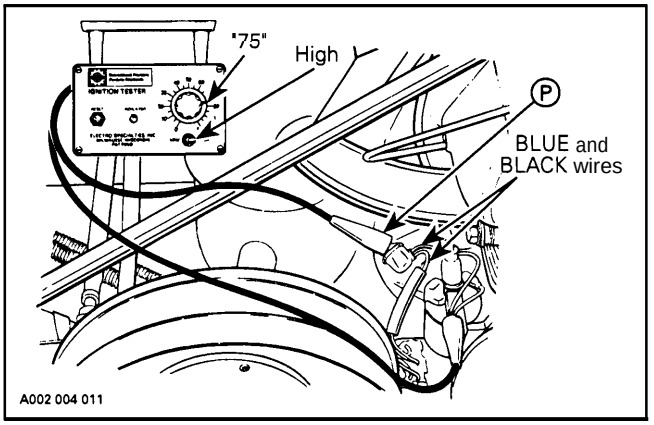

3) Crank engine and observe indicator.

Results :

a) Indicator lamp lights : Generator coil output is up to specifications. Repeat test at least three times to verify reading.

b) Indicator lamp does not light: Generator coil output is below specifications. This could be caused by a faulty generator coil or breaker points. Check breaker points condition and adjustment, and correct as necessary. Repeat test. If lamp still does not light, the generator coil is defective and should be replaced.

LIGHTING GENERATOR COIL OUTPUT

NOTE : The lighting generator coil is not part of the ignition system. It is a separate system that supplies current to the lighting system and AC-powered devices. However, it can be tested with the same tester.

NOTE : There are 2 independent lighting generator coils ; main (large) coil wires are YELLOW and YELLOW / BLACK while auxiliary lighting generator coil (small) wires are GREEN and GREEN / BLACK.

1) Disconnect wiring harness junction block at engine.

2) Connect tester leads as illustrated using 2 harness adaptors then set switch and dial as follows :

Tester wires	Component wires	Tester switch position	Tester dial position
N	YELLOW / BLACK wire of magneto harness	LOW	85
P	YELLOW wire of magneto harness		

Tester wires	Component wires	Tester switch position	Tester dial position
N	GREEN / BLACK wire of magneto harness	LOW	85
P	GREEN wire of magneto harness		

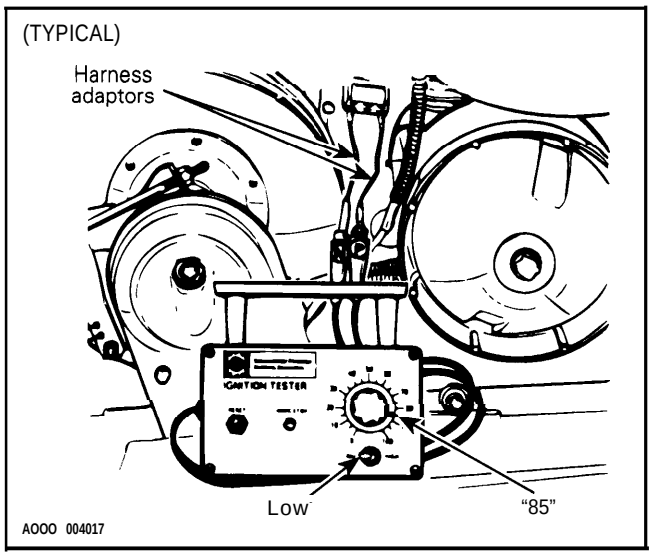

3) Crank engine and observe indicator.

Results :

a) Indicator lamp lights: Lighting generator coil output is up to specifications Repeat test at least 3 times to verify reading.

b) Indicator lamp does not ight : Lighting generator coil is faulty.

RESISTANCE MEASUREMENTS

As an alternate method, magneto system components can be checked with a digital ohmmeter.

NOTE : All resistance measurements must be performed with parts at room temperature (approx. 20°C (68 °F)). Temperature greatly affects resistance measurements.

Disconnect connector at ignition coil and magneto junction. Measure resistance between each terminal. Refer to the following table for values and wire colors.

NOTE : An ignition coil with good resistance measurement can still be faulty. Voltage leak can occur at high voltage level which is not detectable with an ohmmeter.

	PART NAME	WIRE COLOR*	RESISTANCE OHM	REMARKS
MAGNETO	Ignition generator coil	BL with BR	3-3.7	No display change means open circuit.
	Large lighting generator coil	YL / BK with YL	0.38-0.58	
	Small lighting generator coil	GN / BK with GN	1.85-2.35	
IGNITION COIL	Primary winding	BL no. 14 with BL no. 15	1.8-2.00	Display showing zero (0) means short circuit.
	Secondary winding (spark plug cap removed)	BL no. 15 with high tension wire	7.6- 11.4 K (7600 - 11400)	
SPARK PLUG CAP	Spark plug cap	—	4.5- 5.5 K	

*

COLOR CODE	
BK - BLACK	GN - GREEN
WH - WHITE	GY - GRAY
RD - RED	VI - VIOLET
BL - BLUE	OR - ORANGE
YL - YELLOW	BR - BROWN

NIPPONDENSO **CDI** SYSTEM TESTING

(Applicable to 277 Engine Type)

NOTE : Ensure ignition cut-out switches are properly working and they are in the ON position prior to performing the following tests.

WARNING : To prevent powerful electric shocks while cranking engine, do not touch neither electronic ignition components (ignition coil, high tension wire, wire harness, etc.) nor tester leads.

IGNITION COIL OUTPUT

A paper clip of approximately 20 mm (3/4 in) will be used as a test adapter for the following test.

1) Clip the test adapter around spark plug cable close to the spark plug.

2) Connect tester wires then set switch and dial as follows :

Tester wires	Component wires	Tester switch position	Tester dial position
N	Tester adapter (paper clip) on spark plug cable	LOW	45
P	Engine ground		

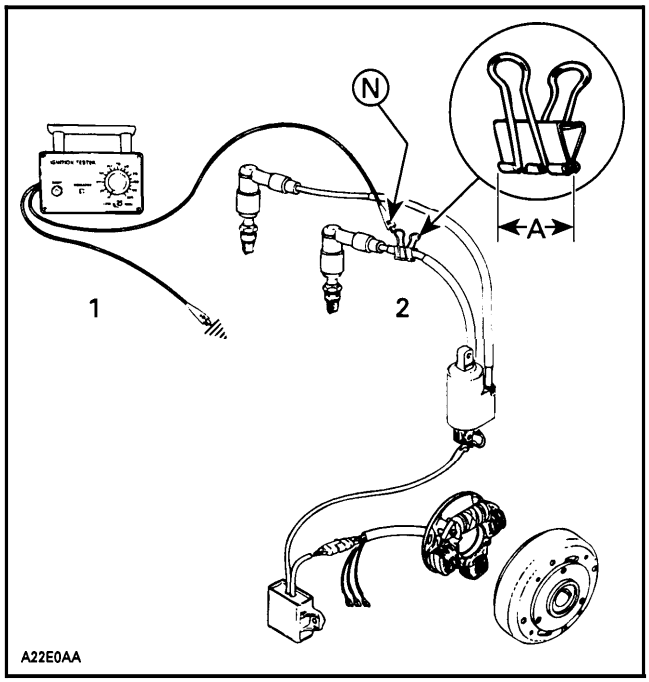

TYPICAL
1. Engine ground
2. MAG side
A. 20 mm (3/4 in)

3) Crank engine and observe indicator.

NOTE : If engine starts, allow it to idle while observing indicator. Then, shut engine off.

4) Push reset button and repeat step 3 twice.

Results :

a) Indicator lamp lights : Ignition system is OK.

b) Indicator lamp does not light on one or both cylinder: Proceed to following tests.

IGNITION MODULE OUTPUT

1) Disconnect both connectors at ignition coil.

At installation, secure with new locking ties.

2) Connect an ignition coil (known as being in good condition) to the spark plug.

3) Connect CDI module to replacement ignition coil paying attention to connect the WHITE/ BLUE wire to the positive (+) terminal and the BLACK wire to the negative (–) terminal.

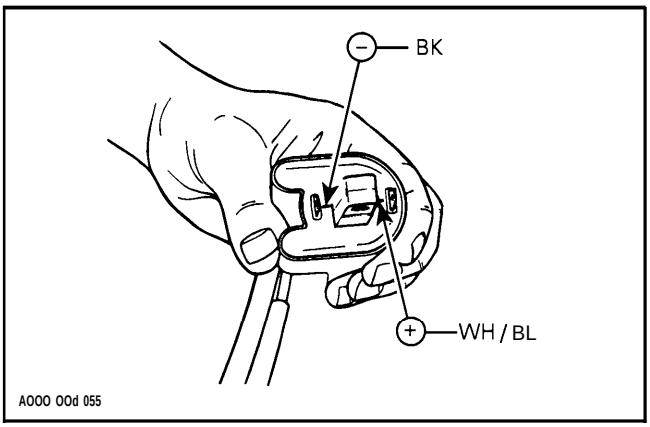

4) Slip plastic protectors out of coil terminals,

5) Connect tester wires to coil terminals then set switch and dial as follows :

NOTE : If necessary use jumper wires from coil terminals to tester wires.

Tester wires	Component wires	Tester switch position	Tester dial position
N	WHITE / BLUE wire (+) of ignition coil	HIGH	55
P	BLACK wire (–) of ignition coil		

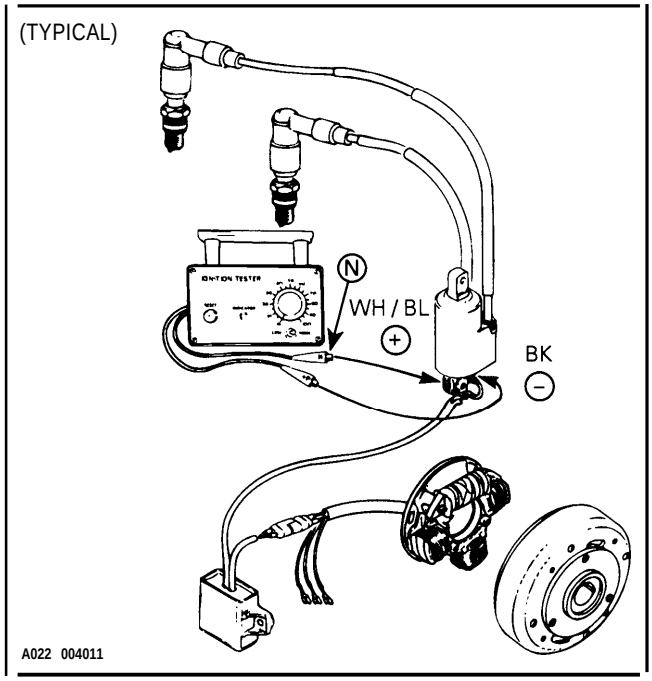

6) Crank engine and observe indicator.

7) Push reset button and repeat step 6 twice.

Results :

a) Indicator lamp lights : Ignition module output is up to specifications. The problem is a faulty ignition coil.

b) Indicator lamp does not light: Proceed to following test. If magneto output tests good, the problem is a faulty ignition module.

MAGNETO OUTPUT

(Ignition Generator Coil)

1) Disconnect the 2-wire connector between ignition module and magneto harness.

At installation, secure with new locking ties.

2) Connect tester wires then set switch and dial as follows :

Tester wires	Component wires	Tester switch position	Tester dial position
N	BLACK / RED wire of magneto harness	LOW	85
P	BLACK wire of magneto harness		

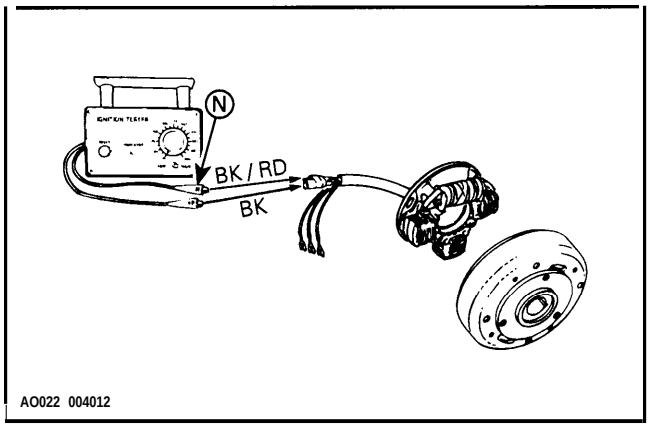

3) Crank engine and observe indicator.

4) Push reset button and repeat step 3 twice.

Results :

a) Indicator lamp lights : Ignition generator coil output is up to specifications.

b) Indicator lamp does not light : The problem is a faulty ignition generator coil.

LIGHTING GENERATOR COIL OUTPUT

NOTE : The lighting generator coil is not part of the ignition system. It is a separate system that supplies current to the lighting system and AC-powered devices. However it can be tested with the same tester.

1) Disconnect wiring harness junction block at **engine (the** one with YELLOW and YELLOW wires).

2) Connect tester wires then set switch and dial as follows :

Tester wires	Component wires	Tester switch position	Tester dial position
N	YELLOW wire of magneto harness	LOW	70
P	YELLOW wire of magneto harness		

(TYPICAL)

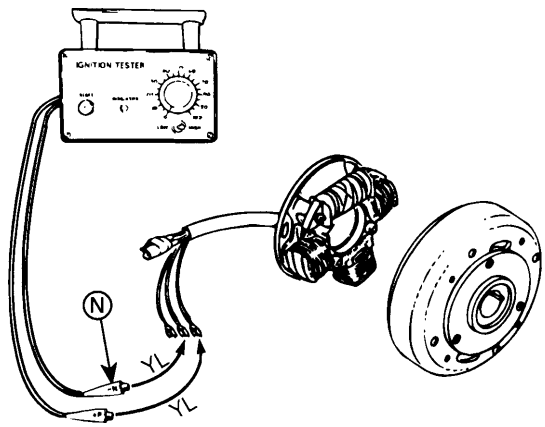

A022 004013

3) Crank engine and observe indicator,

4) Push reset button and repeat step 3 twice.

Results :

a) Indicator lamp lights : Lighting generator coi output is up to specifications.

b) Indicator lamp does not light: Lighting generator coil is faulty.

SUMMARY TABLE

Test to perform	Tester wires	Component wires	Switch	Dial
Ignition coil output	N	Test adapter on MAG spark plug cable	LOW	45
	P	Engine ground		
Ignition module output	N	WHITE / BLUE wire (+) of ignition coil	HIGH	55
	P	BLACK wire (–) of ignition coil		
Magneto output (ignition generator coil)	N	BLACK / RED wire of magneto harness	LOW	85
	P	BLACK wire of magneto harness		
Lighting generator coil output	N	YELLOW wire of magneto harness	LOW	**70**
	P	YELLOW wire of magneto harness		

RESISTANCE MEASUREMENTS

As an alternate method, magneto system components can be checked with a digital ohmmeter.

NOTE : All resistance measurements must be performed with parts at **room temperature** (approx. 20°C (68°F)). Temperature greatly affects resistance measurements.

Disconnect connectors at ignition coil and magneto junction. Measure resistance between each terminal. Refer to the following table for values and wire colors.

NOTE : An ignition coil with good resistance measurement can still be faulty. Voltage leak can occur at high voltage level which is not detectable with an ohmmeter.

	PART NAME	WIRE COLOR*	RESISTANCE OHM	REMARKS
MAGNETO	Ignition generator coil	BK with BK/ RD	40-76	No display change means open circuit.
	Lighting generator coil	YL with YL	0.05 -0.6	
IGNITION COIL	Primary winding	BK with WH / BL	0.11-0.21 (applicable to 277 engine type only)	
			0.34-0,62 (applicable to 503 Alpine II engine only)	
	Secondary winding (spark plug cap removed)	BR with high tension wire (applicable to 277 engine type only)	4.9- 7.5 K (4900 - 7500)	
		End of each high tension wire	9-15 K (9000 - 1 5000)	Display showing zero (0) means short circuit.
	Insulation	WH / BL with core	∞ Ω	
		WH / BL with high tension wire		
SPARK PLUG CAP	Spark plug cap		4.5- 5.5 K	

∞ : Infinity (extremely large number)

*

COLOR CODE	
BK - BLACK	GN - GREEN
WH - WHITE	GR - GRAY
RD - RED	VI - VIOLET
BL - BLUE	OR - ORANGE
YL - YELLOW	BR - BROWN

DUCATI CDI SYSTEM TESTING

(Applicable to 377,443 and 503 Engine Types)

0 NOTE : Ensure ignition cut-out switches are properly working and they are in the ON position prior to performing the following tests.

◆ WARNING : To prevent powerful electric shocks while cranking engine, do not touch neither electronic ignition components (ignition coil, high tension wire, wire harness, etc.) nor tester leads.

TRIGGER COIL OUTPUT

1) Disconnect the connector of RED wire at ignition module.

2) Connect tester wires then set switch and dial as follows :

Tester wires	Component wires	Tester switch position	Tester dial position
N	RED wire of trigger coil	LOW	45
P	Engine ground		

3) Crank engine and observe indicator,

4) Push reset button and repeat step 3 twice.

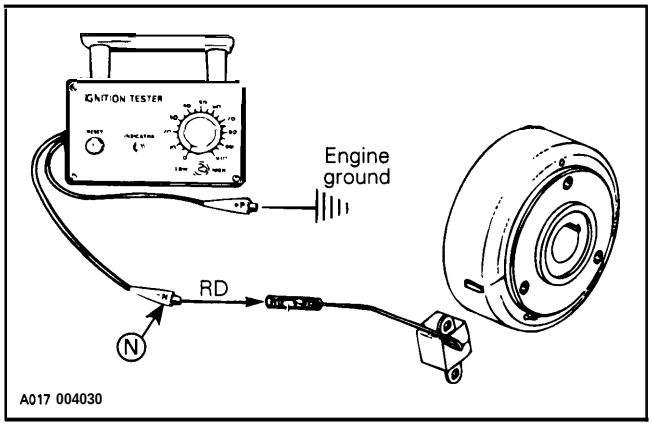

Results :

a) indicator lamp lights : Trigger coil output is up to specifications.

b) Indicator lamp does not light : The problem is a faulty trigger coil or bad grounding.

MAGNETO OUTPUT

(Ignition Generator Coil)

1) Disconnect the 2-wire connector between ignition module and magneto harness.

2) Connect tester wires then set switch and dial as follows :

Tester wires	Component wires	Tester switch position	Tester dial position
N	GREEN wire of magneto harness	LOW	80
P	WHITE wire of magneto harness		

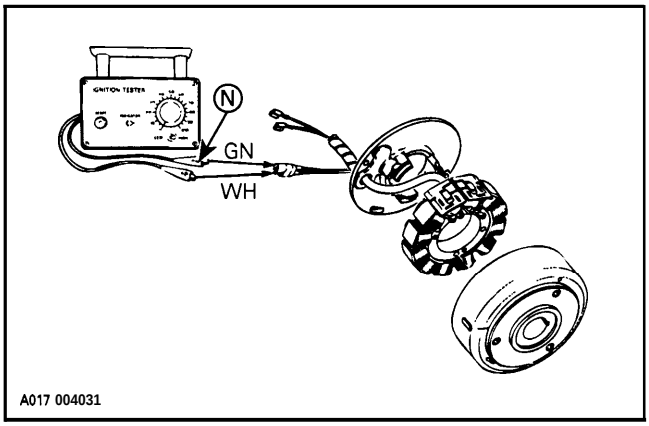

3) Crank engine and observe indicator.

4) Push reset button and repeat step 3 twice.

Results :

a) Indicator lamp lights : Ignition generator coil output up to specifications.

b) Indicator lamp does not light : The problem is a faulty ignition generator.

IGNITION COIL OUTPUT

A paper clip of approximately 20 mm (3/4 in) will be used as a test adapter for the following test.

1) Clip the test adapter around spark plug cable close to MAG side spark plug.

2) Connect tester wires then set switch and dial as follows :

Tester wires	Component wires	Tester switch position	Tester dial position
N	Test adapter (paper clip) on spark plug cable	LOW	70
P	Engine ground		

NOTE : Different reading occurs if N tester wire is connected to PTO side spark plug cable.

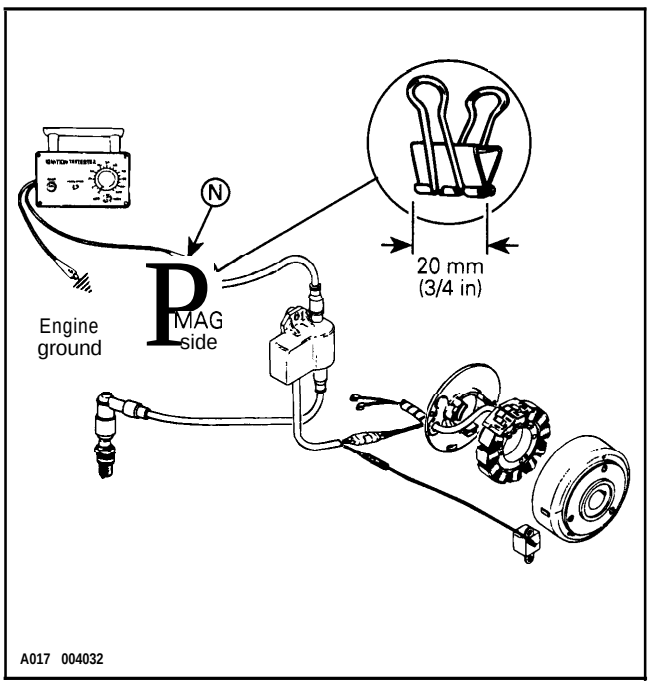

3) Crank engine and observe indicator.

NOTE : If engine starts, allow it to idle while observing indicator, Then, shut engine off.

4) Push reset button and repeat step 3 twice.

Results :

a) Indicator lamp lights : Ignition system is OK.

b) Indicator lamp does not light on one or both cylinder : The problem is a faulty ignition coil/ module.

IGNITION MODULE

Ignition module can not be tested with the Bombardier ignition tester. When other components test good, the module is probably faulty. Try a new module.

LIGHTING GENERATOR COIL OUTPUT

NOTE : The lighting generator coil is not part of the ignition system. It is a separate system that supplies current to the lighting system and AC-powered devices, However it can be tested with the same tester.

1) Disconnect wiring harness junction block at engine (the one with YELLOW and YELLOW **wires).**

2) Connect tester wires then set switch and dial as follows :

Tester wires	Component wires	Tester switch position	Tester dial position
N	YELLOW wire of magneto harness	LOW	80
P	YELOW wire of magneto harness		

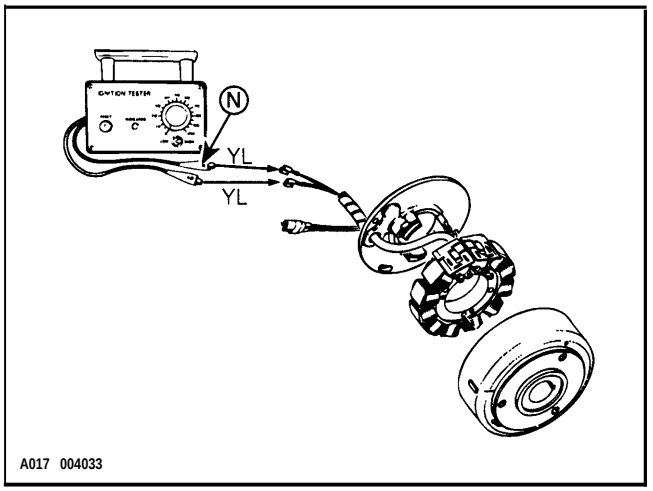

3) Crank engine and observe indicator.

4) Push reset button and repeat step 3 twice.

Results :

a) Indicator lamp lights : Lighting generator coil output is up to specifications.

b) Indicator lamp does not light: Lighting generator coil is faulty.

SUMMARY TABLE

Test to perform	Tester wires	Component wires	Switch	Dial
Trigger coil output	N	RED wire of trigger coil	LOW	45
	P	Engine ground		
Magneto output (ignition generator coil)	N	GREEN wire of magneto harness	LOW	80
	P	WHITE wire of magneto harness		
Ignition coil output	N	Test adapter on MAG spark plug cable	LOW	70
	P	Engine ground		
Lighting generator coil output	N	YELLOW wire of magneto harness	LOW	80
	P	YELLOW wire of magneto harness		

RESISTANCE MEASUREMENTS

As an alternate method, magneto system components can be checked with a digital ohmmeter.

NOTE : All resistance measurements must be performed with parts **at room temperature** (approx. 20°C (68°F)). **Temperature greatly affects resistance measurements.**

Disconnect connector at ignition coil and magneto junction. Measure resistance between each terminal. Refer to the following table for values and wire colors.

NOTE : An ignition coil with good resistance measurement can still be faulty. Voltage leak can occur at high voltage level which is not detectable with an ohmmeter.

	PART NAME	WIRE COLOR*	RESISTANCE OHM	REMARKS
MAGNETO	Trigger coil	RD with engine ground	140-180	No display change means open circuit.
	Ignition generator coil	WH with GN	230-330	
	Lighting generator coil	YL with YL	0.23-0.28	
IGNITION COIL	Secondary winding ① (spark plug cap removed)	End of each high tension wire	9.3- 10.5 K (9300 -10500)	
SPARK PLUG COIL	Spark plug cap	—	4.5- 5.5 K	Display showing zero (0) means short circuit.

① The primary winding of ignition coil can not be measured be cause there is no external connection.

*

COLOR CODE	
BK - BLACK	GN - GREEN
WH - WHITE	GY - GRAY
RD - RED	VI - VIOLET
BL - BLUE	OR - ORANGE
YL - YELLOW	BR - BROWN

VOLTAGE REGULATOR INSPECTION

A faulty voltage regulator is often responsible for frequent burned bulbs.

CAUTION : Never run an engine with a faulty or inoperative voltage regulator. This could damage the DUCATI CDI module.

TESTING PROCEDURE

The regulator ground must be checked to ensure the circuit is complete. If necessary, connect a good ground wire from the regulator to the engine.

A) Quick Test Without Voltmeter

CAUTION : Do not perform this test on engines that have a DUCATI CDI system.

If a voltmeter is not available, a visual test can be performed with satisfactory results,

Disconnect all lights and electric equipment.

While engine is running, disconnect and connect regulator connector several times checking for a spark.

A spark on regulator terminal indicates a good and working regulator.

B) Voltmeter Test

NOTE : Use a voltmeter able to read alternating current (AC). For accurate reading, use a RMS voltmeter.

Connect a wire of the voltmeter to a BLACK/YELLOW wire.

Connect the other wire of the voltmeter to a YELLOW wire.

Lift the rear of vehicle and support with a mechanical stand.

Start the engine at an idle without opening the throttle.

WARNING : Ensure the track is free of particles which might be thrown out while track is rotating. Keep hands, tools, feet and clothing clear of track. Ensure no-one is standing in close proximity to the vehicle.

Slowly open the throttle and accelerate the engine to increase the RPM.

If the meter reads over 15 volts, the regulator is defective and must be replaced.

CAUTION : Do not increase the RPM so the voltage exceeds 15 V as the bulb(s) will burn.

NOTE : Whatever the voltmeter type used (peak voltage or RMS) the voltage must not exceed 15 V (a defective regulator will allow voltage to exceed 15 V as engine RPM is increased).

INSPECTION OF AC CIRCUIT ISOLATION

All Electric Start Models

If AC circuit is not isolated from frame, headlamp beam will weaken.

INSPECTION

Disconnect regulator / rectifier.

Connect one digital ohmmeter probe (needle ohmmeter will not offer enough precision) to frame and other probe to one of 2 yellow magneto wires.

Measured resistance must be infinite. If such is not the case, it means there is a connection between AC circuit and DC circuit.

Disconnect one accessory at the time to identify the faulty circuit.

TABLE OF CONTENTS

BOGIE WHEELS 07-01-1
REMOVAL 07-01-2
DISASSEMBLYANDASSEMBLY 07-01-2
INSTALLATION 07-01-3

TORQUE REACTION SUSPENSION 07-02-1
COMPONENT REMOVAL 07-02-2
REMOVAL 07-02-2
DISASSEMBLY AND ASSEMBLY 07-02-2
INSTALLATION 07-02-3
RIDE ADJUSTMENT 07-02-3
LUBRICATION 07-02-5

SC-IOSPORTANDTOURING SUSPENSION 07-03-1
COMPONENT REMOVAL AND INSTALLATION 07-03-2
REMOVAL 07-03-2
DISASSEMBLY AND ASSEMB LAY 07-03-3
INSTALLATION 07-03-4
RIDE ADJUSTMENT 07-03-5
LUBRICATION 07-03-7

REARAXLE 07-04-1
REMOVAL 07-04-2
DISASSEMBLY AND ASSEMB LAY 07-04-2
INSTALLATION 07-04-2

DRIVE AXLE 07-05-1
REMOVAL 07-05-2
DISASSEMBLY 07-05-2
ASSEMBLY 07-05-2
AXIAL PLAY 07-05-4
INSTALLATION 07-05-7
LUBRICATION 07-05-7
ADJUSTMENT 07-05-7

TRACK 07-06-1
TRACK TYPE APPLICATION 07-06-1
GENERAL 07-06-1
INSPECTION 07-06-1
REMOVAL 07-06-1
INSTALLATION 07-06-1

BOGIE WHEELS

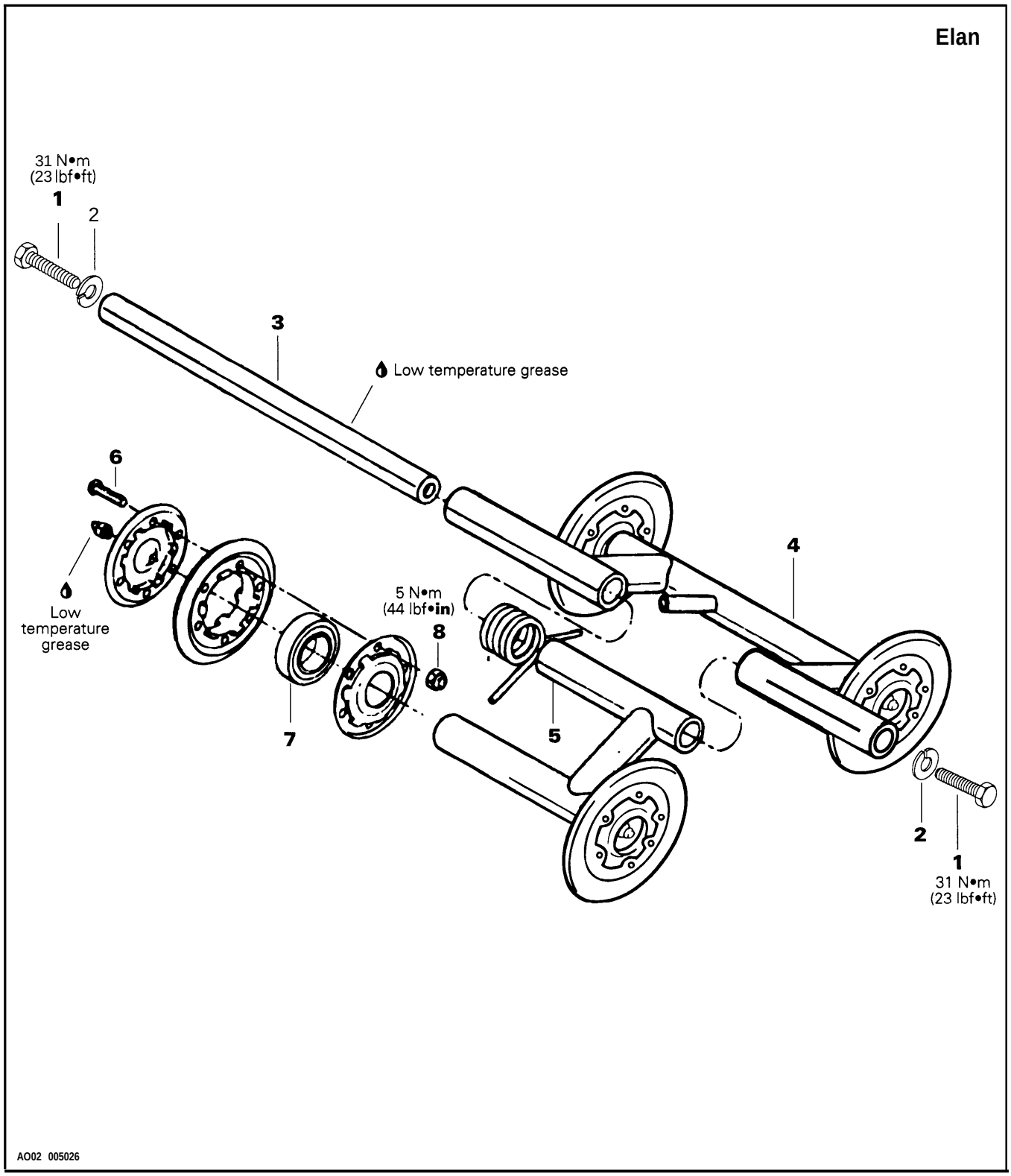

REMOVAL

Raise and block rear of vehicle off the ground.

Release track tension by unlocking the link plate springs using an appropriate tool.

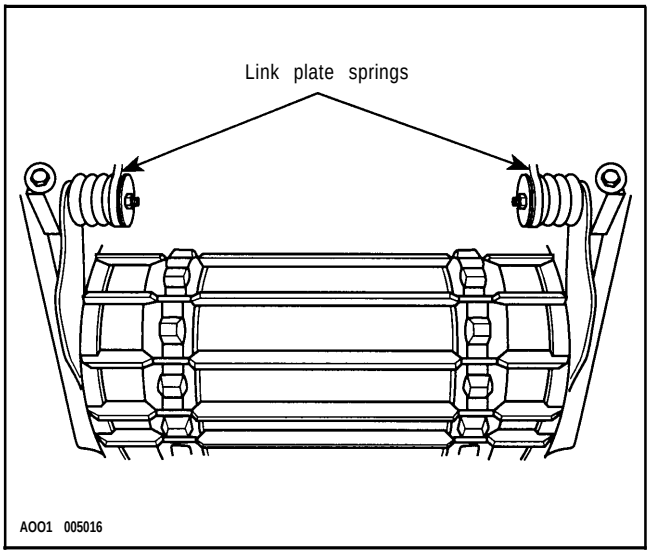

1,2,3, Screw, Lock Washer and Cross Shaft

Starting at center bogie wheel set, remove screws and lock washers securing cross shaft to frame,

NOTE : To prevent the cross shaft from rotating within the cross support, wedge a screwdriver blade between the cross shaft and cross support.

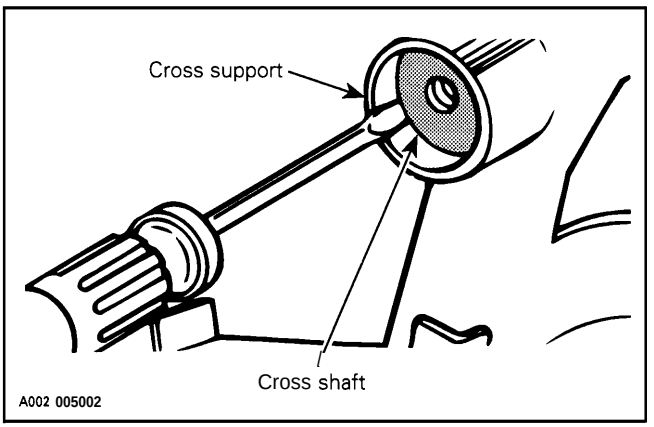

Remove bogie wheel set.

NOTE : Since spring diameter may vary depending on actual installation location, it is important to identify the installation of each bogie wheel set. Observe this position when reinstalling sets.

Repeat operation for remaining bogie wheel sets.

DISASSEMBLY AND ASSEMBLY

4,5, Side and Center Wheel Supports

Heat spring anchor on wheel support before attempting to open or close anchor.

3, Cross Shaft

Clean then lubricate cross shaft with low temperature grease (P/ N 4137061 00) before installation.

4,5,7, Wheel Support and Bearing

Always pull or push bearing by inner race. When installing bearing on wheel support, position bearing shield towards inner flange, then press down until bearing is sitting flush with support end.

Then notch (3 notches) wheel support with a cold chisel to secure the bearing in place.

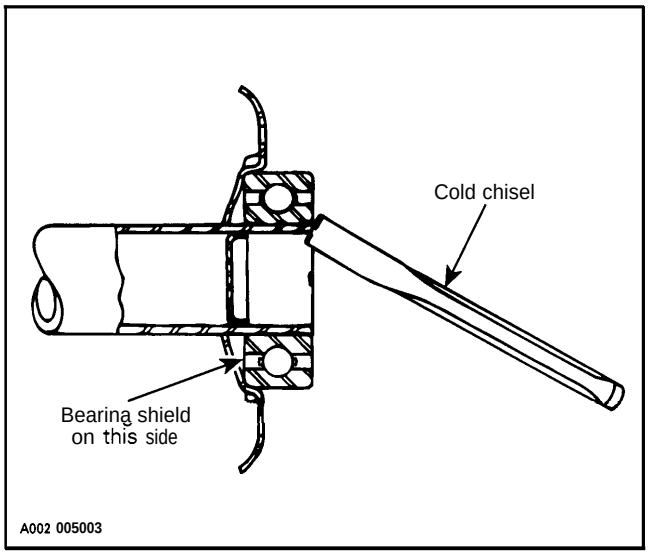

6,8, Bolt and Nut

Bogie wheels are factory riveted. When separation is necessary, remove rivets securing wheel tire and flanges using a 3/16 in dia. drill. Secure flanges and tire using bolts (1/4-20 x 3/4 in) and nuts. Tighten in the following sequence to 5 N•m (44 lbf•in).

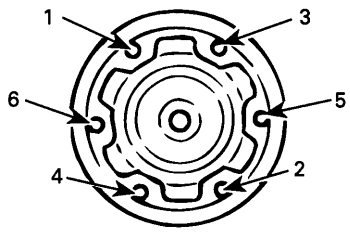

Torque sequence

AO02005004

INSTALLATION

1,2,3, Screw, Lock Washer and Cross Shaft

With rear of vehicle supported off the ground, position front bogie wheel set and secure to frame using lock washers and screws, Secure rear set then remaining set to frame.

NOTE : The side wheel supports should be towards the front of the vehicle.

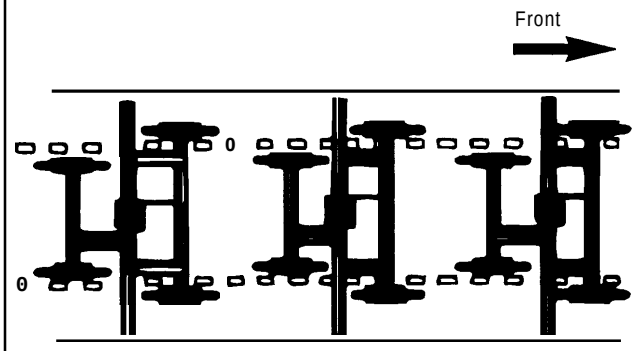

AO02 005005

Using an appropriate tool, apply track tension by hooking the link plate springs into the anchors.

Lubricate each bogie wheel until new grease appears at joint. Wipe off excess of grease (grease P / N 413 7061 00).

NOTE : To adjust the track tension and alignment refer to TRACK 07-09.

TORQUE REACTION SUSPENSION

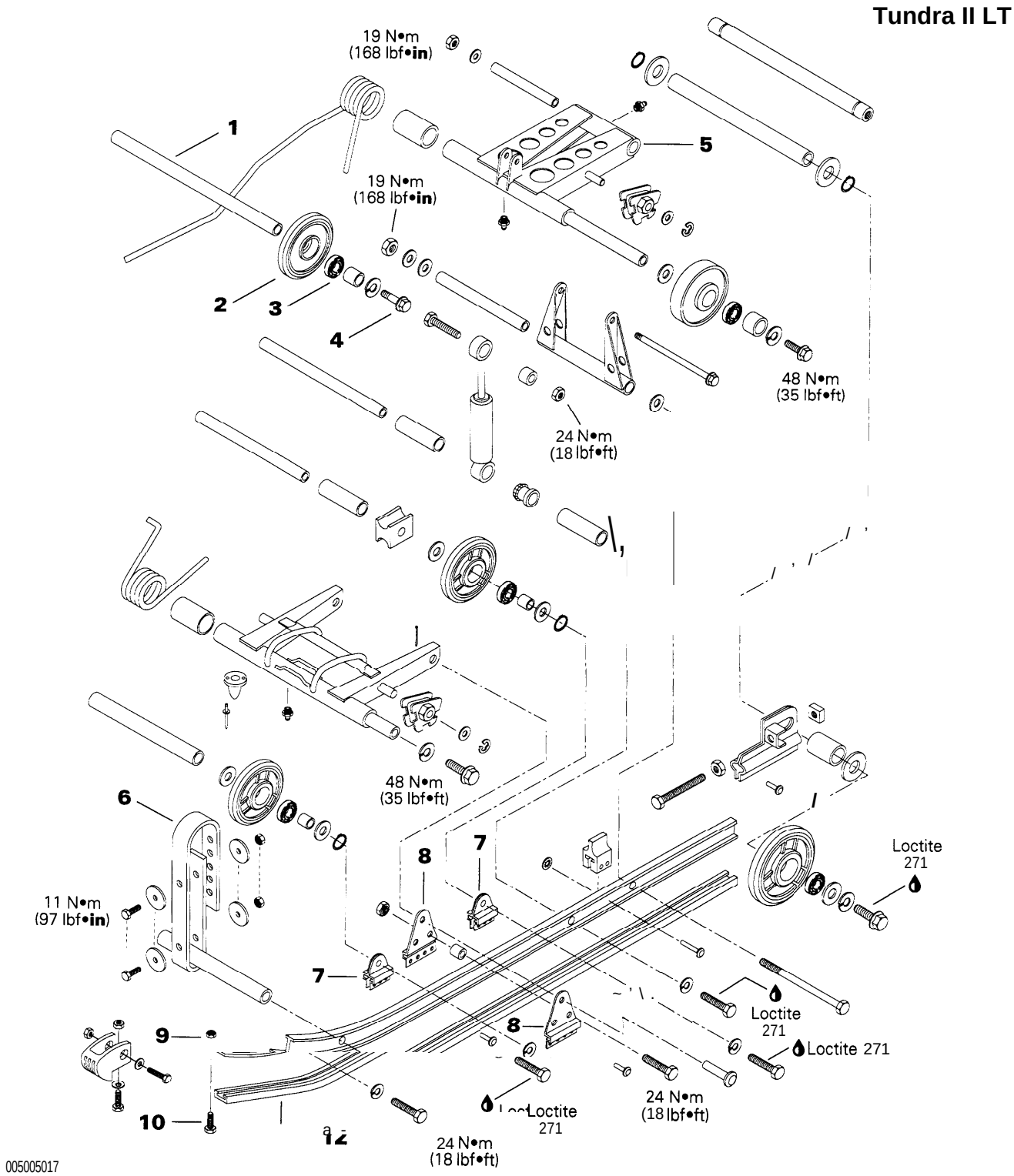

COMPONENT REMOVAL

Lift rear of vehicle and support it off the ground.

5, **Rear Arm**

Release spring tension. Unfasten shock from rear arm. Remove 3 screws retaining rear arm.

REMOVAL

NOTE : To prevent cross shaft from turning when unscrewing screws assembled with thread locker, proceed as follows :

— Loosen one screw then retighten.

— Remove the other screw.

— Remove the first one.

1,2,3,4, Cross Shaft, Idler Wheel, Spacer and Screw

Remove idler wheel ass'y.

Lift rear of vehicle and support it off the ground.

Unscrew 4 screws retaining front arm and rear arm to frame.

Remove suspension.

DISASSEMBLY AND ASSEMBLY

6, **Stopper Strap**

Inspect strap for wear or cracks, bolt and nut for tightness. If loose, inspect hole for deformation. Replace as required. Make sure it is attached through the 3rd hole from the end. Torque nut to 11 N•m (97 lbf•**in**).

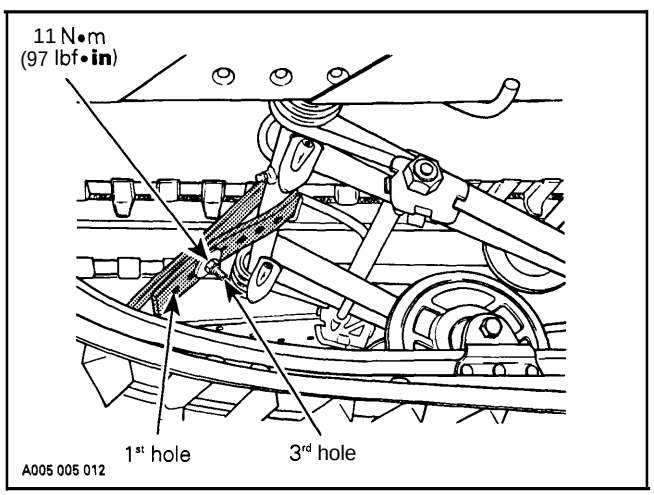

9,10,12, Nut, Slotted Screw and Slider Shoe

To replace a worn shoe, remove the front screw and stop nut, then slide the shoe rearward out of the runner.

NOTE : Slider shoe minimum thickness : 10 mm (25/64 in).

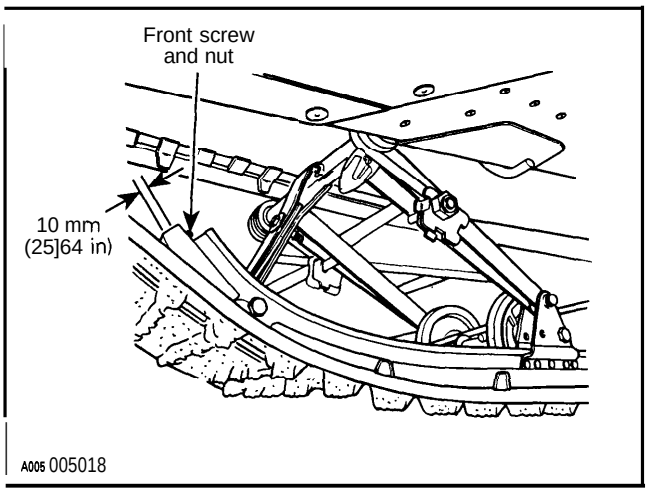

CAUTION : **Slider shoes must always be replaced in pairs.**

7,8, **Support and Front Arm Support**

To remove rivets securing the supports, cut rivet heads off using a cold chisel.

At assembly, position the rivet head toward the outside of the assembly. Support the rivet head against a metal block, as shown, and use a flat head punch to secure the rivet in place.

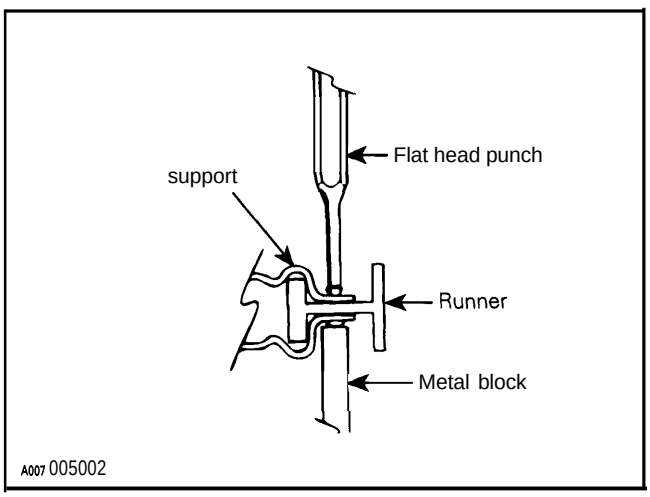

NOTE : Rivets can be substituted with 3/16 in x 3/4 in long screws and flanged elastic stop nuts. Always position screw head outside the assembly.

INSTALLATION

Release rear spring tension then install assembled suspension into track with front portion first.

Insert rear portion of suspension into track,

Bolt suspension to tunnel.

Pry rear spring end onto cam,

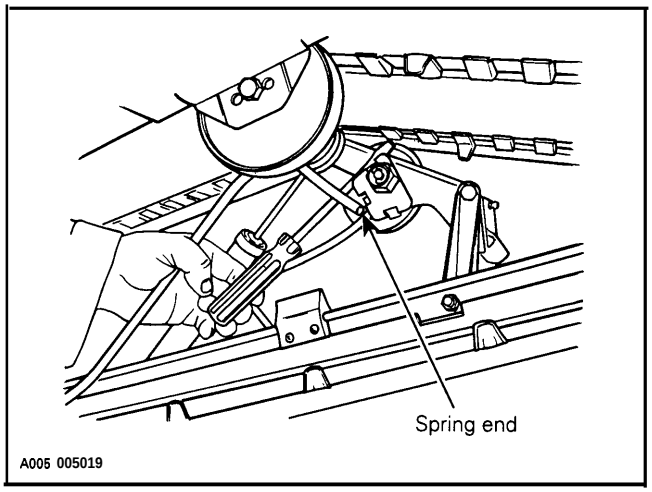

Adjust track tension / alignment. Refer to TRACK 07 06.

RIDE ADJUSTMENT

The front portion of rear suspension is adjustable for surface condition and steering effects.

The stopper strap is adjustable for vehicle weight transfer control.

The rear portion of rear suspension is adjustable for driver's weight.

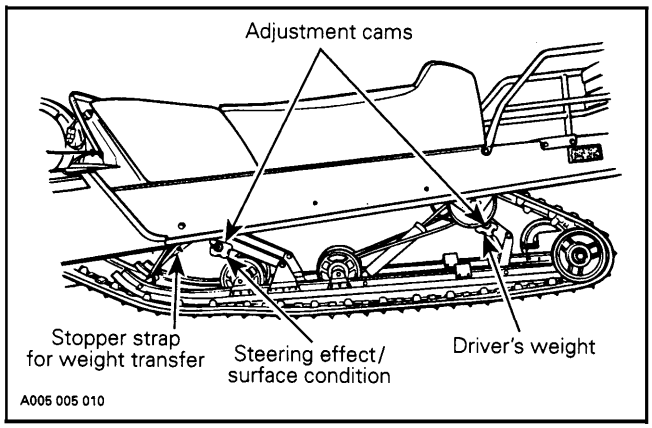

Choice of suspension adjustments depends on carrying load, driver's weight, personal preference, riding speed and field condition.

Slight suspension bottoming occurring under the worst riding conditions indicates a good choice of spring preload.

To adjust rear suspension adjustment cams, use special key supplied in vehicle tool box.

Turning adjustment cam moves edges of cam supporting spring rod. The softest adjustment is reached when the supporting edge of cam is the closest to hexagonal portion of cam.

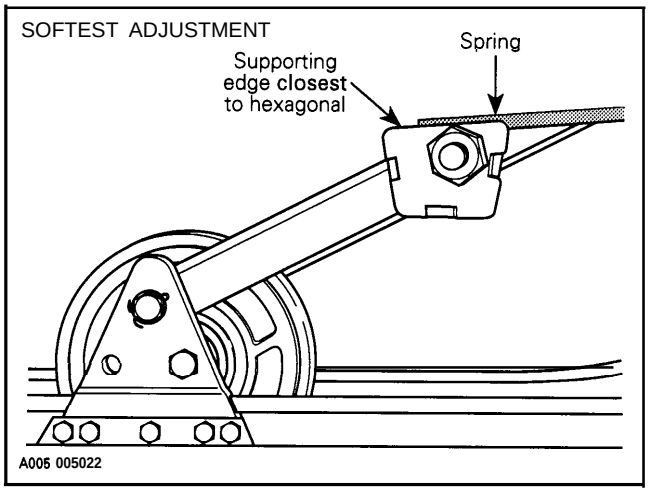

The stiffest adjustment is reached when the supporting edge of cam is the farthest to hexagonal portion of cam.

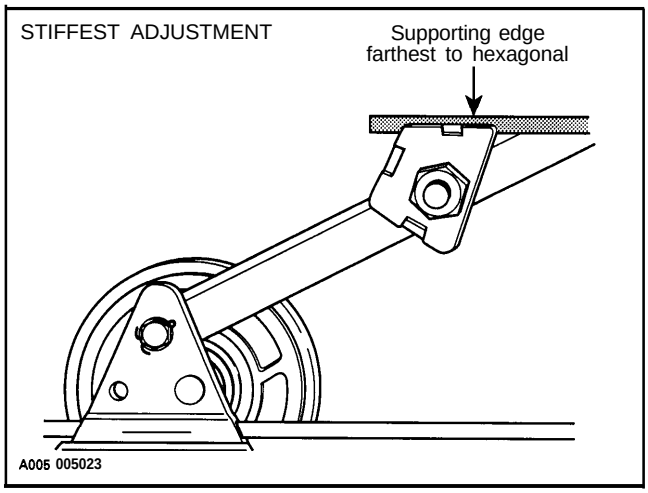

CAUTION : Always turn the left side adjustment cams in a clockwise direction and the right side cams in a counterclockwise direction. Left and right adjustment cams must always be set at the same position.

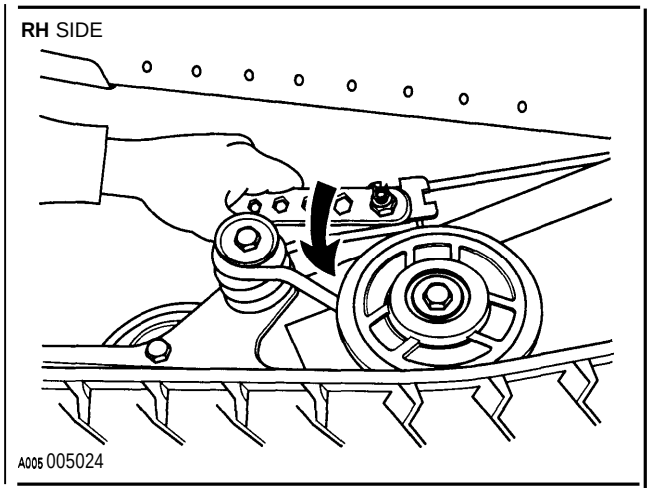

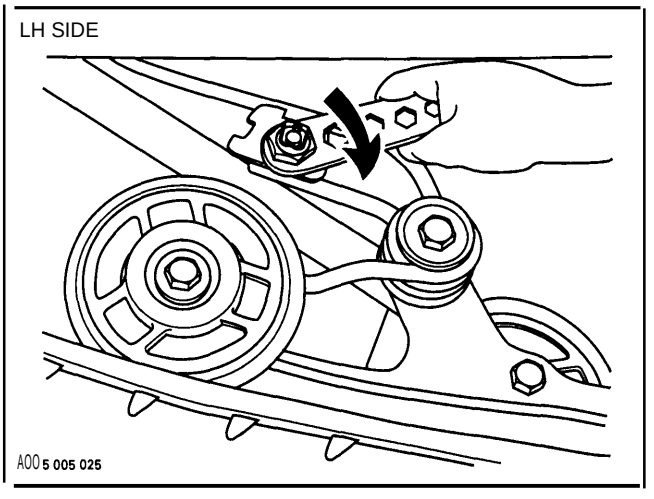

NOTE : To quickly change rear cam position without using any tool :

— Lay vehicle on its side.

— Unhook rear spring by hand from lower idler wheel.

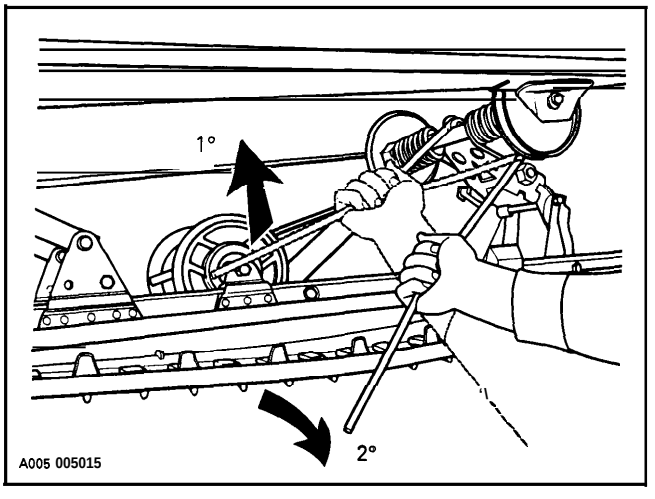

—Turn adjustment cam by hand to the desired position.

— Reinstall spring on its support making sure that it sits in the groove of support.

Stopper Strap

The function of the stopper strap is to control the transfer of vehicle weight during acceleration and to control track lead angle.

The longer the belt, the more the weight will be transferred to the track to provide a better traction. The shorter the belt, the lesser the weight transferred to the track, thus maintaining a more positive steering.

The longer the belt, the greater will be the track lead angle. A shorter belt will reduce track lead angle which may help when negotiating a particular snow condition.

Adjusting holes on the stopper strap allow to adjust it according to driver's requirements, field and /or snow conditions.

CAUTION : Whenever stopper strap length is changed, track tension must be readjusted to prevent any possibility of operating vehicle with a too loose or too tight track tension.

For normal use, locate bolt through 3rd hole from strap end.

WARNING : Always torque the nut to 11 N•m (97 lbf•in). Replace strap if worn or torn.

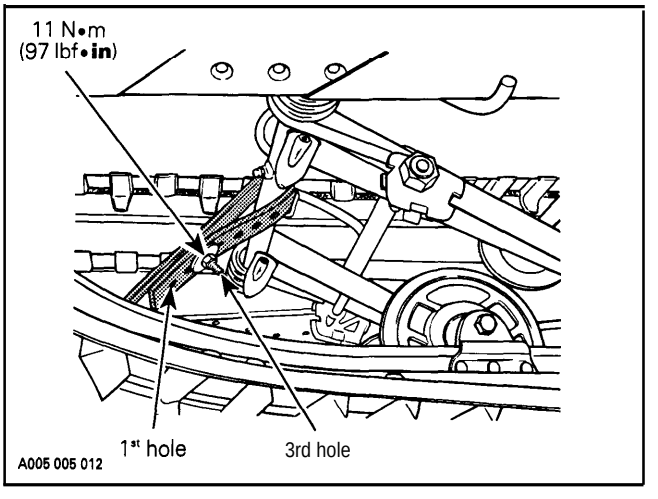

NOTE : When towing a load, it is suggested to adjust stopper strap to its shortest length, soften front springs of rear suspension and stiffen rear springs. These adjustment will improve steering ability.

Deep Snow Operation

When operating the vehicle in deep snow, it may be necessary to change position of adjustment cams, stopper strap and /or driver's riding position, to change the angle at which the track rides on the snow. Operator's familiarly with the various adjustments as well as snow conditions will dictate the most efficient combination.

LUBRICATION

Lubricate front and rear arms at grease fittings using low temperature grease (P/ N 4137061 00).

NOTE : There are 4 grease fittings.

O

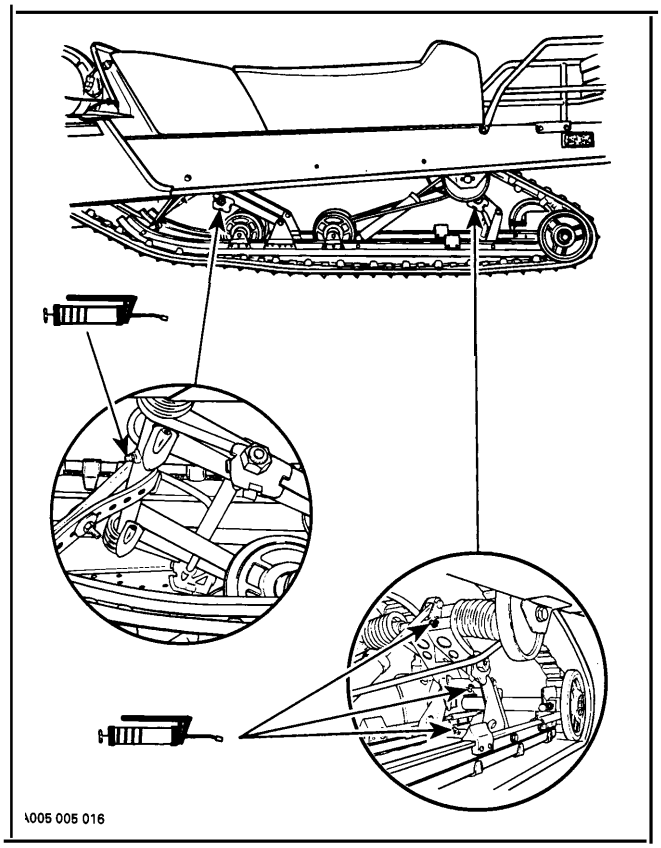

SC-10 SPORT AND TOURING SUSPENSION

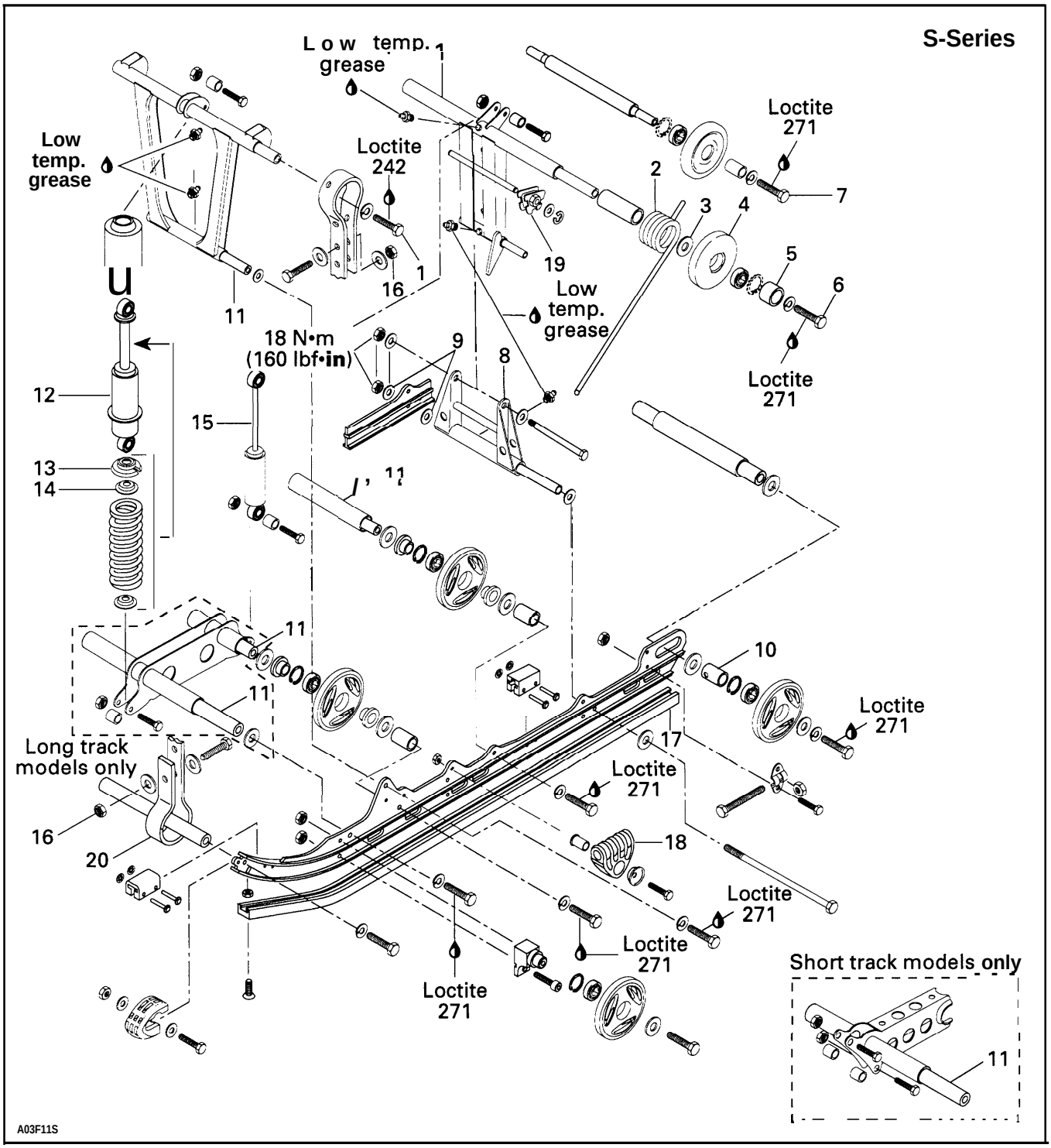

COMPONENT REMOVAL AND INSTALLATION

Lift rear of vehicle and support it off the ground.

1, **Rear Arm**

Release spring tension by unfastening spring support. Unfasten shock from rear arm. Remove 3 screws retaining rear arm.

At installation, rear arm stroke limiter must be behind shackle.

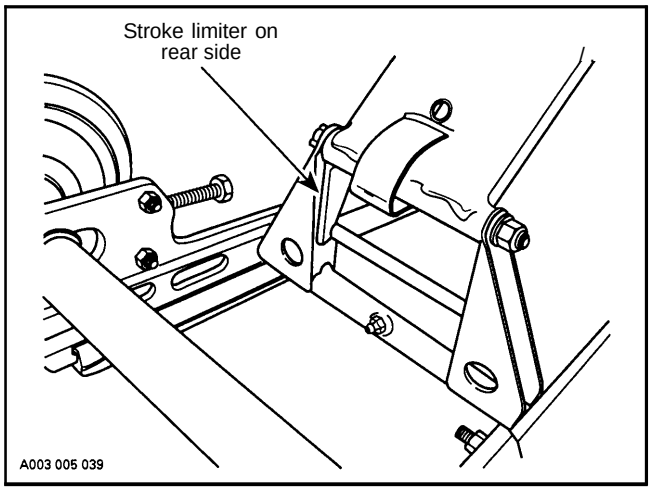

18, Spring Support

CAUTION : To avoid track damage, spring supports must be mounted upward.

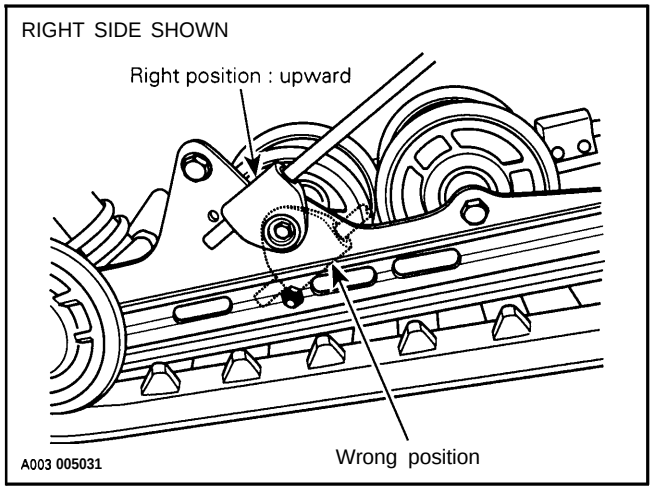

REMOVAL

19, Cam

Decrease spring preload by turning LH cam clockwise and RH cam counterclockwise.

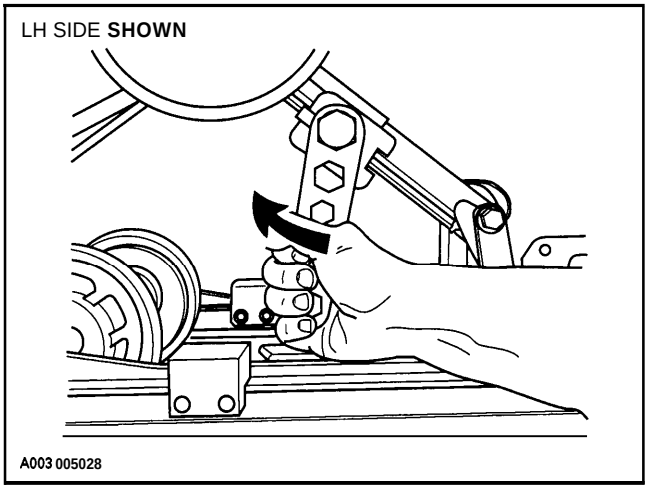

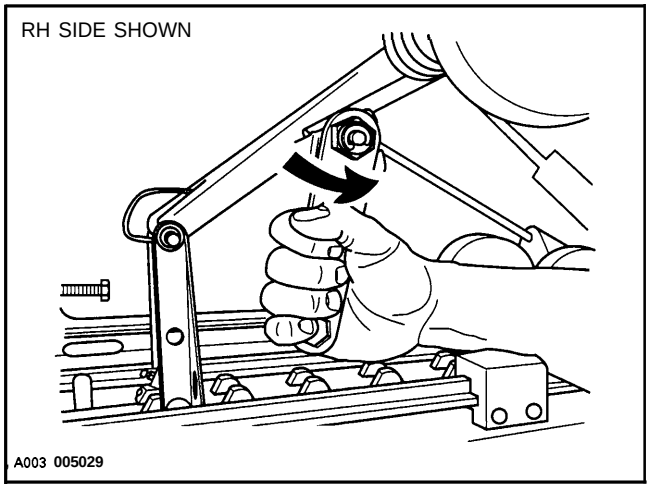

Lift rear of vehicle and support it off the ground. Block suspension in place.

2,3,4,5,6,18, Spring, Washer, Idler Wheel, Spacer, Screw and Spring Support

Unbolt spring support from runner while retaining spring end. Move spring end rearward to completely release spring preload. Proceed with the other side.

Unscrew both rear arm screws.

NOTE : To prevent cross shaft from turning when unscrewing screws assembled with thread locker, proceed as follows :

— Knock on screw head and/or heat to break thread-locker bond.

— Loosen one screw then retighten.

— Remove the opposite screw.

— Remove the first one.

7, Screw

Unscrew center idler wheel axle from tunnel then remove.

Lift rear of vehicle until spacers, idler wheels, washers and springs can be removed.

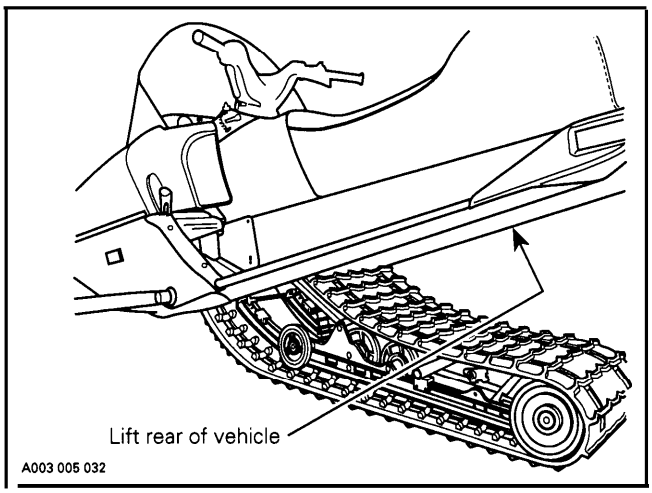

6, Screw

Remove both screws retaining front arm to tunnel.

Remove suspension.

DISASSEMBLY AND ASSEMBLY

Inspect track throughly before reinstalling suspension. Refer to 07-06 TRACK.

1, Rear Arm

At installation, rear arm stroke limiter must be on rear side.

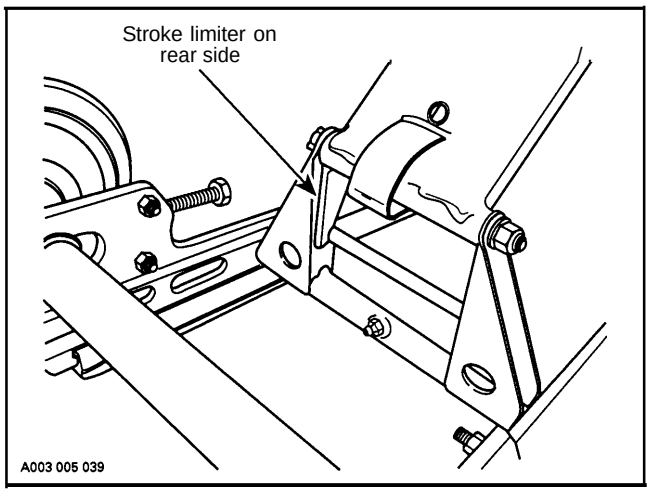

8,9, Pivot Arm and Flat Washer

At installation pivot arm grease fitting must face rearward. Small washer must be against-nut. Large washers must be inside rails on both side.

10, Outer Bushing

At installation, hole must face adjustment screw.

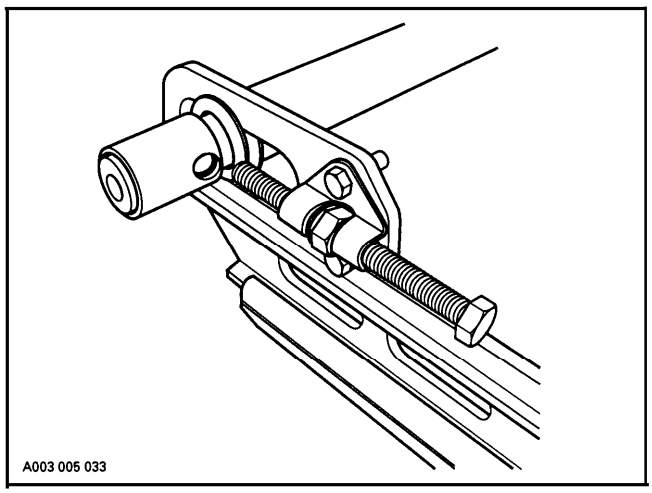

11, Axle

Note position of axles at disassembly. Axles with a paint stripe serve as idler wheel axles. These are more precise than those used as pivot axles. Idler wheel axles can be used as pivot axles but the opposite is not true.

12,13,14, Front Shock, Spring Stopper and Cap

Use shock spring remover (P/ N 5290271 00) in a vise, Mount shock in it and turn shock so that spring coils matched spring compressor.

Close and lock bar. Adjust handle horizontal by changing position of clevis pin.

Push down on handle until il locks. Remove spring stopper and cap then release handle.

At installation, cap opening must be 180° from spring stopper opening.

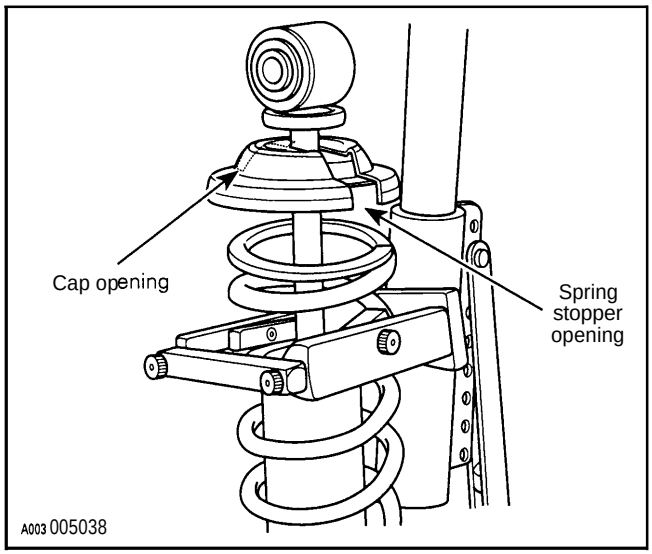

20, **Stopper Strap**

Inspect strap for wear or cracks, bolt and nut for tightness. If loose, inspect hole for deformation. Replace as required. Make sure it is attached through the 2nd hole from the end. Torque nut to 11 N•m (97 lbf•**in**).

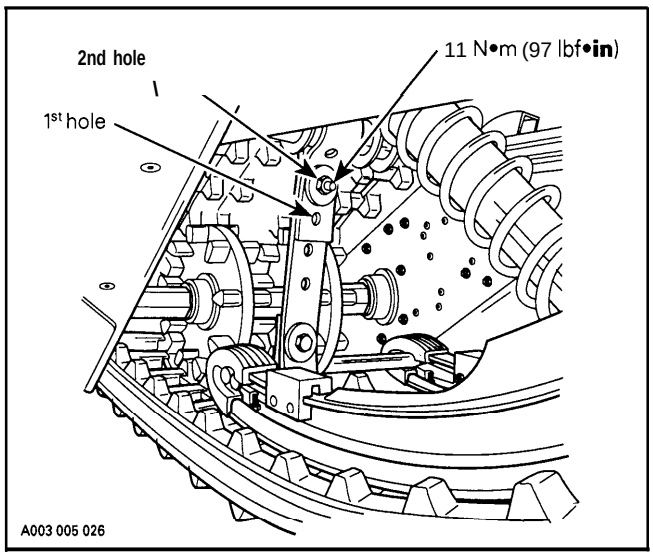

17, Slider Shoe

Replace slider shoes when it is worn to the line.

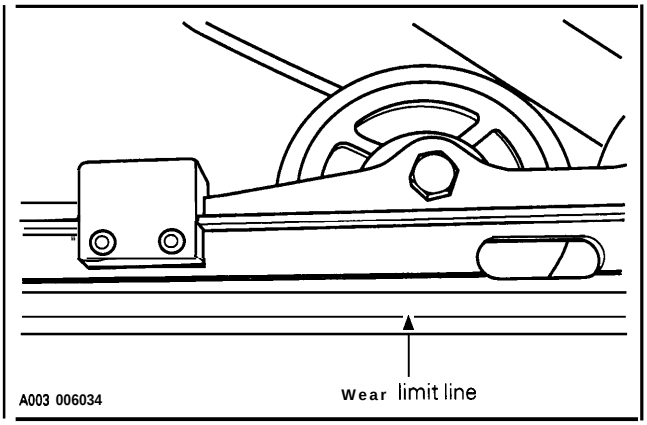

CAUTION : Slider shoes must always be replaced in pairs.

INSTALLATION

Do not install rear spring yet. Install assembled suspension into track with front portion first.

Insert rear portion of suspension into track.

2,3,4,5,6 **Spring, washer, idler wheel, spacer and screw**

On each side, install rear spring, washer, idler wheel, spacer then bolt that axle to tunnel.

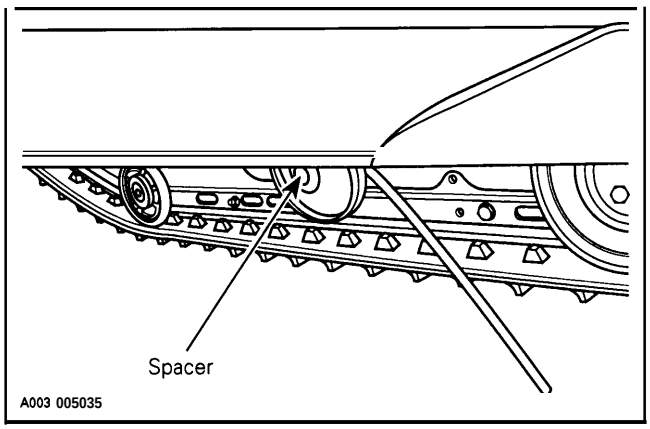

18, Spring Support

Install spring supports to rails.

CAUTION : **To avoid track damage, spring supports must be mounted upward.**

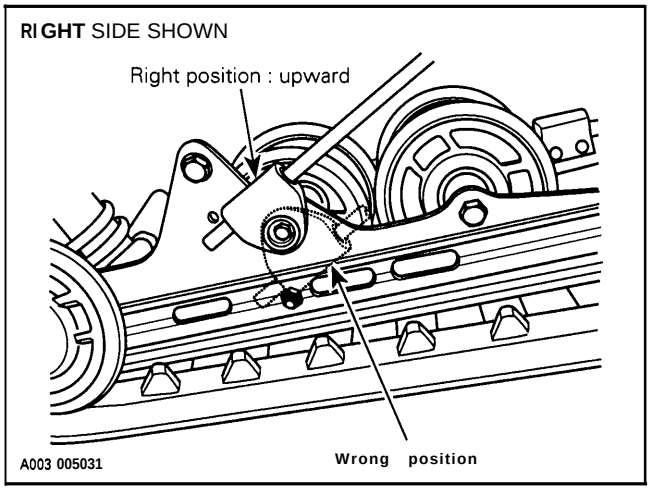

RIDE ADJUSTMENT

The stopper strap is adjustable for vehicle weight transfer control.

The rear portion of rear suspension is adjustable for driver's weight.

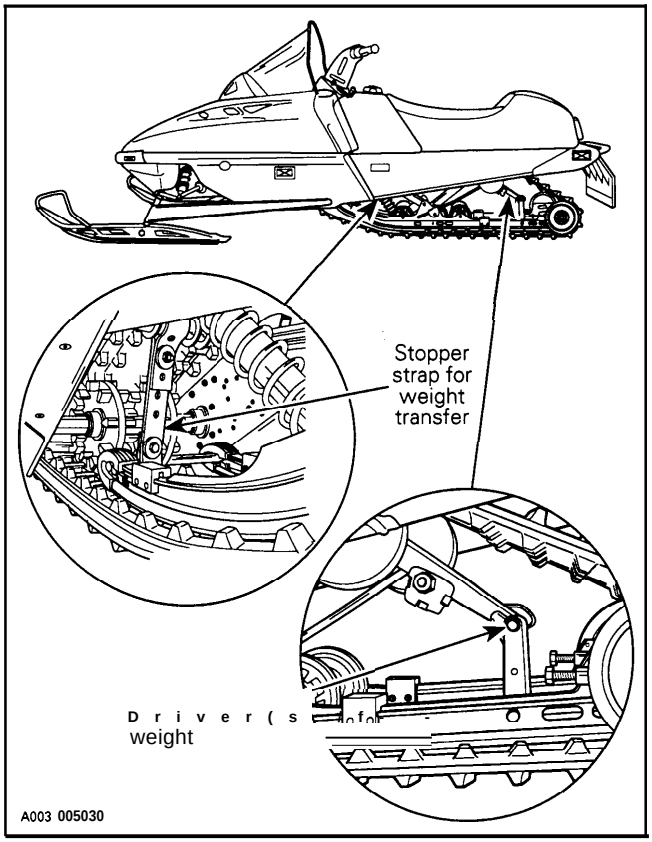

Choice of suspension adjustments depends on carrying load, driver's weight, personal preference, riding speed and field condition.

Rear Suspension Setting Table

Cam position	Soft → Stiff
Operator's weight	Light → Heavy
Riding speed	Low → High
Field condition	Flat → Bumpy

Slight suspension bottoming occuring under the worst riding conditions indicates a good choice of springs preload.

To adjust rear suspension adjustment cams, use multi wrench supplied in vehicle tool box.

Turning adjustment cam moves edges of cam supporting spring rod. The softest adjustment is reached when the supporting edge of cam is the closest to hexagonal portion of cam.

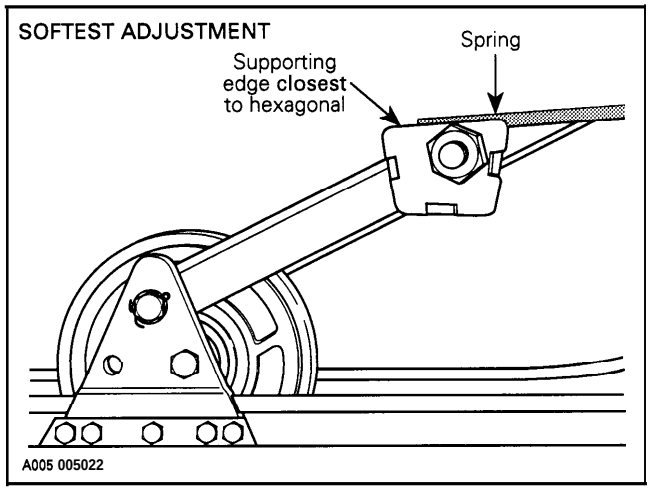

The stiffest adjustment is reached when the supporting edge of cam is the farthest to hexagonal portion of cam.

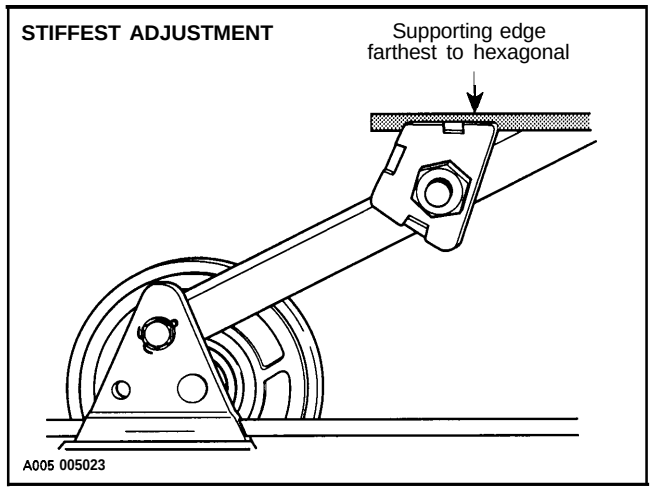

CAUTION : Always turn the left side adjustment cams in a clockwise direction and the right side cams in a counterclockwise direction. Left and right adjustment cams must always be set at the same position.

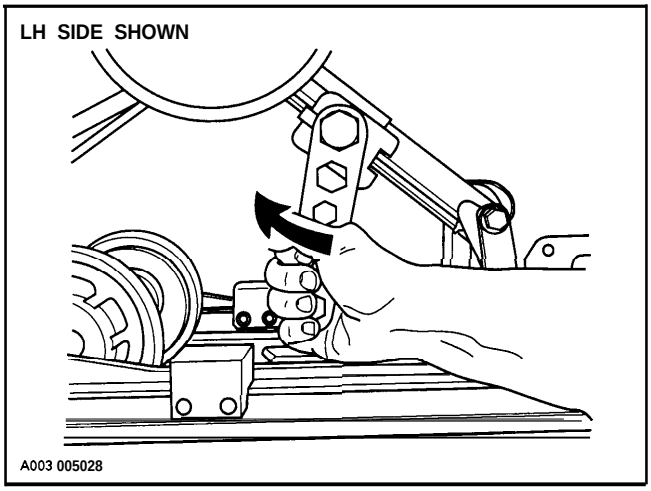

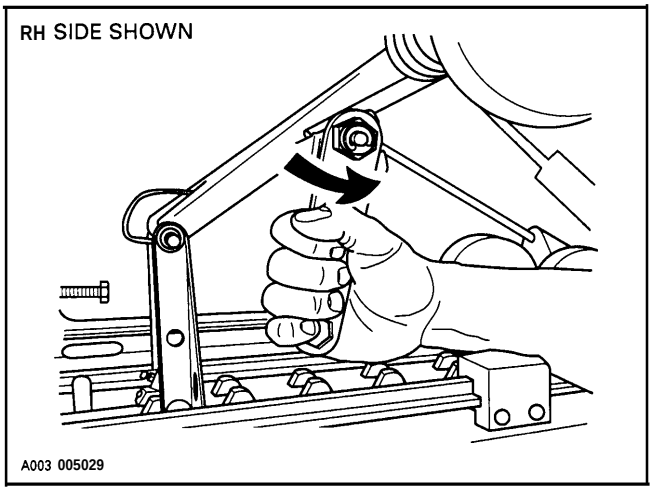

Stopper Strap

The function of the stopper strap is to control the transfer of vehicle weight during acceleration and to control track lead angle.

The longer the belt, the more the weight will be transferred to the track to provide a better traction. The shorter the belt, the lesser the weight transferred to the track, thus maintaining a more positive steering.

The longer the belt, the greater will be the track lead angle. A shorter belt will reduce track lead angle which may help when negotiating a particular snow condition.

Adjusting holes on the stopper strap allow to adjust it according to driver's requirements, field and /or snow conditions.

CAUTION : Whenever stopper strap length is changed, track tension must be readjusted to prevent any possibility of operating vehicle with a too loose or too tight track tension.

For normal use, locate bolt through 2nd hole from strap end.

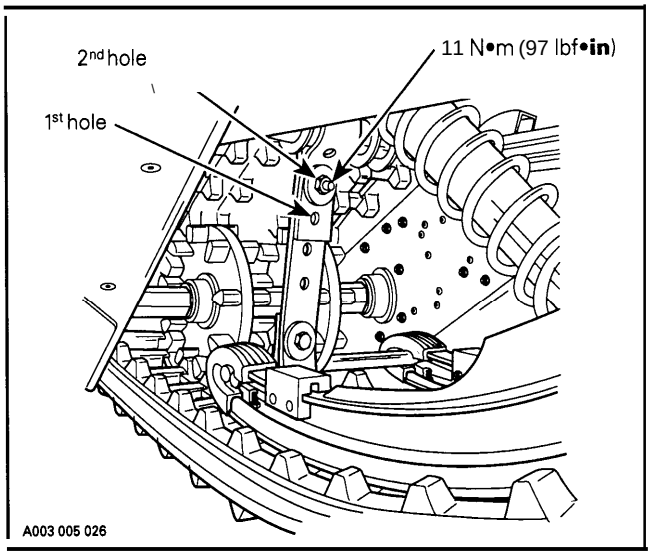

WARNING: Always torque the nut to 11 N•m (97 lbf•in). Replace strap if worn or torn.

NOTE : When towing a load, it is suggested to adjust stopper strap to a shorter length and stiffen rear springs. These adjustment will improve steering ability.

Deep Snow Operation

When operating the vehicle in deep snow, it may be necessary to change position of adjustment cams, stopper strap and /or driver's riding position, to change the angle at which the track rides on the snow. Operator's familiarly with the various adjustments as well as snow conditions will dictate the most efficient combination.

LUBRICATION

Lubricate front and rear arms at grease fittings using low temperature grease (P/ N 4137061 00).

NOTE :Thereare5 grease fittings.

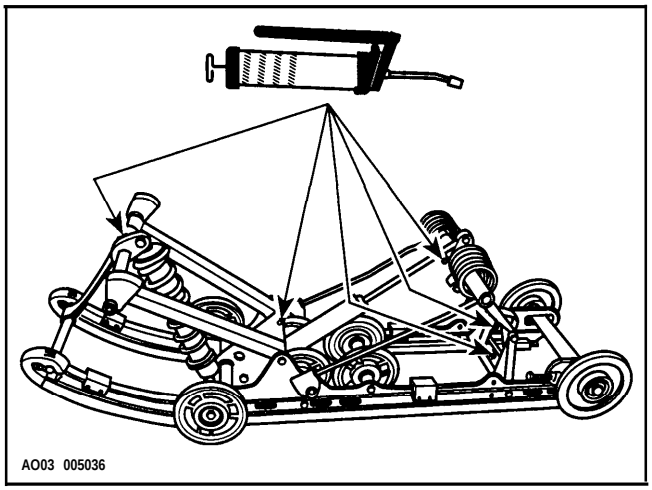

REAR AXLE

Elan

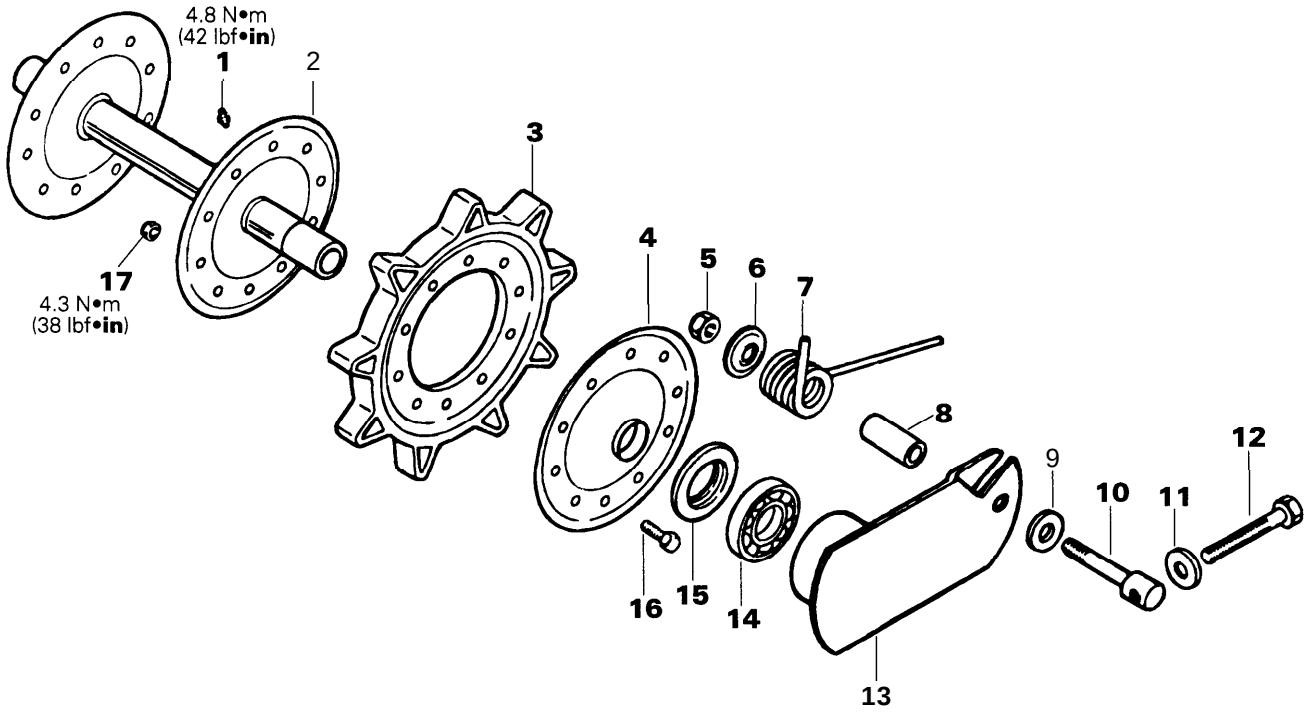

AO02 005025

REMOVAL

Lift and support rear of vehicle.

7, Link Plate Spring

Using an appropriate tool, unlock link plate springs,

5,6, Retaining Washer and Locking Nut

Remove spring locking nut and retaining washer from both link plates.

8,9,10,11,12, Sleeve, Hardened Washer, Eye Bolt, Washer and Adjusting Bolt

Remove track adjusting bolts, eye bolts, hardened washers and adjusting sleeves.

Withdraw rear axle from vehicle.

DISASSEMBLY AND ASSEMBLY

3, Sprocket

Sprockets are factory riveted, When separation is necessary, remove rivets securing sprocket with a 1/4 in diameter drill bit.

To remove sprocket without removing bearing, apply liquid soap or petroleum jelly on sprocket bead and flange. Using 2 screwdrivers or tire irons, carefully pry sprocket over the flange as shown.

Reverse procedure to install sprocket.

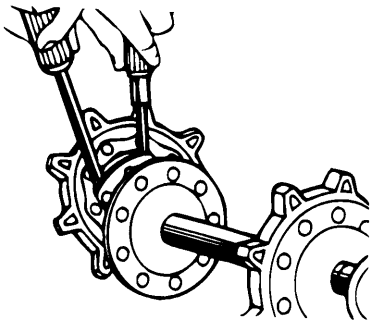

A002 005006

2,3,4,16,17, Rear Axle, Sprocket, Flange, Bolt and Nut

At assembly, replace the rivets securing flange to sprocket with 1/4-20 x 3/4 in long screws and elastic stop nuts.

Torque to 4.3 N•m (38 lbf•in) in the following sequence.

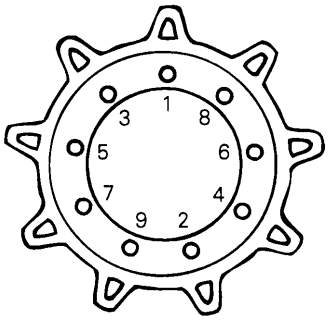

A002 005007

14, Bearing

Always pull or push the bearing by the inner race. Install bearing with shield facing the sprocket.

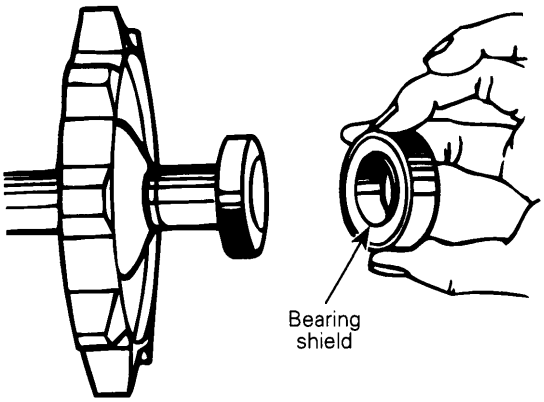

13,15, Link Plate and Seal

When reassembling, always use a new seal. When inserting seal into link plate ensure that seal sits correctly in link plate groove. After lubricating the rear axle, ensure that seal remains in position.

INSTALLATION

2, Rear Axle

With rear of vehicle off the ground, position the rear axle within the track.

8,9,10, Sleeve, Hardened Washer and Eye Bolt

Install sleeves, hardened washers and eye bolts.

12, Adjusting Bolt

Partially screw-in the track adjusting bolts.

5,6, Locking Nut and Retaining Washer

Install retaining washers and partially tighten the link plate spring locking nuts.

Carry out track tension and alignment.

O **NOTE :** To adjust track tension and alignment, refer to TRACK 07-06.

7, Link Plate Spring

Using a suitable tool hook up link plate springs.

1, Grease Fitting

If necessary, lubricate idler wheels through grease fittings until grease appears at joints. Use low temperature grease only (P/ N 4137061 **00).**

▼ **CAUTION : After lubricating rear axle, always check that seal is in position in link plate groove.**

DRIVE AXLE

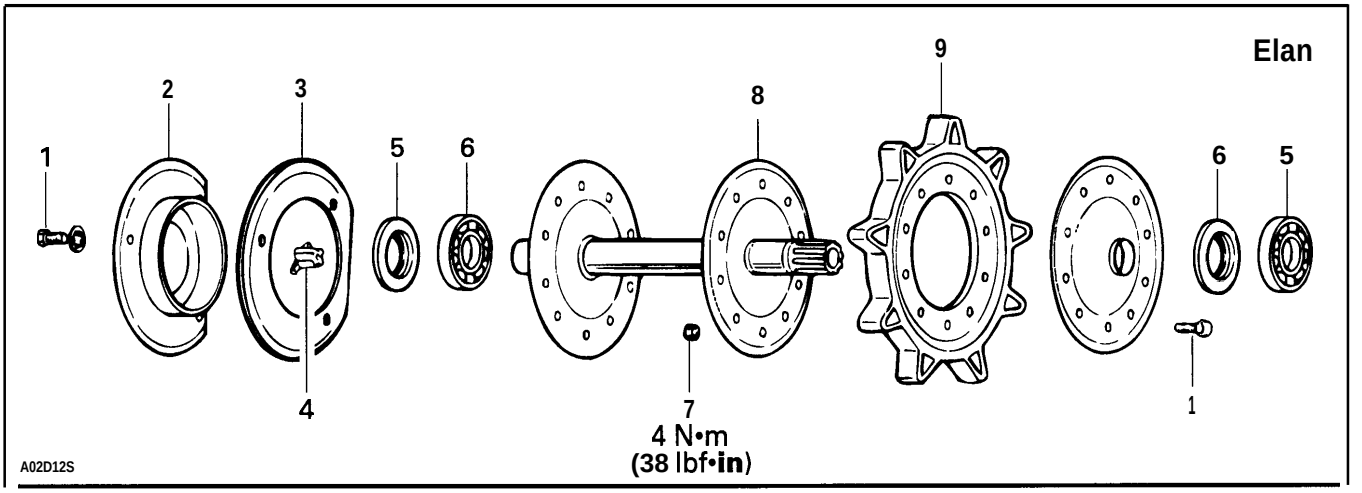
Elan
1
2
3
4
5
6
7
8
9
6
5
1
4 N•m
(38 lbf•in)
A02D12S

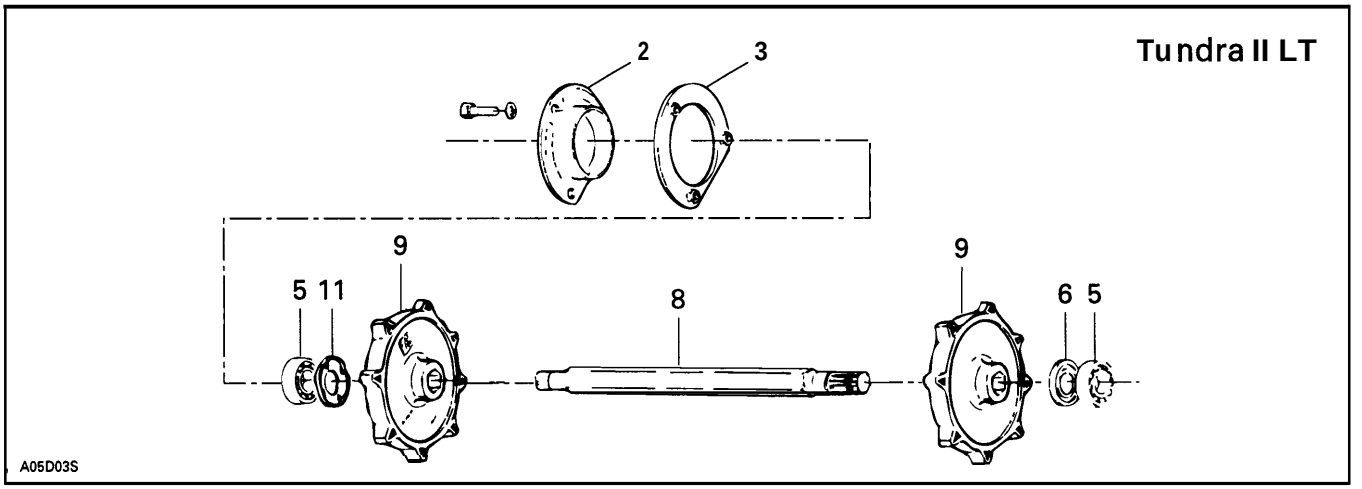
Tundra II LT
2
3
5 11
9
8
9
6 5
A05D03S

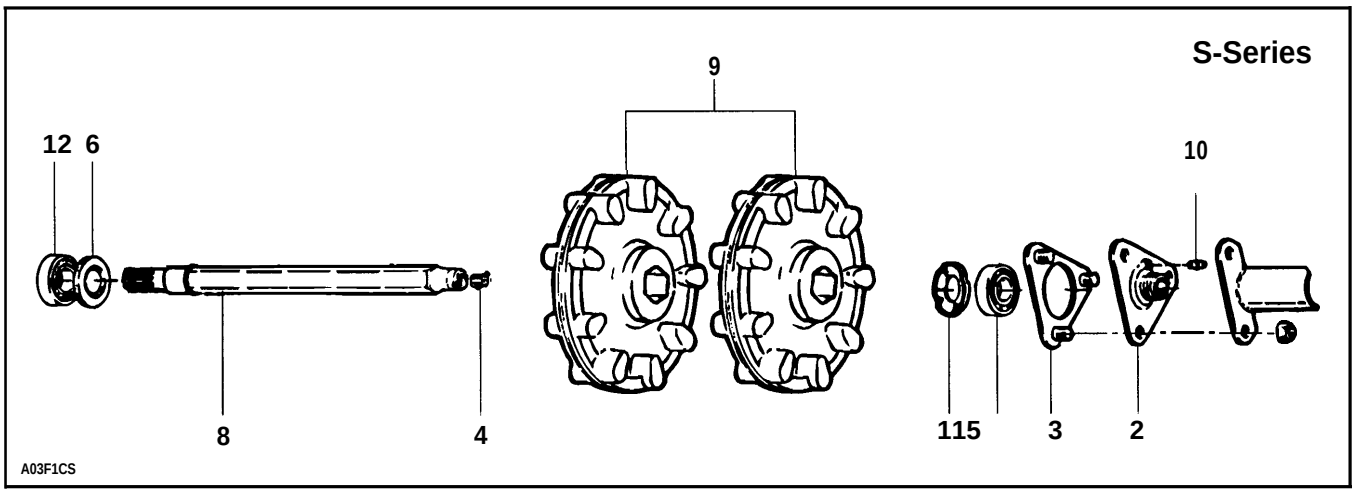
S-Series
12 6
9
10
8
4
115
3
2
A03F1CS

REMOVAL

All Models

Drain oil from chaincase or gearbox. Remove chaincase cover and release drive chain tension (if applicable).

Raise and block rear of vehicle off the ground.

Remove suspension. (Refer to REAR SUSPENSION **07).**

2,6, **End Bearing Housing and Seal**

O **NOTE :** If applicable, remove muffler, battery and its support. If vehicle is equipped with a speedometer, remove angle drive unit and coupling cable if necessary.

On all S-Series, remove chaincase cover, chain and sprocket then circlip and bearing on drive axle.

Pry oil seals from chaincase and end bearing housing (if applicable).

Unlock sprocket from drive axle and remove with its spacer (if applicable).

8,9, **Drive Axle and Sprocket**

Release drive axle sprocket from track and at the same time, pulling the drive axle towards the end bearing housing side.

Remove drive axle from vehicle.

DISASSEMBLY

4, **Speedometer Drive Insert**

All Models

Remove speedometer drive insert (if applicable).

5,12, Bearing

To remove bearings, use puller assembly, ring and half rings as illustrated. (Refer to tools section).

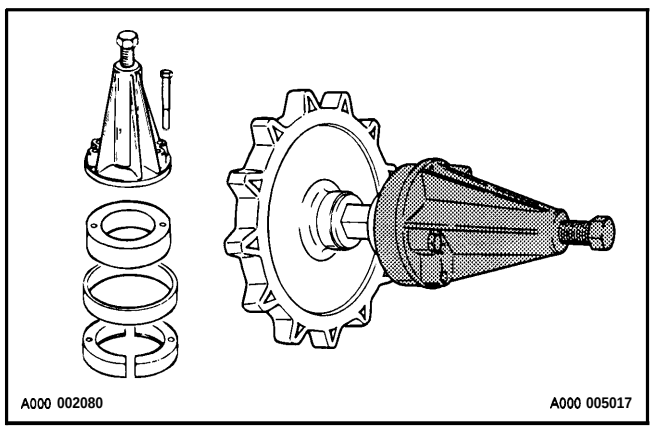

9,13, Sprocket and Half-Sprocket

To remove press fit sprockets (except Elan), use a press and a suitable support as illustrated.

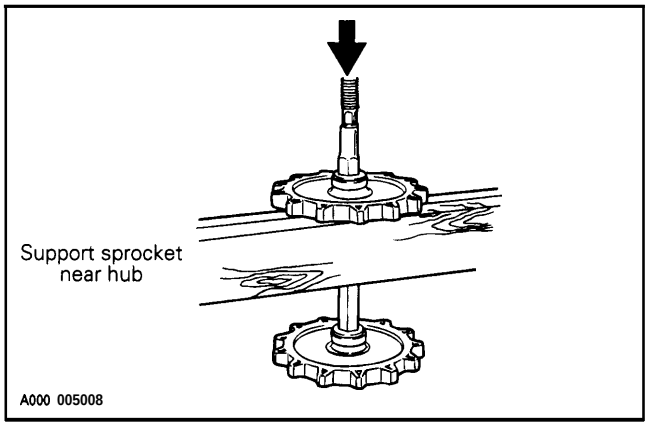

0 **NOTE :** Two different types of sprocket press fit can be found. Ensure to replace ring reinforced sprockets with the same type.

ASSEMBLY

8,9,13, Drive Axle and Sprocket

To assemble press fit sprockets, use a press and a suitable pipe as illustrated. Sprockets must be assembled according to the following dimensions.

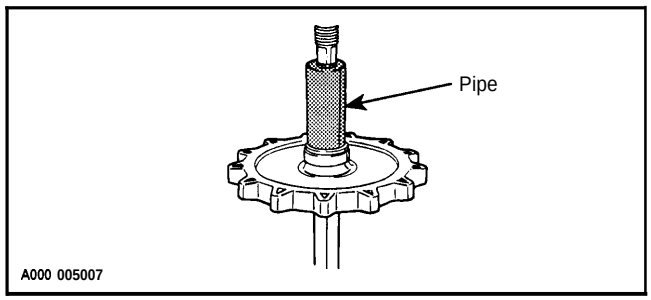

Tundra II LT

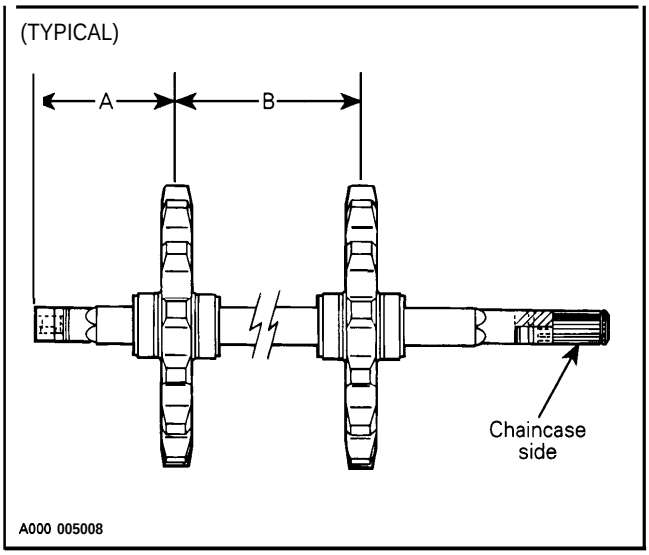

APPLICABLE MODEL	A mm (in)	B mm (in)
Tundra II LT	***83*** (3-17/64)	***242*** (9-17/32)

S-Series

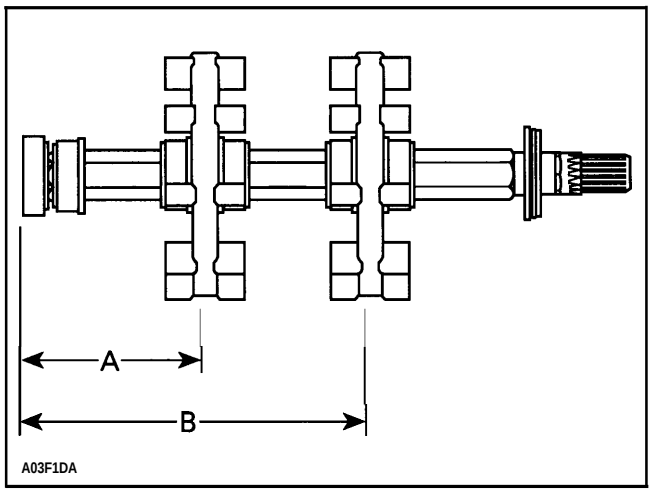

A. **155,4** *mm (6-1/8 in)*
B. **278.4** *mm* **(10-31L32** *in)*

All Models

Ensure to align indexing marks of each sprocket when assembling.

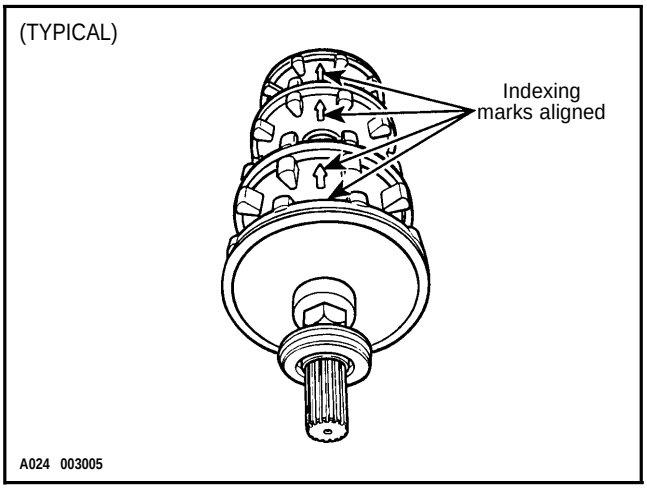

The maximum desynchronization for the sprockets is ***1.5*** mm (1/16 in).

To check this tolerance, place axle assembly on a plane surface and measure the gap between sprocket tooth and surface.

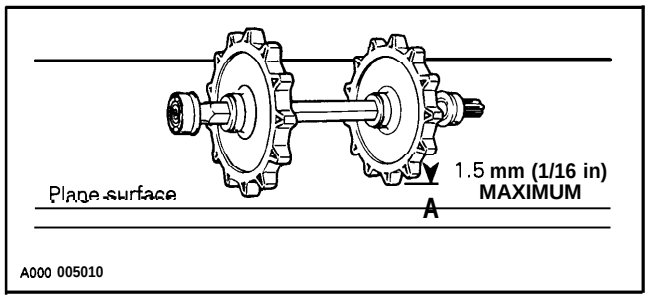

CAUTION : The same sprocket must not be pressed twice on the axle. If synchronization is found to be defective, use a new sprocket.

1,7, Cap Screw and Elastic Stop Nut

On Elan, torque nuts of axle flanges to 4 N•m (38 lbf•**in**).

When reassembling, install a new nut or apply Loctite 242 (P/ N 4137030 00) on old threads. Tighten in the following sequence.

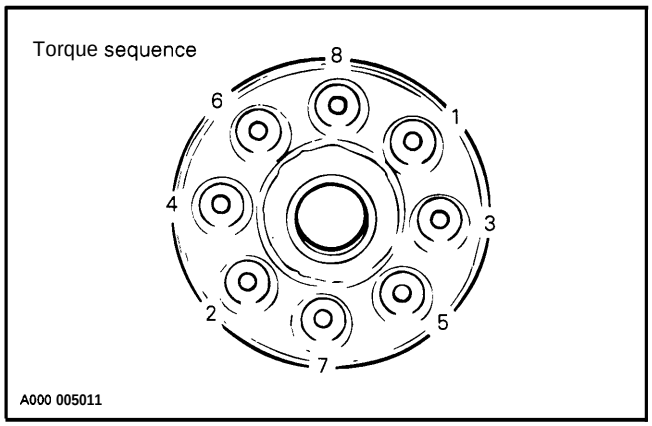

6,8, **Drive Axle and Seal**

When assembling drive axle, always position a new seal on each end of drive axle (if applicable). Locate seal lip as illustrated.

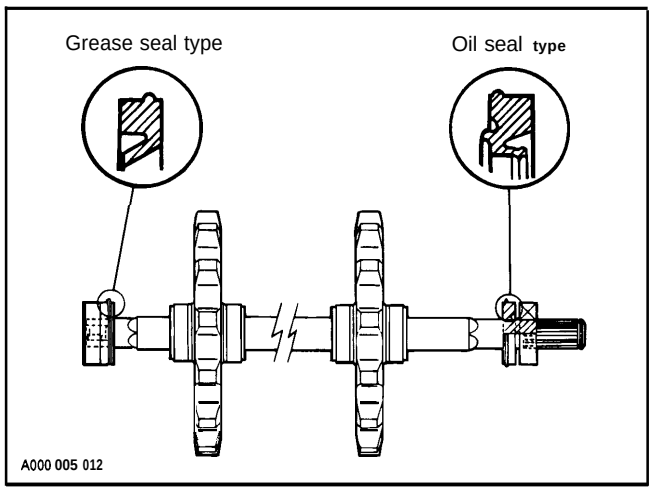

11, Bearing Protector

At assembly, flat side of bearing protector must be against bearing.

5,12, Bearing

Always push bearing by inner race.

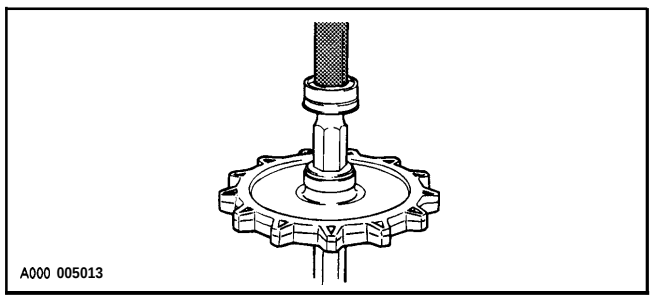

The bearing on the splined side of axle must be pushed until it is seated on shaft shoulder. The end bearing housing bearing must be flush with end of drive axle. Each bearing must have its shield facing the sprocket.

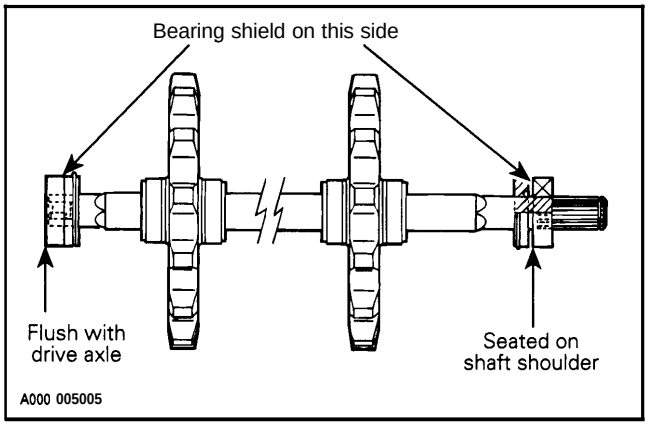

AXIAL PLAY

S-Series

Ensure there is no deformation of the sheet metal around the end bearing housing. Straighten as required.

Before attempting to adjust the drive axle axial play, check the chaincase perpendicularity as follows :

CHAINCASE PERPENDICULARITY ADJUSTMENT

— Remove driven pulley.

— Slacken bearing collar set screw and working from the driven pulley side, turn bearing collar clockwise.

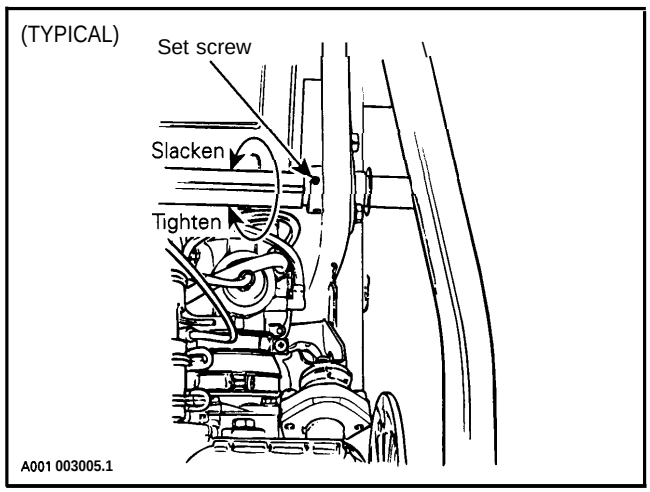

— Extract bearing from its support.

Wrong chaincase perpendicularity will make it difficult to correctly install the bearing in its support due to the countershaft and support misalignment.

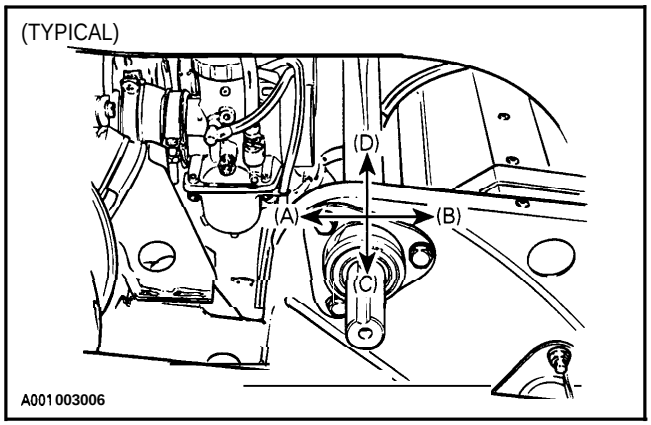

— Add shim(s) (P/ N 5040398 00) between chaincase and frame to obtain easy bearing installation.

CAUTION : **When installing one shim or more between chaincase and frame, secure with 50 mm long screws.**

	BEARING POSITION			
	(A) TOWARD FRONT OF VEHICLE	(B) TOWARD REAR OF VEHICLE	(C) TOWARD BOTTOM OF VEHICLE	(D) TOWARD TOP OF VEHICLE
SHIM LOCATION	LOWER	UPPER	UPPER	LOWER

This chart can be use as a “starting point” to correct the chaincase perpendicularity.

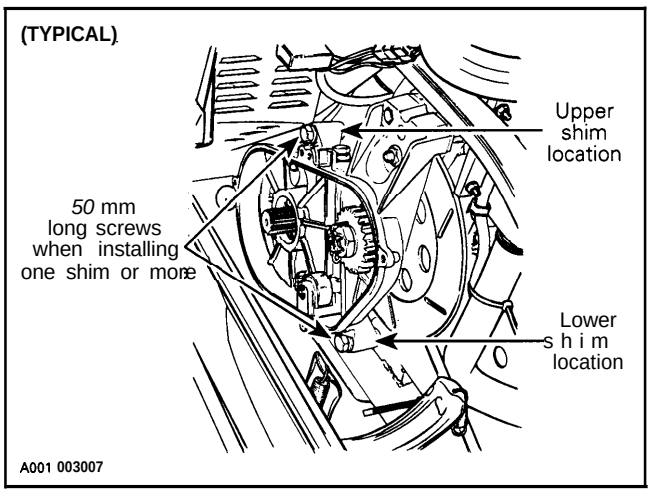

— Do not reinstall the driven pulley at this time.

AXIAL PLAY ADJUSTMENT

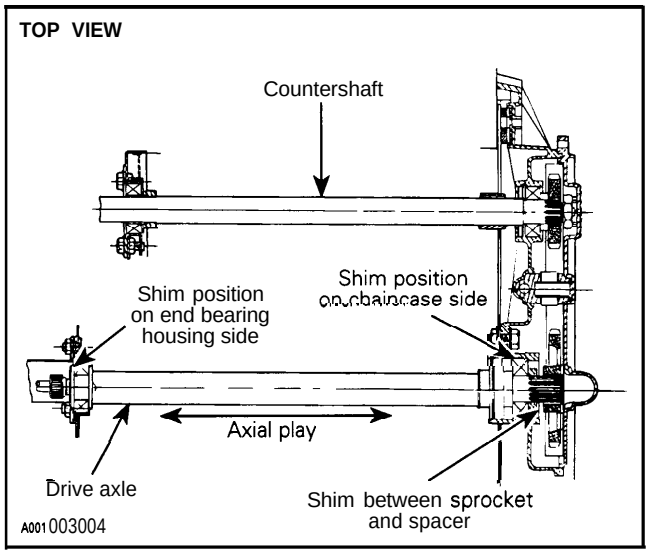

– Push the drive axle toward chaincase and take note of the distance between the sprocket and tunnel.

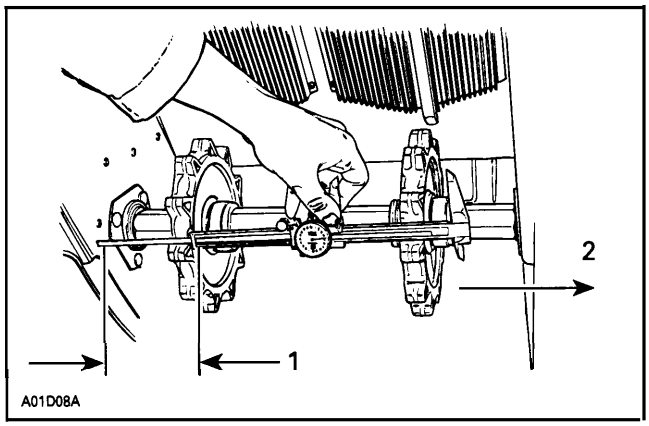

TYPICAL

1. Distance between sprocket and tunnel
2. Drive axle pushed toward chaincase

CAUTION : Be sure drive axle bearing makes full contact all around the shoulder of the bearing bore.

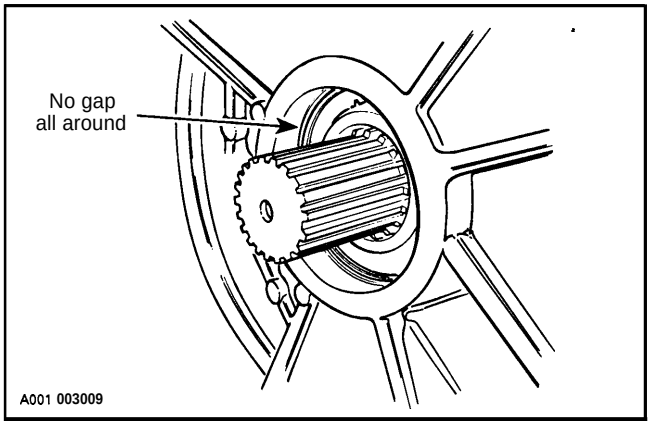

– Pull drive axle toward the end bearing housing and take note of the measurement between sprocket and tunnel.

The drive axle axial play is the difference between these 2 measurements.

— Repeat this procedure 2 or 3 times to obtain an accurate measurement.

The allowable drive axle axial play is O to 1.5 mm (O to .060 in).

The drive axle axial play, as calculated above, should be within the allowable axial play, add shim(s) accordingly,

— Remove drive axle, install required shim(s) as per the **shim position** chart, reinstall drive axle without the suspension and track.

SHIM POSITION

Shim position is important to maintain proper sprocket alignment.

CAUTION : Install shim(s) following **the pattern shown in the chart.**

	SHIM POSITION AND QUANTITY	
SHIM(S) REQUIRED	END BEARING HOUSING SIDE	CHAINCASE SIDE
1	1	
2	1	1
3	2	

When installing shims between the chaincase and the drive axle bearing, there must be same quantity of shims between the drive chain sprocket and spacer.

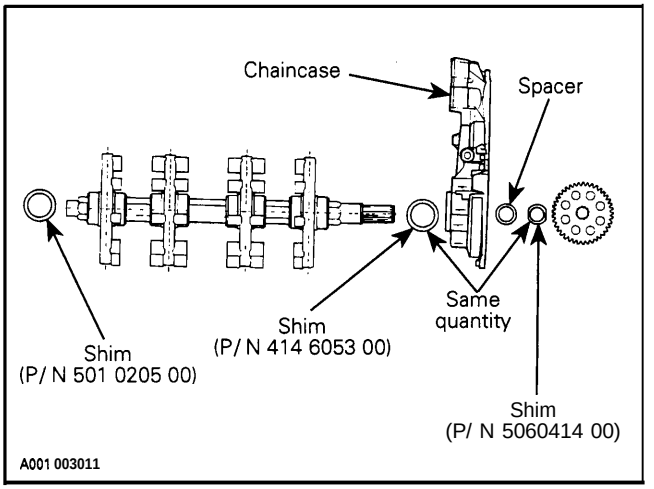

— Doublecheck drive axle axial play as described above.

— Modify total shim thickness as required.

— Reinstall track and suspension. Adjust track tension and alignment.

NOTE : Center the track suspension to ensure that the alignment check made in the next step is accurate.

—To center, grasp the track suspension and move it sideways, left and right. Position the track suspension at the midpoint of its sideways movement.

— Check track front alignment by measuring the gap, on each side between guide cleat and the slider shoe, behind the suspension front axle as shown.

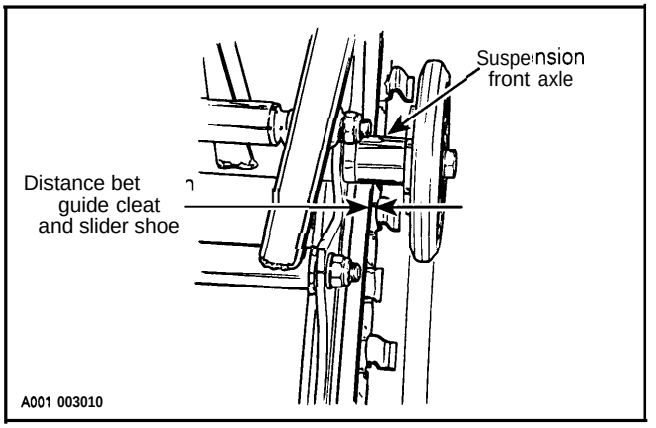

If the difference between each side exceeds 3 mm (1/8 in), redistribute drive axle shims as follows:

DIFFERENCE BETWEEN EACH SIDE	DRIVE AXLE SHIM REDISTRIBUTION
3 to 4.5 mm (1/8 to 3/16 in)	Remove 1 shim from larger gap side. Add 1 shim on smaller gap side.
4.5 to 6 mm (3/16 to 1/4 in)	Remove 2 shims from larger gap side. Add 2 shims on smaller gap side.

INSTALLATION

4, Speedometer Drive Insert

If the drive axle to be installed is a new part and the vehicle is equipped with a speedometer, a correct size speedometer drive insert must be installed into the axle end. Ensure that insert is flush with end of axle.

Position drive axle assembly into location. Install end bearing housing, Install spacer (if applicable) between bearing and lower chaincase sprocket.

Install chaincase and position seals (if applicable), making sure that a gap of approximately 2 mm (1/16 in) exists between end of bearing housing and each seal.

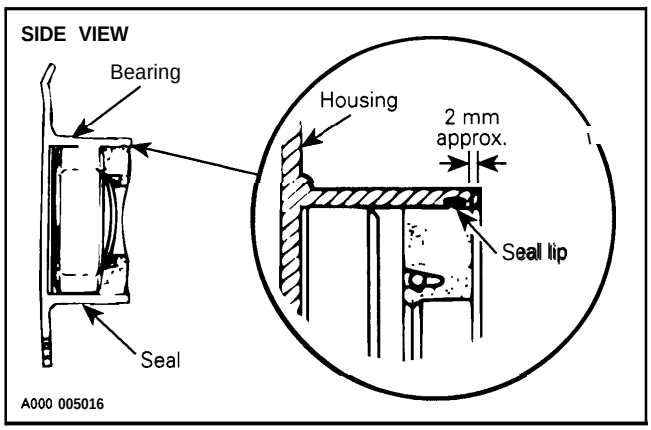

3, Retainer Ring

Make sure that welded nuts are toward inside of tunnel.

Lock drive axle sprocket with a circlip (use new cotter pin on Élan).

Reinstall the chaincase cover (if applicable).

Refill with chaincase oil. Refer to TECHNICAL DATA 10.

Install the suspension. Refer to TRACK 07-06 and adjust track tension and carry out track alignment procedure.

LUBRICATION

15, Grease Fitting

Lubricate end housing bearing with low temperature grease (P/ N 4137061 00).

ADJUSTMENT

Sprocket / Track Alignment

CAUTION : Do not temper with sprocket/track alignment if frame or suspension is damaged.

All Models Except Élan

Sprockets might be repositioned to fit track holes (lugs on S-Series without removing drive axle.

Use drive axle sprocket adjuster kit (P/ N 861 7257 00).

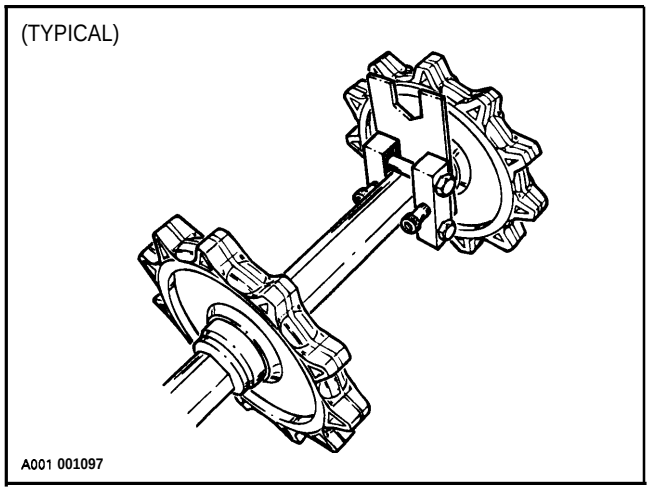

TRACK

TRACK TYPE APPLICATION

Refer to TECHNICAL DATA section10.

GENERAL

This section gives guidelines for track removal. Some components require more detailed disassembly procedures. In these particular cases, refer to the pertaining section in this manual.

INSPECTION

Visually inspect track for :

— cuts and abnormal wear

— broken rods

— broken or missing track cleats

If track is damaged or rods are broken, replace track. For damaged or missing cleats, replace by new ones, using cleat remover (P/ N 5290082 00) for Elan and Tundra II LT (P/N 5290287 00) for all other models. Use large-cleat installer (P/ N 5290288 00) or small-cleat installer (P/ N 5290085 00).

WARNING : **Do not operate a snowmobile with a cut, torn or damaged track.**

REMOVAL

Elan

Remove the following items :

—tool box

— chaincase access plug

— drive axle cotter pin and washer

— suspension

— rear axle

— both drive axle seals

— end bearing housing

— drive axle

— track

Tundra II LT

Remove the following items :

— chaincase cover, sprockets, chain

— muff ler

— upper center idler ass'y

— suspension

— end bearing housing

— drive axle seal

—drive axle (outwards from end bearing housing)

— track

S-Series

Remove the following items :

— speedometer cable

— muff ler

— chaincase cover

— suspension

— drive axle seal

— end bearing housing

— sprockets and chain

— drive axle (toward end bearing housing)

— track

INSTALLATION

All Models

Reverse the removal procedure.

O **NOTE : When installing the track, respect rotation direction indicated by an arrow on track thread.**

Check sprocket /track alignment as described in DRIVE AXLE 07-05.

Track Tension and Alignment

Track tension and alignment are inter-related. Do not adjust one without checking the other. Track tension procedure must be carried out prior to track alignment.

Tension (bogie wheel)

Élan

With rear of vehicle blocked off the ground, check the track tension at middle set of bogie wheels.

35 mm (1-3/8 in) between top inside edge of track and bottom of foot board as shown.

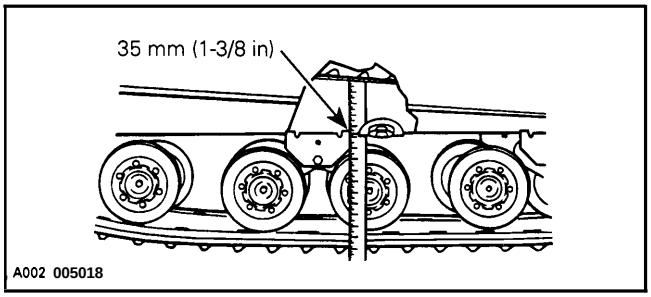

To correct track tension, loosen link plate spring lock nuts on inner side of link plate springs. Turn adjuster bolts clockwise to tighten track or counterclockwise to slacken.

Tighten link plate spring **lock nuts.**

CAUTION : Too much tension will result in power loss and excessive stress on suspension components. If too loose, the track will have a tendency to thump.

Tension (slide suspension)

Lift the rear of vehicle and support with a mechanical stand. Allow the slide to extend normally. Check the gap half-way between front and rear idler wheels. Measure between slider shoe and bottom inside of track.

When using the track tension gauge (P/ N 5290215 00), slide U shape extrusion to proper deflection.

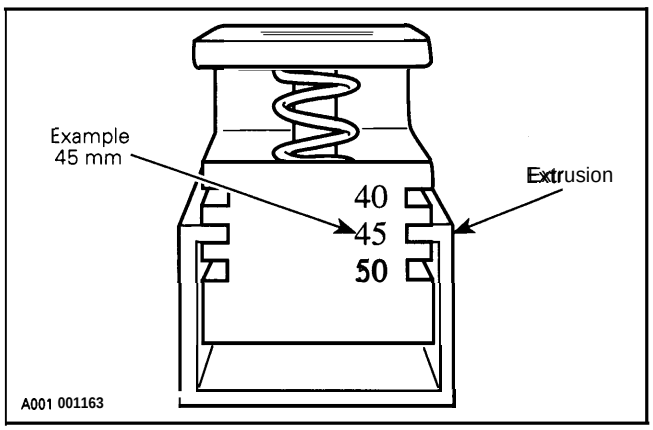

Insert pre-setted gauge between slider shoe and track. Allow gauge to settle by forcing track up and down. Track tension is as specified when edge of gauge reaches lign.

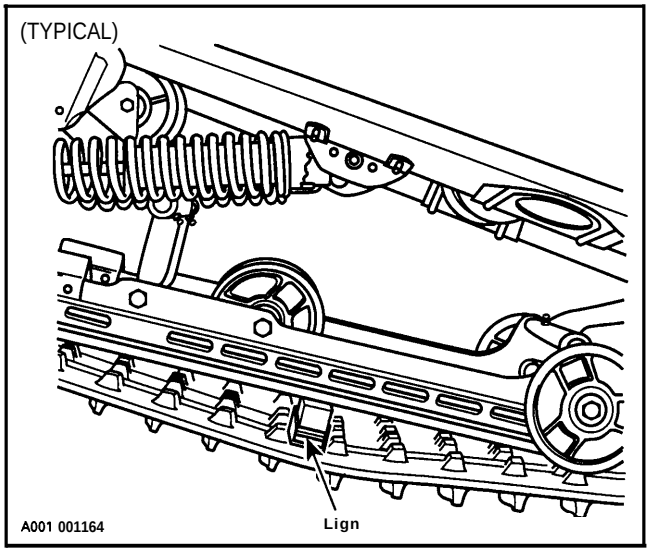

NOTE : Lightly oil track tension gauge center pin to avoid sticking.

Tundra II LT

35 **to** 45 mm **(1-3/8 to 1-25/32 in) when exerting a** downward pull of 7.3 kg (16 lb).

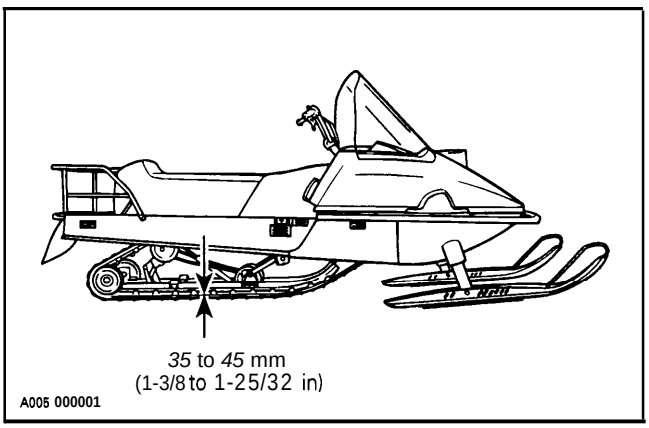

S-Series

40 to 45 mm (1-9/16 to 1-3/4 in) when exerting a downward pull of 7.3 kg (16 lb).

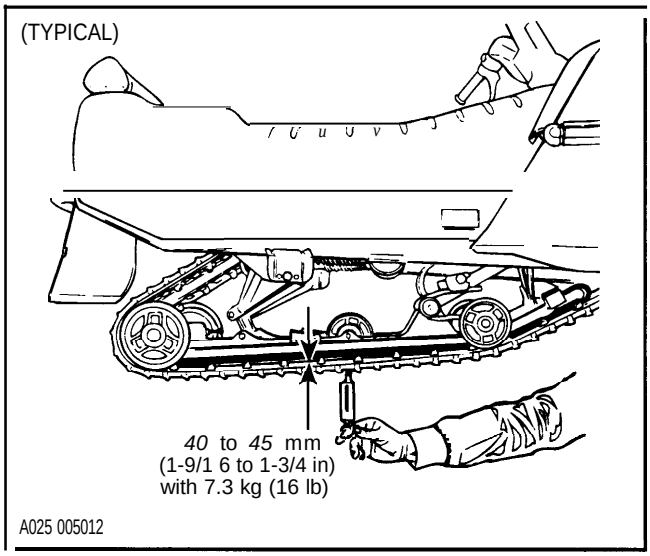

All Models

CAUTION : Too much tension will result in power loss and excessive stress on suspension components. If too loose, the track will have a tendency to thump.

To adjust, loosen the rear idler wheel retaining screws (one side only on Tundra II LT and S-Series) and the adjuster bolt lock nut ; then loosen or tighten the adjuster bolts located on the inner side of the rear idler wheels.

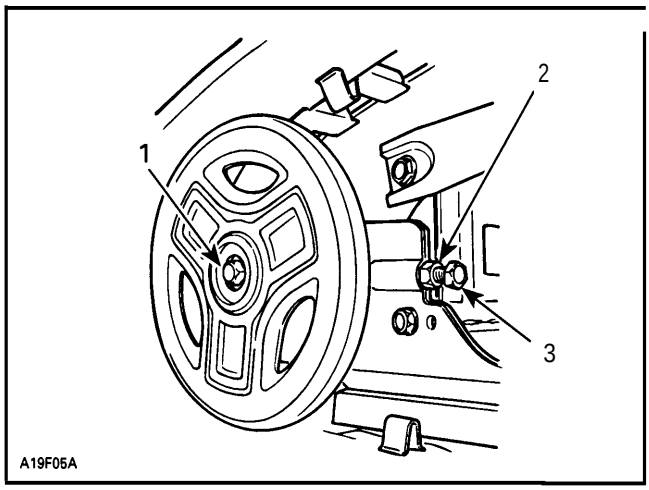

TYPICAL

1. Retaining screw
2. Lock nut (except S-series)
3. Adjuster bolt

Alignment (bogie wheel)

#/an

With rear of vehicle supported off the ground, start engine and allow the track to rotate slowly.

Check if track is well centered and turns evenly on rear sprockets. Distance between edge of track and link plate must be equal on both sides.

NOTE : Sometimes, after reinstalling, sprocket O teeth seem to skip out of track notches. Apply liquid soap on sprocket teeth to correct.

WARNING : Before checking track alignment, ensure that the track is free of all particles which could be thrown out while track is rotating. Keep hands, feet, tools and clothing clear of track.

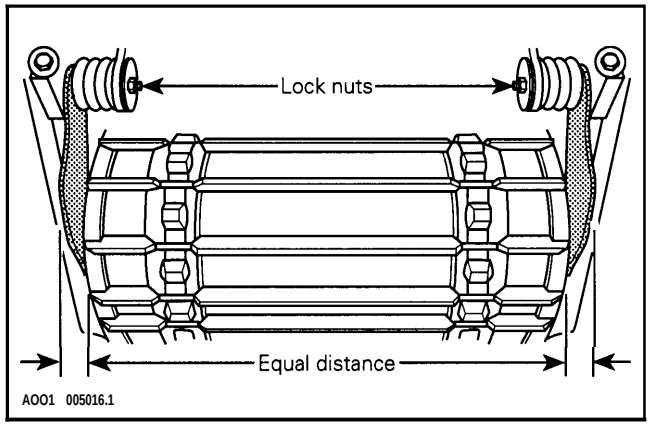

Rotate track slowly and recheck alignment and tension.

To correct alignment, loosen link plate spring lock nut on side where track is closest to the link plate.

Turn track adjuster bolt on same side, clockwise until track realigns.

Tighten link plate spring lock nut.

Alignment (slide suspension)

WARNING : Before checking track tension, ensure that the track is free of all particles which could be thrown out while it is rotating. Keep hands, tools, feet and clothing clear of track. Ensure no one is standing in close proximity to the vehicle.

All Models

With rear of vehicle supported off the ground, start engine and allow the track to rotate **slowly.**

Check that the track is well centered ; equal distance on both sides between edges of track guides and slider shoes.

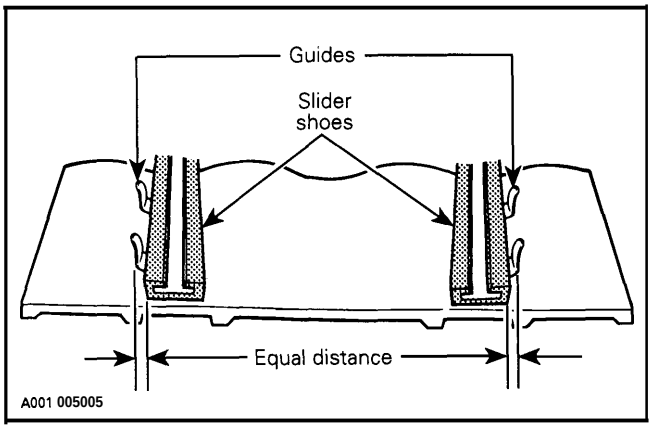

◆ **WARNING : Before checking track alignment, ensure that the track is free of all particles which could be thrown out while track is rotating. Keep hands, tools, feet and clothing clear of track.**

To **correct, stop** engine then loosen the lock nuts and tighten the adjuster bolt on side where guides are farthest to slide. Tighten lock nuts and recheck alignment.

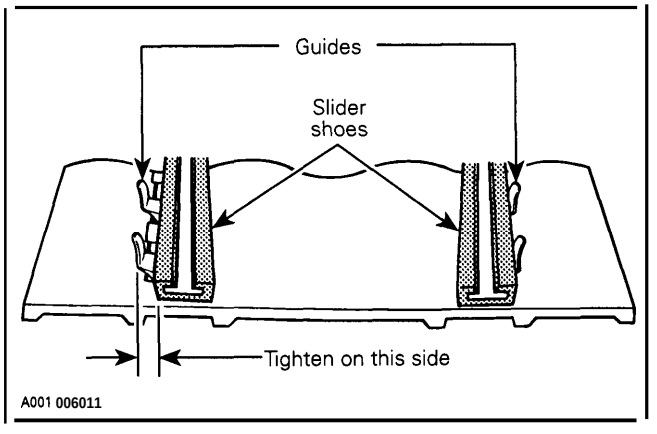

Tighten lock nuts and the idler wheel retaining screws.

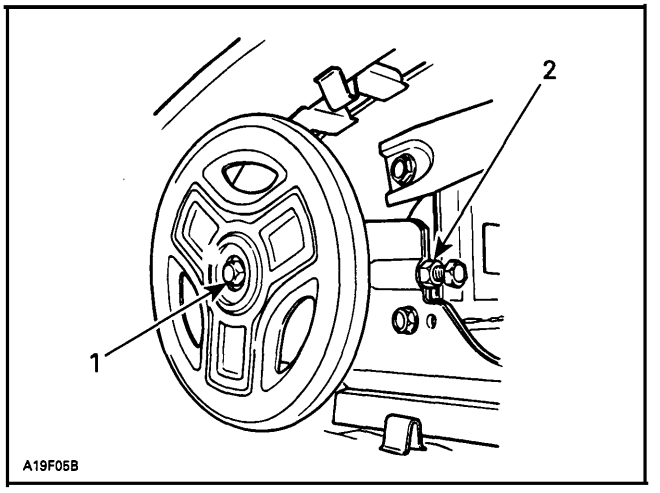

TYPICAL
1. Retighten
2. Retighten (except S-series)

Restart engine, rotate track slowly and recheck alignment.

TRACK CLEAT

Removal

— **Raise rear of vehicle off the ground and lift snow guard then rotate track to expose a cleat to be replaced.**

— **Using track cleat remover (P/N 5290082 00)** for Elan and Tundra II LT. Use (P/N 5290087 00) for all other models.

Installation

O **NOTE : Keep the same pitch between guide cleats.**

— Place new cleat in position and using small track cleat installer (P/ N 529 0085 00) o-r large cleat installer (P/ N 529 0288 00) bend cleat then Push tabs into rubber.

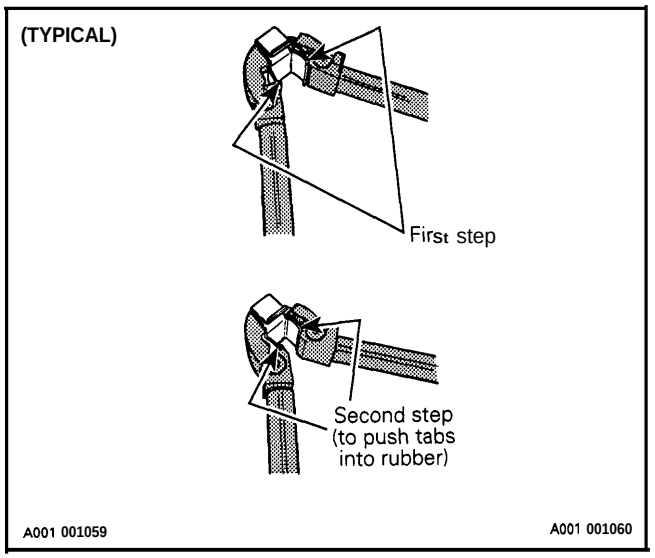

TABLE OF CONTENTS

STEERING SYSTEM **08-01-1**
INSPECTION 08-01-4
DISASSEMBLYAND ASSEMBLY 08-01-4
INSPECTION 08-01-4
ADJUSTABLE HANDLEBAR 08-01-6
STEERING ADJUSTMENT(SKIS) 08-01-6
LUBRICATION w... 08-01-9

SUSPENSIONAND SKISYSTEM **08-02-1**
SUSPENSION **08-02-1**
INSPECTION **08-02-2**
DISASSEMBLYANDASSEMBLY **08-02-2**
ON-VEHICLE COMPONENTVE REIFICATIO N... ..... **08-02-4**
DISASSEMBLY **08-02-4**
INSPECTION **08-02-5**
INSTALLATION **08-02-5**
DISASSEMBLY **08-02-7**
INSPECTION **08-02-7**
INSTALLATION **08-02-8**

STEERING SYSTEM

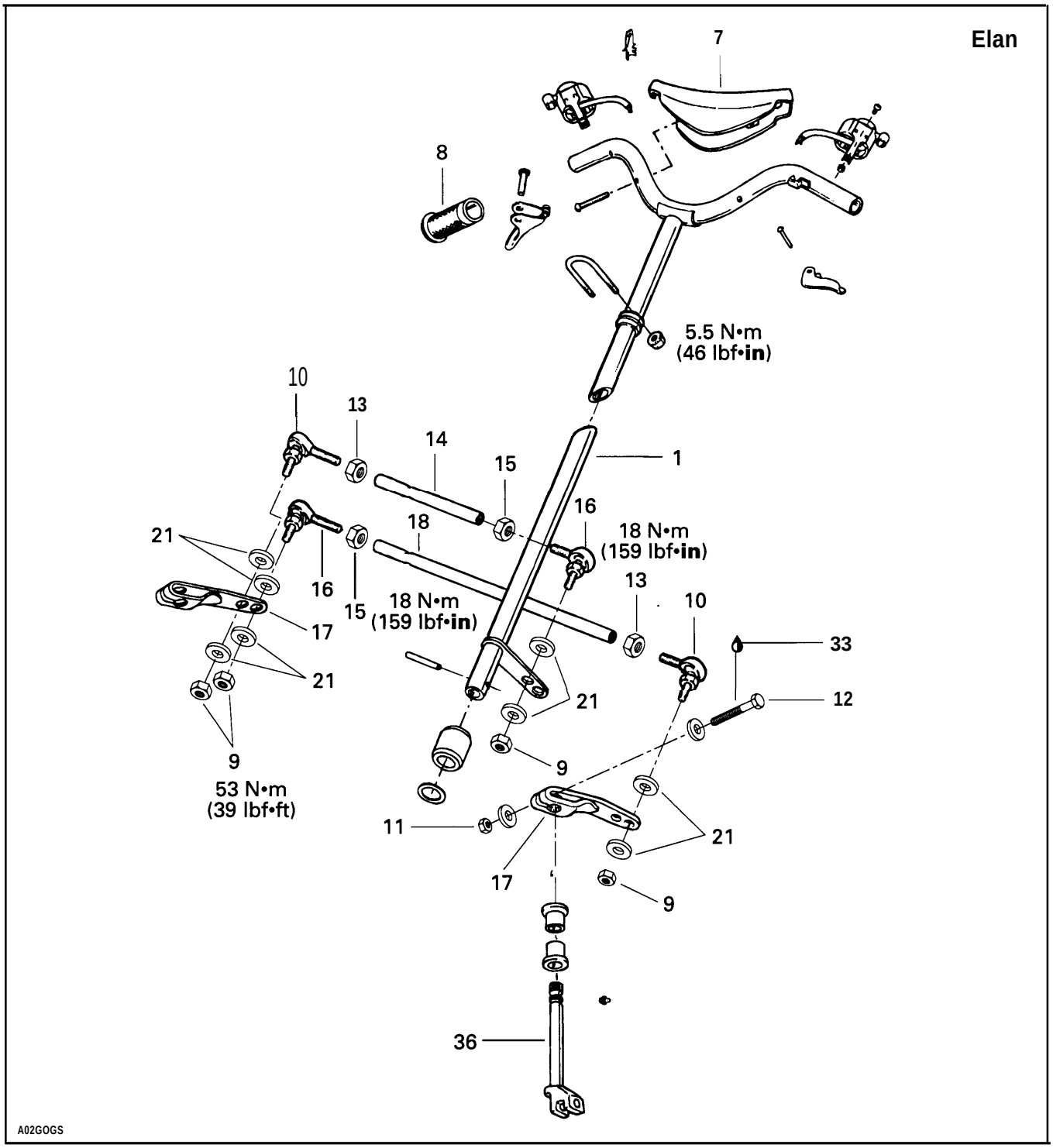

Tundra II LT

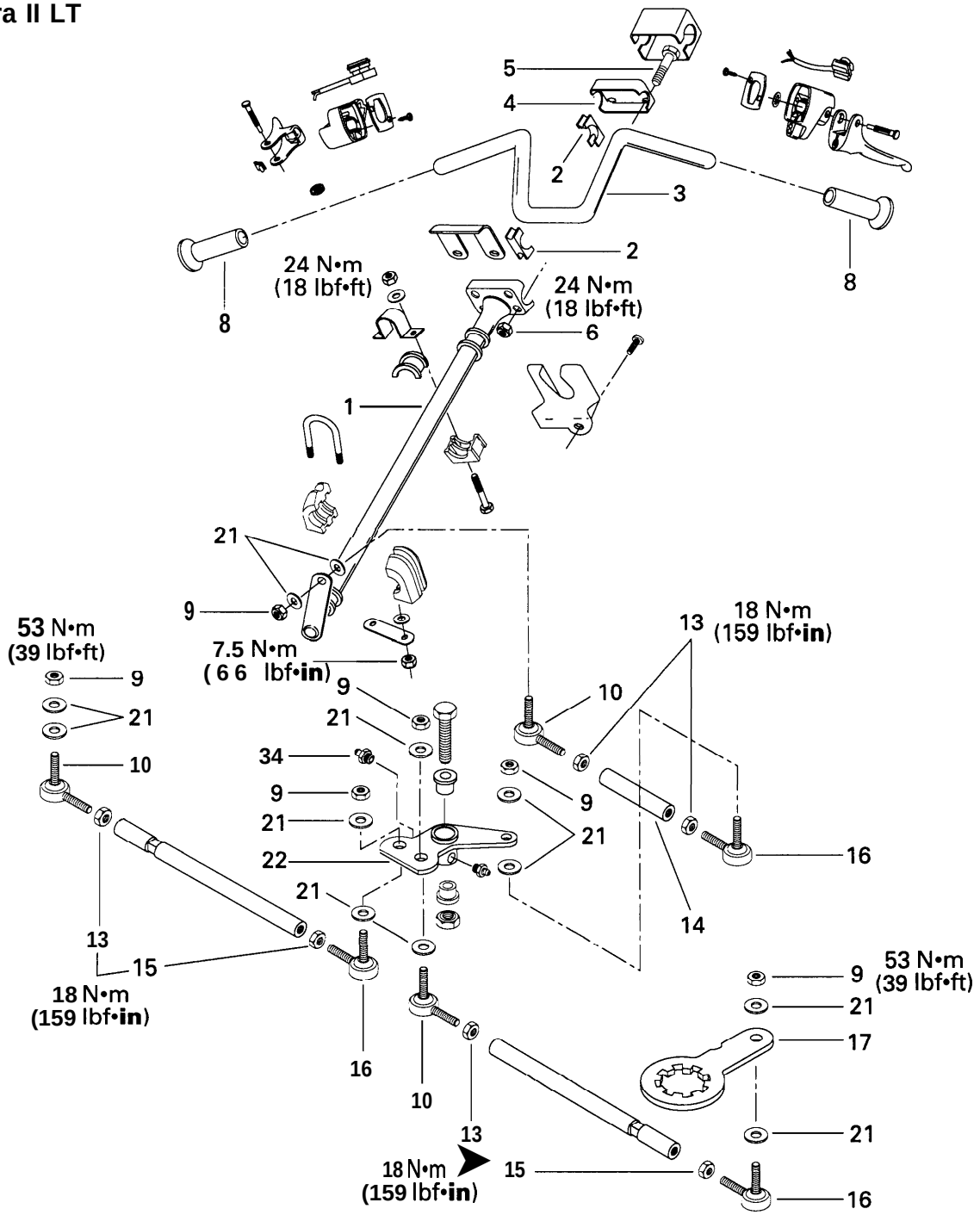
5
4
2
3
2
8
8
24 N•m
(18 lbf•ft)
24 N•m
(18 lbf•ft)
6
1
21
9
7.5 N•m
(66 lbf•in)
53 N•m
(39 lbf•ft)
9
21
10
13
18 N•m
(159 lbf•in)
10
9
21
34
9
21
22
21
9
21
16
14
13
15
18 N•m
(159 lbf•in)
16
10
13
18 N•m
(159 lbf•in)
15
16
9
53 N•m
(39 lbf•ft)
21
17
21
A05GOAS

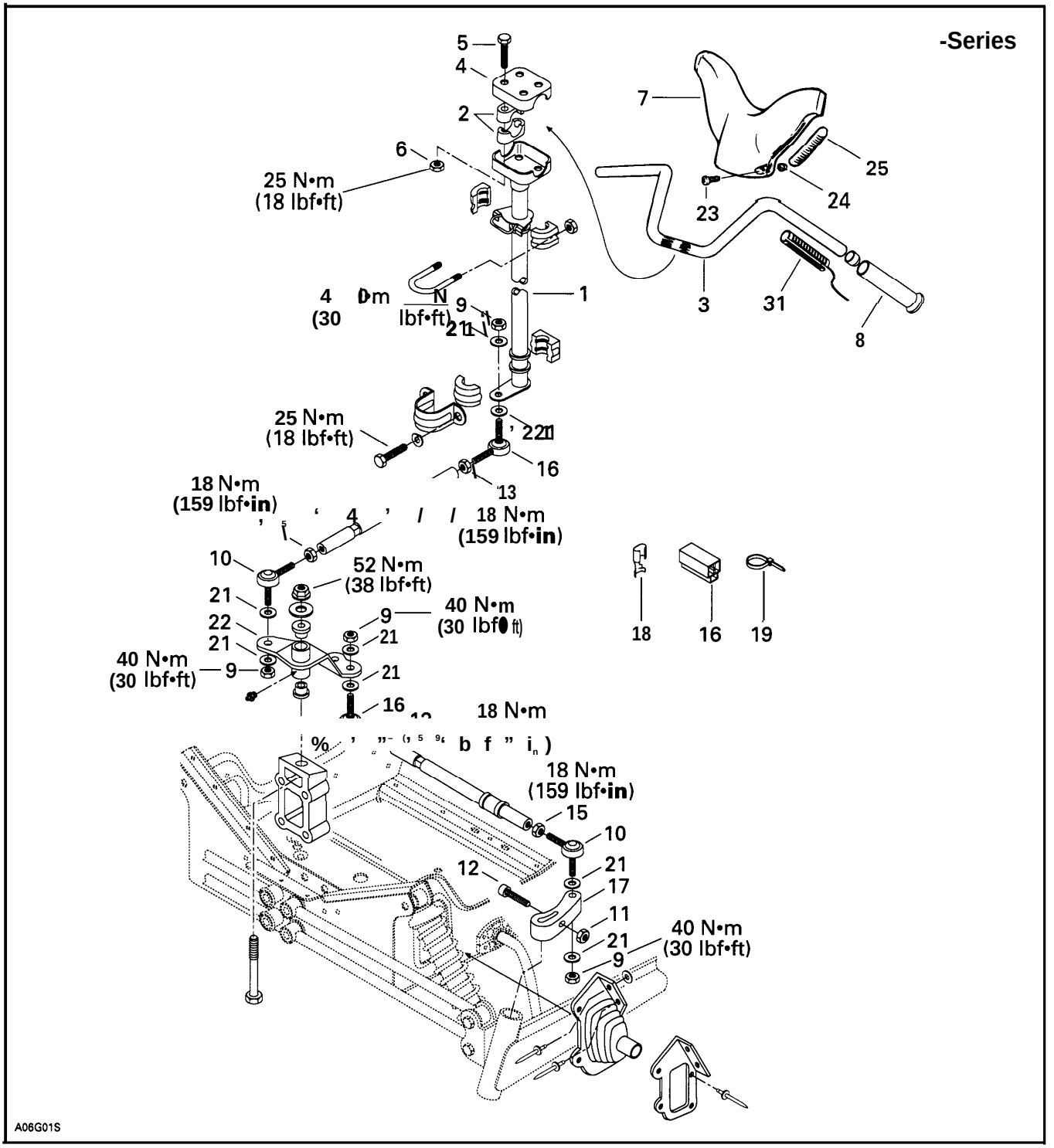
-Series
5
4
2
6
25 N•m
(18 lbf•ft)
7
25
24
23
3
31
8
1
9
21
25 N•m
(18 lbf•ft)
22
16
13
18 N•m
(159 lbf•in)
10
52 N•m
(38 lbf•ft)
21
22
21
40 N•m
(30 lbf•ft)
9
21
40 N•m
(30 lbf•ft)
9
21
16
18
16
19
18 N•m
(159 lbf•in)
15
10
21
12
17
11
21
9
40 N•m
(30 lbf•ft)
A06G01S

INSPECTION

Check skis and runner shoes for wear, replace as necessary. (See section 08-02).

17,36, Steering Arm and Ski Leg

Make sure steering arm and ski leg splines interlock (if applicable).

◆ WARNING : All parts having **worn splines have to be changed by new ones.**

Check general condition of steering system.

Check general condition of steering system components for wear and replace if necessary.

DISASSEMBLY AND ASSEMBLY

8, Grip

Grips can be removed and installed without any damage by injecting compressed air into the handlebar or by heating them with a heat gun.

1, Steering Column

Remove steering pad then handlebar ass'y.

Detach short tie rod from steering column working under engine. On S-Series remove air intake silencer and carburetor(s) to gain access.

17, Steering Arm

To maintain correct steering geometry when reassembling, punch mark the steering arm and ski leg before removal.

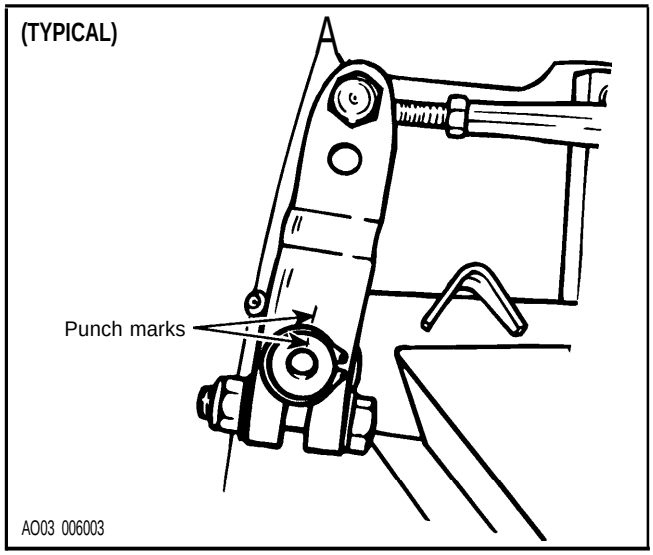

31, Heating Grip Element

On vehicle equipped with heating grips, grips might be unremovable as explained earlier, in this case, carefully proceed as follows to prevent damaging heating elements.

Locate the grip heater wires inside handlebar; look through end of grip. Start cutting grip exactly opposite heater wires and immediately peel open to locate gap in heating element, as shown.

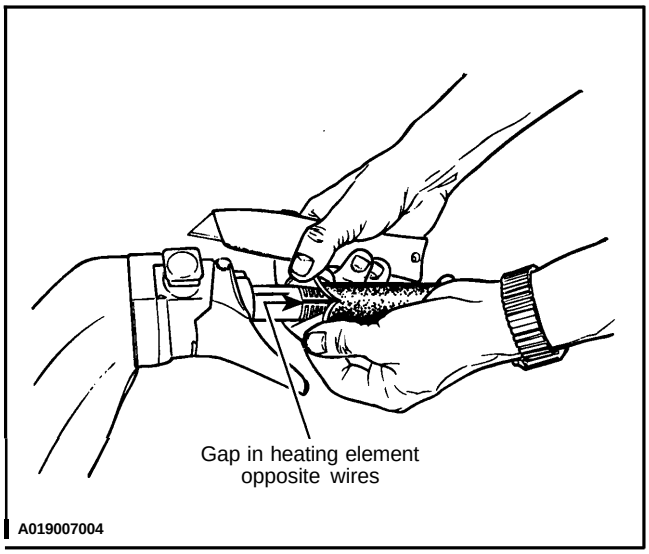

Continue cutting along gap and remove **grip.** If required, slowly peel heating element from handlebar and remove.

To install, stick heating element to handlebar making sure wires do not interfere with operation of accelerator or brake handle.

● WARNING : **Never use lubricants (e.g. soap, grease, etc.) to install handlebar grip, use instead a mix of soap and water. Mix 40 parts of water with one part of dish washing soap (recommended: Ultra Joy, Sunlight or Palmolive).**

Insert new grip with a rubber mallet. Heat grip with a heater gun or a spot light to facilitate installation.

INSPECTION

The resistance tolerance on heating element should be on high power between 2.2 and 3.2 ohms, on low power 9.2 to 13.8 ohms.

10,16, Ball Joint (Left Hand and Right Hand Treads)

Inspect ball joint ends for wear or looseness, if excessive, replace.

Screw threaded end of ball joint into tie rod. The maximum external threaded length not engaged in tie rod must not exceed the value L in the following chart :

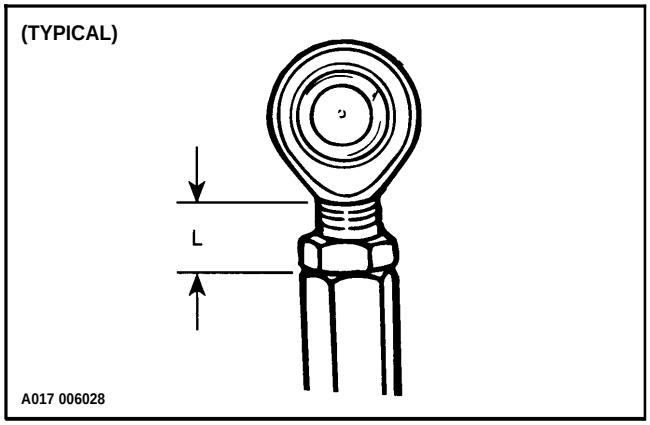

MODEL	L	
	mm	(in)
I All models	20	(25/32)

The cut-off section of the tie rod end must run paralle with the horizontal line of the steering arm when as sembled on vehicle. The ball joint should be restrained when tightening tie rod end lock nut. For torque specifications see specific exploded view.

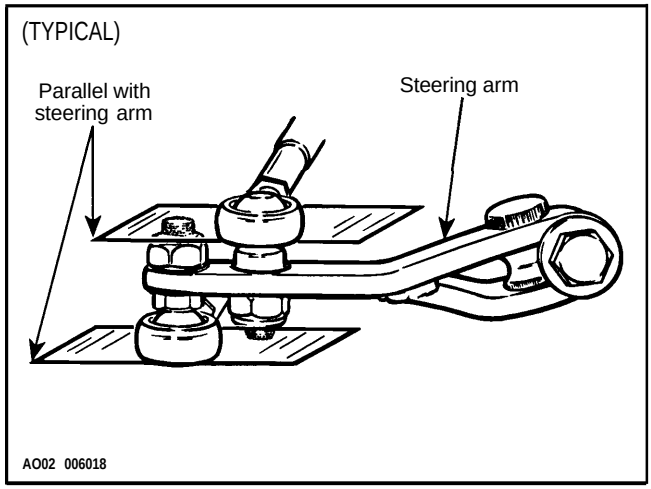

◆ **WARNING : The cut off section of the ball joint must run parallel with the steering arm. When tightening lock nuts, restrain ball joint with appropriate size wrench. Ensure not too many threads are kept outside of the tie rod according to the thread length chart.**

21, Hardened Washer

Install a hardened washer on each side.

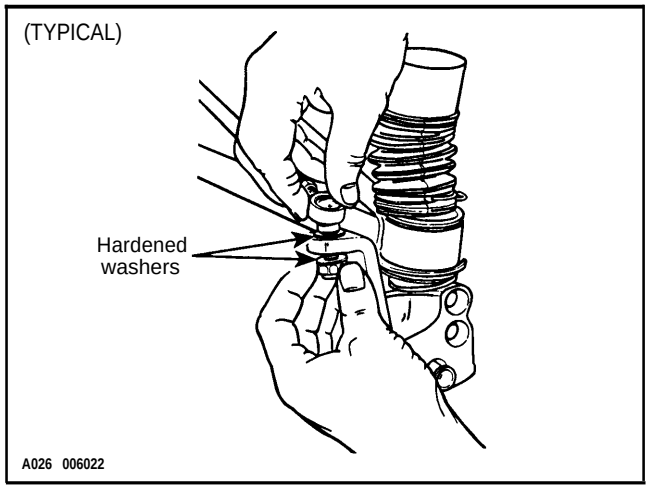

17,36, Steering Arm

The steering arm angles should be equal on both sides when skis a-re parallel with vehicle.

Steering arm must run parallel to ski.

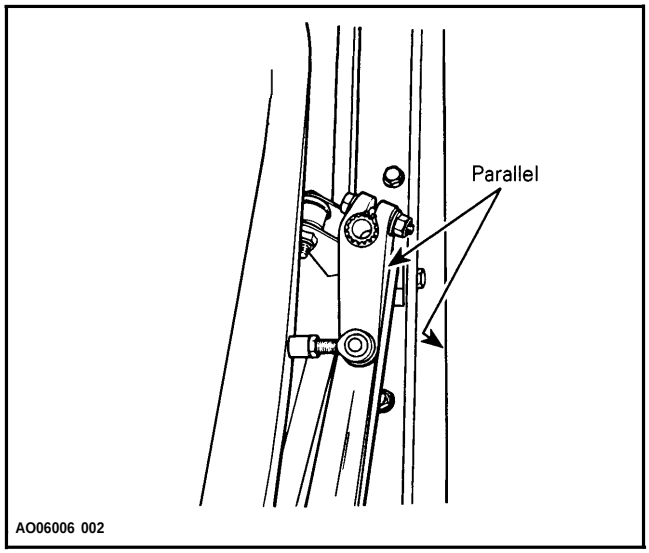

9,13,15, Ball Joint Nut and jam nut

Tighten ball joint jam nuts to specified torque (see illustration).

11,12, Steering Arm Nut and bolt

Tighten steering arm nuts to specified torque (see illustration).

ADJUSTABLE HANDLEBAR

1,3, Steering Column and Handlebar

If applicable, remove the steering clamp and nuts holding the handlebar to the steering column. Tighten nuts to the specified torque (see illustration).

2,4,5,6, Handlebar Support, Steering Clamp, Bolt and Nut

Install the four handlebar support, steering clamp, the four screws and nuts to the column, as illustrated.

See applicable exploded view for each model,

Adjust the steering handle to the desired position.

Lock the handle in place by tightening the four nuts to 26 N•m (19 lbf•ft).

CAUTION : Tighten the nuts equally **in a criss-cross sequence and ensure there is an equal gap on each side of the clamps.**

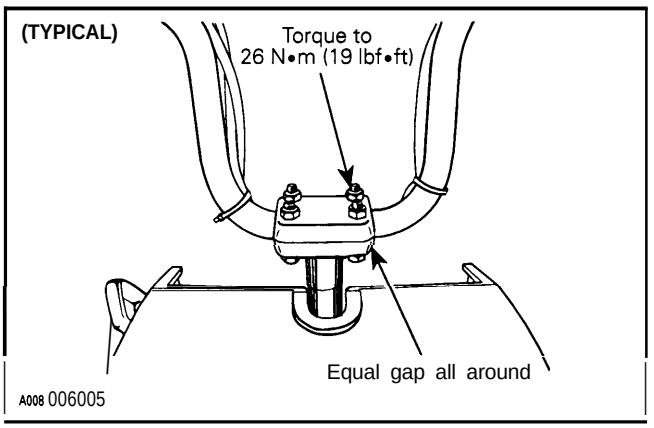

WARNING : Avoid contact between the brake handle and the windshield by NOT **adjusting the handlebar too high.**

WARNING : Make sure that the steering pad and all controls are properly fixed to their normal location on the handlebar.

CAUTION : Plastic alloy components such as fuel tank, windshield, controls, etc. can be cleaned using mild detergents or isopropyl alcohol and a soft clean cloth. Never clean plastic parts with strong detergent, decreasing agent, paint thinner, acetone, etc. Do not apply isopropyl alcohol directly on decals.

7,23,24,25, Steering Pad, Bolt, Nut and Rubber Attachment

CAUTION : Prior to installation, perform handlebar adjustment.

Properly fit the steering pad to the handlebar. Assemble using the two rubber attachments, nuts and bolts.

WARNING : Make sure that the steering pad and all controls are properly fixed to their normal location on the handlebar.

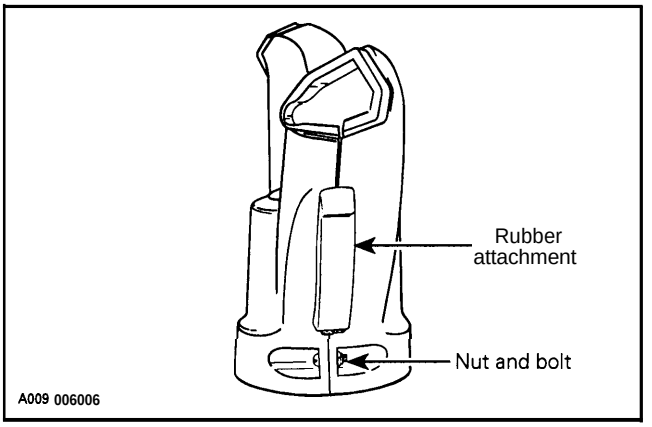

STEERING ADJUSTMENT (SKIS)

Definitions

TOE-OUT :

A difference measurement between front edge A and rear edge B of skis as viewed from top side of suspension system. It is adjustable.

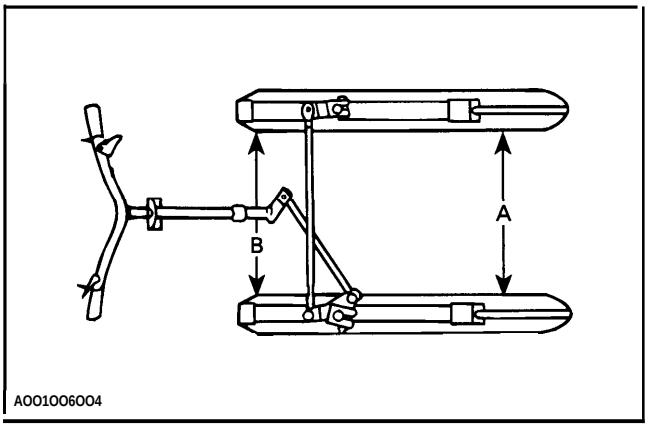

CAMBER :

A specific inward or outward tilt angle of ski leg compared to a vertical line when viewing vehicle from front. This angle is not adjustable **on these models.**

Adjustments

TOE-OUT

l b

Skis should have a total toe-out of 6.6 mm (1/4 in). When they are in straight-ahead position. If adjustment is required, proceed as follows :

13,15, Tie Rod Jam Nut (LH and RH)

Loosen the jam nuts locking the tie rod in place. Turn tie rod manually until alignment is correct. Torque jam nuts as specified in the applicable illustration.

IMPORTANT: **Close front of skis manually to take all slack from steering mechanism.**

NOTE : A rubber band can be hooked in front of skis to keep them closed.

NOTE : To make sure skis are in straight-ahead position, place a straight edge against pre-adjusted **track and measure distance between front and rear of skis and straight edge. Distances should be equal. After ski toe-out adjustment, distance at front of ski must be 3.3** mm (1/8 in) more than at rear on both sides for a total toe-out of 6.6 mm (1/4 in).

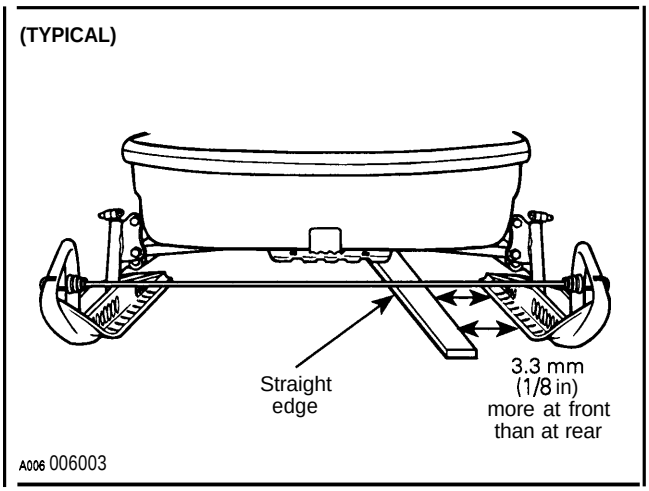

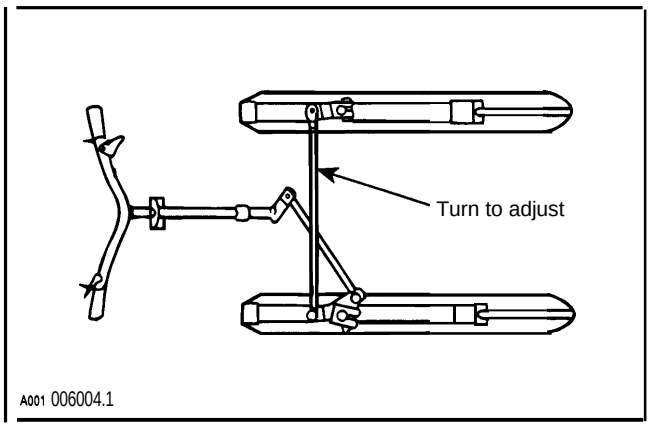

Check that handlebar is horizontal when skis are in straight ahead position. To adjust :

— Loosen shorter tie rod jam nuts.

—Turn tie rod manually until handlebar is horizontal.

—Torque jam nuts as specified in the applicable illustration.

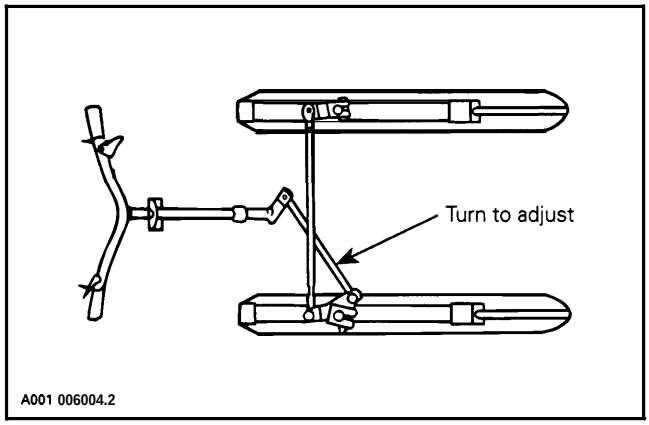

Tundra II LT

Adjustments should be performed following this sequence :

— Pivot arm centering/ horizontal handlebar.

— Set toe-out.

PIVOT ARM CENTERING/ HORIZONTAL HANDLEBAR

Turn handlebar until pivot arm is well centered in slot of its bracket.

Check if handlebar is horizontal. To adjust, loosen lock nuts of short tie rod and turn it accordingly.

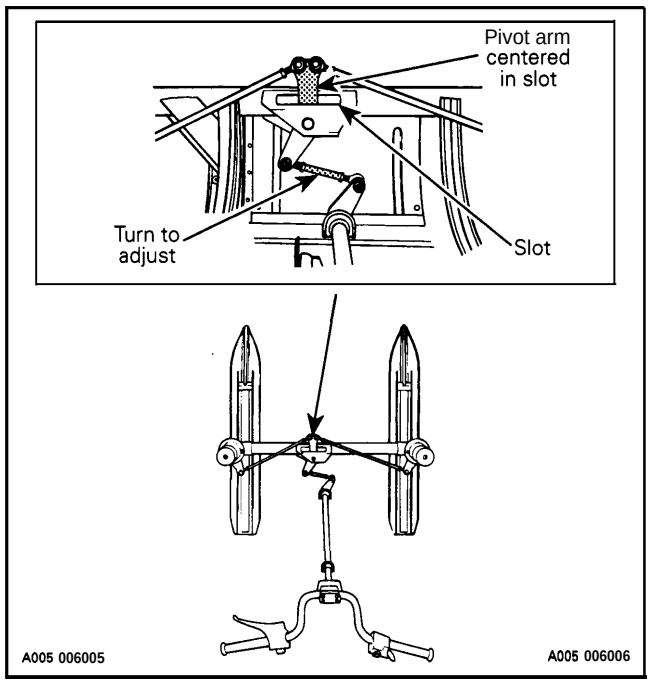

WARNING : **Maximum ball joint external threaded length not engaged in the tie rod end must not exceed 15 mm (19/32 in). Torque lock nut to** 20 N•m **(15** lbf•ft**).**

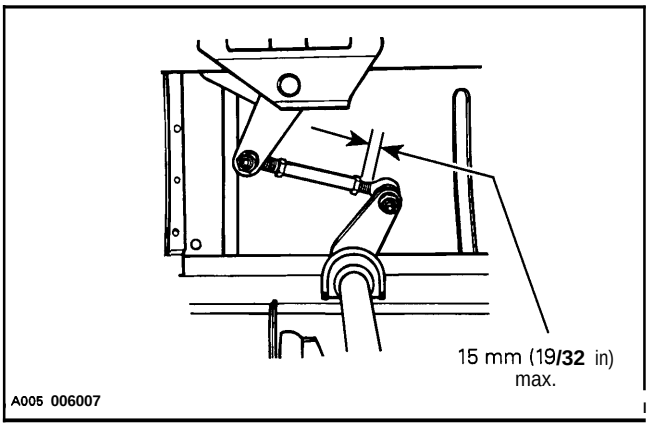

Restrain tie rod while firmly retighten nuts so that ball joint sockets run parallel with steering arm and pivot **arm.**

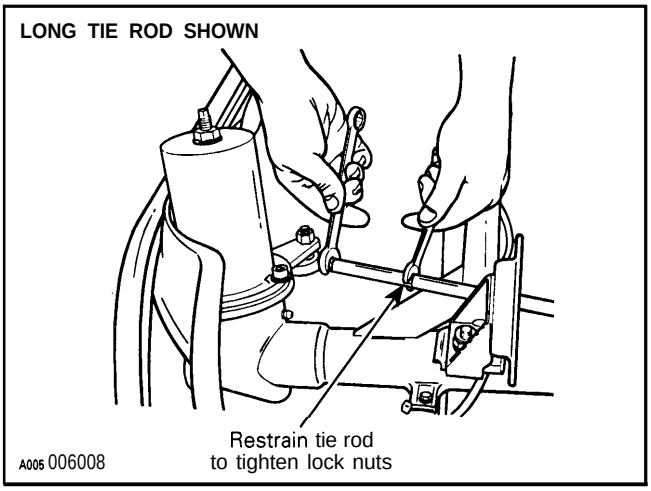

◆ **WARNING : Ball joint sockets must run parallel with steering arm and pivot arm. Tie rod must be restrained when tightening lock nuts.**

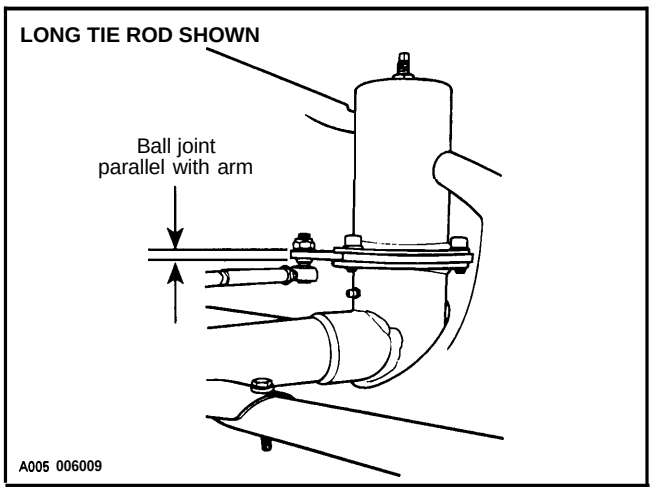

Ensure that pivot arm is still centered and check ski toe-out.

TOE-OUT

Loosen lock nuts of long tie rods and turn each tie rod so that skis are in a straight ahead position. To adjust toe-out, slightly turn both tie rods exactly the same amount.

Check external threaded length not engaged and firmly retighten nuts as specified above.

NOTE : To make sure skis are in straight-ahead position, place a straight edge against pre-ad-**justed track and measure distance between front and rear of skis and straight edge. Distances should be equal. After** ski toe-out adjustment, distance at front of ski must be 3.0 mm (1/8 in) more than at rear on both sides for a total toe-out of 6 mm (1/4 in).

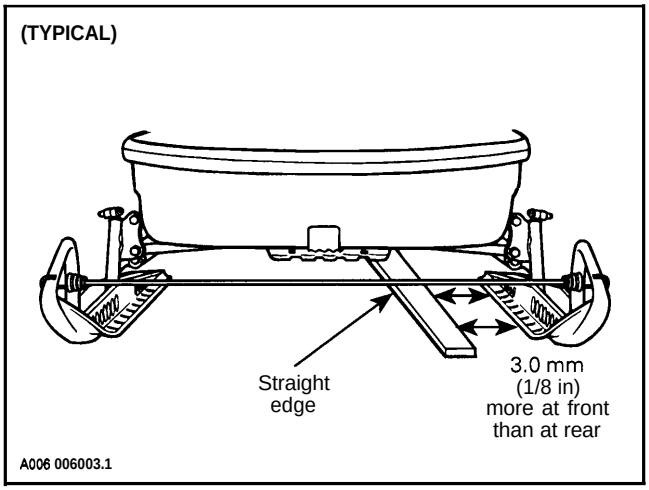

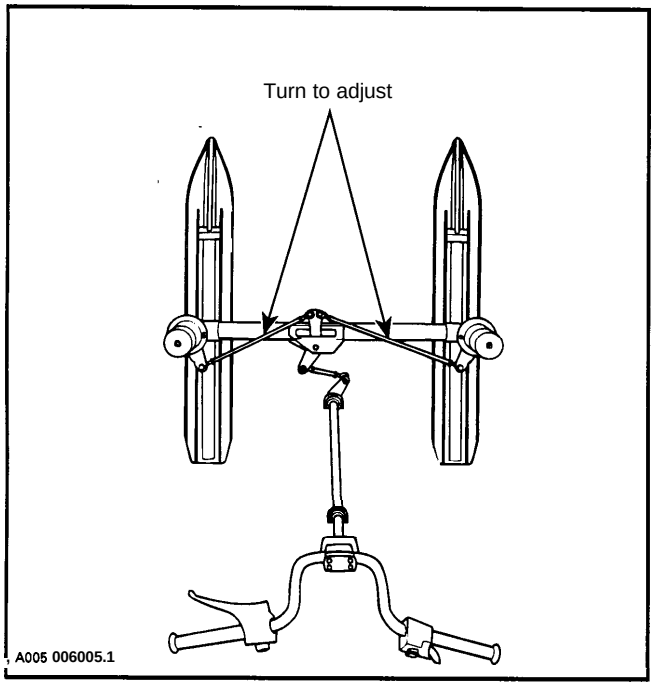

DSA S-Series

Adjustments should be performed following this sequence :

— Pivot arm centering.

— Set camber angle (except for S-Series).

— Check for horizontal handlebar.

— Set toe-out,

DSA System

PIVOT ARM CENTERING

◆ **WARNING : Do not attempt to adjust skis straight ahead position by turning ball joint on tie rod no. *14.***

13,14, stat,22, Jam Nut, Tie Rod and Pivot Arm

With handlebar in straight position, center of pivot arm must be in line with end of bolt. Loosen jam nuts on tie rod **no. 14** (LH threads on steering column end) and turn tie rod accordingly. Tighten jam nuts to 18 N•m (159 lbf•**in**).

◆ **WARNING : Never lengthen tie rod so that threated portion of ball joint exceeds 20 mm (25/32 in).**

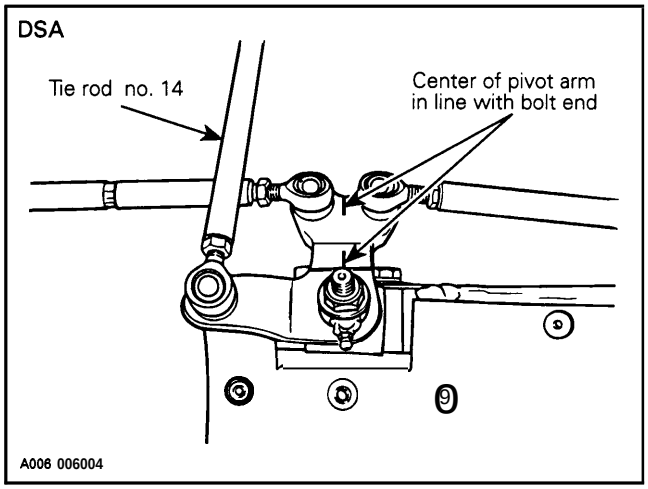

LUBRICATION

◆ **WARNING : Do not lubricate throttle and/or brake cable, housing and spring coupler bolts.**

Grease Fitting and Ski Leg

Use low **temperature grease only** (P/ N **4137061 00).**

Élan

Lubricate the ski legs at grease fittings until new grease appears at joints. Lubricate steel on steel ball joints and **steering column bushings.**

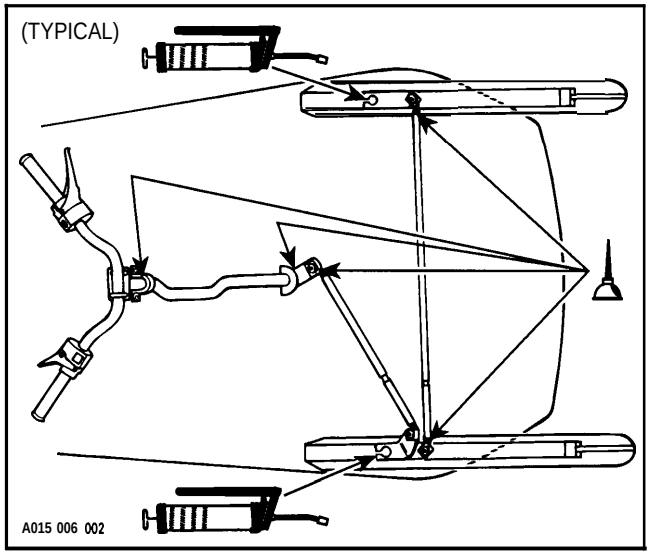

Tundra II LT

Lubricate front suspension posts and pivot arm at grease fittings. Pump five strokes of grease gun on each post.

NOTE : There are three grease fittings.

O

Oil ball joints and steering column bushings.

NOTE : There are eight lubrication points.

O

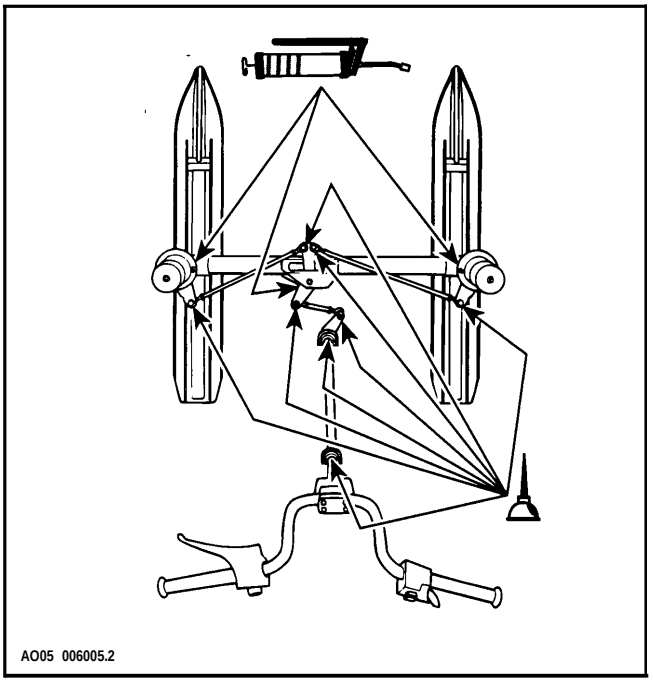

Other grease fittings require low temperature grease (P/ N 4137061 00) injected with a grease gun.

The following symbols will be used to show what type of lubricant should be used at the suitable locations.

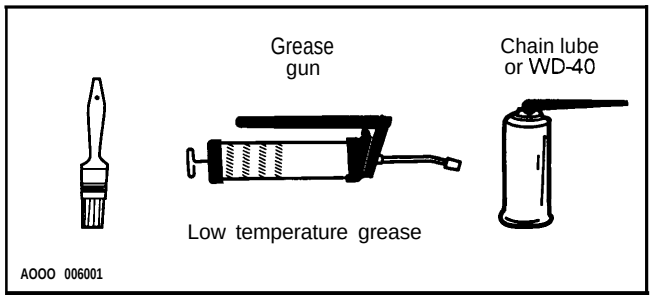

Lubricate :

S-Series

— Steering column.

— Upper and lower control arms drop link and tie rod ends.

—Grease ski legs, ski pivots and idler arm.

—Coat stabilizer sliders with grease, and oil their ball joints if so equipped.

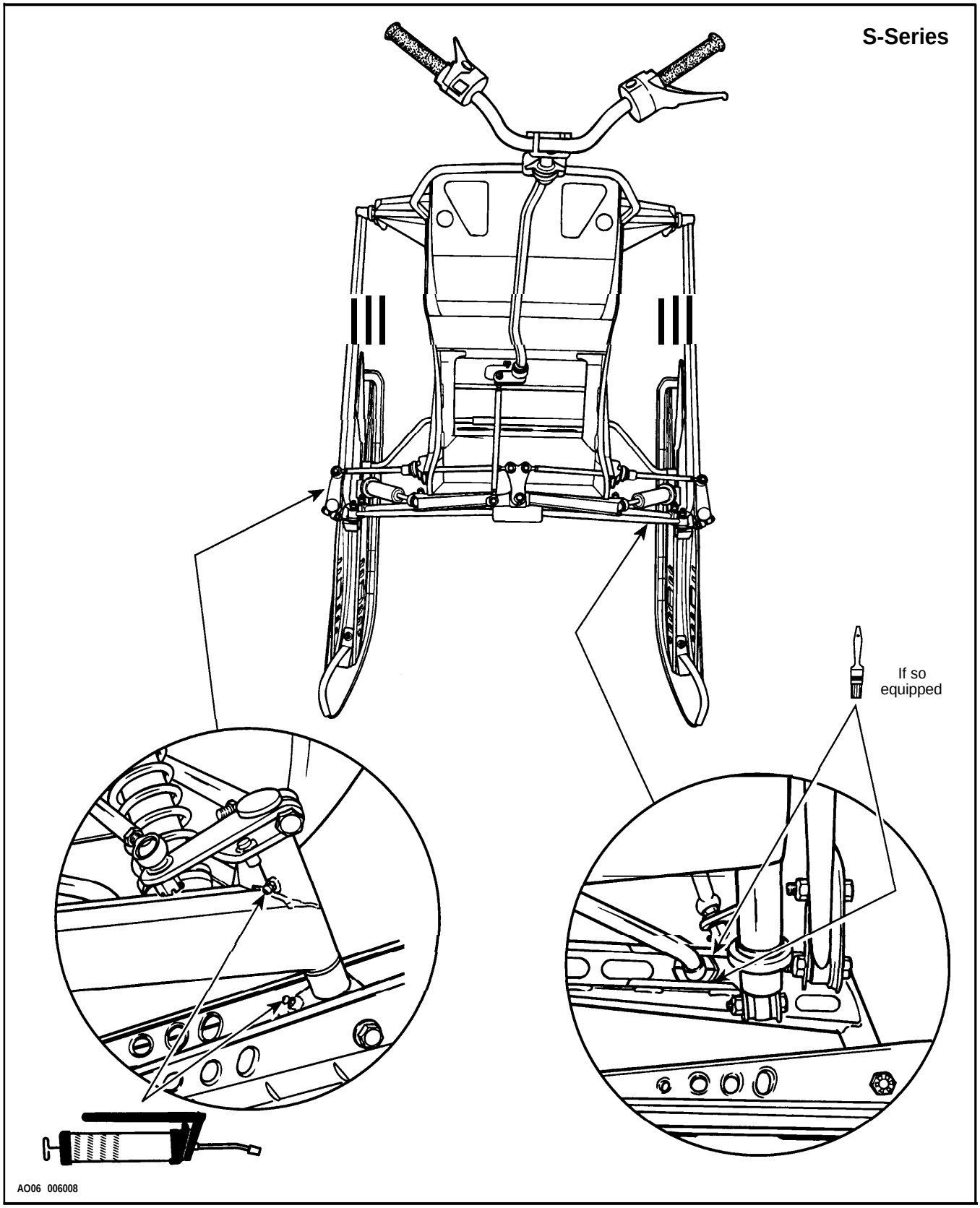
S-Series
If so equipped
AO06 006008

SUSPENSION AND SKI SYSTEM

SUSPENSION

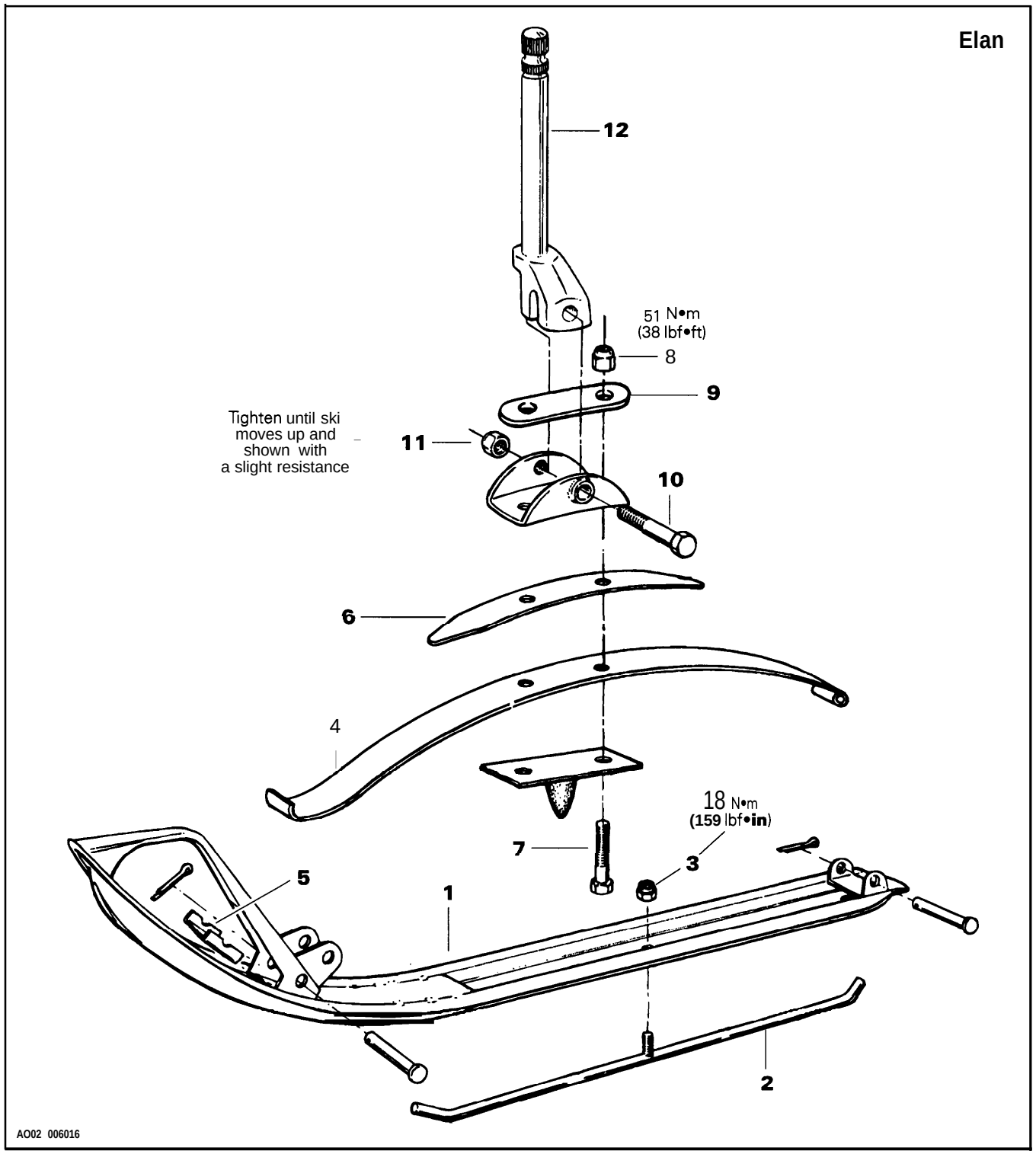

INSPECTION

1,2, Ski and Ski Runner

Check skis and ski runners for wear, replace as necessary.

12, Ski Leg

Make sure steering arm and ski leg splines interlock.

◆ WARNING : All **parts having worn splines have to be changed by new ones.**

Check general condition of steering system components for wear and replace if necessary.

DISASSEMBLY AND ASSEMBLY

2, Runner

◆ **WARNING : Observe caution while prying or removing steel ski runners from ski slots as they are under tension and may spring out. Check that ski runners are not worn more than half of their original thickness.**

Replace ski runner when half worn.

3, Nut

Torque to 18 N•m (159 lbf•in).

4,6, Main and Auxiliary Spring Leaf

▼ **CAUTION : When disassembling leaf coupler from spring leaves, be careful of leaf tension.**

7,8,9, Bolt, Nut and Locking Tab

When assembling spring leaves, cross each and temporarily insert one nut, locking tab and bolt. Position them parallel to each other and install the remaining bolt and nut, Tighten nuts to specified torque and bend tab from the locking tab, over the nuts.

◆ WARNING : Should removal of a nylon lock nut or cotter pin be required **when undergoing repairs / disassembly, always replace by new ones. Tighten as specified.**

(TYPICAL)

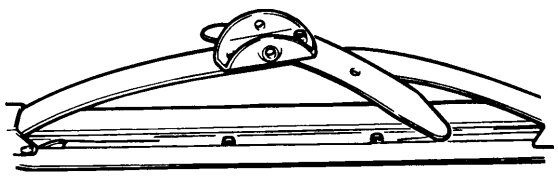

AOOO 006004

5, Spring Slider Cushion

Apply lithium grease on spring slider cushions at least once a year.

10,11, Spring Coupler Bolt and Nut

Tighten nut and move ski by hand to check that it pivots on ski leg.

▼ **CAUTION : Ski must move easily by hand.**

(TYPICAL)

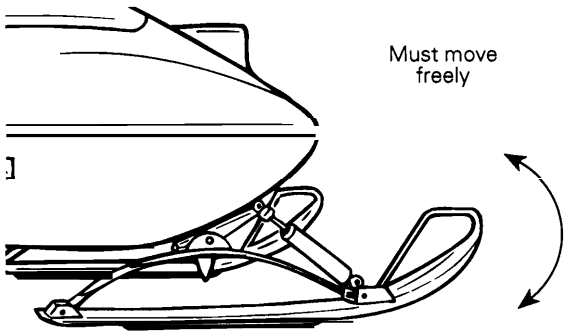

AO03 007001

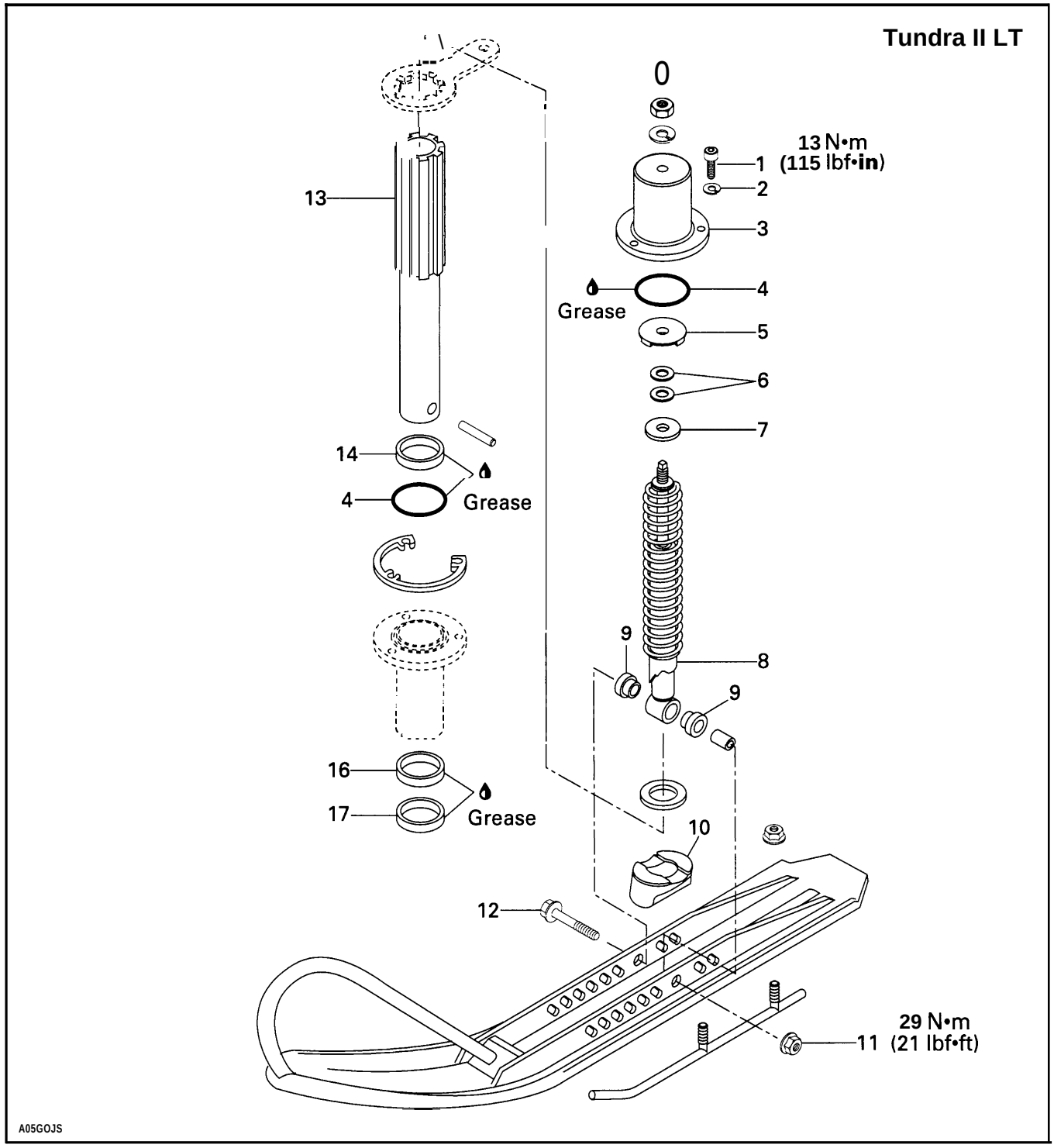
Tundra II LT
0
13 N•m
(115 lbf•in)
1
2
3
4
Grease
5
6
7
13
14
4
Grease
9
8
9
16
17
Grease
10
12
29 N•m
11 (21 lbf•ft)
A05GOJS

ON-VEHICLE COMPONENT VERIFICATION

8, **Shock**

Lift front of vehicle and support off the ground.

Unscrew shock piston pin nut then remove washer. Unscrew 3 Allen screws retaining cover no. 3, then remove stopper no. 5, washers no. 6, washer no. 7.

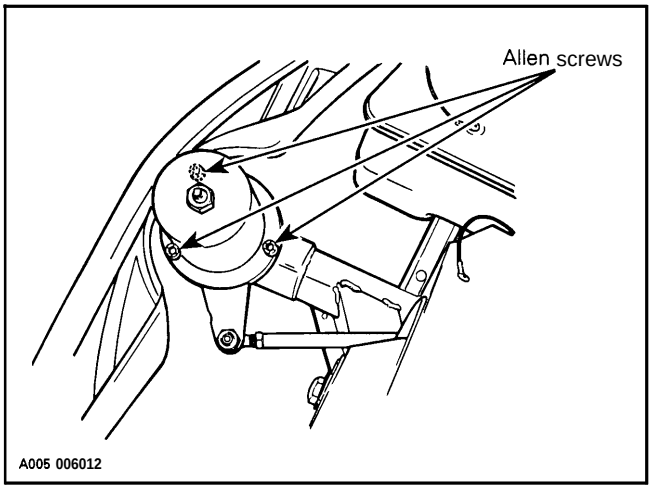

0 NOTE : These washers and stopper can be wedged in cover.

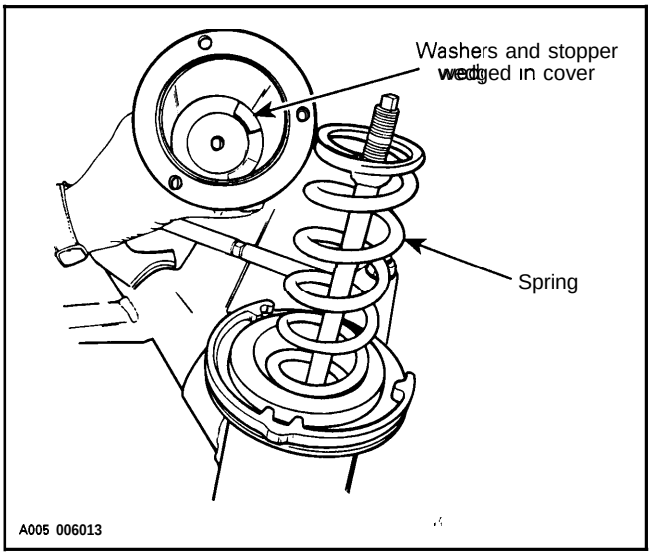

Pull out spring then check shock as described below in **inspection.**

Suspension Free Operation

Remove cover and check for free movement of ski leg by lifting end of ski.

DISASSEMBLY

Lift front of vehicle and support off the ground.

1,2,3,5,6,7,9,11,12, Bolt, Lock Washer, Cover, Stopper, Bushing and Nut

Remove ski bolt, nut, bushings and ski.

Unscrew shock piston pin nut then **remove washer.** Shock with spring will fall off the ski leg.

Unscrew 3 Allen screws retaining cover, then remove **stopper and washers.**

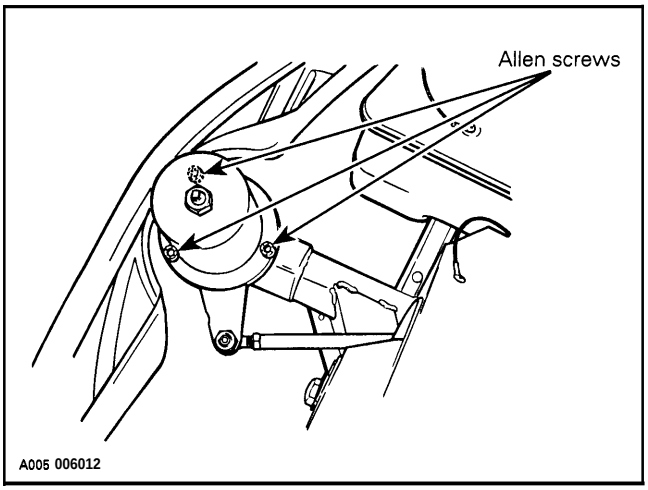

0 **NOTE : These washers and stopper can be wedged in cap.**

4,13,14,16,17, O-ring, Ski Leg, Bushing and Seal

Pull up ski leg. Steering arm will not interfere.

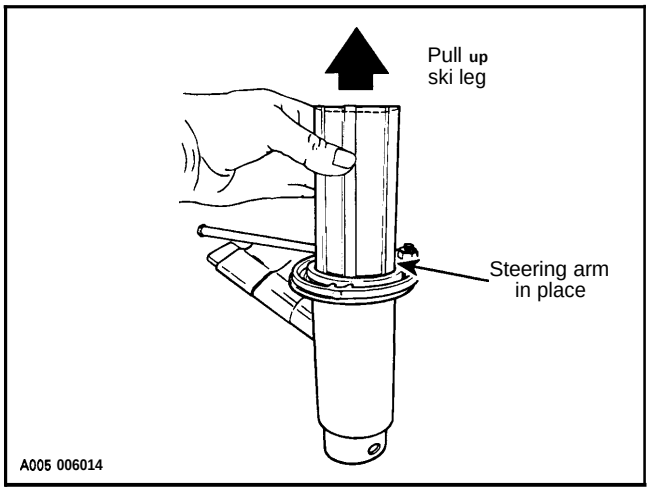

Remove seal and O-rings. Drive out bushing if worn Out.

INSPECTION

13, Ski Leg

Check straightness of ski leg. Check for scored or scratched surface. Replace as required.

5, Stopper

Check condition of stopper. Replace it when deteriorated.

Grease fitting

Ensure that grease fittings are not clogged.

10, Stopper

Check stopper for crack or deterioration. Replace as required.

13, Ski Leg

Check that splines on ski leg and steering arm interlock properly with no excessive free play. Renew as necessary.

8, Shock Absorber

Secure the shock body end in a vise.

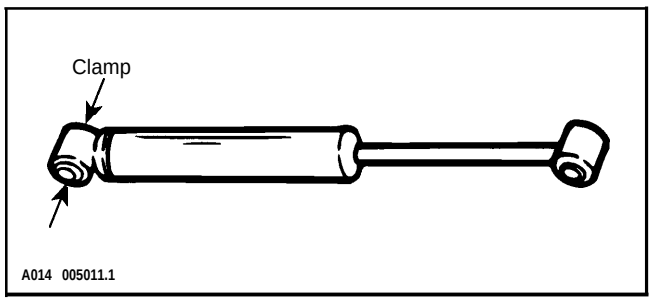

CAUTION : Do not clamp directly on shock body.

Examine each shock for leaks. Extend and compress the piston several times over its entire stroke checking that it moves smoothly and with uniform resistance.

Pay attention to the following conditions that will denote a defective shock :

—A skip or a hang back when reversing stroke at mid travel.

— Seizing or binding condition except at extreme end of either stroke.

— Oil leakage.

—A gurgling noise, after completing one full compression and extension stroke.

Renew if any faults are present.

INSTALLATION

For assembly, reverse the disassembly procedure. However, pay attention to the following.

Apply low temperature grease (P/ N 4137061 00) as illustrated in exploded view above.

Tighten nuts and screws to proper torque as mentioned in exploded view,

Steering arm notch must face outside of vehicle.

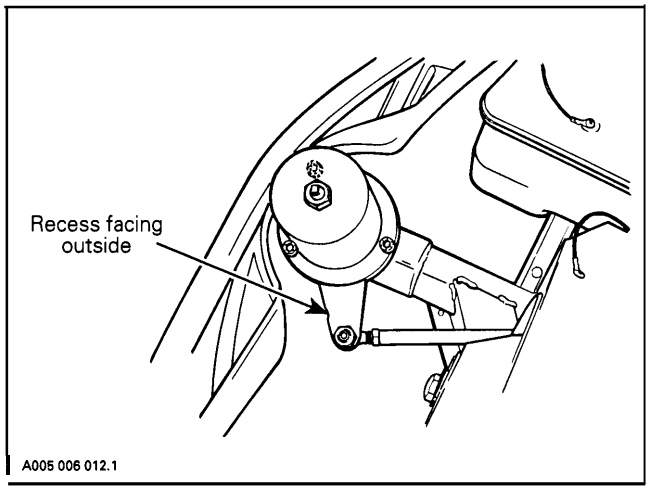

16,17, Seal

Install seal before reinstalling ski leg.

S-Series

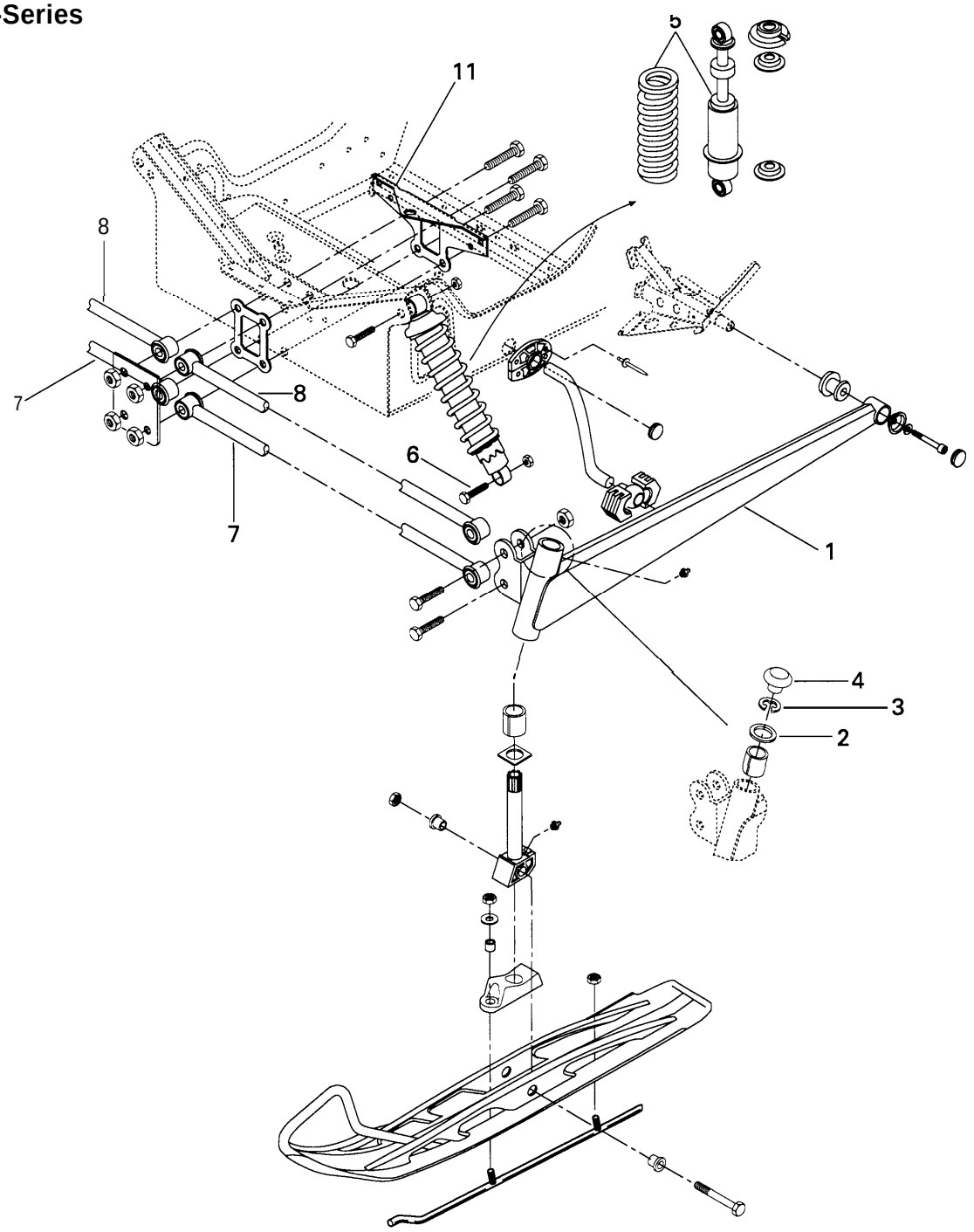

DISASSEMBLY

5, Shock

Lift front of vehicle and support it off the ground.

Reduce spring preload by turning adjusting ring accordingly with special key in vehicle tool box.

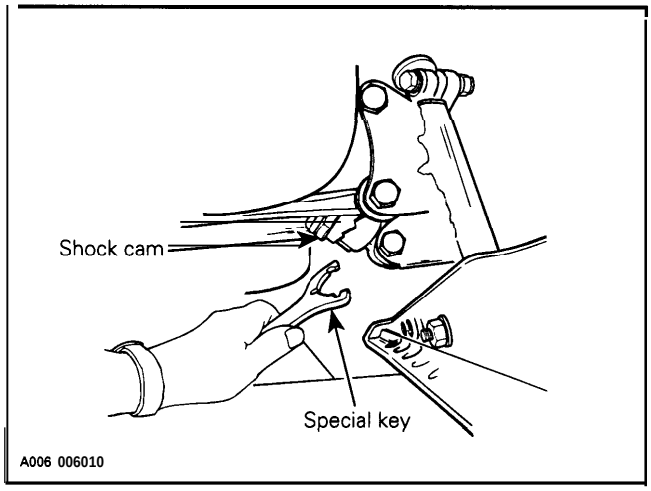

Remove lower bolt then upper bolt of shock.

For shock spring disassembly, use shock spring remover (P / N 5290271 00) in a vise. Mount shock in it and turn shock so that spring coils matched spring compressor.

Close and lock bar. Adjust handle horizontal by changing position of clevis pin.

Push down on handle until il locks. Remove spring stopper and cap then release handle.

At installation, cap opening must be 180° from spring stopper opening.

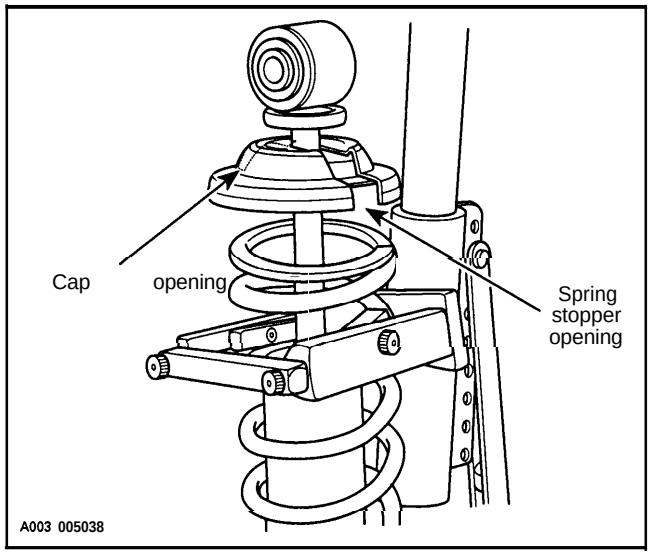

1, Swing Arm

Lift front of vehicle and support it off the ground.

Unbolt ski.

Remove cap, circlip then slacken steering arm bolt and pull up steering arm. Note shim positions. Ski leg may fall off from swing arm.

Unbolt lower end of shock from swing arm.

Unbolt half arms and tie rods.

Unbolt rear of swing arm from frame.

Pull swing arm off the vehicle. Stabilizer bar will disengage ball joint **at swing arm inside rails.**

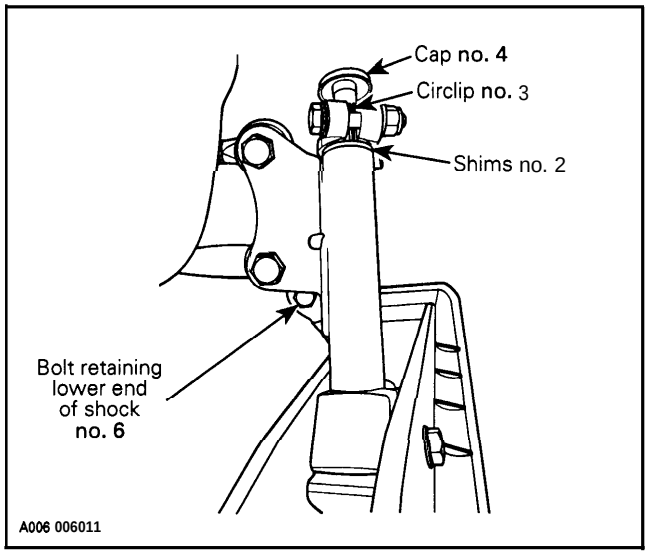

INSPECTION

Check all rubber cushions for crack and wear. Replace as required.

Check straightness of splines and proper interlocking with steering arm. Replace as required.

Check for straightness of swing arm. Replace as required.

Check if grease fittings are not clogged.

Check proper action of sliding blocks in swing arm.

Check skis and runners for wear, replace as necessary.

Check condition of ski stopper. Replace it when deteriorated.

To check condition of shock, refer to 07-05 IMPROVED C-7 SUSPENSION then look for **Shock Servicing.**

INSTALLATION

For assembly, reverse the disassembly procedure. However, pay attention to the following.

Apply low temperature grease (P/ N 4137061 00) to ski leg components.

Tighten nuts and screws to proper torque as mentioned in exploded view.

7,8, Upper Half Arm and Tie Rod

Position half arms and tie rods horizontally before tightening nuts.

9,10,11, Bolt, Nut and Link Plate

Attach link plate to frame with additional nuts and bolts, if applicable.

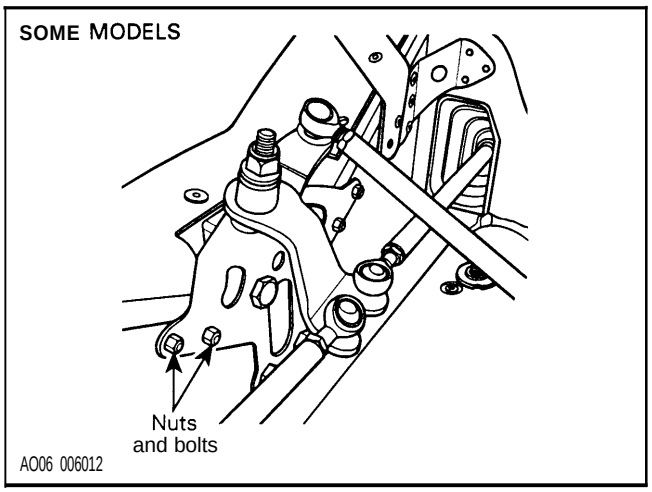

TABLE OF CONTENTS

BODY **09-01-1**

INSTALLATION AND ADJUSTMENT **09-01-1**
HEADLAMP BEAM AIMING **09-01-1**
BULB REPLACEMENT **09-01-1**
DECAL **09-01-1**
WINDSHIELD INSTALLATION **09-01-2**
BELTGUARD **09-01-2**
WIRING HARNESS **09-01-2**
CABLES **09-01-3**
PIPING **09-01-3**

PLASTIC MAINTENANCEAND REPAIR **09-01-4**
MAINTENANCE **09-01-4**
REPAIR **09-01-4**
MATERIAL REPAIR PROCEDURE **09-01-5**
REPAIR PROCEDURE FOR BOTH R.I.M. URETHANE., ... **09-01-5**

FRAME **09-02-1**
FRAME CLEANING 09-02-1
FRAME WELDING 09-02-1
FRAME COMPONENT REPLACEMENT 09-02-2

BODY

INSTALLATION AND ADJUSTMENT

HEADLAMP BEAM AIMING

Beam aiming is correct when center of high beam is 25 mm (1 in) below the headlamp horizontal center line, scribed on a test surface, 381 cm (12 ft 6 in) away.

Measure headlamp center distance from ground. Scribe a line at this height on test surface (wall or screen). Light beam center should be 25 mm (1 in) below scribed line.

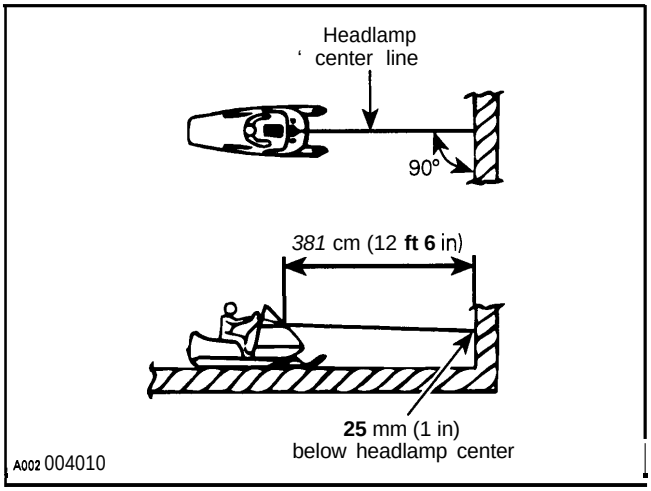

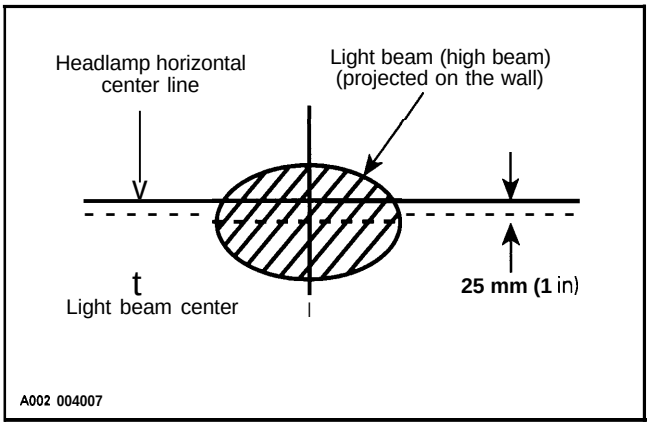

Required Conditions

Place the vehicle on a flat surface perpendicular to test surface (wall or screen) and 381 cm (12 ft 6 in) away from it.

Rider or equivalent weight must be on the vehicle.

Select **high** beam.

BULB REPLACEMENT

If headlamp bulb is burnt, tilt cab and unplug the connector from the headlamp. Remove the rubber boot and unfasten the bulb retainer clips or locking ring.

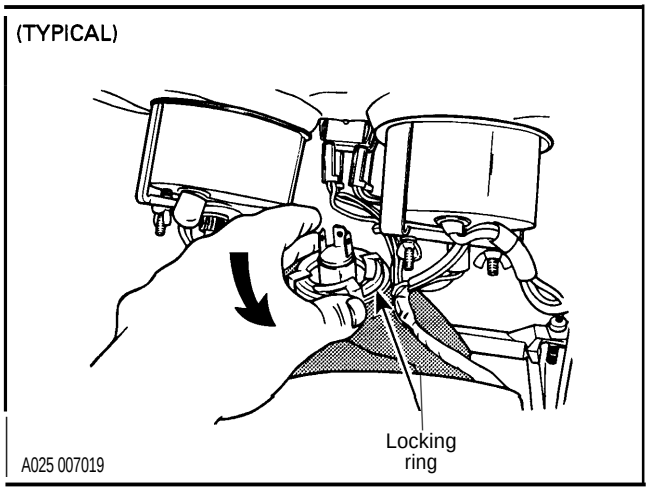

Detach the bulb and replace. If the taillight bulb is burnt, expose the bulb by removing red plastic lens. To remove, 'unscrew the 2 retaining screws. Verify all lights after replacement.

CAUTION : **Never touch glass portion of an halogen bulb with bare fingers, as it shortens its operating life. If by mistake glass is touched, clean it with isopropyl alcohol which will not leave a film on the bulb.**

DECAL

To remove a decal ; heat old decal with a heat gun and peel off slowly.

Using isopropyl alcohol, clean the surface and dry thoroughly.

Apply liquid soap to new decal and carefully position the decal. Using a sponge or a squeegee, remove the air bubbles and surplus water working from the center toward the edges. Allow to air dry.

CAUTION : Do not apply isopropyl alcohol or solvant directly on decals.

WINDSHIELD INSTALLATION

When peeling off the protective film some polyethylene particles may remain on the windshield. A soft clean cloth moistened with naphtha (camping equipment fuel) will easily remove the remaining particles.

◆ **WARNING : Naphtha is flammable and explosive under certain conditions. Always manipulate in a well ventilated area. Do not smoke or allow open flames or sparks in the vicinity.**

Position the windshield on the hood then push it down until the tabs are fully inserted into the hood slots. Lock the windshield tabs in position using latches as shown.

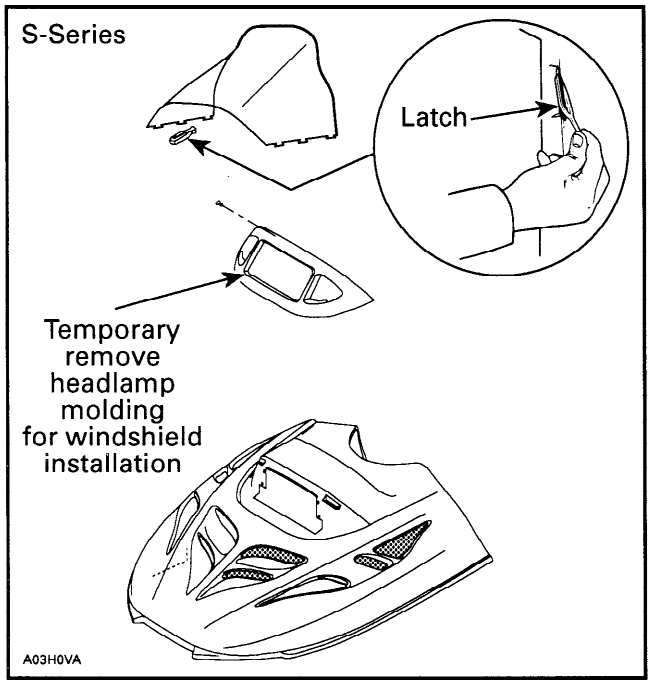

BELT GUARD

Disassembly and Assembly

○ NOTE : For additional information (ex. : exploded view) refer to the correspondent parts catalog.

◆ **WARNING : Engine should be running only with belt guard and / or pulley guard well secured in place.**

Inspection

All Models

Check belt guard and / or pulley guard mounting bosses, clips and retainers for wear.

Élan

Check the spring-loaded retaining pin for free operation. Replace any damaged parts.

Prior to installation, ensure that pulley guard and frame bracket are 90° with frame.

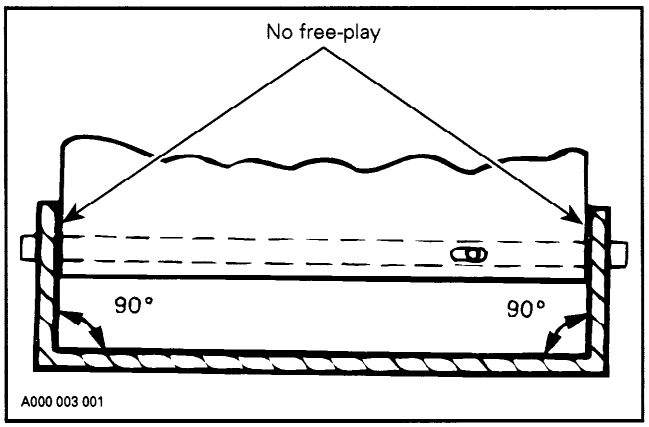

◆ **WARNING : No lateral free-play should exist between drive pulley guard and frame bracket.**

○ NOTE : Belt guards are purposely made slightly oversize to maintain tension on their clips and retainers preventing undue noise and vibration. It is important that this tension be maintained when reassembling.

Adjustment

Élan

The length of the uncompressed retaining pin spring should not be less than 47 mm (1-7/8 in).

An uncompressed front guard spring should not be less than 20 mm (13/16 in). When assembling adjust length as illustrated below.

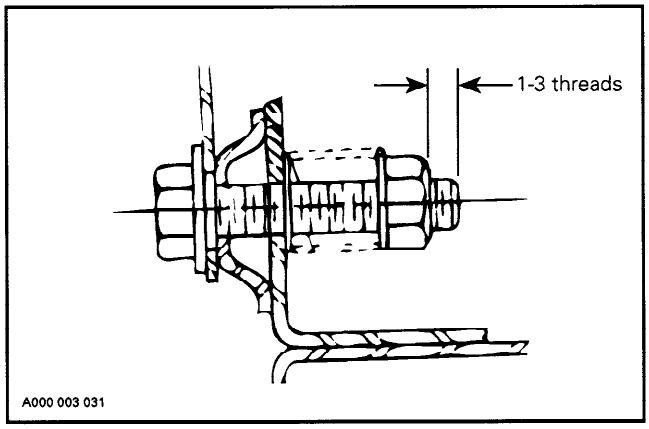

WIRING HARNESS

◆ **WARNING : Ensure all terminals are properly crimped on the wires and that all connector housings are properly fastened. Keep wires away from any rotating, moving, heating and vibrating parts. Use proper fastening devices as required.**

CABLES

◆ **WARNING : Before installation, ensure that all cables are in perfect condition. Properly install the cable ends and secure them in place. Pay attention to route them properly, away from any rotating, moving, heating, or vibrating parts.**

PIPING

● **WARNING : Always ensure that the fuel, vent, primer, impulse, injection oil and rotary valve oil lines are properly fixed to their connectors, that they are not perforated or kinked and that they are properly routed away from any rotating, moving, heating or vibrating parts. Also check for leaks. Replace if required.**

O **NOTE :** Refer to proper *Parts Catalog* to find suitable clip part numbers.

PLASTIC MAINTENANCE AND REPAIR

MAINTENANCE

Clean the vehicle thoroughly, removing all dirt and grease accumulation.

To clean use a soft clean cloth and either soapy water or isopropyl alcohol.

To remove grease, oil or glue use isopropyl alcohol.

CAUTION : Do not apply isopropyl alcohol or acetone directly on decals.

CAUTION : The following products must not be used to clean or wax any of the plastic components used on the vehicles :

— gasoline
— brake fluid
— kerosene
—diesel fuel
— lighter fluid
— varsol
— naphtha
— acetone
— strong detergents
— abrasive cleaners
— waxes containing an abrasive or a cleaning agent in their formula

CAUTION : Clean R.I.M. Metton® with isopropyl alcohol only. Never use cleaners or products containing chlorine.

Apply wax on glossy finish only. Protect the vehicle with a cover to prevent dust accumulation during storage.

CAUTION : If for some reason the snowmobile has to be stored outside it is preferable to cover it with an opaque tarpaulin. This will prevent the sun rays from affecting the plastic components and the vehicle finish.

REPAIR

The very first step before repairing plastic materials is to find out exactly which type of material is involved. Refer to following chart.

CAUTION : Consult chart and repair kit instructions carefully, some repair products are not compatible with certain plastics.

WARNING : Polycarbonate windshields must never be repaired by welding or otherwise.

PART	MODEL	REPAIRABLE	IRREPARABLE
		R.I.M. URETHANE	POLYETHYLENE
HOOD 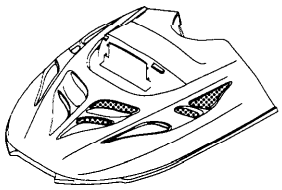 A03H104	Elan		
	Tundra II LT		
	S-Series		
BOTTOM PAN 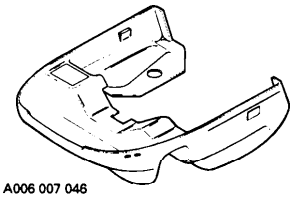 A006 007 046	Tundra II LT		
	S-Series		

MATERIAL REPAIR PROCEDURE

R.I. M. Urethane is light colored (tan) on the inside with a smooth surface,

◆ **WARNING : Material should be repaired and repainted in a well ventilated area only.**

▼ **CAUTION : Clean R.I.M. with isopropyl alchol or Crest Hi-Solv product. Never use cleaners or products that contain chlorine.**

▼ **CAUTION : R.I.M. should never be exposed to temperatures exceeding 93°C (200°F).**

O **NOTE :** When working on a R.I. M. surface, never use a grinder or a high revolution tool such as an air or electric buffer. Use of such tools could overheat material and liberate agents in it thus causing a bad adhesion.

REPAIR PROCEDURE FOR BOTH R.I.M. URETHANE

Small Scratches

— Sand and scuff area.

— Feather out edges.

— Paint with a matching acrylic auto touch-up paint.

Deep Scratches

— Sand and scuff area.

— Make a V groove using a knife or a rough round file.

— Clean surface with isopropyl alcohol or Crest Hi-Solv stock no. AH-S product.

— Cover with TP-E epoxy mixed in equal quantities.

— Heat the surface with a heater lamp placed at 38 cm (15 in) for a period of 15 minutes.

— Sand the repair using a smooth dry sand paper.

— Use the same product if a final finish is required.

— Clean surface with Crest Hi-Solv product,

—Apply a flexible primer such as Crest Prima Flex stock no. AP-F.

— Wait 10 minutes.

— Repaint (air dry during 72 hours (approximately)).

Large Crack

— Sand and scuff outside and inside area by exceeding it 31.7 mm (1-1/4 in) on each side and 12.7 mm (1/2 in) at each end.

— Make a V groove (appr. 90°) on both sides of hood using a knife or a rough round file.

— Enlarge the crack to 2.4 mm (3/32 in) -3.2 mm (1/8 in) using a sharp knife.

— Clean outside and inside surface with isopropyl alcohol or Crest Hi-Solv product.

— Repair inside surface first.

— Cover inside area with Crest TP-E epoxy.

—Apply a 50 mm x 30 mm (2 in x 1-1/4 in) patch. If no room for the patch, use tape.

— Cover exterior surface with same product. Damaged area should be slightly higher.

— Heat surface with a heater lamp placed at 38 mm (15 in) for a period of 15 minutes.

— Sand outside repair using a smooth dry sand paper.

— Use same product if a final finish is required.

—Apply a flexible primer.

— Wait 10 minutes.

— Repaint (air dry during 72 hours approximately).

O **NOTE :** Both R.I.M. materials are high static plastics, painting must be done in a dust free area such as a paint booth.

CREST MAIN OFFICE AND MANUFACTURING PLANT

CREST INDUSTRIES, INC.
3841 13th **Street**
Wyandotte, Michigan
48192

Phone : **313-283-4100**
Toll Free : 1-800-822-4100
Fax : 1-800-344-4461
Fax : 313-283-4461

Crest products used in R.I.M. repair procedure are available from following locations :

DISTRIBUTOR WAREHOUSE LOCATIONS

UNITED STATES

CREST EAST COAST, INC.
P.O. Box **550**
1109 Industrial Parkway
Brick, New Jersey 08723
Phone : 908-458-9000
Fax : 908-458-5753

CREST PRODUCTS, INC.
Shipping Address:
125 Production Drive
Yorktown, Virginia 23693
Phone : 804-599-6572
Virginia : 1-800-572-5025
Outstate : 1-800-368-5033
Fax : 804-599-6630
Mailing Address:
P.O. Box 2018
Grafton, Virginia 23692

CREST INDUSTRIES SOUTHEAST, INC.
Shipping Address :
4300 Glen Haven Drive
Decatur, Georgia 30035
Phone : 404-288-4658
Toll Free : 1-800-552-0876
Fax : 404-288-4658
Mailing Address :
P.O. Box 254
Decatur, Georgia 30031

CREST INDUSTRIES, INC.
(CREST MID-WEST)
231 Larkin Williams Ind. Court
St. Louis, Missouri 63026
Phone : 314-349-4800
Toll Free : 1-800-733-2737
Fax : 314-349-4888
Toll Free Fax: 1-800-776-2737

CREST MID WEST
Regional Branch Warehouses

CREST INDUSTRIES, INC.
P.O. Box *635*
Mountain Home, Arkansas 72653
Phone : 501-491-5583
Toll Free : 1-800-733-2737

CREST INDUSTRIES, INC.
4200 Jackson Street, Unit 9
Denver, Colorado 80216
Phone : 303-320-3900
Toll Free : 1-800-733-2737
Fax : 303-320-6509

REM-CO DISTRIBUTING, INC.
5625 S. Adams
Tacoma, Washington 98409
Phone : 206-474-5414
Toll Free : 1-800-735-7224
Fax : 206-474-7339

CANADA

J2 PRODUCTS
A Division of Sawill Ltd.
54 Audia Court, Unit 2A
Concord, Ontario, L4K 3N4
Phone:
Toronto : 416-665-1404
Concord : 905-669-9410
Montréal : *514-655-6505*
Fax:
Concord : 905-669-9419
Montréal : 514-655-6505

WHEEL-IN AUTOMOTIVE
SUPPLY
Shipping Address:
1, 3911A Brandon St. S.E.
Calgary, Alberta, T2G 4A7
Office : 403-287-0775
Mailing Address :
P.O. Box 40036
929-42nd Avenue S.E.
Calgary, Alberta, T2G 5G5

FRAME

FRAME CLEANING

NOTE : For aluminum frames use only aluminum cleaner and follow instructions on container. (Dursol cleaner **or** equivalent).

Clean frame and tunnel with appropriate cleaners and rinse with high pressure hose.

On liquid cooled models carefully clean radiators and check condition of radiator protectors. The protectors should extend far enough to keep the track from rubbing on the radiators.

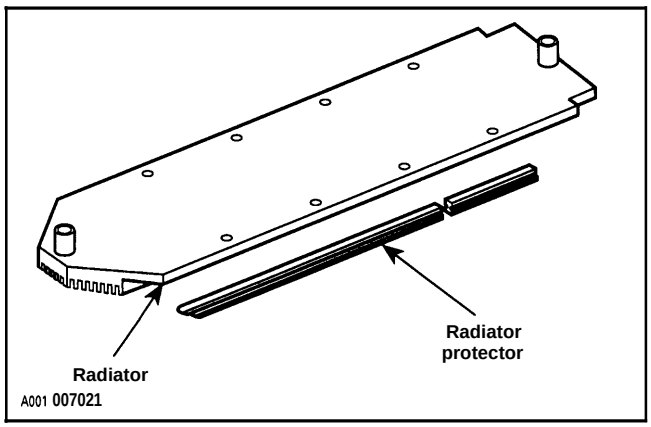

Touch up all metal spots where paint has been scratched off. Spray all bare metal parts of vehicle with metal protector.

Seat Cleaning

For all models, it is recommend to clean the seat with a solution of **warm soapy water, using a soft clean** cloth.

CAUTION : Avoid use of harsh detergents such as strong soaps, decreasing solvents, abrasive cleaners, paint thinners, etc. that may cause damage to the seat cover.

FRAME WELDING

Steel Frame :

— electric welding

—amperage : 70-110 A

—voltage : 20-24 V

— rod : E-7014 (3/32 in)

Aluminum Frame :
(refer to specialized welding shop)

— argon-oxygen / acetylene welding

— rod : ER-4043 (3/32 in)

CAUTION : Before performing electrical welding anywhere on the vehicle, unplug the multiple connector at the electronic box for models equipped with a battery, unplug the negative cable. This will protect the electronic box and battery against damage caused by flowing current when welding.

NOTE **: This procedure applies to all electronic** ignition systems.

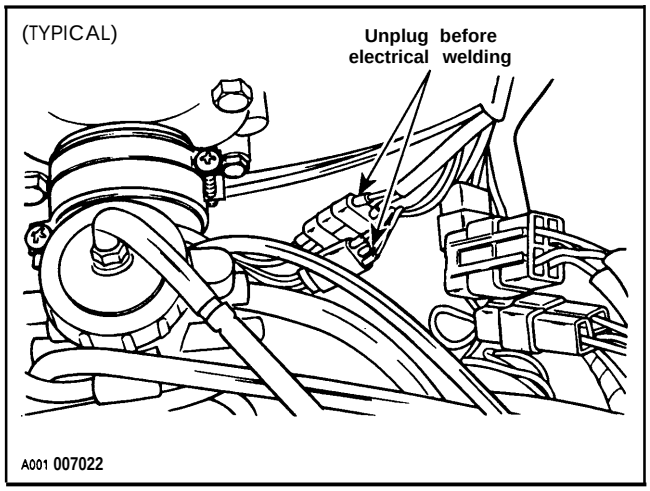

CAUTION : If welding is to be done near plastic material, it is recommended to either remove the part from the area or to protect it with aluminum foil to prevent damage.

FRAME COMPONENT REPLACEMENT

S-series

CAUTION : Do not attempt to drill hardened self-piercing rivets. Always grind rivet heads for removal.

Rear Cap

Grind rivet heads from top of rear cap and underneath for side retaining rivets.

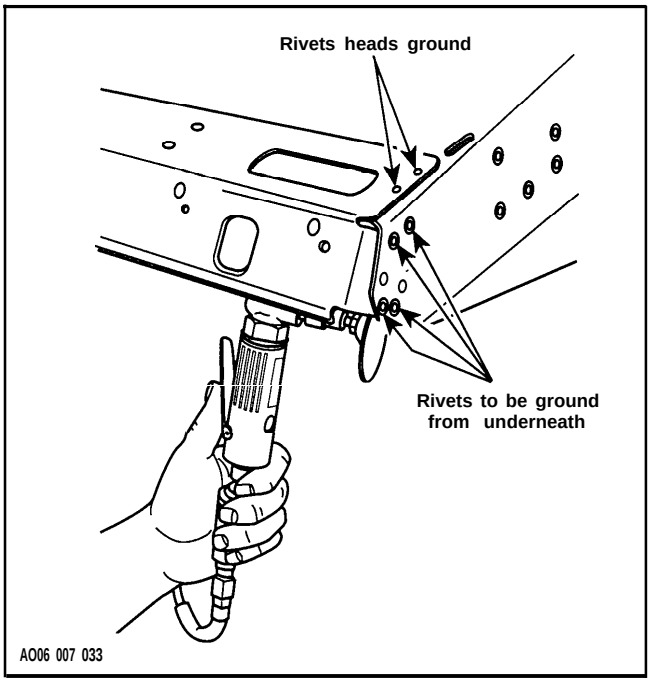

To remove rivet, strike with a punch from rivet head side.

Make a chamfer from underneath on all 4 corner holes.

TECHNICAL DATA

SI* METRIC INFORMATION GUIDE

BASE UNITS

DESCRIPTION	UNIT	SYMBOL
length	**meter**	m
mass	**kilogram**	kg
force	**newton**	N
liquid	**liter**	L
temperature	Celsius	"C
pressure	kilopascal	kPa
torque	newto no meter	N•m
speed	kilometer per hour	km/h

PREFIXES

PREFIX	SYMBOL	MEANING	VALUE
kilo	k	one thousand	1,000
centi	c	one hundredth	0.01
mini	m	one thousandth	0.001
micro	µ	one millionth	0.000001

CONVERSION FACTORS

TO CONVERT	TO t	MULTIPLY BY
in	mm	**25.4**
in	cm	**2.54**
in^2	cm^2	**6.45**
in^3	cm^3	**16.39**
ft	m	0.3
Oz	g	28,35
lb	kg	0.45
lbf	N	4.4
lbf•**in**	N•m	0.11
lbf•ft	N•m	1.36
lbf•ft	lbf•**in**	12
PSI (lbf/in^2)	kPa	6.89
imp. oz	Us. Oz	0.96
imp. oz	mL	28.41
imp. gal	U.S. gal	1.2
imp. gal	L	4.55
Us. Oz	mL	29.57
U.S. gal	L	3.79
MPH	km/h	1.61
Fahrenheit	Celsius	("F - 32) ÷ 1.8
Celsius	Fahrenheit	("C x 1.8) + 32

* The international system of units abbreviates SI in all languages.

† To obtain the inverse sequence, divide by the given factor. To convert "mm" to "in", divide by 25.4.

NOTE : Conversion factors are rounded off to 2 decimals for easier use.

NOTE : These specifications cover all vehicles except swedish models.

VEHICLE MODEL			ÉLAN	TUNDRA II LT	TOURING E, TOURING E LT, SKANDIC 380, FORMULA S	TOURING LE	TOURING SLE, SKANDIC 500, FORMULA SL
ENGINE TYPE			**247**	**277**	**377**	**443**	**503**
Number of Cylinders			1	1	2	2	2
Bore		mm (in)	69.50 (2.736)	72.00 (2.835)	62.00 (2.441)	67.5 (2.66)	72.00 (2.835)
Stroke		mm (in)	66.00 (2.598)	66.00 (2.598)	61.00 (2.402)	61.00 (2.402)	61.00 (2.402)
Displacement		cm^3 (in^3)	250.40 (15.28)	268.70 (16.40)	368.30 (22.48)	436.6 (26.64)	496.70 (30.31)
Compression Ratio (corrected)			5.70	6.70	6.80	6.4	6.20
Maximum Power Engine Speed ①		RPM	5100 – 5300	6800 – 7000	6800 – 7000	7000 – 7200	7000 – 7200
Piston Ring Type		1st / 2nd	R / R	ST / R	ST / R	ST / R	ST / R
Ring End Gap	(new)	mm (in)	0.2 (.008)	0.2 (.008)	0.2 (.008)	0.2 (.008)	0.2 (.008)
	(wear limit)	mm (in)	1.0 (.039)	1.0 (.039)	1.0 (.039)	1.0 (.039)	1.0 (.039)
Ring / Piston Groove Clearance	(new)	mm (in)	0.04 (.0016)	0.04 (.0016)	0.04 (.0016)	0.04 (.0016)	0.04 (.0016)
	(wear limit)	mm (in)	0.2 (.008)	0.2 (.008)	0.2 (.008)	0.2 (.008)	0.2 (.008)
Piston / Cylinder Wall Clearance	(new)	mm (in)	0.085 (.0034)	0.070 (.0028)	0.050 (.0020)	0.050 (.0020)	0.080 (.0031)
	(wear limit)	mm (in)	0.2 (.008)	0.2 (.008)	0.2 (.008)	0.2 (.008)	0.2 (.008)
Connecting Rod Big End Axial Play	(new)	mm (in)	0.21 (.0083)	0.20 (.0079)	0.20 (.0079)	0.20 (.0079)	0.2 (.0079)
	(wear limit)	mm (in)	1.0 (.0394)	1.0 (.0394)	1.0 (.0394)	1.0 (.0394)	1.0 (.0394)
Maximum Crankshaft End-play ⑦		mm (in)	0.3 (.0118)	0.3 (.0118)	0.3 (.0118)	0.3 (.0118)	0.3 (.0118)
Maximum Crankshaft Deflection		mm (in)	0.08 (.0031)	0.08 (.0031)	0.08 (.0031)	0.08 (.0031)	0.08 (.0031)
Rotary Valve Timing ②		Opening Closing	N.A.	N.A.	N.A.	N.A.	N.A.
Magneto Generator Output		W	75 / 23	160	240	240	240
Ignition Type			BP	CDI	CDI	CDI	CDI
Spark Plug Make and Type			Bosch M7A	NGK BR9ES	NGK BR9ES	NGK BR9ES	NGK BR9ES
Spark Plug Gap		mm (in)	0.55 (.022)	0.45 (.018)	0.45 (.018)	0.45 (.018)	0.45 (.018)
Ignition Timing BTDC ③		mm (in)	3.75 – 4.23 (.148 – .167) ④	2.52 (.099)	1.68 (.066)	1.68 (.066)	1.66 (.065)
Generating Coil ⑨	Low Speed : Ω		3.0 – 3.7	40 – 76	N.A.	N.A.	N.A.
	High Speed : Ω		N.A.	N.A.	230 – 330	230 – 330	230 – 330
Lighting Coil ⑨		Ω	0.38 – 0.58 ⑤	0.05 – 0.6	0.23 – 0.28	0.23 – 0.28	0.23 – 0.28
High Tension Coil ⑨	Primary	Ω	1.805 – 1.995	0.11 – 0.21	N.A.	N.A.	N.A.
	Secondary	kΩ	7.6 – 11.4	4.9 – 7.5	5.1 – 6.3	5.1 – 6.3	5.1 – 6.3
Carburetor Type		PTO / MAG	VM 28-470	VM 34-433	2 x VM 30-186	2 x VM 34-467	VM 34-444 / 447
Main Jet		PTO / MAG	160	190	140 / 140	180 / 180	190 / 180
Needle Jet			182 O-8	159 O-8	159 P-0	159 P-1	159 P-0
Pilot Jet			30	40	40	40	40
Needle Identification – Clip Position			6DP1-3	6DH4-2	6DP9-3	6DH2-3	6DH2-3
Slide Cut-away			2	2.5	2.5	2.5	2.5
Float Adjustment		± 1 mm (± 0.40 in)	17.3 (.68)	23.9 (.94)	23.9 (.94)	23.9 (.94)	23.9 (.94)
Air Screw Adjustment		± 1/8 Turn	1.5	1	1.25	2.25	1.25
Idle Speed RPM		RPM	1100 – 1300	1100 – 1300	1500 – 1800	1500 – 1800	1500 – 1800
Gas Type / Pump Octane number			Unleaded / 87	Unleaded / 87	Unleaded / 87	Unleaded / 87	Unleaded / 87
Gas / Oil Ratio			50 : 1	Injection	Injection	Injection	Injection
Type			Radial Fan	Radial Fan	Axial Fan	Axial Fan	Axial Fan
Axial Fan Belt Adjustment	Deflection	mm (in)	N.A.	N.A.	8 – 9 (.31 – .35)	8 – 9 (.31 – .35)	9 – 10 (.35 – .39)
	Force ⑥	kg (lbf)	N.A.	N.A.	5 (11)	5 (11)	5 (11)
Thermostat Opening Temperature		°C (°F)	N.A.	N.A.	N.A.	N.A.	N.A.
Radiator Cap Opening Pressure		kPa (PSI)	N.A.	N.A.	N.A.	N.A.	N.A.
ENGINE COLD N•m (lbf•ft)	Drive Pulley Retaining Screw ⑧		95 – 108 (70 – 80)	85 (63)	95 (70)	95 (70)	95 (70)
	Exhaust Manifold Nuts or Bolts		22 (16)	22 (16)	22 (16)	22 (16)	22 (16)
	Magneto Ring Nut		80 (59)	90 (66)	105 (77)	105 (77)	105 (77)
	Crankcase Nuts or Screws	M6 M8	10 (7) 22 (16)	10 (7) 22 (16)	10 (7) 22 (16)	10 (7) 22 (16)	— 22 (16)
	Crankcase / Engine Support Nuts or Screws		38 (28)	20 (15)	38 (28)	38 (28)	38 (28)
	Cylinder Head Nuts		22 (16)	26 (19)	22 (16)	22 (16)	22 (16)
	Crankcase / Cylinder Nuts or Screws		N.A.	N.A.	N.A.	N.A.	N.A.
	Axial Fan Shaft Nut		N.A.	N.A.	50 (37)	50 (37)	50 (37)

NOTE : These specifications cover all vehicles except Swedish models.

VEHICLE MODEL				ÉLAN	TUNDRA II LT	TOURING E, FORMULA S	TOURING E LT
ENGINE TYPE				**247**	**277**	**377**	**377**
Chain Drive Ratio				10/25	14/25	21/44	21/44
Chain	Pitch		(in)	1/2	1/2	3/8	3/8
	Type / Links Qty / Plates Qty			Single / 62	Single / 62	Silent / 72 / 11	Silent / 74 / 11
Drive Pulley	Type of Drive Pulley			Bombardier Lite	Bombardier Lite	Bombardier Lite	Bombardier Lite
	Ramp Identification			N.A.	N.A.	N.A.	N.A.
	Calibration Screw Position or Calibration Disc Quantity			N.A.	N.A.	6	6
	Spring Color			Blue	Turquoise	Violet	Violet
	Spring Length		± 1.5 mm (± 0.060 in)	N.A.	N.A.	102 (4.02)	82 (3.23)
	Clutch Engagement		RPM	2000 – 2200	3000 – 3200	3000 – 3200	2800 – 3000
Driven Pulley Spring Preload Cam Angle			kg (lb) degree	2.6 – 4.3 (4.6 – 9.5) 40.4°	2.6 – 4.6 (5.7 – 10.1) 37.8°	4.1 – 5.5 (9.0 – 12.1) 44°	4.1 – 5.5 (9.0 – 12.1) 44°
Pulley Distance Z			(+0, –1) mm ((+0, –1/32) in)	45.8 (1-13/16)	37 (1-29/64)	25.5 (1)	25.5 (1)
Offset	X		± 0.4 mm (± 1/64 in)	34.4 (1-23/64)	36 (1-27/64)	33.4 (1-5/16)	33.4 (1-5/16)
	Y - X		MIN. MAX.	– .75 (– 0.300) + .75 (+ 0.300)	– 0 (– 0.000) + 1.5 (+ 0.059)	+ 0.5 (+ 0.020) + 1.5 (+ 0.059)	+ 0.5 (+ 0.020) + 1.5 (+ 0.059)
Drive Belt Part Number (P / N)				570 0411 00	414 8276 00	414 8833 00	414 8833 00
Drive Belt Width (new) ①			mm (in)	30.2 (1-3/16)	33.3 (1-5/16)	34.3 (1-3/8)	34.3 (1-3/8)
Drive Belt Adjustment		Deflection	mm (in)	33 ± 3 (3/4)	32 ± 5 (1-1/4 ± 13/64)	32 ± 5 (1-1/4 ± 13/64)	32 ± 5 (1-1/4 ± 13/64)
		Force ②	kg (lbf)	5 (11)	6.8 (15)	6.8 (15)	6.8 (15)
Track	Width		cm (in)	38.1 (15)	38.1 (15)	38.1 (15)	38.1 (15)
	Length		cm (in)	290 (114.17)	354 (139)	307 (121)	345 (136)
	Adjustment	Deflection	mm (in)	35 (1-3/8)	35 – 45 (1-3/8 – 1-3/4)	40 – 55 (1-9/16 – 2-5/32)	40 – 55 (1-9/16 – 2-5/32)
		Force ③	kg (lbf)	N.A.	N.A.	7.3 (16)	7.3 (16)
Suspension Type		Track		Bogie Wheels	Torque Reaction Slide	Slide	Slide
		Ski		Multi Leafs	Telescopic Strut	DSA	DSA
Length			cm (in)	224.8 (88.5)	284.5 (112)	272.5 (107.3)	292 (115)
Width			cm (in)	76.8 (30.3)	95.3 (37.5)	115.6 (45.5)	115.6 (45.5)
Height			cm (in)	109.5 (43.1)	114 (44.9)	122 (48.0)	122 (48.0)
Ski Stance			cm (in)	64.8 (25.5)	81.3 (32.0)	101.6 (40)	101.6 (40)
Mass (dry)			kg (lb)	129 (284)	171 (377)	Touring : 204 (449) Formula : 195 (430)	205 (452)
Ground Contact Area			cm^2 (in^2)	6494 (1007)	7864 (1219)	6503 (1008)	7227 (1120)
Ground Contact Pressure			kPa (PSI)	1.95 (.283)	2.13 (.309)	Touring : 3.08 (.447) Formula : 2.94 (.426)	2.78 (.403)
Frame Material				Steel	Steel	Aluminum	Aluminum
Bottom Pan Material				Steel	Polyethylene High Density	Polyethylene	Polyethylene
Cab Material				Polyethylene	Polyethylene High Density	RRIM Polyurethane	RRIM Polyurethane
Battery			V (A•h)	N.A.	N.A.	Touring : 12 (22) Formula : N.A.	12 (22)
Headlight			W	H4 60/55	H4 60/55	H4 60/55	H4 60/55
Taillight and Stoplight			W	8/27	8/27	8/27	8/27
Tachometer and Speedometer Bulb			W	N.A.	N.A.	Touring : 5 Formula : 2 x 3	5
Fuel and Temperature Gauge Bulb			W	N.A.	N.A.	N.A.	N.A.
Fuse	Starter Solenoid		A	N.A.	N.A.	Touring : 30 Formula : N.A.	30
	Tachometer		A	N.A.	N.A.	N.A.	N.A.
Fuel Tank			L (U.S. gal)	13.6 (3.6)	26 (6.9)	40 (10.6)	40 (10.6)
Chaincase / Gearbox			mL (U.S. oz)	250 (8.5)	250 (8.5)	250 (8.5)	250 (8.5)
Cooling System			L (U.S. oz)	N.A.	N.A.	N.A.	N.A.
Injection Oil Reservoir			L (U.S. oz)	N.A.	1.9 (64)	2.55 (86)	2.55 (86)

NOTE : These specifications cover all vehicles except Swedish models.

VEHICLE MODEL				TOURING LE	SKANDIC 380	TOURING SLE, SKANDIC 500	FORMULA SL
ENGINE TYPE				443	377	503	503
Chain Drive Ratio				21/44	21/44	21/44	22/44
Chain	Pitch		(in)	3/8	3/8	3/8	3/8
	Type / Links Qty / Plates Qty			Silent / 72 / 11	Silent / 72 / 11	Silent / 72 / 11	Silent / 72 / 11
Drive Pulley	Type of Drive Pulley			TRA	Bombardier Lite	TRAC	TRAC
	Ramp Identification			227 ④	N.A.	284 ④	284 ④
	Calibration Screw Position or Calibration Disc Quantity			4	6	4	3
	Spring Color			Yellow / Violet	Violet	Red / Orange	Blue / Yellow
	Spring Length		± 1.5 mm (± 0.060 in)	88.4 (3.48)	82 (3.23)	91.2 (3.59)	115.1 (4.53)
	Clutch Engagement		RPM	3000 – 3200	2800 – 3000	2900 – 3100	3500 – 3700
Driven Pulley Spring Preload Cam Angle			kg (lb) degree	4.1 – 5.5 (9.0 – 12.1) 44°	4.1 – 5.5 (9.0 – 12.1) 44°	4.1 – 5.5 (9.0 – 12.1) 44°	4.1 – 5.5 (9.0 – 12.1) 44°
Pulley Distance Z			(+0, –1) mm ((+0, –1/32) in)	16.5 (21/32)	25.5 (1)	16.5 (21/32)	16.5 (21/32)
Offset	X		± 0.4 mm (± 1/64 in)	35.0 (1-3/8)	33.4 (1-5/16)	35.0 (1-3/8)	35.0 (1-3/8)
	Y - X		MIN. MAX.	+ 1 (+ 0.039) + 2 (+ 0.079)	+ 0.5 (+ 0.020) + 1.5 (+ 0.059)	+ 1 (+ 0.039) + 2 (+ 0.079)	+ 1 (+ 0.039) + 2 (+ 0.079)
Drive Belt Part Number (P / N)				414 8833 00	414 8833 00	414 8833 00	414 8833 00
Drive Belt Width (new) ①			mm (in)	34.3 (1-3/8)	34.3 (1-3/8)	34.3 (1-3/8)	34.3 (1-3/8)
Drive Belt Adjustment		Deflection	mm (in)	32 ± 5 (1-1/4 ± 13/64)	32 ± 5 (1-1/4 ± 13/64)	32 ± 5 (1-1/4 ± 13/64)	32 ± 5 (1-1/4 ± 13/64)
		Force ②	kg (lbf)	6.8 (15)	6.8 (15)	6.8 (15)	6.8 (15)
Track	Width		cm (in)	38.1 (15)	38.1 (15)	38.1 (15)	38.1 (15)
	Length		cm (in)	345 (136)	345 (136)	345 (136)	345 (136)
	Adjustment	Deflection	mm (in)	40 – 55 (1-9/16 – 2-5/32)	40 – 55 (1-9/16 – 2-5/32)	40 – 55 (1-9/16 – 2-5/32)	40 – 55 (1-9/16 – 2-5/32)
		Force ③	kg (lbf)	7.3 (16)	7.3 (16)	7.3 (16)	7.3 (16)
Suspension Type		Track		Slide	Slide	Slide	Slide
		Ski		DSA	DSA	DSA	DSA
Length			cm (in)	292 (115)	294 (115.7)	Touring : 292 (115) Skandic : 294 (115.7)	272.5 (107.3)
Width			cm (in)	115.6 (45.5)	108 (42.5)	Touring : 115.6 (45.5) Skandic : 108 (42.5)	115.6 (45.5)
Height			cm (in)	122 (48.0)	122 (48.0)	122 (48.0)	112 (44.1)
Ski Stance			cm (in)	101.6 (40)	94 (37)	Touring : 101.6 (40) Skandic : 94 (37)	101.6 (40)
Mass (dry)			kg (lb)	208 (457)	209 (459)	Touring : 224 (493) Skandic : 216 (475)	199 (438)
Ground Contact Area			cm^2 (in^2)	7227 (1120)	7227 (1120)	7227 (1120)	6503 (1008)
Ground Contact Pressure			kPa (PSI)	2.82 (.409)	2.84 (.412)	Touring : 3.04 (.441) Skandic : 2.93 (.425)	3 (.435)
Frame Material				Aluminum	Aluminum	Aluminum	Aluminum
Bottom Pan Material				Polyethylene	Polyethylene	Polyethylene	Polyethylene
Cab Material				RRIM Polyurethane	RRIM Polyurethane	RRIM Polyurethane	RRIM Polyurethane
Battery			V (A•h)	12 (22)	N.A.	Touring : 12 (22) Skandic : N.A.	N.A.
Headlight			W	H4 60/55	H4 60/55	H4 60/55	H4 60/55
Taillight and Stoplight			W	8/27	8/27	8/27	8/27
Tachometer and Speedometer Bulb			W	5	2 x 3	2 x 3	2 x 3
Fuel and Temperature Gauge Bulb			W	N.A.	N.A.	N.A.	N.A.
Fuse	Starter Solenoid		A	30	N.A.	Touring : 30 Skandic : N.A.	N.A.
	Tachometer		A	N.A.	N.A.	N.A.	N.A.
Fuel Tank			L (U.S. gal)	40 (10.6)	40 (10.6)	40 (10.6)	40 (10.6)
Chaincase / Gearbox			mL (U.S. oz)	250 (8.5)	250 (8.5)	250 (8.5)	250 (8.5)
Cooling System			L (U.S. oz)	N.A.	N.A.	N.A.	N.A.
Injection Oil Reservoir			L (U.S. oz)	2.55 (86)	2.55 (86)	2.55 (86)	2.55 (86)

ENGINE TECHNICAL DATA LEGEND

BP : Breaker Points
BTDC : Before Top Dead Center
CDI : Capacitor Discharge Ignition
CTR : Center
K: Kilo (x 1000)
MAG : Magneto Side
N.A. : Not Applicable
PTO : Power Take Off Side
R: Rectangular
ST: Semi-trapez
µ : Micro (÷ 1000 000)

① The maximum horsepower RPM is applicable on the vehicle. It may be different under certain circumstances and BOMBARDIER INC. reserves the right to modify it without obligation.

② Rotary valve to crankcase clearance : 0.27 - 0.48 mm (.01 1-,019 in).

③ At 6000 RPM (engine cold) with headlamp turned on. Except ÉLAN model.

④ With centrifugal weight in fully advanced position.

Dynamic edge gap : 8.5 mm (.335 in).

Breaker point gap : 0.30-0.40 mm (.012 -.016 in).

Condenser capacity: 0.27 µF.

⑤ Small lighting coil : 1.85-2.35 Ω.

⑥ Force applied midway between pulleys to obtain specified deflection.

⑦ Crankshaft end-play is not adjustable on these models, specification is given for verification purposes only.

⑧ TRA drive pulley retaining screw : torque to 105 N•m (77 lbf•ft), install drive belt, accelerate the vehicle to moderate speed and apply the brake ; repeat 5 times. Reduce torque to 85 N•m (62.5 lbf•ft), then retorque to 95 N•m (70 lbf•ft).

⑨ All resistance measurements must be performed with parts at room temperature (approx. 20°C (68°F)). Temperature greatly affects resistance measurements.

VEHICLE TECHNICAL DATA LEGEND

DSA : Direct Shock Action
RRIM : Reinforced Reaction Injection Molding
TRA : Total Range Adjustable drive pulley
N.A. : Not Applicable

① Minimum allowable width may not be less than 3.0 mm (1/8 in) of new drive belt.

② Force applied midway between pulleys to obtain specified deflection.

③ Force or downward pull applied to track to obtain specified tension deflection.

④ Lever with roller pin P / N 420429140 (Hollow).

ANNEX 1

ÉLAN

ELAN '96

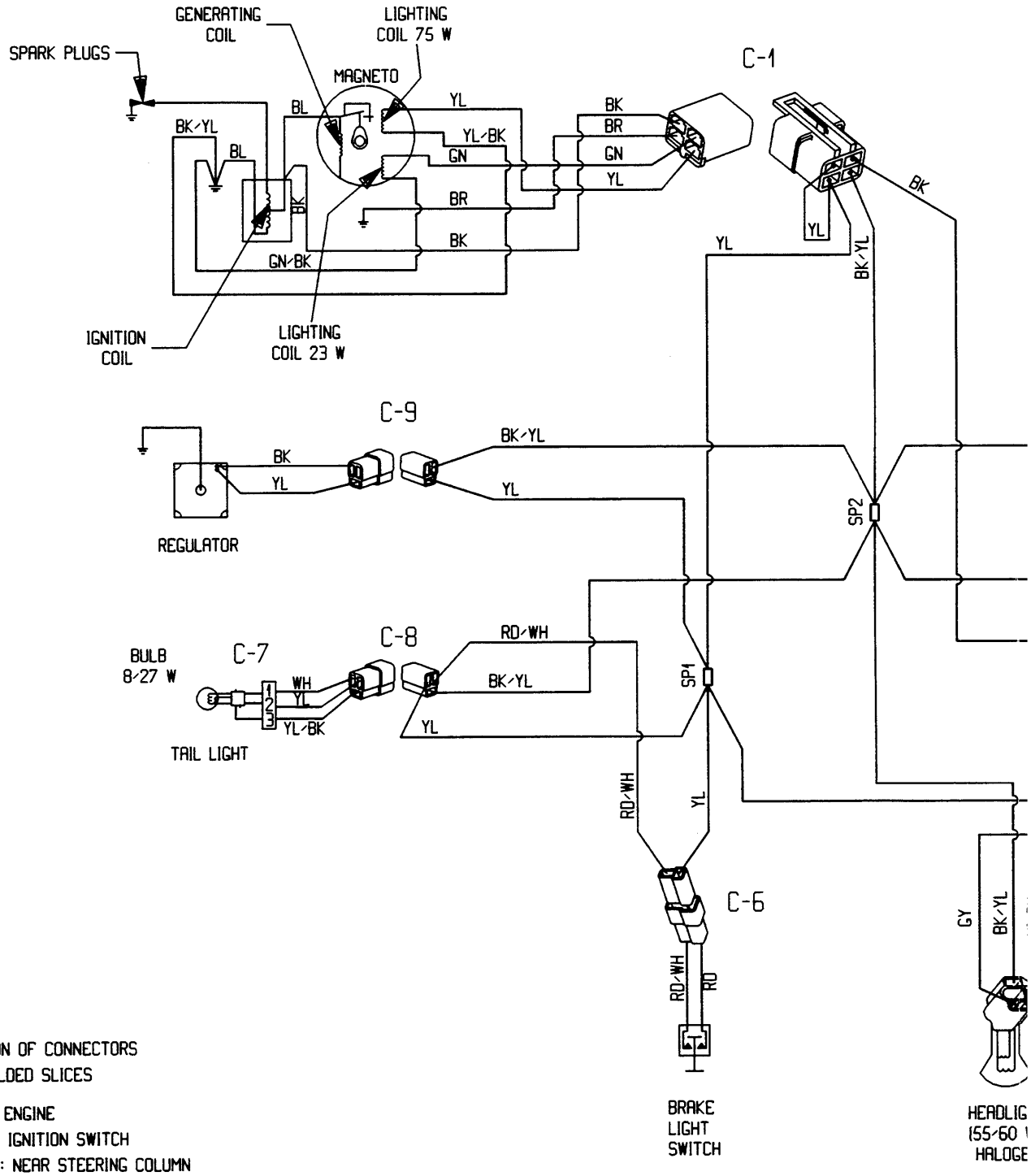

LOCATION OF CONNECTORS
AND WELDED SLICES

C-1: ON ENGINE
C-2: ON IGNITION SWITCH
C-3,C-4: NEAR STEERING COLUMN
C-5: NEAR HEADLIGHT
C-6: NEAR DRIVEN PULLEY
C-7: ON TAILLIGHT
SP1,C-8: UNDER CONSOLE
SP2,C-9: RIGHT SIDE OF STEERING BRACKET

◆ WARNING :

ENSURE ALL TEMINALS ARE PROPERLY CRIMPED ON THE WIRES AND ALL CONNECTOR HOUSINGS ARE PROPERLY FASTENED.

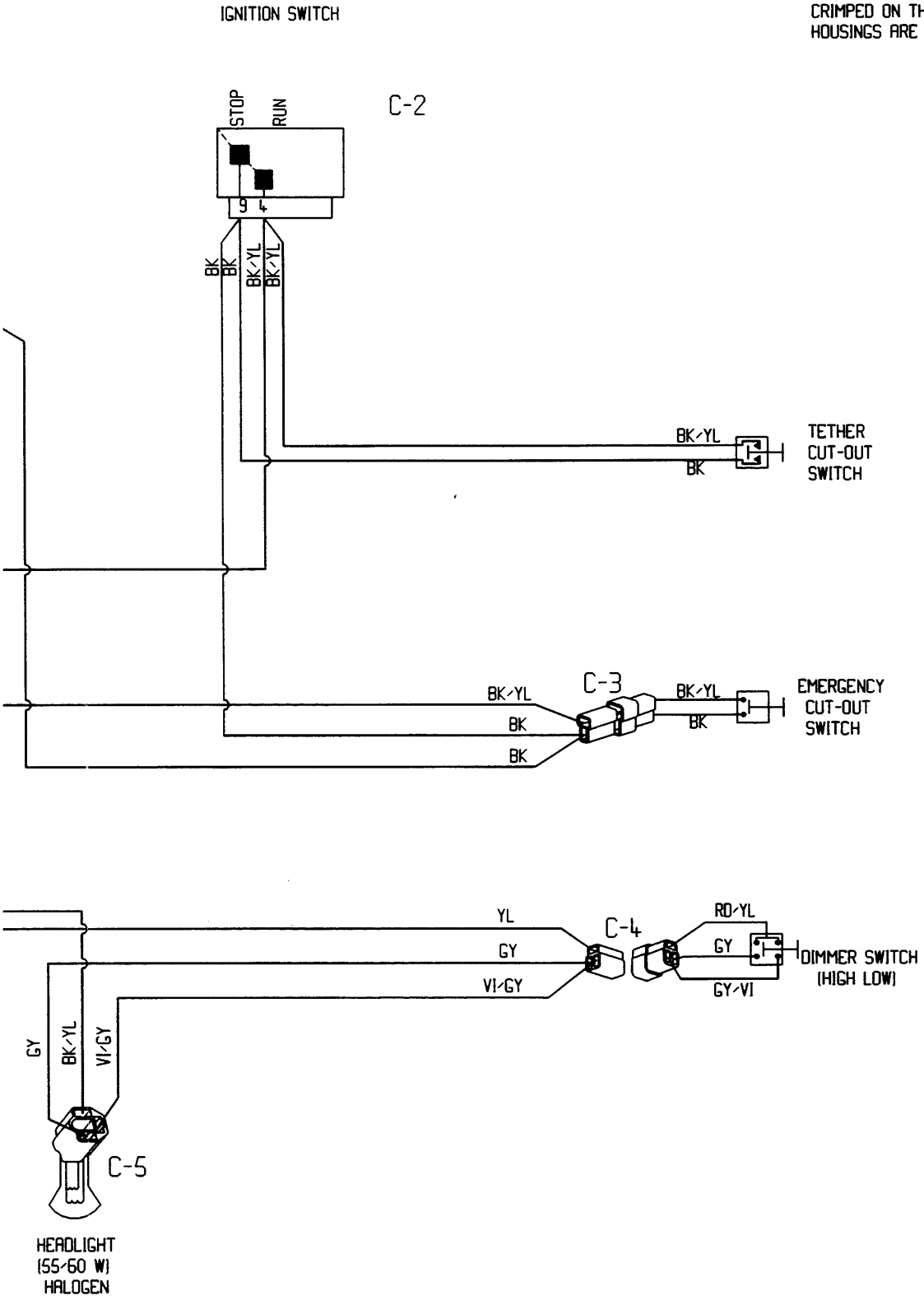

COLOR CODE	
BK - BLACK	GN - GREEN
WH - WHITE	GY - GREY
RD - RED	VI - VIOLET
BL - BLUE	OR - ORANGE
YL - YELLOW	BR - BROWN

ANNEX 2

TUNDRA II LT

TUNDRA '96
TUNDRA LT

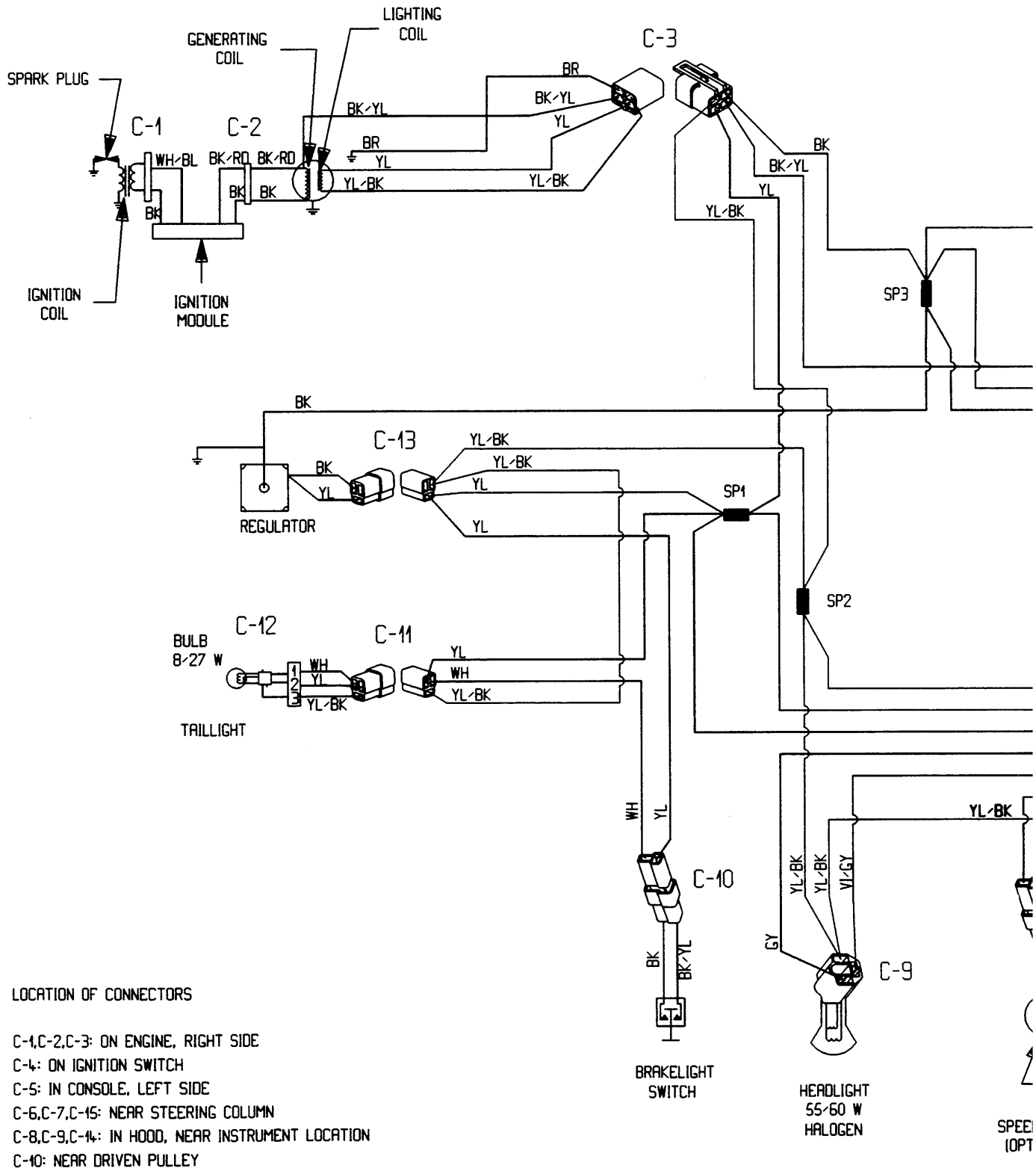

LOCATION OF CONNECTORS

C-1,C-2,C-3: ON ENGINE, RIGHT SIDE
C-4: ON IGNITION SWITCH
C-5: IN CONSOLE, LEFT SIDE
C-6,C-7,C-15: NEAR STEERING COLUMN
C-8,C-9,C-14: IN HOOD, NEAR INSTRUMENT LOCATION
C-10: NEAR DRIVEN PULLEY
C-11: BETWEEN SEAT AND FUEL TANK
C-12: ON TAILLIGHT
C-13: NEAR REGULATOR

◆ WARNING :

ENSURE ALL TERMINALS ARE PROPERLY CRIMPED ON THE WIRES AND ALL CONNECTOR HOUSINGS ARE PROPERLY FASTENED.

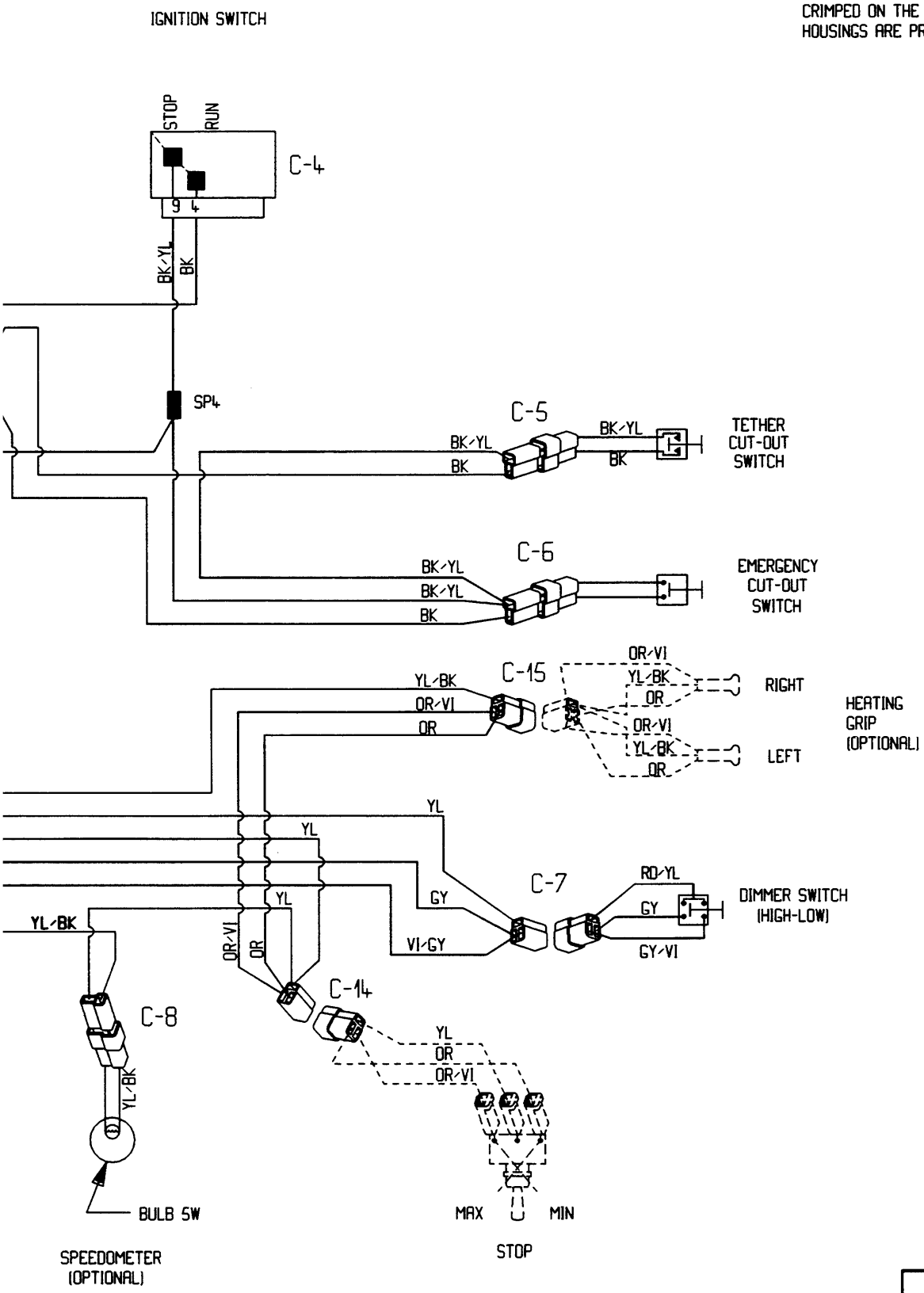

COLOR CODE	
BK - BLACK	GN - GREEN
WH - WHITE	GY - GREY
RD - RED	VI - VIOLET
BL - BLUE	OR - ORANGE
YL - YELLOW	BR - BROWN

ANNEX 3

FORMULA S / SL
SKANDIC 380 / 500

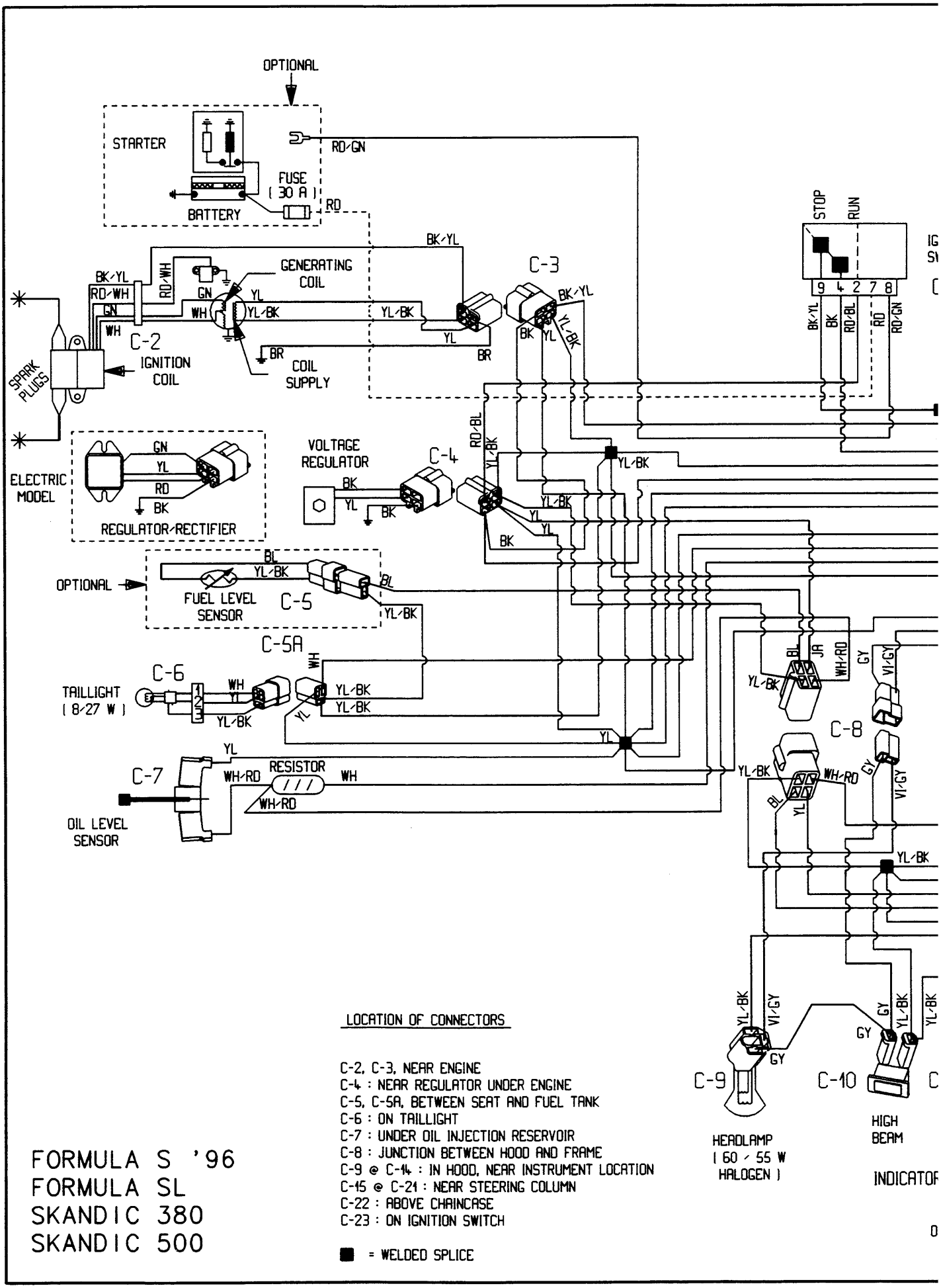

LOCATION OF CONNECTORS

C-2, C-3, NEAR ENGINE
C-4 : NEAR REGULATOR UNDER ENGINE
C-5, C-5A, BETWEEN SEAT AND FUEL TANK
C-6 : ON TAILLIGHT
C-7 : UNDER OIL INJECTION RESERVOIR
C-8 : JUNCTION BETWEEN HOOD AND FRAME
C-9 @ C-14 : IN HOOD, NEAR INSTRUMENT LOCATION
C-15 @ C-21 : NEAR STEERING COLUMN
C-22 : ABOVE CHAINCASE
C-23 : ON IGNITION SWITCH

■ = WELDED SPLICE

FORMULA S '96
FORMULA SL
SKANDIC 380
SKANDIC 500

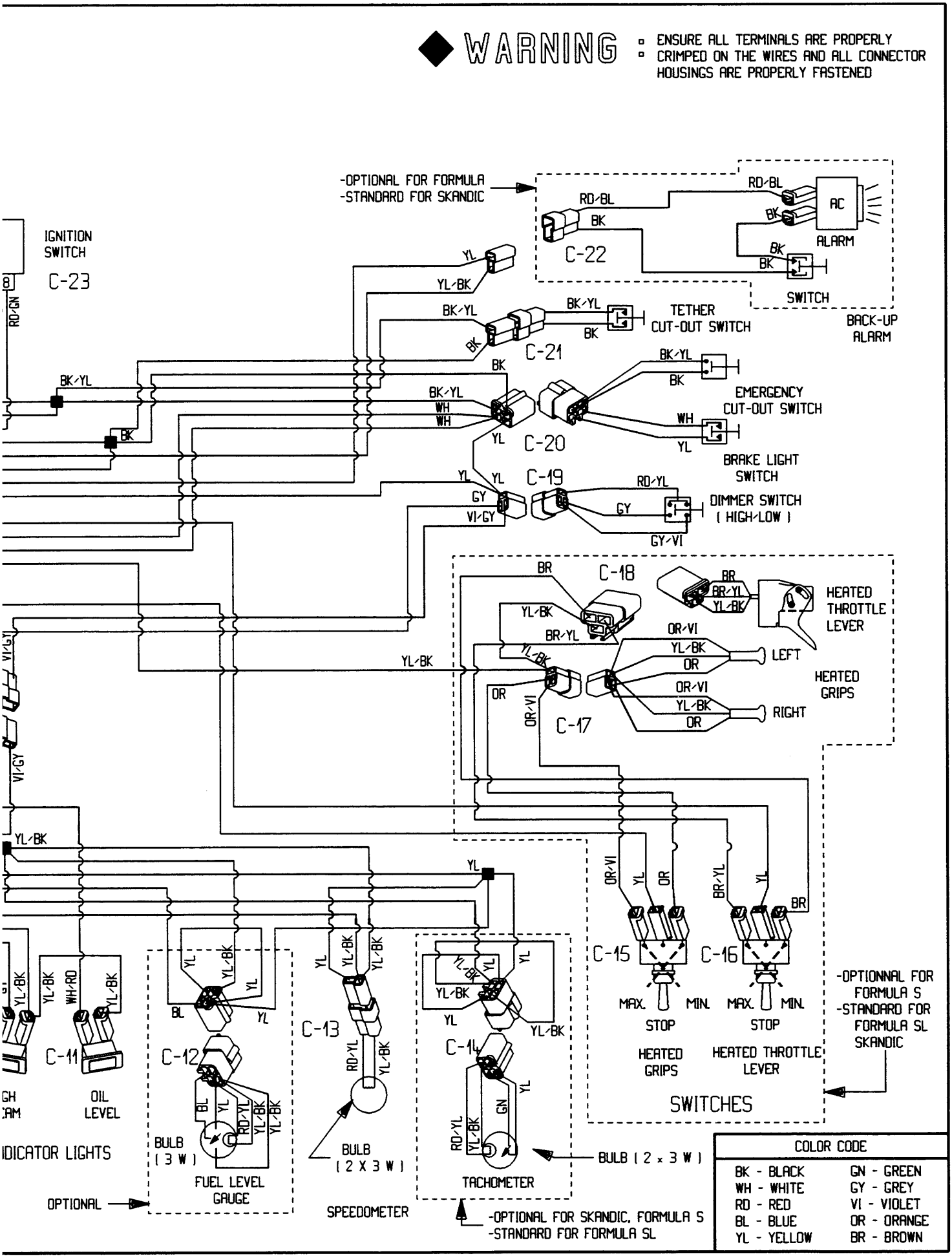
WARNING
ENSURE ALL TERMINALS ARE PROPERLY CRIMPED ON THE WIRES AND ALL CONNECTOR HOUSINGS ARE PROPERLY FASTENED
-OPTIONAL FOR FORMULA
-STANDARD FOR SKANDIC
IGNITION SWITCH
C-23
C-22
AC
ALARM
SWITCH
BACK-UP ALARM
C-21
TETHER CUT-OUT SWITCH
C-20
EMERGENCY CUT-OUT SWITCH
BRAKE LIGHT SWITCH
C-19
DIMMER SWITCH (HIGH/LOW)
C-18
HEATED THROTTLE LEVER
C-17
LEFT
RIGHT
HEATED GRIPS
C-15
C-16
MAX.
MIN.
STOP
HEATED GRIPS
HEATED THROTTLE LEVER
SWITCHES
-OPTIONNAL FOR FORMULA S
-STANDARD FOR FORMULA SL
SKANDIC
C-11
OIL LEVEL
C-12
BULB (3 W)
FUEL LEVEL GAUGE
OPTIONAL
C-13
BULB (2 X 3 W)
SPEEDOMETER
C-14
BULB (2 x 3 W)
TACHOMETER
-OPTIONAL FOR SKANDIC, FORMULA S
-STANDARD FOR FORMULA SL
COLOR CODE
BK - BLACK
WH - WHITE
RD - RED
BL - BLUE
YL - YELLOW
GN - GREEN
GY - GREY
VI - VIOLET
OR - ORANGE
BR - BROWN

ANNEX 4

TOURING E / E LT
TOURING LE / SLE

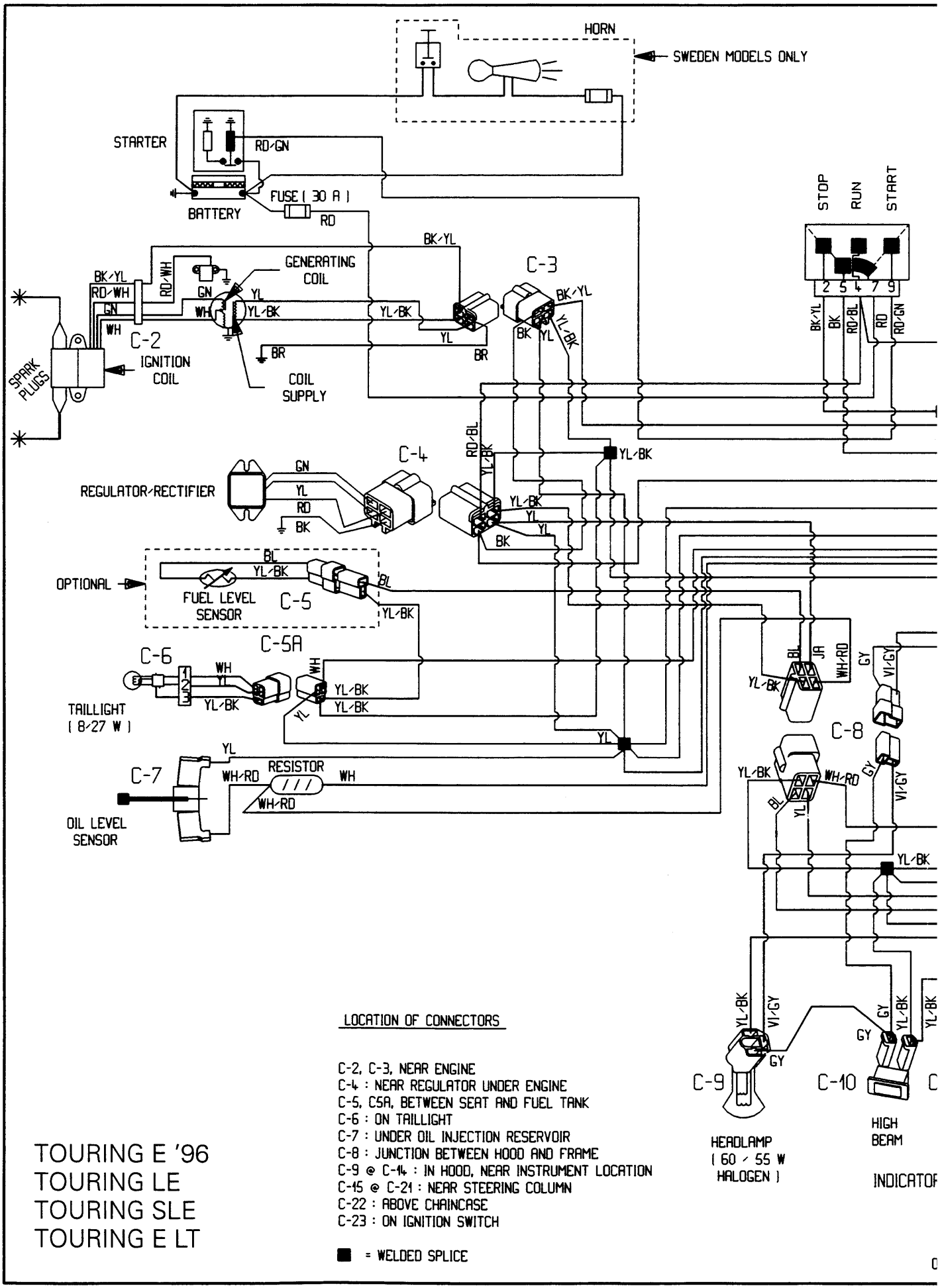

LOCATION OF CONNECTORS

C-2, C-3, NEAR ENGINE
C-4 : NEAR REGULATOR UNDER ENGINE
C-5, C5A, BETWEEN SEAT AND FUEL TANK
C-6 : ON TAILLIGHT
C-7 : UNDER OIL INJECTION RESERVOIR
C-8 : JUNCTION BETWEEN HOOD AND FRAME
C-9 @ C-14 : IN HOOD, NEAR INSTRUMENT LOCATION
C-15 @ C-21 : NEAR STEERING COLUMN
C-22 : ABOVE CHAINCASE
C-23 : ON IGNITION SWITCH

■ = WELDED SPLICE

TOURING E '96
TOURING LE
TOURING SLE
TOURING E LT

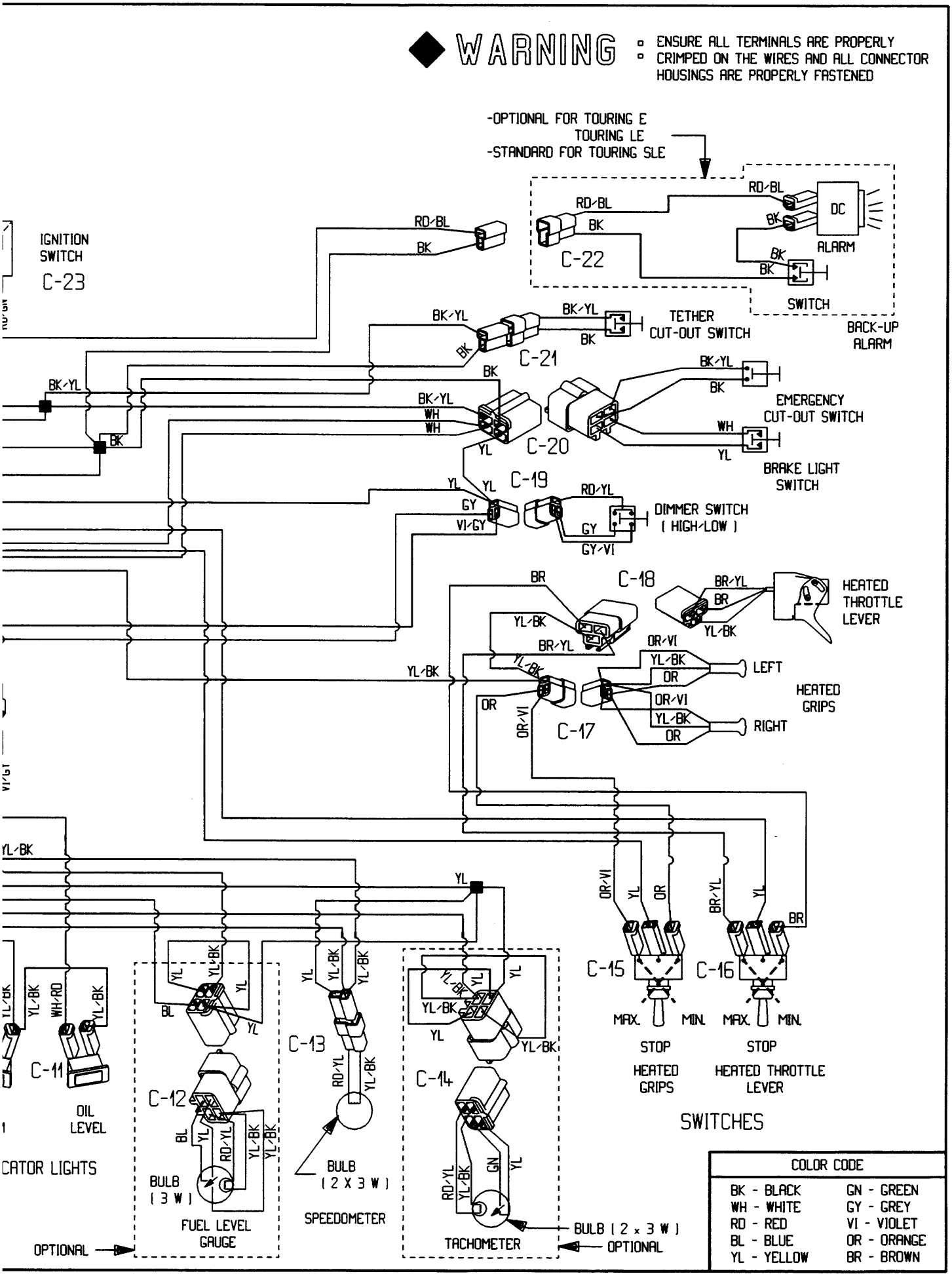
WARNING
ENSURE ALL TERMINALS ARE PROPERLY CRIMPED ON THE WIRES AND ALL CONNECTOR HOUSINGS ARE PROPERLY FASTENED
-OPTIONAL FOR TOURING E
TOURING LE
-STANDARD FOR TOURING SLE
IGNITION SWITCH
C-23
C-22
DC
ALARM
SWITCH
BACK-UP ALARM
C-21
TETHER CUT-OUT SWITCH
C-20
EMERGENCY CUT-OUT SWITCH
BRAKE LIGHT SWITCH
C-19
DIMMER SWITCH (HIGH/LOW)
C-18
HEATED THROTTLE LEVER
C-17
LEFT
RIGHT
HEATED GRIPS
C-15
C-16
MAX.
MIN.
STOP
HEATED GRIPS
HEATED THROTTLE LEVER
SWITCHES
C-11
OIL LEVEL
CATOR LIGHTS
C-12
BULB (3 W)
FUEL LEVEL GAUGE
OPTIONAL
C-13
BULB (2 X 3 W)
SPEEDOMETER
C-14
BULB (2 x 3 W)
TACHOMETER
OPTIONAL
COLOR CODE
BK - BLACK
WH - WHITE
RD - RED
BL - BLUE
YL - YELLOW
GN - GREEN
GY - GREY
VI - VIOLET
OR - ORANGE
BR - BROWN

Bombardier SERVICE PUBLICATIONS REPORT

Publication title and year _____ Page _____

Machine _____ Report of error ☐ Suggestion ☐

_____

_____

_____

_____

_____

_____

Name _____

Address _____

City and State / Prov. _____ Date _____

Zip code / Postal code _____

Bombardier SERVICE PUBLICATIONS REPORT

Publication title and year _____ Page _____

Machine _____ Report of error ☐ Suggestion ☐

_____

_____

_____

_____

_____

_____

Name _____

Address _____

City and State / Prov. _____ Date _____

Zip code / Postal code _____

Bombardier SERVICE PUBLICATIONS REPORT

Publication title and year _____ Page _____

Machine _____ Report of error ☐ Suggestion ☐

_____

_____

_____

_____

_____

_____

Name _____

Address _____

City and State / Prov. _____ Date _____

Zip code / Postal code _____

We would be pleased if you could communicate to Bombardier any suggestions you may have concerning our publications.

AFFIX
PROPER
POSTAGE

Bombardier Inc.
Technical Publications
After Sales Service
Valcourt, {Quebec)
Canada, JOE 2L0

AFFIX
PROPER
POSTAGE

Bombardier Inc.
Technical Publications
After Sales Service
Valcourt, (Quebec)
Canada, JOE 2L0

AFFIX
PROPER
POSTAGE

Bombardier Inc.
Technical Publications
After Sales Service
Valcourt, (Quebec)
Canada, JOE 2L0

®*MARQUES DE COMMERCE DE BOMBARDIER INC.
TOUS DROITS RÉSERVÉS© 1995 BOMBARDIER INC.
LITHOGRAPHIÉ AU CANADA

®*TRADEMARKS OF BOMBARDIER INC.
ALL RIGHTS RESERVED© 1995 BOMBARDIER INC.
LITHO'D IN CANADA

VOLUME 2

SHOP MANUAL

Ski-doo®

BOMBARDIER

GRAND TOURING 500/580/SE
FORMULA SLS/STX/STX LT (2)
SUMMIT 500
MACH 1

1996

484 0628 01

ski-doo®

1996
Shop Manual

VOLUME 2

GRAND TOURING 500 / 580 / SE
FORMULA SLS
FORMULA STX / LT
SUMMIT 500
MACH 1

Legal deposit :

National Library of Quebec
2nd trimester 1995
National Library of Canada

All rights reserved. No parts of this manual may be reproduced in any form without the prior written permission of Bombardier Inc.

©Bombardier Inc. 1995

Printed in Canada

®*Registered trademarks of Bombardier Inc.

This document contains the trademarks of the following companies :

Loctite® is a trademark of Loctite Corporation
Metton® is a trademark of Hercules Inc.
Molykote® is a trademark of Dow Corning Corporation
Silastic® is a trademark of Dow Corning Corporation
Snap-on® is a trademark of Snap-on Tools Corporation
Versilube® is a trademark of General Electric Company

TABLE OF CONTENTS

SECTION	SUB-SECTION	PAGE
SAFETY NOTICE		III
1996 BOMBARDIER SNOWMOBILES SHOP MANUAL VOLUME 2 (INTRODUCTION)		IV
01 SERVICE TOOLS AND SERVICE PRODUCTS	01 – Service tools	01-01-1
	02 – Service products	01-02-1
02 LUBRICATION AND MAINTENANCE	01 – Lubrication and maintenance	02-01-1
03 TROUBLESHOOTING	00 – Table of contents	03-00-1
	01 – Engine	03-01-1
	02 – Fuel and oil systems	03-02-1
	03 – Transmission and brake systems	03-03-1
	04 – Electrical system	03-04-1
	05 – Suspension system and track	03-05-1
04 ENGINE	00 – Table of contents	04-00-1
	01 – 494, 582, 583 and 670 engine types	04-01-1
	02 – Leak test and engine dimension measurement	04-02-1
	03 – CDI system	04-03-1
	04 – Oil injection system	04-04-1
	05 – Liquid cooling system	04-05-1
	06 – Rotary valve, coolant pump and reservoir	04-06-1
	07 – Rewind starter	04-07-1
	08 – Carburetor and fuel pump	04-08-1
	09 – Fuel tank and throttle cable	04-09-1
05 TRANSMISSION	00 – Table of contents	05-00-1
	01 – Drive belt	05-01-1
	02 – Drive pulley	05-02-1
	03 – Driven pulley	05-03-1
	04 – Pulley distance and alignment	05-04-1
	05 – Brake	05-05-1
	06 – Chaincase	05-06-1
	07 – Gearbox	05-07-1
	08 – Drive chain	05-08-1
06 ELECTRICAL	00 – Table of contents	06-00-1
	01 – Wiring diagrams (see ANNEXES at the end of this manual)	06-01-1
	02 – Ignition timing	06-02-1
	03 – Spark plugs	06-03-1
	04 – Battery	06-04-1
	05 – Electric starter	06-05-1
	06 – Testing procedure	06-06-1

TABLE OF CONTENTS

SECTION	SUB-SECTION	PAGE
07 REAR SUSPENSION	00 – Table of contents	07-00-1
	01 – Suspension SC-10 Sport, Touring and Mountain	07-01-1
	02 – Improved C-7 suspension	07-02-1
	03 – Drive axle	07-03-1
	04 – Track	07-04-1
08 STEERING / FRONT SUSPENSION	00 – Table of contents	08-01-1
	01 – Steering system	08-02-1
	02 – Suspension and ski system	08-02-1
09 BODY / FRAME	00 – Table of contents	09-01-1
	01 – Body	09-02-1
	02 – Frame	08-02-1
10 TECHNICAL DATA	01 – SI metric information guide	10-01-1
	02 – Engines	10-02-1
	03 – Vehicles	10-03-1
	04 – Technical data legends	10-04-1
ANNEXES (Wiring diagrams)		

SAFETY NOTICE

This manual has been prepared as a guide to correctly service and repair 1996 Ski-Doo snowmobiles. See model list below.

This edition was primarily published to be used by snowmobile mechanics who are already familiar with all service procedures relating to Bombardier made snowmobiles.

Please note that the instructions will apply only if proper hand tools and special service tools are used.

This shop manual uses technical terms which may be slightly different from the ones used in parts catalog.

It is understood that this manual may be translated into another language. In the event of any discrepancy, the English version shall prevail.

The content depicts parts and / or procedures applicable to the particular product at its time of manufacture. It does not include dealer modifications, whether authorized or not by Bombardier, after manufacturing the product.

In addition, the sole purpose of the illustrations throughout the manual, is to assist identification of the general configuration of the parts. They are not to be interpreted as technical drawings or exact replicas of the parts.

The use of Bombardier parts is most strongly recommended when considering replacement of any component. Dealer and / or distributor assistance should be sought in case of doubt.

The engines and the corresponding components identified in this document should not be utilized on product(s) other than those mentioned in this document.

Torque wrench tightening specifications must be strictly adhered to. Locking devices (ex. : locking tab, elastic stop nut, etc.) must be installed or replaced with new ones, where specified. If the efficiency of a locking device is impaired, it must be renewed.

This manual emphasizes particular information denoted by the wording and symbols ;

◆ WARNING : Identifies an instruction which, if not followed, could cause serious personal injury including possibility of death.

▼ CAUTION : Denotes an instruction which, if not followed, could severely damage vehicle components.

○ NOTE : Indicates supplementary information needed to fully complete an instruction.

Although the mere reading of such information does not eliminate the hazard, your understanding of the information will promote its correct use. Always use common shop safety practice.

This information relates to the preparation and use of Bombardier snowmobiles and has been utilized safely and effectively by Bombardier Inc.. However, Bombardier Inc. disclaims liability for all damages and / or injuries resulting from the improper use of the contents. We strongly recommend that any services be carried out and / or verified by a highly skilled professional mechanic. It is understood that certain modifications may render use of the vehicle illegal under existing federal, provincial and state regulations.

INTRODUCTION

This *Shop Manual VOLUME 2* covers the following Bombardier made 1996 snowmobiles :

MODELS	MODEL NUMBER
FORMULA* SLS (Canada).....	1049
FORMULA* SLS (U.S.)	1050
FORMULA* SLS (Sweden).....	1097
GRAND TOURING* 500 (Canada)	1067
GRAND TOURING* 500 (U.S.)	1068
GRAND TOURING* 500 (Sweden)	1069
GRAND TOURING* 580 (Canada)	1070
GRAND TOURING* 580 (U.S.)	1071
GRAND TOURING* 580 (Sweden)	1072
GRAND TOURING* SE (Canada)..	1073
GRAND TOURING* SE (U.S.)	1074
GRAND TOURING* SE (Sweden).	1075
SUMMIT* 500 (Canada)	1058
SUMMIT* 500 (U.S.).....	1059
FORMULA* STX (Canada)	1054
FORMULA* STX (U.S.).....	1055
FORMULA* STX LT (2) (Canada)..	1056
FORMULA* STX LT (2) (U.S.).....	1057
MACH 1* (Canada)	1081
MACH 1* (U.S.)	1082
MACH 1* (Sweden)	1083

*Trademarks of Bombardier Inc.

LIST OF MODELS GROUPED BY COMMON CHASSIS

S-Series consists of :

Formula SLS

Summit 500

Grand Touring 500

A03A02A

TYPICAL — S-SERIES

F-Series consists of :

Grand Touring 580 / SE

Formula STX / STX LT

Mach 1

A06A06A

TYPICAL — F-SERIES

Each vehicle has its particular vehicle serial number

Serial Number Meaning :

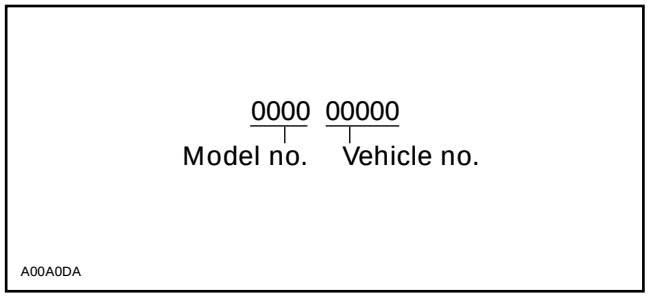

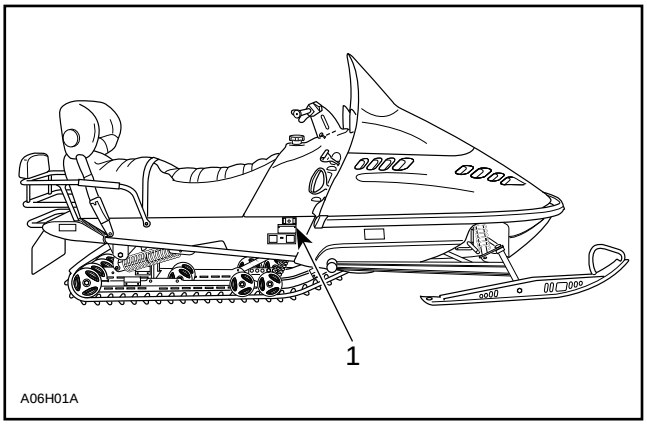

TYPICAL

1. Vehicle serial number

The engine also has a serial number.

Liquid-Cooled Engines

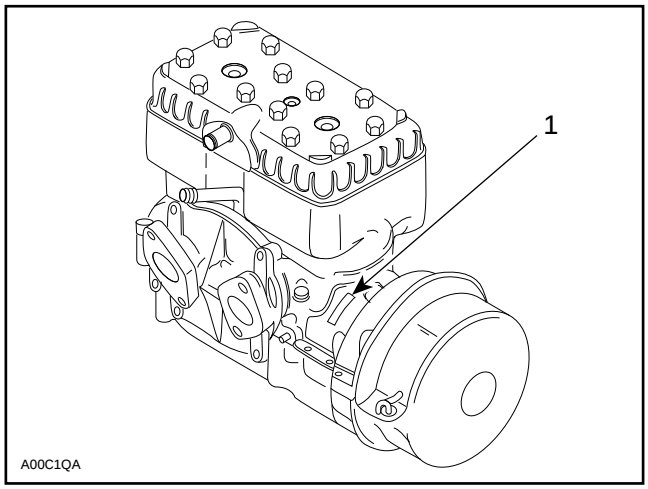

1. Engine serial number

ARRANGEMENT OF THE MANUAL

The manual is divided into 10 major sections :

01 SERVICE TOOLS AND SERVICE PRODUCTS

02 LUBRICATION AND MAINTENANCE

03 TROUBLESHOOTING

04 ENGINE

05 TRANSMISSION

06 ELECTRICAL

07 REAR SUSPENSION

08 STEERING / FRONT SUSPENSION

09 BODY / FRAME

10 TECHNICAL DATA

ANNEXES

Each section is divided in various sub-sections, and again, each sub-section has one or more divisions.

This *Shop Manual* uses technical terms wich may be slightly different from the ones in the parts catalog.

TYPICAL PAGE

Page heading indicates section and sub-section detailed.

Sub-section title indicates beginning of the sub-section.

Sub-title above exploded view indicate pertaining models.

Exploded view assists you in identifying parts and related positions.

Drop represents a liquid product to be applied to a surface. In this case Loctite 271 to screw threads.

Bold face number indicates special procedure concerning this part.

Illustration number for publishing process.

Dotted box contains parts of a particular model in this case the short track models only.

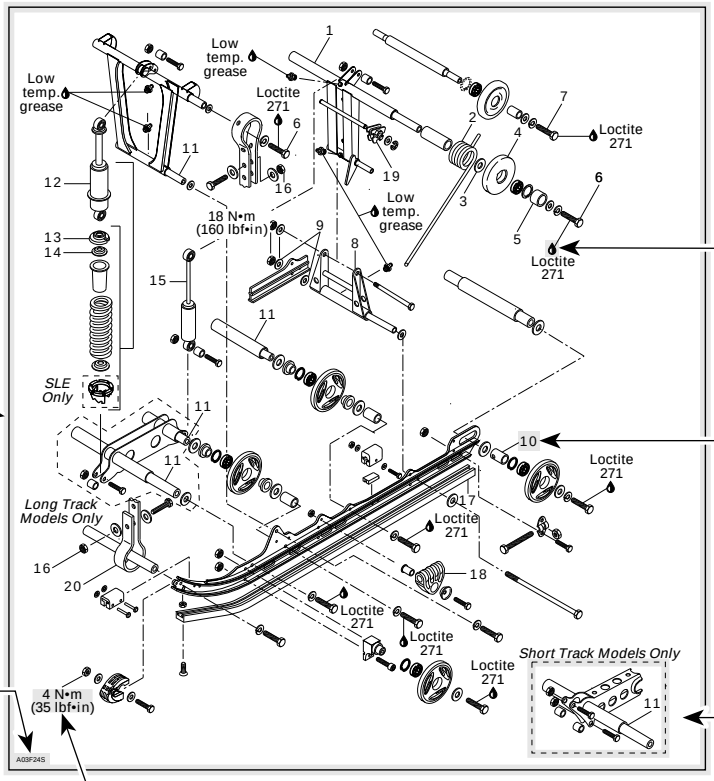

Tightening torque near by fastener. In this case, nut must be torqued to 4 N•m or 35 lbf•in.

Page numbering system :
07 : REAR SUSPENSION section
01 : SUSPENSION SC-10 SPORT, TOURING AND MOUNTAIN sub-section
1 : First page of this sub-section

▼CAUTION : Pay attention to torque specifications. Some of these are in lbf•in instead of lbf•ft. Use appropriate torque wrench.

A01A1QS

TYPICAL PAGE

Turn puller handle and sliding half at once to extract the bushing.

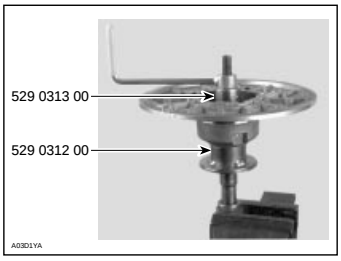

IMPORTANT : Large bushing retaining screws and washers must be removed before small bushing installation.

Coat bushing outside diameter with Loctite 609 (P / N 413 7031 00).

Install bushing as following photo.

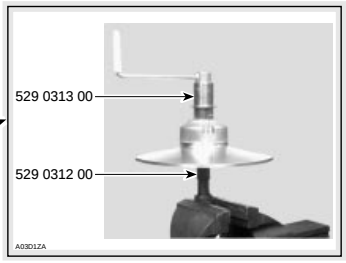

ASSEMBLY

Came Slider Shoe

When replacing slider shoes no. 4, always install a new set (3 shoes) to maintain equal pressure on the cam.

Assemble driven pulley components by reversing the disassembly procedure.

Cam

Coat cam no. 18 interior with anti-seize lubricant.

INSTALLATION

Countershaft

CAUTION : Always apply anti-seize lubricant (P / N 413 7010 00) on the countershaft before final pulley installation.

F-Series and S-Series Only

Should installation procedure be required, refer to BRAKE 05-05 then look for Brake Disc and Countershaft Bearing Adjustment.

Reinstall the pulley on the countershaft by reversing the removal procedure.

All Models

Check end play of driven pulley on countershaft by pushing pulley towards outer housing so that the inner shims (P / N 504 1082 00) contact it. Measure end play at the mounting screw end between shim(s) and puley. See illustration.

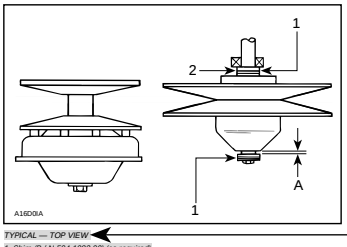

TYPICAL — TOP VIEW

1. Shim (P / N 504 1082 00) (as required)
2.Contact
A. 0 to 1 mm (0 to 3/64 in)

Torque retaining screw no. 13 to 25 N•m (18 lbf•ft).

ADJUSTMENT

Refer to PULLEY DISTANCE AND ALIGNMENT 05-04 to adjust pulley distance. Adjust drive belt height between pulley halves to obtain specified belt deflection.

Title indicates main procedure to be carried-out.

Italic bold face type setting indicates a particular procedure concerning a model.

Italic bold face setting in this case indicates that particular procedure for F and S-series is finished, so from this point, all models are concerned.

''TYPICAL'' caption indicates a general view which does not represent full detail. "TOP VIEW" caption helps you in understanding illustration.

Illustration always follows text to which it pertains.

Call-outs for above illustration.

Sub-title indicates a particular procedure for the named part.

Reference to look up a certain section and sub-section (PULLEY DISTANCE AND ALIGNMENT 05-04). In this case it concerns pulleys adjustment.

Number : following part name refers to exploded view at beginning of sub-section.

A01A1RS

GENERAL INFORMATION

The information and component / system descriptions contained in this manual are correct at time of publication. Bombardier Inc. however, maintains a policy of continuous improvement of its products without imposing upon itself any obligation to install them on products previously manufactured.

Due to late changes, it may have some differences between the manufactured product and the description and / or specifications in this document.

Bombardier Inc. reserves the right at any time to discontinue or change specifications, designs, features, models or equipment without incurring obligation.

USEFUL PUBLICATIONS

Refer to *Parts Catalogs* to order the right parts.

PARTS CATALOG	
MODELS	P / N
FORMULA S FORMULA SL FORMULA SLS	480 1407 00
GRAND TOURING 500 GRAND TOURING 580 GRAND TOURING SE	480 1405 00
SUMMIT 500 SUMMIT 583 SUMMIT 670	480 1406 00
FORMULA STX FORMULA STX LT (2)	480 1408 00
FORMULA III / III LT MACH 1 MACH Z / Z LT	480 1411 00
SKANDIC WT	480 1419 00

Use *Tools and Accessories Catalog* to order the tools you need. See also SERVICE TOOLS 01-01.

1994 TOOLS AND ACCESSORIES (P / N 480 1343 00).

Use *Specification Booklet* to find rapidly the right specs.

1990-1996 SPECIFICATION BOOKLET (P / N 480 1400 00).

ILLUSTRATIONS AND PROCEDURES

The illustrations show the typical construction of the different assemblies and, in all cases, may not reproduce the full detail or exact shape of the parts shown, however, they represent parts which have the same or a similar function.

CAUTION : Most components of those vehi-cles are built with parts dimensioned in the metric system. Most fasteners are metric and must not be replaced by customary fasteners or vice versa. Mismatched or incorrect fasteners could cause damage to the vehicle or possible personal injury.

As many of the procedures in this manual are interrelated, we suggest, that before undertaking any task, you read and thoroughly understand the entire section or sub-section in which the procedure is contained.

A number of procedures throughout the book require the use of special tools. Before commencing any procedure, be sure that you have on hand all the tools required, or approved equivalents.

The use of RIGHT and LEFT indications in the text, always refers to driving position (when sitting on vehicle).

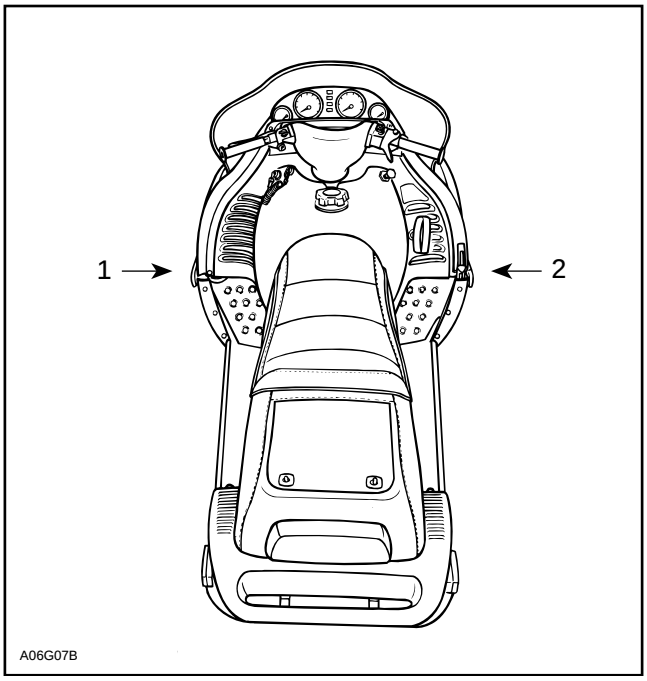

(TYPICAL)

1. *Right*
2. *Left*

Technical Publications
Bombardier Inc.
Valcourt (Quebec) Canada

SERVICE TOOLS

ENGINE (Mandatory service tools)

NOTE : The numbers outlined in black (example : ❑) are reference numbers to tools from other divisions (Sea-Doo and/or Sea-Doo Jet Boats). Matching numbers are the same tool even if the part numbers are different.

Degree wheel **1**

(p/ N414 3529 00)

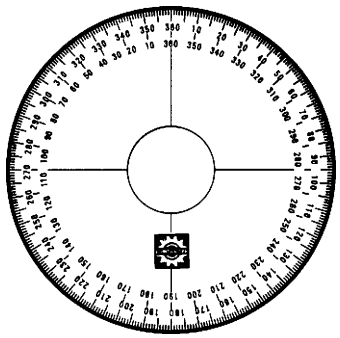

AOOB334

APPLICATION

All rotary valve engines.

Hose pincher (2) **2**

(P/ N 5290099 00)

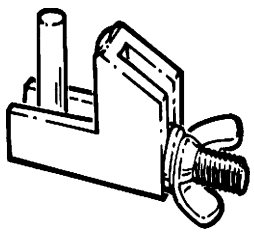

A01B2I4

APPLICATION

All vehicles.

Fan holder ❑

(P/ N 4208763 57)

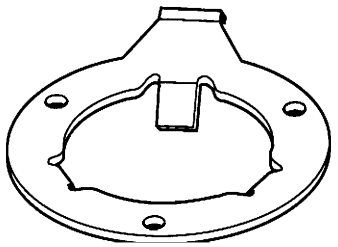

A00C0Q4

APPLICATION

377, 443 and 503 engines.

Magneto puller ring

(p/ N 4208760 80)

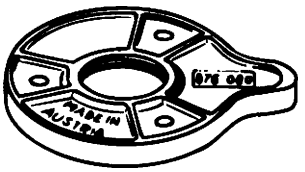

A00C1R4

APPLICATION

All engines except 247.

Magneto puller **5**

(P/ N 5290225 00)

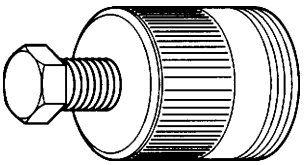

A00C1A4

APPLICATION

All engines except 247.

Aligning pin (4)

(p/ N 5290189 00)

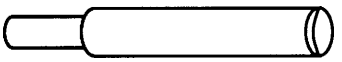

A00A1D4

APPLICATION

467 and 582 engines.

Pusher **7**

(washer behind the impeller)

(p/ N 5290207 00)

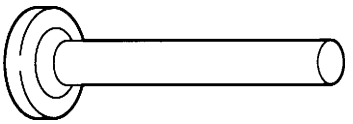

A00C3H4

APPLICATION

Rotary valve engines.

Rotary valve shaft pusher **8**

(p/ N 4208766 12)

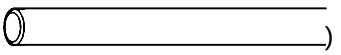

A00C0F4

APPLICATION

Rotary valve engines.

ENGINE (Mandatory service tools)

Rotary valve seal pusher **9**

(p/ N 4208766 07)

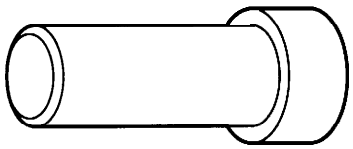

AOOCOY4

APPLICATION

Rotary valve engines.

Seal pusher (water pump) **10**

(p/ N 4208765 12)

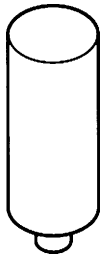

AOOC374

APPLICATION

Rotary valve engines.

Rotary valve shaft seal pusher (coolant pump side) m

(p/ N 4208770 50)

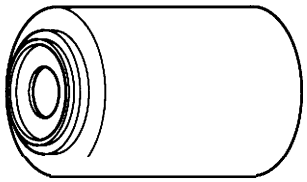

AOOCOX4

APPLICATION

Rotary valve engines.

Bearing pusher (rotary valve) **12**

(P/ N 4208765 00)

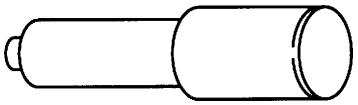

AOOB2J4

APPLICATION

Rotary valve engines.

Engine leak tester kit m

(P/ N 8617491 00)

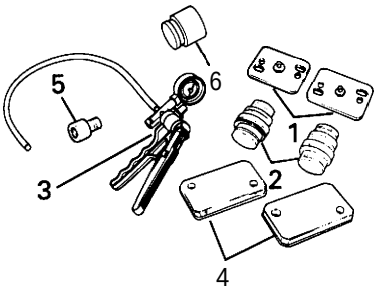

A01B2D4

APPLICATION

All engines.

Parts included in the kit:

1) Exhaust oulet plug (2)
   (p/ N 5290246 00)
2) Intake manifold plug (2)
   (P/ N 5290110 00)
3) Air pump (1)
   (P / N 5290218 00)
4) RAVE system plug (2)
   (p/ N 5290112 00)
5) Adapter (2)
   (p/ N 5172349 00)
6) Intake manifold plug -779
   (p/ N 5290305 00)

2-1 /4 in plug (1)
(p/ N 5290211 00)
2-3/4 in plug (1)
(p/ N 5290212 00)
Plates (2)
(p/ N 5290213 00)
Radiator plug (1)
(p/ N 5290214 00)
Clamp (1)
(P/ N 4088035 00)
Adapter 3/1 6 ID x 1/8 NPT
(p/ N 4082011 00)

O NOTE : Must maintain a pressure of 5 lb during 3 minutes. Never pressurize over 5 lb.

ENGINE (Mandatory service tools)

Piston pinpuller **16**

P / N 5290290 00)

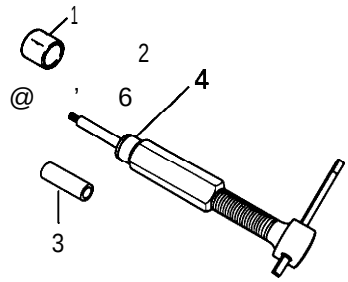

.01B4H4

APPLICATION

All engines.

Parts included :

1) Locating sleeve (3)
(p/ N 5290238 00)
2) Expansion sleeve (3)
(p/ N 5290237 00)
3) Adaptor
(P / N 5290236 00)
4) Bushing
(p/ N 5290277 03)

Rubber pad **17**

(p/ N 5290234 00)

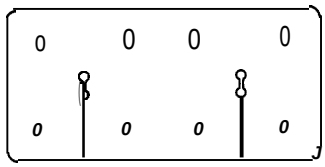

A01B4C4

APPLICATION

All cageless bearing engines (277 and 503).

Rotary valve circlip tool

A) (p/N 5290291 00) **18**

B) (p/N 5290208 00) **15**

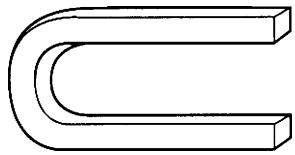

A00C314

APPLICATION

A) 454 and 670 engines.

B) All rotary valve engines except the 454 and 670.

ENGINE (Optional service tools)

The following tools are highly recommended to optimize your basic tool kit and reduce tear down time.

1- Crankshaft puller assembly **200**
(p/ N 4208762 98)
For 779 : **250**
(p/ N 4208776 35)
With 145 mm screw : **258**
(p/ N 4209407 55)

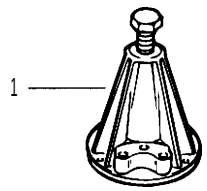

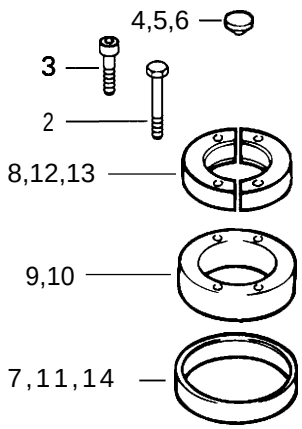

AOOC3L4

APPUCATION
All engines.

2- Screw M8 x 70 (4)	P / N 420841201	**500**
All engines except 247.		
3- Screw M8 x 40 (4)	P / N 420840681	**559**
247, 277, 467 and 670 engines.		
4- Crankshaft protector PTO	P / N 420876552	**259**
All engines except 247.		
5- Crankshaft protector MAG	P / N 420976890	**260**
247 engine.		
6- Crankshaft protector MAG	P / N 420876557	**554**
All engines except 247.		
7- Puller ring	P / N 420977480	**257**
All engines.		
8- Half ring ass'y	P / N 420276025	**558**
All engines except 377, 503 and 779.		
9- Distance ring	P / N 420876565	**261**
All engines except 247 and 277.		
10- Distance ring	P / N 420876569	**557**
377, 443, 503, 582, 583 and 670 engines.		
11- Puller ring	P / N 420977490	**555**
All engines.		
12- Half ring	P / N 420977475	**556**
All engines except 247 and 779.		
13- Half ring ass'y	P / N 420977479	**252**
779 engine.		
14- Puller ring	P / N 420977494	**251**
779 engine,		

ENGINE (Optional service tools)

Piston circlip installer

A) (p / N 5290169 00) **202**

B) (p / N 2908770 16) **548**

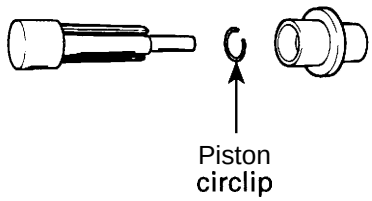

A01B1P4

APPLICATION

A) All engines except 670.

B) 670 engines.

Piston pin / connecting rod bearing centering tool **203**

(p/ N 5290091 00)

NOTE : New diameter is 9.65 mm (0.380”).

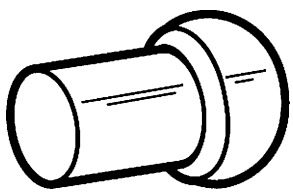

A01B1RA

APPLICATION

All engines.

Ring compressor

A) (p/N4208760 90) (62 mm) **204**

B) (p/N4208769 74) (69.5 mm) **205**

C) (P/N4208769 70) (72 mm) **206**

D) (P/N4208769 72) (76 mm) **207**

E) (P/N 4208769 75) (67.5 mm) **208**

F) (p/N 5290308 00) (78 mm) **262**

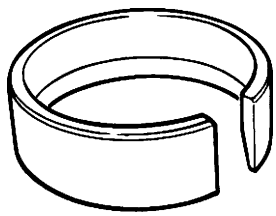

A01B1T4

APPLICATION

A) 377 engines.

B) 467 engines.

C) 503, 253 and 536 engines.

D) 582, 583 and 643 engines.

E) 447 engines,

F) 670 engines.

Magneto coil centering ring **209**

(P/ N 4208769 22)

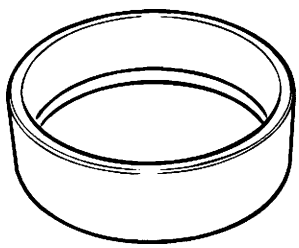

A01B1V4

APPLICATION

All engines with Nippondenso CDI (160 W).

Seal protector sleeve

(p/ N 4209779 10) (PTO) **210**

(P/ N 4202769 00) (MAG) **211**

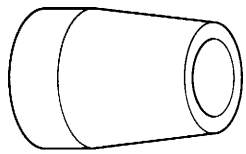

AOOCOD4

APPLICATION

247 engine.

Engine seal pusher **212**

(p/ N 4209779 20)

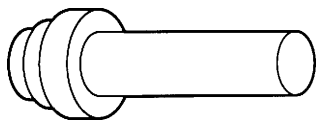

AOOCOV4

APPLICATION

247 engine.

Polyamid ring pusher **213**

(p/ N 4202769 30)

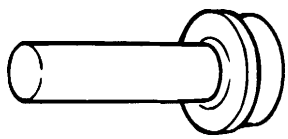

A00C0Z4

APPLICATION

247 engine.

ENGINE (Optional service tools)

Magneto holder **215**
(P/ N 4209765 50)

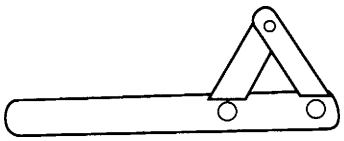

A00C1V4

APPLICATION
247 engine.

Crankshaft feeler gauge **216**
(P/ N 4208766 20)

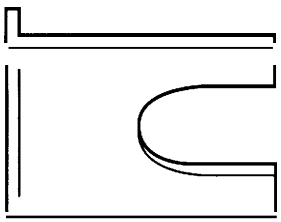

A00C114

APPLICATION
377, 443, 447 and 503 engines.

Crankshaft distance gauge **217**
(P/ N 4208768 22)

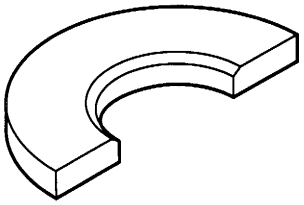

AOOC294

APPLICATION
377, 443 and 447 engines.

Crankshaft distance gauge **218**
(P / N 4208768 24)

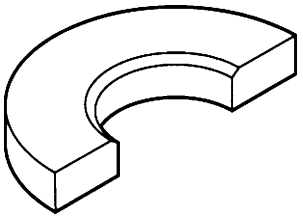

A00C3A4

APPLICATION
503 engine.

Cylinder aligning tool
A) (P / N 4208769 02) **220**
(on exhaust side)
B) (P / N 4208761 71) **221**
(on intake side)

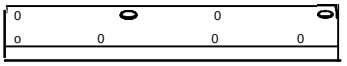

AOOB084

APPLICATION
A) 467, 536, 537, 582, 583, 643 and 670 engines.
B) 377, 443, 447 and 503 engines.

Mikuni carburetor tool kit **222**
(P/ N 4041120 00)

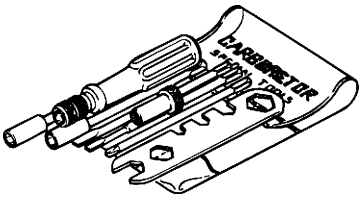

AOOB2F4

APPLICATION
All models.

Circuit tester (continuity light) **223**
(P/ N 4140122 00)

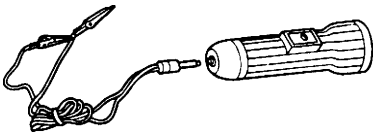

A00C214

APPLICATION
All vehicles.

Piston ring expander **224**
(P / N 5290097 00)

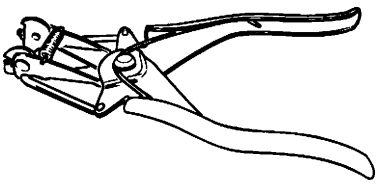

A01B2G4

APPLICATION
All engines.

Stroboscopic timing light **225**
(P/ N 5290092 00)

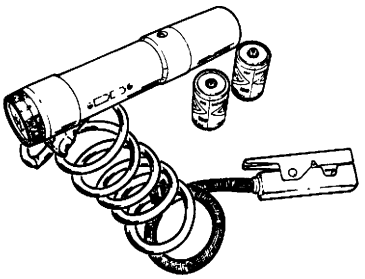

A01B2K4

APPLICATION
All engines.

ENGINE (Optional service tools)

226

RAVE movement indicator

(P/ N 8617258 00)

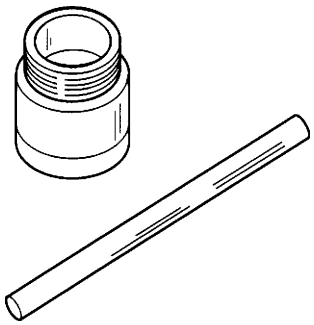

A18B014

APPLICATION

All RAVE equipped engines.

227

Air pressure gauge, 0-200 inch of water

(P/ N 5290104 00)

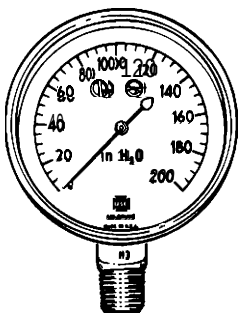

A18B034

APPLICATION

For pressure testing gauge.

230

Dial indicator (TDC gauge)

(p/ N 2950001 43)

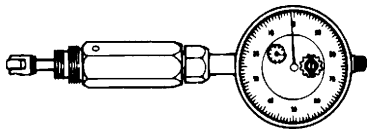

AOOB2E4

APPLICATION

All engines.

231

Seal protector sleeve

A)(P/N4208769 80) (for 10 mm shaft)

232

B)(p/N4208764 90) (for 12 mm shaft)

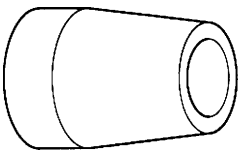

A00C0D4

APPLICATION

467, 582, 583 and 670 engines.

233

Magneto puller

P / N 4209762 35)

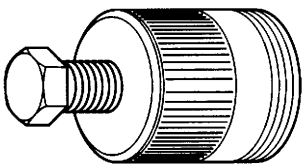

OOC1A4

APPLICATION

247 engine.

234

Injection pump gear holder

(p/ N 4208766 95)

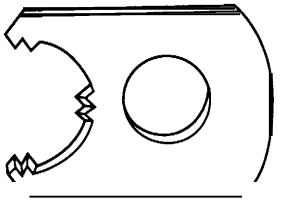

AOOB314

APPLICATION

253, 377, 447 and 503 engines.

235

Injection pump gear holder

(p/ N 4202779 05)

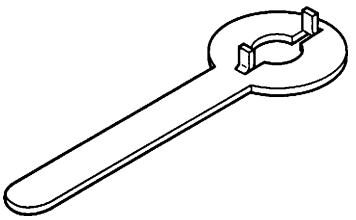

A00C164

APPLICATION

467, 494, 536, 537, 582, 583, 643, 670 and 779 engines.

236

Bombardier magneto tester

(P/ N419 0033 00)

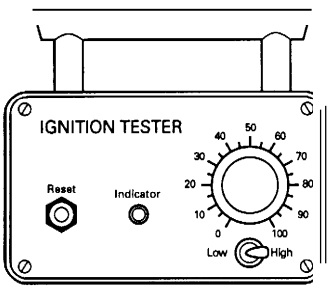

A00C1K4

APPLICATION

All engines.

ENGINE (Optional service tools)

Digital / induction type tachometer **237**

(p/ N 5290145 00)

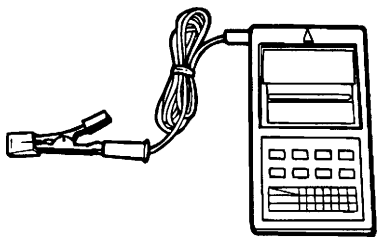

F01B1G4

APPLICATION

All engines.

Connecting rod holder **238**

(p/ N 4209779 00)

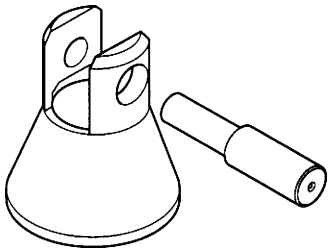

AOOCON4

APPLICATION

247 engine.

Fluke multimeter **242**

(p/ N 5290220 00)

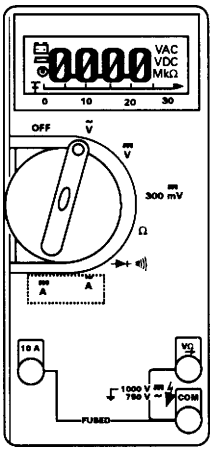

FO1B1O4

APPLICATION

All models.

MAG seal pusher **243**

(p/ N 4202778 75)

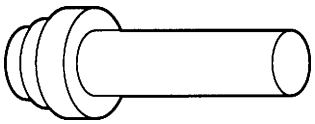

A00C0V4

APPLICATION

277 engine.

PTO seal pusher **244**

(p/ N 420 8766 60)

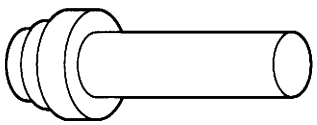

A00C0V4

APPLICATION

277 engine.

Base puller plate kit **245**

(P / N 5290249 00)

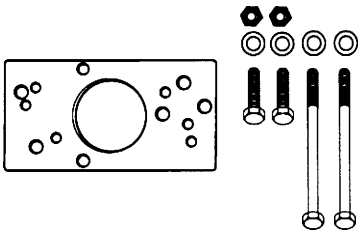

A05C0M4

APPLICATION

277 engine.

Insertion jig **247**
(Magneto side seal)

(p/ N 4208765 16)

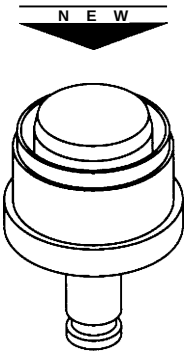

AOOC3TA

APPLICATION

779 engine.

ENGINE (Optional service tools)

Insertion jig (Magneto seal) **248**

(p/ N 4208765 14)

N E W

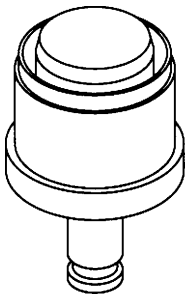

AOOC3UA

APPLICATION

454 and 670 engines.

Handle for insertion jig **249**

(p/ N 4208776 50)

N E W

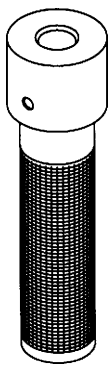

AOOC3V4

APPLICATION

454, 670 and 779 engines.

Exhaust spring installer/ remover **253**

(P/ N 5290281 00)

N E W

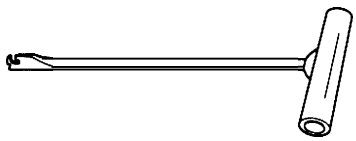

AOOC3S4

APPLICATION

All models.

Bearing simulator **219**

(P/ N 4208761 55)

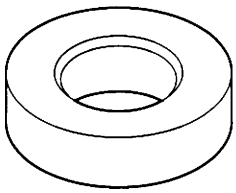

AOOC1H4

APPLICATION

253, 305, 343, 402 and 440 engines.

Rotary valve seal and shaft pusher **229**

(p/ N 4208766 05)

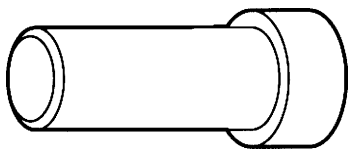

AOOCOY4

APPLICATION

Rotary valve engines 1990 models and older.

Seal pusher (rotary valve) **240**

(P/ N 4208765 10)

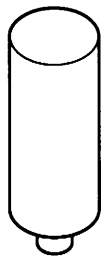

AOOC374

APPLICATION

All rotary valve shaft seals with a 12 mm I.D.

Rotary valve shaft pusher **239**

(p/ N 4208766 10)

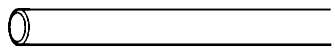

AOOCOF4

APPLICATION

All rotary valve engines with 12 mm shaft.

Self fuel control injection (S. F. C. I.) system test kit **241**

(P/ N 8617391 00)

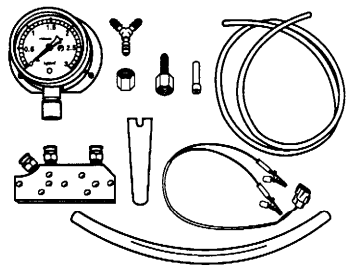

A28E034

APPLICATION

1993 Formula Plus EFI.

ENGINE (Optional service tools)

Large hose pincher **773**

(p/ N 5290304 00)

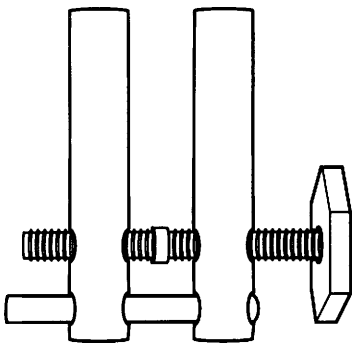

F01B234

APPLICATION

All vehicles.

TRANSMISSION (Mandatory service tools)

Clutch holder **51**

(p/ N 5290064 00)

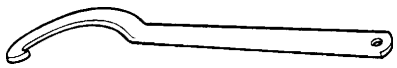

A01B154

APPLICATION

All TRA drive pulleys.

Clutch holder **79**

(p/ N 5290276 00)

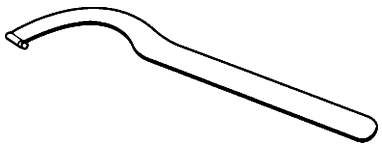

A02B034

APPLICATION

Bombardier Lite drive pulley.

Drive pulley puller **53**

(p/ N 5290275 00)

Consists of :

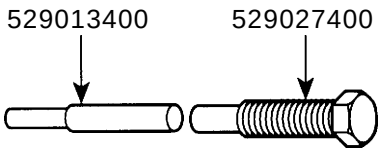

AOOC094

APPLICATION

Bombardier Lite drive pulley, except Élan.

TRA drive pulley puller **75**

(p/ N 5290224 00)

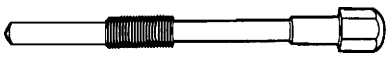

A06BO14

APPLICATION

TRA drive pulley for the 454,494, 599, 670 and 779 engines.

TRA drive pulley puller **55**

(p/ N 5290079 00) (25 mm)

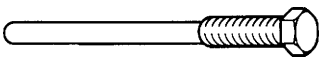

A18B044

APPLICATION

TRA drive pulley (except 599,670 and 779 engines).

Forks (3) **57**

(p/ N 5290055 00)

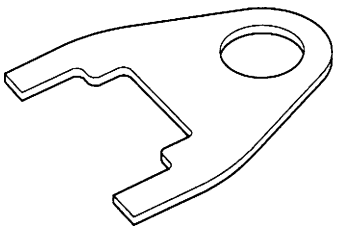

A16B014

APPLICATION

All vehicles equipped with a TRA drive pulley.

Drive belt installer **58**

(p/ N 5290172 00)

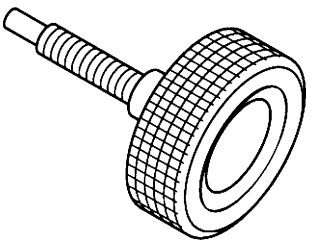

AOOA1A4

APPLICATION

All vehicles except Elan and Tundra II.

Alignment bar

A) (p / N 5290267 00) **78**

B) (p/N 5290269 00) **00**

C) (p/N 5290300 00) **80**

D) (P / N 5290268 00) **73**

A01B4D4

APPLICATION

A) F-Series and S-Series with 503.

B) Tundra II.

C) S-Series with Bombardier Lite drive pulley.

D) Safari L and Skandic.

Spring scale hook **62**

(P/ N 5290152 00)

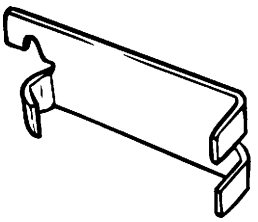

A01B514

APPLICATION

1994 models and older except Alpine II.

TRANSMISSION (Mandatory service tools)

Spring scale hook **84**

(p/ N 5290309 00)

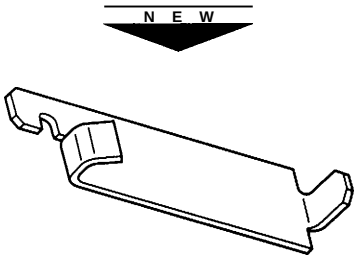

AOOB4A4

APPLICATION

F-Series and S-Series (1995 and newer).

Drive belt tension adjuster tool **63**

(p/ N 5290087 00)

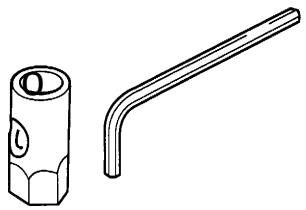

A15B044

APPLICATION

All vehicles except Elan, Tundra II and Skandic WT.

Spring compressor / TRA clutch flare tool **64**

(P / N 5290186 00)

Parts included in the kit :

1) Spring compressor
(P / N 5290151 **00)**

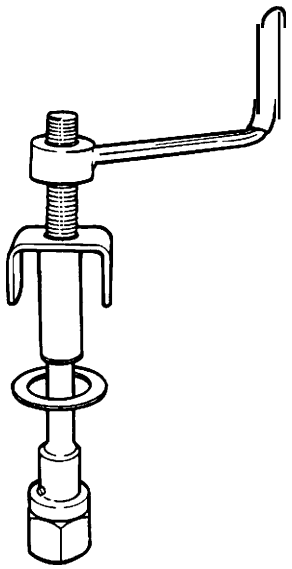

A01B334

APPLICATION (1)

S and F-Series and Alpine II driven pulley type.

All TRA pulley.

3) Washer (2)
(P / N 7329000 15)

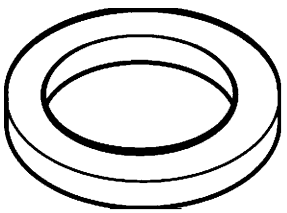

A01B3T4

APPLICATION (3)

All applications.

2) **TRA clutch** spring cover **bush-**ing flare tool

A) INTERIOR flare tool
(p/ N 5290180 00)
EXTERIOR flare tool
(P/ N 5290181 00)

NOTE : Letter A stamper on tools.

B) INTERIOR flare tool
(p/ N 5290182 00)
EXTERIOR f lare tool
(p/ N 5290183 00)

NOTE : Letter B stamper on tools.

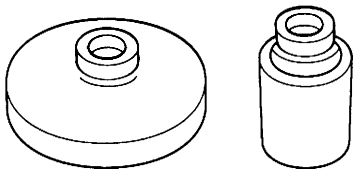

A01B3F4

APPLICATION (2)

A) TRA pulley (25 mm shaft).

B) TRA pulley (27 mm shaft).

4) **TRA** clutch outer half bushing flare tool

INTERIOR flare tool
(p/ N 5290184 00)
EXTERIOR flare tool
(P/ N 5290185 00)

NOTE : Letter C stamper on tools.

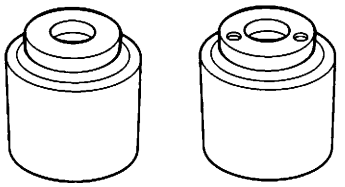

A01B3I4

APPLICATION (4)

All TRA drive pulleys.

TRANSMISSION (Mandatory service tools)

Burnishing bar **77**
(P/ N 5290264 02)

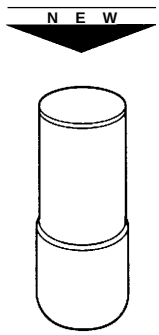

A00B4B4

APPLICATION
Safari L and Skandic.

Shock spring remover kit **65**
(P/ N 5290271 00)
Parts included in the kit :
Pin
(p/ N 4145284 00)

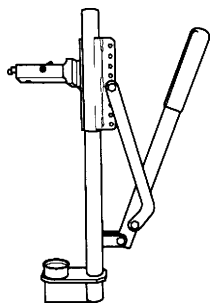

A01B404

APPLICATION
All suspensions with coil spring.

Tension tester **74**
(P/ N 4143482 00)

A00C074

APPLICATION
All models.

Countershaft bearing installer **83**
(p/ N 5290302 00)

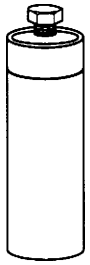

A00A194

APPLICATION
S-Series and F-Series.

Countershaft bearing remover **82**
(P/ N 5290301 00)

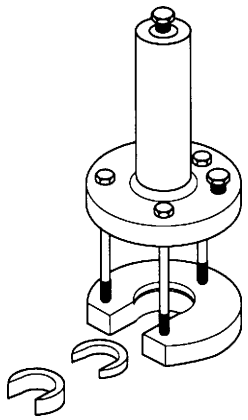

Q

A00A274

APPLICATION
S-Series and F-Series.

Spring cover tool **81**
(p/ N 5290273 00) "

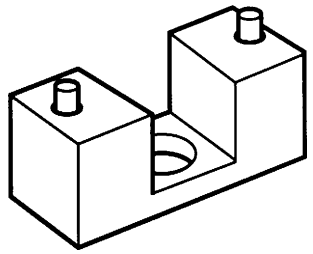

A01B4M4

APPLICATION
Bombardier Lite drive pulley.

Transmission adjuster **76**
(p/ N 5290285 00)

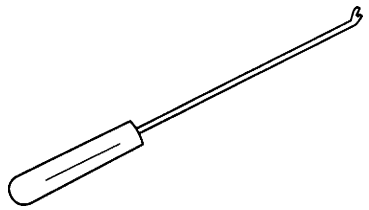

A00D0X4

APPLICATION
F-Series equipped with reverse gear.

TRANSMISSION (Optional service tools)

Alignment tool **306**

(p/ N 4204760 10)

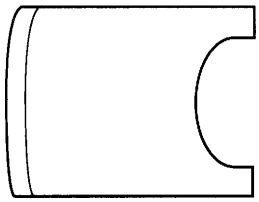

A00C1D4

APPLICATION

Skandic WT and Alpine II gear-box.

Contershaft bearing installer **501**

(p/ N 5290188 00)

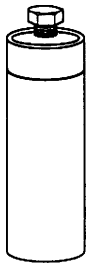

AOOA194

APPLICATION

PRS chassis.

Cam pusher **309**

(p/ N 5290129 00)

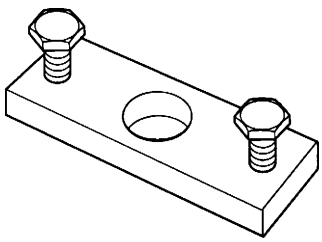

A18B064

APPLICATION

Tundra II LT.

Contershaft bearing remover **502**

(p/ N 5290187 00)

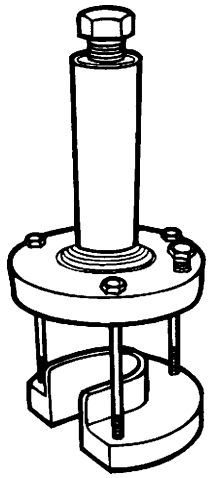

A00A164

APPLICATION

PRS chassis.

Drive pulley puller **318**

P / N 5290231 00)

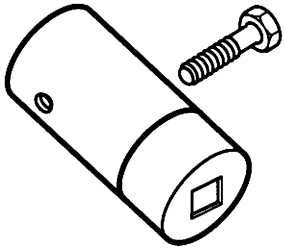

00C3J4

APPLICATION

Élan.

Transmission ball mounting pin **305**

(p/ N 4204760 20)

A00C1C4

APPLICATION

Alpine II 3-speed transmission.

Alignment bar

A) (p / N 5290256 00) **324**

B) (P / N 5290282 00) **320**

C) (P / N 5290283 00) **321**

A01B4D4

APPLICATION

A) PRS chassis.

B) Alpine II.

C) Elan.

Spring scale hook **323**

(P/ N 5290065 00)

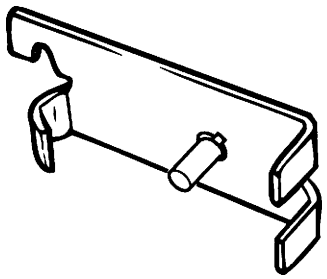

A01B174

APPLICATION

Alpine II 1994 and older.

TRANSMISSION (Optional service tools)

Alignment template **300**

(p/ N 5290083 00)

A03B034

APPLICATION

scout.

Driven pulley support extractor **310**

(P/ N 5290135 00)

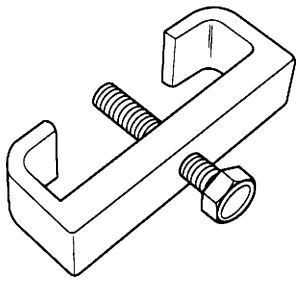

A25B0F4

APPLICATION

Safari (except Cheyenne), Stratos / E, Citation E / LS / LSE, Escapade, Skandic 503, SS-25 and Formula SP / SS (no vehicles equipped with reverse).

TRA clutch spring cover remover cap **312**

(p/ N 5290103 00)

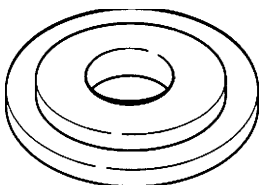

A16B054

APPLICATION

TRA clutch (drive pulley).

Spacer **311**

(p/ N 5290054 00)

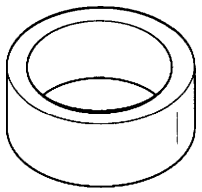

A16B044

APPLICATION

TRA clutch (drive pulley).

Drive pulley retainer **313**

(P/ N 5290017 00)

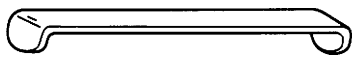

AOOC224

APPLICATION

Round shaft drive pulley.

Transmission shifter template **314**

(P/ N 5290198 00)

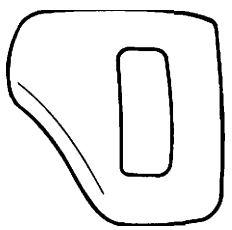

A15H3J4

APPLICATION

1991 to 1994 PRS chassis.

Drive pulley puller **319**

(p/ N 5290021 00)
(Standard threads)

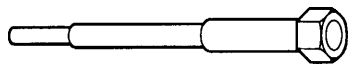

AOOC064

APPLICATION

Square shaft, standard (SAE) threads.

TRA drive pulley puller (27 mm) **322**

(p/ N 5290101 00)

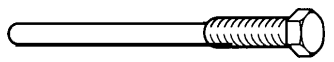

A18B044

APPLICATION

TRA drive pulley (27 mm) shaft except 454, 670 and 779 engines.

Drive pulley puller **400**

(p/ N 8604142 00)
(square shaft metric)
Consist of :

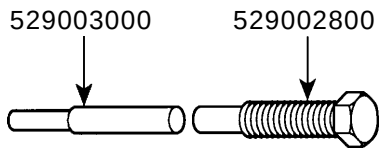

A00C095

APPLICATION

Square shaft, metric threads drive pulley.

TRANSMISSION (Optional service tools)

Drive axle sprocket adjuster **340**

(p/ N 8617257 00)

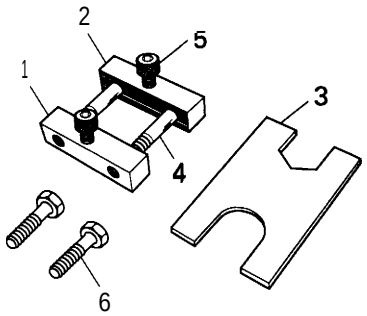

A01B204

APPLICATION

All vehicles except Elan.

Parts included in the kit:

1) Block with threads
(P/ N 5290107 00)
2) Block without threads
(p/ N 5290108 00)
3) Plate
(p/ N 5290106 00)
4) Bolt MIO (2)
(p/ N 2220075 00)
5) Allen screw M8 (2)
(P/ N 420 840991)
6) Screw M8 (2)
(P/ N 2220825 65)

NOTE : When the tool is to be use between tunnel and sprocket use screw M8.

Transmission adjuster **504**

(p/ N 5290303 00)

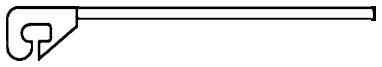

A03D1T4

APPLICATION

vehicles equipped with "push-pull" reverse transmission.

SUSPENSION (Optional service tools)

A) Track cleat remover **345**

(p/ N 5290082 00)

Pins **346**

(p/ N 5290082 04)

NOTE : Pins can be rotated 180° depending on whether the tool is used by a left-hander or right-ha rider.

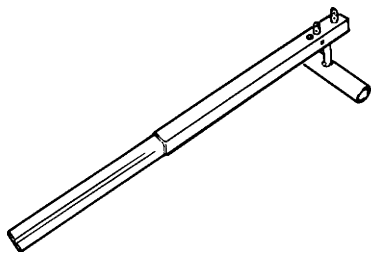

A01B1J4

B) TRA track cleat remover **254**

(p/ N 5290287 00)

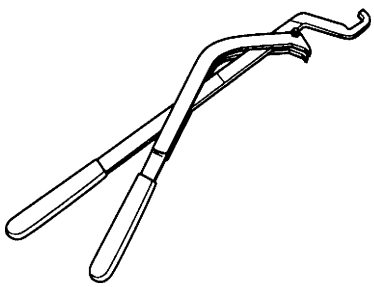

A01F224

APPLICATION

A) 1993 and older.

B) 1994 and newer except Elan and Tundra II.

Camber angle tool **343**

(P/ N 5290216 00)

NOTE : Angle finder with a magnetic base must be used.

Suggestion : K-D tool no. 2968

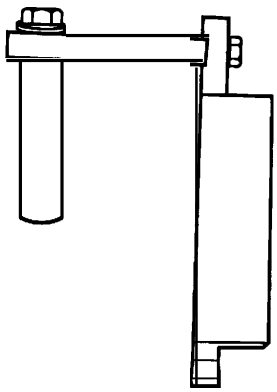

A06B024

APPLICATION

All DSA front suspensions.

Track tension gauge **342**

(p/ N 5290215 00)

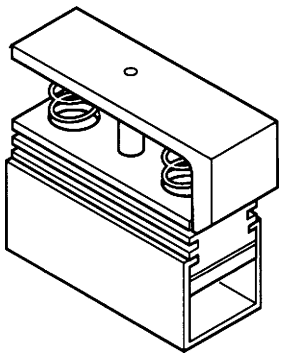

AOOB3X4

APPLICATION

All models except Elan.

Track cleat installer

A) (P / N 5290085 00) Narrow **347**

B) (p/N 5290288 00) Narrow **255**

C) (P/N 5290077 00) Wide **344**

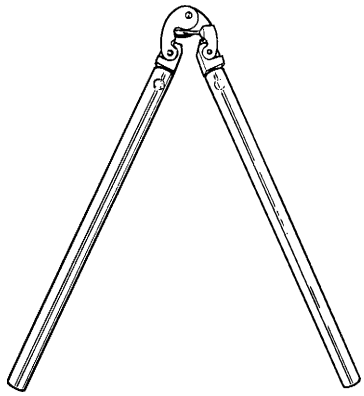

A01B1M4

APPLICATION

A) 1993 and older.

B) 1994 and newer.

C) 1992 and older with wide cleat opening.

Dome guide **349**

(p / N 529 0265 00

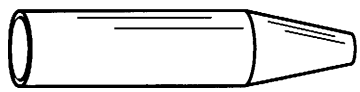

A06F1B4

APPLICATION

MX Z T / A shocks.

SUSPENSION (Optional service tools)

Piston guide **500**

(P/N 5290266 00)

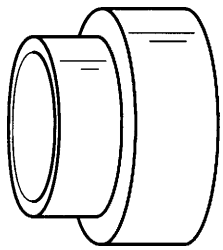

A06F1C4

APPLICATION

MX Z T / A shocks.

Suspension spring installer (hook) **325**

(p/ N 5290066 00)

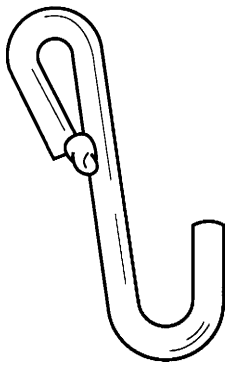

A19B034

APPLICATION

Cheyenne.

Spring installer (bar) **326**

(p/ N 5290050 00)

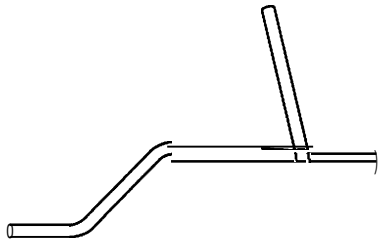

A00C1I4

APPLICATION

Tundra II/ LT and Scout,

Spring cam adjuster key **330**

(p/ N 8617317 00)

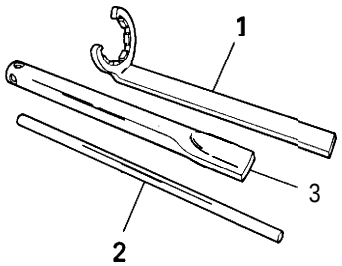

A25B0D4

APPLICATION

Safari A-arm suspension spring.

Replacement parts :

1) Adjustment key
   (p/ N 5290138 00)
2) Handle
   (p/ N 5290140 00)
3) Key extension
   (p/ N 5290139 00)

Bushing installer / remover **331**

(P/N 5290119 00)

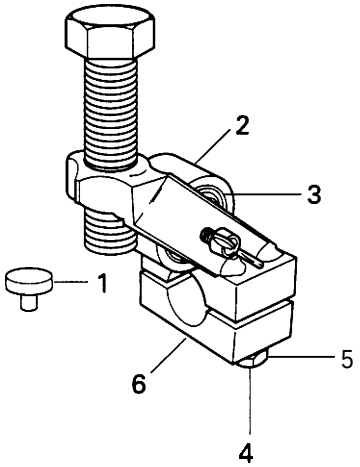

A25B054

APPLICATION

A-arm suspension.

Parts included in the kit :

1) Buffer
   (P/ N 5290118 00)
2) Outer sleeve
   (p/ N 5290125 00)
3) Inner sleeve
   (P/ N 5290126 00)
4) Hexagonal screw (2)
   (p/ N 2220830 65)
5) Flat washer (2)
   (p/ N 224 081201)
6) Lower retainer
   (P/ N 5290121 00)

SUSPENSION (Optional service tools)

Drive axle holder **333**

(p/ N 5290072 00)

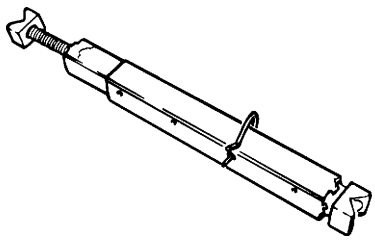

A01B1E4

APPLICATION

All models.

Kayaba shock adjustment tool **334**

(P/ N 5290190 00)

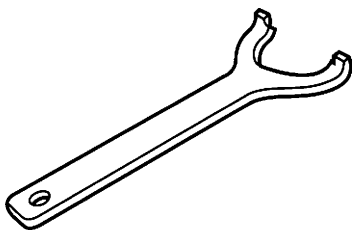

AOOA1K4

APPLICATION

C-7 suspension.

Hexagonal wrench **335**

(p/ N 5290147 00)

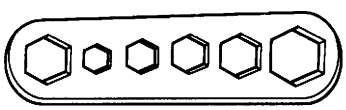

A19B024

APPLICATION

Safari and Skandic prior to 1995.

Suspension adjustment wrench **336**

(p/ N 5290122 00)

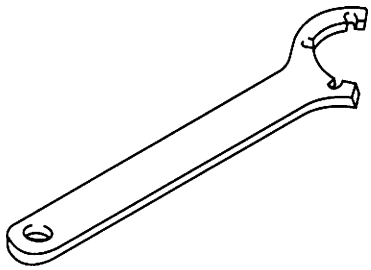

A25A014

APPLICATION

Rear suspension.

Suspension adjustment wrench **337**

(p/ N 5290098 00)

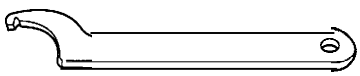

A24A014

APPLICATION

Models equipped with a mono-shock suspension.

Suspension adjustment wrench **338**

(p/ N 5290171 00)

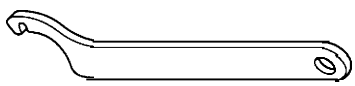

A15B094

APPLICATION

1992 and old Formula C-7.

Adjustment wrench **506**

(p/ N 8617439 00)

Consists of :

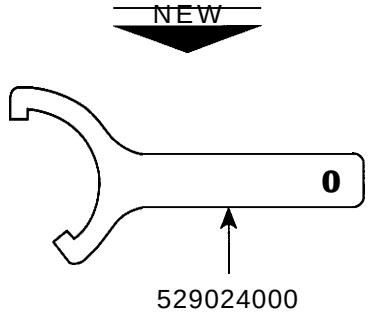

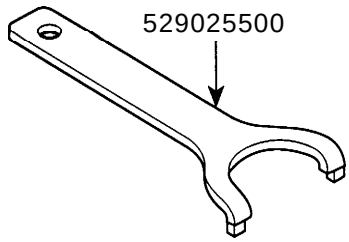

AOOB4B4

APPLICATION

T / A shock.

VEHICLES (Optional service tools)

Protective mat
(P / N 529 0306 00)

503

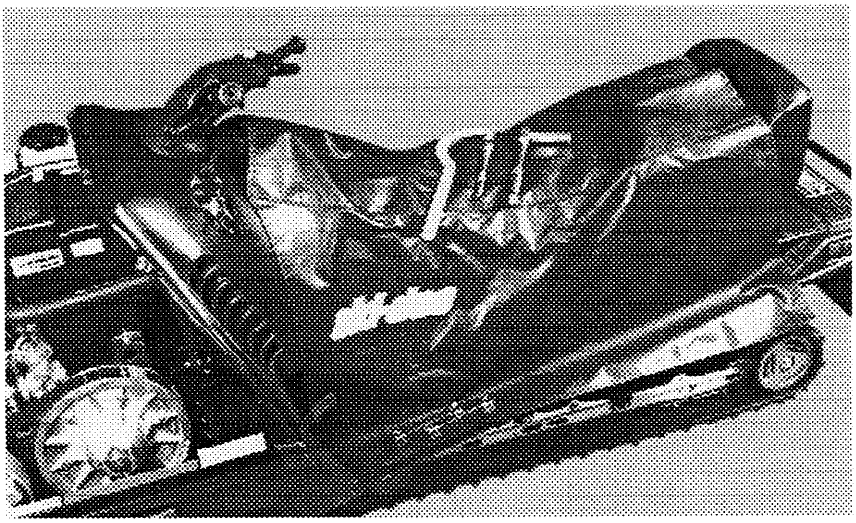

A01B45W

APPLICATION
All vehicles.

Dolly
(P / N 529 0299 00)

348

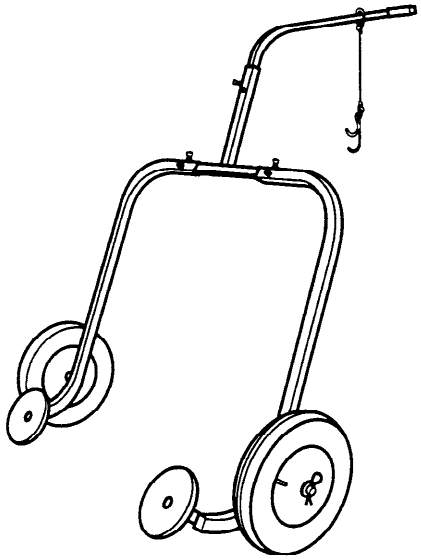

A00B4CJ

APPLICATION
All models.

Snowmobile jack
(P / N 529 0200 00)

341

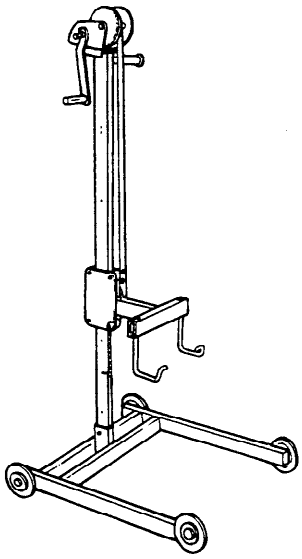

A01A1JJ

APPLICATION
All models.

SERVICE PRODUCTS

MANDATORY SERVICE PRODUCTS

NOTE : The numbers outlined in black (example : ❑) are reference to tool numbers from other divisions (Sea-Doo and/or Sea-Doo Jet Boats). Matching numbers are the same tool even if the part numbers are different.

Loctite® is a trademarks of Loctite Corporation.

Dow Corning™ is a trademarks of Dow Corning Corporation.

151

Retaining compound

(p/ N 4137031 00)

Loctite® RC / 609 :
Retaining compound (1 O mL)
(green)

AOOB2S4

APPLICATION

Used for retaining bushings, bearings in slightly worn housing or on shaft.

152

Paste gasket

(P/ N413 7027 00)

Loctite® 515 :
Gasket eliminator (50 mL)

AOOB2T4

APPLICATION

Crankcase halves transmission and gearbox mating surfaces.

154

Medium-strength thread locker

(P/ N413 7030 00)

Loctite® 242 :
Threadlocker (1 O mL)
(blue, medium strength)

AOOB324

APPLICATION

Flywheel nut, crankcase studs, etc.

155

High strength thread locker

(P/ N413 7074 00)

Loctite® 271 :
Threadlocker (1 O mL)
(red, high strength)

(TYPICAL)

AOOB2U4

APPLICATION

Fasteners and studs up to 1“ diameter.

MANDATORY SERVICE PRODUCTS

Gasket / paint remov 156

(p/ N 4137085 00)
Loctite® 79040 Chise
510 g (18 oz)

A00B3L4

APPLICATION

Clean mating surfaces of cylinders and crankcase. Remove carbon in combustion chambers.

Cleaning solvent 157

(p/ N413 7082 00)
Loctite® 755-59
340 g (12 oz)

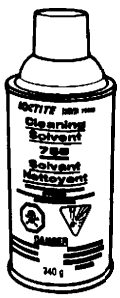

AOOB3M4

APPLICATION

Clean carburetor parts and degrease all oily surfaces.

Loctite® primer 158

(p/ N 4137081 00)
Loctite® 764-56
Primer N
170 g (6 oz)

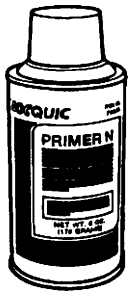

AOOB3N4

APPLICATION

To prepare mating surfaces before applying paste gasket, retaining compound or threadlockers.

Silicone compound 159

(p/ N 420 897061)
Dow Corning® MS4

AOOB3R4

APPLICATION

Lubricate pawl and pawl lock of rewind starter.

OPTIONAL SERVICE PRODUCTS

Silicone dielectric grease **350**
(3 oz)
(p/ N413 7017 00)

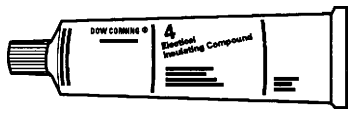

A00B1X4

APPLICATION

On all electric connections. High tension coil and spark plug connections. Connector housings, etc.

Grease LMZ no. 1 **351**
(400 g)
(P/ N 4137075 00)

AOOB1Y4

APPLICATION

Mainly used between regulators or rectifiers and upper column to transfer the heat build-up and to assure a good ground.

Clutch lube **352**
(4 oz)
(P/ N413 8007 00)

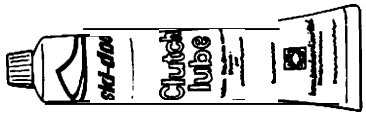

AOOB1Z4

APPLICATION

Roller round shaft drive pulleys.

Chaincase oil **353**
(p/ N 4138019 00)

A00B2R4

APPLICATION

Chaincase lubricant on Élan and Tundra II.

Synthetic chaincase oil **354**
(p/ N413 8033 00)

A01B4Q4

APPLICATION

Chaincase lubricant on all models except Élan and Tundra II.

Blizzard oil **355**
(12 x 500 mL)
(p/ N 4138031 00)

A00B2Q4

APPLICATION

All models.

Injection oil
(P/ N413 8029 00) **356**
(12 x 1 liter)
(P/ N 4138030 00) **357**
(3x 4 liter)

F01B2H4

APPLICATION

All engines.

OPTIONAL SERVICE PRODUCTS

358

Pipe sealant
(P/ N413 7023 00)
Loctite 592 (50 mL)

AOOB2W4

APPLICATION

Engine plugs and senders.

359

High temperature thread locker
(P/ N 4208997 88)
Loctite 648 (green)
(5 g)

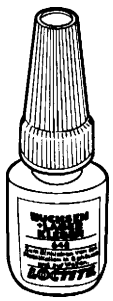

A00B3D4

APPLICATION

For RAVE valve rod distance nut on 583, 670 and 779 engines.

362

Anti-seize lubricant
(p/ N 4137010 00)
Loctite anti-seize lubricant 454 g (16 oz)

F01B174

APPLICATION

Unpainted surfaces of drive pulley countershaft.

363

Bearing grease
(400 g)
(p/ N 4137061 00)

A00B2L4

APPLICATION

For idler bearings, ski legs, leaf spring cushion pads, seal interior lips, rear hub bearings, bogie wheels, countershaft bearings, etc.

364

Storage oil
(350 g spray can)
(P/ N 4960141 00)

A00B384

APPLICATION

All models.

365

Degreaser
(p/ N413 7084 00)
Permatex® 48 TA
433 g (15 02)

AOOB3K4

APPLICATION

Engine, chaincase, pulleys and any greasy surfaces.

OPTIONAL SERVICE PRODUCTS

Gel instant adhesive **366**

(P / N 413 7083 00)

Loctite 454-40
20 g (.70 oz)

AOOB304

APPLICATION

Isolating foam and rubber strip.

Tough adhesive **367**

(P / N413 4083 00)

Loctite Black Max 38004
3 mL (.1 O oz)

AOOB3P4

APPLICATION

Shifter boot or grip.

Stripped threads repair kit **3C8**

(p/ N 4137086 00)

Loctite 81668

Form-A-thread 81668

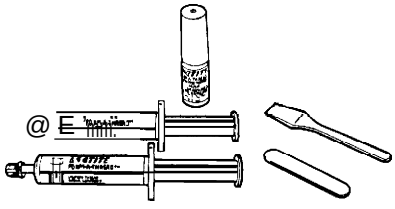

AOOA1J4

APPLICATION

Repair damaged threads of grade 5 (SAE) or 8.8 (metric) maximum. Do not use in applications where temperatures will exceed 149°C (300°F) or on critical assemblies.

HYLOMAR sealant (100 g) **369**

(P/ N 4137071 00)

AOOB3F4

APPLICATION

To form an oil resistant seal (ex: transmission).

Paint for frame touch-up **370**

(p/ N413 4010 00)

Black semi-gloss
(spray can)

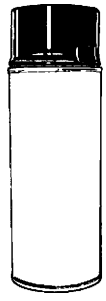

AOOB3H4

APPLICATION

All models with a black frame.

General purpose instant adhesive (495) **373**

(P/ N413 7032 00)

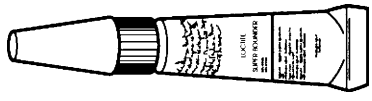

AOOB2V4

APPLICATION

Rubber to metal bonding and most hard plastic.

Sealant 736 Dow Corning **374**

(P / N 4137092 00)

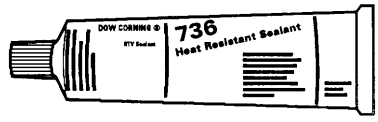

AOOB3U4

APPLICATION

All models.

Fuel stabilizer **375**

(P / N413 4086 00)

AOOB3V4

APPLICATION

All models.

Molykote 111 **376**

(P/ N 4137070 00)

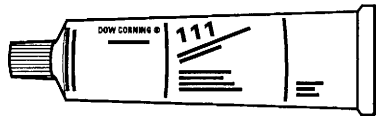

AOOB3W4

APPLICATION

Rotary valve shaft seals.

OPTIONAL SERVICE PRODUCTS

Shock oil **377**
(1 liter)
(p/ N413 7094 00)

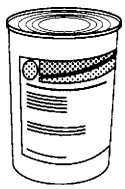

A06FOP4

APPLICATION
MX Z T / A shocks.

Bombardier Lube **378**
(p/ N 2936000 16)

A01B4P4

APPLICATION
Steering ball joints on all models.

Super Lube (grease) **379**
(p/ N 29355OO 13)

NEW

AOOB474

APPLICATION
Tie rod bushings.

LUBRICATION AND MAINTENANCE CHART

		①	②	③	④	⑤	⑥	REFER TO
	Starting Rope Condition						✔	—
	Engine Head Nuts	✔			✔			Appropriate section : See Top End
	Engine Mount Nuts	✔			✔			Appropriate section : See ENGINE SUPPORT AND MUFFLER
	Exhaust System	✔		✔				Appropriate section : See ENGINE SUPPORT AND MUFFLER
	Engine Lubrication					✔		This section no. 1
	Cooling System Condition	✔			✔			Sub-section 04-06
	Coolant Replacement (Except Fan Cooled)						✔	Page 04-09-5
	Condition of Seals						✔	Sub-section 04-03
	Injection Oil Filter Condition (Except Élan)			✔				Page 04-07-1
	Injection Oil Filter Replacement (Except Élan)						✔	Sub-section 04-05
	Oil Injection Pump Adjustment (Except Élan)	✔			✔			Page 04-05-5
	Fuel Stabilizer					✔		This section no. 2
	Fuel Filter Replacement						✔	This section no. 3
	Fuel Lines and Connections	✔					✔	Sub-section 04-09
	Carburetor Adjustment	✔			✔			Page 04-08-8
	Throttle Cable Inspection	✔			✔		✔	Sub-section 04-09
	Air Filter Cleaning			✔				This section no. 4
	Drive Belt Condition	✔	✔					This section no. 5
	Condition of Drive and Driven Pulleys	✔		✔		✔		Sub-sections 05-02 and 03-03
	Cleaning of Drive and Driven Pulleys						✔	Sub-sections 05-02 and 03-03
	Retorquing of Drive Pulley Screw	✔						Sub-section 05-02
	Driven Pulley Preload	✔			✔			Sub-section 05-03
	Brake Condition	✔	✔					Sub-section 05-05
	Brake Adjustment			✔				Sub-section 05-05
	Lubrication of Ratchet Wheel or Fluid Change (Except Élan)						✔	Sub-section 05-05
	Drive Chain Tension	✔		✔				Sub-sections 05-06 and 05-07
	Countershaft Lubrication (S and F Series)	✔		✔		✔		Sub-section 05-05
	Chaincase / Gearbox Oil Level	✔		✔		✔		Sub-sections 05-06 and 05-07
	Lubrification of drive axle bearing	✔		✔		✔		Sub-section 07-05

		①	②	③	④	⑤	⑥	REFER TO
	Handlebar Bolts. Retorque to 26 N•m (19 lbf•ft)	✔						Page 08-01-1
	Steering and Front Suspension Mechanism	✔		✔		✔		Sub-sections 08-01 and 08-02
	Wear and Condition of Skis and Runners	✔	✔					Sub-section 08-02
	Steering and Ski Leg Camber Adjustment	✔		✔				Sub-section 08-01
	Suspension Adjustments (Except Élan)	AS REQUIRED						Section 07 : See appropriate sub-section and *Operator's Guide*
	Suspension Lubrication			✔		✔		Section 07 : See appropriate sub-section
	Suspension Condition	✔			✔			Section 07 : See appropriate sub-section
	Suspension Stopper Strap Condition (Except Élan)				✔			Section 07 : See appropriate sub-section
	Track Condition	✔		✔				Sub-section 07-06
	Track Tension and Alignment	✔	AS REQUIRED					Sub-section 07-06
	Spark Plugs*	✔						Sub-section 06-03
	Engine Timing	✔					✔	Sub-section 06-02
	Battery Condition	✔		✔		✔		Sub-section 06-04
	Headlight Beam Aiming				✔			Page 09-01-1
	Wiring Harnesses, Cables and Lines	✔		✔				Page 09-01-13
	Operation of Lighting System (HI / LO Beam, Brake Light, etc.) Test Operation of Emergency Cut-Out Switch and Tether Cut-Out Switch	✔	✔			✔		Operator's Guide
	Rags in Air Intake and Exhaust System					✔	✔	This section no. 6
	Engine Compartment	✔		✔				This section no. 7
	General Inspection	✔		✔		✔		This section no. 8

* Before installing new spark plugs at pre-season preparation, it is suggested to burn excess storage oil by starting the engine with the old spark plugs. Only perform this operation in a well ventilated area.

① 10-HOUR INSPECTION (To be performed by dealer)

② WEEKLY OR EVERY 240 km (150 mi)

③ MONTHLY OR EVERY 800 km (500 mi)

④ONCE A YEAR OR EVERY 3200 km (2000 mi)

⑤STORAGE

⑥PRE-SEASON PREPARATION (To be performed by dealer)

NO. 1 ENGINE LUBRICATION

Engine internal parts must be lubricated to protect them from possible rust formation during the storage period.

To perform the storage procedures, proceed as follows :

Start the engine and allow it to run at idle speed until the engine reaches its operating temperature.

◆ WARNING : Ensure the track is free of all particles which could be thrown out while it is rotating. Keep hands, tools, feet and clothing clear of track. Ensure no one is standing in close proximity to the vehicle.

Stop the engine.

All Models Except Mach Z

To prevent fuel from draining, primer button should be pushed all the way in.

Disconnect the outlet primer hose from the primer valve (straight coupling).

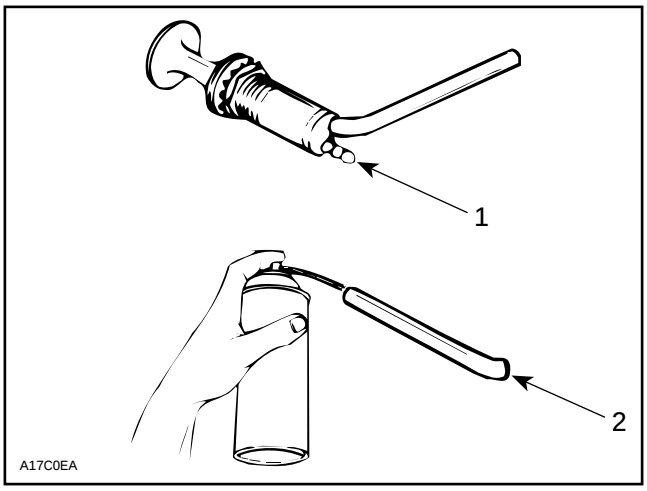

1. Straight coupling
2. To intake manifold

Insert storage oil (P / N 496 0141 00) nozzle into primer outlet hose.

Mach Z Only

Remove air silencers to spray storage oil into each carburetor bore.

All Models

Restart engine and run at idle speed.

Inject storage oil until the engine stalls or until a sufficient quantity of oil has entered the engine (approximately half a can).

With the engine stopped, remove the spark plug and spray storage oil (P / N 496 0141 00) into each cylinder.

Crank slowly 2 or 3 revolutions to lubricate cylinders.

Reinstall the spark plugs and the outlet primer hose or air silencers.

◆ WARNING : This procedure must only be performed in a well ventilated area. Do not run engine during storage period.

NO. 2 FUEL STABILIZER

A fuel stabilizer (P / N 413 4086 00) can be added in fuel tank to prevent fuel deterioration and avoid draining fuel system for storage. Follow manufacturer's instructions for proper use.

If above fuel stabilizer is not used, drain fuel system including fuel tank and carburetor(s).

▼ CAUTION : Fuel stabilizer should be added prior engine lubrication to ensure carburetor(s) protection against varnish deposit.

NO. 3 FUEL FILTER REPLACEMENT

On all models except Élan and Alpine II, drain fuel tank.

On all models, remove fuel line grommet from fuel tank and pull out inlet fuel line from tank.

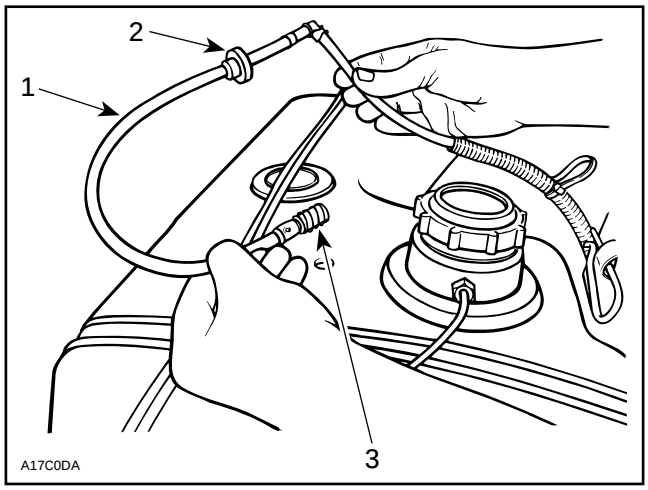

TYPICAL

1. Inlet fuel line
2. Position of grommet when installing
3. Fuel filter

Replace fuel filter. To facilitate the fuel line installation, slide grommet on fuel line about 50 mm (2 in) away from elbow then install grommet on fuel tank and push elbow through grommet.

NO. 4 AIR FILTER CLEANING

S-Series

Lift hood and remove air filter from air intake silencer.

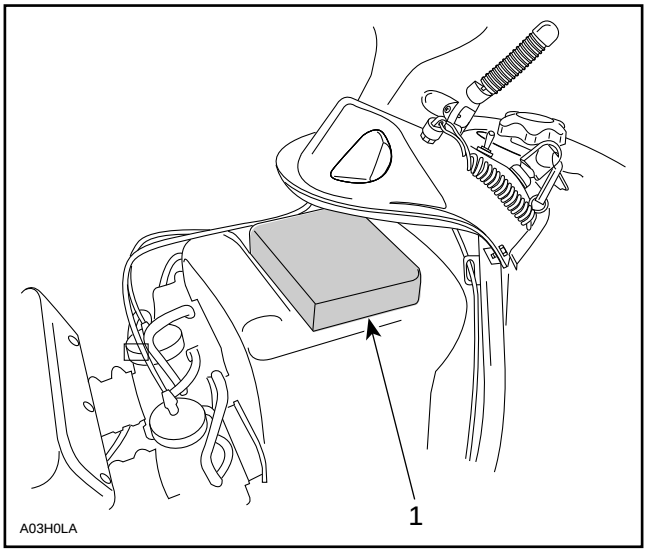

TYPICAL
1. *Filter*

To clean the filter, shake the snow out of it then, dry it out.

F-Series

Lift hood and remove air filter(s) from air intake silencer.

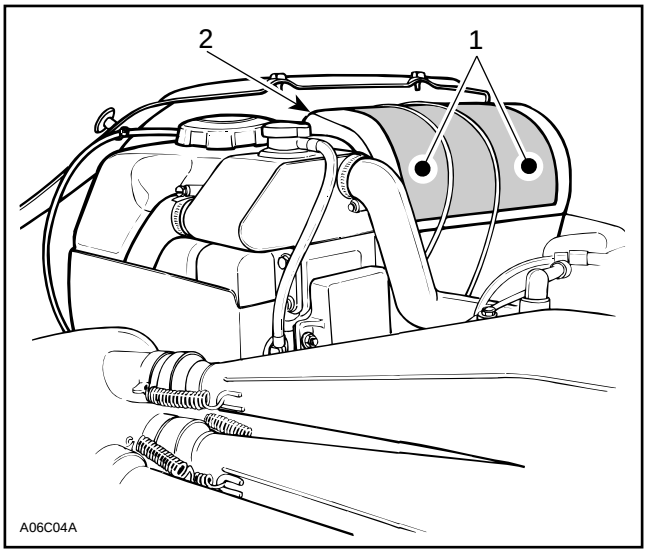

TYPICAL
1. *Air intake silencer*
2. *Air filter(s)*

Shake the snow out of filter(s) then, dry it out.

All Models

Check that the air box is clean and dry then properly reinstall the filter.

CAUTION : These snowmobiles have been calibrated with the filter installed. Operating the snowmobile without it may cause engine damage.

Tundra II LT

Air filter is located on lower side portion of air intake silencer. Lift hood and remove belt guard. Gently pull air filter sideward.

Ensure it is clean and dry. Shake snow out. Clean with a solvent and dry as necessary.

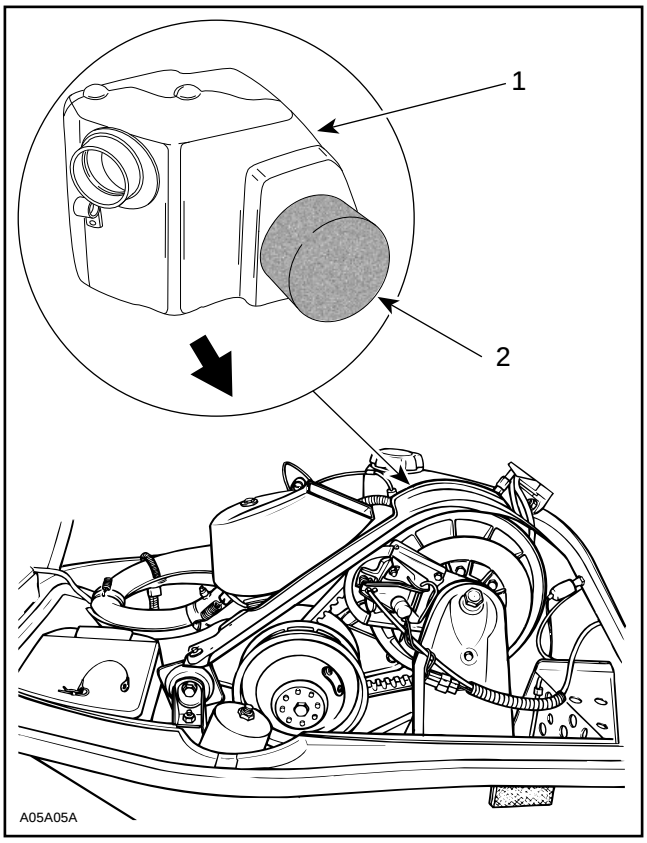

1. *Intake silencer*
2. *Air filter*

NO. 5 DRIVE BELT CONDITION

Inspect belt for cracks, fraying or abnormal wear (uneven wear, wear on one side, missing cogs, cracked fabric). If abnormal wear is noted, probable cause could be pulley misalignment, excessive RPM with frozen track, fast starts without warm-up period, burred or rusty sheave, oil on belt or distorted spare belt.

Check the drive belt width. Replace the drive belt if width is less than the minimum width recommended in DRIVE BELT 05-01.

NO. 6 RAGS IN AIR INTAKE AND EXHAUST SYSTEM

At storage preparation, block air intake hole and exhaust system hole using clean rags.

Remove those rags at pre-season preparation.

NO. 7 ENGINE COMPARTMENT

Keep clean of grass, twigs, cloth, etc. These are combustible under certain conditions.

NO. 8 GENERAL INSPECTION

Grease or oil at all recommended lubrication points. Wipe off surplus.

Block air intake hole and exhaust system hole using clean cloths.

Remove any dirt or rust.

To clean the entire vehicle, use only flannel clothes or Kimtowels® wipers no. 58-380 from Kimberly-Clark.

CAUTION : It is necessary to use flannel cloths or “Kimtowels” wipers on windshield and hood to avoid damaging further surfaces to clean.

To clean the entire vehicle, including metallic parts with a thick coat of grease, use “Endust” imported by Bristol Myers, available at hardware stores or supermarkets.

To clean the entire vehicle, including metallic parts with a thin coat of grease, use “Simple Green” from Sunshine Makers Inc., available at hardware stores or at automotive parts retailer.

To remove scratches on windshield or hood : Start with “Slip Streamer Motorcycle Windshield Heavy Duty Scratch, Remover”. Finish with “Slip Streamer Motorcycle Cleaner and Polish”.

NOTE : The latest product may be use alone if only light scratches are noticeable.

CAUTION : Never clean plastic parts or hood with strong detergent, degreasing agent, paint thinner, acetone, products containing chlorine, etc.

Inspect the hood and repair any damage. Touch up all metal spots where paint has been scratched off. Spray all metal parts including shock chromed rods with antirust product (P / N 293 6000 06). Wax the hood and the painted portion of the frame for better protection.

NOTE : Apply wax on glossy finish only. Protect the vehicle with a cover to prevent dust accumulation during storage.

CAUTION : The snowmobile has to be stored in a cool and dry place and covered with an opaque tarpaulin This will prevent sun rays and grime from affecting plastic components and vehicle finish.

TABLE OF CONTENTS

ENGINE **03-01-1**

FUEL AND OIL SYSTEMS **03-02-1**

TRANSMISSION AND BRAKE SYSTEM **03-03-1**

TRANSMISSION **03-03-1**

BRAKE SYSTEM **03-03-7**

MECHANICAL BRAKE 03-03-7

HYDRAULIC BRAKE 03-03-7

MECHANICAL AND HYDRAULIC BRAKES 03-03-8

ELECTRICAL SYSTEM **03-04-1**

SUSPENSION SYSTEM AND TRACK **03-05-1**

ENGINE

The following chart is provided to help in diagnosing the probable source of troubles. It should be used as a guideline. Some causes or corrections may not apply to a specific model.

SYMPTOM	**ENGINE BACKFIRES.**
CONDITION	NORMAL USE.
Test / Inspection	**1. Check spark plug(s).** a. Carbon accumulation caused by defective spark plug(s). *Clean carbon accumulation and replace spark plug(s).*
	2. Check cooling system. a. Loose fan belt. *Adjust or replace fan belt (refer to TECHNICAL DATA 10).* b. Low antifreeze level. *Adjust antifreeze level. Then check clamps or hoses.* c. Defective tank cap. *Replace cap.* d. Air in system. *Bleed system.*
	3. Check ignition timing. a. Timing is too advanced. *Set timing according to specifications (refer to TECHNICAL DATA 10).*

SYMPTOM	**ENGINE SUDDENLY TURNS OFF.**
CONDITION	NORMAL USE.
Test / Inspection	**1. Perform engine leak test (tool P / N 861 7390 00). Refer to engine leak verification flow chart. Check possible piston seizure.** a. Damaged gasket and / or seal. *Replace defective parts.*
	2. "Four-corner" seizure of piston(s). a. Accelerating too fast when engine is cold. Piston expands faster than cylinder. *Replace piston(s). Ask driver to refer to warm-up procedure in* Operator's Guide.
	3. Piston(s) seizure on exhaust side (color on piston dome is correct). a. Kinked fuel tank vent tube. *Relocate fuel tank vent tube.* b. Leaks at fuel line connections. *Replace defective lines.* c. Fuel does not flow through carburetor(s) (plastic particles in needle area and / or varnish formation in carburetor(s)). *Clean carburetor(s).* d. Spark plug heat range is too warm. *Install spark plug(s) with appropriate heat range (refer to TECHNICAL DATA 10).* e. Improper ignition timing. *Adjust according to specifications (refer to TECHNICAL DATA 10).* f. Restriction in exhaust system. *Replace.* g. Compression ratio is too high. *Install genuine parts.* h. Carburetor calibration is too lean. *Adjust according to specifications (refer to TECHNICAL DATA 10).* i. Improper rotary valve timing or improper valve. Adjust according to specifications (refer to TECHNICAL DATA 10) and / or install Bombardier's recommended rotary valve. j. Poor quality oil. *Use Bombardier Rotax oil.* k. Leaks at air intake silencer. *Replace air intake silencer grommets.*

	4. Melted and / or perforated piston dome; melted section at ring end gap. a. When piston reaches TDC, mixture is ignited by heated areas in combustion chamber. This situation is due to an incomplete combustion of a poor quality oil. *Clean residue accumulation in combustion chamber and replace piston(s). Use Bombardier Rotax oil.* b. Spark plug heat range is too high. *Install recommended spark plug(s) (refer to TECHNICAL DATA 10).* c. gnition timing is too advanced. *Adjust according to specifications (refer to TECHNICAL DATA 10).* d. Inadequate fuel quality. *Use appropriate fuel.* e. Carburetion is too lean. *Adjust according to specifications (refer to TECHNICAL DATA 10).*
	5. Seized piston all around the circumference (dry surface). a. Lack of oil, damaged oil line or defective injection pump. *Replace defective part(s).*
	6. Grooves on intake side of piston only. a. Oil film eliminated by water (snow infiltration in engine). *Replace piston(s) and check if intake system leaks.*
	7. Piston color is dark due to seizure on intake and exhaust sides. a. Broken or loose fan belt. *Replace fan belt or adjust its tension (refer to TECHNICAL DATA 10).* b. Cooling system leaks and lowers coolant level. *Tighten clamps or replace defective parts. Add antifreeze in cooling system until appropriate level is reached.* c. Accumulation of foreign particles in needle and / or main jet area. *Clean carburetor(s).*
	8. Cracked or broken piston(s). a. Cracked or broken piston(s) due to excessive piston / cylinder clearance or engine overreving. *Replace piston(s). Check piston / cylinder clearance (refer to TECHNICAL DATA 10). Adjust drive pulley according to specifications (refer to TECHNICAL DATA 10) and / or clean pulley sheaves if they are contaminated with greasy particles.*
SYMPTOM	**PISTON RING AND CYLINDER SURFACES ARE GROOVED.**
CONDITION	NORMAL USE.
Test / Inspection	**1. Check oil quality.** a. Poor oil quality. *Use Bombardier Rotax oil.*
	2. Check injection pump and its hoses. a. Inadequate injection pump adjustment and / or defective hoses. *Adjust pump according to specifications (refer to ENGINE section 04) and / or replace hoses.*
	3. Check fuel / oil premix (Élan). a. Inadequate fuel / oil mixture. *Drain fuel tank. Use manufacturer's recommended mixture (refer to FUEL AND OIL section in* Operator's Guide*).*

SYMPTOM	**ENGINE DOES NOT OFFER MAXIMUM POWER AND / OR DOES NOT REACH MAXIMUM OPERATING RPM.**
CONDITION	NORMAL USE.
Test / Inspection	**1. Check spark plug condition.** a.Fouled spark plug(s). *Replace.*
	2. Check if there is water in fuel. a.There is water in fuel. *Drain fuel system, then fill it with appropriate fuel.*
	3. Check items listed in "Engine runs out of fuel" (refer to FUEL AND OIL SYSTEM sub-section 02).
	4. Check carburetor adjustments and cleanliness. a.Inadequate carburetor adjustments or dirt accumulation. *Adjust according to specifications (refer to TECHNICAL DATA 10) or clean.*
	5. Check drive belt. a.Worn belt. *Replace belt if width is 3 mm (1/8") less than nominal dimension (refer to TECHNICAL DATA 10).*
	6. Check track adjustment. a.Too much tension and / or improper alignment. *Align track and adjust its tension to specifications (refer to TECHNICAL DATA 10).*
	7. Check drive pulley. a.Improper calibration screw adjustments (TRA pulley) and / or worn bushing(s). *Adjust according to specifications (refer to TECHNICAL DATA 10) and / or replace bushing(s).*
	8. Check driven pulley. a.Worn bushing and / or spring tension. *Replace spring and / or adjust its tension according to specifications (refer to TECHNICAL DATA 10).*
	9. Check exhaust system. a.Restriction. *Replace.*
	10. Check ignition timing. a.Decrease in power due to retarded ignition. *Adjust according to specification (refer to TECHNICAL DATA 10).*
	11. Check engine compression. a.Worn piston(s) and ring(s). *Replace (refer to TECHNICAL DATA 10 for specification).*
	12. Check engine cooling system. a.Engine overheats. Improper fan belt tension. *Adjust fan belt (refer to TECHNICAL DATA 10).* b.Antifreeze level is low, cap fails to pressurize system or air circulates through lines. *Adjust level, replace cap or bleed cooling system.*

SYMPTOM	**ENGINE DETONATION AT MAXIMUM RPM.**
CONDITION	NORMAL USE.
Test / Inspection	**1. Check which type of fuel is used.** a. Octane number is too low and / or alcohol level is too high. *Use recommended fuel type.*
	2. Check spark plug type. a. Improper spark plug heat range. *Install recommended spark plug(s) (refer to TECHNICAL DATA 10).*
	3. Check exhaust system. a. Too much restriction. *Replace.*
	4. Check ignition timing. a. Timing is too advanced. *Adjust according to specification (refer to TECHNICAL DATA 10).*
	5. Check carburetion. a. Fouled and / or improper carburetor components. *Clean or replace according to specification (refer to TECHNICAL DATA 10).*
	6. Check compression ratio and squish area. a. Compression ratio is too high. *Install genuine parts.*
SYMPTOM	**ENGINE TURNS OVER BUT FAILS TO START.**
CONDITION	NORMAL USE.
Test / Inspection	**1. Check switches.** a. Ignition switch, emergency cut-out switch or tether switch is in the OFF position. *Place all switches in the RUN or ON position.*
	2. Check fuel level. a. Mixture not rich enough to start cold engine. *Check fuel tank level and use primer.*
	3. Check spark plug. a. Defective spark plug (no spark). *Replace spark plug(s).*
	4. Check amount of fuel on spark plug. a. Flooded engine (spark plug wet when removed). *Do not overprime. Remove wet spark plug(s), turn ignition switch to OFF and crank engine several times. Install clean dry spark plug. Start engine following usual starting procedure.*
	5. Check fuel lines. a. No fuel to the engine (spark plug dry when removed). *Check fuel tank level; turn fuel valve on if applicable; check fuel filter, replace if clogged; check condition of fuel and impulse lines and their connections.*
	6. Check engine compression. a. Insufficient engine compression. *Replace defective part(s) (ex. : piston(s), ring(s), etc.).*

SYMPTOM	**IRREGULAR ENGINE IDLE.**
CONDITION	NORMAL USE AFTER ENGINE WARM UP.
Test / Inspection	**1. Check primer.** a. Fuel leaks at primer nipple which is mounted to carburetor. *Replace.*
	2. Check choke. a. Choke plunger may be partially opened. *Readjust.*
	3. Check carburetor adapter. a. Air enters through a crack. *Replace.*
	4. Check air screw position. a. Inadequate fuel / air mixture. *Adjust according to specifications (refer to TECHNICAL DATA 10).*
	5. Check ignition system trigger coil air gap. a. Air gap is too large. *Adjust according to specifications (refer to TECHNICAL DATA 10).*
	6. Check dimension of pilot jet. a. Inadequate fuel / air mixture. *Adjust according to specifications (refer to TECHNICAL DATA 10).*
	7. Perform engine leak test (tool P / N 861 7390 00). a. Leaking gaskets allow air to enter in engine. *Replace defective parts.*
SYMPTOM	**HIGH ENGINE OPERATING TEMPERATURE.**
CONDITION	NORMAL USE.
Test / Inspection	**1. Check temperature gauge sensor.** a. False reading. *Replace.*
	2. Check fan belt. a. Belt slides because it is too loose. *Adjust according to specifications (refer to TECHNICAL DATA 10).*
	3. Verify antifreeze level and check if there is air infiltration in the system or if there are leaks in gasket areas. a. Low antifreeze level or air in system. *Add antifreeze until recommended level is reached, bleed system and / or tighten clamps at fitting.*
	4. Check if antifreeze flows through system properly. a. Foreign particles and / or broken coolant pump impeller. *Clean cooling system and / or replace coolant pump impeller.*
	5. Check thermostat. a. Thermostat reacts slowly or not at all. *Replace.*

	6. Check antifreeze concentration. a.Antifreeze concentration is too high. *Adjust concentration according to Bombardier's recommendations.*
	7. Check tank cap. a.Cap does not hold pressure. *Replace.*
	8. Check carburetion. a. mproperly adjusted or inadequate carburetor components. *Adjust according to specifications (refer to TECHNICAL DATA 10) or replace inadequate component(s).*
	9. Check cylinder head gaskets. a.Worn gaskets. *Replace.*
	10. Check ignition timing. a.Ignition timing is too advanced. *Adjust according to specifications (refer to TECHNICAL DATA 10).*
	11. Check if there are leaks at air intake silencer and / or engine crankcase. a.Leak(s). *Repair or replace.*
	12. Check condition and heat range of spark plug(s). a.Melted spark plug tip or inadequate heat range. *Replace.*
SYMPTOM	**ENGINE EQUIPPED WITH "RAVE" VALVE DOES NOT REACH ITS FULL OPERATING RPM (500 TO 1000 RPM SLOWER).**
CONDITION	NORMAL USE.
Test / Inspection	**1. Check "RAVE" valve pistons.** a.Valve piston(s) is (are) too far out. *Screw valve piston(s) to bottom.*
	2. Check "RAVE" valve stems. a.Bent "RAVE" valve stem(s). *Replace.*
	3. Check "RAVE" valves. a.Jamed valve(s). *Clean.*
	4. Check tension of "RAVE" springs. a.Inadequate spring tension. *Replace.*
	5. Check "RAVE" pressure holes. a.Clogged holes. *Clean.*
	6. Check clamps or sleeves. a.Damaged clamp(s) or sleeve(s). *Replace.*

SYMPTOM	**ENGINE EQUIPPED WITH "RAVE". ENGINE HESITATES AT MID-SPEED AND REACHES MAXIMUM PERFORMANCE ONLY AFTER A WHILE.**
CONDITION	NORMAL USE.
Test / Inspection	**1. Check "RAVE" valve spring(s).** a. Spring tension is too weak or spring(s) is (are) broken. *Replace.*
	2. Check "RAVE" valve cover red adjustment screws. a. Adjustment screw(s) is (are) too loose. *Fully tighten.*
	3. Check "RAVE" valve movement ("RAVE" movement indicator P / N 861 7258 00). a. Valve(s) is (are) stuck in open position. *Clean.*
SYMPTOM	**REWIND STARTER ROPE DOES NOT REWIND.**
CONDITION	NORMAL USE.
Test / Inspection	**4. Check rewind spring.** a. Broken spring. *Replace spring.*
SYMPTOM	**REWIND STARTER PAWL DOES NOT ENGAGE.**
CONDITION	NORMAL USE.
Test / Inspection	**1. Check stopper spring.** a. Broken stopper spring. *Replace.*
	2. Check pawl and pawl lock. a. Pawl and pawl lock have stuck together because of heat. *Replace.*
	3. Check pawl and rope sheave. a. Pawl and rope sheave have stuck together because of heat. *Replace.*

SYMPTOM	**ENGINE PINGING.**
CONDITION	NORMAL USE.
Test / Inspection	**1. Check fuel lines.** a. Bent fuel lines (preventing fuel from flowing through). *Relocate or replace fuel lines.*
	2. Check if carburetor(s) is (are) clean. a. Dirt prevents fuel from flowing through. *Clean.*
	3. Check ignition timing. a. Timing is too advanced. *Adjust according to specifications (refer to TECHNICAL DATA 10).*
	4. Check compression ratio. a. Compression ratio is too high. *Replace inadequate part(s) to obtain manufacturer's recommended compression ratio or use a higher grade fuel.*
SYMPTOM	**ENGINE GENERATES A LOT OF VIBRATIONS.**
CONDITION	NORMAL USE.
Test / Inspection	**1. Check engine supports.** a. Loose broken supports or interference between support(s) and chassis. *Retighten to specification (refer to TECHNICAL DATA 10) or replace.*
	2. Check drive pulley (refer to : vibrations coming from drive pulley).
	3. Check carburetor synchronization. a. Throttle slide heights are adjusted differently and / or throttle slide openings are unsynchronized. *Adjust throttle slide heights and throttle cable.*

ENGINE LEAK VERIFICATION FLOW CHART

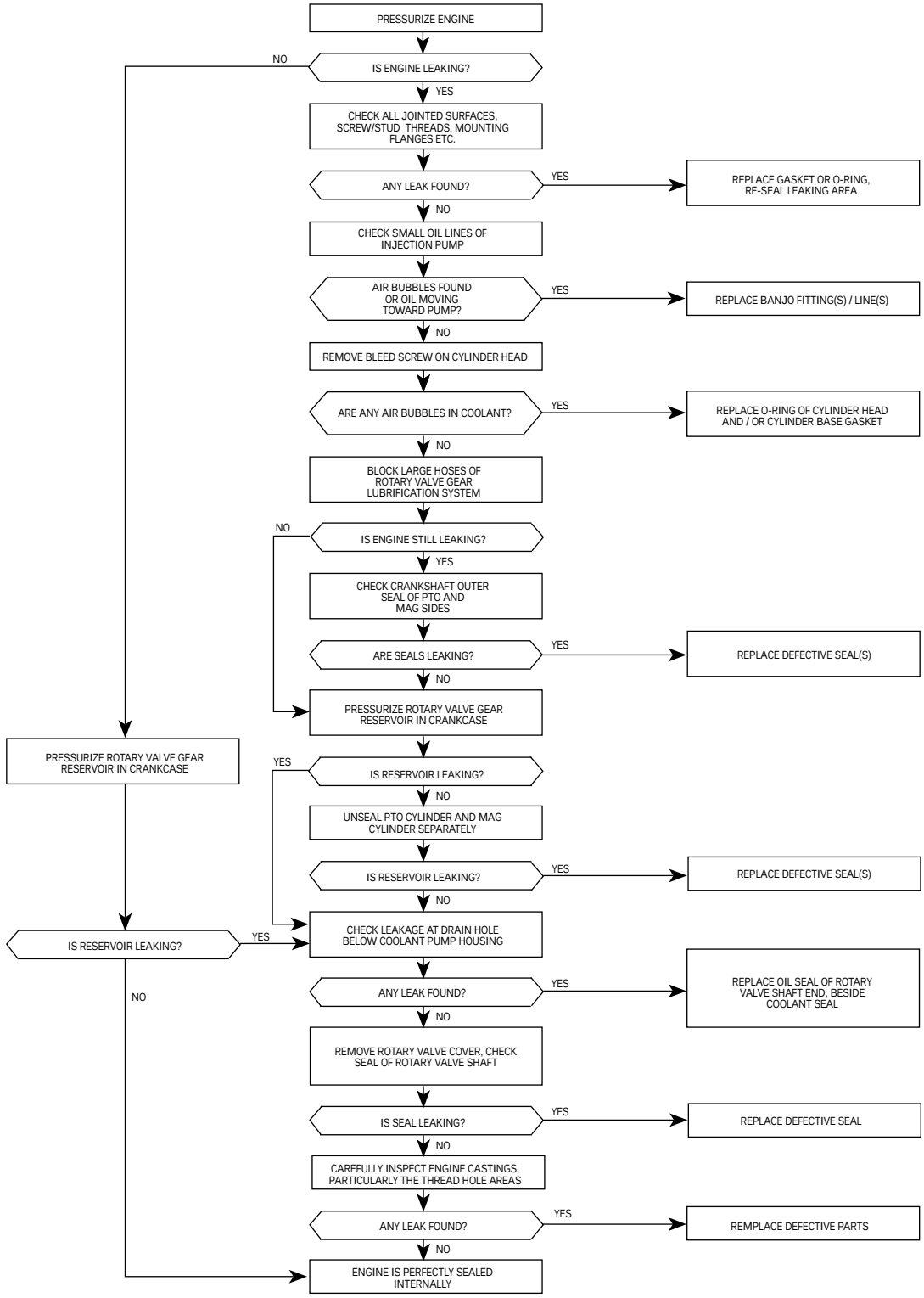

FUEL AND OIL SYSTEMS

The following chart is provided to help in diagnosing the probable source of troubles. It should be used as a guideline. Some causes or corrections may not apply to a specific model.

SYMPTOM	**HIGH FUEL CONSUMPTION (OR RICH MIXTURE).**
CONDITION	NORMAL USE.
Test / Inspection	**1. Check fuel tank.** a. Perforated fuel tank. *Replace fuel tank.*
	2. Check fuel pump reservoir and carburetor fittings. a. Leaking fittings. *Replace defective part.*
	3. Check primer. a. Fuel flows through primer while engine runs. *Replace primer.*
	4. Check float height in carburetor(s). a. Fuel level is too high in float bowl(s). *Adjust according to specifications (refer to TECHNICAL DATA 10).*
	5. Check needle valve. a. Foreign particles prevent needle valve(s) from closing and / or worn seating area. *Clean or replace needle valve(s), then clean seating area.*
	6. Check H.A.C. system. a. Connection to atmosphere is plugged. *Clean.* b. Leakage in H.A.C. to carburetor tube. *Replace.* c. Leak in H.A.C. sealed chamber. *Replace.* d. H.A.C. frozen. *Replace.*
SYMPTOM	**FUEL LEAKS IN ENGINE BASE WHEN ENGINE IS STOPPED.**
CONDITION	NORMAL USE.
Test / Inspection	**1. Check items 3, 4 and 5 of “High fuel consumption”.**
	2. Check fuel pump diaphragm. a. Cracked diaphragm. *Replace.*

SYMPTOM	**ENGINE LACKS POWER OR STALLS AT HIGH RPM.**
CONDITION	NORMAL USE.
Test / Inspection	**1. Check fuel tank vent hose.** a. Kinked or clogged hose. *Relocate or replace.*
	2. Check fuel filter. a. Clogged filter. *Replace.*
	3. Check fuel lines. a. Kinked or clogged lines. *Relocate or replace.*
	4. Check fuel pump flow. a. Dried diaphragm. *Replace.*
	5. Check if carburetor(s) is (are) clean. a. Varnish. *Clean.*
SYMPTOM	**HIGH INJECTION OIL CONSUMPTION.**
CONDITION	NORMAL USE.
Test / Inspection	**1. Check oil injection pump adjustment.** a. Oil injection pump adjusted too rich. *Adjust.*
	2. Check injection oil lines and their fitting. a. Leaking lines and / or cover. *Replace defective part(s).*
	3. Check injection pump cover gasket. a. Worn gasket. *Replace.*
	4. Pressurize crankcase rotary valve gear reservoir. a. Leaking gasket(s). *Replace gasket(s).*

SYMPTOM	**ENGINE RUNS OUT OF FUEL (OR LEAN MIXTURE).**
CONDITION	NORMAL USE.
Test / Inspection	**1. Check fuel filter ball located in fuel tank. Ball must move freely.** a. Corrosion due to oxidation at installation. *Replace fuel filter.*
	2. Check if lines are perforated or kinked and make sure they do not leak at fittings. a. Lines are too big for their fittings or are improperly rooted. *Replace or properly relocate lines.*
	3. Check fuel pump outlet flow. a. Dirt clogging fuel pump lines or torn membrane. *Clean or replace fuel pump.*
	4. Check carburetor needle valve(s). a. Dirt (varnish, foreign particle) clogging fuel line inlets. *Clean.*
	5. Check main jet. a. Dirt (varnish, foreign particle) accumulation at main jet. *Clean.*
	6. Check float height in carburetor bowl(s). a. Running out of fuel at high speed because float height is too low. *Adjust float lever height according to specification.*
	7. Check H.A.C. system. a. Plugged hole in air jet inlet. *Clean.* b. H.A.C. frozen. *Replace.*

TRANSMISSION AND BRAKE SYSTEM

The following charts are provided to help in diagnosing the probable source of troubles. It should be used as a guideline. Some causes or corrections may not apply to a specific model.

TRANSMISSION

SYMPTOM	**THE SNOWMOBILE ACCELERATES SLOWLY, ESPECIALLY WHEN IT IS STOPPED.**
CONDITION	NORMAL USE.
Test / Inspection	**1. Check drive belt condition.** a. Belt is too narrow (drive belt engagement is higher in drive pulley). *Replace belt if width is 3 mm (1/8”) less than a new one (refer to TECHNICAL DATA 10).*
	2. Check distance between pulleys and / or drive belt deflection. a. Distance is too small between pulleys or deflection is too high (drive belt engagement is higher in drive pulley). *Adjust distance between pulleys and / or drive belt deflection according to specifications (refer to TECHNICAL DATA 10).*
	3. Check driven pulley sliding half play. a. ammed sliding half. *Replace.*
	4. Check spring tension of driven pulley sliding half. a. Sliding half rotation is accelerated when spring tension is too weak. *Adjust according to specifications (refer to TECHNICAL DATA 10).*
	5. Refer to “Vibrations originating from driven pulley” and check items listed.
	6. Check drive pulley spring tension. a. Spring tension is too weak. *Replace.*
SYMPTOM	**ENGINE MAXIMUM RPM IS TOO HIGH AND TOP SPEED IS NOT REACHED.**
CONDITION	NORMAL USE.
Test / Inspection	**1. Check items 1, 2 and 3 of “The snowmobile accelerates slowly, especially when it is stopped”.**
	2. Check driven pulley spring tension. a. Spring tension is to stiff. *Adjust according to specification (refer to TECHNICAL DATA 10).*
	3. Check position of the calibration screws. (TRA drive pulley) a. Selected numbers are too high. *Adjust according to specification (refer to TECHNICAL DATA 10).*
	4. Refer to “Vibrations originating from driven pulley” and check items listed.

SYMPTOM	**LOOSENESS IS FELT IN DRIVE SYSTEM WHEN ACCELERATING / DECELERATING.**
CONDITION	NORMAL USE.
Test / Inspection	**1. Check drive chain tension.** a. Drive chain is too loose. *Adjust.*
	2. Check play of driven pulley Woodruff key (aluminum frame models) a. Worn Woodruff key or keyway. *Replace.*
SYMPTOM	**VIBRATIONS ORIGINATING FROM DRIVEN PULLEY.**
CONDITION	NORMAL USE.
Test / Inspection	**1. Check drive belt.** a. Belt width is uneven at many places. *Replace (refer to TECHNICAL DATA 10 for the part number).*
	2. Check tightening torque of drive pulley screw. a. Moving governor cup. *Retighten bolt.*
	3. Spring cover bolts. a. Spring cover moves and restrains sliding half movement. *Retighten bolts.*
	4. Check spring cover (TRA TYPE) and / or outer half bushings. a. Excessive gap between bushings and inner half shaft, thus restraining sliding half movements. *Replace bushing(s) (IMPORTANT: flare edges of each bushing using appropriate tool (TRA model).*
	5. Check sliding half slider shoes. a. Worn slider shoes. *Replace.*
SYMPTOM	**VIBRATIONS ORIGINATING FROM DRIVEN PULLEY.**
CONDITION	NORMAL USE.
Test / Inspection	**1. Check sliding half play.** a. Sliding half runout. *Replace sliding half bushing.*
	2. Check sliding half and fixed half straightness. a. Sliding half / fixed half runout. *Replace.*
	3. Check cam slider shoes. a. One or two slider shoes out of three are broken. *Replace.*

SYMPTOM	**PULLEYS DO NOT DOWN SHIFT PROPERLY.**
CONDITION	NORMAL USE.
Test / Inspection	**1. Check driven pulley spring tension.** a. Spring tension is too weak. *Adjust according to specifications (refer to TECHNICAL DATA 10).*
	2. Refer to "Vibrations coming from driven pulley" and check items listed.
	3. Check drive pulley bushings (cleanliness, wear, etc.). a. Bushings stick to fixed half pulley shaft. *Clean or replace.*
	4. Check driven pulley spring tension. a. Spring tension is too weak. *Replace.*
SYMPTOM	**IT IS DIFFICULT TO ENGAGE TRANSMISSION IN FORWARD OR REVERSE GEAR.**
CONDITION	NORMAL USE.
Test / Inspection	**1. Check position of gear shift lever adjustment screw.** a. mproper adjustment. *Adjust according to specifications (refer to transmission section 05).*
SYMPTOM	**UNEVEN BELT WEAR ON ONE SIDE ONLY.**
CONDITION	NORMAL USE.
Test / Inspection A00D09Y	**1. Check tightening torque of engine mount bolts.** a. Loose engine mount. *Tighten engine mount nuts / bolts equally.*
	2. Check pulley alignment. a. Pulley misalignment. *Align pulleys.*
	3. Check drive belt contact area on pulleys. a. Rough or scratched pulley surfaces. *Repair or replace pulley half.*
	4. Check driven pulley sliding half play. a. Driven pulley bushing worn. *Replace bushing.*

SYMPTOM	**BELT GLAZED EXCESSIVELY OR HAVING BAKED APPEARANCE.**
CONDITION	NORMAL USE.
Test / Inspection 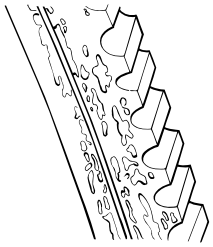 A00D0AY	**1. Check if drive pulley bushings are worn.** a. Insufficient pressure on belt sides. *Replace bushing.*
	2. Check condition of drive pulley fixed half shaft. a. Rusted drive or driven pulley shafts. *Clean shaft with fine steel woof and lubricate with low temperature grease (If applicable only).*
	3. Check if pulley halves are clean. a. Oil on pulley surfaces. *Clean pulley halves.*
	4. Check pulley calibration a. Improper pulley calibration. *Calibrate according to specification.*
SYMPTOM	**BELT WORN EXCESSIVELY IN TOP WIDTH.**
CONDITION	NORMAL USE.
Test / Inspection 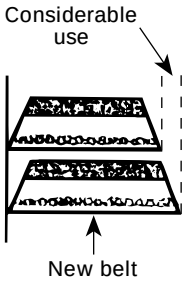 A00D0BY	**1. Check drive pulley.** a. Excessive slippage due to irregular outward actuation movement of drive pulley. *Carry out drive pulley inspection.*
	2. Check drive belt identification number. a. Improper belt angle. (wrong type of belt). *Replace belt with an appropriate drive belt.*
	3. Check drive belt width. a. Considerable use. *Replace belt if 3 mm (1/8”) less than recommended width (see TECHNICAL DATA 10).*

SYMPTOM	**BELT WORN NARROW IN ONE SECTION.**
CONDITION	NORMAL USE.
Test / Inspection	**1. Check track tension / alignment.** a. Frozen or too tight track. *Liberate track from ice or check track tension and alignment.*
	2. Check drive pulley. a. Drive pulley not functionning properly. *Repair or replace drive pulley.*
	3. Check idle speed. a. Engine idle speed too high. *Adjust according to specification.*
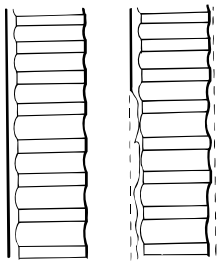	**4. Check drive belt length.** a. Incorrect belt length. *Replace belt with an appropriate drive belt (refer to TECHNICAL DATA 10).*
	5. Check distance between pulleys. a. Incorrect pulley distance. *Readjust according to specification.*
	6. Check belt deflection. a. Deflection is too small. *Adjust according to specification.*
A00D0CY	**7. Check if parking brake is released.** a. Parking brake is engaged. *Release parking brake.*
SYMPTOM	**BELT SIDES WORN CONCAVE.**
CONDITION	NORMAL USE.
Test / Inspection	**1. Check pulley half surfaces.** a. Rough or scratched pulley half surfaces. *Repair or replace.*
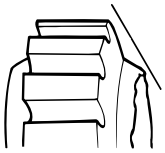	**2. Check drive belt identification number.** a. Unspecified type of belt. *Replace belt with an appropriate drive belt (refer to TECHNICAL DATA 10).*
A00D0DY	
SYMPTOM	**BELT DISINTEGRATION.**
CONDITION	NORMAL USE.
Test / Inspection	**1. Check drive belt identification number.** a. Excessive belt speed. *Using unspecified type of belt. Replace belt with proper type of belt (refer to TECHNICAL DATA 10).*
	2. Check if pulley halves are clean. a. Oil on pulley surfaces. *Clean pulley surfaces with fine emery cloth and wipe clean using alcohol and a cloth.*
A00D0EY	

SYMPTOM	**BELT EDGE CORD BREAKAGE.**
CONDITION	NORMAL USE.
Test / Inspection 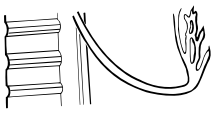 A00D0FY	**1. Check pulley alignment.** a. Pulley misalignment. *Align pulley according to specifications (refer to TECHNICAL DATA 10).*
SYMPTOM	**FLEX CRACKS BETWEEN COGS.**
CONDITION	NORMAL USE.
Test / Inspection 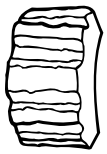 A00D0GY	**1. Check drive belt condition.** a. Considerable use, belt wearing out. *Replace.*
SYMPTOM	**SHEARED COGS, COMPRESSION SECTION FRACTURED OR TORN.**
CONDITION	NORMAL USE.
Test / Inspection 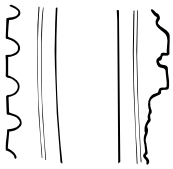 A00D0HY	**1. Check drive belt rotational direction.** a. Improper belt installation. *Replace.*
	2. Check if drive belt rubs against components. a. Belt rubbing on stationary object. *Relocate components.*
	3. Check drive pulley. a. Violent engagement of drive pulley. *Check drive pulley engagement speed, drive pulley bushings and components.*
SYMPTOM	**BELT “FLIP-OVER” AT HIGH SPEED.**
CONDITION	NORMAL USE.
Test / Inspection 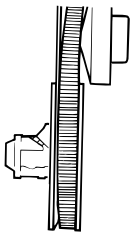 A00D0IY	**1. Check pulley alignment.** a. Pulley misalignment. *Align pulley according to specifications (refer to TECHNICAL DATA 10).*
	2. Check drive belt identification number. a. Using unspecified type of belt. *Replace belt with an appropriate drive belt.*

BRAKE SYSTEM

MECHANICAL BRAKE

SYMPTOM	**BRAKE DOES NOT ADJUST AUTOMATICALLY.**
CONDITION	NORMAL USE.
Test / Inspection	**1. Check ratchet wheel spring.** a. Broken ratchet wheel tag. *Replace.*
	2. Check mobile pad stud. a. Stud rotates in pad. *Replace.*
SYMPTOM	**BRAKE HANDLE DOES NOT RETURN COMPLETELY.**
CONDITION	NORMAL USE.
Test / Inspection	**1. Check brake return spring.** a. Broken return spring. *Replace.*
	2. Check if brake cable moves freely in its housing. a. Brake cable movement is limited due to oxidation or dirt accumulation. *Replace.*
	3. Check distance between brake lever and caliper. a. Distance is too wide. *Adjust according to specifications (refer to TRANSMISSION section 05).*

HYDRAULIC BRAKE

SYMPTOM	**SPONGY BRAKE CONDITION.**
CONDITION	NORMAL USE.
Test / Inspection	*Replace brake fluid and bleed system. If problem still occurs, replace master cylinder.*
SYMPTOM	**BRAKE FLUID LEAKING.**
CONDITION	NORMAL USE.
Test / Inspection	**1. Check for loosen hose connectors.** *Retighten.*
	2. Check for damaged hose, master cylinder and caliper. *Replace part(s) and check for proper mounting.*

MECHANICAL AND HYDRAULIC BRAKES

SYMPTOM	**BRAKE SYSTEM IS NOISY.**
CONDITION	NORMAL USE.
Test / Inspection	**1. Check brake pad thickness.** a. Pads are worn up to wear warner. *Replace.*

ELECTRICAL SYSTEM

The following chart is provided to help in diagnosing the probable source of troubles. It should be used as a guideline. Some causes or corrections may not apply to a specific model.

SYMPTOM	**STARTER DOES NOT TURN.**
CONDITION	NORMAL USE.
Test / Inspection	**1. Check fuse.** a. Burnt fuse. *Check wiring condition and replace fuse.*
	2. Check continuity of starter switch contact points. a. Poor contact of starter switch contact points. *Repair or replace switch.*
	3. Check continuity between starter switch and solenoid. a. Open circuit between starter switch and solenoid switch. *Repair.*
SYMPTOM	**STARTER TURNS ; BUT DOES NOT CRANK THE ENGINE.**
CONDITION	NORMAL USE.
Test / Inspection	**1. Check battery capacity.** a. Shorted battery cell(s). *Replace.*
	2. Check battery charge. a. Weak battery. *Recharge.*
	3. Check wire connection. a. Inadequate connection (too much resistance). *Clean and reconnect.*
	4. Check solenoid switch contact disc. a. Burnt or poor contact of solenoid switch contact disc. *Replace solenoid switch.*
	5. Check continuity of solenoid switch pull-in winding. a. Open circuit of solenoid switch pull-in winding. *Replace solenoid switch.*
	6. Check continuity of solenoid switch hold-in winding. a. Open circuit of solenoid switch hold-in winding. *Replace solenoid switch.*
	7. Check brushes. a. Poor contact of brushes. *Replace brushes.*
	8. Check commutator. a. Burnt commutator. *Turn commutator in lathe.*

	9. Check height of commutator mica. a. Commutator mica too high. *Undercut mica.*
	10. Check field coil resistance. a. Shorted field coil. *Repair or replace yoke.*
	11. Check armature resistance. a. Shorted armature. *Repair or replace armature.*
	12. Check tension of brush springs. a. Weak brush spring tension. *Replace springs.*
	13. Check yoke assembly magnets. a.Weak magnets. *Replace yoke assembly.*
	14. Check if bushings are worn. a.Worn bushings. *Replace bushings.*
SYMPTOM	**STARTER TURNS, BUT OVERRUNNING CLUTCH PINION DOES NOT MESH WITH RING GEAR.**
CONDITION	NORMAL USE.
Test / Inspection	**1. Check clutch pinion gear.** a.Worn clutch pinion gear. *Replace clutch.*
	2. Check clutch. a.Defective clutch. *Replace clutch.*
	3. Check movement of clutch on splines. a.Poor movement of clutch on splines. *Clean and correct.*
	4. Check clutch bushing. a.Worn clutch bushing. *Replace clutch.*
	5. Check starter bushings. a.Worn starter bushing(s). *Replace bushing(s).*
	6. Check ring gear. a.Worn ring gear. *Replace ring gear.*

SYMPTOM	**ELECTRIC STARTER KEEPS TURNING WHEN ENGINE IS STARTED.**
CONDITION	NORMAL USE.
Test / Inspection	**1. Check clutch.** a. Jammed clutch pinion gear. *Replace or clean.*
	2. Check movement of clutch on splines. a. Clutch is stuck on splines. *Clean.*
	3. Check ignition switch. a. Ignition switch does not return to its ON position or is short-circuited. *Adjust retaining screw or replace switch.*
	4. Check solenoid. a. Shorted solenoid switch winding(s). *Replace solenoid switch.*
	5. Check solenoid switch contacts. a. Melted solenoid switch contacts. *Replace solenoid switch.*
	6. Check starter switch. a. Starter switch returns poorly. *Replace ignition switch.*
SYMPTOM	**NOISE OCCURENCE WHEN STARTING ENGINE.**
CONDITION	NORMAL USE.
Test / Inspection	**1. Check if ring gear is well mounted to drive pulley inner half.** a. Loose and / or broken bolts. *Retighten bolts using thread locker or replace ring gear and drive pulley inner half.*
SYMPTOM	**ELECTRIC STARTER SOMETIMES DOES NOT WORK WHEN TURNING IGNITION SWITCH.**
CONDITION	NORMAL USE.
Test / Inspection	**1. Check battery cables and starter wires.** a. Corroded and / or loose connection(s). *Clean and / or retighten.*
	2. Check fuse. a. Oxidized fuse. *Clean.*
	3. Check wiring harness connections. a. Oxidized connections. *Clean or replace defective terminals.*
	4. Check ignition switch. a. Defective contacts in ignition switch. *Replace.*
	5. Check solenoid of electric starter. a. Shorted solenoid wiring harness or eroded contact washer. *Replace.*

SYMPTOM	**HEADLAMP NOT LIGHTING.**
CONDITION	WHITE BULB.
Test / Inspection	**1. Check bulb.** a. Gas leak. *Replace bulb.*
CONDITION	BROKEN ELEMENT.
Test / Inspection	**1. Check for loose headlamp housing and bulb socket.** a. Vibration problem. *Tighten headlamp mounting screws. Lock bulb in socket. Replace bulb.*
CONDITION	MELTED FILAMENT (ENDS OF ELEMENT HOLDER) AND BLACK BULB.
Test / Inspection	**1. Check voltage at headlamp at different speeds. It must not be above 15 VAC.** NOTE : If quartz halogen bulb is involved, ensure that voltage regulator P/N 410 9089 00 is used. a. Excessive voltage in lighting circuit. *Replace voltage regulator and ensure proper grounding. Retest.*
SYMPTOM	**HEADLAMP DIMING.**
CONDITION	NORMAL USE.
Test / Inspection	**1. Check voltage at headlamp at different speeds. It must not be below 11 VAC.** a. Insufficient voltage in lighting circuit. *Replace voltage regulator and retest.*
	2. Visually inspect wiring harness for damaged and / or melted wires and / or bad wire terminal crimping and / or connections. a. Heating, rotating or sharp part in contact with harness. Improper harness routing. *Repair / replace damaged wires and / or terminals. Reroute harness where necessary.*
	3. On manual start models : Verify if there is an interconnection between AC and DC current. a. Rusted or loose retaining screws. *Clean, apply lithium grease (LMZ1) and firmly tighten screws.*
	4. On electrical start models : Verify if there is an interconnection between AC and DC current. a. Faulty installation of optional equipment. *Find optional equipment connected directly to DC ground (BK wire or chassis) or to any DC hot wire (RD, RD / BL). Disconnect and reconnect to AC current (YL and YL / BK wires).*
	5. Verify of optional electric accessories are overloading the magneto / generator. a. Excessive electrical load to magneto / generator. *Reduce the electrical load by removing excess accessories. Reconnect as recommended by manufacturer.*
	6. Hot Grips brand : Verify if they were connected in parallel by mistake. a. Excessive electrical load to magneto / generator. *Reconnect as recommended by manufacturer.*
	7. Bombardier heating grips : Verify if the return wires of the elements were grounded to the chassis by mistake. a. Faulty installation of optional equipment. *Reconnect as recommended by manufacturer.*

	8. Verify if heating grips installation overloads the magneto / generator capacity (ex: Élan). a. Excessive electrical load to magneto / generator. *Reduce the electrical load by removing accessories.*
SYMPTOM	**FALSE FUEL AND / OR TEMPERATURE GAUGE READINGS.**
CONDITION	NORMAL USE.
Test / Inspection	**1. Verify if gauge was connected on DC current by mistake (in case of optional installation).** a. Faulty installation of optional equipment. *Find optional wires connected directly to DC ground (BK wire to chassis) or to any DC hot wire (RD, RD / BL). Disconnect and reconnect to AC current (YL and YL / BK wires).*
	2. Verify sender unit for free movement and / or correct arm position. a. Defective or damaged part. *Correct or replace sender unit.*
	1. Verify sender unit / gauge wiring harness condition. a. Heating, rotating or sharp part in contact with harness. Improper harness routing. *Replace or repair damaged wires. Reroute where necessary.*
SYMPTOM	**ENGINES DOES NOT START – NO SPARK AT SPARK PLUG.**
CONDITION	AT ENGINE CRANKING.
Test / Inspection	**1. Verify spark plug condition.** a. Defective, improperly set, worn-out, fouled. *Identify source of problem and correct. Replace spark plug.*
	2. Verify spark plug cap resistance with an ohmmeter. a. Defective part. *Replace cap.*
	3. Verify if problem originated from electrical system wiring harness and / or accessories and / or ignition cut-out switches by unplugging the 4-wire connectors between the magneto / generator and the vehicle wiring harness. Check condition of connectors. a. Heating, rotating or sharp part in contact with harness. Improper harness routing. Defective switch(es). Corroded connector terminals. *Replace or repair damaged wires. Reroute where necessary. Replace defective switch(es). Clean terminals and apply silicone dielectric grease.*
	4. Verify trigger coil resistance with an ohmmeter and connector condition. a. Defective coil. Corroded connector terminals. *Replace defective coil. Clean terminals and apply silicone dielectric grease.*
	5. Verify condition of ignition coil. a. Mechanically damaged part. Vibration problem. Electrically damaged part. *Tighten mounting screws. Replace ignition coil.*
	6. Verify condition of ignition generator coils. Mechanically damaged part. Vibration problem. Electrically damaged part. Tighten mounting screws. Replace coils.
	7. Verify CDI (Capacitor discharge ignition) module. a. Mechanically damaged part. Vibration problem. Electrically damaged part. *Tighten mounting screws. Replace CDI module, retest and verify ignition timing.*

SYMPTOM	**ENGINE STALLS.**
CONDITION	AT LOW SPEED.
Test / Inspection	**1. Verify items 4, 5 and 6 above.**
SYMPTOM	**IRREGULAR ENGINE SPEED.**
CONDITION	AT HIGH SPEED.
Test / Inspection	**1. Verify items 4, 5 and 6 above.**
CONDITION	AT LOW SPEED.
Test / Inspection	**1. Verify items 4 and 5 above and trigger coil / flywheel protrusion air-gap.** a. Air-gap too large. *Readjust air-gap.*
SYMPTOM	**ENGINE IS MISFIRING – ERRATIC SPARK AT SPARK PLUG.**
CONDITION	RIDING ON WET SNOW.
Test / Inspection	**1. Verify if spark plug wires and / or spark plug cap seals are sealing-out moisture.** a. Defective wires and / or seals. *Replace defective part.*
	2. Verify if ignition system wiring harness connectors are in good condition and / or are sealing-out moisture. a. Loose connectors, corroded terminals or defective parts. *Clean terminals and apply silicone dielectric grease. Replace defective parts.*
CONDITION	NORMAL USE.
Test / Inspection	**1. Verify misfiring by observing flash of stroboscopic timing light; unplug connectors between magneto / generator and vehicle wiring harness to isolate problem. Check condition of connectors.** a. Defective spark plug and / or cables / caps. Defective electrical system wiring harness and / or accessories and / ignition cut-out switches. Condition of connector terminals. *Replace defective parts and / or repair damaged wires. Replace defective switch(es). Clean terminals and apply silicone dielectric grease.*
CONDITION	RIDING IN DEEP AND THICK SNOW.
Test / Inspection	**1. Perform all verifications outlined under "Engine does not start – no spark at spark plug".**
	2. Verify spark plug(s). Proceed with spark plug analysis in order to identify source of problem. a. Defective and / or worn spark plug(s) and / or cable(s) and / or cap(s). *Replace defective part(s). Proceed with ignition system testing procedures. Perform engine analysis.*

SYMPTOM	**FOULED (BLACK) SPARK PLUG TIP.**
CONDITION	NORMAL USE.
Test / Inspection	**1. Check carburetor(s).** a. Carburetion is too rich. *Adjust according to specifications (refer to TECHNICAL DATA 10).*
	2. Check injection oil consumption. a. Injection pump flow is too high. *Adjust according to specification or replace.*
	3. Check oil quality. a. Poor oil quality that creates deposits. *Use Bombardier oil.*
	4. Check engine compression. a. Leaking piston ring(s). *Replace.*
SYMPTOM	**SPARK PLUG TIP(S) IS (ARE) LIGHT GREY.**
CONDITION	NORMAL USE.
Test / Inspection	**1. Refer to "Engine slows down or stops at high RPM" and check items listed.**
	2. Check spark plug heat range. a. Spark plug heat range is too high. *Replace by Bombardier's recommended spark plug (refer to TECHNICAL DATA 10).*
	3. Check if air intake silencer leaks. a. Air surplus coming from opening(s) located between halves. *Seal.*
	4. Check carburetor adapter collars. a. Loose collar(s). *Tighten.*
	5. Check carburetor adapter(s). a. Cracked or deformed adapter(s). *Replace.*
SYMPTOM	**BRAKE LIGHT REMAINS ON.**
CONDITION	NORMAL USE.
Test / Inspection	**1. Check if bulb is properly installed.** a. Bulb is not installed correctly (contact elements are reversed). *Install bulb correctly.*
	2. Check brake switch. a. Switch contact remains closed. *Adjust brake cable or brake switch.*

SYMPTOM	**REAR LIGHT BULB FLASHES.**
CONDITION	NORMAL USE.
Test / Inspection	**1. Check bulb tightness in housing.** a. Looseness at bulb contact elements. *Install bulb correctly.*
	2. Check if rear light is properly connected. a. Connector housing is partially connected. *Install connector housing properly.*
	3. Check continuity of wires. a. Corroded terminals and / or broken wires. *Replace terminal(s) or crimp defective wires.*
SYMPTOM	**TACHOMETER DOES NOT WORK.**
CONDITION	NORMAL USE.
Test / Inspection	**1. Check fuse.** a. Burnt fuse. *Replace.*
	2. Check continuity of wires. a. Corroded terminals and / or broken wires. *Replace terminal(s) or crimp defective wires.*

SUSPENSION SYSTEM AND TRACK

The following chart is provided to help in diagnosing the probable source of troubles. It should be used as a guideline. Some causes or corrections may not apply to a specific model.

SYMPTOM	**REAR SUSPENSION BOTTOMS OUT.**
CONDITION	NORMAL USE.
Test / Inspection	**1. Check rear spring preload or rear arm spring preload.** a. Spring tension is too low. *Increase rear arm spring preload.*
SYMPTOM	**SLIDER SHOES WEAR OUT PREMATURELY.**
CONDITION	NORMAL USE.
Test / Inspection	**1. Check track tension.** a. Pressure is too great on slider shoes. *Adjust according to specifications (refer to TECHNICAL DATA 10). Replace defective parts.*
SYMPTOM	**TRACK CLEATS BECOME BLUE.**
CONDITION	NORMAL USE.
Test / Inspection	**1. Check track tension.** a. Pressure is too great on cleats. *Adjust according to specifications (refer to TECHNICAL DATA 10).*
	2. Check slider shoes and / or suspension retaining screws. a. Worn slider shoes or lost retaining screws. *Replace defective parts and / or tighten loose screws.*
SYMPTOM	**NOISE OR VIBRATIONS ORIGINATING FROM THE TRACK.**
CONDITION	NORMAL USE.
Test / Inspection	**1. Check slide suspension retaining bolts.** a. Missing bolt(s) allowing movement of certain components which in turn interfere with track rotation. *Replace missing bolt(s).*
	2. Check condition of idler wheel(s). a. Idle wheel rubber is damaged. *Replace.*
	3. Check guide cleats. a. Top portion of guide cleat(s) is bent. *Replace.*
	4. Check sprockets. a. One or various teeth of drive shaft sprockets are broken. *Replace sprocket(s).*
	5. Check track rods and / or internal traction teeth. a. One or various track rods and / or teeth are broken. *Replace track.*

SYMPTOM	**DERAILING TRACK.**
CONDITION	NORMAL USE.
Test / Inspection	**1. Check track tension.** a. Track is too loose. *Adjust.*
	2. Check if track and slider shoes are properly aligned. a. Improper alignment. *Adjust.*
SYMPTOM	**REAR SUSPENSION IS LOW OR TOO STIFF.**
CONDITION	NORMAL USE.
Test / Inspection	**1. Check track tension.** a. Track is too tight. *Adjust.*
	2. Check if axles are properly lubricated. a. Improper lubrication and / or contaminated grease (sticky oil sludge). *Clean and / or lubricate.*
	3. Check rear spring preload. a. Insufficient preload. *Increase preload using shock adjustment cams.*
SYMPTOM	**WHEN HANDLEBAR IS TURNED, SNOWMOBILE TURNS BEARLY OR NOT AT ALL.**
CONDITION	NORMAL USE.
Test / Inspection	**1. Check ski runner condition.** a. Worn ski runners. *Replace.*
	2. Check tension of front spring adjustment cams. a. Insufficient ski pressure on the ground. *Increase spring preload.*
	3. Check if front arm stopper strap is too long. a. Insufficient ski pressure on the ground. *Shorten stopper strap.*
	4. Check front arm spring tension. a. Insufficient ski pressure on the ground. *Slacken spring tension.*

SYMPTOM	**HANDLE BAR IS DIFFICULT TO TURN.**
CONDITION	NORMAL USE.
Test / Inspection	**1. Check position of front spring adjustment cams.** a. More pressure on the ground when cam increases spring preload. *Reduce front spring preload.*
	2. Check position of stopper strap. a. More weight when stopper strap is short. *Lengthen front arm stopper strap.*
	3. Check position of front arm shock adjustment cam(s). a. When spring tension is weak, more weight is transferred to the skis. *Increase spring preload.*
	4. Check condition of ball joints. a. Corrosion restrains movement. *Lubricate or replace.*
	5. Check swing arm camber (liquid cooled models). a. Too much ski leg inclination. *Adjust camber to 0° ± .5°.*
SYMPTOM	**THE SNOWMOBILE IS UNSTABLE (IT MOVES FROM LEFT TO RIGHT AND VICE VERSA).**
CONDITION	NORMAL USE.
Test / Inspection	**1. Check ski runner condition.** a. Worn or bent ski runners. *Replace ski runners.*
	2. Check ski alignment. a. Improper ski alignment. *Align skis in order to obtain proper toe-out (opening) (to adjust, refer to section 08 STEERING system).*
	3. Check if bushings are too loose in steering system. a. Bushings are too loose. *Replace.*

TABLE OF CONTENTS

494, 582, 583 AND 670 ENGINE TYPES **04-01-1**

ENGINE SUPPORT AND MUFFLER **04-01-1**
REMOVAL FROM VEHICLE 04-01-2
ENGINE SUPPORT AND MUFFLER DISASSEMBLY AND ASSEMBLY 04-01-2
INSTALLATION ON VEHICLE 04-01-2

TOP END **04-01-3**
CLEANING 04-01-4
DISASSEMBLY 04-01-4
INSPECTION 04-01-4
ASSEMBLY 04-01-5

BOTTOM END **04-01-10**
CLEANING 04-01-11
DISASSEMBLY 04-01-11
INSPECTION 04-01-11
ASSEMBLY 04-01-11

LEAK TEST AND ENGINE DIMENSION MEASUREMENT **04-02-1**

LEAK TEST **04-02-1**
PREPARATION 04-02-1
PROCEDURE 04-02-1
FINALIZING REASSEMBLY 04-02-4
COOLING SYSTEM LEAK TEST 04-02-4

ENGINE DIMENSION MEASUREMENT **04-02-5**
CYLINDER TAPER 04-02-5
CYLINDER OUT OF ROUND 04-02-5
CYLINDER / PISTON CLEARANCE 04-02-5
RING / PISTON GROOVE CLEARANCE 04-02-6
RING END GAP 04-02-6
CRANKSHAFT DEFLECTION 04-02-6
CONNECTING ROD BIG END AXIAL PLAY 04-02-7
CONNECTING ROD / PISTON PIN CLEARANCE 04-02-8
CONNECTING ROD / CRANKPIN CLEARANCE 04-02-8
CRANKSHAFT END-PLAY 04-02-8
CRANKCASE / ROTARY VALVE GAP 04-02-10
CHECKING SURFACE FLATNESS 04-02-11
RECTIFYING SURFACES 04-02-11
CHECKING CRANKSHAFT ALIGNMENT 04-02-11

CDI SYSTEM **04-03-1**

NIPPONDENSO TRIGGER COIL IGNITION SYSTEM **04-03-1**
494, 582, 583 AND 670 ENGINES *04-03-1*
CLEANING 04-03-2
DISASSEMBLY 04-03-2
ASSEMBLY 04-03-3

OIL INJECTION SYSTEM **04-04-1**

OIL INJECTION PUMP **04-04-1**
494, 582, 583 AND 670 ENGINES *04-04-1*
OIL PUMP IDENTIFICATION 04-04-2
CLEANING 04-04-2
DISASSEMBLY 04-04-2
ASSEMBLY 04-04-2
ADJUSTMENT 04-04-2
CHECKING OPERATION 04-04-3

LIQUID COOLING SYSTEM **04-05-1**
494 ENGINE *04-05-1*
582 ENGINE *04-05-2*
583 AND 670 ENGINES *04-05-3*
INSPECTION 04-05-4
DRAINING THE SYSTEM 04-05-4
DISASSEMBLY AND ASSEMBLY 04-05-4
COOLING SYSTEM REFILLING PROCEDURE 04-05-5

ROTARY VALVE, COOLANT PUMP AND RESERVOIR **04-06-1**
494, 582, 583 AND 670 ENGINES *04-06-1*
GENERAL 04-06-2
CLEANING 04-06-2
DISASSEMBLY 04-06-2
INSPECTION 04-06-3
ASSEMBLY 04-06-3
ROTARY VALVE TIMING 04-06-6

REWIND STARTER **04-07-1**
ALL MODELS *04-07-1*
REMOVAL 04-07-2
DISASSEMBLY 04-07-2
ASSEMBLY 04-07-2
INSTALLATION 04-07-3

CARBURETOR AND FUEL PUMP **04-08-1**

MIKUNI FLOAT CARBURETOR **04-08-1**
REMOVAL 04-08-3
CLEANING AND INSPECTION 04-08-3
DISASSEMBLY AND ASSEMBLY 04-08-3
CARBURETOR FLOAT LEVEL ADJUSTMENT 04-08-4
INSTALLATION 04-08-5
CARBURETOR ADJUSTMENTS 04-08-6
PRELIMINARY IDLE SPEED ADJUSTMENT 04-08-8
IDLE SPEED FINAL ADJUSTMENT 04-08-8
HAC SYSTEM 04-08-8

HAC SYSTEM **04-08-9**

FUEL PUMP **04-08-10**
REMOVAL 04-08-11
PUMP VERIFICATION 04-08-11
CLEANING AND INSPECTION 04-08-11
INSTALLATION 04-08-11

FUEL TANK AND THROTTLE CABLE **04-09-1**

494, 582, 583 AND 670 ENGINE TYPES

ENGINE SUPPORT AND MUFFLER

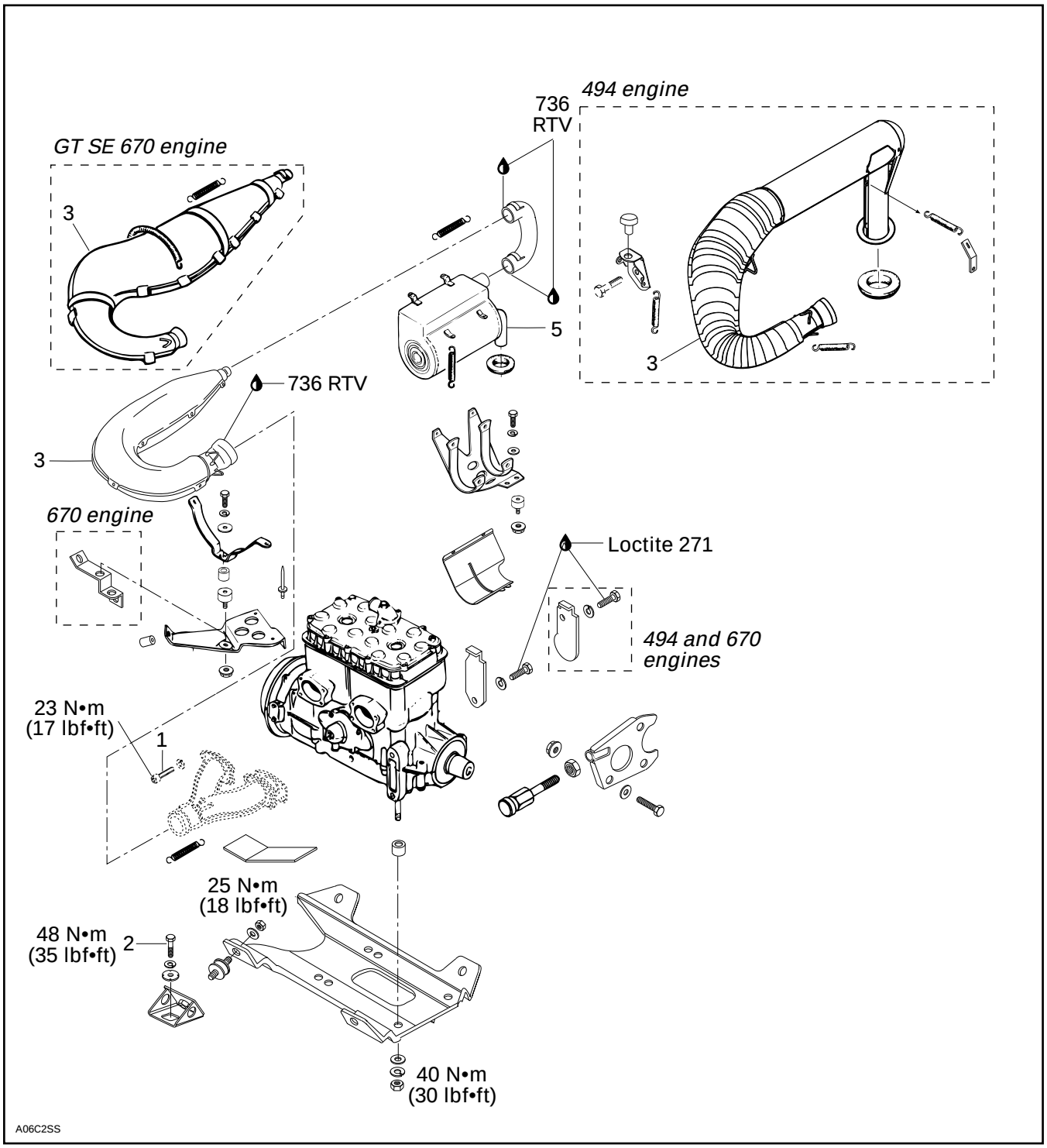

REMOVAL FROM VEHICLE

Disconnect or remove the following from vehicle.

- air intake silencer
- belt guard and drive belt
- drive pulley
- carburetors and throttle cable at oil injection pump
- impulse line, oil supply line and rotary valve shaft lubrication hoses then plug all these hoses
- ignition coils and ignition module
- temperature sensor connector, 4 circuit connector, 3 circuit connector and black / yellow wire
- drain the cooling system and disconnect hoses from the engine. Refer to COOLING SYSTEM 04-07
- 4 screws retaining support to frame

ENGINE SUPPORT AND MUFFLER DISASSEMBLY AND ASSEMBLY

1,2, Manifold Screw and Engine Support Screw

Torque the engine support screws to 48 N•m (35 lbf•ft).

Torque the manifold screws to 23 N•m (17 lbf•ft).

INSTALLATION ON VEHICLE

To install engine on vehicle, reverse removal procedure. However, pay attention to the following :

- Check tightness of engine rubber mount nuts. Torque to 23 N•m (17 lbf•ft).
- After throttle cable installation, check carburetor maximum throttle opening and oil injection pump adjustment.
- Check pulley alignment and drive belt tension.

CAUTION : A red dot is printed on one carburetor and on oil pump mounting flange. Match the marked carburetor to the side marked on the oil pump mounting flange (magneto side). This is required because of the different jettings.

3,4,5, Tuned Pipe, Tail Pipe and Muffler

These parts are identified on welded hook.

Second number sequence of P / N is stamped on part.

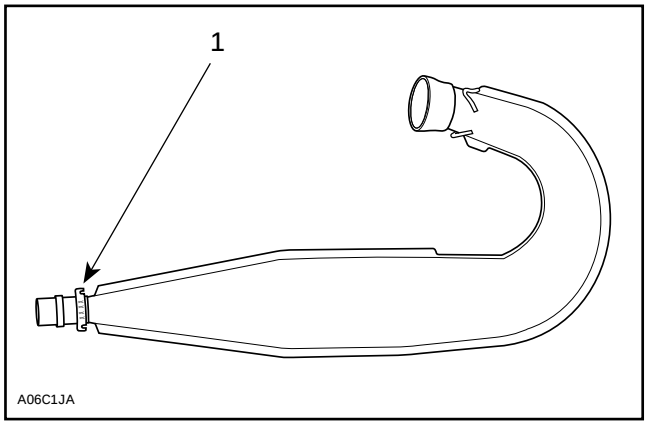

1. Example : 0392 for 514 0392 00

NOTE : For Mach 1, there is a P before number sequence to identify PTO side pipe and an M for MAG side pipe.

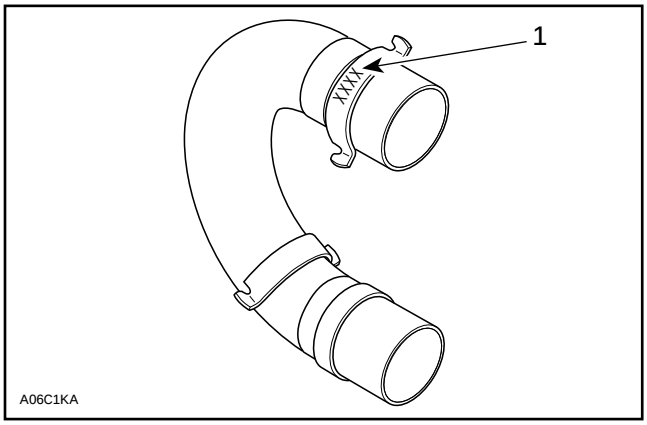

1. Number sequence

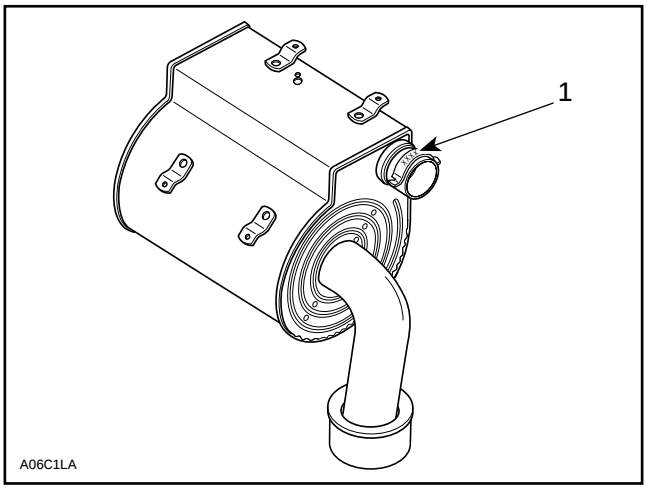

1. Number sequence

- Should a light exhaust leak be experienced at any ball joints, Dow Corning sealer no. 736 RTV (P / N 413 7092 00) can be used.

TOP END

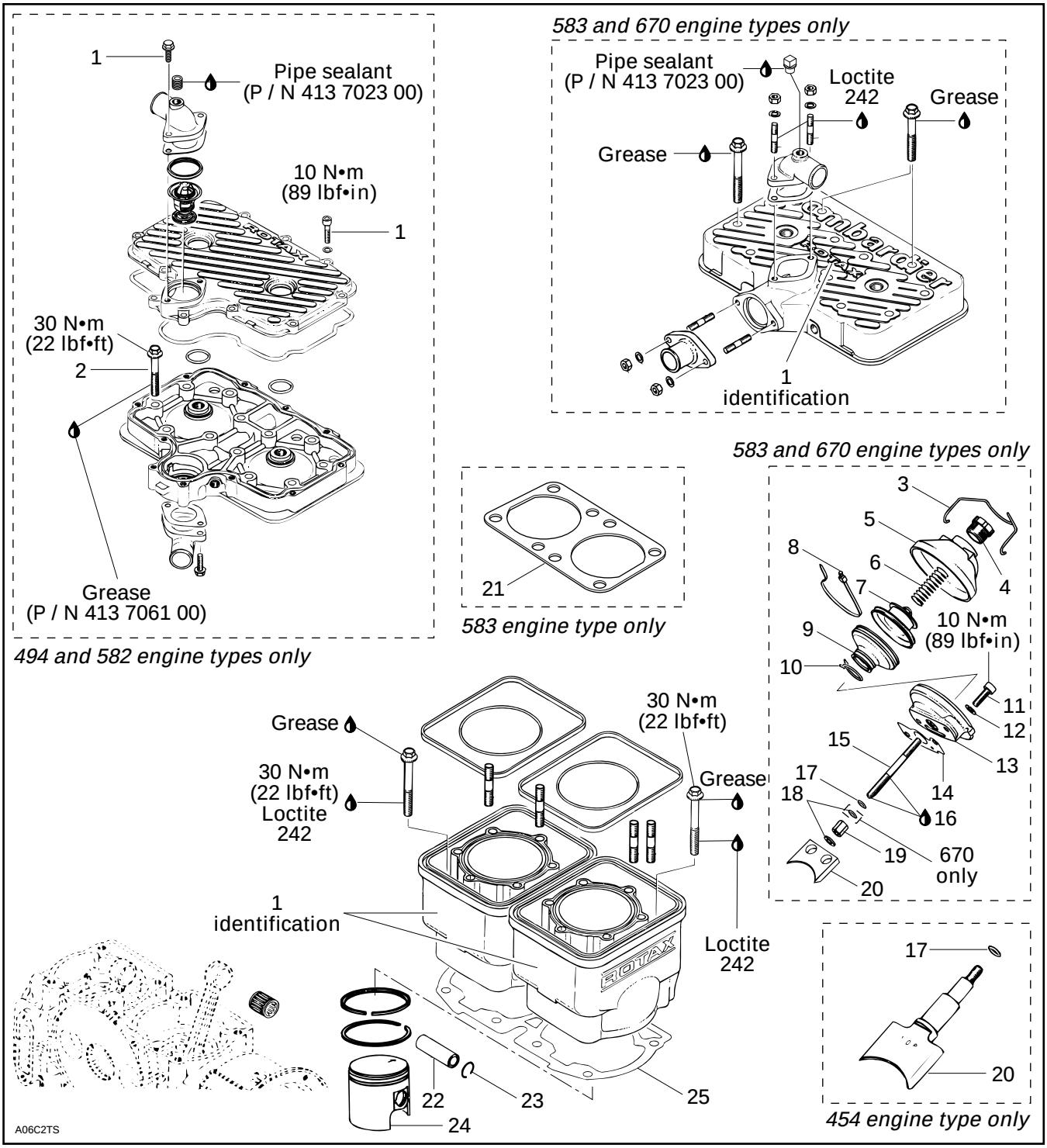
583 and 670 engine types only
1
Pipe sealant
(P / N 413 7023 00)
10 N•m
(89 lbf•in)
1
30 N•m
(22 lbf•ft)
2
Grease
(P / N 413 7061 00)
494 and 582 engine types only
Pipe sealant
(P / N 413 7023 00)
Loctite
242
Grease
Grease
1
identification
583 and 670 engine types only
21
583 engine type only
3
5
8
6
4
7
9
10 N•m
(89 lbf•in)
10
11
12
15
13
17
14
18
16
19
670
only
20
Grease
30 N•m
(22 lbf•ft)
30 N•m
(22 lbf•ft)
Loctite
242
Grease
1
identification
Loctite
242
17
20
22
23
25
24
454 engine type only
A06C2TS

NOTE : The following procedures can be done without removing the engine from chassis.

CLEANING

Discard all gaskets and O-rings.

Clean all metal components in a non-ferrous metal cleaner.

Scrape off carbon formation from cylinder exhaust port, cylinder head and piston dome using a wooden spatula.

NOTE : The letters “AUS” (over an arrow on the piston dome) must be visible after cleaning.

Clean the piston ring groove with a groove cleaner tool, or with a piece of broken ring.

DISASSEMBLY

22,23,24, Piston Pin, Circlip and Piston

Place a clean cloth over crankcase then with a pointed tool inserted in piston notch, remove circlip from piston.

To remove piston pin, use piston pin puller (P / N 529 0290 00) as follows :

– Fully screw puller handle.
– Insert puller end into piston pin.
– Install adaptor (P / N 529 0236 00) then screw extracting nut (LH threads).
– Hold puller firmly and rotate puller handle counterclockwise to pull piston pin.

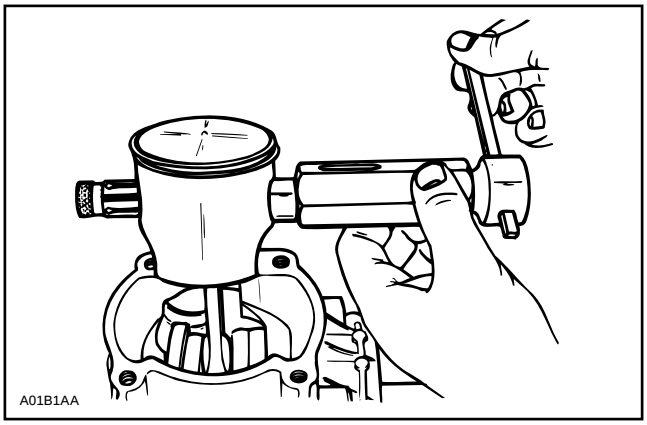

NOTE : 0.25 mm oversize piston and rings are available if necessary.

RAVE System

NOTE : RAVE stands for Rotax Adjustable Variable Exhaust.

3,5,6, Spring Clip, Cover and Spring

Remove spring clip, cover and spring.

7,8, Valve Piston and Clamp 50 mm

Cut clamp and unscrew valve piston.

9,10, Bellows and Clamp 21 mm

Spread clamp and remove bellows.

11,12,13, Cylindrical Screw, Lock Washer and Valve Rod Housing

Remove cylindrical screws and their washers then valve rod housing.

15,17,18,19,20, Valve Rod, O-ring, Washer, Distance Nut and Exhaust Valve

Pull out exhaust valve assembly.

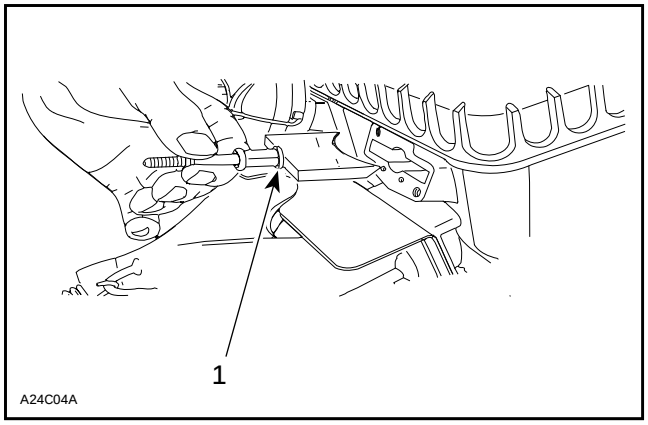

1. Exhaust valve ass’y

Do not disassemble exhaust valve ass’y needlessly. Secure valve in a soft jaw vice. Remove O-ring and washer, unscrew distance nut and remove washer. Unscrew valve rod from distance nut.

INSPECTION

See ENGINE DIMENSIONS MEASUREMENT 04-02.

RAVE System

Check valve rod housing and cylinder for clogged passages.

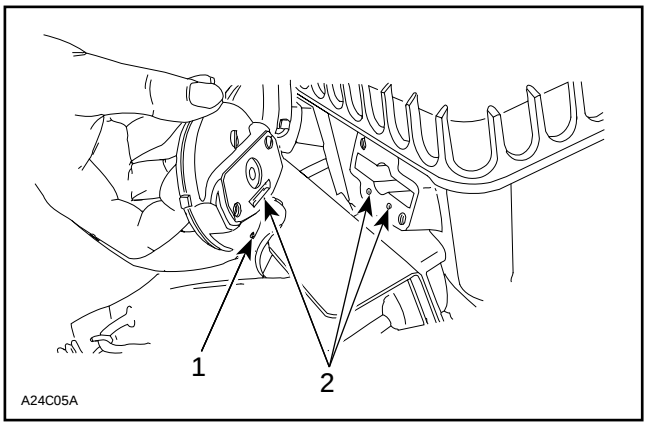

1. Draining hole
2. Passages

NOTE : Oil dripping from draining hole indicates a loosen clamp or damaged bellows.

4, Valve Rod

Check valve rod for straightness.

10, Bellows

Check for cracked, dried or perforated bellows.

13, Spring

ENGINE TYPE	SPRING P / N	WIRE DIA.	FREE LENGTH	PRELOAD IN N (LBF) AT COMPRESSED LENGTH
		mm (in)	mm (in)	OF 14.7 mm (.579 in)
454	420 2399 44	0.9 (.035)	48.5 (1-29/32)	15.9 (3.56)
583 and 670 (except Mach 1)	420 2399 48	1.0 (.039)	38.0 (1-1/2)	19.3 (4.34)
670 Mach 1	420 2399 46	1.0 (.039)	42.0 (1-21/32)	22.5 (5.04)

Make sure both springs installed on the engine have same characteristics.

ASSEMBLY

22,23,24, Piston Pin, Circlip and Piston

At assembly, place the pistons over the connecting rods with the letters “AUS” (over an arrow on the piston dome) facing in direction of the exhaust port.

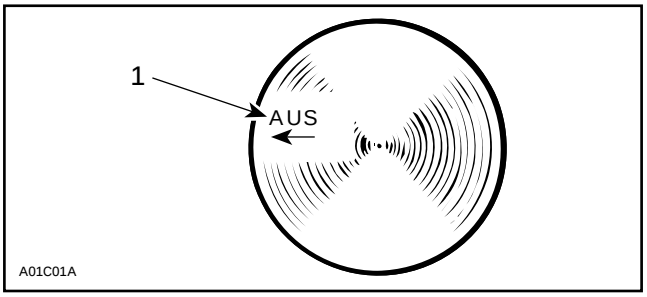

1. Exhaust

NOTE : Spare parts pistons and cylinders are identified with a green or red dot, it is important to match the piston with the cylinder of the same color.

To center the piston pin with the connecting rod bearing, use centering tool (P / N 529 0091 00).

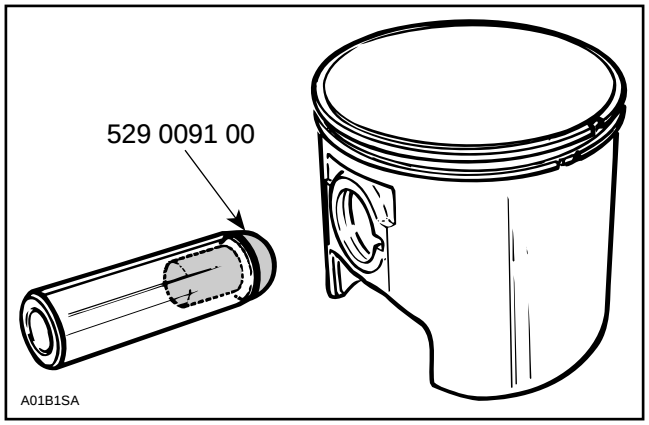

NOTE : The circlip on the opposite side can be installed before pin installation, the tool will easily go out.

Use piston pin puller (P / N 529 0210 00) to ease piston pin installation.

To minimize the effect of acceleration forces on circlip, install each circlip so the circlip break is at 6 o’clock as illustrated. Use piston circlip installer (P / N 529 0169 00) for all engines except 670 and (P / N 290 8770 16) for 670 engine.

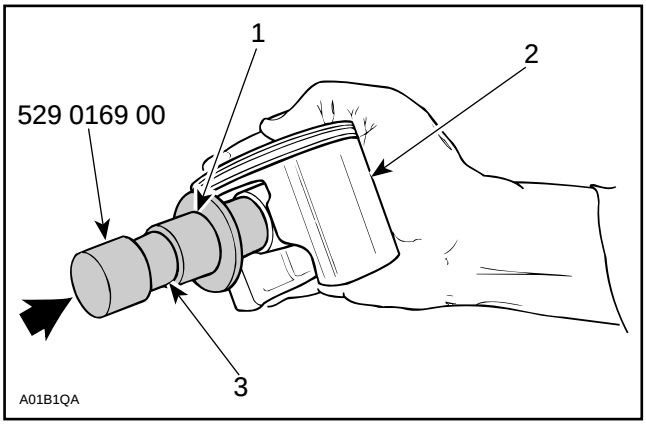

1. Place circlip in
2. Restrain
3. Oil

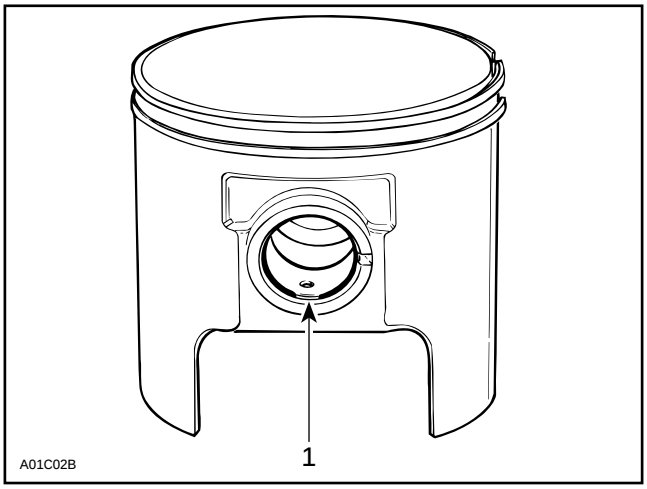

TYPICAL
1. Circlip break

CAUTION : Circlips must not move freely after installation if so, replace them.

27, Cylinder

494 and 582 Only

To avoid pinching or cutting of O-ring between cylinder and cylinder head, it is necessary to use a special tool and to proceed as follows :

Use aligning pin (P / N 529 0189 00).

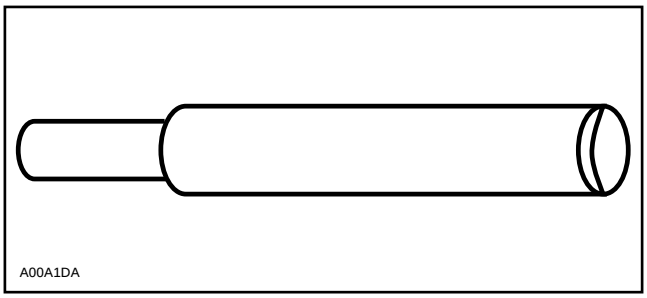

NOTE : Neither exhaust manifold nor cylinder aligning tools (flat bars) must be installed on exhaust flanges to perform this procedure.

1. Place a 0.43 mm (.017 in) feeler gauge between cylinders and slide it back and forth to have the good spacing along cylinders.

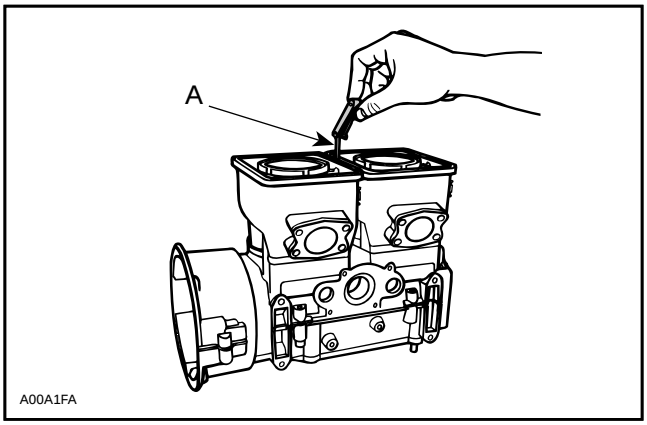

A. 0.43 mm (.017 in) feeler gauge

2. Apply Loctite 242 to screw threads. Properly torque cylinders screws.
3. Lay down cylinder head and insert aligning pins in holes as shown.

NOTE : If pins can not be inserted in cylinder head holes, enlarge them with a 8.75 mm (11/32 in) drill bit.

4. Install 4 screws in center holes. Torque to 10 N•m (89 lbf•in).

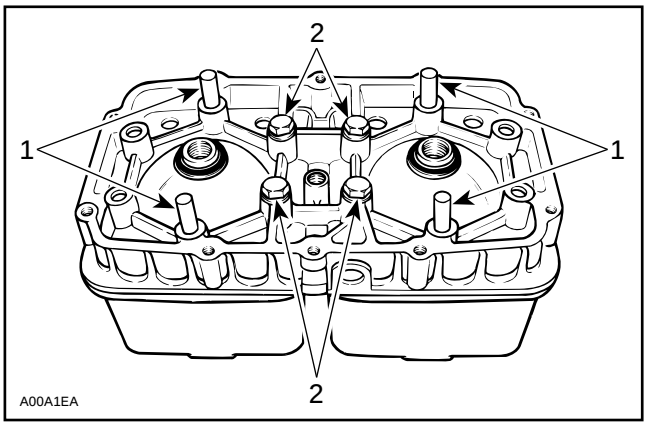

1. Pins
2. Screws

5. Remove pins and install remaining screws.
6. Tighten all screws in recommended above sequence and torque as specified.

583 and 670 Only

When reassembling the cylinders to the crankcase, it is important to have them properly aligned so that the cylinder head holes will match up with the studs. Cylinder head itself can be used to align the cylinders. Prior to torquing crankcase / cylinder nuts, install exhaust manifold to properly align exhaust flanges or use exhaust flange aligning tool (P / N 420 8769 02).

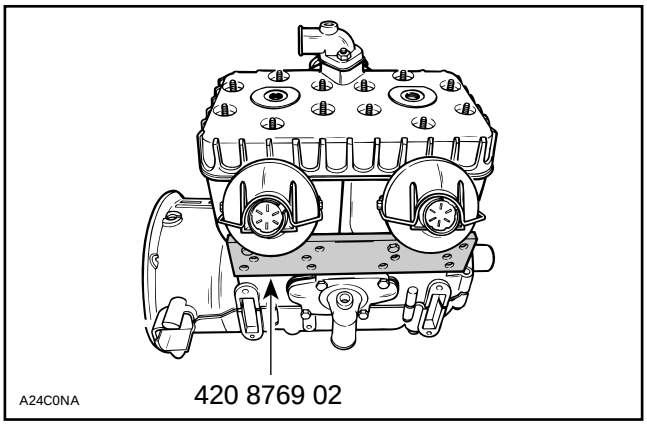

All Models

Apply Loctite 242 (P / N 413 7030 00) on cylinder screw threads.

Install and torque screws in a criss-cross sequence for each cylinder to 30 N•m (22 lbf•ft). Longer screws go on intake side.

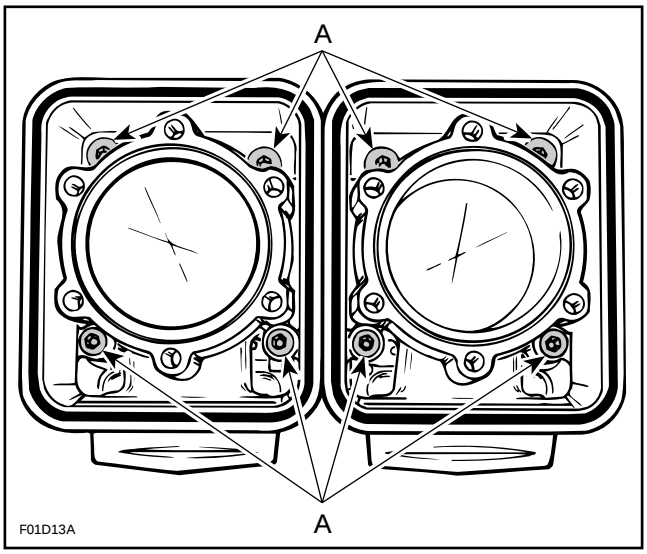

TYPICAL

A. Torque screws to 30 N•m (22 lbf•ft)

670 Mach 1 Only

Cylinders and cylinder head are identified with as 1. Refer to exploded view for location.

21, Gasket

583 Only

Install gasket with its larger holes on exhaust side.

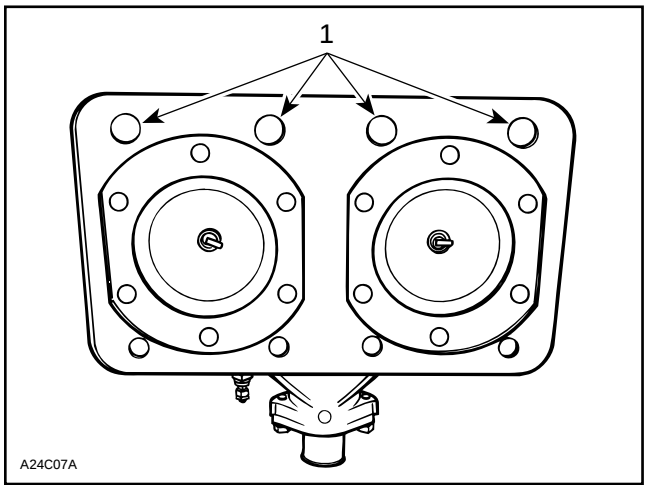

EXHAUST SIDE

1. Larger holes

All Models

2, Cylinder Head Screw

ENGINE TYPE	CYLINDER HEAD SCREWS TIGHTENING TORQUE
494, 582, 583 and 670	29 N•m (21 lbf•ft) Apply grease under screw head

583 and 670 Only

Torque cylinder head screws following illustrated sequence. Longer screws go on intake side.

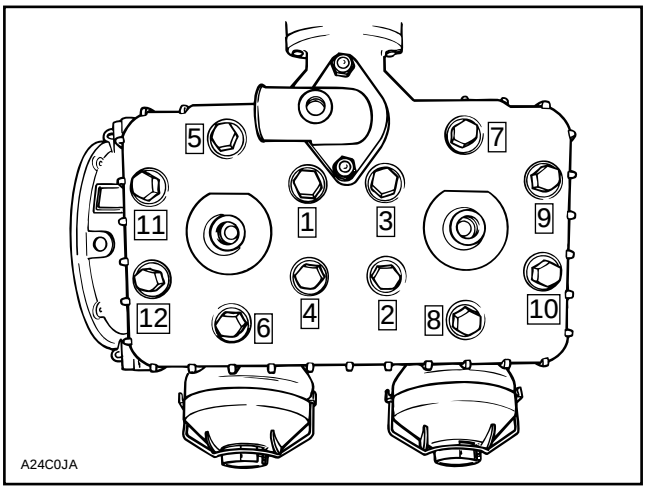

467 and 582 Only

Position O-rings over cylinders then install cylinder head with its temperature sensor hole on rotary valve side. Install and torque screws to 29 N•m (21 lbf•ft) as per following illustrated sequence. Make sure to install O-rings around spark plug holes.

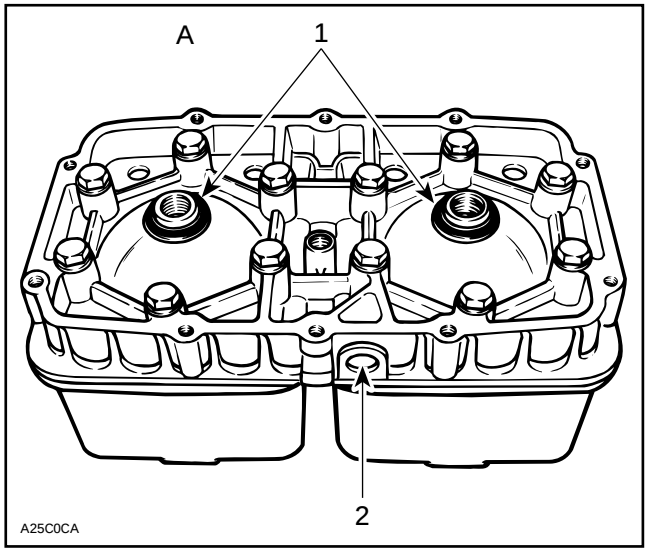

TYPICAL

1. *O-rings*
2. *Temperature sensor hole*

A. Torque to 29 N•m (21 lbf•ft)

1, Screw

Torque cylinder head cover screws to 10 N•m (90 lbf•in) as per following illustrated sequence.

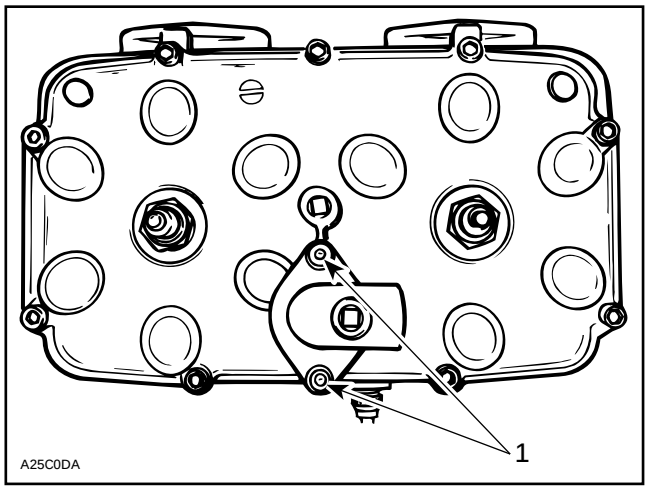

TYPICAL

1. *Longer screws*

*A. Torque to 10 N•m (90 lbf•**in**)*

RAVE SYSTEM

15,16,17,18,19,20, Valve Rod, Threadlocker, O-ring, Washer, Distance Nut and Exhaust Valve

Fully screw distance nut, with its notch first, on valve rod longer threaded portion. Install washer and apply high temperature threadlocker (P / N 420 8997 88) on threads. Screw valve rod into exhaust valve until following distance is respected.

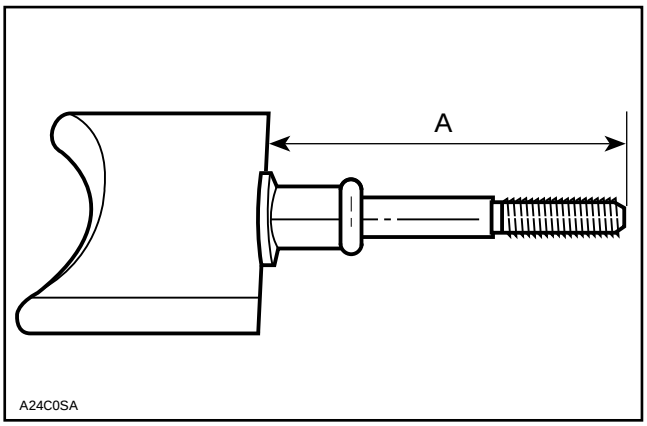

A. 583 engine type = 63^{-1} mm ($2.480^{-.039}$ in)
670 type engine = 59.5^{-1} mm ($2.343^{-.039}$ in)

Back off distance nut to jam the assembly. Install second washer and O-ring. Install exhaust valve assembly in cylinder with its cut-away downward (see illustration at removal).

11,12,13,14, Cylindrical Screw, Lock Washer, Valve Rod Housing and Gasket

Install gasket and valve rod housing with their passages toward bottom.

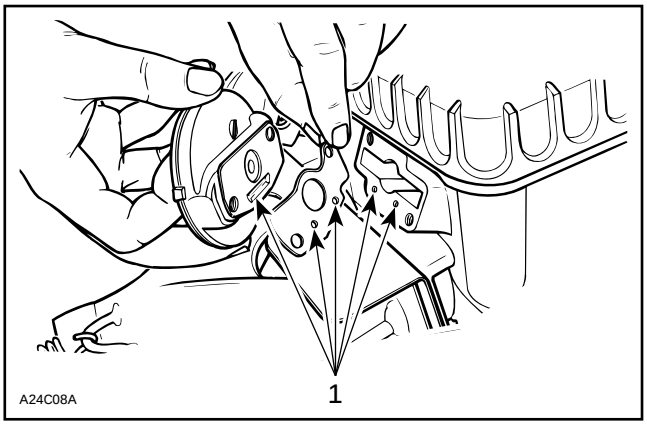

1. *Passages*

Torque cylindrical screws to 10 N•m (90 lbf•in). Check free sliding action of valve assembly.

7,8,9,10, Valve Piston, Clamp 50 mm, Bellows and Clamp 21 mm

Install bellows over valve rod housing groove and secure with a clamp.

Screw by hand valve piston on valve rod until it bottoms.

Secure bellows to valve piston with a clamp.

3,4,5,6, Spring Clip, Adjustment Screw Cover and Spring

Install spring, cover and spring clip. Turn adjustment screw by hand until it bottoms.

BOTTOM END

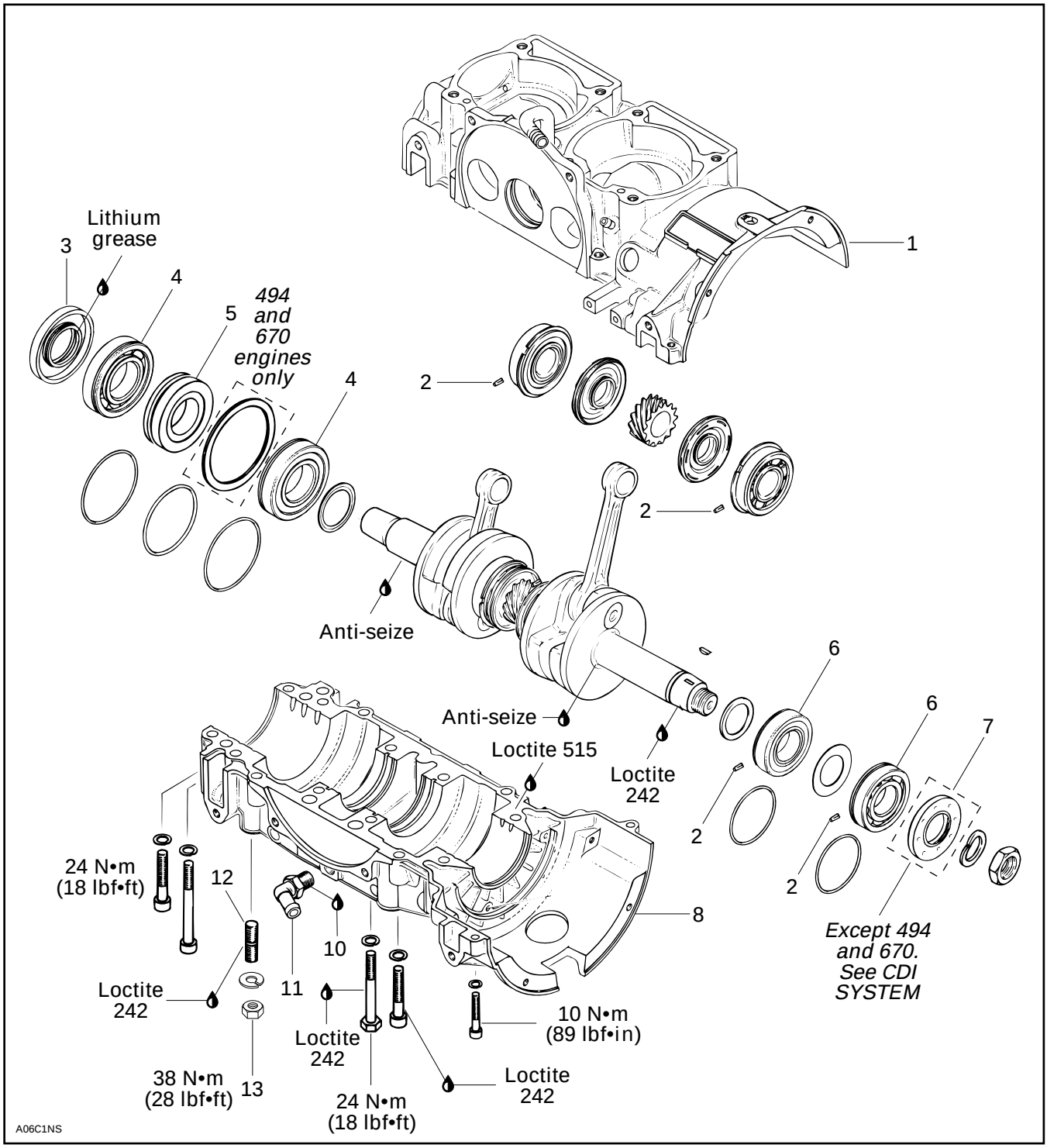

TYPICAL

NOTE : Engine must be removed from chassis to perform the following procedures.

CLEANING

Discard all oil seals, gaskets, O-rings and sealing rings.

Clean all metal components in a non-ferrous metal cleaner. Use gasket remover (P / N 413 7085 00) accordingly.

Remove all trace of Loctite from crankshaft taper.

Remove old paste gasket from crankcase mating surfaces with Bombardier gasket remover (P / N 413 7085 00).

CAUTION : Never use a sharp object to scrape away old sealant as score marks incurred are detrimental to crankcase sealing.

DISASSEMBLY

General

To remove drive pulley, refer to DRIVE PULLEY 05-02.

To remove magneto, refer to CDI MAGNETO 04-03.

2,4,6,9, Crankshaft Bearing

To remove bearings from crankshaft, use a protective cap and special puller, as illustrated.

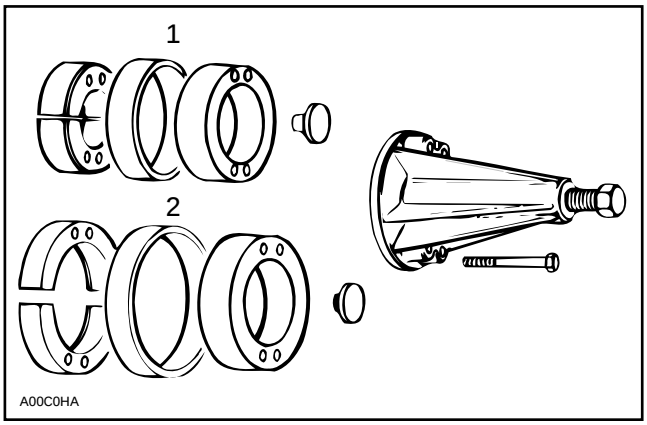

1. PTO side
2. MAG side

INSPECTION

See ENGINE DIMENSIONS MEASUREMENT 04-02.

ASSEMBLY

2,4,5,6,9, Crankshaft Bearing and Labyrinth Sleeve

Smear antiseize lubricant (P / N 413 7010 00) on part of crankshaft where bearing fits.

Prior to installation, place bearings into an oil container filled with oil previously heated to 75°C (167°F). This will expand bearing and ease installation. Install bearings and labyrinth sleeve with groove as per the following illustration. Keep a 0.3 mm (.012 in) gap between outer bearing and labyrinth sleeve.

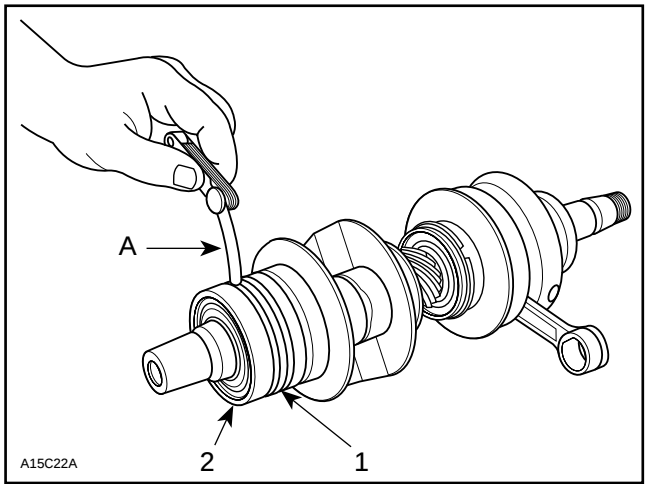

1. Labyrinth sleeve
2. Outer bearing
A. 0.3 mm (.012 in)

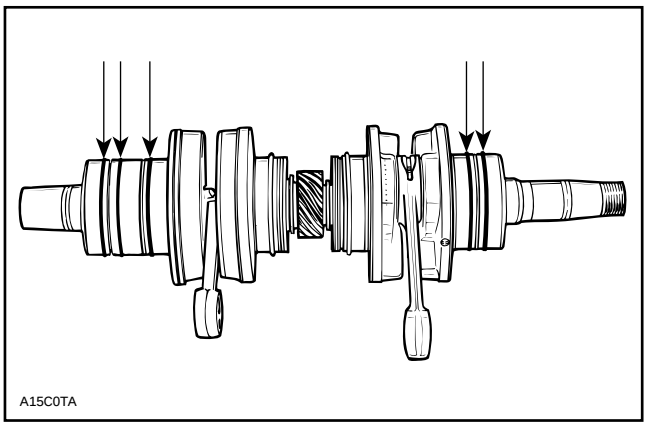

ALL ENGINES EXCEPT 494 AND 670

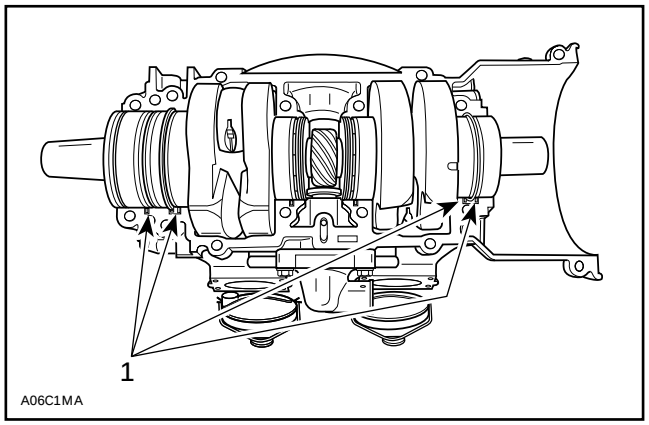

494 AND 670 ENGINES — EXHAUST SIDE
1. Drive pins

CAUTION : Make sure drive pins of bearings are on exhaust side of crankcase for proper seating in recesses.

3,7, Seal

At seal assembly, apply a light coat of lithium grease on seal lips.

For bearing lubrication purpose, a gap of 1.0 mm (.040 in) must be maintained between seals and bearings.

When installing plain oil seals (seal without locating ring or without spacing legs), ensure to maintain a 1.0 mm (.040 in) gap. For seals with spacing legs, install them against the bearing.

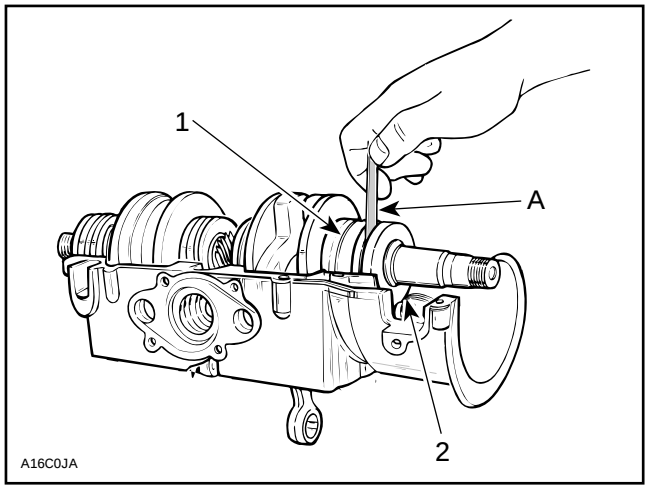

1. Bearing
2. Oil seal
A. 1 mm (.040 in)

1,8, Upper Crankcase and Lower Crankcase

Crankcase halves are factory matched and therefore, are not interchangeable or available as single halves.

Prior to joining of crankcase halves spray some new injection oil (or equivalent) on all moving parts of the crankshaft. Spray Activator (P / N 413 7081 00) on mating surfaces to ensure paste gasket will fully cured. It increases cure speed and gap filling capability.

Then apply paste gasket (P / N 413 7027 00) on crankcases mating surfaces.

CAUTION : Before joining crankcase halves be sure that crankshaft rotary valve gear is well engaged with rotary valve shaft gear.

Position the crankcase halves together and tighten screws by hand then install and tighten armature plate on magneto side to correctly align crankcase halves. Apply Loctite 242 on screw threads and under head. Torque screws as specified following illustrated sequence.

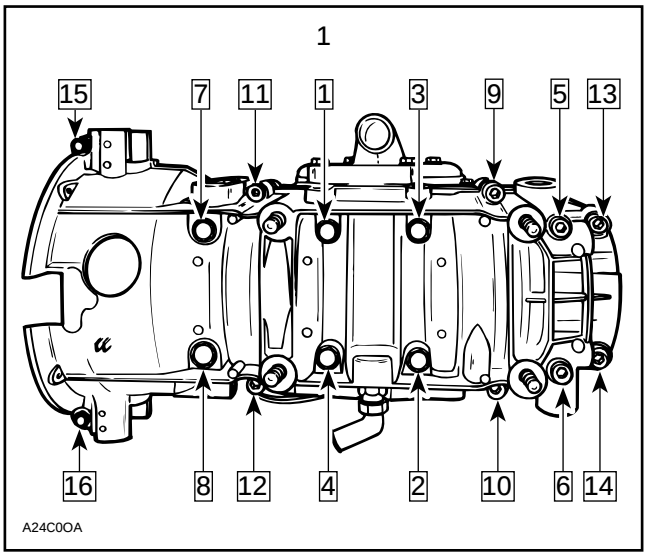

*1. Follow sequence shown 1 to 14 – 25 N•m (18 lbf•ft) 15 and 16 – 10 N•m (90 lbf•**in**)*

NOTE : Torque the 2 smaller screws (15 and 16) on magneto side to 10 N•m (90 lbf•in).

10,11, Pipe Sealant and Angular Tube

Apply pipe sealant (P / N 413 7023 00) on threads prior to assembly angular tube.

12, Crankcase Stud

At assembly on crankcase, apply medium strength threadlocker (P / N 413 7030 00) on stud threads.

13, Crankcase / Engine Bracket Nut

Torque the crankcase / engine bracket nut to 38 N•m (28 lbf•ft).

To install magneto, refer to CDI MAGNETO 04-03.

LEAK TEST AND ENGINE DIMENSION MEASUREMENT

LEAK TEST

The following gives verification procedures for liquid cooled engines though it also applies to fan cooled engines. For FC engines, do not consider information pertaining to coolant system and crankcase rotary valve gear reservoir / components.

On twin-cylinder engines, each cylinder can not be verified individually due to leakage from one cylinder to the other through rotary valve (except on engines with separate intake manifolds). Besides, on FC engines, leak will occur through labyrinth sleeve in center of crankshaft.

PREPARATION

1. Remove tuned pipe / muffler and exhaust manifold.
2. Install plug(s) over exhaust flange(s). Tighten with previously removed screws.
3. On engines with RAVE system, remove RAVE valves and install plugs over flanges. Tighten with previously removed screws.
4. Remove carburetor(s).
5. Insert plug(s) in intake rubber boot(s). Tighten with clamps already there.
6. Using a hose pincher(s) (P / N 529 0099 00), block impulse hose(s).

NOTE : Do not block large hoses of rotary valve gear lubrication system.

7. Install air pump on any valve of exhaust plug.

NOTE : If necessary, lubricate air pump piston with mild soap.

CAUTION : Using hydrocarbon lubricant (such as engine oil) will damage rubber seal of pump piston.

8. Rotate crankshaft so that piston goes to B.D.C. (Bottom Dead Center) on side where the pump is installed. This will open exhaust port.
9. Activate pump and pressurize engine to 140 in H_2O (5 PSI). Do not exceed this pressure.
10. Engine must stand this pressure during 3 minutes.

    If pressure drops before 3 minutes, check tester kit by spraying a soapy solution on pump piston, all plugs and fittings.

    –If tester kit is leaking, bubbles will indicate where leak comes from.

    –If tester kit is not leaking, check engine as per following procedure.

PROCEDURE

NOTE : A flow chart has been prepared as a visual reference. See last page of sub-section ENGINE 03-01.

Using flow chart and following text, pressurize area to be tested and spray soapy solution at the indicated location.

TEST PRESSURE : 140 in H_2O (5 PSI) for 3 minutes

– If there is a leak at the tested location, it is recommended to continue testing next items before overhauling engine. There is a possibility of more than one leak.

– If there is no leak at the tested location, continue pumping to maintain pressure and continue with next items until leak is found.

Engine

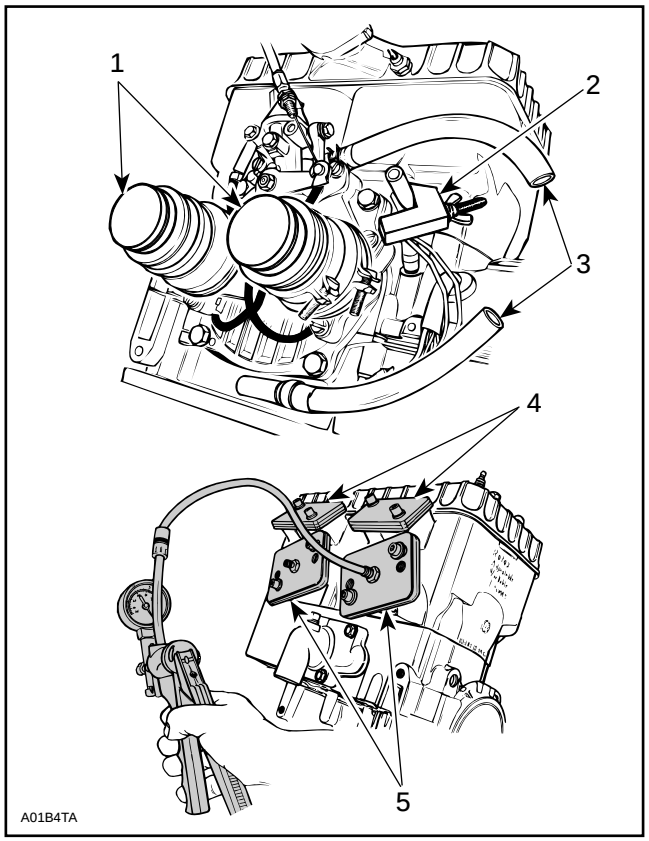

TYPICAL

1. *Blocked intake flanges*
2. *Blocked impulse fitting*
3. *Open ends (if applicable)*
4. *Blocked RAVE valve flanges (if applicable)*
5. *Blocked exhaust flanges*

When exhaust manifold is installed, use rubber plug. (In this case it is not necessary to move piston to B.D.C.).

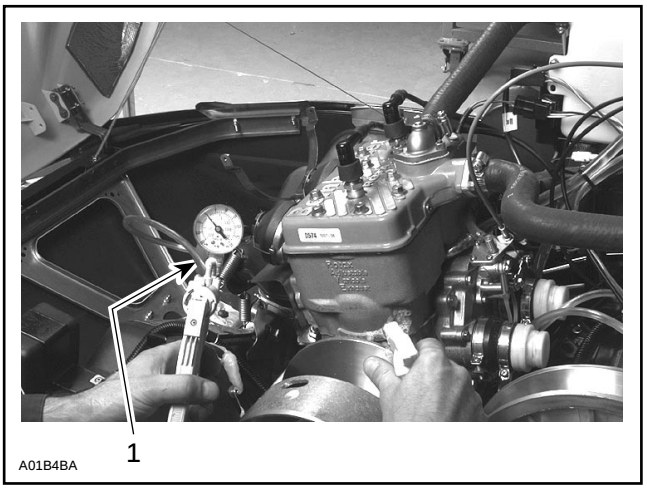

1. *Rubber plug*

Check the following :

1. All jointed surfaces and screw / stud threads of engine :
   - –spark plug base, insulator
   - –cylinder head
   - –decompressor valve (247 and 277 types only)
   - –cylinder base
   - –crankcase halves (joint)
   - –rotary valve cover
   - –oil injection pump mounting flange (O-ring, seal)
   - –coolant pump housing
   - –bleed screws / plugs
2. Small injection oil lines coming from pump.

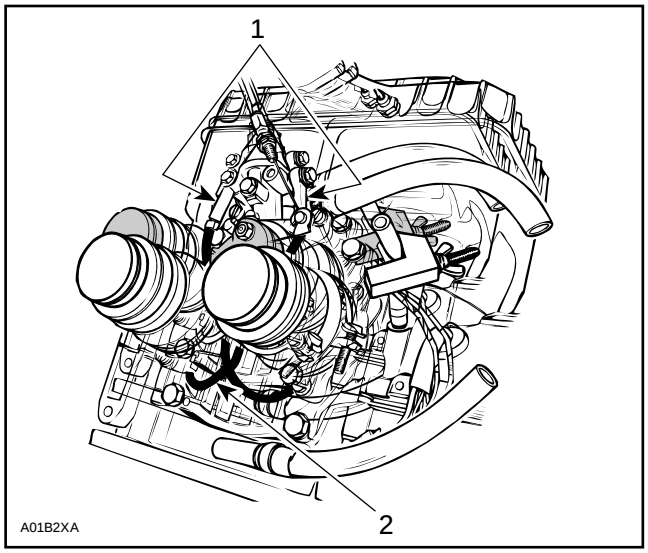

1. *Banjo fittings*
2. *Small injection oil lines*

Check for air bubbles or oil column going toward pump. It indicates defective check valve in banjo fitting (or lines).

3. Remove cooling system cap.

Check for air bubbles in antifreeze. It indicates defective cylinder head O-ring or cylinder base gasket.

4. Block both hoses of rotary valve gear lubrication system with hose pincers.

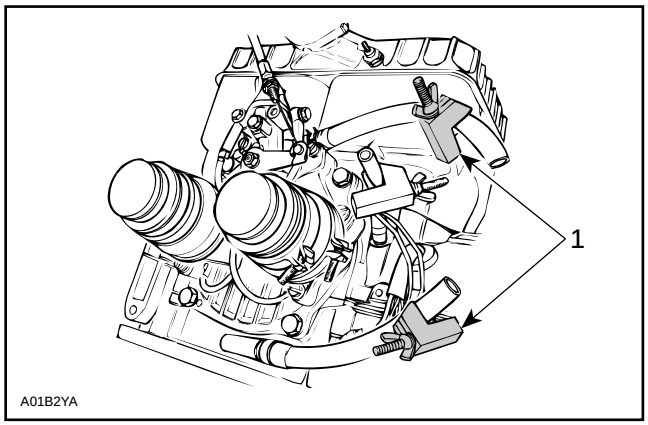

1. Block both hoses

If leakage stops, ignore remaining items and check crankcase rotary valve gear reservoir as per Crankcase Rotary Valve Gear Reservoir of this section.

5. Remove clutch then check crankshaft outer seal.
6. Remove rewind starter and magneto system then check crankshaft outer seal.
7. Check crankcase rotary valve gear reservoir.

Crankcase Rotary Valve Gear Reservoir

Block one hose of rotary valve gear lubrication system with a hose pincer and install an adapter in remaining hose.

Install air pump on adapter and pressurize as before.

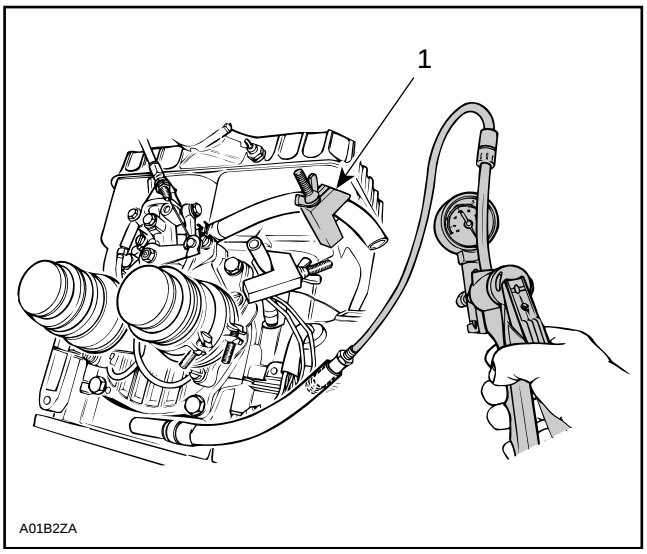

1. Blocked hose

1. Remove a spark plug or any plug of leak tester kit on PTO side.

   If pressure drops, it indicates defective crankshaft inner seal on PTO side.
2. Remove a spark plug or any plug of leak tester kit on MAG side.

   If pressure drops, it indicates defective crankshaft inner seal on MAG side.
3. Check drain hole below coolant pump housing with soapy water.

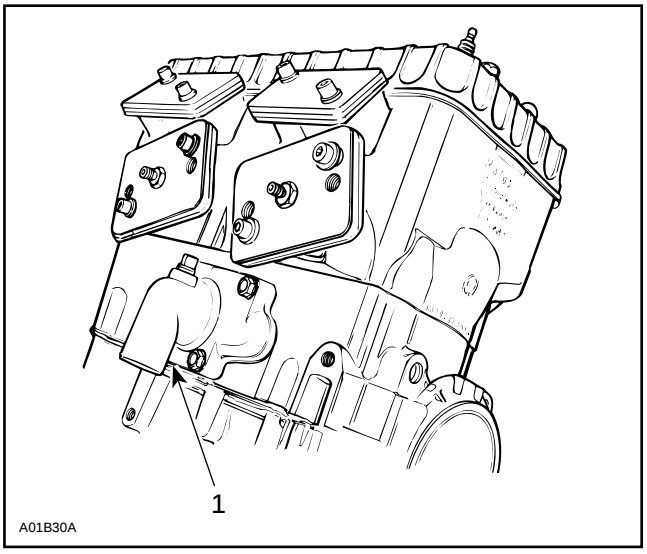

1. Drain hole

If there is a leak, it indicates defective seal of rotary valve shaft (oil seal beside coolant seal).

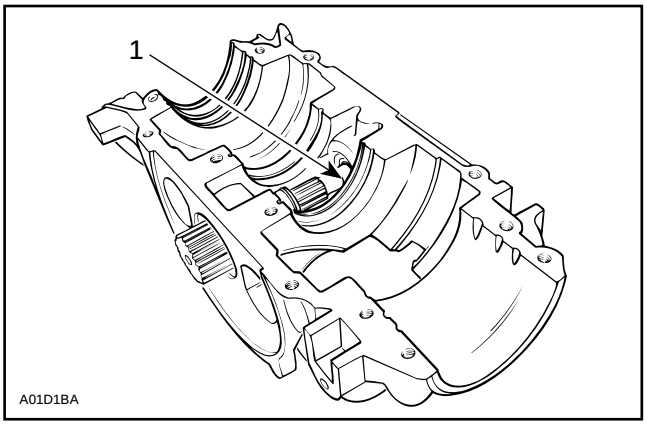

1. Oil seal

4. Remove rotary valve cover and check for leak of rotary valve seal with soapy water.

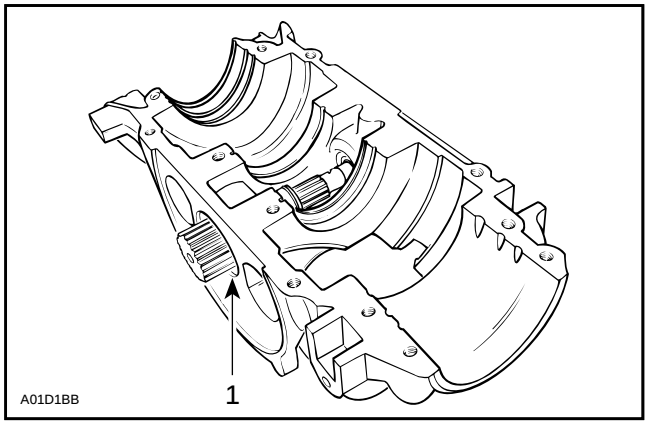

1. Seal

5. If leak still persists, it indicates a defective casting somewhere in engine.

   Disassemble engine and carefully check for defects in castings. Pay attention to tapped holes which may go through engine sealed area and thus leading to leakage.

FINALIZING REASSEMBLY

After reassembling engine, always recheck for leakage.

COOLING SYSTEM LEAK TEST

Use special plug (radiator cap) (P / N 529 0214 00) and pressurize to 15 PSI.

Check all hoses and cylinder / base for coolant leaks. Spray a soap / water solution and look for presence of air bubbles. Refer to LIQUID COOLING SYSTEM 04-09 for exploded views.

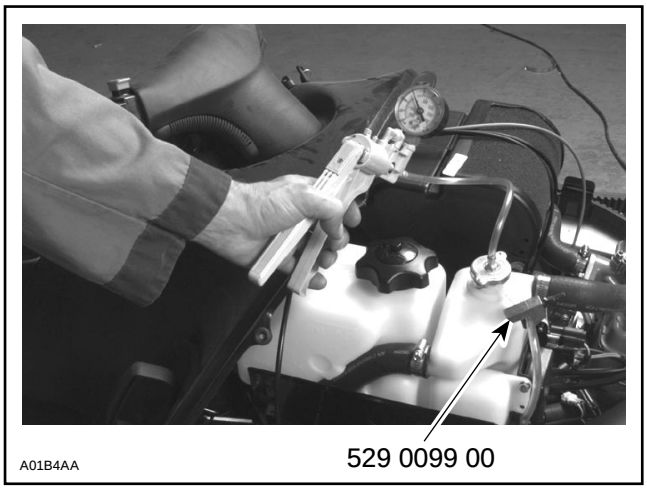

TYPICAL

ENGINE DIMENSION MEASUREMENT

This section covers all engine types.

CYLINDER TAPER

ENGINE TYPE	MAXIMUM
All	0.08 mm (.003 in)

Compare cylinder diameter 16 mm (5/8 in) from top of cylinder to just below its intake port area.

On rotary valve engines, measure just below auxiliary transfer port, facing exhaust port. If the difference exceeds the specified dimension the cylinder should be rebored and honed or should be replaced.

NOTE : Be sure to restore the chamfer around all cylinder sleeve port openings.

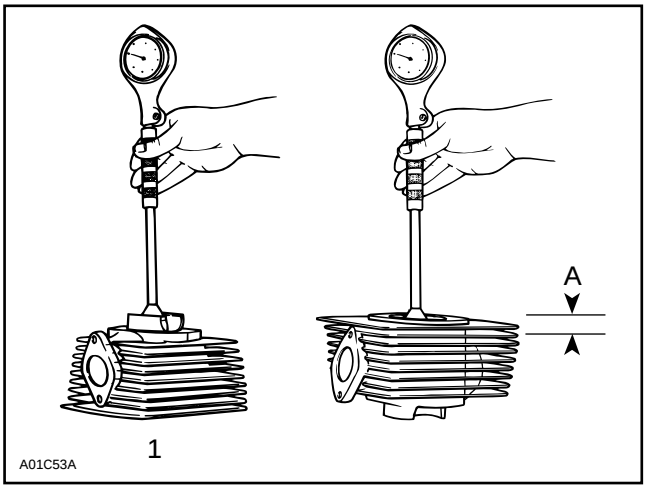

1. Below the intake port
A. 16 mm (5/8 in)

CYLINDER OUT OF ROUND

ENGINE TYPE	MAXIMUM
All	0.05 mm (.002 in)

Measuring 16 mm (5/8 in) from top of cylinder with a cylinder gauge, check if the cylinder out of round is more than the specified dimension. If larger, cylinder should be rebored and honed or should be replaced.

NOTE : Be sure to restore the chamfer around all cylinder sleeve port openings.

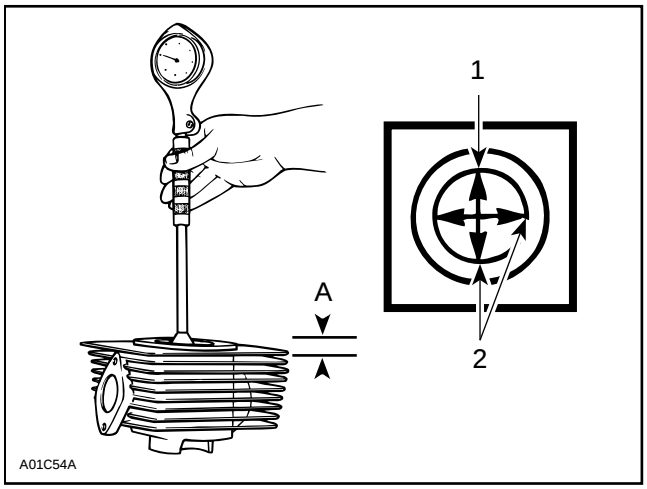

1. Piston pin position
2. Measures to be compared
B. 16 mm (5/8 in)

CYLINDER / PISTON CLEARANCE

Measurement (used parts)

Check cylinder taper and out-of-round as described above before proceeding with piston / cylinder clearance.

To accurately determine piston to cylinder clearance, the piston should be measured under the axis hole and 90° to piston pin axis. Find the biggest diameter.

The cylinder should be measured 16 mm (5/8 in) below its top edge. Find the smallest diameter.

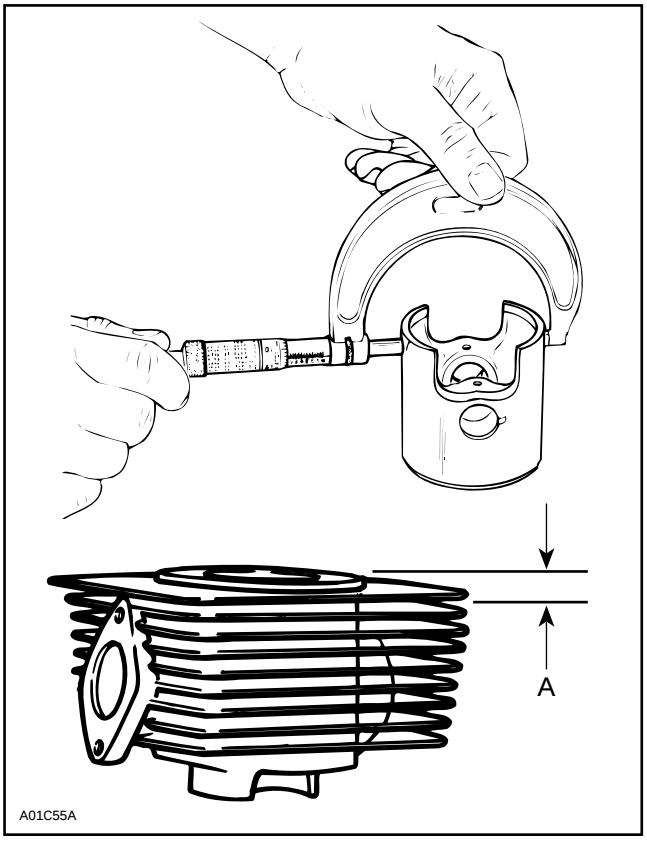

A. 16 mm (5/8 in)

The difference between these 2 measurements should be within specified tolerance. Refer to TECHNICAL DATA 10-02.

Measurement (Fitting New Parts)

With an inside micrometer, measure cylinder diameter above the exhaust port.

With a micrometer, measure the piston diameter perpendicularly (90°) to piston axis and 3 mm (1/8 in) above bottom edge.

The difference of both measurements is the clearance.

RING / PISTON GROOVE CLEARANCE

Using a feeler gauge check clearance between rectangular ring and groove. Replace piston. If clearance exceeds specified tolerance. Refer to TECHNICAL DATA 10-02.

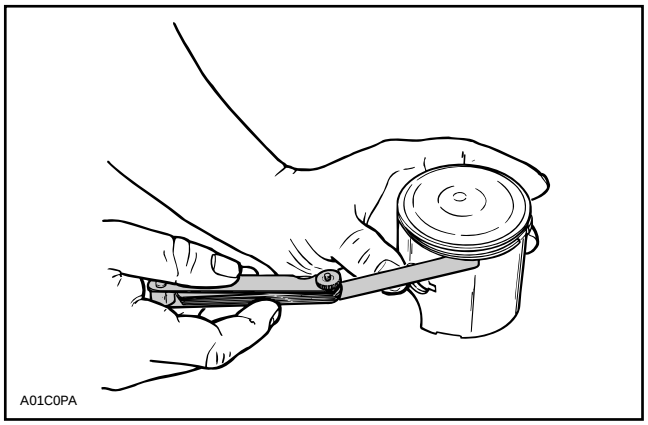

RING END GAP

Position ring half way between transfer ports and intake port. On rotary valve engines, position ring just below transfer ports.

NOTE : In order to correctly position the ring in the cylinder, use piston as a pusher.

Using a feeler gauge, check ring end gap. Replace ring. If gap exceeds specified tolerance, refer to TECHNICAL DATA 10-02.

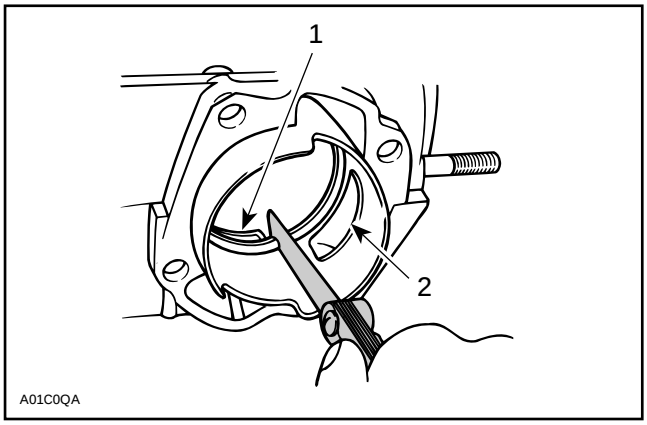

1. Transfer port
2. Intake port

CRANKSHAFT DEFLECTION

Crankshaft Deflection in Mid of Crankshaft

ENGINE TYPE	MAXIMUM IN MID OF CRANKSHAFT
All	0.08 mm (0.0031 in)

Crankshaft deflection can also be measured each end with a dial indicator.

First, check deflection with crankshaft in engine. If deflection exceeds the specified tolerance, it can be either bearing wear or bent crankshaft. Remove crankshaft bearings and check deflection again on V-shaped blocks at A measurement as illustrated.

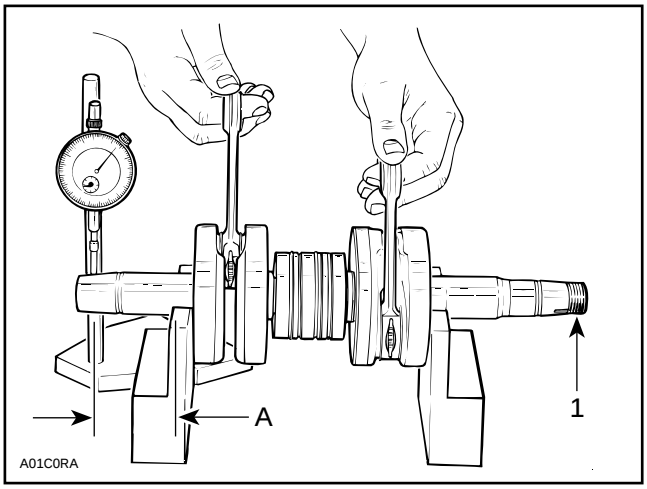

1. Measure at mid point between the key and the first thread

Crankshaft Deflection on PTO Side

ENGINE TYPE	DISTANCE A mm (in)	MAXIMUM ON PTO SIDE mm (in)
377, 443	75.5 (2.972)	0.05 (.002)
454, 494, 582 and 583	86 (3.386)	0.06 (.002)
503	82.5 (3.248)	
670	100 (3.937)	
599, 779	94.5 (3.720)	0.03 (.001)

Crankshaft Deflection on MAG Side

ENGINE TYPE	MAXIMUM ON MAG SIDE mm (in)
All except 779	0.03 (.001)
779	0.05 (.002)

NOTE : Crankshaft deflection can not be correctly measured between centers of a lathe.

If the deflection exceeds the specified tolerance, crankshaft should be repaired or replaced.

CONNECTING ROD BIG END AXIAL PLAY

ENGINE TYPE	NEW PARTS MIN. – MAX.	WEAR LIMIT
247, 277, 377 443 and 503	0.20 – 0.53 mm (.008 – .021 in)	1.00 mm (.039 in)
454, 494, 582, 583, 670 and 779	0.40 – 0.75 mm (.016 – .029 in)	1.20 mm (.047 in)

Using a feeler gauge, measure distance between thrust washer and crankshaft counterweight. If the distance exceeds specified tolerance, repair or replace the crankshaft.

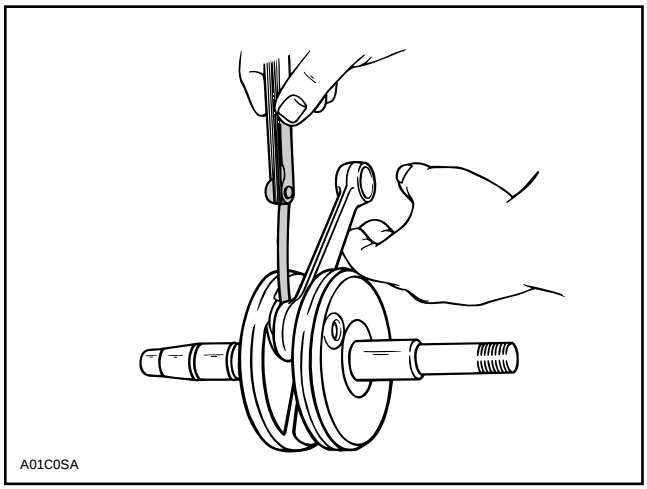

TYPICAL

CONNECTING ROD / PISTON PIN CLEARANCE

Measure piston pin with its needle bearing. Compare to inside diameter of connecting rod.

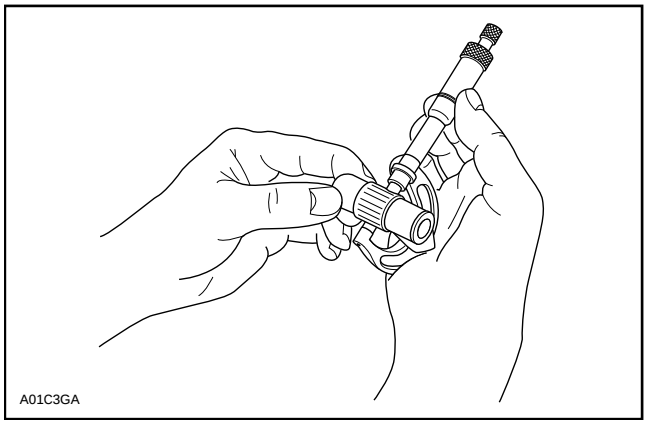

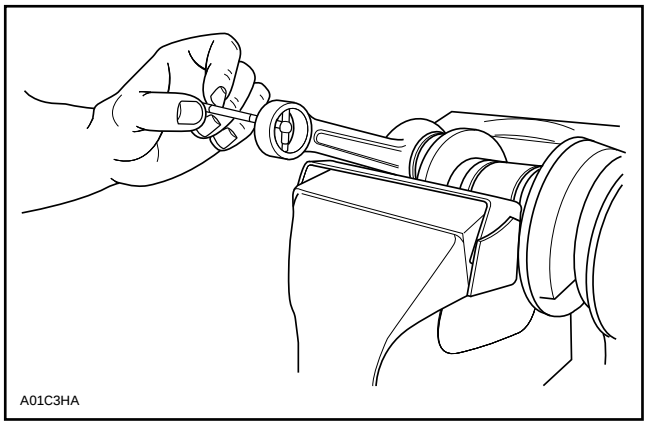

ENGINE TYPE	NEW PARTS MIN. – MAX.	WEAR LIMIT
All	0.03 – 0.012 mm (.0001 – .0005 in)	0.015 mm (.0006 in)

CONNECTING ROD / CRANKPIN CLEARANCE

ENGINE TYPE	NEW PARTS MIN. – MAX.	WEAR LIMIT
247	0.020 – 0.032 mm (.0008 – .0013 in)	0.05 mm (.0020 in)
277	0.020 – 0.030 mm (.0008 – .0012 in)	
377, 443 and 503	0.020 – 0.033 mm (.0008 – .0013 in)	
454, 494, 582, 583, 670 and 779	0.038 – 0.050 mm (.0015 – .0020 in)	0.06 mm (.0024 in)

CRANKSHAFT END-PLAY

247 and 277 Engine Types

ENGINE TYPE	MINIMUM	MAXIMUM
247 and 277	0.10 mm (.004 in)	.030 mm (.012 in)

Adjustment

Crankshaft end-play is adjusted with shims located between crankshaft and magneto side bearing.

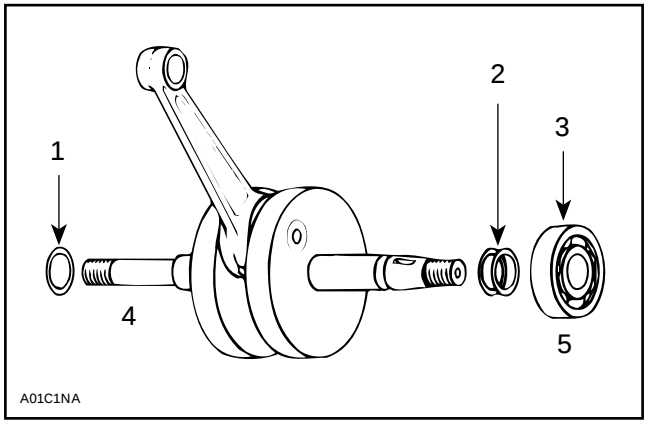

1. Distance ring
2. Shim location
3. Bearing
4. PTO
5. MAG

CAUTION : Always install end-play adjustment shims on the magneto side between bearing and crankshaft counterweight.

The following is required for the adjustment procedure :

– adjustment shims (refer to parts catalog)

thicknesses available : 0.10 mm (.004 in)
0.20 mm (.008 in)
0.30 mm (.012 in)
0.50 mm (.020 in)
1.00 mm (.040 in)

– micrometer

– vernier

Total shim thickness needed for the end-play adjustment is determined with the following procedure :

a. Measure crankcase halves as illustrated (M_1 and M_2).

1. A standard compressed crankcase gasket will have a 0.30 mm (.012 in) thickness (M_3). Add these measurements to obtain dimension A.

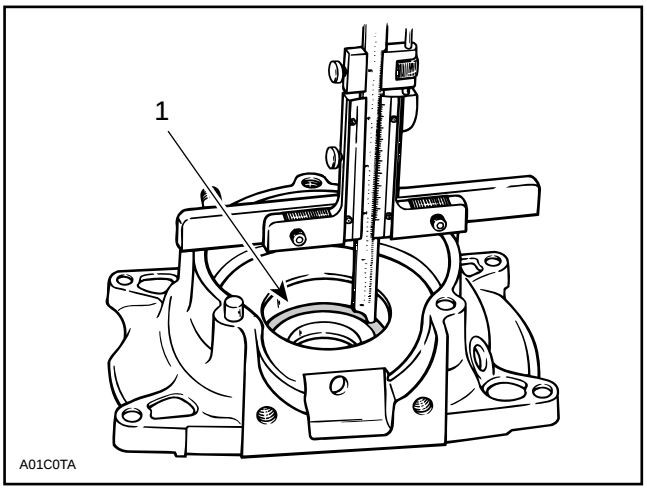

1. Bearing seat

b. Measure the thickness of each bearing (M_4 and M_5).

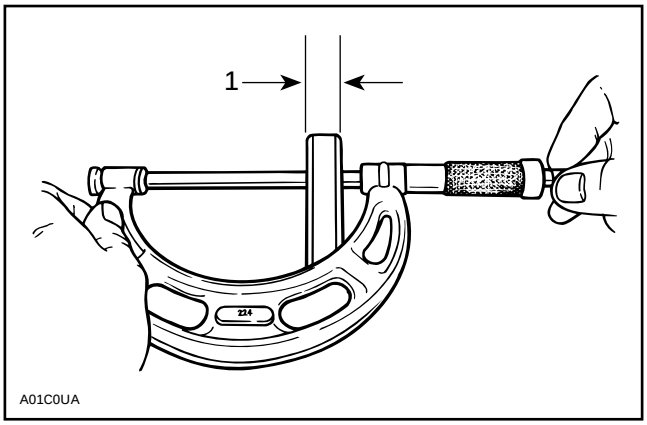

1. Bearing thickness

c. Measure distance between bearing shoulders on crankshaft (M_6).

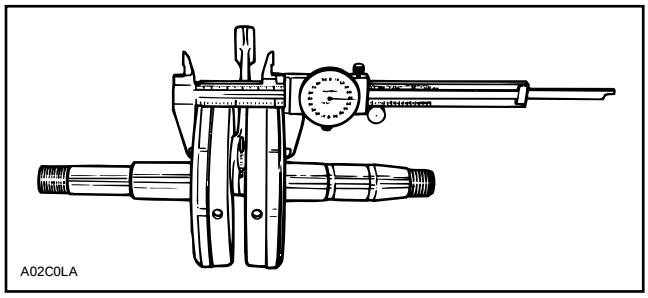

d. Measure the distance ring (M_7) and adjustment shims thickness (M_8). Add these measurements to obtain dimension B.

e. From dimension A, subtract dimension B.

The result is the actual crankshaft end-play that must be within specification.

If the result is over specification, add adjustment shim(s) to reach this specification.

If the result is under specification, remove adjustment shim(s) to reach this specification.

To Summarize

$A = M_1 + M_2 + M_3$

$B = M_4 + M_5 + M_6 + M_7 + M_8$

A – B = Actual end-play that must be within specification.

M_8 is the dimension that must be adjusted to obtain the specified crankshaft end-play.

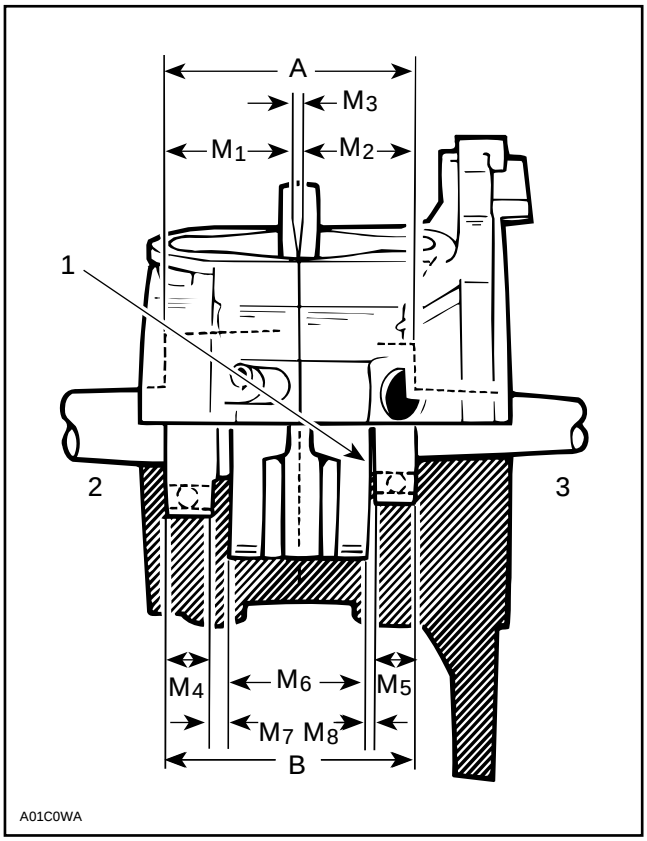

1. End-play is adjusted with shims
2. PTO
3. MAG
A. $M_1 + M_2 + M_3$
B. $M_4 + M_5 + M_6 + M_7 + M_8$

377, 443, 454, 494, 503, 582, 583, 670 and 779 Engine Types

End-play is not adjustable but it should be between 0.10 – 0.30 mm (.004 – .012 in).

CRANKCASE / ROTARY VALVE GAP

ENGINE TYPE	MINIMUM	MAXI-MUM
Liquid cooled engines	0.27 mm (0.011 in)	0.40 mm (0.016 in)

First Method

To measure this gap use a feeler gauge inserted between rotary valve and upper crankcase with the rotary valve cover in place without its O-ring. Check the most surface as possible. Follow the same procedure with the lower crankcase.

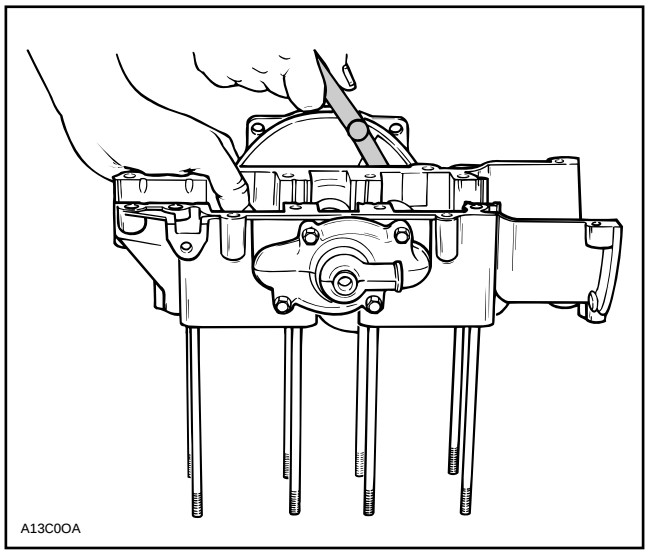

TYPICAL

The gap can be measured with the engine installed on vehicle. Use 45° bent blade feeler gauge (Snap-On FB300A) inserted through intake socket of valve cover.

If gap is under tolerances, rotary valve cover can be refaced to increase clearance.

If gap is over tolerances, cover replacement may be necessary. Check if surfaces on crankcase halves are damaged, replacement wear plate is available.

Second Method

Remove rotary valve cover and its O-ring.

Use the following type of solder :

– rosin core
– diameter : 0.5 mm (0.020 in)
– electronic application (available at electronic stores)

Install 2 short pieces (13 mm (1/2 in) long) of solder directly on rotary valve, one above and one below rotary valve gear. Apply grease to hold solder in position.

Reinstall cover in place WITHOUT its O-ring and torque screws to 20 N•m (15 lbf•ft).

Remove cover then clean and measure compressed solder thickness, it must be within the specified tolerance.

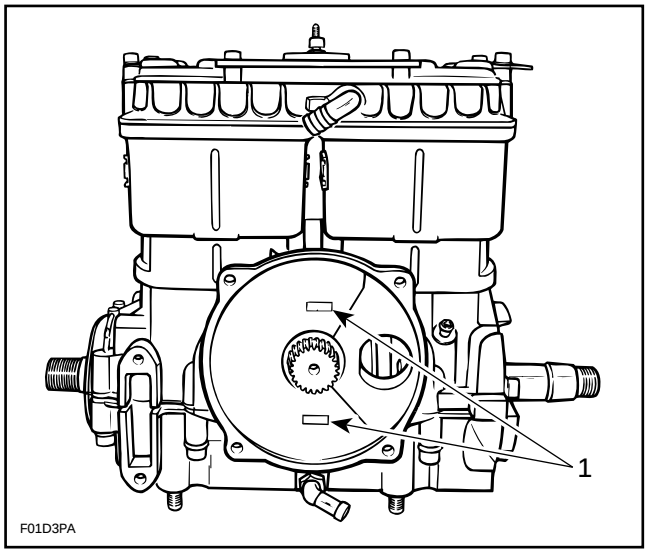

TYPICAL
1. Solder

CHECKING SURFACE FLATNESS

Intake manifold, intake manifold cover, rotary valve cover can be checked for perfectly mating surfaces.

Lay part on a surface plate (marble, mirror or thick glass plate).

Holding down one end of part, try pushing down the other end.

If any play is felt, part must be rectified.

RECTIFYING SURFACES

Stick a fine sand paper sheet on the surface plate then lightly oil the sand paper.

Rub manifold mating surface on sand paper using 8-figure movements.

Sand until mating surface is perfectly straight.

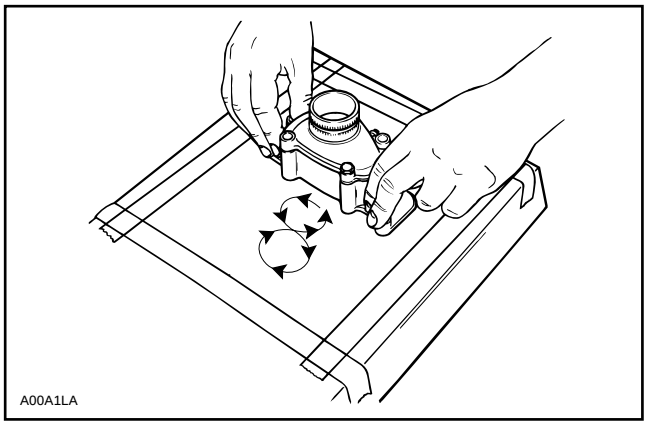

CHECKING CRANKSHAFT ALIGNMENT

Install a degree wheel (P / N 414 3529 00) on crankshaft end.

Remove both spark plugs.

Install a TDC gauge (P / N 414 1047 00) in spark plug hole on MAG side.

Bring MAG piston at top dead center.

Rotate degree wheel (not crankshaft) so that 360° mark aligns with center of crankcase. Scribe a mark on crankcase.

Remove TDC gauge and install it on PTO side.

Bring PTO piston to top dead center.

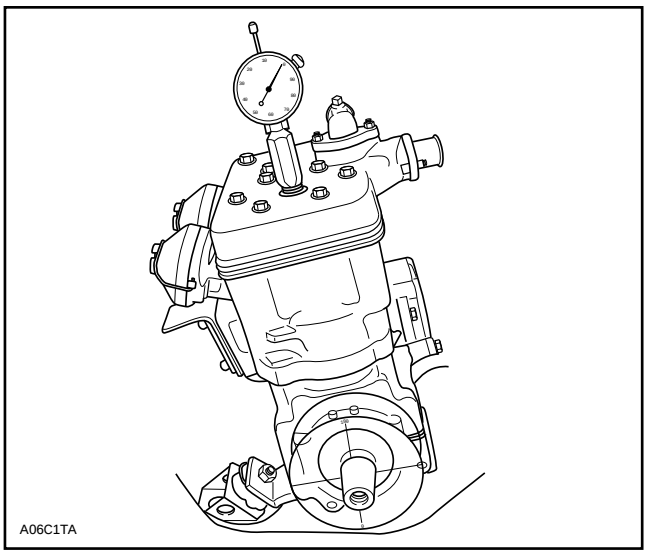

Interval between cylinders must be exactly 180°, 120° for 779 engine.

Any other reading indicates a misaligned crankshaft.

CDI SYSTEM

NIPPONDENSO TRIGGER COIL IGNITION SYSTEM

494, 582, 583 and 670 Engines

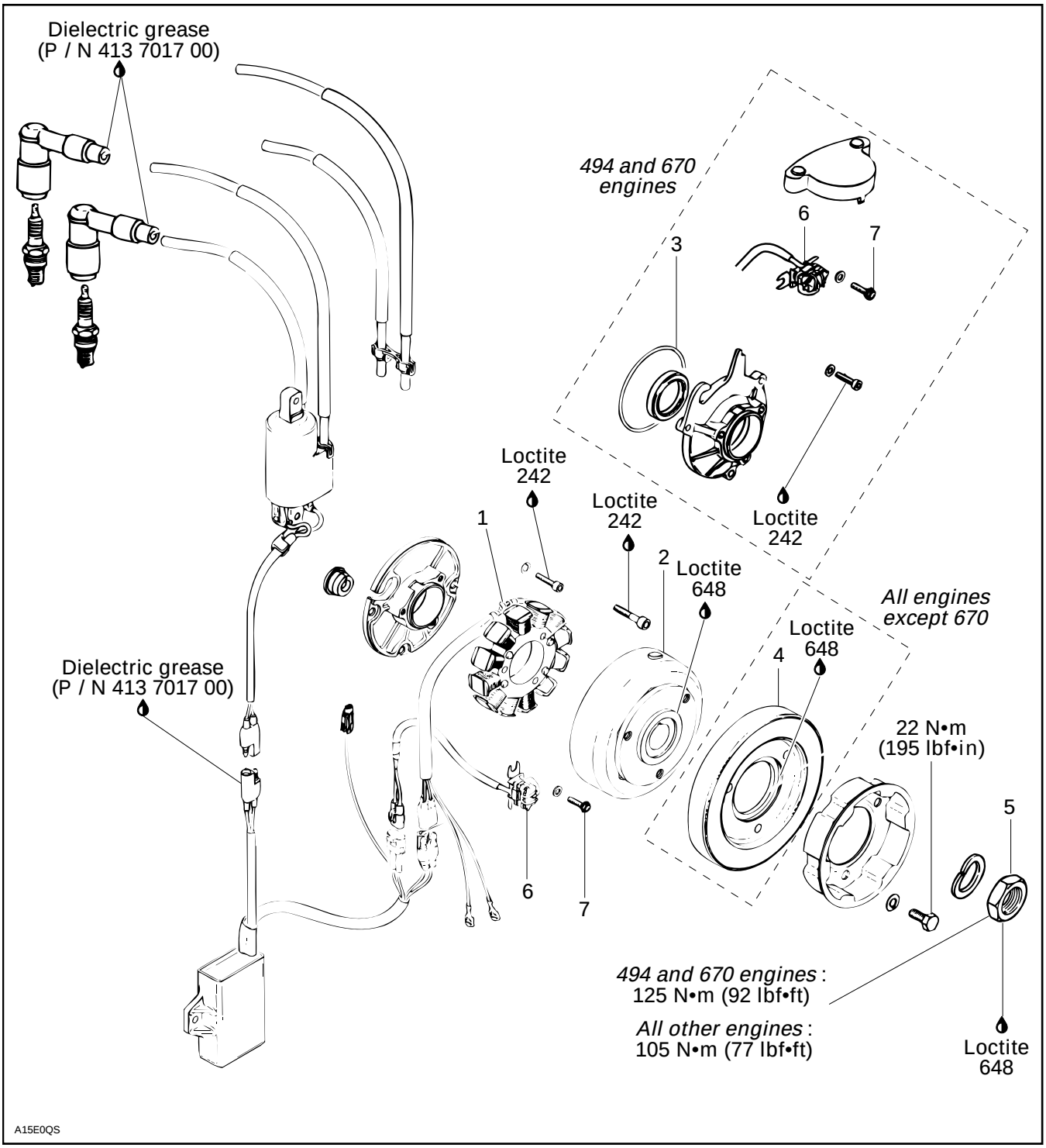

NOTE : The following procedures can be done without removing the engine from chassis. To facilitate magneto removal, hold drive pulley with tool (P / N 529 0276 00).

CLEANING

Clean all metal components in a non-ferrous metal cleaner.

CAUTION : Clean stator and magneto using only a clean cloth.

DISASSEMBLY

2,5, Nut and Magneto Flywheel

To gain access to magneto assembly, remove the following parts as needed on different engines :

– muffler
– rewind starter
– starting pulley

To remove magneto flywheel retaining nut :

– On some engines, lock crankshaft with crankshaft locking tool (P / N 420 8766 40) inserted in impulse fitting as shown. Otherwise use clutch holder (P / N 529 0276 00).
– Remove magneto flywheel nut.

NOTE : To correctly remove a threadlocked fastener it is first necessary to tap on the fastener to break threadlocker bond. This will eliminate the possibility of thread breakage.

To remove magneto flywheel, install the suitable puller as shown.

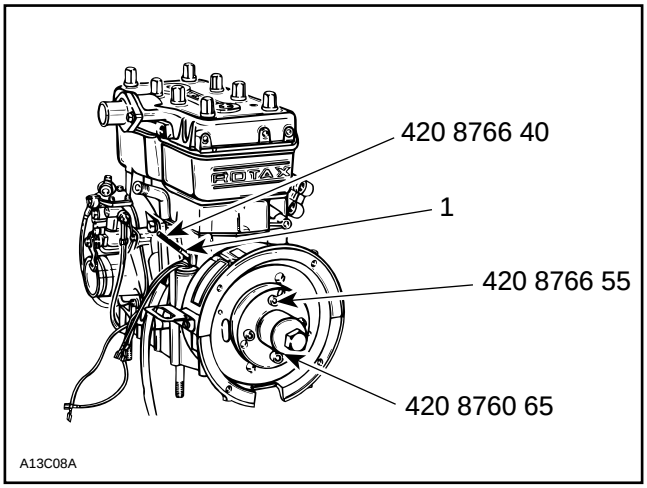

TYPICAL
1. Impulse hose fitting

– Tighten puller bolt and at the same time, tap on bolt head using a hammer to release magneto flywheel from its taper.

4, Hydro Damper Ass'y

Check for oil leaks and for noisy ring inside. Replaced it in both cases.

6,7, Trigger Coil and Screw

Magneto and armature plate must be removed before trigger coil removal.

To replace trigger coil :

– Disconnect trigger coil connector housing.
– Remove grommet from crankcase where trigger coil wire exits magneto housing.
– Remove retaining screws.
– Remove trigger coil and carefully pull wires.
– Thread magneto harness through crankcase hole before trigger coil harness.

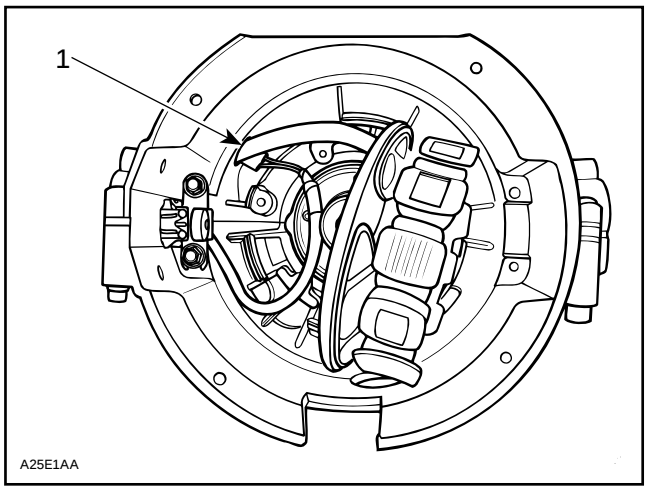

1. Magneto harness through crankcase hole

– Install new trigger coil and other parts removed.

Adjustment

Whenever the trigger coil or the magneto flywheel is removed or replaced, the air-gap between the trigger coil and the flywheel protrusion must be checked and adjusted. The purpose of this adjustment is to obtain the minimum clearance between these parts – without touching at any RPM – so that the trigger coil produces its proper electrical output. Ignition timing must also be checked. Refer to IGNITION TIMING 06-02 then look for Checking Ignition Timing.

▼CAUTION : Each time trigger coil air-gap is adjusted, ignition timing must be checked.

Proceed as follows :

1. Rotate flywheel so that the protrusion aligns with trigger coil.
2. Using a feeler gauge of 0.75 mm (.030 in) min. 0.55 mm (.022 in) and max. 1.45 mm (.057 in) thick, check air-gap between center pole of trigger coil and flywheel protrusion.
3. If necessary, adjust by slackening retaining screws and moving trigger coil toward or away of protrusion.
4. Retighten screws and recheck air-gap.

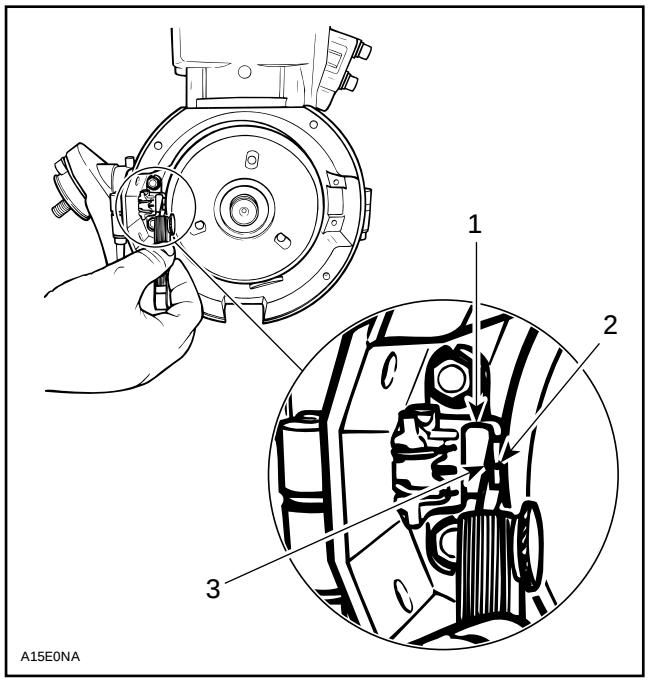

ADJUSTING TRIGGER COIL AIR-GAP

1. Trigger coil
2. Flywheel protrusion
3. Measure at center pole of trigger coil 0.75 mm (.030 in)

1, Stator

To replace stator :

- Disconnect the 3-wire connector (BLACK, RED and BLACK / RED wires).
- Disconnect both YELLOW wires.
- Remove grommet from crankcase where magneto harness exits magneto housing.
- Remove stator plate retaining screws.
- Remove stator plate with stator and carefully pull wires.
- Install new parts and other parts removed taking care not to squeeze trigger coil harness.

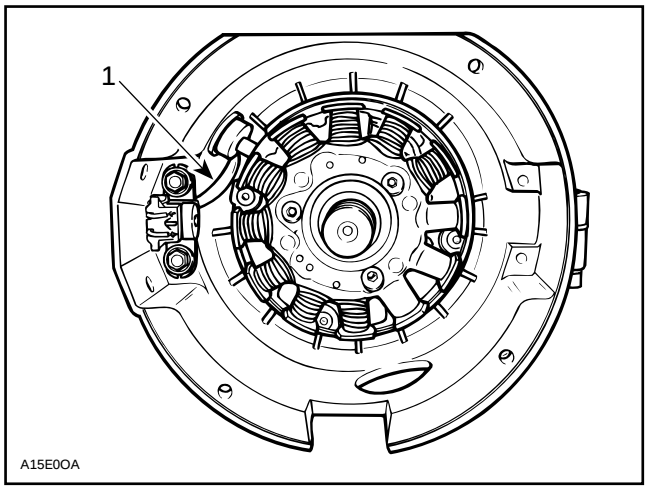

1. Trigger coil harness

ASSEMBLY

3, Oil Seal

Use pusher (P / N 420 8765 14) to install oil seal into stator.

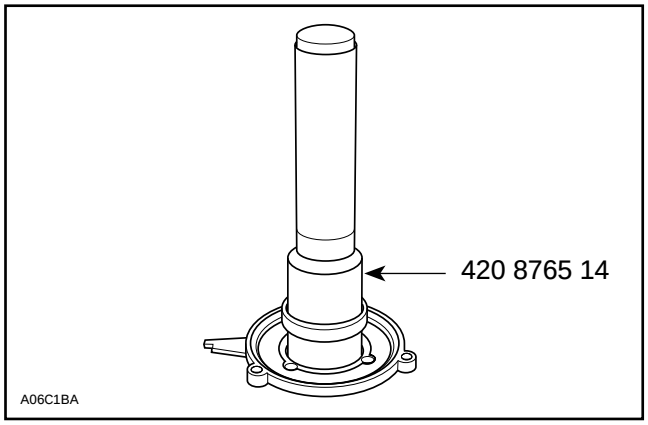

2,5, Magneto Flywheel and Nut

Clean crankshaft extension (taper) and apply Loctite 242 (blue) on taper, then position Woodruff key, flywheel and lock washer on crankshaft.

Clean nut threads and apply Loctite 242 (blue) then tighten nut to 105 N•m (77 lbf•ft) on all engines except 494 and 670. Tighten to 125 N•m (92 lbf•ft) on 494 and 670 engines.

At reassembly coat all electric connections with silicone dielectric grease (P / N 413 7017 00) to prevent corrosion or moisture penetration.

CAUTION : Do not use silicone “sealant”, this product will corrode contacts.

Ignition Timing

Check as described in IGNITION TIMING 06-02.

OIL INJECTION SYSTEM

OIL INJECTION PUMP

494, 582, 583 and 670 Engines

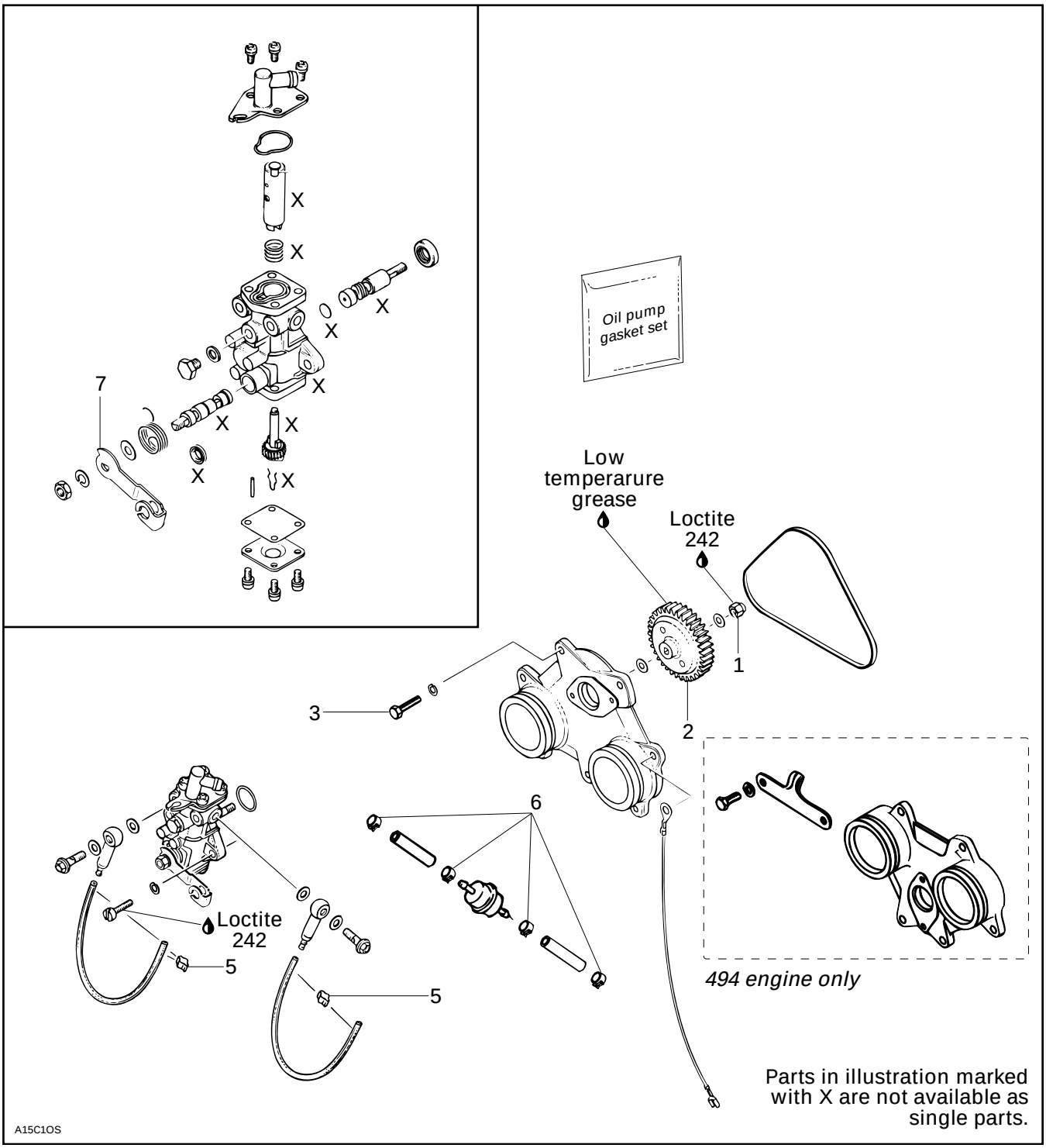

OIL PUMP IDENTIFICATION

7, Pump Lever

Different engines need different pumps. Oil pumps are identified on their levers.

CAUTION : Always mount proper pump on engine.

ENGINE TYPE	OIL PUMP IDENTIFICATION
494	P3
582	N2
583	N3
670	N3

NOTE : The following procedures can be done without removing the engine from chassis.

CLEANING

Clean all metal components in a non-ferrous metal cleaner.

DISASSEMBLY

NOTE : Some oil pump components are not avail-able as single parts.

1,2, Gear Retaining Nut and Oil Pump Gear

To remove gear retaining nut, first extract the needle roller with pliers then lock gear in place using one of the following gear holder :

ENGINE TYPE	TOOL P / N
494 / 582 / 583 / 670	420 2779 05

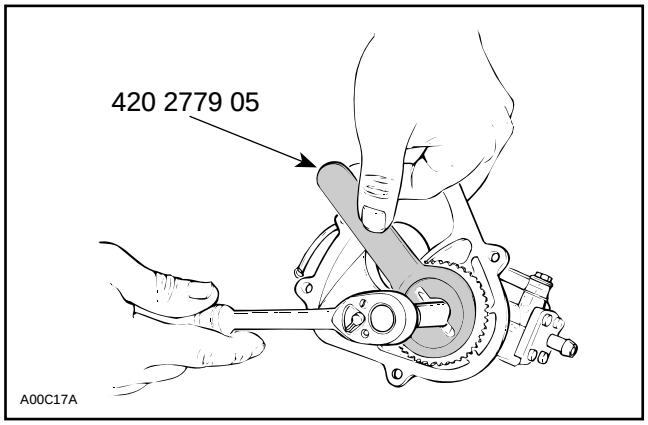

TYPICAL

ASSEMBLY

2, Oil Pump Gear

At gear assembly, apply a light coat of low temperature grease (P / N 413 7061 00) on gear teeth.

4, Needle Roller (Fan Cooled Engine Only)

The needle roller must be engaged as deep as possible in the pump mounting flange.

5,6, Spring Clip and Clamp

Always check for spring clips and clamps tightness.

3, Screw

Torque to 9 N•m (80 lbf•in).

CAUTION : Whenever oil injection lines are removed, always make the routing as shown.

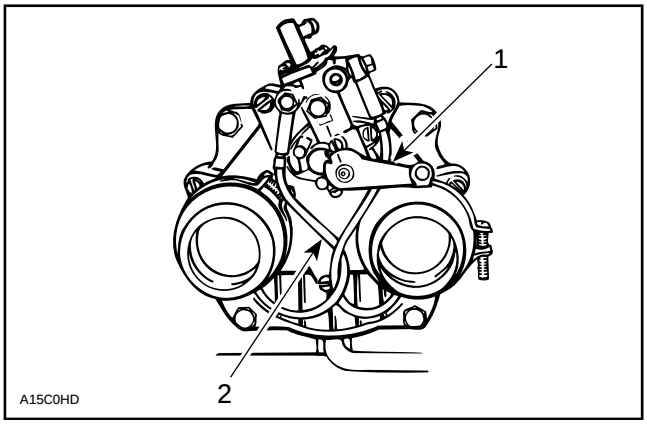

1. Oil pump lever
2. Twist oil lines

Make sure cable barrel is well seated in oil pump lever.

Secure barrel with plastic washer and circlip.

Verify cable and oil pump lever operation.

ADJUSTMENT

Prior to adjusting the pump, make sure all carburetor adjustments are completed.

Synchronizing Pump with Carburetor :

Eliminate the throttle cable free-play by pressing the throttle lever until a light resistance is felt, then hold in place. The aligning marks on the pump casting and on the lever must align. If not, loosen the adjuster nut and adjust accordingly.

Retighten the adjuster nut.

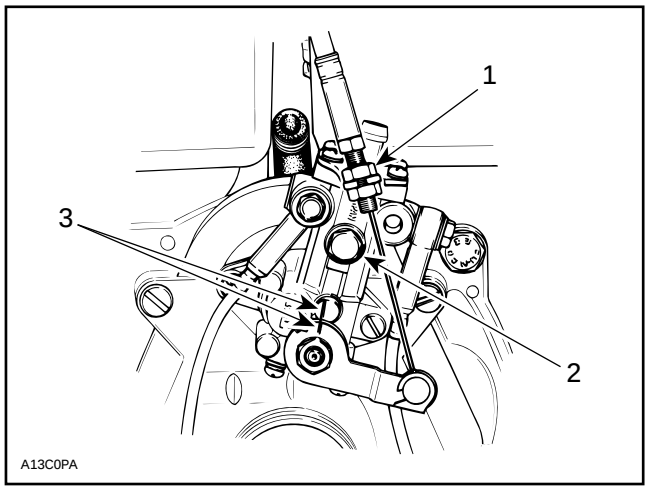

1. *Adjuster nut*
2. *Bleeder screw*
3. *Marks in line*

▼ CAUTION : Proper oil injection pump adjust-ment is very important. Any delay in the opening of the pump can result in serious engine damage.

To Bleed Oil Lines

Remove air silencer and move carburetors aside.

Bleed main oil line (between tank and pump) by loosening the bleeder screw until air has escaped from the line. Add injection oil as required.

Check also for proper oil lever adjustment. Marks must aligned when throttle lever is activated just enough to take all cable play.

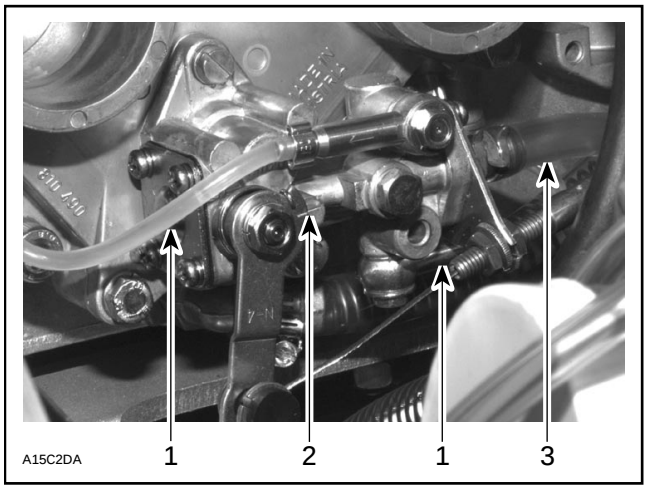

1. *Small oil line*
2. *Marks aligned*
3. *Main oil line*

Reinstall all parts except air silencer.

Bleed the small oil line between pump and intake manifold by running engine at idle while holding the pump lever in fully open position.

○ NOTE : If the air silencer has been reinstalled, make a J hook out of mechanical wire to lift the lever.

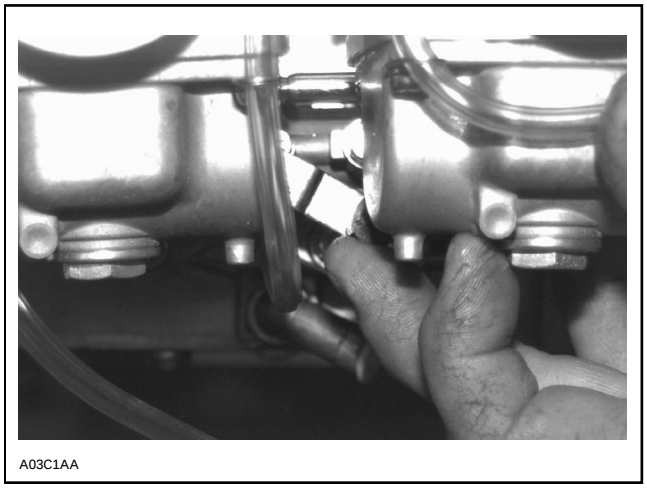

TYPICAL – ENGINE AT IDLE

Reinstall air silencer.

◆ WARNING : Ensure not to operate carburetor throttle mechanism. Secure the rear of the vehicle on a stand.

CHECKING OPERATION

On Vehicle

NOTE : Main oil line must be full of oil. See bleeding procedure above.

Lift rear of vehicle and support with a mechanical stand. Unbolt banjo fittings from pump. Start engine and stop it as soon as it fires.

Check that oil level in small oil lines is passed banjo fittings end by about 25 mm (1 in) (this will be indicated by a clear section of small oil lines of about 25 mm (1 in)). Repeat the procedure until this condition is attained.

Reconnect banjo fittings with a washers on each side, start engine and run at idle while holding the pump lever in fully open position. Oil columns must advance into small oil lines.

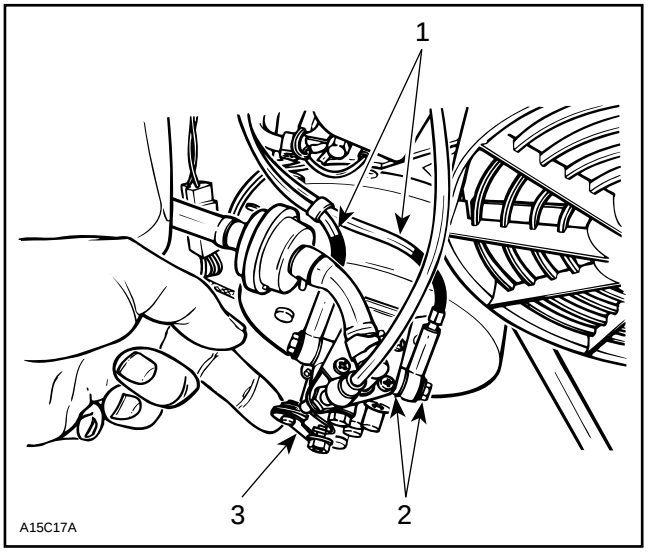

TYPICAL — ENGINE AT IDLE

1. *Oil columns advancing*
2. *Washer on each side*
3. *Fully open position*

If not, remove pump assembly and check the pump gear and drive shaft (if applicable) for defects, replace as necessary. Test pump as describes below.

NOTE : Through normal use, oil level must not drop in small tubes. If oil drops, verify check valve operation in banjo fittings. Replace as necessary.

Oil Pump Test Bench

Connect a hose filled with injection oil to main line fitting. Insert other hose end in an injection oil container. Using a counterclockwise rotating drill rotate pump shaft. Oil must drip from outer holes while holding lever in a fully open position. If not replace pump.

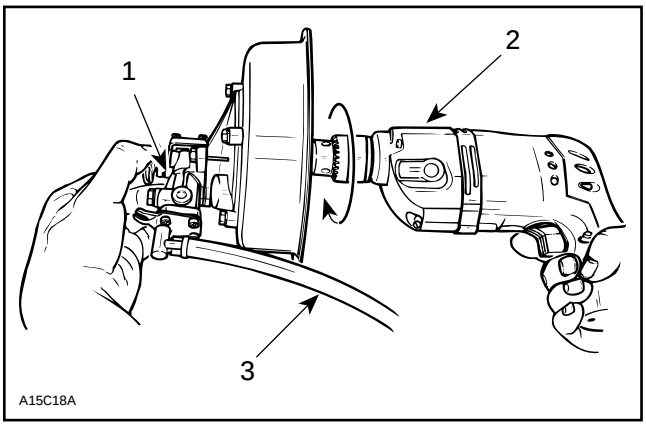

TYPICAL

1. *Fully open position*
2. *Counterclockwise rotating drill*
3. *Main line*

LIQUID COOLING SYSTEM

494 Engine

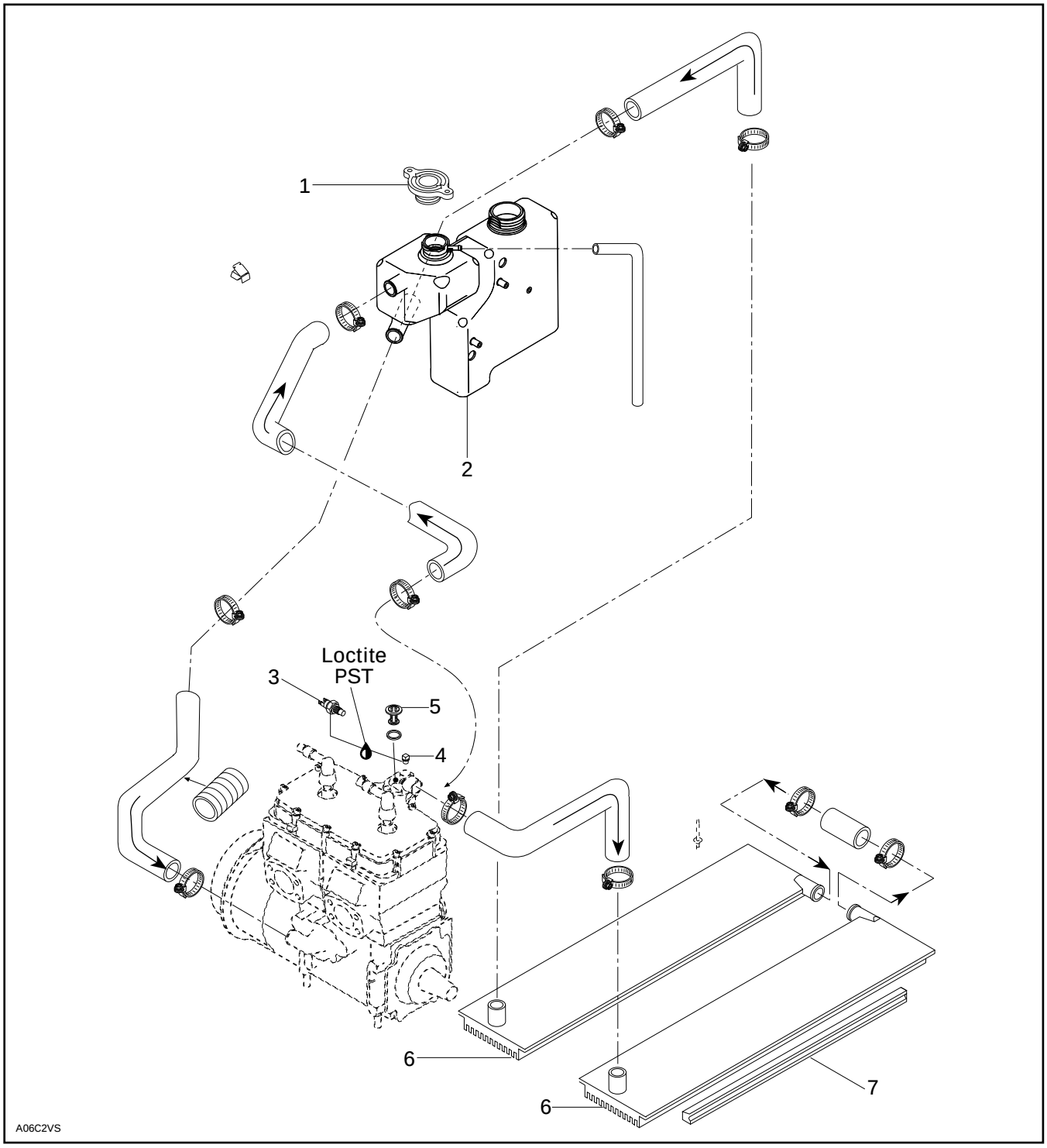

582 Engine

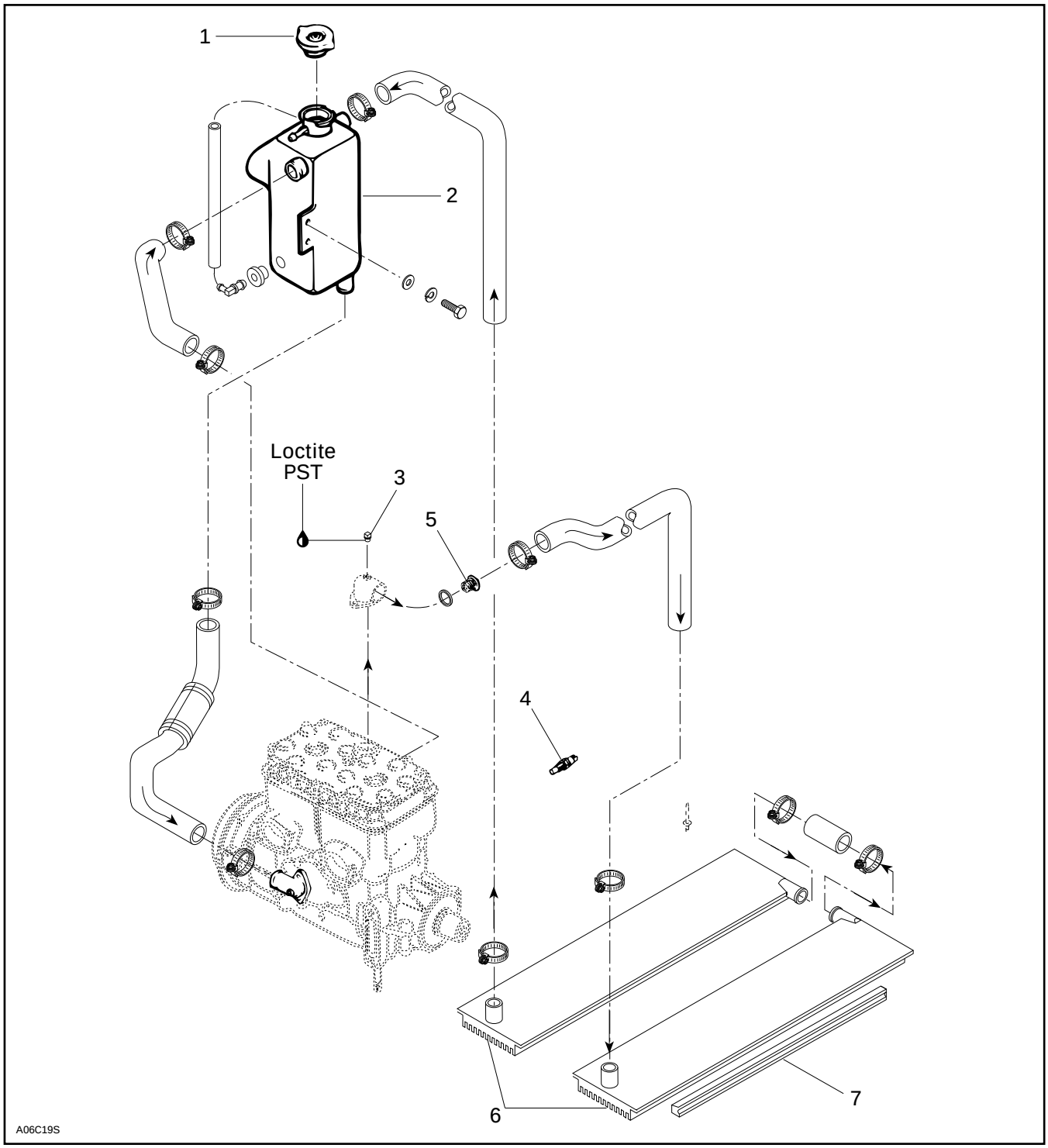

583 and 670 Engines

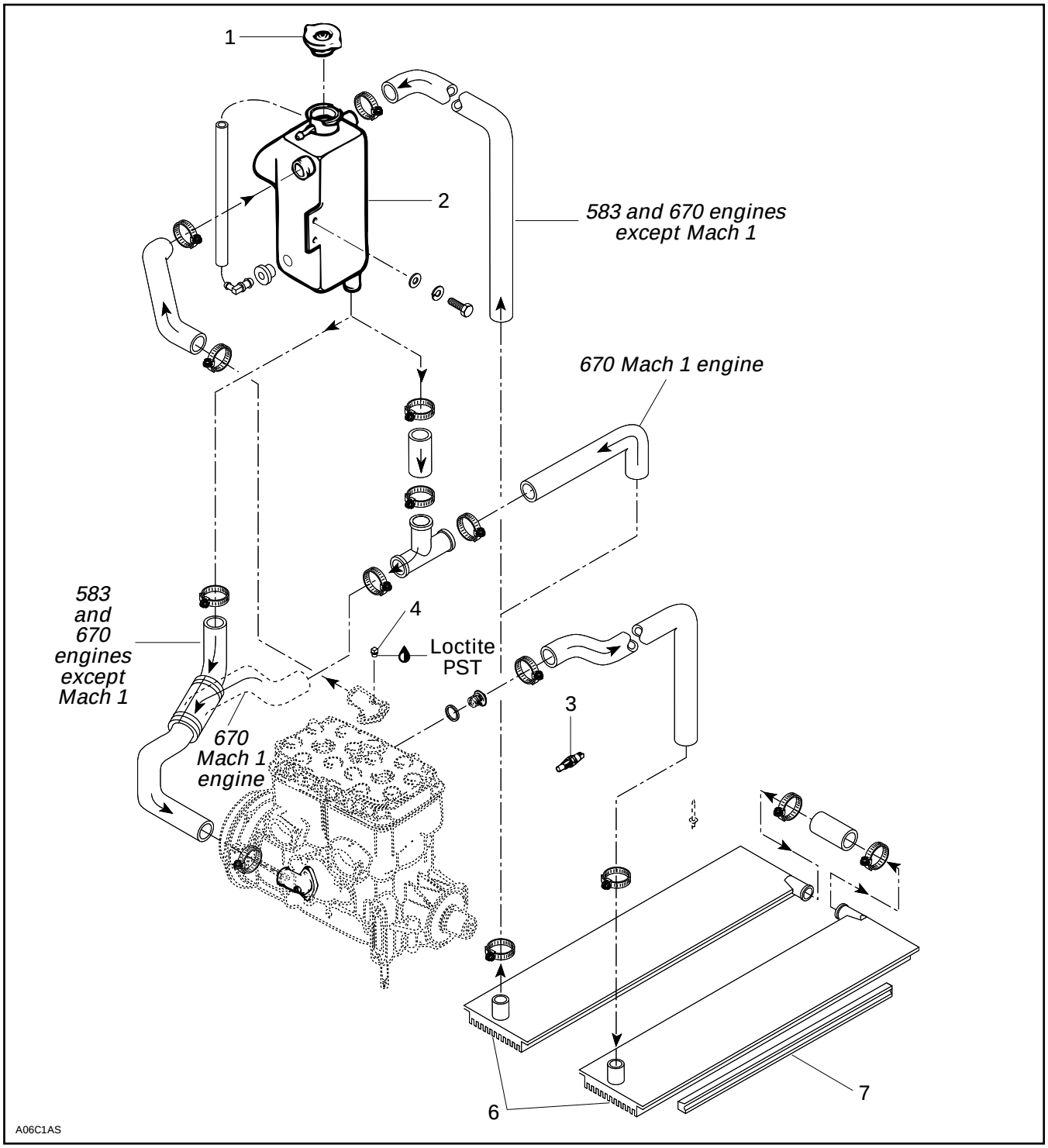

INSPECTION

Check general condition of hoses and clamp tightness.

DRAINING THE SYSTEM

◆ WARNING : Never drain or refill the cooling system when engine is hot.

To drain the cooling system, siphon the coolant mixture from the coolant tank. Use a primer pump with a plastic hose inserted as deep as possible into the lower hose.

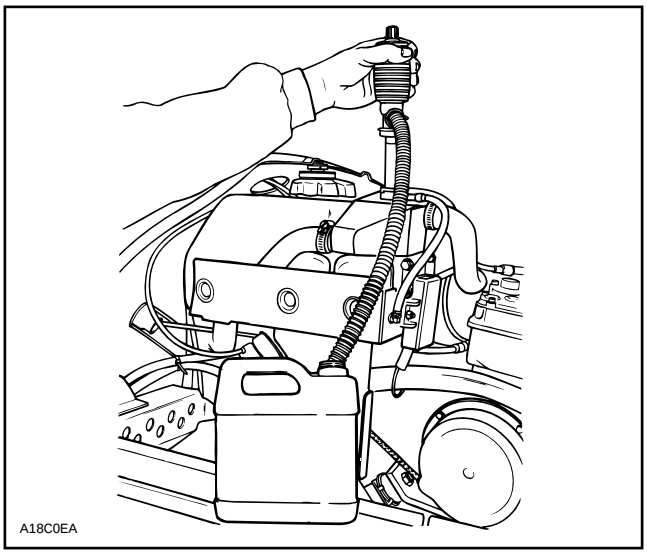

When the coolant level is low enough, lift the rear of vehicle to drain the radiators.

DISASSEMBLY AND ASSEMBLY

3,4, Sender and Plug

Apply thread sealant on sender and plug to avoid leaks.

1, Pressure Cap

Check if the cap pressurizes the system. If not, install a new 90 kPa (13 PSI) cap, (do not exceed this pressure).

6,7, Radiator and Radiator Protector

Insert radiator protector into radiator C-rail and crimp C-rail at both ends. Refer to FRAME 09-02 for radiator removal.

5, Thermostat

To check thermostat, put in water and heat water. Thermostat should open when water temperature reaches the following degree.

ENGINE	TEMPERATURE
494, 582, 583 and 670	42°C (108°F)

On 494, 582, 583 and 670 engines, the thermostat is a double action type.

a. Its function is to give faster warm up of the engine by controlling a circuit ; water pump – engine – coolant tank. This is done by bypassing the radiator circuit.

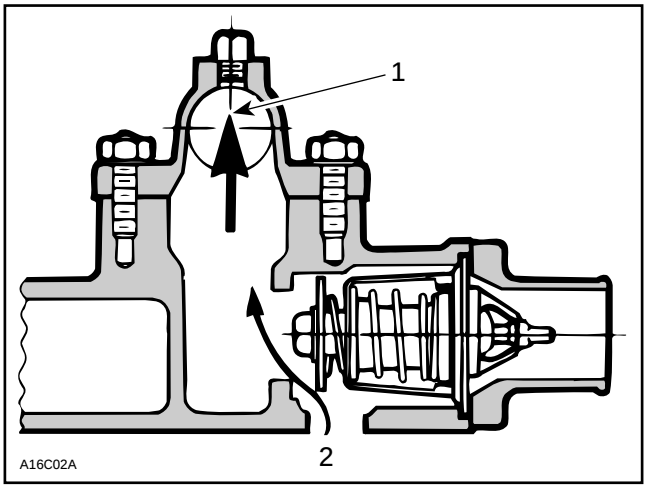

CLOSED THERMOSTAT, COLD ENGINE

1. To reservoir
2. From cylinders

b. When the liquid is warmed enough, the thermostat opens the circuit, water pump – engine – radiators coolant tank to keep the liquid at the desired temperature. (See the diagram of the exploded view).

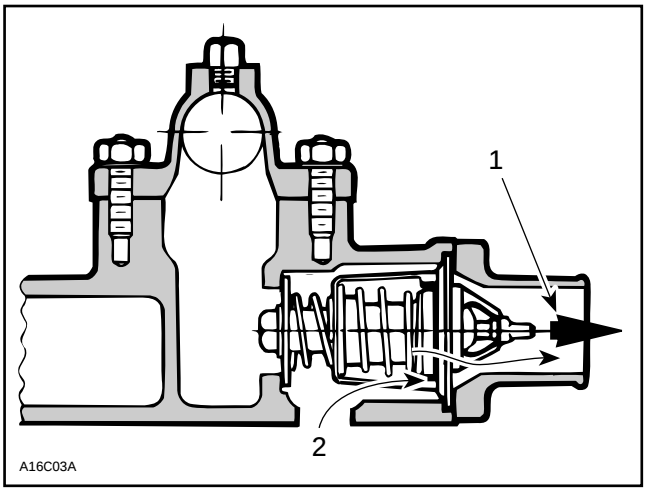

OPEN THERMOSTAT, WARM ENGINE

1. *To radiators*
2. *From cylinders*

These 2 functions have the advantage of preventing a massive entry of cold water into the engine.

2, Coolant Tank

The coolant expands as the temperature (up to 90 – 100°C (195 – 212°F)) and pressure rise in the system. When the limiting system working pressure (cap) is reached (90 kPa (13 PSI)), the pressure relief valve in the pressure cap is lifted from its seat and allows coolant to flow through the overflow hose into the overflow coolant tank.

When the system temperature drops, the coolant contracts in volume and the pressure in the coolant tank is reduced. The coolant in the overflow coolant tank will then flow back into the coolant tank through the vacuum relief valve in the pressure cap.

COOLING SYSTEM REFILLING PROCEDURE

Recommended Coolant

Use a blend of 60 % antifreeze with 40 % water. Do not reinstall pressure cap.

▼ CAUTION : To prevent rust formation or freezing condition, always replenish the system with 60 % antifreeze and 40 % water. Pure antifreeze without water freezes. Always use ethyl-glycol antifreeze containing corrosion inhibitors specifically recommended for aluminum engines.

System Capacity

Refer to TECHNICAL DATA 10.

Refilling Procedure

With vehicle on a flat surface, engine cold, refill coolant tank up to cold level mark. Wait a few minutes then refill to mark. Install pressure cap. Run engine until thermostat opens then stop engine. Refill up to mark.

To make sure coolant flows through radiators, touch them by hand. They must feel warm.

Reinstall pressure cap.

When engine has completely cooled down, recheck coolant level in coolant tank and top up if necessary.

Check coolant concentration (freezing point) with proper tester.

ROTARY VALVE, COOLANT PUMP AND RESERVOIR

494, 582, 583 and 670 Engines

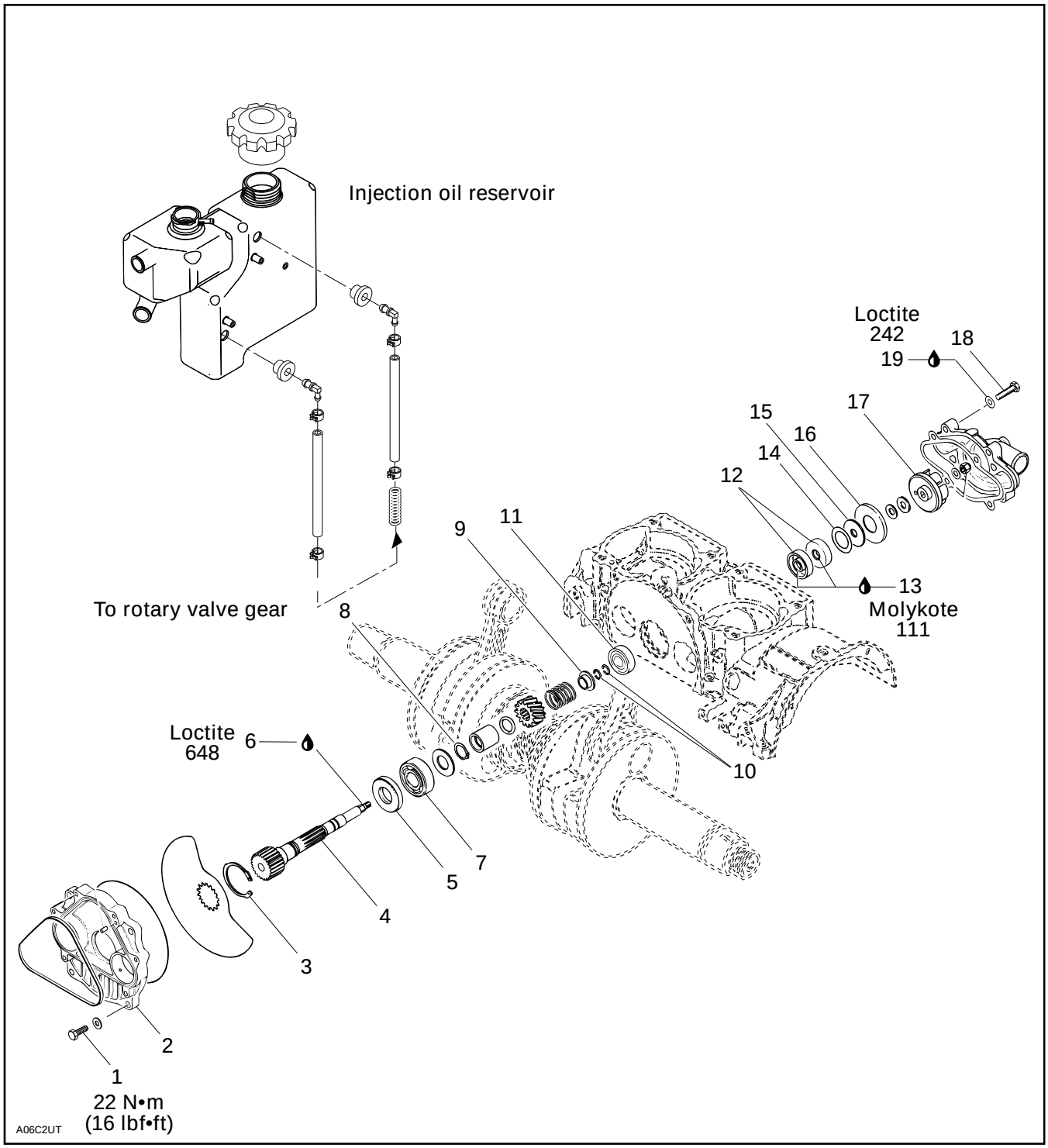

NOTE : Some verifications can be performed with engine in vehicle. Refer to ENGINE DIMENSION MEASUREMENT 04-02.

GENERAL

Engine must be removed from vehicle to work on rotary valve shaft / components. Refer to **Removal and installation** of appropriate engine for procedures.

Bottom end must be opened to remove rotary valve shaft.

CLEANING

Discard all seals and O-rings.

Clean all metal components in a non-ferrous metal cleaner.

DISASSEMBLY

1,2, Screw and Rotary Valve Cover

NOTE : Before removing rotary valve, check valve timing as described in **Rotary valve timing** at the end of this sub-section.

Unscrew 4 retaining screws and withdraw rotary valve cover and valve.

3,17, Circlip and Pump Impeller

CAUTION : Bottom end must be opened to remove rotary valve shaft.

To remove rotary valve shaft assembly from crankcase, first remove coolant pump impeller and circlip on valve side. Using the suitable pusher (P / N 420 8766 12) and a fiber hammer, push shaft assembly.

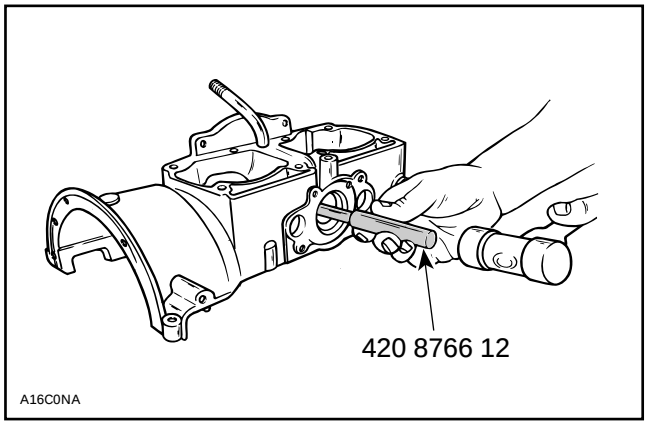

CAUTION : To prevent damage to the end of the rotary valve shaft, use pusher (P / N 420 8766 12).

8,9,10, Circlip and Spring Retaining Cup

If it is necessary to disassemble components of rotary valve shaft assembly, compress spring retaining cup with rotary valve circlip tool (P / N 529 0291 00) in order to remove circlip. Remove gear and distance sleeve then external circlip.

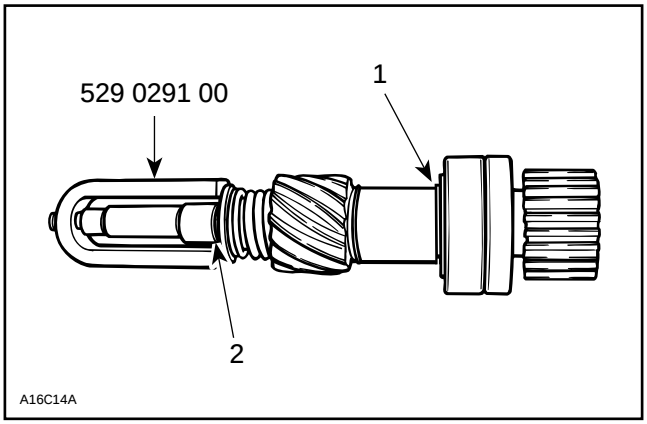

1. *External circlip*
2. *Circlip*

To remove bearing, use a bearing puller (ex. : Snap-on no. CJ 950) and pusher (P / N 420 8766 12) as illustrated.

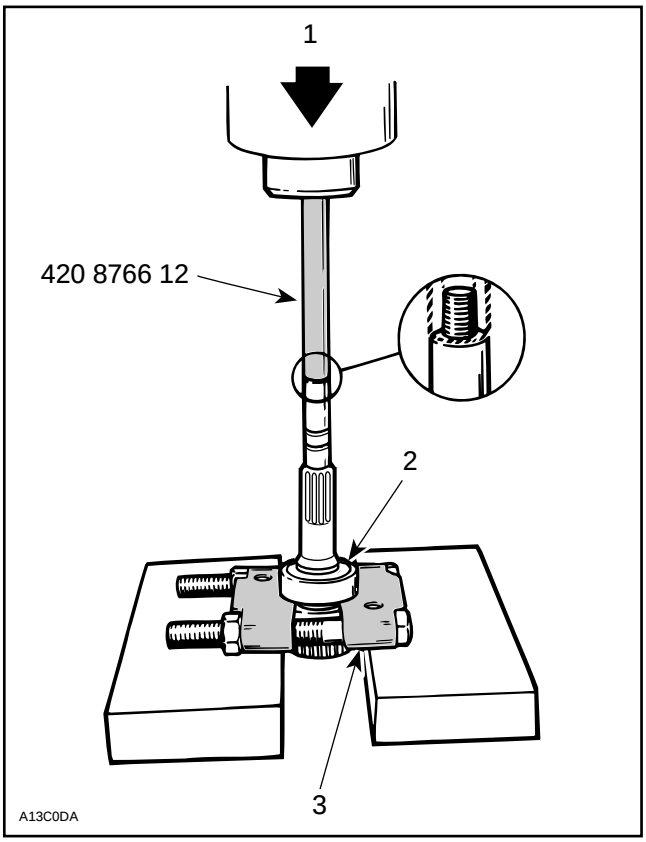

1. *Press*
2. *Bearing*
3. *Bearing puller. Ex. : Snap-on no. CJ 950*

▼CAUTION : Ensure that the rotary valve shaft is perfectly perpendicular with the press tip or damage will occur.

14,15,16, Shim, Rubber Washer and Support Plate

Pry support plate out of crankcase and remove rubber washer and shim.

11,12,14,15, Bearing 6201 and Seal

To remove bearing 6201 (the smallest one), seals and rubber washer, use seal pusher (P / N 420 8765 12).

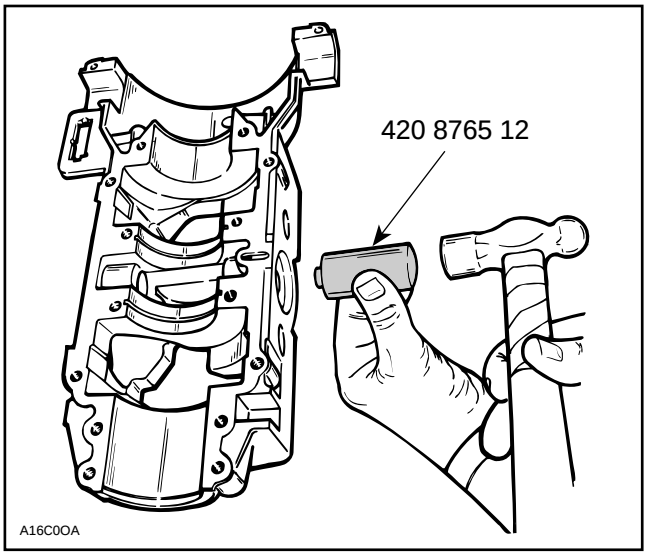

INSPECTION

Inspect rotary valve cover for warpage. Small deformation can be corrected by surfacing with fine sand paper on a surface plate. Surface part against oiled sand paper.

Inspect bearings. Check for scoring, pitting, chipping or other evidence of wear. Make sure plastic cage (on bigger bearing) is not melted. Rotate them and make sure they turn smoothly.

Check for presence of brass fillings in gear housing.

Visually check gear wear pattern. It should be even on tooth length all around. Otherwise it could indicate a bent shaft ; check deflection. Replace gear if damaged.

Refer to ENGINE DIMENSION MEASUREMENT 04-02.

ASSEMBLY

Assembly is essentially the reverse of disassembly procedures. However pay particular attention to the following.

4,5,7, Rotary Valve Shaft, Seal and Bearing 6203

At assembly apply lithium grease on seal lips. Position the seal with shielded portion against splines of shaft.

Install bearing as illustrated.

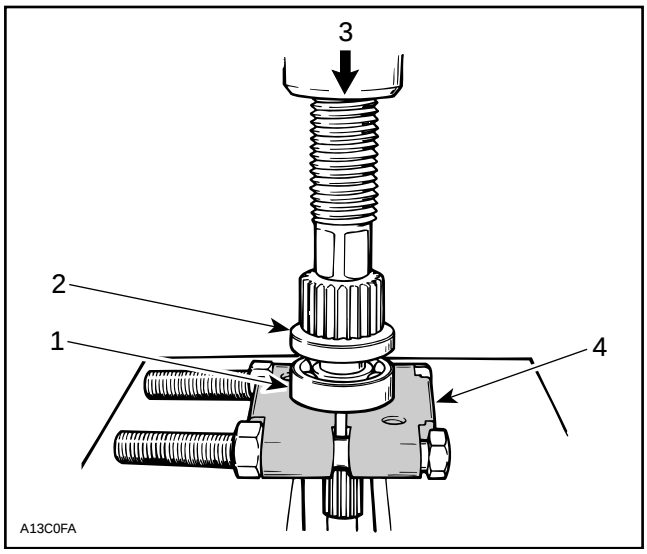

1. Bearing
2. Shielded portion of seal here
3. Press
4. Bearing puller. Ex. : Snap-on no. CJ 950

Install distance sleeve with its counterbore first.

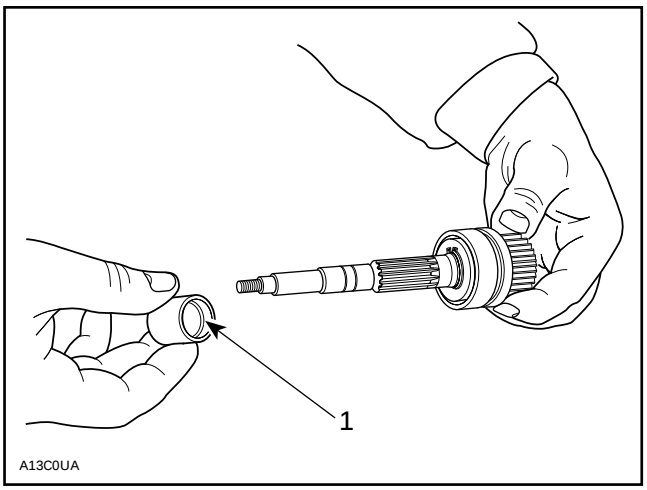

1. Counterbore first

11, Bearing 6201

To install bearing 6201 use bearing pusher (P / N 420 8765 00).

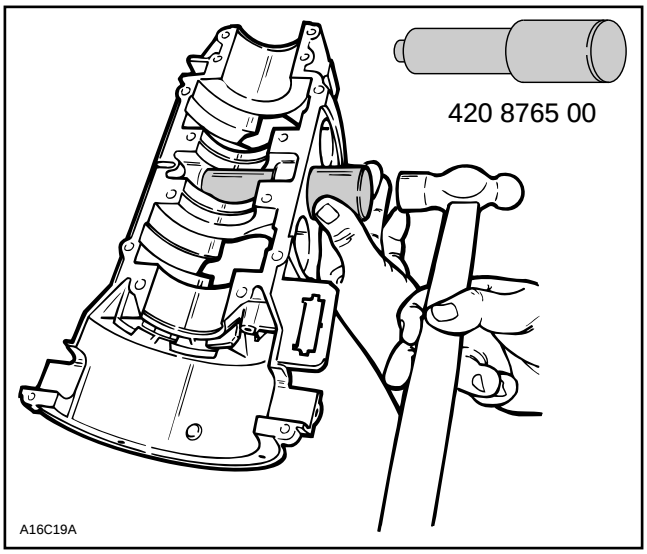

NOTE : Bearing shielded side must be facing rotary valve.

Refer to Rotary valve timing at the end of this subsection to properly install gear on rotary valve shaft.

12,13,14,15, Seals, Shim, Rubber Washer and Molykote Grease

To install seals on water pump side proceed as follows :

- Apply Molykote 111 (P / N 413 7070 00) on lip both seals.
- Position oil seal shielded portion towards pump impeller. Drive in place with a seal pusher (P / N 420 8765 12).
- Position coolant seal shielded portion towards rotary valve. Drive in place with the rotary valve shaft seal pusher (P / N 420 8770 50).

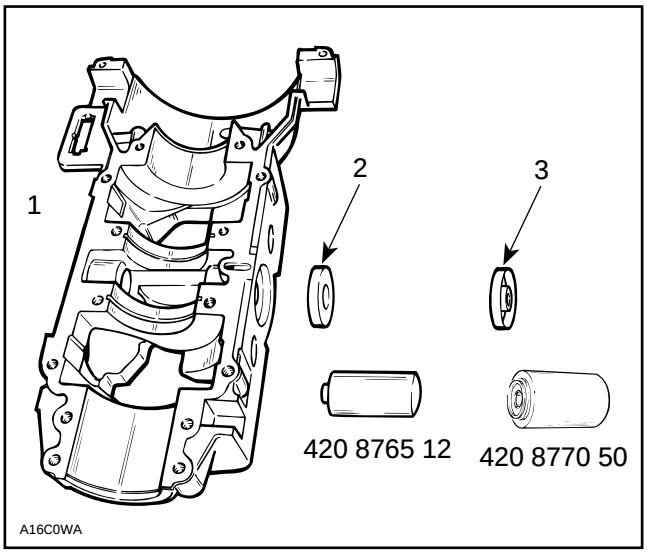

1. Rotary valve side
2. Oil seal
3. Coolant seal

Make sure not to obstruct draining hole. Position seals so that hole is between them.

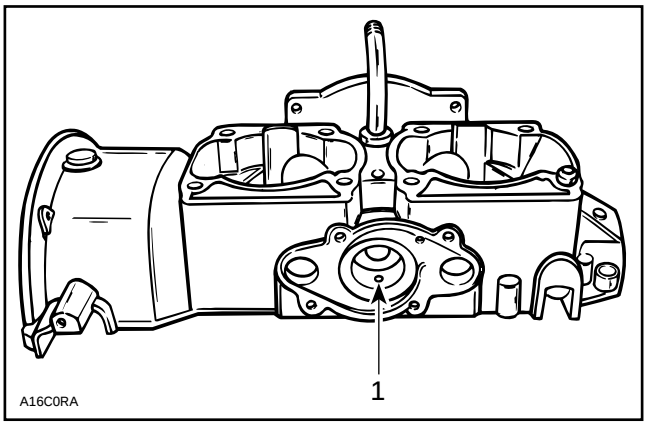

1. Draining hole

CAUTION : Failure to position the seals as specified may cause the seal spring to be corroded by coolant. Severe damage may occur if these notices are disregarded.

NOTE : The draining hole is used to detect seal malfunction. If you notice oil or coolant at the exit of the draining hole, this means that oil seal or coolant seal leaks.

– Install large shim and pack space with Molykote 111 (P / N 413 7070 00).
– Install rubber washer then support plate with its flange towards pump impeller. Use impeller support plate pusher (P / N 529 0207 00) for proper installation.
– Install small thrust washer then friction washer positioning its grooves against pump impeller.

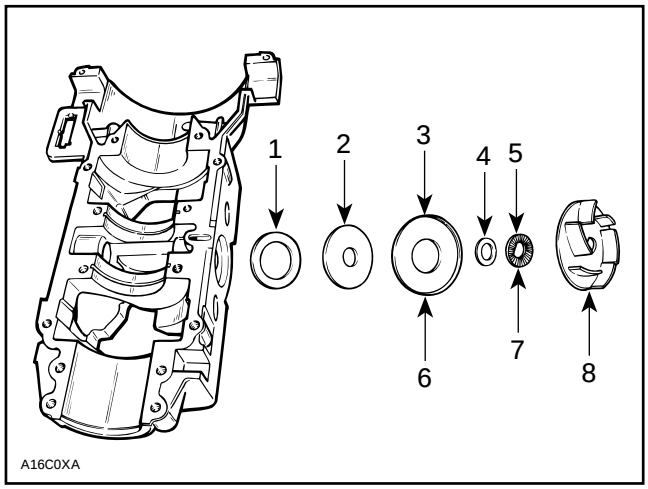

1. Large shim
2. Rubber washer
3. Support plate
4. Small thrust washer

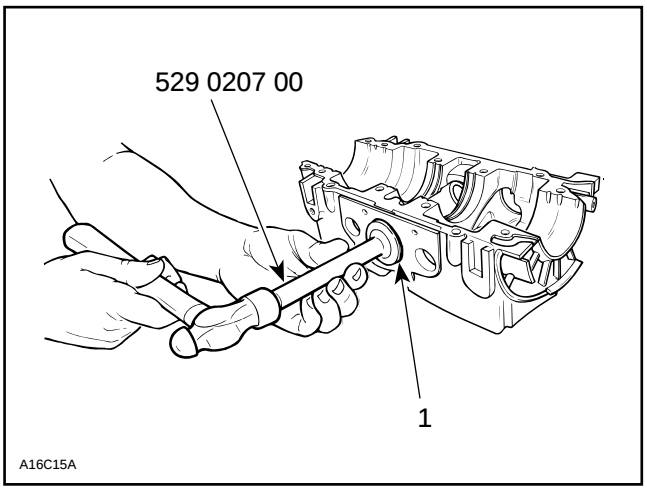

1. Support plate

NOTE : After seals installation, check if the water pump end bearing is correctly positioned with bearing pusher (P / N 420 8765 00).

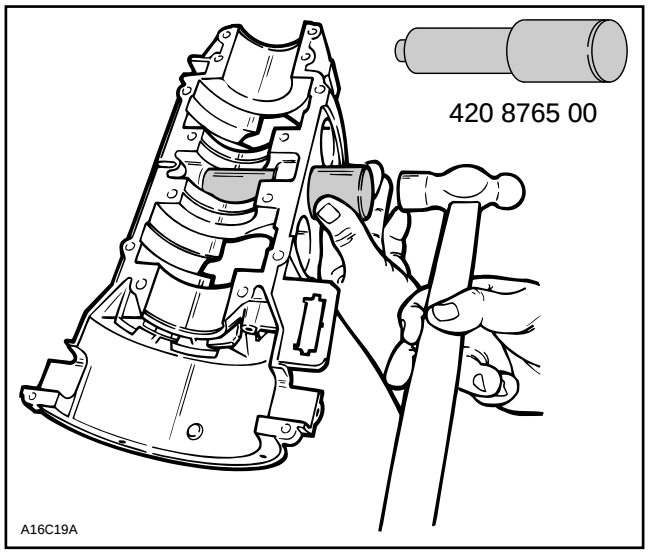

4,6, Rotary Valve Shaft and Loctite 648

CAUTION : Crankcase halves must be separated and crankshaft must not be present to install rotary valve shaft ass'y in crankcase.

To install rotary valve shaft proceed as follows with the suitable tools :

– rotary valve seal pusher (P / N 420 8766 07)
– seal protector sleeve (P / N 420 8769 80)

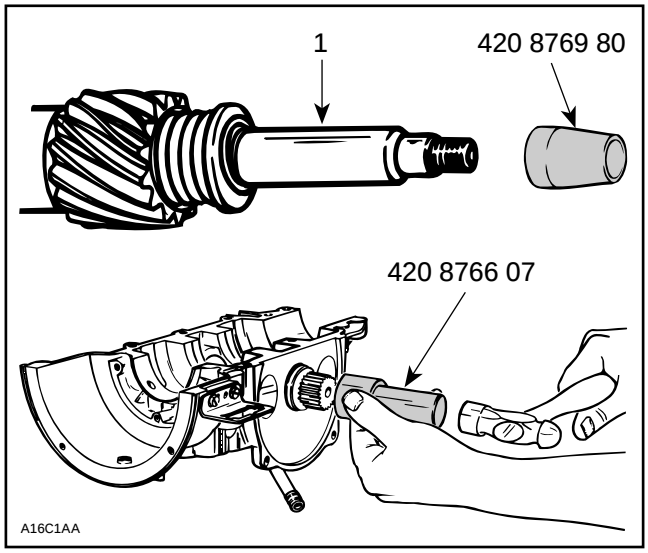

1. Rotary valve shaft

Apply Loctite 648 (P / N 420 8997 88) on shaft threads.

18,19, Pump Housing Bolt and Loctite 242 (Blue)

Apply Loctite 242 (blue) on bolt threads.

ROTARY VALVE TIMING

At disassembly, before removing rotary valve, note original rotary valve timing : it may be out of specifications by one to four degrees of retard or advance. To do so bring MAG piston to TDC and scribe a mark on crankshaft end at top (12 o'clock) and also on upper crankcase half.

Mark position of rotary valve shaft gear in relation to upper crankcase.

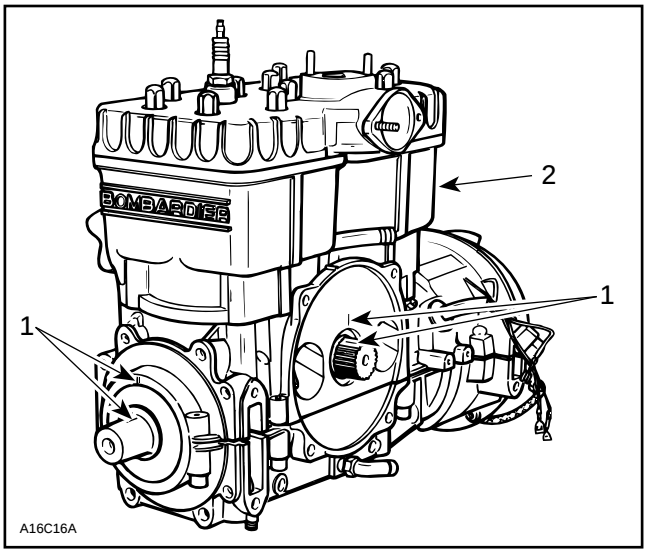

1. Mark here
2. MAG piston at TDC

After removing rotary valve shaft but before disassembling, mark brass gear in relation to shaft.

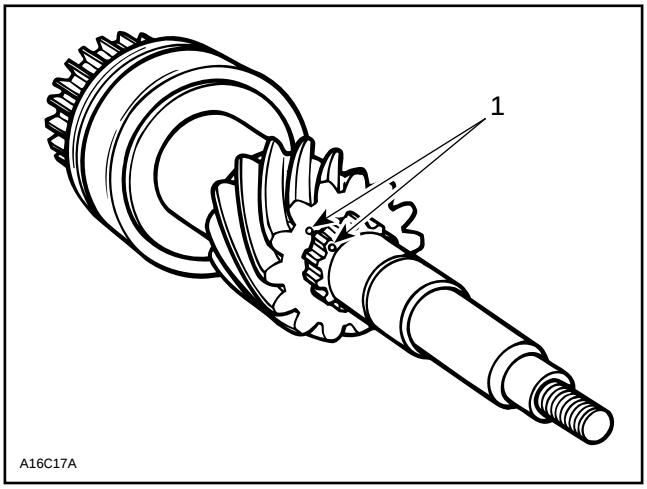

1. Mark here

These marks will be useful to time rotary valve exactly to the specifications.

NOTE : Tolerance of rotary valve timing is ± 5 degrees.

When the same crankcase is reassembled, the first timing method is to be followed. However since replacement crankcases do not have timing marks (ridge), the second method is required. Take note that the second method is more accurate and may be used any time.

Installation on Same Crankcase (with Ridge)

To correctly install rotary valve, proceed as follows :

– Turning crankshaft, bring MAGneto side piston to Top Dead Center.

Insert crankshaft locking tool while turning crankshaft. When the crankshaft stops it is the right position.

Use a dial indicator (P / N 414 1047 00).

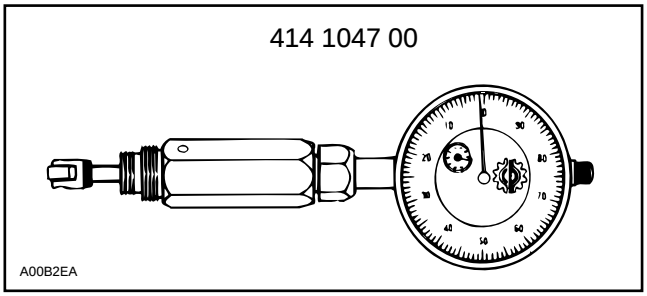

All Engine Types :

– Position rotary valve on shaft splines so that its opening edge will be aligned with timing ridge on upperleft side of rotary valve housing and its closing edge is the closest to bottom of MAGneto side inlet port.

NOTE : Rotary valve is asymmetrical. Therefore, try turning it inside out then reinstall on splines to determine best installation position.

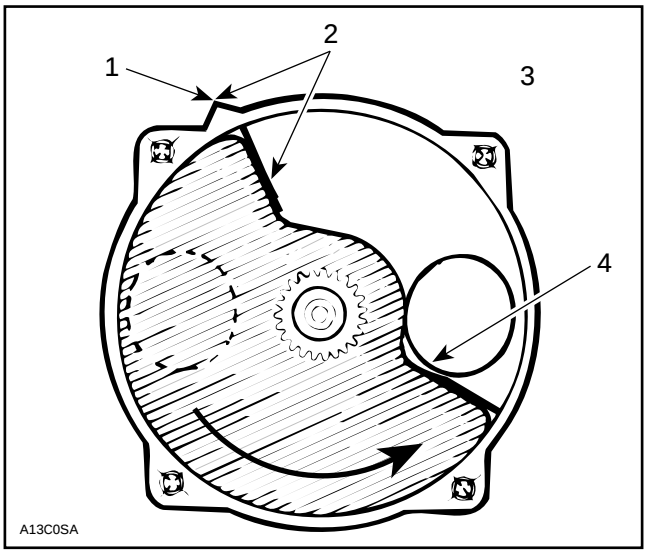

1. Rotary valve housing mark (ridge)
2. Align here
3. MAGneto side piston must be at TDC
4. Bottom of inlet port

Installation on Replacement Crankcase (without Ridge)

A degree wheel (P / N 414 3529 00) is required to measure rotary valve opening and closing angles in relation with MAGneto side piston. Degree wheel will be installed on rotary valve shaft for measurements.

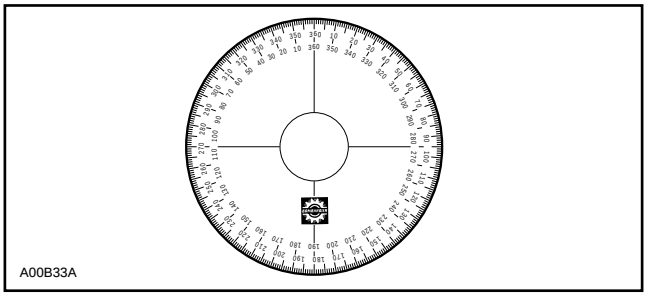

Rotary valve must be set as specified in TECHNICAL DATA 10.

For the following instructions, use these specifications as example :

OPENING : 132° BTDC

CLOSING : 52° BTDC

Proceed as follows :

– Turning crankshaft, bring MAGneto side piston to Top Dead Center as done before with a crankcase having a ridge.

– For opening mark, first align 360° line of degree wheel with BOTTOM of MAGneto side inlet port. Then, find 132° line on degree wheel and mark crankcase at this point.

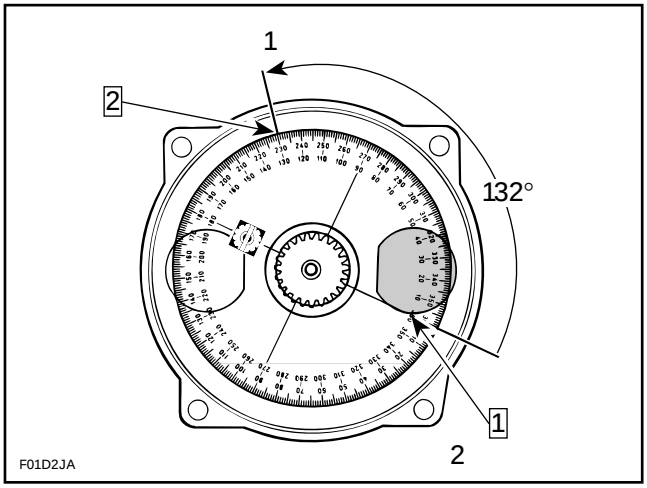

Step 1 : Align 360° line of degree wheel here
Step 2 : Find 132° on degree wheel and mark here
1. Opening mark
2. Bottom of MAGneto inlet port

– For closing mark, first align 360° line of degree wheel with TOP of MAGneto side inlet port. Then, find 52° line on degree wheel and mark crankcase at this point.

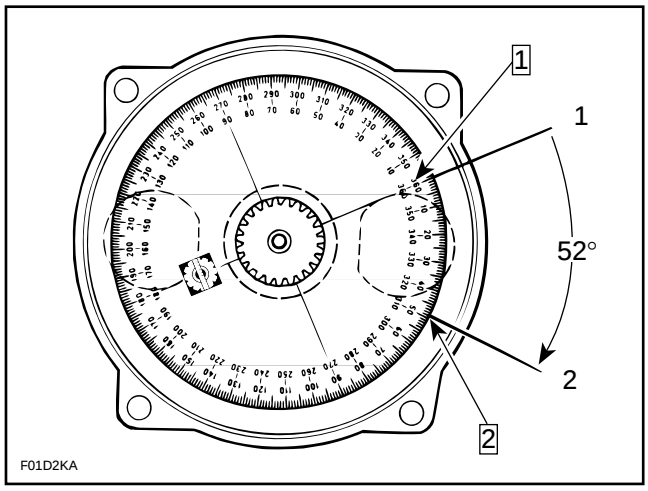

Step 1 : Align 360° line of degree wheel here
Step 2 : Find 52° on degree wheel and mark here
1. Top of MAGneto inlet port
2. Closing mark

– Position rotary valve on shaft splines to have edges as close as possible to marks.

NOTE : Rotary valve is asymmetrical. Therefore, try turning it inside out then reinstall on splines to determine best installation position.

Apply injection oil on rotary valve before closing rotary valve cover.

To Time Rotary Valve Exactly to Specifications

NOTE : If desynchronization (out of spec.) is unknown, install rotary valve to determinate it before proceeding with the following.

First Method

Turn crankshaft to bring MAG piston to TDC. Scribed marks of crankshaft and upper crankcase must aligned. These marks were scribed while determinating desynchronization.

Install brass gear on rotary valve shaft with its marked spline 4 positions (splines) away for one degree of desynchronization. Turn in the opposite direction of desynchronization. For instance, a rotary valve is retarded by 2.5°, turn brass gear by 10 splines counterclockwise.

Second Method

Turn crankshaft to bring MAG piston to TDC. Scribed marks of crankshaft and upper crankcase must aligned. These marks were scribed while determinating desynchronization.

For each degree of desynchronization, rotary valve shaft should be turned in the opposite direction by about 5 splines on the rotary valve gear.

Note position of rotary valve gear mark when brass gear disengage worm gear of crankshaft at removal of rotary valve shaft. From this position, turn shaft accordingly then reinstall.

For instance, take a valve advanced by 2°.

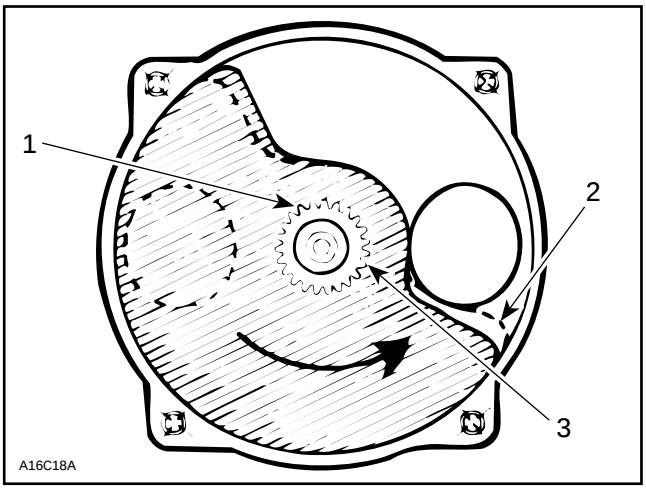

1. Position of mark when brass gear disengage worm gear
2. Advanced by 2°
3. Position of mark before installation (about 10 splines from original position)

1,2, Screw and Rotary Valve Cover

Install O-ring and cover then torque screws to 22 N•m (16 lbf•ft) in a criss-cross sequence.

REWIND STARTER

All Models

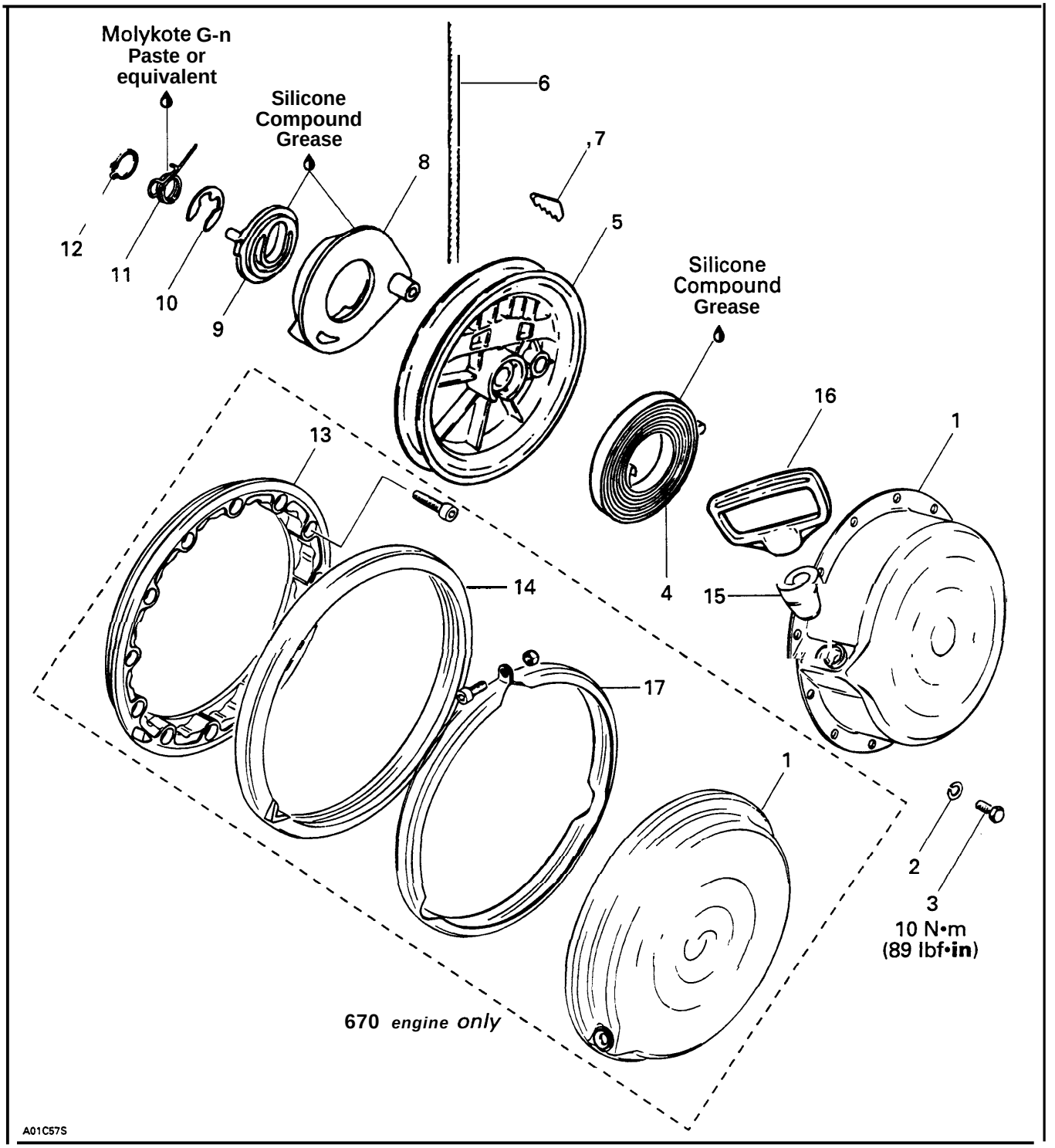

TYPICAL

REMOVAL

16, Starter Grip

Using a small screwdriver, extract rope knot from starter grip. Cut rope close to knot. Tie a knot near starter housing.

All Engines Except 670

1,2,3, Starter Housing, Lock Washer and Screw

Remove screws and washers securing rewind starter to engine then remove rewind starter.

670 ***Engine Only***

13,14,17, Connecting Flange, Damper Ring and Locking Ring

Unfasten locking ring and remove starter ass'y. Connecting flange and damper ring can be removed for inspection and cleaning. Mark position of connecting flange before removal.

All Models

DISASSEMBLY

To remove rope from rewind starter mechanism :

Untie the knot while holding sheave. Allow sheave to turn slowly clockwise.

8,9,10,11,12, Pawl, Pawl Lock, Circlip, Locking Spring and Locking Ring

— First remove locking ring, locking spring, circlip, pawl lock and pawl.

1,5, Starter Housing and Rope Sheave

— Remove sheave from starter housing.

6,7, Starter Rope and Key

— Disengage key by gently tapping on it and then pull out rope.

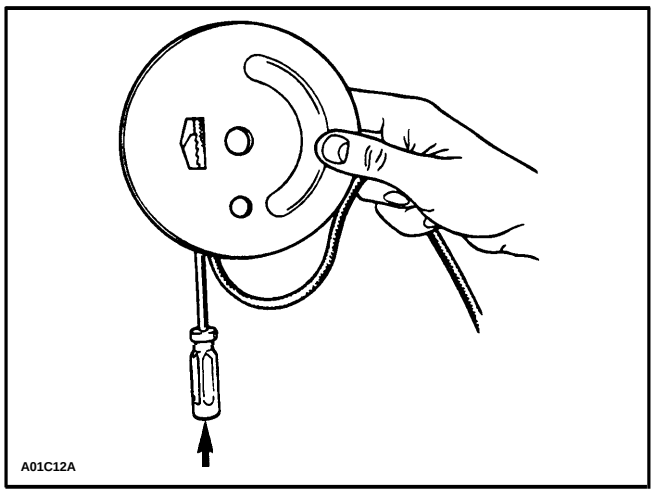

ASSEMBLY

4, Rewind Spring

At assembly, position spring outer end into spring guide notch then wind the spring counterclockwise into guide.

◆ **WARNING : Since the spring is tightly wound inside the guide it may fly out when rewind is handled. Always handle with care.**

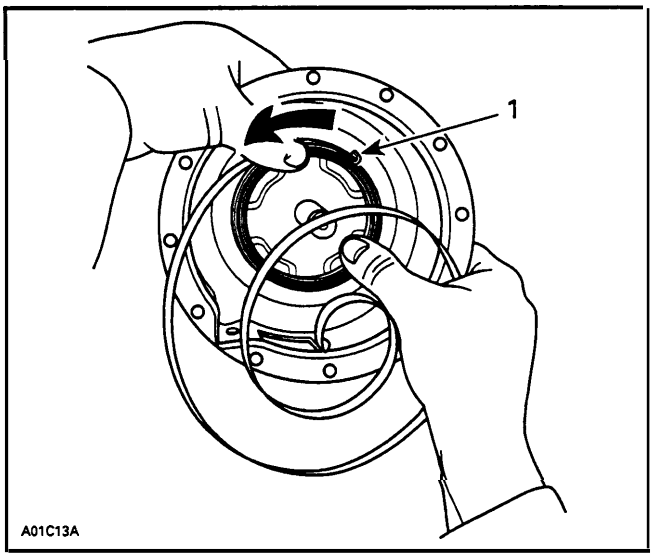

1. Outer end into guide notch

O **NOTE :** Due to dust accumulation, rewind starter must be periodically cleaned, inspected and relubricated.

▼ **CAUTION : It is of the utmost importance that the rewind starter spring(s) be lubricated periodically using specific lubricants. Otherwise, rewind starter component life will be shortened and /or rewind starter will not operate properly under very cold temperatures.**

Lubricate spring assembly with silicone compound grease (P/ N 4208970 61) and position into starter housing as illustrated.

▼ **CAUTION : This lubricant must NOT be used on rewind starter locking spring as it does not stay on under vibration.**

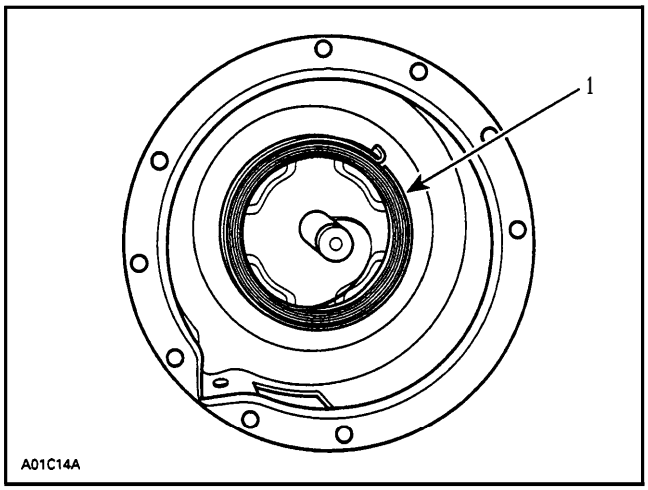

1. Grease inside spring guide

CAUTION : The use of standard multi-purpose grease could result in rewind starter malfunction.

5,6,7, Rope Sheave, Starter Rope and Key

To install a new rope : insert rope into sheave orifice and lock it with the key as illustrated.

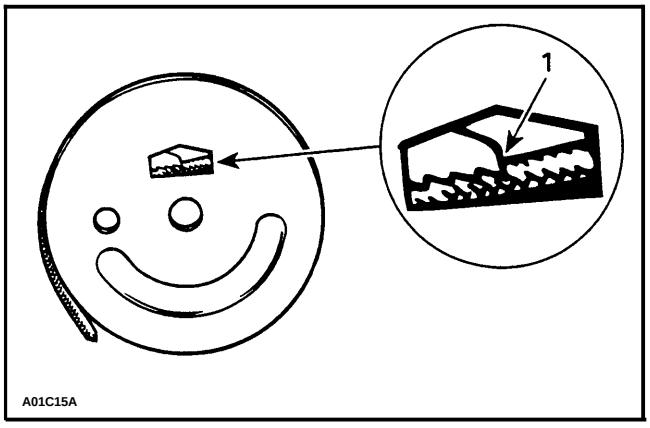

1. Push to lock

To adjust rope tension :

Wind rope on sheave and place rope sheave into starter housing making sure that the sheave hub notch engages in the rewind spring hook.

Rotate the sheave counterclockwise until rope end is accessible through starter housing orifice.

Pull the rope out of the starter housing and temporarily make a knot to hold it. One turn preload will give 7 turns of tension when fully extended.

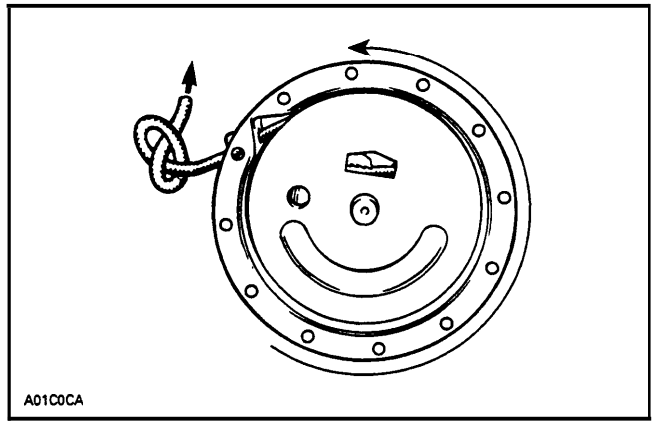

1. Knot

8,9,10, Pawl, Pawl Lock and Circlip

Apply silicone compound grease (P/ N 420 897061) to pawl and pawl lock.

Position pawl, pawl lock and circlip.

11,17, Locking Spring and Molykote G-n Paste

Install locking spring and lubricate with MO LYKOTE G-n paste from Dow Corning" or equivalent.

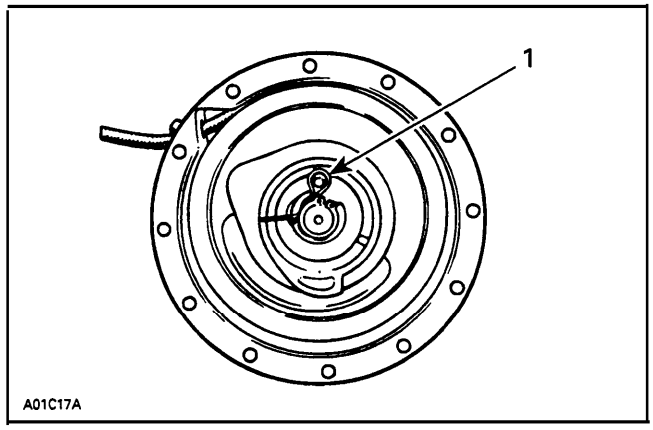

1. Molykote G-n paste inside spring

Install locking ring.

CAUTION : This lubricant must NOT **be used on rewind springs as it does not stay on when dry.**

INSTALLATION

On fan cooled models with oil injection pump, reinstall oil pump on rewind starter assembly.

All Engines Except 670

Reinstall rewind starter assembly on engine.

670 ***Engine Only***

Install rewind starter on damper ring matching notches and emboss of damper ring.

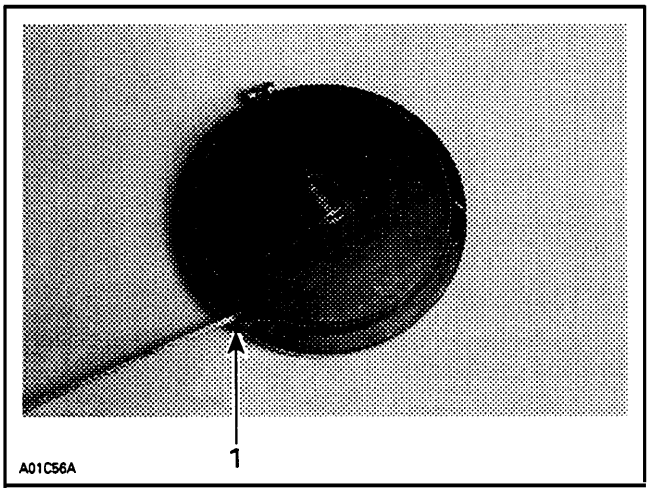

1. Notch

All Models

6, Starter Rope

Thread starter rope through rope guide when applicable.

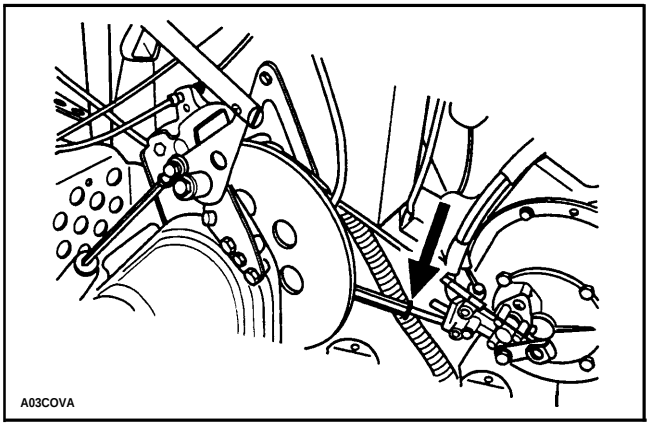

16, Starter Grip

Prior to installing starter grip on new rope, it is first necessary to fuse the rope end with a lit match. Pass rope through rubber buffer and starter grip and tie a knot in the rope end. Fuse the knot with a lit match then insert rope end down and pull the starter grip over the knot.

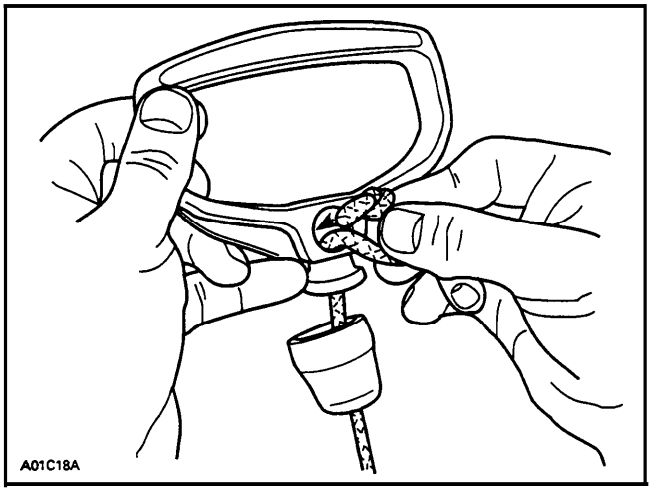

CARBURETOR AND FUEL PUMP

MIKUNI FLOAT CARBURETOR

NOTE : Refer to TECHNICAL DATA section 10 for carburetor application.

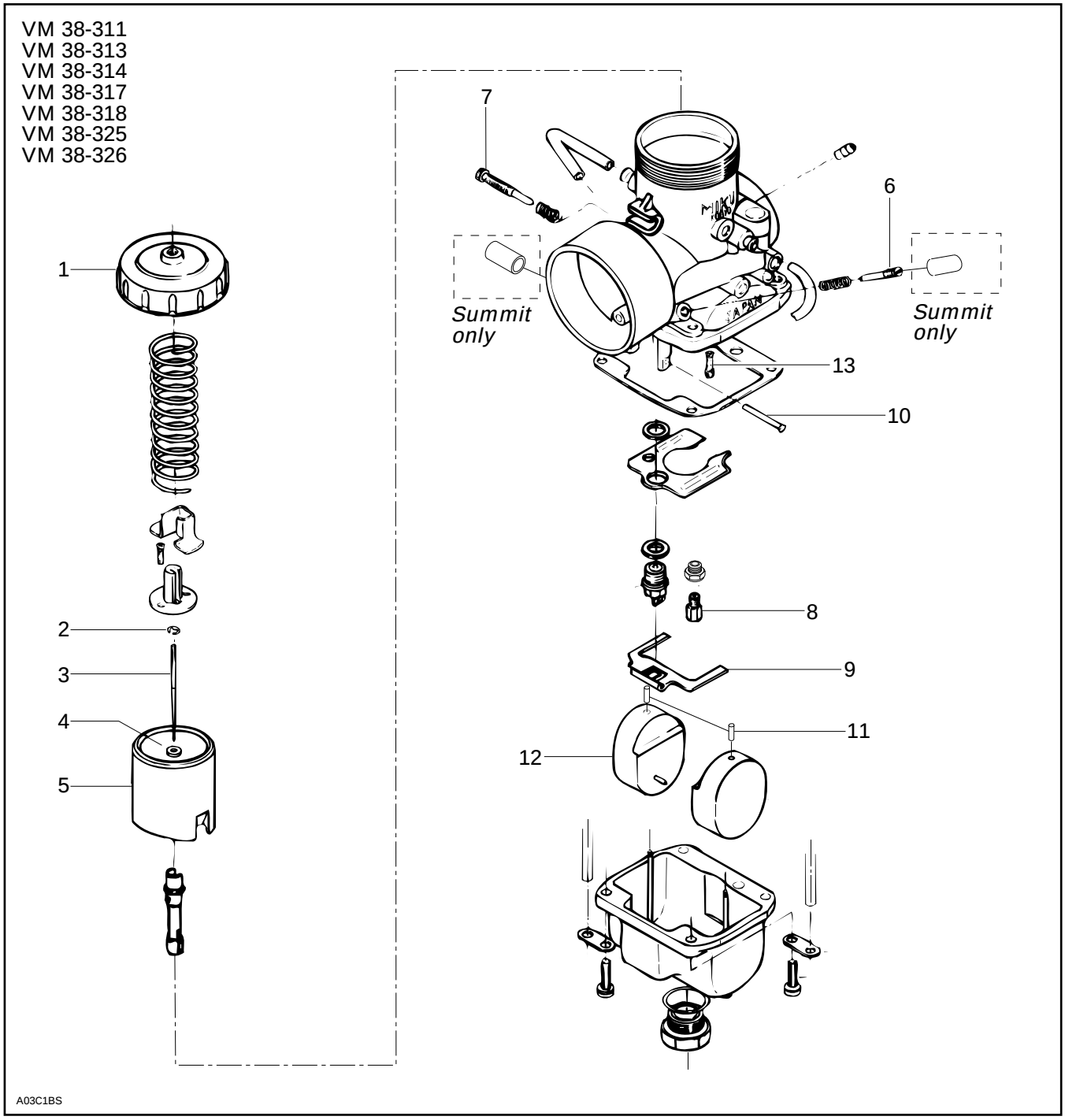

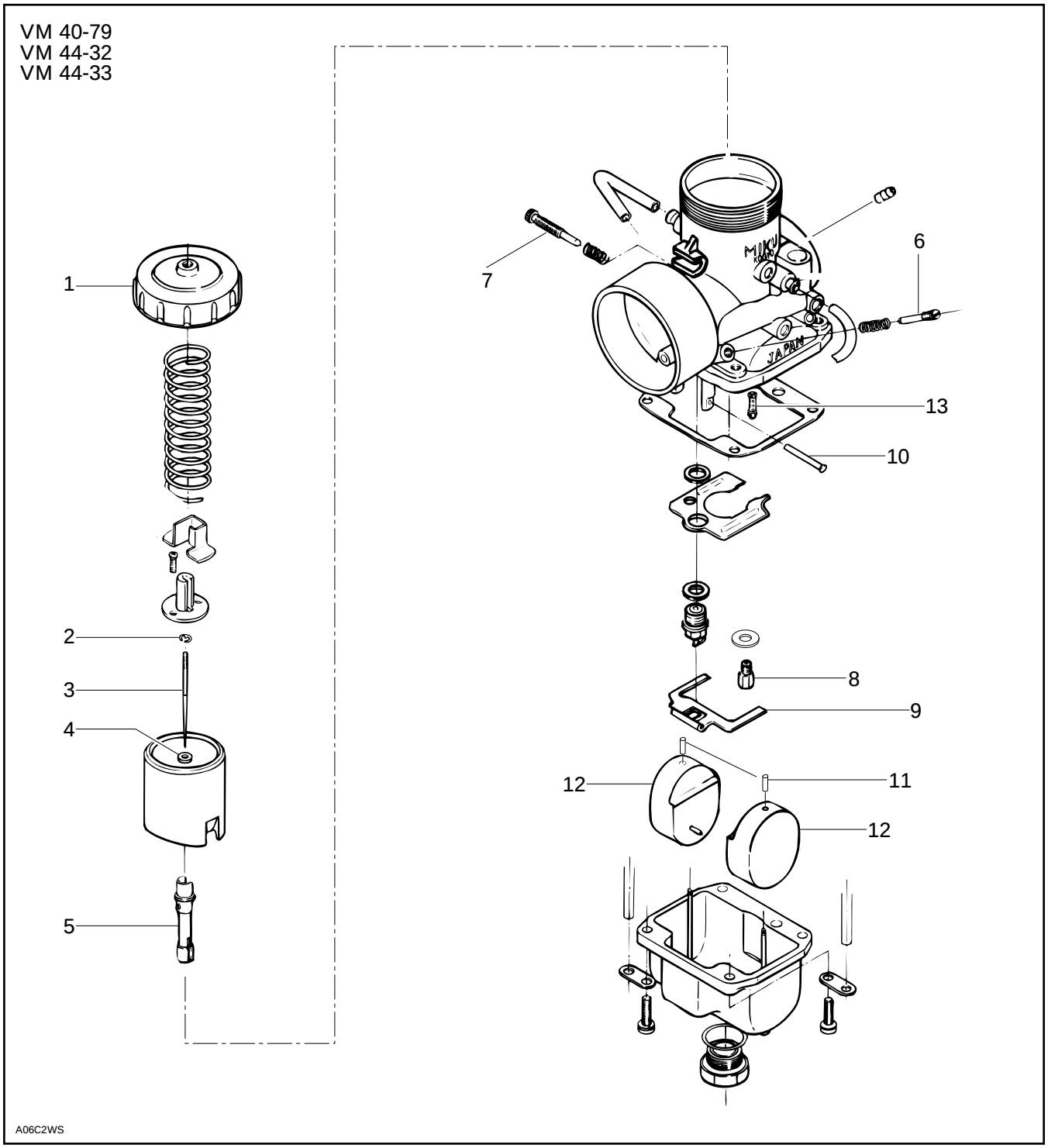
VM 40-79
VM 44-32
VM 44-33
1
2
3
4
5
6
7
8
9
10
11
12
12
13
MIKUNI
JAPAN
A06C2WS

REMOVAL

Remove air silencer(s). For S-Series, see BATTERY 06-04.

Disconnect fuel inlet line.

Disconnect primer line from carburetor.

1,9, Cover and Throttle Slide

Unscrew carburetor cover then pull out throttle slide from carburetor.

◆ WARNING : Exercise care when handling throttle slide. Scratches incurred may cause throttle slide to stick open in operation.

Disconnect throttle cable from throttle slide.

Untighten rubber flange clamps then remove carburetor from engine.

CLEANING AND INSPECTION

The entire carburetor should be cleaned with a general solvent and dried with compressed air before disassembly.

▼ CAUTION : Heavy duty carburetor cleaner may be harmful to the float material and to the rubber parts, O-rings, etc. Therefore, it is recommended to remove those parts prior to cleaning.

Carburetor body and jets should be cleaned in a carburetor cleaner following manufacturer's instructions.

◆ WARNING : Solvent with a low flash point such as gasoline, naphtha, benzol, etc., should not be used as they are flammable and explosive.

Check inlet needle tip condition. If worn, the inlet needle and seat must be replaced as a matched set.

○ _NOTE : Install needle valve for snowmobile carburetor only. It is designed to operate with a fuel pump system.

Check throttle slide for wear. Replace as necessary.

11,12, Cap and Float

Check for fuel inside float.

If fuel is noticed :

– Check cap for fuel tightness ; replace as necessary.

– Check float for cracks or other damage affecting fuel tightness ; replace as necessary.

VM 38 on Summit Only

Check rubber plug close to fuel inlet fitting for cracks or any damage that could affect air tightness.

DISASSEMBLY AND ASSEMBLY

○ NOTE : To ease the carburetor disassembly and assembly procedures it is recommended to use carburetor tool kit (P / N 404 1120 00).

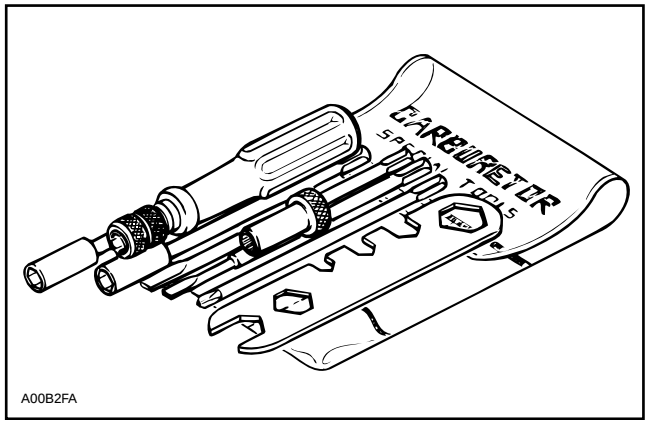

2,3, E-clip and Needle

Remove screws from needle retaining plate to withdraw the needle.

The position of the needle in the throttle slide is adjustable by means of an E-clip inserted into 1 of 5 grooves located on the upper part of the needle. Position 1 (at top) is the leanest, 5 (at bottom) the richest.

○ NOTE : The last digit of the needle identification number gives the recommended position of the E-clip from the top of the needle.

Example : 6DH4-3

Needle identification

Recommended position of the E-clip from top.

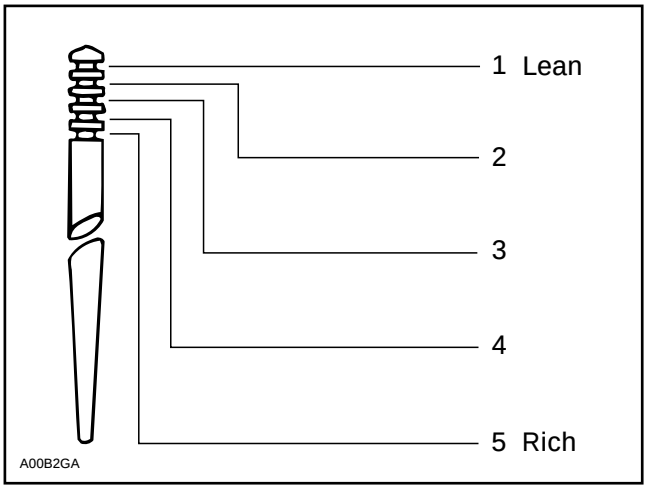

5, Throttle Slide

The size of the throttle slide cut-away affects the fuel mixture between 1/8 to 1/2 throttle opening. A certain amount of richness is needed for that particular range because this is where the transition from the low speed to the high speed circuit takes place.

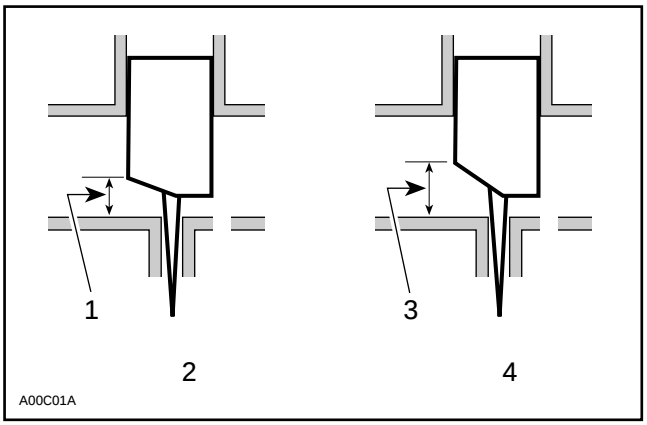

1. Low cut-away (high air speed)
2. Rich mixture
3. High cut-away (low air speed)
4. Lean mixture

8, Main Jet

The main jet installed in the carburetor has been selected for a temperature of -20°C (0°F) at sea level. Different jetting can be installed to suit temperature and / or altitude changes. Always check spark plug tip and / or piston dome color to find out correct jetting.

CARBURETOR FLOAT LEVEL ADJUSTMENT

9,10, Float Arm and Float Arm Pin

Correct fuel level in float chamber is vital toward maximum engine efficiency. To check for correct float level proceed as follows :

– Remove float bowl and gasket from carburetor.
– With carburetor chamber upside-down on a level surface, measure height H between bowl seat and top edge of float arm.

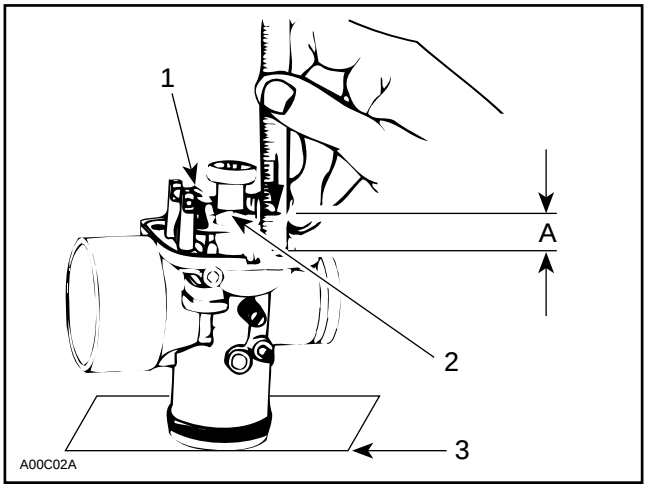

TYPICAL
1. Contact tab
2. Float arm
3. Level surface
A. H

On TM 38, do not turn carburetor up side down. Measure float arm height when it just touches needle valve without moving it.

Float arm height dimensions :

CARBURETOR MODEL	FLOAT HEIGHT H ± 1 mm	(± .040 in)
VM 38 VM 40 VM 44	18.1	(.713)
VM38 (Summit)	19.6	(.772)

To Adjust Height H :

– Bend the contact tab of float arm until the specified height is reached.

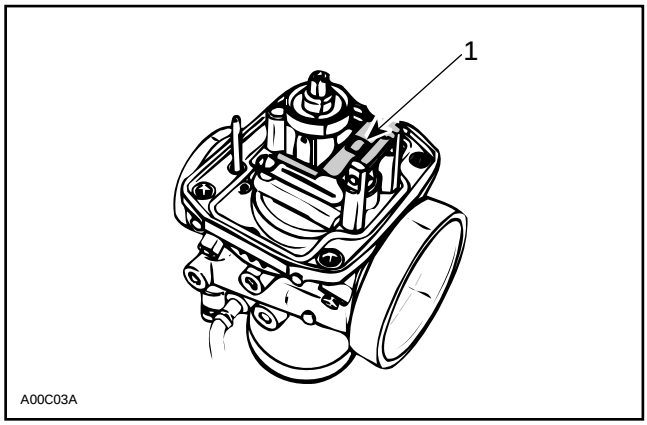

1. Contact tab

The illustration below shows which part of the carburetor begins and to stops to function at different throttle slide openings.

Note that the wider part of symbol corresponds to the opening mostly affected. For instance, throttle slide cut-away begins to function at close position but it is most effective at 1/4 opening and decreases up to 1/2 opening.

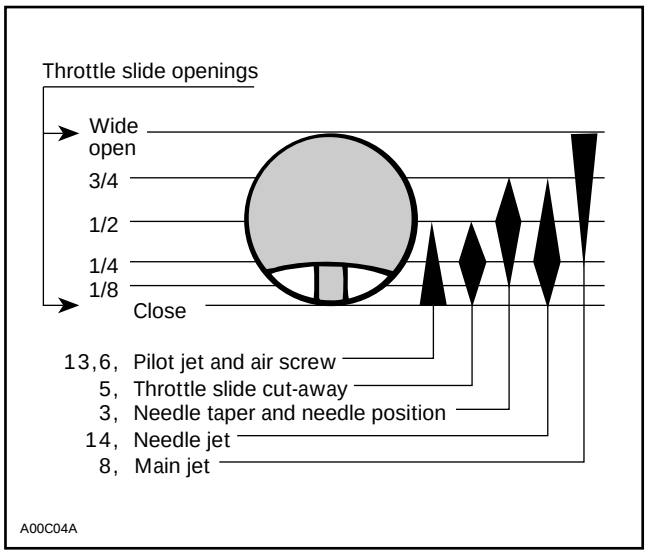

NOTE : For fine tuning refer to TECHNICAL DATA section 10 and to SPARK PLUG 06-03.

NOTE : For high altitude regions, the High Altitude Technical Data (P / N 484 0624 00 and 484 0545 00 for binder) gives information about calibration according to altitude and temperature.

INSTALLATION

CAUTION : Never allow throttle slide(s) to snap shut.

To install carburetor on engine, inverse removal procedure.

However, pay attention to the following :

– Inspect throttle cable and housing prior to installation.

On applicable models, make sure to align tab of carburetor and air intake silencer (if applicable) with notch of adaptor(s). On applicable models, install adaptor with up mark facing up.

CAUTION : The rubber flange must be checked for cracks and / or damage. At assembly, the flange must be perfectly matched with the air intake manifold or severe engine damage will occur.

Install clamps in a way that their tightening bolt being staggered — not align.

Center Post Retaining (all models)

Hook throttle cable into the needle retainer plate.

NOTE : Do not obstruct hole in throttle slide when installing needle retaining plate. This is important to allow air escaping through and thus allowing a quick response.

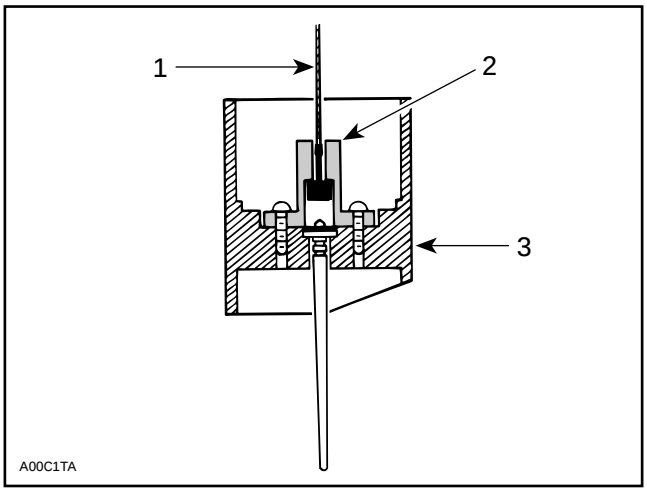

CENTER POST TYPE

1. *Throttle cable*
2. *Needle retaining plate*
3. *Throttle slide*

3,4, Needle and Nylon Packing

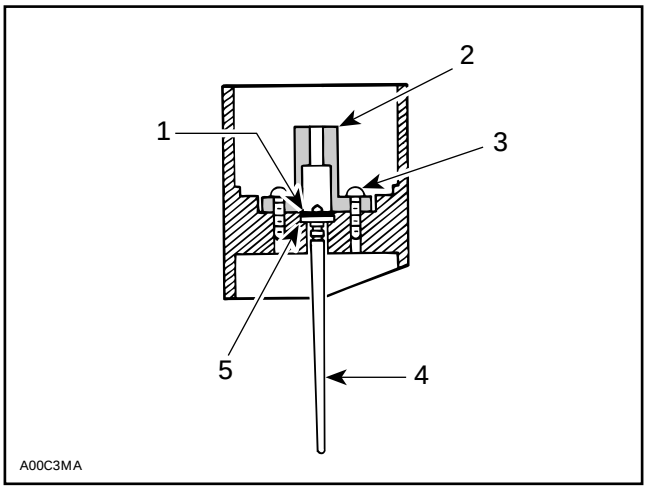

CENTER POST TYPE

1. *E-clip*
2. *Needle retaining plate*
3. *Screw*
4. *Needle*
5. *Nylon packing*

Make sure the nylon packing is installed on all applicable throttle slides.

CAUTION : Serious engine damage can occur if this notice is disregarded.

CARBURETOR ADJUSTMENTS

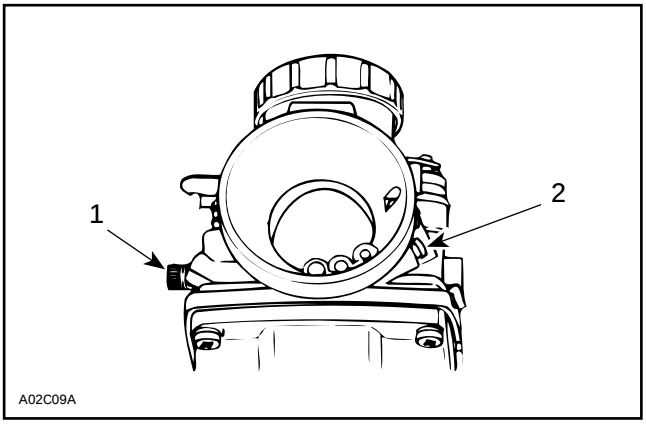

1. *Idle speed screw*
2. *Air screw*

6, Air Screw Adjustment

Completely close the air screw (until a slight seating resistance is felt) then back off as specified.

Turning screw clockwise enrichens mixture and conversely, turning it out counterclockwise leans mixture.

Refer to TECHNICAL DATA section 10 for the specifications.

Carburetor Synchronization

Both carburetor slides must start to open at the same time.

Completely unscrew idle speed screw on both carburetors.

Unlock cable adjustment lock nut then screw in adjuster until throttle slide bottoms out. Proceed the same for both carburetors.

Unscrew cable adjuster to eliminate all cable play but without raising throttle slide. Proceed with care on both carburetors then tighten jam nuts. Both carburetor slide must start to open at the same time, depress throttle lever to check it and turn cable adjuster as required.

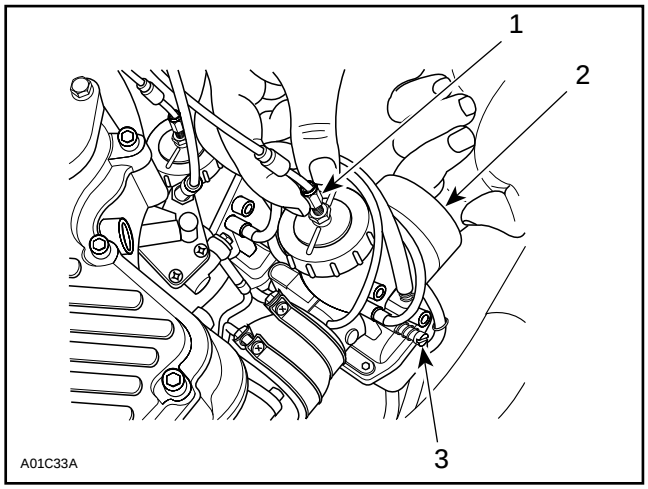

1. Screw in and out until no cable free play exists
2. Check that throttle slide does not move
3. Idle speed screw completely unscrewed

Check throttle slide position at wide open throttle. On liquid cooled models, throttle slide must be flush with carburetor outlet bore. On fan cooled models, throttle slide must be flush with carburetor inlet bore. At that same position, check that throttle slide does not contact carburetor cover. Turn cable adjuster and recheck synchronisation.

▼CAUTION : If the throttle slide rests against the carburetor cover at full throttle opening, this will create too much strain and may damage the throttle cable or other components in throttle mechanism.

Throttle Slide Adjustment

◆WARNING : Ensure the engine is turned OFF, prior to performing the throttle slide adjustment.

For maximum performance, correct carburetor throttle slide adjustment is critical.

The following method should be used with engine turned off :

– Idle speed screw must be completely unscrewed. It must not contact throttle slide.

Turn the idle speed screw clockwise until it contacts the throttle slide then continue turning 2 additional turns.

On twin carburetor models : Repeat on the other one. This will ensure identical throttle slide preliminary idle setting. Recheck carburetor synchronization. Adjust idle by turning both idle speed screws of the same amount.

▼CAUTION : On twin carburetor models, make sure both carburetors start to operate simultaneously. Beside do not interchange carburetors, the jetting may be different on each side. A red dot is printed on one carburetor and on the engine. Match the carburetor and the engine dots when applicable.

▼CAUTION : On oil injection models, the oil injection pump adjustment must be checked each time carburetor is adjusted. Refer to OIL INJECTION SYSTEM 04-04.

Throttle slide must be flush with the top of carburetor outlet bore.

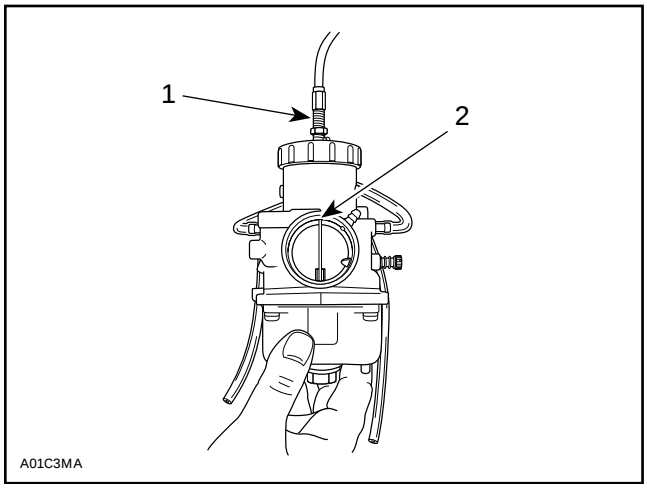

THROTTLE LEVER AGAINST HANDLE GRIP

1. Throttle cable adjuster
2. Throttle slide flush with carburetor outlet bore

Once carburetor adjustment is performed, check that with the throttle lever fully depressed, there is a free play between the carburetor cover and top of throttle slide.

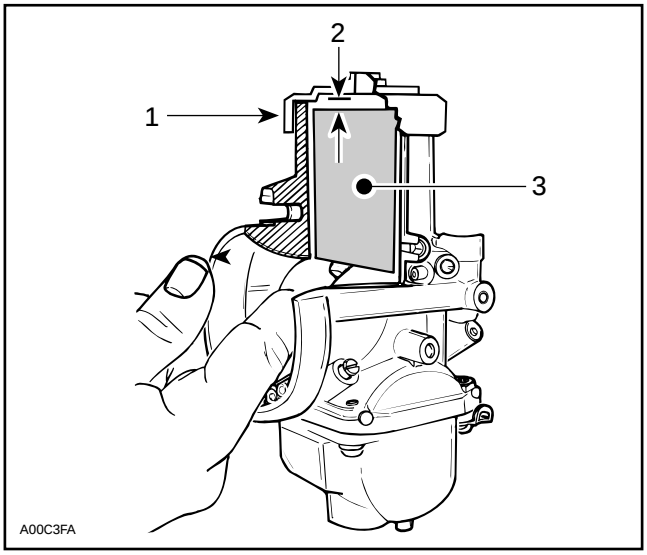

THROTTLE LEVER AGAINST HANDLE GRIP

1. *Cover*
2. *Free play*
3. *Throttle slide*

◆ WARNING : This gap is very important. If the throttle slide rests against the carburetor cover at full throttle opening, this will create too much strain and may damage the throttle cable or other components in throttle mechanism.

On twin-carburetor models : Recheck carburetor synchronization.

▼ CAUTION : On oil injection models, the oil in-jection pump adjustment must be checked each time carburetor is adjusted. Refer to OIL INJECTION SYSTEM 04-04.

PRELIMINARY IDLE SPEED ADJUSTMENT

Adjust throttle slide height (see table) by turning idle speed screw no. 7.

Final adjustment (engine running at idle speed) should be within 1/2 turn of idle speed screw from preliminary adjustment.

Models	Throttle Slide Height	
	± 0.1 mm	(± 0.004 in)
Grand Touring 580	1.5	(.059)
Formula STX / LT	1.6	(.063)
Grand Touring 500 Formula SLS	1.8	(.071)
Grand Touring SE	1.9	(.074)
Summit 500	2.0	(.078)
Mach 1	2.25	(.088)

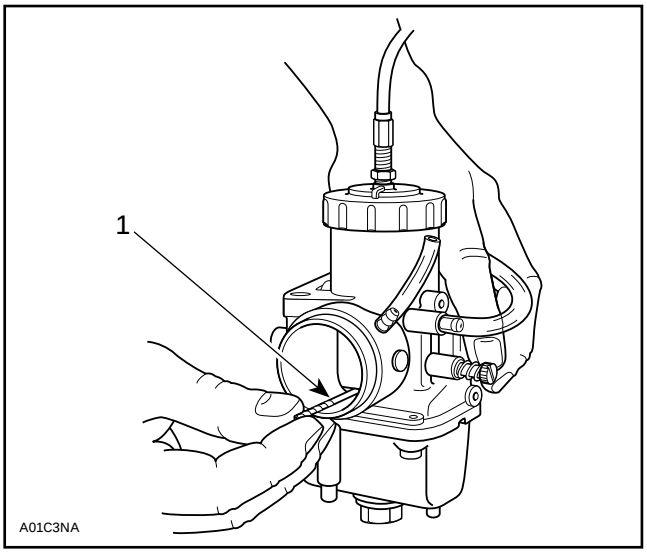

TYPICAL

1. *Drill bit used as gauge for throttle slide height*

IDLE SPEED FINAL ADJUSTMENT

7, Idle Speed Screw

Check idle speed screw straightness. Replace as necessary.

Start engine and allow it to warm then adjust idle speed to specifications by turning idle speed screw clockwise to increase engine speed or counterclockwise to decrease it.

NOTE : On twin-carburetor models : Turn adjustment screw the same amount to keep carburetors synchronized.

Refer to TECHNICAL DATA section 10 for the specifications.

CAUTION : Do not attempt to set the idle speed by using the air screw. Severe engine damage can occur.

HAC SYSTEM

Summit 500 Only

HAC (High Altitude Compensator) is a maintenance free device.

No adjustment and verification can be done on HAC.

If HAC is suspected to be faulty, replace it and check for improvement.

Hoses connected to HAC must not be altered in length or size. Check for kinked or loose hoses. Tighten or replace as necessary. See below illustrations for routing.

Nut holding T-fitting must be torqued to 6 N•m (53 lbf•in).

HAC SYSTEM

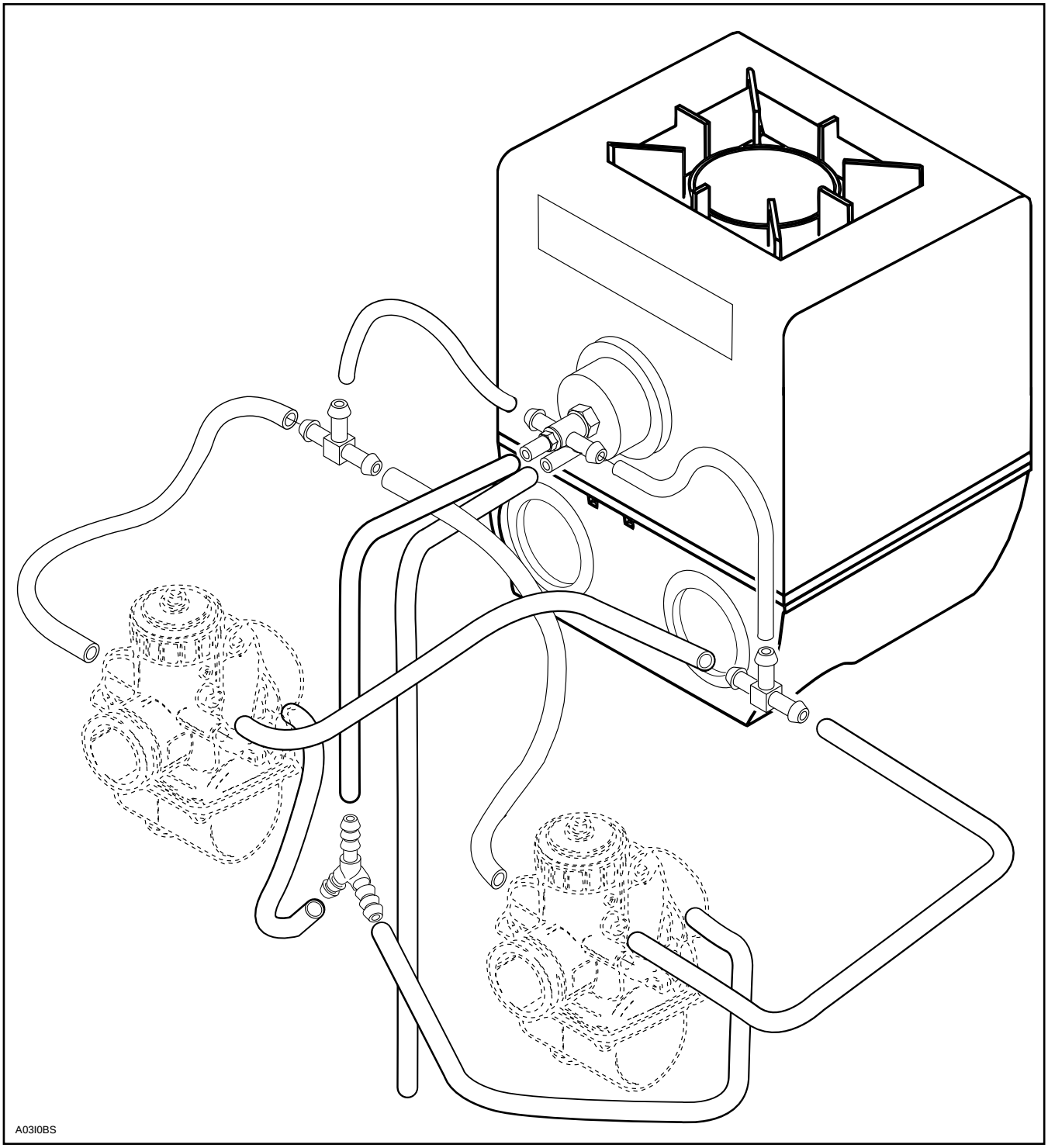

FUEL PUMP

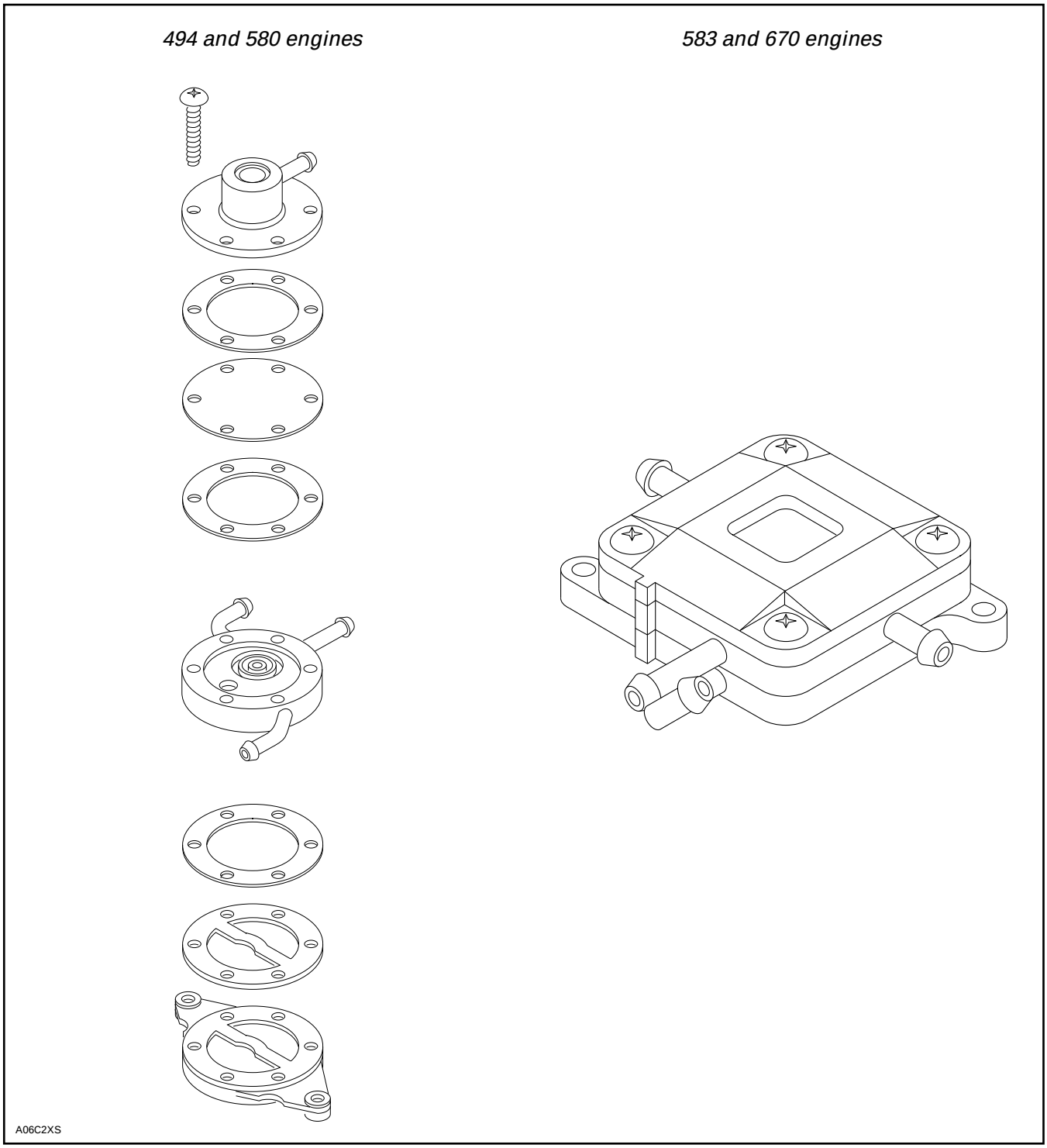

REMOVAL

Install a hose pincer (P / N 529 0099 00) on fuel supply line close to pump inlet.

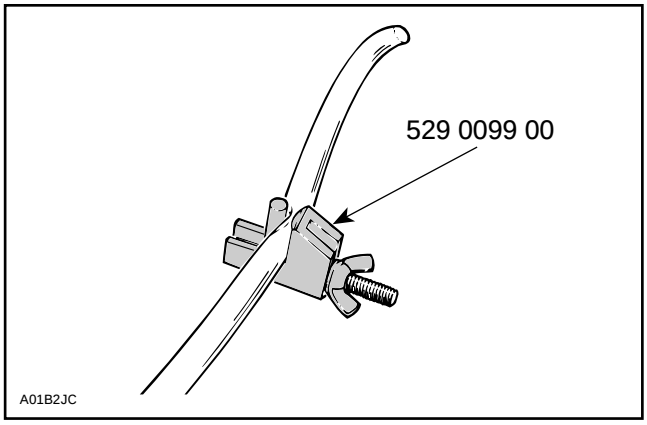

Disconnect fuel outlet line(s).

Disconnect impulse line.

Remove screws securing fuel pump.

PUMP VERIFICATION

Check fuel pump valves operation as follows :

Connect a clean plastic tubing to the inlet nipple and alternately apply pressure and vacuum with the mouth. The inlet valve should release with pressure and hold under vacuum.

Repeat the same procedure at the outlet nipple. This time the outlet valve should hold with pressure and release under vacuum.

NOTE : On model fitted with 2 outlets, plug 1 outlet with finger while checking outlet valve.

Check impulse diaphragm and gasket on high-supply fuel pump with twin outlets as follows :

Connect a clean plastic tubing to the impulse nipple and plug vent hole on top cover. Either apply pressure or vacuum. The diaphragm / gasket must not leak.

CLEANING AND INSPECTION

The entire pump should be cleaned with general purpose solvent before disassembly.

Fuel pump components should be cleaned in general purpose solvent and dried with compressed air.

WARNING : Solvent with a low flash point such as gasoline, naphtha, benzol, etc., should not be used as each is flammable and explosive.

Inspect diaphragm. The pumping area should be free of holes, tears or imperfections. Replace as needed.

High-supply pump with twin outlets : Thoroughly clean filter on top cover. Replace pump if too dirty.

INSTALLATION

To install, inverse removal procedure.

WARNING : Pressure test to ensure there is no leak in fuel system.

FUEL TANK AND THROTTLE CABLE

Fuel Tank Lines

◆ WARNING : When draining a fuel tank or whenever a fuel line is disconnected, obstruct line with a hose pincher (P / N 529 0099 00) or equivalent device. Fuel is flammable and explosive under certain conditions. Ensure work area is well ventilated. Do not smoke or allow open flames or sparks in the vicinity.

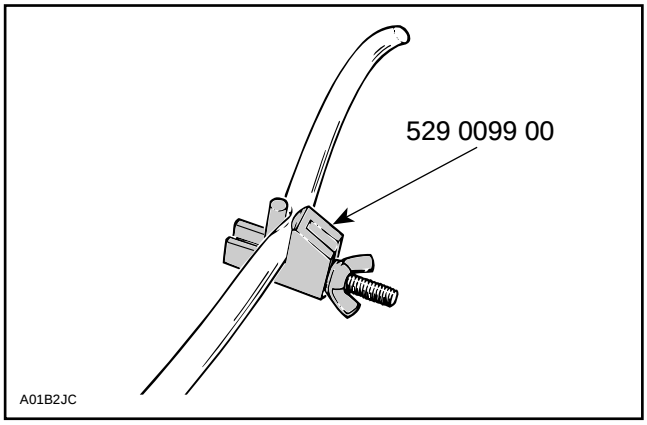

Impulse / Fuel Lines Spring Clips (all models)

Always reposition spring clips after any repair to prevent possible leaks.

Throttle Cable Circlip at Handlebar (all models)

Put silicone grease (P / N 413 7017 00) around cable barrel. Locate circlip as per illustration.

◆ WARNING : If this procedure is disregarded, throttle might be half-open at normally closed position and the engine will speed up when starting.

Models with Easy Action Throttle Lever

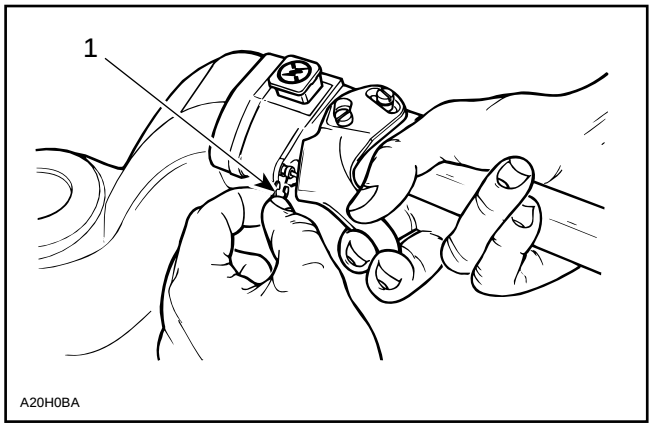

TYPICAL

1. *Circlip*

Other Models

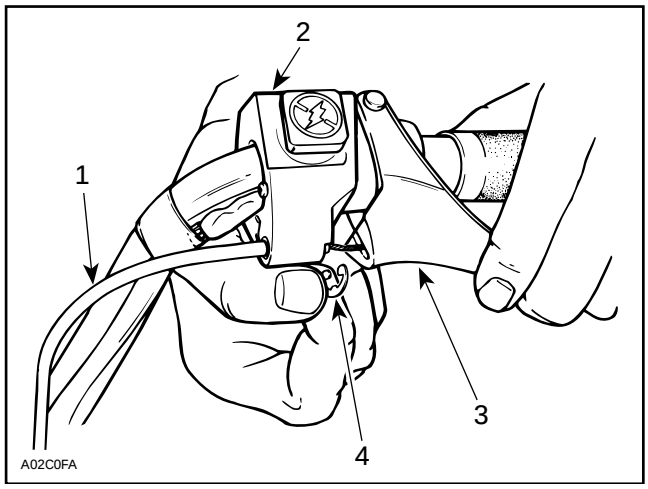

1. *Throttle cable housing*
2. *Throttle handle housing*
3. *Throttle handle*
4. *Circlip*

Throttle Cable O-ring and Retaining Ring at Carburetor (some models)

Locate O-ring outside of carburetor cover and retaining ring inside.

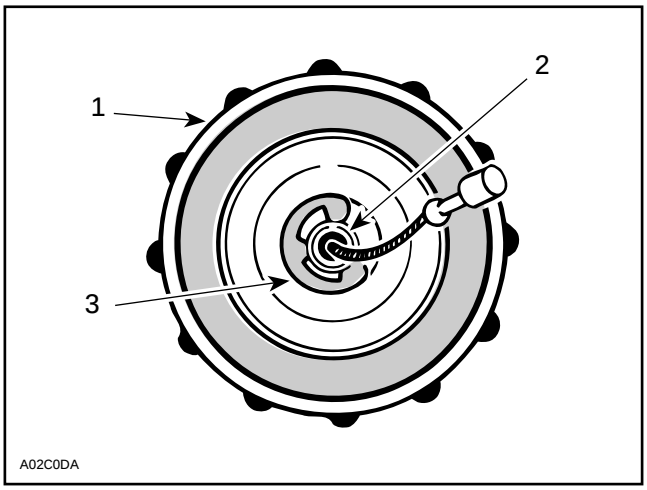

1. Carburetor cover
2. Throttle cable housing
3. Retaining ring

Adjust throttle cable as specified in CARBURETOR AND FUEL PUMP 04-08.

Throttle Cable Routing

▼CAUTION : Check that throttle cable is routed away from sharp, edges, hot or vibrating parts. When turning steering while engine is running, idle speed must not vary.

Fuel Level Sensor

INSPECTION

Visually inspect the condition of connectors and wiring throughout the circuit. Connections must be clean and tight, and wiring free of damage. Repair as necessary. Use silicone dielectric grease to prevent corrosion at the connectors. Operate the engine to see if the problem has been corrected. If not, remove fuel level sensor from fuel tank and check rod angle (100.7°), resistance at full position (3 ± 2 Ω) and resistance at empty position (110 ± 7 Ω).

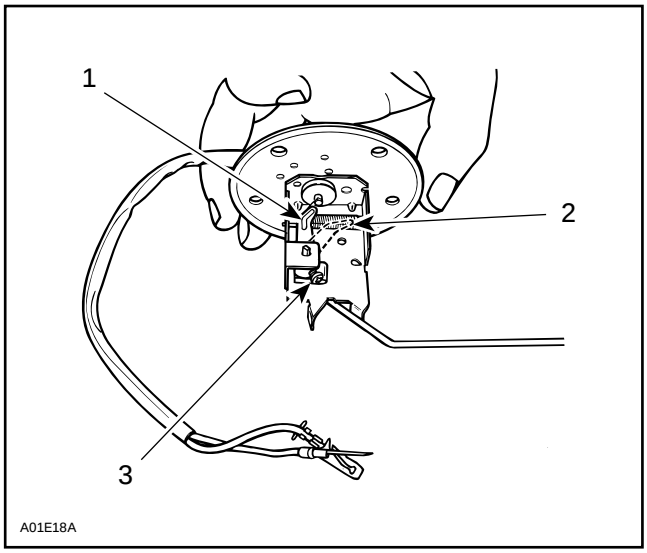

1. Full position (3 ± 2 Ω)
2. Empty position (110 ± 7 Ω)
3. Slacken to adjust

Fuel Level Sensor Screws (some models)

Torque fuel level sensor retaining screws to 1 N•m (8 lbf•in) in the sequence shown and then to 2.5 N•m (22 lbf•in), using the same sequence.

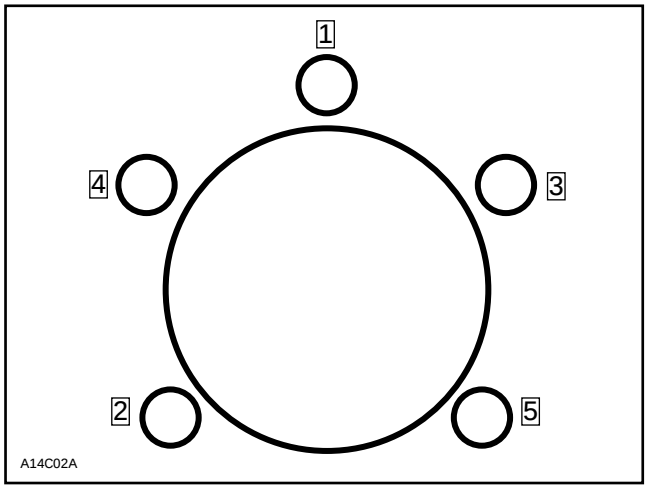

TABLE OF CONTENTS

DRIVE BELT **05-01-1**

1996 APPLICATION CHART **05-01-1**
ROTATION DIRECTION 05-01-1
DRIVE BELT DEFLECTION MEASUREMENT 05-01-1
DEFLECTION ADJUSTMENT 05-01-3

DRIVE PULLEY **05-02-1**

TRA **05-02-1**
S-SERIES AND F-SERIES *05-02-1*
GENERAL 05-02-2
REMOVAL 05-02-2
DISASSEMBLY 05-02-3
CLEANING 05-02-4
INSPECTION 05-02-4
ASSEMBLY 05-02-6
INSTALLATION 05-02-9
DRIVE PULLEY ADJUSTMENT 05-02-9

DRIVEN PULLEY **05-03-1**
S-SERIES AND F-SERIES *05-03-1*
REMOVAL 05-03-2
DISASSEMBLY 05-03-2
CLEANING 05-03-2
INSPECTION 05-03-2
ASSEMBLY 05-03-3
INSTALLATION 05-03-3
ADJUSTMENT 05-03-3

PULLEY DISTANCE AND ALIGNMENT **05-04-1**
GENERAL 05-04-1
GENERAL PROCEDURE 05-04-1
PULLEY ALIGNMENT AND DISTANCE SPECIFICATIONS CHART 05-04-2

BRAKE **05-05-1**
FORMULA SLS, GT 500 / 580, SUMMIT 500 AND FORMULA STX / STX LT *05-05-1*
GRAND TOURING SE AND MACH 1 ..... *05-05-2*
REMOVAL 05-05-3
DISASSEMBLY 05-05-4
CLEANING 05-05-4
INSPECTION 05-05-4
ASSEMBLY 05-05-4
INSTALLATION 05-05-5
ADJUSTMENT 05-05-6

CHAINCASE **05-06-1**
S-SERIES AND F-SERIES WITHOUT REVERSE GEAR *05-06-1*
REMOVAL 05-06-2
INSPECTION 05-06-2
GEAR RATIO MODIFICATION 05-06-2
INSTALLATION 05-06-2
DRIVE CHAIN ADJUSTMENT 05-06-3
ADJUSTMENT 05-06-4

GEARBOX **05-07-1**
2-SPEED GEARBOX **05-07-1**
GRAND TOURING 500 / 580 / SE *05-07-1*
DISASSEMBLY 05-07-2
INSPECTION 05-07-2
ASSEMBLY 05-07-3
ADJUSTMENT 05-07-4
OIL CHANGE 05-07-5

DRIVE CHAIN **05-08-1**
SILENT CHAIN 05-08-1

DRIVE BELT

1996 APPLICATION CHART

MODEL	PART NUMBER	WIDTH (NEW) ± 0.25 mm (.010 in)	MINIMUM WIDTH (WEAR LIMIT)
FORMULA SLS / STX / STX LT, SUMMIT 500 GRAND TOURING 500 / 580	414 8607 00	35 mm (1-3/8'')	32.5 mm (1-9/32'')
MACH 1 AND GRAND TOURING 670	414 9182 00	35.5 mm (1-25/64'')	33 mm (1-19/64'')

ROTATION DIRECTION

The maximum drive belt life span is obtained when the drive belt is installed as shown. This will ensure that correct direction of rotation is respected.

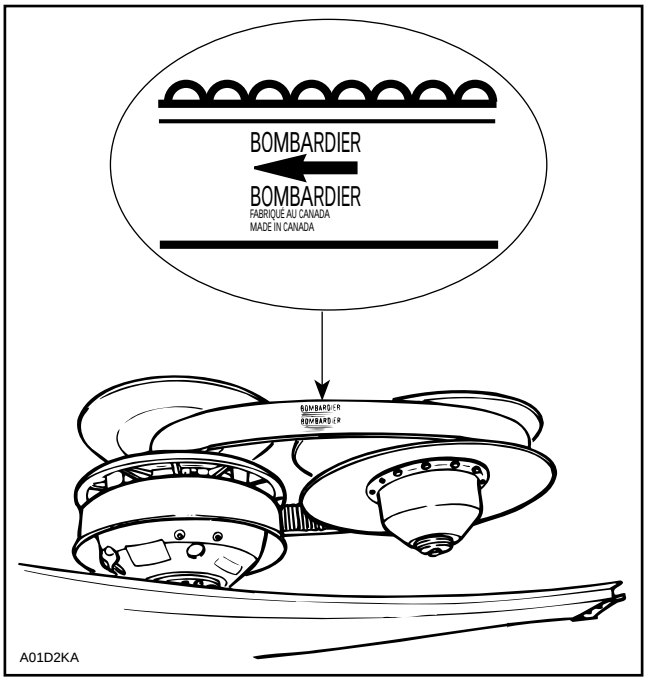

CORRECT

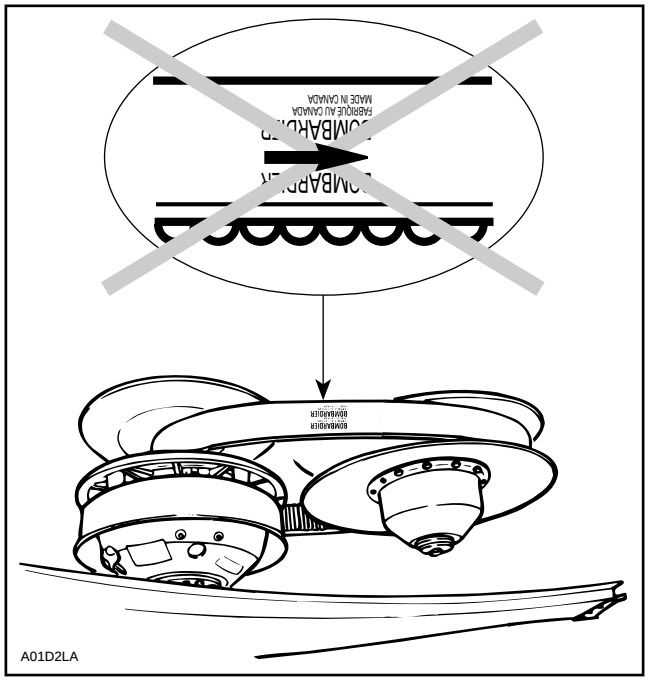

INCORRECT

NOTE : For used drive belt, mark and reinstall in the same position.

DRIVE BELT DEFLECTION MEASUREMENT

NOTE : The drive belt deflection measurement must be performed each time a new drive belt is installed.

NOTE : To obtain an accurate drive belt deflection measurement, it is suggested to allow a break-in period of 50 km (30 mi).

Before checking the belt deflection, ensure vehicle has the proper belt (Refer to the application chart).

Adjust pulley distance and alignment. Refer to 05-04 PULLEY DISTANCE AND ALIGNMENT.

To obtain maximum vehicle performance, the belt tension must be adjusted according to specifications shown in the accompanying chart.

MODEL	DEFLECTION mm (in)	FORCE kg (lb)	HEIGHT† OVER DRIVEN PULLEY
S and F Series	32 ± 5 (1-1/4 ± 13/64)	6.8 (15)	0 - 1.5 mm (0 - 1/16")

† *For reference only*

To Check Tension

Position a reference rule on drive belt.

Wooden Stick and Spring Scale Method :

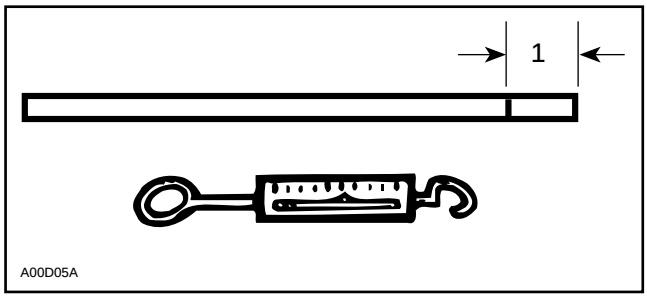

1. *Mark specified deflection*

Using spring scale and stick, apply specified force on drive belt halfway between pulleys as shown.

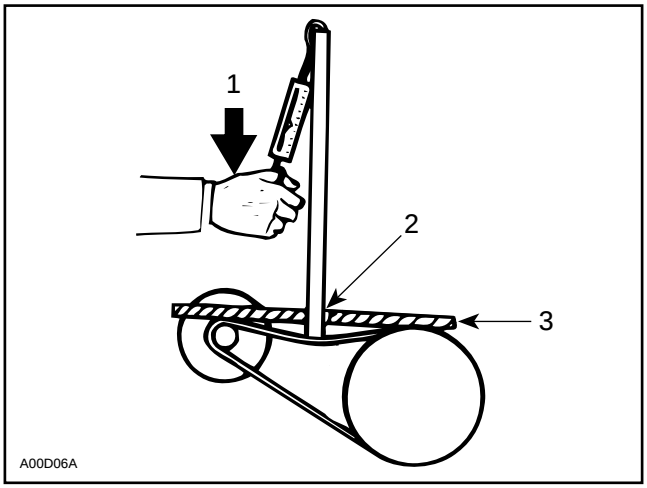

1. *Force*
2. *Read deflection here*
3. *Reference rule*

Or use the belt tension tester (P / N 414 3482 00).

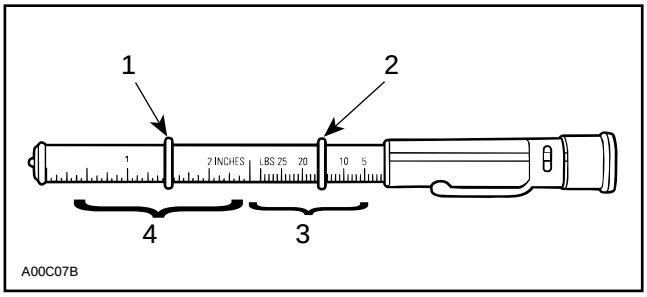

1. *Lower O-ring*
2. *Upper O-ring*
3. *Force (Read Down)*
4. *Deflection (Read Up)*

1. Slide lower O-ring of deflection scale to specified measure.
2. Slide upper O-ring to zero on the force scale.
3. Apply pressure until lower O-ring is flush with edge of rule and read force on the upper scale at top edge of O-ring.

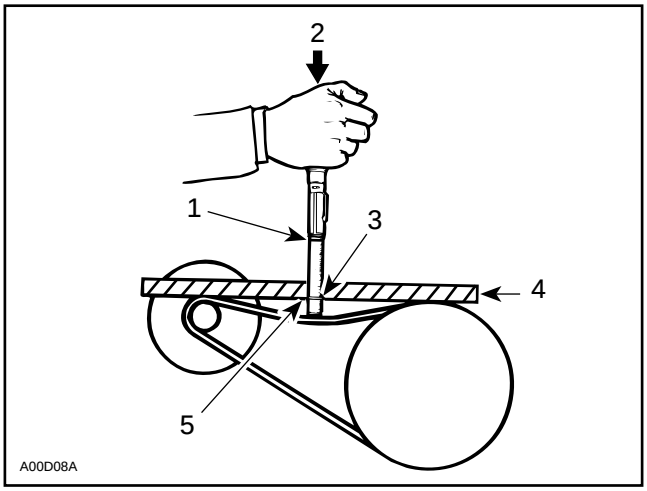

1. *Upper O-ring*
2. *Force*
3. *Deflection*
4. *Reference rule*
5. *Lower O-ring*

DEFLECTION ADJUSTMENT

All S-Series and F-Series

Adjust pulley distance according to specification, refer to PULLEY DISTANCE AND ALIGNMENT 05-04, then adjust drive belt deflection using Allen screw, as shown.

To increase deflection : turn Allen screws clockwise.

To decrease deflection : turn Allen screws counterclockwise.

NOTE : Turn Allen screws 1/4 turn at a time, then rotate driven pulley to allow drive belt to settle in pulley. Check deflection, repeat as required.

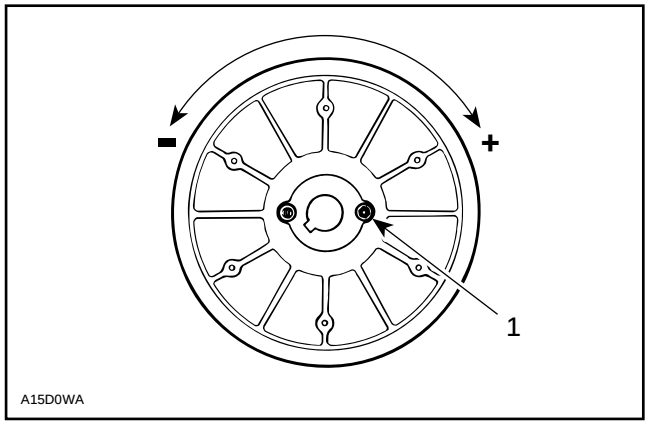

1. Allen screw with jam nut

Allen screws should be restrained while tightening jam nut to prevent throwing adjustment out. Use drive belt tension adjuster (P / N 529 0087 00).

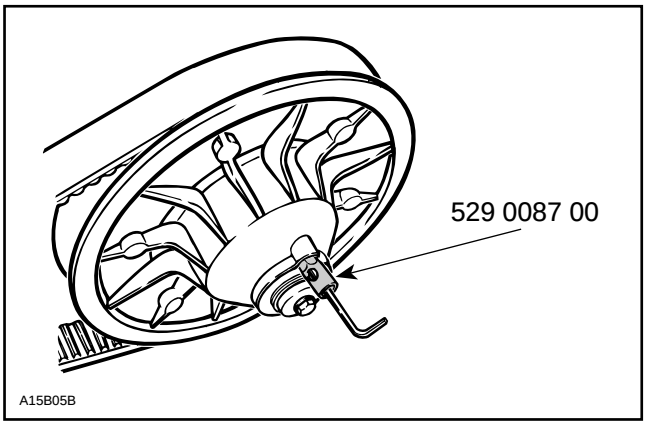

Restrain Allen screws with the wrench and tighten nut with the socket using socket handle provided in tool box.

NOTE : After belt deflection adjustment is performed, the height of the top of the drive belt over the driven pulley should be according to specifications (see table above). If not, check pulley distance and make sure proper belt is used.

DRIVE PULLEY

TRA

S-Series and F-Series

NOTE : This is a lubrication free drive pulley.

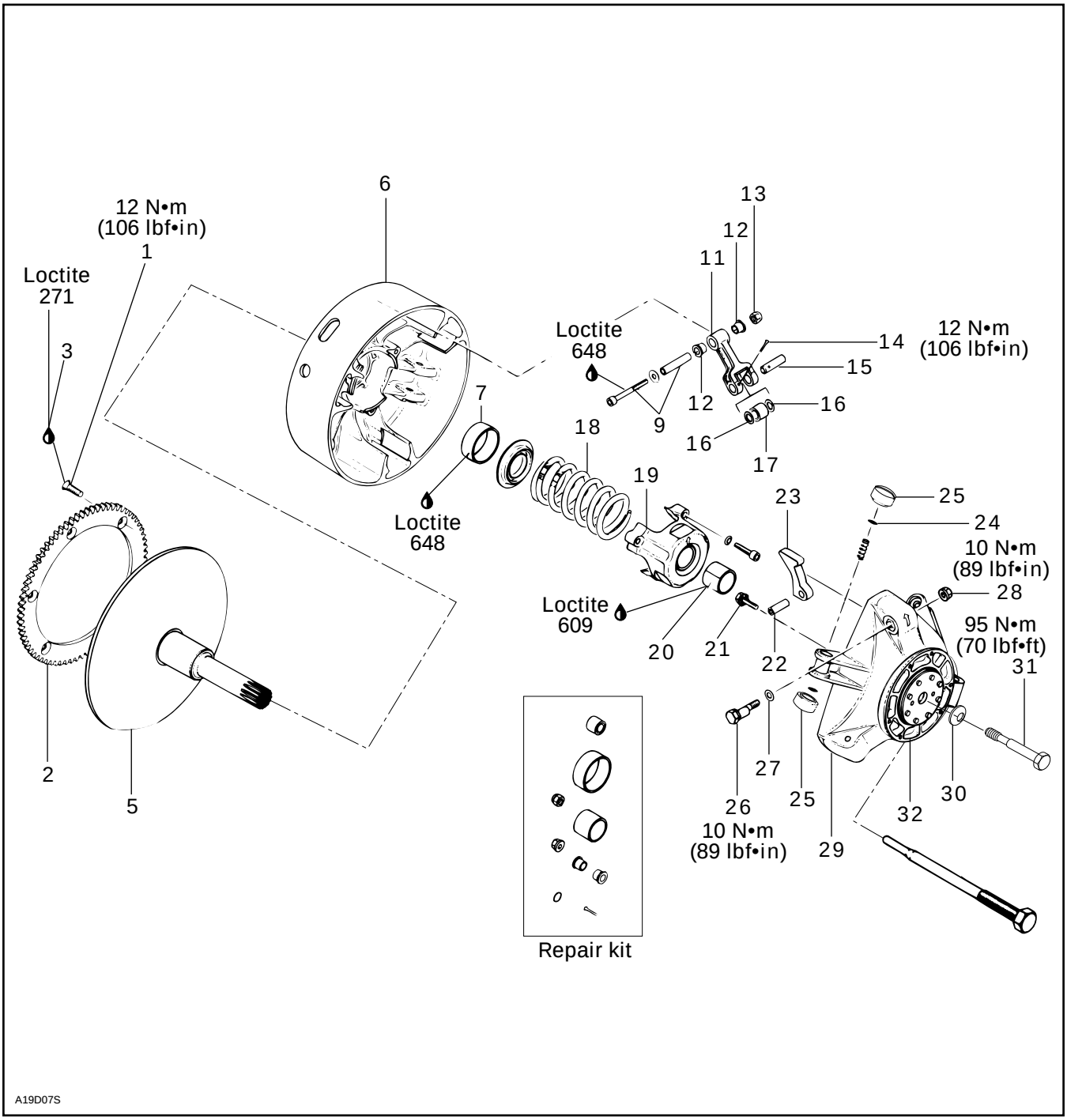

GENERAL

Some drive pulley components (return spring, ramp) can be changed to improve vehicle performance in high altitude regions. The *High Altitude Technical Data* booklet (P / N 484 0624 00 and 484 0545 00 for binder) gives information about calibration according to altitude.

CAUTION : Such modifications should only be performed by experienced mechanics since they can greatly affect vehicle performance. Verify spring specifications before installation. Do not only refer to the spring color code.

NOTE : TRA clutch stands for Total Range Adjustable clutch.

WARNING : Any drive pulley repairs must be performed by an authorized Bombardier snowmobile dealer, or other such qualified person. Sub-component installation and assembly tolerances require strict adherence to procedures detailed.

REMOVAL

30,31, Conical Spring Washer and Screw

Use clutch holder (P / N 529 0064 00).

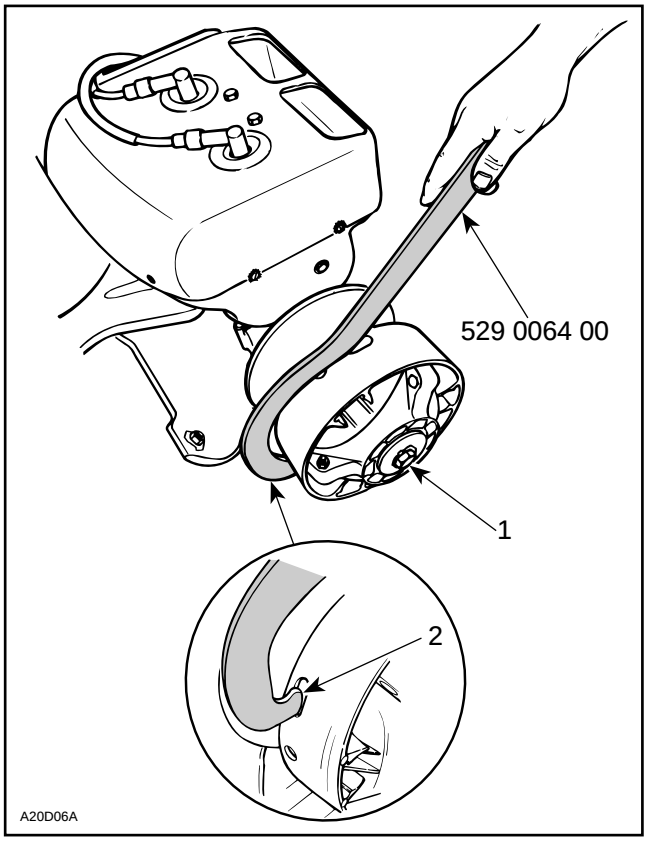

TYPICAL

1. *Retaining screw*
2. *Insert in any slot*

NOTE : Sliding half can be removed while fixed half remains on crankshaft.

WARNING : Never use any type of impact wrench at drive pulley removal and installation.

Remove retaining screw.

To remove drive pulley ass'y and / or fixed half from engine, use puller (P / N 529 0079 00) for 582 and 583 engines. Use puller (P / N 529 0224 00) for 454, 494 and 670 engines.

CAUTION : These pulleys have metric threads. Do not use imperial threads puller. Always tighten puller by hand to ensure that the drive pulley have the same type of threads (metric vs imperial) prior to fully tighten.

To Remove Drive Pulley Ass'y :

Retain drive pulley with clutch holder.

Install puller in pulley shaft then tighten.

DISASSEMBLY

1,2, Screw and Ring Gear

▼ CAUTION : Retaining screws must be heated before disassembly.

5,6, Fixed and Sliding Half

▼ CAUTION : Do not tap on governor cup.

Screw puller into fixed half shaft about 13 mm (1/2 in). Raise drive pulley and hold it by the sliding half while knocking on puller head to disengage fixed half.

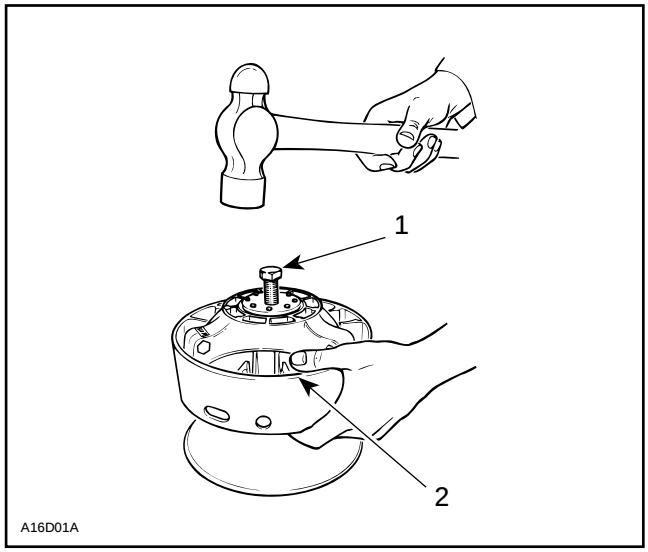

1. Puller
2. Holding sliding half

○ NOTE : No components marking is required before disassembling this drive pulley since it has factory mark and arrows as indexing reference.

25,29, Slider Shoe and Governor Cup

Carefully lift governor cup until slider shoes come at their highest position into guides.

Hold a slider shoe set then carefully lift its housing and remove them. Proceed the same way for other housings lifting one at a time.

32, Cushion Drive

▼ CAUTION : Do not disassemble cushion drive. Governor cup and cushion drive are factory balanced as an assembly.

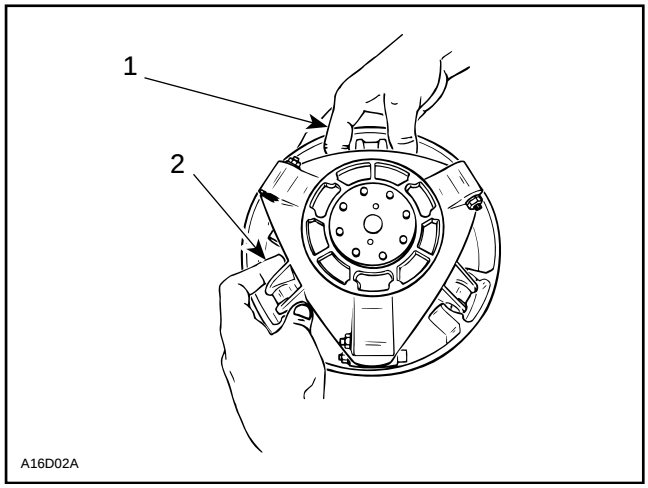

1. Hold slider shoes
2. Lift one housing at a time

○ NOTE : To ease disassembly, forks (P / N 529 0055 00) should be used to hold slider shoes prior to removing governor cup.

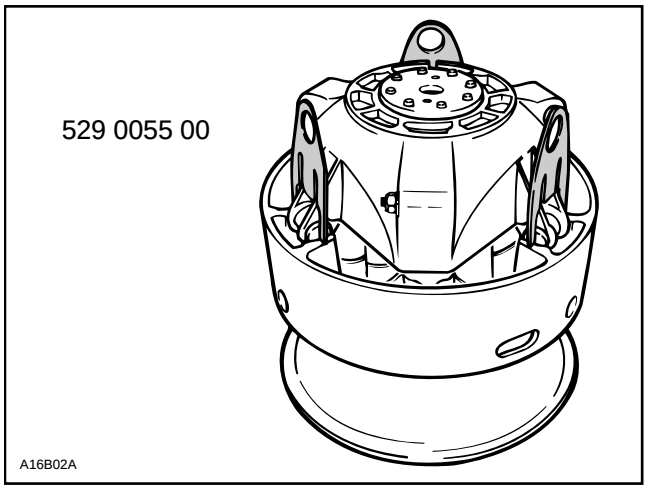

19, Spring Cover Ass'y

It is pushed by clutch spring pressure.

◆ WARNING : Clutch spring is very strong. Never attempt to remove spring cover without the recommended tools.

Use spring compressor (P / N 529 0151 00).

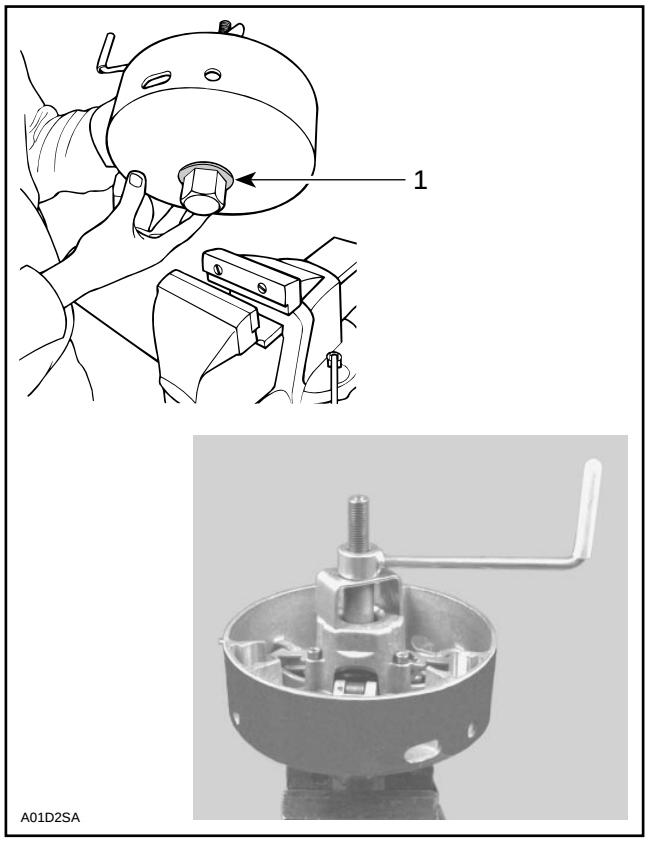

1. Washer must be here

Install tools as shown. Remove 3 Allen screws retaining spring cover then unscrew compressor.

CLEANING

5,6, Fixed and Sliding Half

Clean pulley faces and shaft with fine steel wool and dry cloth.

5, Fixed Half and Crankshaft End

Parts must be at room temperature before cleaning.

Using a paper towel with cleaning solvent (P / N 413 7082 00), clean crankshaft tapered end and the taper inside the fixed half of the drive pulley, crankshaft threads and retaining screw threads.

◆ WARNING : This procedure must be performed in a well ventilated area.

▼ CAUTION : Avoid contact between cleaner and crankshaft seal because damage may occur.

Remove all harden oil deposits that have baked on crankshaft and pulley tapered surfaces with coarse or medium steel wool and / or sand paper no. 600.

▼ CAUTION : Do not use any other type of abrasive.

Reclean mounting surfaces with paper towel and cleaning solvent (P / N 413 7082 00).

Wipe off the mounting surfaces with a clean, dry paper towel.

▼ CAUTION : Mounting surfaces must be free of any oil, cleaner or towel residue.

7,20, Bushing

Only use petrol base cleaner when cleaning bushings.

▼ CAUTION : Do not use acetone to clean bushing.

INSPECTION

Drive pulley should be inspected annually.

16,17, Thrust Washer and Roller

Check roller for roundness of external diameter. Check thrust washer for thickness wear. Replace as required.

▼ CAUTION : Ensure rollers are in good condition. Replace as required.

9,12, Fitting Bolt Ass'y and Flanged Bushing

Check for wear, replace as required. When installing old style flanged bushing (made of black plastic), use a size "O" (letter) drill bit to ream inside diameter.

24,25, O-ring and Slider Shoe

Check if O-rings are cracked, cut or crushed. Replace as required.

Check slider shoes for wear. Replace if groove is not apparent on top.

5,29, Fixed Half and Governor Cup

Inspect splines and free play between both parts. Maximum free-play is 0.5 mm (.020 in) measured at calibration screw radius. Replace if required.

7,20, Sliding Half and Spring Cover Kahrlon Bushing

Visually inspect kahrlon coating. Replace if worn.

Sliding Half Bushing Replacement

Use a suitable pusher to remove the old bushing. Clean sliding half with ethyl alcohol.

▼ CAUTION : Bushing must be bonded with retaining compound (P / N 413 7031 00) then flared to prevent displacement in sliding half.

To flare bushing, use spring compressor (P / N 529 0151 00) and appropriate flare tools.

FLARE TOOL	STAMPED LETTER	P / N
INTERIOR	C	529 0184 00
EXTERIOR	C	529 0185 00

Apply retaining compound (P / N 413 7031 00) outside of bushing then insert into its housing making sure there is the same distance both sides.

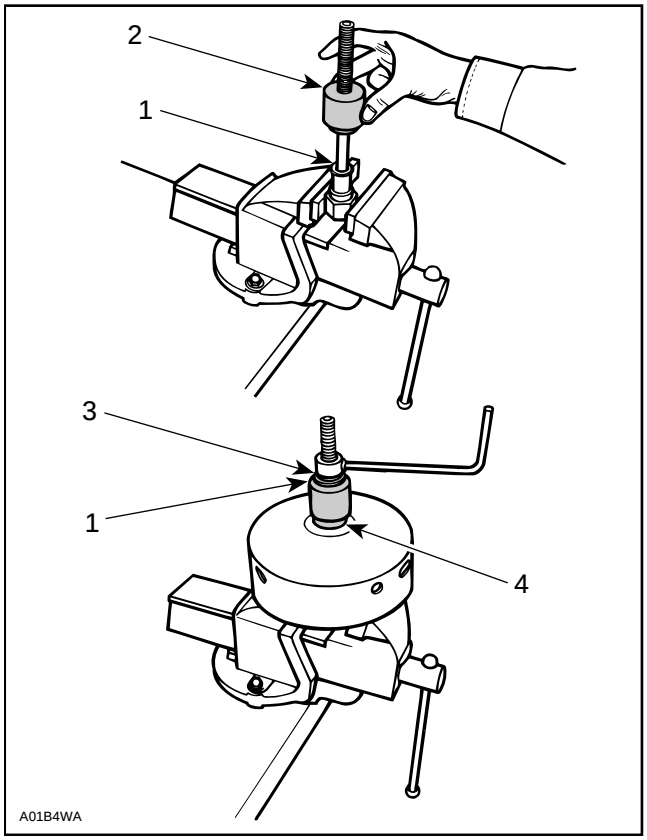

1. Washer
2. Flat surface
3. Flaring side
4. Bushing

Then flare bushing.

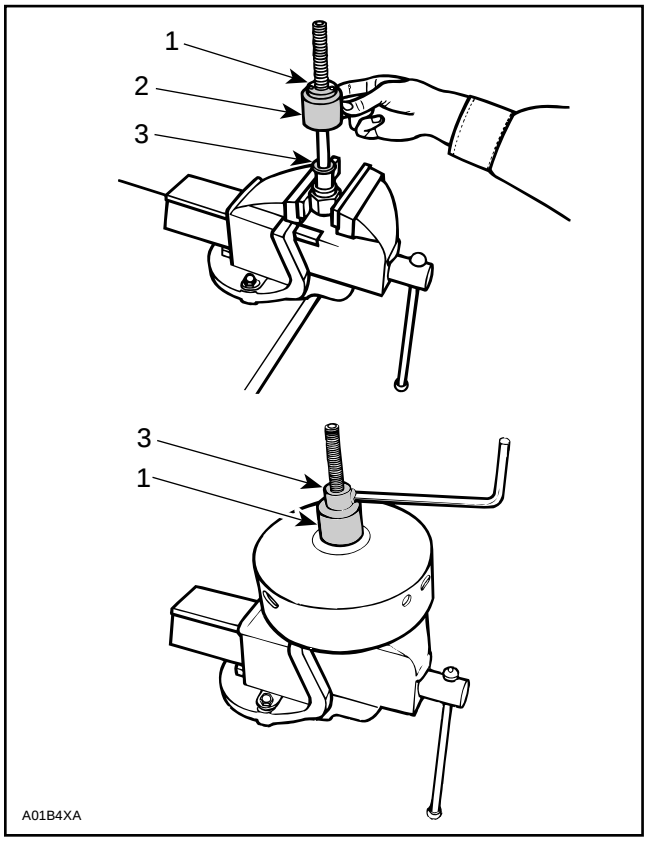

1. Flaring side
2. Tool with holes
3. Washer

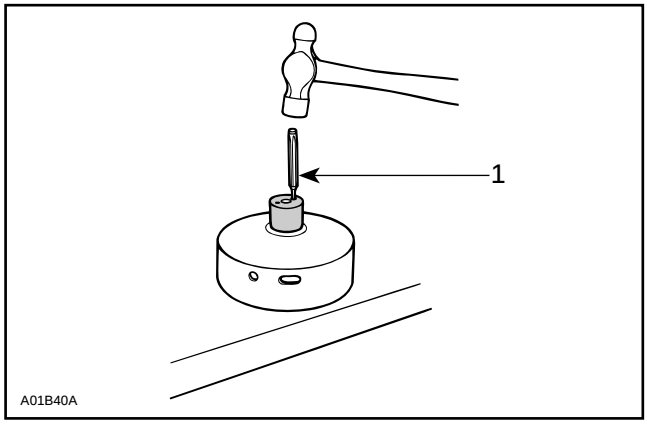

TOOL REMOVAL

1. Strike in holes alternately

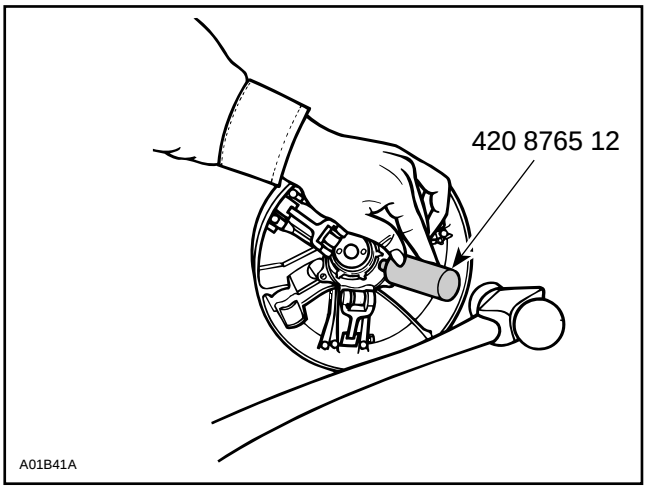

TOOL REMOVAL

CAUTION : Do not install sliding half on a vise to remove remaining tool.

Spring Cover Bushing Replacement

Under normal use there is no need to replace this bushing.

Use a pusher to remove old bushing.

When the pusher is available, it will be announced in a service bulletin.

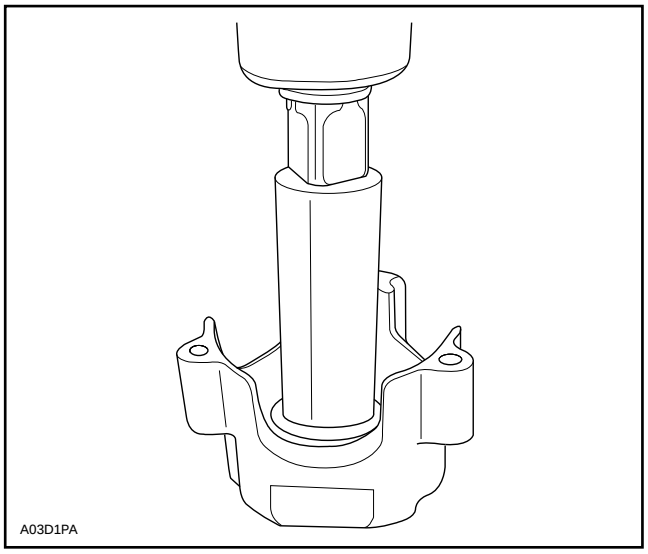

CAUTION : Bushing must be bonded with retaining compound.

Apply retaining compound outside of bushing then press it down to counterbore from governor cup side. Use spring compressor (P / N 529 0151 00) and appropriate flare tools.

CAUTION : Insert bushing from governor cup side (exterior) of spring cover.

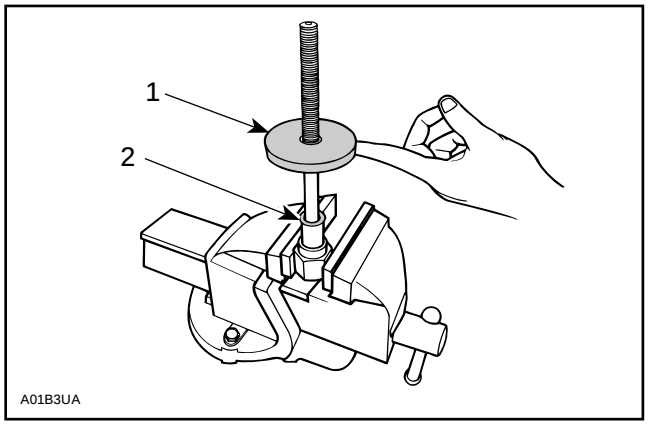

1. Flat surface
2. Washer

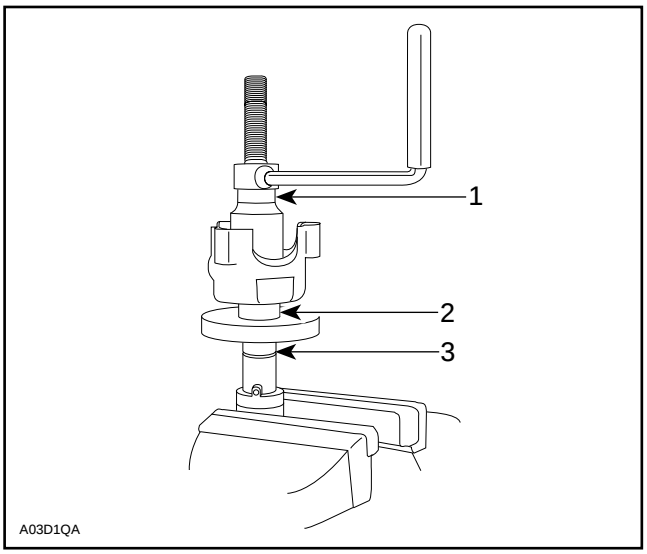

1. Flaring side
2. Bushing
3. Washer

ASSEMBLY

NOTE : This drive pulley is lubrication free. Do not lubricate any component.

1,2,3, Screw, Ring Gear and Loctite 271

Apply Loctite 271 (P / N 413 7029 00) on threads and under head then torque to 15 N•m (33 lbf•in).

26,27,28, Calibration Screw, Washer and Locking Nut

When installing calibration screw, make sure to install washer as shown.

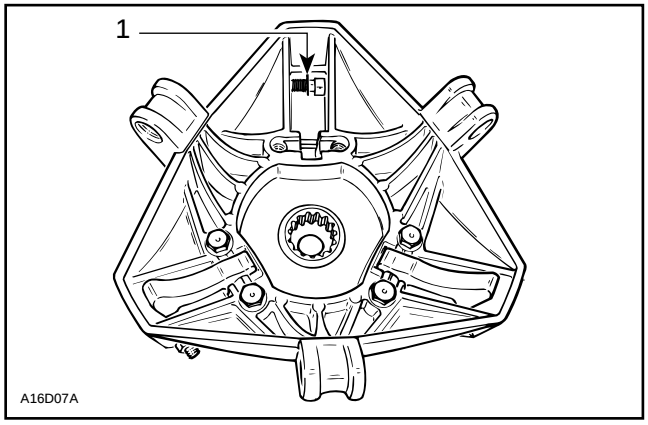

1. Washer

Torque locking nut to 10 N•m (89 lbf•in)

15, Pin

Always use the same type of pin as originally installed when servicing. Different types have different weights for calibration purpose. Refer to TECHNICAL DATA 10.

21,22,23, Ramp, Dowel Tube and Screw

Insert dowel tube from chamfered side. Make sure ramp is centered on dowel tube.

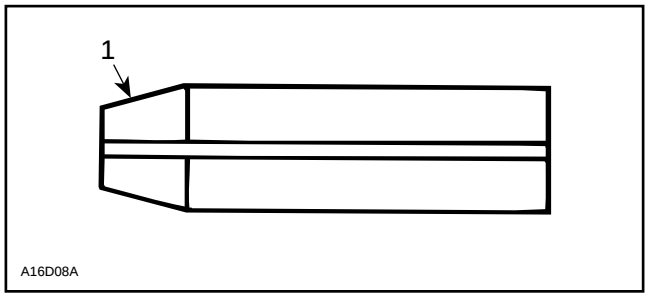

1. Chamfer side

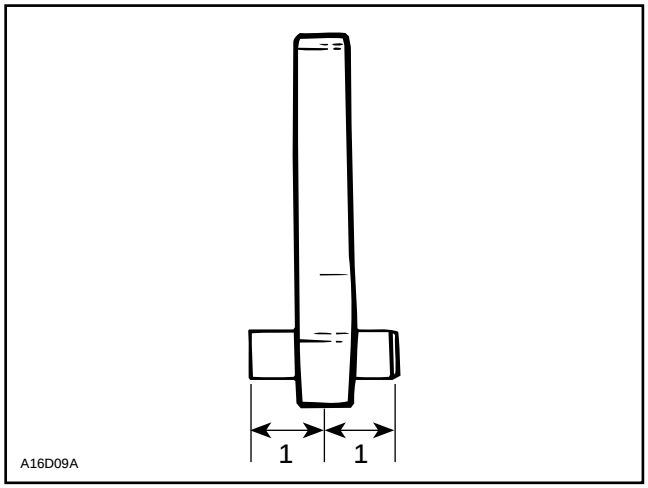

1. Equal distance

CAUTION : Dowel tube split must be installed against screw head or nut to block properly and prevent from turning.

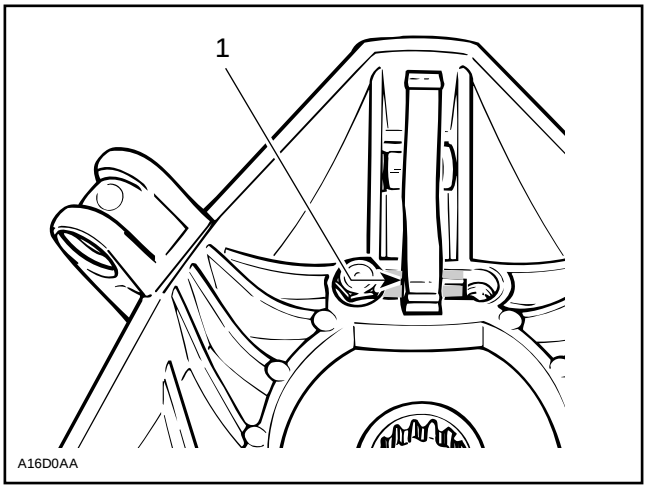

TYPICAL
1. Split against screw head

Torque screws to 10 N•m (89 lbf•in).

9,11,13,14, Screw, Lever Ass'y, Nut and Cotter Pin

Always install lever assemblies so that cotter pins are at the shown side. Besides install cotter pin head on top when lever is sat at bottom of sliding half. Bend cotter pin ends to sit perfectly against lever.

WARNING : Whenever replacing centrifugal levers, always replace all 3 at the same time. Otherwise, clutch misbalancing will occur because of levers difference.

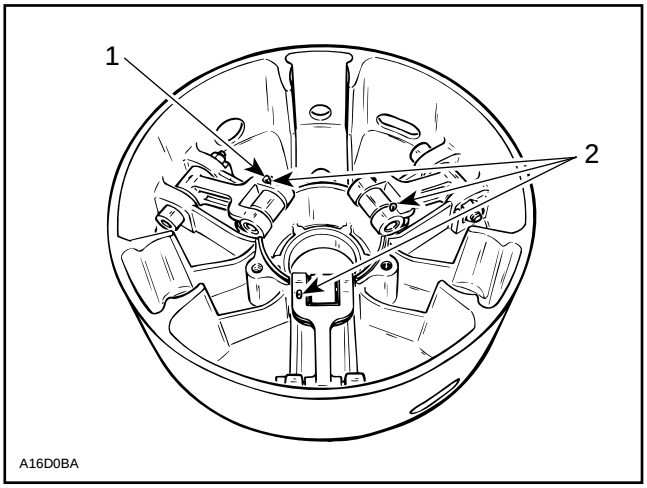

1. Head on top
2. All on the same side

CAUTION : Lever assemblies must be installed so that cotter pins are on the same side.

Torque nuts to 12 N•m (106 lbf•in).

CAUTION : Lever ass'y and rollers must move easily after installation.

5,6,18,19, Fixed Half, Sliding Half, Spring, Spring Cover and Screw

To install spring cover, use spring compressor (P / N 529 0151 00).

Assemble fixed and sliding halves. Note that fixed halves have different cone angle. Match cone angle with crankshaft.

Lift sliding half against spring cover and align spring cover arrow with sliding half mark.

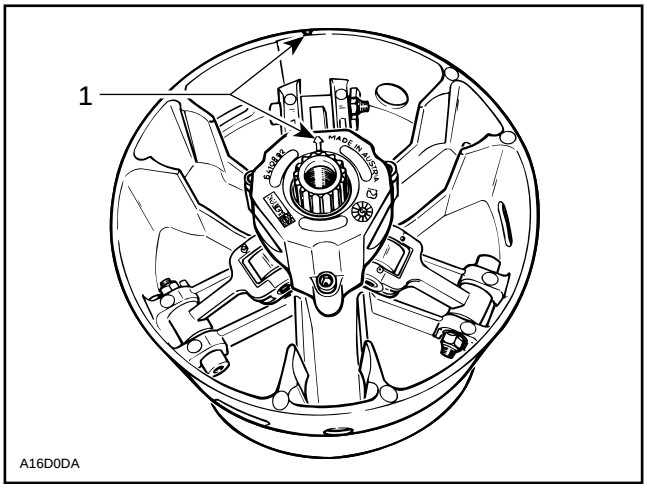

1. Align

Install and torque screws to 10 N•m (89 lbf•in).

6,25,29, Sliding Half, Slider Shoe and Governor Cup

To install governor cup, use following tool :

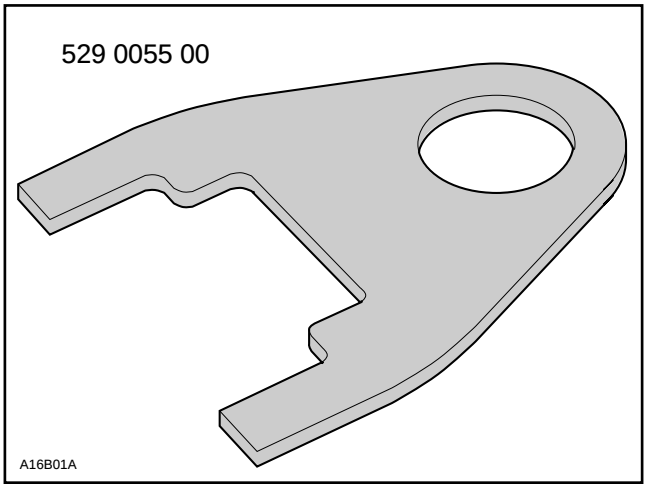

Insert spring and slider shoes into governor cup so that groove in each slider shoe is vertical to properly slide in guides.

▼ CAUTION : Make sure O-rings are installed on slider shoes and their grooves are positioned vertically.

Install fork (P / N 529 0055 00) into slider shoe grooves to maintain them for governor cup installation. Proceed on 3 set of slider shoes.

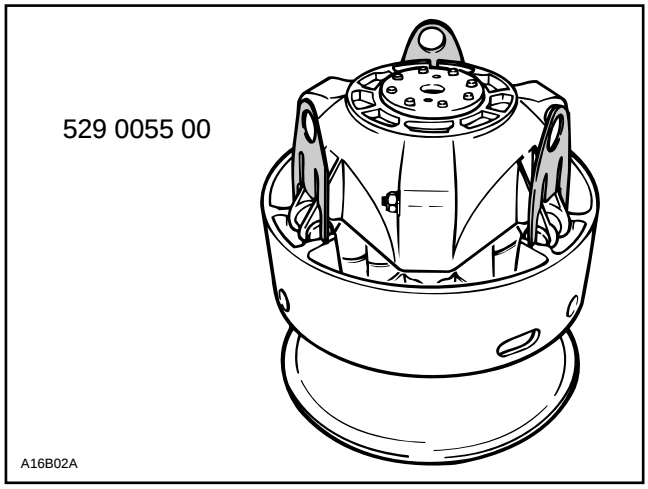

Make sure to align governor cup arrow with sliding half and fixed half mark.

○ NOTE : If fixed half has no mark, align governor cup mark with segment no. 1 of inner half. Segments are identified on engine side.

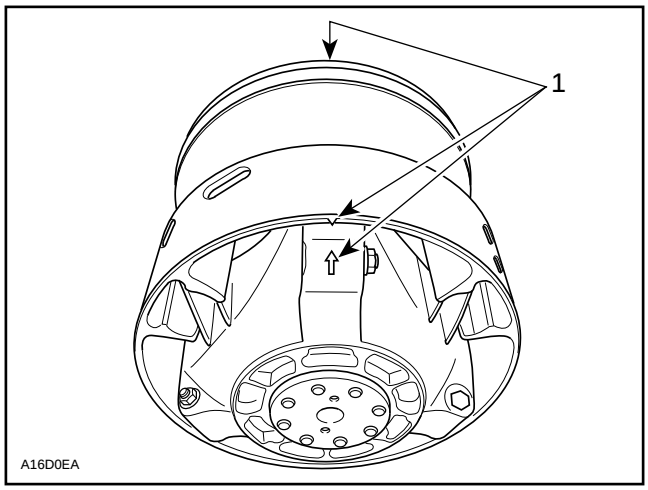

1. Align

Carefully slide governor cup into sliding half. Align mark of governor cup with mark of fixed half.

Remove forks and push governor cup so that its splines engage with fixed half shaft splines.

▼ CAUTION : Make sure splines of both parts are fully engaged.

INSTALLATION

◆ WARNING : Do not apply anti-seize or any lubricant on crankshaft and drive pulley tapers.

◆ WARNING : Never use any type of impact wrench at drive pulley removal and installation.

Clean mounting surfaces as described in CLEANING above.

Drive Pulley Ass'y

The installation procedure must be strictly adhered to as follows.

Lock crankshaft in position as explained in removal procedure.

Install drive pulley on crankshaft extension.

Install conical washer with its concave side towards drive pulley then install screw.

◆ WARNING : Never substitute lock washer and / or screw with jobber ones. Always use Bombardier genuine parts for this particular case.

Torque screw to 80 to 100 N•m (59 to 74 lbf•ft).

Install drive belt and belt guard.

Raise and block the rear of the vehicle and support it with a mechanical stand.

◆ WARNING : Ensure that the track is free of particles which could be thrown out while track is rotating. Keep hands, tools, feet and clothing clear of track. Ensure nobody is standing near the vehicle.

Accelerate the vehicle at intermediate speed and apply the brake, repeat 5 times.

Retorque to 90 to 100 N•m (66 to 74 lbf•ft).

◆ WARNING : After 10 hours of operation the transmission system of the vehicle must be inspected to ensure the retaining screw is properly torqued.

DRIVE PULLEY ADJUSTMENT

The drive pulley is factory calibrated to transmit maximum engine power at a predefined RPM. Factors such as ambient temperature, altitude or surface condition may vary this critical engine RPM thus affecting snowmobile efficiency.

This adjustable drive pulley allows setting maximum engine RPM in the vehicle to maintain maximum power.

Calibration screws should be adjusted so that actual maximum engine RPM in vehicle matches with the maximum horsepower RPM given in TECHNICAL DATA 10.

○ NOTE : Use precision digital tachometer for engine RPM adjustment.

○ NOTE : The adjustment has an effect on high RPM only.

To adjust, modify ramp end position by turning calibration screws.

26,28,29, Calibration Screw, Locking Nut and Governor Cup

Calibration screw has a notch on top of its head.

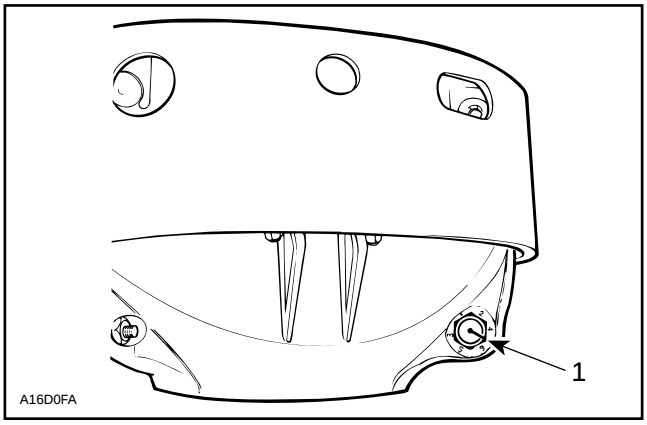

1. Notch

Governor cup has 6 positions numbered 2 to 6. Note that in position 1 the number is substituted by a dot (due to its location on casting).

See TECHNICAL DATA 10 for original setting.

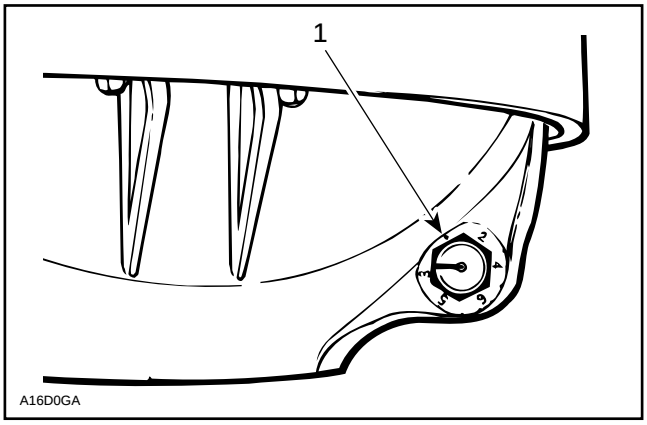

1. Position 1 (not numbered)

Each number modifies maximum engine RPM by about 200 RPM.

Lower numbers decrease engine RPM in steps of 200 RPM and higher numbers increase it in steps of 200 RPM.

Example :

Calibration screw is set at position 4 and is changed to position 6. So maximum engine RPM is increased of 400 RPM.

To Adjust :

Just loosen locking nut enough to pull calibration screw partially out and adjust to desired position. Do not completely remove the locking nut. Torque locking nuts to 10 N•m (89 lbf•in).

▼ CAUTION : Do not completely remove calibration screw or its inside washer will fall off.

▼ CAUTION : Always adjust all 3 calibration screws and make sure they are all set at the same number.

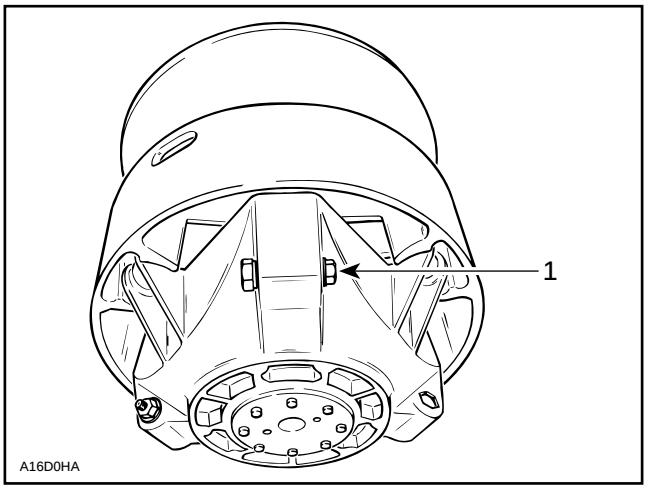

1. Loosen just enough to permit rotating of calibrate screw

DRIVEN PULLEY

S-Series and F-Series

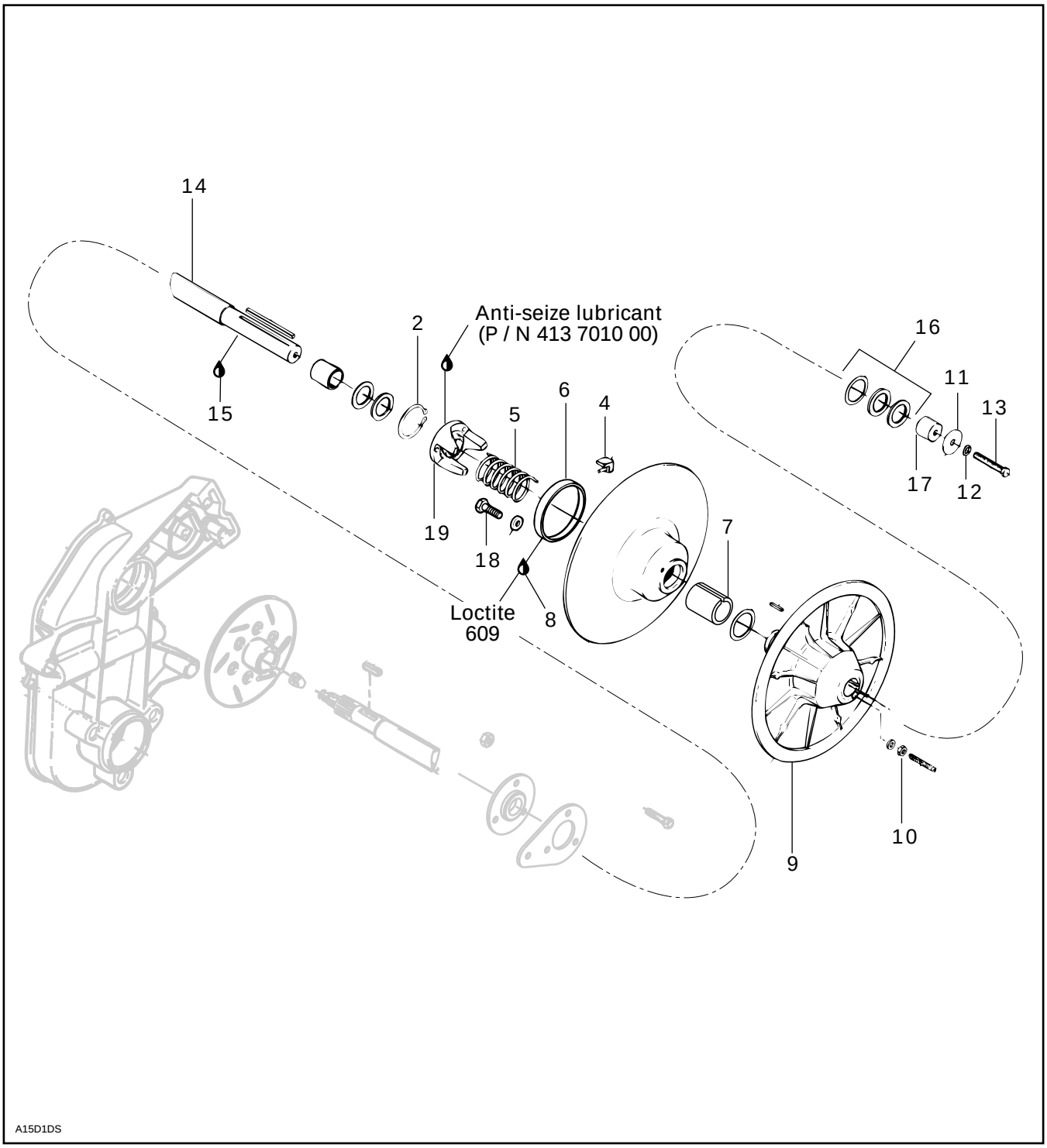

REMOVAL

Belt Guard and Drive Belt

Remove from vehicle.

11,12,13,16,17, Washer, Lock Washer, Screw, Shim and Extension

Remove the cap screw, pull the driven pulley from the countershaft.

14, Countershaft

Should removal be required, refer to BRAKE 05-05 then look for Countershaft and Brake Disc Removal.

DISASSEMBLY

2, Snap Ring

Use spring compressor (P / N 529 0151 00).

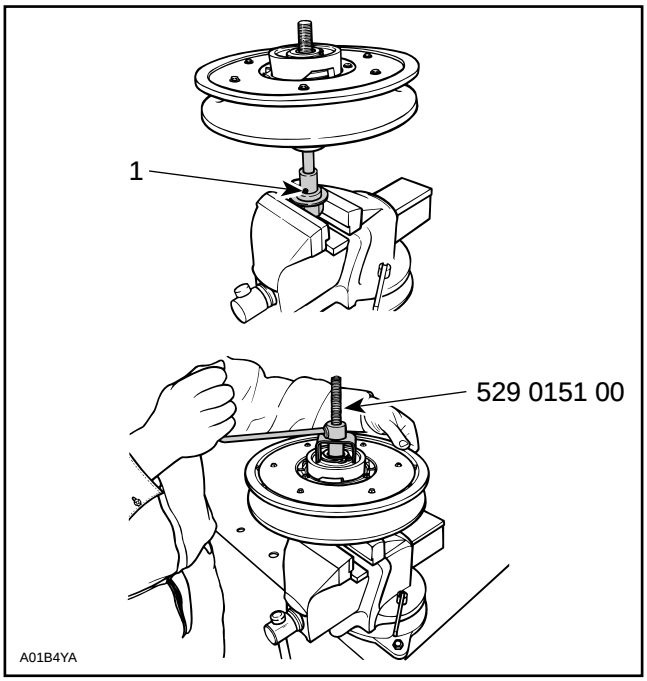

TYPICAL

1. Insert this pin in keyway

Remove snap ring to disassemble the outer cam and the 2 pulley halves.

◆ WARNING : Driven pulley cam is spring loaded, use above mentioned tool.

CLEANING

6,7, Large Bushing and Small Bushing

During break-in period (about 10 hours of use), teflon from bushing moves to cam or shaft surface. A teflon over teflon running condition occurs, leading to low friction. So it is normal to see gray teflon deposit on cam or shaft. Do not remove that deposit, it is not dust.

When a dust deposit has to be removed from the cam or the shaft, use dry cloth to avoid removing transferred teflon.

INSPECTION

6,7, Bushings

Check for cracks, scratch and for free movement when assembled to fixed half.

Using a dial bore gauge measure bushing diameter. Measuring point must be at least 5 mm (1/4 in) from bushing edge.

Replace bushing(s) if worn more than specified.

DRIVEN PULLEY BUSHING WEAR LIMIT mm (in)	
Small bushing	38.30 (1.299)
Large bushing	89.15 (3.510)

4, Slider Shoe

Check cam slider shoes for wear. Replace when inside edge of cam slider shoe slope base is worn to 1 mm (.039 in) or less.

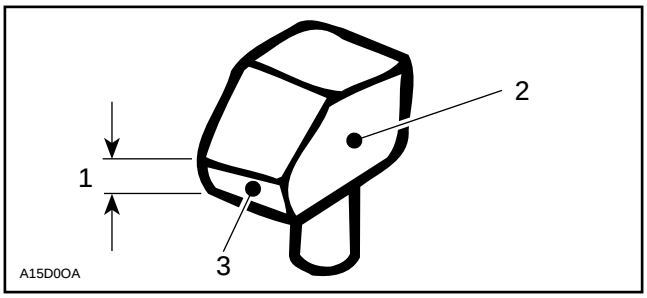

1. *Measure thickness of slope base here*
2. *Sliding pulley side*
3. *Slope base*

ASSEMBLY

4, Cam Slider Shoe

When replacing slider shoes, always install a new set (3 shoes) to maintain equal pressure on the cam.

Assemble driven pulley components by reversing the disassembly procedure.

18, Cam

Coat cam interior with antiseize lubricant.

INSTALLATION

14,15, Countershaft and Anti-seize Lubricant

▼CAUTION : Always apply antiseize lubricant P / N 413 7010 00) on the countershaft before final pulley installation.

F-Series and S-Series only

Should installation procedure be required, refer to BRAKE 05-05 then look for Brake Disc and Countershaft Bearing Adjustment.

Reinstall the pulley on the countershaft by reversing the removal procedure.

All models

Check end play of driven pulley on countershaft by pushing pulley towards outer housing so that the inner shims (P / N 504 1082 00) contact it. Measure end play at the mounting screw end between shim(s) and pulley. See illustration.

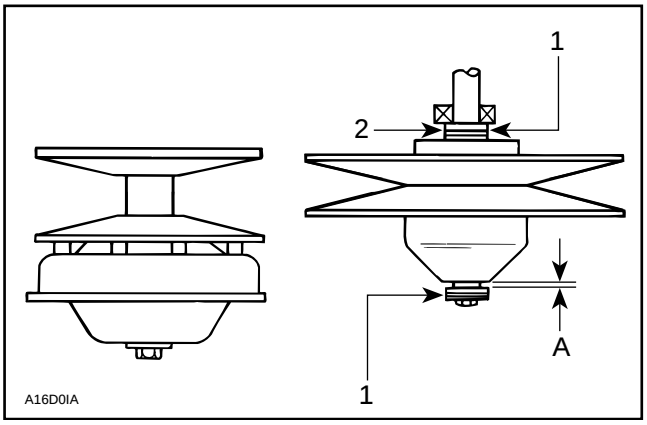

TYPICAL

1. *Shim (P / N 504 1082 00) (as required)*
2. *Contact*

A. 0 to 1 mm (0 to 3/64 in)

13, Pulley Retaining Screw

Torque to 25 N•m (18 lbf•ft).

ADJUSTMENT

Refer to PULLEY DISTANCE AND ALIGNMENT 05-04 to adjust pulley distance. Adjust drive belt height between pulley halves to obtain specified belt deflection.

5, Spring

Spring Torsional Pre-Load

To check spring pre-load adjustment, use spring scale hook (P / N 529 0065 00) and a spring scale.

Remove drive belt.

Install the hook on the sliding half. Preventing fixed half from turning, pull sliding half with the spring scale perpendiculary with pulley axle.

Take a measurement when opening driven pulley and another one when driven pulley begins to close after a rotation of 10 mm (3/8 in). Spring pre-load is the average measurement between these 2.

$$\frac{\text{1st measurement (when opening)} + \text{2nd measurement (when closing)}}{2} = \text{Spring pre-load}$$

$$\text{Example : } \frac{\text{3.8 kg (8.4 lb) (when opening)} + \text{3.4 kg (7.9 lb) (when closing)}}{2} = \text{3.6 kg (8 lb) Actual spring pre-load}$$

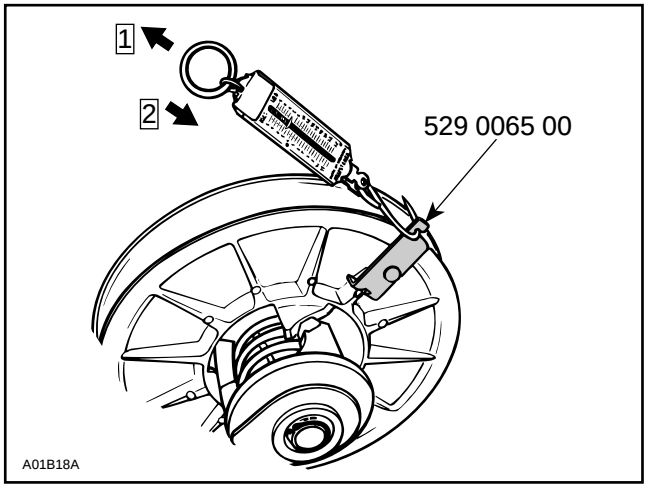

Step 1 : 1st measurement
Step 2 : 2nd measurement

To adjust spring pre-load, relocate spring end in cam, moving it clockwise to increase the pre-load and counterclockwise to decrease it. Refer to 10 TECHNICAL DATA.

NOTE : If spring pre-load can not be adjusted, try to relocate the other end of spring in sliding pulley (holes A, B, C).

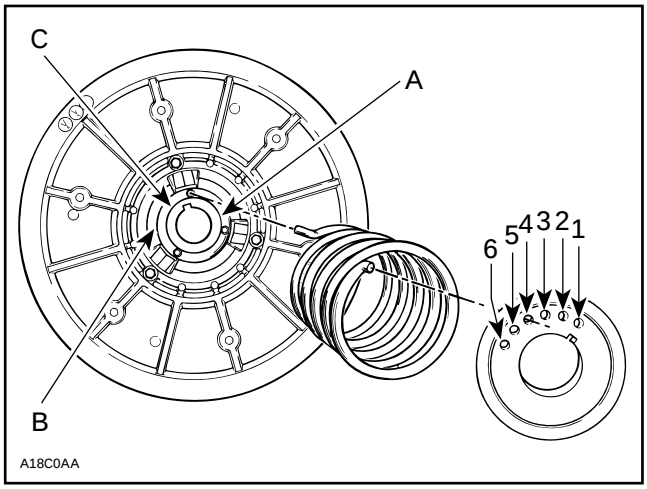

Letters and numbers shown in illustration are actual letters and numbers embossed on parts.

NOTE : Always recheck torsional pre-load after adjusting.

Pulley Alignment and Drive Belt Deflection

Refer to PULLEY DISTANCE AND ALIGNMENT 05-04 and DRIVE BELT 05-01 to perform adjustments.

CAUTION : Drive belt and pulley adjustments must always be checked whenever pulleys have been removed, replaced or disassembled.

3, Outer Cam

Make sure to install proper cam. Refer to TECHNICAL DATA.

Cam angle is identified on cam.

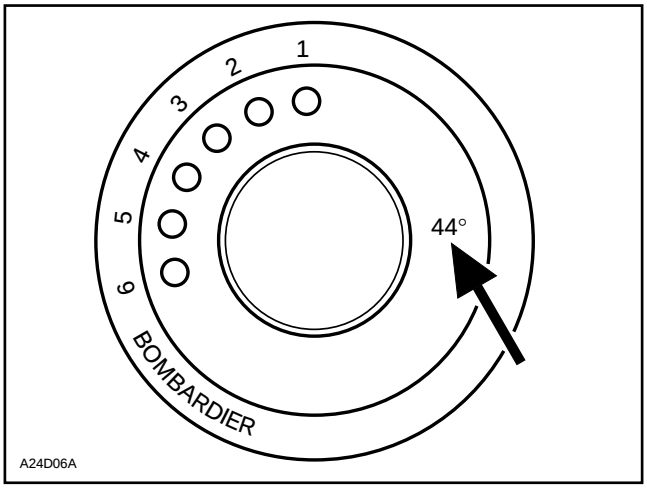

NOTE : For high altitude regions, the High Altitude Technical Data Booklet (P / N 484 0624 00 and 484 0545 00 for binder) gives information about calibration according to altitude.

PULLEY DISTANCE AND ALIGNMENT

GENERAL

The pulley distance we will refer to, in this section, is the space separating the drive and driven pulley outside diameters (Z measure).

This basic distance is provided as an assembly guide and indicates the dimensions between which satisfactory belt deflection will be obtained.

Both pulley distance adjustment and pulley alignment must be carried out to ensure the highest efficiency of the transmission system. Furthermore, optimum drive belt operation and minimal wear will be obtained only with proper pulley alignment.

▼ CAUTION : Before checking pulley adjustment, the rear suspension must be mounted on the vehicle and track tension / alignment must be done. Always check pulley adjustment after suspension is adjusted.

◆ WARNING : Failure to correctly perform pulley alignment may cause the vehicle to creep forward at idle.

All pulley alignment specifications refer to :

X = Distance between straight bar and drive pulley fixed half edge, measured between pulleys.

Y = Distance between straight bar and drive pulley fixed half edge, measured at the end of straight bar.

Z = Distance between outside diameter of pulleys.

GENERAL PROCEDURE

Remove belt guard and drive belt.

By turning and pushing the sliding half, open the driven pulley. Insert a straight bar 9.5 mm (.375 in) square, 48 cm (19 in) long or the proper alignment template into the opened driven pulley.

Measuring Procedure

Using Straight Bar :

Always measure distances X and Y from the farther straight bar side (including its thickness to the fixed half edge.)

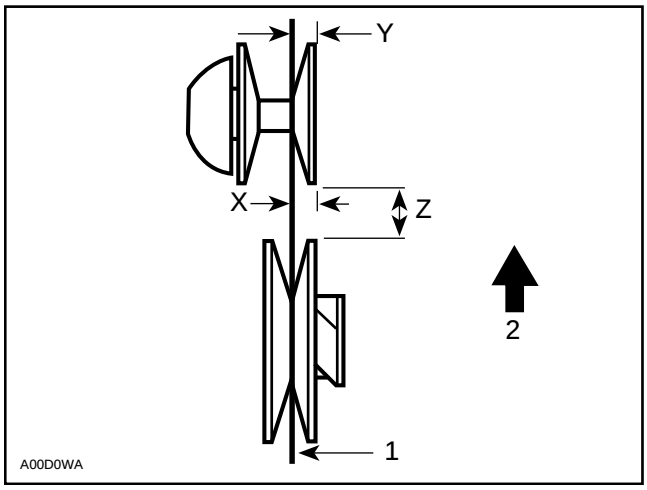

1. Straight bar
2. FRONT

On all models, the distance Y must exceed distance X to compensate for the twist due to the engine torque.

Nominal Value Procedure and Quick Alignment and Distance Check

Alignment template tabs must fully contact fixed half of drive pulley.

Pulley distance is correct when tab contacts both pulley halves.

Refer to below chart for proper alignment template.

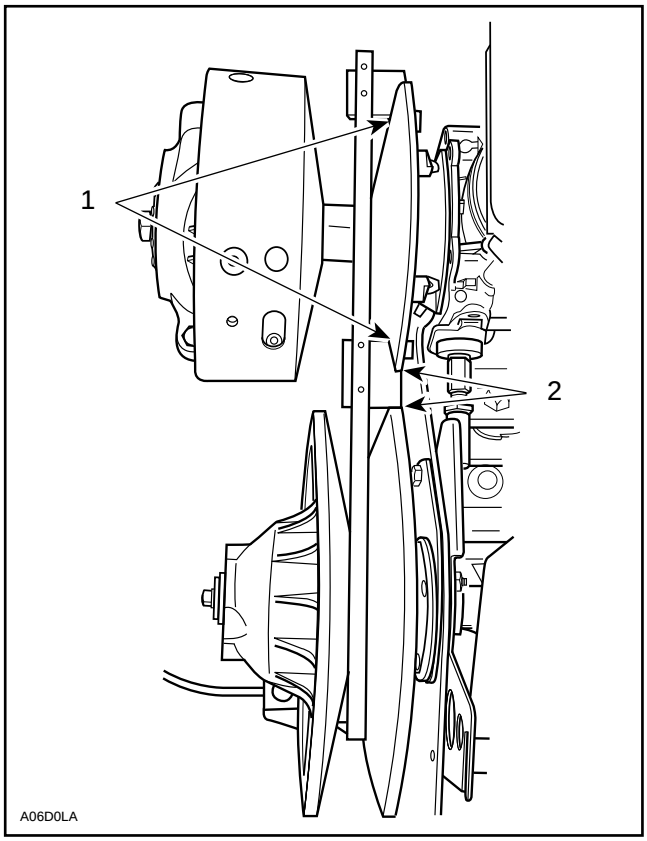

TYPICAL
1. *Contact (alignment)*
2. *Contact (distance)*

Drive Belt Deflection

NOTE : When pulley distance and alignment are adjusted to specifications, refer to DRIVE BELT 05-01 to adjust drive belt deflection.

CAUTION : This section deals mainly with adjustment procedures. For complete assembly requirements, refer to the proper ENGINE or TRANSMISSION installation section.

PULLEY ALIGNMENT AND DISTANCE SPECIFICATIONS CHART

MODEL	PULLEY DISTANCE	OFFSET		ALIGNMENT TEMPLATE
	Z	X	Y-X	①
	+ 0, – 1 mm (+ 0, – 0.040 in)	± 0.50 mm (0.020 in)	± 0.5 mm (0.020 in)	P / N
S-Series and F-Series	16.5 (0.650)	35.0 (1.380)	1.5 (0.060)	529 0267 00

① Alignment templates have been made according to pulley alignment nominal values. However, they do not take into account allowed tolerances for alignment specifications. They are used as GO / NO GO gauges for quick alignment and pulley distance check and as templates to reach alignment nominal values.

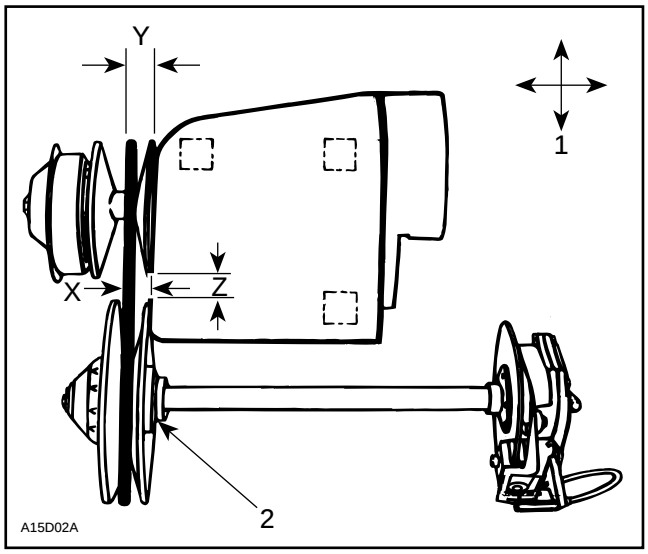

TYPICAL

1. *Engine movement*
2. *Contact*

NOTE : Prior to performing pulley adjustment, loosen torque rod nut to allow engine movement. Engine brackets have tendency to stick to frame, work engine loose prior to aligning.

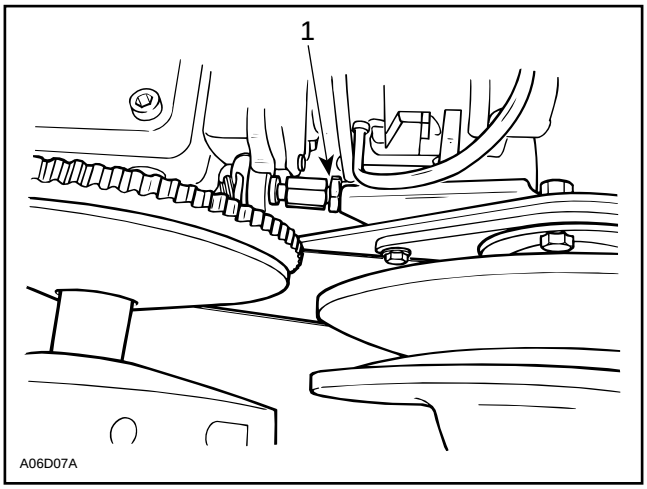

1. *Loosen*

Pulley Distance Adjustment Method

Engine Movement

The engine bracket has slotted mounting holes. Move engine to obtain specified distance between pulleys.

Pulley Alignment Method

Driven Pulley Movement

When engine slotted mounting holes do not allow to set proper pulley offset (X), adjust with shims (P / N 504 1082 00) between pulley and countershaft bearing support (pulley pushed toward brake disc).

Engine Movement

Loosen the 4 bolts retaining engine bracket to the frame. Position engine to obtain the specified alignment.

NOTE : After adjustment, just tighten torque rod nut so it sits against washer. Do not over tighten, it will disalign pulleys.

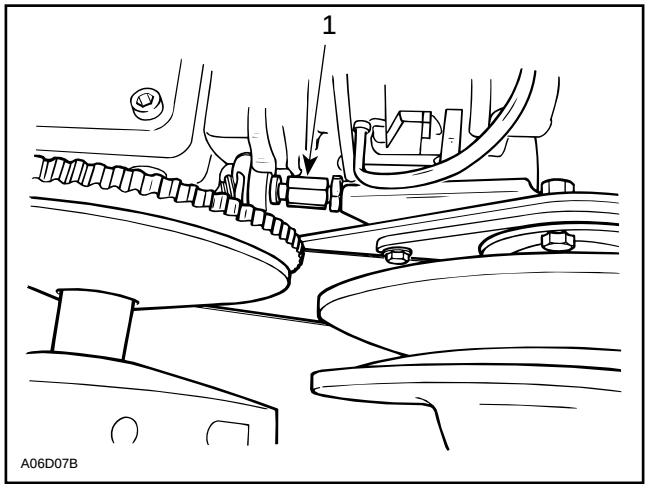

1. *Retighten*

BRAKE

Formula SLS, GT 500 / 580, Summit 500 and Formula STX / STX LT

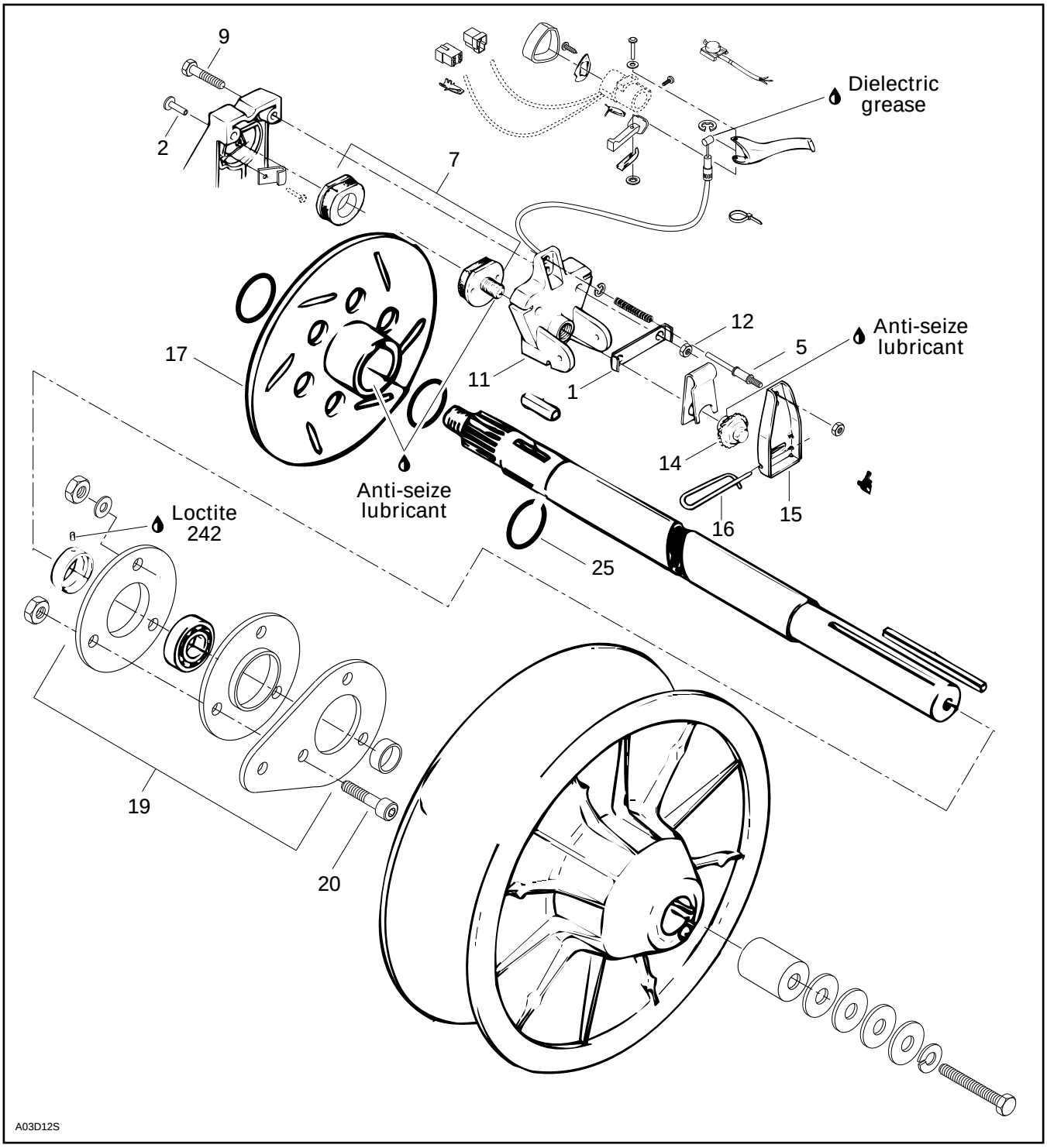

Grand Touring SE and Mach 1

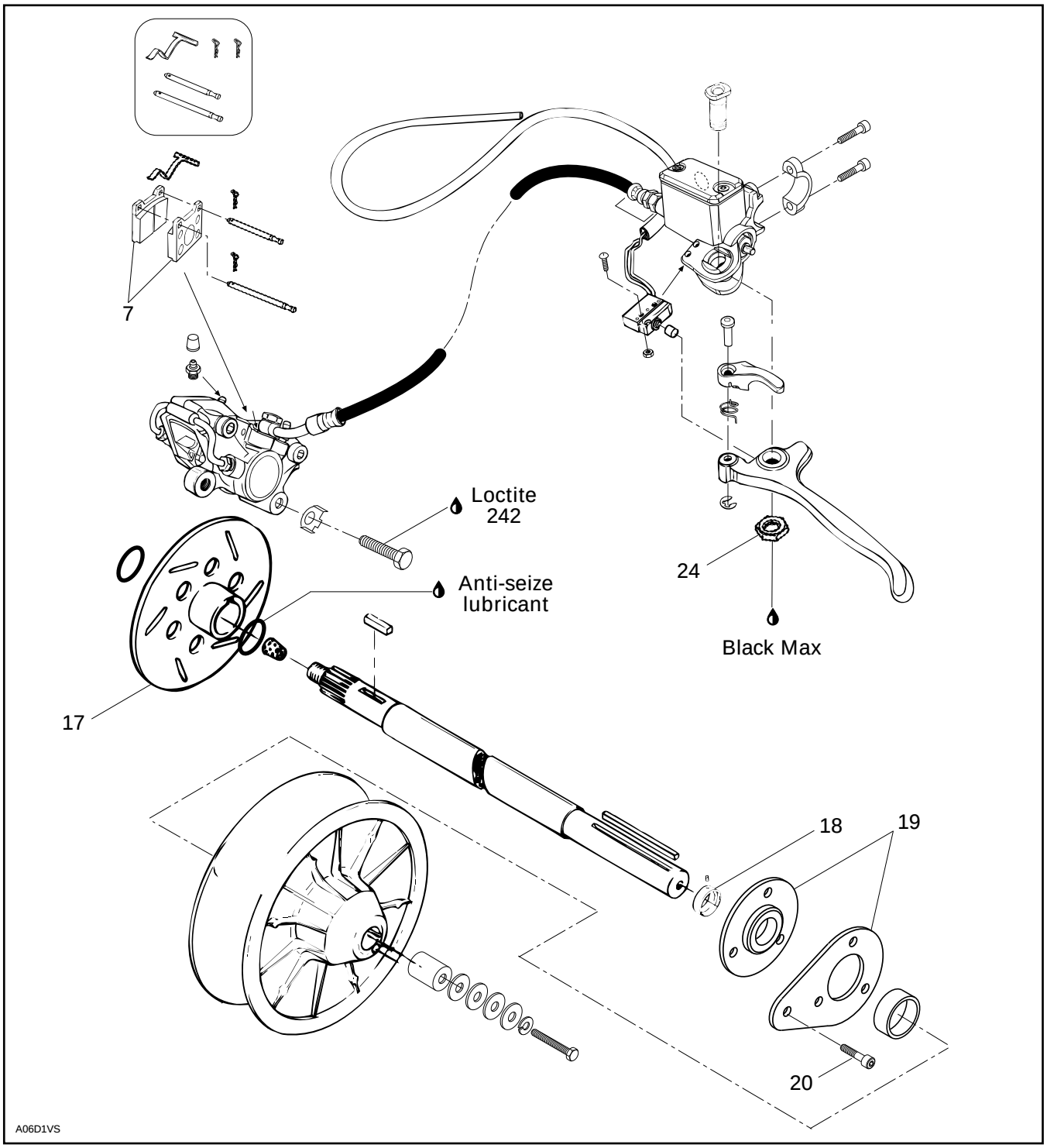

REMOVAL

BRAKE DISC REMOVAL

Mechanical Brake Models

Brake disc can be withdraw without removing caliper. Proceed as follows :

– Remove belt guard, belt and driven pulley.

– Remove air silencer.

– Remove clip no. 25 on countershaft.

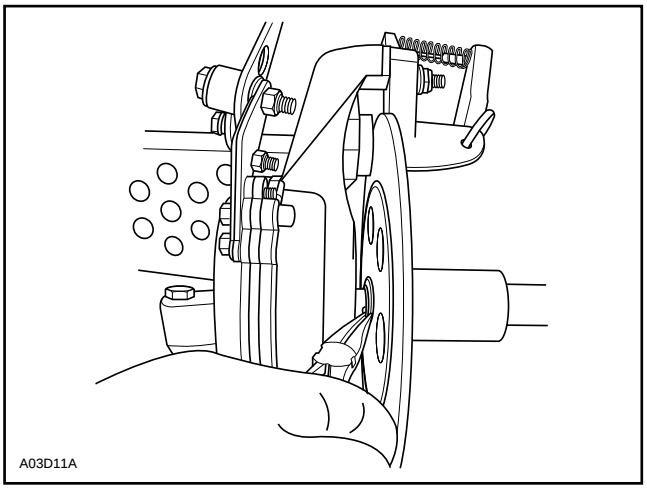

– Unbolt bearing support from chassis.

– Open chaincase and remove upper sprocket.

– Pull countershaft toward driven pulley side to free from chaincase and disc.

– Remove disc.

COUNTERSHAFT REMOVAL

Mechanical Brake Models

Proceed the same as for brake disc removal but unlock bearing collar on driven pulley side.

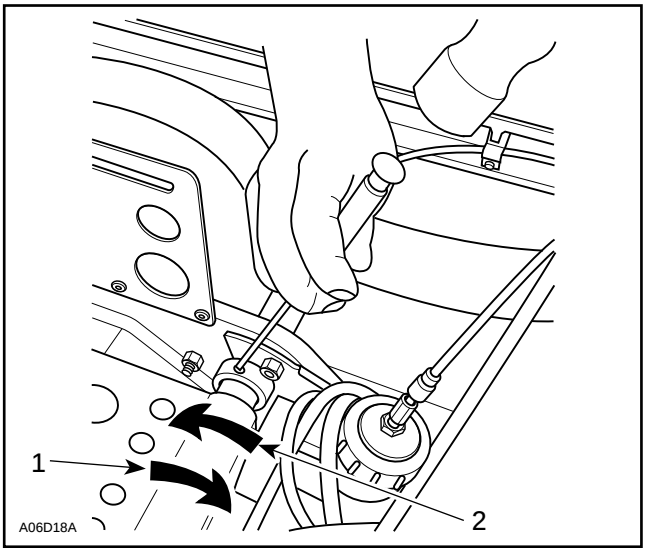

1. Unlock
2. Lock

Unbolt bearing plates then push bearing to driven pulley side out of countershaft.

COUNTERSHAFT AND BRAKE DISC REMOVAL

Hydraulic Brake Models

– Remove muffler.

– Refer to CHAINCASE 05-06 in order to remove chaincase cover.

– Remove upper sprocket castellated nut.

– Remove belt guard, drive belt and driven pulley referring to DRIVEN PULLEY 05-03.

– Slacken set screw and unlock collar no. 18 if bearing is needed to be disassembled. See above S-Series illustration and procedure.

– Remove 3 retaining screws no. 20 from countershaft bearing housing.

– Unbolt coolant tank support to make room for countershaft or brake disc removal.

– Pull countershaft toward driven pulley side to free from chaincase. Withdraw countershaft toward chaincase.

– Remove brake disc from countershaft.

– Remove connecting pipe between tuned pipe and after muffler.

– Disconnect brake line from caliper and plug it.

– Unbolt caliper from chaincase.

To remove brake disc, refer to procedure on mechanical brake models.

DISASSEMBLY

2,7,15,16,23, Rivet, Brake Pad, Brake Lever, Pin and Screw

All Models Except Grand Touring SE and Mach 1

Pull pin out off caliper and remove lever.

Unscrew ratchet wheel in order to remove moving pad.

Fixed pad is riveted to chaincase. Caliper must be split to remove moving pad. To removed fixed pad, drill out its rivet then pry disc in order to remove fixed pad.

Grand Touring SE and Mach 1

Only brake pads are available as spare parts. If caliper or master cylinder are damaged, replace each of them as an assembly.

All Models

CLEANING

Clean all metal components in a general purpose solvent. Thoroughly dry all components before assembling.

▼ CAUTION : Do not clean brake pads in solvent. Soiled brake pads must be replaced by new ones.

INSPECTION

7, Brake Pad Thickness

Brake pads must be replaced when fixed pad projects only 1 mm (1/32 in) from caliper.

▼ CAUTION : Brake pads must always be replaced in pairs.

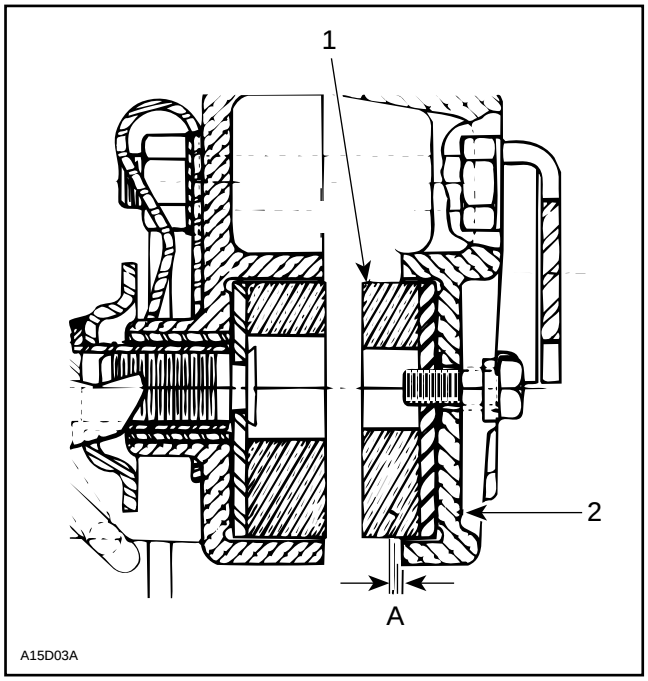

TYPICAL

1. Fixed pad
2. Inner caliper half
A. 1 mm (1/32 in) min.

Brake Disc

Check for scoring, cracking or heat discoloration, replace as required. Refer to DRIVEN PULLEY 05-03 for procedures on applicable models.

▼ CAUTION : Brake disc should never be machined.

ASSEMBLY

14, Ratchet Wheel

Apply low temperature grease (P / N 413 7061 00) on threads and spring seat prior to installing. Fully tighten then back off one turn.

16, Pin

Install so that it can only be removed upward. Lock it in the caliper casting notch.

2,7, Nut and Fixed Brake Pad

Torque nut to 8 N•m (71 lbf•in).

INSTALLATION

To install brake, reverse removal procedure paying attention to the following.

◆ WARNING : Avoid getting oil on brake pads. Do not lubricate or apply antirust or antifreeze solution in brake cable.

17, Brake Disc

The brake disc must be floating on countershaft for efficient operation of brake.

Apply anti-seize lubricant (P / N 413 7010 00) on shaft and check that disc slides freely.

The disc hub exceeds the disc more from one side than from the other. Install disc with the longer exceeding portion toward driven pulley.

Push O-rings inside disc hub.

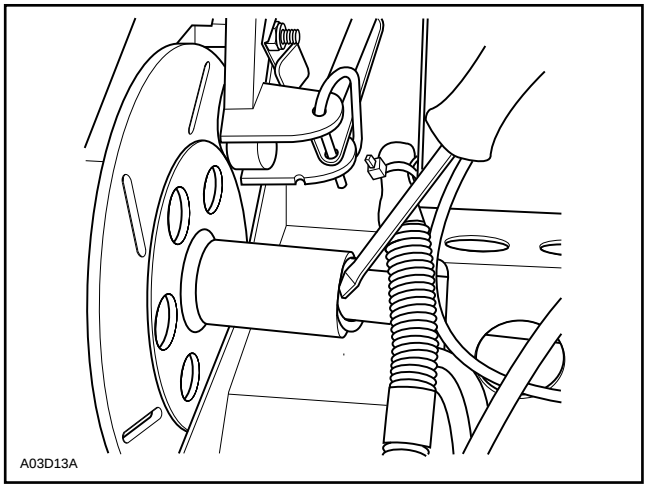

Countershaft Bearing Adjustment

Insert countershaft (with brake disc) from chaincase side through countershaft support (driven pulley side), then insert into chaincase.

Install countershaft bearing no. 19 and ensure that countershaft is properly aligned, then tighten 3 retaining screws.

○ NOTE : A misaligned countershaft will result in difficulty to center the bearing in its support.

Refer to DRIVE AXLE 05-03 then look Chaincase Perpendicularity Adjustment.

Torque castellated nut of upper sprocket to 53 N•m (39 lbf•ft).

▼ CAUTION : Upper sprocket castellated nut must be tightened before adjusting bearing collar.

Slide collar no. 18 towards bearing and turn, by hand, to engage the eccentric. This should require about a quarter turn.

Turn collar in direction of countershaft rotation until collar and inner race lock together.

Insert a punch into collar hole and strike sharply in the same direction to lock firmly.

Apply medium strength threadlocker (P / N 413 7030 00) on set screw threads, then tighten.

Close chaincase referring to CHAINCASE 05-06.

1,11,12, Locking Tab, Outer Caliper and Nut

Mechanical Brake Models

Install caliper retaining bolts.

Assemble outer caliper. Install locking tab then nuts. Torque nuts to 24 N•m (18 lbf•ft). Bend locking tab over a flat of each nut.

5,10, Brake Cable and Nut

Insert brake cable into upper hole in brake lever and caliper. Install nut and tighten until a few threads exceed.

◆ WARNING : At least 3 threads must exceed the elastic stop nut.

24, Brake Lever Lock Nut

Hydraulic Brake Models

◆ WARNING : Always install a new nut when servicing.

Tighten nut to 3.0 N•m (27 lbf•in). Check free movement of brake lever.

Apply Loctite Black Max Gel (Loctite item no. 18398) over nut and on bolt threads.

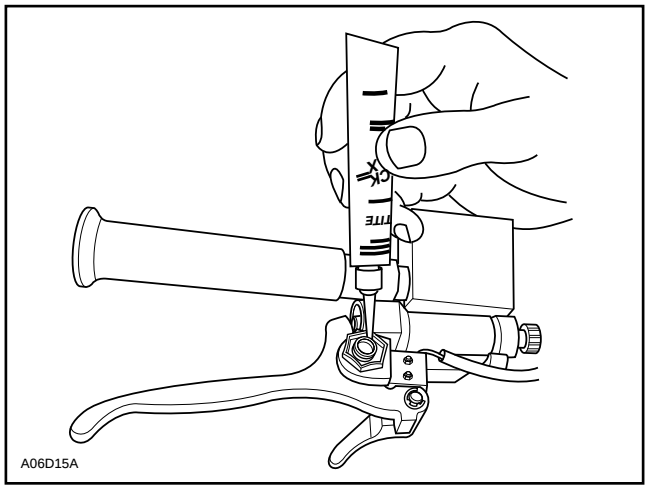

ADJUSTMENT

Brake

Mechanical Brake Models

Fully depress brake handle several times to obtain 13 mm (1/2 in) between brake handle and handlebar grip when brake is fully applied.

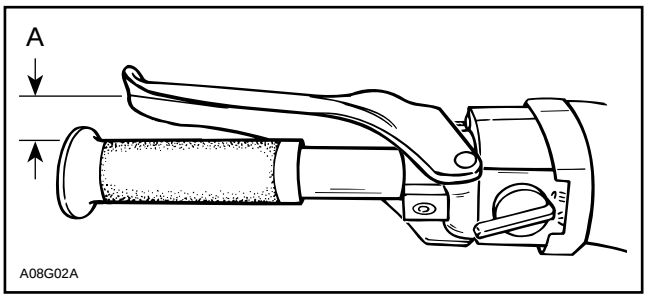

A. 13 mm (1/2 in) approx.

Should this adjustment be unattainable, retighten nut no. 10 as needed.

Hydraulic Brake Models

Change brake fluid once a year.

Bleed brake system as follows :

Keep sufficient DOT 4 (DOT 3 for normal use) brake fluid in reservoir at all times.

CAUTION : Use only DOT 4 brake fluid for heavy duty or racing applications.

Install a hose on left side bleeder. Route this hose to a container.

Pump a few times brake lever and while holding brake lever depressed, open bleeder and check for air to escape.

Repeat with the same bleeder until no air appears in hose.

Proceed the same way with the right side bleeder.

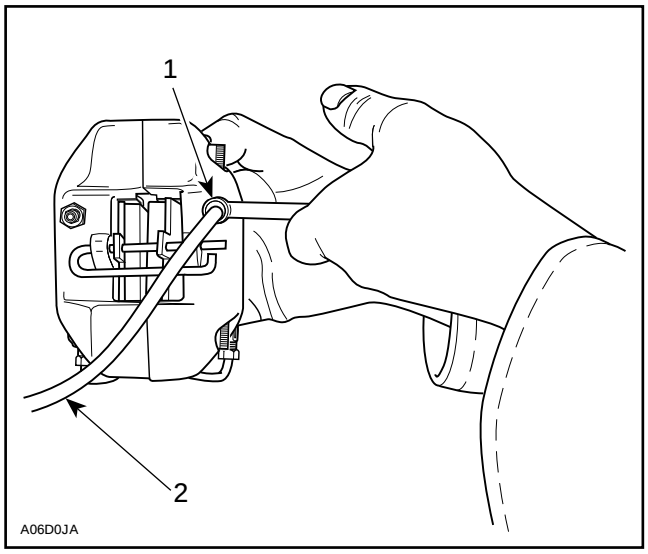

1. Open bleeder
2. Clear hose to catch used brake fluid

Brake Light

Mechanical Brake Models

Brake light should light up before brake pads touch brake disc. To adjust, unscrew nut no. 10 until brake light goes on.

WARNING : At least one full thread must exceed the elastic stop nut.

Check brake adjustment as described above.

NOTE : If brake light adjustment is unattainable while respecting brake adjustment, ratchet wheel may be too far out. If so, tighten ratchet wheel.

CHAINCASE

S-Series and F-Series Without Reverse Gear

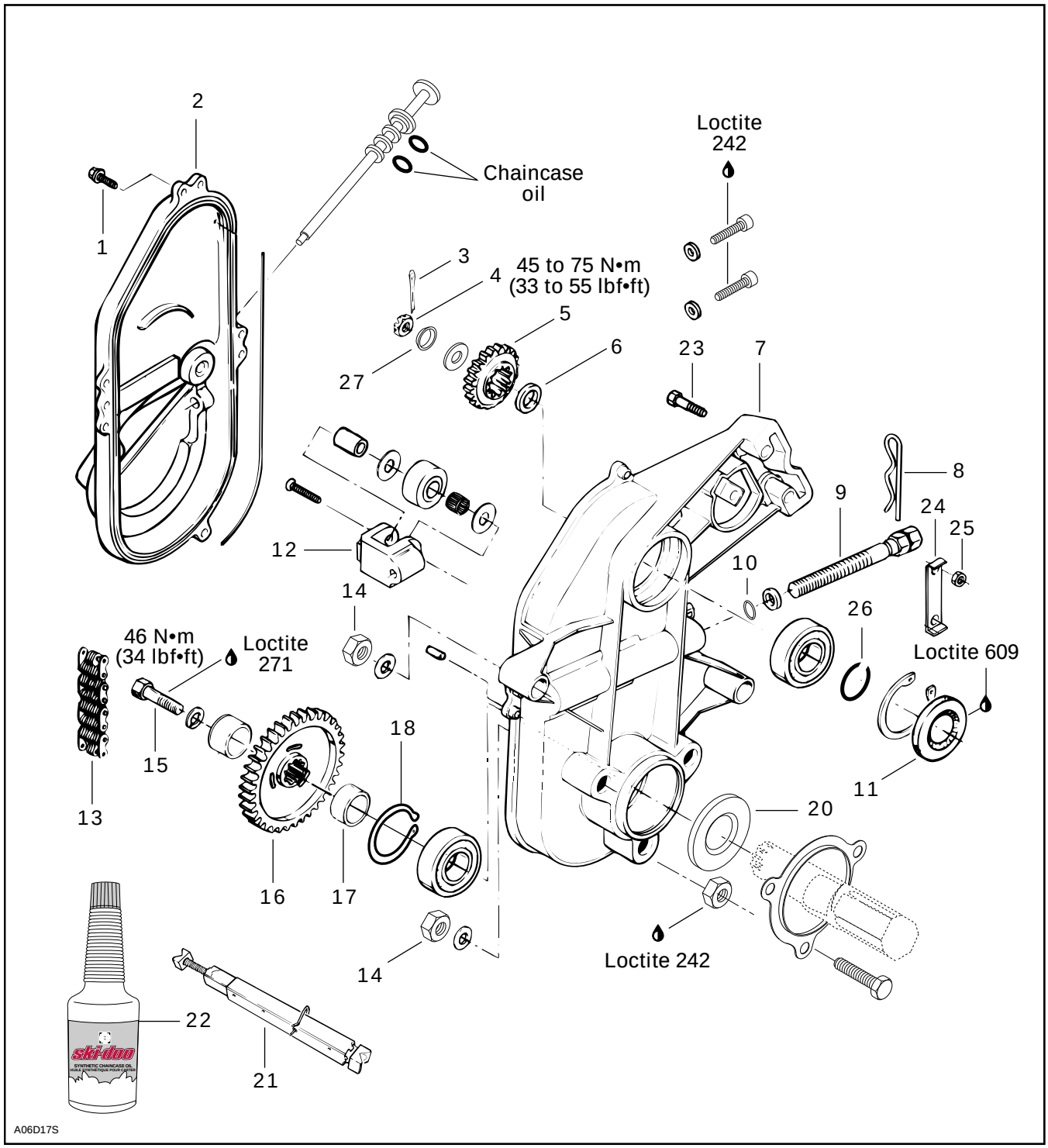

REMOVAL

To remove chaincase proceed as follows.

Remove tuned exhaust pipe and muffler.

◆ WARNING : Never remove exhaust components when engine is hot.

8,9,12, Hair Pin, Adjustment Screw and Chain Tensioner

Remove hair pin. Release drive chain tension by unscrewing tensioner adjustment screw.

1,2, Chaincase Cover and Screw

Drain oil by removing chaincase cover.

3,4,5,6,13,16,17, Cotter Pin, Nut, Sprocket, Shim and Drive Chain

Remove cotter pin, nut, washer retaining upper sprocket and screw retaining lower sprocket. Pull sprockets and drive chain simultaneously. Remove shims.

○ NOTE : Should countershaft removal be required, refer to BRAKE 05-05 then look for Brake disc.

26, Circlip

Remove circlip. Refer to BRAKE 05-05 then lock for brake disc.

14, Nut

Remove 5 nuts. 3 nuts are behind the lower sprocket.

23,24,25, Screw, Locking Tab and Nut

Unfold locking tab, unscrew nuts then remove caliper retaining screws.

21, Drive Axle Holder

Release track tension, use drive axle holder (P / N 529 0072 00).

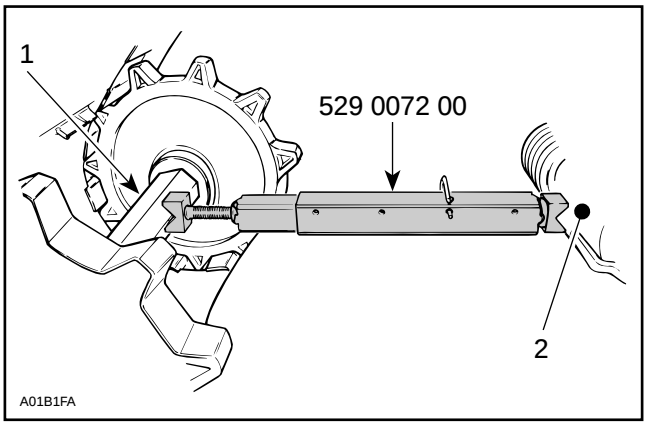

TYPICAL

1. *Drive axle*
2. *Suspension cross shaft*

20, Drive Axle Oil Seal

Pry out from chaincase.

Pull chaincase from drive axle and countershaft.

7, Chaincase

Using two large screwdrivers inserted between chaincase and frame, pry complete assembly from vehicle.

INSPECTION

Visually inspect the chain for cracked, damaged or missing links. Check for worn or defective bearings, sprockets and chain tensioner components.

◆ WARNING : If chain deflection is greater than 38 mm (1.5 in) (without chain tensioner), replace chain and check condition of sprockets.

GEAR RATIO MODIFICATION

For particular applications, the number of teeth of the sprockets can be increased or decreased on lower and upper sprockets.

Refer to TECHNICAL DATA 10-03 for gear ratio.

▼ CAUTION : Gear ratio modifications should only be performed by experienced mechanics since they can greatly affect vehicle performance.

○ NOTE : For high altitude regions, the High Altitude Technical Booklet (P / N 484 0624 00 and P / N 484 0545 00 for binder) gives information about calibration according to altitude.

INSTALLATION

Reverse removal procedure and pay attention to the following. Replace oil seals, gaskets and O-rings.

Refer to DRIVE AXLE 07-04 for drive axle axial play adjustment.

11, Oil Seal

Clean chaincase bore with Loctite Safety Solvent (P / N 413 7082 00) then apply Loctite 609 to oil seal mounting surface (outside).

Using an appropriate pusher, press the oil seal into chaincase hud. Oil seal must fit flush with the chaincase edge.

NOTE : Should installation procedure for countershaft be required, refer to BRAKE 05-05 then look for Brake disc and Countershaft bearing adjustment.

5,16, Sprockets

Position the sprockets with the writing facing the chaincase cover.

27, Conical Spring Washer

Install washer with its concave side towards drive pulley.

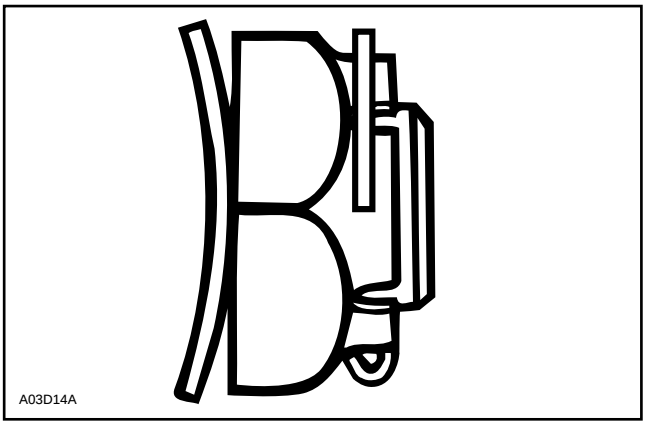

4, Upper Sprocket Castellated Nut

Torque to 45 to 75 N•m (33 to 55 lbf•ft).

Install new cotter pin in the position shown.

CAUTION : When removing a cotter pin always replace with a new one.

CAUTION : Cotter pin will rub on chaincase cover if installed otherwise.

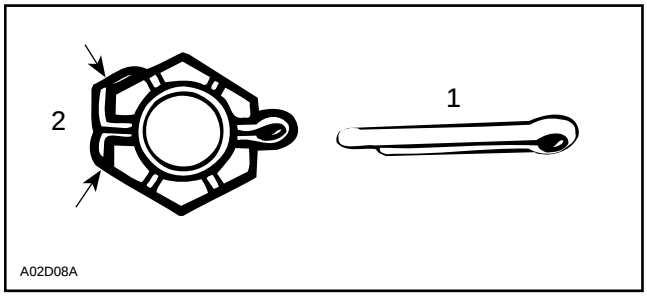

1. New
2. Fold cotter pin over castellated nut flats only

18, Circlip

CAUTION : It is of the utmost importance to install the circlip otherwise damage to the chaincase components may occur.

DRIVE CHAIN ADJUSTMENT

10, O-ring

Replace O-ring on tensioner adjustment screw. Fully tighten tensioner adjustment screw by hand, then back off only far enough for hair pin to engage in locking hole.

This initial adjustment should provide 3-5 mm (1/8-13/64 in) free-play when measured at the outer circumference of the brake disk.

CAUTION : Free-play must not exceed 5 mm (13/64 in), readjust if necessary.

WARNING : If the specified free-play is not reached with the tensioner screw fully tightened, replace chain and check the condition of sprockets.

22, Chaincase Oil

Pour 250 mL (8.5 fl. oz) of synthetic chaincase oil (P / N 413 8028 00) into chaincase.

NOTE : Chaincase oil capacity is 250 mL (8.5 fl. oz).

Check oil level with the dipstick unscrewed then add if required.

NOTE : Chaincase must be in its proper position when checking oil level.

ADJUSTMENT

Pulley Alignment

Refer to PULLEY DISTANCE AND ALIGNMENT 05-04.

Track Tension and Alignment

Refer to TRACK 07-04.

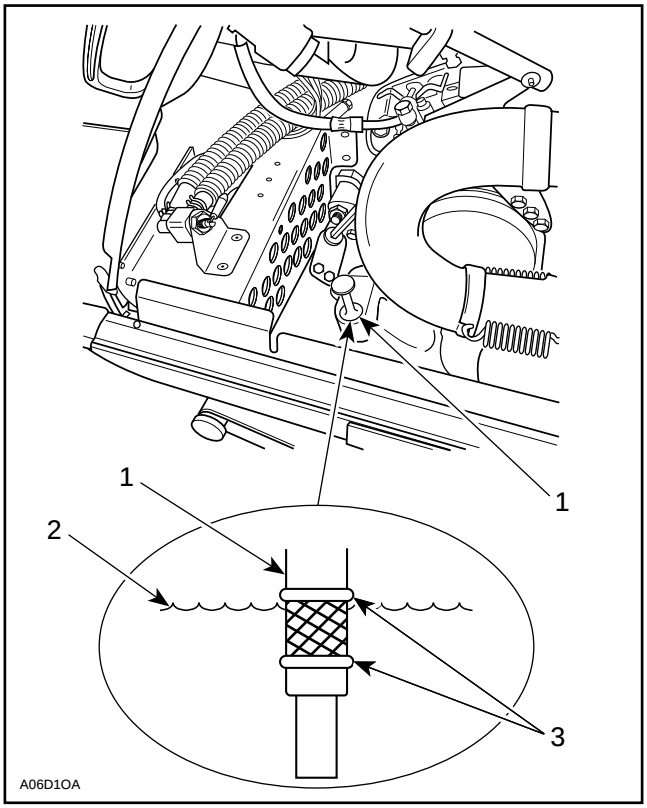

1. *Dipstick*
2. *Oil lever*
3. *Level between marks*

GEARBOX

2-SPEED GEARBOX

Grand Touring 500 / 580 / SE

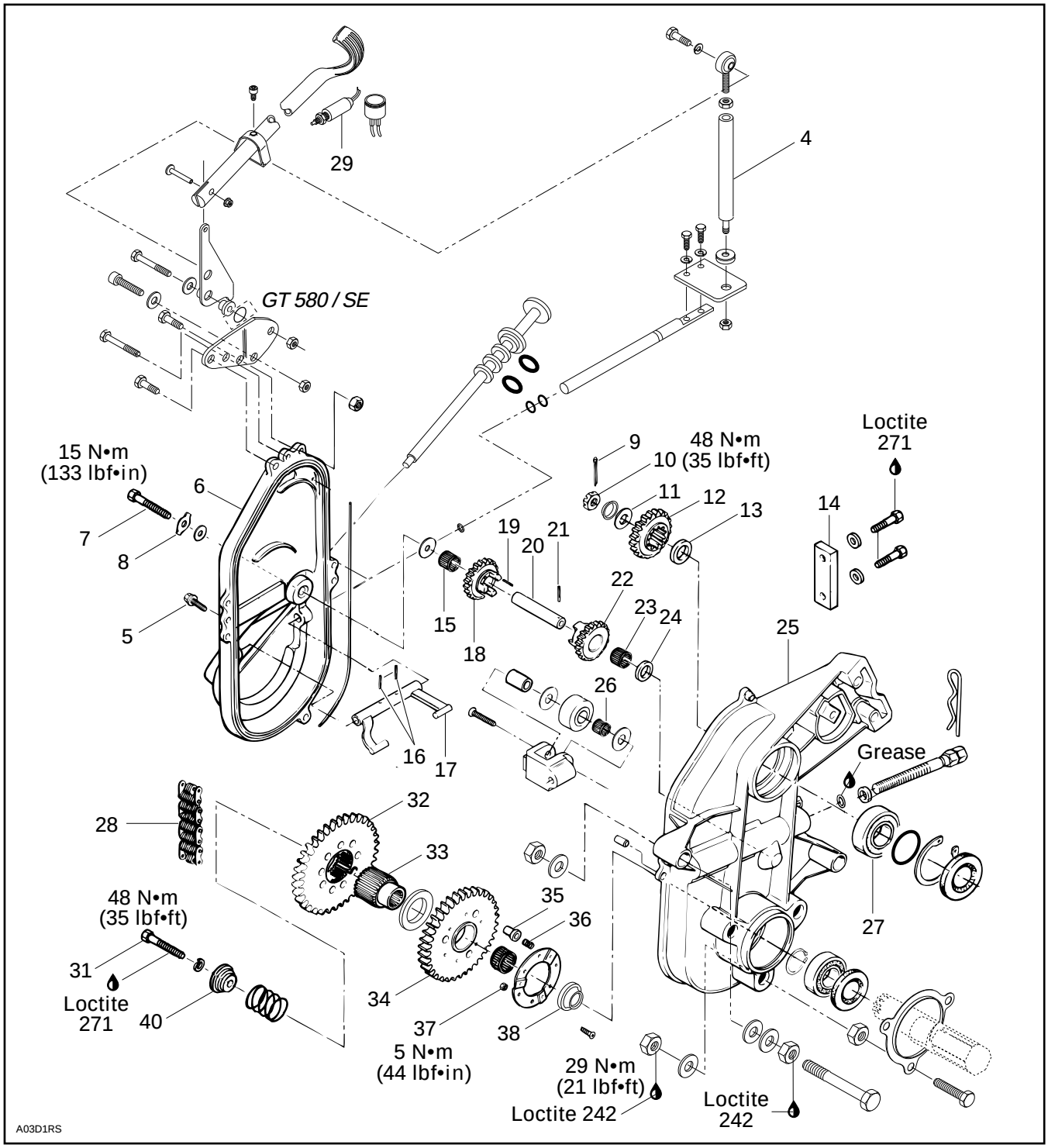

DISASSEMBLY

NOTE : It is possible to see the sliding gear in motion through oil gauge hole.

5,6,7, Screw, Gearbox Cover and Screw

Unbolt gear shift linkage from shifter.

Unscrew cover screws as well as reverse shaft screw.

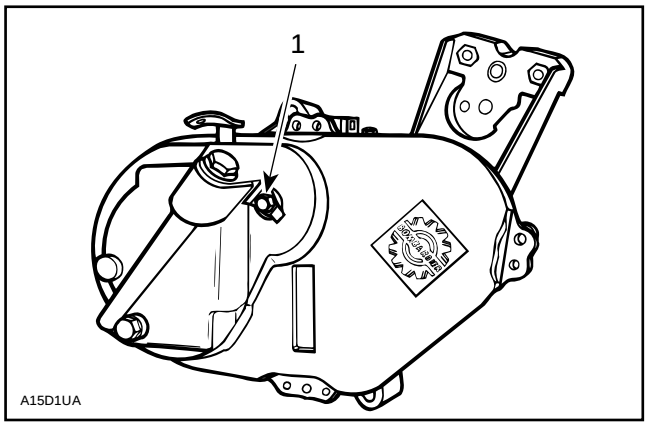

1. Reverse shaft screw

Separate cover from housing and move it toward the front in order to disengage fork from sliding gear.

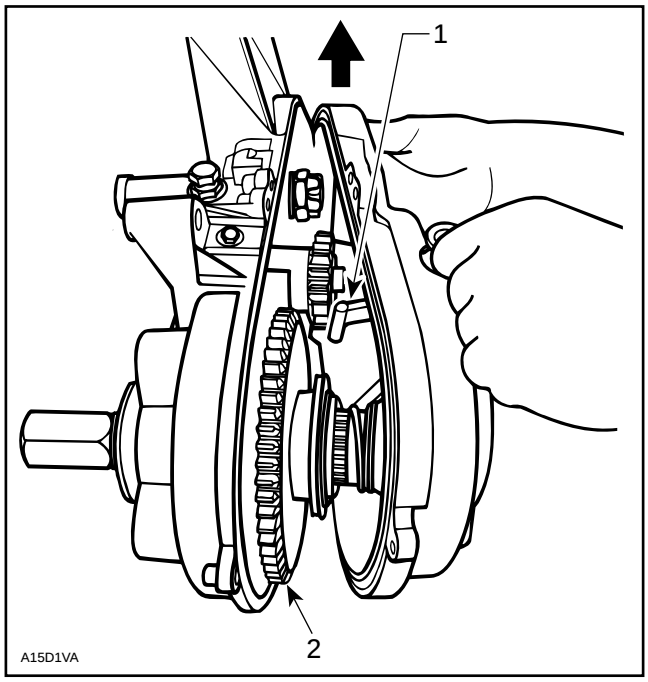

1. Fork
2. Sliding gear

31,32, Screw and Sliding Gear

Slacken chain tension, unscrew sliding gear retaining screw, then remove sliding gear.

18,20, Reverse Gear and Reverse Axle

First remove 19-tooth reverse gear and then remove reverse axle.

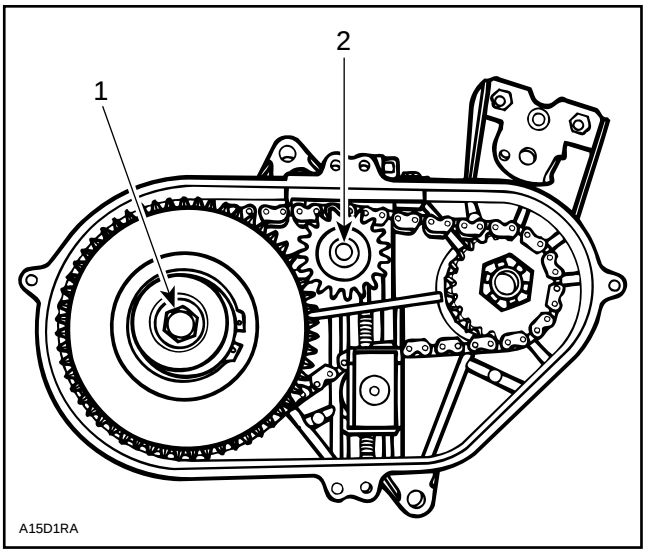

1. Sliding gear screw
2. Reverse axle

28,33,34,38, Chain, Coupling Shaft, Sprocket and Spacer

Remove coupling shaft, large sprocket, spacer and chain.

10,12, Castellated Nut and Sprocket

First unscrew castellated nut, then remove small sprocket.

16,17, Spring Pin and Fork

Force 2 spring pins out to disengage fork from its axle.

INSPECTION

14, Chain Slider

Replace slider if maximum wear is 1.0 mm (.039 in) at contact point.

15,23,26,27,37, Bearing

Check bearing condition. There must be no discoloration, missing rollers, broken cages, etc.

Sprockets and Gears

Check teeth.

ASSEMBLY

Reinstall drive shaft.

25, Gearbox Housing

Reinstall gearbox housing.

NOTE : Adjustment screw can only be installed when housing is removed.

Do not reuse removed oil seals. Replace them by new ones.

Install drive axle with track then bearing and circlip in chaincase bore. Install spacer no. 38 with its large outer diameter against sprocket, sprocket no. 34, coupling shaft no. 33, cap no. 40 and screw no. 31.

Place a 25 cm (10-inch) rule against sprockets. Maximum allowable offset is 1 mm (.040 in).

a. If upper sprocket too far in, possible causes are :

   1. Countershaft bearing on driven pulley side may be too far in. To check, pull out bearing using countershaft bearing extractor (P / N 529 0301 00) then recheck sprocket alignment. Use bearing installer (P / N 529 0302 00) to reposition bearing. Bearing housing (triangle) must be against frame without preload.

   2. Add shim(s) between chaincase and frame and reposition bearing on driven pulley side accordingly.

b. If upper sprocket is too far out, check :

   If there are too many shims between chaincase and frame. Remove shims accordingly and reposition bearing on driven pulley side.

34,35,36,37, Sprocket, Drive Pin, Spring and Bearing

Press needle bearing in sprocket. Assemble drive pins and their spring on sprocket. Tighten to 5 N•m (44 lbf•in) in a criss-cross sequence.

19,20,22,23,24, Spring Pin, Reverse Axle, Sprocket, Bearing and Ring

Insert spring pin in reverse axle up to inside diameter. Press needle bearing in 19-tooth sprocket. Install ring and 19-tooth sprocket on reverse axle.

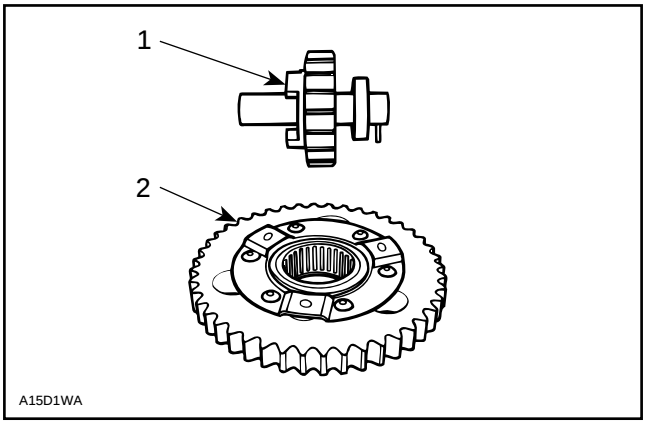

1. Reverse axle (assembly)
A. Sliding gear (assembly)

9,10,11,12,13, Cutter Pin, Castellated Nut, Washer, Sprocket and Shim

Install shim, small sprocket (drive) and washer then tighten castellated nut. Secure with a new cotter pin.

28,32,33,38, Chain, Sliding Gear, Coupling Shaft and Spacer

Install chain, large sprocket and its spacer. Spacer's large outer diameter must be against sprocket. Insert coupling shaft in large sprocket.

15,18, Needle Bearing and Reverse Gear

Install needle bearing (wider one) in reverse gear.

18,21, Reverse Gear and Alignment Rod

Install reverse axle (assembly) making sure to properly position spring pin in housing slot. Install alignment rod, reverse gear and spacer. Drive sprocket hole and driven gear hole must be aligned to insert alignment rod.

9,16,17, Chain Tensioner, Spring Pin, Fork and Fork Axle

Mount chain tensioner (assembly) to adjustment screw already fixed to gearbox. Assemble fork to axle using spring pins. Apply grease on O-rings.

6, Cover

Join cover (assembly) to housing by passing fork tabs behind sliding sprocket thrust washer.

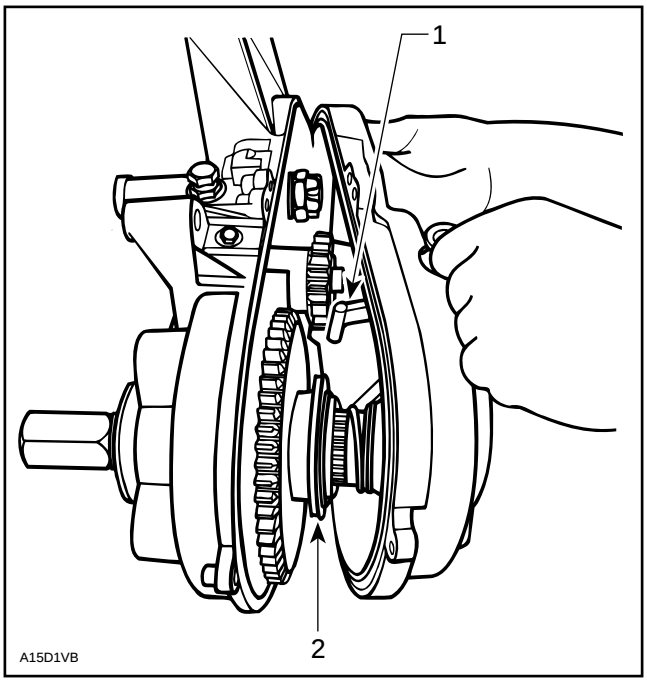

1. Fork tabs
2. Thrust washer

CAUTION : Gearbox cover must completely lay against housing.

5,7,8, Screws and Locking Tab

Tighten screws in a criss-cross sequence starting with the one above reverse axle. Install reverse shaft screw and bend locking tab against screw head flat. Bolt shift linkage to shifter.

ADJUSTMENT

28, Chain

Fully tighten adjustment screw by hand, then back off only far enough for hair pin to engage in locking hole.

4, Gear Shift Linkage

1. Check proper fit of handle in console.
2. Shift into reverse gear.

NOTE : If it is impossible to shift into reverse gear, shorten tie-rod and try again. If it is still impossible, check if fork meshes sliding gear or remove cover to inspect components.

3. Completely slacken ball joint lock nut on the gear shift linkage.
4. Using tool (P / N 529 0303 00) to push and hold down tie-rod plate to make sure transmission is in reverse gear. Pull shifter handle in reverse position making sure all slack is removed. Lengthen tie-rod until it contacts the rubber washer then add an additional turn.

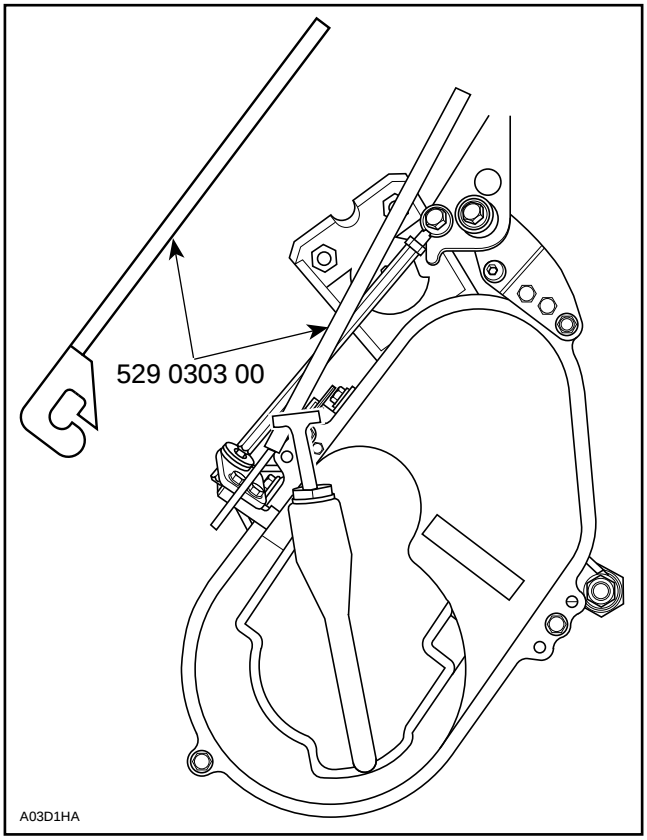

1. Tool

NOTE : It is normal to feel a light friction when shifting into gear.

5. Statically test transmission operation in forward and reverse positions.
6. Hold linkage and tighten ball joint jam nut.

29, Alarm Switch

Adjust backup alarm so that it sounds when transmission is in reverse gear while engine is running.

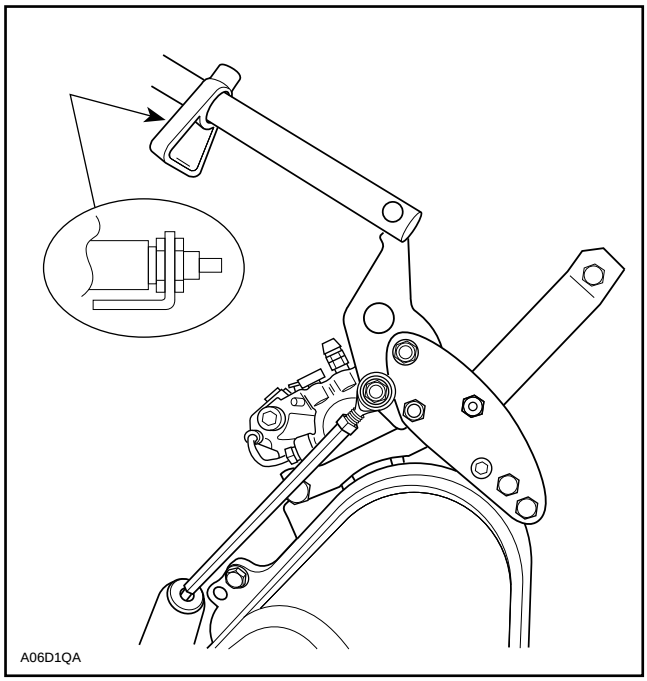

OIL CHANGE

Place a container under bottom pan (gearbox side).

Unbolt gear shift linkage from fork axle. Unbolt and remove cover by separating it from housing and by moving it toward the front in order to release fork from sliding sprocket.

Clean cover interior.

NOTE : It is normal to find metallic particles stuck to dipstick magnet. If bigger pieces of metal are found, disassemble and check all parts.

Reinstall cover as previously described during assembly.

Fill housing with chaincase oil (P / N 413 8019 00). Oil capacity is 250 mL (8.5 oz).

Check oil level with dipstick. Oil level must be between MIN. and MAX. marks.

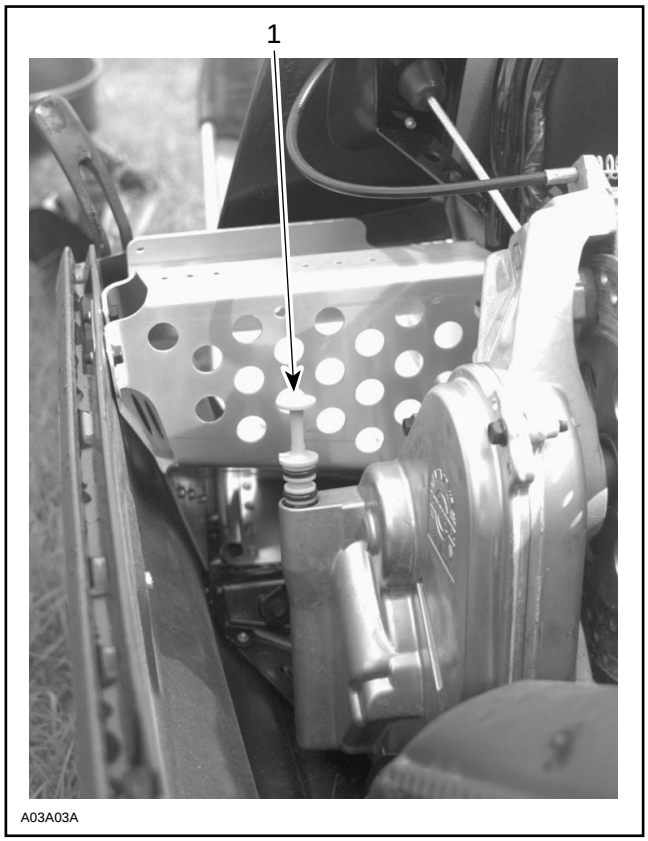

1. Dipstick

Shifter can be put in reverse position to ease removal of dipstick.

DRIVE CHAIN

SILENT CHAIN

There are 2 types of silent chain. One is 11-link wide and the other (stronger) is 13-link wide. Do not interchange sprockets. Fit chain on sprockets to make sure using right ones according to width. Refer to TECHNICAL DATA 10.

NOTE : No work (separation, lengthening) can be done on the silent chain type.

TABLE OF CONTENTS

WIRING DIAGRAMS **06-01-1**
CHART CODES 06-01-1
UNPLUGING CONNECTORS 06-01-3
TAB AND RECEPTACLE CONNECTORS REMOVAL 06-01-3
TAB AND RECEPTACLE CONNECTORS INSTALLATION 06-01-4
ACCESSORIES INSTALLATION 06-01-4

IGNITION TIMING **06-02-1**
NIPPONDENSO TRIGGER COIL SYSTEM **06-02-1**

SPARK PLUGS **06-03-1**
NGK SPARK PLUG **06-03-1**
NGK SPARK PLUG NUMBERING SYSTEM 06-03-1
1996 REFERENCE CHART 06-03-1
DESIGN SYMBOLS USED IN NGK SPARK PLUGS **06-03-2**
DISASSEMBLY 06-03-3
HEAT RANGE 06-03-3
FOULING 06-03-3
SPARK PLUG ANALYSIS 06-03-3
SPARK PLUG INSTALLATION 06-03-4
SPARK PLUG TIGHTENING TORQUE 06-03-4

BATTERY **06-04-1**
REMOVAL 06-04-1
CLEANING 06-04-1
INSPECTION 06-04-2
HYDROMETER TEST 06-04-2
BATTERY STORAGE 06-04-2
ACTIVATION OF NEW BATTERY 06-04-3
SERVICING 06-04-5
TIPS FOR CHARGING A USED BATTERY 06-04-5
BATTERY CHARGING EQUIPMENT 06-04-6
INSTALLATION OF BATTERY 06-04-7

ELECTRIC STARTER **06-05-1**
S-SERIES AND F-SERIES WITH ELECTRIC STARTING *06-05-1*
REMOVAL 06-05-2
DISASSEMBLY 06-05-2
CLEANING AND INSPECTION 06-05-4
ASSEMBLY 06-05-4
INSTALLATION 06-05-5
CLEANING AND INSPECTION **06-05-6**
CLEANING 06-05-6
INSPECTION 06-05-6
SOLENOID SWITCH 06-05-8

TESTING PROCEDURE **06-06-1**
GENERAL 06-06-1
USE OF BOMBARDIER IGNITION TESTER 06-06-2
NIPPONDENSO CDI TRIGGER COIL SYSTEM TESTING **06-06-3**
TRIGGER COIL OUTPUT 06-06-3
IGNITION COIL OUTPUT 06-06-3
IGNITION MODULE 06-06-4
MAGNETO OUTPUT (IGNITION GENERATOR COIL) 06-06-5
LIGHTING GENERATOR COIL OUTPUT 06-06-6
SUMMARY TABLE 06-06-6
RESISTANCE MEASUREMENTS 06-06-7
VOLTAGE REGULATOR INSPECTION **06-06-8**
TESTING PROCEDURE 06-06-8
INSPECTION OF AC CIRCUIT ISOLATION **06-06-9**
INSPECTION 06-06-9
INSPECTION OF HEATING ELEMENTS **06-06-10**

WIRING DIAGRAMS

MODEL	WIRING DIAGRAM PAGE	HEADLIGHT (watt)	TAILLIGHT (watt)	ELECTRICAL SYSTEM OUTPUT (watt)
Grand Touring 500	Annex 1	60 / 55 hal.	8 / 27	220
Grand Touring 580 / SE	Annex 2	60 / 55 hal.	8 / 27	220
Formula SLS and Summit 500	Annex 3	60 / 55 hal.	8 / 27	220
Formula STX / STX LT	Annex 4	60 / 55 hal.	8 / 27	220
Mach 1	Annex 5	60 / 55 hal.	8 / 27	220

hal. = halogen

CHART CODES

Wiring Color Code

The first color of a wire is the main color, second color is the stripe.

Example : YL / BK is a YELLOW wire with a BLACK stripe.

COLOR CODE	
BK – BLACK	GN – GREEN
WH – WHITE	GY – GREY
RD – RED	VI – VIOLET
BL – BLUE	OR – ORANGE
YL – YELLOW	BR – BROWN

Following table shows wire colors related to electrical circuits.

WIRE COLORS	ELECTRICAL CIRCUIT	ADDITIONAL INFORMATION
BLACK / YELLOW	ENGINE SHUT OFF – Key switch – Tether cord switch – Emergency switch	Must be grounded to stop engine.
BLACK (small)	Ground for shut off	
BLACK (Big)	Ground for starter (–)	
YELLOW YELLOW / BLACK	12 volts (A.C.)	If shorted, magneto stops producing electricity.
RED	12 volts (D.C.) (+) For starter motor	
RED / GREEN	12 volts (D.C.) (+) For starter solenoid	
RED / BLUE	12 volts (D.C.) (+) Rectifier output	
GREY	12 volts (A.C.) High beam	Current returns by YELLOW / BLACK wire connected to headlamp.
VIOLET / GREY	12 volts (A.C.) Low beam	
WHITE	12 volts (A.C.) Brake light	Current returns by YELLOW / BLACK wire connected to taillight.
WHITE / RED	12 volts (A.C.) Low oil level	Current returns by YELLOW / BLACK wire connected to oil level sensor.
BLUE	12 volts (A.C.) Fuel level indicator	Current returns by YELLOW wire connected to fuel level sensor.
ORANGE	12 volts (A.C.) Heated grips (max.)	Current returns by YELLOW / BLACK wire connected to heating elements.
ORANGE / VIOLET	12 volts (A.C.) Heated grips (min.)	
BROWN	12 volts (A.C.) Heated throttle level (max.)	
BROWN / YELLOW	12 volts (A.C.) Heated throttle level (min.)	
GREEN	12 volts (A.C.) Temperature gauge	Current returns by YELLOW wire connected to sensor.
VIOLET	12 volts (A.C.) Engine overheating light.	

Connector Location

Connectors on wiring diagrams carry the letter C followed by a number. Use this code with wiring diagram legend to find connector location on vehicle.

UNPLUGING CONNECTORS

Always unplug connectors by pulling on housing not on wire. This is particularly important with connectors on temperature sender and heating element switches.

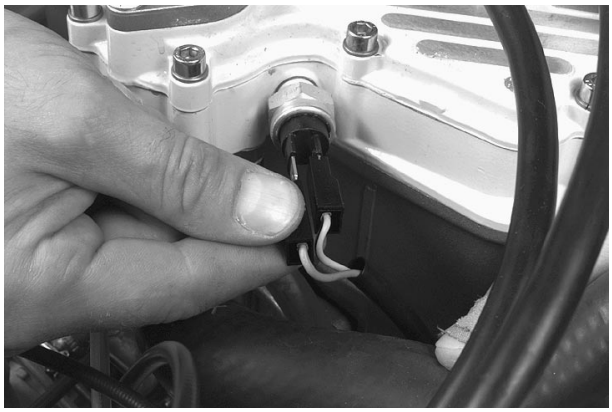

A06E1PA

TAB AND RECEPTACLE CONNECTORS REMOVAL

Tab Connector

It is locked in its housing by a spring tab on its side. Removal is done by squeezing this tab.

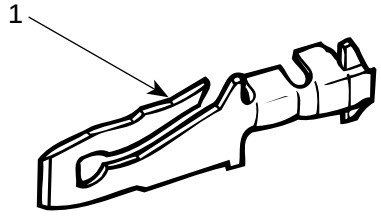

A00E1DA

1. Locking tab

To remove :

– Insert a screwdriver or Snap-on TT 600-5 from side opposite of wire and pry locking tab.
– While holding locking tab pryed, pull connector toward wire side.

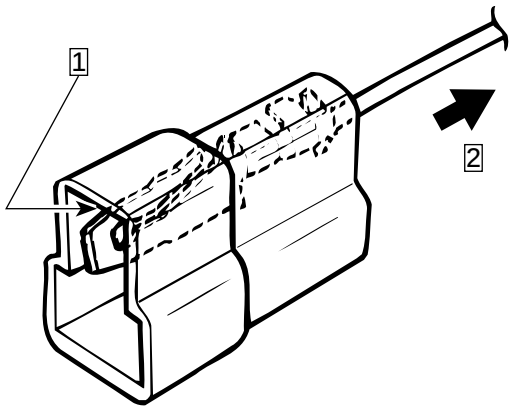

A00E1EA

Step 1 : Insert screwdriver here
Step 2 : Pull this side

Receptacle Connector

It is locked in its housing by a small tab on top. Removal is done by squeezing this tab.

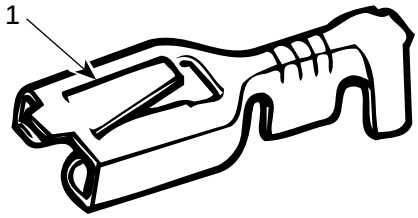

A00E1BA

1. Locking tab

To remove :

– Insert a small screwdriver or Snap-on TT 600-5 in access opening, opposite of wire side, between receptacle and its housing and squeeze locking tab.
– While holding locking tab squeezed, pull connector toward wire side.

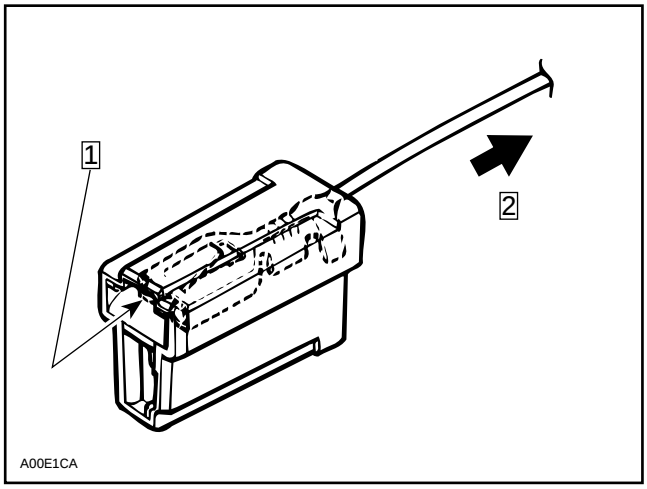

Step 1 : Insert screwdriver here
Step 2 : Pull this side

Locking Receptacle Connector

To remove :

– Insert Snap-on tool TT 600-5 in access opening then pull housing.

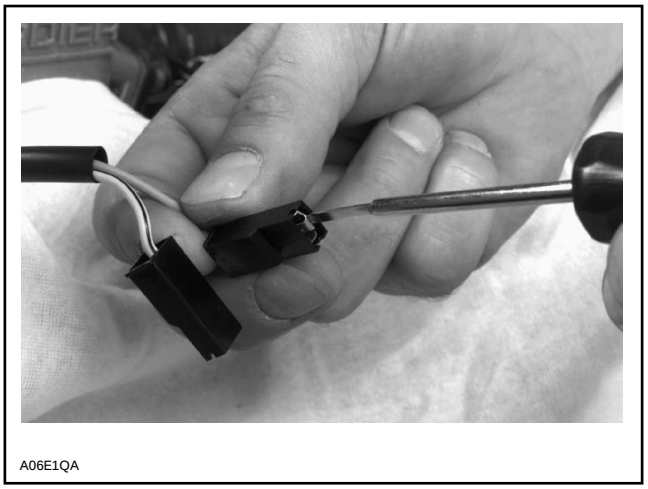

TAB AND RECEPTACLE CONNECTORS INSTALLATION

Prior to installing, make sure locking tab is sufficiently lifted to properly lock.

Insert tab and receptacle connectors in their respective housings as shown in following illustrations. Push sufficiently so that they snap. Try pulling wire to ensure they are properly locked.

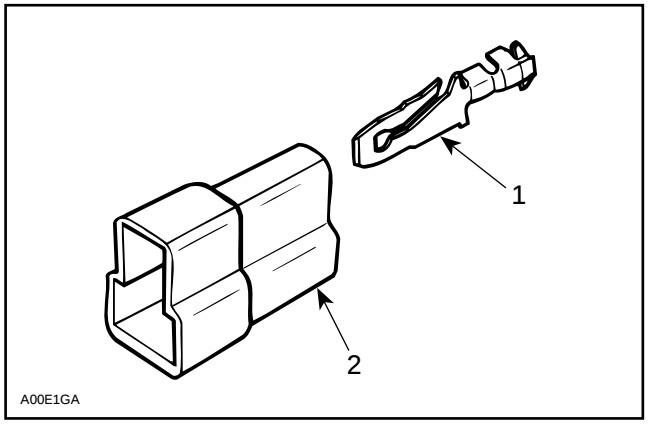

1. Tab
2. Housing

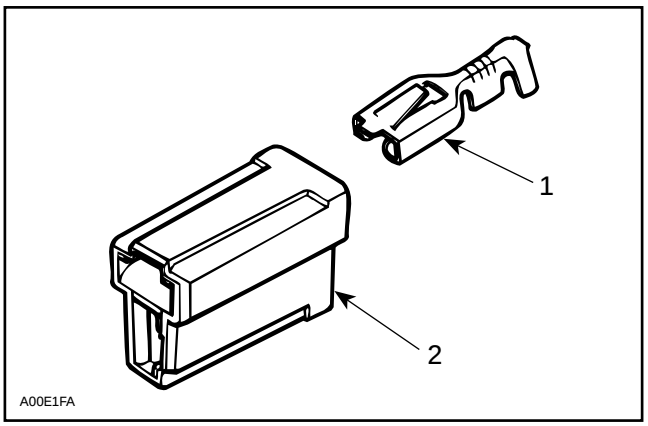

1. Receptacle
2. Housing

ACCESSORIES INSTALLATION

On all electric start models : The direct current (DC) utilizes the snowmobile frame as ground “wire” while all alternating current (AC) consumers (lights, heated grips, fuel gauge, etc.) utilize a separate ground wire.

Never interconnect AC and DC grounds as an AC voltage drop will result. When installing accessories on any snowmobile, connect their wires directly to the YELLOW and YELLOW / BLACK lighting coil wires.

Even if manual start models have an AC ground to the chassis (on voltage regulator), all accessories utilize a ground wire isolated from chassis. When an electric starter kit is installed, the voltage regulator and its ground wire are replaced by a voltage rectifier / regulator unit permitting a completely isolated AC circuit.

◆ WARNING : Never secure electrical wires / cables with fuel lines. Keep wires away from any rotating, moving, heating, vibrating or sharp edge. Use proper fastening devices as required.

IGNITION TIMING

NIPPONDENSO TRIGGER COIL SYSTEM

494, 582, 583 and 670 Engine Type

Ignition timing is adjusted by movement of trigger coil. Raising position of trigger coil retards ignition. Lowering position of trigger advances ignition. On 494 and 670 engines, moving trigger coil to right retards ignition and moving to left advances ignition.

▼CAUTION : Each time ignition timing is adjusted by moving trigger coil, air-gap must be adjusted.

Refer to CDI MAGNETO 04-03 then look for Trigger Coil Adjustment after adjusting ignition timing.

Verifying Magneto Flywheel Timing Mark Position

Prior to checking the timing, it may be necessary to verify the position of the timing mark on the magneto flywheel, for the following reasons :

1. To detect a missing or broken magneto flywheel Woodruff key which would allow a change of timing to occur, with eventual break down of the engine.
2. To correctly locate and mark a timing mark on a new service magneto flywheel.
3. To verify the correct location of the factory timing mark.
4. To detect a wrong magneto flywheel.

To verify the position of the timing mark on the magneto flywheel or to scribe a timing mark, proceed as follows :

All Engines

1. Clean the area around the spark plugs, and remove them.
2. Remove the rewind starter from the engine.
3. Install the TDC gauge in the spark plug hole, (magneto side) and adjust as follows :
   a. Position the magneto flywheel at approximately TDC.

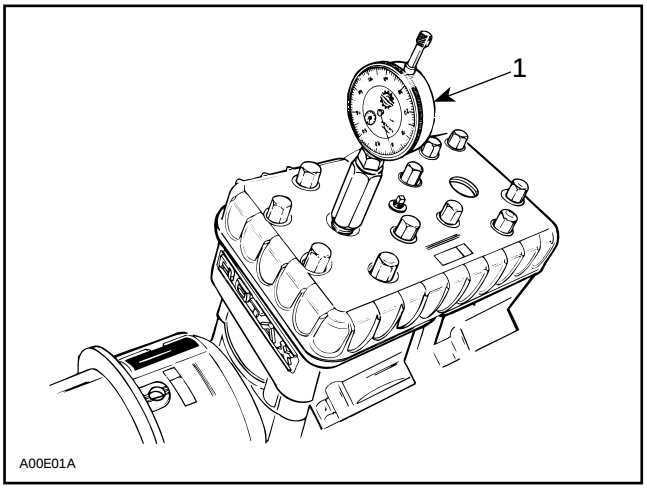

TYPICAL
1. TDC gauge MAG side

   b. Assemble the gauge to the adaptor and tighten the roller lock nut. Do not tighten the adaptor lock nut.
   c. Screw the adaptor into the spark plug hole and tighten to prevent movement in the plug hole.
   d. Position the dial face toward the magneto. Move the gauge down until the needle just begins to move, then move down a further 5 or 6 mm (approximately 1/4 in). Tighten adaptor lock nut by hand.
4. Locate the piston TDC position as follows :
   a. Slowly rotate the magneto flywheel back and forth across TDC while observing the needle. Note that the needle stops moving only as the piston is changing direction.
   b. Rotate the dial face so that “0” is in line with the needle when it stops moving.
   c. Again, slowly rotate the magneto flywheel back and forth across TDC and adjust the dial face to “0”, until the needle always stops exactly at “0” before changing direction.
   d. “0” now indicates exact TDC.
5. Verify the position of the timing mark on the magneto flywheel as follows :

NOTE : When checking timing, certain procedures require that the magneto flywheel be turned in a clockwise direction, viewed facing the magneto. If it is necessary to turn back (counterclockwise) for any reason, rotate the magneto flywheel at least one-quarter turn counterclockwise, and then rotate it clockwise. The last magneto flywheel movement when making a critical check must always be in a clockwise direction, to ensure that the slack in engine moving parts is taken-up.

a. Rotate the magneto flywheel counterclockwise, one-quarter turn then carefully rotate it clockwise until the needle indicates the specified measurement, indicated in TECHNICAL DATA 10.

b. Make sure that the dot located on the side of the magneto flywheel protrusion perfectly aligns with center of trigger coil core, refer to illustration.

c. If the marks do not align, slacken trigger coil screws and move trigger coil to align dot with center of trigger coil core.

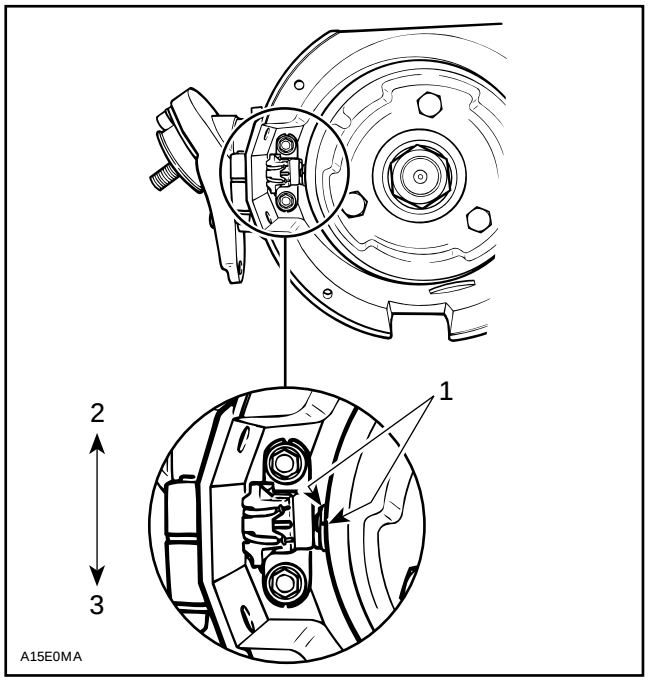

582, 583 AND 779 ENGINES

1. *Dot aligned with center of trigger coil core*
2. *Retard*
3. *Advance*

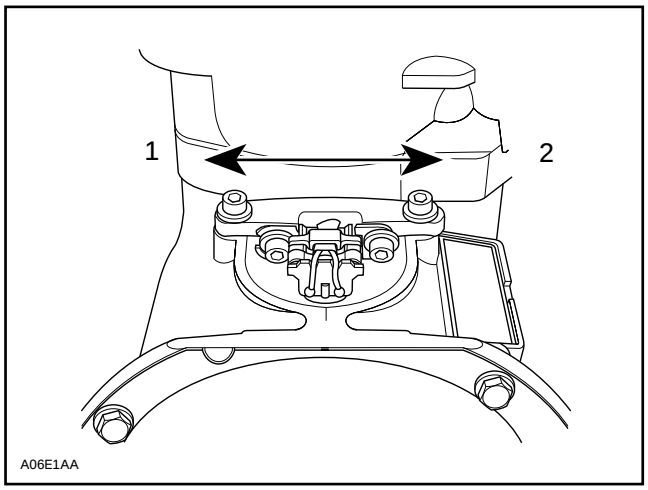

494 AND 670 ENGINES

1. *Advance*
2. *Retard*

NOTE : These marks can not be used to check dynamic (with engine running) ignition timing with a timing light : an other mark is scribed on magneto flywheel or damper for this purpose. When flywheel protrusion dot aligns with center of trigger coil core, flywheel mark and crankcase center mark must be aligned.

Checking Ignition Timing

A timing light capable of flashing reliably over 6000 RPM should be used. The following timing lights are recommended : SNAP-ON no. MT 212, ELECTRO-SPECIALTY no. 978 and ELECTRO-SPECIALTY no. TL 2802 which uses its own type C alkaline batteries.

To check the ignition timing, refer to illustration and proceed as follows :

NOTE : Engine should be cold when checking timing. Do not idle engine for more than 20 seconds and make checks quickly. Use a 12 V battery to power the timing light when working on manual start models, if light is not self-powered.

WARNING : Place ski tips against a wall, raise rear of vehicle on a stand, so that track does not contact the ground. Do not allow anyone in front of or behind the vehicle while engine is running. Keep clear of track and do not wear loose clothing which can get caught in moving parts.

1. Connect the timing light pick-up to a spark plug cable and the power connections to the battery.

NOTE : To avoid an incorrect reading due to parallax, view the magneto flywheel and the crankcase timing marks in a straight line.

2. Start the engine and point timing light straight in line with the crankcase timing mark. Bring engine to 6000 RPM for a brief instant.

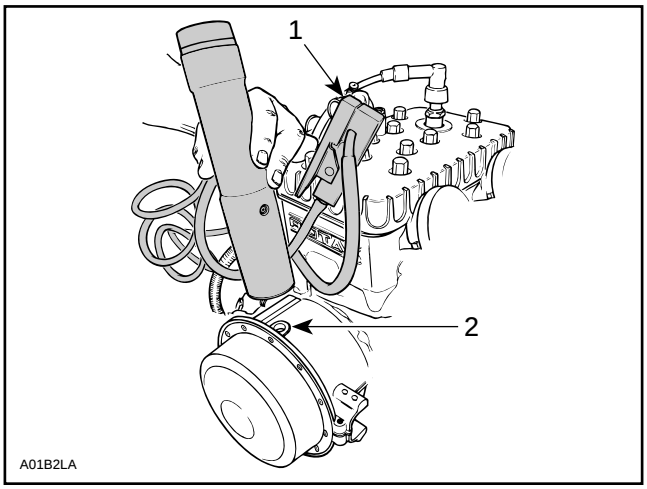

TYPICAL

1. *Timing light pick-up on MAG side*
2. *Timing inspection hole*

The magneto / damper mark must be aligned with center mark. If not, move trigger coil as explained above and recheck ignition timing. Tolerance is ± 1°.

If the marks still do not align, a faulty trigger coil (check proper grounding of coil) or a faulty CDI module could be the cause : substitute one part at a time and recheck timing marks (check connectors condition prior to substituting any part).

SPARK PLUGS

NGK SPARK PLUG

NGK SPARK PLUG NUMBERING SYSTEM

The heat range identification system is :

High number ⟶ cold plug
Low number ⟶ hot plug

1996 REFERENCE CHART

NGK spark plugs used on 1996 Bombardier snowmobiles :

– BR8ES
– BR9ES
– BR10ES

DESIGN SYMBOLS USED IN NGK SPARK PLUGS

PREFIX — SUFFIX

B R 9 E S – 15

WIDE GAP

- 10 : 1.0 mm (.040")
- 11 : 1.1 mm (.044")
- 13 : 1.3 mm (.050")
- 14 : 1.4 mm (.055")
- 15 : 1.5 mm (.060")
- 20 : 2.0 mm (.080")

Thread diameter

- **A :** 18 mm
- **B :** 14 mm
- **C :** 10 mm
- **D :** 12 mm
- **E :** 8 mm
- **J :** 12 mm x 19 mm Reach

Construction

- **M :** Compact Type
- **P :** Projected Insulator Type
- **R :** Resistor Type
- **U :** Surface Discharge
- **Z :** Inductive Suppressor Type

Heat rating numbers

2	Hot
4	
5	
6	
7	
8	
9	
10	Cold

Reach

- **E :** 19 mm (3/4")
- **F :** Taper Seat
- **H :** 12.7 mm (1/2")
- **L :** 11.2 mm (7/16")
- **Z :** 21 mm (53/54")

Blank

- 18 mm ø 12 mm (31/64")
- 14 mm ø 9.5 mm (3/8")

Firing end construction

- **A :** Special Design
- **B :** Single Ground Special Alloy
- **C :** Dual Ground Special Alloy
- **G :** Racing Type
- **GV :** Racing Version of V-Type
- **L :** Half Heat Range
- **S :** Standard Center Electrode
- **V :** Fine Wire Center Electrode
- **X :** Booster Gap
- **Y :** V-Grooved Center Electrode

A00E4NS

CROSSCUTS AND GAP STYLES OF SPARK PLUGS

Standard Type | Projected Insulator Type | Taper Seat Type | V-Type | Surface Discharge Type

A01E1PS

DISASSEMBLY

First unscrew the spark plug 1 turn.

Clean the spark plug and cylinder head with pressurize air then completely unscrew.

◆ WARNING : Whenever using compressed air, always wear protective eye wear.

HEAT RANGE

The proper operating temperature or heat range of the spark plugs is determined by the spark plug ability to dissipate the heat generated by combustion.

The longer the heat path between the electrode tip to the plug shell, the hotter the spark plug operating temperature will be – and inversely, the shorter the heat path, the colder the operating temperature will be.

A "cold" type plug has a relatively short insulator nose and transfers heat very rapidly into the cylinder head.

Such a plug is used in heavy duty or continuous high speed operation to avoid overheating.

The "hot" type plug has a longer insulator nose and transfers heat more slowly away from its firing end. It runs hotter and burns off combustion deposits which might tend to foul the plug during prolonged idle or low speed operation.

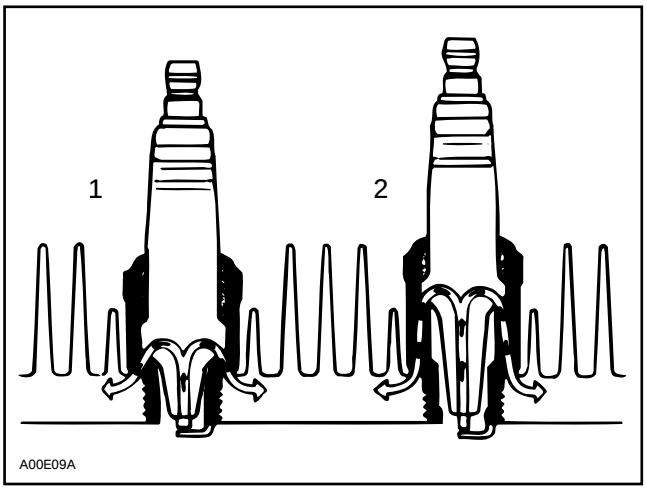

1. Cold
2. Hot

▼ CAUTION : Severe engine damage might occur if a wrong heat range plug is used.

A too "hot" plug will result in overheating and pre-ignition, etc.

A too "cold" plug will result in fouling (shorting the spark plug) or may create carbon build up which can heat up red-hot and cause pre-ignition or detonation.

FOULING

Fouling of the spark plug is indicated by irregular running of the engine, decreased engine speed due to misfiring, reduced performance, and increased fuel consumption. This is due to a loss of compression. Other possible causes are : prolonged idling, or running on a too rich mixture due to a faulty carburetor adjustment or incorrect fuel and / or fuel mixing. The plug face of a fouled spark plug has either a dry coating of soot or an oily, glossy coating given by an excess either of oil or of oil with soot. Such coatings form a conductive connection between the center electrode and ground.

SPARK PLUG ANALYSIS

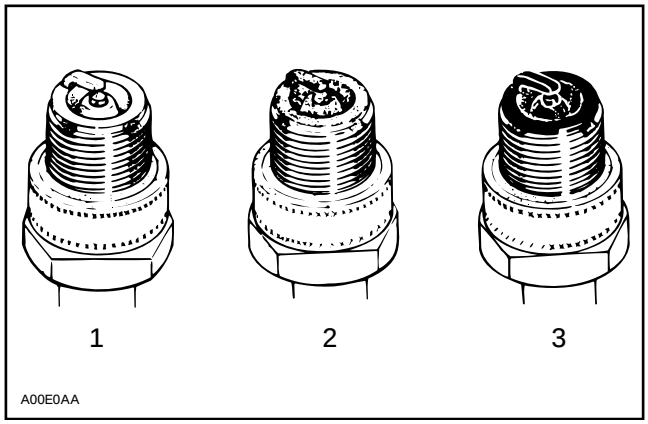

1. Overheated (light grey)
2. Normal (brownish)
3. Fouled (black)

The plug face (and piston dome) reveals the condition of the engine, operating condition, method of driving and fuel mixture. For this reason it is advisable to inspect the spark plug at regular intervals, examining the plug face (i.e. the part of the plug projecting into the combustion chamber) and the piston dome.

SPARK PLUG INSTALLATION

Prior to installation make sure that contact surfaces of the cylinder head and spark plug are free of grime.

1. Using a wire feeler gauge, set electrode gap according to TECHNICAL DATA 10.
2. Apply antiseize lubricant (P / N 413 7010 00) over the spark plug threads to prevent possible seizure.
3. Hand screw spark plug into cylinder head and tighten with a torque wrench and a proper socket.

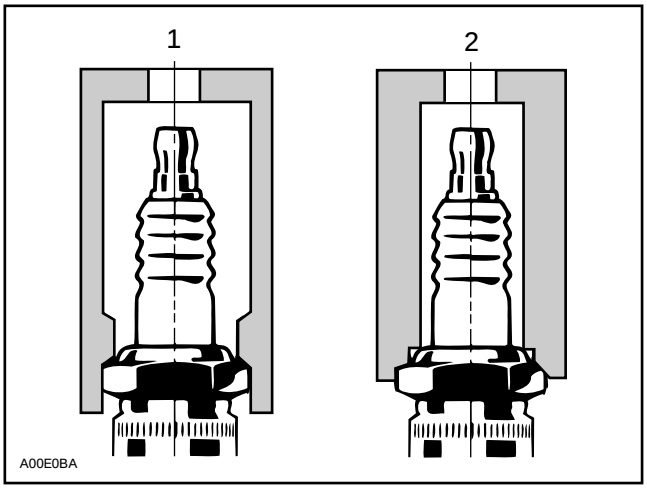

1. Proper socket
2. Improper socket

SPARK PLUG TIGHTENING TORQUE

Models	Spark plugs	Torque N•m (lbf•ft)
All models	NGK	27 (20)

BATTERY

REMOVAL

All Models

◆ WARNING : Battery BLACK negative cable must always be disconnected first and connected last.

◆ WARNING : Never charge or boost battery while installed on vehicle.

S-Series With Electric Starting

Remove belt guard.

Unfasten spark plug cables from fan housing. Unplug spark plug caps.

Remove throttle cable and primer hose attachment from air silencer.

Unplug CDI box harness connector.

Slacken collar on carburetor adaptors. Remove air silencer. CDI box will come along with.

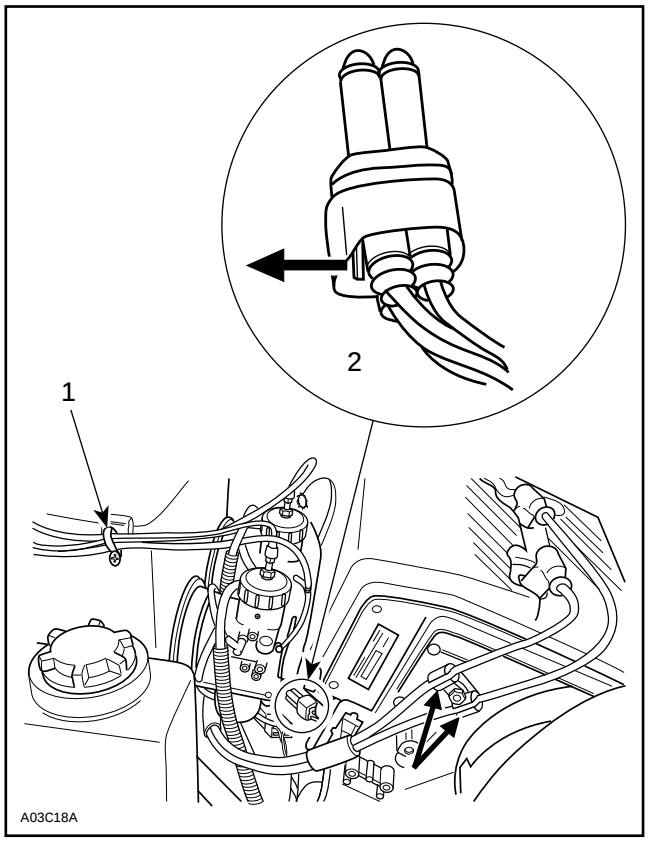

1. Attachment
2. CDI box harness connector

F-Series With Electric Starting

Remove air intake silencer.

All Models

Unfasten retaining strips.

Open strips and lift battery protective boot.

Remove vent tube.

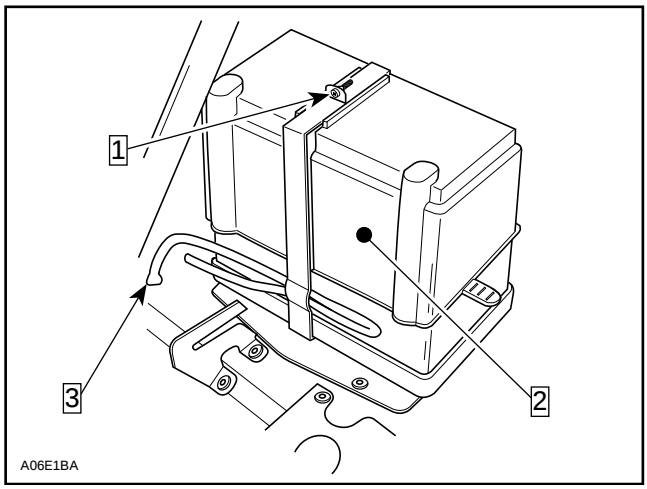

Step 1 : Unfasten and open
Step 2 : Lift protective boot
Step 3 : Remove vent tube

All Models

Withdraw battery from vehicle being careful not lean it so that electrolyte flows out of vent tube.

▼ CAUTION : Should any electrolyte spillage occur, immediately wash off with a solution of baking soda and water to prevent damage to vehicle components.

CLEANING

Clean the battery, battery casing, vent tube, caps, cables and battery posts using a solution of baking soda and water.

▼ CAUTION : Do not allow cleaning solution to enter battery interior since it will destroy the electrolyte.

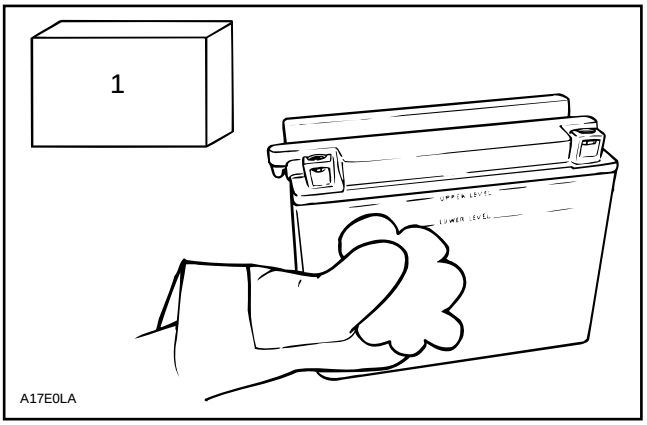

1. Baking soda

Remove corrosion from battery cable terminals and battery posts using a firm wire brush.

INSPECTION

Visually inspect battery casing for cracks or other possible damage. If casting is damaged, replace battery and thoroughly clean battery tray and close area with water and baking soda.

◆ WARNING : Should the battery casing be damaged, wear a suitable pair of non-absorbent gloves when removing the battery by hand.

Inspect battery posts for security of mounting.

Inspect for cracked or damaged battery caps, replace defective caps.

◆ WARNING : Battery caps do not have vent holes. Make sure that vent tube is not obstructed.

HYDROMETER TEST

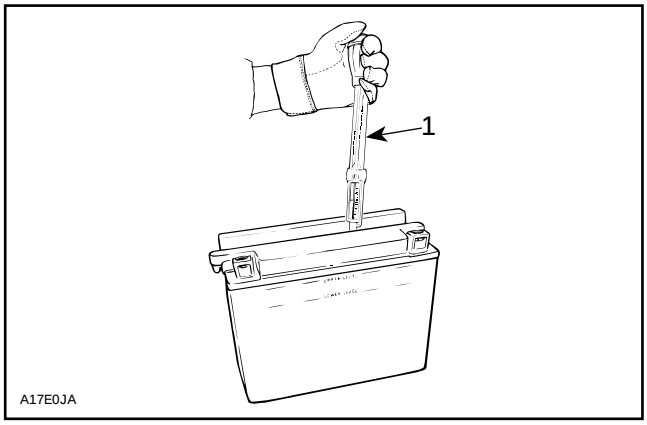

1. Specific gravity 1.260

A hydrometer measures the charge of a battery in terms of specific gravity of the electrolyte. Most hydrometers give a true reading at 27°C (80°F).

In order to obtain correct readings, adjust the initial reading by adding .004 points to the hydrometer readings for each 5.5°C (10°F) above 27°C (80°F) and by subtracting .004 point for every 5.5°C (10°F) below 27°C (80°F).

This chart will be useful to find the correct reading.

ELECTROLYTE TEMPERATURE		OPERATION TO PERFORM		
°C	°F			
38	100	add	.008	to the reading
32	90		.004	
27	80	correct reading		
21	70	substract	.004	from the reading
16	60		.008	
10	50		.012	
4	40		.016	
–1	30		.020	
–7	20		.024	
–12	10		.028	
–18	0		.032	
–23	–10		.036	
–29	–20		.040	
–34	–30		.044	
–40	–40		.048	

EXAMPLE NO. 1
Temperature below 27°C (80°F) :
Hydrometer Reading : 1.250
Electrolyte temperature : –7°C (20°F)
Subtract .024 Sp. Gr.
Corrected Sp. Gr. is 1.226

EXAMPLE NO. 2
Temperature above 27°C (80°F) :
Hydrometer Reading : 1.235
Electrolyte temperature : 38°C(100 (100°F)
Add .008 Sp. Gr.
Corrected Sp. Gr. is 1.243

▼ CAUTION : Do not install a partially charged battery on a snowmobile since the casing might crack at freezing temperature. The following chart shows the freezing point of the electrolyte in relation to the charge of the battery.

Temperature - Corrected Specific Gravity	Battery Charge	Freezing Point of Electrolyte	
1.260	Fully charged	–59°C	(–74°F)
1.230	3/4 Charged	–40°C	(–40°F)
1.200	1/2 Charged	–27°C	(–16°F)
1.170	1/4 Charged	–18°C	(0°F)
1.110	Discharged	–7°C	(+19°F)

BATTERY STORAGE

Disconnect and remove battery from the vehicle.

Check electrolyte level in each cell, add distilled water up to upper level line.

▼ CAUTION : Do not overfill.

The battery must always be stored in fully charged condition. If required, charge until specific gravity of 1.260 is obtained.

▼ CAUTION : Battery electrolyte temperature must not exceed 50°C (122°F). The casing should not feel hot.

Clean battery terminals and cable connections using a wire brush. Apply a light coat of dielectric grease (P / N 413 7017 00) or petroleum jelly on terminals.

Clean battery casing and caps using a solution of baking soda and water. Do not allow cleaning solution to enter battery, otherwise it will destroy the electrolyte. Rinse battery with clear water and dry well using a clean cloth.

Store battery on a wooden shelf in a cool dry place. Such conditions reduce self-discharging and keep fluid evaporation to a minimum.

During the storage period, recheck electrolyte level and specific gravity readings at least every 40 days. As necessary, keep the battery at its upper level line and near full charge as possible (trickle charge).

ACTIVATION OF NEW BATTERY

◆ WARNING : Never charge or boost battery while installed on vehicle.

▼ CAUTION : Prior to charging the battery, always remove it from the vehicle to prevent electrolyte spillage.

A new battery is factory fresh dry charged. For storage purposes, it is fitted with a temporary sealing tube.

Do not remove the sealing tube or loosen battery caps unless activation is desired.

In case of accidental premature removal of caps or sealing tube, battery should be given a full charge.

Perform the following operations anytime a new battery is to be installed.

1. Remove the sealing tube from the vent elbow. Install vent tube, included in the battery kit, to battery elbow.

◆ WARNING : Failure to remove the sealing tube could result in an explosion.

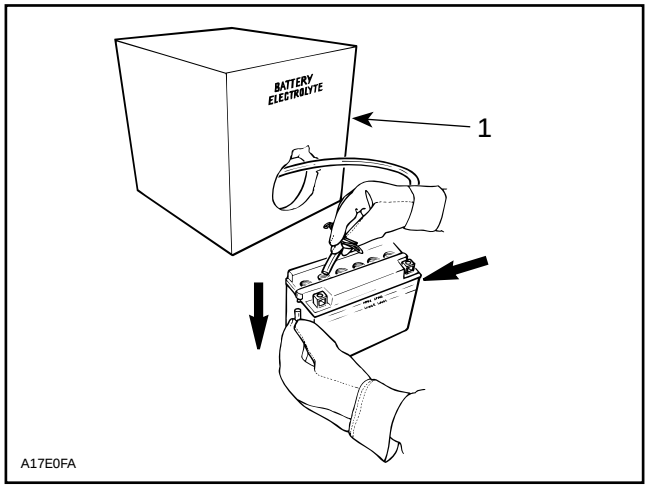

1. Battery electrolyte

2. Remove caps and fill battery to UPPER LEVEL line with electrolyte (specific gravity : 1.260 at 20°C (68°F)).
3. Allow the battery to stand for 30 minutes MINIMUM so that electrolyte soak through battery cells.

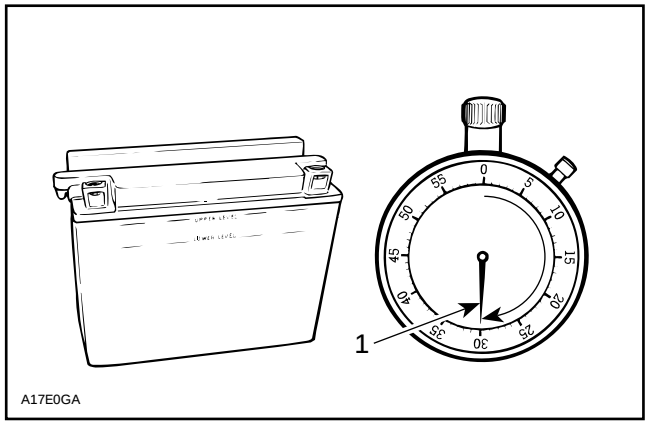

1. 30 minutes

4. Allow gas bubbles to escape by lightly shaking battery by hand.

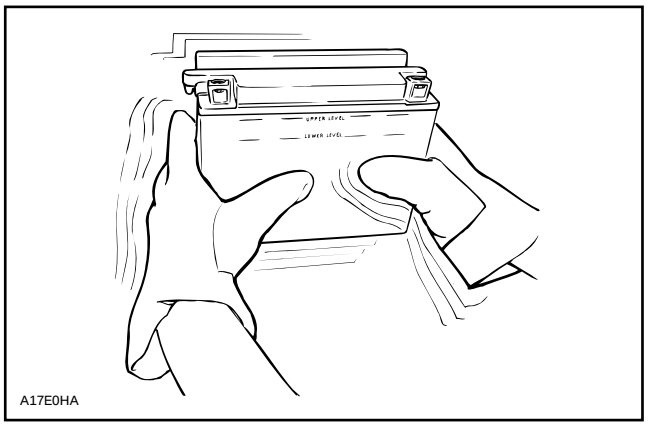

5. Readjust the electrolyte level to the UPPER LEVEL line.

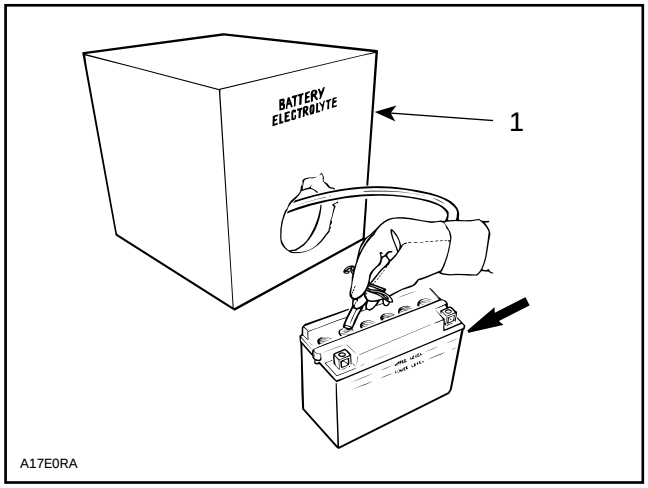

1. Battery electrolyte

6. Connect a 2 A battery charger for 10 to 20 hours.

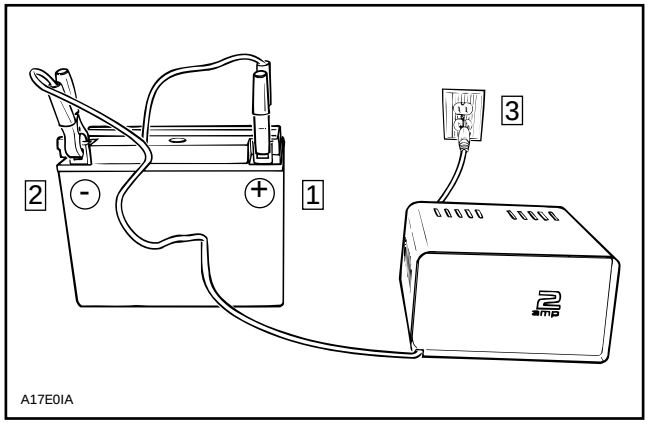

▼CAUTION : If charging rate raises higher than 2.4 A reduce it immediately. If cell temperature rises higher than 50°C (122°F) (if the casing feels hot) discontinue charging temporarily or reduce the charging rate.

◆WARNING : Gases given off by a battery being charged are highly explosive. Always charge in a well ventilated area. Keep battery away from cigarettes or open flames. Always turn battery charger off prior to disconnecting cables. Otherwise a spark will occur and battery might explode.

7. Disconnect battery charger.

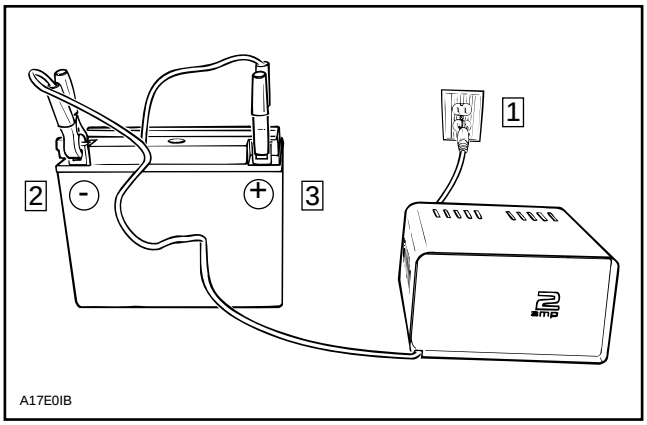

8. Test battery state of charge. Use a hydrometer.

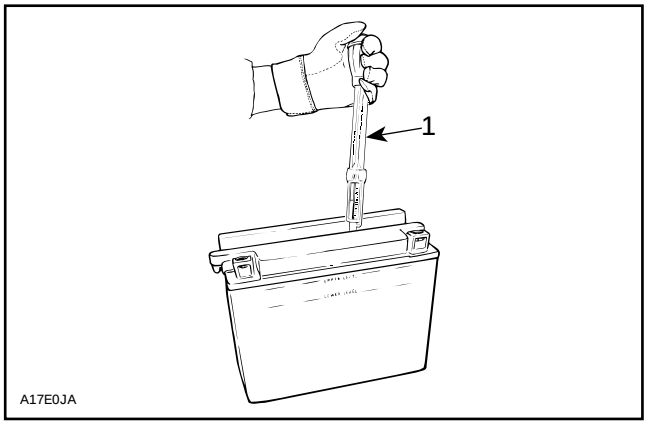

1. Specific gravity 1.260

9. Let battery settles for one hour.

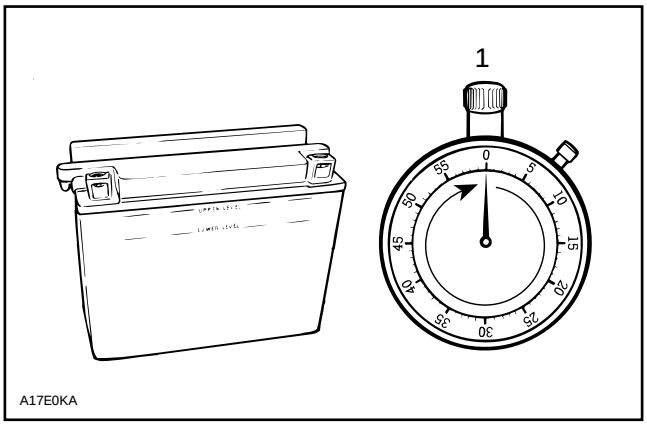

1. 60 minutes

10. Allow gas bubbles to escape by lightly shake battery.

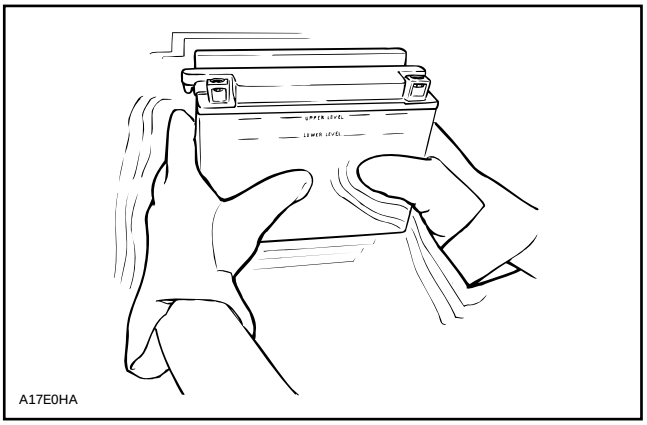

11. Readjust electrolyte level.

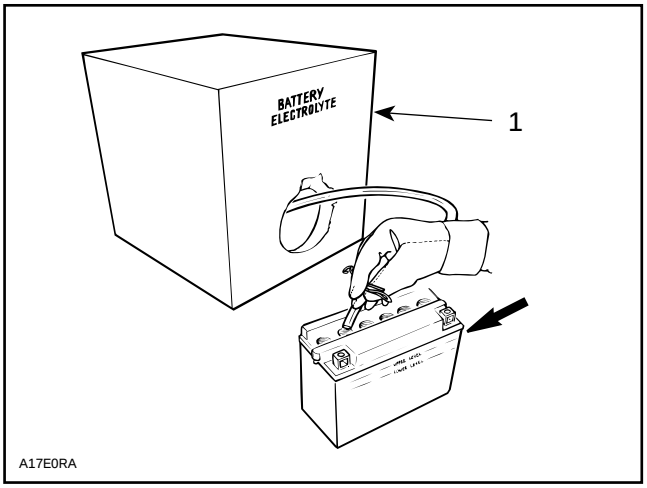

1. Battery electrolyte

12. Reinstall caps and clean any electrolyte spillage using a solution of baking soda and water.

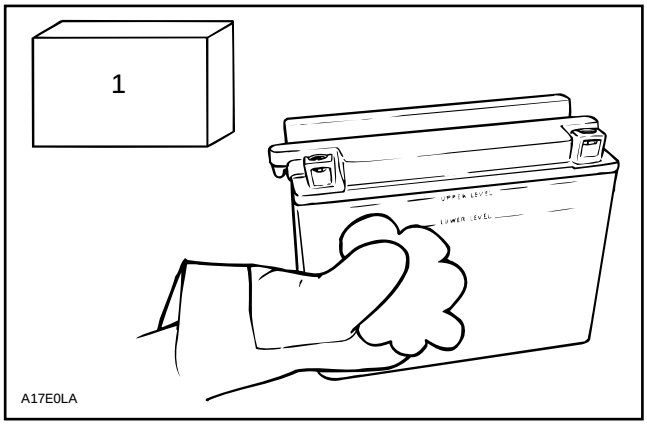

1. Baking soda

CAUTION : Do not allow cleaning solution to enter battery interior since it will destroy the electrolyte.

NOTE : It is recommended to verify the battery charge once a month. If necessary, fully charge battery.

SERVICING

Electrolyte Level

Since a battery has been activated (see above), add distilled water to top up electrolyte.

TIPS FOR CHARGING A USED BATTERY

CAUTION : Prior to charging the battery, always remove it from the vehicle to prevent electrolyte spillage.

For best results, battery should be charged when the electrolyte and the plates are at room temperature. A battery that is cold may not accept current for several hours after charging begun.

Do not charge frozen battery. If the battery charge is very low, the battery may freeze. If it is suspected to be frozen, keep it in a heated area for about two hours before charging.

WARNING : Do not place battery near open flame.

The time required to charge a battery will vary depending some factors such as :

– Battery temperature : The charging time is increased as the temperature goes down. The current accepted by a cold battery will remain low. As the battery warms up, it will accept a higher rate of charge.

– State of charge : Because the electrolyte is nearly pure water in a completely discharged battery, it cannot accept current as well as electrolyte. This is the reason the battery will not accept current when the charging cycle first begins. As the battery remains on the charger, the current from the charger causes the electrolytic acid content to rise which makes the electrolyte a better conductor and then, the battery will accept a higher charging rate.

– Type of charger : Battery chargers vary in the amount of voltage and current that they can supply. Therefore, the time required for the battery to begin accepting measurable current will also vary.

Charging a Very Flat or Completely Discharged Battery :

Unless this procedure is properly followed, a good battery may be needlessly replaced.

– Measure the voltage at the battery posts with an accurate voltmeter. If it is below 10 volts, the battery will accept current at very low rate, in term of milliamperes, because electrolyte is nearly pure water as explained above. It could be some time before the charging rate increases. Such low current flow may not be detectable on some charger ammeters and the battery will seem not to accept any charge.

– Only for this particular case, set the charger to a high rate.

NOTE : Some chargers have a polarity protection feature which prevents charging unless the charger leads are connected to the correct battery terminals. A completely discharged battery may not have enough voltage to activate this circuitry, even though the leads are connected properly. This will make it appear that the battery will not accept a charge. Follow the charger manufacturer's instruction telling how to bypass or override this circuitry so that the charger will turn on and charge a low-voltage battery.

– Since the battery chargers vary in the amount of voltage and current they provide, the time required for the battery to accept measurable charger current might be up to approximatively 10 hours or more.

– If the charging current is not up to a measurable amount at the end of about 10 hours, the battery should be replaced.

– If the charging current is measurable before the end or at the end of about 10 hours, the battery is good and charging should be completed in the normal manner as specified in Activation of a new battery.

– It is recommended that any battery recharged by this procedure be load tested prior to returning it to service.

BATTERY CHARGING EQUIPMENT

The battery charger should have an adjustable charging rate. Variable adjustment is preferred, but a unit which can be adjusted in small increments is acceptable.

The battery charger must be equipped with an ammeter capable of accurately measuring current of less than one ampere.

If the present charger is not adjustable to the proper current values, a rheostat can be connected in series with the battery to provide adjustment. 12 Ohm, 50 watt rheostats, such as OHMITE – 0314 or MALLORY 50K 12P, are available from electronic parts supply shops and they are suitable for use with most chargers if the peak current is to be held below 2 amps.

If you need an accurate ammeter, we recommend the use of : SHURITE – 5202 (0 to 3 amps) or – 5203 (0 to 5 amps) available from electronic parts supply shops.

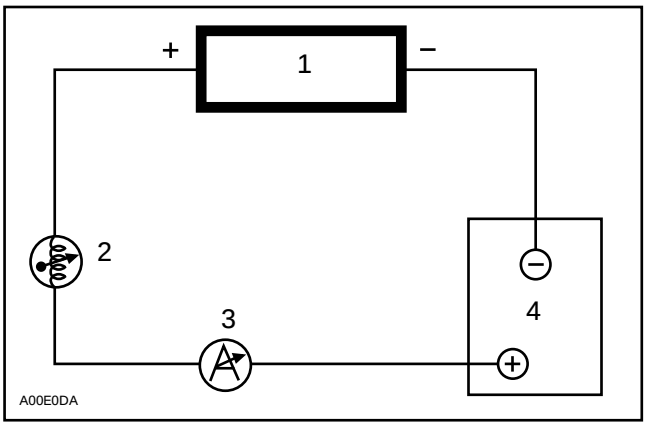

1. Charger
2. Rheostat 12 Ω, 50 W
3. Ammeter
4. Battery

For a service application and a permanent installation, both ammeter and rheostat can be built into a small box adjacent to your charger.

CAUTION : Adequate ventilation MUST be provided to cool the rheostat.

Charging 2 or More Batteries at a Time

Connect all positives together and use a charger with a capacities (rated) equal to : number of battery to be charged multiply by 2 A.

For example : charging five batteries at a time requires a 10 A rated charger (5 x 2 A = 10 A).

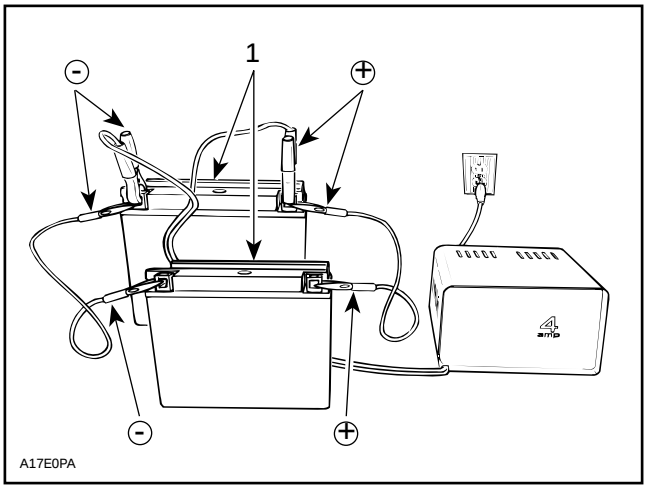

TYPICAL

1. 2 batteries = 4 A

INSTALLATION OF BATTERY

S-Series and F-Series With Electric Starting

Ensure vent tube is properly installed on battery elbow, then install protective boot over battery.

Bent rear strip by 15° to facilitate installation. That strip can also be taped on its hook portion so it stays in place.

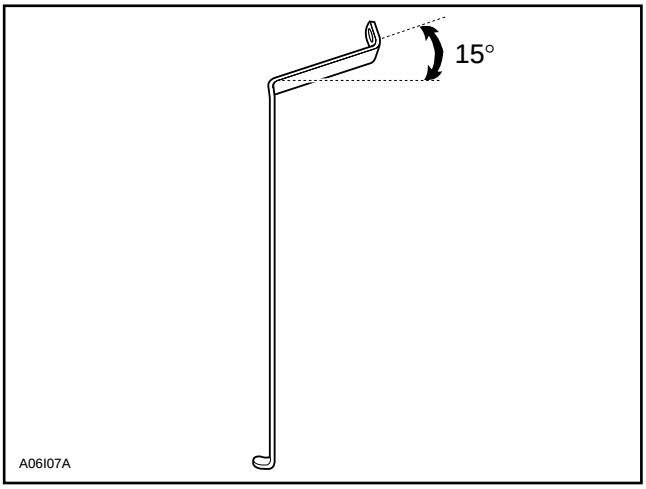

Close and fasten retaining strips.

Connect vent tube to vehicle fitting on front frame.

Route RED positive cable behing retaining strip and connect it to positive battery terminal.

Connect BLACK negative cable LAST.

CAUTION : Negative battery terminal should always be disconnected FIRST and reconnected LAST.

Apply silicone dielectric grease (P / N 413 7017 00) on battery posts and connectors.

Connect vent tube to vehicle fitting on front frame.

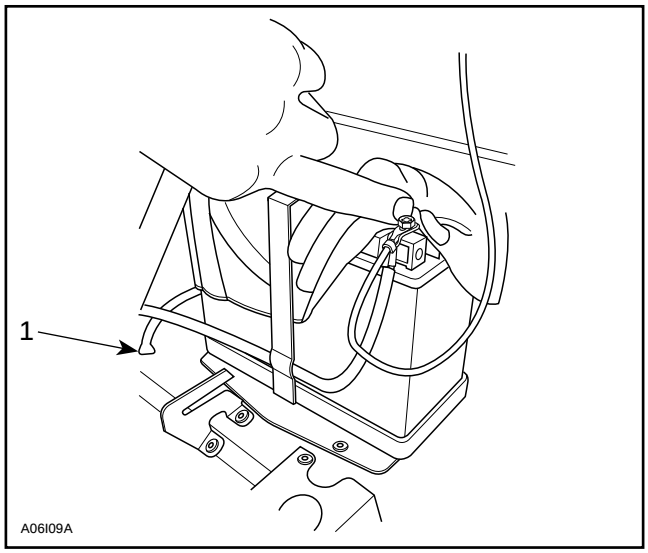

1. Vent tube on fitting

Ensure that vent tube is not kinked or blocked.

Reinstall air silencer.

WARNING : Vent tube must be free and open. A kinked or bent tube will restrict ventilation and create gas accumulation that might result in an explosion.

S-Series With Electric Starting

Fasten spark plug cables to fan housing.

Reinstall throttle cable and primer hose attachment to air silencer. See removal illustration.

Skandic WT

Secure battery brackets.

Connect battery cables.

CAUTION : Negative BLACK battery terminal should always be disconnected FIRST and reconnected LAST.

Apply silicone dielectric grease (P / N 413 7017 00) on battery posts and connectors.

Ensure vent tube is properly installed on battery elbow and that in not kinked or blocked.

Reinstall air intake silencer.

Secure oil injection pump caable to air intake silencer using a locking tie. Install locking tie loosely as per following illustration.

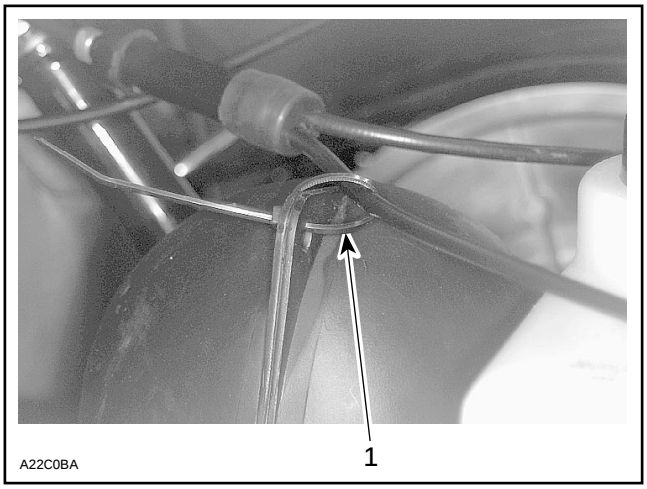

1. Locking tie

ELECTRIC STARTER

S-Series and F-Series with Electric Starting

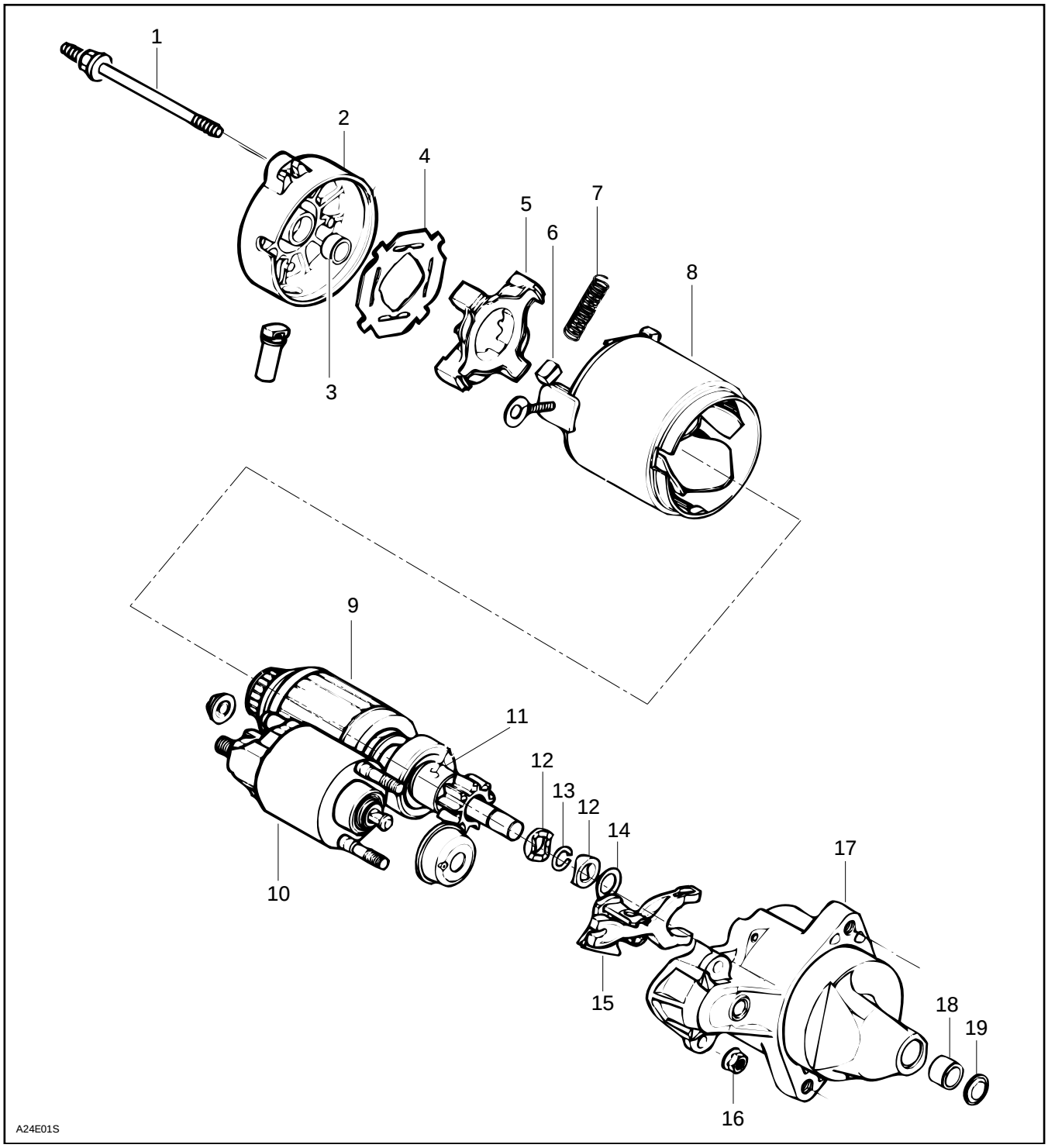

REMOVAL

– Disconnect BLACK ground cable from battery.
– Disconnect RED positive cable from battery.

◆ WARNING : Always disconnect ground cable first and connect last.

– Disconnect RED cable and RED / GREEN wire from starter solenoid switch.
– Remove starter from engine.

DISASSEMBLY

Disconnect bare wire linking starter and solenoid.

10,15,16, Solenoid Switch, Drive Lever and Nut

Remove nuts then solenoid switch by lifting and pulling to disengage from drive lever.

1,2,8,17, Screw, End Frame, Yoke and Drive Housing

Unscrew starter longer screws then pull yoke with end frame to separate from drive housing.

9,14,15, Armature, Thrust Washer and Drive Lever

Pull armature with drive lever being careful not to lose thrust washer at shaft end.

4,5,7, Insulator, Brush Holder and Spring

Remove insulator then brush springs being careful not to lose them since they will be projected out.

Pull brush holder from yoke.

11,12,13, Overrunning Clutch, Circlip and Stop Collar

Insert blade of a small screwdriver between stop collars.

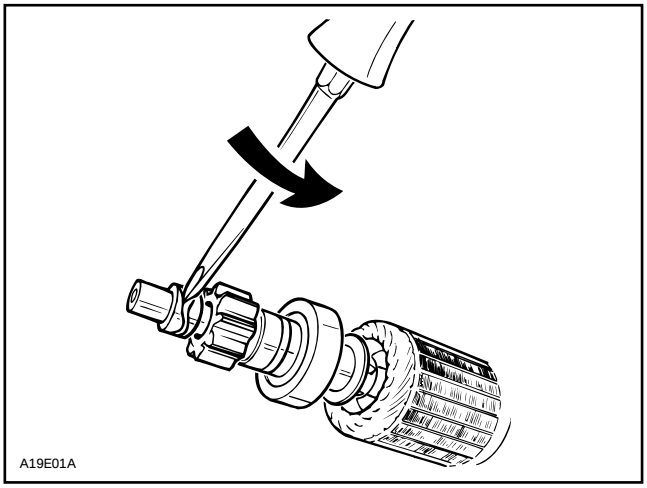

Twist screwdriver to separate stop collars thus giving access to circlip.

Remove outer collar, circlip then inner collar.

Remove overrunning clutch.

18,19, Bushing (drive housing) and Cover

Check the wear on bushing by measuring the amount of radial play between the armature shaft and the bushing.

The radial play should not exceed 0.20 mm (0.008 in). If greater, replace the bushing. To replace, press out the old one toward bushing cover and press in a new one with a bushing pusher. The correct size of the bushing pusher to use is given on next illustration.

▼ CAUTION : Support drive housing adequately to prevent damage when pressing bushing.

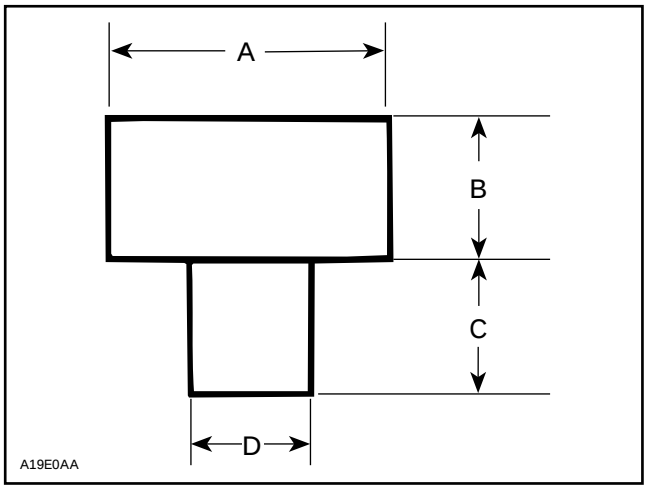

BUSHING PUSHER

A. 16 mm (5/8 in) dia.
B. 13 mm (1/2 in)
C. 11 mm (7/16 in)
D. 11 mm (.433 in) dia.

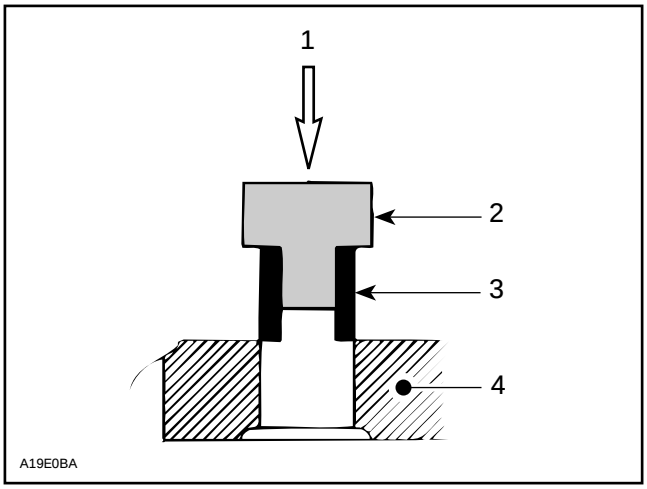

1. Press-in
2. Bushing pusher
3. Bushing
4. Drive housing

Install bushing cover then, using a punch, stake bushing cover in place.

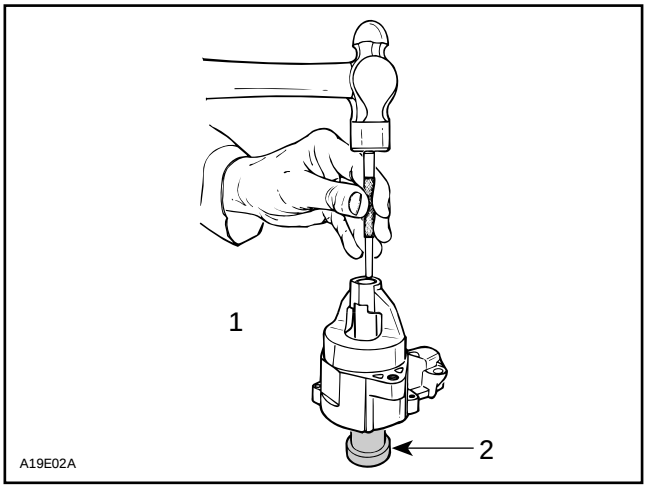

1. Stake bushing cover
2. Support

3, Bushing (end frame)

Check the wear on bushing by measuring the amount of radial play between the armature shaft and the bushing.

The radial play should not exceed 0.20 mm (.008 in). If greater, replace bushing as follows :

Using a 12 mm tap, cut threads into bushing so that the tap contacts the end frame. Continue to rotate tap until the bushing comes free.

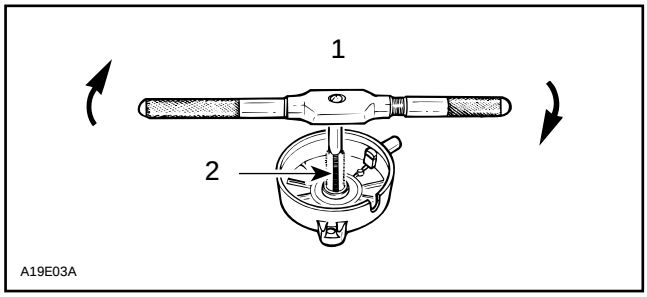

1. Turn until bushing goes out
2. 12 mm tap

To install new bushing, use the same bushing pusher as for drive housing bushing installation.

6, Brush

To replace, proceed as follows :

Cut brush wire close to connector at the welded portion.

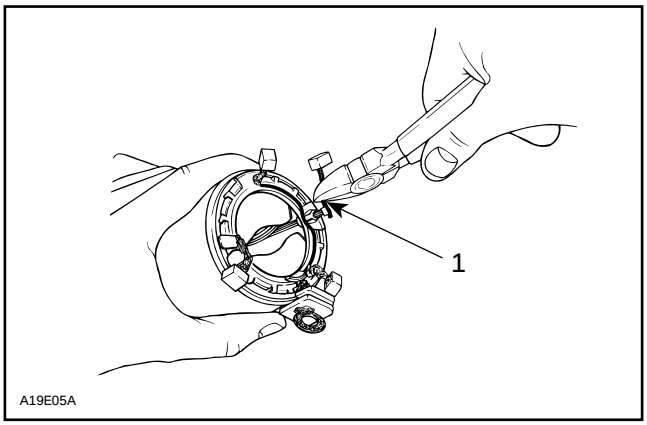

1. Cut close to connector

Remove burrs with a file on the remaining welded portion.

CAUTION : Be careful not to damage plastic portion of yoke.

Place spare brush plate edge against yoke connector edge (welded portion).

Crimp plate over yoke connector with a pair of pliers.

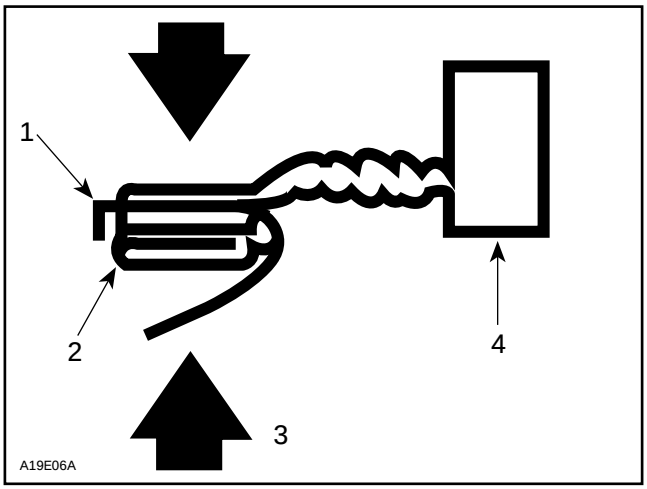

1. Plate edge
2. Yoke connector
3. Crimp
4. Spare brush

Solder the crimped portion.

CAUTION : Do not overheat and quickly perform soldering to prevent solder from flowing to the brush through the wire. Preferably use a heat sink.

CLEANING AND INSPECTION

Refer to the end of this sub-section.

ASSEMBLY

Prior to assembling, coat sliding surfaces and moving parts on armature shaft splines, overrunning clutch, solenoid switch plunger, drive lever and bushings with G.E. Versilube G 321 (P / N 413 7040 00) lubricant.

Proceed as follows for assembling.

Secure drive housing in a vise.

CAUTION : Do not overtighten since housing might be damaged.

12,13, Stop Collar and Circlip

Install overrunning clutch onto armature shaft. Insert inner collar onto shaft. Install a new circlip.

CAUTION : Always install a new circlip when servicing.

Insert outer collar being careful to match protrusions with notches of collars.

Using a pair of pliers on each side of stop collars, squeeze evenly until collars sit over circlip.

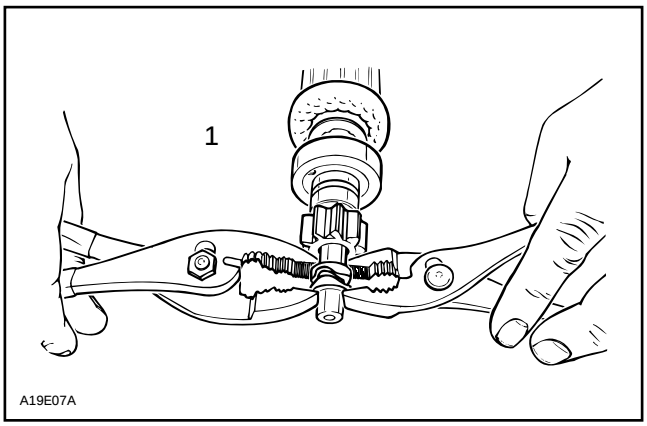

1. Squeeze evenly

12,14,15,17, Stop Collar, Thrust Washer, Drive Lever and Drive Housing

Install thrust washer against outer stop collar. Place drive lever onto overrunning clutch then insert into drive housing.

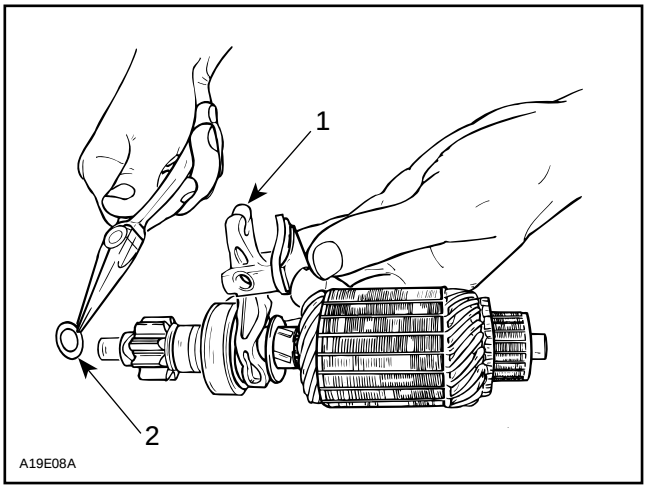

1. Install on overrunning clutch
2. Install thrust washer

5,6,7,8,9, Brush Holder, Brush, Spring, Yoke and Armature

Slide yoke over armature.

Install brush holder then brushes in their housings. Insert springs as follows : place one end of spring against brush, compress, then push the other end of spring onto its housing. Repeat for remaining springs.

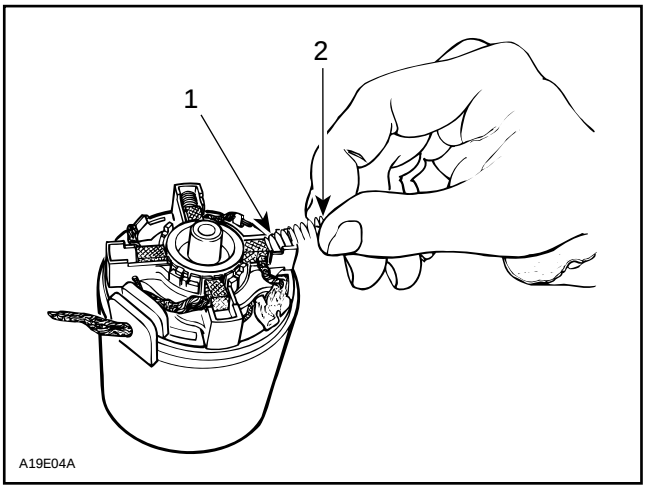

1. This end first
2. Push this end to complete

1,2,4, Screw, End Frame and Insulator

Secure insulator over brushes and springs. Properly install end frame and tighten screws.

10,15,17, Solenoid, Drive Lever and Drive Housing

Insert solenoid plunger inside of drive lever fork and secure to drive housing.

Connect starter bare wire to solenoid.

NOTE : Connect this wire on the shorter solenoid stud.

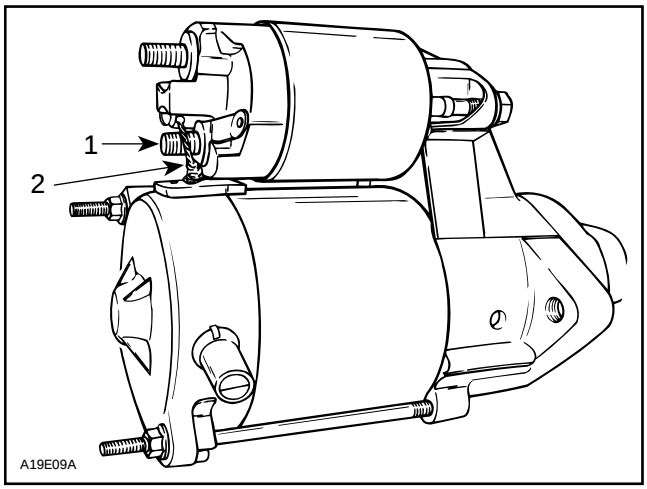

1. Shorter stud
2. Bare wire

INSTALLATION

Make sure that starter and engine mating surfaces are free of grime. Serious trouble may arise if starter is not properly aligned.

Install starter.

NOTE : Check proper engaging depth of starter pinion teeth to ring gear teeth (see illustration). Install hardened washers (P / N 503 0079 00) between engine and starter support and / or starter bracket accordingly.

CAUTION : All starter and starter bracket fasteners must be secured with Loctite 271 (P / N 413 7074 00).

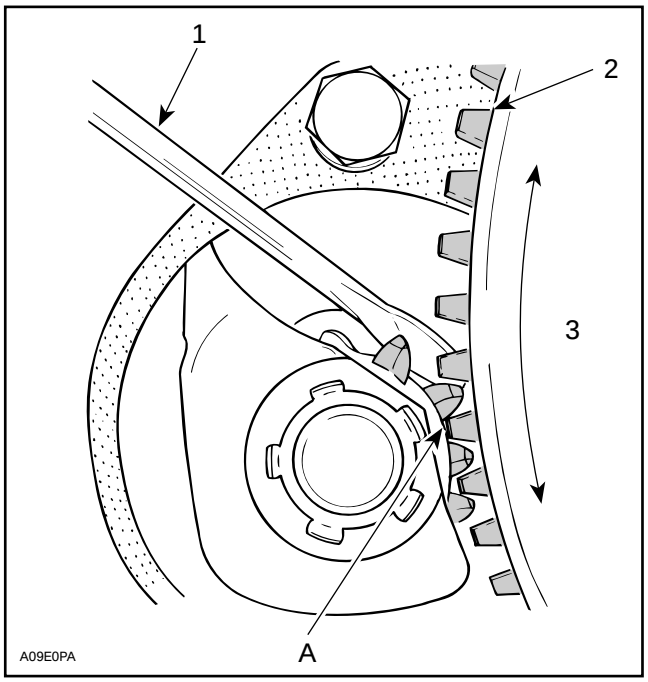

1. Screwdriver pulling starter pinion
2. Ring gear
3. No excessive backlash
A. 0.5 to 1.5 mm (.020 to .060 in)

Connect the RED battery cable and the red wire to the large terminal of the solenoid. Connect RED / GREEN wire to small terminal of solenoid.

Connect BLACK cable to battery.

◆ WARNING : Always disconnect ground cable first and connect last.

CLEANING AND INSPECTION

CLEANING

CAUTION : Armature starter yoke ass'y and drive unit assembly must not be immersed in cleaning solvent.

Clean brushes and holder with a clean cloth soaked in solvent. Brushes must be dried thoroughly with a clean cloth.

Blow brush holder clean using compressed air.

WARNING : Always wear safety goggles when using compressed air.

Remove dirt, oil or grease from commutator using a clean cloth soaked in suitable solvent. Dry well using a clean, dry cloth.

Clean engine starter gear teeth and drive unit (clutch).

NOTE : Bushings must not be cleaned with grease dissolving agents.

Immerse all metal components in cleaning solution. Dry using a clean, dry cloth.

INSPECTION

Armature

NOTE : .An ohmmeter may be used for the following testing procedures, except for the one concerning the shorted windings in the armature.

Check the commutator for roughness, burnt or scored surface. If necessary, turn the commutator on a lathe, enough to remove grime only.

Check the commutator for mica depth. If the depth is less than 0.20 mm (0.008 in), undercut the mica. Be sure that no burrs are left and no copper dust remains between the segments after the undercutting operation is completed.

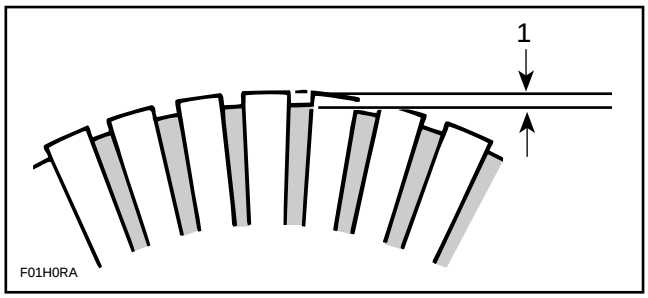

1. Commutator undercut 0.20 mm (.008 in)

Check the commutator out-of-round condition with V Blocks and an indicator. If the commutator out-of-round is more than 0.40 mm (.016 in), the commutator should be turned on a lathe.

Check commutator outer diameter. If less than specified value, replace.

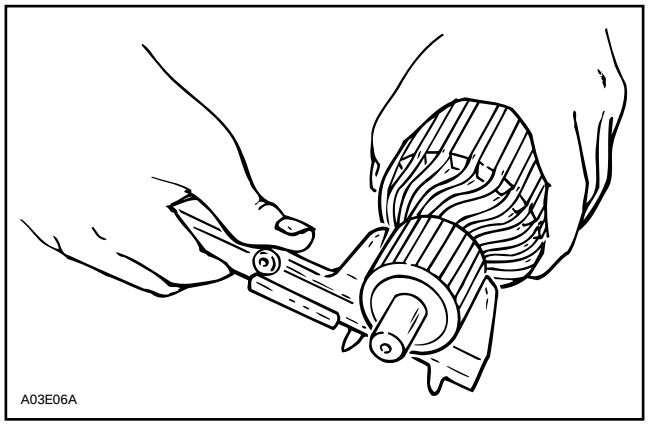

MODEL	WEAR LIMIT
All	27 mm (1.063 in)

Test for Ground Circuit in the Armature :

Use growler test probes. Check between armature core and the commutator bars. If growler lamp turns on, bars are grounded.

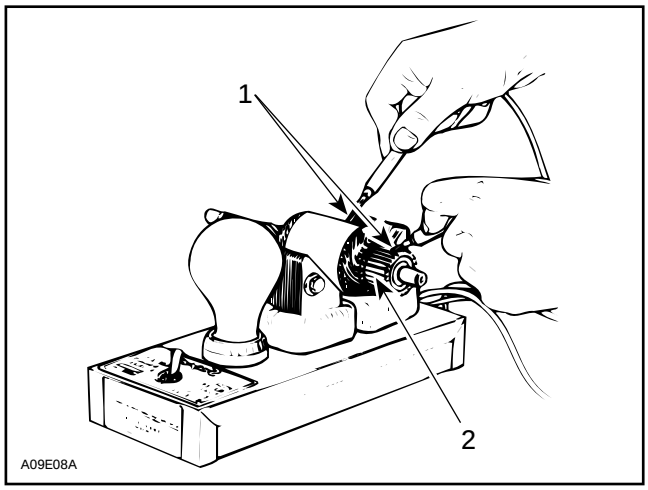

1. Test probes
2. Commutator bars

Test Armature for Shorted Winding :

When the armature is rotated in the growler with a steel strip (hack-saw blade) held above it, the strip will vibrate over that area of the armature which has short circuited.

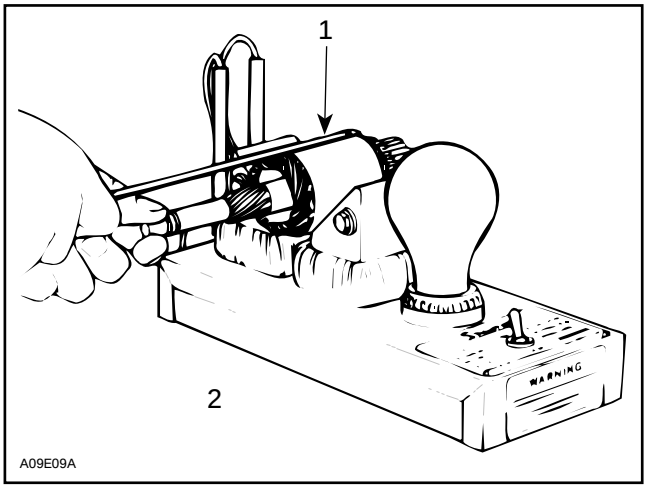

1. Steel strip (hack-saw blade)
2. Growler

Test the Armature for Open Circuit :

Use growler test probes. Place one test probe on a commutator bar and the other test probe on the neighboring bar. Repeat this operation for all bars, moving one test probe at a time. If the growler lamp does not turn on, the armature circuit between these two bars is opened. The armature should be replaced or repaired ; open circuits most often occur at the commutator riser where coils are soldered. (Burnt commutator bars are usually an indication of an open-circuited armature coil.)

Field Windings and Brushes

Test the Field Winding for Open Circuit

Use growler test probes. Place one test probe on the negative brush and the other test probe on the yoke. If growler lamp does not turn on, the field winding has an open-circuit. The yoke has to be repaired or replaced.

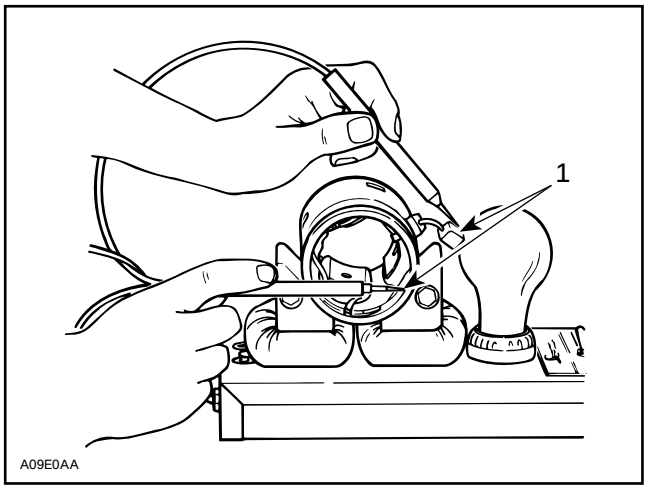

1. Test probes

Check the dynamic brake winding for open circuit by placing one test probe on the positive brush and the other probe on the negative brush.

If growler lamp does not turn on, the winding circuit is open-circuit and the yoke has to be repaired or replaced.

Brush Holder

Check the brush holder for insulation using growler test probes. Place one test probe on the insulated brush holder and the other test probe on the brush holder plate. If the growler lamp turns on, the brush holder has to be repaired or replaced.

Brush Length

Measure brush length. If less than the specified value, replace them.

MODEL	LENGTH	
	New	Wear limit
All	10 mm (.400 in)	6 mm (.236 in)

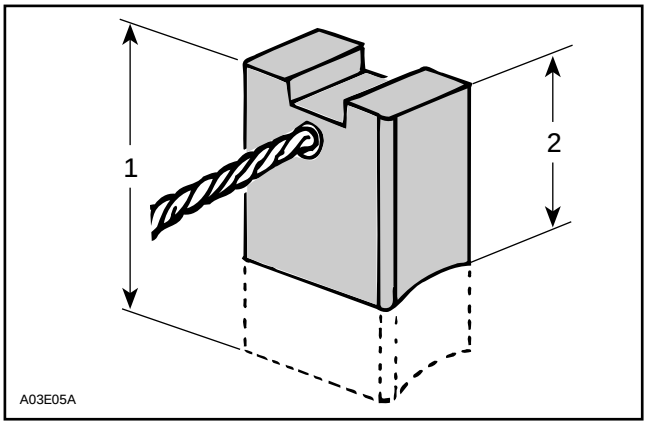

TYPICAL

1. *New*
2. *Wear limit*

Overrunning Clutch

The pinion of the overrunning clutch should turn smoothly in the clockwise direction, and should not slip in a counterclockwise direction. If defective, replace.

Check the pinion teeth for wear and damage. If defective, replace.

SOLENOID SWITCH

Inspect connections and clean as necessary. Solenoid switch condition can be checked with an ohmmeter. Install test probes on large connectors of solenoid when it is activated (+ on RED / GREEN wire and – on solenoid body).

IMPORTANT: No current must be present on large cables when using ohmmeter, otherwise meter could be damaged.

TESTING PROCEDURE

GENERAL

The following chart gives the engine types with their implemented system.

ENGINE TYPE	IGNITION SYSTEM	CHARGING SYSTEM OUTPUT
454, 494, 582, 583 and 670	①NIPPONDENSO (CDI) TRIGGER COIL	220

CDI System Identification

Nippondenso

The NIPPONDENSO CDI system has a separate ignition coil which is mounted on the reservoir cluster.

1. Ignition module is connected to the ignition generator coil via a 3-wire connector (RED, BLACK / RED and BLACK wires).

582 and 583 Engines

Ignition module stamped P / N : 070000-2281

Ignition coil stamped P / N : 129700-2982

Flywheel stamped P / N : 032000-7860

454, 494 and 670 Engines

Ignition module stamped P / N : 070000-2281

Ignition coil stamped P / N : 129700-2982

Flywheel stamped P / N : 032700-5900

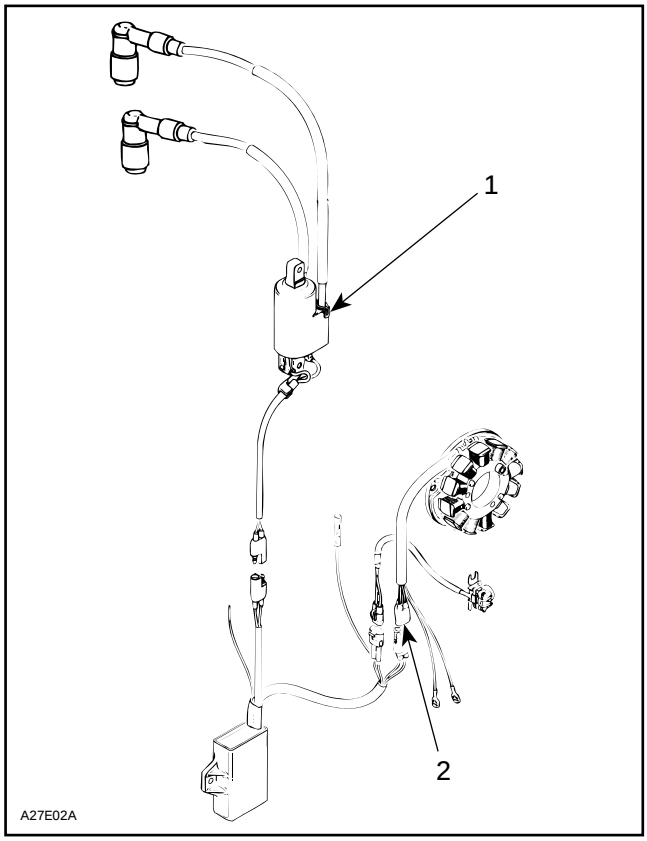

① NIPPONDENSO CDI TRIGGER COIL SYSTEM

1. Separate ignition coil mounted on reservoir cluster
2. Three-wire connector (RED, BLACK / RED and BLACK)

Ignition System Testing Sequence

When dealing with ignition problems, the following items should be verified in this order.

Nippondenso

1. Spark occurrence / spark plug condition.
2. Electrical connections.
3. Engine stop / tether cord switches.
4. gnition coil output.
5. gnition module output.
6. Magneto output (ignition generator coil).

▼ CAUTION : Whenever replacing a component in ignition system, check ignition timing.

The first 2 items can be checked with known automotive equipment and other items as follows.

Engine Stop / Tether Cut-Out Switches Verification

Engine Stop Switch

Unplug stop switch connector from main harness then using an ohmmeter, connect test probes to BLACK / YELLOW and BLACK wires.

Measure resistance, it must be an open circuit in its operating position and close to 0 ohm when depressed.

Tether Cut-Out Switch

Unplug tether cut-out switch connector from main harness then using an ohmmeter, connect test probes to BLACK / YELLOW and BLACK wires.

Measure resistance, it must be an open circuit when cap is over switch and close to 0 ohm when removed.

Magneto System Verification

System verification can be performed using the Bombardier ignition tester (P / N 419 0033 00), a digital ohmmeter or by substituting parts.

USE OF BOMBARDIER IGNITION TESTER

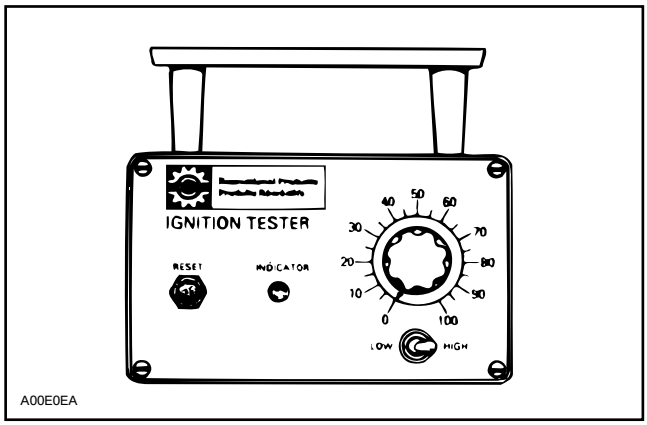

NOTE : For more information about operating and maintenance of the tester, refer to its instruction manual.

Test Condition

All tests are performed on the vehicle at cranking speed

Vigorous manual cranking against compression causes the flywheel to snap over, raising the output higher than by cranking without compression, therefore, do not remove spark plug.

Test values listed are taken against compression

Always crank vigorously as in actual starting.

Always proceed in the following order :

1. Connect tester P and N clip leads as illustrated for each specific test.
2. Follow test procedure sequence.
3. After every test that lights the indicator lamp, reset the indicator circuit by depressing the reset button.

Analysis of Test Results

Indicator Lamp Lights at Specific Setting

Output is as specified. Test results should repeat three times. If readings do not repeat, output is erratic and cause should be investigated (loose connections or components etc.).

Indicator Lamp Lights at Lower Setting

This indicates that the output is less than that designed to operate in a satisfactory manner. However, before coming to the conclusion of a faulty condition, be certain that correct engine cranking conditions were met before condemning the tested part.

Indicator Lamp Does Not Light

One component is defective. Proceed as instructed to find defective component.

Intermittent Ignition Problems

In dealing with intermittent problems there is no easy diagnosis. For example, problems that occur only at normal engine operating temperature have to be tested under similar conditions.

In most cases of temperature and / or vibration failure, only parts replacement can solve the problem as most of these failures return to normal when engine is not running.

Multiple Problems

There is always the possibility of more than one faulty part. If after a component has been replaced, the problem still persists, carefully repeat the complete test procedure to find the other faulty part.

NIPPONDENSO CDI TRIGGER COIL SYSTEM TESTING

Applicable to 454, 494, 582, 583, 670 Engine Types

NOTE : Ensure ignition cut-out switches are properly working and they are in the ON position prior to performing the following tests.

WARNING : To prevent powerful electric shocks while cranking engine, do not touch neither electronic ignition components (ignition coil, high tension wire, wire harness, etc.) nor tester leads.

TRIGGER COIL OUTPUT

1. Disconnect connector housing of trigger coil at ignition module.
2. Connect tester wires then set switch and dial as follows :

Tester wires	Component wires	Tester switch position	Tester dial position
N	BLUE/YELLOW wire of trigger coil	LOW	35
P	WHITE/YELLOW wire of trigger coil		

3. Crank engine and observe indicator.
4. Push reset button and repeat step 3 twice.

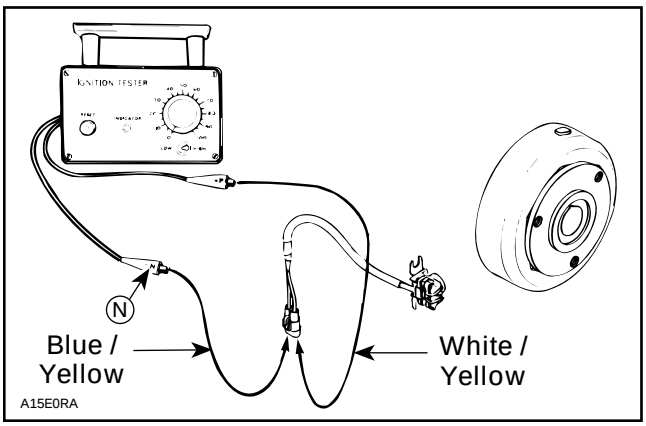

TYPICAL

Results :

a. Indicator lamp lights : Trigger coil output is up to specifications.
b. Indicator lamp does not light : The problem is a faulty trigger coil or bad grounding.

IGNITION COIL OUTPUT

A paper clip of approximately 20 mm (3/4 in) will be used as a test adapter for the following test.

1. Install the test adapter to spark plug cable close to MAG side spark plug.
2. Connect tester wires then set switch and dial as follows :

Tester wires	Component wires	Tester switch position	Tester dial position
N	Engine ground	LOW	45
P	Test adapter (paper clip) spark plug cable		

NOTE : Different reading occurs if N tester wire is connected to PTO or MAG side spark plug cable.

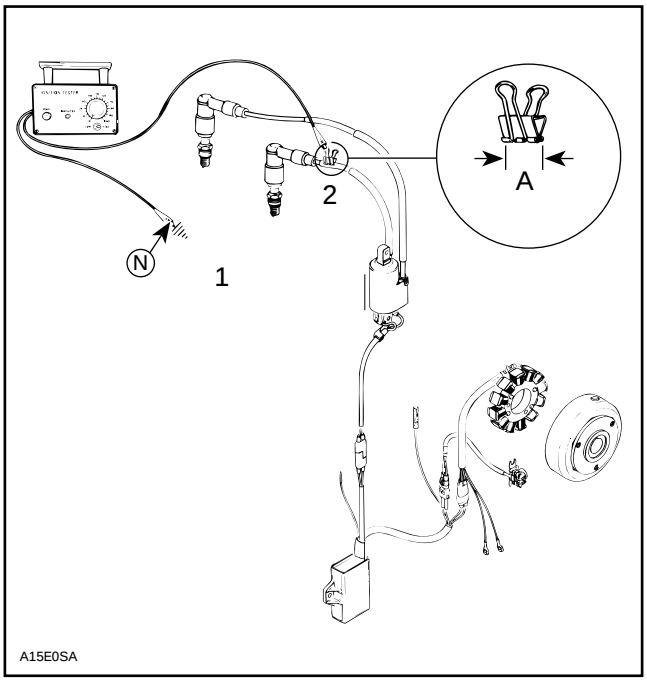

TYPICAL
1. *Engine ground*
2. *MAG side*
3. *20 mm (3/4 in)*

3. Crank engine and observe indicator.

NOTE : If engine starts, allow it to idle while observing indicator. Then, shut engine off.

4. Push reset button and repeat step 3 twice.

Results :

a. Indicator lamp lights : Ignition system is OK.

b. Indicator lamp does not light on one or both cylinder : Proceed to following tests.

IGNITION MODULE

1. Disconnect both connectors at ignition coil.

   At assembly, secure with new locking ties.

2. Connect an ignition coil (known as being in good condition) to the spark plug(s).

3. Connect CDI module to replacement ignition coil paying attention to connect the WHITE / BLUE wire to the positive (+) terminal and the BLACK wire to the negative (–) terminal.

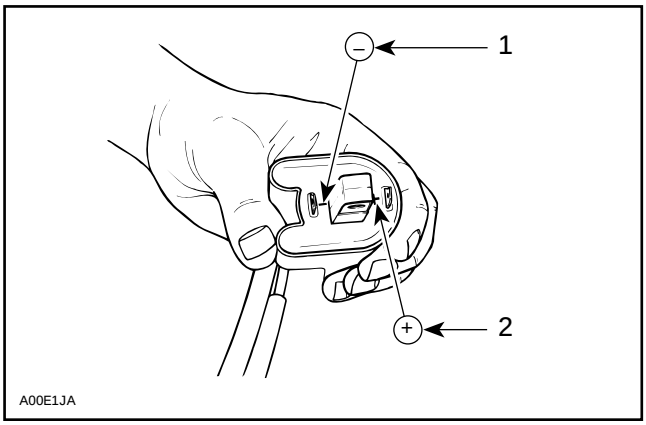

1. *Black*
2. *White/Blue*

4. Slip plastic protectors out of coil terminals.

5. Connect tester wires to coil terminals then set switch and dial as follows :

NOTE : If necessary use jumper wires from coil terminals to tester wires.

Tester wires	Component wires	Tester switch position	Tester dial position
N	WHITE/BLUE wire (+) of ignition coil	LOW	85
P	BLACK wire (–) trigger coil		

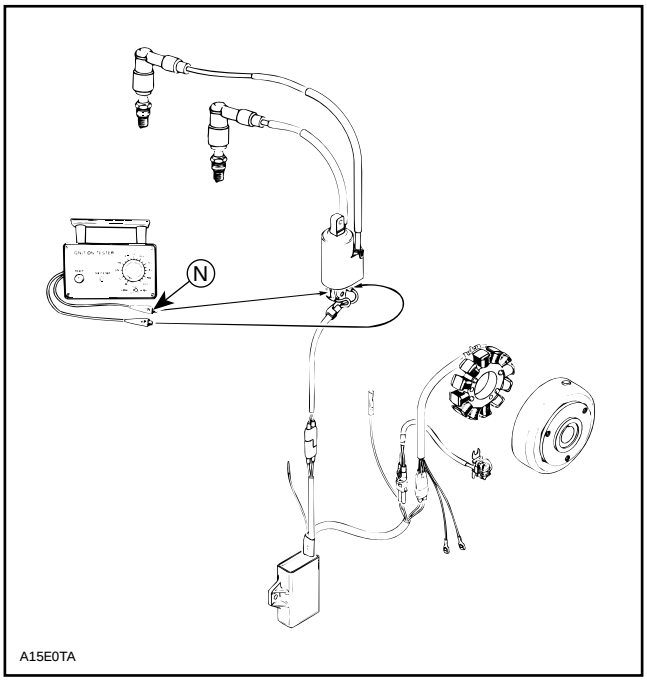

TYPICAL

6. Crank engine and observe indicator.
7. Push reset button and repeat step 6 twice.

Results :

a. **Indicator lamp lights** : Ignition module output is up to specifications. The problem is a faulty ignition coil.

b. **Indicator lamp does not light** : Proceed to following test. If magneto output tests good, the problem is a faulty ignition module.

MAGNETO OUTPUT (IGNITION GENERATOR COIL)

1. Disconnect the 3-wire connector between ignition module and magneto harness.

   At installation, secure with new locking ties.

2. Connect tester wires then set switch and dial as follows :

Tester wires	Component wires	Tester switch position	Tester dial position
N	RED wire of magneto harness	LOW	35
P	BLACK/RED wire of magneto harness		

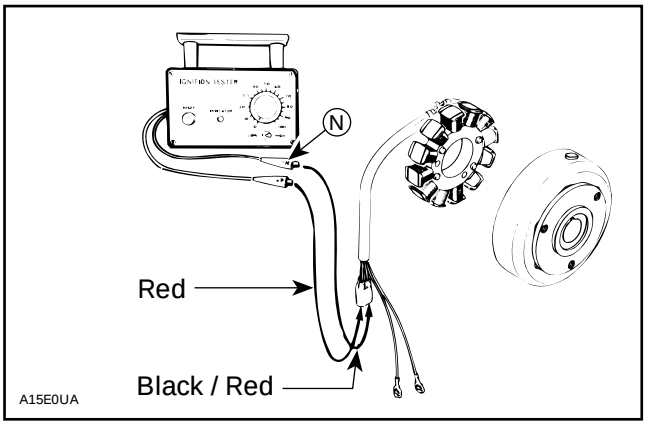

TYPICAL

All Engines

3. Crank engine and observe indicator.
4. Push reset button and repeat step 3 twice.

LIGHTING GENERATOR COIL OUTPUT

NOTE : The lighting generator coil is not part of the ignition system. It is a separate system that supplies current to the lighting system and AC-powered devices. However it can be tested with the same tester.

1. Disconnect wiring harness junction block at engine (the one with YELLOW wires).
2. Connect tester wires then set switch and dial as follows :

Tester wires	Component wires	Tester switch position	Tester dial position
N	YELLOW wire of magneto harness	LOW	75
P	YELLOW wire of magneto harness		

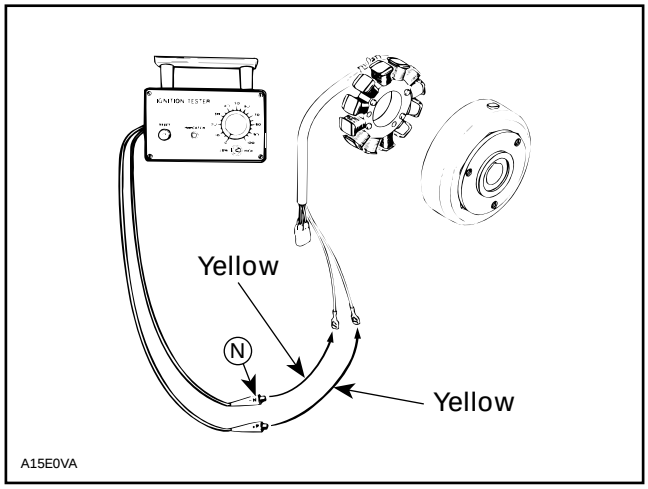

3. Crank engine and observe indicator.
4. Push reset button and repeat step 3 twice.

Results :

a. Indicator lamp lights : Lighting generator coil output is up to specifications.

b. Indicator lamp does not light : Lighting generator coil is faulty.

SUMMARY TABLE

Test to perform	Tester wires	Component wires	Tester switch position	Dial
Ignition coil output	N	BLUE/YELLOW wire of trigger coil	LOW	35
	P	WHITE/YELLOW wire of trigger coil		
Ignition coil output	N	Engine ground	LOW	45
	P	Test adapter on MAG spark plug cable		
Ignition module output	N	WHITE/BLUE wire (+) of ignition coil	LOW	85
	P	BLACK wire (–) of ignition coil		
Magneto output (ignition generator coil)	N	RED wire of magneto harness	LOW	85
	P	BLACK/RED wire of magneto harness		
Lighting generator coil output	N	YELLOW wire of magneto harness	LOW	75
	P	YELLOW wire of magneto harness		

RESISTANCE MEASUREMENTS

As an alternate method, magneto system components can be checked with a digital ohmmeter.

NOTE : All resistance measurements must be performed with parts at room temperature (approx. 20°C (68°F)). Temperature greatly affects resistance measurements.

Disconnect connector at ignition coil and magneto junction. Measure resistance between each terminal. Refer to the following table for values and wire colors.

NOTE : An ignition coil with good resistance measurement can still be faulty. Voltage leak can occur at high voltage level which is not detectable with an ohmmeter.

	PART NAME	WIRE COLOR*	RESISTANCE OHM	REMARKS
MAGNETO	Trigger coil	BL / YL with WH / YL	190-300	No display change means open circuit.
	Ignition generator coil	RD with BK / RD	10-17	
	Lighting generator coil	YL with YL	0.20-0.35	
IGNITION COIL	Primary winding	BK with WH / BL	0.3-0.7	
	Secondary winding (spark plug cap remove)	End of each high tension wire	8-16 K (8000-16000)	
	Insulation	WH / BL with core	∞Ω	Display showing zero (0) means short circuit.
		WH / BL with high tension wire		
SPARK PLUG CAP	Spark plug Cap	–	4.5-5.5 K	

∞ : Infinity (extremely large number)

*	COLOR CODE	
	BK – BLACK WH – WHITE RD – RED BL – BLUE YL – YELLOW	GN – GREEN GY – GRAY VI – VIOLET OR – ORANGE BR – BROWN

VOLTAGE REGULATOR INSPECTION

A faulty voltage regulator is often responsible for frequent burned bulbs.

CAUTION : Never run an engine with a faulty or inoperative voltage regulator. This could damage the DUCATI CDI module.

TESTING PROCEDURE

The regulator ground must be checked to ensure the circuit is complete. If necessary, connect a good ground wire from the regulator to the engine.

A) Quick Test Without Voltmeter

CAUTION : Do not perform this test on engines that have a DUCATI CDI system.

If a voltmeter is not available, a visual test can be performed with satisfactory results.

Disconnect all lights and electric equipment.

While engine is running, disconnect and connect regulator connector several times checking for a spark.

A spark on regulator terminal indicates a good and working regulator.

B) Voltmeter Test

NOTE : Use a voltmeter able to read alternating current (AC). For accurate reading, use a RMS voltmeter.

Connect a wire of the voltmeter to a BLACK / YELLOW wire.

Connect the other wire of the voltmeter to a YELLOW wire.

Lift the rear of vehicle and support with a mechanical stand.

Start the engine at an idle without opening the throttle.

WARNING : Ensure the track is free of particles which might be thrown out while track is rotating. Keep hands, tools, feet and clothing clear of track. Ensure no-one is standing in close proximity to the vehicle.

Slowly open the throttle and accelerate the engine to increase the RPM.

If the meter reads over 15 volts, the regulator is defective and must be replaced.

CAUTION : Do not increase the RPM so the voltage exceeds 15 V as the bulb(s) will burn.

NOTE : Whatever the voltmeter type used (peak voltage or RMS) the voltage must not exceed 15 V (a defective regulator will allow voltage to exceed 15 V as engine RPM is increased).

INSPECTION OF AC CIRCUIT ISOLATION

All Electric Start Models

If AC circuit is not isolated from frame, headlamp beam will weaken.

INSPECTION

Disconnect regulator / rectifier.

Connect one digital ohmmeter probe (needle ohmmeter will not offer enough precision) to frame and other probe to one of 2 yellow magneto wires.

Measured resistance must be infinite. If such is not the case, it means there is a connection between AC circuit and DC circuit.

Disconnect one accessory at the time to identify the faulty circuit.

INSPECTION OF HEATING ELEMENTS

All measurement must be performed at 21°C (70°F).

Throttle Lever Heating Element

HIGH INTENSITY	YELLOW / BLACK wire BROWN wire	1.96 to 3.64 ohms
LOW INTENSITY	YELLOW / BLACK wire BROWN / YELLOW wire	8.05 to 14.95 ohms

Handlebar Grip Heating Element

HIGH INTENSITY	YELLOW / BLACK wire BROWN wire	8.73 to 10.67 ohms
LOW INTENSITY	YELLOW / BLACK wire BROWN / YELLOW wire	17.7 to 20.7 ohms

TABLE OF CONTENTS

SUSPENSION SC-10 SPORT, TOURING AND MOUNTAIN **07-01-1**
GRAND TOURING 500 / 580, FORMULA SLS / STX / STX LT AND SUMMIT 500 ..... *07-01-1*
COMPONENT REMOVAL AND INSTALLATION 07-01-2
REMOVAL 07-01-2
DISASSEMBLY AND ASSEMBLY 07-01-3
INSTALLATION 07-01-5
RIDE ADJUSTMENT 07-01-5
LUBRICATION 07-01-5

IMPROVED C-7 SUSPENSION **07-05-1**
GRAND TOURING SE AND MACH 1 ..... *07-05-1*
REMOVAL 07-05-2
DISASSEMBLY AND ASSEMBLY 07-05-2
INSTALLATION 07-05-3
SHOCK ABSORBER SPRING REPLACEMENT 07-05-3
SHOCK ABSORBER SERVICING 07-05-4
SUSPENSION ADJUSTMENT 07-05-4

DRIVE AXLE **07-03-1**
S-SERIES AND F-SERIES *07-03-1*
REMOVAL 07-03-2
DISASSEMBLY 07-03-2
ASSEMBLY 07-03-2
AXIAL PLAY 07-03-4
INSTALLATION 07-03-6
LUBRICATION 07-03-7
ADJUSTMENT 07-03-7

TRACK **07-04-1**
TRACK TYPE APPLICATION 07-04-1
GENERAL 07-04-1
INSPECTION 07-04-1
REMOVAL 07-04-1
INSTALLATION 07-04-1

SUSPENSION SC-10 SPORT, TOURING AND MOUNTAIN

Grand Touring 500 / 580, Formula SLS / STX / STX LT and Summit 500

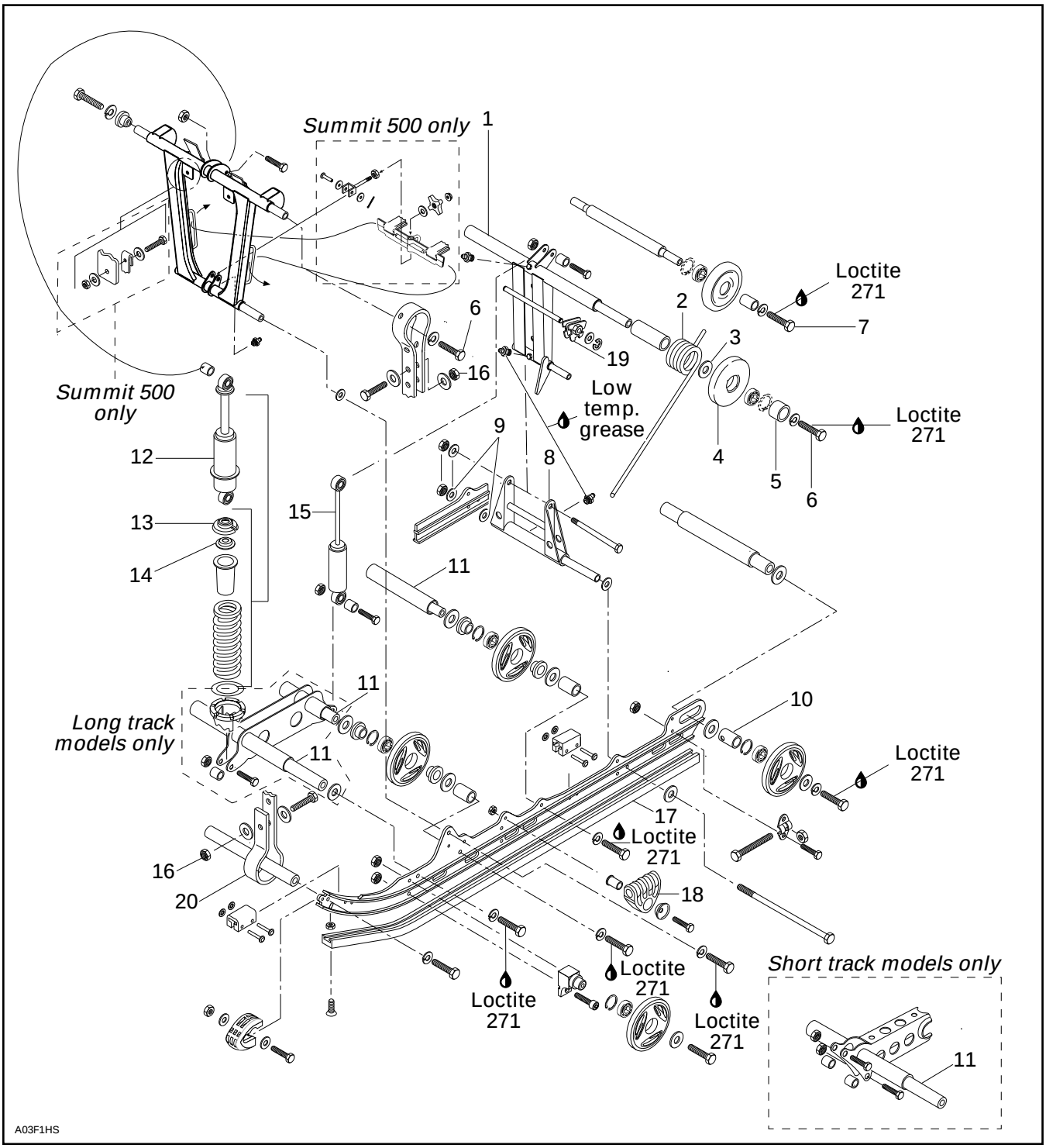

COMPONENT REMOVAL AND INSTALLATION

Lift rear of vehicle and support it off the ground.

1, Rear Arm

Release spring tension by unfastening spring support. Unfasten shock from rear arm. Remove 3 screws retaining rear arm.

At installation, rear arm stroke limiter must be behind shackle.

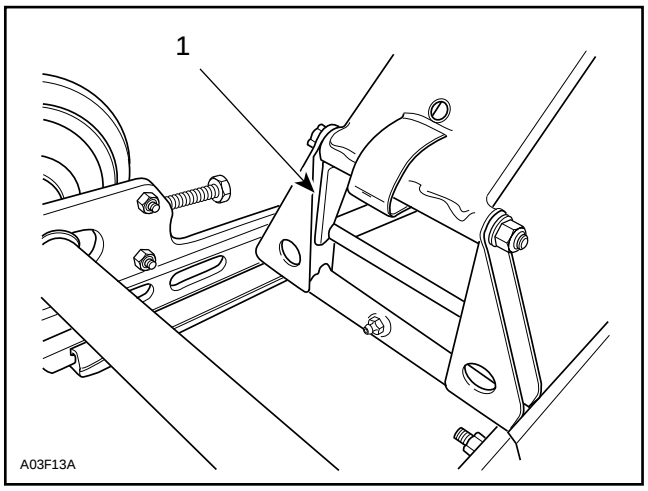

1. Stroke limiter on rear side

18, Spring Support

CAUTION : To avoid track damage, spring supports must be mounted upward.

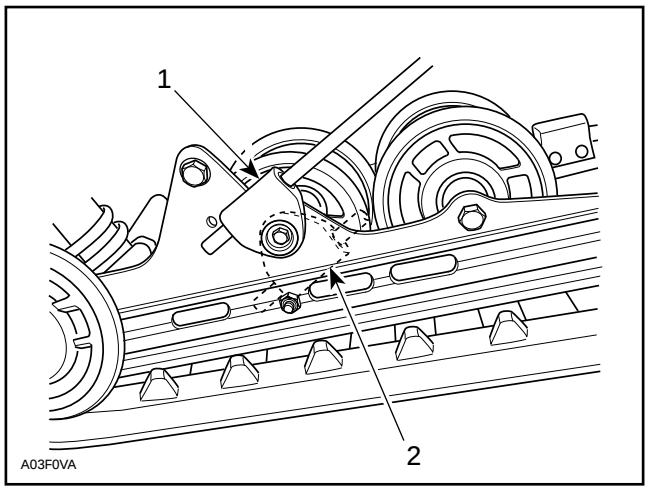

RIGHT SIDE SHOWN

1. Right position : upward
2. Wrong position

REMOVAL

19, Cam

Decrease spring preload by turning LH cam clockwise and RH cam counterclockwise.

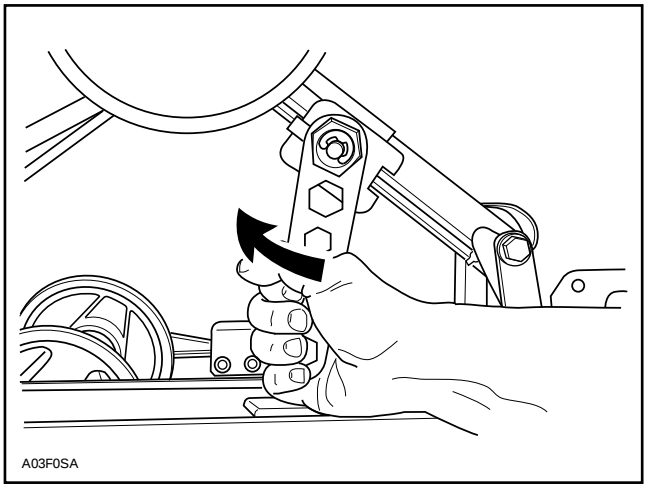

LH SIDE SHOWN

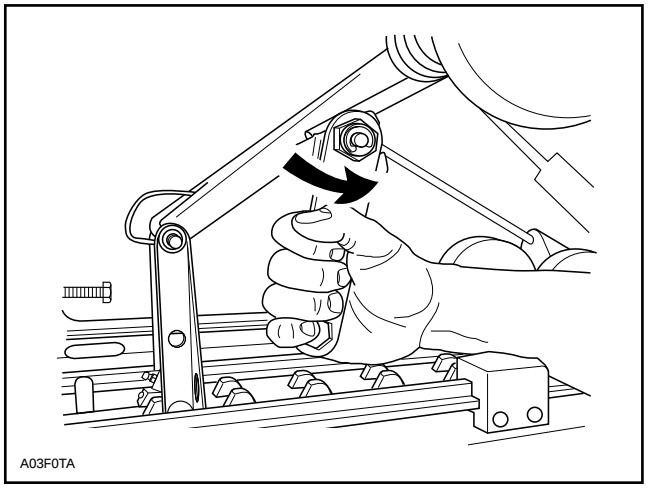

RH SIDE SHOWN

Lift rear of vehicle and support it off the ground. Block suspension in place.

2,3,4,5,6,18, Spring, Washer, Idler Wheel, Spacer, Screw and Spring Support

Unbolt spring support from runner while retaining spring end. Move spring end rearward to completely release spring preload. Proceed with the other side.

Unscrew both rear arm screws.

NOTE : To prevent cross shaft from turning when unscrewing screws assembled with threadlocker, proceed as follows :

- Knock on screw head and / or heat to break threadlocker bond.
- Loosen one screw then retighten.
- Remove the opposite screw.
- Remove the first one.

7, Screw

Unscrew center idler wheel axle from tunnel then remove.

Lift rear of vehicle until spacers, idler wheels, washers and springs can be removed.

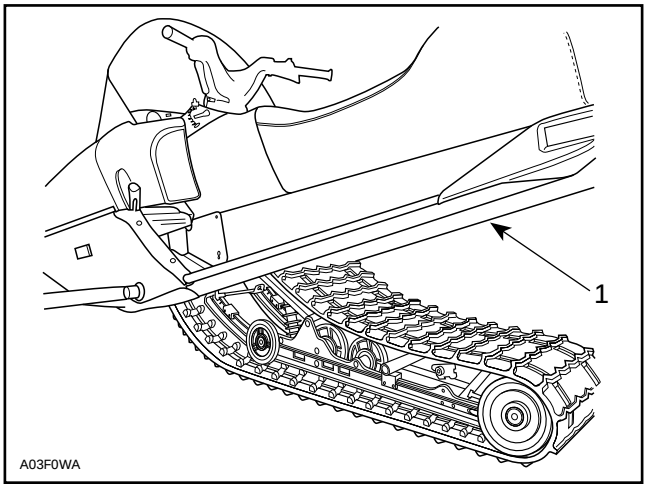

1. Lift rear of vehicle

6, Screw

Remove both screws retaining front arm to tunnel.

Remove suspension.

DISASSEMBLY AND ASSEMBLY

Inspect track throughly before reinstalling suspension. Refer to 07-05 TRACK.

1, Rear Arm

At installation, rear arm stroke limiter must be on rear side.

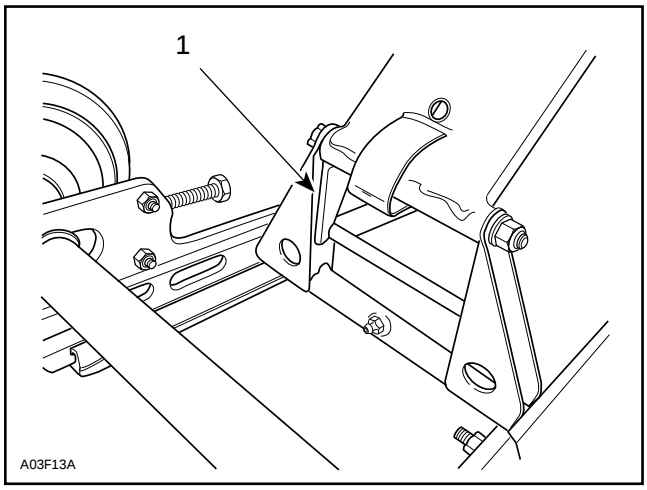

1. Stroke limiter on rear side

8,9, Pivot Arm and Flat Washer

At installation pivot arm grease fitting must face rearward. Small washer must be against nut. Large washers must be inside rails on both side.

10, Outer Bushing

At installation, hole must face adjustment screw.

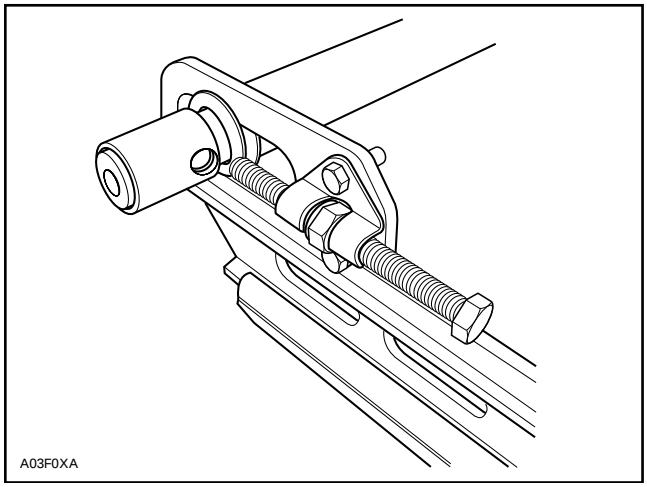

11, Axle

Note position of axles at disassembly. Axles with a paint stripe serve as idler wheel axles. These are more precise than those used as pivot axles. Idler wheel axles can be used as pivot axles but the opposite is not true.

12,13,14, Front Shock, Spring Stopper and Cap

Use shock spring remover (P / N 529 0271 00) in a vise. Mount shock in it and turn shock so that spring coils matched spring compressor.

Close and lock bar. Adjust handle horizontal by changing position of clevis pin.

Push down on handle until it locks. Remove spring stopper and cap then release handle.

At installation, cap opening must be 180° from spring stopper opening.

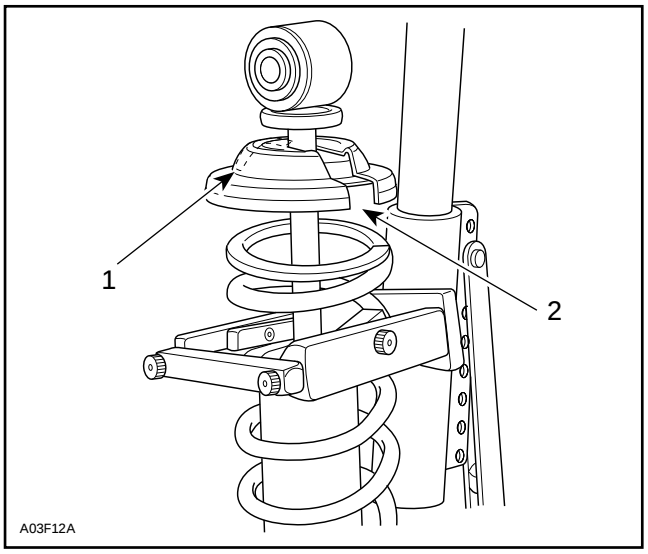

1. Cap opening
2. Spring stopper opening

20, Stopper Strap

Inspect strap for wear or cracks, bolt and nut for tightness. If loose, inspect hole for deformation. Replace as required. Make sure it is attached through the 2nd hole from the end. Torque nut to 11 N•m (97 lbf•in).

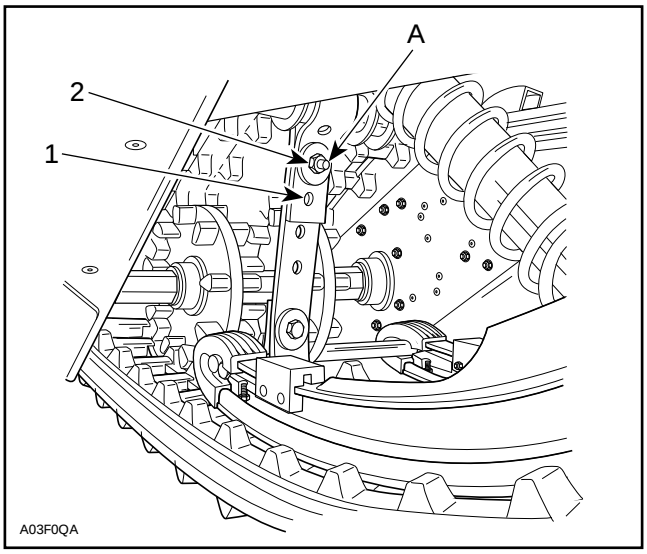

1. 1st hole
2. 2nd hole
*A. 11 N•m (97 lbf•**in**)*

17, Slider Shoe

Replace slider shoes when it is worn to the line.

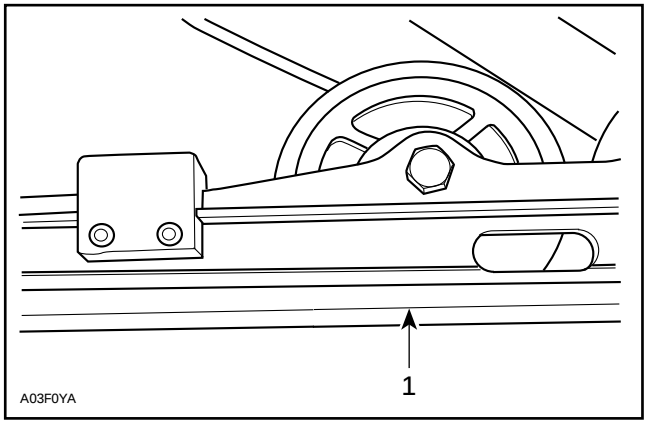

1. Wear limit line

CAUTION : Slider shoes must always be replaced in pairs.

INSTALLATION

Do not install rear spring yet. Install assembled suspension into track with front portion first.

Insert rear portion of suspension into track.

2,3,4,5,6 Spring, washer, idler wheel, spacer and screw

On each side, install rear spring, washer, idler wheel, spacer then bolt that axle to tunnel.

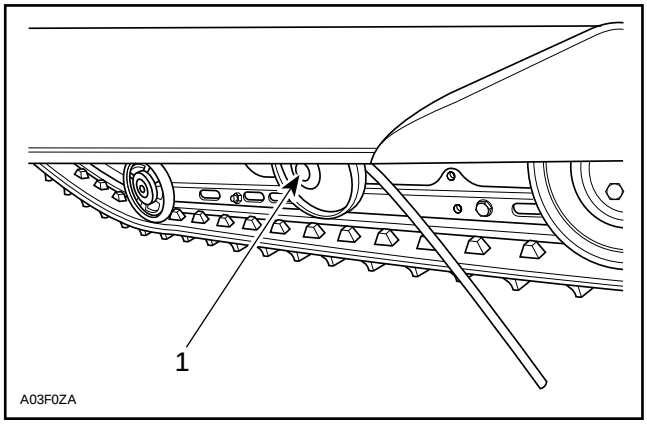

1. Spacer

18, Spring Support

Install spring supports to rails.

CAUTION : To avoid track damage, spring supports must be mounted upward.

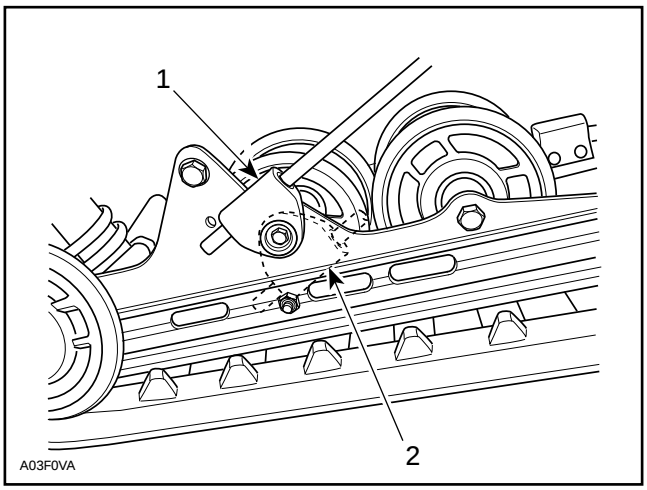

RIGHT SIDE SHOWN

1. Right position : upward
2. Wrong position

RIDE ADJUSTMENT

Refer to Operator's Guide.

LUBRICATION

Lubricate front and rear arms at grease fittings using low temperature grease (P / N 413 7061 00).

NOTE : There are 4 grease fittings

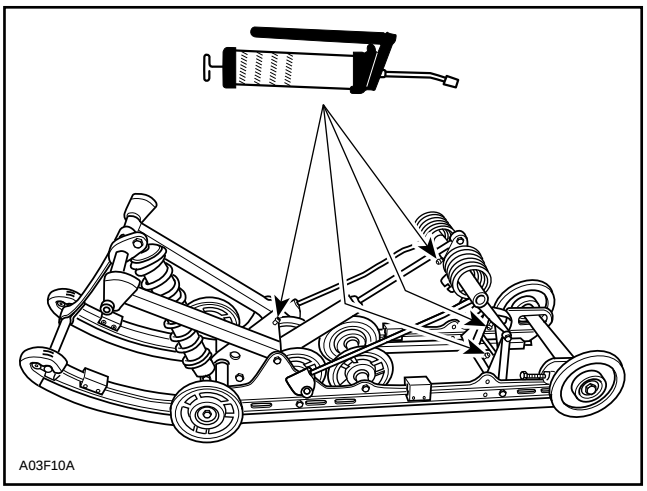

IMPROVED C-7 SUSPENSION

Grand Touring SE and Mach 1

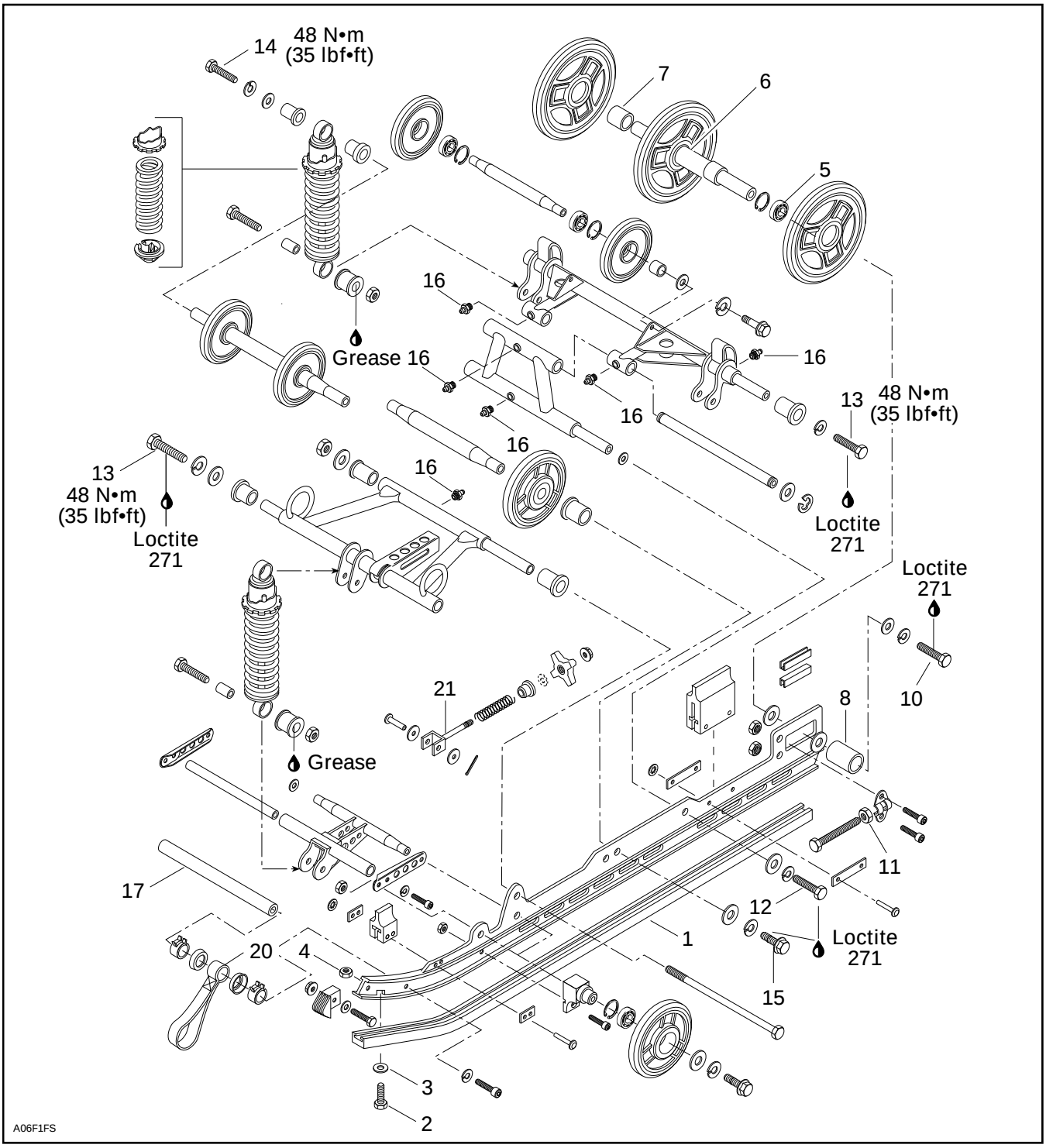

REMOVAL

NOTE : To prevent cross shaft from turning when unscrewing screws assembled with threadlocker, proceed as follows :

– Loosen one screw then retighten.
– Remove the other screw.
– Remove the first one.

CAUTION : Close fuel shut-off valve before lifting vehicle.

Lift rear of vehicle off the ground about 850 mm (33-1/2 in).

Unscrew 6 screws retaining front arm, shock pivot and rear arm to frame in the illustrated sequence.

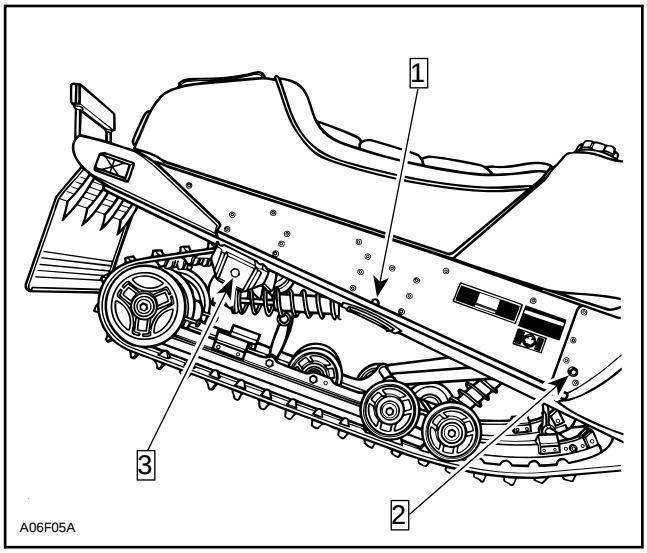

TYPICAL

Remove suspension.

DISASSEMBLY AND ASSEMBLY

20, Stopper Strap

Inspect strap for wear or cracks. Check seams. Replace as required.

At installation, slide washers no. 19 and spring clamps no. 18 on axle no. 17 until stopper strap is in line with its tensioner mounted on front arm. See illustration below.

1,2,3,4, Slider Shoe, Bolt, Washer and Nut

To replace a worn shoe, remove the front bolt and stop nut, then slide the shoe rearward out of the runner.

NOTE : Slider shoe minimum thickness : 10 mm (25/64 in).

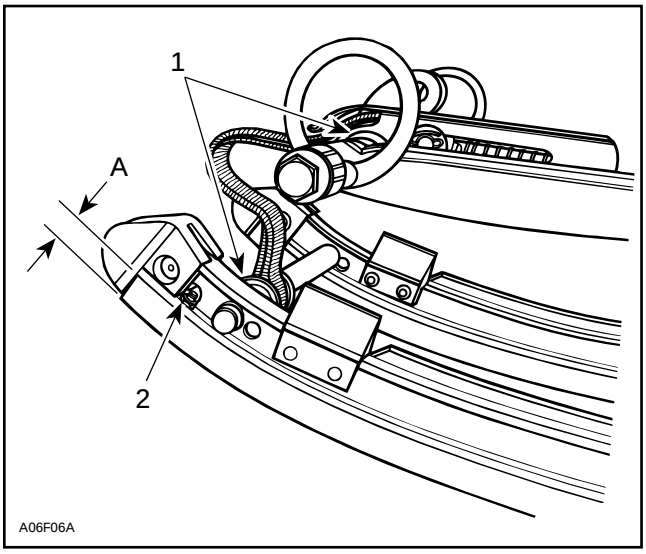

TYPICAL

1. In line
2. Front screw and nut
A. 10 mm (25/64 in)

CAUTION : Slider shoes must always be replaced in pairs.

5,6,7,8,9, Rear Axle, Long Spacer, Short Spacer, Outer Spacer and Screw

At assembly, center idler wheel must be offset to the right (opposite side of stopper strap).

Position outer spacer as shown.

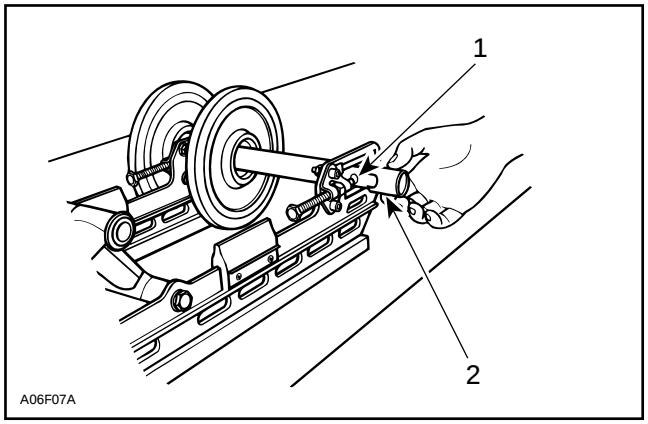

1. Rear axle hole
2. Outer spacer

CAUTION : It is important to properly position the outer spacer. Disregarding this notice might cause rear axle failure.

Position hole on rear axle forward.

Position notch in outer spacer forward and inward onto the rear axle.

10,12,13,14,15, Screw

Clean all screw threads and axle hole threads. Prior to assembly, apply low temperature grease (P / N 413 7061 00) on axles and Loctite 271 (P / N 413 7074 00) on screw threads.

11, Elastic Stop Nut

Inspect for damage and replace as required.

INSTALLATION

CAUTION : Close fuel shut-off valve(s) before lifting vehicle.

Lift rear of vehicle off the ground about 850 mm (33-1/2 in). Install assembled suspension into track with front portion first. Insert rear portion of suspension into track.

Bolt suspension to tunnel following sequence and torque values as follows.

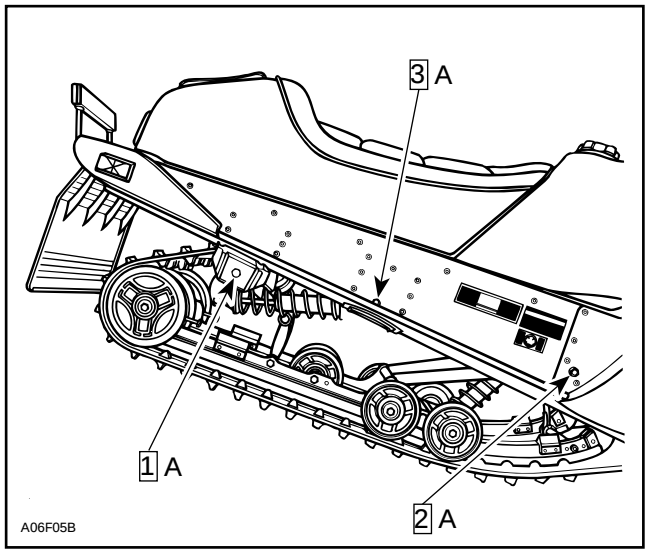

TYPICAL

A. 48 N•m (35 lbf•ft)

16, Grease Fitting

Lubricate until grease appears at joints using low temperature grease (P / N 412 7061 00) :

- Front arm : upper and lower axles.
- Rear arm : upper and lower axles.
- Rear shackle.

NOTE : There are 7 lubrication points.

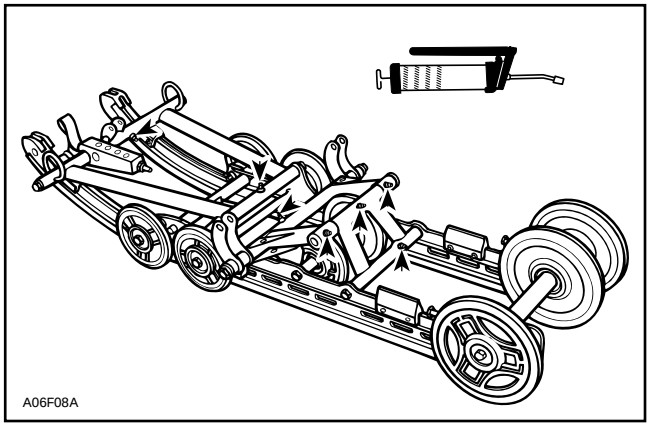

TYPICAL

SHOCK ABSORBER SPRING REPLACEMENT

WARNING : Do not attempt to dismantle a shock absorber spring without using the proper spring compressor. Do not apply heat or flame to the rear gas pressurized shocks.

NOTE : Before attempting to compress the spring, push the rubber bumper against the shock body and place the adjuster ring at its lowest position.

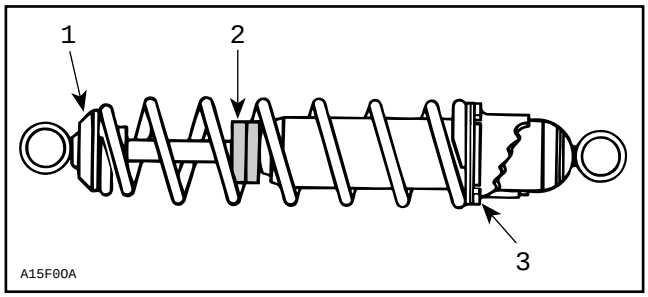

TYPICAL

1. *Spring collar*
2. *Bumper against shock body*
3. *Lowest position*

Install spring compressor (P / N 529 0271 00) in a vise. Mount shock in it and turn shock so that spring coils matched spring compressor.

Close and lock bar. Adjust handle horizontal by changing position of clevis pin.

Push down on handle until it locks. Remove spring stopper then release handle.

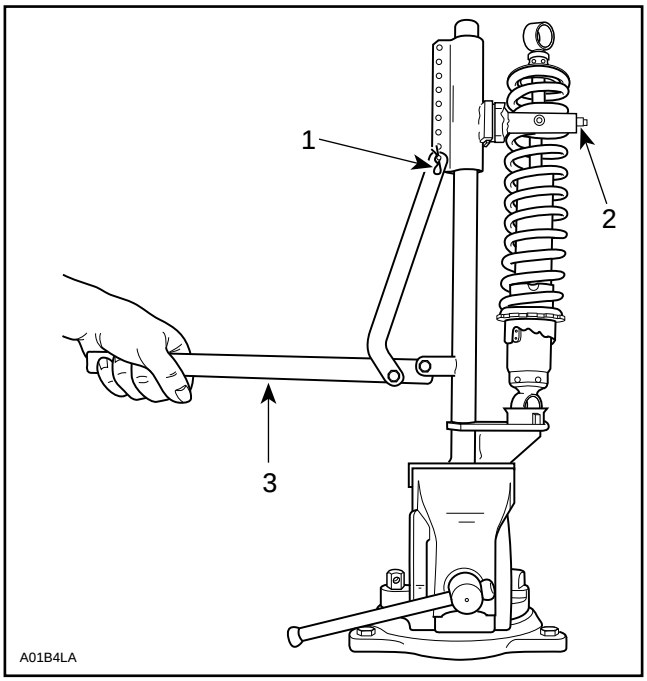

1. *Clevis pin*
2. *Bar*
3. *Handle horizontal*

At installation, position spring stopper slit on opposite side of spring coil end.

SHOCK ABSORBER SERVICING

Because of gas pressure, strong resistance is felt when compressing shock. When released, the shock will extend unassisted. Renew as required.

SUSPENSION ADJUSTMENT

Refer to *Operator's Guide*.

DRIVE AXLE

S-Series and F-Series

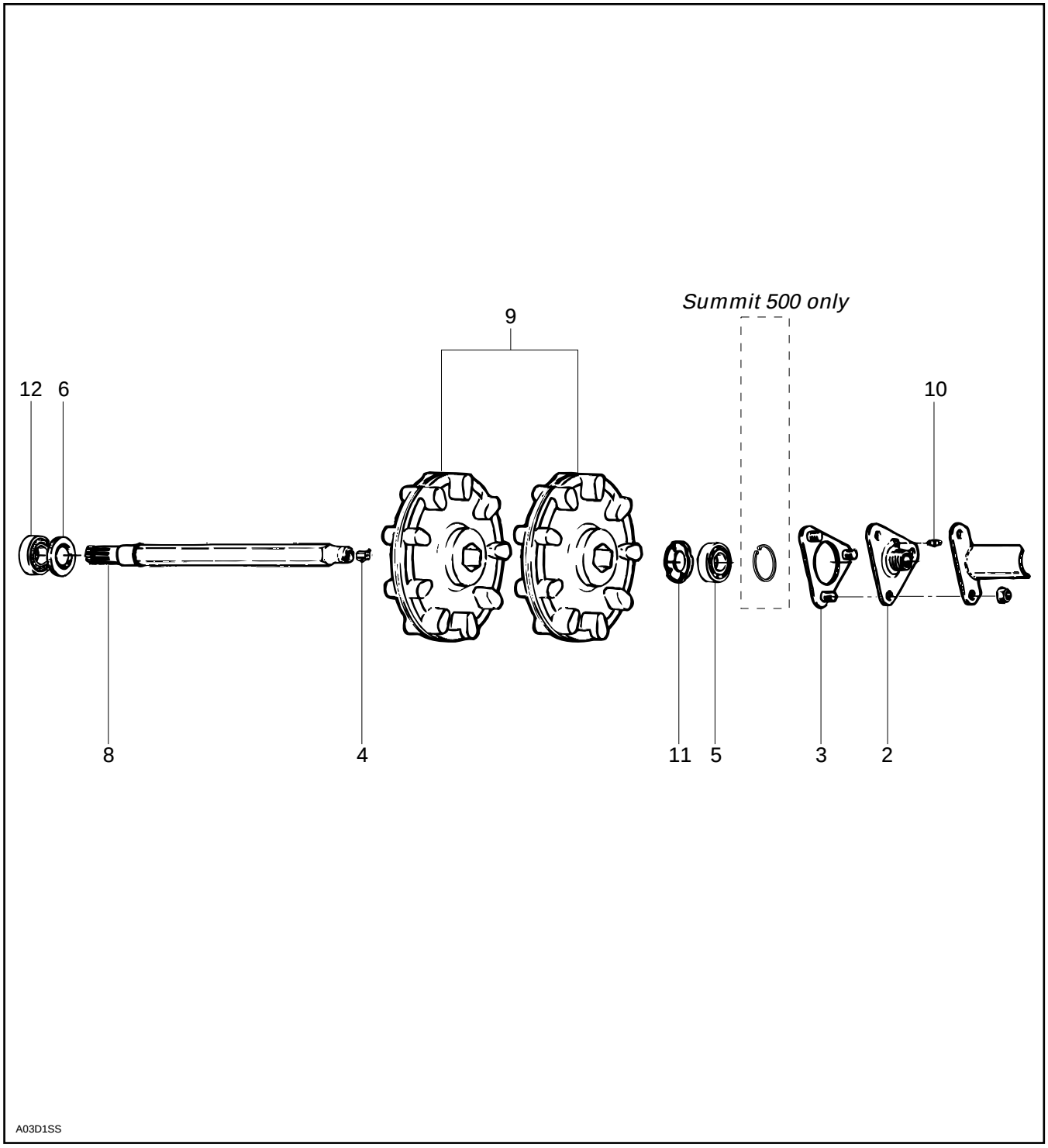

REMOVAL

Drain oil from chaincase or gearbox. Release drive chain tension. Remove chaincase cover.

Raise and block rear of vehicle off the ground.

Remove suspension. (Refer to REAR SUSPENSION 07).

2,6, End Bearing Housing and Seal

Remove angle drive unit and coupling cable. On Summit 500, remove circlip from drive axle.

Remove chain and sprocket then circlip and bearing from drive axle.

Pry oil seals from chaincase and end bearing housing.

8,9, Drive Axle and Sprocket

Release drive axle sprocket from track and at the same time, pulling the drive axle towards the end bearing housing side.

Remove drive axle from vehicle.

DISASSEMBLY

4, Speedometer Drive Insert

Remove speedometer drive insert.

5,12, Bearing

To remove bearings, use puller assembly, ring and half rings as illustrated. (Refer to TOOLS section).

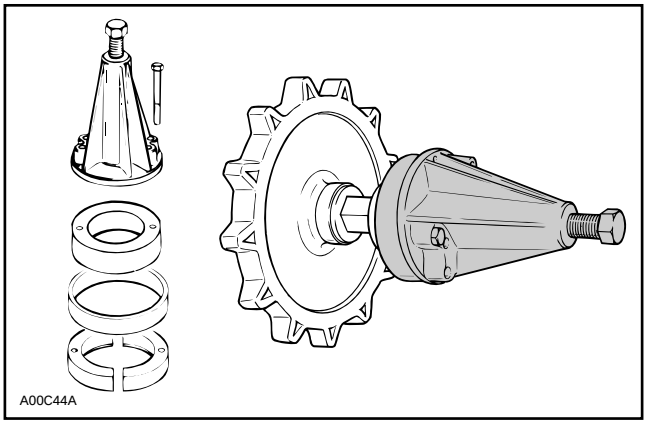

9,13, Sprocket and Half-Sprocket

To remove press fit sprockets, use a press and a suitable support as illustrated.

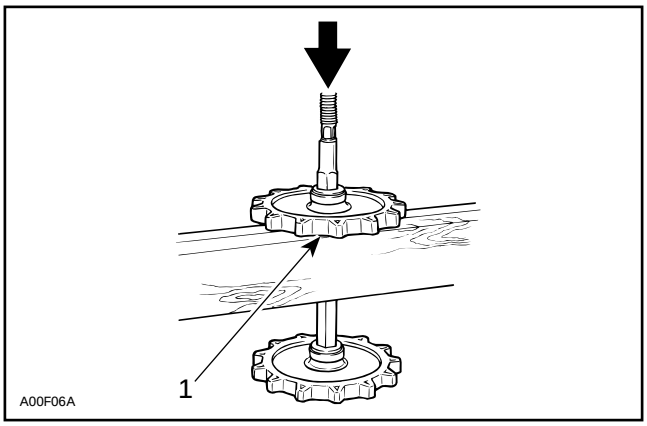

TYPICAL

1. Support sprocket near hub

NOTE : Two different types of sprocket press fit can be found. Ensure to replace ring reinforced sprockets with the same type.

ASSEMBLY

8,9,13, Drive Axle and Sprocket

To assemble press fit sprockets, use a press and a suitable pipe as illustrated. Sprockets must be assembled according to the following dimensions.

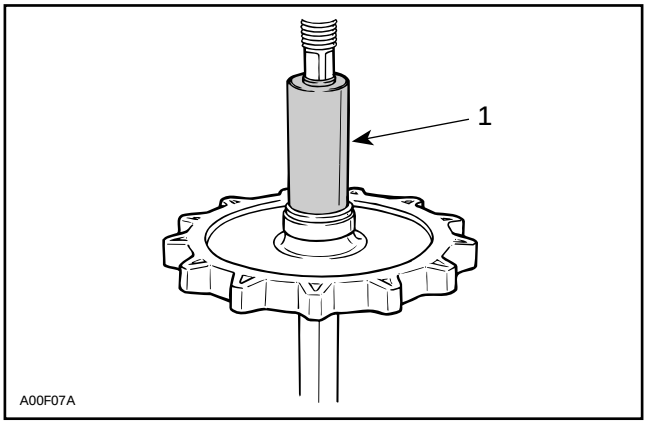

1. Pipe

S-Series and F-Series

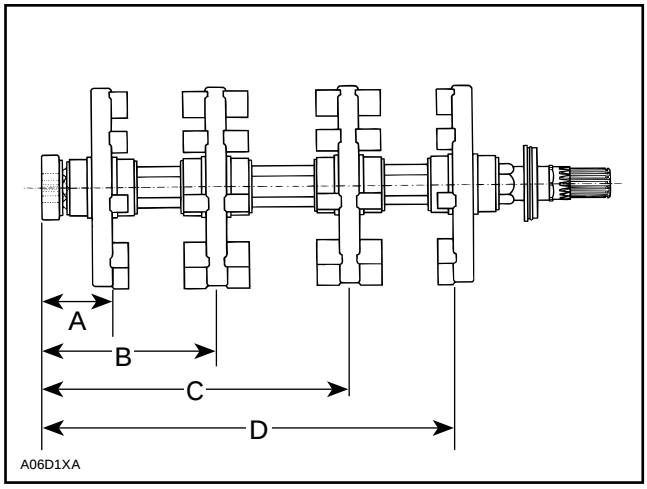

A. 65.8 mm (2-19/32 in)
B. 159.3 mm (6-17/64 in)
C. 282.3 mm (11-7/64 in)
D. 375.8 mm (14-51/64 in)

Ensure to align indexing marks of each sprocket when assembling.

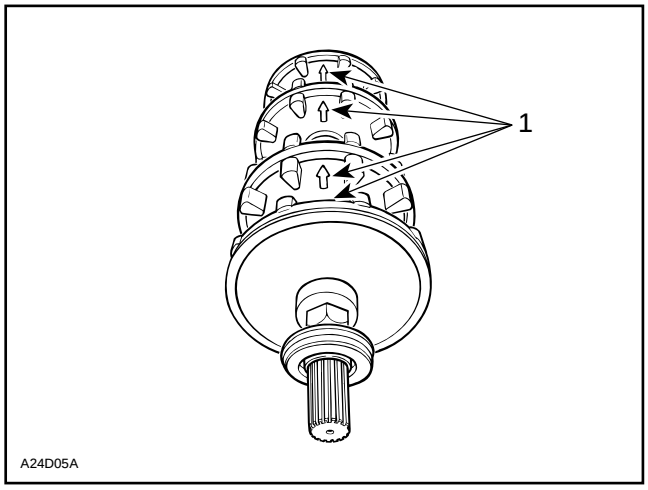

TYPICAL
1. Indexing marks aligned

The maximum desynchronization for the sprockets is 1.5 mm (1/16 in).

To check this tolerance, place axle assembly on a plane surface and measure the gap between sprocket tooth and surface.

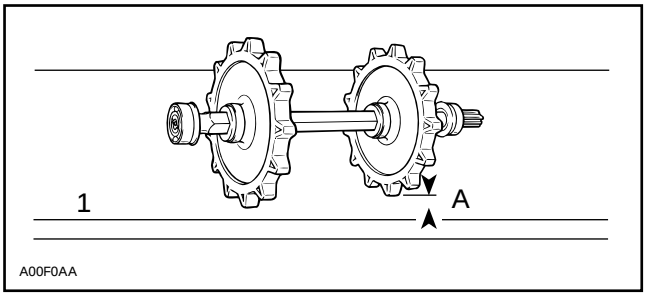

1. Plane surface
A. 1.5 mm (1/16 in) MAXIMUM

CAUTION : The same sprocket must not be pressed twice on the axle. If synchronization is found to be defective, use a new sprocket.

6,8, Drive Axle and Seal

When assembling drive axle, always position a new seal on each end of drive axle (if applicable). Locate seal lip as illustrated.

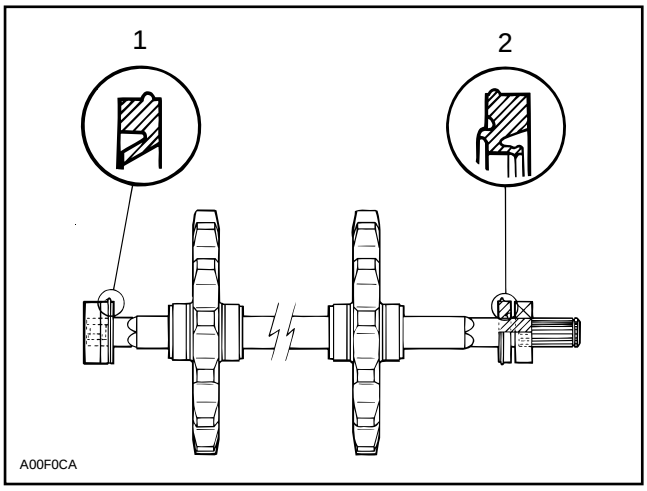

1. Grease seal type
2. Oil seal type

11, Bearing Protector

At assembly, flat side of bearing protector must be against bearing.

5,12, Bearing

Always push bearing by inner race.

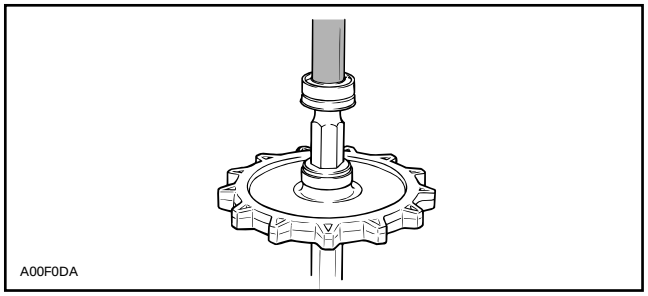

The bearing on the splined side of axle must be pushed until it is seated on shaft shoulder. The end bearing housing bearing must be flush with end of drive axle. Each bearing must have its shield facing the sprocket.

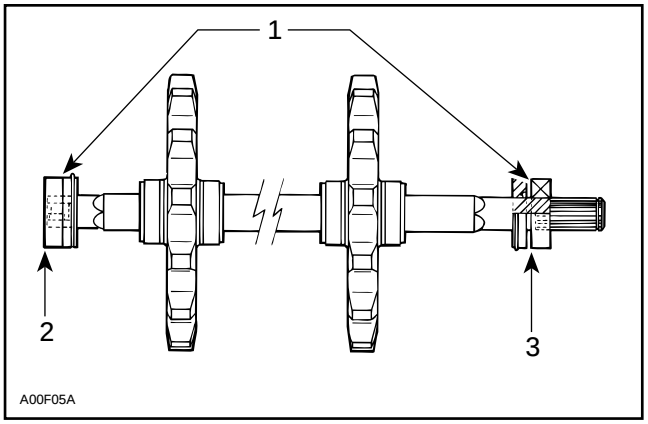

1. Bearing shield on this side
2. Flush with drive axle
3. Seated on shaft shoulder

AXIAL PLAY

S-Series and F-Series

Ensure there is no deformation of the sheet metal around the end bearing housing. Straighten as required.

Before attempting to adjust the drive axle axial play, check the chaincase perpendicularity as follows :

CHAINCASE PERPENDICULARITY ADJUSTMENT

– Remove driven pulley.

– Slacken bearing collar set screw and working from the driven pulley side, turn bearing collar clockwise.

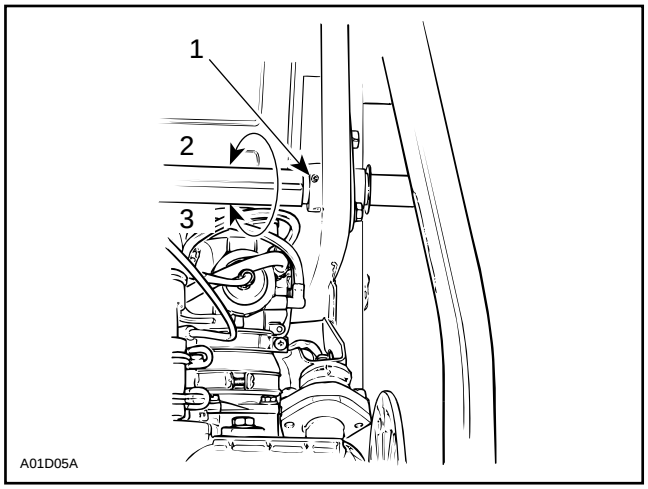

TYPICAL

1. Set screw
2. Slacken
3. Tighten

– Extract bearing from its support.

Wrong chaincase perpendicularity will make it difficult to correctly install the bearing in its support due to the countershaft and support misalignment.

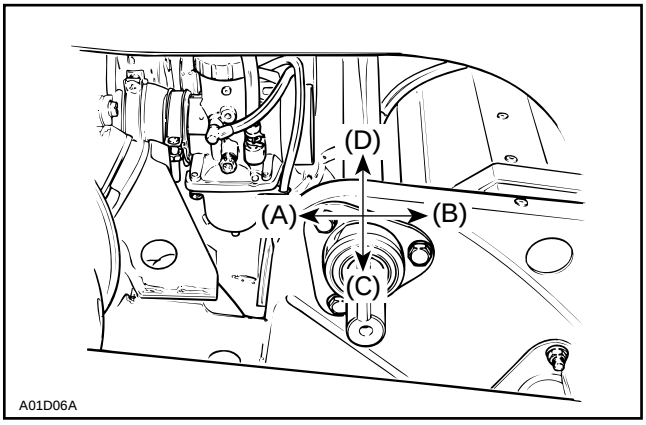

TYPICAL

– Add shim(s) (P / N 504 0398 00) between chaincase and frame to obtain easy bearing installation.

▼CAUTION : When installing one shim or more between chaincase and frame, secure with 50 mm long screws.

	BEARING POSITION			
	(A) TOWARD FRONT OF VEHICLE	(B) TOWARD REAR OF VEHICLE	(C) TOWARD BOTTOM OF VEHICLE	(D) TOWARD TOP OF VEHICLE
SHIM LOCATION	LOWER	UPPER	UPPER	LOWER

This chart can be use as a "starting point" to correct the chaincase perpendicularity.

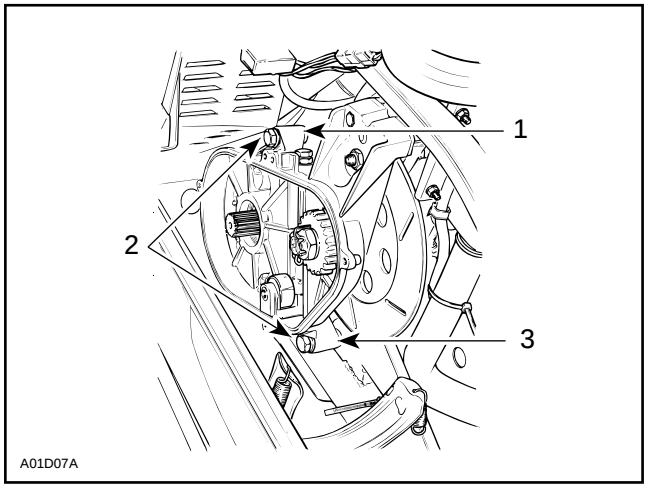

TYPICAL

1. *Upper shim location*
2. *50 mm long screws when installing one shim or more*
3. *Lower shim location*

– Do not reinstall the driven pulley at this time.

AXIAL PLAY ADJUSTMENT

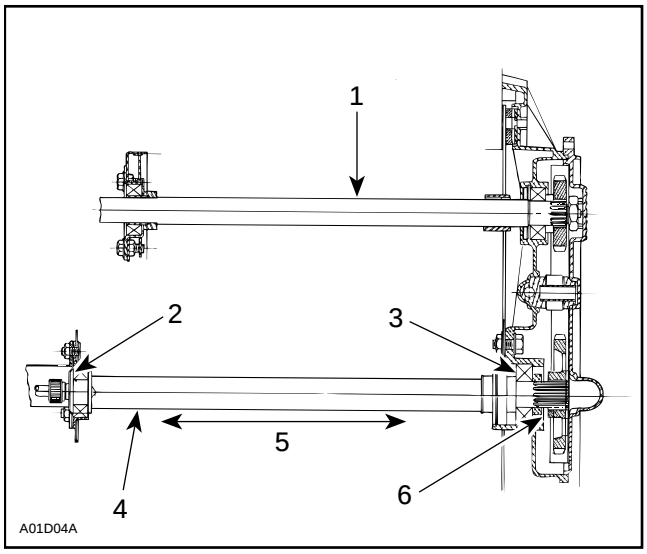

TOP VIEW

1. *Countershaft*
2. *Shim position on end bearing housing side*
3. *Shim position on chaincase side*
4. *Drive axle*
5. *Axial play*
6. *Shim between sprocket and spacer*

– Push the drive axle toward chaincase and take note of the distance between the sprocket and tunnel.

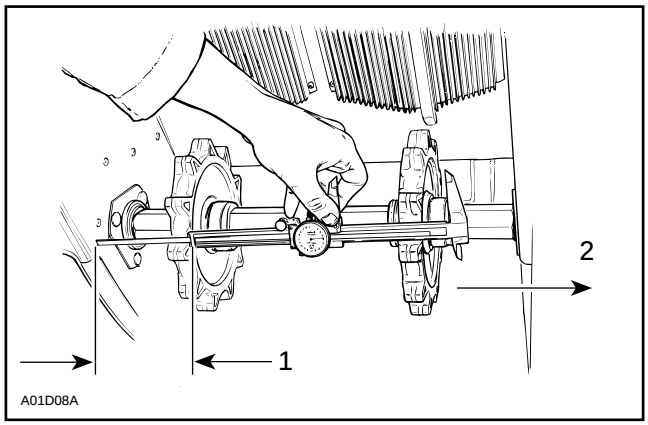

1. *Distance between sprocket and tunnel*
2. *Drive axle pushed toward chaincase*

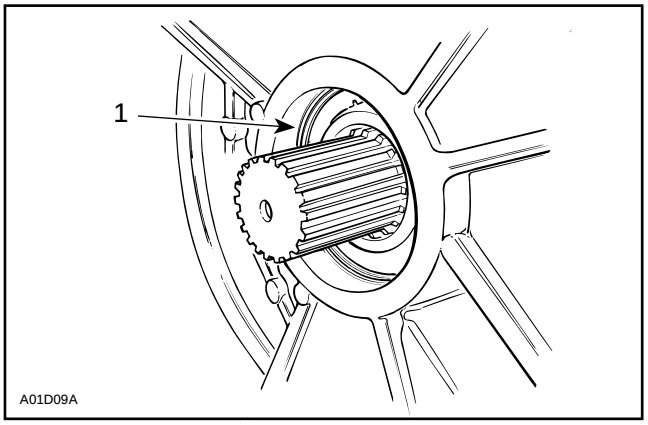

1. No gap all around

– Pull drive axle toward the end bearing housing and take note of the measurement between sprocket and tunnel.

The drive axle axial play is the difference between these 2 measurements.

– Repeat this procedure 2 or 3 times to obtain an accurate measurement.

The allowable drive axle axial play is 0 to 1.5 mm (0 to .060 in).

The drive axle axial play, as calculated above, should be within the allowable axial play, add shim(s) accordingly.

– Remove drive axle, install required shim(s) as per the shim position chart, reinstall drive axle without the suspension and track.

SHIM POSITION

Shim position is important to maintain proper sprocket alignment.

CAUTION : Install shim(s) following the pattern shown in the chart.

SHIM(S) REQUIRED	SHIM POSITION AND QUANTITY	
	END BEARING HOUSING SIDE	CHAINCASE SIDE
1	1	
2	1	1
3	2	1

When installing shims between the chaincase and the drive axle bearing, there must be same quantity of shims between the drive chain sprocket and spacer.

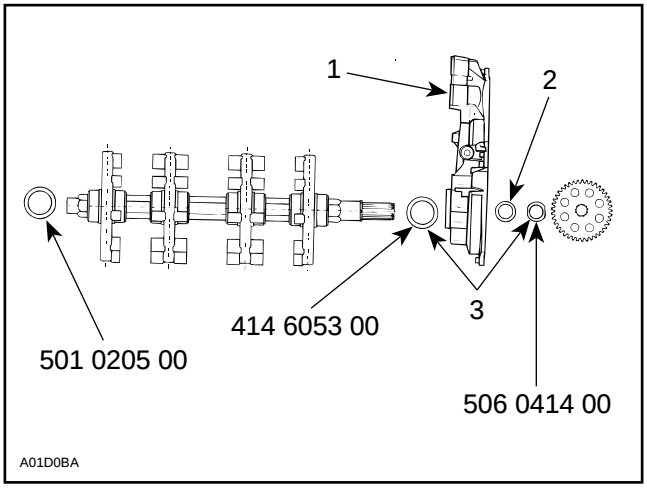

1. Chaincase
2. Spacer
3. Same quantity

– Doublecheck drive axle axial play as described above.

– Modify total shim thickness as required.

– Reinstall track and suspension. Adjust track tension and alignment.

NOTE : Center the track suspension to ensure that the alignment check made in the next step is accurate.

– To center, grasp the track suspension and move it sideways, left and right. Position the track suspension at the midpoint of its sideways movement.

– Check track front alignment by measuring the gap, on each side between guide cleat and the slider shoe, behind the suspension front axle as shown.

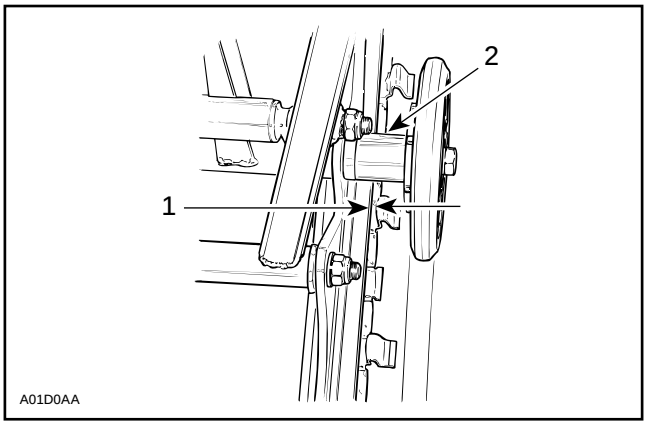

1. Distance between guide cleat and slider shoe
2. Suspension front axle

If the difference between each side exceeds 3 mm (1/8 in), redistribute drive axle shims as follows :

DIFFERENCE BETWEEN EACH SIDE	DRIVE AXLE SHIM REDISTRIBUTION
3 to 4.5 mm (1/8 to 3/16 in)	Remove 1 shim from larger gap side. Add 1 shim on smaller gap side.
4.5 to 6 mm (3/16 to 1/4 in)	Remove 2 shims from larger gap side. Add 2 shims on smaller gap side.

INSTALLATION

4, Speedometer Drive Insert

If the drive axle to be installed is a new part and the vehicle is equipped with a speedometer, a correct size speedometer drive insert must be installed into the axle end. Ensure that insert is flush with end of axle (not applicable to Alpine II).

Position drive axle assembly into location. Install end bearing housing. Install spacer (if applicable) between bearing and lower chaincase sprocket (on Alpine II, place spacers prior to installing drive axle).

Install chaincase and position seals (if applicable), making sure that a gap of approximately 2 mm (1/16 in) exists between end of bearing housing and each seal.

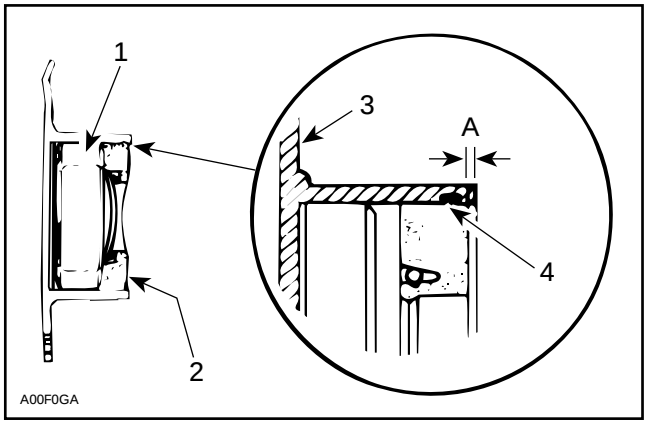

SIDE VIEW

1. *Bearing*
2. *Seal*
3. *Housing*
4. *Seal lip*

A. 2 mm approx.

3, Retainer Ring

Make sure that welded nuts are toward inside of tunnel.

Lock drive axle sprocket with a circlip.

Reinstall the chaincase cover.

Refill with chaincase oil. Refer to TECHNICAL DATA 10.

Install the suspension. Refer to TRACK 07-05 and adjust track tension and carry out track alignment procedure.

LUBRICATION

15, Grease Fitting

Lubricate end housing bearing with low temperature grease (P / N 413 7061 00).

ADJUSTMENT

Sprocket / Track Alignment

▼ CAUTION : Do not temper with sprocket / track alignment if frame or suspension is damaged.

Sprockets might be repositioned to fit lugs without removing drive axle.

Use drive axle sprocket adjuster kit (P / N 861 7257 00).

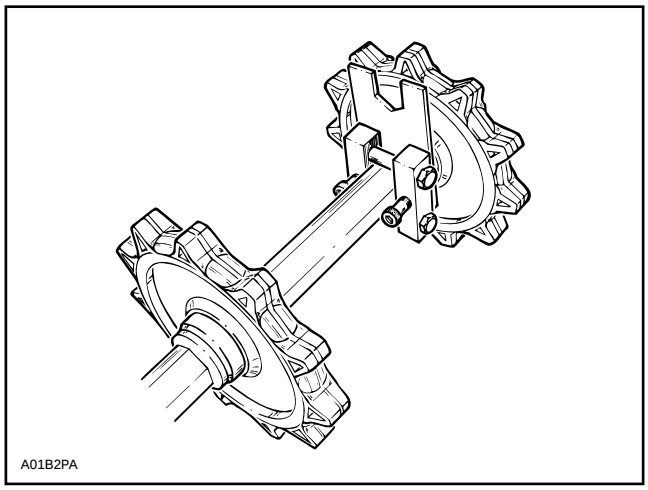

TYPICAL

TRACK

TRACK TYPE APPLICATION

Refer to TECHNICAL DATA section10.

GENERAL

This section gives guidelines for track removal. Some components require more detailed disassembly procedures. In these particular cases, refer to the pertaining section in this manual.

INSPECTION

Visually inspect track for :

– cuts and abnormal wear
– broken rods
– broken or missing track cleats

If track is damaged or rods are broken, replace track. For damaged or missing cleats, replace by new ones, using cleat remover (P / N 529 0287 00) Use small-cleat installer (P / N 529 0085 00).

◆ WARNING : Do not operate a snowmobile with a cut, torn or damaged track.

REMOVAL

S-Series and F-Series

Remove the following items :

– speedometer cable
– muffler
– chaincase cover
– suspension
– drive axle seal
– end bearing housing
– sprockets and chain
– drive axle (toward end bearing housing)
– track

INSTALLATION

All Models

Reverse the removal procedure.

NOTE : When installing the track, respect rotation direction indicated by an arrow on track thread.

Check sprocket / track alignment as described in DRIVE AXLE 07-04.

Track Tension and Alignment

Track tension and alignment are inter-related. Do not adjust one without checking the other. Track tension procedure must be carried out prior to track alignment.

Tension

Lift the rear of vehicle and support with a mechanical stand. Allow the slide to extend normally. Check the gap half-way between front and rear idler wheels. Measure between slider shoe and bottom inside of track.

When using the track tension gauge (P / N 529 0215 00), slide U shape extrusion to proper deflection.

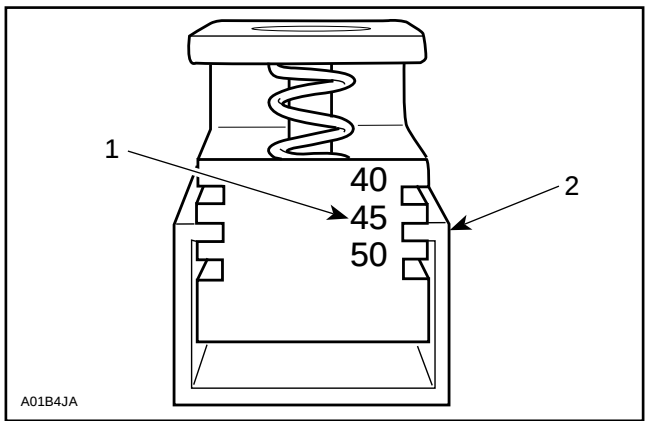

1. Example 45 mm
2. Extrusion

Insert pre-setted gauge between slider shoe and track. Allow gauge to settle by forcing track up and down. Track tension is as specified when edge of gauge reaches lign.

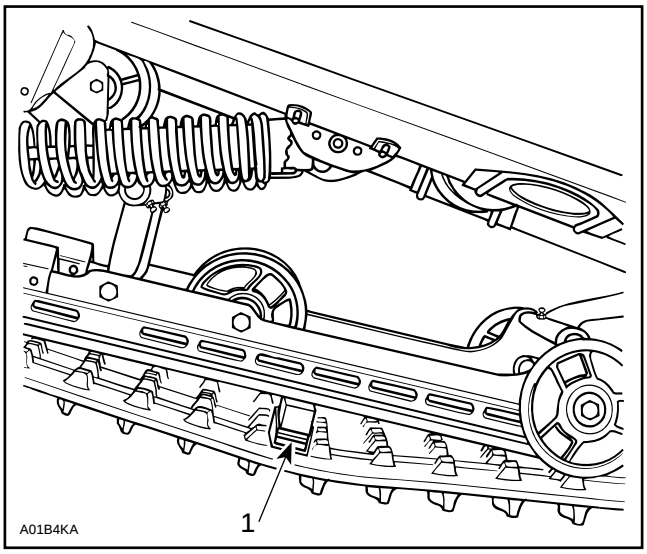

TYPICAL
1. Lign

NOTE : Lightly oil track tension gauge center pin to avoid sticking.

S Series and F-Series

45 to 50 mm (1-25/32 to 1-31/32 in) when exerting a downward pull of 7.3 kg (16 lb).

All Models

CAUTION : Too much tension will result in power loss and excessive stress on suspension components. If too loose, the track will have a tendency to thump.

To adjust, loosen the rear idler wheel retaining screws then loosen or tighten the adjuster bolts located on the inner side of the rear idler wheels.

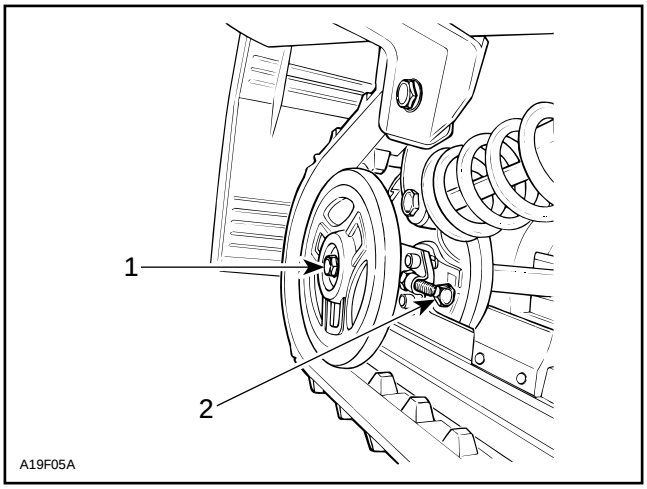

TYPICAL
1. Retaining screw
2. Adjuster bolt

Alignment

WARNING : Before checking track tension, ensure that the track is free of all particles which could be thrown out while it is rotating. Keep hands, tools, feet and clothing clear of track. Ensure no one is standing in close proximity to the vehicle.

All Models

With rear of vehicle supported off the ground, start engine and allow the track to rotate slowly.

Check that the track is well centered ; equal distance on both sides between edges of track guides and slider shoes.

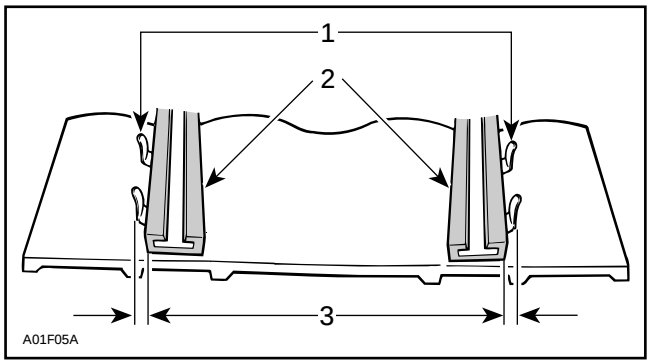

1. Guides
2. Slider shoes
3. Equal distance

WARNING : Before checking track alignment, ensure that the track is free of all particles which could be thrown out while track is rotating. Keep hands, tools, feet and clothing clear of track.

To correct, stop engine then tighten the adjuster bolt on side where guides are farthest to slide. Recheck alignment.

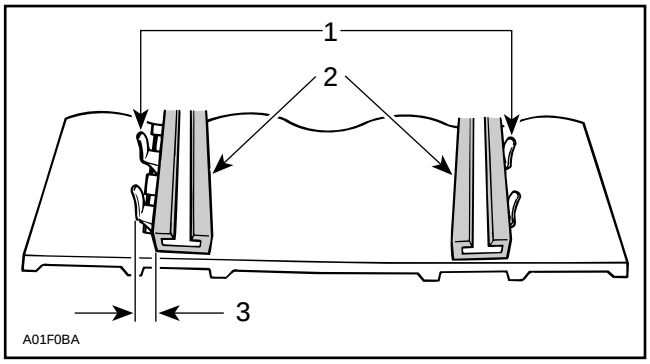

1. Guides
2. Slider shoes
3. Tighten on this side

NOTE : On all S Series and F-Series, torque retaining screw to 48 N•m (35 lbf•ft) after adjustment.

Tighten the idler wheel retaining screws.

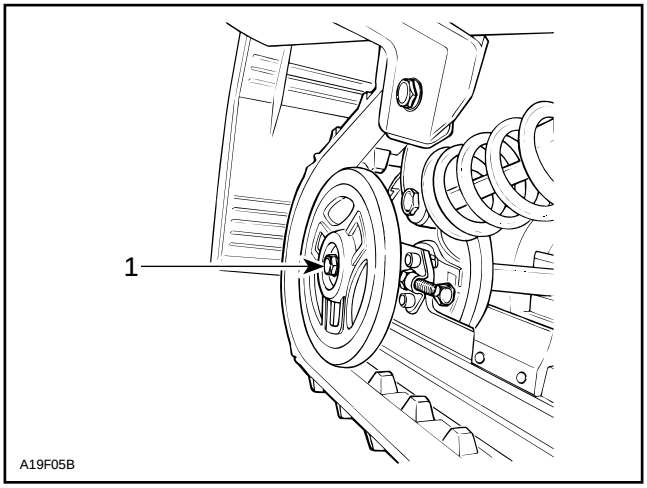

TYPICAL

1. *Retighten*

Restart engine, rotate track slowly and recheck alignment.

TRACK CLEAT

Removal

– Raise rear of vehicle off the ground and lift snow guard then rotate track to expose a cleat to be replaced.

– Using track cleat remover (P / N 529 0087 00) for all models.

Installation

NOTE : Keep the same pitch between guide cleats.

– Place new cleat in position and using small track cleat installer (P / N 529 0085 00) bend cleat then push tabs into rubber.

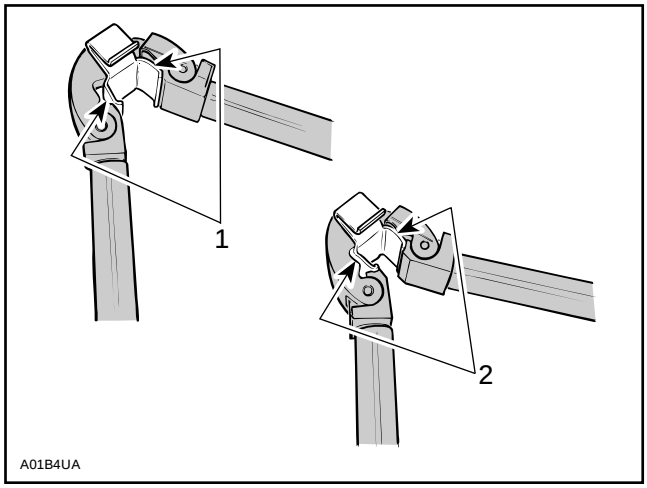

TYPICAL

1. *First step*
2. *Second step (to push tabs into rubber)*

TABLE OF CONTENTS

STEERING SYSTEM **08-01-1**
S-SERIES *08-01-1*
F-SERIES *08-01-2*
INSPECTION 08-01-3
DISASSEMBLY AND ASSEMBLY 08-01-3
INSPECTION 08-01-3
ADJUSTABLE HANDLEBAR 08-01-5
STEERING ADJUSTMENT (SKIS) 08-01-6
LUBRICATION 08-01-8
S-SERIES AND F-SERIES *08-01-9*

SUSPENSION AND SKI SYSTEM **08-02-1**
F-SERIES *08-02-1*
S-SERIES *08-02-2*
DISASSEMBLY 08-02-3
INSPECTION 08-02-4
INSTALLATION 08-02-4

STEERING SYSTEM

S-Series

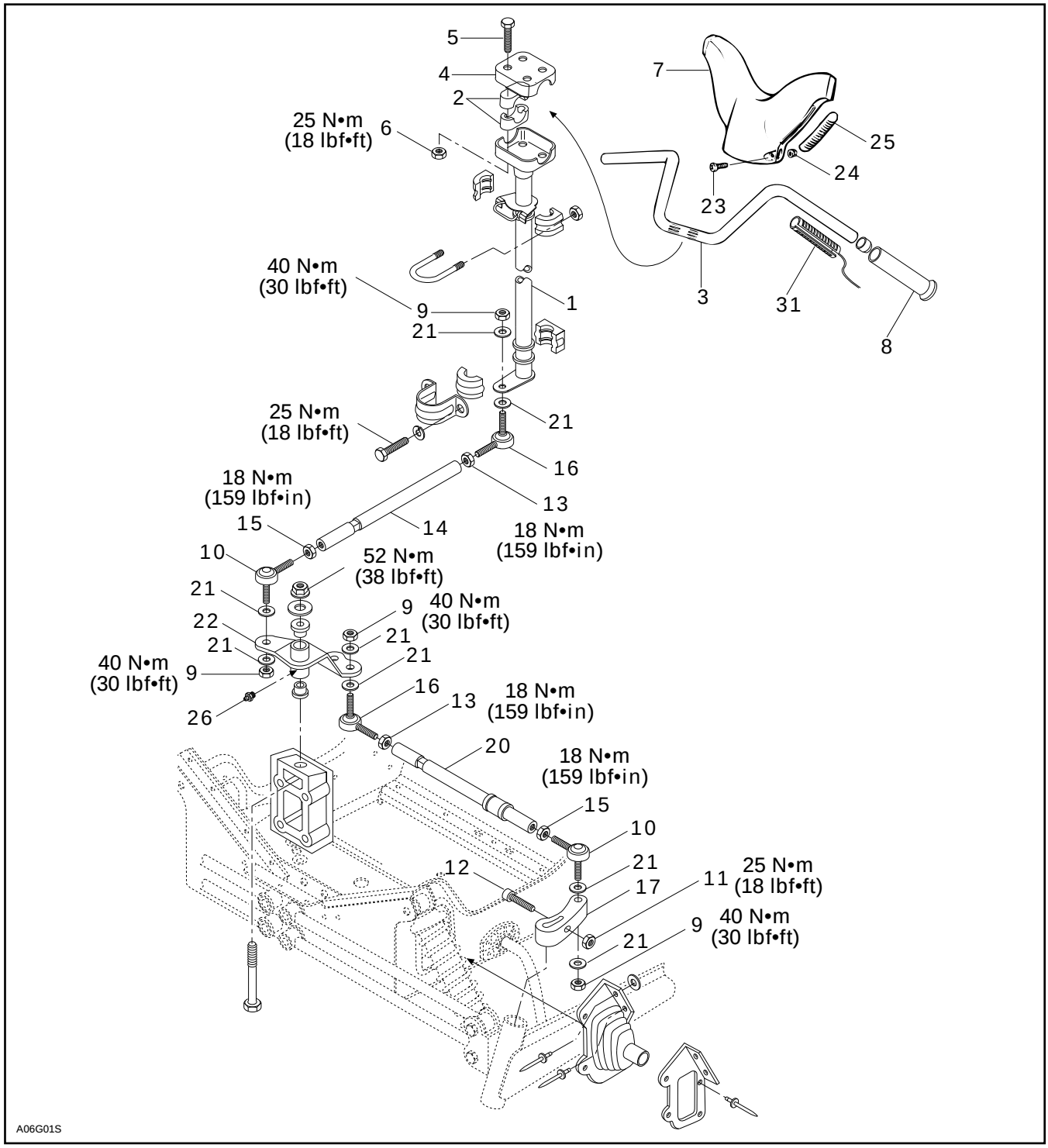

F-Series

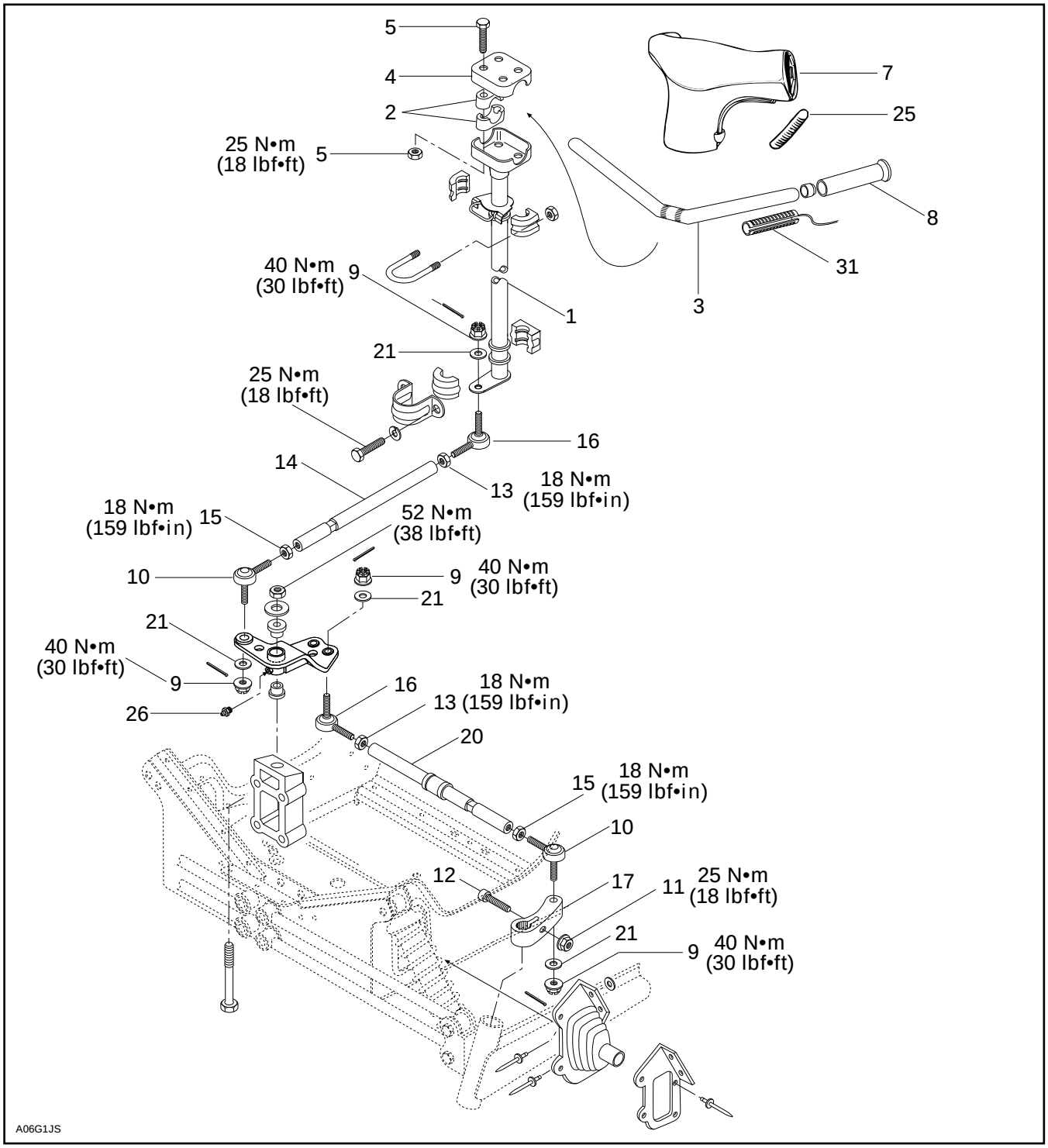
5
4
2
25 N•m
(18 lbf•ft)
5
7
25
8
31
3
40 N•m
(30 lbf•ft)
9
1
21
25 N•m
(18 lbf•ft)
16
14
13
18 N•m
(159 lbf•in)
18 N•m
(159 lbf•in)
15
52 N•m
(38 lbf•ft)
10
9
40 N•m
(30 lbf•ft)
21
21
40 N•m
(30 lbf•ft)
9
26
16
18 N•m
13 (159 lbf•in)
20
15
18 N•m
(159 lbf•in)
10
12
17
11
25 N•m
(18 lbf•ft)
21
9
40 N•m
(30 lbf•ft)
A06G1JS

INSPECTION

Check skis and runner shoes for wear, replace as necessary. (See section 08-02).

17, Steering Arm and Ski Leg

Make sure steering arm and ski leg splines interlock.

◆ WARNING : Any parts having worn splines have to be replaces with new ones.

Check the general condition of the steering system components for wear. Replace if necessary.

DISASSEMBLY AND ASSEMBLY

8, Grip

Grips can be removed and installed without any damage by injecting compressed air into the handlebar or by heating them with a heat gun.

1, Steering Column

Remove steering pad then handlebar ass'y.

To gain access remove the air intake silencer and carburetor(s).

Detach the short tie rod (under the engine) from the steering column.

17, Steering Arm

To maintain correct steering geometry for reassembling, punch mark the steering arm and ski leg before disassembly.

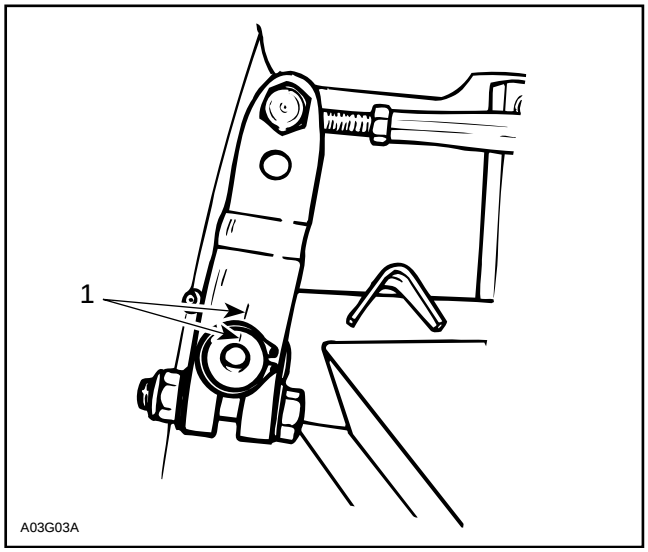

TYPICAL

1. Punch marks

31, Heating Grip Element

On vehicles is equipped with heating, the grips, might be unremovable as explained above, in this case, carefully proceed as follows to prevent damaging the heating elements.

Locate the element wires inside the handlebar ; look through end of grip. Start cutting the grip exactly opposite the element wires and immediately peel it open to locate the gap in the heating element, as shown.

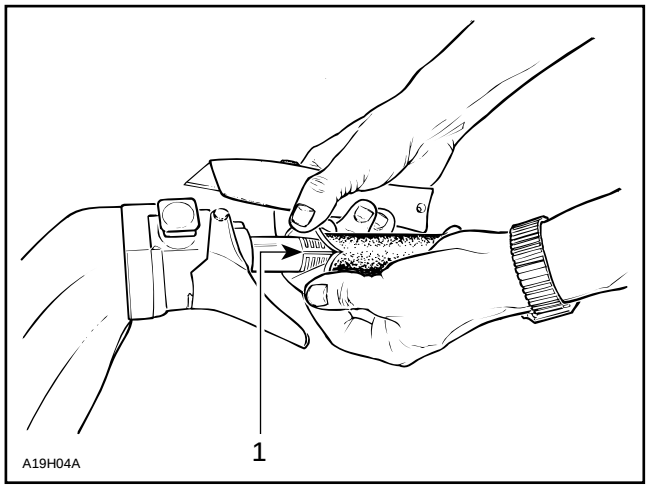

1. Gap in the heating element opposite the wires

Continue cutting along the gap and remove the grip. If required, slowly peel heating element from handlebar and remove it.

To install, stick the heating element to the handlebar making sure the wires do not interfere with operation of the accelerator or brake handle.

◆ WARNING : Never use lubricants (e.g. soap, only grease, etc.) to install the handlebar grip, use a mix of soap and water. Mix 40 parts of water with one part of dish washing soap (recommended : Ultra Joy, Sunlight or Palmolive).

Heat the grip with a heater gun or a spot light to ease installation. Insert new grip with a rubber mallet.

INSPECTION

Refer to TESTING PROCEDURE 06-06.

10,16, Ball Joint (Left Hand and Right Hand Threads)

Inspect ball joint ends for wear or looseness, if excessive, replace them.

Screw threaded end of the ball joint into the tie rod. The maximum external threaded length not engaged in the tie rod must not exceed the value L in the following thread length chart :

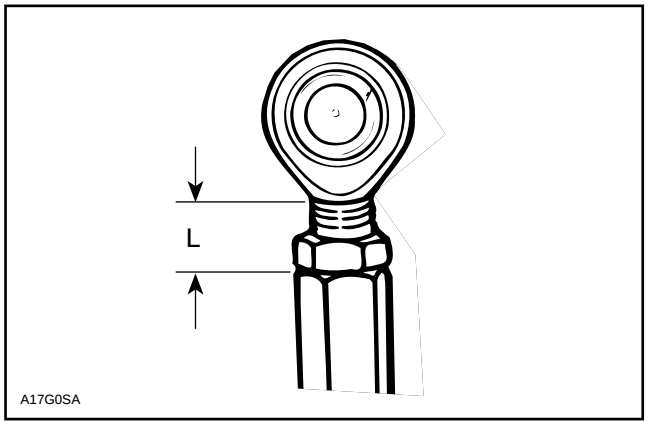

TYPICAL

MODEL	L	
	mm	(in)
All	20	(25/32)

The ball joint should be restrained when tightening the tie rod end lock nut. Align it so the tie rod end is parallel to the steering arm when assembled on the vehicle, refer to the following illustration.

For proper torque specifications refer to the specific exploded view for the vehicle being serviced.

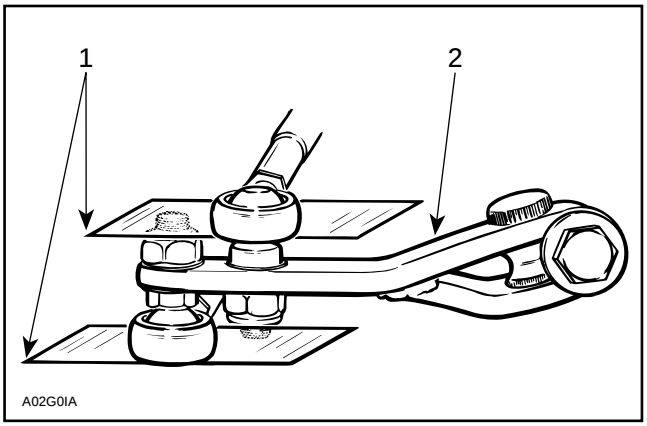

TYPICAL

1. *Parallel with steering arm*
2. *Steering arm*

◆ WARNING : The cut off section of the ball joint must run parallel with the steering arm. When tightening lock nuts, restrain ball joint with appropriate size wrench. Ensure not too many threads are kept outside of the tie rod according to the thread length chart.

21, Hardened Washer

Install a hardened washer on each side of the arm.

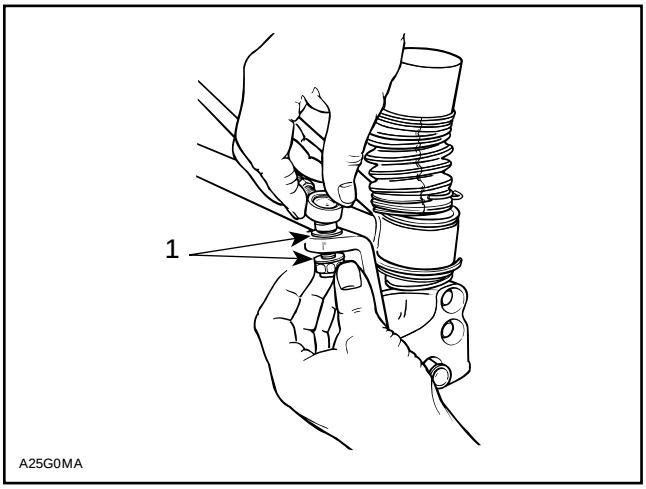

TYPICAL

1. *Hardened washers*

17, Steering Arm

The steering arm angles should be equal on both sides when skis are parallel with vehicle.

Steering arm must run parallel to ski.

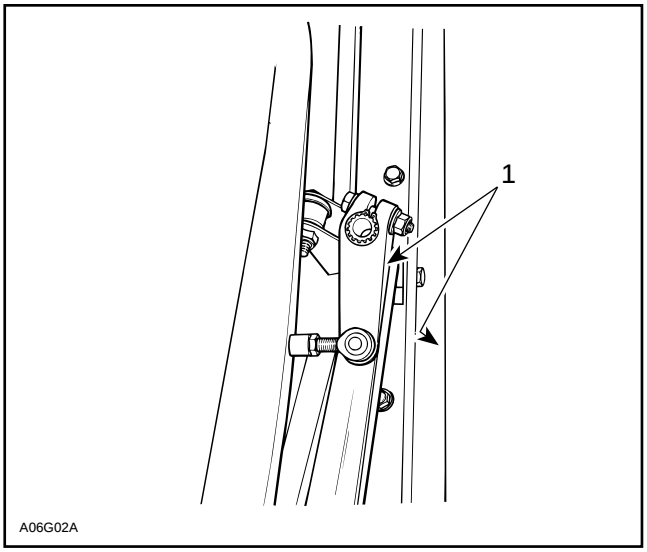

1. *Parallel*

Tighten the steering arm pinch bolt to the torque specified in the exploded view.

9,13,15, Ball Joint Nut and Jam Nut

Tighten ball joint, nuts and jam nuts to specified torque (see exploded view).

9, F-Series Vehicles with a Castle Nut

After proper torque has been applied to the ball joint nut, insert a cotter pin through the hole in the tie rod end bending the ends around the nut as shown in the following illustration.

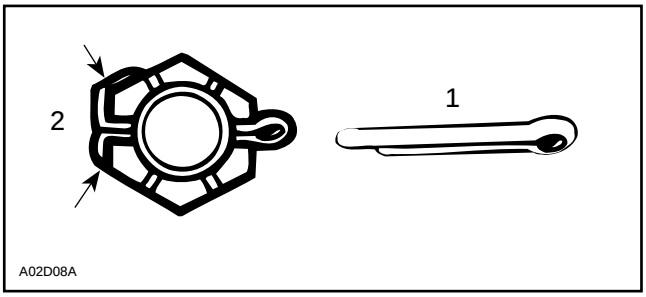

1. *New*
2. *Fold cotter pin over castellated nut flats only*

11,12, Steering Arm Nut and Bolt

Tighten steering arm nuts to specified torque (see exploded view).

ADJUSTABLE HANDLEBAR

1,3, Steering Column and Handlebar

If applicable, remove the steering clamp and nuts holding the handlebar to the steering column.

2,4,5,6, Handlebar Support, Steering Clamp, Bolt and Nut

Install the handlebar support, steering clamp, the 4 screws and nuts to the column, as illustrated.

See applicable exploded view for each model.

Adjust the steering handlebar to the desired position.

Lock the handlebar in place by tightening the 4 nuts as specified in the illustrations.

▼ CAUTION : Tighten the nuts equally in a criss-cross sequence and ensure there is an equal gap on each side of the clamps.

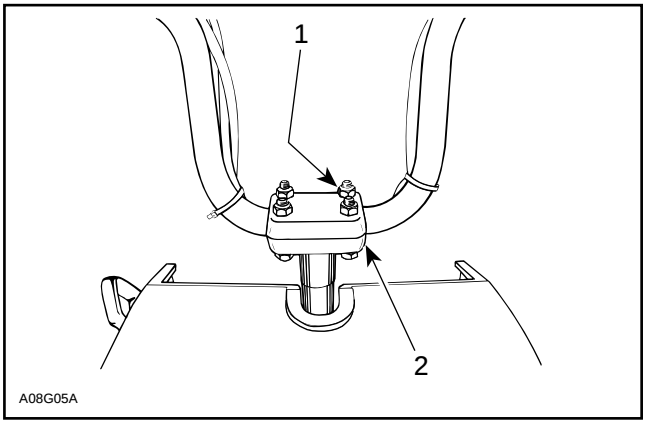

TYPICAL

1. *Torque to 26 N•m (19 lbf•ft)*
2. *Equal gap all around*

◆ WARNING : Avoid contact between the brake handle and the windshield by NOT adjusting the handlebar too high.

◆ WARNING : Make sure that the steering pad and all controls are properly fixed to their normal location on the handlebar.

7,23,24,26, Steering Pad, Bolt, Nut and Rubber Attachment

▼ CAUTION : Prior to installation, perform handlebar adjustment.

Properly fit the steering pad to the handlebar. Assemble using the 2 rubber attachments, nuts and bolts where applicable.

◆ WARNING : Make sure that the steering pad and all controls are properly fixed to their normal location on the handlebar.

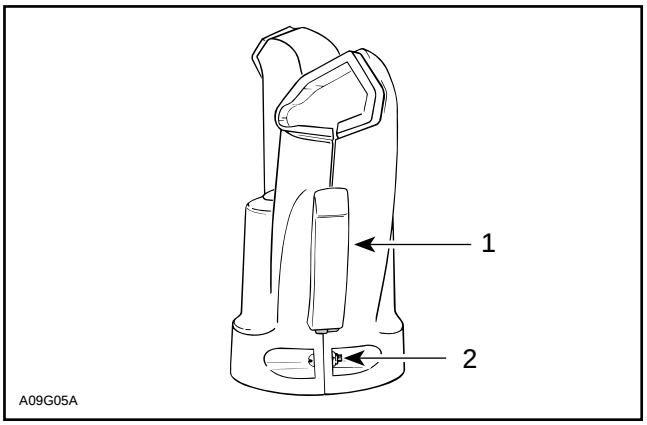

1. *Rubber attachment*
2. *Nut and bolt (where applicable)*

STEERING ADJUSTMENT (SKIS)

Definitions

TOE-OUT :

A difference measured between the front edge of the skis “A” and rear edge “B” as viewed from the top. It is adjustable.

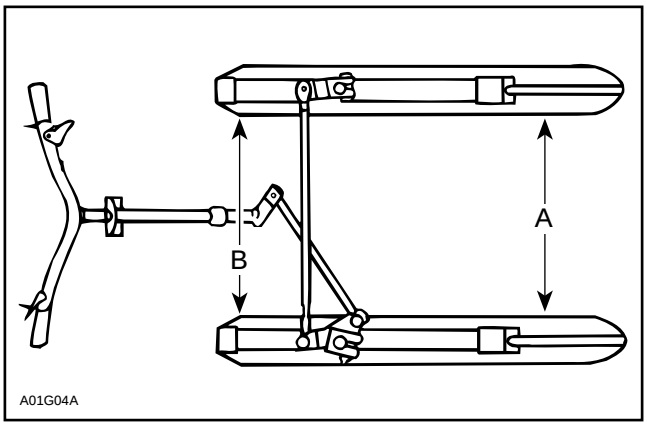

CAMBER :

A specific inward or outward tilt angle of ski leg compared to a vertical line when viewing the vehicle from front. This angle is adjustable on some models only.

Adjustments

F and S Series

Adjustments should be performed following this sequence :

– Pivot arm centering.
– Set camber angle (some models).
– Check for a horizontal handlebar.
– Set toe-out.

DSA System

PIVOT ARM CENTERING

◆ WARNING : Do not attempt to adjust straight ahead ski position by turning the ball joint on tie rod **no. 14**.

13,14,15,22, Jam Nut, Tie Rod and Pivot Arm

With handlebar in straight ahead position, the center of the pivot arm must be in line with the end of the bolt. Loosen the jam nuts on tie rod no. 14 (LH threads on steering column end) and turn tie rod accordingly. Align and retighten the jam nuts to 18 N•m (159 lbf•in).

◆ WARNING : Never lengthen tie rod so that threaded portion of ball joint exceeds 20 mm (25/32 in).

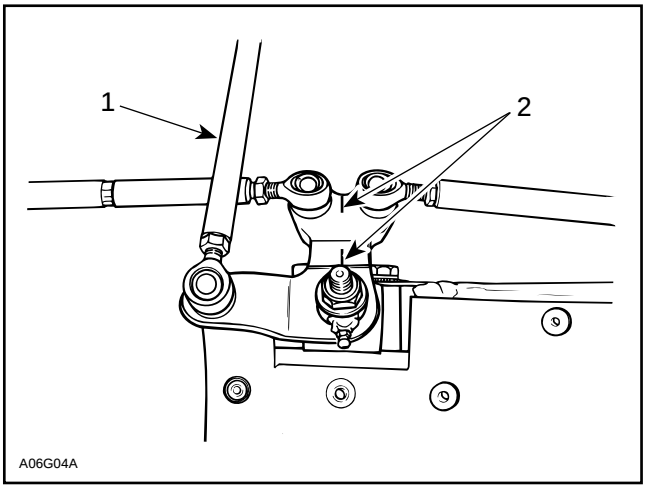

1. Tie rod no. 14
2. Center of pivot arm in line with bolt end

CAMBER

○ NOTE : On vehicles without adjustable radius arms (no. 7) the camber is not adjustable.

○ NOTE : Identical adjustments are required on both sides of the vehicle.

– Make sure the vehicle is leveled by placing an angle finder under the main frame member as shown on the following illustration.

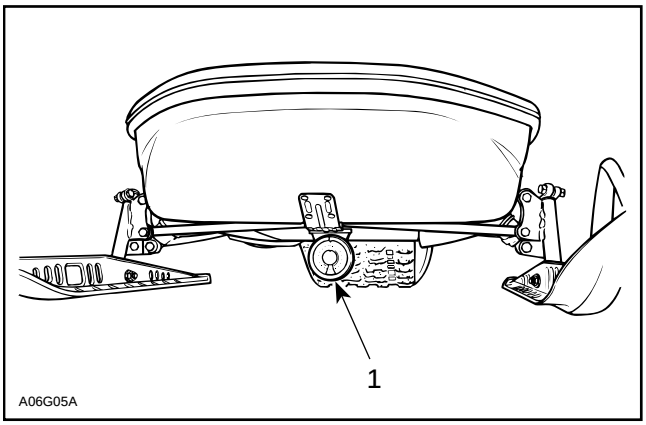

1. Angle finder

Using special tool P / N 529 0216 00 mounted to the ski leg position the angle finder on the tool as shown in the following illustration. An alternate location for the angle finder if the special tool is not available is the outside of the ski leg housing.

Adjust the camber to 0°±0.5°.

CAUTION : Angle finder must sit square against swing arm. Positioning angle finder against weld bead or decal may result in false reading.

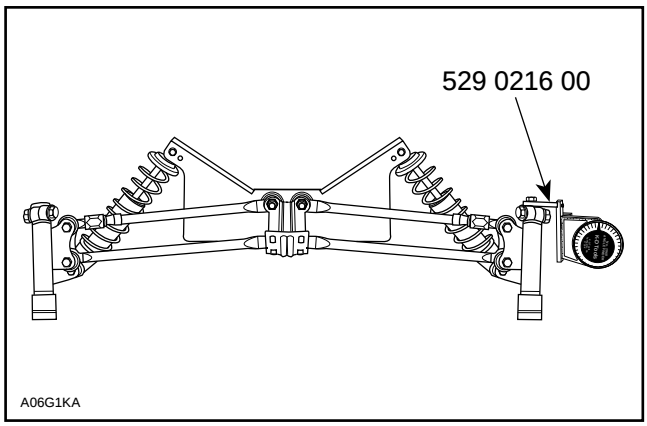

TYPICAL – DSA CAMBER ADJUSTMENT SET-UP

Adjusting

- Loosen lock nut on both lower control arms.
- Unbolt both lower control arms at ski leg housing. Turn control arm one complete turn at a time to obtain a vertical ski leg (0°±0.5°). Bolt lower control arms.

If a control arm is to be assembled, respect a 446 mm (17-9/16 in) center to center measurement.

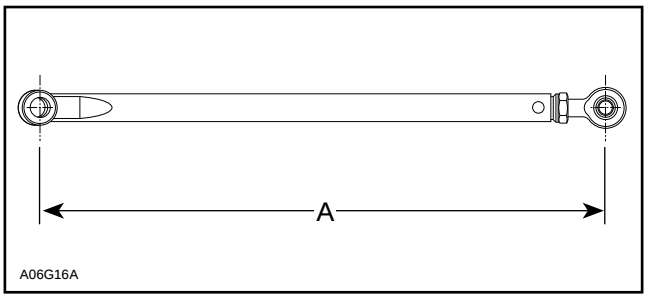

A. 446 mm (17-9/16 in)

HANDLEBAR AND SKI TOE-OUT

Check that handlebar is horizontal when skis are in straight ahead position by measuring from the extremities of the grips to the rearmost edge of the tunnel, as shown.

NOTE : The reference point must be the same relative to each side.

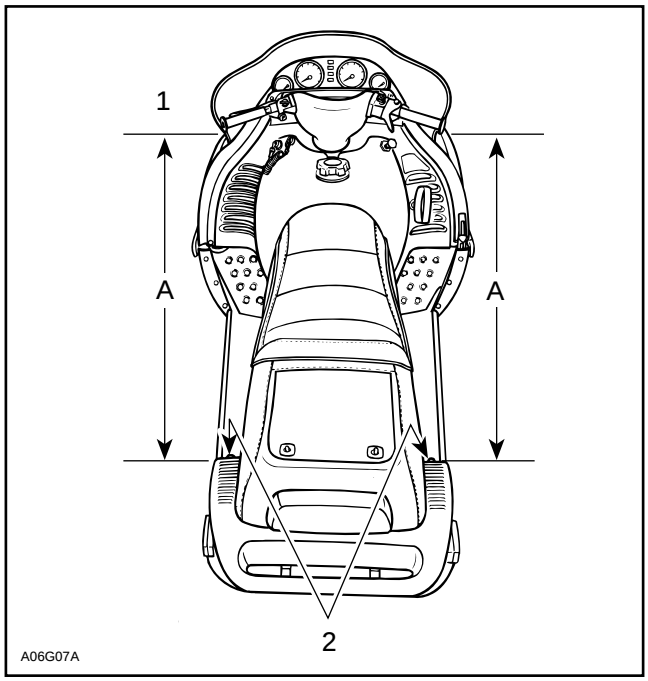

TYPICAL

1. *Equal distance A on each side*
2. *Same reference point (rivet)*

Adjustment is performed by adjusting length of left and right tie rods no. 20.

WARNING : Do not attempt to adjust skis straight ahead position by turning ball joint on tie rod no. 14.

Procedure :

- Loosen jam nuts no. 13 and no. 15 of both tie rods no. 20.
- Turn the tie rod on one side to shorten its length.
- Lengthen the other one by turning it exactly the same amount, so that toe-out is not changed.

WARNING : Never lengthen tie rod so that threated portion of ball joint exceeds 20 mm (25/32 in).

- Close front of skis manually to take all slack from steering mechanism.

NOTE : A rubber cord must be hooked in front of skis to keep them closed.

- Skis should have a toe-out of 3 mm (1/8 in) when they are in straight-ahead position and the vehicle is resting on the ground.

NOTE : To make sure skis are in straight-ahead position, place a straight edge against pre-adjusted track and measure the distance between front and rear of skis and straight edge. Distances should be equal. After the ski toe-out adjustment, distance at front of ski must be 1.5 mm (1/16 in) more than at rear on both sides for a total toe-out of 3 mm (1/8 in).

To reduce tolerance when measuring, set one ski to proper toe-out then measure from that ski to the opposite ski.

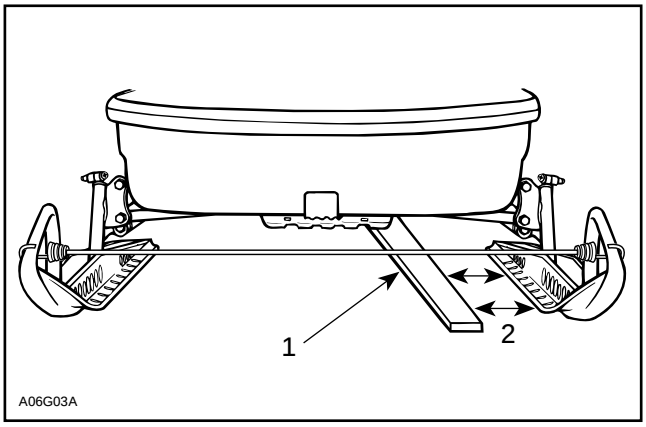

TYPICAL

1. *Straight edge*
2. *1.5 mm (1/16 in) more at front than at rear*

LUBRICATION

WARNING : Do not lubricate throttle and / or brake cable, housing and spring coupler bolts.

26, Grease Fittings

Only use low temperature grease (P / N 413 7061 00).

The following symbols will be used to show what type of lubricant should be used at the suitable locations.

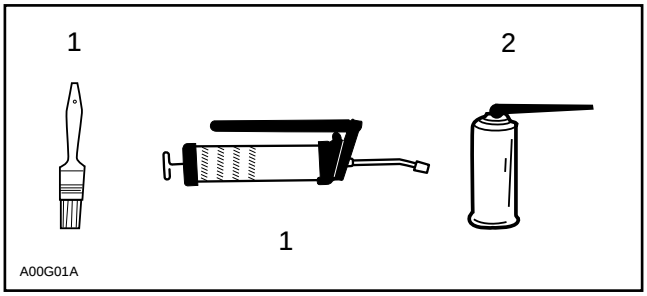

1. *Low temperature grease*
2. *Penetrating lubricant (P / N 293 6000 16)*

Lubricate :

- Steering column.
- Upper and lower control arms drop link and tie rod ends.
- Grease ski legs, ski pivots and idler arm.
- Coat stabilizer sliders with grease, and oil their ball joints if so equipped.

S-Series and F-Series

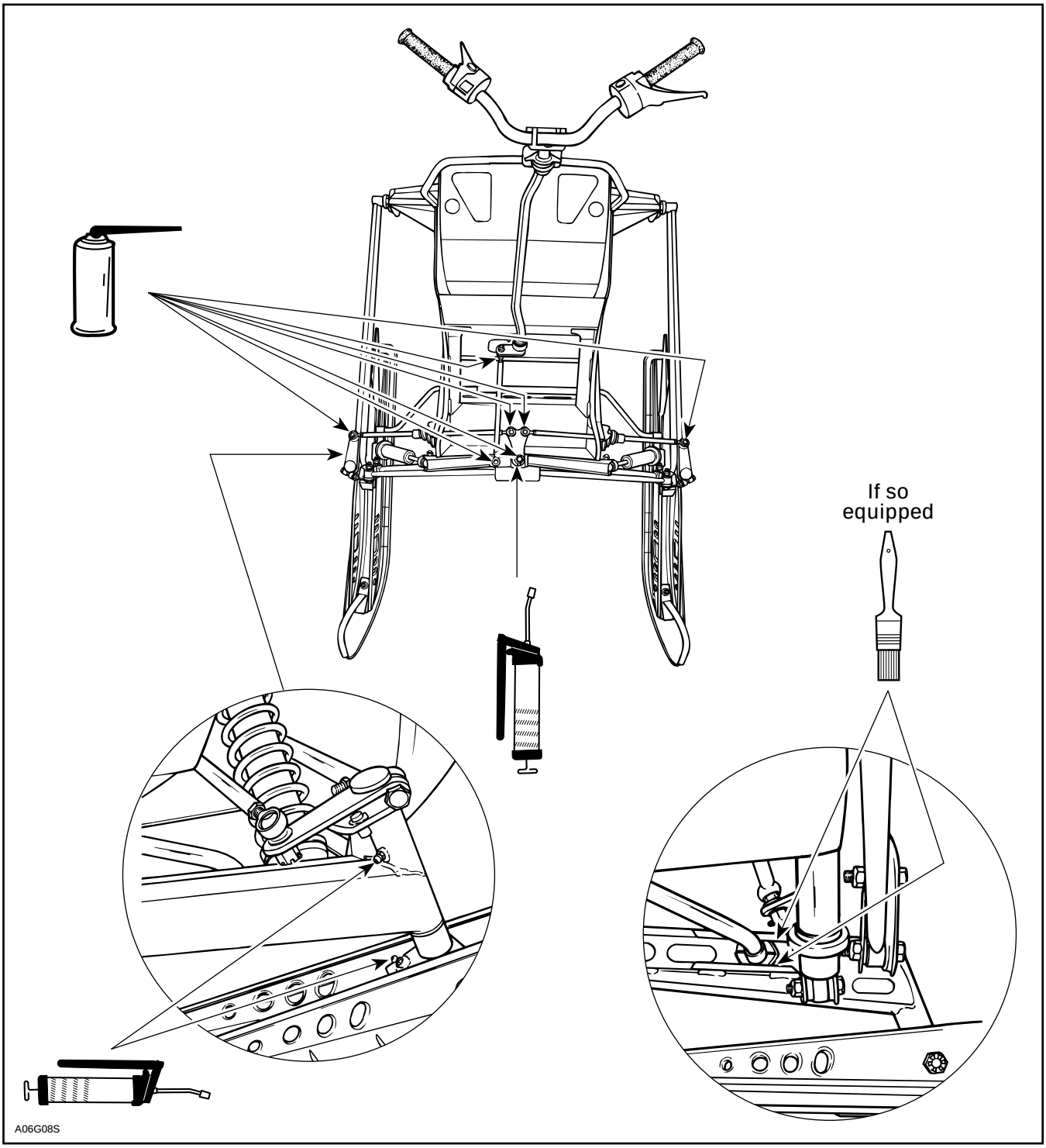

SUSPENSION AND SKI SYSTEM

F-Series

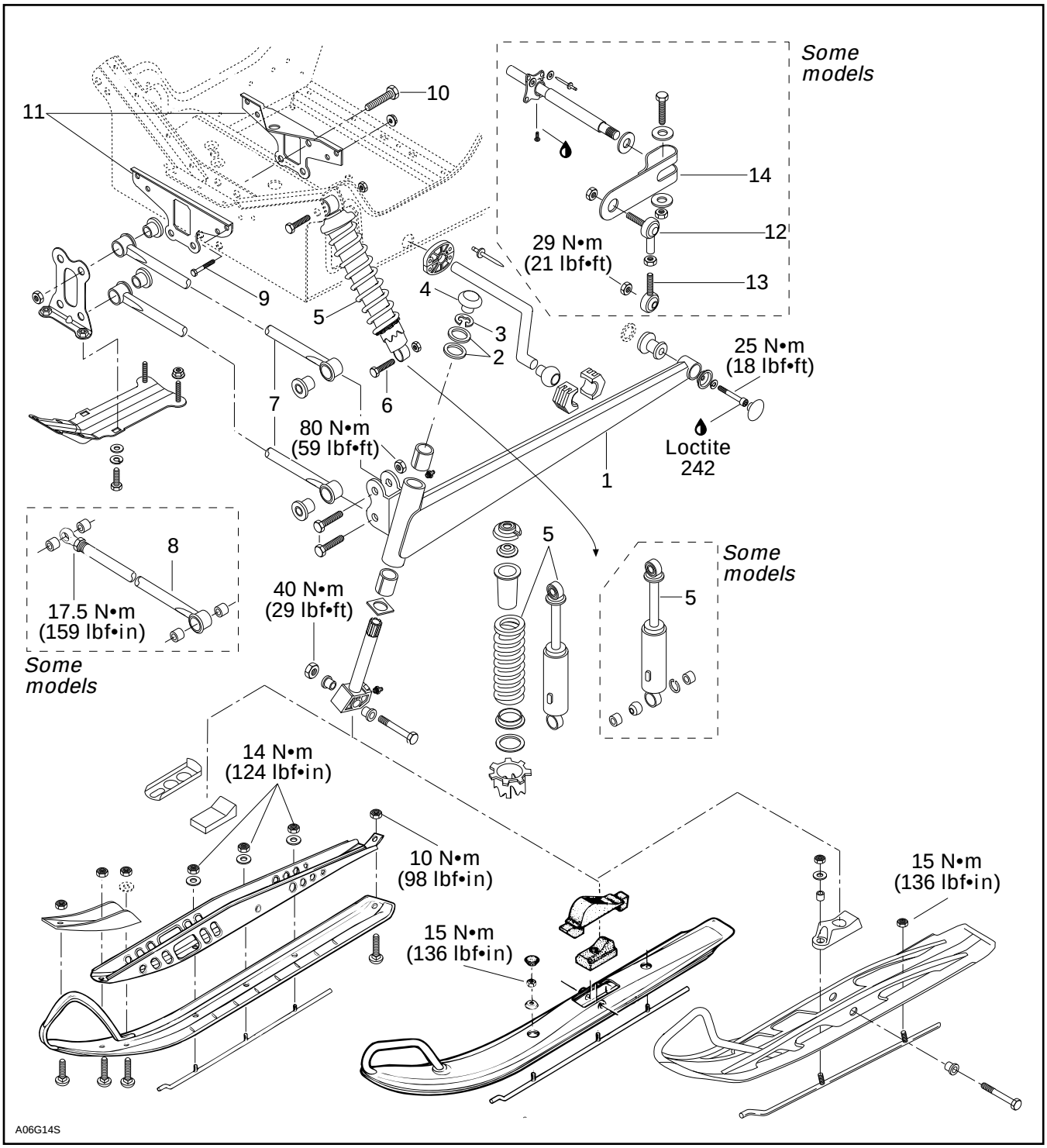

S-Series

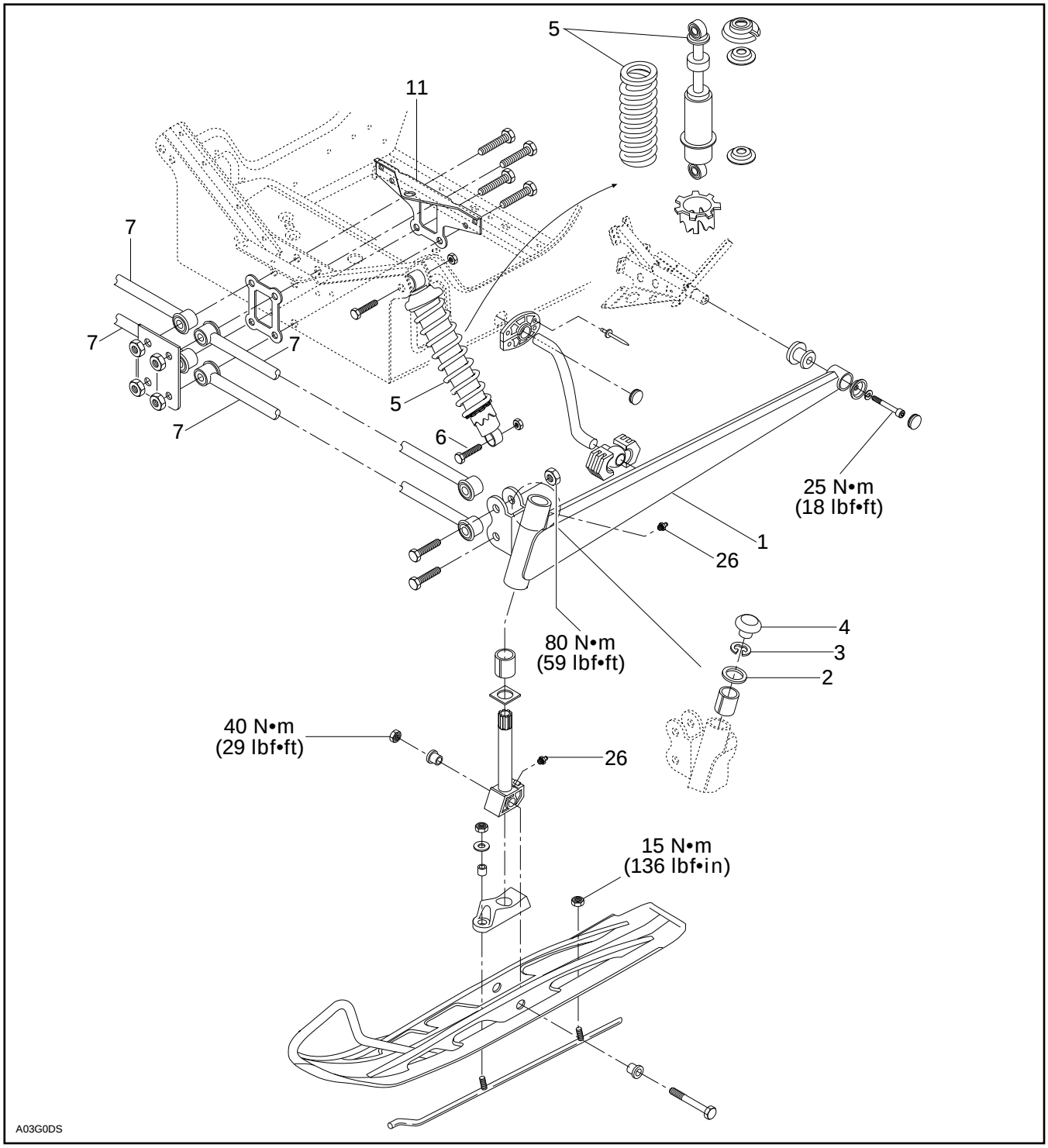
5
11
7
7
7
7
5
6
25 N•m
(18 lbf•ft)
1
26
4
3
2
80 N•m
(59 lbf•ft)
40 N•m
(29 lbf•ft)
26
15 N•m
(136 lbf•in)
A03G0DS

DISASSEMBLY

5, Shock

Lift front of vehicle and support it off the ground.

Reduce spring preload by turning adjusting ring accordingly with the adjustment wrench in vehicle tool box.

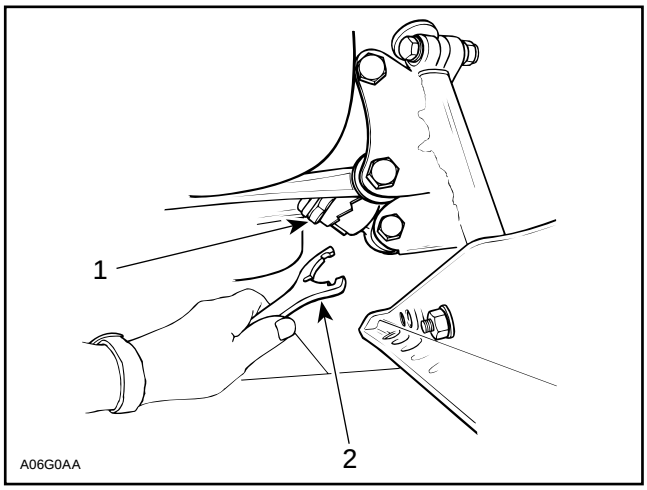

1. Shock cam
2. Adjustment wrench

Remove lower bolt then upper bolt of shock.

For shock spring disassembly use shock spring remover (P / N 529 0271 00) in a vise. Mount shock in it and turn shock so that spring coils matched spring compressor.

Close and lock the bar. Adjust the handle horizontal position by changing the position of the clevis pin.

Push down on the handle until it locks. Remove spring stopper and cap then release handle.

When installing the cap opening must be 180° from the spring stopper opening.

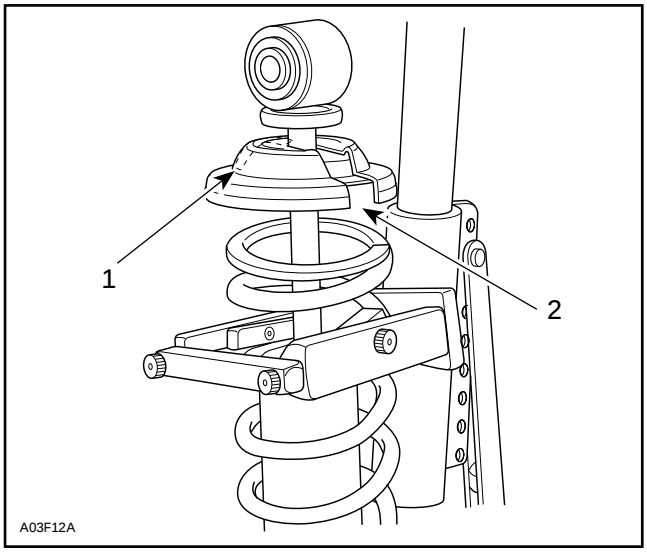

1. Cap opening
2. Spring stopper opening

1, Swing Arm

Lift front of vehicle and support it off the ground.

Remove cap, circlip then slacken steering arm bolt and pull up steering arm. Note shim positions. Ski leg may fall off from swing arm.

Unbolt lower end of shock from swing arm.

Unbolt radius rod.

14, Lever

Models with adjustable stabilizer bar : unbolt lower no. 13 ball joint from swing arm, do not change stabilizer adjustments at this time.

Unbolt rear of swing arm from frame.

Pull swing arm off the vehicle. Stabilizer bar will disengage ball joint at swing arm inside rails.

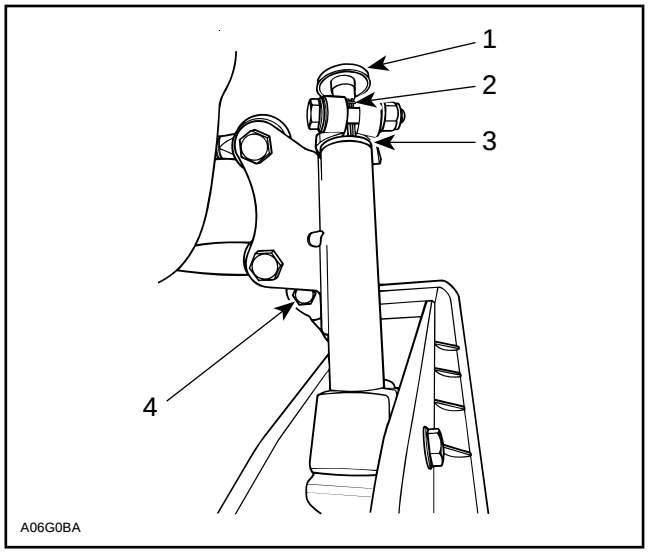

1. Cap no. 4
2. Circlip no. 3
3. Shims no. 2
4. Bolt retaining lower end of shock no. 6

INSPECTION

Check all rubber cushions for crack and wear. Replace as required.

Check straightness of splines and proper interlocking with steering arm. Replace as required.

Check for straightness of swing arm. Replace as required.

Check for clogged grease fittings. Clean or replace as required.

Check for proper action of sliding blocks in swing arm.

Check skis and runners for wear, replace as necessary.

Check condition of ski stopper. Replace it when deteriorated.

To check condition of shock, refer to 07-02 IMPROVED C-7 SUSPENSION then look for Shock Servicing.

INSTALLATION

For assembly, reverse the disassembly procedure. However, pay attention to the following.

Apply low temperature grease (P / N 413 7061 00) to ski leg components.

Tighten nuts and screws to proper torque as mentioned in exploded view.

7,8, Upper Half Arm and Tie Rod

Position half arms and tie rods horizontally before tightening nuts.

9,10,11, Bolt, Nut and Link Plate

Attach link plate to frame with additional nuts and bolts, if applicable.

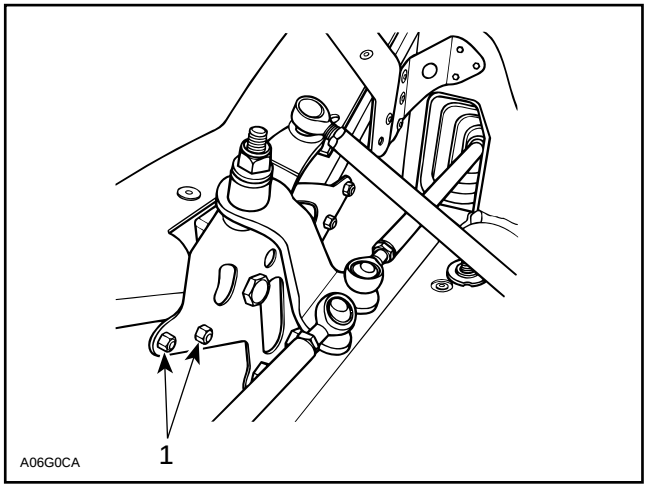

SOME MODELS
1. Nuts and bolts

13,14, Ball Joint and Lever

Install levers on both sides at same angle (about horizontal). Lengthen ball joints accordingly to fasten in lower control arm without play nor preload.

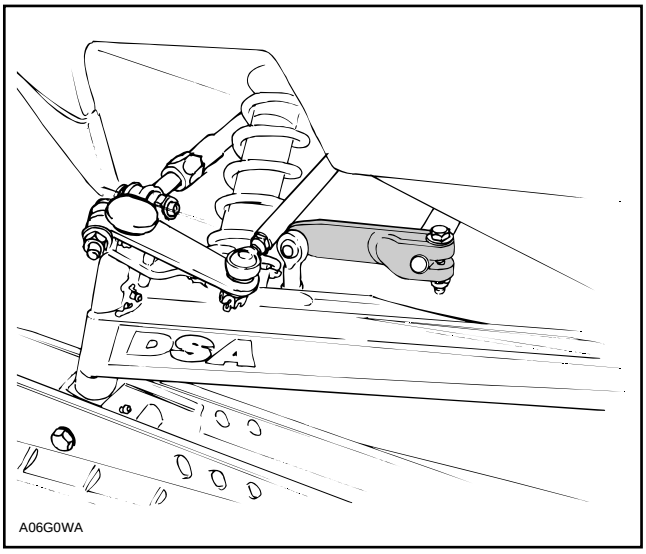

TYPICAL

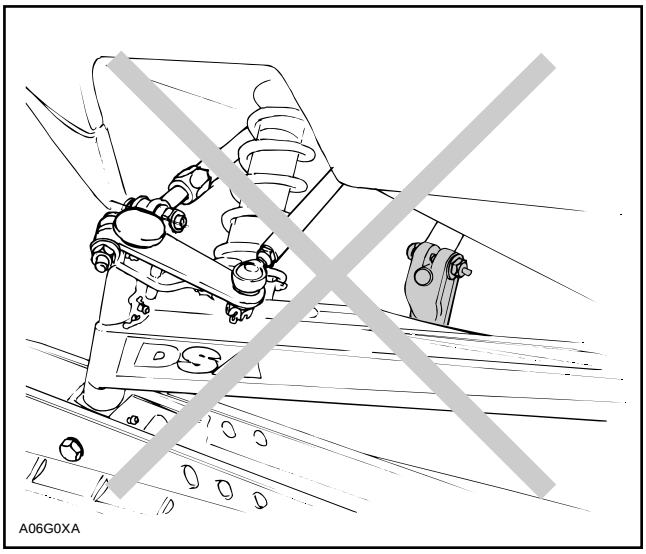

WRONG POSITION

TABLE OF CONTENTS

BODY **09-01-1**

INSTALLATION AND ADJUSTMENT **09-01-1**
HEADLAMP BEAM AIMING 09-01-1
BULB REPLACEMENT 09-01-1
DECAL 09-01-2
WINDSHIELD INSTALLATION 09-01-2
HOOD 09-01-2
BELT GUARD 09-01-3
WIRING HARNESS 09-01-3
CABLES 09-01-3
PIPING 09-01-3

PLASTIC MAINTENANCE AND REPAIR **09-01-4**
MAINTENANCE 09-01-4
REPAIR 09-01-5
MATERIAL REPAIR PROCEDURE 09-01-6
REPAIR PROCEDURE FOR R.I.M. URETHANE 09-01-6

FRAME **09-02-1**
FRAME CLEANING 09-02-1
FRAME WELDING 09-02-1
FRAME COMPONENT REPLACEMENT 09-02-2

BODY

INSTALLATION AND ADJUSTMENT

HEADLAMP BEAM AIMING

Beam aiming is correct when center of high beam is 25 mm (1 in) below the headlamp horizontal center line, scribed on a test surface, 381 cm (12 ft 6 in) away.

Measure headlamp center distance from ground. Scribe a line at this height on test surface (wall or screen). Light beam center should be 25 mm (1 in) below scribed line.

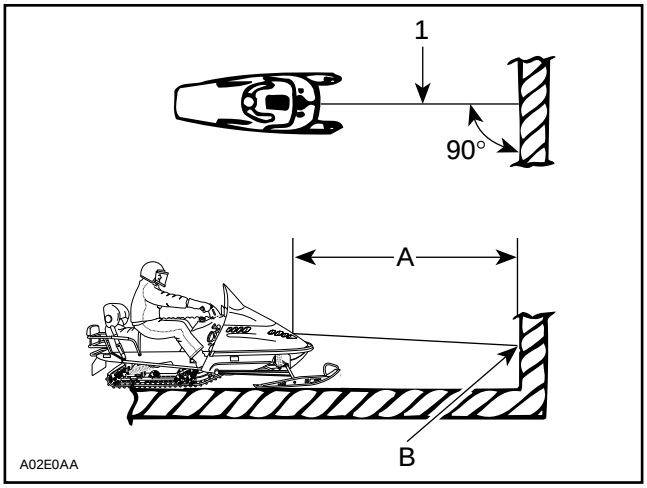

1. Headlamp center line
A. 381 cm (12 ft 6 in)
B. 25 mm (1 in)

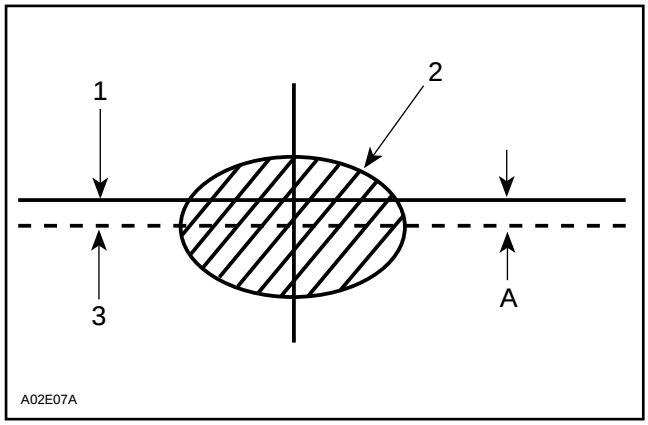

1. Headlamp horizontal
2. Light beam (high beam) (projected on the wall)
3. Light beam center
A. 25 mm (1 in)

Required Conditions

Place the vehicle on a flat surface perpendicular to test surface (wall or screen) and 381 cm (12 ft 6 in) away from it.

Rider or equivalent weight must be on the vehicle.

Select high beam.

BULB REPLACEMENT

If headlamp bulb is burnt, tilt cab and unplug the connector from the headlamp. Remove the rubber boot and unfasten the bulb retainer clips or locking ring.

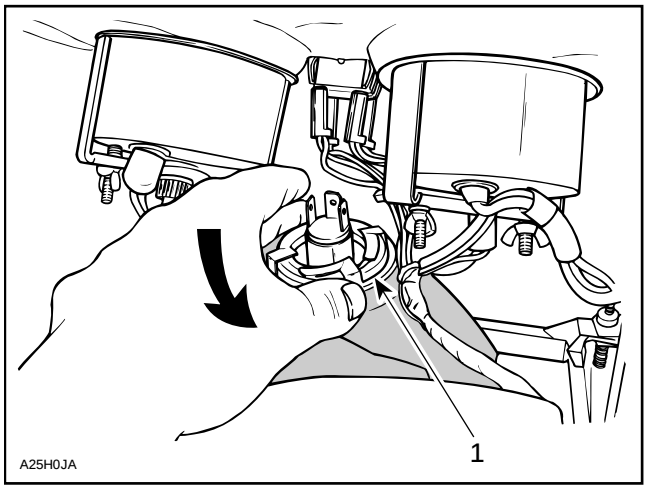

TYPICAL
1. Locking ring

Detach the bulb and replace. If the taillight bulb is burnt, expose the bulb by removing red plastic lens. To remove, unscrew the 2 retaining screws. Verify all lights after replacement.

▼ CAUTION : Never touch glass portion of an halogen bulb with bare fingers, as it shortens its operating life. If by mistake glass is touched, clean it with isopropyl alcohol which will not leave a film on the bulb.

DECAL

To remove a decal ; heat old decal with a heat gun and peel off slowly.

Using isopropyl alcohol, clean the surface and dry thoroughly.

Apply liquid soap to new decal and carefully position the decal. Using a sponge or a squeegee, remove the air bubbles and surplus water working from the center toward the edges. Allow to air dry.

▼ CAUTION : Do not apply isopropyl alcohol or solvant directly on decals.

WINDSHIELD INSTALLATION

When peeling off the protective film some polyethylene particles may remain on the windshield. A soft clean cloth moistened with naphtha (camping equipment fuel) will easily remove the remaining particles.

◆ WARNING : Naphtha is flammable and explosive under certain conditions. Always manipulate in a well ventilated area. Do not smoke or allow open flames or sparks in the vicinity.

Position the windshield on the hood then push it down until the tabs are fully inserted into the hood slots. Lock the windshield tabs in position using latches as shown.

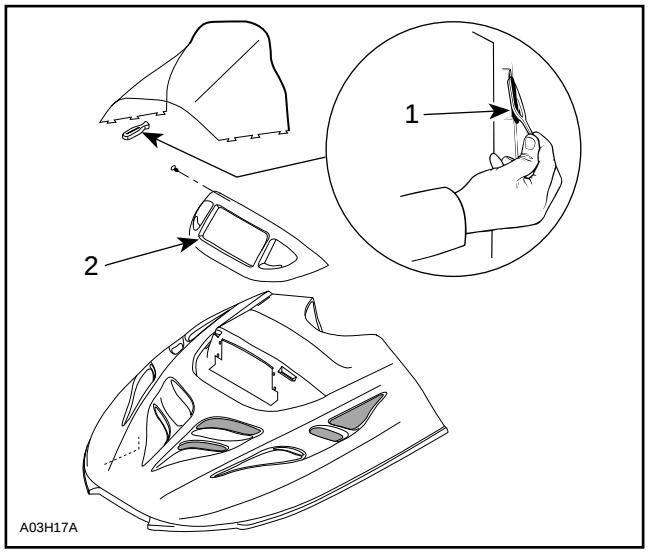

S-SERIES

1. *Latch*
2. *Temporary remove headlamp molding for windshield installation*

HOOD

S-Series

Working from within engine compartment, remove exterior nuts retaining both hinges. Then, close hood and remove interior nuts through the access holes.

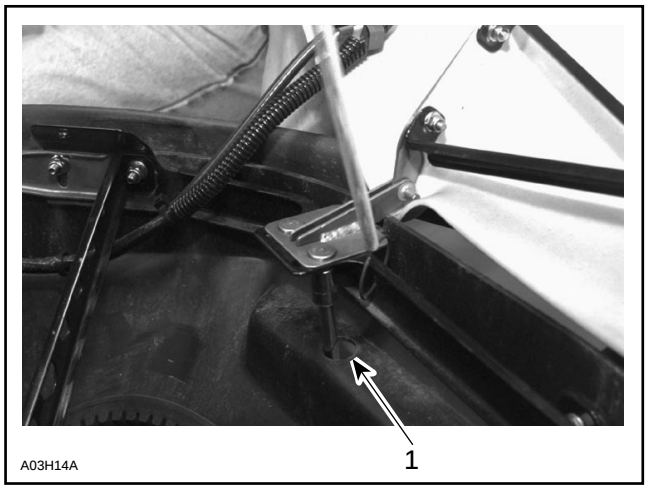

1. Access hole

At installation, loosely install nuts, close hood then adjust before tightening interior nuts through access holes.

F-Series

Unfasten speedometer cable, wiring harnesses then retaining cables.

Unbolt front molding and unclip it.

Close hood.

Remove molding.

Remove hinge pin.

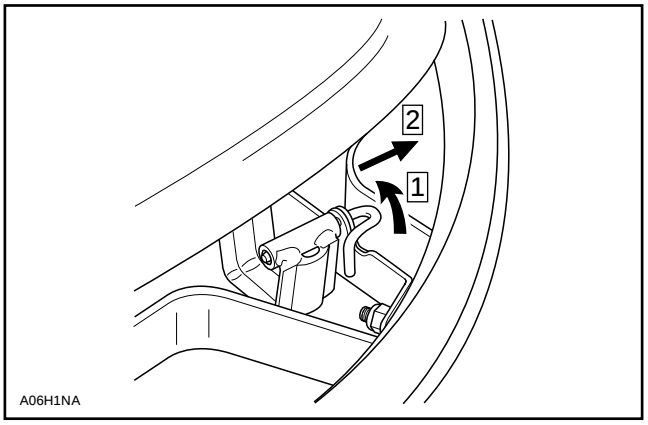

At installation, half close hood to install front molding.

BELT GUARD

Disassembly and Assembly

○ NOTE : For additional information (ex. : exploded view) refer to the correspondent parts catalog.

◆ WARNING : Engine should be running only with belt guard and / or pulley guard well secured in place.

Inspection

All Models

Check belt guard and / or pulley guard mounting bosses, clips and retainers for wear.

WIRING HARNESS

◆ WARNING : Ensure all terminals are properly crimped on the wires and that all connector housings are properly fastened. Keep wires away from any rotating, moving, heating and vibrating parts. Use proper fastening devices as required.

CABLES

◆ WARNING : Before installation, ensure that all cables are in perfect condition. Properly install the cable ends and secure them in place. Pay attention to route them properly, away from any rotating, moving, heating, or vibrating parts.

PIPING

◆ WARNING : Always ensure that the fuel, vent, primer, impulse, injection oil and rotary valve oil lines are properly fixed to their connectors, that they are not perforated or kinked and that they are properly routed away from any rotating, moving, heating or vibrating parts. Also check for leaks. Replace if required.

○ NOTE : Refer to proper Parts Catalog to find suitable clip part numbers.

PLASTIC MAINTENANCE AND REPAIR

MAINTENANCE

Clean the vehicle thoroughly, removing all dirt and grease accumulation.

To clean use a soft clean cloth and either soapy water or isopropyl alcohol.

To remove grease, oil or glue use isopropyl alcohol.

▼ CAUTION : Do not apply isopropyl alcohol or acetone directly on decals.

▼ CAUTION : The following products must no be used to clean or wax any of the plastic components used on the vehicles :

- gasoline
- brake fluid
- kerosene
- diesel fuel
- lighter fluid
- varsol
- naphtha
- acetone
- strong detergents
- abrasive cleaners
- waxes containing an abrasive or a cleaning agent in their formula

▼ CAUTION : Clean R.I.M. Metton® with isopropyl alcohol only. Never use cleaners or products containing chlorine.

Apply wax on glossy finish only. Protect the vehicle with a cover to prevent dust accumulation during storage.

▼ CAUTION : If for some reason the snowmobile has to be stored outside it is preferable to cover it with an opaque tarpaulin. This will prevent the sun rays from affecting the plastic components and the vehicle finish.

REPAIR

The very first step before repairing plastic materials is to find out exactly which type of material is involved. Refer to following chart.

▼ CAUTION : Consult chart and repair kit instructions carefully, some repair products are not compatible with certain plastics.

◆ WARNING : Polycarbonate windshields must never be repaired by welding or otherwise .

		REPAIRABLE		
PART	MODEL	FIBERGLASS	R.I.M. URETHANE	POLYETHYLENE
HOOD 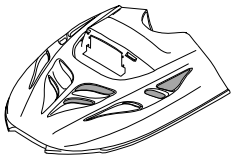 A06H194	Skandic WT			
	S Serie F Serie			
BOTTOM PAN 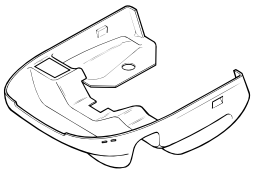 A06H1A4	Skandic WT S Serie F Serie			
SIDE PANEL AND REAR MOLDING 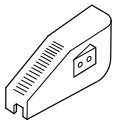 A06H1B4	S Serie F Serie			

MATERIAL REPAIR PROCEDURE

Fiberglass

This material is repairable and repaintable, using any one of several kits available on the market.

R.I.M. Urethane

R.I.M. Urethane is light colored (tan) on the inside with a smooth surface.

◆ WARNING : Material should be repaired and repainted in a well ventilated area only.

▼ CAUTION : Clean R.I.M. with isopropyl alchol or Crest Hi-Solv product. Never use cleaners or products that contain chlorine.

▼ CAUTION : R.I.M. should never be exposed to temperatures exceeding 93°C (200°F).

○ NOTE : When working on a R.I.M. surface, never use a grinder or a high revolution tool such as an air or electric buffer. Use of such tools could overheat material and liberate agents in it thus causing a bad adhesion.

REPAIR PROCEDURE FOR R.I.M. URETHANE

Small Scratches

- Sand and scuff area.
- Feather out edges.
- Paint with a matching acrylic auto touch-up paint.

Deep Scratches

- Sand and scuff area.
- Make a V groove using a knife or a rough round file.
- Clean surface with isopropyl alcohol or Crest Hi-Solv stock no. AH-S product.
- Cover with TP-E epoxy mixed in equal quantities.
- Heat the surface with a heater lamp placed at 38 cm (15 in) for a period of 15 minutes.
- Sand the repair using a smooth dry sand paper.
- Use the same product if a final finish is required.
- Clean surface with Crest Hi-Solv product.
- Apply a flexible primer such as Crest Prima Flex stock no. AP-F.
- Wait 10 minutes.
- Repaint (air dry during 72 hours (approximately)).

Large Crack

- Sand and scuff outside and inside area by exceeding it 31.7 mm (1-1/4 in) on each side and 12.7 mm (1/2 in) at each end.
- Make a V groove (appr. 90°) on both sides of hood using a knife or a rough round file.
- Enlarge the crack to 2.4 mm (3/32 in) – 3.2 mm (1/8 in) using a sharp knife.
- Clean outside and inside surface with isopropyl alcohol or Crest Hi-Solv product.
- Repair inside surface first.
- Cover inside area with Crest TP-E epoxy.
- Apply a 50 mm x 30 mm (2 in x 1-1/4 in) patch. If no room for the patch, use tape.
- Cover exterior surface with same product. Damaged area should be slightly higher.
- Heat surface with a heater lamp placed at 38 mm (15 in) for a period of 15 minutes.
- Sand outside repair using a smooth dry sand paper.
- Use same product if a final finish is required.
- Apply a flexible primer.
- Wait 10 minutes.
- Repaint (air dry during 72 hours approximately).

○ NOTE : Both R.I.M. materials are high static plas-tics, painting must be done in a dust free area such as a paint booth.

CREST MAIN OFFICE AND MANUFACTURING PLANT	
CREST INDUSTRIES, INC. 3841 13th Street Wyandotte, Michigan 48192	Phone : 313-283-4100 Toll Free : 1-800-822-4100 Fax : 1-800-344-4461 Fax : 313-283-4461

Crest products used in R.I.M. repair procedure are available from following locations :

DISTRIBUTOR WAREHOUSE LOCATIONS		
UNITED STATES		**CANADA**
CREST EAST COAST, INC. P.O. Box 550 1109 Industrial Parkway Brick, New Jersey 08723 Phone : 908-458-9000 Fax : 908-458-5753 CREST PRODUCTS, INC. *Shipping Address :* 125 Production Drive Yorktown, Virginia 23693 Phone : 804-599-6572 Virginia : 1-800-572-5025 Outstate : 1-800-368-5033 Fax : 804-599-6630 *Mailing Address :* P.O. Box 2018 Grafton, Virginia 23692 CREST INDUSTRIES SOUTHEAST, INC. *Shipping Address :* 4300 Glen Haven Drive Decatur, Georgia 30035 Phone : 404-288-4658 Toll Free : 1-800-552-0876 Fax : 404-288-4658 *Mailing Address :* P.O. Box 254 Decatur, Georgia 30031	CREST INDUSTRIES, INC. (CREST MID-WEST) 231 Larkin Williams Ind. Court St. Louis, Missouri 63026 Phone : 314-349-4800 Toll Free : 1-800-733-2737 Fax : 314-349-4888 Toll Free Fax : 1-800-776-2737 CREST MID WEST Regional Branch Warehouses CREST INDUSTRIES, INC. P.O. Box 635 Mountain Home, Arkansas 72653 Phone : 501-491-5583 Toll Free : 1-800-733-2737 4200 Jackson Street, Unit 9 Denver, Colorado 80216 Phone : 303-320-3900 Toll Free : 1-800-733-2737 Fax : 303-320-6509 REM-CO DISTRIBUTING, INC. 5625 S. Adams Tacoma, Washington 98409 Phone : 206-474-5414 Toll Free : 1-800-735-7224 Fax : 206-474-7339	J2 PRODUCTS A Division of Sawill Ltd. 54 Audia Court, Unit 2A Concord, Ontario, L4K 3N4 *Phone :* *Toronto : 416-665-1404* *Concord : 905-669-9410* *Montréal : 514-655-6505* *Fax :* Concord : 905-669-9419 Montréal : 514-655-6505 WHEEL-IN AUTOMOTIVE SUPPLY *Shipping Address :* # 1, 3911A Brandon St. S.E. Calgary, Alberta, T2G 4A7 Office : 403-287-0775 *Mailing Address :* P.O. Box 40036 929-42nd Avenue S.E. Calgary, Alberta, T2G 5G5

FRAME

FRAME CLEANING

NOTE : For aluminum frames use only aluminum cleaner and follow instructions on container. (Dursol cleaner or equivalent).

Clean frame and tunnel with appropriate cleaners and rinse with high pressure hose.

On liquid cooled models carefully clean radiators and check condition of radiator protectors. The protectors should extend far enough to keep the track from rubbing on the radiators.

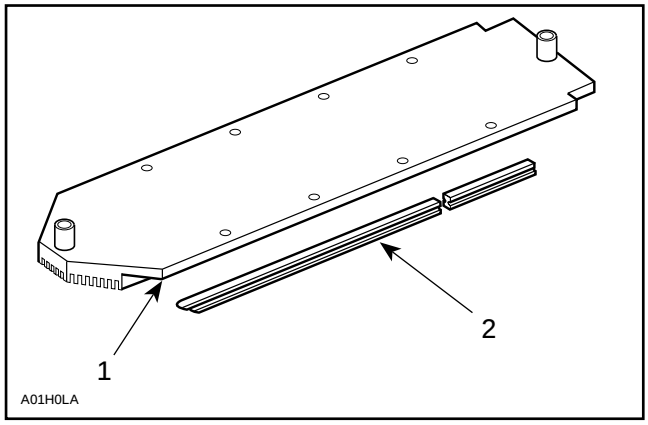

1. Radiator
2. Radiator protector

Touch up all metal spots where paint has been scratched off. Spray all bare metal parts of vehicle with metal protector.

Seat Cleaning

For all models, it is recommend to clean the seat with a solution of warm soapy water using a soft clean cloth.

CAUTION : Avoid use of harsh detergent such as strong soaps, degreasing solvents, abrasive cleaners, paint thinners, etc. that may cause damage to the seat cover.

FRAME WELDING

Steel Frame :

– electric welding
– amperage : 70-110 A
– voltage : 20-24 V
– rod : E-7014 (3/32 in)

Aluminum Frame : (refer to specialized welding shop)

– argon-oxygen / acetylene welding
– rod : ER-4043 (3/32 in)

CAUTION : Before performing electrical weld-ing anywhere on the vehicle, unplug the multiple connector at the electronic box for models equipped with a battery, unplug the negative cable. This will protect the electronic box and battery against damage caused by flowing current when welding.

NOTE : This procedure applies to all electronic ignition systems.

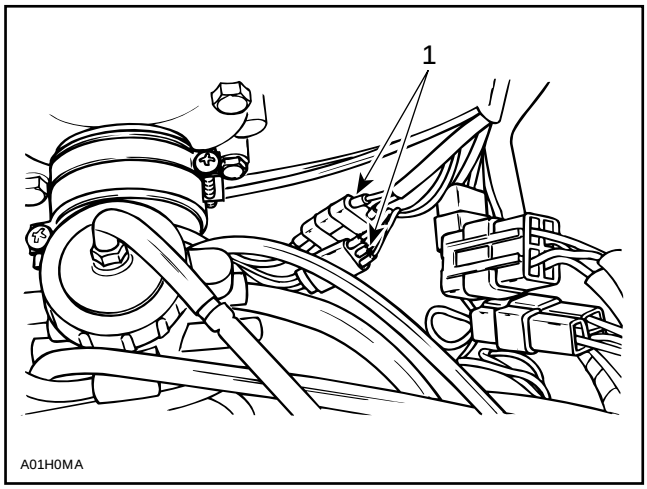

TYPICAL
1. Unplug before electrical welding

CAUTION : If welding is to be done near plastic material, it is recommended to either remove the part from the area or to protect it with aluminum foil to prevent damage.

FRAME COMPONENT REPLACEMENT

DSA Suspension Models

▼CAUTION : Do not attempt to drill hardened self-piercing rivets. Always grind rivet heads for removal.

Rear Cap

Grind rivet heads from top of rear cap and underneath for side retaining rivets.

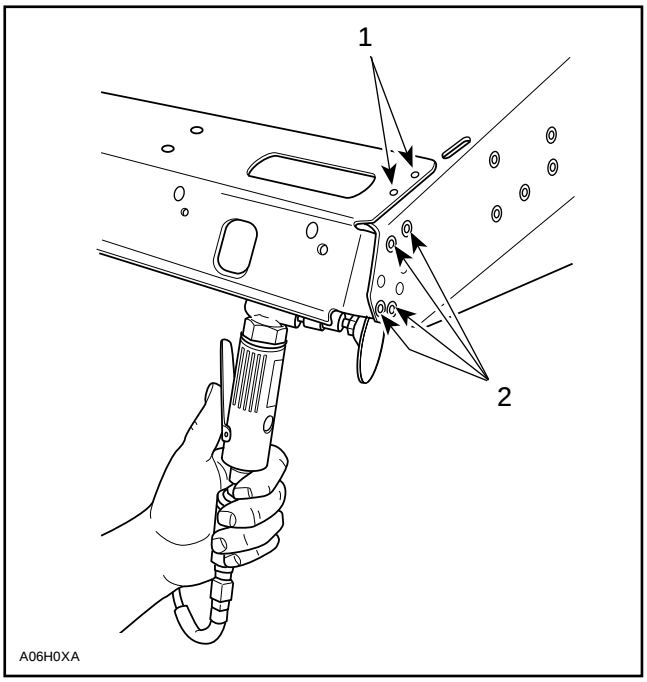

1. Rivets heads ground
2. Rivets to be ground from underneath

To remove rivet, strike with a punch from rivet head side.

Make a chamfer from underneath on all four corner holes.

Radiator

Grind outside rivet heads from top of tunnel beginning from the side of tunnel to the center to avoid scratching visible part of tunnel.

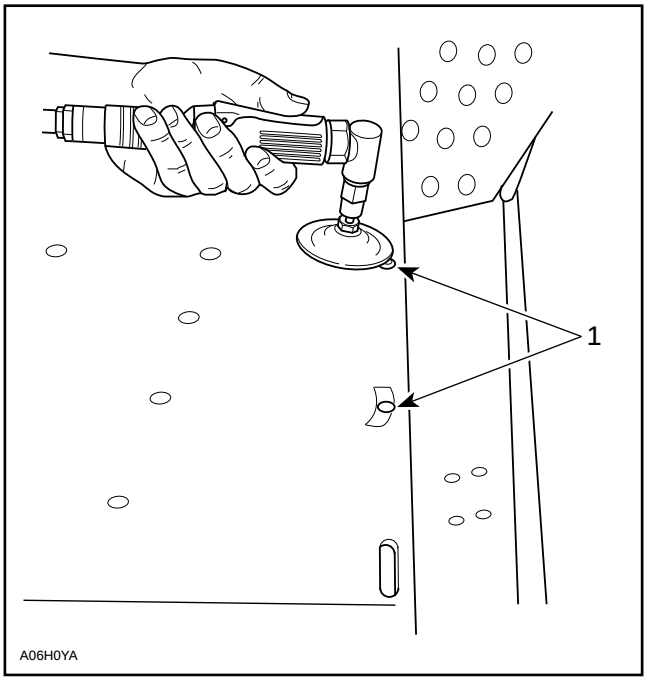

Outside rivets

Grind inside rivets from underneath of tunnel.

Make paint touch-ups.

Rivet new radiator. Install a washer under rivet head when rivet hole is enlarged.

SI* METRIC INFORMATION GUIDE

TECHNICAL DATA

BASE UNITS

DESCRIPTION	UNIT	SYMBOL
length	meter	m
mass	kilogram	kg
force	newton	N
liquid	liter	L
temperature	Celsius	°C
pressure	kilopascal	kPa
torque	newton•meter	N•m
speed	kilometer per hour	km/h

PREFIXES

PREFIX	SYMBOL	MEANING	VALUE
kilo	k	one thousand	1,000
centi	m	one hundredth	0.01
milli	c	one thousandth	0.001
micro	µ	one millionth	0.000001

CONVERSION FACTORS

TO CONVERT	TO †	MULTIPLY BY
in	mm	25.4
in	cm	2.54
in^2	cm^2	6.45
in^3	cm^3	16.39
ft	m	0.3
oz	g	28.35
lbf	kg	0.45
lbf•in	N	4.4
lbf•ft	N•m	0.11
lbf•ft	N•m	1.36
PSI (lbf/in^2)	lbf•in	12
imp. oz	kPa	6.89
U.S. oz	U.S. oz	0.96
U.S. oz	mL	28.41
imp. gal	U.S. gal	1.2
imp. gal	L	4.55
U.S. oz	mL	29.57
U.S. gal	L	3.79
MPH	km/h	1.61
Fahrenheit	Celsius	(°F – 32) ÷ 1.8
Celsius	Fahrenheit	(°C × 1.8) + 32

* The international system of units abbreviates SI in all languages.

† To obtain the inverse sequence, divide by the given factor. To convert ''mm'' to ''in'', divide by 25.4.

NOTE : Conversion factors are rounded off to 2 decimals for easier use.

VEHICLE MODEL			FORMULA SLS	GRAND TOURING 500	SUMMIT 500	GRAND TOURING 580	FORMULA STX, STX LT
ENGINE TYPE			**494**	**494**	**494**	**582**	**583**
Number of Cylinders			2	2	2	2	2
Bore		mm (in)	69.50 (2.74)	69.50 (2.74)	69.50 (2.74)	76.00 (2.99)	76.00 (2.99)
Stroke		mm (in)	65.80 (2.59)	65.80 (2.59)	65.80 (2.59)	64.00 (2.520)	64.00 (2.520)
Displacement		cm^3 (in^3)	499.30 (30.47)	499.30 (30.47)	499.30 (30.47)	580.70 (35.44)	580.70 (35.44)
Compression Ratio (corrected)			6.8	6.8	6.8	6.70	6.10
Maximum Power Engine Speed ①		RPM	7400–7600	7400–7600	7400–7600	7200–7400	7800–8000
Piston Ring Type		1st / 2nd	ST / R	ST / R	ST / R	ST / N.A.	ST / N.A.
Ring End Gap	(new)	mm (in)	0.200 (.008)	0.200 (.008)	0.200 (.008)	0.250 (.0100)	0.250 (.0100)
	(wear limit)	mm (in)	1.000 (.040)	1.000 (.040)	1.000 (.040)	1.000 (.0400)	1.000 (.0400)
Ring / Piston Groove Clearance	(new)	mm (in)	0.030 (.0012)	0.030 (.0012)	0.030 (.0012)	0.043 (.0017)	0.040 (.0016)
	(wear limit)	mm (in)	0.200 (.008)	0.200 (.008)	0.200 (.008)	0.160 (.0064)	0.200 (.0080)
Piston / Cylinder Wall Clearance	(new)	mm (in)	0.090 (.0036)	0.090 (.0036)	0.090 (.0036)	0.050 (.0020)	0.050 (.0020)
	(wear limit)	mm (in)	0.150 (.006)	0.150 (.006)	0.150 (.006)	0.150 (.0060)	0.150 (.0060)
Connecting Rod Big End Axial Play	(new)	mm (in)	0.390 (.0156)	0.390 (.0156)	0.390 (.0156)	0.400 (.0160)	0.390 (.0156)
	(wear limit)	mm (in)	1.200 /(.048)	1.200 (.048)	1.200 (.048)	1.200 (.0480)	1.200 (.0480)
Maximum Crankshaft End-play		mm (in)	0.300 (.0120)	0.300 (.0120)	0.300 (.0120)	0.300 (.0120)	0.300 (.0120)
Maximum Crankshaft Deflection		mm (in)	0.080 (.0032)	0.080 (.0032)	0.080 (.0032)	0.080 (.0032)	0.080 (.0032)
Rotary Valve Timing ② and P / N 420 924 XXX		Opening Closing	135° – 64° 509	135° – 64° 509	135° – 64° 509	129.5° – 69.5° 509	140° – 71° 502
Magneto Generator Output		W	220	220	220	220	220
Ignition Type			CDI	CDI	CDI	CDI	CDI
Spark Plug Make and Type			NGK BR9ES	NGK BR9ES	NGK BR9ES	NGK BR9ES	NGK BR9ES
Spark Plug Gap		mm (in)	0.45 (.018)	0.45 (.018)	0.45 (.018)	0.45 (.018)	0.45 (.018)
Ignition Timing BTDC ③		mm (in)	1.81 (.071)	1.81 (.071)	1.81 (.071)	2.18 (.086)	1.75 (.069)
Generating Coil ⑨		Low Speed : Ω	10 – 17	10 – 17	10 – 17	10 – 17	10 – 17
		High Speed : Ω	N.A.	N.A.	N.A.	N.A.	N.A.
Lighting Coil ⑨		Ω	0.20 – 0.35	0.20 – 0.35	0.20 – 0.35	0.20 – 0.35	0.20 – 0.35
High Tension Coil ⑨	Primary	Ω	0.3 – 0.7	0.3 – 0.7	0.3 – 0.7	0.3 – 0.7	0.3 – 0.7
	Secondary	kΩ	8 – 16	8 – 16	8 – 16	8 – 16	8 – 16
Carburetor Type		PTO / MAG	VM 38 311 / 311	VM 38 311 / 311	VM 38(HAC) 313 / 314	VM 38 317 / 318	VM 38 325 / 326
Main Jet		PTO / MAG	320	320	400	360 / 370	320 / 330
Needle Jet			480 - P7	480 - P7	480 - Q0	480 - O4	480 - P0
Pilot Jet			45	45	75	40	40
Needle Identification – Clip Position			6FEY1-3	6FEY1-3	6FEY1-3	6DHN44-4	6DHN44-3
Slide Cut-away			2.5	2.5	2.5	2.5	2.5
Float Adjustment		± 1 mm (± 0.40 in)	18.1 (.71)	18.1 (.71)	19.6 (.77)	18.1 (.71)	18.1 (.71)
Air Screw Adjustment		± 1/16 Turn	1.75	1.75	2.0	1.25	1.5
Idle Speed RPM		RPM	1700 – 1900	1700 – 1900	1700 – 1900	1800 – 2000	1800 – 2000
Gas Type / Pump Octane number			Unleaded / 87	Unleaded / 87	Unleaded / 87	Unleaded / 87	Unleaded / 87
Gas / Oil Ratio			Injection	Injection	Injection	Injection	Injection
Type			Liquid	Liquid	Liquid	Liquid	Liquid
Axial Fan Belt Adjustment	Deflection	mm in	N.A.	N.A.	N.A.	N.A.	N.A.
	Force	kg (lbf)	N.A.	N.A.	N.A.	N.A.	N.A.
Thermostat Opening Temperature		°C (°F)	42 (108)	42 (108)	42 (108)	42 (108)	42 (108)
Radiator Cap Opening Pressure		kPa (PSI)	90.0 (13.0)	90.0 (13.0)	90.0 (13.0)	90.0 (13.0)	90.0 (13.0)
ENGINE COLD N•m (lb•ft)	Drive Pulley Retaining Screw ④		④	④	④	④	④
	Exhaust Manifold Nuts or Bolts		23 (17)	23 (17)	23 (17)	23 (17)	23 (17)
	Magneto Ring Nut		125 (92)	125 (92)	125 (92)	100 (74)	125 (92)
	Crankcase Nuts or Screws	M6 M8	9 (6.5) 29 (21)	9 (6.5) 29 (21)	9 (6.5) 29 (21)	9 (6.5) 23 (17)	9 (6.5) 29 (21)
	Crankcase / Engine Support Nuts or Screws		40 (29)	40 (29)	40 (29)	40 (29)	40 (29)
	Cylinder Head Nuts		29 (21)	29 (21)	29 (21)	29 (21)	29 (21)
	Crankcase / Cylinder Nuts or Screws		29 (21)	29 (21)	29 (21)	29 (21)	29 (21)
	Axial Fan Shaft Nut		N.A.	N.A.	N.A.	N.A.	N.A.

VEHICLE MODEL			GRAND TOURING SE	MACH 1
ENGINE TYPE			**670**	**670**
Number of Cylinders			2	2
Bore		mm (in)	78.00 (3.07)	78.00 (3.07)
Stroke		mm (in)	70.00 (2.760)	70.00 (2.760)
Displacement		cm^3 (in^3)	668.97 (40.82)	668.97 (40.82)
Compression Ratio (corrected)			6.20	6.0
Maximum Power Engine Speed ①		RPM	7600–7800	8100–8300
Piston Ring Type		1st / 2nd	ST / R	ST / R
Ring End Gap	(new)	mm (in)	0.250 (.0100)	0.250 (.0100)
	(wear limit)	mm (in)	1.000 (.0400)	1.000 (.0400)
Ring / Piston Groove Clearance	(new)	mm (in)	0.030 (.0012)	0.030 (.0012)
	(wear limit)	mm (in)	0.200 (.0080)	0.200 (.0080)
Piston / Cylinder Wall Clearance	(new)	mm (in)	0.070 (.0028)	0.070 (.0028)
	(wear limit)	mm (in)	0.150 (.0060)	0.150 (.0060)
Connecting Rod Big End Axial Play	(new)	mm (in)	0.390 (.0156)	0.390 (.0156)
	(wear limit)	mm (in)	1.200 (.0480)	1.200 (.0480)
Maximum Crankshaft End-play		mm (in)	0.300 (.0120)	0.300 (.0120)
Maximum Crankshaft Deflection		mm (in)	0.080 (.0032)	0.080 (.0032)
Rotary Valve Timing ② and P / N 420 924 XXX		Opening Closing	144° – 72° 500	145° – 76° 501
Magneto Generator Output		W	220	220
Ignition Type			CDI	CDI
Spark Plug Make and Type			NGK BR9ES	NGK BR9ES
Spark Plug Gap		mm (in)	0.45 (.018)	0.45 (.018)
Ignition Timing BTDC ③		mm (in)	1.93 (.076)	1.93 (.076)
Generating Coil ⑨		Low Speed : Ω	10 – 17	10 – 17
		High Speed : Ω	N.A.	N.A.
Lighting Coil ⑨		Ω	0.20 – 0.35	0.20 – 0.35
High Tension Coil ⑨	Primary	Ω	0.3 – 0.7	0.3 – 0.7
	Secondary	kΩ	8 – 16	8 – 16
Carburetor Type		PTO / MAG	VM 40 79 / 79	VM 44 32 / 33
Main Jet		PTO / MAG	360 / 360	420 / 430
Needle Jet			224 AA-3	224 AA-7
Pilot Jet			50	35
Needle Identification – Clip Position			7EDY1-3	7EGO6-3
Slide Cut-away			2.5	2.5
Float Adjustment		± 1 mm (± 0.40 in)	18.1 (.71)	18.1 (.71)
Air Screw Adjustment		± 1/16 Turn	2.25	1.5
Idle Speed RPM		RPM	1800 – 2000	1800 – 2000
Gas Type / Pump Octane number			Unleaded / 87	Super unleaded / 81
Gas / Oil Ratio			Injection	Injection
Type			Liquid	Liquid
Axial Fan Belt Adjustment	Deflection	mm in	N.A.	N.A.
	Force	kg (lbf)	N.A.	N.A.
Thermostat Opening Temperature		°C (°F)	42 (108)	42 (108)
Radiator Cap Opening Pressure		kPa (PSI)	90.0 (13.0)	90.0 (13.0)
ENGINE COLD N•m (lb•ft)				
Drive Pulley Retaining Screw ④			④	④
Exhaust Manifold Nuts or Bolts			23 (17)	23 (17)
Magneto Ring Nut			125 (92)	125 (92)
Crankcase Nuts or Screws		M6 M8	9 (6.5) 29 (21)	9 (6.5) 29 (21)
Crankcase / Engine Support Nuts or Screws			40 (29)	40 (29)
Cylinder Head Nuts			29 (21)	29 (21)
Crankcase / Cylinder Nuts or Screws			29 (21)	29 (21)
Axial Fan Shaft Nut			N.A.	N.A.

VEHICLE MODEL				FORMULA SLS	GRAND TOURING 500	SUMMIT 500	GRAND TOURING 580
ENGINE TYPE				494	494	494	582
Chain Drive Ratio				25/44	23/44	22/44	25/44
Chain	Pitch		(in)	3/8	3/8	3/8	3/8
	Type, Links – Plates Qty			Silent 74-11	Silent 72-11	Silent 72-11	Silent 74-11
Drive Pulley	Type of Drive Pulley			TRAC	TRAC	TRAC	TRAC
	Ramp Identification			287 ⑤	228 ⑥	287 ⑤	228 ⑨
	Calibration Screw Position or Calibration Disc Quantity			4	3	5	3
	Spring Color			Green / Blue	Green / Blue	Pink / White	Yellow / Red
	Spring Length		± 1.5 mm ± (0.060 in)	147.4 (5.80)	147.4 (5.80)	124.5 (4.90)	121.1 (4.77)
	Clutch Engagement		RPM	4400 – 4600	4400 – 4600	4700 – 4900	3100 – 3300
Driven Pulley Spring Preload Cam Angle			kg (lb) degree	6.1 – 7.5 (13.4 – 16.5) 50°	5.4 – 6.8 (11.9 – 14.9) 44°	6.1 – 7.5 (13.4 – 16.5) 47°	5.4 – 6.8 (11.9 – 14.9) 50°
Pulley Distance Z			(±0, –1) mm ((±0, –1/32) in)	16.5 (21/32)	16.5 (21/32)	16.5 (21/32)	16.5 (21/32)
Offset	X		± 0.4 mm (± 1/64 in)	35.0 (1-3/8)	35.0 (1-3/8)	35.0 (1-3/8)	35.0 (1-3/8)
	Y – X			1.0 – 2.0 (0.039 – 0.079)	1.0 – 2.0 (0.039 – 0.079)	1.0 – 2.0 (0.039 – 0.079)	1.0 – 2.0 (0.039 – 0.079)
Drive Belt Part Number (P / N)				414 8607 00	414 8607 00	414 8607 00	414 8607 00
Drive Belt Width (new) ①			mm (in)	34.90 (1-3/8)	34.90 (1-3/8)	34.90 (1-3/8)	34.90 (1-3/8)
Drive Belt Adjustment		Deflection	mm (in)	32 (1-1/4)	32 (1-1/4)	32 (1-1/4)	32 (1-1/4)
		Force ②	kg (lbf)	6.8 (15)	6.8 (15)	6.8 (15)	6.8 (15)
Track	Width		cm (in)	38 (15.0)	38.1 (15.0)	38.1 (15.0)	38.1 (15.0)
	Length		cm (in)	307 (121)	345.5 (135.83)	345.5 (135.83)	345.5 (136)
	Adjustment	Deflection	mm (in)	45 – 50 (1-3/4 – 1-31/32)	45 – 50 (1-3/4 – 1-31/32)	45 – 50 (1-3/4 – 1-31/32)	45 – 50 (1-3/4 – 1-31/32)
		Force ③	kg (lbf)	7.3 (16)	7.3 (16)	7.3 (16)	7.3 (16)
Suspension Type		Track		SC-10 Sport	SC-10 Touring	SC-10 Touring	SC-10 Touring
		Ski		DSA	DSA	DSA	DSA
Length			cm (in)	272 (107.1)	291.9 (114.9)	291.9 (114.9)	302 (119)
Width			cm (in)	115.6 (45.5)	115.6 (45.5)	108 (42.5)	115.6 (45.5)
Height			cm (in)	112 (44)	122 (48)	112 (44)	128.3 (50.5)
Ski Stance			cm (in)	101.6 (40.0)	101.6 (40.0)	94 (37)	101.6 (40.0)
Mass (dry)			kg (lb)	211 (464)	232 (510)	218 (479)	255 (560)
Ground Contact Area			cm^2 (in^2)	6503 (1008)	7227.2 (1120.2)	7479.2 (1159.2)	7479.2 (1159.2)
Ground Contact Pressure			kPa (PSI)	3.18 (.461)	3.15 (.457)	2.86 (.415)	3.34 (.484)
Frame Material				Aluminum	Aluminum	Aluminum	Aluminum
Bottom Pan Material				Impact copolymer	Impact copolymer	Impact copolymer	Impact copolymer
Cab Material				RRIM	RRIM	RRIM	RRIM
Nose Piece Material				N.A.	N.A.	N.A.	N.A.
Battery			V (A•h)	N.A.	12 (22)	N.A.	12 (22)
Headlight			W	H4 60/55	H4 60/55	H4 60/55	H4 60/55
Taillight and Stoplight			W	8/27	8/27	8/27	8/27
Tachometer and Speedometer Bulb			W	2 x 3	2 x 3	2 x 3	2 x 3
Fuel and Temperature Gauge Bulb			W	N.A.	N.A.	N.A.	3 / 3
Fuse	Starter Solenoid		A	N.A.	30	N.A.	30
	Tachometer		A	N.A.	N.A.	N.A.	N.A.
Fuel Tank			L (U.S. gal)	40 (10.6)	40 (10.6)	40 (10.6)	42.1 (11.1)
Chaincase / Gearbox			mL (U.S. oz)	250 (8.5)	250 (8.5)	250 (8.5)	250 (8.5)
Cooling System ④			L (U.S. oz)	4.7 (159)	5.0 (169)	5.0 (169)	5.0 (169)
Injection Oil Reservoir			L (U.S. oz)	2.8 (94.7)	2.8 (94.7)	2.8 (94.7)	4.1 (138.7)

VEHICLE MODEL				FORMULA STX	FORMULA STX LT	GRAND TOURING SE	MACH 1
ENGINE TYPE				583	583	670	670
Chain Drive Ratio				25/44	23/44	25/44	26/44
Chain	Pitch		(in)	3/8	3/8	3/8	3/8
	Type / Links Qty / Plates Qty			Silent 74-11	Silent 72-11	Silent 74-13	Silent 74-13
Drive Pulley	Type of Drive Pulley			TRAC	TRAC	TRAC	TRAC
	Ramp Identification			228 ⑤	228 ⑤	280 ⑤	286 ⑥
	Calibration Screw Position or Calibration Disc Quantity			4	3	3	2
	Spring Color			Blue / Green	Yellow / Green	Yellow / Orange	Pink / White
	Spring Length		± 1.5 mm ± (0.060 in)	105.7 (4.16)	94 (3.70)	105.7 (4.16)	124.5 (4.90)
	Clutch Engagement		RPM	3400 – 3600	3100 – 3300	3400 – 3600	4400 – 4600
Driven Pulley Spring Preload Cam Angle			kg (lb) degree	5.5 – 7.0 (12.1 – 15.4) 50°	5.4 – 6.8 (11.9 – 14.9) 50°	5.4 – 6.8 (11.9 – 14.9) 47°	5.4 – 6.8 (11.9 – 14.9) 47°
Pulley Distance Z			(±0, –1) mm ((±0, –1/32) in)	16.5 (21/32)	16.5 (21/32)	16.5 (21/32)	16.5 (21/32)
Offset	X		± 0.4 mm (± 1/64 in)	35.0 (1-3/8)	35.0 (1-3/8)	35.0 (1-3/8)	35.0 (1-3/8)
	Y – X			1.0 – 2.0 (0.039 – 0.079)	1.0 – 2.0 (0.039 – 0.079)	1.0 – 2.0 (0.039 – 0.079)	1.0 – 2.0 (0.039 – 0.079)
Drive Belt Part Number (P / N)				414 8607 00	414 8607 00	414 9182 00	414 9182 00
Drive Belt Width (new) ①			mm (in)	34.90 (1-3/8)	34.90 (1-3/8)	35.2 (1-3/8)	35.2 (1-3/8)
Drive Belt Adjustment		Deflection	mm (in)	32 (1-1/4)	32 (1-1/4)	32 (1-1/4)	32 (1-1/4)
		Force ②	kg (lbf)	6.8 (15)	6.8 (15)	6.8 (15)	6.8 (15)
Track	Width		cm (in)	38.1 (15.0)	38.1 (15.0)	38.1 (15.0)	38.1 (15.0)
	Length		cm (in)	307 (121)	345.5 (136)	345.5 (136)	307 (121)
	Adjustment	Deflection	mm (in)	45 – 50 (1-3/4 – 1-31/32)	45 – 50 (1-3/4 – 1-31/32)	45 – 50 (1-3/4 – 1-31/32)	45 – 50 (1-3/4 – 1-31/32)
		Force ③	kg (lbf)	7.3 (16)	7.3 (16)	7.3 (16)	7.3 (16)
Suspension Type		Track		SC-10 Sport	SC-10 Touring	C-7 Twin Shock Progressive Rate	C-7 Twin Shock Progressive Rate
		Ski		DSA	DSA	DSA	DSA
Length			cm (in)	272 (107.1)	291 (114.6)	302 (119)	272 (107.1)
Width			cm (in)	115.6 (45.5)	115.6 (45.5)	115.6 (45.5)	118.5 (46.7)
Height			cm (in)	128.3 (50.52)	128.3 (50.52)	128.3 (50.5)	108 (42.5)
Ski Stance			cm (in)	101.6 (40.0)	101.6 (40.0)	101.6 (40)	104.5 (41)
Mass (dry)			kg (lb)	231 (509)	239 (526)	268 (590)	239 (525)
Ground Contact Area			cm^2 (in^2)	6825.3 (1057.9)	7549.2 (1170.1)	7227.2 (1120.2)	6793.4 (1053)
Ground Contact Pressure			kPa (PSI)	3.32 (.481)	3.11 (.451)	3.15 (.457)	3.45 (.5)
Frame Material				Aluminum	Aluminum	Aluminum	Aluminum
Bottom Pan Material				Impact copolymer	Impact copolymer	Impact copolymer	Impact copolymer
Cab Material				RRIM	RRIM	RRIM	RRIM
Nose Piece Material				N.A.	N.A.	N.A.	N.A.
Battery			V (A•h)	N.A.	N.A.	12 (22)	N.A.
Headlight			W	H4 60/55	H4 60/55	H4 60/55	H4 60/55
Taillight and Stoplight			W	8/27	8/27	8/27	8/27
Tachometer and Speedometer Bulb			W	2 x 3	2 x 3	2 x 3	2 x 3
Fuel and Temperature Gauge Bulb			W	N.A.	N.A.	3 / 3	3 / 3
Fuse	Starter Solenoid		A	N.A.	N.A.	30	N.A.
	Tachometer		A	N.A.	N.A.	N.A.	N.A.
Fuel Tank			L (U.S. gal)	42.1 (11.1)	42.1 (11.1)	42.1 (11.1)	42.1 (11.1)
Chaincase / Gearbox			mL (U.S. oz)	250 (8.5)	250 (8.5)	250 (8.5)	250 (8.5)
Cooling System ④			L (U.S. oz)	4.7 (159)	5.0 (169)	5.0 (169)	4.7 (159)
Injection Oil Reservoir			L (U.S. oz)	4.1 (138.7)	4.1 (138.7)	4.1 (139)	4.1 (139)

ENGINE LEGEND

BP :Breaker Points

BTDC :Before Top Dead Center

CDI :Capacitor Discharge Ignition

CTR :Center

K :Kilo (× 1000)

MAG :Magneto Side

N.A. :Not Applicable

PTO :Power Take Off Side

R :Rectangular

ST :Semi-trapez

µ :Micro (÷ 1 000 000)

① The maximum horsepower RPM is applicable on the vehicle. It may be different under certain circumstances and BOMBARDIER INC. reserves the right to modify it without obligation.

② Rotary valve to crankcase clearance : 0.27 – 0.48 mm (.011 – .019 in).

③ At 6000 RPM (engine cold) with headlamp turned on.

④ Drive pulley retaining screw : torque to 80 to 100 N•m (59 to 74 lbf•ft), install drive belt, accelerate the vehicle to moderate speed and apply the brake ; repeat 5 times. Retorque to 90 to 100 N•m (66 to 74 lbf•ft).

⑤ All resistance measurements must be performed with parts at room temperature (approx. 20°C (68°F)). Temperature greatly affects resistance measurements.

VEHICLE LEGEND

DSA : Direct Shock Action

HPG : High Pressure Gas

PRS : Progressive Rate Suspension

RAVE : Rotax Adjustable Variable Exhaust

RRIM :Reinforced Reaction Injection Molding

TRAC : Total Range Adjustable Clutch

N.A. :Not Applicable

① Minimum allowable width may not be less than 3.0 mm (1/8 in) of new drive belt.

② Force applied midway between pulleys to obtain specified tension deflection.

③ Force or downward pull applied to track to obtain specified tension deflection.

④ Coolant mixture : 60 % antifreeze / 40 % water.

⑤ Lever with roller pin P / N 420 4291 40. (Hollow)

⑥ Lever with roller pin P / N 504 2596 00. (Solid)

ANNEX 1 GRAND TOURING 500

GRAND-TOURING 500 '96

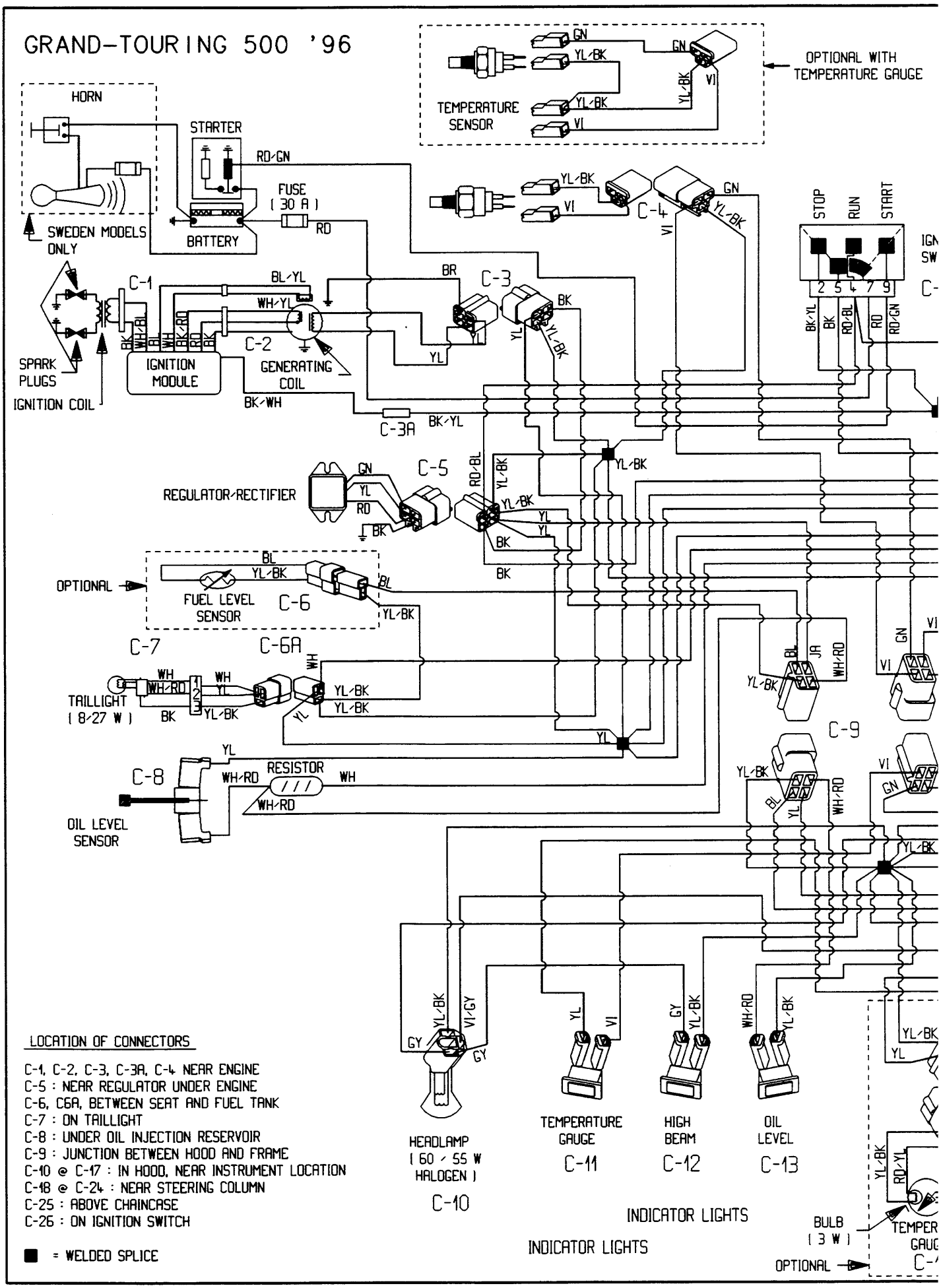

LOCATION OF CONNECTORS

C-1, C-2, C-3, C-3A, C-4 NEAR ENGINE
C-5 : NEAR REGULATOR UNDER ENGINE
C-6, C6A, BETWEEN SEAT AND FUEL TANK
C-7 : ON TAILLIGHT
C-8 : UNDER OIL INJECTION RESERVOIR
C-9 : JUNCTION BETWEEN HOOD AND FRAME
C-10 @ C-17 : IN HOOD, NEAR INSTRUMENT LOCATION
C-18 @ C-24 : NEAR STEERING COLUMN
C-25 : ABOVE CHAINCASE
C-26 : ON IGNITION SWITCH

■ = WELDED SPLICE

. WITH
URE GAUGE

WARNING

- ENSURE ALL TERMINALS ARE PROPERLY
- CRIMPED ON THE WIRES AND ALL CONNECTOR HOUSINGS ARE PROPERLY FASTENED

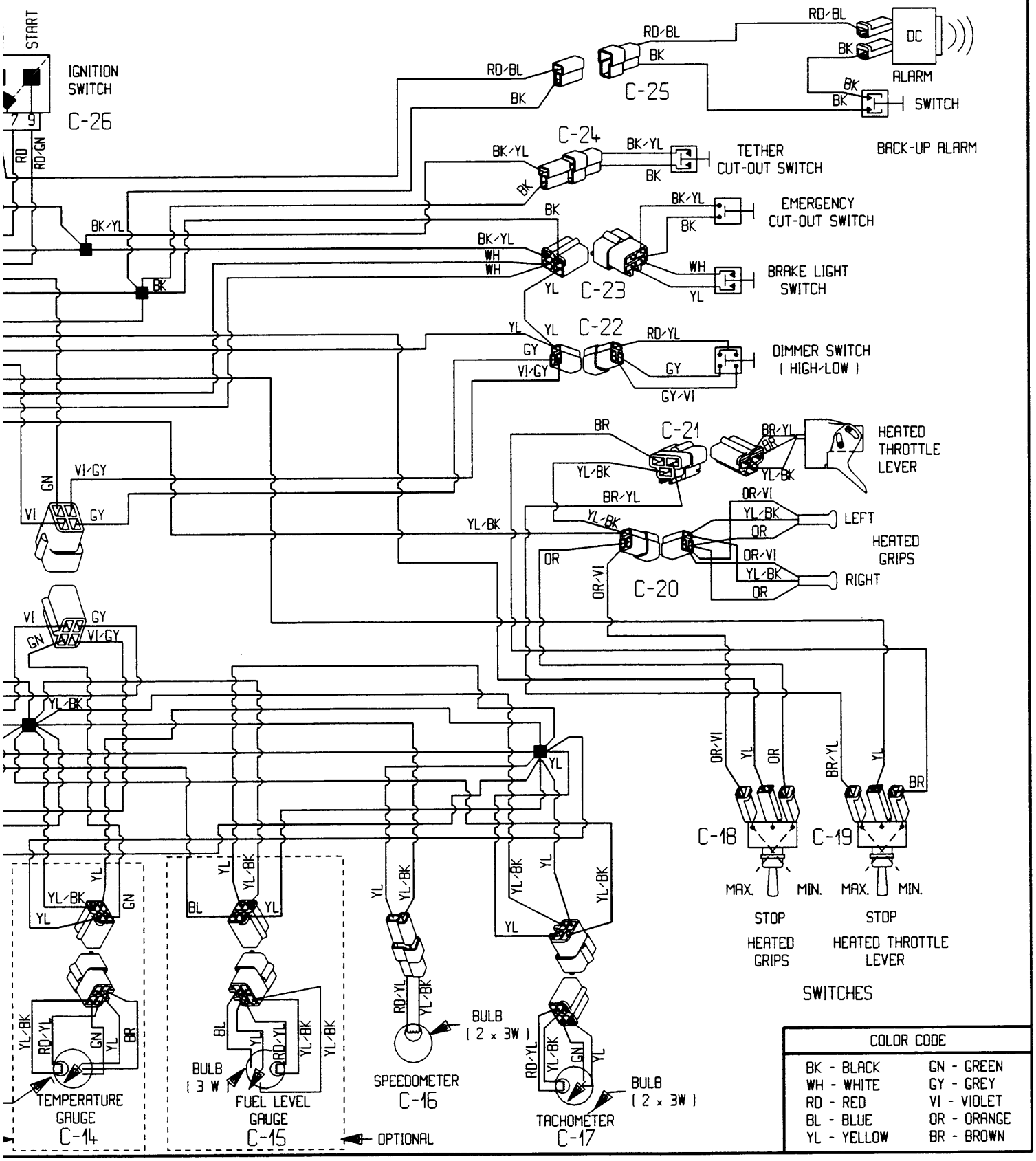

COLOR CODE	
BK - BLACK	GN - GREEN
WH - WHITE	GY - GREY
RD - RED	VI - VIOLET
BL - BLUE	OR - ORANGE
YL - YELLOW	BR - BROWN

ANNEX 2

GRAND TOURING 580 / SE

GRAND TOURING SE '96
GRAND TOURING 580

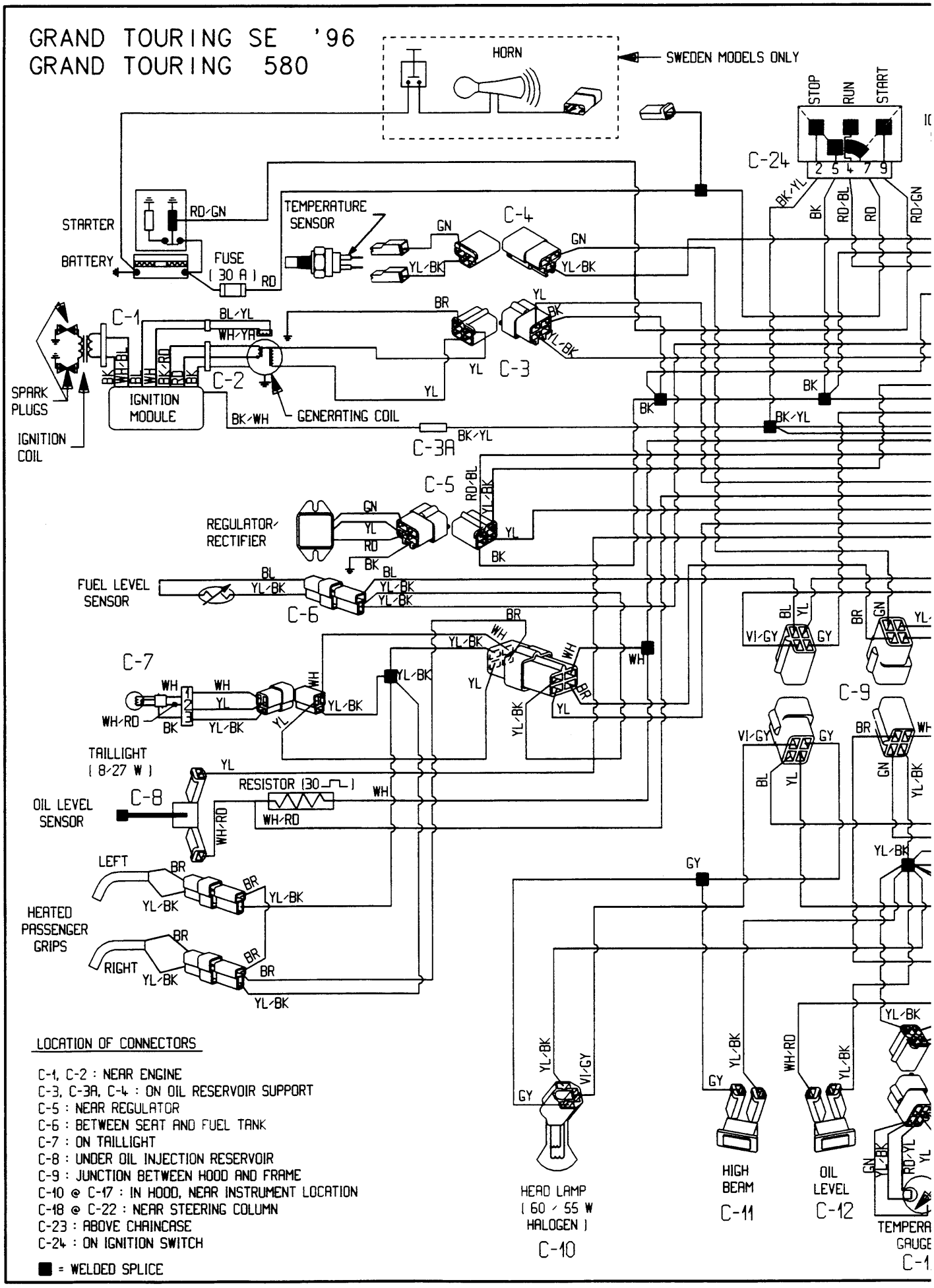

LOCATION OF CONNECTORS

C-1, C-2 : NEAR ENGINE
C-3, C-3A, C-4 : ON OIL RESERVOIR SUPPORT
C-5 : NEAR REGULATOR
C-6 : BETWEEN SEAT AND FUEL TANK
C-7 : ON TAILLIGHT
C-8 : UNDER OIL INJECTION RESERVOIR
C-9 : JUNCTION BETWEEN HOOD AND FRAME
C-10 @ C-17 : IN HOOD, NEAR INSTRUMENT LOCATION
C-18 @ C-22 : NEAR STEERING COLUMN
C-23 : ABOVE CHAINCASE
C-24 : ON IGNITION SWITCH

■ = WELDED SPLICE

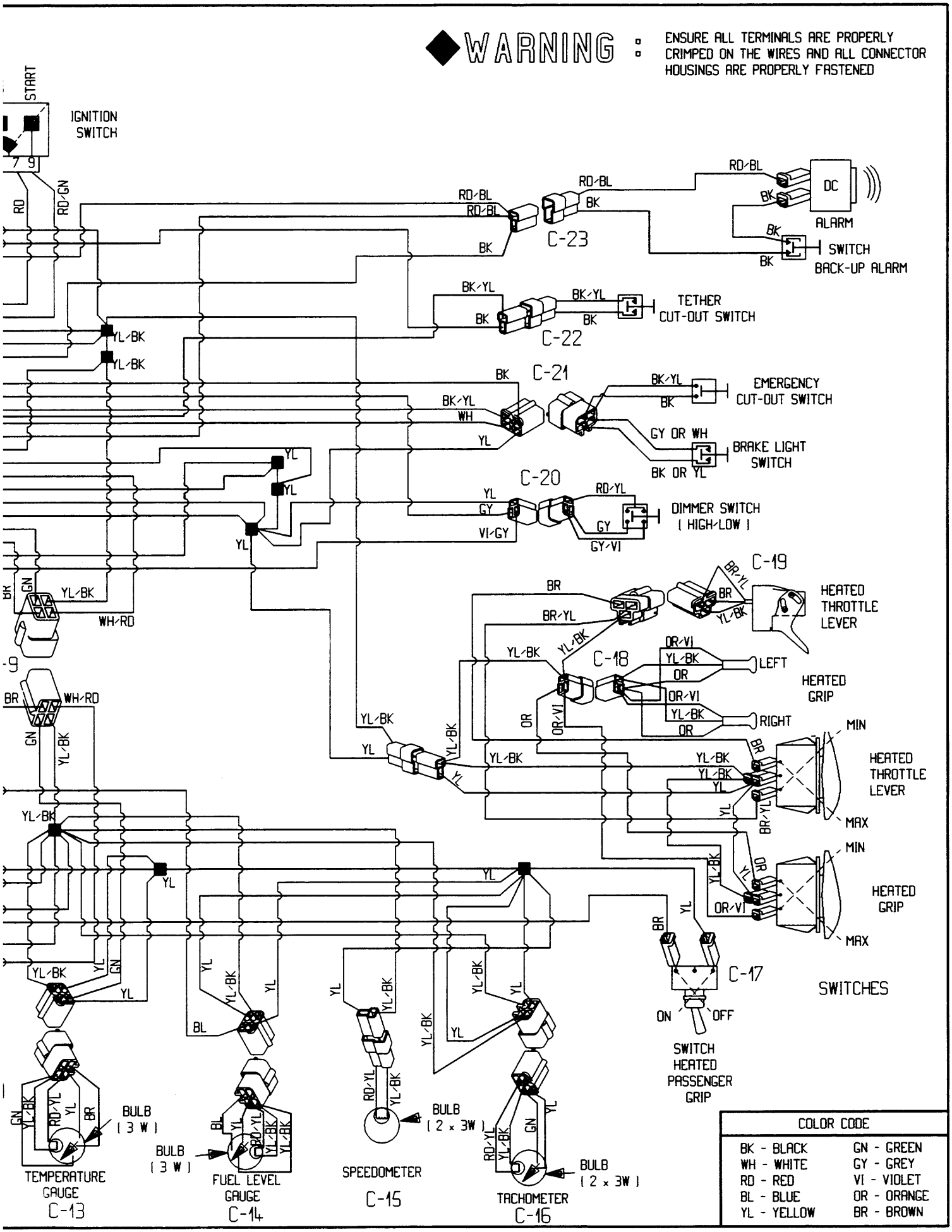
WARNING : ENSURE ALL TERMINALS ARE PROPERLY CRIMPED ON THE WIRES AND ALL CONNECTOR HOUSINGS ARE PROPERLY FASTENED
START
IGNITION SWITCH
7 9
RD
RD/GN
RD/BL
BK
C-23
DC
ALARM
SWITCH BACK-UP ALARM
BK/YL
TETHER CUT-OUT SWITCH
C-22
YL/BK
C-21
EMERGENCY CUT-OUT SWITCH
WH
YL
GY OR WH
BRAKE LIGHT SWITCH
BK OR YL
C-20
RD/YL
GY
DIMMER SWITCH (HIGH/LOW)
VI/GY
GY/VI
C-19
BR/YL
BR
HEATED THROTTLE LEVER
WH/RD
C-18
OR/VI
OR
LEFT
HEATED GRIP
RIGHT
MIN
MAX
C-17
SWITCHES
ON
OFF
SWITCH HEATED PASSENGER GRIP
BULB (3 W)
TEMPERATURE GAUGE
C-13
FUEL LEVEL GAUGE
C-14
BULB (2 x 3W)
SPEEDOMETER
C-15
TACHOMETER
C-16
COLOR CODE
BK - BLACK
WH - WHITE
RD - RED
BL - BLUE
YL - YELLOW
GN - GREEN
GY - GREY
VI - VIOLET
OR - ORANGE
BR - BROWN

ANNEX 3 FORMULA SLS AND SUMMIT 500

FORMULA SLS '96
SUMMIT 500/583/670

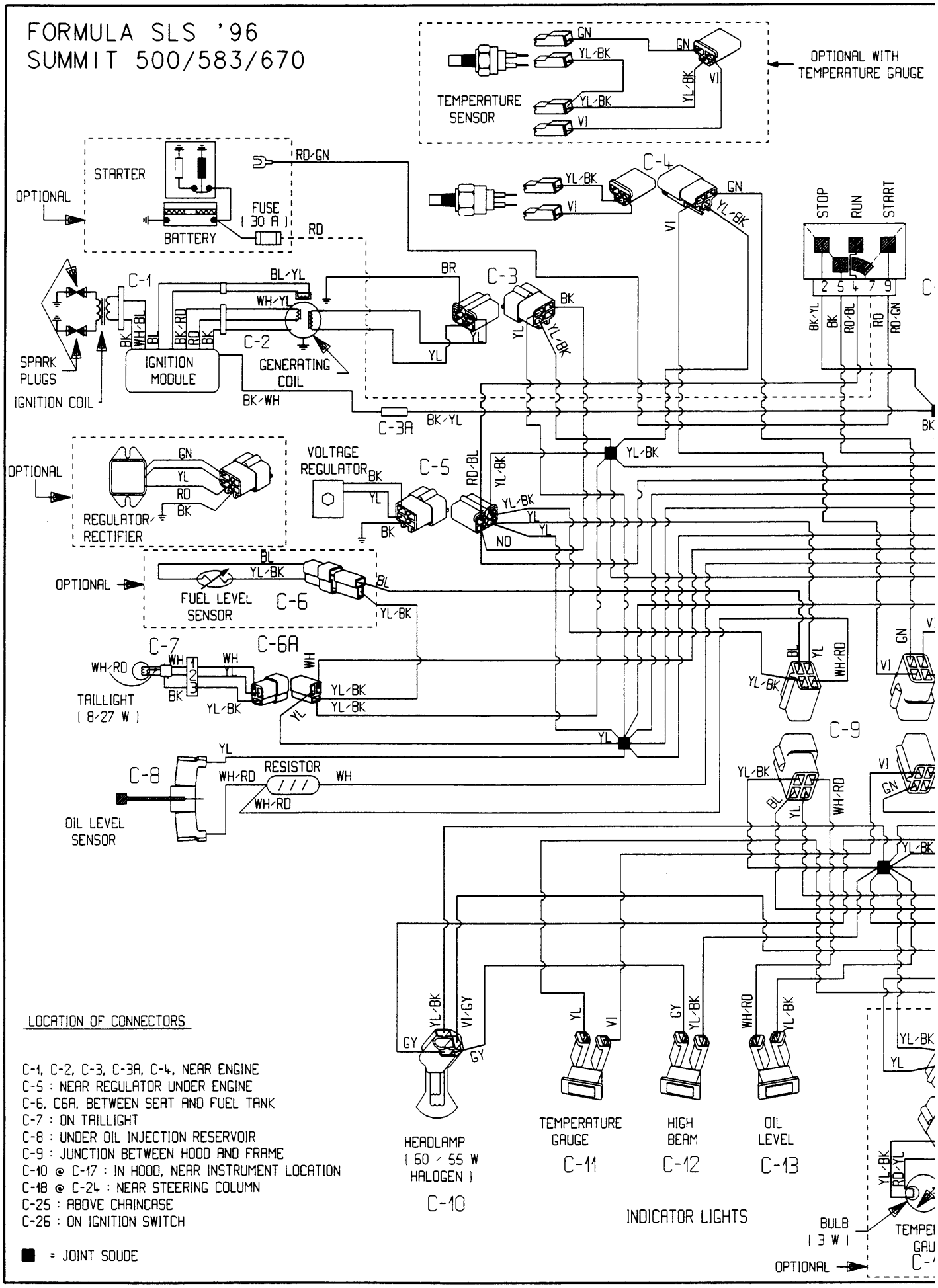

LOCATION OF CONNECTORS

C-1, C-2, C-3, C-3A, C-4, NEAR ENGINE
C-5 : NEAR REGULATOR UNDER ENGINE
C-6, C6A, BETWEEN SEAT AND FUEL TANK
C-7 : ON TAILLIGHT
C-8 : UNDER OIL INJECTION RESERVOIR
C-9 : JUNCTION BETWEEN HOOD AND FRAME
C-10 @ C-17 : IN HOOD, NEAR INSTRUMENT LOCATION
C-18 @ C-24 : NEAR STEERING COLUMN
C-25 : ABOVE CHAINCASE
C-26 : ON IGNITION SWITCH

■ = JOINT SOUDE

AL WITH
TURE GAUGE

◆ WARNING :

ENSURE ALL TERMINALS ARE PROPERLY CRIMPED ON THE WIRES AND ALL CONNECTOR HOUSINGS ARE PROPERLY FASTENED.

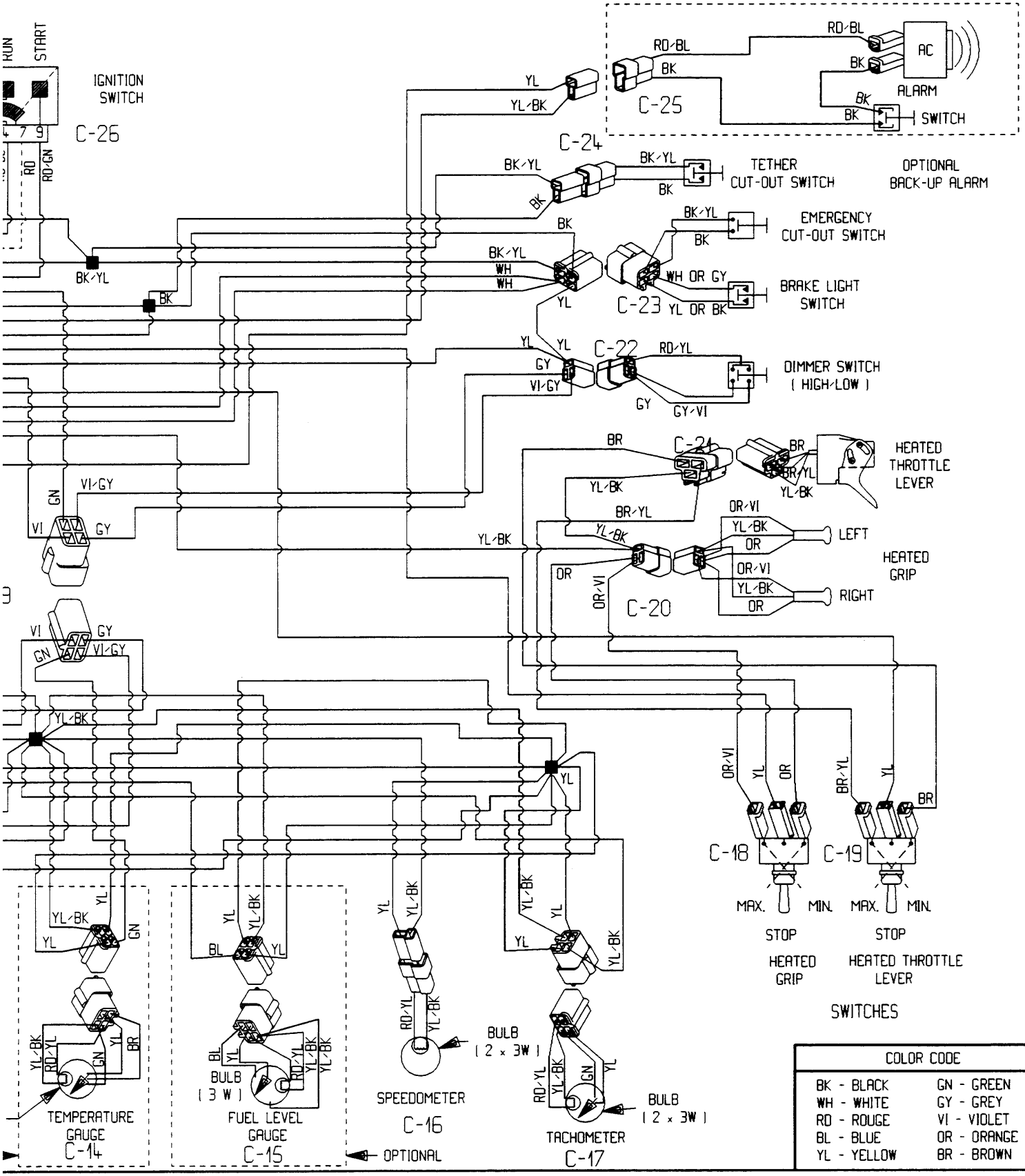

ANNEX 4

FORMULA STX / STX LT

FORMULA SS '96
FORMULA STX
FORMULA STX LT

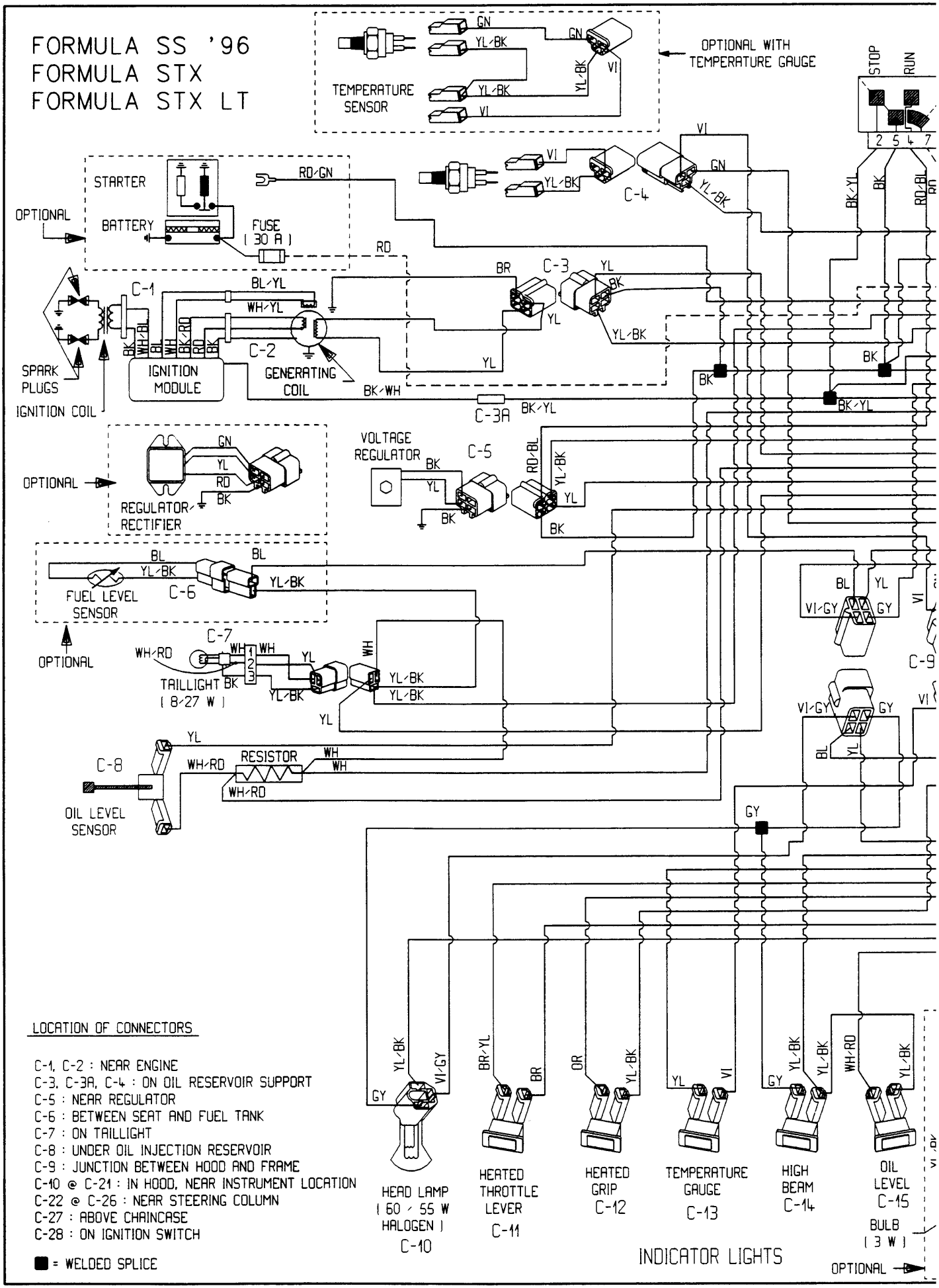

LOCATION OF CONNECTORS

C-1, C-2 : NEAR ENGINE
C-3, C-3A, C-4 : ON OIL RESERVOIR SUPPORT
C-5 : NEAR REGULATOR
C-6 : BETWEEN SEAT AND FUEL TANK
C-7 : ON TAILLIGHT
C-8 : UNDER OIL INJECTION RESERVOIR
C-9 : JUNCTION BETWEEN HOOD AND FRAME
C-10 @ C-21 : IN HOOD, NEAR INSTRUMENT LOCATION
C-22 @ C-26 : NEAR STEERING COLUMN
C-27 : ABOVE CHAINCASE
C-28 : ON IGNITION SWITCH

■ = WELDED SPLICE

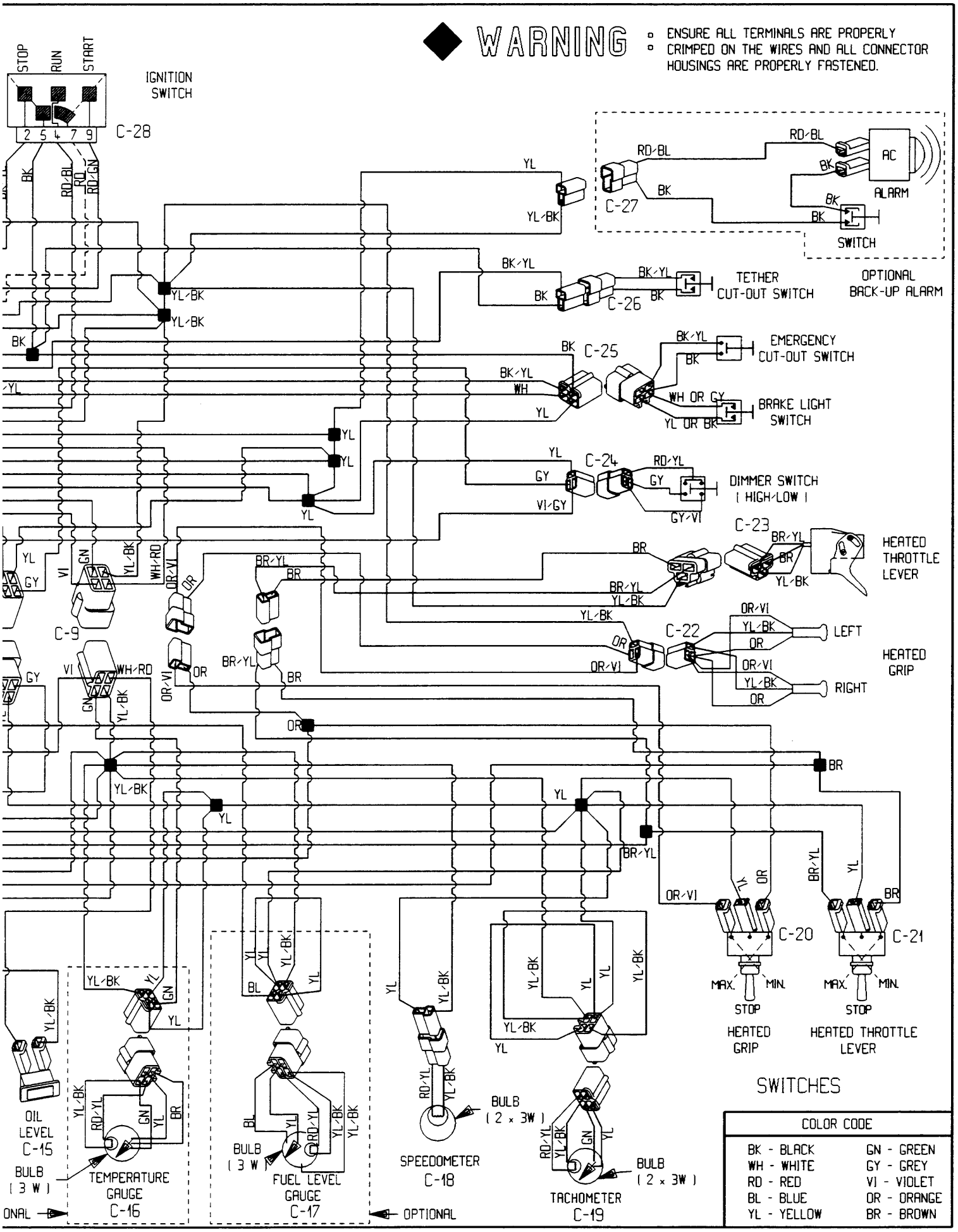
WARNING
ENSURE ALL TERMINALS ARE PROPERLY CRIMPED ON THE WIRES AND ALL CONNECTOR HOUSINGS ARE PROPERLY FASTENED.
STOP
RUN
START
IGNITION SWITCH
C-28
2 5 4 7 9
C-27
AC
ALARM
SWITCH
OPTIONAL BACK-UP ALARM
C-26
TETHER CUT-OUT SWITCH
C-25
EMERGENCY CUT-OUT SWITCH
BRAKE LIGHT SWITCH
C-24
DIMMER SWITCH (HIGH/LOW)
C-23
HEATED THROTTLE LEVER
C-9
C-22
LEFT
RIGHT
HEATED GRIP
C-20
C-21
MAX.
MIN.
STOP
HEATED GRIP
HEATED THROTTLE LEVER
SWITCHES
OIL LEVEL
C-15
BULB (3 W)
TEMPERATURE GAUGE
C-16
BULB (3 W)
FUEL LEVEL GAUGE
C-17
OPTIONAL
SPEEDOMETER
C-18
BULB (2 x 3W)
TACHOMETER
C-19
BULB (2 x 3W)
COLOR CODE
BK - BLACK
WH - WHITE
RD - RED
BL - BLUE
YL - YELLOW
GN - GREEN
GY - GREY
VI - VIOLET
OR - ORANGE
BR - BROWN

ANNEX 5

MACH 1

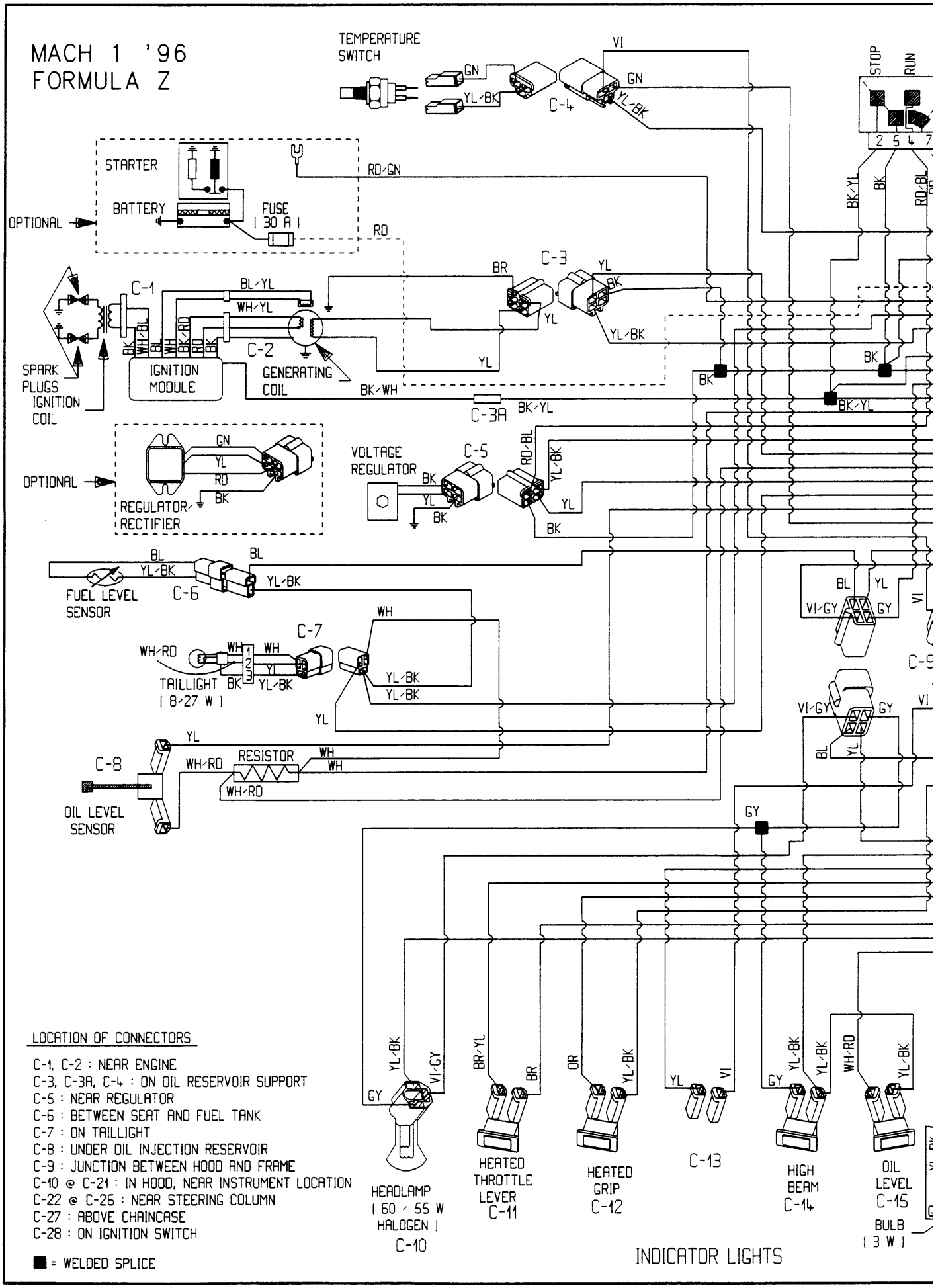

LOCATION OF CONNECTORS

C-1, C-2 : NEAR ENGINE
C-3, C-3A, C-4 : ON OIL RESERVOIR SUPPORT
C-5 : NEAR REGULATOR
C-6 : BETWEEN SEAT AND FUEL TANK
C-7 : ON TAILLIGHT
C-8 : UNDER OIL INJECTION RESERVOIR
C-9 : JUNCTION BETWEEN HOOD AND FRAME
C-10 @ C-21 : IN HOOD, NEAR INSTRUMENT LOCATION
C-22 @ C-26 : NEAR STEERING COLUMN
C-27 : ABOVE CHAINCASE
C-28 : ON IGNITION SWITCH

■ = WELDED SPLICE

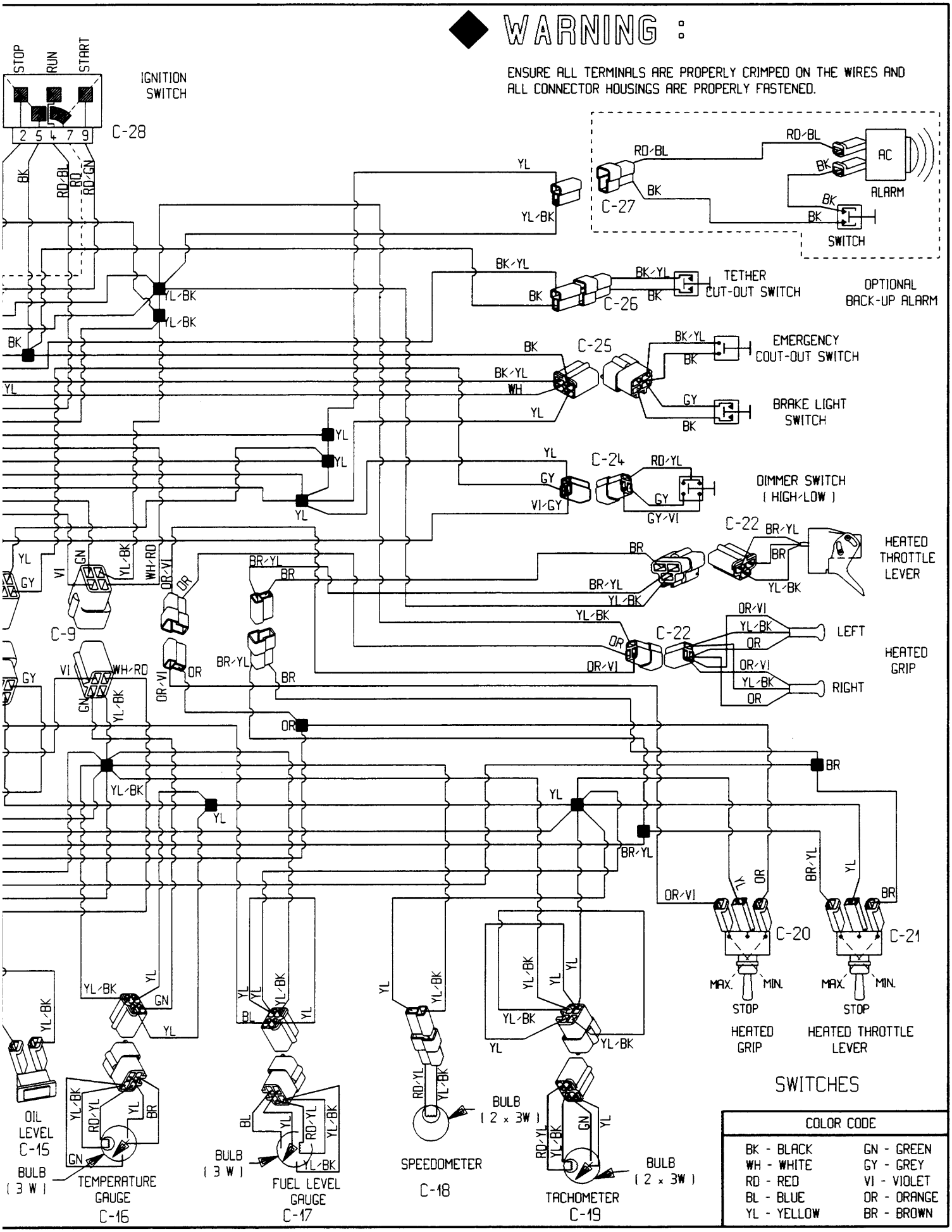
WARNING :
ENSURE ALL TERMINALS ARE PROPERLY CRIMPED ON THE WIRES AND ALL CONNECTOR HOUSINGS ARE PROPERLY FASTENED.
STOP
RUN
START
IGNITION SWITCH
C-28
2 5 4 7 9
BK
RD/BL
RD
RD/GN
YL
YL/BK
C-27
RD/BL
BK
AC
ALARM
SWITCH
BK/YL
C-26
TETHER CUT-OUT SWITCH
OPTIONAL BACK-UP ALARM
C-25
EMERGENCY COUT-OUT SWITCH
BRAKE LIGHT SWITCH
WH
GY
C-24
RD/YL
DIMMER SWITCH (HIGH/LOW)
VI/GY
GY/VI
C-22
BR/YL
HEATED THROTTLE LEVER
BR
OR/VI
OR
LEFT
RIGHT
HEATED GRIP
C-9
VI
GN
WH/RD
C-20
C-21
MAX.
MIN.
STOP
HEATED GRIP
HEATED THROTTLE LEVER
SWITCHES
OIL LEVEL C-15
BULB (3 W)
TEMPERATURE GAUGE C-16
BL
BULB (3 W)
FUEL LEVEL GAUGE C-17
SPEEDOMETER C-18
BULB (2 x 3W)
TACHOMETER C-19
COLOR CODE
BK - BLACK
WH - WHITE
RD - RED
BL - BLUE
YL - YELLOW
GN - GREEN
GY - GREY
VI - VIOLET
OR - ORANGE
BR - BROWN

Bombardier SERVICE PUBLICATIONS REPORT

Publication title and year Page_____

Machine Report of error ❑ Suggestion ❑

Name

Address

City and State / Prov. Date_____

Zip code / Postal code

Bombardier SERVICE PUBLICATIONS REPORT

Publication title and year Page_____

Machine Report of error ❑ Suggestion ❑

Name

Address

City and State / Prov. Date_____

Zip code / Postal code

Bombardier SERVICE PUBLICATIONS REPORT

Publication title and year Page_____

Machine Report of error ❑ Suggestion ❑

WE WOULD BE PLEASED IF YOU COULD COMMUNICATE TO BOMBARDIER ANY SUGGESTIONS YOU MAY HAVE CONCERNING OUR PUBLICATIONS.

Name

Address

City and State / Prov. Date_____

Zip code / Postal code

AFFIX

PROPER

POSTAGE

Bombardier Inc.

Technical Publications
After Sales Service
Valcourt, (Quebec)
Canada, J0E 2L0

AFFIX

PROPER

POSTAGE

Bombardier Inc.

Technical Publications
After Sales Service
Valcourt, (Quebec)
Canada, J0E 2L0

AFFIX

PROPER

POSTAGE

Bombardier Inc.

Technical Publications
After Sales Service
Valcourt, (Quebec)
Canada, J0E 2L0

®*MARQUES DE COMMERCE DE BOMBARDIER INC.
TOUS DROITS RÉSERVÉS© 1995 BOMBARDIER INC.
LITHOGRAPHIÉ AU CANADA

®*TRADEMARKS OF BOMBARDIER INC.
ALL RIGHTS RESERVED© 1995 BOMBARDIER INC.
LITHO'D IN CANADA

VOLUME 3

SHOP MANUAL

Ski-doo®

BOMBARDIER

MX Z	440/583/670
SUMMIT	583/670
FORMULA	Z/SS/III/III LT
MACH	Z/Z LT
SKANDIC	Wide Track

1996

484 0628 02

ski-doo®

1996
Shop Manual

VOLUME 3

MX Z 440 / 583 / 670
SUMMIT 583 / 670
FORMULA Z / SS
FORMULA III / III LT
MACH Z / Z LT
SKANDIC WT

EXCELLENCE IN SERVICE

Legal deposit :

National Library of Quebec
4th trimester 1995
National Library of Canada

All rights reserved. No parts of this manual may be reproduced in any form without the prior written permission of Bombardier Inc.

©Bombardier Inc. 1995

Printed in Canada

®*Registered trademarks of Bombardier Inc.

This document contains the trademarks of the following companies :

Loctite® is a trademark of Loctite Corporation
Metton® is a trademark of Hercules Inc.
Molykote® is a trademark of Dow Corning Corporation
Silastic® is a trademark of Dow Corning Corporation
Snap-on® is a trademark of Snap-on Tools Corporation
Versilube® is a trademark of General Electric Company

TABLE OF CONTENTS

SECTION	SUB-SECTION	PAGE
SAFETY NOTICE		III
1996 BOMBARDIER SNOWMOBILES SHOP MANUAL VOLUME 3 (INTRODUCTION)		IV
01 SERVICE TOOLS AND SERVICE PRODUCTS	01 - Service tools	01-01-1
	02 - Service products	01-02-1
02 LUBRICATION AND MAINTENANCE	01 - Lubrication and maintenance	02-01-1
03 TROUBLESHOOTING	00 - Table of contents	03-00-1
	01 - Engine	03-01-1
	02 - Fuel and oil systems	03-02-1
	03 - Transmission and brake systems	03-03-1
	04 - Electrical system	03-04-1
	05 - Suspension system and track	03-05-1
04 ENGINE	00 - Table of contents	04-00-1
	01 - 503 engine type	04-01-1
	02 - 454, 583 and 670 engine types	04-02-1
	03 - 599 and 779 engine types	04-03-1
	04 - Leak test and engine dimension measurement	04-04-1
	05 - CDI system	04-05-1
	06 - Oil injection system	04-06-1
	07 - Axial Fan cooling system	04-07-1
	08 - Liquid cooling system	04-08-1
	09 - Rotary valve, coolant pump and reservoir	04-09-1
	10 - Rewind starter	04-10-1
	11 - Carburetor and fuel pump	04-11-1
	12 - Fuel tank and throttle cable	04-12-1
05 TRANSMISSION	00 - Table of contents	05-00-1
	01 - Drive belt	05-01-1
	02 - Drive pulley	05-02-1
	03 - Driven pulley	05-03-1
	04 - Pulley distance and alignment	05-04-1
	05 - Brake	05-05-1
	06 - Chaincase	05-06-1
	07 - Gearbox	05-07-1
	08 - Drive chain	05-08-1
06 ELECTRICAL	00 - Table of contents	06-00-1
	01 - Wiring diagrams (see ANNEXES at the end of this manual)	06-01-1
	02 - Ignition timing	06-02-1
	03 - Spark plugs	06-03-1
	04 - Battery	06-04-1
	05 - Electric starter	06-05-1
	06 - Testing procedure	06-06-1

TABLE OF CONTENTS

SECTION	SUB-SECTION	PAGE
07 REAR SUSPENSION	00 - Table of contents	07-00-1
	01 - Suspension SC-10 High Performance, Cross-Country and Mountain	07-01-1
	02 - Skandic WT suspension	07-02-1
	03 - Improved C-7 suspension	07-03-1
	04 - Drive axle	07-04-1
	05 - Track	07-05-1
08 STEERING / FRONT SUSPENSION	00 - Table of contents	08-00-1
	01 - Steering system	08-01-1
	02 - Suspension and ski system	08-02-1
09 BODY / FRAME	00 - Table of contents	09-00-1
	01 - Body	09-01-1
	02 - Frame	09-02-1
10 TECHNICAL DATA	01 - SI metric information guide	10-01-1
	02 - Engines	10-02-1
	03 - Vehicles	10-03-1
	04 - Technical data legends	10-04-1
ANNEXES (Wiring diagrams)		

SAFETY NOTICE

This manual has been prepared as a guide to correctly service and repair some 1996 Ski-Doo snowmobiles. See model list below.

This edition was primarily published to be used by snowmobile mechanics who are already familiar with all service procedures relating to Bombardier made snowmobiles.

Please note that the instructions will apply only if proper hand tools and special service tools are used.

This shop manual uses technical terms which may be slightly different from the ones used in parts catalog.

It is understood that this manual may be translated into another language. In the event of any discrepancy, the English version shall prevail.

The content depicts parts and / or procedures applicable to the particular product at its time of manufacture. It does not include dealer modifications, whether authorized or not by Bombardier, after manufacturing the product.

In addition, the sole purpose of the illustrations throughout the manual, is to assist identification of the general configuration of the parts. They are not to be interpreted as technical drawings or exact replicas of the parts.

The use of Bombardier parts is most strongly recommended when considering replacement of any component. Dealer and / or distributor assistance should be sought in case of doubt.

The engines and the corresponding components identified in this document should not be utilized on product(s) other than those mentioned in this document.

Torque wrench tightening specifications must be strictly adhered to. Locking devices (ex. : locking tab, elastic stop nut, etc.) must be installed or replaced with new ones, where specified. If the efficiency of a locking device is impaired, it must be renewed.

This manual emphasizes particular information denoted by the wording and symbols ;

◆ **WARNING : Identifies an instruction which, if not followed, could cause serious personal injury including possibility of death.**

▼ **CAUTION : Denotes an instruction which, if not followed, could severely damage vehicle components.**

○ **NOTE :** Indicates supplementary information needed to fully complete an instruction.

Although the mere reading of such information does not eliminate the hazard, your understanding of the information will promote its correct use. Always use common shop safety practice.

This information relates to the preparation and use of Bombardier snowmobiles and has been utilized safely and effectively by Bombardier Inc.. However, Bombardier Inc. disclaims liability for all damages and / or injuries resulting from the improper use of the contents. We strongly recommend that any services be carried out and / or verified by a highly skilled professional mechanic. It is understood that certain modifications may render use of the vehicle illegal under existing federal, provincial and state regulations.

INTRODUCTION

This *Shop Manual VOLUME 3* covers the following Bombardier made 1996 snowmobiles :

MODELS	MODEL NUMBER
MX Z 440 (Canada)	1051
MX Z 440 (U.S.)	1052
MX Z 440 (Sweden)	1053
MX Z 583 (Canada)	1094
MX Z 583 (U.S.)	1095
MX Z 583 (Sweden)	1096
MX Z 670 (Canada)	1187
MX Z 670 (U.S.)	1188
SUMMIT 583 (Canada)	1064
SUMMIT 583 (U.S.)	1065
SUMMIT 583 (Sweden)	1066
SUMMIT 670 (Canada)	1061
SUMMIT 670 (U.S.)	1062
SUMMIT 670 (Sweden)	1063
FORMULA* Z (Canada)	1090
FORMULA* Z (U.S.)	1091
FORMULA* Z (Sweden)	1092
FORMULA* SS (Canada)	1078
FORMULA* SS (U.S.)	1079
FORMULA* III (Canada)	1076
FORMULA* III (U.S.)	1077
FORMULA* III (Sweden)	1093
FORMULA* III LT (Canada)	1100
FORMULA* III LT (U.S.)	1101
FORMULA* III LT (Sweden)	1102
MACH Z (Canada)	1084
MACH Z (U.S.)	1085
MACH Z (Sweden)	1086
MACH Z LT (Canada)	1087
MACH Z LT (U.S.)	1088
MACH Z LT (Sweden)	1089

*Trademarks of Bombardier Inc.

LIST OF MODELS GROUPED BY COMMON CHASSIS

S-Series consists of :

MX Z 440 / 583 / 670

Summit 583 / 670

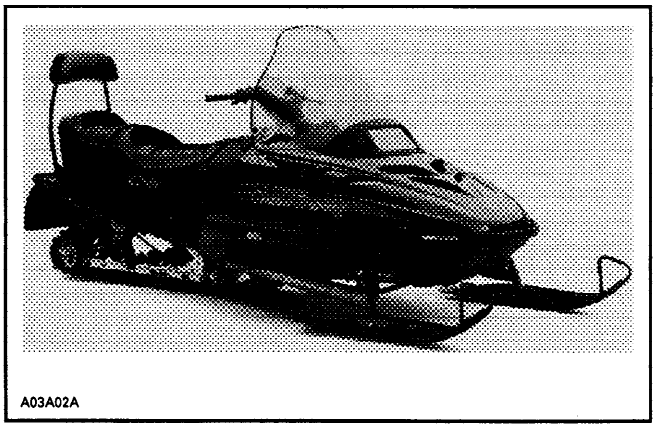

TYPICAL - S-SERIES

F-Series consists of :

Formula Z / SS

Formula III / III LT

Mach Z / Z LT

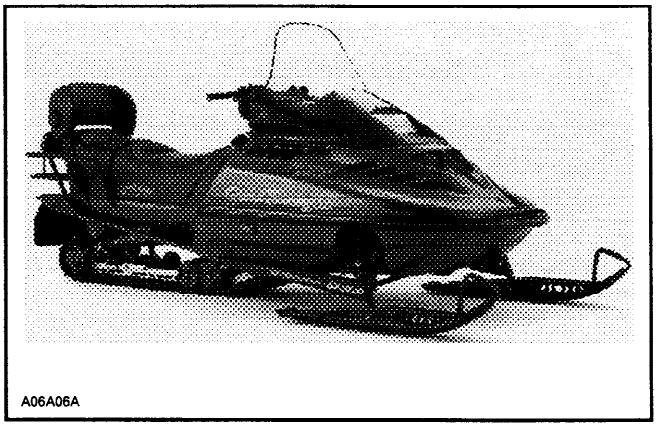

TYPICAL - F-SERIES

Each vehicle has its particular vehicle serial number

Serial Number Meaning :

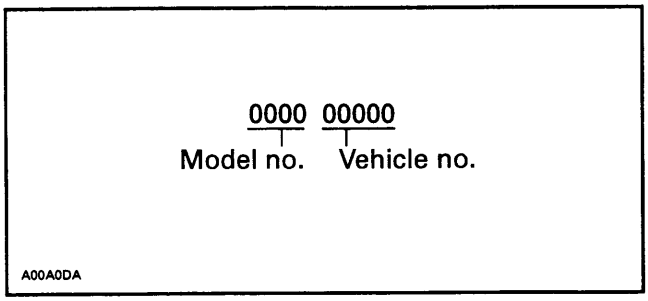

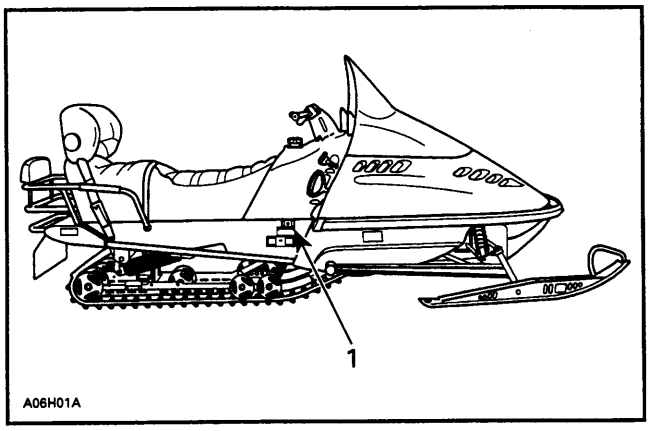

TYPICAL

1. Vehicle serial number

The engine also has a serial number.

Liquid-Cooled Engines

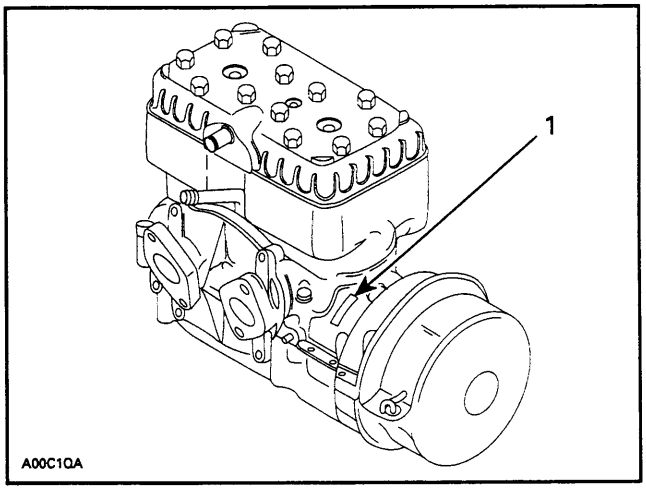

TYPICAL

1. Engine serial number

ARRANGEMENT OF THE MANUAL

The manual is divided into 10 major sections :

01 SERVICE TOOLS AND SERVICE PRODUCTS
02 LUBRICATION AND MAINTENANCE
03 TROUBLESHOOTING
04 ENGINE
05 TRANSMISSION
06 ELECTRICAL
07 REAR SUSPENSION
08 STEERING / FRONT SUSPENSION
09 BODY / FRAME
10 TECHNICAL DATA
ANNEXES

Each section is divided in various sub-sections, and again, each sub-section has one or more divisions.

This *Shop Manual* uses technical terms wich may be slightly different from the ones in the parts catalog.

TYPICAL PAGE

Page heading indicates section and sub-section detailed.

Sub-section title indicates beginning of the sub-section.

Sub-title above exploded view indicate pertaining models.

Exploded view assists you in identifying parts and related positions.

Drop represents a liquid product to be applied to a surface. In this case Loctite 271 to screw threads.

Bold face number indicates special procedure concerning this part.

Illustration number for publishing process.

Dotted box contains parts of a particular model in this case the short track models only.

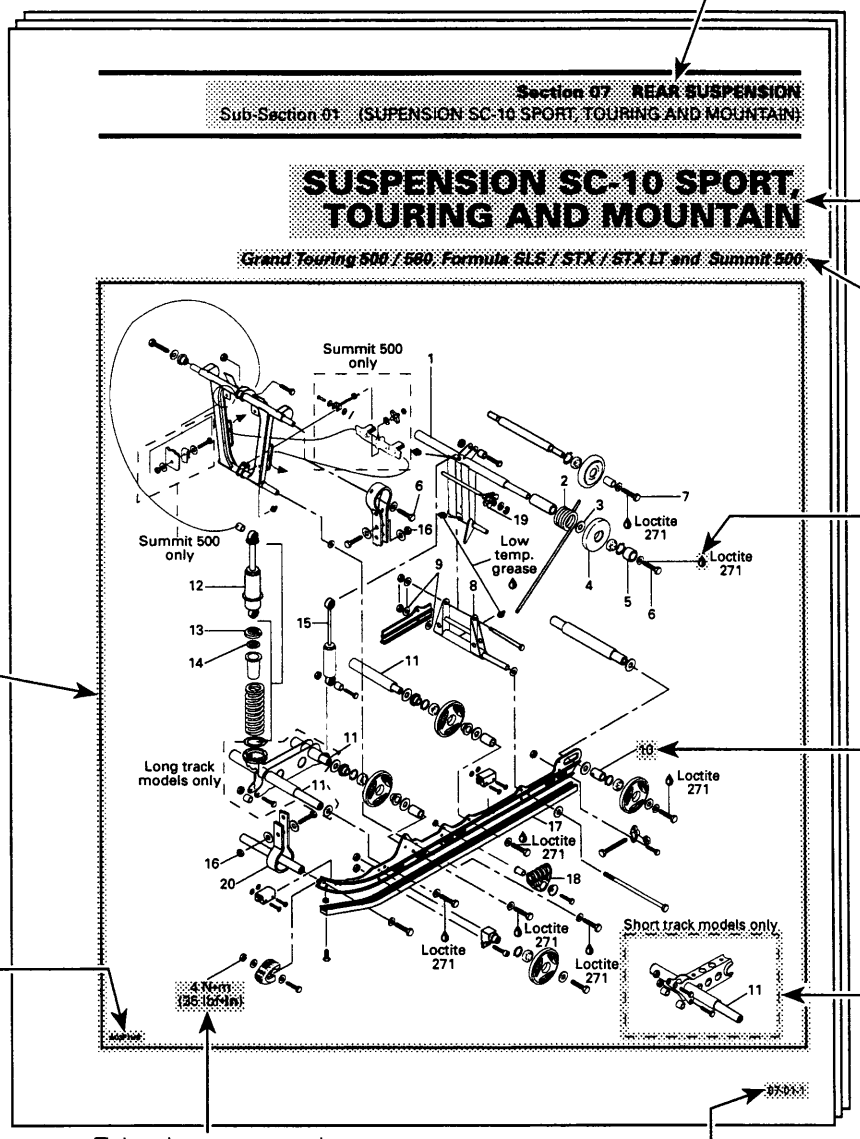

Tightening torque near by fastener. In this case, nut must be torqued to 4 N•m or 35 lbf•**in**.

Page numbering system :
07 : REAR SUSPENSION section
01 : SUSPENSION SC-10 SPORT, TOURING AND MOUNTAIN sub-section
1 : First page of this sub-section

▼CAUTION : Pay attention to torque specifications. Some of these are in lbf•**in** instead of lbf•ft. Use appropriate torque wrench.

A01A1QS

TYPICAL PAGE

Detailed view of illustration.

"Side view" caption below illustration helps you in understanding illustration.

Title indicates main procedure to be carried-out.

Sub-title beginning with part reference number(s) of sub-section exploded view followed by part name(s).

Italic bold face type setting indicates a particular procedure concerning a model.

Illustration always follows text to which it pertains.

"Typical" below illustration indicates a general view which does not represent full detail. In this case, track is not illustrated even if the adjustment can be made when installed.

Italic bold face setting in this case indicates that particular procedure for B-series is finished, so from this point, all models are concerned.

Reference to look up a certain section and sub-section (TRACK 07-09). In this case it concerns track adjustment.

Section 07 REAR SUSPENSION
Sub-Section 08 (DRIVE AXLE)

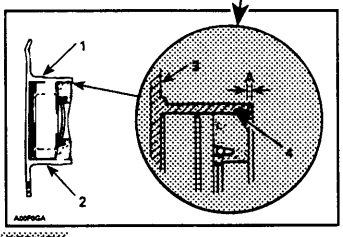

SIDE VIEW

1. Bearing
2. Seal
A. 2mm approx.
3. Housing
4. Seal lip

3. Retainer Ring

Make sure that welded nuts are toward inside of tunnel.

B Series

When installing end bearing housing, ensure to position grease fiting on top. This is requeired to have proper alignment with accaess hole.

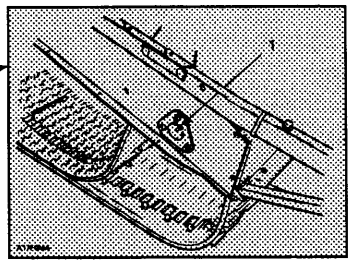

1. Grease fitting on top

All Models

Lock drive axle sprocket with a circlip (use new cotter pin on Élan.

Reinstall the caincase cover (if applicable).

Refill with chaincase oil. Refer to TECHNICAL DATA 10.

Install the suspension. Refer to TRACK 07-09 and adjust track tension and carry out track alignment procedure.

LUBRICATION

15, Grease Fitting

Lubricate end housing bearing with low temperature grease (P / N 861 7257 00).

ADJUSTEMENT

Sprocket / Track Alignment

CAUTION : Do not tamper with sprocket / track alignment if frame or suspension is damaged

All Models Except Élan

Sprockets might be repositionned to fit track holes (lugs cooled models and Skandic II 503 R SLT) without removing drive axle.

Use drive axle sprocket adjuster kit (P / N 861 7257 00).

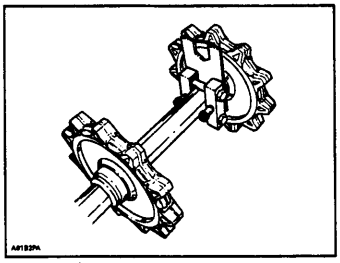

TYPICAL

07-08-9

A01A1RS

GENERAL INFORMATION

The information and component / system descriptions contained in this manual are correct at time of publication. Bombardier Inc. however, maintains a policy of continuous improvement of its products without imposing upon itself any obligation to install them on products previously manufactured.

Due to late changes, it may have some differences between the manufactured product and the description and / or specifications in this document.

Bombardier Inc. reserves the right at any time to discontinue or change specifications, designs, features, models or equipment without incurring obligation.

USEFUL PUBLICATIONS

Refer to *Parts Catalogs* to order the right parts.

PARTS CATALOG	
MODELS	P / N
MX Z 440 MX Z 583	480 1410 00
MX Z 670	480 1421 00
SUMMIT 500 SUMMIT 583 SUMMIT 670	480 1406 00
FORMULA Z FORMULA SS	480 1409 00
FORMULA III / III LT MACH 1 MACH Z / Z LT	480 1411 00
SKANDIC WT	480 1419 00

Use *Tools and Accessories Catalog* to order the tools you need. See also SERVICE TOOLS 01-01.

1994 TOOLS AND ACCESSORIES (P / N 480 1343 00).

Use *Specification Booklet* to find rapidly the right specs.

1990-1996 SPECIFICATION BOOKLET (P / N 480 1400 00).

ILLUSTRATIONS AND PROCEDURES

The illustrations show the typical construction of the different assemblies and, in all cases, may not reproduce the full detail or exact shape of the parts shown, however, they represent parts which have the same or a similar function.

▼CAUTION : Most components of those vehicles are built with parts dimensioned in the metric system. Most fasteners are metric and must not be replaced by customary fasteners or vice versa. Mismatched or incorrect fasteners could cause damage to the vehicle or possible personal injury.

As many of the procedures in this manual are interrelated, we suggest, that before undertaking any task, you read and thoroughly understand the entire section or sub-section in which the procedure is contained.

A number of procedures throughout the book require the use of special tools. Before commencing any procedure, be sure that you have on hand all the tools required, or approved equivalents.

The use of RIGHT and LEFT indications in the text, always refers to driving position (when sitting on vehicle).

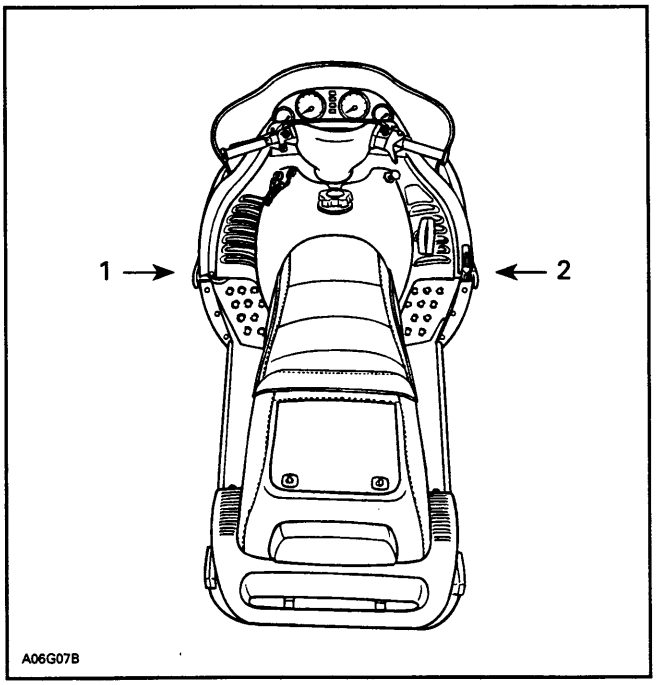

TYPICAL
1. Left
2. Right

Technical Publications
Bombardier Inc.
Valcourt (Quebec) Canada

SERVICE TOOLS

0 NOTE : The numbers outlined in black (example : ❑) are reference numbers to tools from other divisions (Sea-Doo Watercraft and /or Sea-Doo Jet Boats). Matching reference numbers indicate the same tool is being used even if the part numbers are different.

ENGINE (Mandatory service Tools)

Degree wheel ❑
(P/ N 4143529 00)

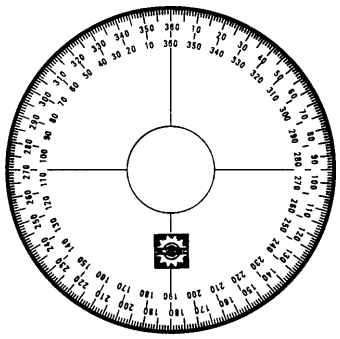

AOOB334

APPLICATION
All rotary valve engines.

Hose pincher (2) **2**
(p/ N 5290099 00)

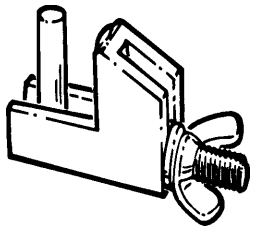

A01B2I4

APPLICATION
All vehicles.

Fan holder ❑
(P/ N 4208763 57)

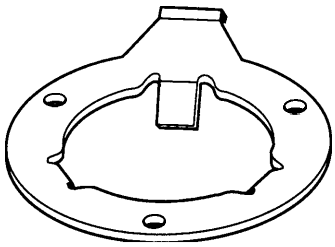

A00C0Q4

APPLICATION
377, 443 and 503 engines.

Magneto puller ring
(p/ N 4208760 80)

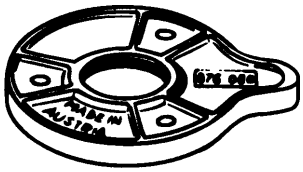

A00C1R4

APPLICATION
All engines except 247.

Magneto puller **5**
(p/ N 5290225 00)

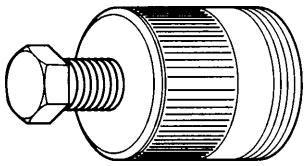

AOOC1A4

APPLICATION
All engines except 247.

Aligning pin (4)
(p/ N 5290189 00)

A00A1D4

APPLICATION
467 and 582 engines.

Pusher **7**
(washer behind the impeller)
(p/ N 5290207 00)

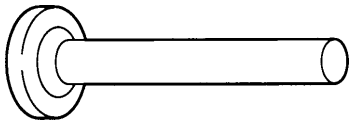

AOOC3H4

APPLICATION
Rotary valve engines.

ENGINE (Mandatory Service Tools)

Rotary valve shaft pusher

(p/ N 4208766 12)

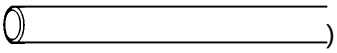

AOOCOF4

APPLICATION

Rotary valve engines with a 10 mm impeller shaft.

Rotary valve seal pusher
(valve side)

(p/ N 4208766 07)

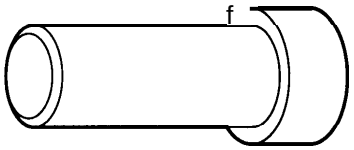

AOOCOY4

APPLICATION

Rotary valve engines.

Rotary valve shaft seal pusher
(inner, water pump side)

(p/ N 4208765 12)

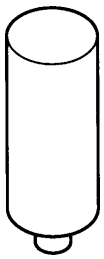

AOOC374

APPLICATION

Rotary valve engines, 1991 and newer with a 10 mm impeller shaft.

Rotary valve shaft seal pusher
(outer, water pump side)

(p/ N 4208770 50)

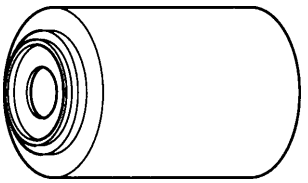

AOOCOX4

APPLICATION

Rotary valve engines.

Bearing pusher
(rotary valve)

(p/ N 4208765 00)

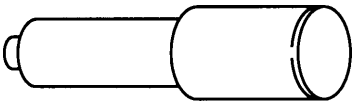

AOOB2J4

APPLICATION

Rotary valve engines.

Engine leak tester kit

(P/ N 86 I 7491 00)

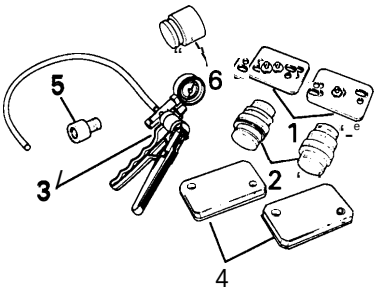

A01B2D4

APPLICATION

All engines.

Parts included in the kit :

1) Exhaust oulet plug (2)
(p/ N 5290246 00)
2) Intake manifold plug (2)
(p/ N 5290110 00)
3) Air pump (1)
(P/ N 5290218 00)
4) RAVE system plug (2)
(P/ N 5290112 00)
5) Adapter (2)
(p/ N 5172349 00)
6) Intake manifold plug -779
(p/ N 5290305 00)

2-1/4 in plug (1)
(p/ N 5290211 00)
2-3/4 in plug,(1)
(p/ N 5290212 00)
Plates (2)
(p/ N 5290213 00)
Radiator plug (1)
(p/ N 5290214 00)
Clamp (1)
(p/ N 4088035 00)
Adapter 3/1 6 ID x 1/8 NPT (2)
(P/ N 4082011 00)

NOTE : Must maintain a pressure of 5 lb during 3 minutes. Never pressurize over 5 lb.

ENGINE (Mandatory Service Tools)

Piston pin puller **16**
(P/ N 5290290 00)

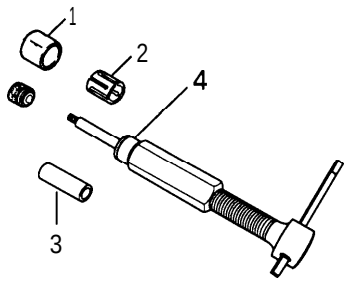

A01B4H4

APPLICATION

All engines.

Parts included :

1) Locating sleeve (3)
(P/ N 5290238 00)
2) Expansion sleeve (3)
(p/ N 5290237 00)
3) Adaptor
(p/ N 5290236 00)
4) U-bushing
(p/ N 5290277 03)

Rubber pad **17**
(p/ N 5290234 00)

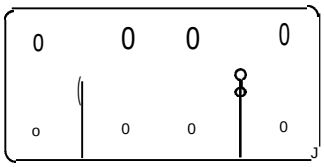

A01B4C4

APPLICATION

All cageless bearing engines (277 and 503).

Rotary valve circlip tool
A) (p/N 5290291 00) **18**
B) (p / N 529020800 **15**

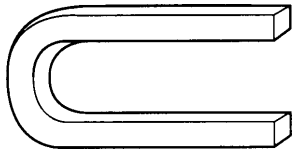

A00C3I4

APPLICATION

A) 454 and 670 engines.

B) All rotary valve engines except the 454 and 670.

ENGINE (Optional Service Tools)

The following tools are highly recommended to optimize your basic tool kit and reduce repair time.

1-2 Crankshaft bearing puller with screw (p/ N 4208762 98) **200**

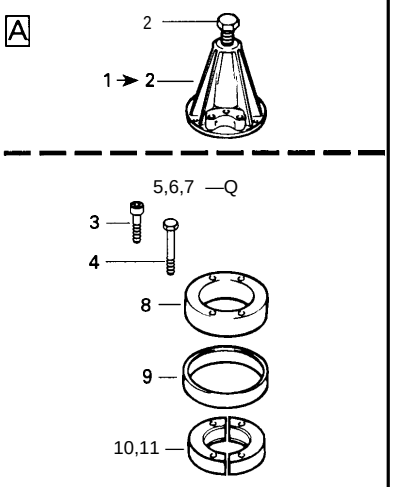

APPLICATION

247, 277,377,443, 503, 582 and 583 engines.

1-2 Crankshaft bearing puller with screw (p/ N 4208776 35) **250**

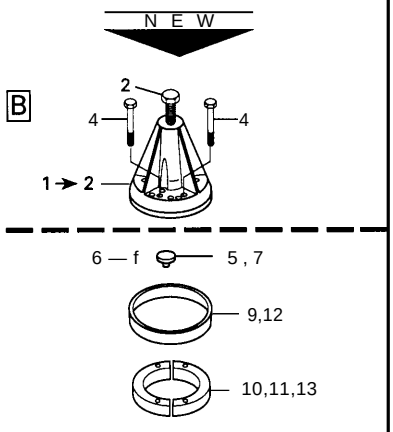

APPLICATION

All, including 454, 494, 670, 599 and 779 engines.

Tools to be used with crankshaft bearing pullers A (P/N 4208762 98) and B (p/N 4208776 35).

2- Bolt (M16 X 1.5 x 150) Use with both A or ❑ pullers.	(p/ N 4209407 55)	**258**
3- Screw M8 x 40 (4) ❑ puller MAG side, ❑ puller MAG and PTO side.	(P/ N 420 840681)	**559**
4- Screw M8 x 70 (4) ❑ puller only, PTO side.	(P/ N 420 841201)	**500**
5- Crankshaft protector 247 engine.	(p/ N 4209768 90)	**200**
6- Crankshaft protector PTO A or ❑ Puller; all engines except 247.	(P/ N 4208765 52)	**259**
7- Crankshaft protector MAG A or ❑ puller ; all engines except 247.	(p/ N 4208765 57)	**554**
8- Distance ring PTO A puller ; 377,443,503,582 and 583 engines,	(p/ N 4208765 69)	**557**
9- Puller ring Use with half rings (P/ N 420977475 or 4202760 25).	(P/ N 4209774 90)	**555**
10- Half ring (2) A or ❑ puller ; for 72 mm O.D. bearings.	(p/ N 4209774 75)	**556**
11- Half ring A or ❑ puller ; for 62 mm O.D. bearings.	(p/ N 4202760 25)	**558**
12- Puller ring For half rings (P/ N 4209774 79).	(p/ N 4209774 94)	**251**
13- Half ring B puller only; 80 mm O.D. bearings,	(P/ N 4209774 79)	**252**

ENGINE (Optional Service Tools)

Piston circlip installer

A) (P / N 5290169 00) **202**

B) (p / N 2908770 16) **548**

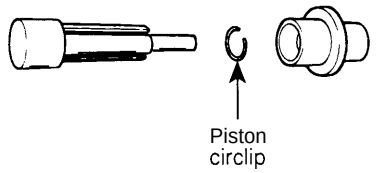

A01B1P4

APPLICATION

A) All engines except 670.

B) 670 engines.

Piston pin / connecting rod bearing centering tool **203**

(P/ N 5290091 00)

NOTE : New diameter is 9.65 mm (0.380").

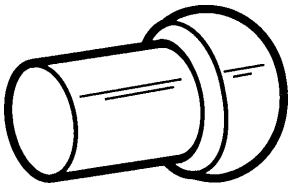

A01B1RA

APPLICATION

All engines.

Ring compressor

A)(P/N4208760 90) (62 mm) **204**

B)(p/N4208769 74) (69.5 mm) **205**

C) (p/N 4208769 70) (72 mm) **206**

D) (p / N 420876972) (76 mm) **207**

E) (p/N 4208769 75) (67.5 mm) **208**

F) (p/N 5290308 00) (78 mm) **62**

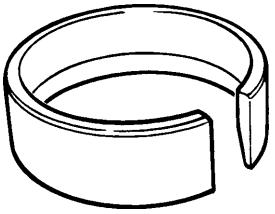

A01B1T4

APPLICATION

A) 377 engines.

B) 467 engines.

C) 503, 253 and 536 engines.

D) 582, 583 and 643 engines.

E) 447 engines.

F) 670 engines.

Magneto coil centering ring **209**

(P/ N 4208769 22)

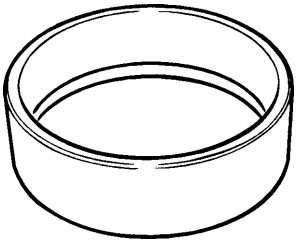

A01B1V4

APPLICATION

All engines with Nippondenso CDI (160 W).

Seal protector sleeve

(P / N 4209779 10) (PTO) **210**

(p/ N 4202769 00) (MAG) **211**

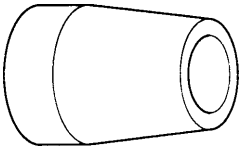

A00C0D4

APPLICATION

247 engine.

Engine seal pusher **212**

(P/ N 4209779 20)

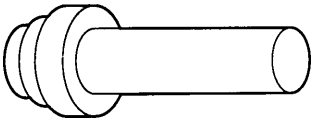

A00C0V4

APPLICATION

247 engine.

Polyamid ring pusher **213**

(p/ N 420 2769 30)

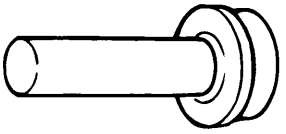

A00C0Z4

APPLICATION

247 engine.

ENGINE (Optional Service Tools)

Magneto holder **215**

(p/ N 4209765 50)

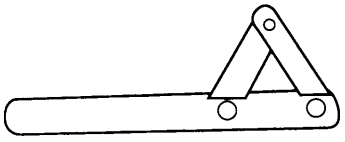

AOOC1V4

APPLICATION

247 engine.

Crankshaft feeler gauge **216**

(p/ N 4208766 20)

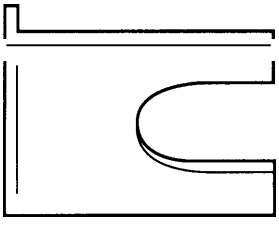

AOOC114

APPLICATION

377, 443, 447 and 503 engines.

Crankshaft distance gauge (5.7 mm) **217**

(p/ N 4208768 22)

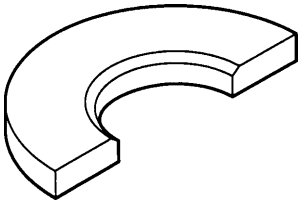

AOOC294

APPLICATION

377, 443 and 447 engines.

Crankshaft distance gauge (1 2.7 mm) **218**

(P/ N 4208768 24)

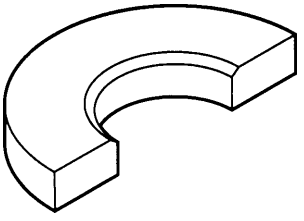

AOOC3A4

APPLICATION

503 engine.

Cylinder aligning tool

A) (p / N 4208769 02) **220**
(on exhaust side)

B) (p / N 4208761 71) **221**
(on intake side)

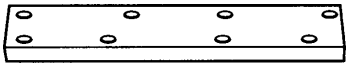

AOOBOB4

APPLICATION

A) 467, 536, 537, 582, 583, 643 and 670 engines.

B) 377, 443, 447 and 503 engines.

Mikuni carburetor tool kit **222**

(p/ N 4041120 00)

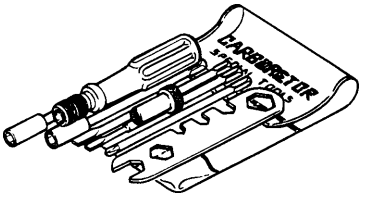

AOOB2F4

APPLICATION

All models.

Circuit tester (continuity light) **223**

(p/ N 4140122 00)

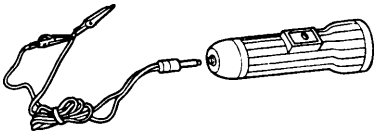

A00C214

APPLICATION

All vehicles.

Piston ring expander **224**

(p/ N 5290097 00)

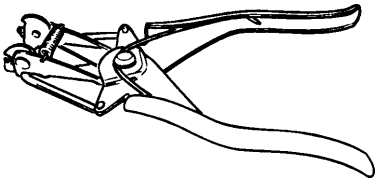

A01B2G4

APPLICATION

All engines.

Stroboscopic timing light **225**

(p/ N 5290092 00)

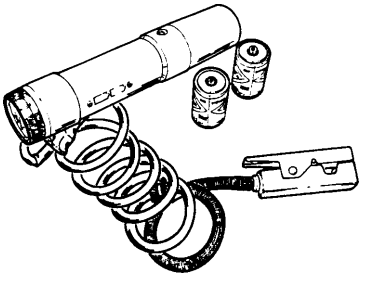

A01B2K4

APPLICATION

All engines.

ENGINE (Optional Service Tools)

226

RAVE movement indicator

(p/ N 8617258 00)

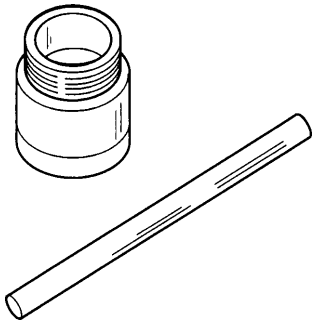

A18B014

APPLICATION

All RAVE equipped engines.

227

Air pressure gauge, 0-200 inch of water

(p/ N 5290104 00)

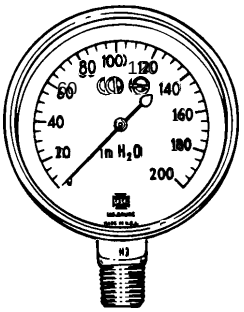

A18B034

APPLICATION

For pressure testing gauge.

230

Dial indicator (TDC gauge)

(p/ N 2950001 43)

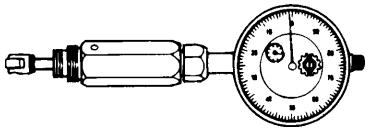

AOOB2E4

APPLICATION

All engines.

231

Seal protector sleeve

A) (p/N4208769 80)
(for 10 mm shaft)

232

B) (p / N 4208764 90)
(for 12 mm shaft)

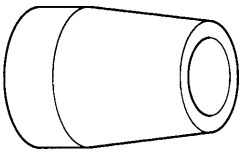

AOOCOD4

APPLICATION

467, 582, 583 and 670 engines.

233

Magneto puller

(p/ N 4209762 35)

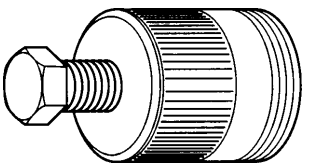

A00C1A4

APPLICATION

247 engine.

234

Injection pump gear holder

(p/ N 4208766 95)

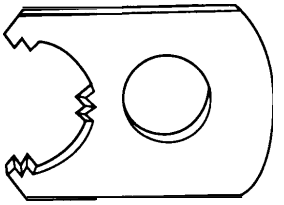

AOOB314

APPLICATION

253, 377, 447 and 503 engines.

235

Injection pump gear holder

(P/ N 4202779 05)

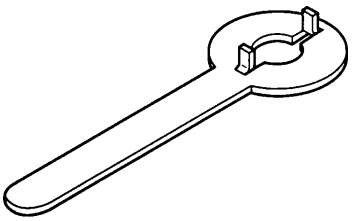

AOOC164

APPLICATION

467, 494, 536, 537, 582, 583, 643, 670 and 779 engines.

236

Bombardier magneto tester

(p/ N419 0033 00)

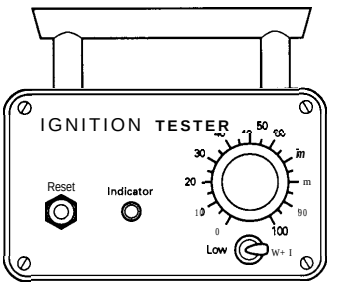

A00C1K4

APPLICATION

All engines.

ENGINE (Optional Service Tools)

237

Digital / induction type tachometer

(p/ N 5290145 00)

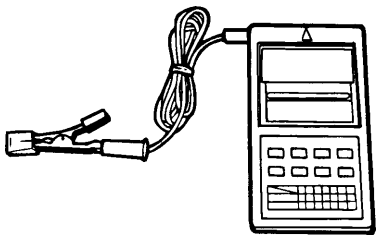

F01B1G4

APPLICATION

All engines.

238

Connecting rod holder

(p/ N 4209779 00)

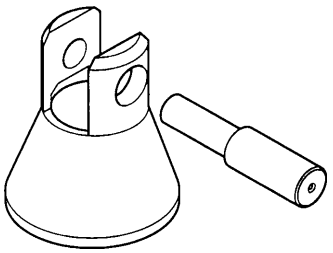

AOOCON4

APPLICATION

247 engine.

242

Fluke multimeter

(P /N 5290220 00)

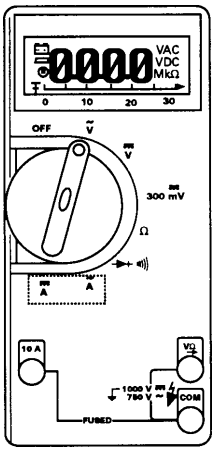

F01B1O4

APPLICATION

All models.

243

MAG seal pusher

(p/ N 4202778 75)

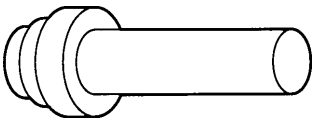

A00C0V4

APPLICATION

277 engine.

244

PTO seal pusher

(P/ N 420 8766 60)

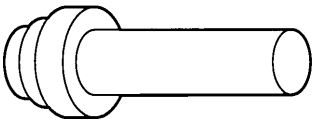

A00C0V4

APPLICATION

277 engine.

245

Base puller plate kit

(p/ N 5290249 00)

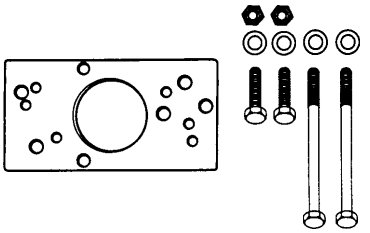

A05COM4

APPLICATION

277 engine.

247

Insertion jig
(Magneto side seal)
(P/ N 4208765 16)

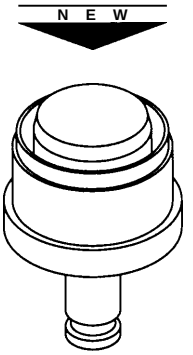

AOOC3TA

APPLICATION

779 engine.

ENGINE (Optional Service Tools)

248

Insertion jig
(Magneto seal)

(P/ N 4208765 14)

NEW

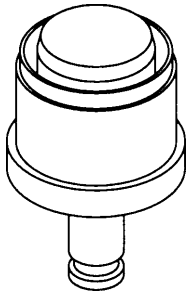

AOOC3UA

APPLICATION

454 and 670 engines.

249

Handle for insertion jig

(P/ N 4208776 50)

NEW

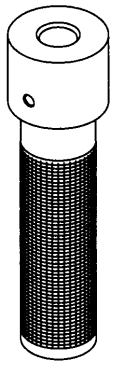

AOOC3V4

APPLICATION

454, 670 and 779 engines.

253

Exhaust spring installer/ remover

(p/ N 5290281 00)

NEW

A00C3S4

APPLICATION

All models.

219

Bearing simulator

(P/ N 4208761 55)

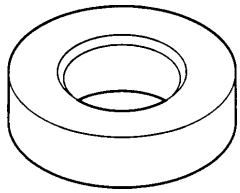

AOOC1H4

APPLICATION

253, 305, 343, 402 and 440 engines.

229

Rotary valve seal and shaft pusher

(p/ N 4208766 05)

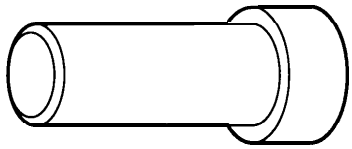

A00C0Y4

APPLICATION

Rotary valve engines 1990 models and older.

240

Seal pusher (rotary valve)

(p/ N 4208765 10)

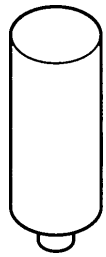

A00C374

APPLICATION

All rotary valve shaft seals with a 12 mm I.D.

239

Rotary valve shaft pusher

(P/ N 4208766 10)

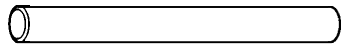

AOOCOF4

APPLICATION

All rotary valve engines with 12 mm shaft.

241

Self fuel control injection (S. F. C. I.) system test kit

(p/ N 8617391 00)

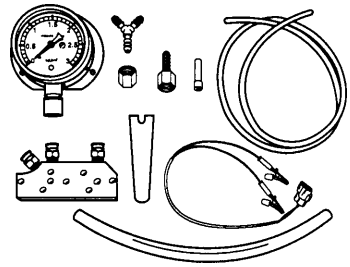

A28E034

APPLICATION

1993 Formula Plus EFI.

ENGINE (Optional Serv ce Tools)

Large hose pincher **773**

(p/ N 5290304 00)

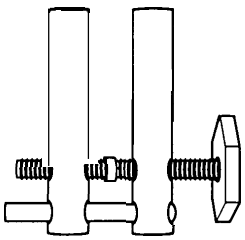

F01B234

APPLICATION

All vehicles.

TRANSMISSION (Mandatory Service Tools)

Clutch holder **51**

(p/ N 5290064 00)

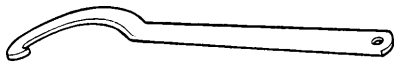

A01B154

APPLICATION

All TRA drive pulleys.

Clutch holder **79**

(p/ N 5290276 00)

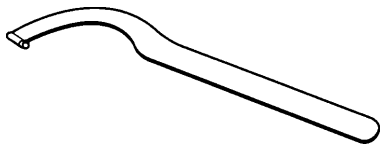

A02B034

APPLICATION

Bombardier Lite drive pulley.

Drive pulley puller **53**

(p/ N 5290314 00)

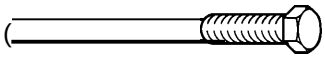

A18B044

APPLICATION

Bombardier Lite drive pulley, except Elan.

TRA drive pulley puller **75**

(p/ N 5290224 00)

A06B014

APPLICATION

TRA drive pulley for the 454,494, 599, 670 and 779 engines.

TRA drive pulley puller **55**

(P/ N 5290079 00) (25 mm)

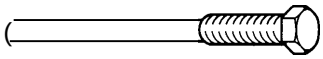

A18B044

APPLICATION

TRA drive pulley (except 599,670 and 779 engines).

Forks (3) **57**

(p/ N 5290055 00)

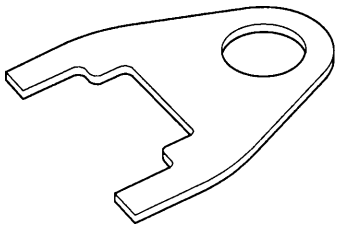

A16B014

APPLICATION

All vehicles equipped with a TRA drive pulley.

Drive belt installer **58**

(P/ N 5290172 00)

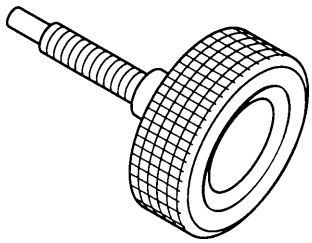

AOOA1A4

APPLICATION

All vehicles except Elan and Tundra II.

Transmission alignment bar

A) (p/N 5290267 00) **78**

B) (p / N 5290269 00) **60**

C) (p / N 5290300 00) **80**

D) (p / N 5290268 00) **73**

A01B4D4

APPLICATION

A) F-Series and S-Series.

B) Tundra II.

C) S-Series with Bombardier Lite.

D) Safari L.

Spring scale hook (long) **62**

(P/ N 5290152 00)

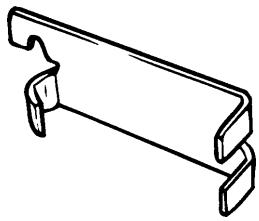

A01B514

APPLICATION

1994 models and older except Alpine II.

TRANSMISSION (Mandatory Service Tools)

Spring scale hook (long) **84**

(p/ N 5290309 00)

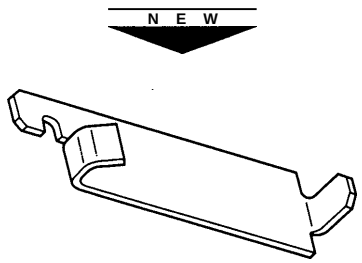

AOOB4A4

APPLICATION

F-Series and S-Series (1 995 and newer).

Drive belt tension adjuster tool **63**

(p/ N 5290087 00)

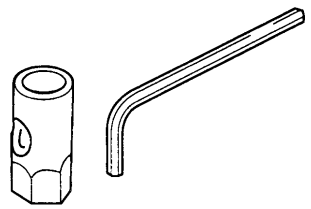

A15B044

APPLICATION

All vehicles except Elan, Tundra II and Skandic WT.

Spring compressor / TRA clutch flare tool **64**

(P/ N 5290186 00)

Parts included in the kit:

1) Spring compressor

(p/ **N** 5290151 **00)**

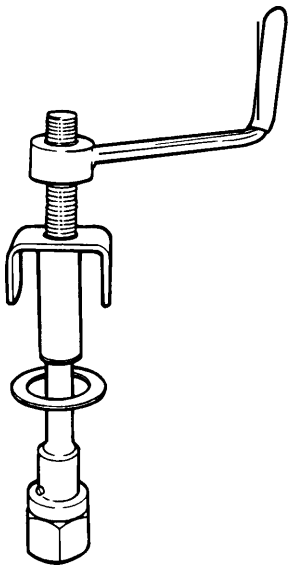

A01B334

APPLICATION (1)

S and F-Series and Alpine II driven pulley type.

All TRA pulley.

3) Washer (2)

(p/ **N** 7329000 15)

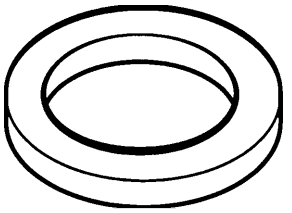

A01B3T4

APPLICATION (3)

All applications.

2) **TRA** clutch spring cover **bushing flare tool**

A) INTERIOR flare tool

(p/ N 5290180 00)

EXTERIOR flare tool

(P/ N 5290181 00)

NOTE : Letter A stamper on tools.

B) INTERIOR flare tool

(p/ N 5290182 00)

EXTERIOR flare tool

(P/ N 5290183 00)

NOTE : Letter B stamper on tools.

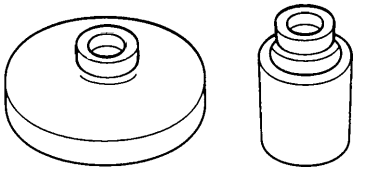

A01B3F4

APPLICATION (2)

A) TRA pulley (25 mm shaft).

B) TRA pulley (27 mm shaft).

4) **TRA clutch outer half bushing flare tool**

INTERIOR flare tool

(p/ N 5290184 00)

EXTERIOR flare tool

(p/ N 5290185 00)

NOTE : Letter C stamper on tools.

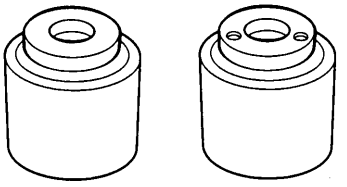

A01B314

APPLICATION (4)

All TRA drive pulleys.

TRANSMISSION (Mandatory Service Tools)

Burnishing bar **77**

(p/ N 5290264 02)

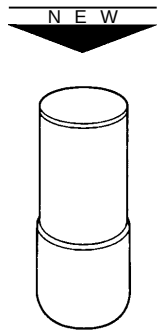

AOOB464

APPLICATION

Safari L and Skandic.

Tension tester **74**

(p/ N 4143482 00)

AOOC074

APPLICATION

All models.

Countershaft bearing installer **83**

(p/ N 5290302 00)

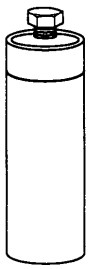

AOOA194

APPLICATION

S-Series and F-Series.

Countershaft bearing remover **82**

(p/ N 5290301 00)

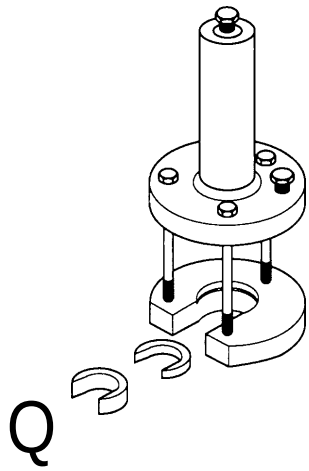

AOOA274

APPLICATION

S-Series and F-Series.

Spring cover tool **81**

(p/ N 5290273 00)

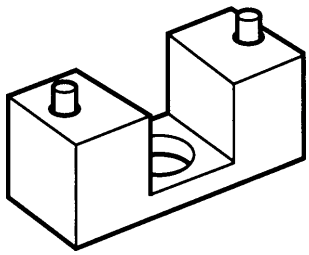

A01B4M4

APPLICATION

Bombardier Lite drive pulley.

Transmission adjuster **76**

(p/ N 5290285 00)

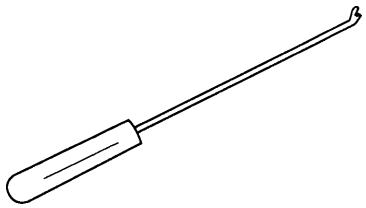

AOODOX4

APPLICATION

F-Series equipped with “twist shifter” reverse transmission.

TRANSMISSION (Optional Service Tools)

The following tools are highly recommended to optimize your basic tool kit and reduce repair time.

Alignment tool **306**

(p/ N 4204760 10)

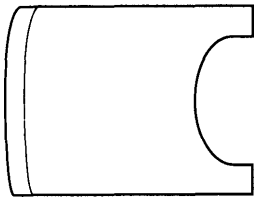

AOOCID4

APPLICATION

Skandic WT and Alpine II gear-box.

Countershaft bearing installer **501**

(p/ N 5290188 00)

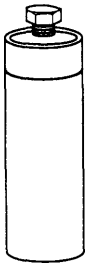

AOOA194

APPLICATION

PRS chassis.

Cam pusher **309**

(P/ N 5290129 00)

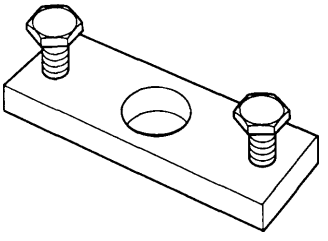

A18B064

APPLICATION

Tundra II LT.

Countershaft bearing remover **502**

(P/ N 5290187 00)

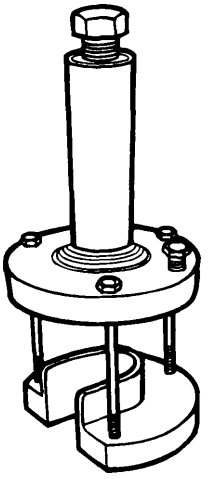

A00A164

APPLICATION

PRS chassis.

Drive pulley puller **318**

(p/ N 5290231 00)

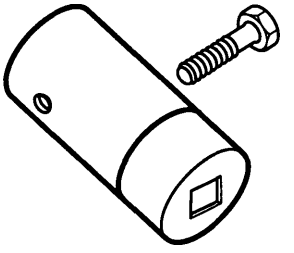

A00C3J4

APPLICATION

Elan.

Transmission ball mounting pin **305**

(p/ N 4204760 20)

A00C1C4

APPLICATION

Alpine II 3-speed transmission.

Spring scale hook (short) **323**

(p/ N 5290065 00)

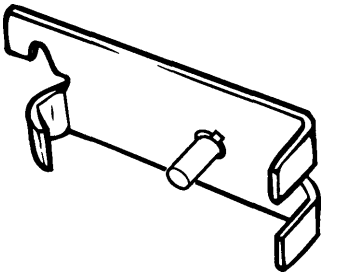

A01B174

APPLICATION

Alpine II 1994 and older.

TRANSMISSION (Optional Service Tools)

Alignment bar

A) (P/N 5290256 00) **324**

B) (p/N 5290282 00) **320**

C) (P/N 5290283 00) **321**

D) (P / N 5290310 00)

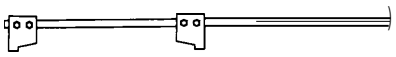

A01B4D4

E)(P / N 5290083 00) **300**

A03B034

APPLICATION

A) PRS chassis.

B) Alpine II.

C) Elan.

D) Skandic WT 1996.

E) Scout.

3-speed transmission bearing extractor

1) Screw M8 x 25 (2) **301**
(p/ N 2220825 65)

2) Plate

3) Half ring (2) **304**
(P/ N 4208763 30)

4) Ring **303**
(p/ N 4209774 80)

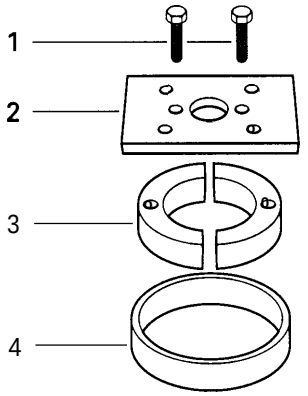

AOOC1B4

APPLICATION

Alpine II 3-speed transmission.

Driven pulley support extractor **310**

(p/ N 5290135 00)

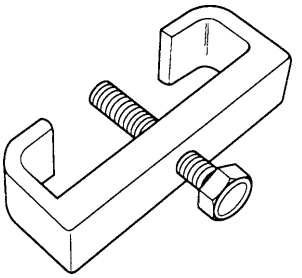

A25B0F4

APPLICATION

Safari (except Cheyenne), Stratos / E, Citation E / LS / LSE, Escapade, Skandic 503, SS-25 and Formula SP / SS (no vehicles equipped with reverse).

TRA clutch spring cover remover cap **312**

(P/ N 5290103 00)

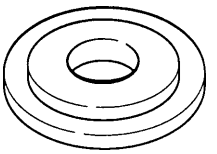

A16B054

Spacer **311**

(P/ N 5290054 00)

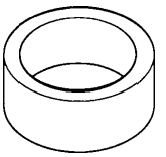

A16B044

APPLICATION

For use with drive pulley puller (p/ N 529 0079 00) to remove spring cover. Refer to *1991 Shop manual.*

TRANSMISSION (Optional Service Tools)

Drive pulley retainer **313**

(p/ N 5290017 00)

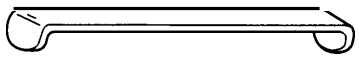

A00C224

APPLICATION

Round shaft drive pulley.

Transmission shifter template **314**

(p/ N 5290198 00)

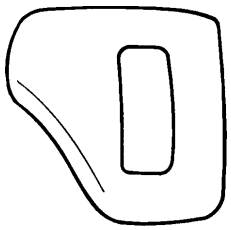

A15H3J4

APPLICATION

1991 to 1994 PRS chassis.

Drive pulley puller **319**

(P/ N 5290021 00)
(Standard threads)

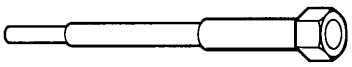

A00C084

APPLICATION

Square shaft, standard (SAE) threads.

TRA drive pulley puller (27 mm) **322**

(p/ N 5290101 00)

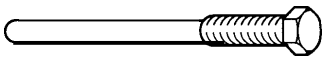

A18B044

APPLICATION

TRA drive pulley (27 mm) shaft except 454, 670 and 779 engines.

Drive pulley puller **400**

(p/ N 8604142 00)
(square shaft metric)
Consist of :

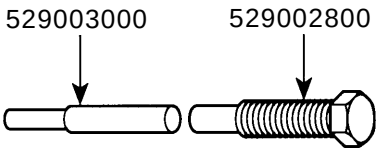

AOOC095

APPLICATION

Square shaft, metric threads drive pulley.

Drive axle sprocket adjuster **340**

(p/ N 8617257 00)

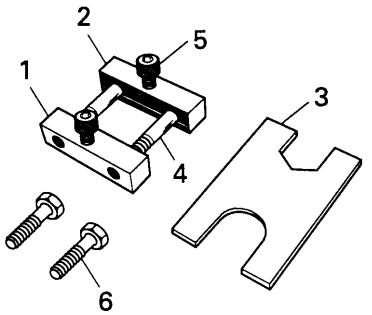

A01B2O4

APPLICATION

All vehicles except Elan.

Parts included in the kit:

1) Block with threads
   (P/ N 5290107 00)
2) Block without threads
   (p/ N 5290108 00)
3) Plate
   (p/ N 5290106 00)
4) Bolt MIO (2)
   (p/ N 2220075 65)
5) Allen screw M8 (2)
   (p/ N 420 840991)
6) Screw M8 (2)
   (p/ N 2220825 65)

NOTE : When the tool is to be use between tunnel and sprocket use screw M8.

Transmission adjuster **504**

(P/ N 5290303 00)

A03D1T4

APPLICATION

vehicles equipped with “push-pull shifter” reverse transmission.

SUSPENSION (Mandatory Service Tools)

Shock spring remove kit **65**

(p/ N 5290271 00)

Replacement clevis pin :

(P/ N 4145284 00)

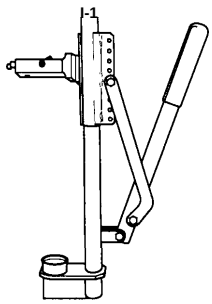

A01B404

APPLICATION

All suspensions with coil spring.

SUSPENSION (Optional Service Tools)

A) Track cleat remover **345**

(P /N 5290082 00)

Pins **346**

(p/ N 5290082 04)

NOTE : Pins can be rotated 180° depending on whether the tool is used by a left-hander or right-hander.

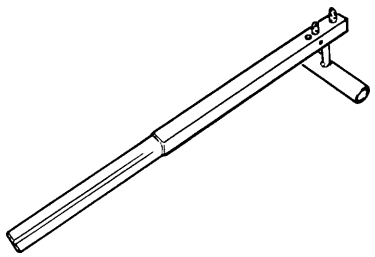

A01B1J4

B) TRA track cleat remover **254**

(p/ N 5290287 00)

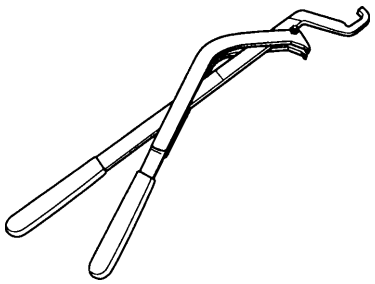

A01F224

APPLICATION

A) 1993 and older.

B) 1994 and newer except Elan and Tundra II.

Camber angle tool **343**

(P /N 5290216 00)

NOTE : Angle finder with a magnetic base must be used.

Suggestion : K-D tool no. 2968

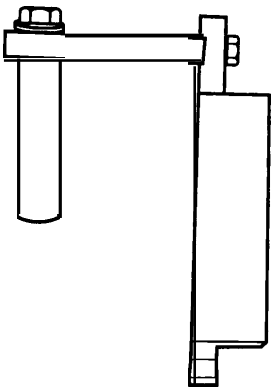

A06B024

APPLICATION

All DSA front suspensions.

Track tension gauge **342**

(P /N 5290215 00)

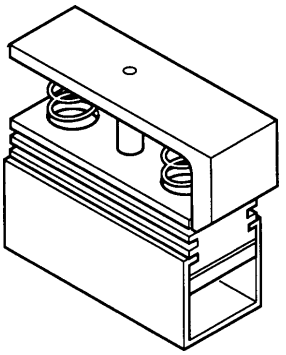

AOOB3X4

APPLICATION

All models except Elan.

Track cleat installer

A) (p / N 5290085 00) **347**
Narrow

B) (p / N 5290288 00) **255**
Narrow

C) (p/N 5290077 00) **344**
Wide

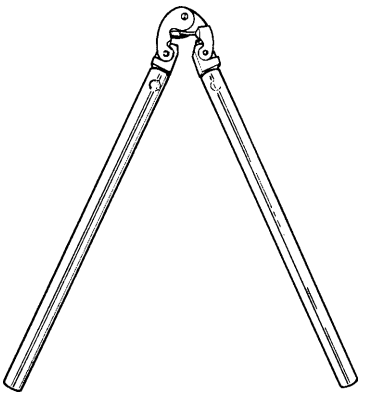

A01B1M4

APPLICATION

A) 1993 and older.

B) 1994 and newer.

C) 1992 and older with wide cleat opening.

Dome guide **349**

(P / N 529 0265 00

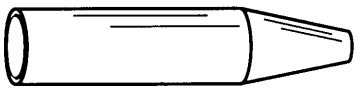

A06F1B4

APPLICATION

MX Z T / A shocks.

SUSPENSION (Optional Service Tools)

Piston guide **500**

(p/ N 5290266 00)

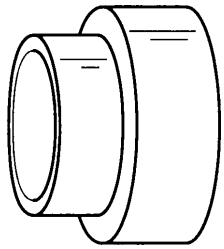

A06F1C4

APPLICATION

MX Z T / A shocks.

Suspension spring installer (hook) **325**

(p/ N 5290066 00)

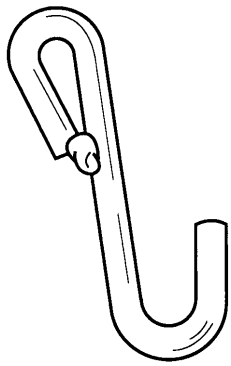

A19B034

APPLICATION

Cheyenne.

Spring installer (bar) **326**

(P/ N 5290050 00)

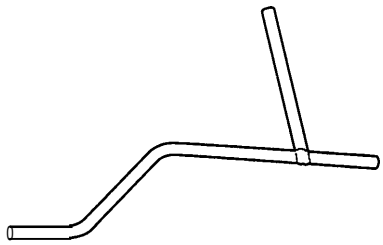

A00C1I4

APPLICATION

Tundra II LT, Scout and all SC-1 O suspensions.

Spring cam adjuster key **330**

(p/ N 8617317 00)

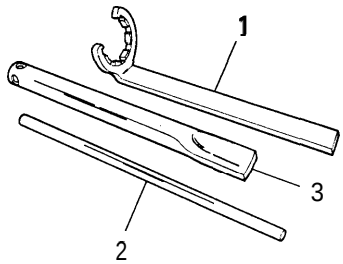

A25B0D4

APPLICATION

Safari A-arm suspension spring.

Replacement parts :

1) Adjustment key (p/ N 5290138 00)
2) Handle (p/ N 5290140 00)
3) Key extension (P/ N 5290139 00)

Bushing installer / remover **331**

(p/ N 5290119 00)

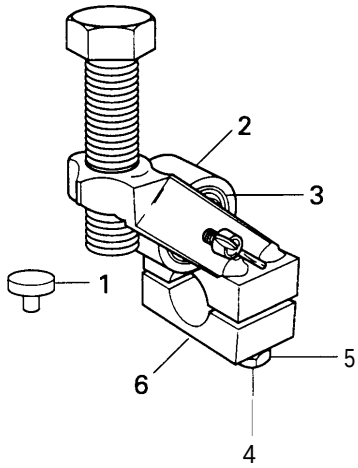

A25B064

APPLICATION

A-arm suspension.

Parts included in the kit :

1) Buffer (P/ N 5290118 00)
2) Outer sleeve (p/ N 5290125 00)
3) Inner sleeve (p/ N 5290126 00)
4) Hexagonal screw (2) (p/ N 2220830 65)
5) Flat washer (2) (p/ N 224 081201)
6) Lower retainer (P/ N 5290121 00)

SUSPENSION (Optional Service Tools)

333 Drive axle holder

(p/ N 5290072 00)

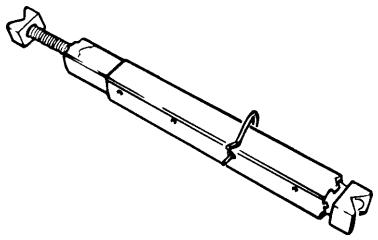

A01B1E4

APPLICATION

All models.

334 Kayaba shock adjustment tool

(p/ N 5290190 00)

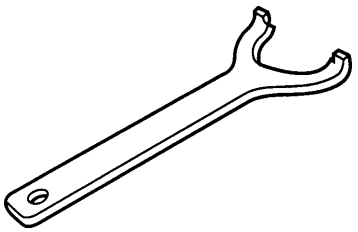

AOOA1K4

APPLICATION

C-7 suspension.

335 Hexagonal wrench

(p/ N 5290147 00)

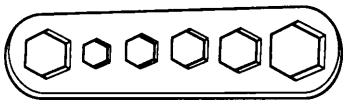

A19B024

APPLICATION

Safari and Skandic prior to 1995,

336 Suspension adjustment wrench

(P/ N 5290122 00)

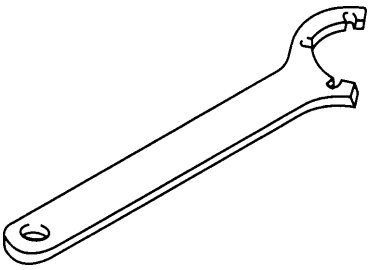

A25A014

APPLICATION

Rear suspension.

337 Suspension adjustment wrench

(P/ N 5290098 00)

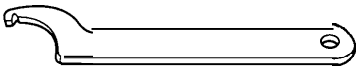

A24A014

APPLICATION

Models equipped with a mono-shock suspension.

338 Suspension adjustment wrench

(p/ N 5290171 00)

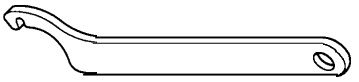

A15B094

APPLICATION

1992 and old Formula C-7.

506 Adjustment wrench

(p/ N 8617439 00)

Consists of :

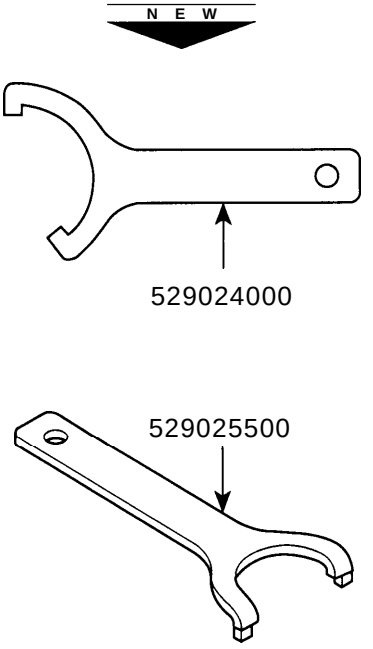

A00B4B4

APPLICATION

T / A shock.

VEHICLES (Optional Service Tools)

Protective mat
(P / N 529 0306 00)

503

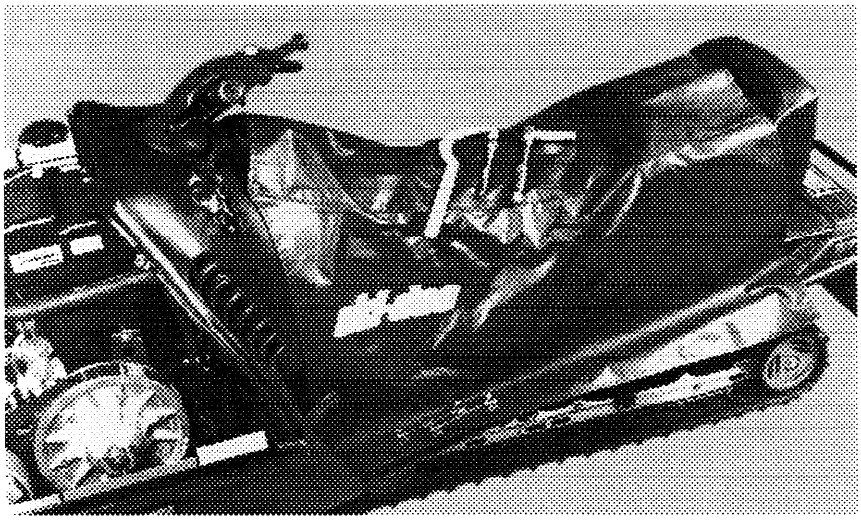

A01B45W

APPLICATION
All vehicles.

Dolly
(P / N 529 0299 00)

348

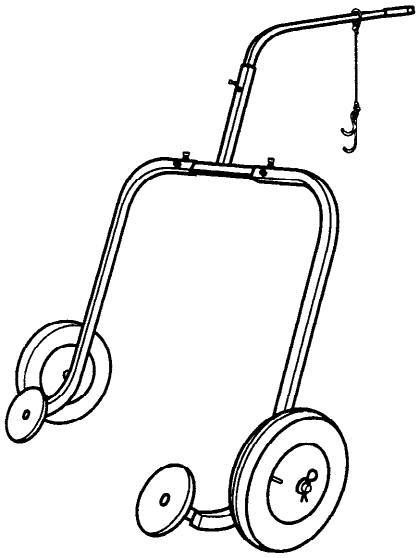

A00B4CJ

APPLICATION
All models.

Snowmobile jack
(P / N 529 0200 00)

341

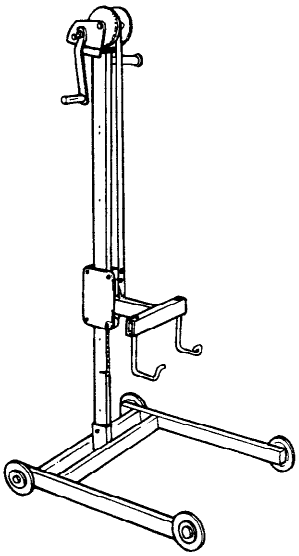

A01A1JJ

APPLICATION
All models.

SERVICE PRODUCTS

MANDATORY SERVICE PRODUCTS

NOTE : The numbers outlined in black (example : ❑) are reference to tool numbers from other divisions (Sea-Doo Watercraft and /or Sea-Doo Jet Boats). Matching reference numbers indicate the same tool is being used, even if the part numbers are different.

Loctite® is a trademarks of Loctite Corporation,

Dow Corning® is a trademarks of Dow Corning Corporation.

Retaining compound **151**

(p/ N 4137031 00)

Loctite® RC / 609 :
Retaining compound (1 O mL)
(green)

AOOB2S4

APPLICATION

Used for retaining bushings, bearings in slightly worn housing or on shaft.

Paste gasket **152**

(p/ N 4137027 00)

Loctite®515 :
Gasket eliminator (50 mL)

A00B2T4

APPLICATION

Crankcase halves transmission and gearbox mating surfaces.

Medium-strength thread locker **154**

(P/ N413 7030 00)

Loctite® 242 :
Thread locker (1 O mL)
(blue, medium strength)

AOOB324

APPLICATION

Flywheel nut, crankcase studs, etc.

High strength thread locker **155**

(P/ N413 7074 00)

Loctite® 271 :
Threadlocker (1 O mL)
(red, high strength)

(TYPICAL)

AOOB2U4

APPLICATION

Fasteners and studs up to 1“ diameter.

MANDATORY SERVICE PRODUCTS

Gasket / paint remov 156

(p/ N 4137085 00)
Loctite® 79040 Chisel
510 g (18 oz)

AOOB3L4

APPLICATION

Clean mating surfaces of cylinders and crankcase. Remove carbon in combustion chambers.

Cleaning solvent 157

(p/ N 4137082 00)
Loctite® 755-59
340 g (12 oz)

AOOB3M4

APPLICATION

Clean carburetor parts and degrease all oily surfaces.

Loctite® primer 158

(P/ N 4137081 00)
Loctite® 764-56
Primer N
170 g (6 oz)

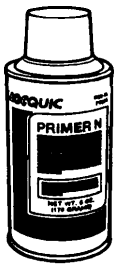

AOOB3N4

APPLICATION

To prepare mating surfaces before applying paste gasket, retaining compound or threadlockers.

Silicone compound 159

(p/ N 420 897061)
Dow Corning® MS4

AOOB3R4

APPLICATION

Lubricate pawl and pawl lock of rewind starter.

OPTIONAL SERVICE PRODUCTS

Silicone dielectric grease **350**
(3 oz)

(p/ N 4137017 00)

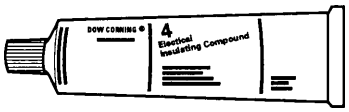

AOOB1X4

APPLICATION

On all electric connections. High tension coil and spark plug connections. Connector housings, etc.

Grease LMZ no. 1 **351**
(400 g)

(P/ N 4137075 00)

A00B1Y4

APPLICATION

Mainly used between regulators or rectifiers and upper column to transfer the heat build-up and to assure a good ground.

Clutch lube **352**
(4 oz)

(P/ N413 8007 00)

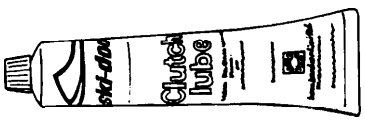

AOOB1Z4

APPLICATION

Roller round shaft drive pulleys.

Chaincase oil **353**

(p/ N413 8019 00)

AOOB2R4

APPLICATION

Chaincase lubricant on Elan and Tundra II.

Synthetic chaincase oil **354**

(P /N 413 8033 00)

A01B4Q4

APPLICATION

Chaincase lubricant on all models except Élan and Tundra II.

Blizzard oil **355**
(12 x 500 mL)

(p/ N 4138031 00)

A00B2Q4

APPLICATION

All models.

Injection oil

(p/ N413 8029 00) **356**
(12 x 1 liter)

(P/ N413 8030 00) **357**
(3x 4 liter)

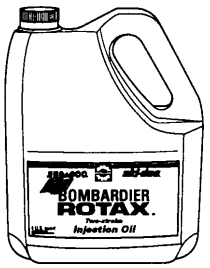

F01B2H4

APPLICATION

All engines.

OPTIONAL SERVICE PRODUCTS

Pipe sealant **358**

(p/ N 4137023 00)
Loctite 592 (50 mL)

AOOB2W4

APPLICATION

Engine plugs and senders.

High temperature thread locker **359**

(p/ N 4208997 88)
Loctite 648 (green)
(5 g)

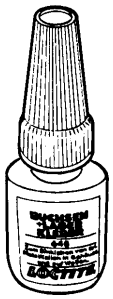

A00B3D4

APPLICATION

For RAVE valve rod distance nut on 583, 670 and 779 engines.

Anti-seize lubricant **362**

(P/ N 4137010 00)

Loctite anti-seize lubricant 454 g (16 oz)

F01B174

APPLICATION

Unpainted surfaces of drive pulley countershaft.

Bearing grease **363**
(400 g)

(P/ N 4137061 00)

A00B2L4

APPLICATION

For idler bearings, ski legs, leaf spring cushion pads, seal interior lips, rear hub bearings, bogie wheels, countershaft bearings, etc.

Storage oil **364**
(350 g spray can)

(p/ N 4960141 00)

AOOB384

APPLICATION

All models.

Degreaser **365**

(p/ N413 7084 00)
Permatex® 48 TA
433 g (15 oz)

AOOB3K4

APPLICATION

Engine, chaincase, pulleys and any greasy surfaces.

OPTIONAL SERVICE PRODUCTS

Gel instant adhesive **366**

(p/ N413 7083 00)
Loctite 454-40
20 g (.70 oz)

AOOB304

APPLICATION

Isolating foam and rubber strip.

Tough adhesive **367**

(p/ N413 4083 00)
Loctite Black Max 38004
3 mL (.1 O oz)

AOOB3P4

APPLICATION

Shifter boot or grip.

Stripped threads repair kit **368**

(p/ N413 7086 00)
Loctite 81668
Form-A-thread 81668

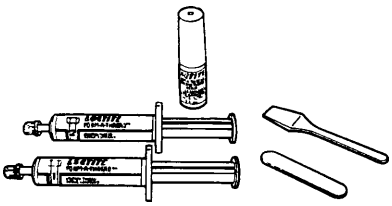

AOOA1J4

APPLICATION

Repair damaged threads of grade 5 (SAE) or 8.8 (metric) maximum. Do not use in applications where temperatures will exceed 149°C (300°F) or on critical assemblies.

HYLOMAR sealant **369**

(loo g)
(f' / N 4137071 00)

AOOB3F4

APPLICATION

To form an oil resistant seal (ex : transmission).

Paint for frame touch-up **370**

(p/ N413 4010 00)
Black semi-gloss
(spray can)

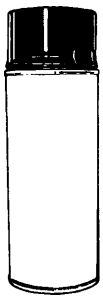

AOOB3H4

APPLICATION

All models with a black frame.

General purpose instant adhesive (495) **373**

(p/ N 4137032 00)

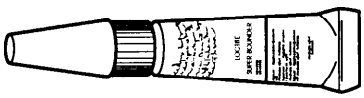

AOOB2V4

APPLICATION

Rubber to metal bonding and most hard plastic.

OPTIONAL SERVICE PRODUCTS

Sealant 736 Dow Corning **374**

(p/ N 4137092 00)

AOOB3U4

APPLICATION

All models.

Fuel stabilizer **375**

(p/ N413 4086 00)

AOOB3V4

APPLICATION

All models.

Molykote 111 **376**

(p/ N 4137070 00)

AOOB3W4

APPLICATION

Rotary valve shaft seals.

Shock oil (1 liter) **377**

(P/ N413 7094 00)

A06F0P4

APPLICATION

MX Z T / A shocks.

Bombardier Lube **378**

(p/ N 2936000 16)

A01B4P4

APPLICATION

Steering ball joints on all models.

Super Lube (grease) **379**

(P/ N 2935500 14)

NEW

AOOB474

APPLICATION

Tie rod bushings.

LUBRICATION AND MAINTENANCE CHART

		①	②	③	④	⑤	⑥	REFER TO
	Starting Rope Condition						✔	—
	Engine Head Nuts	✔			✔			Appropriate section : See Top End
	Engine Mount Nuts	✔			✔			Appropriate section : See ENGINE SUPPORT AND MUFFLER
	Exhaust System	✔		✔				Appropriate section : See ENGINE SUPPORT AND MUFFLER
	Engine Lubrication					✔		This section no. 1
	Cooling System Condition	✔			✔			Sub-section 04-06
	Coolant Replacement (Except Fan Cooled)						✔	Page 04-09-5
	Condition of Seals						✔	Sub-section 04-03
	Injection Oil Filter Condition (Except Élan)			✔				Page 04-07-1
	Injection Oil Filter Replacement (Except Élan)						✔	Sub-section 04-05
	Oil Injection Pump Adjustment (Except Élan)	✔			✔			Page 04-05-5
	Fuel Stabilizer					✔		This section no. 2
	Fuel Filter Replacement						✔	This section no. 3
	Fuel Lines and Connections	✔					✔	Sub-section 04-09
	Carburetor Adjustment	✔			✔			Page 04-08-8
	Throttle Cable Inspection	✔			✔		✔	Sub-section 04-09
	Air Filter Cleaning			✔				This section no. 4
	Drive Belt Condition	✔	✔					This section no. 5
	Condition of Drive and Driven Pulleys	✔		✔		✔		Sub-sections 05-02 and 03-03
	Cleaning of Drive and Driven Pulleys						✔	Sub-sections 05-02 and 03-03
	Retorquing of Drive Pulley Screw	✔						Sub-section 05-02
	Driven Pulley Preload	✔			✔			Sub-section 05-03
	Brake Condition	✔	✔					Sub-section 05-05
	Brake Adjustment			✔				Sub-section 05-05
	Lubrication of Ratchet Wheel or Fluid Change (Except Élan)						✔	Sub-section 05-05
	Drive Chain Tension	✔		✔				Sub-sections 05-06 and 05-07
	Countershaft Lubrication (S and F Series)	✔		✔		✔		Sub-section 05-05
	Chaincase / Gearbox Oil Level (Change Once a Year)	✔		✔	✔	✔		Sub-sections 05-06 and 05-07
	Gearbox Oil Change (Skandic WT Only)	✔			✔			Sub-section 05-07
	Lubrification of Drive Axle Bearing	✔		✔		✔		Sub-section 07-05

		①	②	③	④	⑤	⑥	**REFER TO**
	Handlebar Bolts. Retorque to 26 N•m (19 lbf•ft)	✔						Page 08-01-1
	Steering and Front Suspension Mechanism	✔		✔		✔		Sub-sections 08-01 and 08-02
	Wear and Condition of Skis and Runners	✔	✔					Sub-section 08-02
	Steering and Ski Leg Camber Adjustment	✔		✔				Sub-section 08-01
	Suspension Adjustments (Except Élan)	AS REQUIRED						Section 07 : See appropriate sub-section and *Operator's Guide*
	Suspension Lubrication			✔		✔		Section 07 : See appropriate sub-section
	Suspension Condition	✔			✔			Section 07 : See appropriate sub-section
	Suspension Stopper Strap Condition (Except Élan)				✔			Section 07 : See appropriate sub-section
	Track Condition	✔		✔				Sub-section 07-06
	Track Tension and Alignment	✔	AS REQUIRED					Sub-section 07-06
	Spark Plugs*	✔						Sub-section 06-03
	Engine Timing	✔					✔	Sub-section 06-02
	Battery Condition	✔		✔		✔		Sub-section 06-04
	Headlight Beam Aiming				✔			Page 09-01-1
	Wiring Harnesses, Cables and Lines	✔		✔				Page 09-01-13
	Operation of Lighting System (HI / LO Beam, Brake Light, etc.) Test Operation of Emergency Cut-Out Switch and Tether Cut-Out Switch	✔	✔			✔		*Operator's Guide*
	Rags in Air Intake and Exhaust System					✔	✔	This section no. 6
	Engine Compartment	✔		✔				This section no. 7
	Cleaning	✔		✔		✔		This section no. 8

* Before installing new spark plugs at pre-season preparation, it is suggested to burn excess storage oil by starting the engine with the old spark plugs. Only perform this operation in a well ventilated area.

① 10-HOUR INSPECTION (To be performed by dealer)

② WEEKLY OR EVERY 240 km (150 mi)

③ MONTHLY OR EVERY 800 km (500 mi)

④ ONCE A YEAR OR EVERY 3200 km (2000 mi)

⑤ STORAGE

⑥ PRE-SEASON PREPARATION (To be performed by dealer)

NO. 1 ENGINE LUBRICATION

Engine internal parts must be lubricated to protect them from possible rust formation during the storage period.

To perform the storage procedures, proceed as follows :

Start the engine and allow it to run at idle speed until the engine reaches its operating temperature.

◆ WARNING : Ensure the track is free of all particles which could be thrown out while it is rotating. Keep hands, tools, feet and clothing clear of track. Ensure no one is standing in close proximity to the vehicle.

Stop the engine.

All Models Except Mach Z and Formula III

To prevent fuel from draining, primer button should be pushed all the way in.

Disconnect the outlet primer hose from the primer valve (straight coupling).

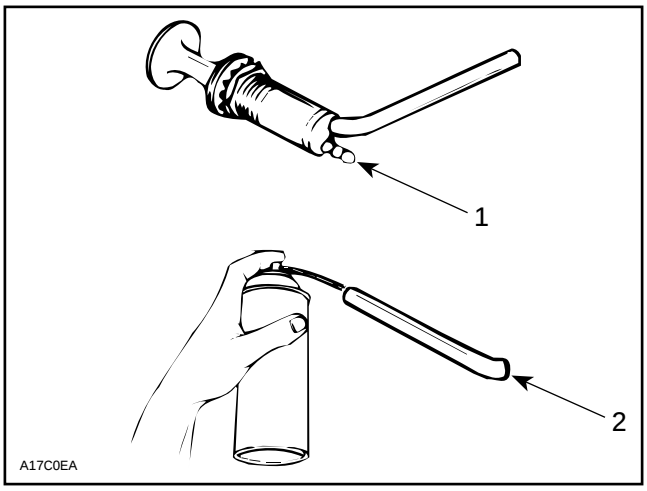

1. Straight coupling

To intake manifold

Insert storage oil (P / N 496 0141 00) nozzle into primer outlet hose.

Mach Z and Formula III Only

Remove air silencers to spray storage oil into each carburetor bore.

All Models

Restart engine and run at idle speed.

Inject storage oil until the engine stalls or until a sufficient quantity of oil has entered the engine (approximately half a can).

With the engine stopped, remove the spark plug and spray storage oil (P / N 496 0141 00) into each cylinder.

Crank slowly 2 or 3 revolutions to lubricate cylinders.

Reinstall the spark plugs and the outlet primer hose or air silencers.

◆ WARNING : This procedure must only be performed in a well ventilated area. Do not run engine during storage period.

NO. 2 FUEL STABILIZER

A fuel stabilizer (P / N 413 4086 00) can be added in fuel tank to prevent fuel deterioration and avoid draining fuel system for storage. Follow manufacturer's instructions for proper use.

If above fuel stabilizer is not used, drain fuel system including fuel tank and carburetor(s).

▼ CAUTION : Fuel stabilizer should be added prior engine lubrication to ensure carburetor(s) protection against varnish deposit.

NO. 3 FUEL FILTER REPLACEMENT

On all models except Élan and Alpine II, drain fuel tank.

On all models, remove fuel line grommet from fuel tank and pull out inlet fuel line from tank.

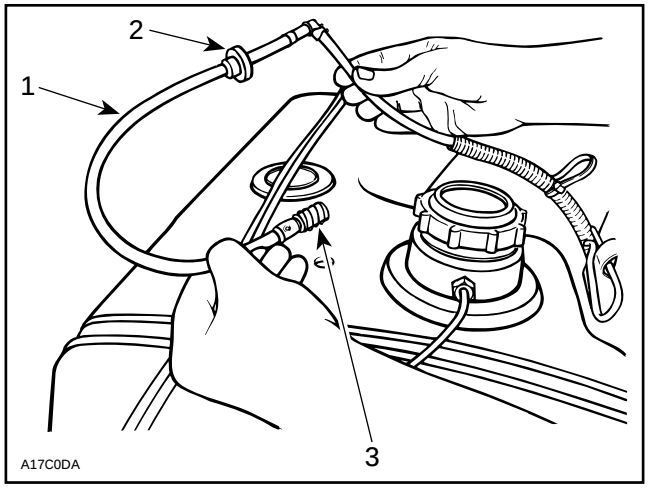

TYPICAL

1. Inlet fuel line
2. Position of grommet when installing
3. Fuel filter

Replace fuel filter. To facilitate the fuel line installation, slide grommet on fuel line about 50 mm (2 in) away from elbow then install grommet on fuel tank and push elbow through grommet.

NO. 4 AIR FILTER CLEANING

S Series

Lift hood and remove air filter from air intake silencer.

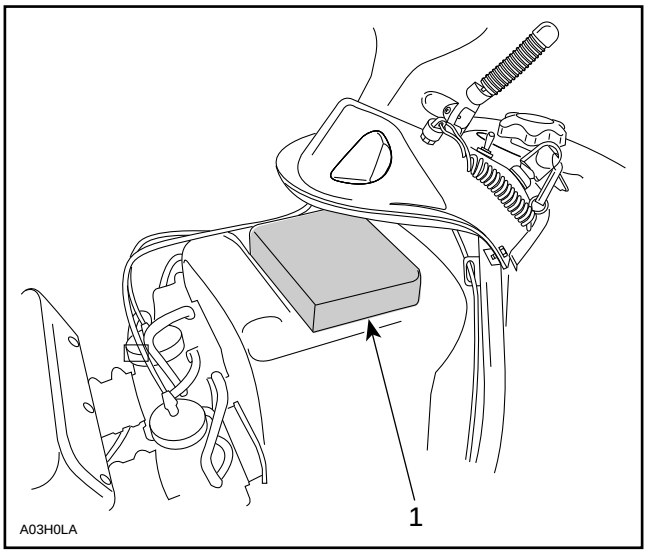

TYPICAL
1. Filter

To clean the filter, shake the snow out of it then, dry it out.

F-Series

Lift hood and remove air filter(s) from air intake silencer.

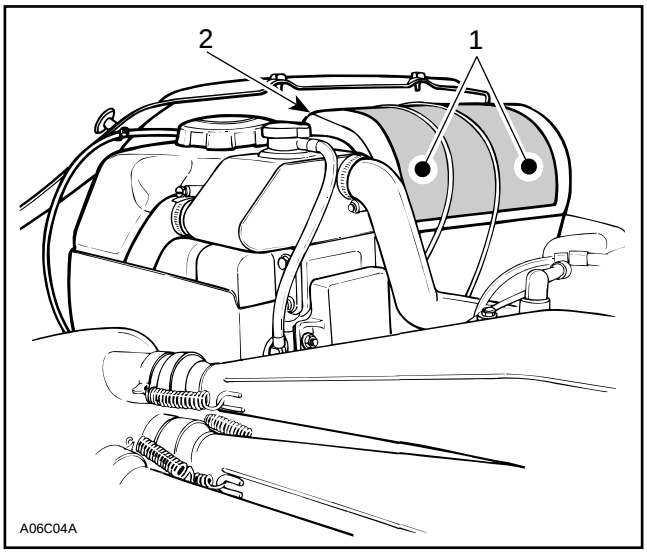

TYPICAL
1. Air intake silencer
2. Air filter(s)

Shake the snow out of filter(s) then, dry it out.

All Models

Check that the air box is clean and dry then properly reinstall the filter.

CAUTION : These snowmobiles have been calibrated with the filter installed. Operating the snowmobile without it may cause engine damage.

Tundra II LT

Air filter is located on lower side portion of air intake silencer. Lift hood and remove belt guard. Gently pull air filter sideward.

Ensure it is clean and dry. Shake snow out. Clean with a solvent and dry as necessary.

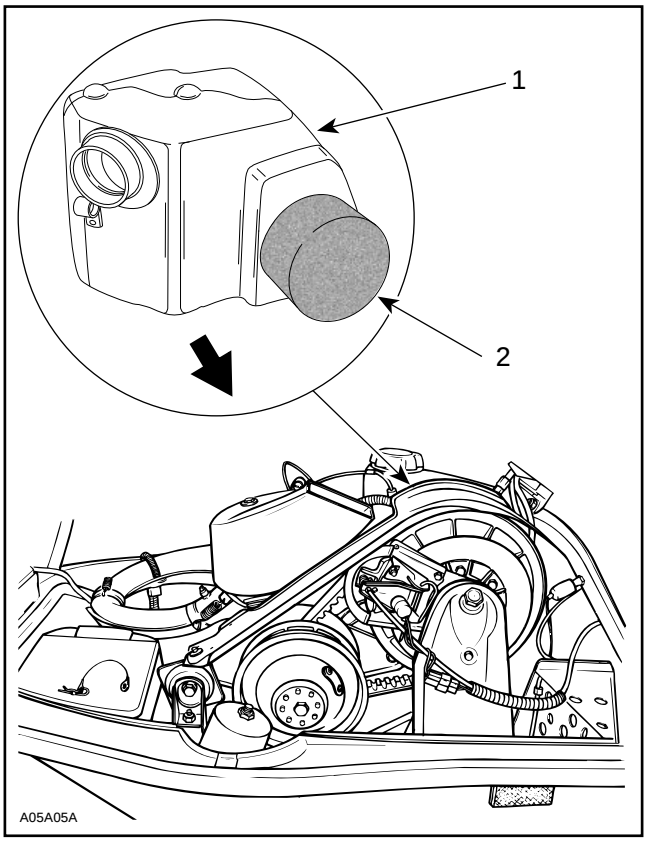

1. Intake silencer
2. Air filter

NO. 5 DRIVE BELT CONDITION

Inspect belt for cracks, fraying or abnormal wear (uneven wear, wear on one side, missing cogs, cracked fabric). If abnormal wear is noted, probable cause could be pulley misalignment, excessive RPM with frozen track, fast starts without warm-up period, burred or rusty sheave, oil on belt or distorted spare belt.

Check the drive belt width. Replace the drive belt if width is less than the minimum width recommended in DRIVE BELT 05-01.

NO. 6 RAGS IN AIR INTAKE AND EXHAUST SYSTEM

At storage preparation, block air intake hole and exhaust system hole using clean rags.

Remove those rags at pre-season preparation.

NO. 7 ENGINE COMPARTMENT

Keep clean of grass, twigs, cloth, etc. These are combustible under certain conditions.

NO. 8 CLEANING

Remove any dirt or rust.

To clean the entire vehicle, use only flannel clothes or Kimtowels® wipers no. 58-380 from Kimberly-Clark.

CAUTION : It is necessary to use flannel cloths or “Kimtowels” wipers on windshield and hood to avoid damaging further surfaces to clean.

To clean the entire vehicle, including metallic parts with a thick coat of grease, use “Endust” imported by Bristol Myers, available at hardware stores or supermarkets.

To clean the entire vehicle, including metallic parts with a thin coat of grease, use “Simple Green” from Sunshine Makers Inc., available at hardware stores or at automotive parts retailer.

Grease or oil at all recommended lubrication points. Wipe off surplus.

To remove scratches on windshield or hood : Start with “Slip Streamer Motorcycle Windshield Heavy Duty Scratch, Remover”. Finish with “Slip Streamer Motorcycle Cleaner and Polish”.

NOTE : The latest product may be use alone if only light scratches are noticeable.

CAUTION : Never clean plastic parts or hood with strong detergent, degreasing agent, paint thinner, acetone, products containing chlorine, etc.

Inspect the hood and repair any damage. Touch up all metal spots where paint has been scratched off. Spray all metal parts including shock chromed rods with antirust product (P / N 293 6000 06). Wax the hood and the painted portion of the frame for better protection.

NOTE : Apply wax on glossy finish only. Protect the vehicle with a cover to prevent dust accumulation during storage.

CAUTION : The snowmobile has to be stored in a cool and dry place and covered with an opaque tarpaulin. This will prevent sun rays and grime from affecting plastic components and vehicle finish.

TABLE OF CONTENT!

ENGINE **03-01-1**

FUEL AND OIL SYSTEMS **03-02-1**

TRANSMISSION AND BRAKE SYSTEMS **03-03-1**

- **TRANSMISSION** **03-03-1**
- **BRAKE SYSTEMS** **03-03-7**
  - MECHANICAL BRAKE 03-03-7
  - HYDRAULIC BRAKE 03-03-7
  - MECHANICAL AND HYDRAULIC BRAKES 03-03-8

ELECTRICAL SYSTEM **03-04-1**

SUSPENSION SYSTEM AND TRACK **03-05-1**

ENGINE

The following chart is provided to help in diagnosing the probable source of troubles. It should be used as a guideline. Some causes or corrections may not apply to a specific model.

SYMPTOM	**ENGINE BACKFIRES.**
CONDITION	NORMAL USE.
Test / Inspection	**1. Check spark plug(s).** a. Carbon accumulation caused by defective spark plug(s). *Clean carbon accumulation and replace spark plug(s).*
	2. Check cooling system. a. Loose fan belt. *Adjust or replace fan belt (refer to TECHNICAL DATA 10).* b. Low antifreeze level. *Adjust antifreeze level. Then check clamps or hoses.* c. Defective tank cap. *Replace cap.* d. Air in system. *Bleed system.*
	3. Check ignition timing. a. Timing is too advanced. *Set timing according to specifications (refer to TECHNICAL DATA 10).*

SYMPTOM	**ENGINE SUDDENLY TURNS OFF.**
CONDITION	NORMAL USE.
Test / Inspection	**1. Perform engine leak test (tool P / N 861 7390 00). Refer to engine leak verification flow chart. Check possible piston seizure.** a. Damaged gasket and / or seal. *Replace defective parts.*
	2. "Four-corner" seizure of piston(s). a. Accelerating too fast when engine is cold. Piston expands faster than cylinder. *Replace piston(s). Ask driver to refer to warm-up procedure in Operator's Guide.*
	3. Piston(s) seizure on exhaust side (color on piston dome is correct). a. Kinked fuel tank vent tube. *Relocate fuel tank vent tube.* b. Leaks at fuel line connections. *Replace defective lines.* c. Fuel does not flow through carburetor(s) (plastic particles in needle area and / or varnish formation in carburetor(s)). *Clean carburetor(s).* d. Spark plug heat range is too warm. *Install spark plug(s) with appropriate heat range (refer to TECHNICAL DATA 10).* e. Improper ignition timing. *Adjust according to specifications (refer to TECHNICAL DATA 10).* f. Restriction in exhaust system. *Replace.* g. Compression ratio is too high. *Install genuine parts.* h. Carburetor calibration is too lean. *Adjust according to specifications (refer to TECHNICAL DATA 10).* i. Improper rotary valve timing or improper valve. *Adjust according to specifications (refer to TECHNICAL DATA 10) and / or install Bombardier's recommended rotary valve.* j. Poor quality oil. *Use Bombardier Rotax oil.* k. Leaks at air intake silencer. *Replace air intake silencer grommets.*

	4. Melted and / or perforated piston dome ; melted section at ring end gap. a. When piston reaches TDC, mixture is ignited by heated areas in combustion chamber. This situation is due to an incomplete combustion of a poor quality oil. *Clean residue accumulation in combustion chamber and replace piston(s). Use Bombardier Rotax oil.* b. Spark plug heat range is too high. *Install recommended spark plug(s) (refer to TECHNICAL DATA 10).* c. Ignition timing is too advanced. *Adjust according to specifications (refer to TECHNICAL DATA 10).* d. Inadequate fuel quality. *Use appropriate fuel.* e. Carburetion is too lean. *Adjust according to specifications (refer to TECHNICAL DATA 10).*
	5. Seized piston all around the circumference (dry surface). a. Lack of oil, damaged oil line or defective injection pump. *Replace defective part(s).*
	6. Grooves on intake side of piston only. a. Oil film eliminated by water (snow infiltration in engine). *Replace piston(s) and check if intake system leaks.*
	7. Piston color is dark due to seizure on intake and exhaust sides. a. Broken or loose fan belt. *Replace fan belt or adjust its tension (refer to TECHNICAL DATA 10).* b. Cooling system leaks and lowers coolant level. *Tighten clamps or replace defective parts. Add antifreeze in cooling system until appropriate level is reached.* c. Accumulation of foreign particles in needle and / or main jet area. *Clean carburetor(s).*
	8. Cracked or broken piston(s). a. Cracked or broken piston(s) due to excessive piston / cylinder clearance or engine overreving. *Replace piston(s). Check piston / cylinder clearance (refer to TECHNICAL DATA 10). Adjust drive pulley according to specifications (refer to TECHNICAL DATA 10) and / or clean pulley sheaves if they are contaminated with greasy particles.*
SYMPTOM	**PISTON RING AND CYLINDER SURFACES ARE GROOVED.**
CONDITION	NORMAL USE.
Test / Inspection	**1. Check oil quality.** a. Poor oil quality. *Use Bombardier Rotax oil.*
	2. Check injection pump and its hoses. a. Inadequate injection pump adjustment and / or defective hoses. *Adjust pump according to specifications (refer to ENGINE section 04) and / or replace hoses.*
	3. Check fuel / oil premix (Élan). a. Inadequate fuel / oil mixture. *Drain fuel tank. Use manufacturer's recommended mixture (refer to FUEL AND OIL section in Operator's Guide).*

SYMPTOM	**ENGINE DOES NOT OFFER MAXIMUM POWER AND / OR DOES NOT REACH MAXIMUM OPERATING RPM.**
CONDITION	NORMAL USE.
Test / Inspection	**1. Check spark plug condition.** a.Fouled spark plug(s). *Replace.*
	2. Check if there is water in fuel. a.There is water in fuel. *Drain fuel system, then fill it with appropriate fuel.*
	3. Check items listed in "Engine runs out of fuel" (refer to FUEL AND OIL SYSTEM sub-section 02).
	4. Check carburetor adjustments and cleanliness. a.Inadequate carburetor adjustments or dirt accumulation. *Adjust according to specifications (refer to TECHNICAL DATA 10) or clean.*
	5. Check drive belt. a.Worn belt. *Replace belt if width is 3 mm (1/8") less than nominal dimension (refer to TECHNICAL DATA 10).*
	6. Check track adjustment. a.Too much tension and / or improper alignment. *Align track and adjust its tension to specifications (refer to TECHNICAL DATA 10).*
	7. Check drive pulley. a.Improper calibration screw adjustments (TRA pulley) and / or worn bushing(s). *Adjust according to specifications (refer to TECHNICAL DATA 10) and / or replace bushing(s).*
	8. Check driven pulley. a.Worn bushing and / or spring tension. *Replace spring and / or adjust its tension according to specifications (refer to TECHNICAL DATA 10).*
	9. Check exhaust system. a.Restriction. *Replace.*
	10. Check ignition timing. a.Decrease in power due to retarded ignition. *Adjust according to specification (refer to TECHNICAL DATA 10).*
	11.Check engine compression. a. Worn piston(s) and ring(s). *Replace (refer to TECHNICAL DATA 10 for specification).*
	12.Check engine cooling system. a.Engine overheats. Improper fan belt tension. *Adjust fan belt (refer to TECHNICAL DATA 10).* b.Antifreeze level is low, cap fails to pressurize system or air circulates through lines. *Adjust level, replace cap or bleed cooling system.*

SYMPTOM	**ENGINE DETONATION AT MAXIMUM RPM.**
CONDITION	NORMAL USE.
Test / Inspection	**1. Check which type of fuel is used.** a. Octane number is too low and / or alcohol level is too high. *Use recommended fuel type.*
	2. Check spark plug type. a. Improper spark plug heat range. *Install recommended spark plug(s) (refer to TECHNICAL DATA 10).*
	3. Check exhaust system. a. Too much restriction. *Replace.*
	4. Check ignition timing. a. Timing is too advanced. *Adjust according to specification (refer to TECHNICAL DATA 10).*
	5. Check carburetion. a. Fouled and / or improper carburetor components. *Clean or replace according to specification (refer to TECHNICAL DATA 10).*
	6. Check compression ratio and squish area. a. Compression ratio is too high. *Install genuine parts.*
SYMPTOM	**ENGINE TURNS OVER BUT FAILS TO START.**
CONDITION	NORMAL USE.
Test / Inspection	**1. Check switches.** a. Ignition switch, emergency cut-out switch or tether switch is in the OFF position. *Place all switches in the RUN or ON position.*
	2. Check fuel level. a. Mixture not rich enough to start cold engine. *Check fuel tank level and use primer.*
	3. Check spark plug. a. Defective spark plug (no spark). *Replace spark plug(s).*
	4. Check amount of fuel on spark plug. a. Flooded engine (spark plug wet when removed). *Do not overprime. Remove wet spark plug(s), turn ignition switch to OFF and crank engine several times. Install clean dry spark plug. Start engine following usual starting procedure.*
	5. Check fuel lines. a. No fuel to the engine (spark plug dry when removed). *Check fuel tank level ; turn fuel valve on if applicable ; check fuel filter, replace if clogged ; check condition of fuel and impulse lines and their connections.*
	6. Check engine compression. a. Insufficient engine compression. *Replace defective part(s) (ex. : piston(s), ring(s), etc.).*

SYMPTOM	**IRREGULAR ENGINE IDLE.**
CONDITION	NORMAL USE AFTER ENGINE WARM UP.
Test / Inspection	**1. Check primer.** a. Fuel leaks at primer nipple which is mounted to carburetor. *Replace.*
	2. Check choke. a. Choke plunger may be partially opened. *Readjust.*
	3. Check carburetor adapter. a. Air enters through a crack. *Replace.*
	4. Check air screw position. a. Inadequate fuel / air mixture. *Adjust according to specifications (refer to TECHNICAL DATA 10).*
	5. Check ignition system trigger coil air gap. a. Air gap is too large. *Adjust according to specifications (refer to TECHNICAL DATA 10).*
	6. Check dimension of pilot jet. a. Inadequate fuel / air mixture. *Adjust according to specifications (refer to TECHNICAL DATA 10).*
	7. Perform engine leak test (tool P / N 861 7390 00). a. Leaking gaskets allow air to enter in engine. *Replace defective parts.*
SYMPTOM	**HIGH ENGINE OPERATING TEMPERATURE.**
CONDITION	NORMAL USE.
Test / Inspection	**1. Check temperature gauge sensor.** a. False reading. *Replace.*
	2. Check fan belt. a. Belt slides because it is too loose. *Adjust according to specifications (refer to TECHNICAL DATA 10).*
	3. Verify antifreeze level and check if there is air infiltration in the system or if there are leaks in gasket areas. a. Low antifreeze level or air in system. *Add antifreeze until recommended level is reached, bleed system and / or tighten clamps at fitting.*
	4. Check if antifreeze flows through system properly. a. Foreign particles and / or broken coolant pump impeller. *Clean cooling system and / or replace coolant pump impeller.*
	5. Check thermostat. a. Thermostat reacts slowly or not at all. *Replace.*

	6. Check antifreeze concentration. a.Antifreeze concentration is too high. *Adjust concentration according to Bombardier's recommendations.*
	7. Check tank cap. a.Cap does not hold pressure. *Replace.*
	8. Check carburetion. a.Improperly adjusted or inadequate carburetor components. *Adjust according to specifications (refer to TECHNICAL DATA 10) or replace inadequate component(s).*
	9. Check cylinder head gaskets. a.Worn gaskets. *Replace.*
	10. Check ignition timing. a.Ignition timing is too advanced. *Adjust according to specifications (refer to TECHNICAL DATA 10).*
	11. Check if there are leaks at air intake silencer and / or engine crankcase. a.Leak(s). *Repair or replace.*
	12. Check condition and heat range of spark plug(s). a.Melted spark plug tip or inadequate heat range. *Replace.*
SYMPTOM	**ENGINE EQUIPPED WITH "RAVE" VALVE DOES NOT REACH ITS FULL OPERATING RPM (500 TO 1000 RPM SLOWER).**
CONDITION	NORMAL USE.
Test / Inspection	**1. Check "RAVE" valve pistons.** a. Valve piston(s) is (are) too far out. *Screw valve piston(s) to bottom.*
	2. Check "RAVE" valve stems. a. Bent "RAVE" valve stem(s). *Replace.*
	3. Check "RAVE" valves. a. Jamed valve(s). *Clean.*
	4. Check tension of "RAVE" springs. a. Inadequate spring tension. *Replace.*
	5. Check "RAVE" pressure holes. a. Clogged holes. *Clean.*
	6. Check clamps or sleeves. a. Damaged clamp(s) or sleeve(s). *Replace.*

SYMPTOM	**ENGINE EQUIPPED WITH "RAVE". ENGINE HESITATES AT MID-SPEED AND REACHES MAXIMUM PERFORMANCE ONLY AFTER A WHILE.**
CONDITION	NORMAL USE.
Test / Inspection	**1. Check "RAVE" valve spring(s).** a. Spring tension is too weak or spring(s) is (are) broken. *Replace.*
	2. Check "RAVE" valve cover red adjustment screws. a. Adjustment screw(s) is (are) too loose. *Fully tighten.*
	3. Check "RAVE" valve movement ("RAVE" movement indicator P / N 861 7258 00). a. Valve(s) is (are) stuck in open position. *Clean.*
SYMPTOM	**REWIND STARTER ROPE DOES NOT REWIND.**
CONDITION	NORMAL USE.
Test / Inspection	**1. Check rewind spring.** a. Broken spring. Replace spring.
SYMPTOM	**REWIND STARTER PAWL DOES NOT ENGAGE.**
CONDITION	NORMAL USE.
Test / Inspection	**1. Check stopper spring.** a. Broken stopper spring. *Replace.*
	2. Check pawl and pawl lock. a. Pawl and pawl lock have stuck together because of heat. *Replace.*
	3. Check pawl and rope sheave. a. Pawl and rope sheave have stuck together because of heat. *Replace.*

SYMPTOM	**ENGINE PINGING.**
CONDITION	NORMAL USE.
Test / Inspection	**1. Check fuel lines.** a. Bent fuel lines (preventing fuel from flowing through). *Relocate or replace fuel lines.*
	2. Check if carburetor(s) is (are) clean. a. Dirt prevents fuel from flowing through. *Clean.*
	3. Check ignition timing. a. Timing is too advanced. *Adjust according to specifications (refer to TECHNICAL DATA 10).*
	4. Check compression ratio. a. Compression ratio is too high. *Replace inadequate part(s) to obtain manufacturer's recommended compression ratio or use a higher grade fuel.*
SYMPTOM	**ENGINE GENERATES A LOT OF VIBRATIONS.**
CONDITION	NORMAL USE.
Test / Inspection	**1. Check engine supports.** a. Loose broken supports or interference between support(s) and chassis. *Retighten to specification (refer to TECHNICAL DATA 10) or replace.*
	2. Check drive pulley (refer to : vibrations coming from drive pulley).
	3. Check carburetor synchronization. a. Throttle slide heights are adjusted differently and / or throttle slide openings are unsynchronized. *Adjust throttle slide heights and throttle cable.*

ENGINE LEAK VERIFICATION FLOW CHART

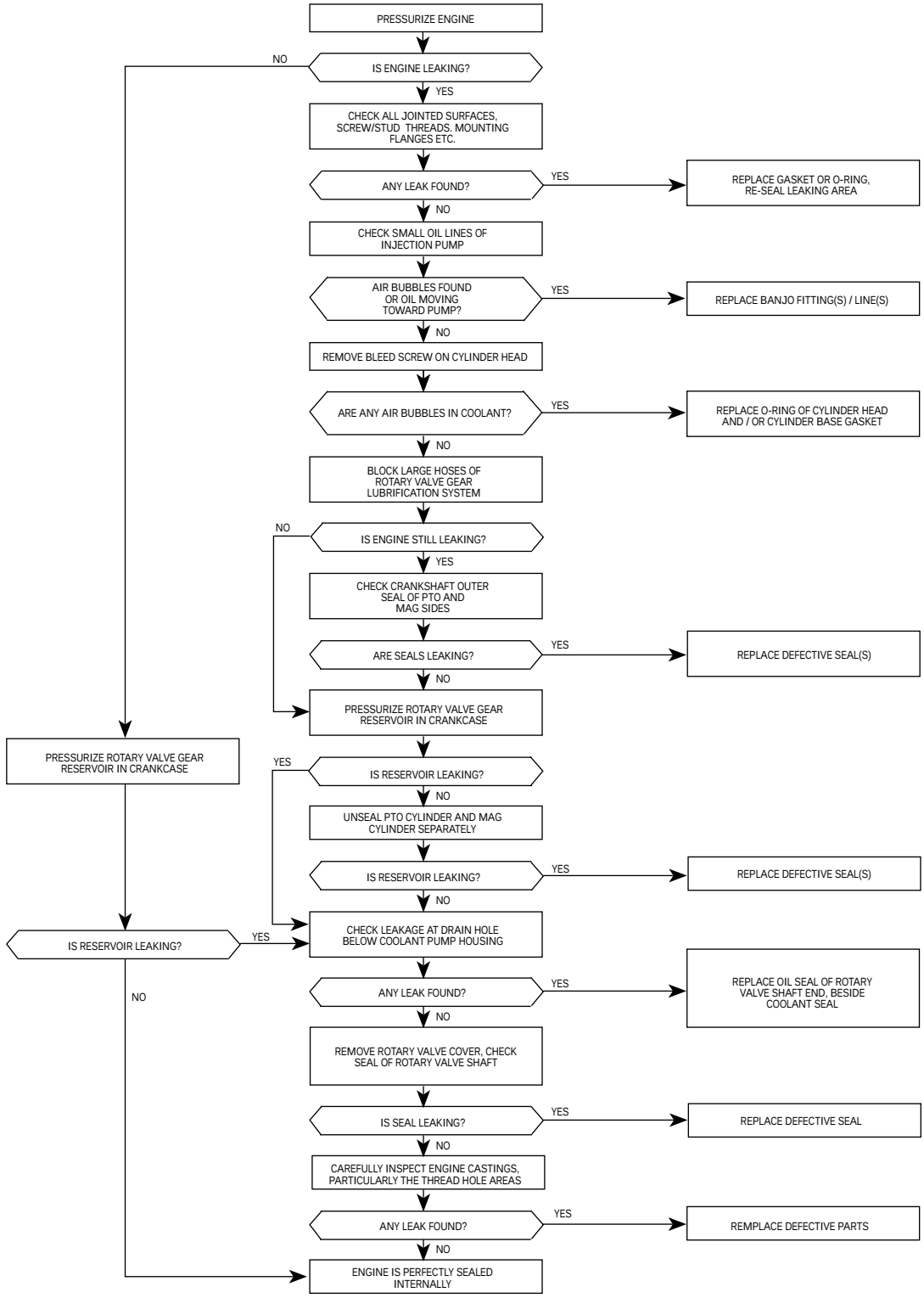

FUEL AND OIL SYSTEMS

The following chart is provided to help in diagnosing the probable source of troubles. It should be used as a guideline. Some causes or corrections may not apply to a specific model.

SYMPTOM	**HIGH FUEL CONSUMPTION (OR RICH MIXTURE).**
CONDITION	NORMAL USE.
Test / Inspection	**1. Check fuel tank.** a. Perforated fuel tank. *Replace fuel tank.*
	2. Check fuel pump reservoir and carburetor fittings. a. Leaking fittings. *Replace defective part.*
	3. Check primer. a. Fuel flows through primer while engine runs. *Replace primer.*
	4. Check float height in carburetor(s). a. Fuel level is too high in float bowl(s). *Adjust according to specifications (refer to TECHNICAL DATA 10).*
	5. Check needle valve. a. Foreign particles prevent needle valve(s) from closing and / or worn seating area. *Clean or replace needle valve(s), then clean seating area.*
	6. Check H.A.C. system. a. Connection to atmosphere is plugged. *Clean.* b. Leakage in H.A.C. to carburetor tube. *Replace.* c. Leak in H.A.C. sealed chamber. *Replace.* d. H.A.C. frozen. *Replace.*
SYMPTOM	**FUEL LEAKS IN ENGINE BASE WHEN ENGINE IS STOPPED.**
CONDITION	NORMAL USE.
Test / Inspection	**1. Check items 3, 4 and 5 of “High fuel consumption”.**
	2. Check fuel pump diaphragm. a. Cracked diaphragm. *Replace.*

SYMPTOM	**ENGINE LACKS POWER OR STALLS AT HIGH RPM.**
CONDITION	NORMAL USE.
Test / Inspection	**1. Check fuel tank vent hose.** a. Kinked or clogged hose. *Relocate or replace.*
	2. Check fuel filter. a. Clogged filter. *Replace.*
	3. Check fuel lines. a. Kinked or clogged lines. *Relocate or replace.*
	4. Check fuel pump flow. a. Dried diaphragm. *Replace.*
	5. Check if carburetor(s) is (are) clean. a. Varnish. *Clean.*
SYMPTOM	**HIGH INJECTION OIL CONSUMPTION.**
CONDITION	NORMAL USE.
Test / Inspection	**1. Check oil injection pump adjustment.** a. Oil injection pump adjusted too rich. *Adjust.*
	2. Check injection oil lines and their fitting. a. Leaking lines and / or cover. *Replace defective part(s).*
	3. Check injection pump cover gasket. a. Worn gasket. *Replace.*
	4. Pressurize crankcase rotary valve gear reservoir. a. Leaking gasket(s). *Replace gasket(s).*

SYMPTOM	**ENGINE RUNS OUT OF FUEL (OR LEAN MIXTURE).**
CONDITION	NORMAL USE.
Test / Inspection	**1. Check fuel filter ball located in fuel tank. Ball must move freely.** a. Corrosion due to oxidation at installation. *Replace fuel filter.*
	2. Check if lines are perforated or kinked and make sure they do not leak at fittings. a. Lines are too big for their fittings or are improperly rooted. *Replace or properly relocate lines.*
	3. Check fuel pump outlet flow. a. Dirt clogging fuel pump lines or torn membrane. *Clean or replace fuel pump.*
	4. Check carburetor needle valve(s). a. Dirt (varnish, foreign particle) clogging fuel line inlets. *Clean.*
	5. Check main jet. a. Dirt (varnish, foreign particle) accumulation at main jet. *Clean.*
	6. Check float height in carburetor bowl(s). a. Running out of fuel at high speed because float height is too low. *Adjust float lever height according to specification.*
	7. Check H.A.C. system. a. Plugged hole in air jet inlet. *Clean.* b. H.A.C. frozen. *Replace.*

TRANSMISSION AND BRAKE SYSTEM

The following charts are provided to help in diagnosing the probable source of troubles. It should be used as a guideline. Some causes or corrections may not apply to a specific model.

TRANSMISSION

SYMPTOM	**THE SNOWMOBILE ACCELERATES SLOWLY, ESPECIALLY WHEN IT IS STOPPED.**
CONDITION	NORMAL USE.
Test / Inspection	**1. Check drive belt condition.** a. Belt is too narrow (drive belt engagement is higher in drive pulley). *Replace belt if width is 3 mm (1/8") less than a new one (refer to TECHNICAL DATA 10).*
	2. Check distance between pulleys and / or drive belt deflection. a. Distance is too small between pulleys or deflection is too high (drive belt engagement is higher in drive pulley). *Adjust distance between pulleys and / or drive belt deflection according to specifications (refer to TECHNICAL DATA 10).*
	3. Check driven pulley sliding half play. a. Jammed sliding half. *Replace.*
	4. Check spring tension of driven pulley sliding half. a. Sliding half rotation is accelerated when spring tension is too weak. *Adjust according to specifications (refer to TECHNICAL DATA 10).*
	5. Refer to "Vibrations originating from driven pulley" and check items listed.
	6. Check drive pulley spring tension. a. Spring tension is too weak. *Replace.*
SYMPTOM	**ENGINE MAXIMUM RPM IS TOO HIGH AND TOP SPEED IS NOT REACHED.**
CONDITION	NORMAL USE.
Test / Inspection	**1. Check items 1, 2 and 3 of "The snowmobile accelerates slowly, especially when it is stopped".**
	2. Check driven pulley spring tension. a. Spring tension is to stiff. *Adjust according to specification (refer to TECHNICAL DATA 10).*
	3. Check position of the calibration screws. (TRA drive pulley) a. Selected numbers are too high. *Adjust according to specification (refer to TECHNICAL DATA 10).*
	4. Refer to "Vibrations originating from driven pulley" and check items listed.

SYMPTOM	**LOOSENESS IS FELT IN DRIVE SYSTEM WHEN ACCELERATING / DECELERATING.**
CONDITION	NORMAL USE.
Test / Inspection	**1. Check drive chain tension.** a. Drive chain is too loose. Adjust.
	2. Check play of driven pulley Woodruff key (aluminum frame models) a. Worn Woodruff key or keyway. *Replace.*
SYMPTOM	**VIBRATIONS ORIGINATING FROM DRIVEN PULLEY.**
CONDITION	NORMAL USE.
Test / Inspection	**1. Check drive belt.** a. Belt width is uneven at many places. *Replace (refer to TECHNICAL DATA 10 for the part number).*
	2. Check tightening torque of drive pulley screw. a. Moving governor cup. *Retighten bolt.*
	3. Spring cover bolts. a. Spring cover moves and restrains sliding half movement. *Retighten bolts.*
	4. Check spring cover (TRA TYPE) and / or outer half bushings. a. Excessive gap between bushings and inner half shaft, thus restraining sliding half movements. *Replace bushing(s) (IMPORTANT: flare edges of each bushing using appropriate tool (TRA model).*
	5. Check sliding half slider shoes. a. Worn slider shoes. *Replace.*
SYMPTOM	**VIBRATIONS ORIGINATING FROM DRIVEN PULLEY.**
CONDITION	NORMAL USE.
Test / Inspection	**1. Check sliding half play.** a. Sliding half runout. *Replace sliding half bushing.*
	2. Check sliding half and fixed half straightness. a. Sliding half / fixed half runout. *Replace.*
	3. Check cam slider shoes. a. One or two slider shoes out of three are broken. *Replace.*

SYMPTOM	**PULLEYS DO NOT DOWN SHIFT PROPERLY.**
CONDITION	NORMAL USE.
Test / Inspection	**1. Check driven pulley spring tension.** a. Spring tension is too weak. *Adjust according to specifications (refer to TECHNICAL DATA 10).*
	2. Refer to "Vibrations coming from driven pulley" and check items listed.
	3. Check drive pulley bushings (cleanliness, wear, etc.). a. Bushings stick to fixed half pulley shaft. *Clean or replace.*
	4. Check driven pulley spring tension. a. Spring tension is too weak. *Replace.*
SYMPTOM	**IT IS DIFFICULT TO ENGAGE TRANSMISSION IN FORWARD OR REVERSE GEAR.**
CONDITION	NORMAL USE.
Test / Inspection	**1. Check position of gear shift lever adjustment screw.** a. Improper adjustment. *Adjust according to specifications (refer to TRANSMISSION section 05).*
SYMPTOM	**UNEVEN BELT WEAR ON ONE SIDE ONLY.**
CONDITION	NORMAL USE.
Test / Inspection A00D09Y	**1. Check tightening torque of engine mount bolts.** a. Loose engine mount. *Tighten engine mount nuts / bolts equally.*
	2. Check pulley alignment. a. Pulley misalignment. *Align pulleys.*
	3. Check drive belt contact area on pulleys. a. Rough or scratched pulley surfaces. *Repair or replace pulley half.*
	4. Check driven pulley sliding half play. a. Driven pulley bushing worn. *Replace bushing.*

SYMPTOM	**BELT GLAZED EXCESSIVELY OR HAVING BAKED APPEARANCE.**
CONDITION	NORMAL USE.
Test / Inspection 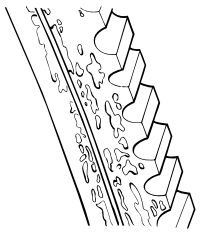 A00D0AY	**1. Check if drive pulley bushings are worn.** a. Insufficient pressure on belt sides. *Replace bushing.*
	2. Check condition of drive pulley fixed half shaft. a. Rusted drive or driven pulley shafts. *Clean shaft with fine steel woof and lubricate with low temperature grease (If applicable only).*
	3. Check if pulley halves are clean. a. Oil on pulley surfaces. *Clean pulley halves.*
	4. Check pulley calibration. a. Improper pulley calibration. *Calibrate according to specification.*
SYMPTOM	**BELT WORN EXCESSIVELY IN TOP WIDTH.**
CONDITION	NORMAL USE.
Test / Inspection 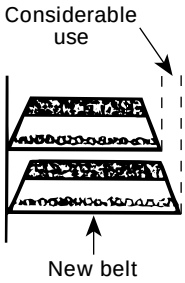 A00D0BY	**1. Check drive pulley.** a. Excessive slippage due to irregular outward actuation movement of drive pulley. *Carry out drive pulley inspection.*
	2. Check drive belt identification number. a. Improper belt angle. (wrong type of belt). *Replace belt with an appropriate drive belt.*
	3. Check drive belt width. a. Considerable use. *Replace belt if 3 mm (1/8”) less than recommended width (see TECHNICAL DATA 10).*

SYMPTOM	**BELT WORN NARROW IN ONE SECTION.**
CONDITION	NORMAL USE.
Test / Inspection	**1. Check track tension / alignment.** a. Frozen or too tight track. *Liberate track from ice or check track tension and alignment.*
	2. Check drive pulley. a. Drive pulley not functionning properly. *Repair or replace drive pulley.*
	3. Check idle speed. a. Engine idle speed too high. *Adjust according to specification.*
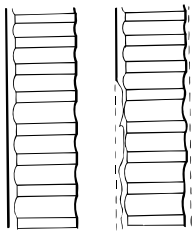	**4. Check drive belt length.** a. Incorrect belt length. *Replace belt with an appropriate drive belt (refer to TECHNICAL DATA 10).*
	5. Check distance between pulleys. a. Incorrect pulley distance. *Readjust according to specification.*
	6. Check belt deflection. a. Deflection is too small. *Adjust according to specification.*
A00D0CY	**7. Check if parking brake is released.** a. Parking brake is engaged. *Release parking brake.*
SYMPTOM	**BELT SIDES WORN CONCAVE.**
CONDITION	NORMAL USE.
Test / Inspection	**1. Check pulley half surfaces.** a. Rough or scratched pulley half surfaces. *Repair or replace.*
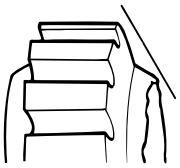	**2. Check drive belt identification number.** a. Unspecified type of belt. *Replace belt with an appropriate drive belt (refer to TECHNICAL DATA 10).*
A00D0DY	
SYMPTOM	**BELT DISINTEGRATION.**
CONDITION	NORMAL USE.
Test / Inspection	**1. Check drive belt identification number.** a. Excessive belt speed. *Using unspecified type of belt. Replace belt with proper type of belt (refer to TECHNICAL DATA 10).*
	2. Check if pulley halves are clean. a. Oil on pulley surfaces. *Clean pulley surfaces with fine emery cloth and wipe clean using alcohol and a cloth.*
A00D0EY	

SYMPTOM	**BELT EDGE CORD BREAKAGE.**
CONDITION	NORMAL USE.
Test / Inspection A00D0FY	**1. Check pulley alignment.** a. Pulley misalignment. *Align pulley according to specifications (refer to TECHNICAL DATA 10).*
SYMPTOM	**FLEX CRACKS BETWEEN COGS.**
CONDITION	NORMAL USE.
Test / Inspection 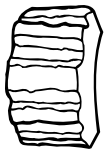 A00D0GY	**1. Check drive belt condition.** a. Considerable use, belt wearing out. *Replace.*
SYMPTOM	**SHEARED COGS, COMPRESSION SECTION FRACTURED OR TORN.**
CONDITION	NORMAL USE.
Test / Inspection 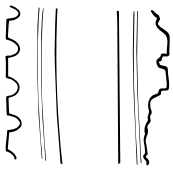 A00D0HY	**1. Check drive belt rotational direction.** a. Improper belt installation. *Replace.*
	2. Check if drive belt rubs against components. a. Belt rubbing on stationary object. *Relocate components.*
	3. Check drive pulley. a. Violent engagement of drive pulley. *Check drive pulley engagement speed, drive pulley bushings and components.*
SYMPTOM	**BELT “FLIP-OVER” AT HIGH SPEED.**
CONDITION	NORMAL USE.
Test / Inspection 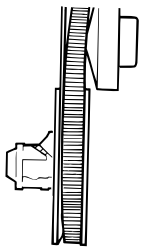 A00D0IY	**1. Check pulley alignment.** a. Pulley misalignment. *Align pulley according to specifications (refer to TECHNICAL DATA 10).*
	2. Check drive belt identification number. a. Using unspecified type of belt. *Replace belt with an appropriate drive belt.*

BRAKE SYSTEM

MECHANICAL BRAKE

SYMPTOM	**BRAKE DOES NOT ADJUST AUTOMATICALLY.**
CONDITION	NORMAL USE.
Test / Inspection	**1. Check ratchet wheel spring.** a. Broken ratchet wheel tag. *Replace.*
	2. Check mobile pad stud. a. Stud rotates in pad. *Replace.*
SYMPTOM	**BRAKE HANDLE DOES NOT RETURN COMPLETELY.**
CONDITION	NORMAL USE.
Test / Inspection	**1. Check brake return spring.** a. Broken return spring. *Replace.*
	2. Check if brake cable moves freely in its housing. a. Brake cable movement is limited due to oxidation or dirt accumulation. *Replace.*
	3. Check distance between brake lever and caliper. a. Distance is too wide. *Adjust according to specifications (refer to TRANSMISSION section 05).*

HYDRAULIC BRAKE

SYMPTOM	**SPONGY BRAKE CONDITION.**
CONDITION	NORMAL USE.
Test / Inspection	*Replace brake fluid and bleed system. If problem still occurs, replace master cylinder.*
SYMPTOM	**BRAKE FLUID LEAKING.**
CONDITION	NORMAL USE.
Test / Inspection	**1. Check for loosen hose connectors.** *Retighten.*
	2. Check for damaged hose, master cylinder and caliper. *Replace part(s) and check for proper mounting.*

MECHANICAL AND HYDRAULIC BRAKES

SYMPTOM	**BRAKE SYSTEM IS NOISY.**
CONDITION	NORMAL USE.
Test / Inspection	**1. Check brake pad thickness.** a. Pads are worn up to wear warner. *Replace.*

ELECTRICAL SYSTEM

The following chart is provided to help in diagnosing the probable source of troubles. It should be used as a guideline. Some causes or corrections may not apply to a specific model.

SYMPTOM	**STARTER DOES NOT TURN.**
CONDITION	NORMAL USE.
Test / Inspection	**1. Check fuse.** a. Burnt fuse. *Check wiring condition and replace fuse.*
	2. Check continuity of starter switch contact points. a. Poor contact of starter switch contact points. *Repair or replace switch.*
	3. Check continuity between starter switch and solenoid. a. Open circuit between starter switch and solenoid switch. *Repair.*
SYMPTOM	**STARTER TURNS ; BUT DOES NOT CRANK THE ENGINE.**
CONDITION	NORMAL USE.
Test / Inspection	**1. Check battery capacity.** a. Shorted battery cell(s). *Replace.*
	2. Check battery charge. a. Weak battery. *Recharge.*
	3. Check wire connection. a. Inadequate connection (too much resistance). *Clean and reconnect.*
	4. Check solenoid switch contact disc. a. Burnt or poor contact of solenoid switch contact disc. *Replace solenoid switch.*
	5. Check continuity of solenoid switch pull-in winding. a. Open circuit of solenoid switch pull-in winding. *Replace solenoid switch.*
	6. Check continuity of solenoid switch hold-in winding. a. Open circuit of solenoid switch hold-in winding. *Replace solenoid switch.*
	7. Check brushes. a. Poor contact of brushes. *Replace brushes.*
	8. Check commutator. a. Burnt commutator. *Turn commutator in lathe.*

	9. Check height of commutator mica. a.Commutator mica too high. *Undercut mica.*
	10. Check field coil resistance. a.Shorted field coil. *Repair or replace yoke.*
	11. Check armature resistance. a.Shorted armature. *Repair or replace armature.*
	12. Check tension of brush springs. a.Weak brush spring tension. *Replace springs.*
	13. Check yoke assembly magnets. a.Weak magnets. *Replace yoke assembly.*
	14. Check if bushings are worn. a.Worn bushings. *Replace bushings.*
SYMPTOM	**STARTER TURNS, BUT OVERRUNNING CLUTCH PINION DOES NOT MESH WITH RING GEAR.**
CONDITION	NORMAL USE.
Test / Inspection	**1. Check clutch pinion gear.** a.Worn clutch pinion gear. *Replace clutch.*
	2. Check clutch. a.Defective clutch. *Replace clutch.*
	3. Check movement of clutch on splines. a.Poor movement of clutch on splines. *Clean and correct.*
	4. Check clutch bushing. a.Worn clutch bushing. *Replace clutch.*
	5. Check starter bushings. a.Worn starter bushing(s). *Replace bushing(s).*
	6. Check ring gear. a.Worn ring gear. *Replace ring gear.*

SYMPTOM	**ELECTRIC STARTER KEEPS TURNING WHEN ENGINE IS STARTED.**
CONDITION	NORMAL USE.
Test / Inspection	**1. Check clutch.** a. Jammed clutch pinion gear. *Replace or clean.*
	2. Check movement of clutch on splines. a. Clutch is stuck on splines. *Clean.*
	3. Check ignition switch. a. Ignition switch does not return to its ON position or is short-circuited. *Adjust retaining screw or replace switch.*
	4. Check solenoid. a. Shorted solenoid switch winding(s). *Replace solenoid switch.*
	5. Check solenoid switch contacts. a. Melted solenoid switch contacts. *Replace solenoid switch.*
	6. Check starter switch. a. Starter switch returns poorly. *Replace ignition switch.*
SYMPTOM	**NOISE OCCURENCE WHEN STARTING ENGINE.**
CONDITION	NORMAL USE.
Test / Inspection	**1. Check if ring gear is well mounted to drive pulley inner half.** a. Loose and / or broken bolts. *Retighten bolts using thread locker or replace ring gear and drive pulley inner half.*
SYMPTOM	**ELECTRIC STARTER SOMETIMES DOES NOT WORK WHEN TURNING IGNITION SWITCH.**
CONDITION	NORMAL USE.
Test / Inspection	**1. Check battery cables and starter wires.** a. Corroded and / or loose connection(s). *Clean and / or retighten.*
	2. Check fuse. a. Oxidized fuse. *Clean.*
	3. Check wiring harness connections. a. Oxidized connections. *Clean or replace defective terminals.*
	4. Check ignition switch. a. Defective contacts in ignition switch. *Replace.*
	5. Check solenoid of electric starter. a. Shorted solenoid wiring harness or eroded contact washer. *Replace.*

SYMPTOM	**HEADLAMP NOT LIGHTING.**
CONDITION	WHITE BULB.
Test / Inspection	**1. Check bulb.** a. Gas leak. *Replace bulb.*
CONDITION	BROKEN ELEMENT.
Test / Inspection	**1. Check for loose headlamp housing and bulb socket.** a. Vibration problem. *Tighten headlamp mounting screws. Lock bulb in socket. Replace bulb.*
CONDITION	MELTED FILAMENT (ENDS OF ELEMENT HOLDER) AND BLACK BULB.
Test / Inspection	**1. Check voltage at headlamp at different speeds. It must not be above 15 VAC.** NOTE : If quartz halogen bulb is involved, ensure that voltage regulator P/N 410 9089 00 is used. a. Excessive voltage in lighting circuit. *Replace voltage regulator and ensure proper grounding. Retest.*
SYMPTOM	**HEADLAMP DIMING.**
CONDITION	NORMAL USE.
Test / Inspection	**1. Check voltage at headlamp at different speeds. It must not be below 11 VAC.** a. Insufficient voltage in lighting circuit. *Replace voltage regulator and retest.*
	2. Visually inspect wiring harness for damaged and / or melted wires and / or bad wire terminal crimping and / or connections. a. Heating, rotating or sharp part in contact with harness. Improper harness routing. *Repair / replace damaged wires and / or terminals. Reroute harness where necessary.*
	3. On manual start models : Verify if there is an interconnection between AC and DC current. a. Rusted or loose retaining screws. *Clean, apply lithium grease (LMZ1) and firmly tighten screws.*
	4. On electrical start models : Verify if there is an interconnection between AC and DC current. a. Faulty installation of optional equipment. *Find optional equipment connected directly to DC ground (BK wire or chassis) or to any DC hot wire (RD, RD / BL). Disconnect and reconnect to AC current (YL and YL / BK wires).*
	5. Verify of optional electric accessories are overloading the magneto / generator. a. Excessive electrical load to magneto / generator. *Reduce the electrical load by removing excess accessories. Reconnect as recommended by manufacturer.*
	6. Hot Grips brand : Verify if they were connected in parallel by mistake. a. Excessive electrical load to magneto / generator. *Reconnect as recommended by manufacturer.*
	7. Bombardier heating grips : Verify if the return wires of the elements were grounded to the chassis by mistake. a. Faulty installation of optional equipment. *Reconnect as recommended by manufacturer.*

	8. Verify if heating grips installation overloads the magneto / generator capacity (ex: Élan). a. Excessive electrical load to magneto / generator. *Reduce the electrical load by removing accessories.*
SYMPTOM	**FALSE FUEL AND / OR TEMPERATURE GAUGE READINGS.**
CONDITION	NORMAL USE.
Test / Inspection	**1. Verify if gauge was connected on DC current by mistake (in case of optional installation).** a. Faulty installation of optional equipment. *Find optional wires connected directly to DC ground (BK wire to chassis) or to any DC hot wire (RD, RD / BL). Disconnect and reconnect to AC current (YL and YL / BK wires).*
	2. Verify sender unit for free movement and / or correct arm position. a. Defective or damaged part. *Correct or replace sender unit.*
	3. Verify sender unit / gauge wiring harness condition. a. Heating, rotating or sharp part in contact with harness. Improper harness routing. *Replace or repair damaged wires. Reroute where necessary.*
SYMPTOM	**ENGINES DOES NOT START – NO SPARK AT SPARK PLUG.**
CONDITION	AT ENGINE CRANKING.
Test / Inspection	**1. Verify spark plug condition.** a. Defective, improperly set, worn-out, fouled. *Identify source of problem and correct. Replace spark plug.*
	2. Verify spark plug cap resistance with an ohmmeter. a. Defective part. *Replace cap.*
	3. Verify if problem originated from electrical system wiring harness and / or accessories and / or ignition cut-out switches by unplugging the 4-wire connectors between the magneto / generator and the vehicle wiring harness. Check condition of connectors. a. Heating, rotating or sharp part in contact with harness. Improper harness routing. Defective switch(es). Corroded connector terminals. *Replace or repair damaged wires. Reroute where necessary. Replace defective switch(es). Clean terminals and apply silicone dielectric grease.*
	4. Verify trigger coil resistance with an ohmmeter and connector condition. a. Defective coil. Corroded connector terminals. *Replace defective coil. Clean terminals and apply silicone dielectric grease.*
	5. Verify condition of ignition coil. a. Mechanically damaged part. Vibration problem. Electrically damaged part. *Tighten mounting screws. Replace ignition coil.*
	6. Verify condition of ignition generator coils. a. Mechanically damaged part. Vibration problem. Electrically damaged part. *Tighten mounting screws. Replace coils.*
	7. Verify CDI (Capacitor discharge ignition) module. a. Mechanically damaged part. Vibration problem. Electrically damaged part. *Tighten mounting screws. Replace CDI module, retest and verify ignition timing.*

SYMPTOM	**ENGINE STALLS.**
CONDITION	AT LOW SPEED.
Test / Inspection	**1. Verify items 4, 5 and 6 above.**
SYMPTOM	**IRREGULAR ENGINE SPEED.**
CONDITION	AT HIGH SPEED.
Test / Inspection	**1. Verify items 4, 5 and 6 above.**
CONDITION	AT LOW SPEED.
Test / Inspection	**1. Verify items 4 and 5 above and trigger coil / flywheel protrusion air-gap.** a. Air-gap too large. *Readjust air-gap.*
SYMPTOM	**ENGINE IS MISFIRING – ERRATIC SPARK AT SPARK PLUG.**
CONDITION	RIDING ON WET SNOW.
Test / Inspection	**1. Verify if spark plug wires and / or spark plug cap seals are sealing-out moisture.** a. Defective wires and / or seals. *Replace defective part.*
	2. Verify if ignition system wiring harness connectors are in good condition and / or are sealing-out moisture. a. Loose connectors, corroded terminals or defective parts. *Clean terminals and apply silicone dielectric grease. Replace defective parts.*
CONDITION	NORMAL USE.
Test / Inspection	**1. Verify misfiring by observing flash of stroboscopic timing light ; unplug connectors between magneto / generator and vehicle wiring harness to isolate problem. Check condition of connectors.** a. Defective spark plug and / or cables / caps. Defective electrical system wiring harness and / or accessories and / ignition cut-out switches. Condition of connector terminals. *Replace defective parts and / or repair damaged wires. Replace defective switch(es). Clean terminals and apply silicone dielectric grease.*
CONDITION	**RIDING IN DEEP AND THICK SNOW.**
Test / Inspection	**1. Perform all verifications outlined under "Engine does not start – no spark at spark plug".**
	2. Verify spark plug(s). Proceed with spark plug analysis in order to identify source of problem. a. Defective and / or worn spark plug(s) and / or cable(s) and / or cap(s). *Replace defective part(s). Proceed with ignition system testing procedures. Perform engine analysis.*

SYMPTOM	**FOULED (BLACK) SPARK PLUG TIP.**
CONDITION	NORMAL USE.
Test / Inspection	**1. Check carburetor(s).** a. Carburetion is too rich. *Adjust according to specifications (refer to TECHNICAL DATA 10).*
	2. Check injection oil consumption. a. Injection pump flow is too high. *Adjust according to specification or replace.*
	3. Check oil quality. a. Poor oil quality that creates deposits. *Use Bombardier oil.*
	4. Check engine compression. a. Leaking piston ring(s). *Replace.*
SYMPTOM	**SPARK PLUG TIP(S) IS (ARE) LIGHT GREY.**
CONDITION	NORMAL USE.
Test / Inspection	**1. Refer to "Engine slows down or stops at high RPM" and check items listed.**
	2. Check spark plug heat range. a. Spark plug heat range is too high. *Replace by Bombardier's recommended spark plug (refer to TECHNICAL DATA 10).*
	3. Check if air intake silencer leaks. a. Air surplus coming from opening(s) located between halves. *Seal.*
	4. Check carburetor adapter collars. a. Loose collar(s). *Tighten.*
	5. Check carburetor adapter(s). a. Cracked or deformed adapter(s). *Replace.*
SYMPTOM	**BRAKE LIGHT REMAINS ON.**
CONDITION	NORMAL USE.
Test / Inspection	**1. Check if bulb is properly installed.** a. Bulb is not installed correctly (contact elements are reversed. *Install bulb correctly.*
	2. Check brake switch. a. Switch contact remains closed. *Adjust brake cable or brake switch.*

SYMPTOM	**REAR LIGHT BULB FLASHES.**
CONDITION	NORMAL USE.
Test / Inspection	**1. Check bulb tightness in housing.** a. Looseness at bulb contact elements. *Install bulb correctly.*
	2. Check if rear light is properly connected. a. Connector housing is partially connected. *Install connector housing properly.*
	3. Check continuity of wires. a. Corroded terminals and / or broken wires. *Replace terminal(s) or crimp defective wires.*
SYMPTOM	**TACHOMETER DOES NOT WORK.**
CONDITION	NORMAL USE.
Test / Inspection	**1. Check fuse.** a. Burnt fuse. *Replace.*
	2. Check continuity of wires. a. Corroded terminals and / or broken wires. *Replace terminal(s) or crimp defective wires.*

SUSPENSION SYSTEM AND TRACK

The following chart is provided to help in diagnosing the probable source of troubles. It should be used as a guideline. Some causes or corrections may not apply to a specific model.

SYMPTOM	**REAR SUSPENSION BOTTOMS OUT.**
CONDITION	NORMAL USE.
Test / Inspection	**1. Check rear spring preload or rear arm spring preload.** a. Spring tension is too low. *Increase rear arm spring preload.*
SYMPTOM	**SLIDER SHOES WEAR OUT PREMATURELY.**
CONDITION	NORMAL USE.
Test / Inspection	**1. Check track tension.** a. Pressure is too great on slider shoes. *Adjust according to specifications (refer to TECHNICAL DATA 10). Replace defective parts.*
SYMPTOM	**TRACK CLEATS BECOME BLUE.**
CONDITION	NORMAL USE.
Test / Inspection	**1. Check track tension.** a. Pressure is too great on cleats. *Adjust according to specifications (refer to TECHNICAL DATA 10).*
	2. Check slider shoes and / or suspension retaining screws. a. Worn slider shoes or lost retaining screws. *Replace defective parts and / or tighten loose screws.*
SYMPTOM	**NOISE OR VIBRATIONS ORIGINATING FROM THE TRACK.**
CONDITION	NORMAL USE.
Test / Inspection	**1. Check slide suspension retaining bolts.** a. Missing bolt(s) allowing movement of certain components which in turn interfere with track rotation. *Replace missing bolt(s).*
	2. Check condition of idler wheel(s). a. Idle wheel rubber is damaged. *Replace.*
	3. Check guide cleats. a. Top portion of guide cleat(s) is bent. *Replace.*
	4. Check sprockets. a. One or various teeth of drive shaft sprockets are broken. *Replace sprocket(s).*
	5. Check track rods and / or internal traction teeth. a. One or various track rods and / or teeth are broken. *Replace track.*

SYMPTOM	**DERAILING TRACK.**
CONDITION	NORMAL USE.
Test / Inspection	**1. Check track tension.** a. Track is too loose. *Adjust.*
	2. Check if track and slider shoes are properly aligned. a. Improper alignment. *Adjust.*
SYMPTOM	**REAR SUSPENSION IS LOW OR TOO STIFF.**
CONDITION	NORMAL USE.
Test / Inspection	**1. Check track tension.** a. Track is too tight. *Adjust.*
	2. Check if axles are properly lubricated. a. Improper lubrication and / or contaminated grease (sticky oil sludge). *Clean and / or lubricate.*
	3. Check rear spring preload. a. Insufficient preload. *Increase preload using shock adjustment cams.*
SYMPTOM	**WHEN HANDLEBAR IS TURNED, SNOWMOBILE TURNS BEARLY OR NOT AT ALL.**
CONDITION	NORMAL USE.
Test / Inspection	**1. Check ski runner condition.** a. Worn ski runners. *Replace.*
	2. Check tension of front spring adjustment cams. a. Insufficient ski pressure on the ground. *Increase spring preload.*
	3. Check if front arm stopper strap is too long. a. Insufficient ski pressure on the ground. *Shorten stopper strap.*
	4. Check front arm spring tension. a. Insufficient ski pressure on the ground. *Slacken spring tension.*

SYMPTOM	**HANDLE BAR IS DIFFICULT TO TURN.**
CONDITION	NORMAL USE.
Test / Inspection	**1. Check position of front spring adjustment cams.** a. More pressure on the ground when cam increases spring preload. *Reduce front spring preload.*
	2. Check position of stopper strap. a. More weight when stopper strap is short. *Lengthen front arm stopper strap.*
	3. Check position of front arm shock adjustment cam(s). a. When spring tension is weak, more weight is transferred to the skis. *Increase spring preload.*
	4. Check condition of ball joints. a. Corrosion restrains movement. *Lubricate or replace.*
	5. Check swing arm camber (liquid cooled models). a. Too much ski leg inclination. *Adjust camber to 0° ± .5°.*
SYMPTOM	**THE SNOWMOBILE IS UNSTABLE (IT MOVES FROM LEFT TO RIGHT AND VICE VERSA).**
CONDITION	NORMAL USE.
Test / Inspection	**1. Check ski runner condition.** a. Worn or bent ski runners. *Replace ski runners.*
	2. Check ski alignment. a. Improper ski alignment. *Align skis in order to obtain proper toe-out (opening) (to adjust, refer to section 08 STEERING system).*
	3. Check if bushings are too loose in steering system. a. Bushings are too loose. *Replace.*

TABLE OF CONTENT

503 ENGINE TYPE **04-01-1**

ENGINE REMOVAL AND INSTALLATION **04-01-1**
SKANDIC WT *04-01-1*
ENGINE REMOVAL AND INSTALLATION 04-01-2

TOP END **04-01-3**
CLEANING 04-01-4
DISASSEMBLY 04-01-4
INSPECTION 04-01-4
ASSEMBLY 04-01-4

BOTTOM END **04-01-7**
CLEANING 04-01-8
DISASSEMBLY 04-01-8
INSPECTION 04-01-8
ASSEMBLY 04-01-8

454, 583 AND 670 ENGINE TYPES **04-02-1**

ENGINE SUPPORT AND MUFFLER **04-02-1**
ALL MODELS *04-02-1*
REMOVAL FROM VEHICLE 04-02-2
ENGINE SUPPORT AND MUFFLER DISASSEMBLY AND ASSEMBLY 04-02-2
INSTALLATION ON VEHICLE 04-02-2

TOP END **04-02-3**
CLEANING 04-02-4
DISASSEMBLY 04-02-4
INSPECTION 04-02-4
ASSEMBLY 04-02-5

BOTTOM END **04-02-8**
CLEANING 04-02-9
DISASSEMBLY 04-02-9
INSPECTION 04-02-9
ASSEMBLY 04-02-9

AND 779 ENGINE TYPES **04-03-1**

NGINE REMOVAL AND INSTALLATION **04-03-1**
ORMULA III / III LT AND MACH Z / Z LT *04-03-1*
EMOVAL FROM VEHICLE 04-03-2
NSTALLATION ON VEHICLE 04-03-2

OP END **04-03-3**
OMPONENT REMOVAL 04-03-4
LEANING 04-03-4
ISASSEMBLY 04-03-4
NSPECTION 04-03-4
SSEMBLY 04-03-5

OTTOM END **04-03-8**
LEANING 04-03-9
ISASSEMBLY 04-03-9
NSPECTION 04-03-9
SSEMBLY 04-03-9

K TEST AND ENGINE DIMENSION MEASUREMENT **04-04-1**
SERIES AND F SERIES *04-04-1*

EAK TEST **04-04-1**
REPARATION 04-04-1
ROCEDURE 04-04-1
INALIZING REASSEMBLY 04-04-4
OOLING SYSTEM LEAK TEST 04-04-4

NGINE DIMENSION MEASUREMENT **04-04-5**
YLINDER TAPER 04-04-5
YLINDER OUT OF ROUND 04-04-5
YLINDER / PISTON CLEARANCE 04-04-5
ING / PISTON GROOVE CLEARANCE 04-04-6
ING END GAP 04-04-6
RANKSHAFT DEFLECTION 04-04-6
ONNECTING ROD BIG END AXIAL PLAY 04-04-7
ONNECTING ROD / PISTON PIN CLEARANCE 04-04-8
ONNECTING ROD / CRANKPIN CLEARANCE 04-04-8
RANKSHAFT END-PLAY 04-04-8
RANKCASE / ROTARY VALVE GAP 04-04-10
HECKING SURFACE FLATNESS 04-04-11
ECTIFYING SURFACES 04-04-11
HECKING CRANKSHAFT ALIGNMENT 04-04-11

CDI SYSTEM **04-05-1**

NIPPONDENSO TRIGGER COIL IGNITION SYSTEM **04-05-1**
454, 583, AND 670 ENGINES *04-05-1*
599 AND 779 ENGINES *04-05-2*
CLEANING 04-05-3
DISASSEMBLY 04-05-3
ASSEMBLY 04-05-5

DUCATI IGNITION SYSTEM **04-05-6**
503 ENGINE *04-05-6*
CLEANING 04-05-7
DISASSEMBLY 04-05-7
REPAIR 04-05-7
ASSEMBLY 04-05-8

OIL INJECTION SYSTEM **04-06-1**

OIL INJECTION PUMP **04-06-1**
454, 583 AND 670 ENGINES *04-06-1*
503 ENGINE *04-06-2*
599 AND 779 ENGINES *04-06-3*
OIL PUMP IDENTIFICATION 04-06-4
CLEANING 04-06-4
DISASSEMBLY 04-06-4
ASSEMBLY 04-06-4
ADJUSTMENT 04-06-5
CHECKING OPERATION 04-06-6

AXIAL FAN COOLING SYSTEM **04-07-1**
503 ENGINE *04-07-1*
CLEANING 04-07-2
DISASSEMBLY AND ASSEMBLY 04-07-2

LIQUID COOLING SYSTEM **04-08-1**
S SERIES WITH 454, 583 AND 670 ENGINES *04-08-1*
F SERIES WITH 583 AND 670 ENGINES *04-08-2*
599 AND 779 ENGINES *04-08-3*
INSPECTION 04-08-4
DRAINING THE SYSTEM 04-08-4
DISASSEMBLY AND ASSEMBLY 04-08-4
COOLING SYSTEM REFILLING PROCEDURE 04-08-5

TARY VALVE, COOLANT PUMP AND RESERVOIR **04-09-1**
54, 583 AND 670 ENGINES *04-09-1*
ENERAL 04-09-2
LEANING 04-09-2
ISASSEMBLY 04-09-2
NSPECTION 04-09-3
SSEMBLY 04-09-3
OTARY VALVE TIMING 04-09-6

VIND STARTER **04-10-1**
LL MODELS *04-10-1*
EMOVAL 04-10-2
ISASSEMBLY 04-10-2
SSEMBLY 04-10-2
NSTALLATION 04-10-4

RBURETOR AND FUEL PUMP **04-11-1**

MIKUNI FLOAT CARBURETOR **04-11-1**
EMOVAL 04-11-4
LEANING AND INSPECTION 04-11-4
ISASSEMBLY AND ASSEMBLY 04-11-4
ARBURETOR FLOAT LEVEL ADJUSTMENT 04-11-5
NSTALLATION 04-11-6
ARBURETOR ADJUSTMENTS 04-11-7
RELIMINARY IDLE SPEED ADJUSTMENT 04-11-9
LE SPEED FINAL ADJUSTMENT 04-11-9
HOKE 04-11-10
IAC SYSTEM 04-11-11

IAC SYSTEM **04-11-12**

UEL PUMP **04-11-13**
EMOVAL 04-11-14
UMP VERIFICATION 04-11-14
LEANING AND INSPECTION 04-11-14
NSTALLATION 04-11-14

L TANK AND THROTTLE CABLE **04-12-1**
LL MODELS *04-12-1*

503 ENGINE TYPE

ENGINE REMOVAL AND INSTALLATION

Skandic WT

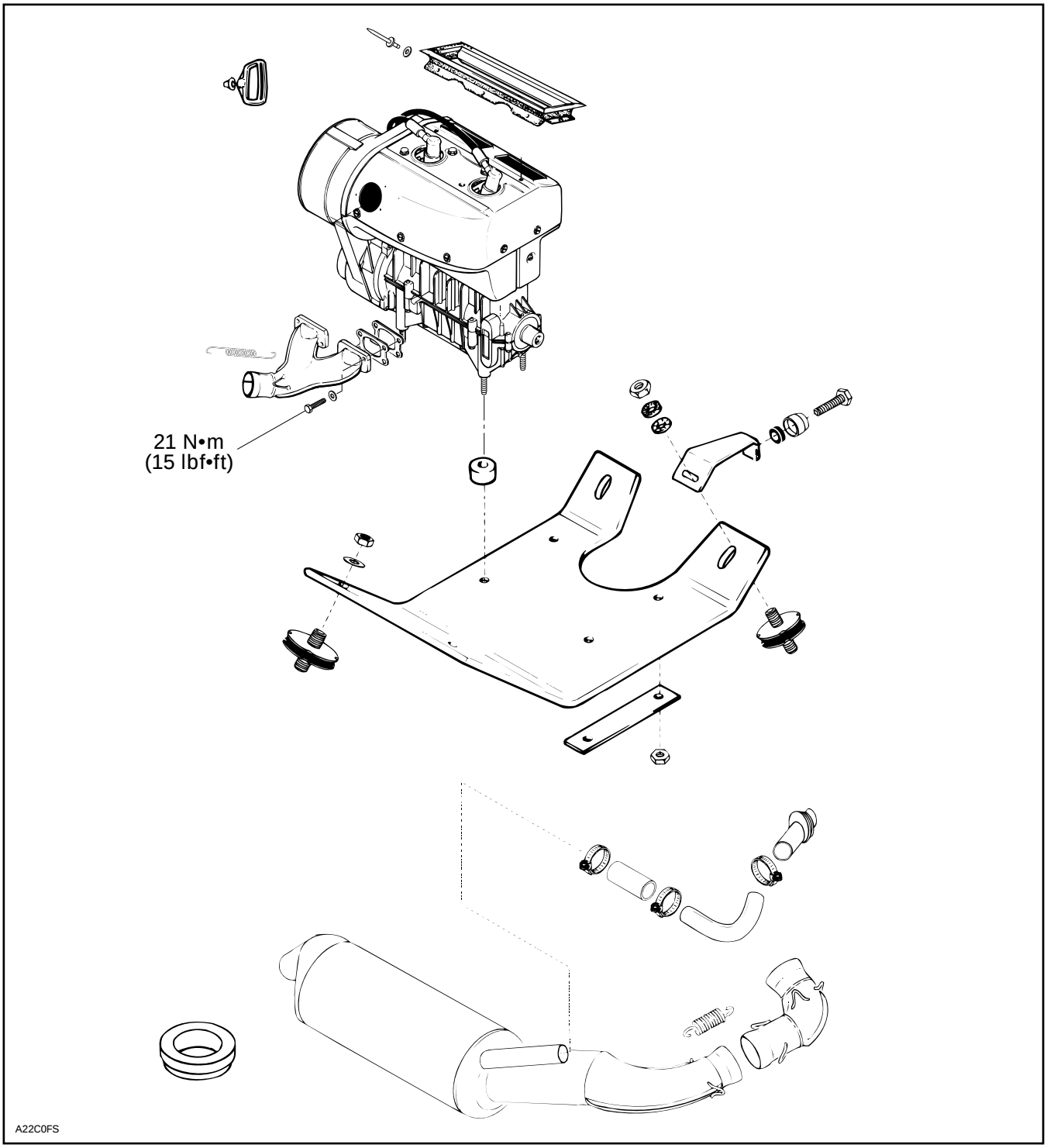

ENGINE REMOVAL AND INSTALLATION

Disconnect or remove the following :

◆ WARNING : Before disconnecting any electrical wire in starter system always first disconnect the BLACK negative battery cable (on electric starting models).

- negative cable from battery
- Positive cable and wire from starter then from engine
- belt guard
- drive belt
- drive pulley using appropriate puller, refer to 05-02 DRIVE PULLEY
- air silencer and carburetor
- impulse line from engine crankcase
- 4-connector housing
- exhaust pipe and exhaust cooling hose
- oil pump inlet tube and plug it
- oil pump cable
- rewind cable : remove starting grip and tie a knot

TOP END

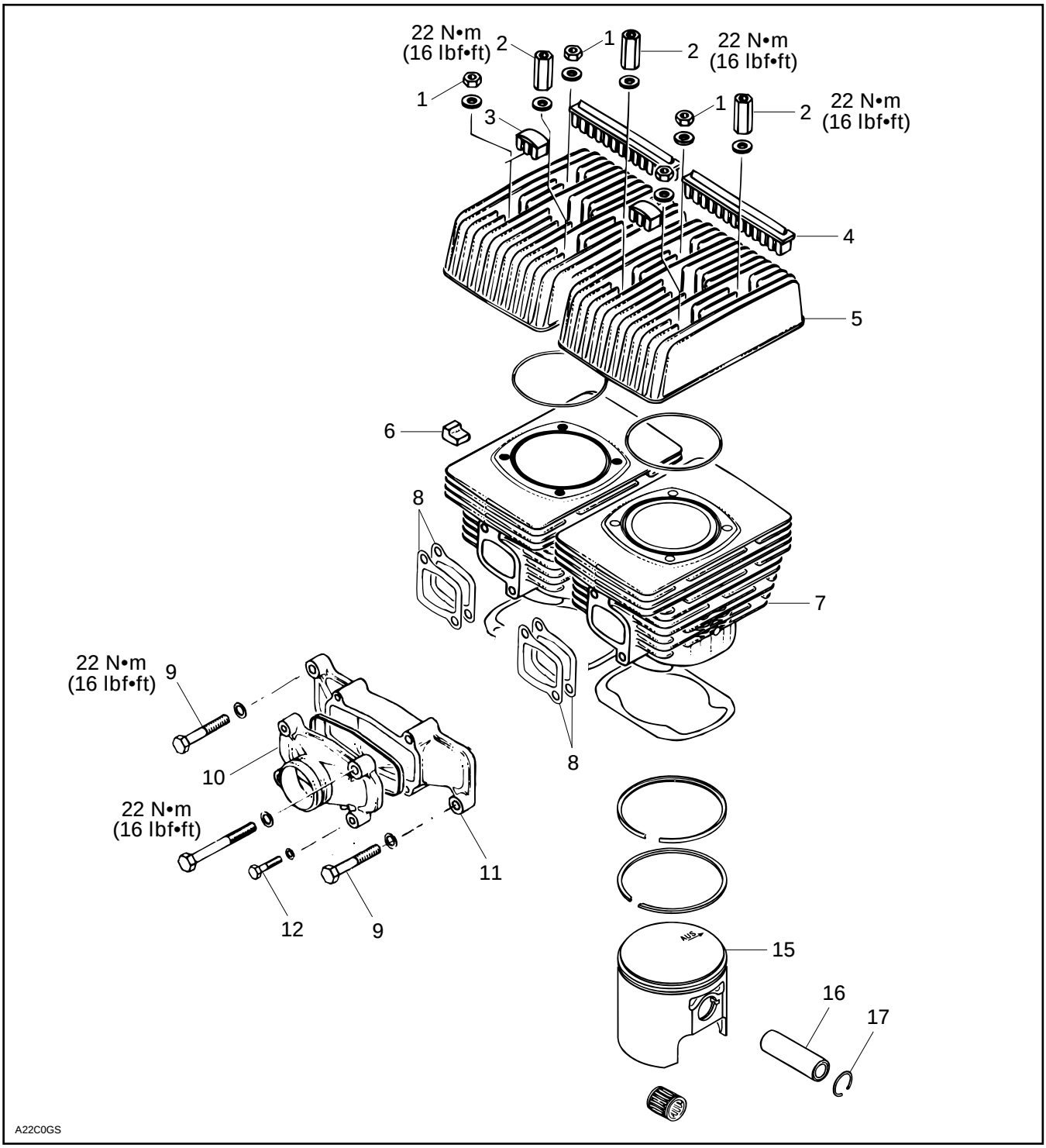
22 N•m
(16 lbf•ft)
2
1
2
22 N•m
(16 lbf•ft)
1
3
1
2
22 N•m
(16 lbf•ft)
4
5
6
8
7
22 N•m
(16 lbf•ft)
9
10
8
22 N•m
(16 lbf•ft)
11
12
9
15
16
17
A22C0GS

NOTE : The following procedures can be done without removing the engine from chassis.

CLEANING

Discard all gaskets. Use Gasket Remover (P / N 413 7085 00) to clean mating surfaces.

Clean all metal components in a non-ferrous metal cleaner.

Scrape off carbon formation from cylinder exhaust port, cylinder head and piston dome using a wooden spatula.

NOTE : The letters “AUS” and arrow on the piston dome must be visible after cleaning.

Clean the piston ring grooves with a groove cleaner tool, or with a piece of broken ring.

DISASSEMBLY

15,16,17, Piston, Piston Pin and Circlip

Place a clean cloth over crankcase to prevent circlips from falling into crankcase. Then with a pointed tool inserted in piston notch, remove circlip from piston.

To remove piston pin, use piston pin puller (P / N 529 0210 00) as follows :

– Fully screw puller handle.
– Insert puller end into piston pin.
– Screw (LH threads) extracting nut.
– Hold puller firmly and rotate puller handle counterclockwise to pull piston pin.

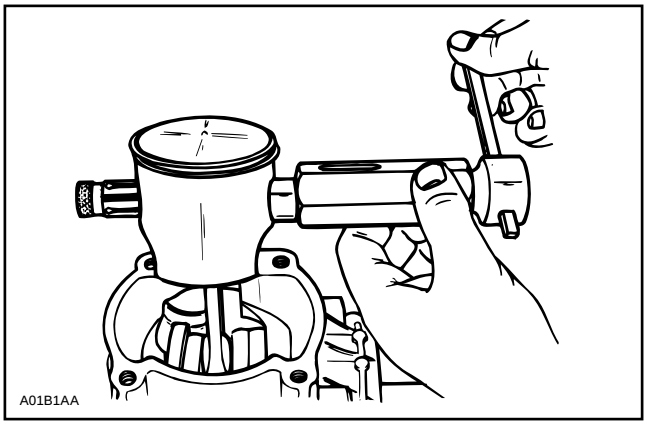

NOTE : The PTO cylinder or fan housing have to be removed to give access to MAG piston pin with the puller.

NOTE : 0.25 and 0.5 mm oversized piston and rings are available if necessary.

INSPECTION

Refer to ENGINE DIMENSIONS MEASUREMENT 04-04.

ASSEMBLY

15,17, Piston and Circlip

At assembly, place the pistons over the connecting rods with the letters “AUS” (over an arrow on the piston dome) facing in the direction of the exhaust port.

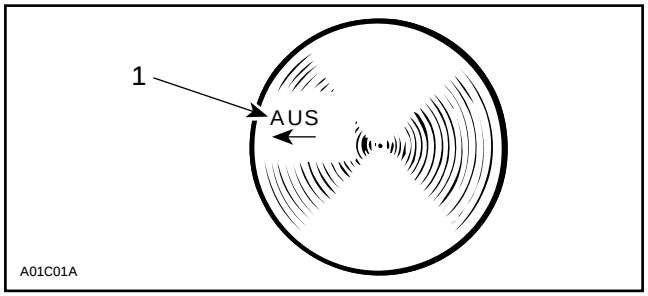

1. Exhaust

NOTE : Spare parts pistons and cylinders are identified with a green or red dot, it is important to match the piston with the cylinder of the same color.

To center the piston pin with the connecting rod bearing, use centering tool (P / N 529 0091 00)

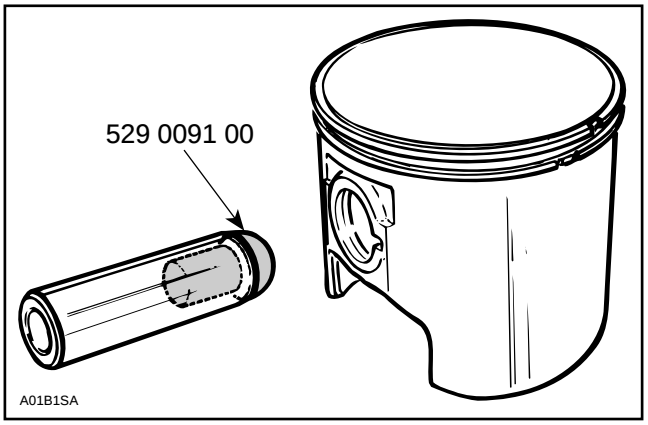

NOTE : The circlip on the opposite side can be installed before pin installation, the tool will easily go out.

To minimize the effect of acceleration forces on circlip, install each circlip so the circlip break is at 6 o'clock as illustrated. Use piston circlip installer (P / N 529 0086 00).

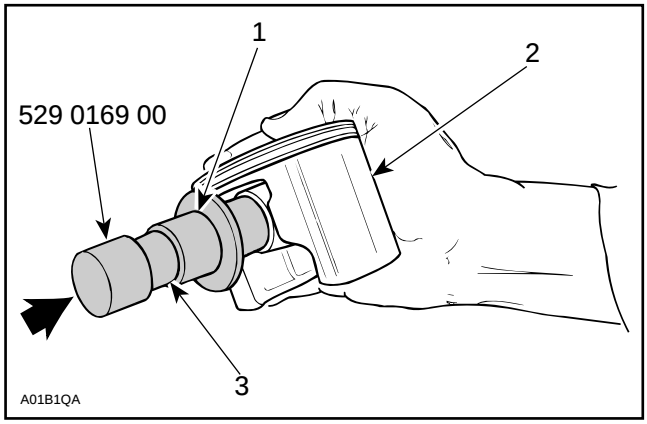

1. *Place circlip in*
2. *Restrain*
3. *Oil*

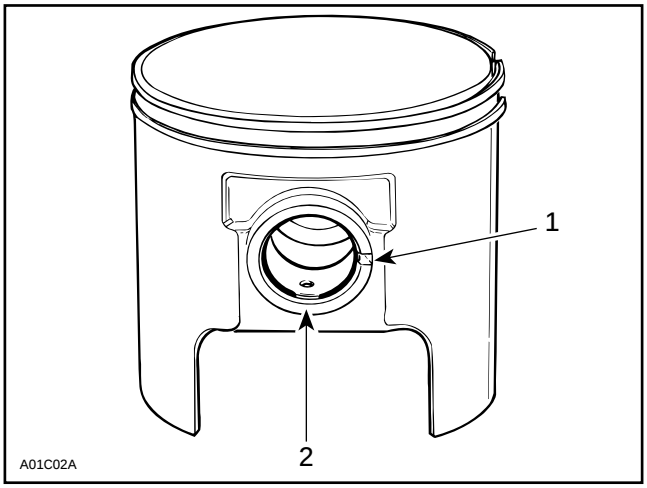

1. *Piston notch*
2. *Circlip break at 6 o'clock*

CAUTION : Circlips must not move freely in the groove after installation. If so, replace them.

7,15, Cylinder and Piston

NOTE : Be sure to restore the chamfer around all cylinder sleeve port openings.

Before inserting piston in cylinder, lubricate the cylinder with new injection oil or equivalent.

Install proper ring compressor on piston assembly.

ENGINE TYPE	RING COMPRESSOR P /N
503	420 8769 70

NOTE : The ring compressor will not fit on over size pistons.

5,7,11, Cylinder Head, Cylinder and Intake Socket

Check flatness of intake sockets.

Refer to ENGINE DIMENSION MEASUREMENT 04-04 and look for checking surface flatness.

At cylinder and / or cylinder head installation, use aligning tool or exhaust manifold itself to ensure sealing of intake manifold and exhaust before tightening cylinder head nuts.

ENGINE TYPE	ALIGNING TOOL P / N
503	420 8761 71

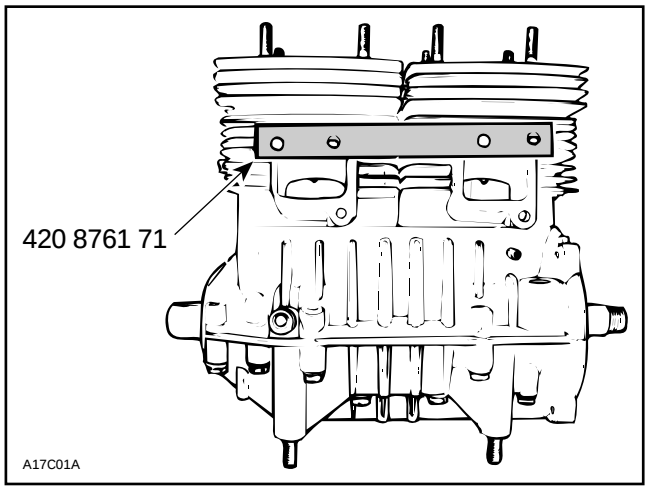

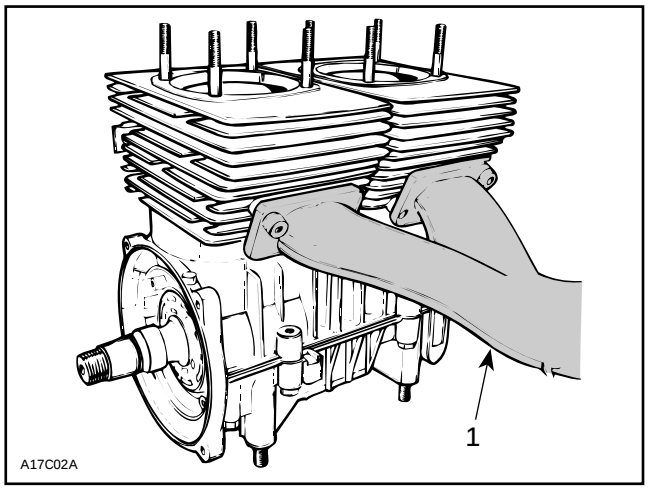

1. Or use exhaust manifold to align cylinders

3,4,6, Noise Damper

For proper position of noise dampers, refer to the following illustrations.

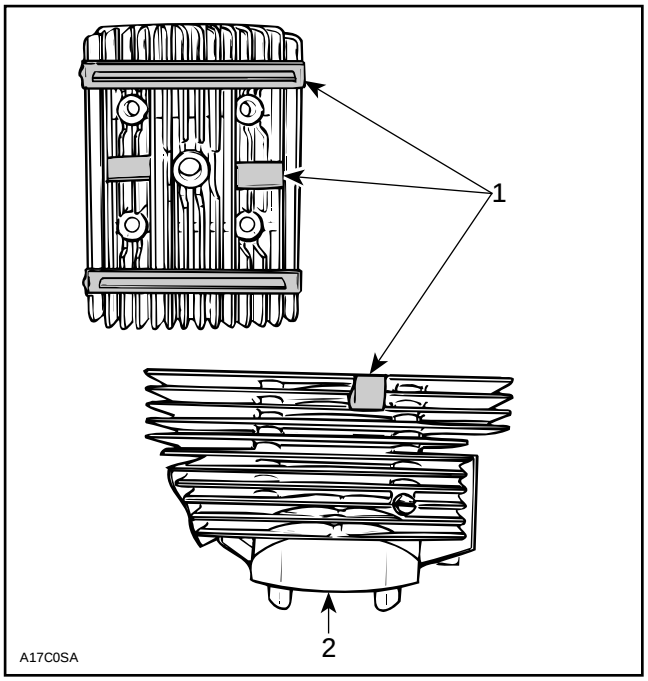

1. Noise dampers
2. PTO side cylinder

1,2, Nut and Distance Nut

Position distance nuts as illustrated.

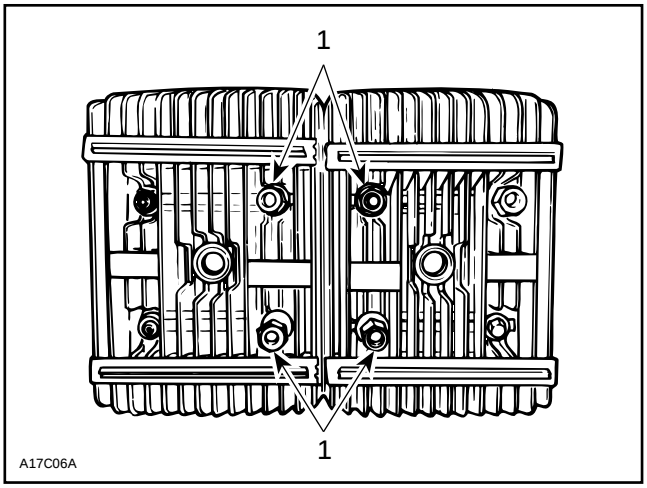

503 ENGINE TYPE
1. Distance nuts

Cross torque cylinder head nuts to 22 N•m (16 lbf•ft) ; torque each cylinder head individually.

Install armature plate, fan housing and then air deflector.

8, Intake Manifold Gasket

Install a gasket on each side of the air deflector.

9,12,14, Intake Manifold Bolt

Torque intake manifold bolts to 22 N•m (16 lbf•ft).

BOTTOM END

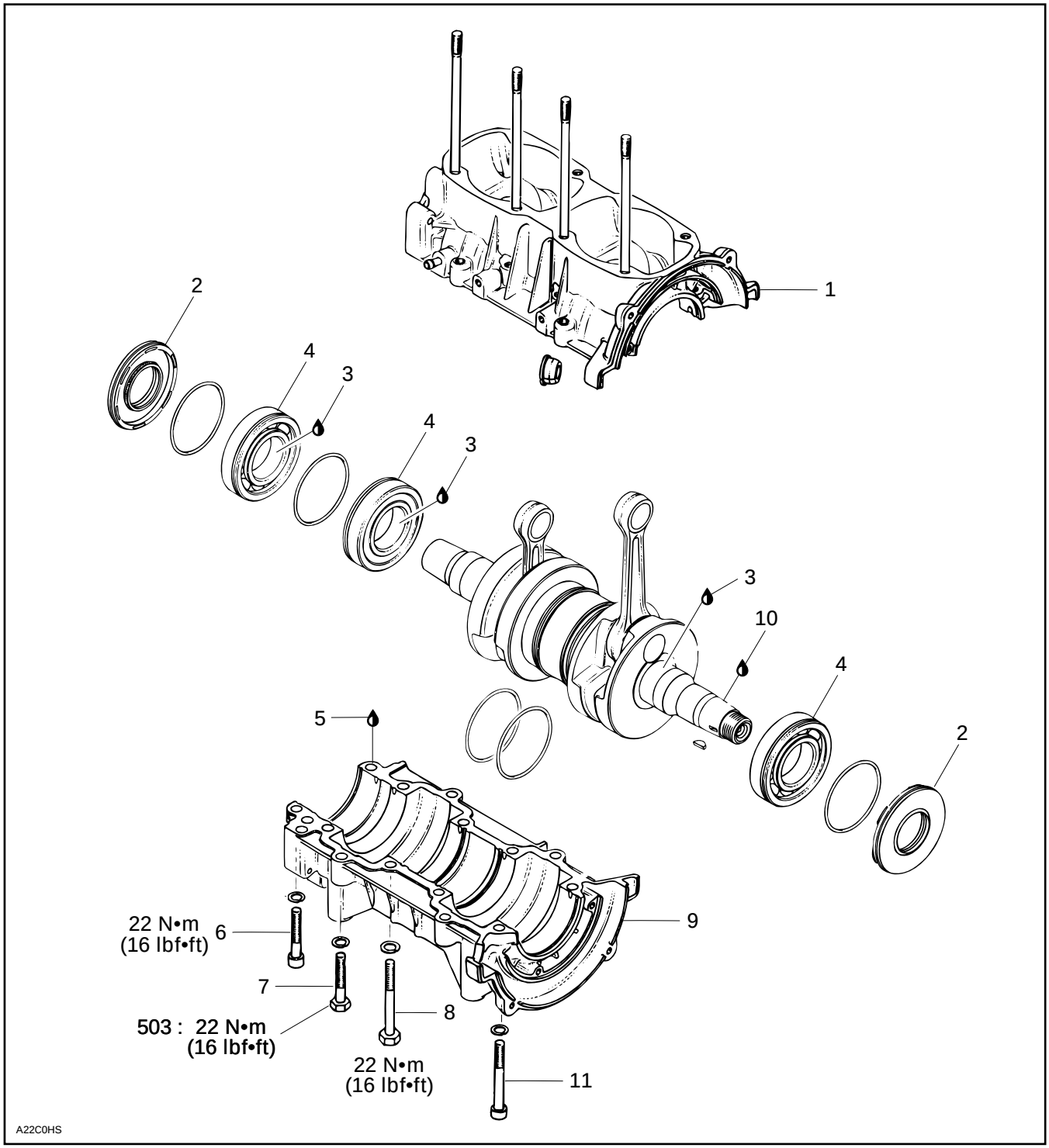
1
2
4
3
4
3
3
10
4
2
5
9
22 N•m
(16 lbf•ft)
6
7
503 : 22 N•m
(16 lbf•ft)
8
22 N•m
(16 lbf•ft)
11
A22C0HS

NOTE : Engine must be removed from chassis to perform the following procedures.

CLEANING

Discard all seals, gaskets and O-rings.

Clean all metal components in a non-ferrous metal cleaner. Use gasket remover (P / N 413 7085 00) accordingly.

10, Loctite 242

Remove all trace of Loctite from crankshaft taper.

Remove old sealant from crankcase mating surfaces with Bombardier gasket remover (P / N 413 7085 00).

CAUTION : Never use a sharp object to scrape away old sealant as score marks incurred are detrimental to crankcase sealing.

DISASSEMBLY

General

To remove drive pulley, refer to DRIVE PULLEY 05-02.

To remove magneto, refer to CDI MAGNETO 04-04.

4, Ball Bearing

To remove bearings from crankshaft, use a protective cap and a special puller, as illustrated.

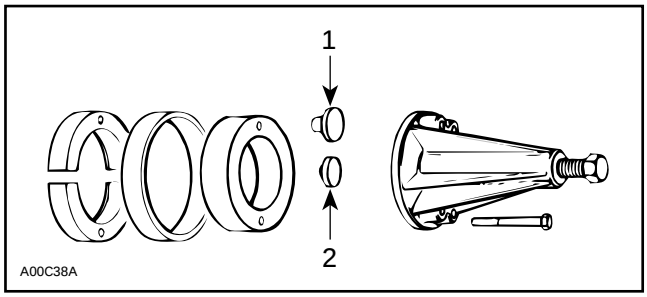

1. PTO side
2. MAG side

INSPECTION

Refer to ENGINE DIMENSIONS MEASUREMENT 04-03.

ASSEMBLY

3,4, Anti-seize Lubricant and Ball Bearing

Smear anti-seize lubricant (P / N 413 7010 00) on part of crankshaft where bearing fits.

PTO Side Bearings

To check proper clearance between bearing and counterweight, use feeler gauge (P / N 420 8766 20).

Mount second bearing with distance gauge (P / N 420 8768 24) for proper positioning.

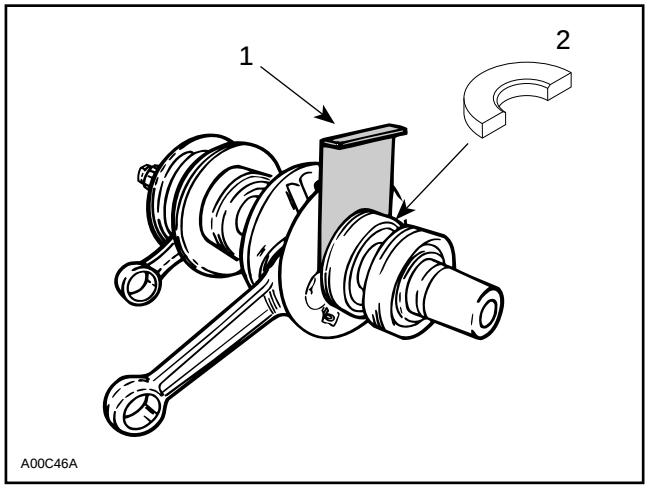

1. Feeler gauge
2. Distance gauge

Prior to installation, place bearings into an oil container filled with oil heated to 75°C (167°F).

This will expand bearings and ease installation. Install bearings with groove as per exploded view.

Bearings are pressed on crankshaft until they rest against radius. These radius maintain the gap needed for bearings lubrication.

2, Seal

At seal assembly, apply a light coat of lithium grease on seal lip.

For bearing lubrication purpose, a gap of 1.0 mm (.040 in) must be maintained between seals and bearings.

When installing plain oil seals (seal without locating ring or without spacing legs), ensure to maintain 1.0 mm (.040 in) gap.

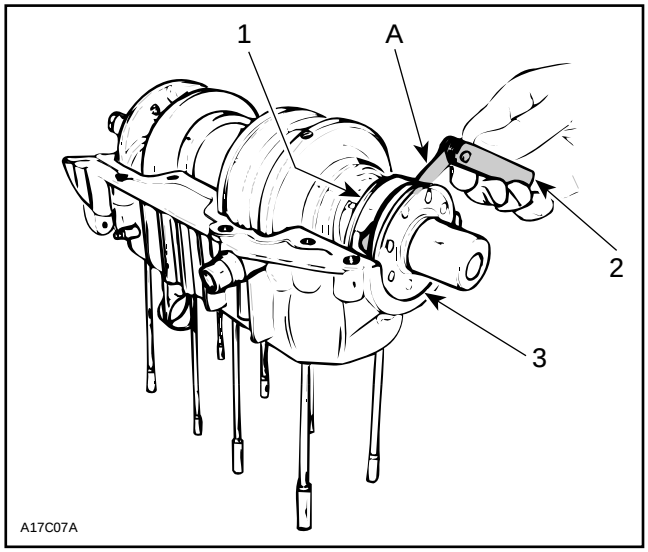

1. Bearing
2. Feeler gauge
3. Plain oil seal
A. 1 mm (.040 in)

1,9, Upper Crankcase and Lower

Crankcase halves are factory matched and therefore, are not interchangeable as single halves.

5, Paste Gasket

Prior to joining of crankcase halves, spray some new injection oil (or equivalent) on all moving parts of the crankshaft. Spray Activator (P / N 413 7081 00) on mating surfaces to ensure paste gasket will fully cured. It increases cure speed and gap filling capability.

Then apply paste gasket (P / N 413 7027 00) on crankcase mating surfaces.

Position the crankcase halves together and tighten bolts by hand then install and tighten armature plate on magneto side to correctly align the crankcase halves.

6,7,8,11, Crankcase Bolt

Torque bolts to 22 N•m (16 lbf•ft) following illustrated sequence.

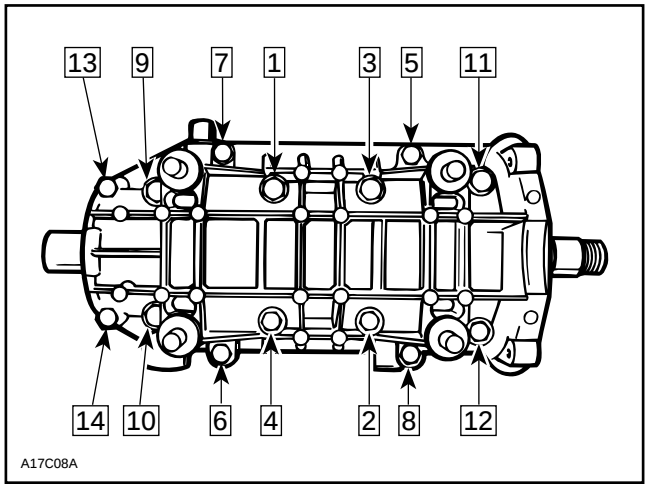

To install magneto, refer to CDI MAGNETO 04-04.

454, 583 AND 670 ENGINE TYPES

ENGINE SUPPORT AND MUFFLER

All Models

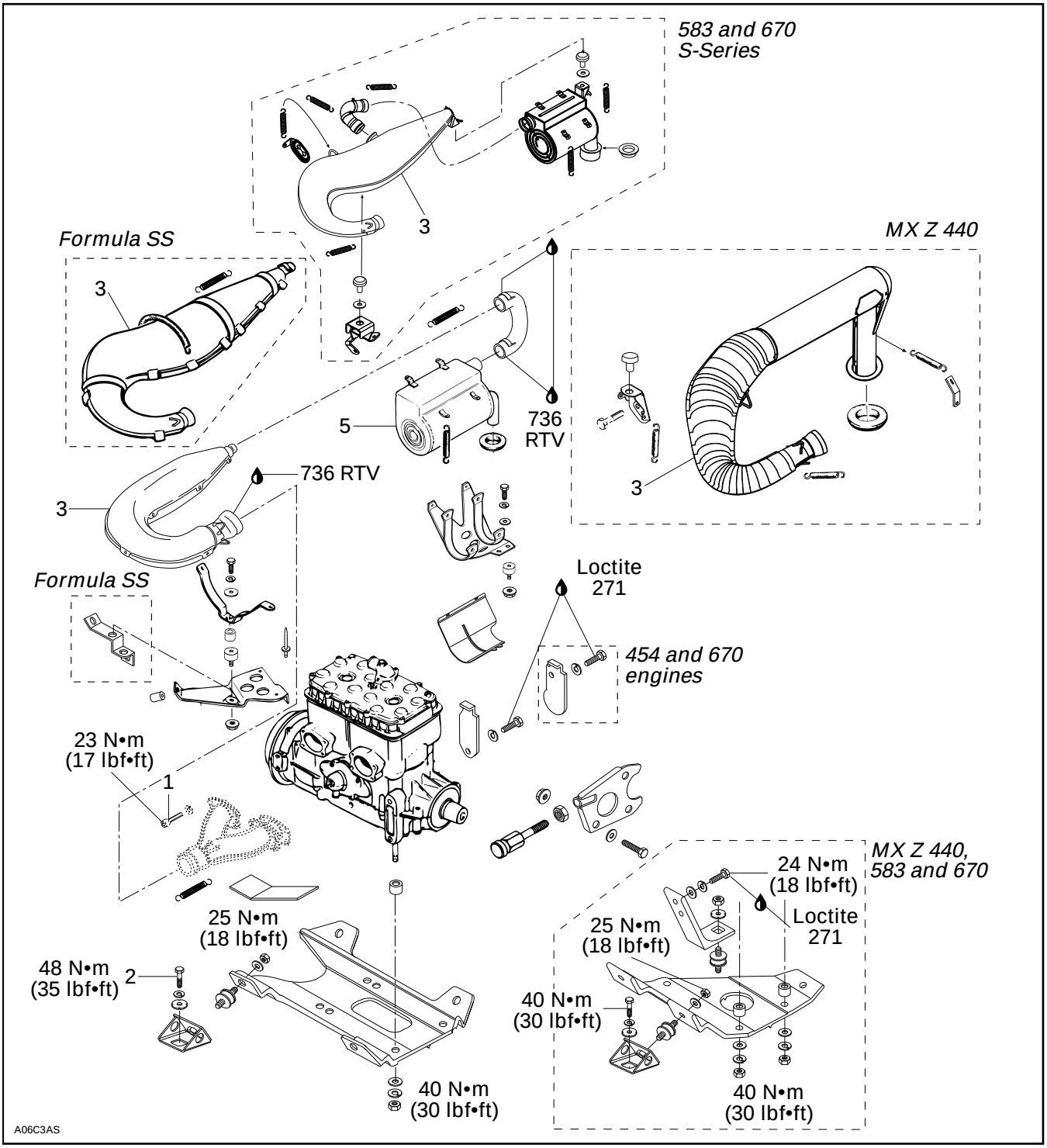

REMOVAL FROM VEHICLE

Disconnect or remove the following from vehicle.

- air intake silencer
- belt guard and drive belt
- drive pulley
- carburetors and throttle cable at oil injection pump
- impulse line, oil supply line and rotary valve shaft lubrication hoses then plug all these hoses
- ignition coils and ignition module
- temperature sensor connector, 4 circuit connector, 3 circuit connector and black / yellow wire
- drain the cooling system and disconnect hoses from the engine. Refer to COOLING SYSTEM 04-08
- 4 screws retaining support to frame

ENGINE SUPPORT AND MUFFLER DISASSEMBLY AND ASSEMBLY

1,2, Manifold Screw and Engine Support Screw

Torque the engine support screws to 48 N•m (35 lbf•ft).

Torque the manifold screws to 23 N•m (17 lbf•ft).

INSTALLATION ON VEHICLE

To install engine on vehicle, reverse removal procedure. However, pay attention to the following :

- Check tightness of engine rubber mount nuts. Torque to 25 N•m (18 lbf•ft).
- After throttle cable installation, check carburetor maximum throttle opening and oil injection pump adjustment.
- Check pulley alignment and drive belt tension.

CAUTION : A red dot is printed on one carburetor and on oil pump mounting flange. Match the marked carburetor to the side marked on the oil pump mounting flange (magneto side). This is required because of the different jettings.

3,4,5, Tuned Pipe, Tail Pipe and Muffler

These parts are identified on welded hook.

Second number sequence of P / N is stamped on part.

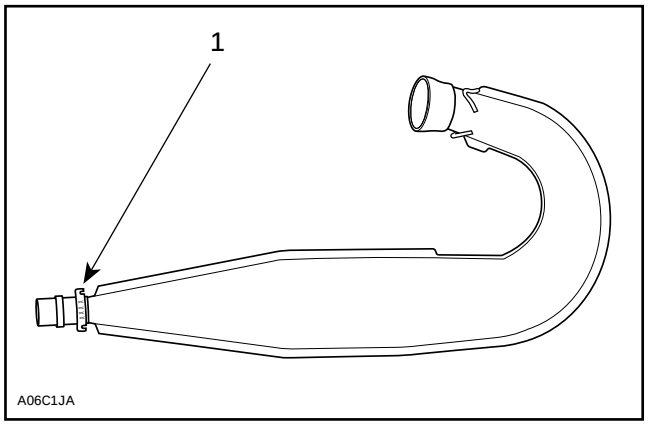

1. Example : 0392 for 514 0392 00

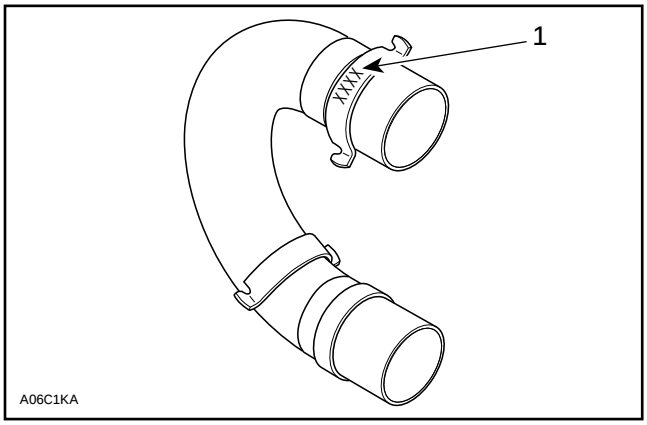

1. Number sequence

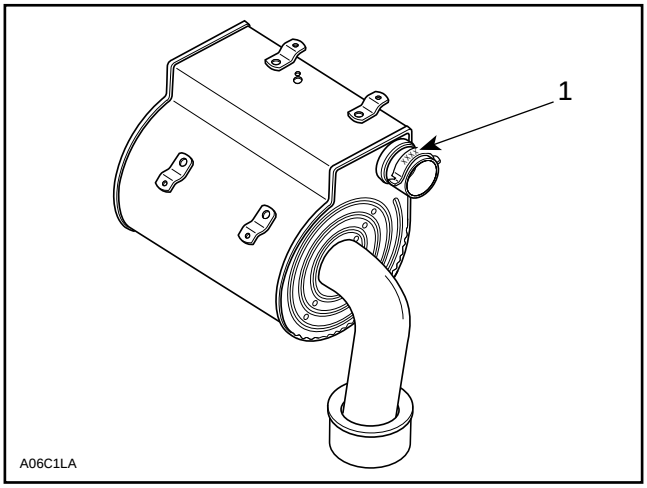

1. Number sequence

- Should a light exhaust leak be experienced at any ball joints, Dow Corning sealer no. 736 RTV (P / N 413 7092 00) can be used.

TOP END

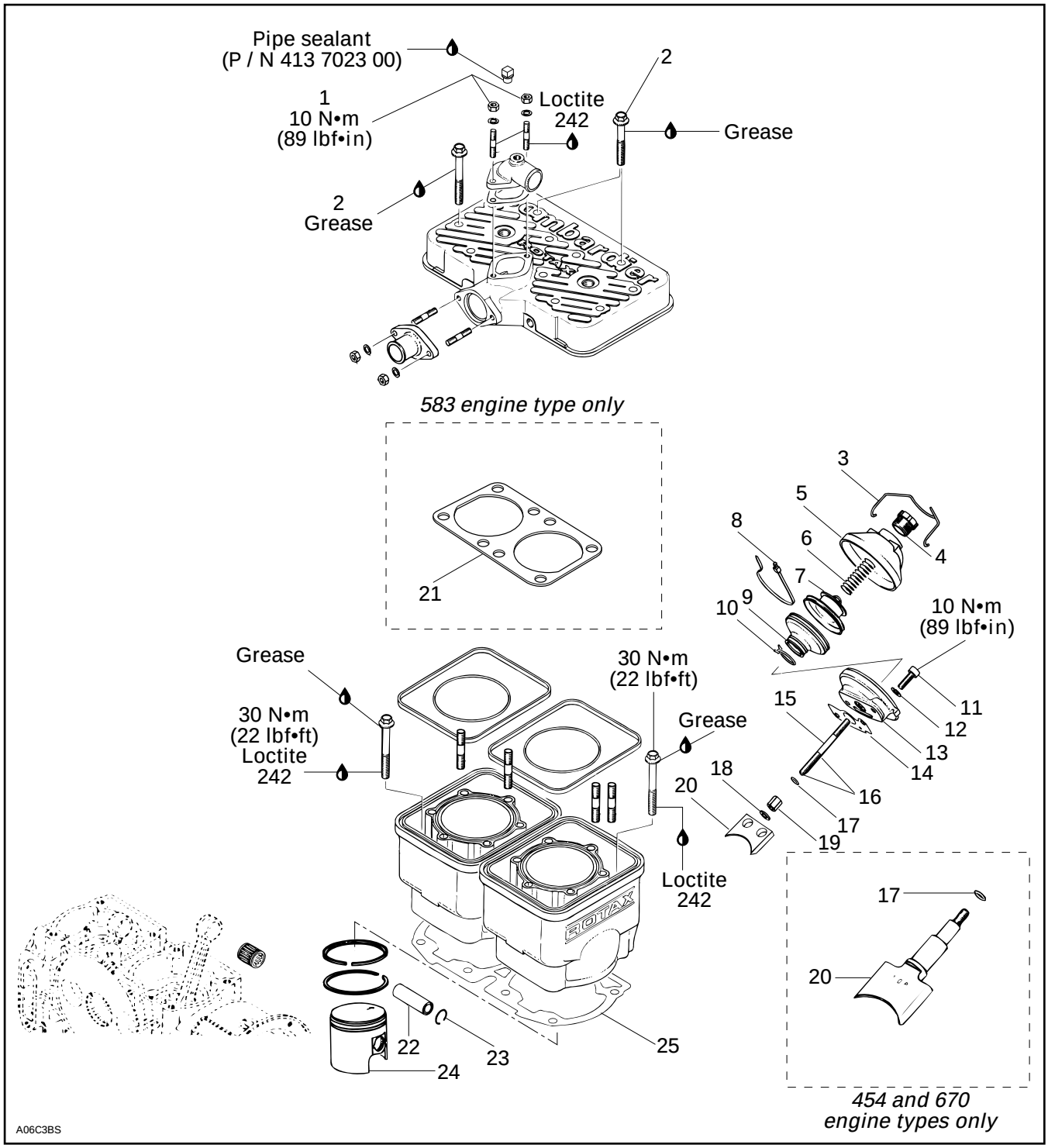
Pipe sealant
(P / N 413 7023 00)
1
10 N•m
(89 lbf•in)
Loctite
242
2
Grease
2
Grease
583 engine type only
21
3
5
8
6
4
7
9
10
10 N•m
(89 lbf•in)
Grease
30 N•m
(22 lbf•ft)
30 N•m
(22 lbf•ft)
Loctite
242
Grease
15
11
12
13
14
18
20
16
17
19
Loctite
242
17
20
22
23
24
25
454 and 670
engine types only
A06C3BS

NOTE : The following procedures can be done without removing the engine from chassis.

CLEANING

Discard all gaskets and O-rings.

Clean all metal components in a non-ferrous metal cleaner.

Scrape off carbon formation from cylinder exhaust port, cylinder head and piston dome using a wooden spatula.

NOTE : The letters “AUS” (over an arrow on the piston dome) must be visible after cleaning.

Clean the piston ring groove with a groove cleaner tool, or with a piece of broken ring.

DISASSEMBLY

22,23,24, Piston Pin, Circlip and Piston

Place a clean cloth over crankcase then with a pointed tool inserted in piston notch, remove circlip from piston.

To remove piston pin, use piston pin puller (P / N 529 0290 00) as follows :

– Fully screw puller handle.
– Insert puller end into piston pin.
– Install adaptor (P / N 529 0236 00) then screw extracting nut (LH threads).
– Hold puller firmly and rotate puller handle counterclockwise to pull piston pin.

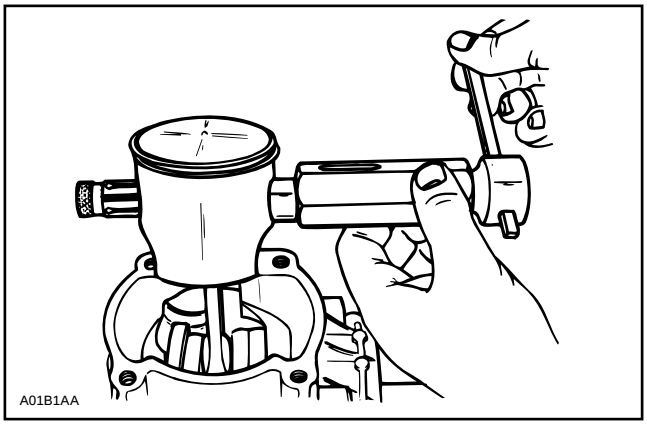

NOTE : 0.25 mm oversize piston and rings are available if necessary.

RAVE System

NOTE : RAVE stands for Rotax Adjustable Variable Exhaust.

3,5,6, Spring Clip, Cover and Spring

Remove spring clip, cover and spring.

7,8, Valve Piston and Clamp 50 mm

Cut clamp and unscrew valve piston.

9,10, Bellows and Clamp 21 mm

Spread clamp and remove bellows.

11,12,13, Cylindrical Screw, Lock Washer and Valve Rod Housing

Remove cylindrical screws and their washers then valve rod housing.

15,17,18,19,20, Valve Rod, O-ring, Washer, Distance Nut and Exhaust Valve

Pull out exhaust valve assembly.

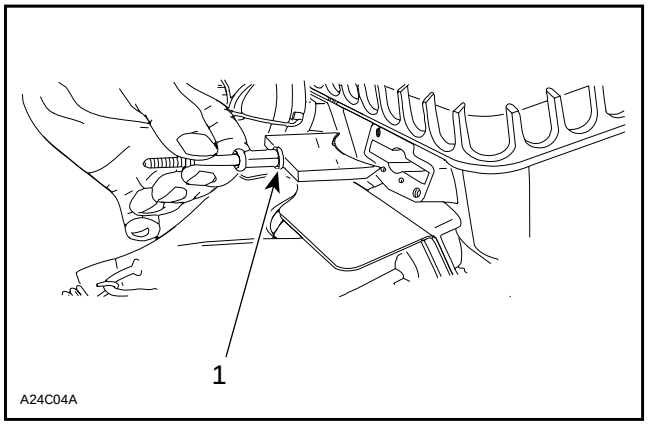

1. Exhaust valve ass’y

583 Engine Only

Do not disassemble exhaust valve ass’y needlessly. Secure valve in a soft jaw vice. Remove O-ring and washer, unscrew distance nut and remove washer. Unscrew valve rod from distance nut.

INSPECTION

All Models

See ENGINE DIMENSIONS MEASUREMENT 04-04.

RAVE System

Check valve rod housing and cylinder for clogged passages.

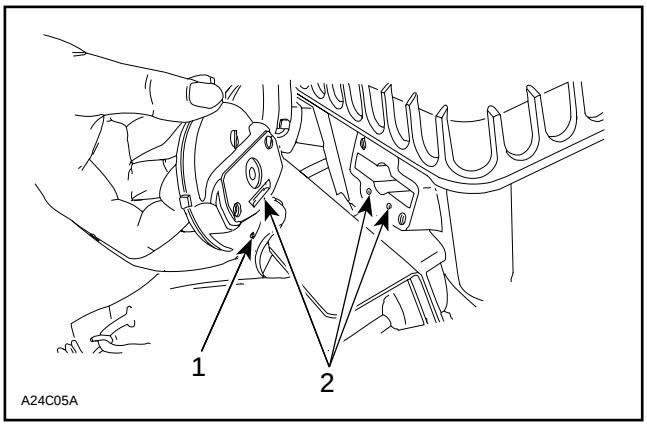

1. Draining hole
2. Passages

NOTE : Oil dripping from draining hole indicates a loosen clamp or damaged bellows.

4, Valve Rod

Check valve rod for straightness.

10, Bellows

Check for cracked, dried or perforated bellows.

13, Spring

ENGINE TYPE	SPRING P / N	WIRE DIA.	FREE LENGTH	PRELOAD IN N (LBF) AT COM-PRESSED LENGTH
		mm (in)	mm (in)	OF 14.7 mm (.579 in)
454	420 2399 45	1.0 (.039)	48.5 (1-29/32)	20.3 (4.55)
583 and 670	420 2399 48	1.0 (.039)	38.0 (1-1/2)	19.3 (4.34)

Make sure both springs installed on the engine have same characteristics.

ASSEMBLY

22,23,24, Piston Pin, Circlip and Piston

At assembly, place the pistons over the connecting rods with the letters “AUS” (over an arrow on the piston dome) facing in direction of the exhaust port.

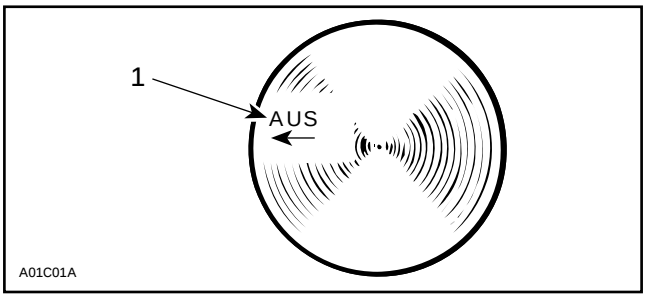

1. Exhaust

NOTE : Spare parts pistons and cylinders are identified with a green or red dot, it is important to match the piston with the cylinder of the same color.

Use piston pin puller (P / N 529 0210 00) to ease piston pin installation.

To minimize the effect of acceleration forces on circlip, install each circlip so the circlip break is at 6 o’clock as illustrated. Use piston circlip installer (P / N 529 0169 00) for all engines except 670 and (P / N 290 8770 16) for 670 engine.

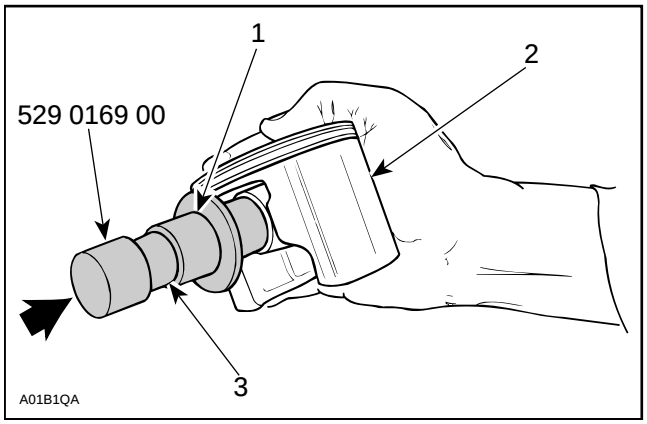

1. Place circlip in
2. Restrain
3. Oil

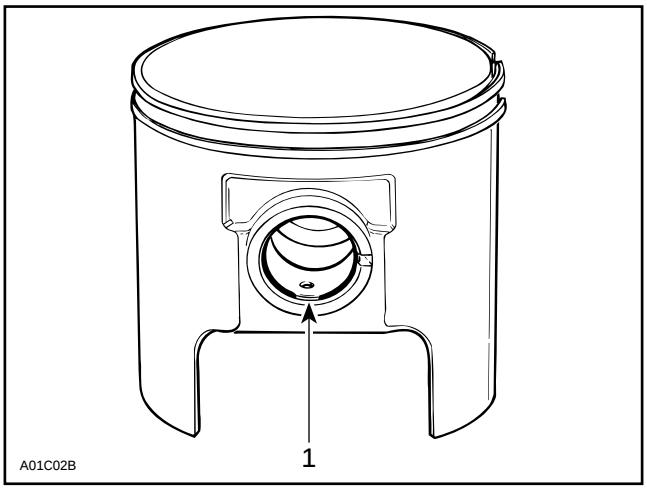

TYPICAL
1. Circlip break

CAUTION : Circlips must not move freely after installation if so, replace them.

27, Cylinder

When reassembling the cylinders to the crankcase, it is important to have them properly aligned so that the cylinder head holes will match up with the studs. Cylinder head itself can be used to align the cylinders. Prior to torquing crankcase / cylinder nuts, install exhaust manifold to properly align exhaust flanges or use exhaust flange aligning tool (P / N 420 8769 02).

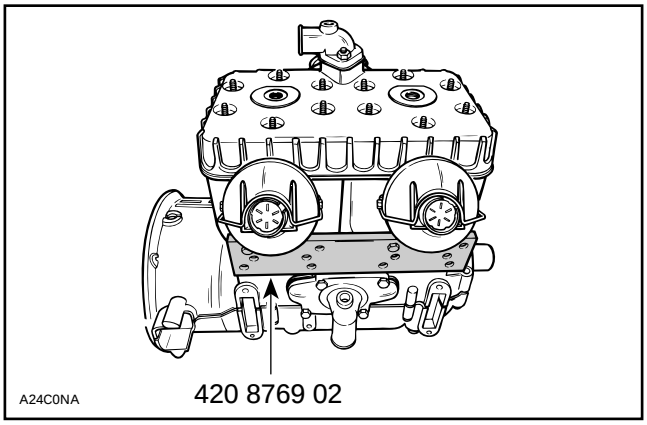

Apply Loctite 242 (P / N 413 7030 00) on cylinder screw threads.

Install and torque screws in a criss-cross sequence for each cylinder to 30 N•m (22 lbf•ft). For 454 and 670 engines longer screws go on exhaust side.

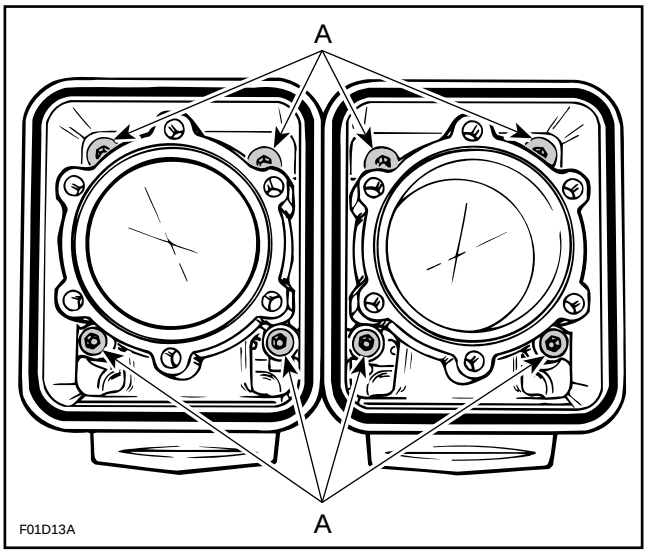

TYPICAL
A. Torque screws to 30 N•m (22 lbf•ft)

21, Gasket

583 Only

Install gasket with its larger holes on exhaust side.

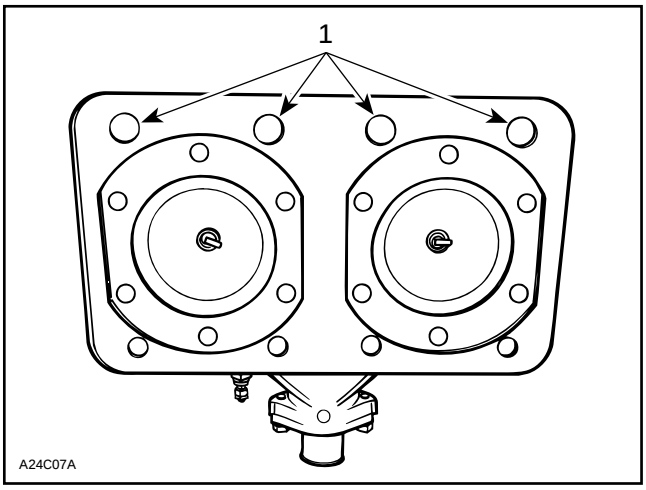

EXHAUST SIDE
1. Larger holes

All Models

2, Cylinder Head Screw

ENGINE TYPE	CYLINDER HEAD SCREWS TIGHTENING TORQUE
454, 583 and 670	29 N•m (21 lbf•ft) Apply grease under screw head

Torque cylinder head screws following illustrated sequence. Longer screws go on intake side.

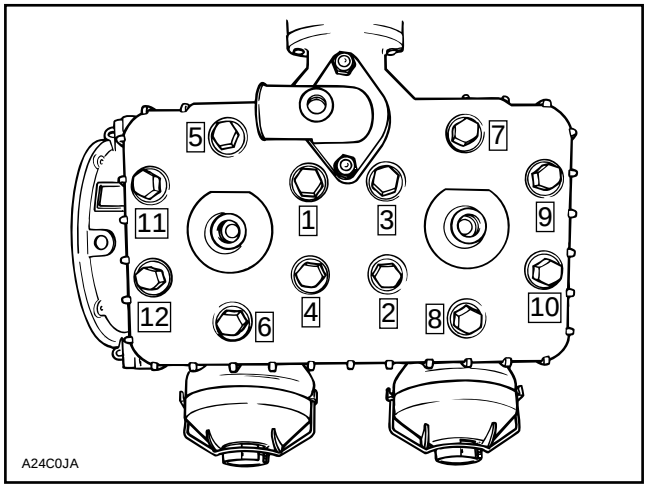

1, Nut

Torque nuts to 10 N•m (90 lbf•in).

RAVE SYSTEM

15,16,17,18,19,20, Valve Rod, Threadlocker, O-ring, Washer, Distance Nut and Exhaust Valve

Fully screw distance nut, with its notch first, on valve rod longer threaded portion. Install washer and apply high temperature threadlocker (P / N 420 8997 88) on threads. Screw valve rod into exhaust valve until following distance is respected.

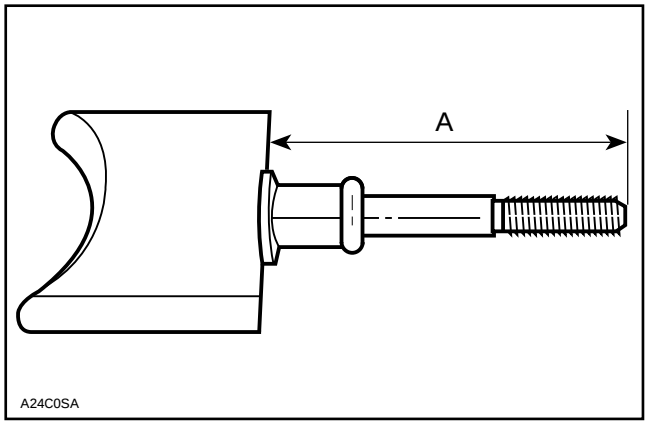

A. 583 engine type = 63^{-1} mm ($2.480^{-.039}$ in)

Back off distance nut to jam the assembly. Install O-ring. Install exhaust valve assembly in cylinder with its cut-away downward (see illustration at removal).

11,12,13,14, Cylindrical Screw, Lock Washer, Valve Rod Housing and Gasket

Install gasket and valve rod housing with their passages toward bottom.

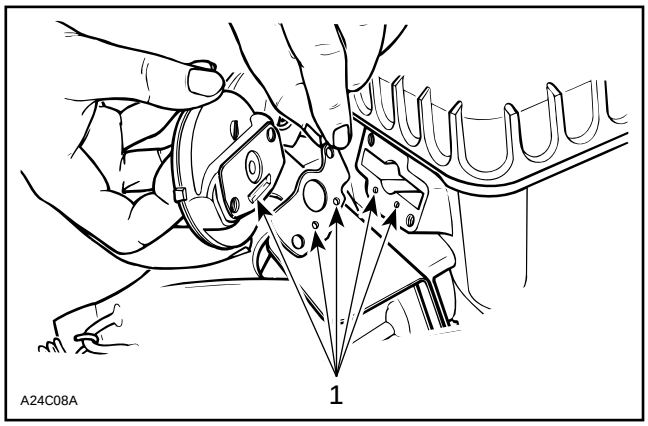

1. Passages

Torque cylindrical screws to 10 N•m (90 lbf•in). Check free sliding action of valve assembly.

7,8,9,10, Valve Piston, Clamp 50 mm, Bellows and Clamp 21 mm

Install bellows over valve rod housing groove and secure with a clamp.

Screw by hand valve piston on valve rod until it bottoms.

Secure bellows to valve piston with a clamp.

3,4,5,6, Spring Clip, Adjustment Screw Cover and Spring

Install spring, cover and spring clip. Turn adjustment screw by hand until it bottoms.

BOTTOM END

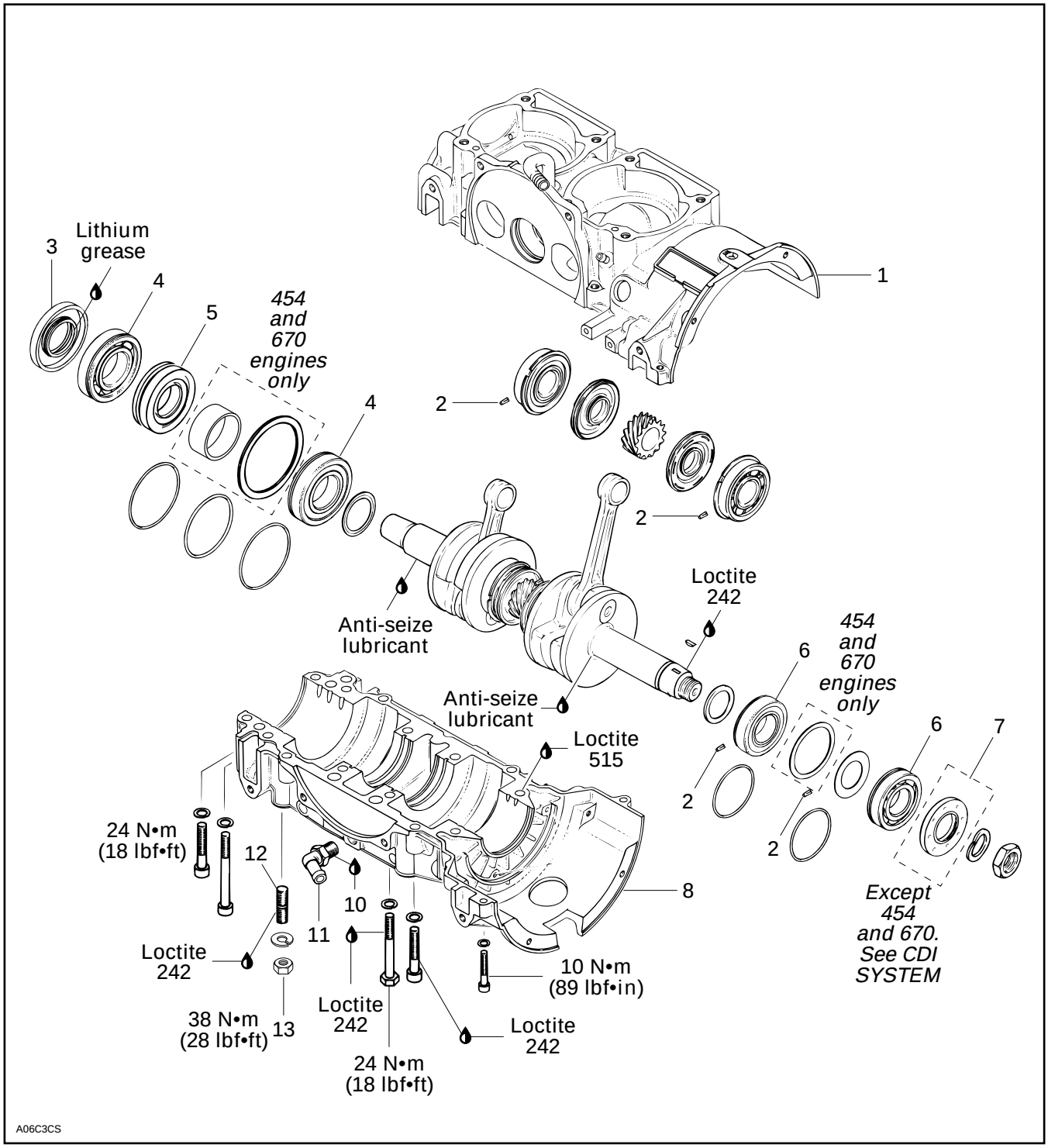

TYPICAL

NOTE : Engine must be removed from chassis to perform the following procedures.

CLEANING

Discard all oil seals, gaskets, O-rings and sealing rings.

Clean all metal components in a non-ferrous metal cleaner. Use gasket remover (P / N 413 7085 00) accordingly.

Remove all trace of Loctite from crankshaft taper.

Remove old paste gasket from crankcase mating surfaces with Bombardier gasket remover (P / N 413 7085 00).

CAUTION : Never use a sharp object to scrape away old sealant as score marks incurred are detrimental to crankcase sealing.

DISASSEMBLY

General

To remove drive pulley, refer to DRIVE PULLEY 05-02.

To remove magneto, refer to CDI MAGNETO 04-05.

2,4,6,9, Crankshaft Bearing

To remove bearings from crankshaft, use a protective cap and special puller, as illustrated.

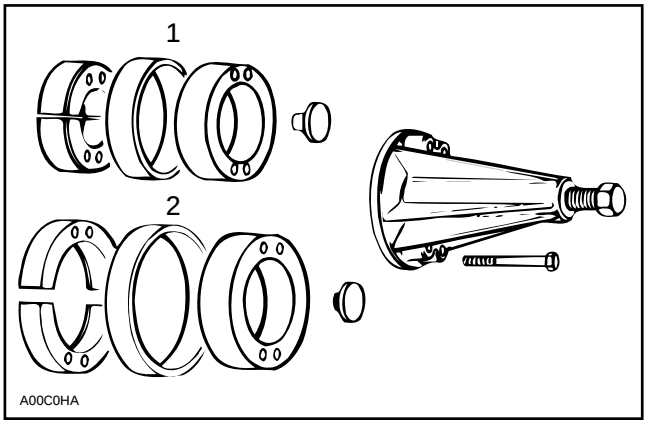

1. PTO side
2. MAG side

INSPECTION

See ENGINE DIMENSIONS MEASUREMENT 04-04.

ASSEMBLY

2,4,5,6,9, Crankshaft Bearing and Labyrinth Sleeve

Smear anti-seize lubricant (P / N 413 7010 00) on part of crankshaft where bearing fits.

Prior to installation, place bearings into an oil container filled with oil previously heated to 75°C (167°F). This will expand bearing and ease installation. Install bearings and labyrinth sleeve with groove as per the following illustration. Keep a 0.3 mm (.012 in) gap between outer bearing and labyrinth sleeve.

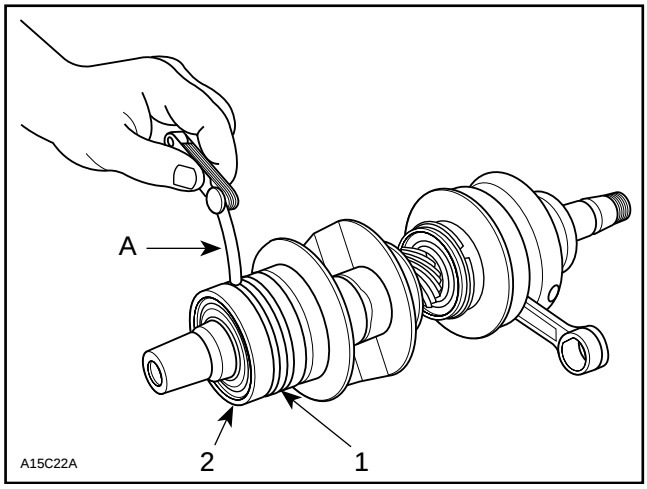

1. Labyrinth sleeve
2. Outer bearing
A. 0.3 mm (.012 in)

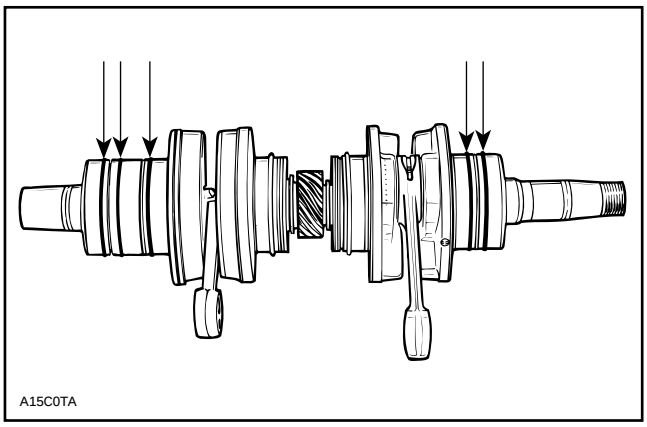

ALL ENGINES EXCEPT 454 AND 670

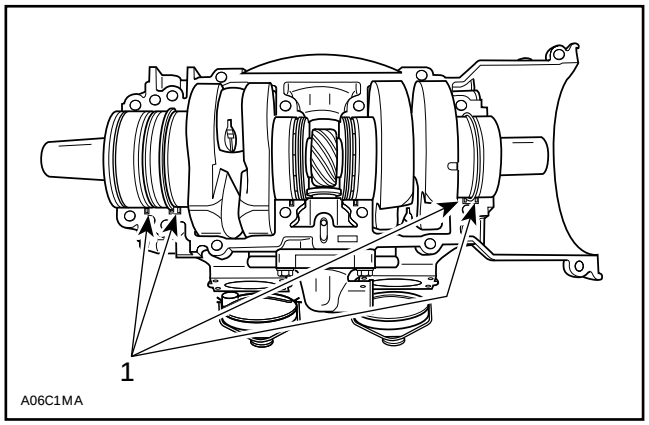

454 AND 670 ENGINES — EXHAUST SIDE
A. Drive pins

CAUTION : Make sure drive pins of bearings are on exhaust side of crankcase for proper seating in recesses.

3,7, Seal

At seal assembly, apply a light coat of lithium grease on seal lips.

For bearing lubrication purpose, a gap of 1.0 mm (.040 in) must be maintained between seals and bearings.

When installing plain oil seals (seal without locating ring or without spacing legs), ensure to maintain a 1.0 mm (.040 in) gap. For seals with spacing legs, install them against the bearing.

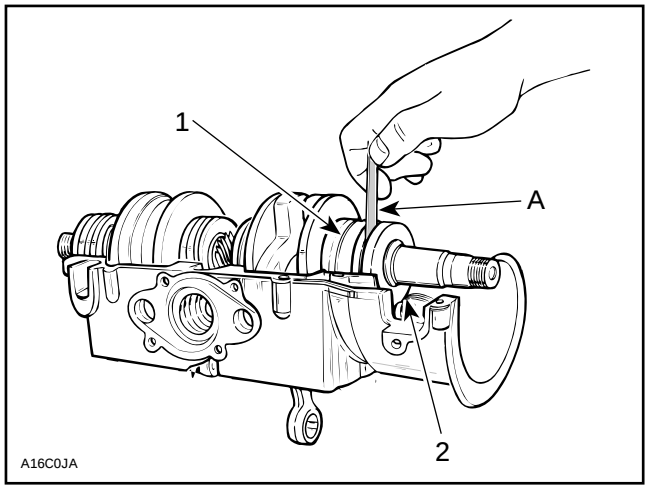

1. Bearing
2. Oil seal
A. 1 mm (.040 in)

1,8, Upper Crankcase and Lower Crankcase

Crankcase halves are factory matched and therefore, are not interchangeable or available as single halves.

Prior to joining of crankcase halves spray some new injection oil (or equivalent) on all moving parts of the crankshaft.

Spray Activator (P / N 413 7081 00) on one of the mating surface to ensure paste gasket will fully cured. It increases cure speed and gap filling capability.

Then apply paste gasket Loctite 515 (P / N 413 7027 00) on the other crankcase mating surface.

CAUTION : Before joining crankcase halves be sure that crankshaft rotary valve gear is well engaged with rotary valve shaft gear.

Position the crankcase halves together and tighten screws by hand then install and tighten armature plate on magneto side to correctly align crankcase halves. Apply Loctite 242 on screw threads and under head. Torque screws as specified following illustrated sequence.

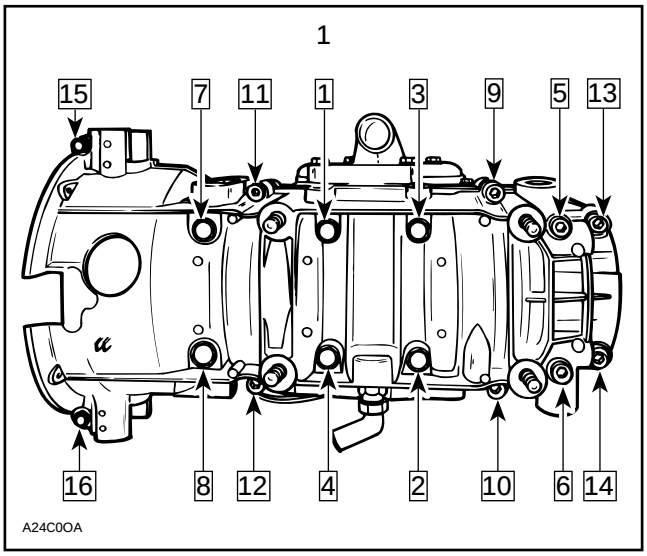

1. Follow sequence shown 1 to 14 – 25 N•m (18 lbf•ft)
15 and 16 – 10 N•m (90 lbf•in)

NOTE : Torque the 2 smaller screws (15 and 16) on magneto side to 10 N•m (90 lbf•in).

10,11, Pipe Sealant and Angular Tube

Apply pipe sealant (P / N 413 7023 00) on threads prior to assembly angular tube.

12, Crankcase Stud

At assembly on crankcase, apply medium strength threadlocker (P / N 413 7030 00) on stud threads.

13, Crankcase / Engine Bracket Nut

Torque the crankcase / engine bracket nut to 38 N•m (28 lbf•ft).

To install magneto, refer to CDI MAGNETO 04-05.

599 AND 779 ENGINE TYPES

ENGINE REMOVAL AND INSTALLATION

Formula III / III LT and Mach Z / Z LT

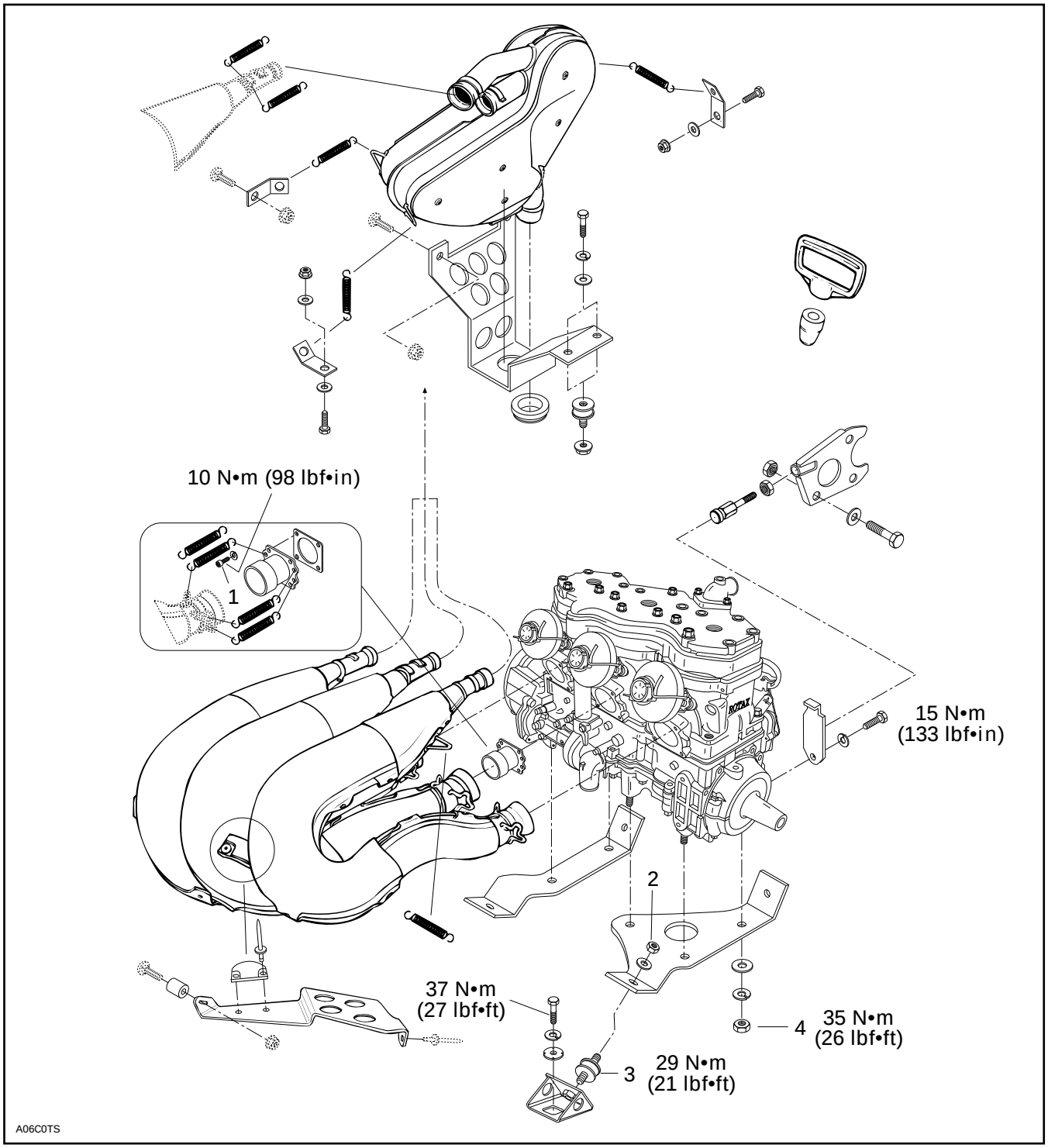

REMOVAL FROM VEHICLE

Remove or unplug the following then lift off engine from engine compartment.

NOTE : 3-cylinder engine is more heavy then a 2 cylinder engine. It weights about 45 kg (100 lb). Use of a hoist is recommended.

- belt guard
- drive belt
- drive pulley
- air intake silencers
- carburetors
- exhaust pipes
- after muffler
- wiring connections
- coolant
- rewind starter
- CDI box from accessory support
- oil injection inlet line at oil injection pump
- coolant hoses
- engine support screws
- engine stopper (left rear of engine)
- impulse lines from engine

1,2,3,4, Engine Support Nut and Manifold Screw

Torque the engine / support nuts to 35 N•m (26 lbf•ft).

Torque rubber mount / support bracket to 29 N•m (21 lbf•ft).

Torque rubber mount / support nuts to 37 N•m (27 lbf•ft).

Torque manifold screws to 10 N•m (89 lbf•in).

INSTALLATION ON VEHICLE

To install engine on vehicle, reverse removal procedure. However, pay attention, to all appropriate component / system reinstallation procedures described throughout this *Shop Manual* and to the following :

- After throttle cable installation, check carburetor maximum throttle opening and oil injection pump adjustment.
- Check pulley alignment and drive belt tension.

— Should as light exhaust leak be experienced at muffler ball joint, Dow Corning sealer no. 736 RTV (P / N 413 7092 00) can be used.

TOP END

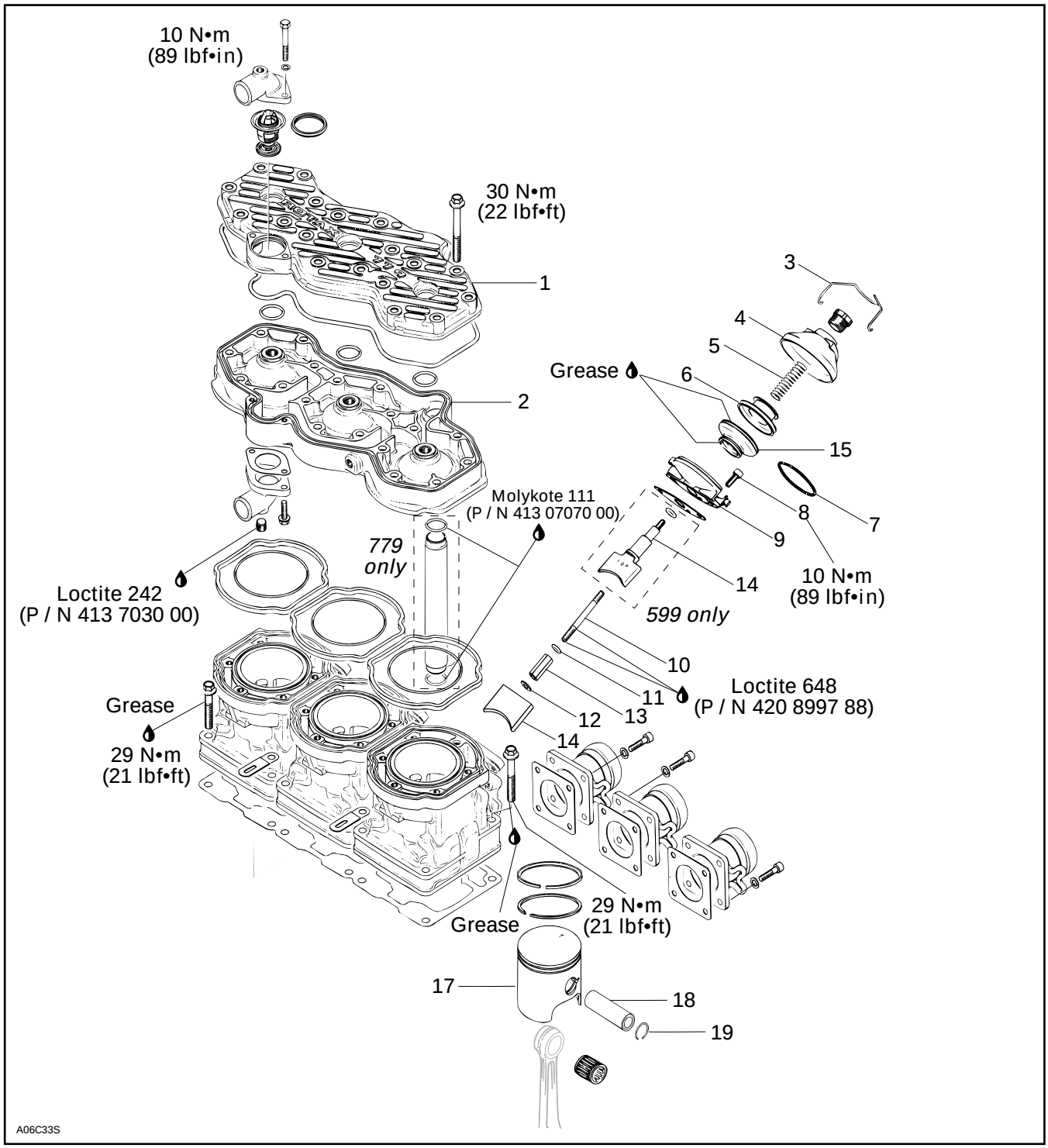
10 N•m
(89 lbf•in)
30 N•m
(22 lbf•ft)
1
2
3
4
5
6
Grease
15
8
7
9
10 N•m
(89 lbf•in)
14
599 only
Molykote 111
(P / N 413 07070 00)
779
only
Loctite 242
(P / N 413 7030 00)
10
11
13
12
14
Loctite 648
(P / N 420 8997 88)
Grease
29 N•m
(21 lbf•ft)
Grease
29 N•m
(21 lbf•ft)
17
18
19
A06C33S

COMPONENT REMOVAL

Most engine components can be removed with engine on vehicle such as :

- cylinder head
- piston(s)
- cylinder(s)
- rewind starter
- oil pump
- water pump
- magneto flywheel
- rave valve(s)

CLEANING

Discard all gaskets and O-rings.

Clean all metal components in a non-ferrous metal cleaner.

Scrape off carbon formation from cylinder exhaust port cylinder head and piston dome using a wooden spatula.

NOTE : The letters ''AUS'' (over an arrow on the piston dome) must be visible after cleaning.

Clean the piston ring groove with a groove cleaner tool or with a piece of broken ring.

DISASSEMBLY

17,18,19,20, Piston, Piston Pin, Circlip and Cage Bearing

Place a clean cloth over crankcase then with a pointed tool inserted in piston notch, remove circlip from piston.

Use piston pin puller (P / N 529 0210 00).

Screw in puller in order to remove it from piston.

Remove piston from connecting rod.

NOTE : 0.25 mm oversize piston and rings are available if necessary.

RAVE System

NOTE : RAVE stands for Rotax Adjustable Variable Exhaust.

3,4,5, Spring Clip, Cover and Spring

Remove spring clip, cover and spring.

6,7, Valve Piston and Clamp 50 mm

Cut clamp and unscrew valve piston.

8,9, Cylindrical Screw and Valve Rod Housing

Remove cylindrical screws then valve rod housing.

10,11,12,13,14, Valve Rod, O-ring, Washer, Distance Nut and Exhaust Valve

Pull out exhaust valve assembly.

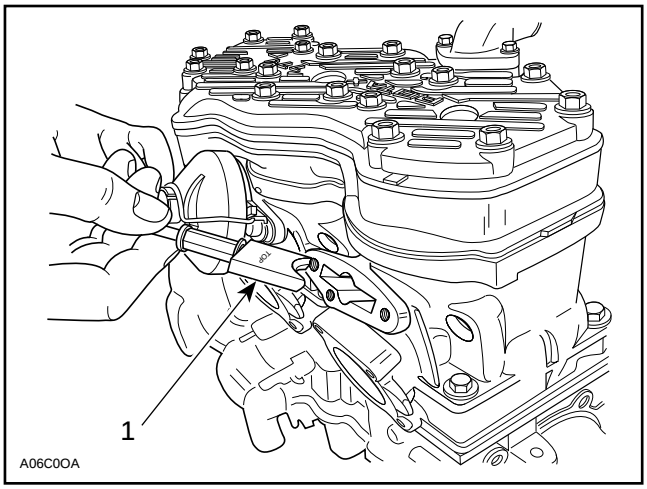

1. Exhaust valve ass'y

Do not disassemble exhaust valve ass'y needlessly. Secure valve in a soft jaw vice. Remove O-ring and washer, unscrew distance nut and remove washer. Unscrew valve rod from distance nut.

INSPECTION

NOTE : See LEAK TEST AND ENGINE DIMENSIONS MEASUREMENT 04-04.

RAVE System

Check valve rod housing and cylinder for clogged passages.

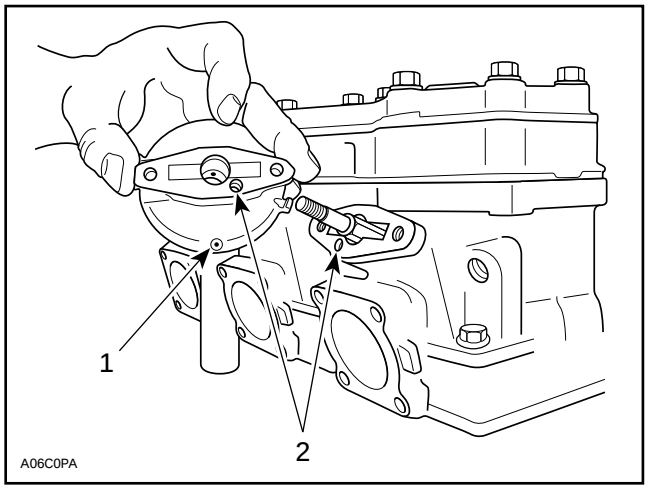

1. Draining hole
2. Passages

NOTE : Oil dripping from draining hole indicates a loosen clamp or damaged bellows.

10, Valve Rod

Check valve rod for straightness.

15, Bellows

Check for cracked, dried or perforated bellows.

5, Spring

ENGINE TYPE	SPRING P / N	Wire Dia. mm (in)	Free length mm (in)	Spring Rate N / mm (lbs / in)
599	420 2399 40	0.8 (.031)	48.5 (1.91)	0.30 (1.71)
779	420 2399 41	0.8 (.031)	52.5 (2.17)	0.30 (1.71)

ASSEMBLY

RAVE SYSTEM

779 Only

10,11,12,13,14, Valve Rod, O-ring, Washer, Distance Nut and Exhaust Valve

Fully screw distance nut, with its notch first, on valve rod longer threaded portion. Install washer and apply high temperature threadlocker (P / N 420 8997 88) on threads. Screw valve rod into exhaust valve until following distance is respected.

Distance between RAVE valve and valve rod end is 58 mm + 1 mm (2.283 + .039 in)

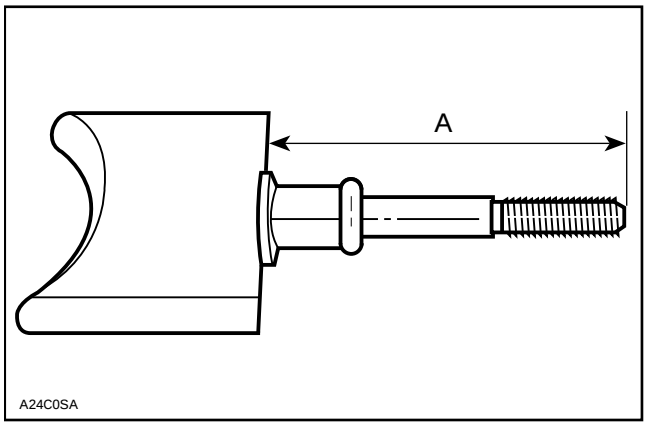

779 ENGINE ONLY
A. 58 + 1 mm (2.283 + .039 in)

Back off distance nut to jam the assembly. Install O-ring. Install exhaust valve assembly in cylinder with letters TOP facing upwards.

All Engines

Piston and Cylinder

NOTE : Be sure to restore the chamfer around all cylinder sleeve port openings.

Before inserting piston in cylinder, lubricate the cylinder with new injection oil or equivalent.

Install ring compressor (P / N 420 8769 74) on piston assembly.

NOTE : The ring compressor will not fit on over size pistons.

1,2,16, Cylinder Head Cover, Cylinder Head and Cylinder

Check flatness of part sealing surfaces.

Refer to LEAK TEST AND ENGINE DIMENSION MEASUREMENT 04-04 and look for Checking Surface Flatness.

– Mount piston over connecting rod with the letters “AUS” (over an arrow on the piston dome) facing in the direction of exhaust port (see illustration below).

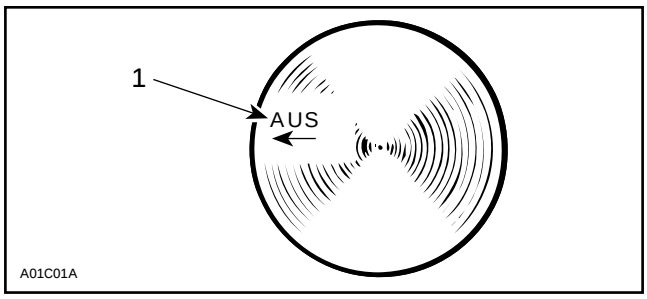

1. Exhaust

– Install piston pin puller (P / N 529 0210 00) and turn handle until piston pin is correctly positioned in piston.

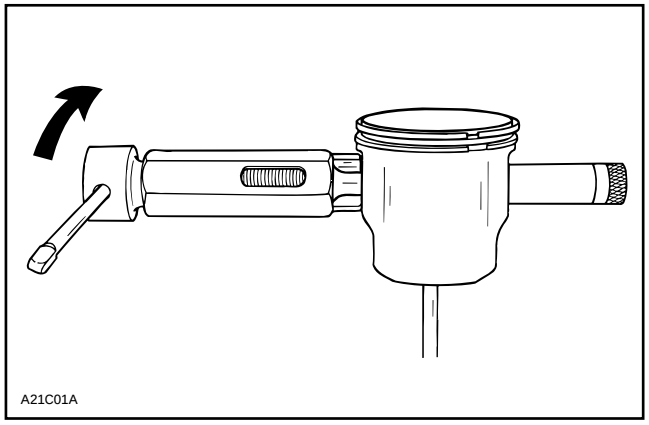

– Remove piston pin puller.

To minimize the effect of acceleration forces on circlip, install each circlip so the circlip break is at 6 o’clock as illustrated. Use piston circlip installer (P / N 529 0169 00).

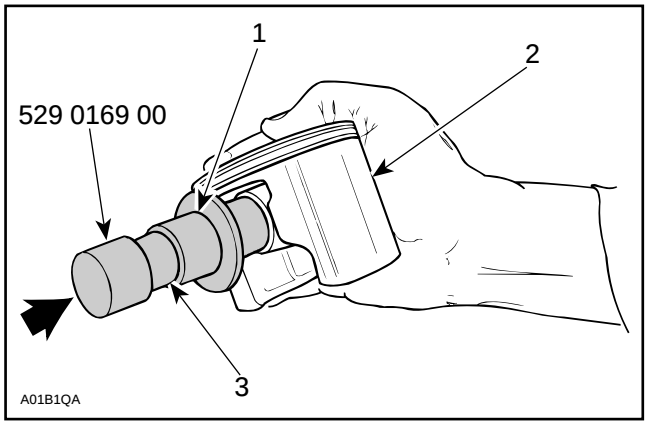

TYPICAL

1. Place circlip in
2. Restrain
3. Oil

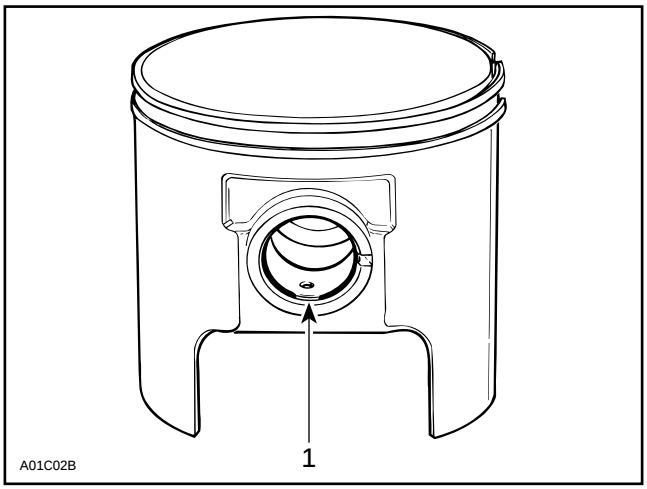

TYPICAL

1. Circlip break

CAUTION : Circlips must not move freely after installation if so, replace them.

Install cylinders and check for same height.

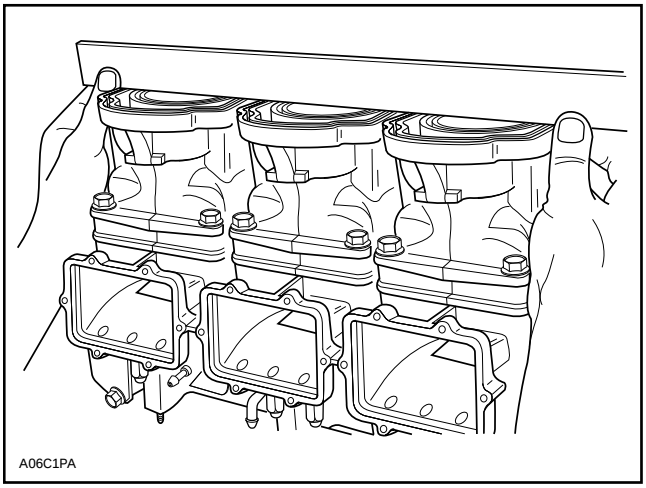

Also check for proper cylinder alignment.

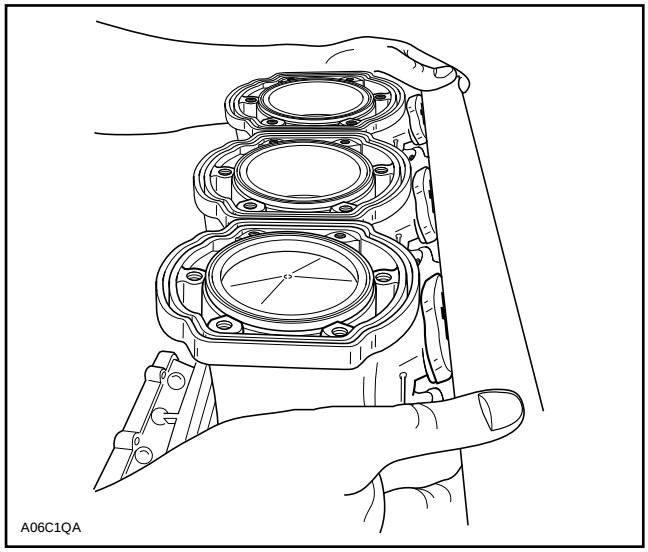

At assembly, torque cylinder head screws in the following illustrated sequence. Tightening torques are :

M6 screws : 12 N•m (106 lbf•in)

M8 screws : 30 N•m (22 lbf•ft)

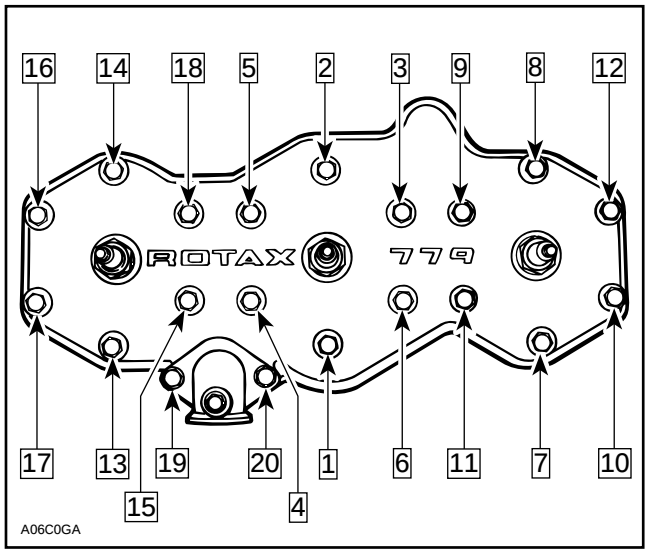

TYPICAL

BOTTOM END

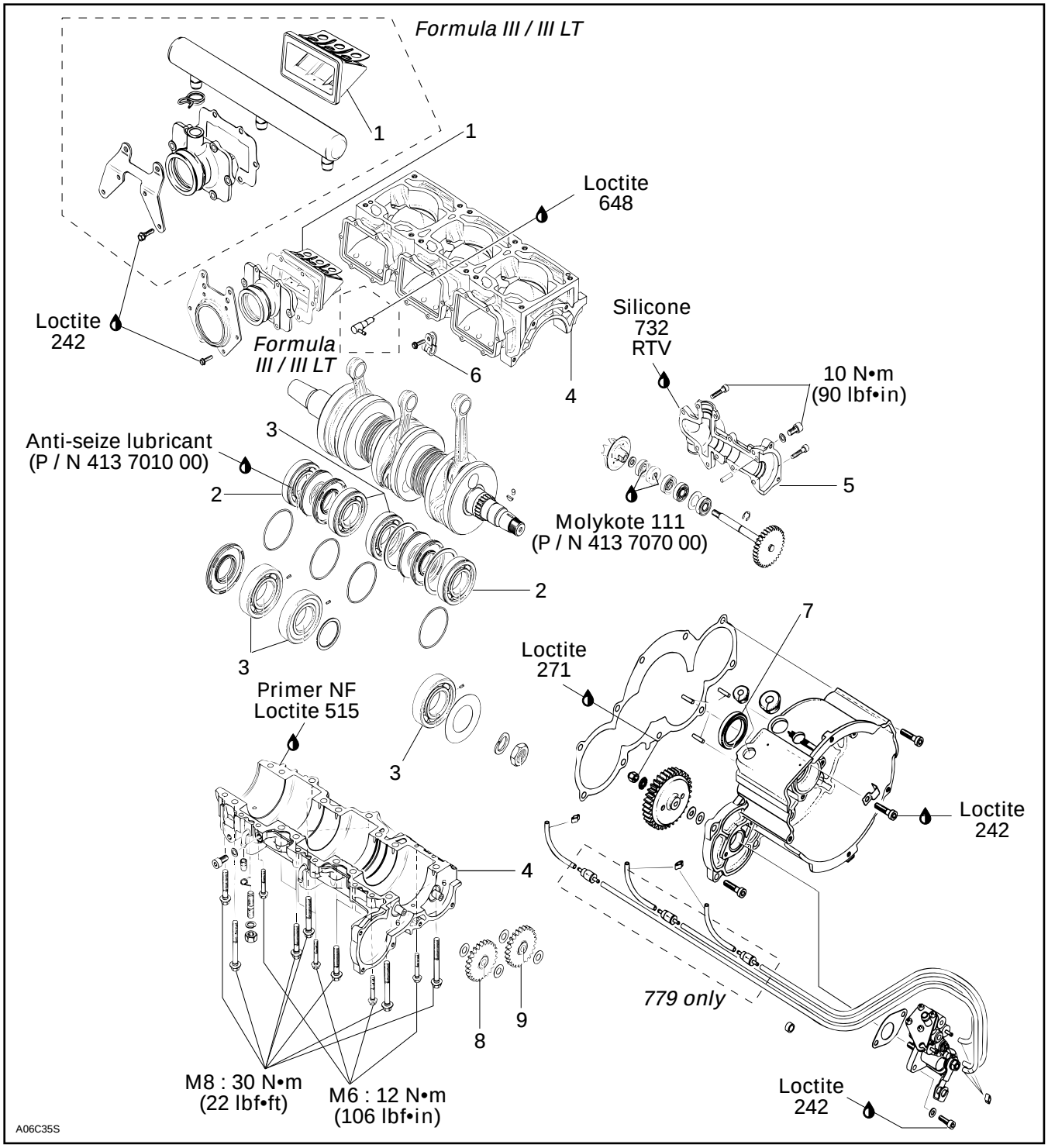
Formula III / III LT
1
1
Loctite
648
Loctite
242
Formula
III / III LT
6
4
Silicone
732
RTV
10 N•m
(90 lbf•in)
Anti-seize lubricant
(P / N 413 7010 00)
3
2
5
Molykote 111
(P / N 413 7070 00)
2
3
7
Loctite
271
Primer NF
Loctite 515
3
Loctite
242
4
779 only
8
9
M8 : 30 N•m
(22 lbf•ft)
M6 : 12 N•m
(106 lbf•in)
Loctite
242
A06C35S

NOTE : Engine must be removed from chassis to perform the following procedures.

CLEANING

Discard all oil seals, gaskets, O-rings and sealing rings.

Clean all metal components in a non-ferrous metal cleaner. Use gasket remover (P / N 413 7085 00) accordingly.

Remove old paste gasket from crankcase mating surfaces with Bombardier gasket remover (P / N 413 7085 00).

CAUTION : Never use a sharp object to scrape away old sealant as score marks incurred are detrimental to crankcase sealing.

DISASSEMBLY

General

To remove drive pulley, refer to DRIVE PULLEY 05-02.

To remove magneto, refer to CDI MAGNETO 04-05.

2,3, Crankshaft Bearing

To remove bearings from crankshaft, use a protective cap and special puller, as illustrated.

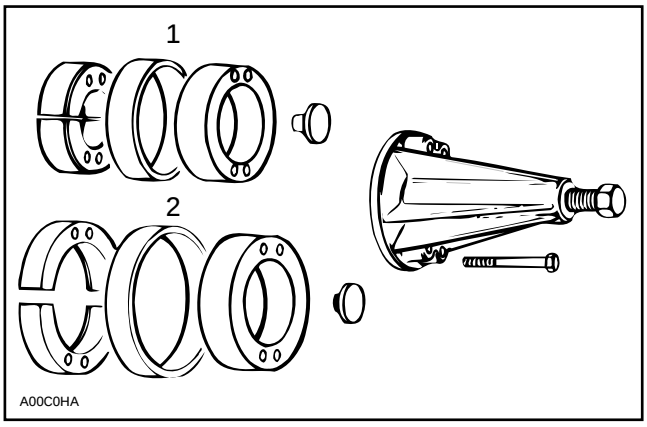

1. *PTO side*
2. *MAG side*

INSPECTION

NOTE : Refer to LEAK TEST AND ENGINE DIMENSIONS MEASUREMENT 04-04.

1, Reed Valve

With blade stopper removed, check reed valve for proper tightness. There must be no play between blade and valve body when exerting a finger pressure on blade at blade stopper location.

In case of a play, turn blade up side down and recheck. If there is still a play, replace blade and / or valve body.

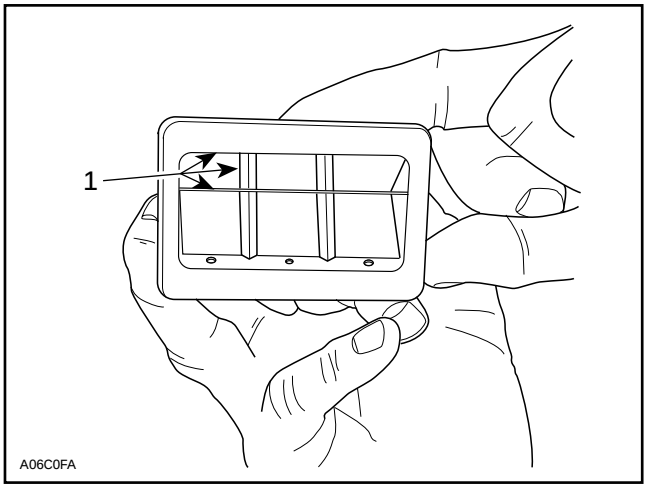

1. *No play*

Check blade stopper distance from center of reed valve block.

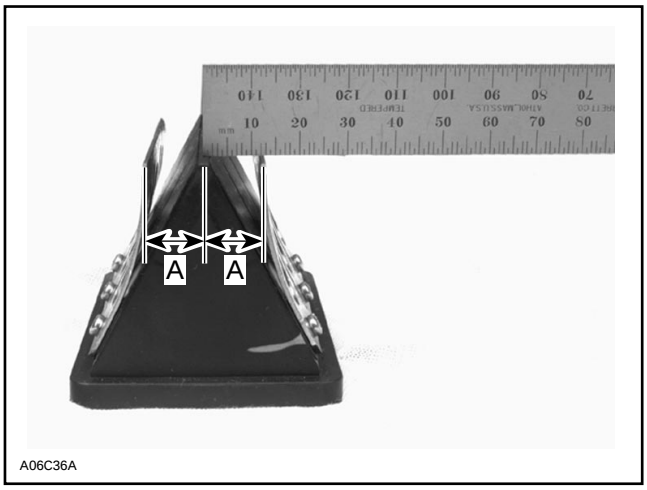

TYPICAL

A. *599 Engine : 14 0.25 mm (.551 .010 in)*
779 Engine : 12 0.25 mm (.472 .010 in)

Bent blade stopper as required to obtain the proper distance.

ASSEMBLY

2,3, Crankshaft Bearing, Anti-seize Lubricant and Labyrinth Sleeve

Smear anti-seize lubricant (P / N 413 7010 00) on part of crankshaft where bearing fits.

Prior to installation, place bearings into an oil container filled with oil previously heated to 75°C (167°F). This will expand bearing and ease installation.

779 Engine Only

Last PTO bearing is 8 mm (5/16 in) from inner bearing.

4, Crankcase

At crankshaft installation, position drive pins as illustrated.

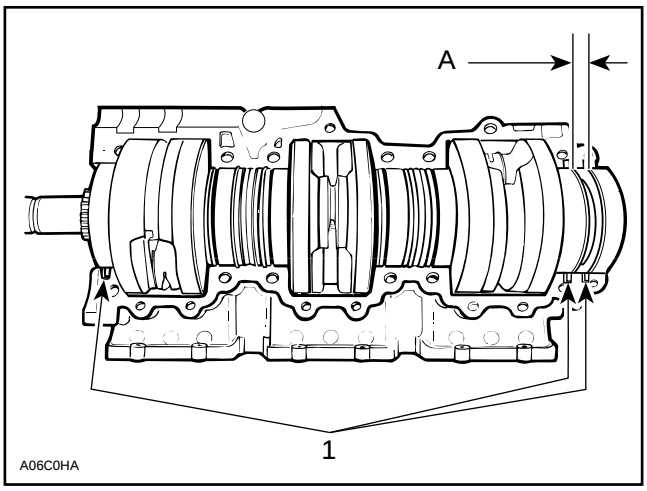

779 ENGINE

1. *Drive pins*

A. 8 mm (5/16 in)

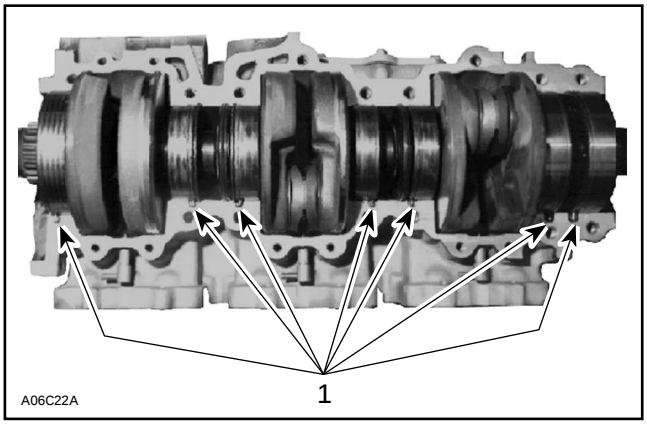

599 ENGINE

1. *Drive pins*

Before joining crankcase halves, spray some activator (P / N 413 7076 00) on one of mating surfaces. Apply paste gasket Loctite 515 (P / N 413 7027 00) to the other mating surface.

Torque crankcase screws in the following illustrated sequence. Tightening torques are :

M6 screws : 12 N•m (106 lbf•in)

M8 screws : 30 N•m (22 lbf•ft)

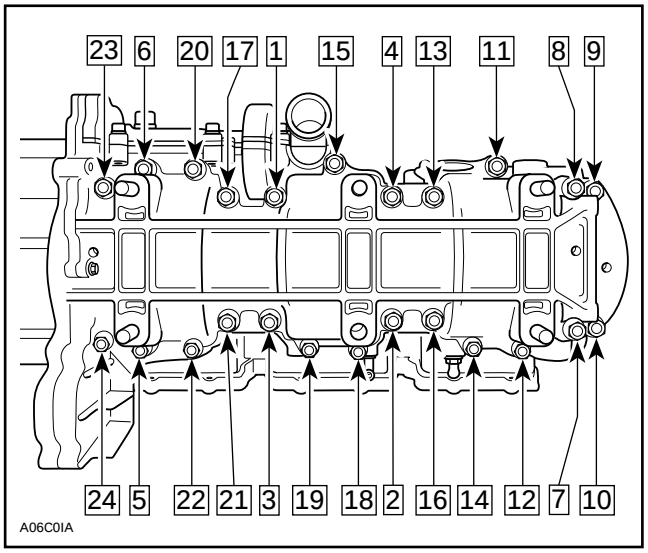

TYPICAL

5, Water Pump Housing

Apply silicone 732 RTV on sealing surface.

Tighten water pump housing screws to 10 N•m (90 lbf•in) following sequence as illustrated.

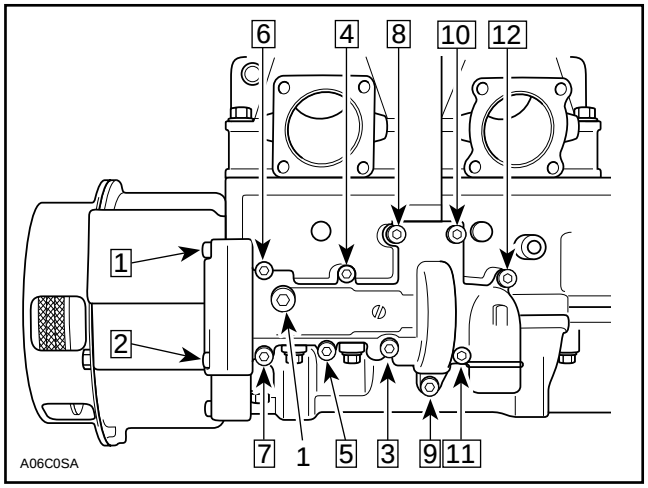

779 ENGINE

1. *Oil level plug*

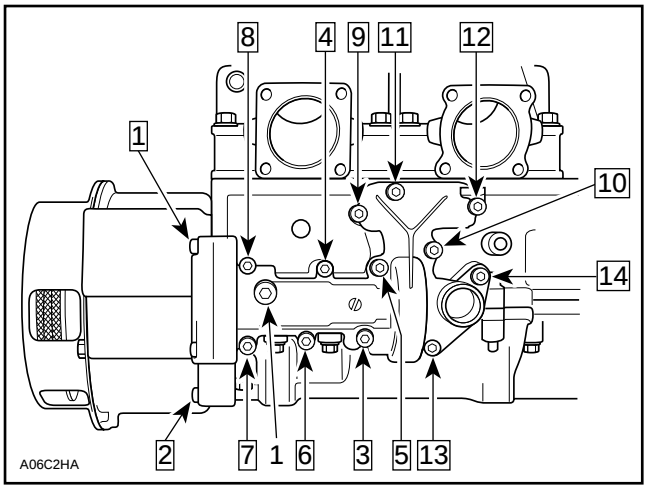

599 ENGINE
1. Oil level plug

Add chaincase synthetic oil (P / N 413 8028 00) into water pump housing until oil level reach bottom of plug hole. See above illustration. Total capacity is about 14 cc (.47 US oz).

This oil addition is needed only when servicing water pump. During normal engine operation, this oil can flow through engine. After that fuel / oil mixture will lubricate water pump bearings by scavenging.

6, Screw

Apply Loctite 242 on screw threads. Install the screw retaining oil line clip first. If experiencing leaks at carburetor adaptor, use primer N and Loctite 515 on sealing surfaces of crankcase and adaptor.

7, Seal

Install seal using pusher (P / N 420 8745 16).

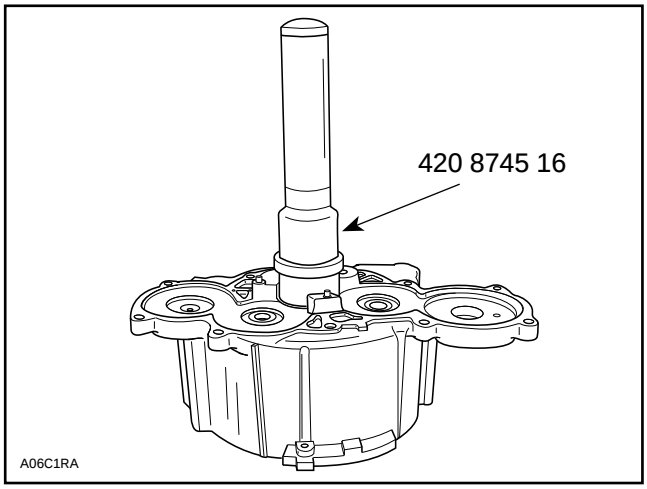

8,9, Plastic Gear and Steel Gear

Install plastic gear on oil pump side. Steel gear goes on water side, its shoulder first.

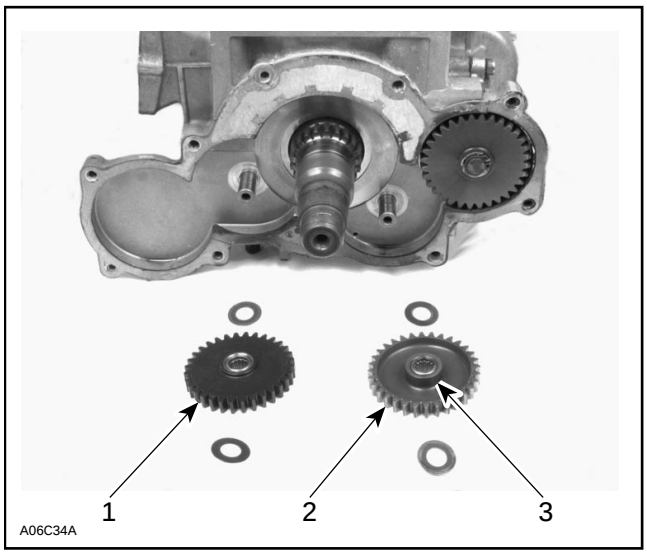

1. Plastic gear
2. Steel gear
3. Shoulder facing crankcase

LEAK TEST AND ENGINE DIMENSION MEASUREMENT

S Series and F Series

LEAK TEST

The following gives verification procedures for liquid cooled engines though it also applies to fan cooled engines. For FC engines, do not consider information pertaining to coolant system and crankcase rotary valve gear reservoir / components.

On twin-cylinder engines, each cylinder can not be verified individually due to leakage from one cylinder to the other through rotary valve (except on engines with separate intake manifolds). Besides, on FC engines, leak will occur through labyrinth sleeve in center of crankshaft.

PREPARATION

1. Remove tuned pipe / muffler and exhaust manifold.
2. Install plug(s) over exhaust flange(s). Tighten with previously removed screws.
3. On engines with RAVE system, remove RAVE valves and install plugs over flanges. Tighten with previously removed screws.
4. Remove carburetor(s).
5. Insert plug(s) in intake rubber boot(s). Tighten with clamps already there.
6. Using a hose pincher(s) (P / N 529 0099 00), block impulse hose(s).

NOTE : Do not block large hoses of rotary valve gear lubrication system.

7. Install air pump on any valve of exhaust plug.

NOTE : If necessary, lubricate air pump piston with mild soap.

CAUTION : Using hydrocarbon lubricant (such as engine oil) will damage rubber seal of pump piston.

8. Rotate crankshaft so that piston goes to BDC (Bottom Dead Center) on side where the pump is installed. This will open exhaust port.
9. Activate pump and pressurize engine to 34 kPa (5 PSIG). Do not exceed this pressure.
10. Engine must stand this pressure during 3 minutes.

    If pressure drops before 3 minutes, check tester kit by spraying a soapy solution on pump piston, all plugs and fittings.

    –If tester kit is leaking, bubbles will indicate where leak comes from.

    –If tester kit is not leaking, check engine as per following procedure.

PROCEDURE

NOTE : A flow chart has been prepared as a visual reference. See last page of sub-section ENGINE 03-01.

Using flow chart and following text, pressurize area to be tested and spray soapy solution at the indicated location.

TEST PRESSURE : 34 kPa (5 PSIG)
for 3 minutes

– If there is a leak at the tested location, it is recommended to continue testing next items before overhauling engine. There is a possibility of more than one leak.

– If there is no leak at the tested location, continue pumping to maintain pressure and continue with next items until leak is found.

Engine

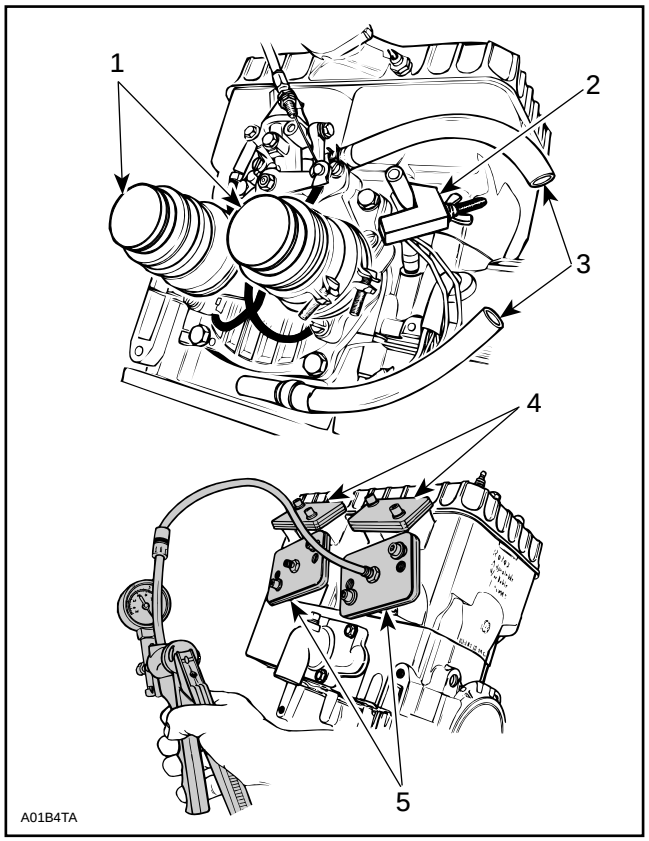

TYPICAL

1. *Blocked intake flanges*
2. *Blocked impulse fitting*
3. *Open ends (if applicable)*
4. *Blocked RAVE valve flanges (if applicable)*
5. *Blocked exhaust flanges*

When exhaust manifold is installed, use rubber plug. (In this case it is not necessary to move piston to BDC).

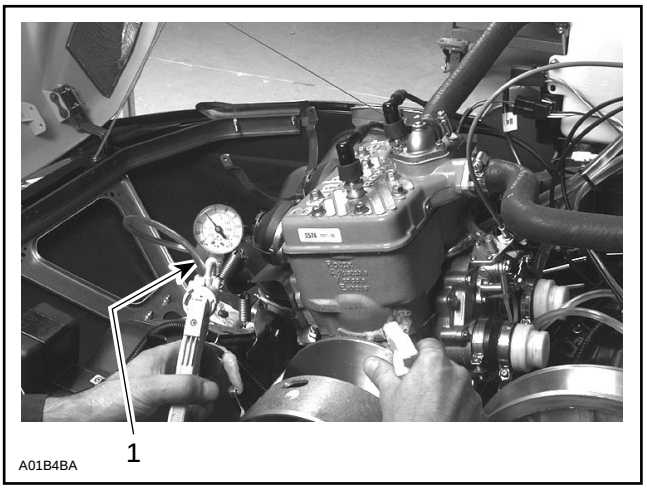

1. *Rubber plug*

Check the following :

1. All jointed surfaces and screw / stud threads of engine :
   - spark plug base, insulator
   - cylinder head
   - decompressor valve (247 and 277 types only)
   - cylinder base
   - crankcase halves (joint)
   - rotary valve cover
   - oil injection pump mounting flange (O-ring, seal)
   - coolant pump housing
   - bleed screws / plugs
2. Small injection oil lines coming from pump.

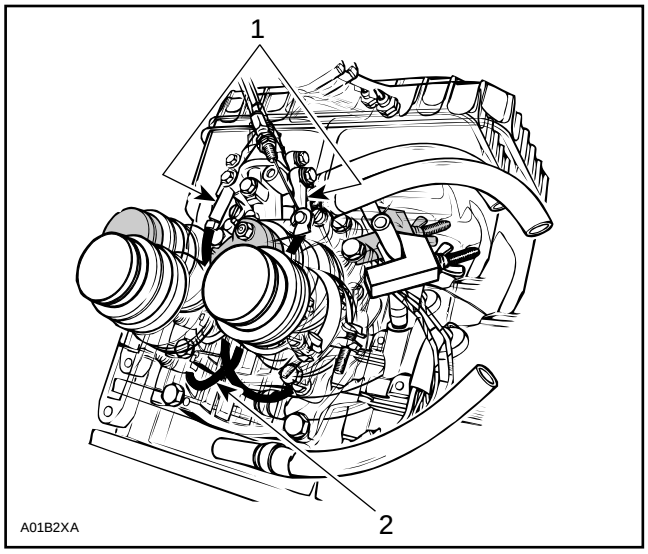

1. *Banjo fittings*
2. *Small injection oil lines*

Check for air bubbles or oil column going toward pump. It indicates defective check valve in banjo fitting (or lines).

3. Remove cooling system cap.

Check for air bubbles in antifreeze. It indicates defective cylinder head O-ring or cylinder base gasket.

4. Block both hoses of rotary valve gear lubrication system with hose pincers.

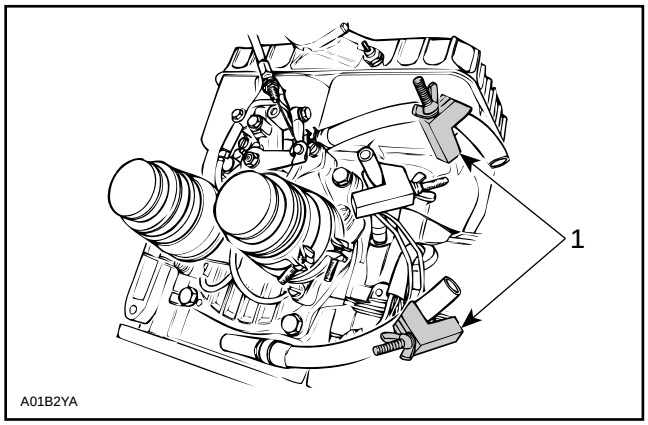

1. Block both hoses

If leakage stops, ignore remaining items and check crankcase rotary valve gear reservoir as per Crankcase Rotary Valve Gear Reservoir of this section.

5. Remove clutch then check crankshaft outer seal.
6. Remove rewind starter and magneto system then check crankshaft outer seal.
7. Check crankcase rotary valve gear reservoir.

Crankcase Rotary Valve Gear Reservoir

Block one hose of rotary valve gear lubrication system with a hose pincer and install an adapter in remaining hose.

Install air pump on adapter and pressurize as before.

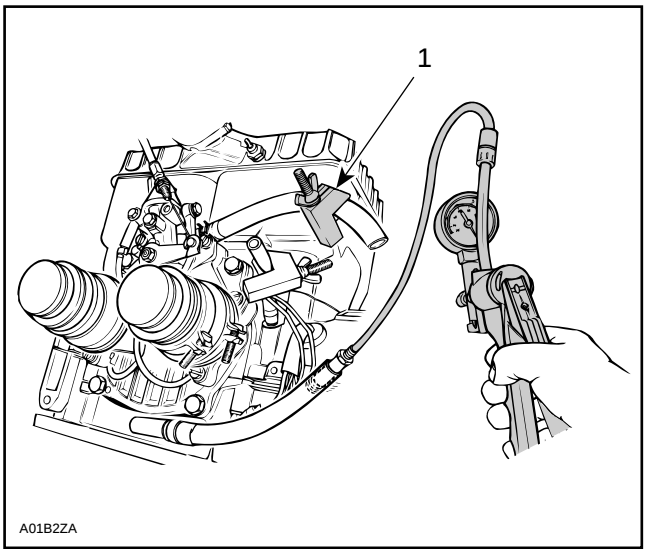

1. Blocked hose

1. Remove a spark plug or any plug of leak tester kit on PTO side.

   If pressure drops, it indicates defective crankshaft inner seal on PTO side.
2. Remove a spark plug or any plug of leak tester kit on MAG side.

   If pressure drops, it indicates defective crankshaft inner seal on MAG side.
3. Check drain hole below coolant pump housing with soapy water.

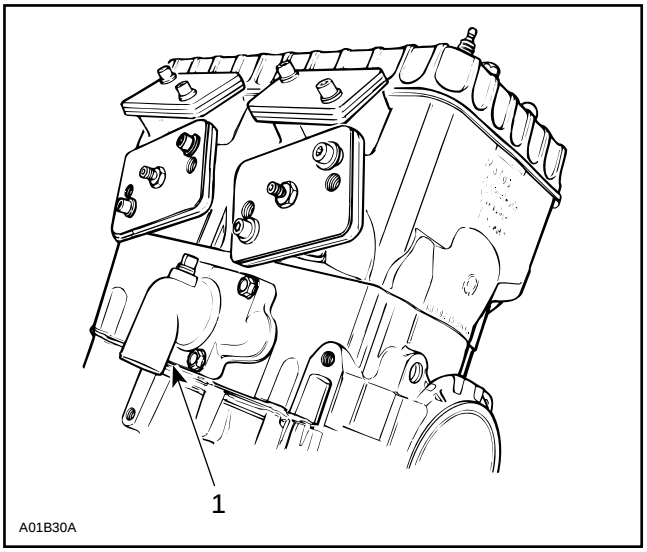

1. Drain hole

If there is a leak, it indicates defective seal of rotary valve shaft (oil seal beside coolant seal).

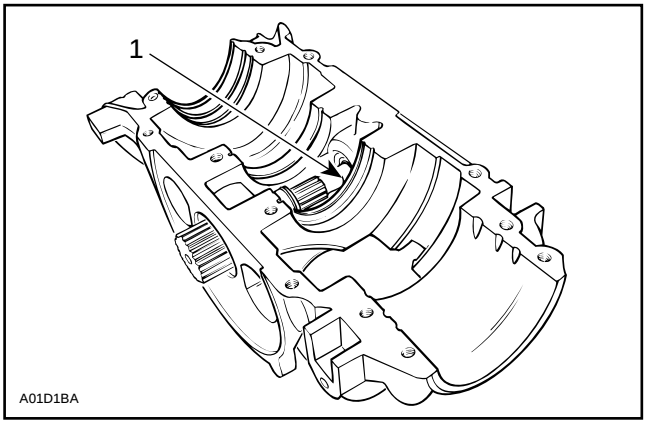

1. Oil seal

4. Remove rotary valve cover and check for leak of rotary valve seal with soapy water.

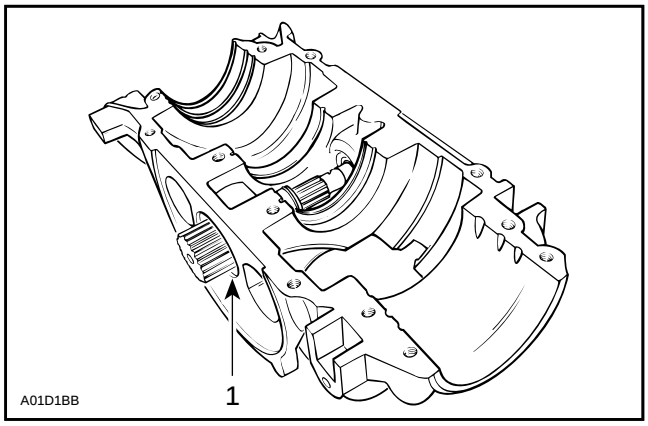

1. Seal

5. If leak still persists, it indicates a defective casting somewhere in engine.

   Disassemble engine and carefully check for defects in castings. Pay attention to tapped holes which may go through engine sealed area and thus leading to leakage.

FINALIZING REASSEMBLY

After reassembling engine, always recheck for leakage.

COOLING SYSTEM LEAK TEST

Use special plug (radiator cap) (P / N 529 0214 00) and pressurize to 15 PSIG (100 kPa).

Check all hoses and cylinder / base for coolant leaks. Spray a soap / water solution and look for presence of air bubbles. Refer to LIQUID COOLING SYSTEM 04-09 for exploded views.

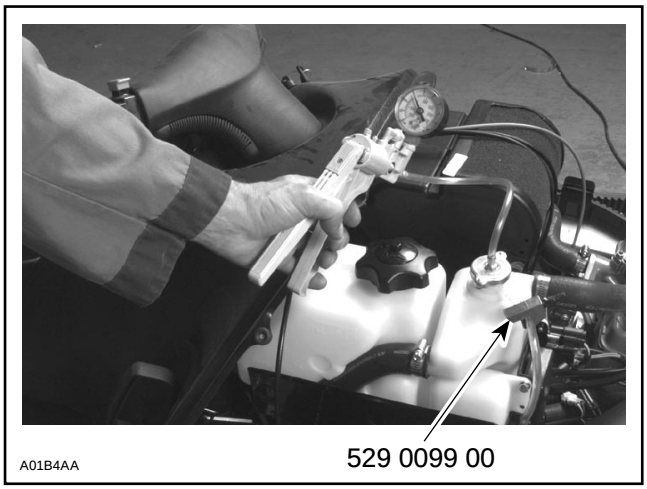

TYPICAL

ENGINE DIMENSION MEASUREMENT

This section covers all engine types.

CYLINDER TAPER

ENGINE TYPE	MAXIMUM
All	0.08 mm (.003 in)

Compare cylinder diameter 16 mm (5/8 in) from top of cylinder to just below its intake port area.

On rotary valve engines, measure just below auxiliary transfer port, facing exhaust port. If the difference exceeds the specified dimension the cylinder should be rebored and honed or should be replaced.

NOTE : Be sure to restore the chamfer around all cylinder sleeve port openings.

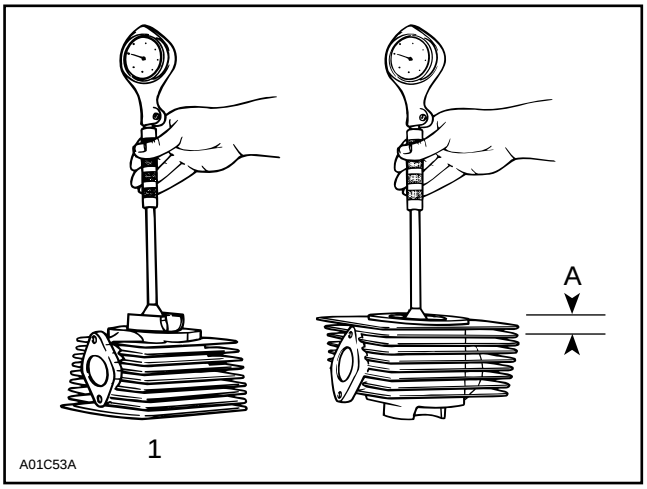

1. Below the intake port
A. 16 mm (5/8 in)

CYLINDER OUT OF ROUND

ENGINE TYPE	MAXIMUM
All	0.05 mm (.002 in)

Measuring 16 mm (5/8 in) from top of cylinder with a cylinder gauge, check if the cylinder out of round is more than the specified dimension. If larger, cylinder should be rebored and honed or should be replaced.

NOTE : Be sure to restore the chamfer around all cylinder sleeve port openings.

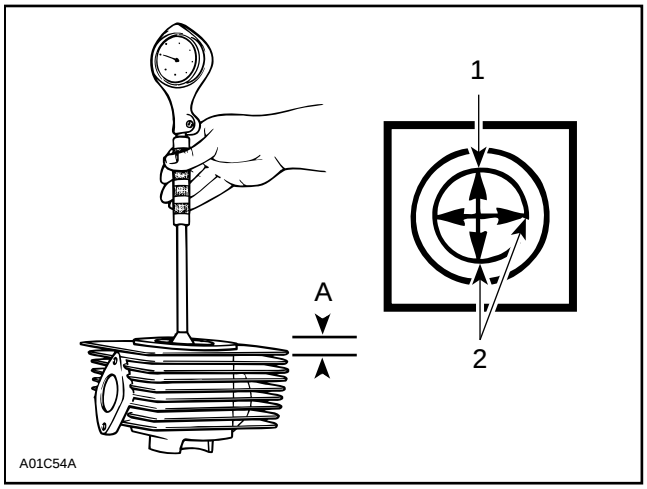

1. Piston pin position
2. Measures to be compared
A. 16 mm (5/8 in)

CYLINDER / PISTON CLEARANCE

Measurement (used parts)

Check cylinder taper and out-of-round as described above before proceeding with piston / cylinder clearance.

To accurately determine piston to cylinder clearance, the piston should be measured under the axis hole and 90° to piston pin axis. Find the biggest diameter.

The cylinder should be measured 16 mm (5/8 in) below its top edge. Find the smallest diameter.

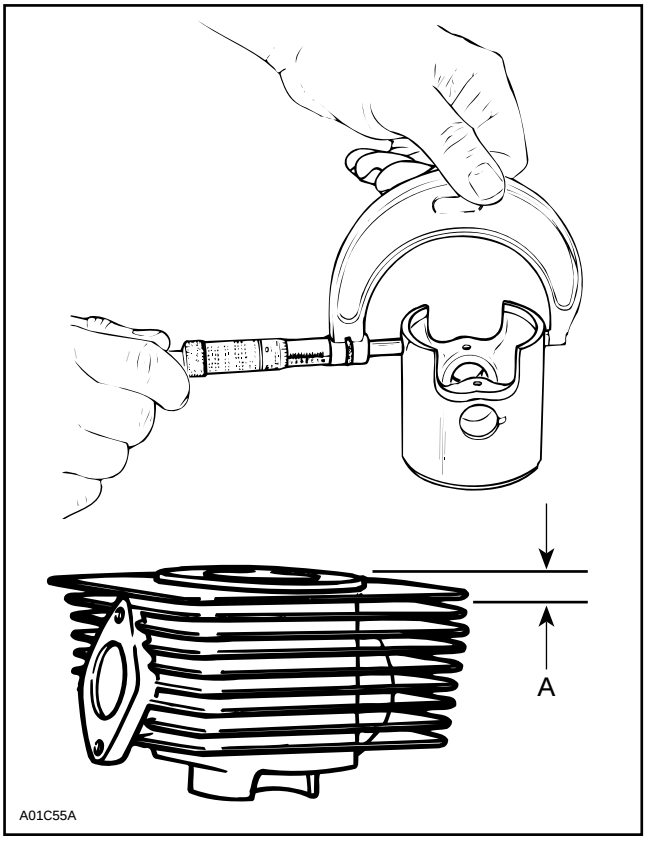

A. 16 mm (5/8 in)

The difference between these 2 measurements should be within specified tolerance. Refer to TECHNICAL DATA 10-02.

Measurement (Fitting New Parts)

With an inside micrometer, measure cylinder diameter above the exhaust port.

With a micrometer, measure the piston diameter perpendicularly (90°) to piston axis and 3 mm (1/8 in) above bottom edge.

The difference of both measurements is the clearance.

RING / PISTON GROOVE CLEARANCE

Using a feeler gauge check clearance between rectangular ring and groove. Replace piston. If clearance exceeds specified tolerance. Refer to TECHNICAL DATA 10-02.

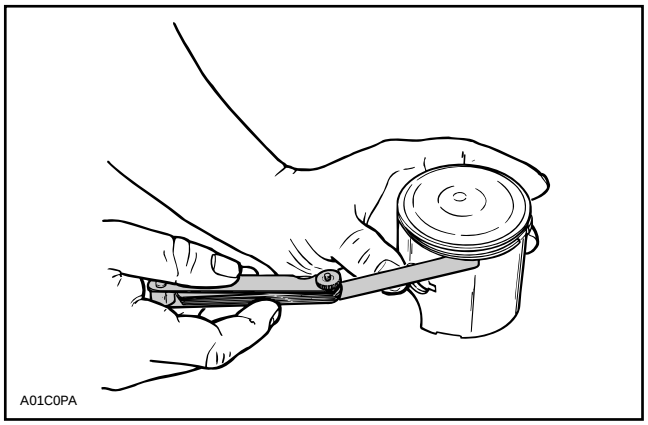

RING END GAP

Position ring half way between transfer ports and intake port. On rotary valve engines, position ring just below transfer ports.

NOTE : In order to correctly position the ring in the cylinder, use piston as a pusher.

Using a feeler gauge, check ring end gap. Replace ring. If gap exceeds specified tolerance, refer to TECHNICAL DATA 10-02.

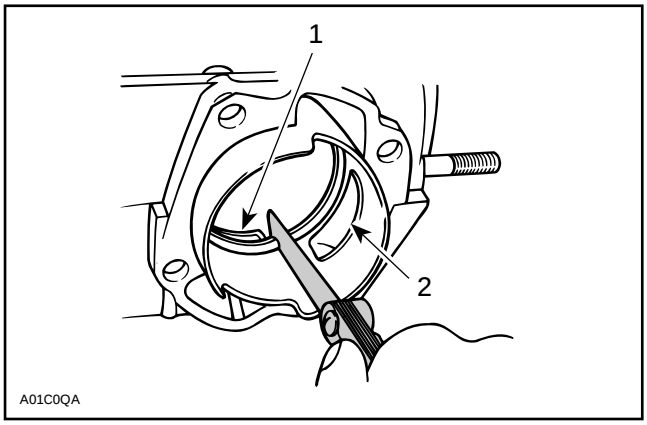

1. Transfer port
2. Intake port

CRANKSHAFT DEFLECTION

Crankshaft Deflection in Mid of Crankshaft

ENGINE TYPE	MAXIMUM IN MID OF CRANKSHAFT
All	0.08 (.0031 in)

Crankshaft deflection can also be measured each end with a dial indicator.

First, check deflection with crankshaft in engine. If deflection exceeds the specified tolerance, it can be either bearing wear or bent crankshaft. Remove crankshaft bearings and check deflection again on V-shaped blocks at A measurement as illustrated.

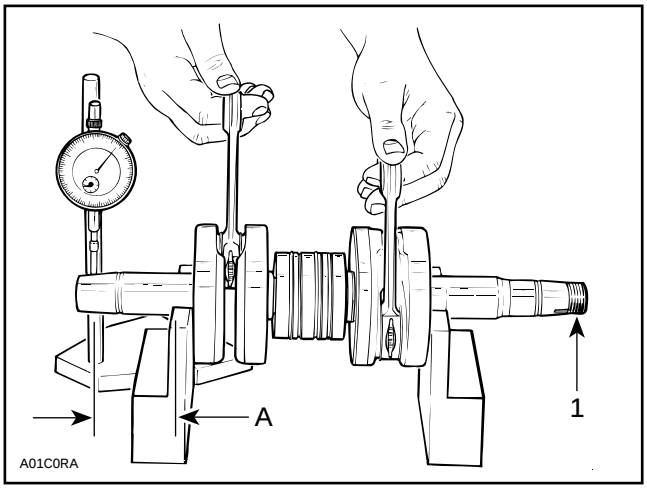

1. Measure at mid point between the key and the first thread

Crankshaft Deflection on PTO Side

ENGINE TYPE	DISTANCE A mm (in)	MAXIMUM ON PTO SIDE mm (in)
377, 443	75.5 (2.972)	0.05 (.002)
454, 494, 582 and 583	86 (3.386)	0.06 (.002)
503	82.5 (3.248)	
670	100 (3.937)	
599, 779	94.5 (3.720)	0.03 (.001)

Crankshaft Deflection on MAG Side

ENGINE TYPE	MAXIMUM ON MAG SIDE mm (in)
All except 779	0.03 (.001)
779	0.05 (.002)

NOTE : Crankshaft deflection can not be correctly measured between centers of a lathe.

If the deflection exceeds the specified tolerance, crankshaft should be repaired or replaced.

CONNECTING ROD BIG END AXIAL PLAY

ENGINE TYPE	NEW PARTS MIN. – MAX.	WEAR LIMIT
247, 277, 377 443 and 503	0.20 – 0.53 mm (.008 – .021 in)	1.00 mm (.039 in)
454, 494, 582, 583, 670 and 779	0.40 – 0.75 mm (.016 – .029 in)	1.20 mm (.047 in)

Using a feeler gauge, measure distance between thrust washer and crankshaft counterweight. If the distance exceeds specified tolerance, repair or replace the crankshaft.

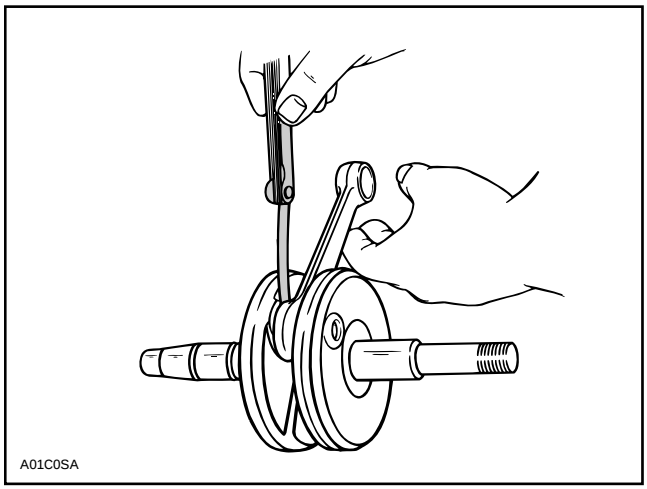

TYPICAL

CONNECTING ROD / PISTON PIN CLEARANCE

Measure piston pin with its needle bearing. Compare to inside diameter of connecting rod.

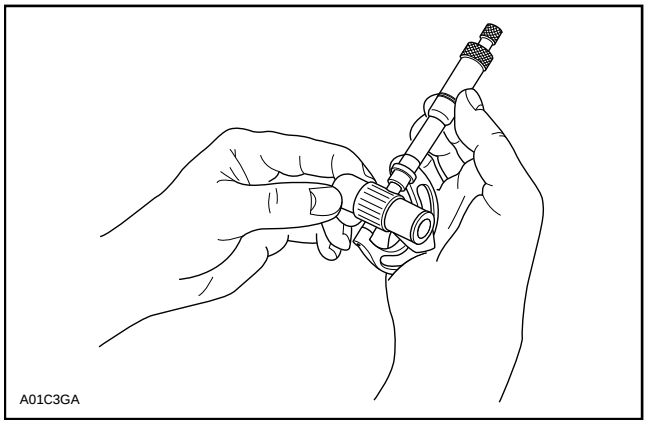

ENGINE TYPE	NEW PARTS MIN. – MAX.	WEAR LIMIT
All	0.03 – 0.012 mm (.0001 – .0005 in)	0.015 mm (.0006 in)

CONNECTING ROD / CRANKPIN CLEARANCE

ENGINE TYPE	NEW PARTS MIN. – MAX.	WEAR LIMIT
247	0.020 – 0.032 mm (.0008 – .0013 in)	0.05 mm (.0020 in)
277	0.020 – 0.030 mm (.0008 – .0012 in)	
377, 443 and 503	0.020 – 0.033 mm (.0008 – .0013 in)	
454, 494, 582, 583, 670 and 779	0.038 – 0.050 mm (.0015 – .0020 in)	0.06 mm (.0024 in)

CRANKSHAFT END-PLAY

247 and 277 Engine Types

ENGINE TYPE	MINIMUM	MAXIMUM
247 and 277	0.10 mm (.004 in)	.030 mm (.012 in)

Adjustment

Crankshaft end-play is adjusted with shims located between crankshaft and magneto side bearing.

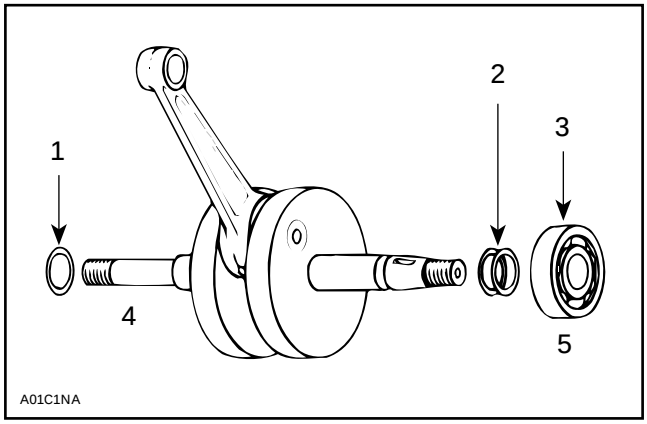

1. Distance ring
2. Shim location
3. Bearing
4. PTO
5. MAG

CAUTION : Always install end-play adjustment shims on the magneto side between bearing and crankshaft counterweight.

The following is required for the adjustment procedure :

– adjustment shims (refer to parts catalog)

thicknesses available : 0.10 mm (.004 in)
0.20 mm (.008 in)
0.30 mm (.012 in)
0.50 mm (.020 in)
1.00 mm (.040 in)

– micrometer

– vernier

Total shim thickness needed for the end-play adjustment is determined with the following procedure :

a. Measure crankcase halves as illustrated (M_1 and M_2).

A standard compressed crankcase gasket will have a 0.30 mm (.012 in) thickness (M_3). Add these measurements to obtain dimension A.

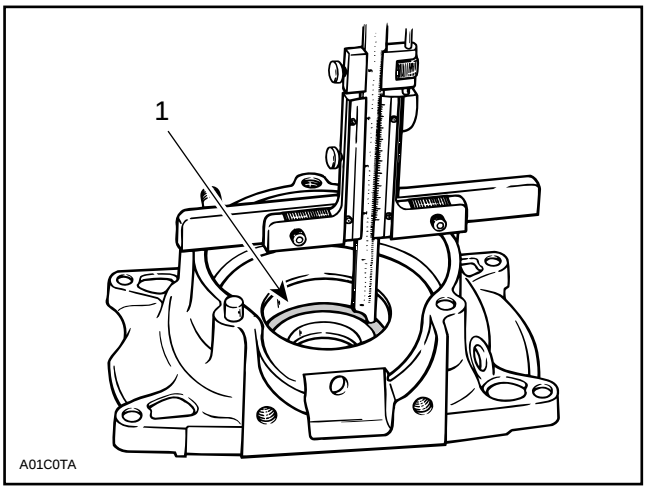

1. Bearing seat

b. Measure the thickness of each bearing (M_4 and M_5).

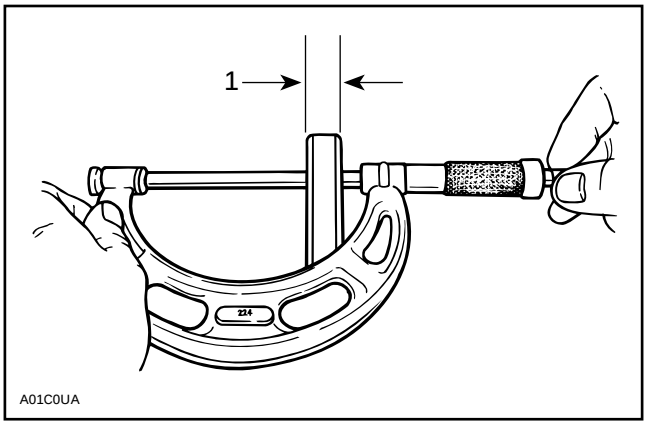

1. Bearing thickness

c. Measure distance between bearing shoulders on crankshaft (M_6).

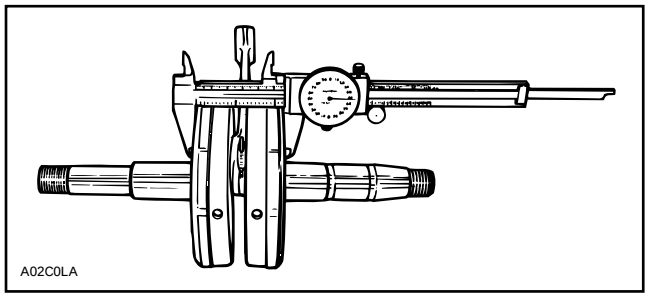

d. Measure the distance ring (M_7) and adjustment shims thickness (M_8). Add these measurements to obtain dimension B.

e. From dimension A, subtract dimension B.

The result is the actual crankshaft end-play that must be within specification.

If the result is over specification, add adjustment shim(s) to reach this specification.

If the result is under specification, remove adjustment shim(s) to reach this specification.

To Summarize

$A = M_1 + M_2 + M_3$

$B = M_4 + M_5 + M_6 + M_7 + M_8$

A – B =Actual end-play that must be within specification.

M_8 is the dimension that must be adjusted to obtain the specified crankshaft end-play.

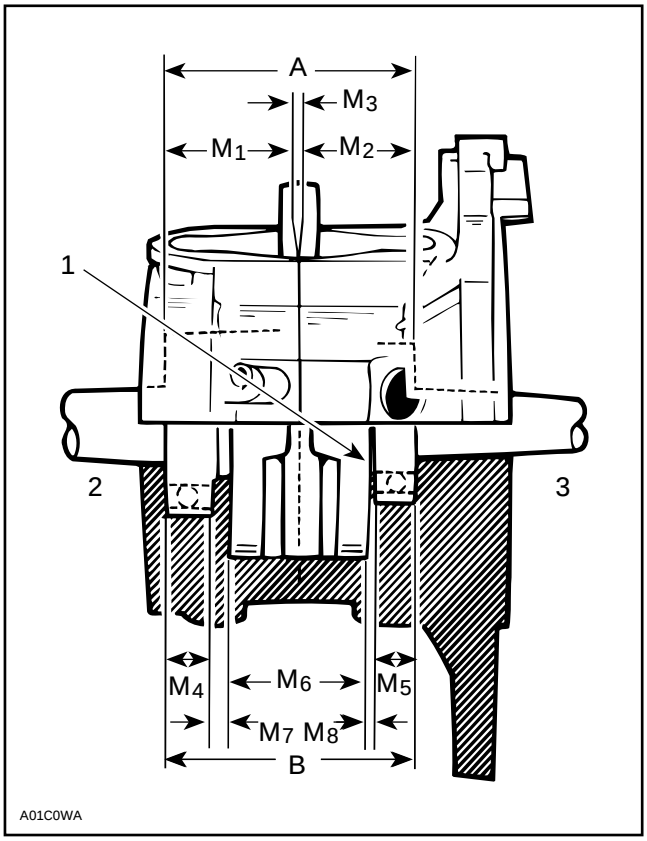

1. End-play is adjusted with shims
2. PTO
3. MAG
A. $M_1 + M_2 + M_3$
B. $M_4 + M_5 + M_6 + M_7 + M_8$

377, 443, 454, 494, 503, 582, 583, 670 and 779 Engine Types

End-play is not adjustable but it should be between 0.10 – 0.30 mm (.004 – .012 in).

CRANKCASE / ROTARY VALVE GAP

ENGINE TYPE	MINIMUM	MAXIMUM
Liquid cooled engines	0.27 mm (0.011 in)	0.40 mm (0.016 in)

First Method

To measure this gap use a feeler gauge inserted between rotary valve and upper crankcase with the rotary valve cover in place without its O-ring. Check the most surface as possible. Follow the same procedure with the lower crankcase.

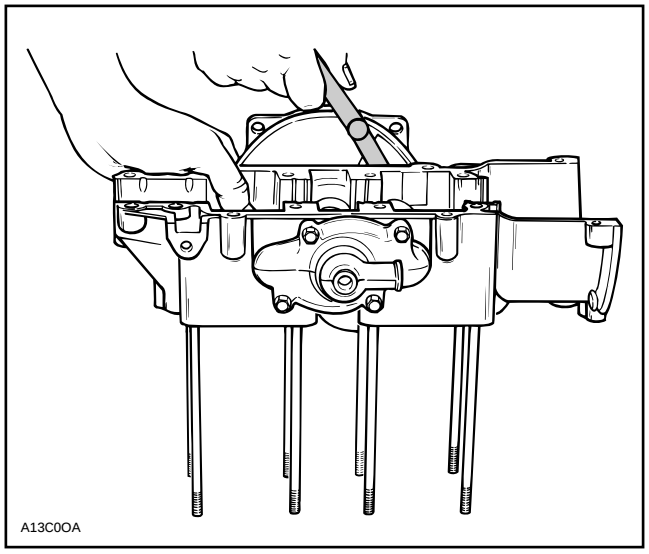

TYPICAL

The gap can be measured with the engine installed on vehicle. Use 45° bent blade feeler gauge (Snap-On FB300A) inserted through intake socket of valve cover.

If gap is under tolerances, rotary valve cover can be refaced to increase clearance.

If gap is over tolerances, cover replacement may be necessary. Check if surfaces on crankcase halves are damaged, replacement wear plate is available.

Second Method

Remove rotary valve cover and its O-ring.

Use the following type of solder :

- rosin core
- diameter : 0.5 mm (0.020 in)
- electronic application (available at electronic stores)

Install 2 short pieces (13 mm (1/2 in) long) of solder directly on rotary valve, one above and one below rotary valve gear. Apply grease to hold solder in position.

Reinstall cover in place WITHOUT its O-ring and torque screws to 20 N•m (15 lbf•ft).

Remove cover then clean and measure compressed solder thickness, it must be within the specified tolerance.

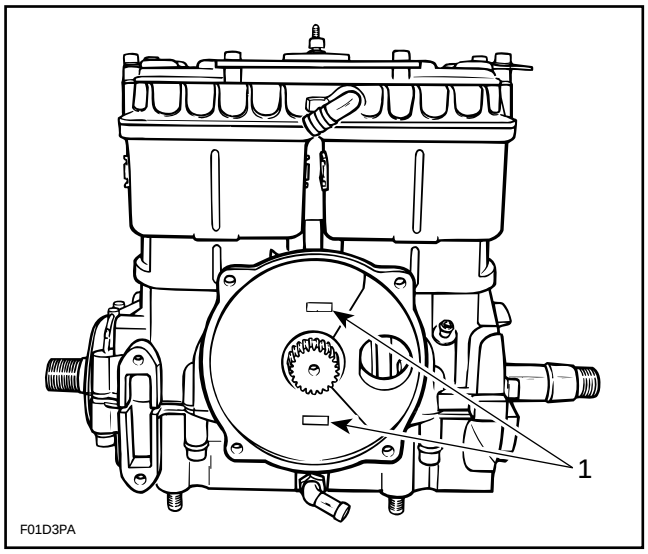

TYPICAL
1. Solder

CHECKING SURFACE FLATNESS

Intake manifold, intake manifold cover, rotary valve cover can be checked for perfectly mating surfaces.

Lay part on a surface plate (marble, mirror or thick glass plate).

Holding down one end of part, try pushing down the other end.

If any play is felt, part must be rectified.

RECTIFYING SURFACES

Stick a fine sand paper sheet on the surface plate then lightly oil the sand paper.

Rub manifold mating surface on sand paper using 8-figure movements.

Sand until mating surface is perfectly straight.

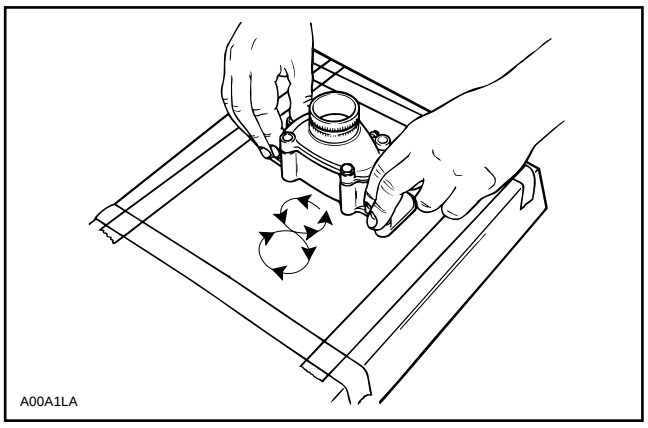

CHECKING CRANKSHAFT ALIGNMENT

Install a degree wheel (P / N 414 3529 00) on crankshaft end.

Remove both spark plugs.

Install a TDC gauge (P / N 414 1047 00) in spark plug hole on MAG side.

Bring MAG piston at top dead center.

Rotate degree wheel (not crankshaft) so that 360° mark aligns with center of crankcase. Scribe a mark on crankcase.

Remove TDC gauge and install it on PTO side.

Bring PTO piston to top dead center.

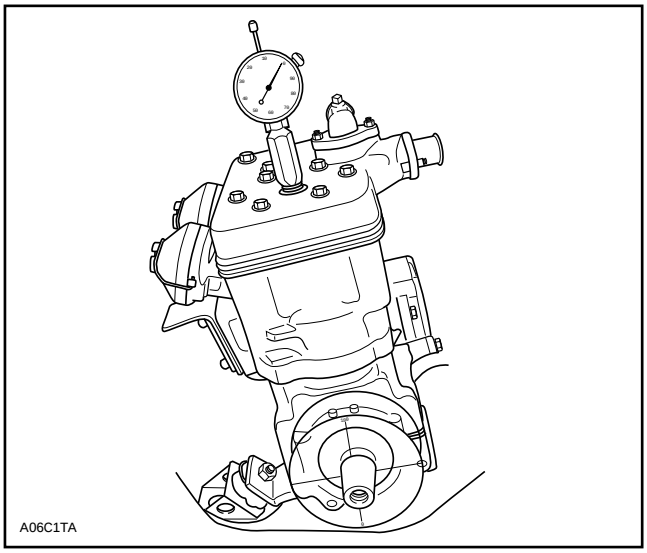

Interval between cylinders must be exactly 180° and 120° for 779 engine.

Any other reading indicates a misaligned crankshaft.

CDI SYSTEM

NIPPONDENSO TRIGGER COIL IGNITION SYSTEM

454, 583, and 670 Engines

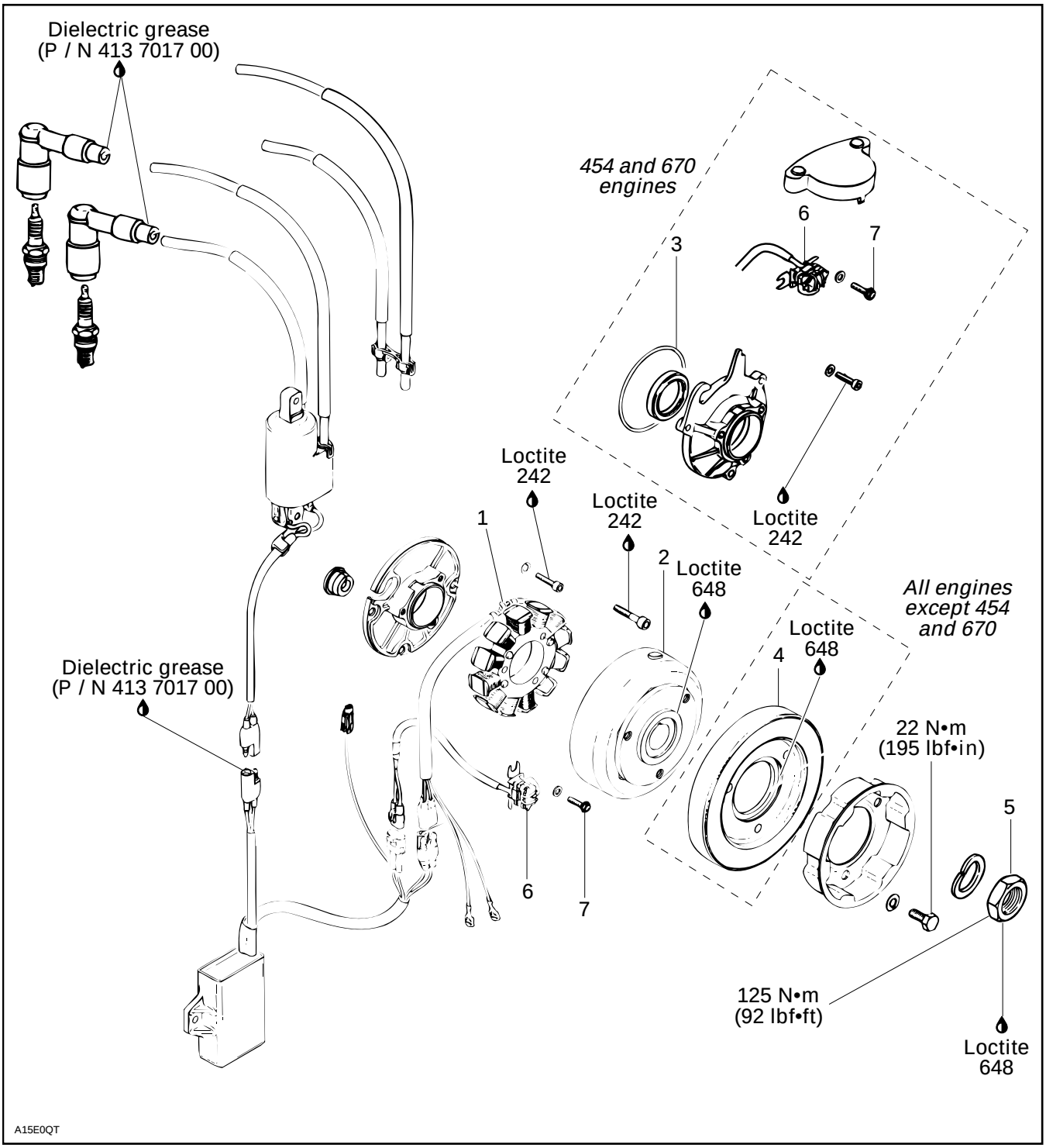

599 and 779 Engines

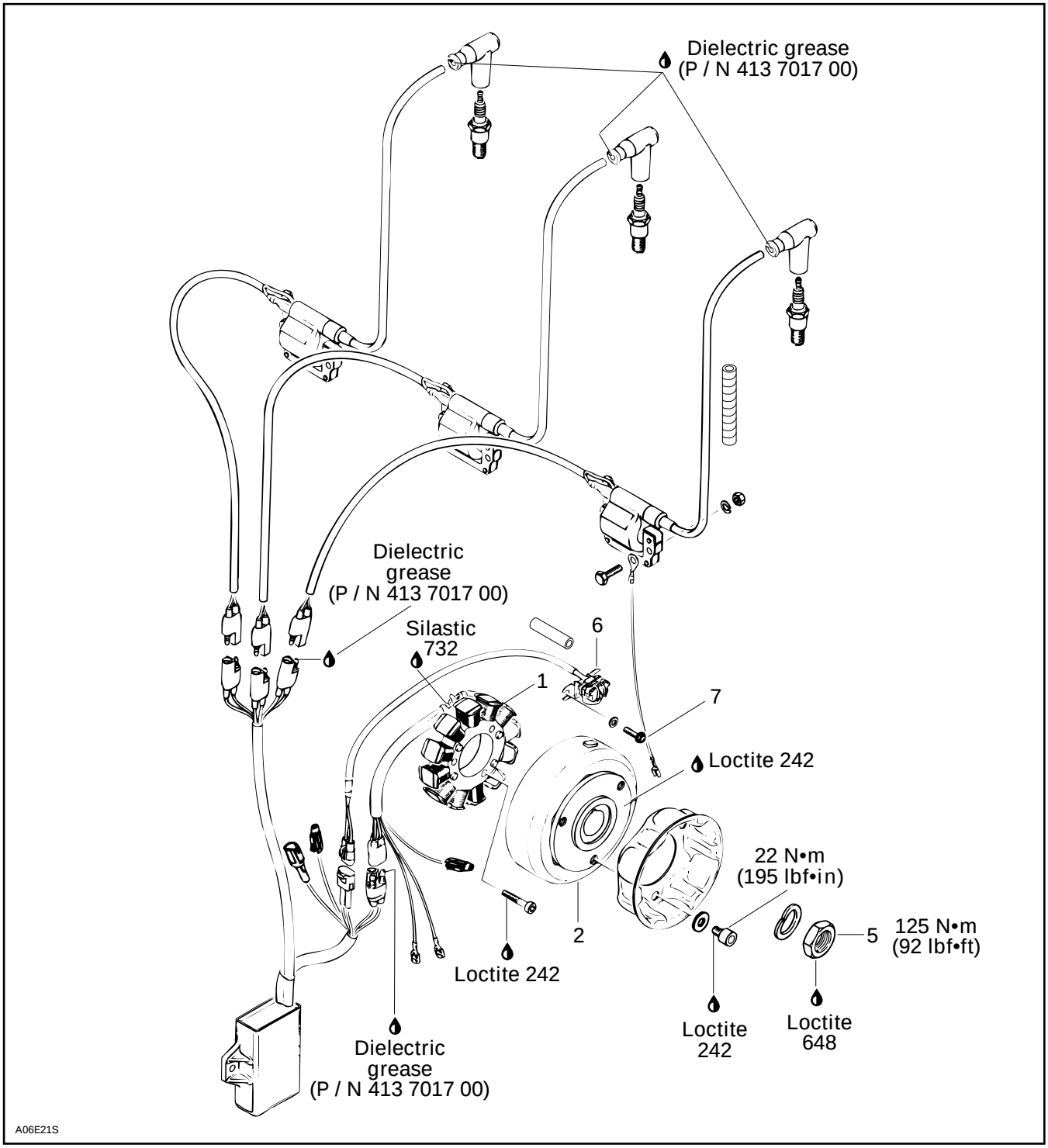

NOTE : The following procedures can be done without removing the engine from chassis. To facilitate magneto removal, hold drive pulley with tool (P / N 529 0276 00).

CLEANING

Clean all metal components in a non-ferrous metal cleaner.

CAUTION : Clean stator and magneto using only a clean cloth.

DISASSEMBLY

2,5, Magneto and Magneto Flywheel Nut

To gain access to magneto assembly, remove the following parts as needed on different engines :

– muffler
– rewind starter
– starting pulley

To remove magneto flywheel retaining nut :

Use magneto puller ring (P / N 420 8760 80) modified as shown.

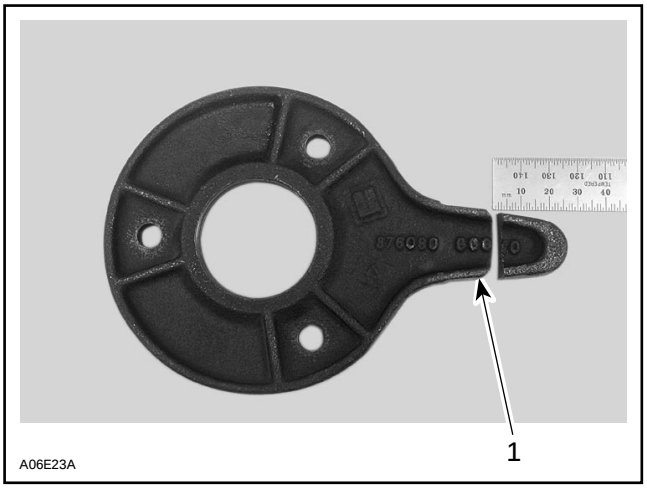

1. Cut by 25 mm (1 in)

Install puller with its tab in magneto housing opening.

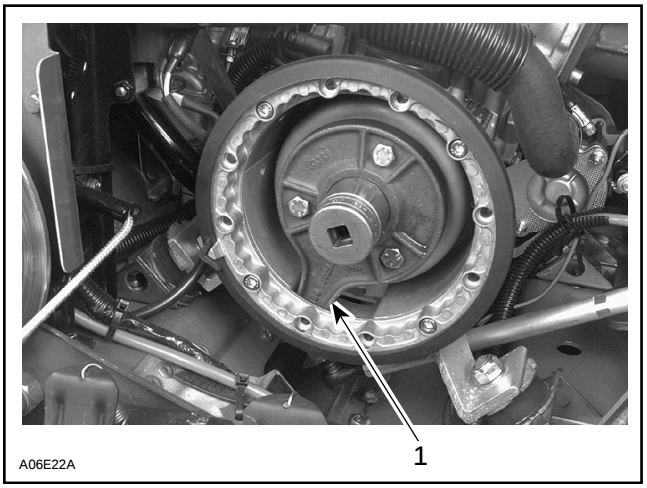

TYPICAL
1. Tab in magneto housing opening

– Remove magneto flywheel nut, using a 30 mm socket machined to 40 mm (1.580 in) outside diameter by 16 mm (5/8 in) long.

NOTE : To correctly remove a threadlocked fastener it is first necessary to tap on the fastener to break threadlocker bond. This will eliminate the possibility of thread breakage.

To remove magneto flywheel, install the suitable puller as shown.

– Tighten puller bolt and at the same time, tap on bolt head using a hammer to release magneto flywheel from its taper.

4, Hydro Damper Ass'y

Check for oil leaks and for noisy ring inside. Replaced it in both cases.

6,7, Trigger Coil and Screw

Magneto and stator plate must be removed before trigger coil removal.

To replace trigger coil :

– Disconnect trigger coil connector housing.
– Remove grommet from crankcase where trigger coil wire exits magneto housing.
– Remove retaining screws.
– Remove trigger coil and carefully pull wires.
– Thread magneto harness through crankcase hole before trigger coil harness.

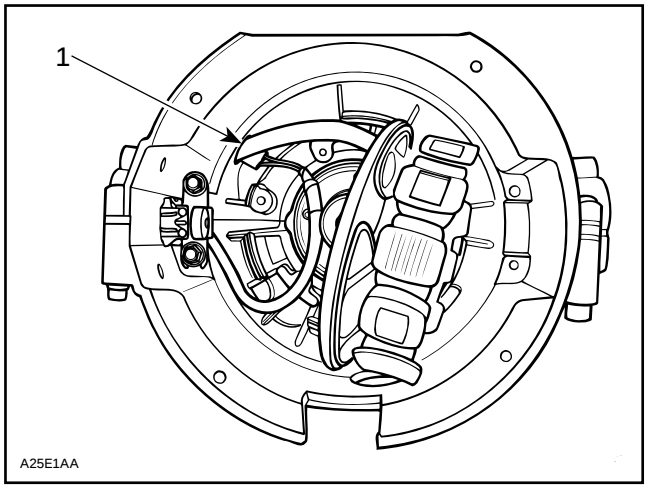

1. Magneto harness through crankcase hole

– Install new trigger coil and other parts removed.

Adjustment

Whenever the trigger coil or the magneto flywheel is removed or replaced, the air-gap between the trigger coil and the flywheel protrusion must be checked and adjusted. The purpose of this adjustment is to obtain the minimum clearance between these parts – without touching at any RPM – so that the trigger coil produces its proper electrical output. Ignition timing must also be checked. Refer to IGNITION TIMING 06-02 then look for Checking Ignition Timing.

▼CAUTION : Each time trigger coil air-gap is adjusted, ignition timing must be checked.

Proceed as follows :

1. Rotate flywheel so that the protrusion aligns with trigger coil.
2. Using a feeler gauge of 0.75 mm (.030 in) min. 0.55 mm (.022 in) and max. 1.45 mm (.057 in) thick, check air-gap between center pole of trigger coil and flywheel protrusion.
3. If necessary, adjust by slackening retaining screws and moving trigger coil toward or away of protrusion.
4. Retighten screws and recheck air-gap.

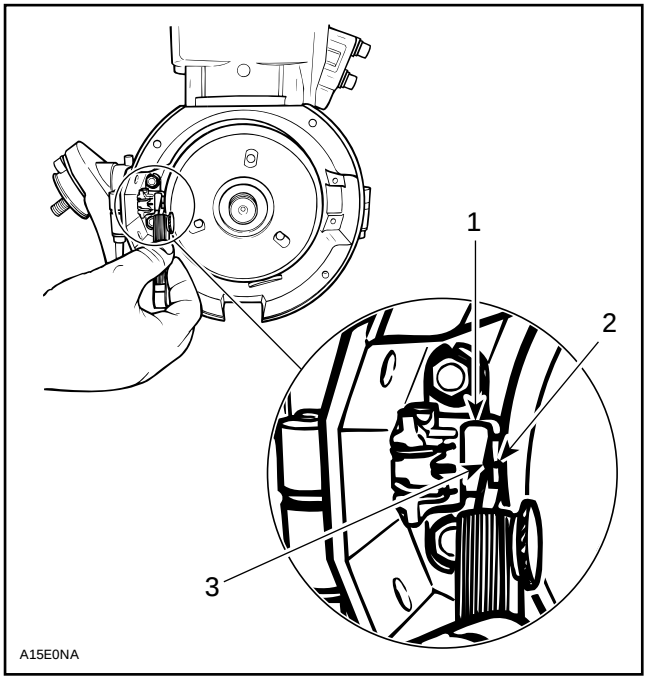

ADJUSTING TRIGGER COIL AIR-GAP

1. Trigger coil
2. Flywheel protrusion
3. Measure at center pole of trigger coil 0.75 mm (.030 in)

1, Stator

To replace stator :

– Disconnect the 3-wire connector (BLACK, RED and BLACK / RED wires).
– Disconnect both YELLOW wires.
– Remove grommet from crankcase where magneto harness exits magneto housing.
– Remove stator plate retaining screws.
– Remove stator plate with stator and carefully pull wires.
– Install new parts and other parts removed taking care not to squeeze trigger coil harness.

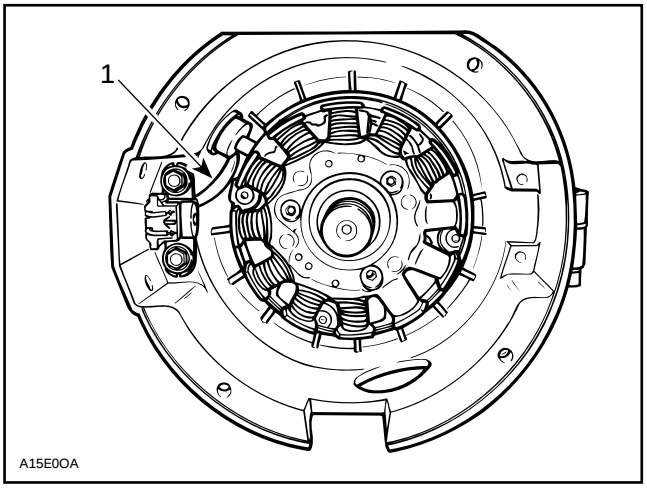

1. Trigger coil harness

ASSEMBLY

3, Oil Seal

Use pusher (P / N 420 8765 14) to install oil seal into stator.

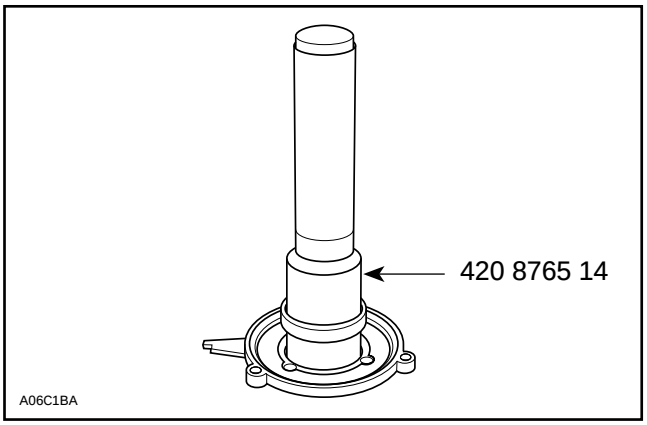

2,5, Magneto Flywheel and Nut

Clean crankshaft extension (taper) and apply Loctite 242 (blue) on taper, then position Woodruff key, flywheel and lock washer on crankshaft.

Clean nut threads and apply Loctite 242 (blue) then tighten nut 125 N•m (92 lbf•ft).

At reassembly coat all electric connections with silicone dielectric grease (P / N 413 7017 00) to prevent corrosion or moisture penetration.

CAUTION : Do not use silicone "sealant", this product will corrode contacts.

Ignition Timing

Check as described in IGNITION TIMING 06-02.

DUCATI IGNITION SYSTEM

503 Engine

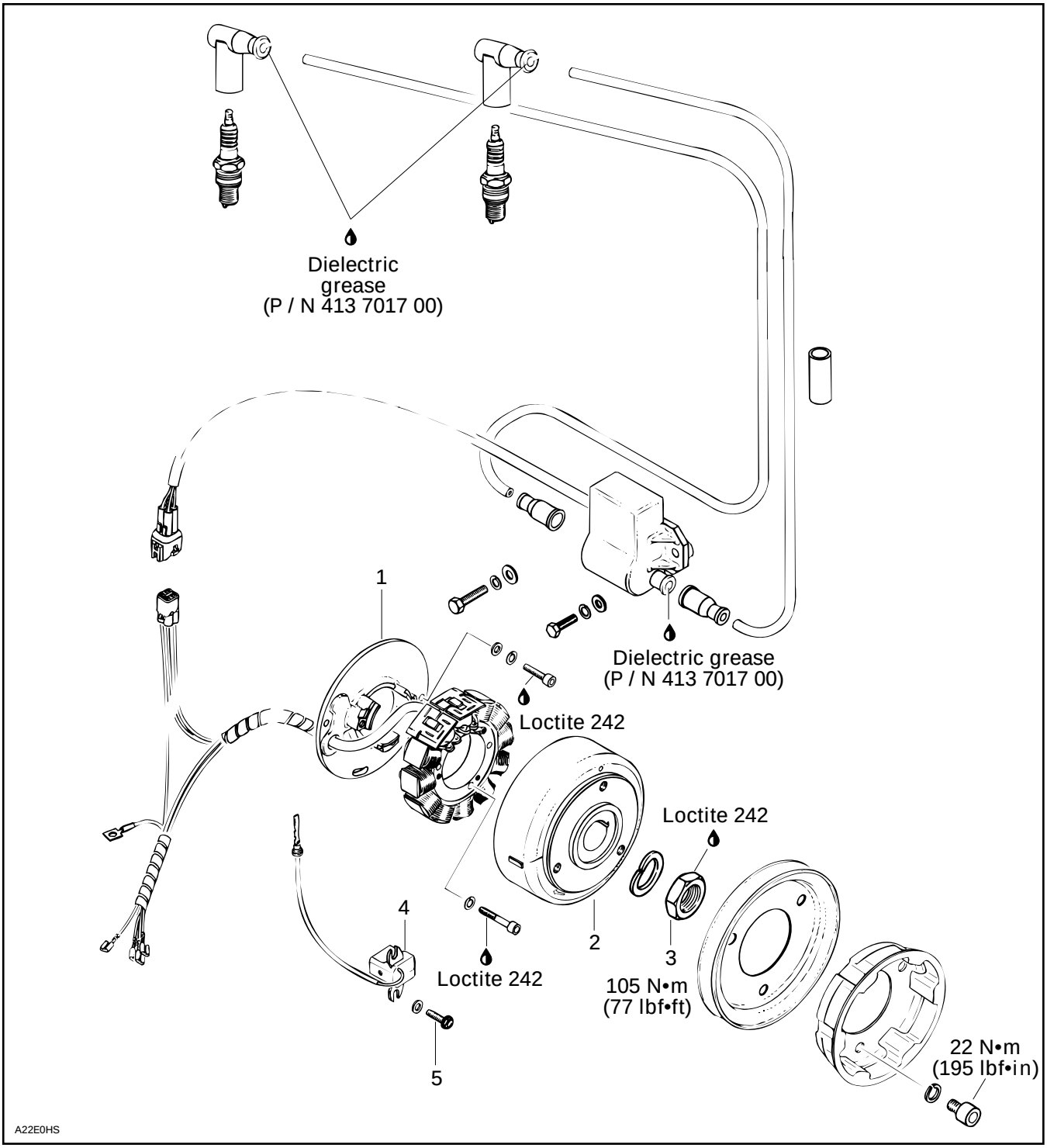

NOTE : The following procedures can be done without removing the engine from chassis.

CLEANING

Clean all metal components in a non-ferrous metal cleaner.

CAUTION : Clean stator and magneto using only a clean cloth.

DISASSEMBLY

3, Magneto Flywheel Nut

To gain access to magneto assembly, remove the following parts as needed on different engines :

– muffler
– rewind starter with oil injection pump
– starting and V-belt pulleys

To remove magneto flywheel retaining nut :

Install magneto puller ring (P / N 420 8760 00).

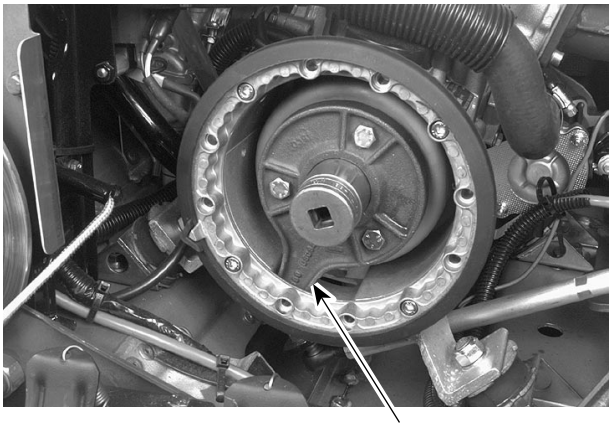

TYPICAL

1. Tab in magneto housing opening

Remove magneto flywheel nut.

NOTE : To correctly remove a threadlocked fastener it is first necessary to tap on the fastener to break threadlocker bond. This will eliminate the possibility of thread breakage.

2, Magneto Flywheel

To remove magneto flywheel, install the suitable puller as shown.

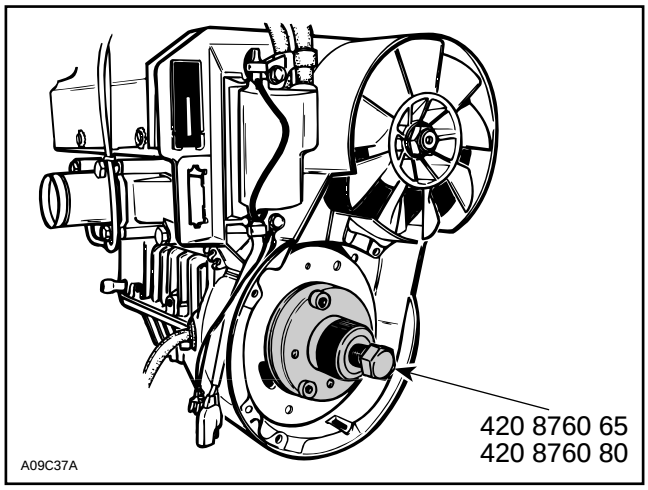

TYPICAL

– Tighten puller bolt and at the same time, tap on bolt head using a hammer to release magneto flywheel from its taper.

REPAIR

4,9, Trigger Coil and Screw

To replace trigger coil :

– Disconnect trigger coil wire (RED).
– Remove grommet from crankcase where trigger coil wire exits magneto housing.
– Remove retaining screws.
– Remove trigger coil and carefully pull wires.
– Install new trigger coil and other parts removed.

Adjustment

Whenever the trigger coil or the magneto flywheel is removed or replaced, the air-gap between the trigger coil and the flywheel protrusion must be checked and adjusted. The purpose of this adjustment is to obtain the minimum clearance between these parts – without touching at any RPM – so that the trigger coil produces its proper electrical output. Ignition timing must also be checked.

Proceed as follows :

1. Rotate flywheel so that the protrusion aligns with trigger coil.
2. Using a feeler gauge of 0.45 mm (.018 in) to 0.55 mm (.022 in) thick, check air-gap between center pole of trigger coil and flywheel protrusion.

3. If necessary, adjust by slackening retaining screws and moving trigger coil toward or away of protrusion.
4. Retighten screws and recheck air-gap.

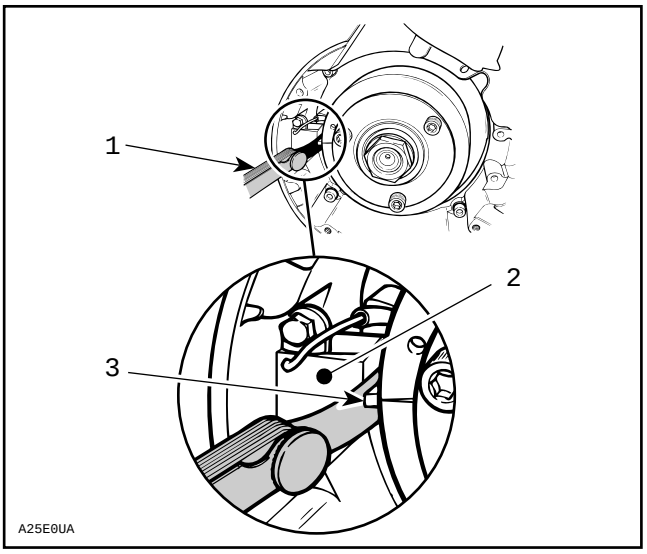

ADJUSTING TRIGGER COIL AIR-GAP

1. *Measure at center pole of trigger coil min. 0.45 mm (.018) max. 0.55 mm (.022 in)*
2. *Trigger coil*
3. *Flywheel protrusion*

1, Armature with Armature Plate

To replace armature :

– Disconnect the 2-wire connector (GREEN and WHITE wires).
– Disconnect both YELLOW / BLACK and YELLOW wires.
– Remove grommet from crankcase where magneto harness exits magneto housing.
– Remove armature plate retaining screws.
– Remove armature plate with armature and carefully pull wires.
– Install new parts and other parts removed.

ASSEMBLY

2,3, Magneto Flywheel and Nut

Clean crankshaft extension (taper).

Apply Loctite 242 (blue) on taper.

Position Woodruff key, flywheel and lock washer on crankshaft.

Clean nut threads and apply Loctite 242 (blue) before tightening nut to 105 N•m (77 lbf•ft).

At reassembly coat all electric connections with silicone dielectric grease (P / N 413 7017 00) to prevent corrosion or moisture penetration.

▼ CAUTION : Do not use silicone “sealant”, this product will corrode contacts.

Ignition Timing

Check as described in IGNITION TIMING 06-02.

OIL INJECTION SYSTEM

OIL INJECTION PUMP

454, 583 and 670 Engines

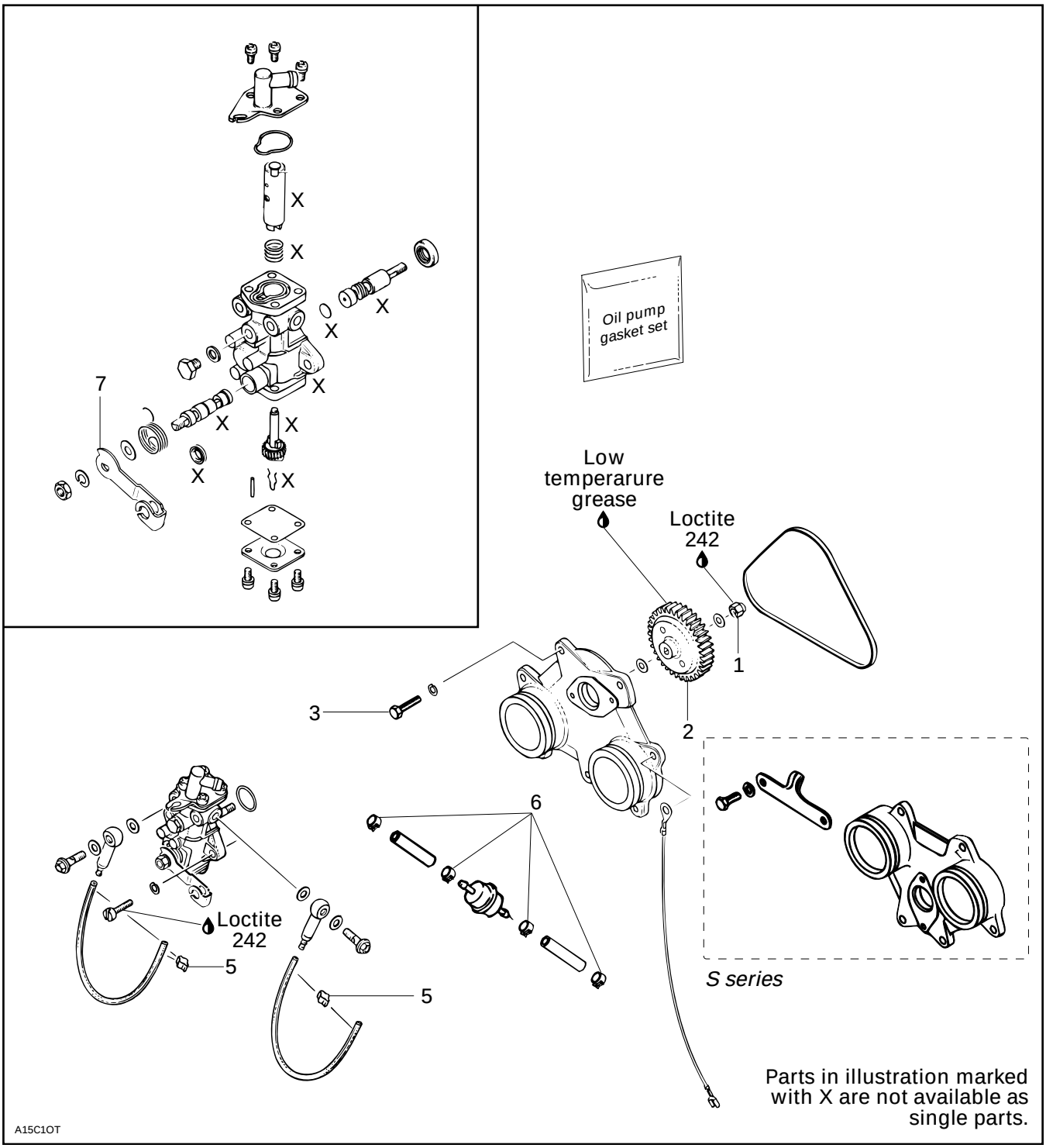

503 Engine

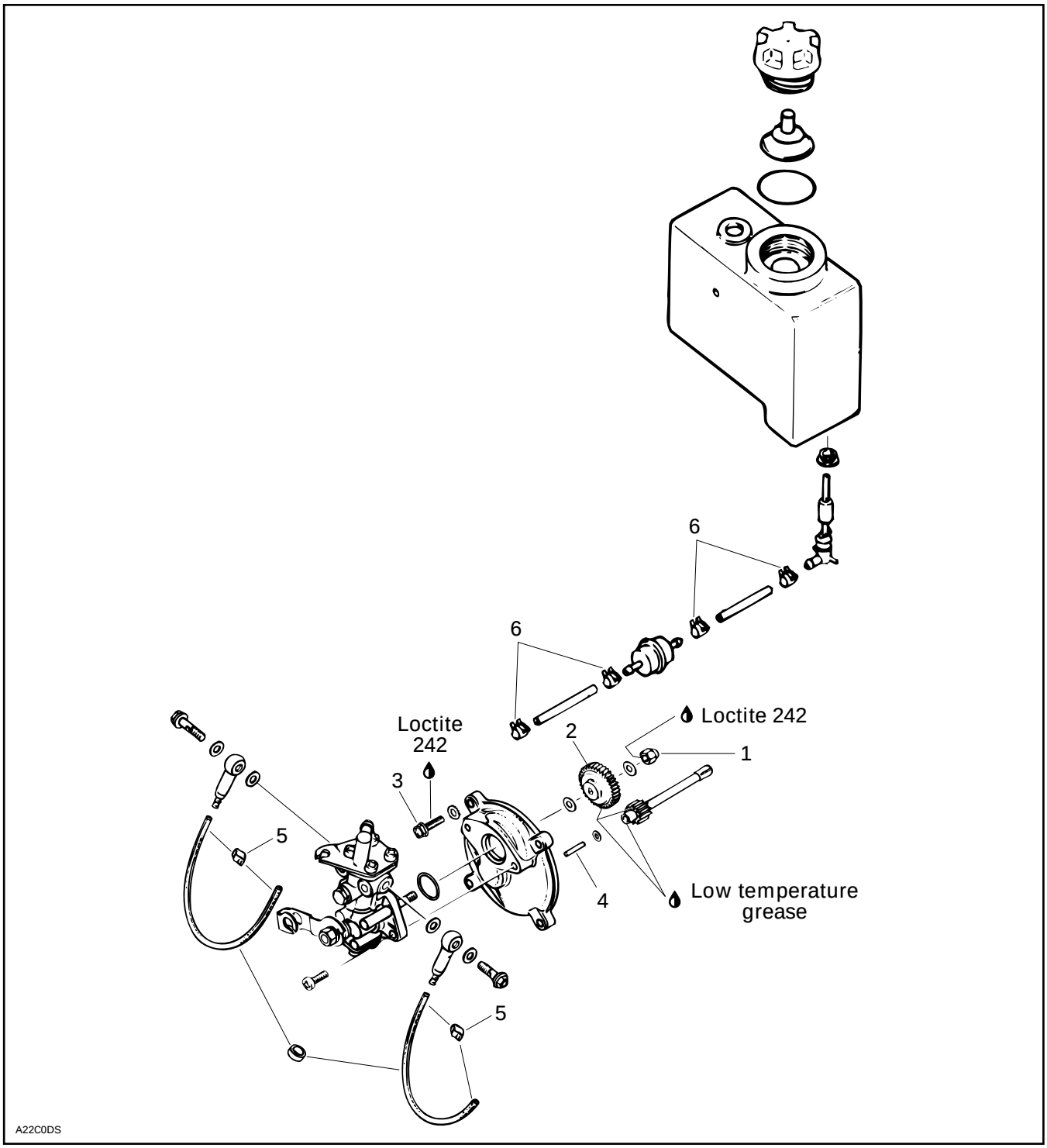
6
6
Loctite 242
Loctite 242
2
1
3
5
4
Low temperature grease
5
A22C0DS

599 and 779 Engines

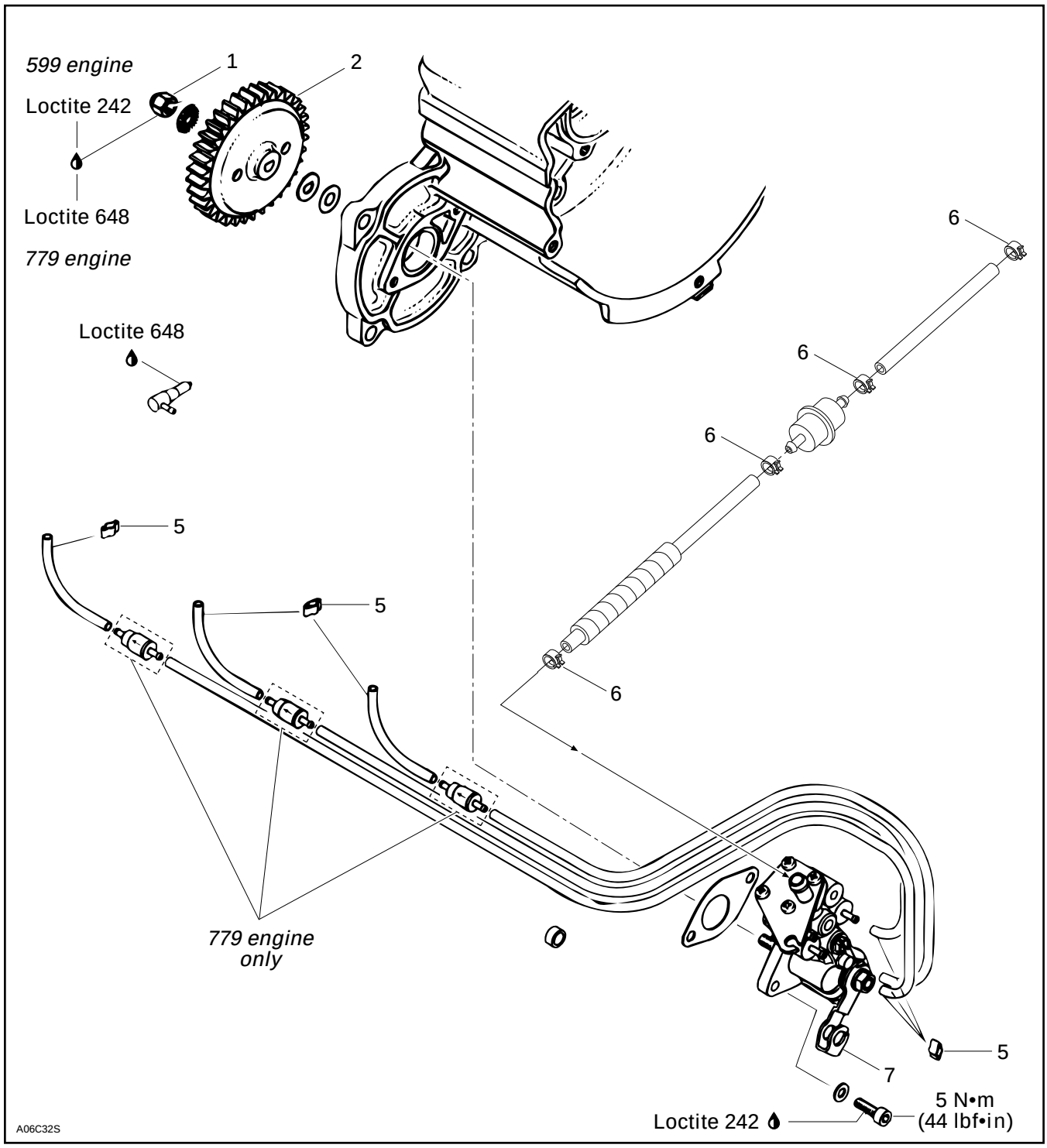

OIL PUMP IDENTIFICATION

7, Pump Lever

Different engines need different pumps. Oil pumps are identified by their levers.

CAUTION : Always mount proper pump on engine.

ENGINE TYPE	OIL PUMP IDENTIFICATION
454	P3
503	E3
583 Formula STX / Z	N3
583 MX Z	N6
583 Summit	N2
599	04
670 Formula SS	N2
670 Summit	N6
779	03

NOTE : The following procedures can be done without removing the engine from chassis.

CLEANING

Clean all metal components in a non-ferrous metal cleaner.

DISASSEMBLY

NOTE : Some oil pump components are not available as single parts.

1,2, Gear Retaining Nut and Oil Pump Gear

To remove gear retaining nut, first extract the needle roller with pliers then lock gear in place using one of the following gear holder :

ENGINE TYPE	TOOL P / N
454 / 583 / 599 / 670 / 779	420 2779 05

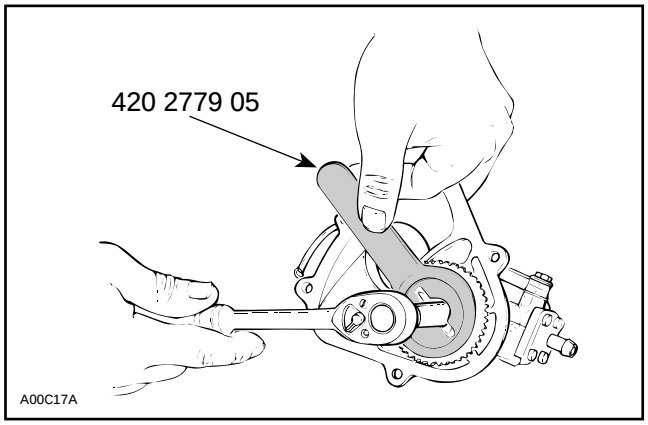

TYPICAL

ASSEMBLY

2, Oil Pump Gear

At gear assembly, apply a light coat of low temperature grease (P / N 413 7061 00) on gear teeth.

4, Needle Roller (Fan Cooled Engine Only)

The needle roller must be engaged as deep as possible in the pump mounting flange.

5,6, Spring Clip and Clamp

Always check for spring clips and clamps tightness.

3, Screw

Torque to 9 N•m (80 lbf•in).

CAUTION : Whenever oil injection lines are removed, always make the routing as shown.

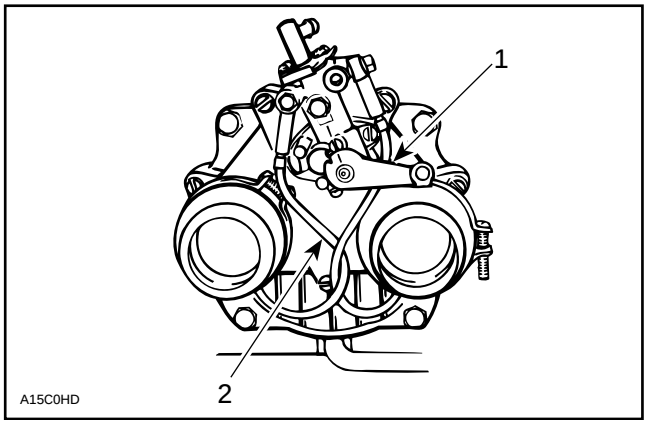

1. Oil pump lever
2. Twist oil lines

Make sure cable barrel is well seated in oil pump lever.

Secure barrel with plastic washer and circlip.

Verify cable and oil pump lever operation.

ADJUSTMENT

Prior to adjusting the pump, make sure all carburetor adjustments are completed.

Synchronizing Pump with Carburetor :

Eliminate the throttle cable free-play by pressing the throttle lever until a light resistance is felt, then hold in place. The aligning marks on the pump casting and on the lever must align. If not, loosen the adjuster nut and adjust accordingly.

Retighten the adjuster nut.

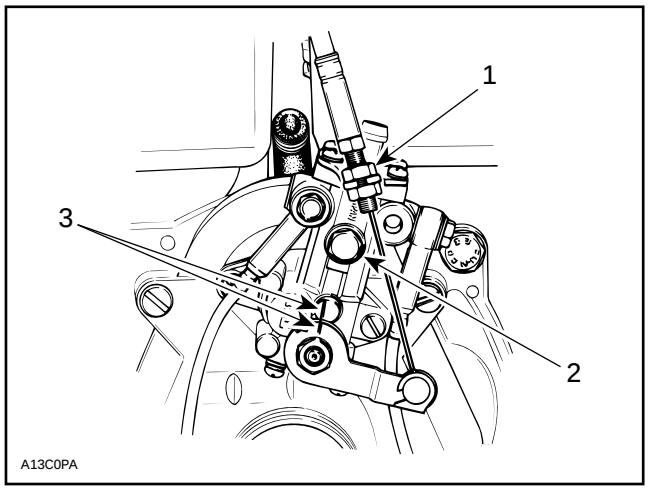

1. *Adjuster nut*
2. *Bleeder screw*
3. *Marks in line*

CAUTION : Proper oil injection pump adjustment is very important. Any delay in the opening of the pump can result in serious engine damage.

To Bleed Oil Lines

S-Series Only

Remove air silencer and move carburetors aside.

All Models

Bleed main oil line (between tank and pump) by loosening the bleeder screw until air has escaped from the line. Add injection oil as required.

Check also for proper oil lever adjustment. Marks must aligned when throttle lever is activated just enough to take all cable play.

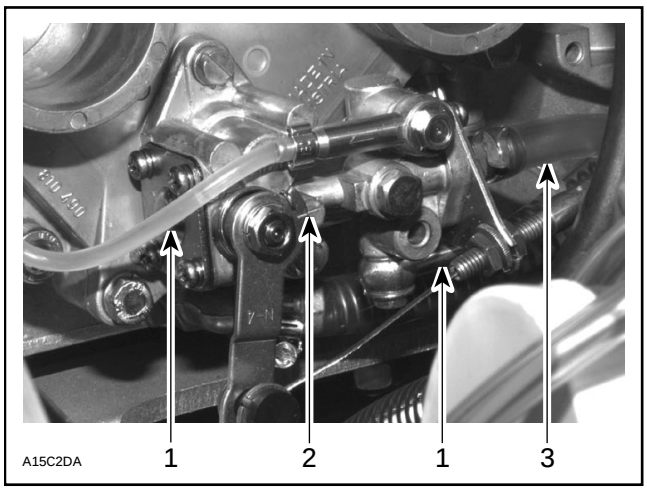

1. *Small oil line*
2. *Marks aligned*
3. *Main oil line*

Reinstall all parts except air silencer.

Bleed the small oil line between pump and intake manifold by running engine at idle while holding the pump lever in fully open position.

NOTE : If the air silencer has been reinstalled, make a J hook out of mechanical wire to lift the lever.

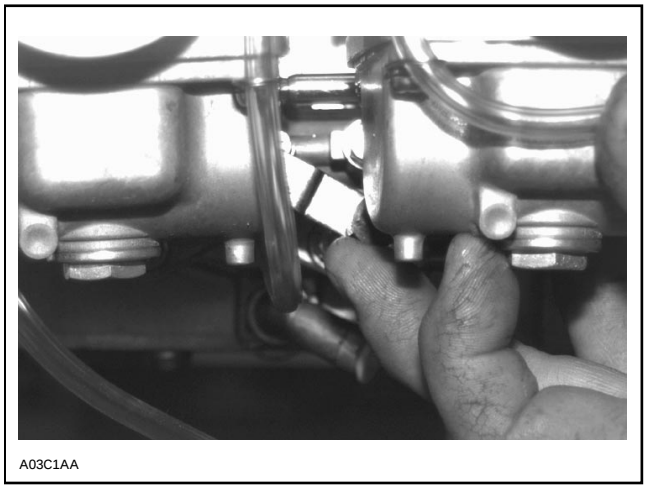

TYPICAL – ENGINE AT IDLE

S-Series Only

Reinstall air silencer.

WARNING : Ensure not to operate carburetor throttle mechanism. Secure the rear of the vehicle on a stand.

CHECKING OPERATION

On Vehicle

NOTE : Main oil line must be full of oil. See bleeding procedure above.

Lift rear of vehicle and support with a mechanical stand. Unbolt banjo fittings from pump. Start engine and stop it as soon as it fires.

Check that oil level in small oil lines is passed banjo fittings end by about 25 mm (1 in) (this will be indicated by a clear section of small oil lines of about 25 mm (1 in)). Repeat the procedure until this condition is attained.

Reconnect banjo fittings with a washers on each side, start engine and run at idle while holding the pump lever in fully open position. Oil columns must advance into small oil lines.

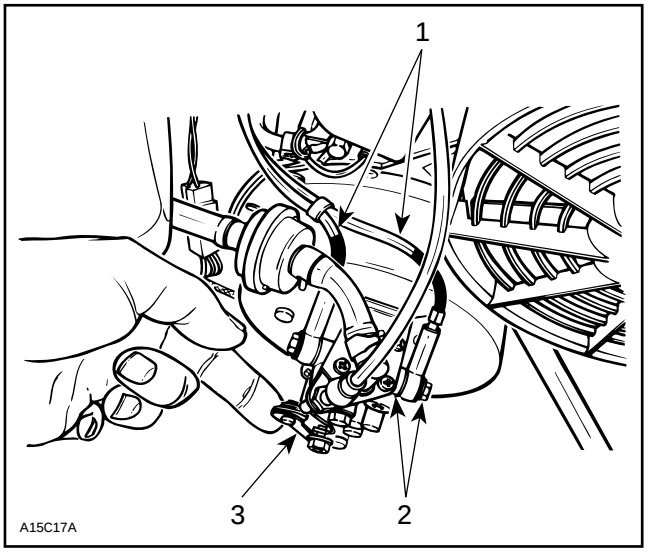

TYPICAL - ENGINE AT IDLE

1. *Oil columns advancing*
2. *Washer on each side*
3. *Fully open position*

If not, remove pump assembly and check the pump gear and drive shaft (if applicable) for defects, replace as necessary. Test pump as describes below.

NOTE : Through normal use, oil level must not drop in small tubes. If oil drops, verify check valve operation in banjo fittings. For 599 engine check valve is integrated in injection nozzle. For 779 check valve is in oil line. Replace as necessary.

Oil Pump Test Bench

Connect a hose filled with injection oil to main line fitting. Insert other hose end in an injection oil container. Using a counterclockwise rotating drill rotate pump shaft. Oil must drip from outer holes while holding lever in a fully open position. If not replace pump.

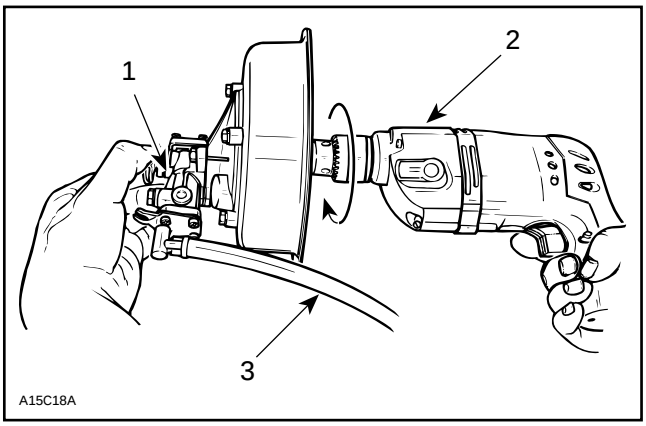

TYPICAL

1. *Fully open position*
2. *Counterclockwise rotating drill*
3. *Main line*

AXIAL FAN COOLING SYSTEM

503 Engine

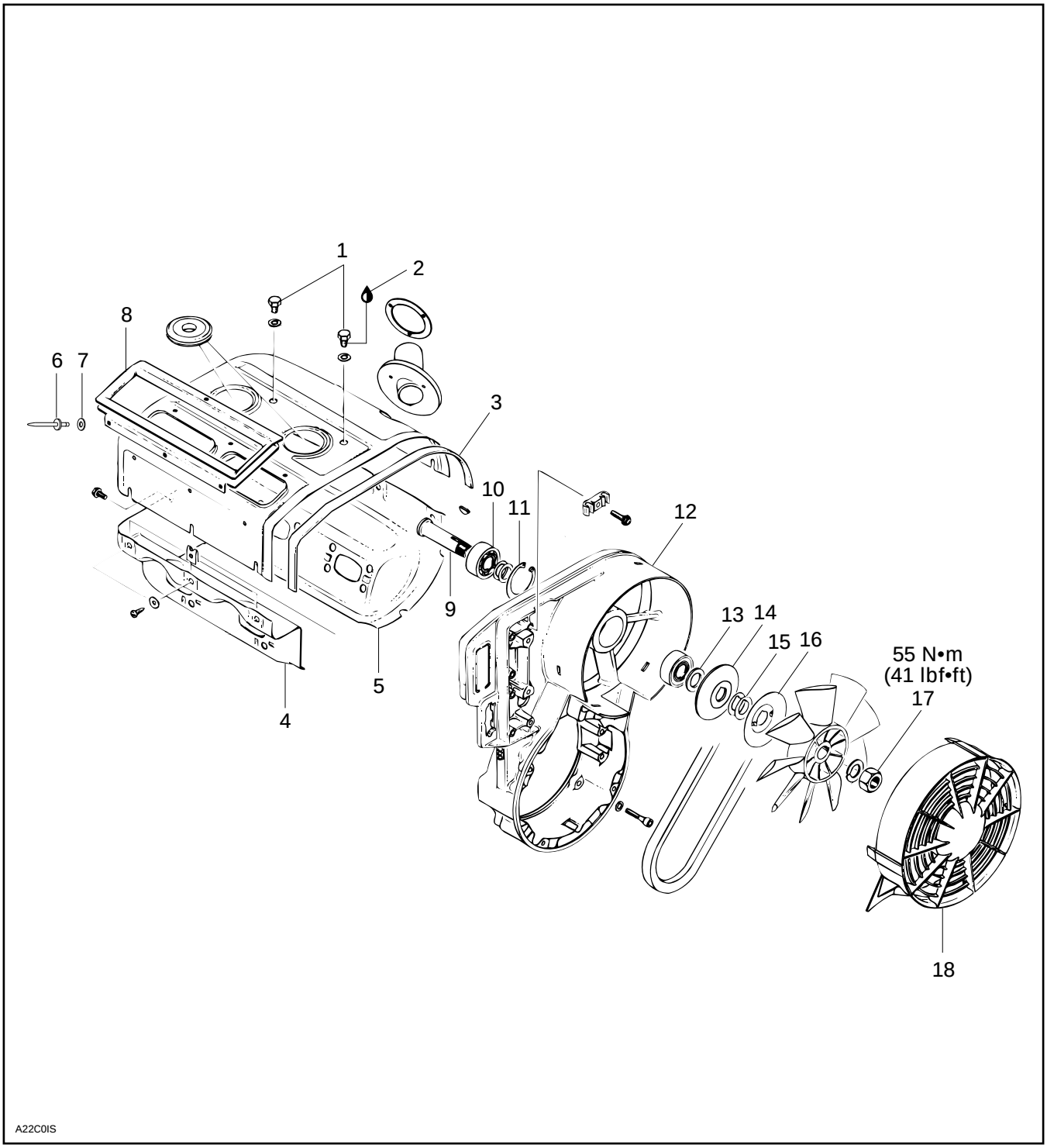

NOTE : The following procedures can be done without removing engine from chassis.

CLEANING

Clean all metal components in a non-ferrous metal cleaner.

DISASSEMBLY AND ASSEMBLY

17, Fan Nut

Remove fan protector.

To remove or install fan pulley retaining nut, lock fan pulley with special holder wrench (P / N 420 8763 57). At assembly, torque nut to 55 N•m (41 lbf•ft).

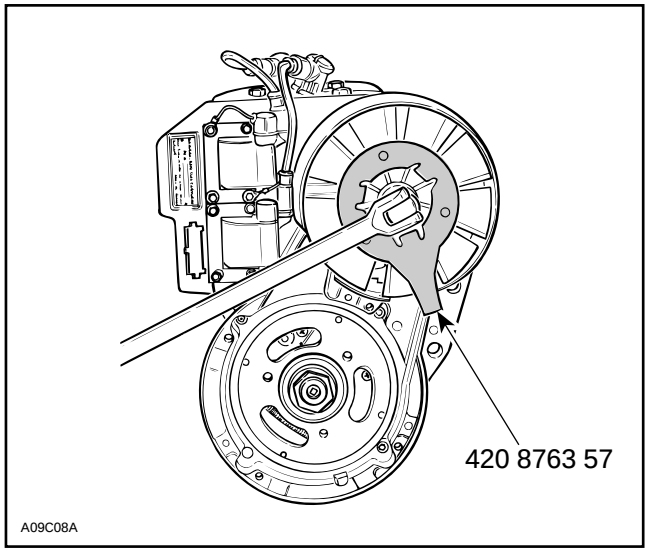

TYPICAL

13,14,15,16,20, Distance Sleeve, Pulley Halves, Shim and V-belt

Fan belt deflection must be as specified when applying the proper force midway between pulleys.

ENGINE TYPE	BELT DEFLECTION	FORCE APPLIED
503	9.5 mm (3/8 in)	5 kg (11 lb)

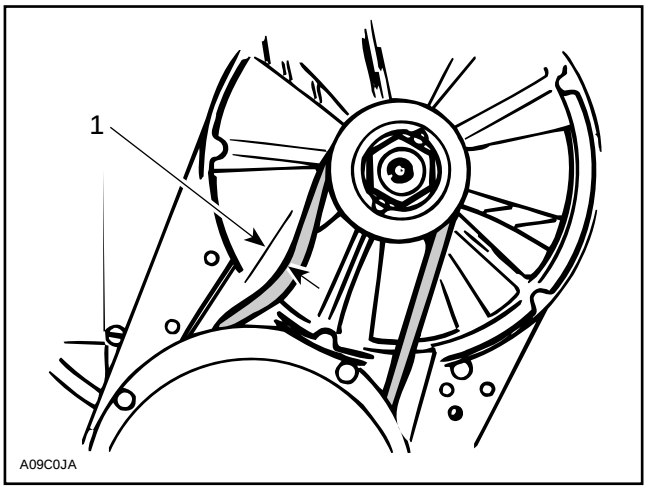

1. Deflection

To adjust tension, add or remove shim(s) between pulley halves. Install excess shim(s) between distance sleeve and half pulley (housing side).

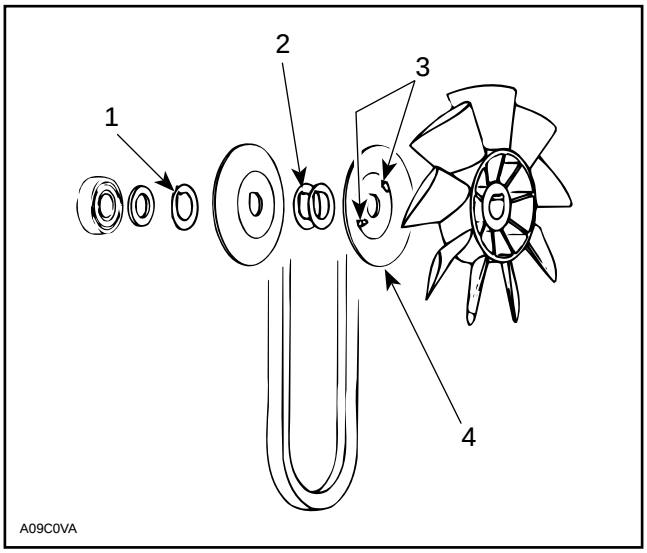

1. Unused shim(s) here
2. Adjust here
3. Positioning noses
4. Some engines only

Some engines have a separate metal pulley half instead of using back of fan as pulley half. On first mentioned engines, select pulley halves so that the one with two positioning noses will be on fan side. Ensure to insert these noses into fan notches.

9, Fan Shaft

Using a press, drive the fan shaft out.

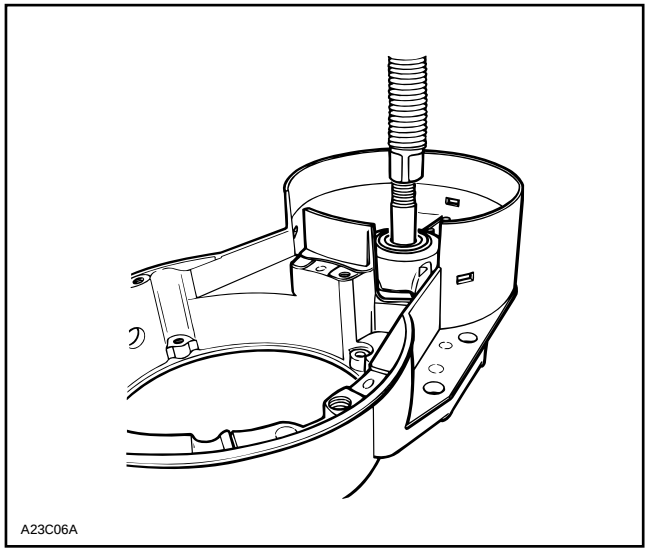

10,12, Bearing and Fan Housing

Support fan housing with a ring. With a punch, working all around bearing inner race, drive bearing out of fan housing. Keep shims for installation.

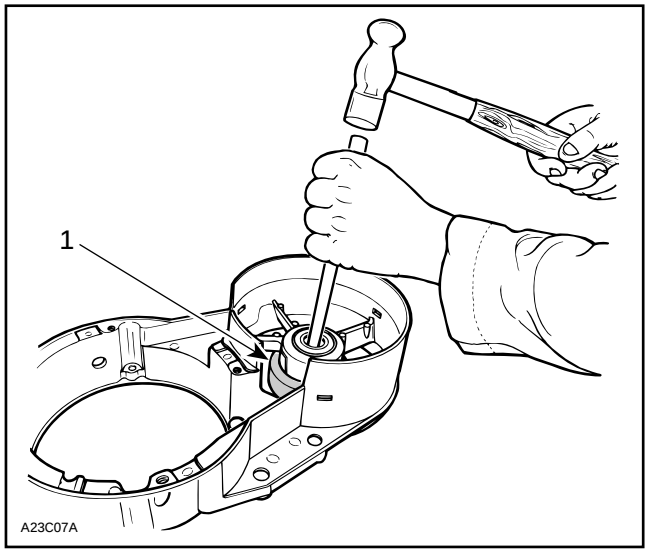

1. Ring supporting fan housing

10,11, Bearing and Circlip

Remove circlip then remaining bearing.

To install, press one bearing in place then install circlip and shims. Press the other bearing from opposite side until it is flush with housing. Press fan shaft from engine side of fan housing. Check for free rolling action.

1,2,3, Screw, Loctite 242 (Blue) and Cylinder Cowl

At assembly, apply a light coat of Loctite 242 (blue) on threads. It should be noted that to correctly remove a threadlocked screw, it is first necessary to slightly tap on screw head to break threadlocker bond. This will eliminate the possibility of screw breakage.

6,7,8, Rivet, Washer and Air Duct

Check for damage or permanent deformation.

Air duct can be removed by drilling out rivets.

CAUTION : At reassembly, use only closed end rivets to avoid rivet ends from falling into magneto.

Install washer over air duct.

On all engines, check fit of engine air duct with hood air duct. Adjust hood as necessary.

4,5, Cylinder Cowl

A gasket must be placed on both sides (inner and outer) of intake and exhaust holes of cylinder cowl.

18, Fan Protector

Reinstall properly.

WARNING : Always reinstall fan protector after servicing.

LIQUID COOLING SYSTEM

S Series with 454, 583 and 670 Engines

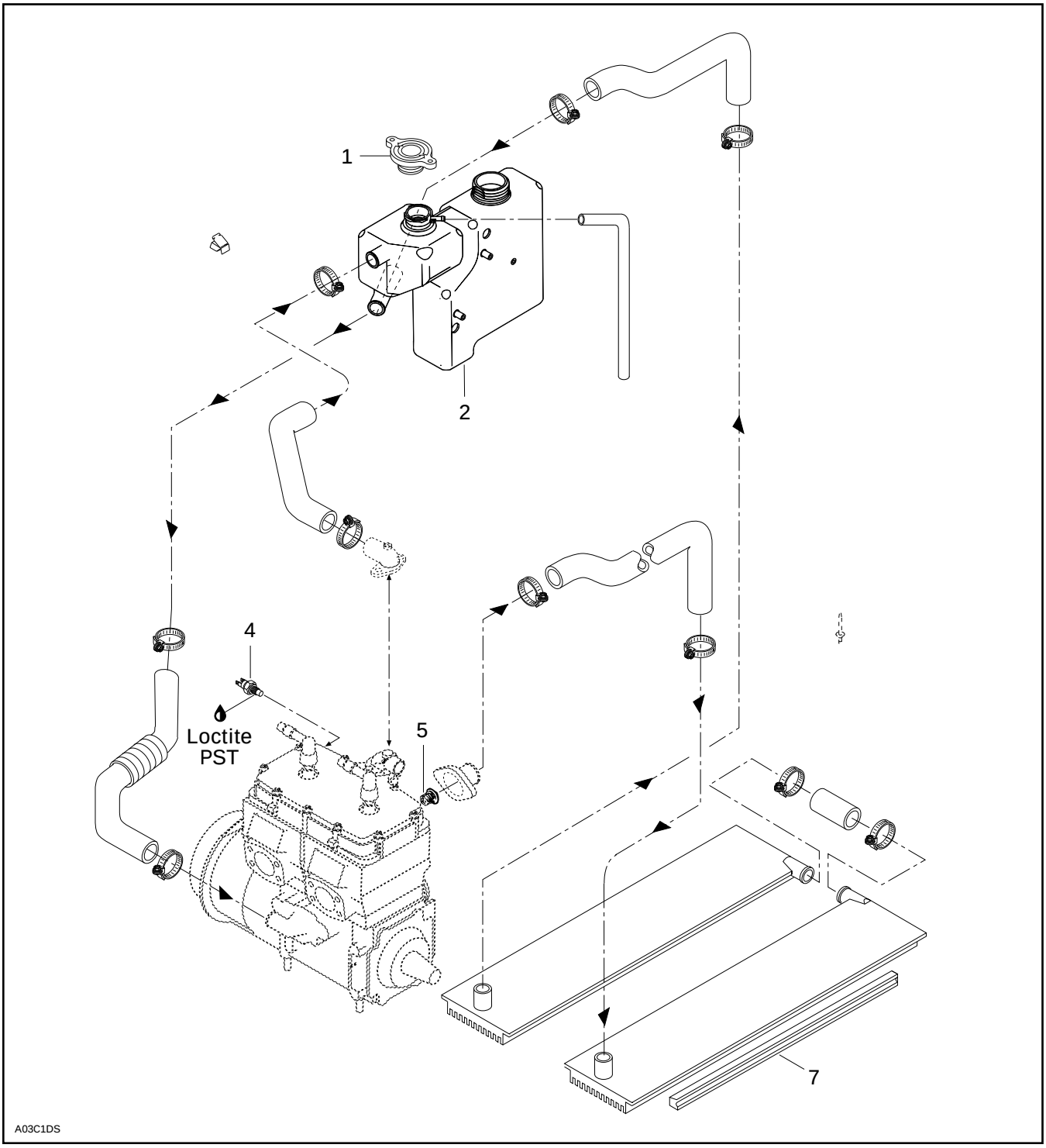

F Series with 583 and 670 Engines

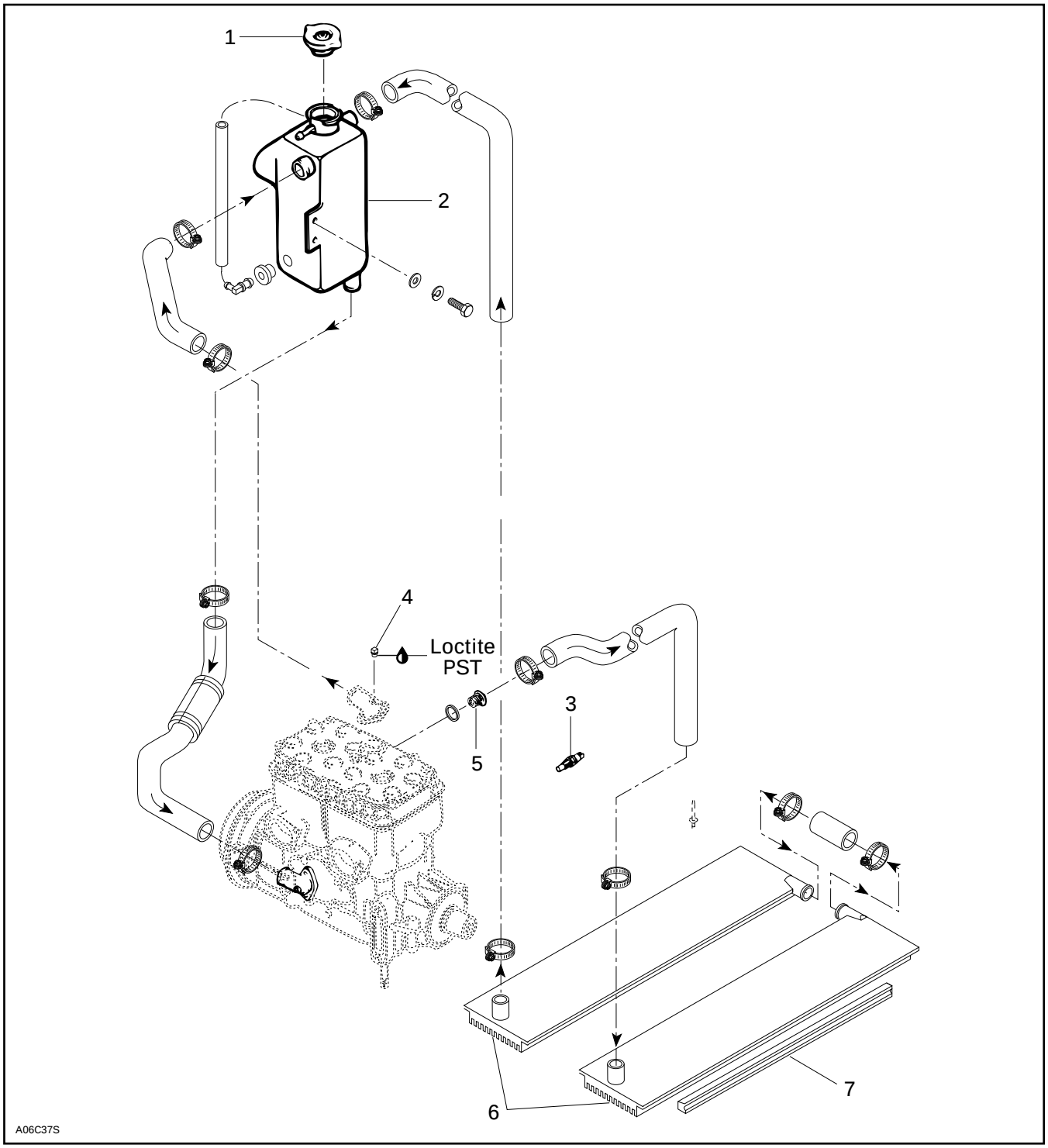

599 and 779 Engines

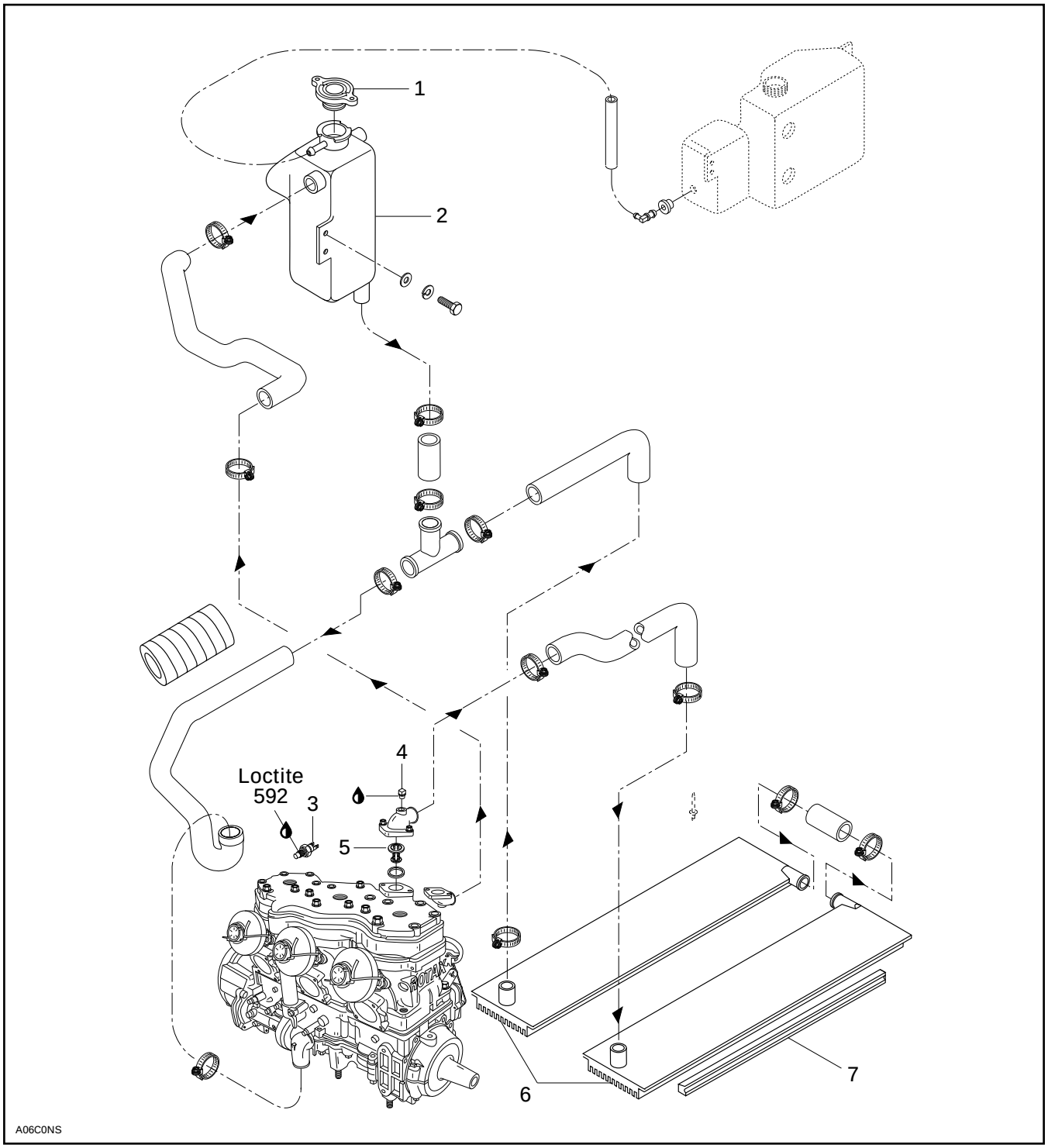

INSPECTION

Check general condition of hoses and clamp tightness.

DRAINING THE SYSTEM

◆ WARNING : Never drain or refill the cooling system when engine is hot.

To drain the cooling system, siphon the coolant mixture from the coolant tank. Use a primer pump with a plastic hose inserted as deep as possible into the lower hose.

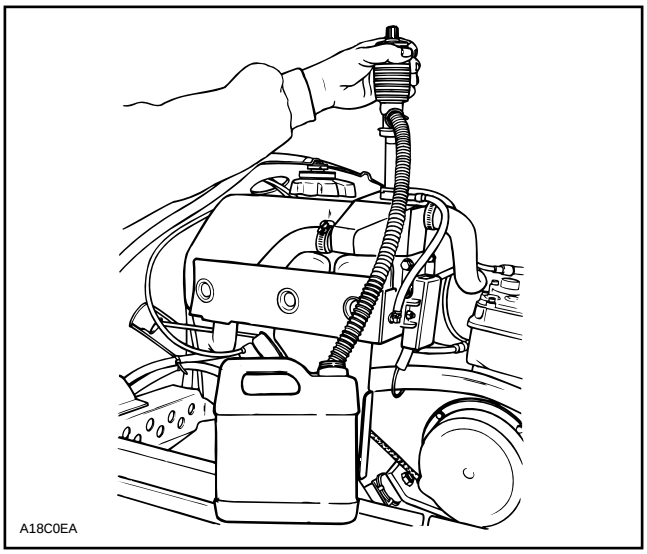

When the coolant level is low enough, lift the rear of vehicle to drain the radiators.

DISASSEMBLY AND ASSEMBLY

3,4, Sender and Plug

Apply thread sealant on sender and plug to avoid leaks.

1, Pressure Cap

Check if the cap pressurizes the system. If not, install a new 90 kPa (13 PSI) cap, (do not exceed this pressure).

6,7, Radiator and Radiator Protector

Insert radiator protector into radiator C-rail and crimp C-rail at both ends. Refer to FRAME 09-02 for radiator removal.

5, Thermostat

To check thermostat, put in water and heat water. Thermostat should open when water temperature reaches the following degree.

ENGINE	TEMPERATURE
454, 583, 599, 670 and 779	42°C (108°F)

On 454, 583, 599, 670 and 779 engines, the thermostat is a double action type.

a. Its function is to give faster warm up of the engine by controlling a circuit ; water pump – engine – coolant tank. This is done by bypassing the radiator circuit.

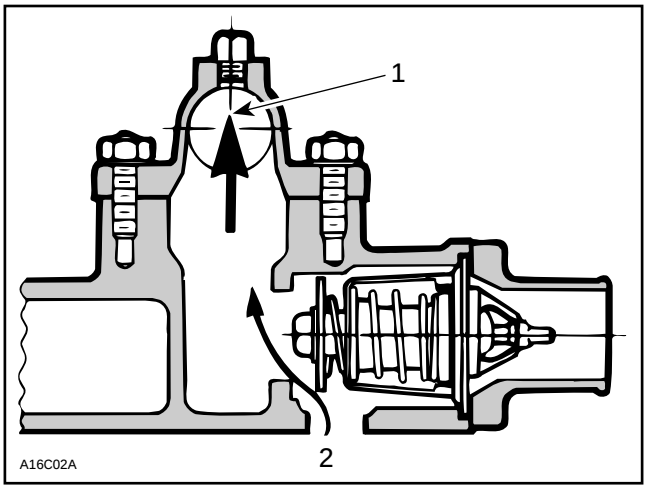

CLOSED THERMOSTAT AND COLD ENGINE

1. *To reservoir*
2. *From cylinders*

b. When the liquid is warmed enough, the thermostat opens the circuit, water pump – engine – radiators coolant tank to keep the liquid at the desired temperature. (See the diagram of the exploded view).

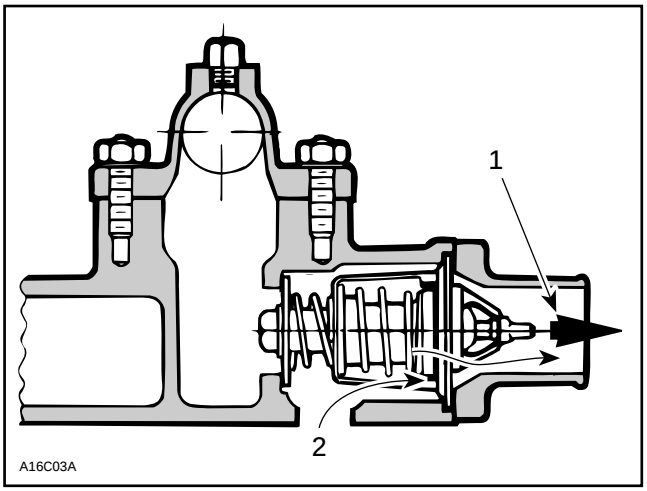

OPEN THERMOSTAT AND WARM ENGINE

1. *To radiators*
2. *From cylinders*

These 2 functions have the advantage of preventing a massive entry of cold water into the engine.

2, Coolant Tank

The coolant expands as the temperature (up to 90 – 100°C (195 – 212°F)) and pressure rise in the system. When the limiting system working pressure (cap) is reached (90 kPa (13 PSI)), the pressure relief valve in the pressure cap is lifted from its seat and allows coolant to flow through the overflow hose into the overflow coolant tank.

When the system temperature drops, the coolant contracts in volume and the pressure in the coolant tank is reduced. The coolant in the overflow coolant tank will then flow back into the coolant tank through the vacuum relief valve in the pressure cap.

COOLING SYSTEM REFILLING PROCEDURE

Recommended Coolant

Use a blend of 60 % antifreeze with 40 % water. Do not reinstall pressure cap.

▼CAUTION : To prevent rust formation or freezing condition, always replenish the system with 60 % antifreeze and 40 % water. Pure antifreeze without water freezes. Always use ethyl-glycol antifreeze containing corrosion inhibitors specifically recommended for aluminum engines.

System Capacity

Refer to TECHNICAL DATA 10.

Refilling Procedure

With vehicle on a flat surface, engine cold, refill coolant tank up to cold level mark. Wait a few minutes then refill to mark. Install pressure cap. Run engine until thermostat opens then stop engine. Refill up to mark.

To make sure coolant flows through radiators, touch them by hand. They must feel warm.

Reinstall pressure cap.

When engine has completely cooled down, recheck coolant level in coolant tank and top up if necessary.

Check coolant concentration (freezing point) with proper tester.

ROTARY VALVE, COOLANT PUMP AND RESERVOIR

454, 583 and 670 Engines

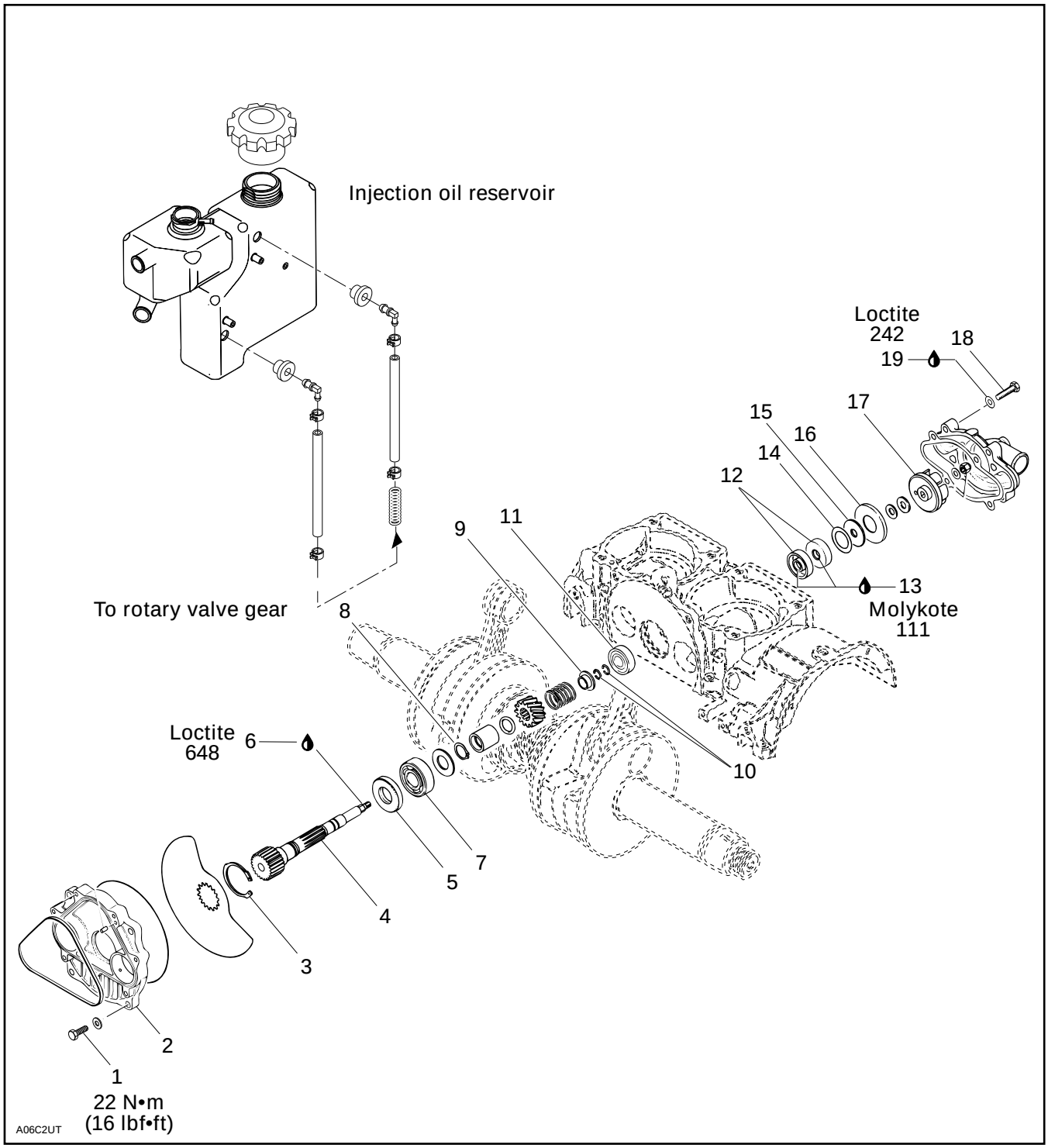

NOTE : Some verifications can be performed with engine in vehicle. Refer to ENGINE DIMENSION MEASUREMENT 04-03.

GENERAL

Engine must be removed from vehicle to work on rotary valve shaft / components. Refer to Removal and installation of appropriate engine for procedures.

Bottom end must be opened to remove rotary valve shaft.

CLEANING

Discard all seals and O-rings.

Clean all metal components in a non-ferrous metal cleaner.

DISASSEMBLY

1,2, Screw and Rotary Valve Cover

NOTE : Before removing rotary valve, check valve timing as described in Rotary valve timing at the end of this sub-section.

Unscrew 4 retaining screws and withdraw rotary valve cover and valve.

3,17, Circlip and Pump Impeller

CAUTION : Bottom end must be opened to remove rotary valve shaft.

To remove rotary valve shaft assembly from crankcase, first remove coolant pump impeller and circlip on valve side. Using the suitable pusher (P / N 420 8766 12) and a fiber hammer, push shaft assembly.

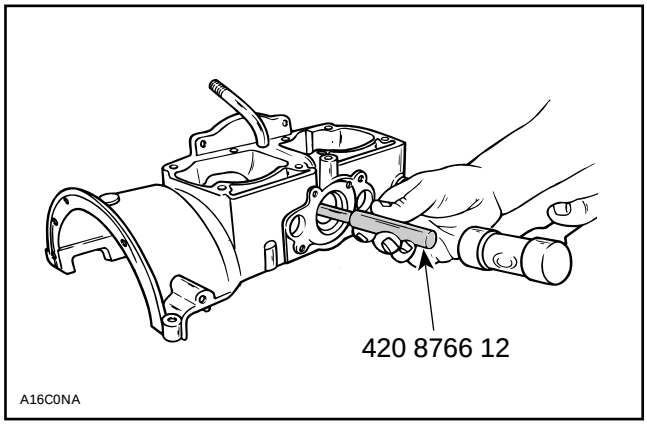

CAUTION : To prevent damage to the end of the rotary valve shaft, use pusher (P / N 420 8766 12).

8,9,10, Circlip and Spring Retaining Cup

If it is necessary to disassemble components of rotary valve shaft assembly, compress spring retaining cup with rotary valve circlip tool (P / N 529 0291 00) in order to remove circlip. Remove gear and distance sleeve then external circlip.

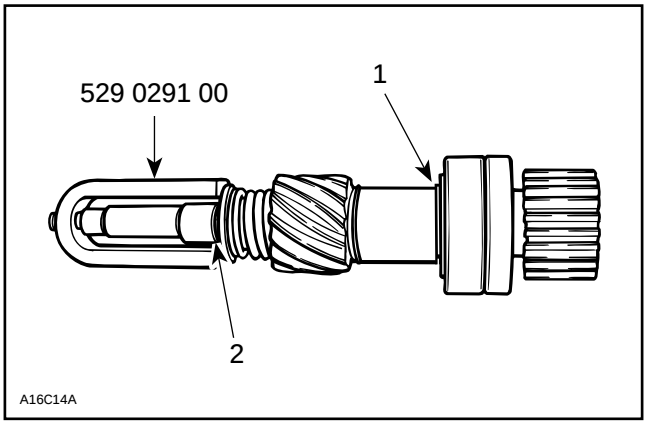

1. *External circlip*
2. *Circlip*

To remove bearing, use a bearing puller (ex. : Snap-on no. CJ 950) and pusher (P / N 420 8766 12) as illustrated.

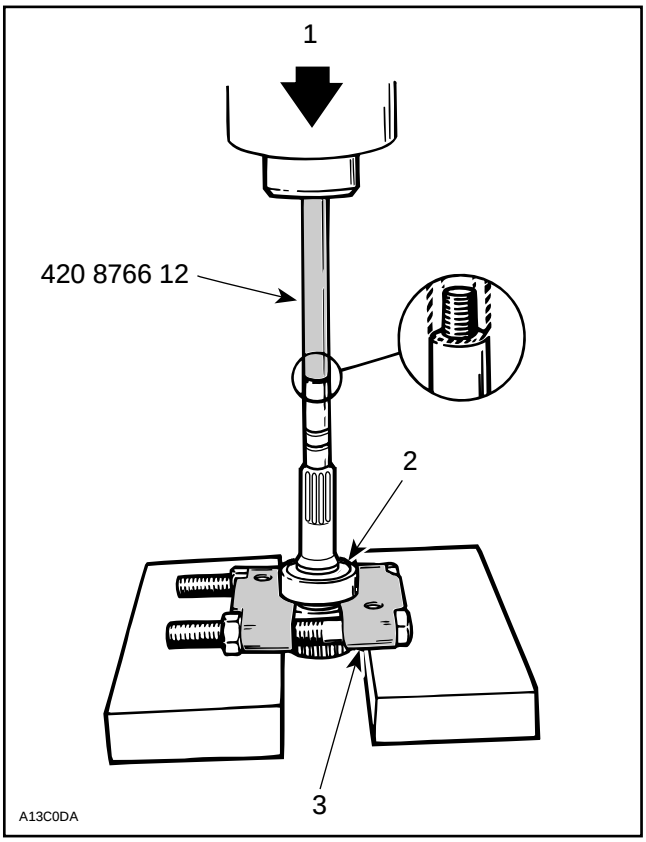

1. *Press*
2. *Bearing*
3. *Bearing puller. Ex. : Snap-on no. CJ 950*

▼CAUTION : Ensure that the rotary valve shaft is perfectly perpendicular with the press tip or damage will occur.

14,15,16, Shim, Rubber Washer and Support Plate

Pry support plate out of crankcase and remove rubber washer and shim.

11,12,14,15, Bearing 6201 and Seal

To remove bearing 6201 (the smallest one), seals and rubber washer, use seal pusher (P / N 420 8765 12).

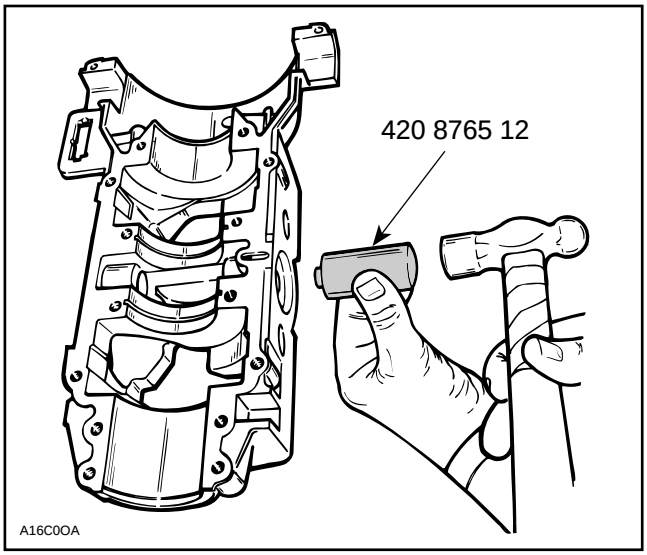

INSPECTION

Inspect rotary valve cover for warpage. Small deformation can be corrected by surfacing with fine sand paper on a surface plate. Surface part against oiled sand paper.

Inspect bearings. Check for scoring, pitting, chipping or other evidence of wear. Make sure plastic cage (on bigger bearing) is not melted. Rotate them and make sure they turn smoothly.

Check for presence of brass fillings in gear housing.

Visually check gear wear pattern. It should be even on tooth length all around. Otherwise it could indicate a bent shaft ; check deflection. Replace gear if damaged.

Refer to ENGINE DIMENSION MEASUREMENT 04-04.

ASSEMBLY

Assembly is essentially the reverse of disassembly procedures. However pay particular attention to the following.

4,5,7, Rotary Valve Shaft, Seal and Bearing 6203

At assembly apply lithium grease on seal lips. Position the seal with shielded portion against splines of shaft.

Install bearing as illustrated.

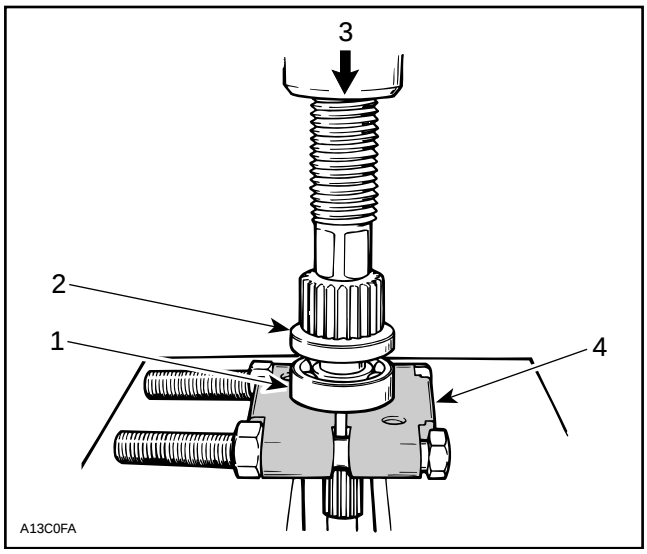

1. Bearing
2. Shielded portion of seal here
3. Press
4. Bearing puller. Ex. : Snap-on no. CJ 950

Install distance sleeve with its counterbore first.

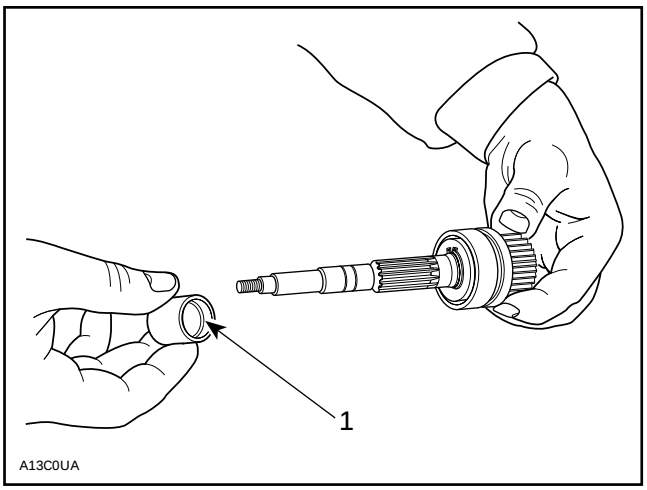

1. Counterbore first

11, Bearing 6201

To install bearing 6201 use bearing pusher (P / N 420 8765 00).

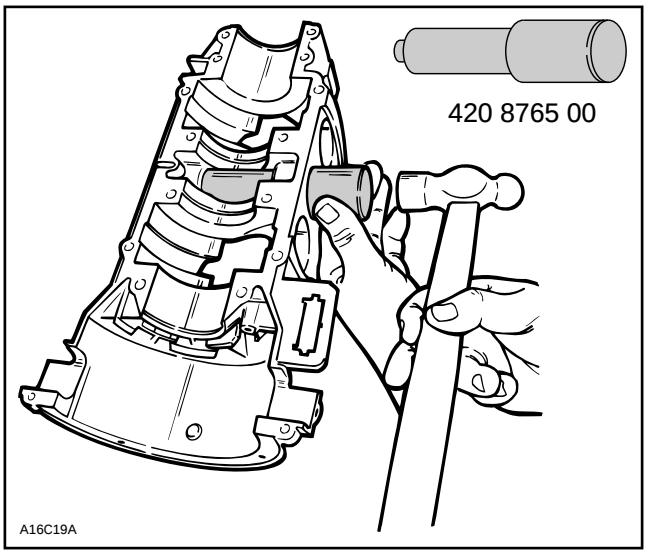

NOTE : Bearing shielded side must be facing rotary valve.

Refer to Rotary valve timing at the end of this sub-section to properly install gear on rotary valve shaft.

12,13,14,15, Seals, Shim, Rubber Washer and Molykote Grease

To install seals on water pump side proceed as follows :

– Apply Molykote 111 (P / N 413 7070 00) on lip both seals.
– Position oil seal shielded portion towards pump impeller. Drive in place with a seal pusher (P / N 420 8765 12).
– Position coolant seal shielded portion towards rotary valve. Drive in place with the rotary valve shaft seal pusher (P / N 420 8770 50).

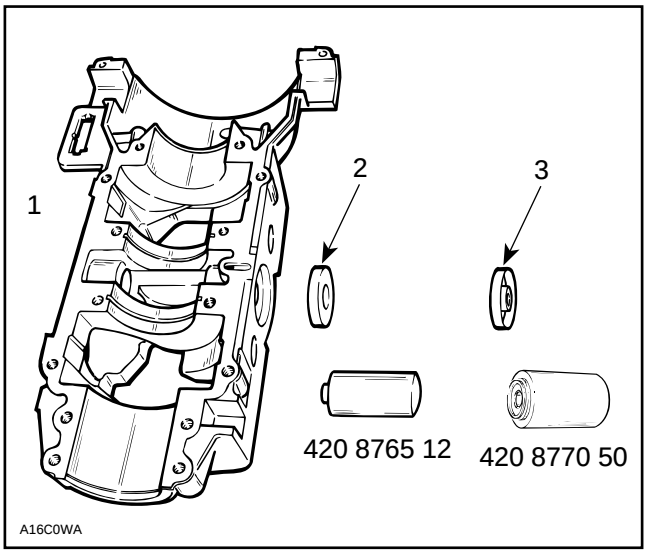

1. Rotary valve side
2. Oil seal
3. Coolant seal

Make sure not to obstruct draining hole. Position seals so that hole is between them.

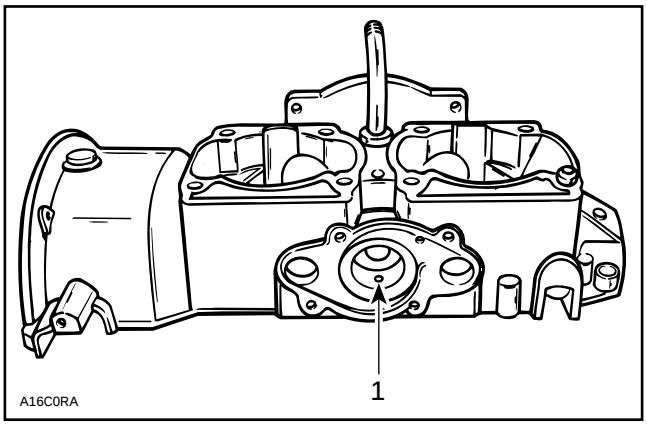

1. Draining hole

CAUTION : Failure to position the seals as specified may cause the seal spring to be corroded by coolant. Severe damage may occur if these notices are disregarded.

NOTE : The draining hole is used to detect seal malfunction. If you notice oil or coolant at the exit of the draining hole, this means that oil seal or coolant seal leaks.

– Install large shim and pack space with Molykote 111 (P / N 413 7070 00).
– Install rubber washer then support plate with its flange towards pump impeller. Use impeller support plate pusher (P / N 529 0207 00) for proper installation.

– Install small thrust washer then friction washer positioning its grooves against pump impeller.

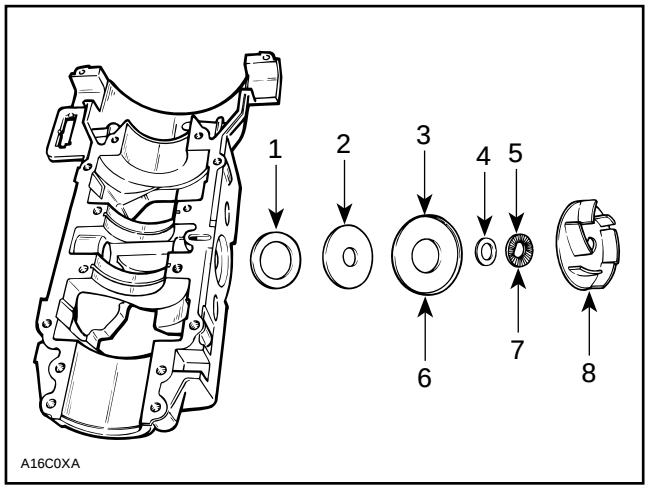

1. *Large shim*
2. *Rubber washer*
3. *Support plate*
4. *Small thrust washer*
5. *Friction washer*
6. *Flange this side*
7. *Grooves this side*
8. *Pump impeller*

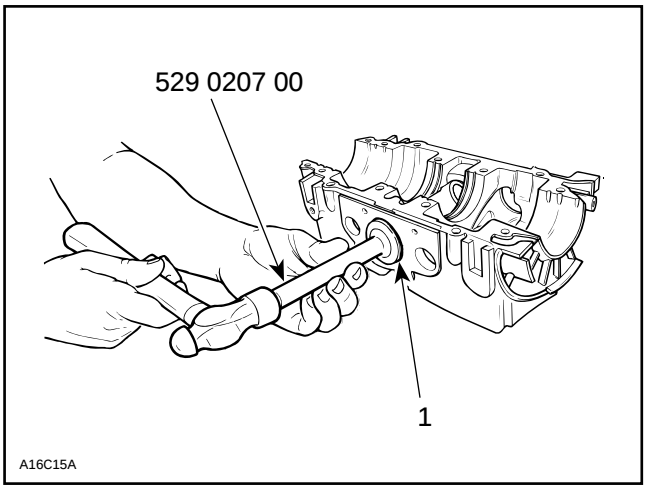

1. *Support plate*

NOTE : After seals installation, check if the water pump end bearing is correctly positioned with bearing pusher (P / N 420 8765 00).

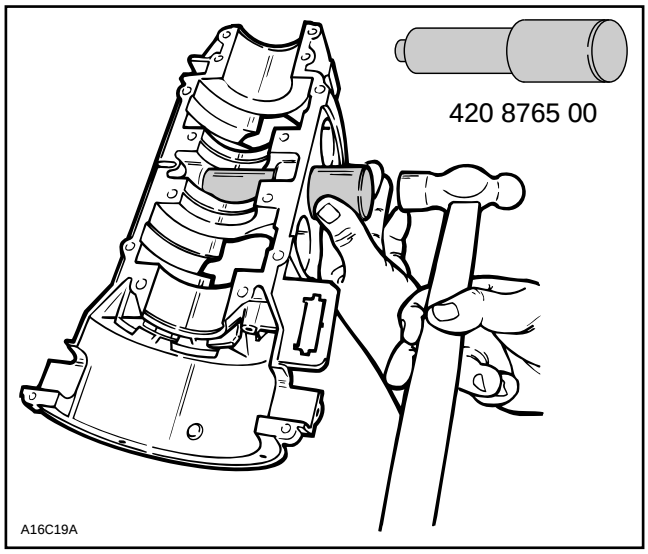

4,6, Rotary Valve Shaft and Loctite 648

CAUTION : Crankcase halves must be separated and crankshaft must not be present to install rotary valve shaft ass'y in crankcase.

To install rotary valve shaft proceed as follows with the suitable tools :

– rotary valve seal pusher (P / N 420 8766 07)

– seal protector sleeve (P / N 420 8769 80)

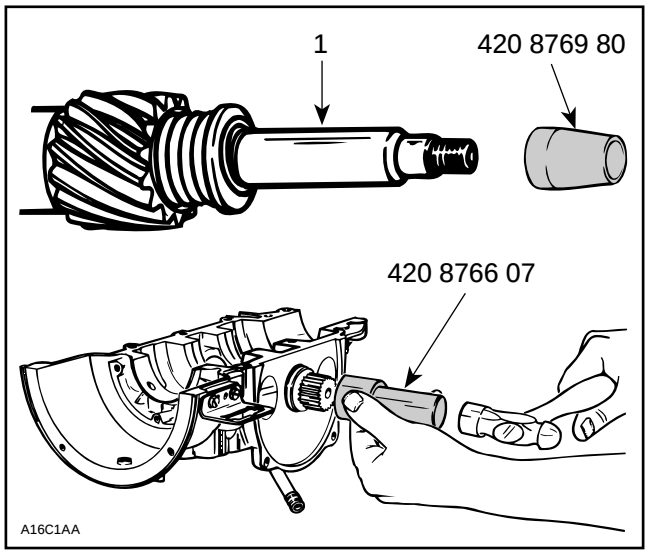

1. *Rotary valve shaft*

Apply Loctite 648 (P / N 420 8997 88) on shaft threads.

18,19, Pump Housing Bolt and Loctite 242 (Blue)

Apply Loctite 242 (blue) on bolt threads.

ROTARY VALVE TIMING

At disassembly, before removing rotary valve, note original rotary valve timing : it may be out of specifications by 1 to 4 degrees of retard or advance. To do so bring MAG piston to TDC and scribe a mark on crankshaft end at top (12 o'clock) and also on upper crankcase half.

Mark position of rotary valve shaft gear in relation to upper crankcase.

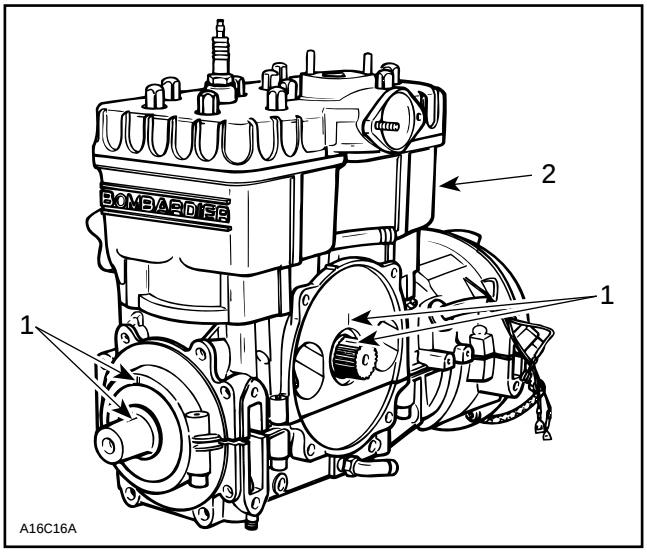

1. Mark here
2. MAG piston at TDC

After removing rotary valve shaft but before disassembling, mark brass gear in relation to shaft.

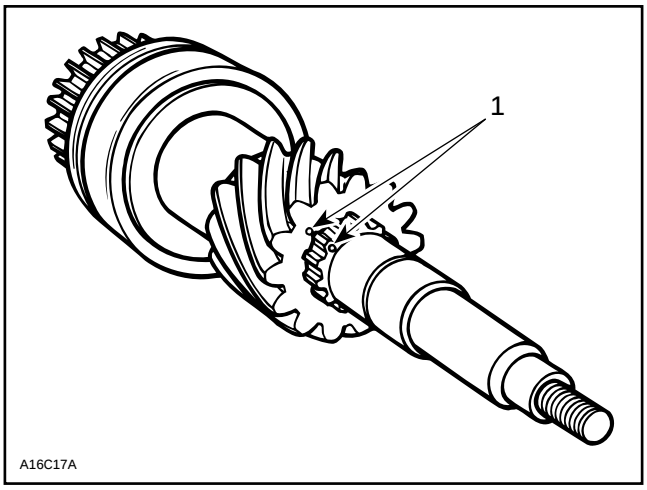

1. Mark here

These marks will be useful to time rotary valve exactly to the specifications.

NOTE : Tolerance of rotary valve timing is ± 5 degrees.

When the same crankcase is reassembled, the first timing method is to be followed. However since replacement crankcases do not have timing marks (ridge), the second method is required. Take note that the second method is more accurate and may be used any time.

Installation

To correctly install rotary valve, proceed as follows :

–)Turning crankshaft, bring MAGneto side piston to Top Dead Center.

Use a dial indicator (P / N 414 1047 00).

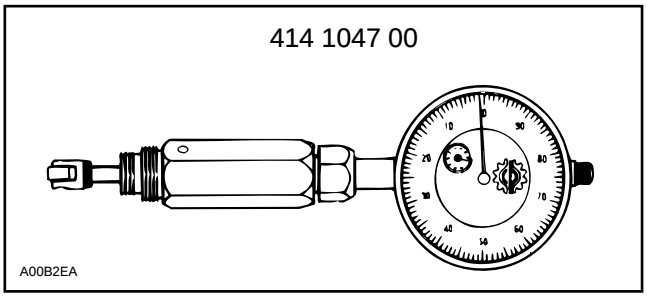

A degree wheel (P / N 414 3529 00) is required to measure rotary valve opening and closing angles in relation with MAGneto side piston. Degree wheel will be installed on rotary valve shaft for measurements.

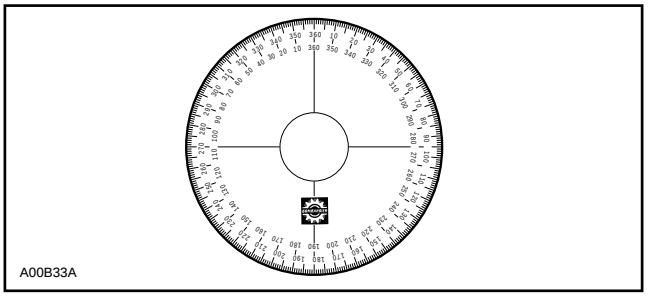

Rotary valve must be set as specified in TECHNICAL DATA 10.

For the following instructions, use these specifications as example :

OPENING : 132° BTDC

CLOSING : 52° BTDC

Proceed as follows :

– Turning crankshaft, bring MAGneto side piston to Top Dead Center as done before with a crankcase having a ridge.

– For opening mark, first align 360° line of degree wheel with BOTTOM of MAGneto side inlet port. Then, find 132° line on degree wheel and mark crankcase at this point.

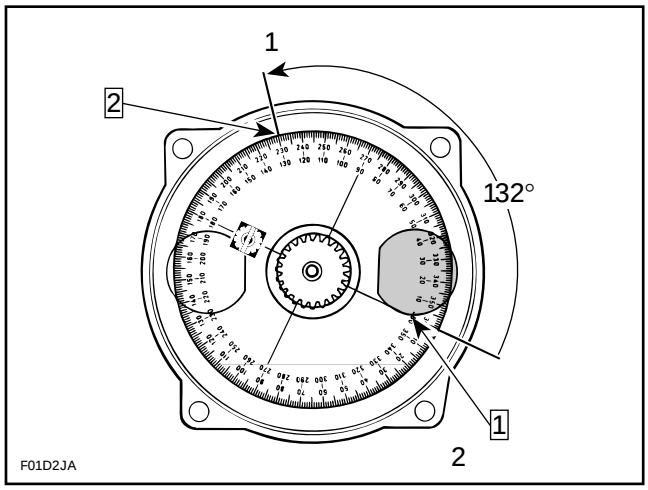

Step 1 : Align 360° line of degree wheel here
Step 2 : Find 132° on degree wheel and mark here
1. Opening mark
2. Bottom of MAGneto inlet port

– For closing mark, first align 360° line of degree wheel with TOP of MAGneto side inlet port. Then, find 52° line on degree wheel and mark crankcase at this point.

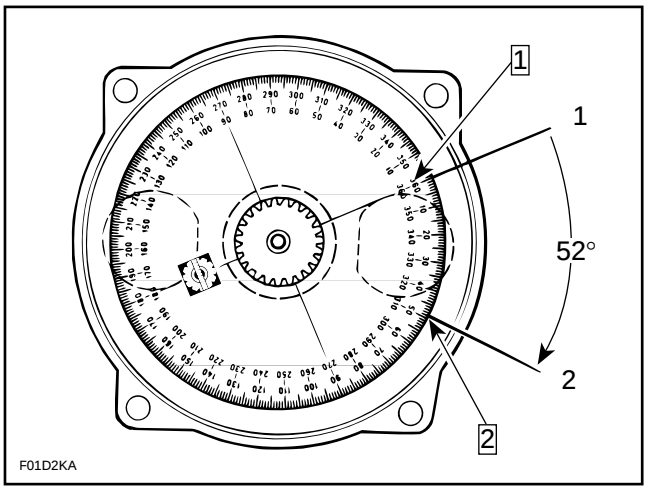

Step 1 : Align 360° line of degree wheel here
Step 2 : Find 52° on degree wheel and mark here
1. Top of MAGneto inlet port
2. Closing mark

– Position rotary valve on shaft splines to have edges as close as possible to marks.

NOTE : Rotary valve is asymmetrical. Therefore, try turning it inside out then reinstall on splines to determine best installation position.

Apply injection oil on rotary valve before closing rotary valve cover.

To Time Rotary Valve Exactly to Specifications

NOTE : If desynchronization (out of spec.) is unknown, install rotary valve to determinate it before proceeding with the following.

First Method

Turn crankshaft to bring MAG piston to TDC. Scribed marks of crankshaft and upper crankcase must aligned. These marks were scribed while determinating desynchronization.

Install brass gear on rotary valve shaft with its marked spline 4 positions (splines) away for one degree of desynchronization. Turn in the opposite direction of desynchronization. For instance, a rotary valve is retarded by 2.5°, turn brass gear by 10 splines counterclockwise.

Second Method

Turn crankshaft to bring MAG piston to TDC. Scribed marks of crankshaft and upper crankcase must aligned. These marks were scribed while determinating desynchronization.

For each degree of desynchronization, rotary valve shaft should be turned in the opposite direction by about 5 splines on the rotary valve gear.

Note position of rotary valve gear mark when brass gear disengage worm gear of crankshaft at removal of rotary valve shaft. From this position, turn shaft accordingly then reinstall.

For instance, take a valve advanced by 2°.

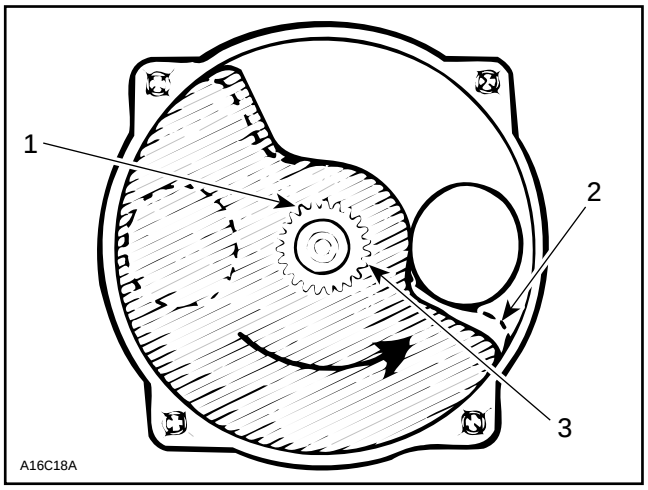

1. Position of mark when brass gear disengage worm gear
2. Advanced by 2°
3. Position of mark before installation (about 10 splines from original position)

1,2, Screw and Rotary Valve Cover

Install O-ring and cover then torque screws to 22 N•m (16 lbf•ft) in a criss-cross sequence.

REWIND STARTER

All Models

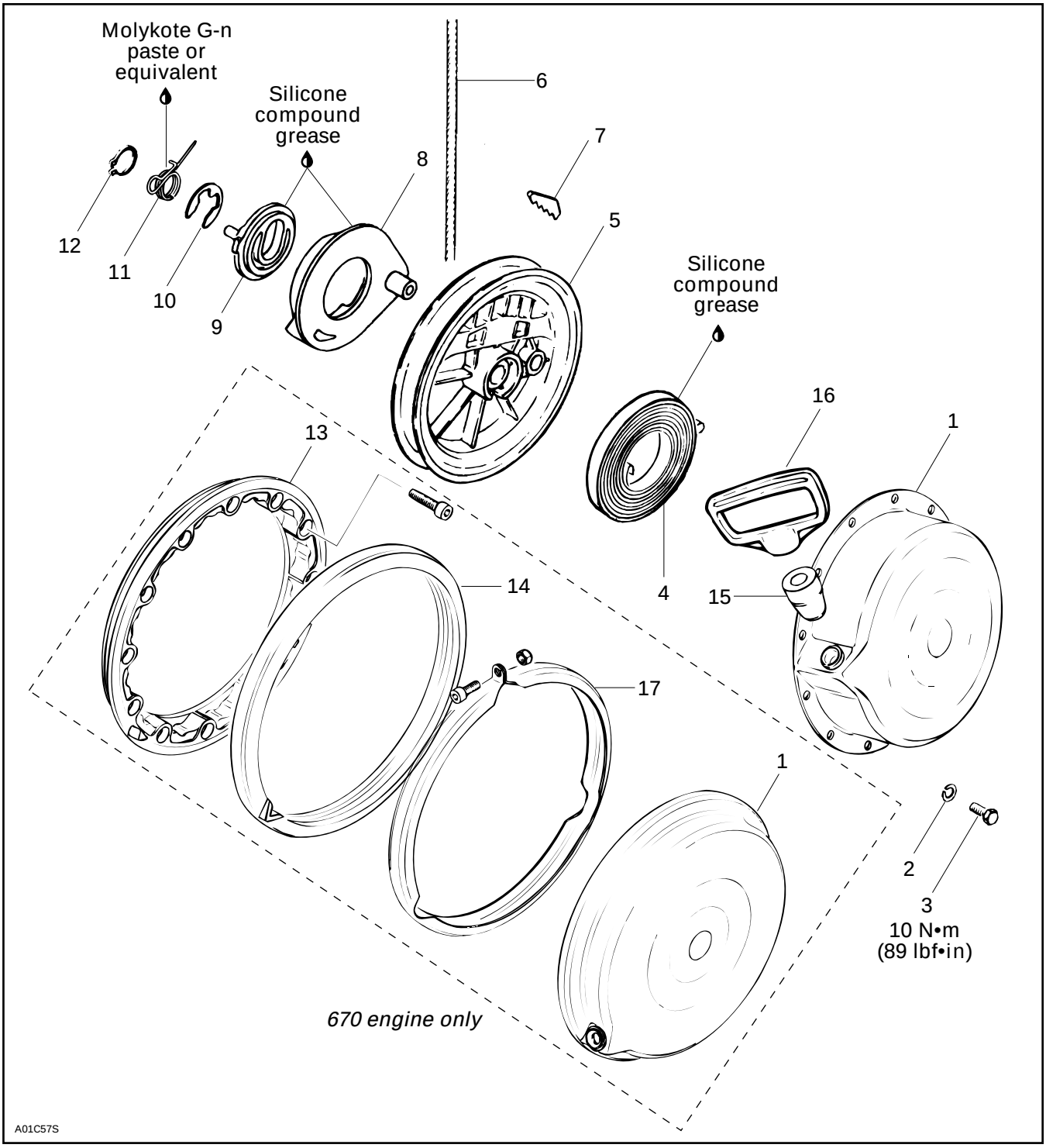

TYPICAL

REMOVAL

16, Starter Grip

Using a small screwdriver, extract rope knot from starter grip. Cut rope close to knot. Tie a knot near starter housing.

All Engines Except 670

1,2,3, Starter Housing, Lock Washer and Screw

Remove screws and washers securing rewind starter to engine then remove rewind starter.

670 Engine Only

13,14,17, Connecting Flange, Damper Ring and Locking Ring

Unfasten locking ring and remove starter ass'y. Connecting flange and damper ring can be removed for inspection and cleaning. Mark position of connecting flange before removal.

All Models

DISASSEMBLY

To remove rope from rewind starter mechanism :

Untie the knot while holding sheave. Allow sheave to turn slowly clockwise.

8,9,10,11,12, Pawl, Pawl Lock, Circlip, Locking Spring and Locking Ring

– First remove locking ring, locking spring, circlip, pawl lock and pawl.

1,5, Starter Housing and Rope Sheave

– Remove sheave from starter housing.

6,7, Starter Rope and Key

– Disengage key by gently tapping on it and then pull out rope.

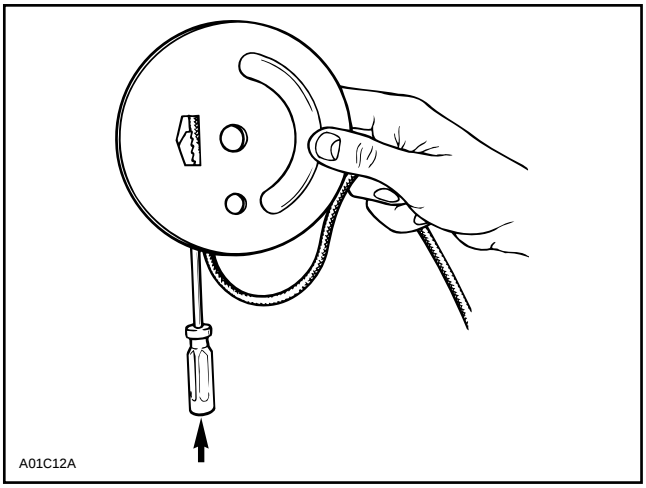

ASSEMBLY

4, Rewind Spring

At assembly, position spring outer end into spring guide notch then wind the spring counterclockwise into guide.

◆ WARNING : Since the spring is tightly wound inside the guide it may fly out when rewind is handled. Always handle with care.

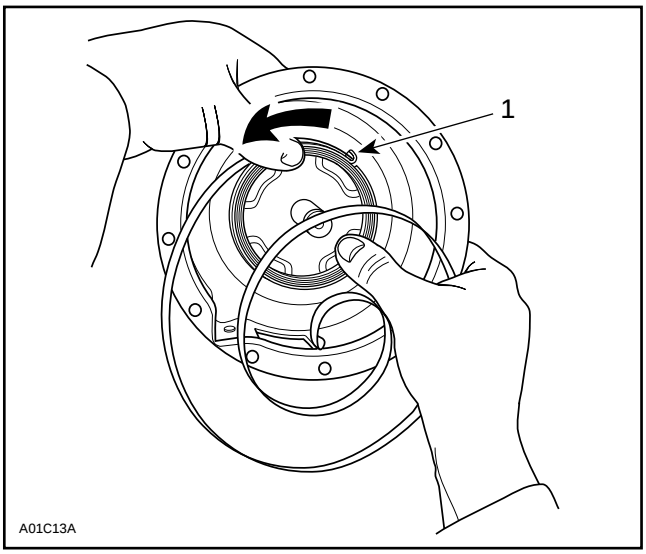

1. Outer end into guide notch

○ NOTE : Due to dust accumulation, rewind starter must be periodically cleaned, inspected and relubricated.

▼CAUTION : It is of the utmost importance that the rewind starter spring(s) be lubricated periodically using specific lubricants. Otherwise, rewind starter component life will be shortened and / or rewind starter will not operate properly under very cold temperatures.

Lubricate spring assembly with silicone compound grease (P / N 420 8970 61) and position into starter housing as illustrated.

▼CAUTION : This lubricant must NOT be used on rewind starter locking spring as it does not stay on under vibration.

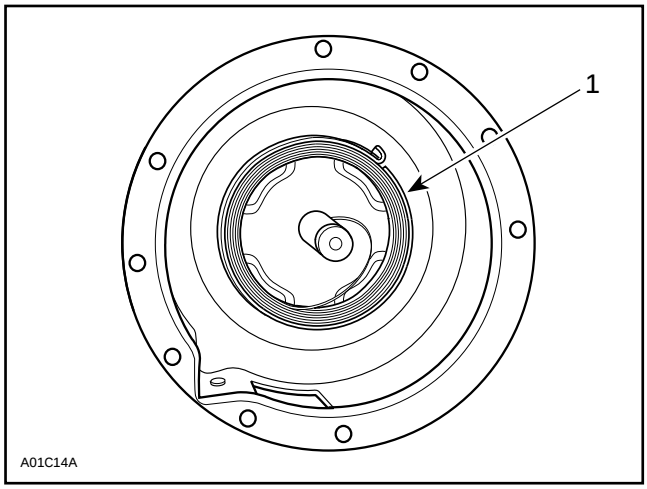

1. Grease inside spring guide

▼CAUTION : The use of standard multipurpose grease could result in rewind starter malfunction.

5,6,7, Rope Sheave, Starter Rope and Key

To install a new rope : insert rope into sheave orifice and lock it with the key as illustrated.

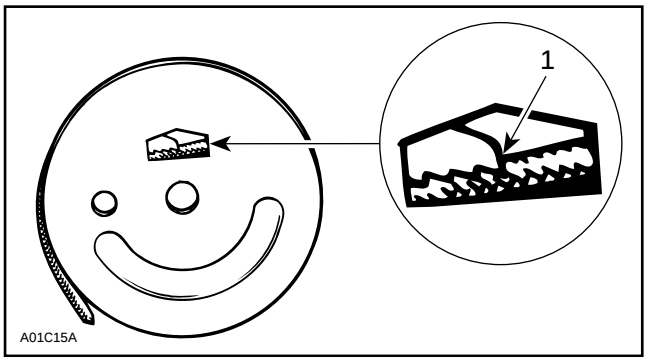

1. Push to lock

To adjust rope tension :

Wind rope on sheave and place rope sheave into starter housing making sure that the sheave hub notch engages in the rewind spring hook.

Rotate the sheave counterclockwise until rope end is accessible through starter housing orifice.

Pull the rope out of the starter housing and temporarily make a knot to hold it. One turn preload will give 7 turns of tension when fully extended.

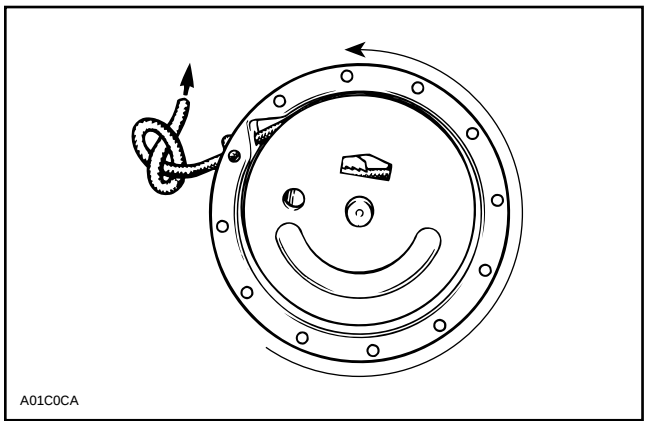

1. Knot

8,9,10, Pawl, Pawl Lock and Circlip

Apply silicone compound grease (P / N 420 8970 61) to pawl and pawl lock.

Position pawl, pawl lock and circlip.

11,17, Locking Spring and Molykote G-n Paste

Install locking spring and lubricate with MOLYKOTE G-n paste from Dow Corning® or equivalent.

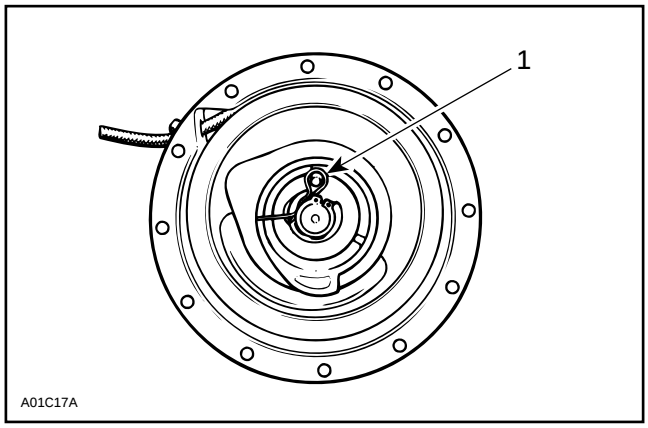

1. Molykote G-n paste inside spring

Install locking ring.

▼CAUTION : This lubricant must NOT be used on rewind springs as it does not stay on when dry.

INSTALLATION

On fan cooled models with oil injection pump, re-install oil pump on rewind starter assembly.

All Engines Except 670

Reinstall rewind starter assembly on engine.

670 Engine Only

Install rewind starter on damper ring matching notches and emboss of damper ring.

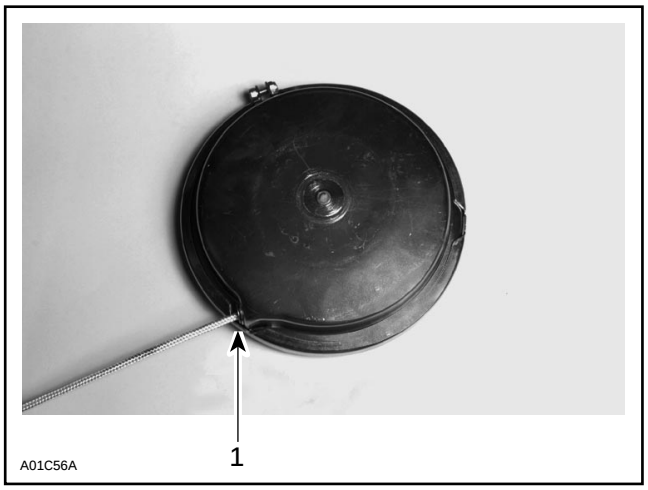

1. Notch

All Models

6, Starter Rope

Thread starter rope through rope guide when applicable.

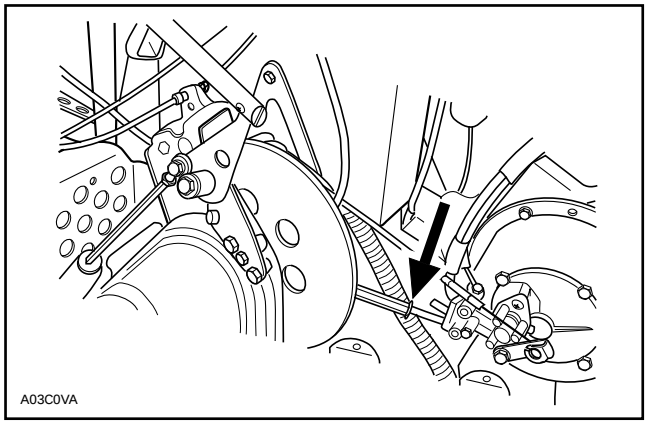

16, Starter Grip

Prior to installing starter grip on new rope, it is first necessary to fuse the rope end with a lit match. Pass rope through rubber buffer and starter grip and tie a knot in the rope end. Fuse the knot with a lit match then insert rope end down and pull the starter grip over the knot.

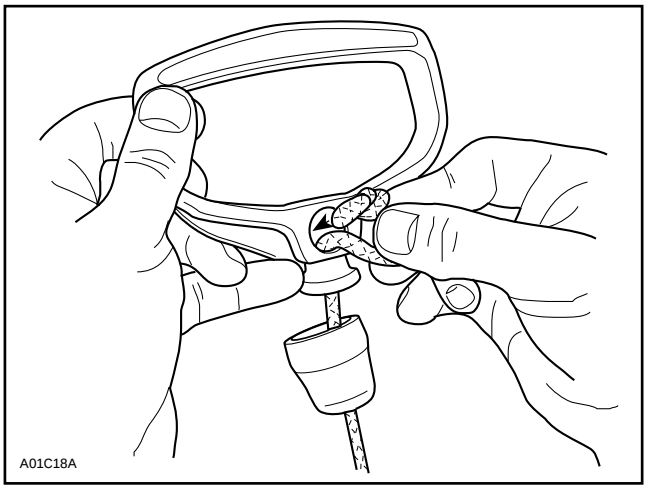

CARBURETOR AND FUEL PUMP

MIKUNI FLOAT CARBURETOR

NOTE : Refer to TECHNICAL DATA section 10 for carburetor application.

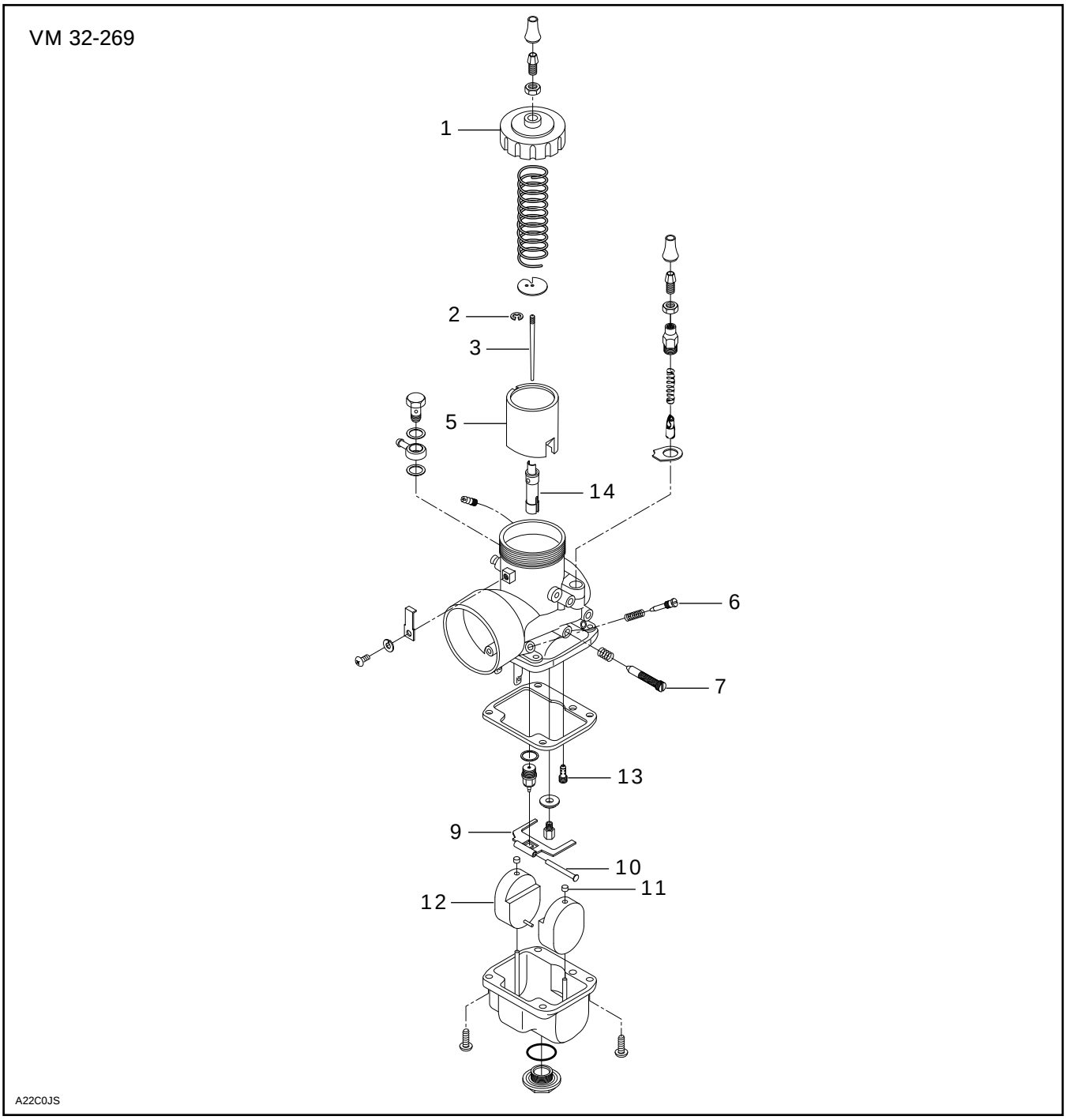

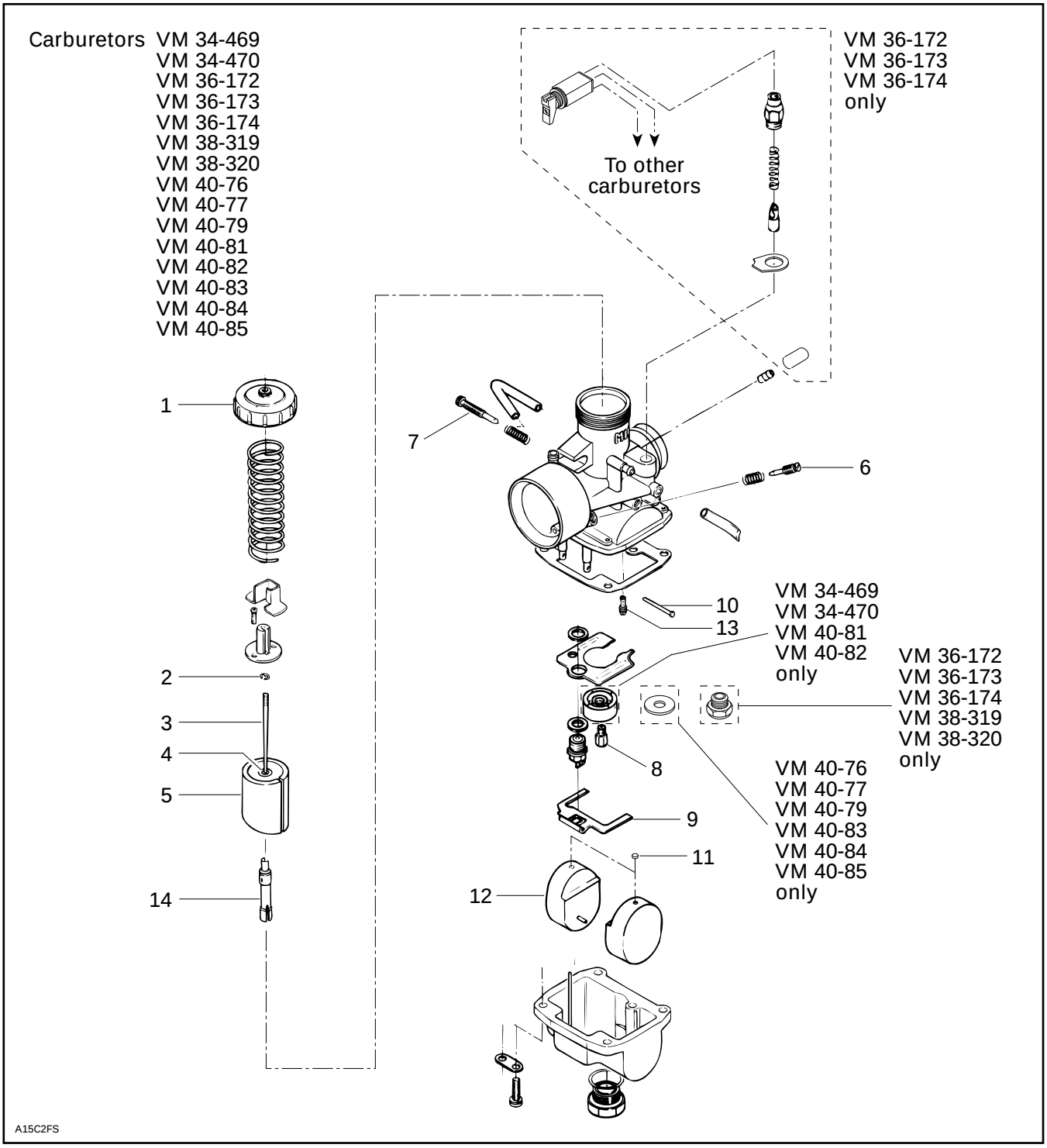
Carburetors VM 34-469
VM 34-470
VM 36-172
VM 36-173
VM 36-174
VM 38-319
VM 38-320
VM 40-76
VM 40-77
VM 40-79
VM 40-81
VM 40-82
VM 40-83
VM 40-84
VM 40-85
VM 36-172
VM 36-173
VM 36-174
only
To other carburetors
1
2
3
4
5
6
7
8
9
10
11
12
13
14
VM 34-469
VM 34-470
VM 40-81
VM 40-82
only
VM 36-172
VM 36-173
VM 36-174
VM 38-319
VM 38-320
only
VM 40-76
VM 40-77
VM 40-79
VM 40-83
VM 40-84
VM 40-85
only
A15C2FS

Carburetor TM 38 C133

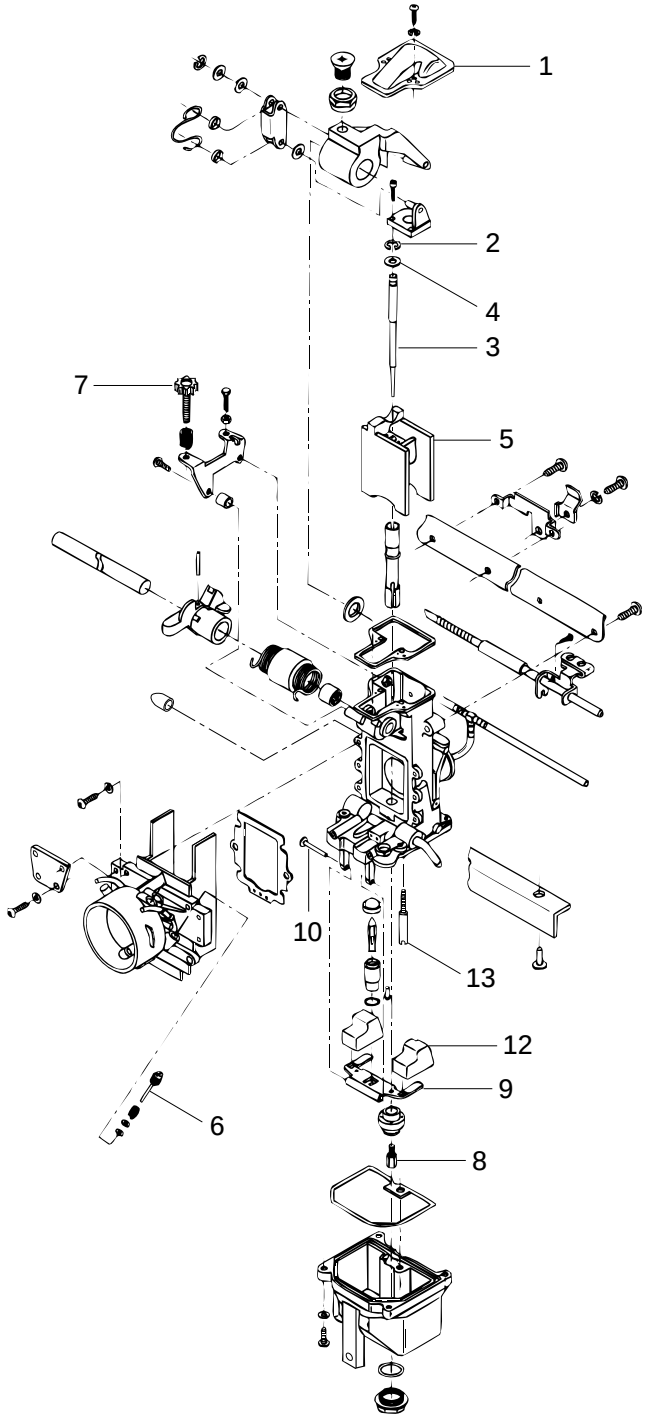

A06C38S

REMOVAL

Remove air silencer(s). For S-Series, see BATTERY 06-04.

Disconnect fuel inlet line.

Disconnect primer line from carburetor.

1,9, Cover and Throttle Slide

Unscrew carburetor cover then pull out throttle slide from carburetor.

◆ WARNING : Exercise care when handling throttle slide. Scratches incurred may cause throttle slide to stick open in operation.

Disconnect throttle cable from throttle slide.

Untighten rubber flange clamps then remove carburetor from engine.

CLEANING AND INSPECTION

The entire carburetor should be cleaned with a general solvent and dried with compressed air before disassembly.

▼ CAUTION : Heavy duty carburetor cleaner may be harmful to the float material and to the rubber parts, O-rings, etc. Therefore, it is recommended to remove those parts prior to cleaning.

Carburetor body and jets should be cleaned in a carburetor cleaner following manufacturer's instructions.

◆ WARNING : Solvent with a low flash point such as gasoline, naphtha, benzol, etc., should not be used as they are flammable and explosive.

Check inlet needle tip condition. If worn, the inlet needle and seat must be replaced as a matched set.

○ NOTE : Install needle valve for snowmobile carburetor only. It is designed to operate with a fuel pump system.

Check throttle slide for wear. Replace as necessary.

11,12, Cap and Float

Check for fuel inside float.

If fuel is noticed :

– Check cap for fuel tightness ; replace as necessary.
– Check float for cracks or other damage affecting fuel tightness ; replace as necessary.

Summit Only

Check rubber plug close to fuel inlet fitting for cracks or any damage that could affect air tightness.

DISASSEMBLY AND ASSEMBLY

○ NOTE : To ease the carburetor disassembly and assembly procedures it is recommended to use carburetor tool kit (P / N 404 1120 00).

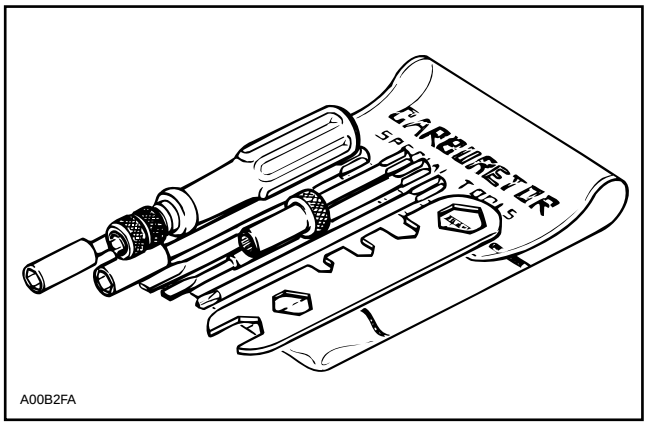

2,3, E-clip and Needle

All Models Except Mach Z

Remove screws from needle retaining plate to withdraw the needle.

Mach Z Only

To remove needle or to change its position or to remove throttle slide, remove carburetor cover.

Except for MAG side carburetor, unscrew locking screw and adjusting nut from throttle rod.

Move arm aside just enough for unscrewing Allen screw retaining throttle slide.

For MAG side carburetor, raise throttle slide half way then unscrew Allen screws.

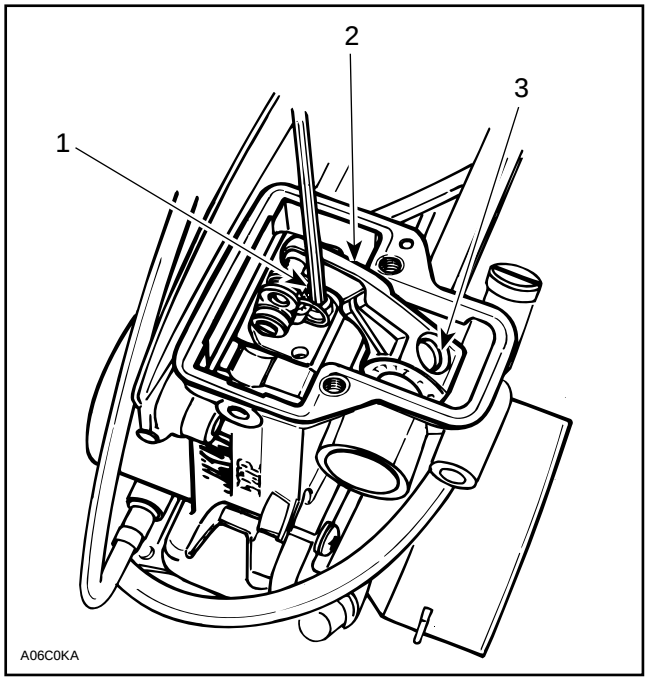

1. *Allen screw*
2. *Arm moved aside*
3. *Locking screw and adjusting nut removed*

All Models

The position of the needle in the throttle slide is adjustable by means of an E-clip inserted into 1 of 5 grooves located on the upper part of the needle. Position 1 (at top) is the leanest, 5 (at bottom) the richest.

NOTE : The last digit of the needle identification number gives the recommended position of the E-clip from the top of the needle.

Example : 6DH4-3

Needle identification — Recommended position of the E-clip from top

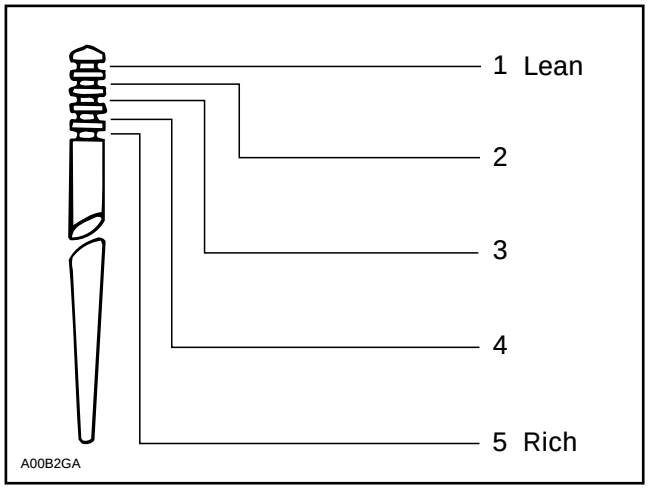

1. *Lean*
2. *Rich*

5, Throttle Slide

The size of the throttle slide cut-away affects the fuel mixture between 1/8 to 1/2 throttle opening. A certain amount of richness is needed for that particular range because this is where the transition from the low speed to the high speed circuit takes place.

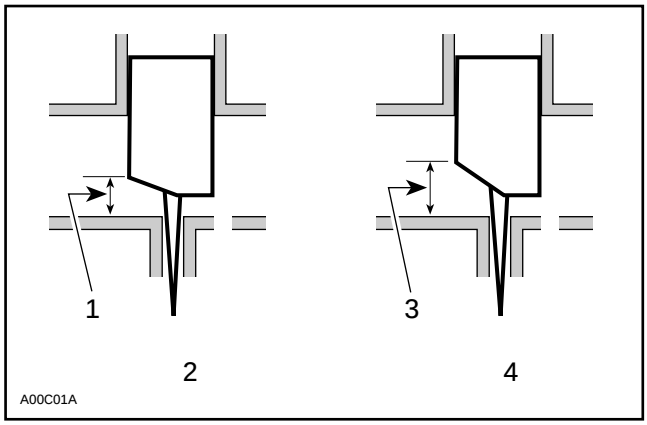

1. *Low cut-away (high air speed)*
2. *Rich mixture*
3. *High cut-away (low air speed)*
4. *Lean mixture*

8, Main Jet

The main jet installed in the carburetor has been selected for a temperature of –20°C (0°F) at sea level. Different jetting can be installed to suit temperature and / or altitude changes. Always check spark plug tip and / or piston dome color to find out correct jetting.

CARBURETOR FLOAT LEVEL ADJUSTMENT

9,10, Float Arm and Float Arm Pin

Correct fuel level in float chamber is vital toward maximum engine efficiency. To check for correct float level proceed as follows :

– Remove float bowl and gasket from carburetor.
– With carburetor chamber upside-down on a level surface, measure height H between bowl seat and top edge of float arm.

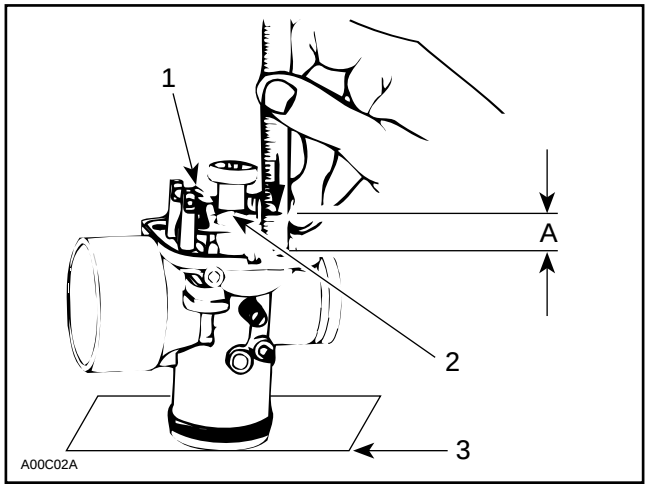

TYPICAL

1. *Contact tab*
2. *Float arm*
3. *Level surface*
4. *H*

On TM 38, do not turn carburetor up side down. Measure float arm height when it just touches needle valve without moving it.

Float arm height dimensions :

CARBURETOR MODEL	FLOAT HEIGHT H	
	± 1 mm	(± .040 in)
VM 32-269 VM 34-469 VM 34-470	23.9	(.941)
VM 38 VM 40	18.1	(.713)
VM 38 (Summit) VM 40 (Summit)	19.6	(.772)

To Adjust Height H :

– Bend the contact tab of float arm until the specified height is reached.

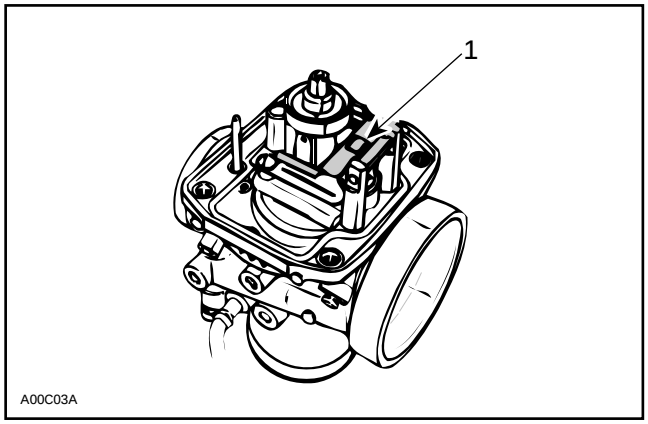

1. Contact tab

The illustration below shows which part of the carburetor begins and to stops to function at different throttle slide openings.

Note that the wider part of symbol corresponds to the opening mostly affected. For instance, throttle slide cut-away begins to function at close position but it is most effective at 1/4 opening and decreases up to 1/2 opening.

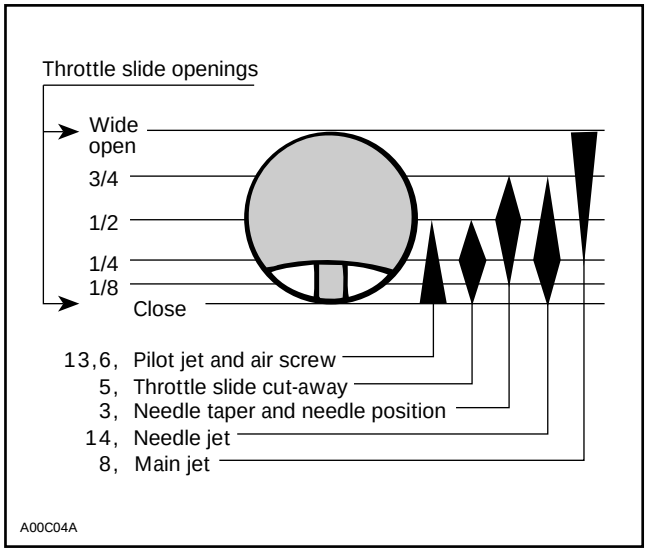

NOTE : For fine tuning refer to TECHNICAL DATA section 10 and to SPARK PLUG 06-03.

NOTE : For high altitude regions, the *High Altitude Technical Data* (P / N 484 0624 00 and 484 0545 00 for binder) gives information about calibration according to altitude and temperature.

INSTALLATION

CAUTION : Never allow throttle slide(s) to snap shut.

To install carburetor on engine, inverse removal procedure.

However, pay attention to the following :

– Inspect throttle cable and housing prior to installation.

– Match the color dot on carburetor with color dot on intake socket.

On applicable models, make sure to align tab of carburetor and air intake silencer (if applicable) with notch of adaptor(s). On applicable models, install adaptor with up mark facing up.

CAUTION : The rubber flange must be checked for cracks and / or damage. At assembly, the flange must be perfectly matched with the air intake manifold or severe engine damage will occur.

Install clamps in a way that their tightening bolt being staggered — not align. Tighten clamps to 0.5 to 0.8 N•m (4.5 to 7.2 lbf•in).

Center Post Retaining (All Models)

Hook throttle cable into the needle retainer plate.

NOTE : Do not obstruct hole in throttle slide when installing needle retaining plate. This is important to allow air escaping through and thus allowing a quick response.

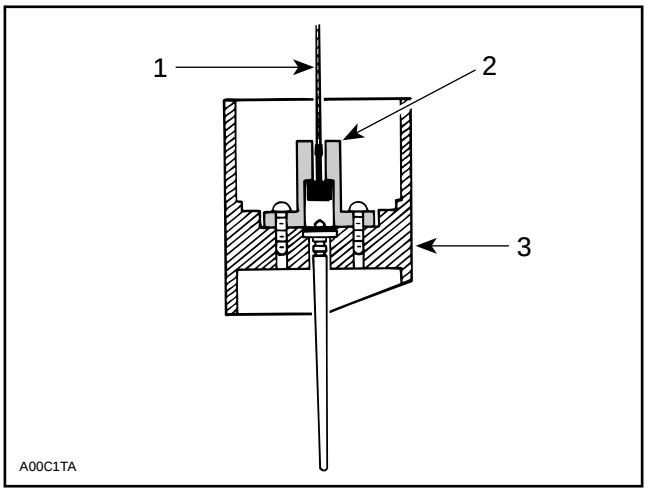

CENTER POST TYPE

1. *Throttle cable*
2. *Needle retaining plate*
3. *Throttle slide*

3,4, Needle and Nylon Packing

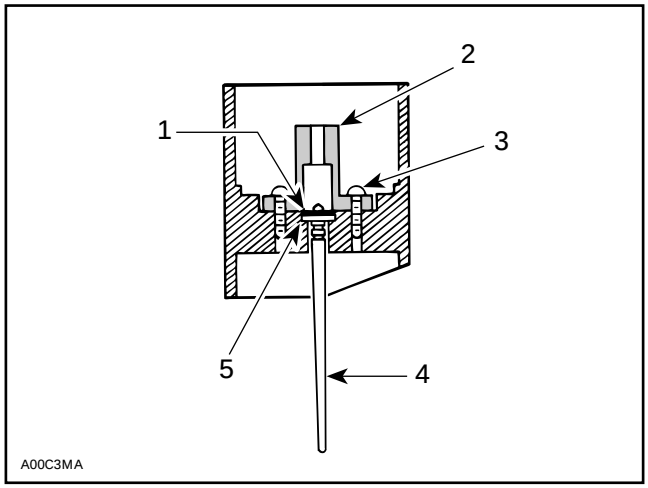

CENTER POST TYPE

1. *E-clip*
2. *Needle retaining plate*
3. *Screw*
4. *Needle*
5. *Nylon packing*

Make sure the nylon packing is installed on all applicable throttle slides.

CAUTION : Serious engine damage can occur if this notice is disregarded.

CARBURETOR ADJUSTMENTS

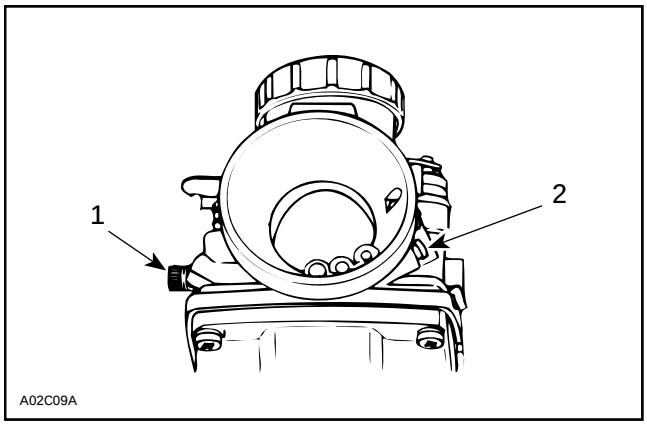

1. *Idle speed screw*
2. *Air screw*

6, Air Screw Adjustment

Completely close the air screw (until a slight seating resistance is felt) then back off as specified.

Turning screw clockwise enrichens mixture and conversely, turning it out counterclockwise leans mixture.

Refer to TECHNICAL DATA section 10 for the specifications.

Carburetor Synchronization

Both carburetor slides must start to open at the same time.

Completely unscrew idle speed screw on both carburetors.

Unlock cable adjustment lock nut then screw in adjuster until throttle slide bottoms out. Proceed the same for both carburetors.

Unscrew cable adjuster to eliminate all cable play but without raising throttle slide. Proceed with care on both carburetors then tighten jam nuts. Both carburetor slide must start to open at the same time, depress throttle lever to check it and turn cable adjuster as required.

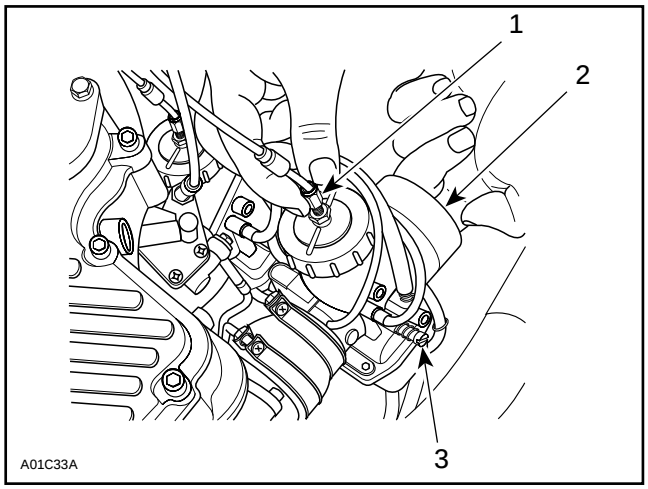

1. Screw in and out until no cable free play exists
2. Check that throttle slide does not move
3. Idle speed screw completely unscrewed

Check throttle slide position at wide open throttle. On liquid cooled models, throttle slide must be flush with carburetor outlet bore. On fan cooled models, throttle slide must be flush with carburetor inlet bore. At that same position, check that throttle slide does not contact carburetor cover. Turn cable adjuster and recheck synchronisation.

▼CAUTION : If the throttle slide rests against the carburetor cover at full throttle opening, this will create too much strain and may damage the throttle cable or other components in throttle mechanism.

Throttle Slide Adjustment

▼CAUTION : Ensure the engine is turned OFF, prior to performing the throttle slide adjustment.

For maximum performance, correct carburetor throttle slide adjustment is critical.

The following method should be used with engine turned off :

Unscrew idle screw until it does not contact throttle slide.

Turn the idle speed screw clockwise until it contacts the throttle slide then continue turning 2 additional turns.

On twin carburetor models : Repeat on the other one. This will ensure identical throttle slide preliminary idle setting. Recheck carburetor synchronization. Adjust idle by turning both idle speed screws of the same amount.

▼CAUTION : On twin carburetor models, make sure both carburetors start to operate simultaneously. Beside do not interchange carburetors, the jetting may be different on each side. A color dot is printed on one carburetor and on the engine. Match the carburetor and the engine dots when applicable.

▼CAUTION : On oil injection models, the oil injection pump adjustment must be checked each time carburetor is adjusted. Refer to OIL INJECTION SYSTEM 04-06.

Throttle slide must be flush with the top of carburetor outlet bore.

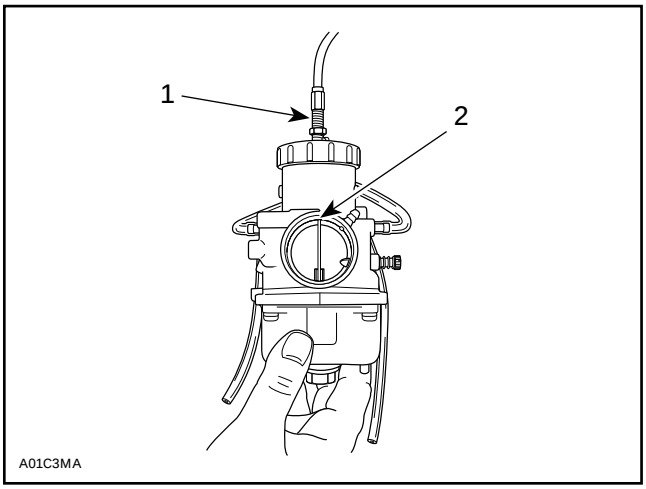

THROTTLE LEVER AGAINST HANDLE GRIP

1. Throttle cable adjuster
2. Throttle slide flush with carburetor outlet bore

Once carburetor adjustment is performed, check that with the throttle lever fully depressed, there is a free play between the carburetor cover and top of throttle slide.

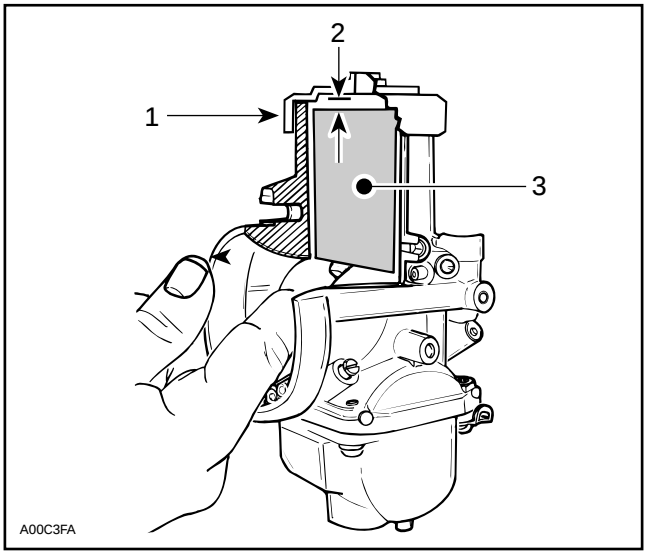

THROTTLE LEVER AGAINST HANDLE GRIP

1. *Cover*
2. *Free play*
3. *Throttle slide*

◆ WARNING : This gap is very important. If the throttle slide rests against the carburetor cover at full throttle opening, this will create too much strain and may damage the throttle cable or other components in throttle mechanism.

On twin-carburetor models : Recheck carburetor synchronization.

▼ CAUTION : On oil injection models, the oil injection pump adjustment must be checked each time carburetor is adjusted. Refer to OIL INJECTION SYSTEM 04-06.

PRELIMINARY IDLE SPEED ADJUSTMENT

Adjust throttle slide height (see table) by turning idle speed screw no. 7.

Final adjustment (engine running at idle speed) should be within 1/2 turn of idle speed screw from preliminary adjustment.

Models	Throttle Slide Height	
	± 0.2 mm	(± 0.008 in)
MX Z 440	1.8	(.071)
MX Z 583	1.5	(.059)
MX Z 670	2.1	(.083)
Summit 583 / 670	2.3	(.090)
Formula Z	1.8	(.071)
Formula SS	1.9	(.074)
Formula III / III LT	1.2	(.047)
Mach Z / Z LT	1.4	(.055)
Skandic WT	1.3	(.051)

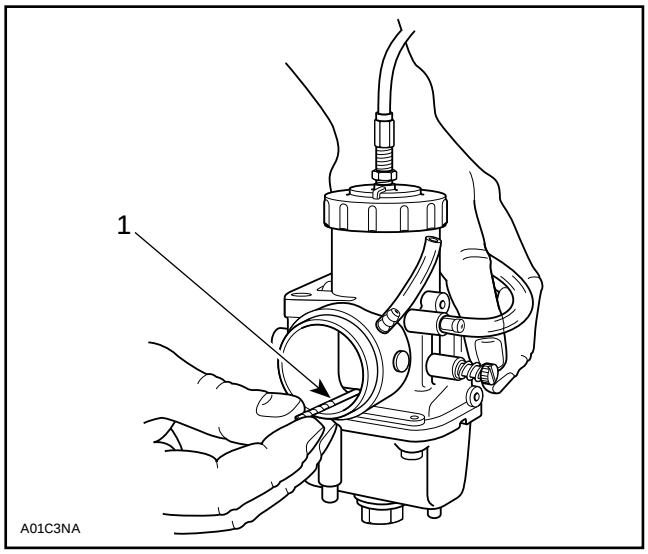

TYPICAL

1. *Drill bit used as gauge for throttle slide height*

IDLE SPEED FINAL ADJUSTMENT

7, Idle Speed Screw

Check idle speed screw straightness. Replace as necessary.

Start engine and allow it to warm then adjust idle speed to specifications by turning idle speed screw clockwise to increase engine speed or counterclockwise to decrease it.

NOTE : On twin carburetor models : Turn adjustment screw the same amount to keep carburetors synchronized.

Refer to TECHNICAL DATA section 10 for the specifications.

CAUTION : Do not attempt to set the idle speed by using the air screw. Severe engine damage can occur.

CHOKE

Skandic WT and Formula III / III LT

Choke Plunger Adjustment

Remove cable from vehicle. Lay cable on a flat surface. Ensure cable is not bent.

Adjust cable length to obtain the following plunger / adaptor distance. Retighten lock nut.

MODELS		PLUNGER / ADAPTOR DISTANCE ± 0.3 mm (± .012 in)
Skandic WT		32.0 (1.260)
Formula III / III LT	PTO	32.9 (1.295)
	CTR	32.3 (1.272)
	MAG	31.2 (1.228)

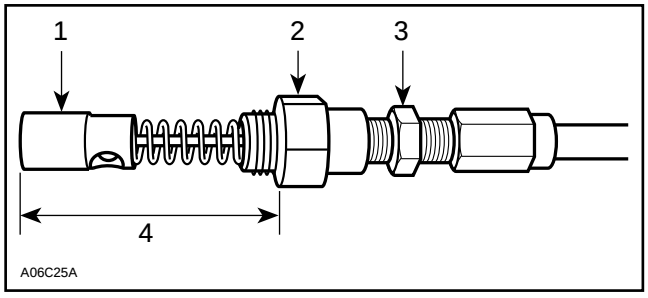

Mach Z / Z LT

Choke Plunger Adjustment

The 3 plungers must be properly synchronized. Make sure set screws of tabs are in the sliding rod holes.

If adjustment is required, slightly bent the choke plunger tab(s) as necessary.

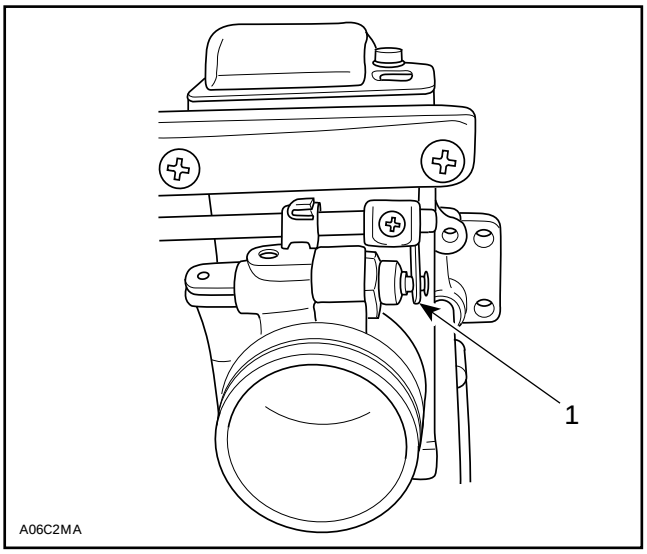

1. Choke plunger tab

Choke Cable Adjustment

Choke cable barrel must be in left hole of sliding rod lever.

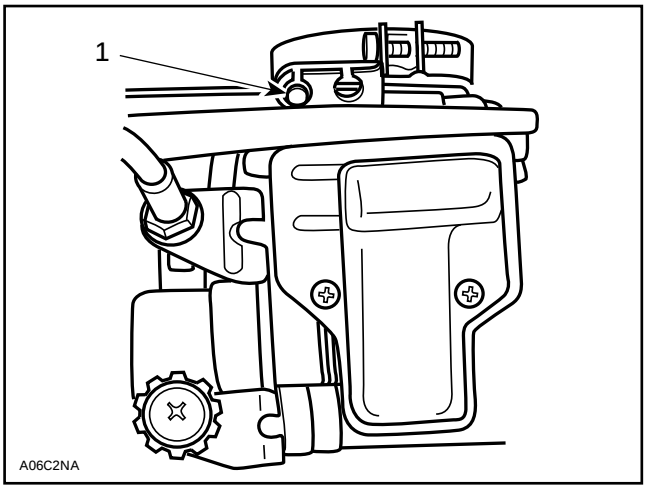

1. Cable barrel in left hole

Air intake silencer must be reinstalled and choke cable properly routed before finalizing adjustment.

Adjust choke cable to obtain a maximum gap of approximately 0.3 mm (.012 in) between tab and plunger when choke lever is not activated.

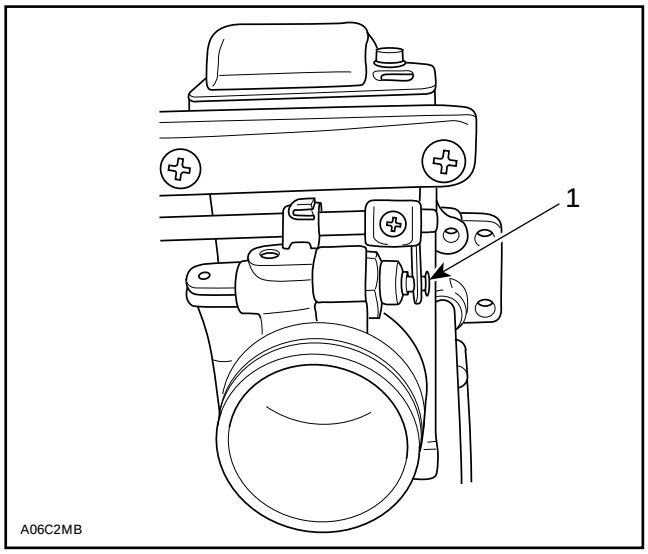

1. 0.3 mm (.012 in) gap maximum

NOTE : If there is no gap between tab and plunger, a rich condition will occur and throttle response will be affected ; if the gap is too great, the plunger stroke will be reduced causing poor cold engine starting.

If adjustment is required, slacken cable support on middle carburetor to change choke cable position.

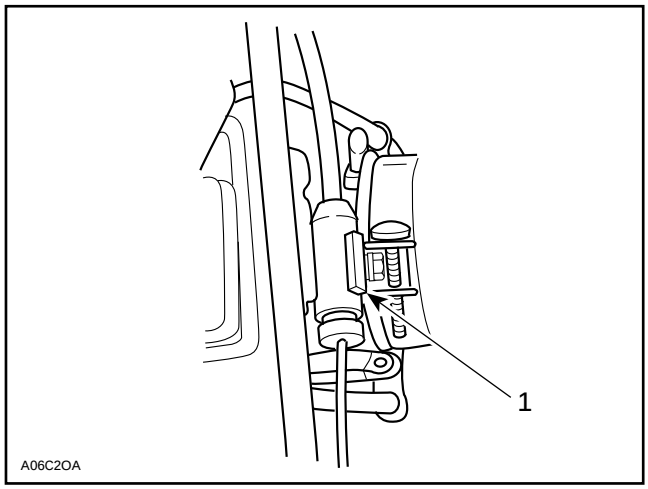

1. Choke cable support

After adjustment, retighten screw.

HAC SYSTEM

Summit Only

HAC (High Altitude Compensator) is a maintenance free device.

No adjustment and verification can be done on HAC.

If HAC is suspected to be faulty, replace it and check for improvement.

Hoses connected to HAC must not be altered in length or size. Check for kinked or loose hoses. Tighten or replace as necessary. See below illustrations for routing.

Nut holding T-fitting must be torqued to 6 N•m (53 lbf•in).

HAC SYSTEM

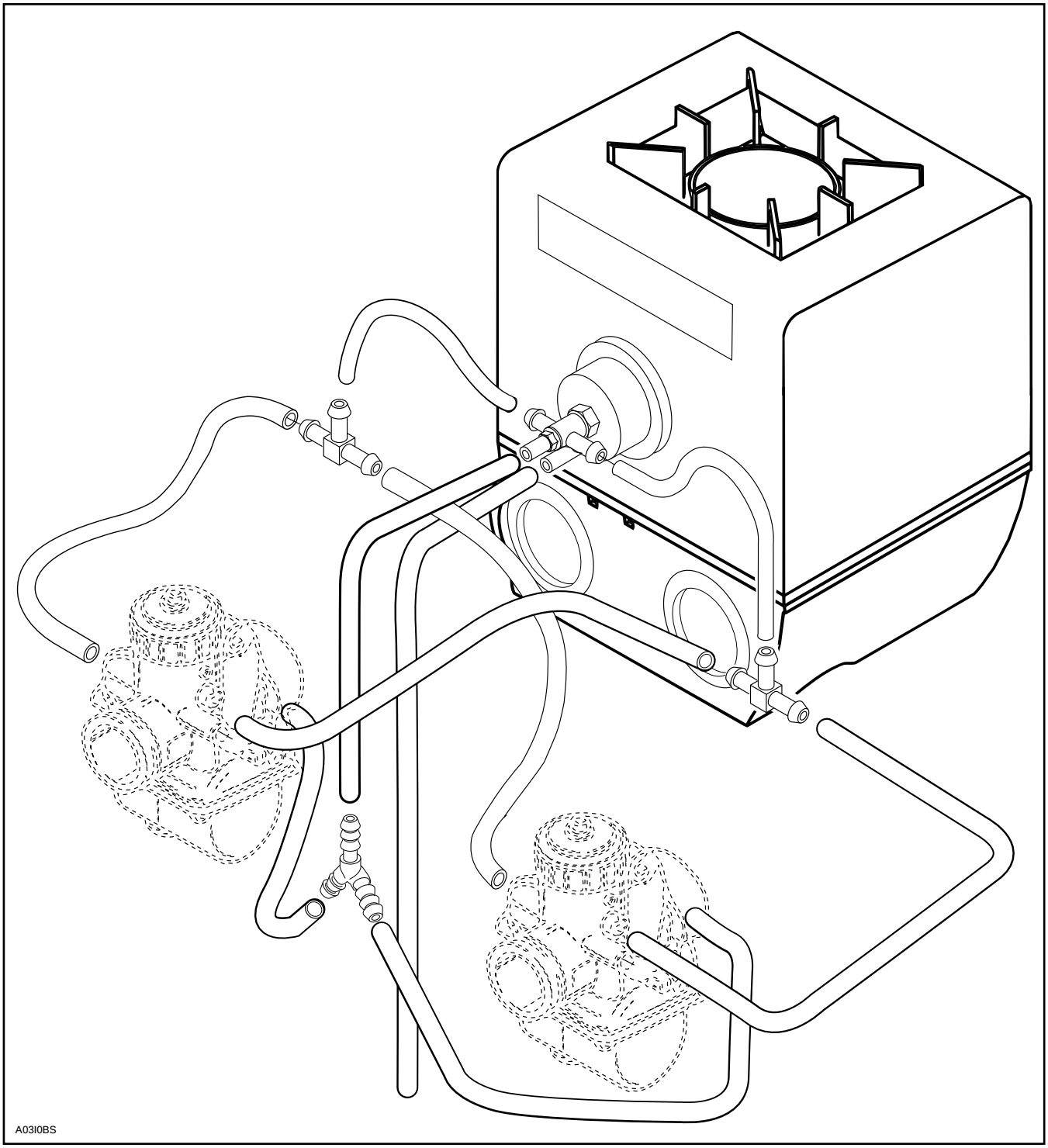

FUEL PUMP

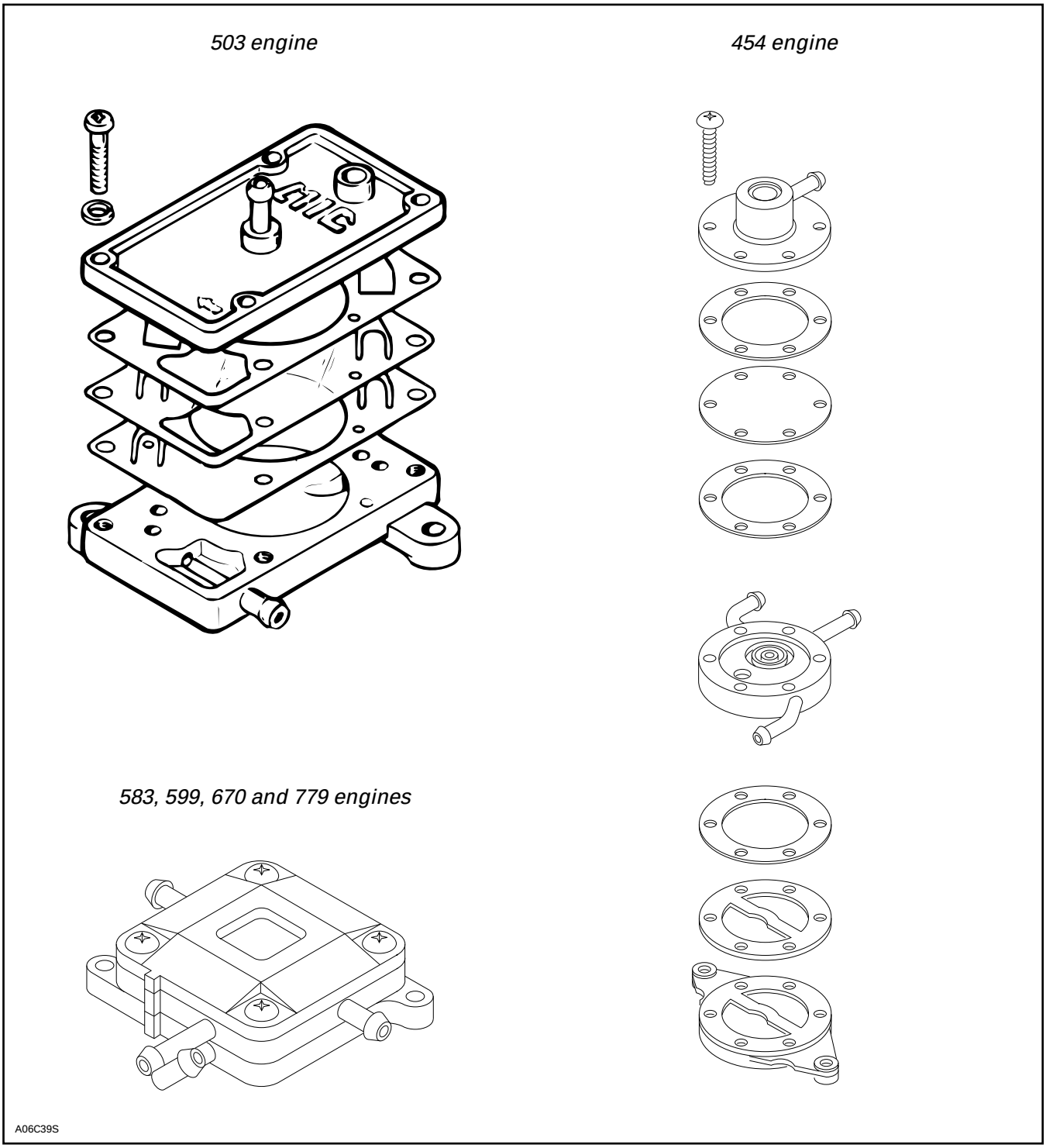

REMOVAL

Install a hose pincer (P / N 529 0099 00) on fuel supply line close to pump inlet.

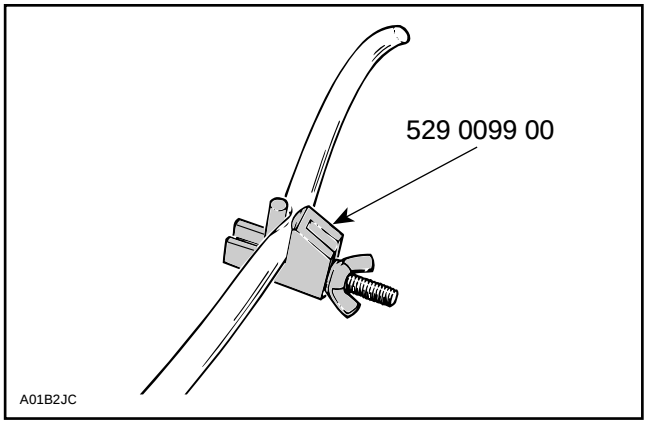

Disconnect fuel outlet line(s).

Disconnect impulse line.

Remove screws securing fuel pump.

PUMP VERIFICATION

Check fuel pump valves operation as follows :

Connect a clean plastic tubing to the inlet nipple and alternately apply pressure and vacuum with the mouth. The inlet valve should release with pressure and hold under vacuum.

Repeat the same procedure at the outlet nipple. This time the outlet valve should hold with pressure and release under vacuum.

NOTE : On model fitted with 2 outlets, plug 1 outlet with finger while checking outlet valve.

Check impulse diaphragm and gasket on high-supply fuel pump with twin outlets as follows :

Connect a clean plastic tubing to the impulse nipple and plug vent hole on top cover. Either apply pressure or vacuum. The diaphragm / gasket must not leak.

CLEANING AND INSPECTION

The entire pump should be cleaned with general purpose solvent before disassembly.

Fuel pump components should be cleaned in general purpose solvent and dried with compressed air.

WARNING : Solvent with a low flash point such as gasoline, naphtha, benzol, etc., should not be used as each is flammable and explosive.

Inspect diaphragm. The pumping area should be free of holes, tears or imperfections. Replace as needed.

High-supply pump with twin outlets : Thoroughly clean filter on top cover. Replace pump if too dirty.

INSTALLATION

To install, inverse removal procedure.

WARNING : Pressure test to ensure there is no leak in fuel system.

FUEL TANK AND THROTTLE CABLE

All Models

Fuel Tank Lines

◆ WARNING : When draining a fuel tank or whenever a fuel line is disconnected, obstruct line with a hose pincher (P / N 529 0099 00) or equivalent device. Fuel is flammable and explosive under certain conditions. Ensure work area is well ventilated. Do not smoke or allow open flames or sparks in the vicinity.

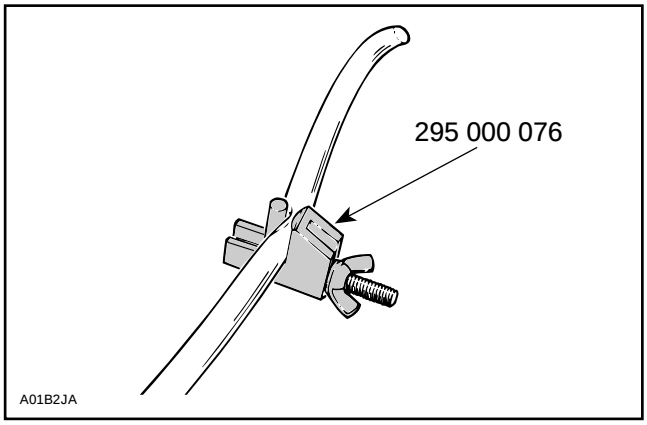

Impulse / Fuel Lines Spring Clips (All Models)

Always reposition spring clips after any repair to prevent possible leaks.

Throttle Cable Circlip at Handlebar (All Models)

Put silicone grease (P / N 413 7017 00) around cable barrel. Locate circlip as per illustration.

◆ WARNING : If this procedure is disregarded, throttle might be half-open at normally closed position and the engine will speed up when starting.

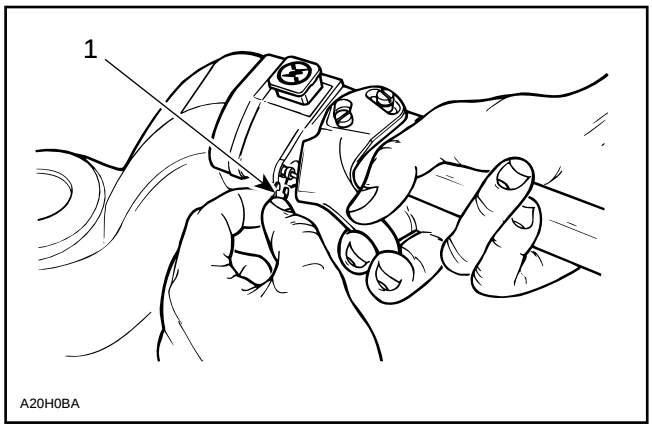

TYPICAL – MODELS WITH EASY ACTION THROTTLE LEVER

1. *Circlip*

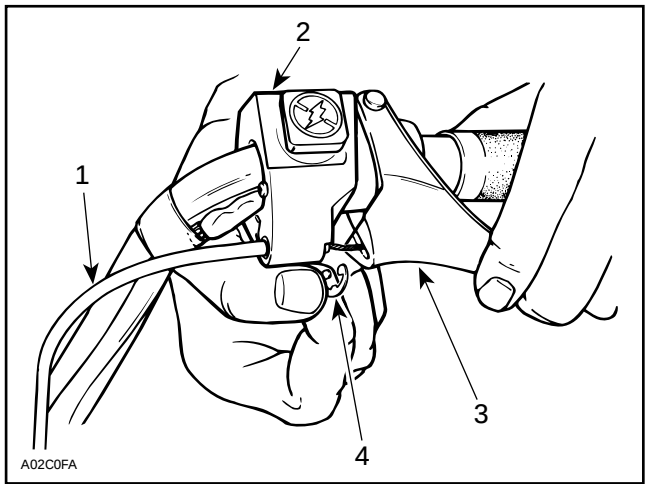

OTHER MODELS

1. *Throttle cable housing*
2. *Throttle handle housing*
3. *Throttle handle*
4. *Circlip*

Throttle Cable O-ring and Retaining Ring at Carburetor (Some Models)

Locate O-ring outside of carburetor cover and retaining ring inside.

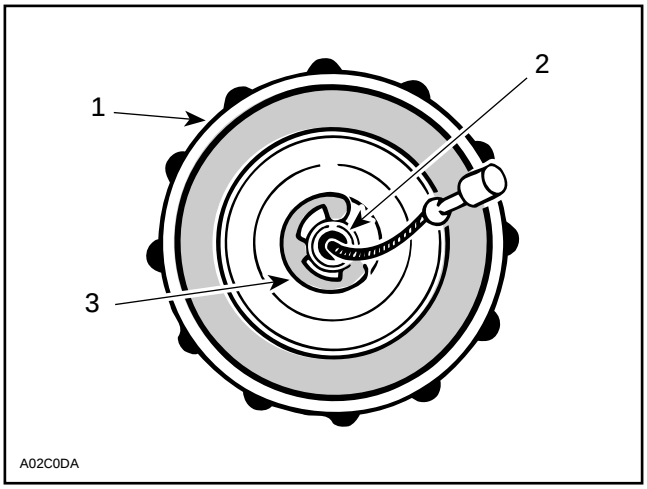

1. Carburetor cover
2. Throttle cable housing
3. Retaining ring

Adjust throttle cable as specified in CARBURETOR AND FUEL PUMP 04-08.

Throttle Cable Routing

▼CAUTION : Check that throttle cable is routed away from sharp, edges, hot or vibrating parts. When turning steering while engine is running, idle speed must not vary.

Fuel Level Sensor

INSPECTION

Visually inspect the condition of connectors and wiring throughout the circuit. Connections must be clean and tight, and wiring free of damage. Repair as necessary. Use silicone dielectric grease to prevent corrosion at the connectors. Operate the engine to see if the problem has been corrected. If not, remove fuel tank cap and lift float using a rigid wire. Check resistance at full position (3 ± 2 Ω) and resistance at empty position (110 ± 7 Ω).

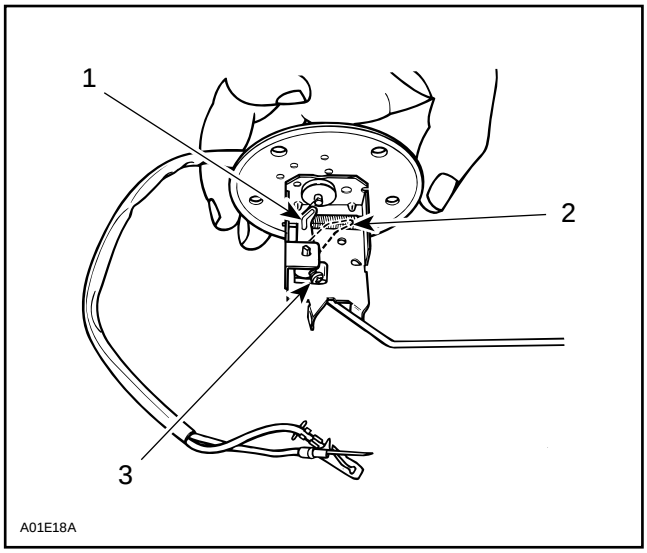

1. Full position (3 ± 2 Ω)
2. Empty position (110 ± 7 Ω)
3. Slacken to adjust

Fuel Level Sensor Screws (Some Models)

Torque fuel level sensor retaining screws to 1 N•m (8 lbf•in) in the sequence shown and then to 2.5 N•m (22 lbf•in), using the same sequence.

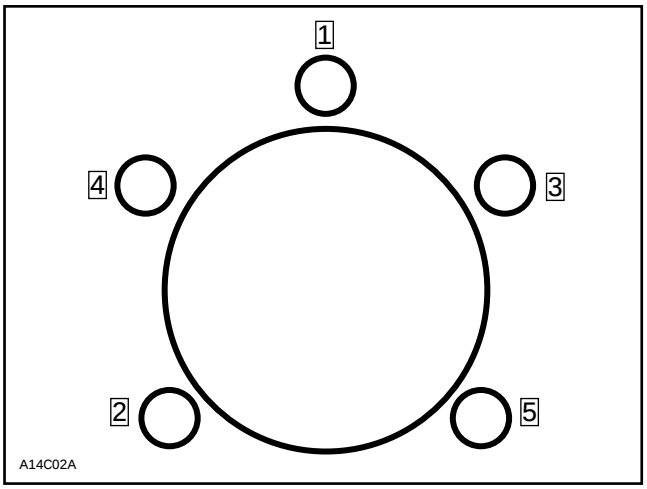

TABLE OF CONTENTS

DRIVE BELT **05-01-1**

1996 APPLICATION CHART **05-01-1**
ROTATION DIRECTION 05-01-1
DRIVE BELT DEFLECTION MEASUREMENT 05-01-1
DEFLECTION ADJUSTMENT 05-01-3

DRIVE PULLEY **05-02-1**

TRA **05-02-1**
ALL MODELS *05-02-1*
GENERAL 05-02-2
REMOVAL 05-02-2
DISASSEMBLY 05-02-2
CLEANING 05-02-3
INSPECTION 05-02-4
ASSEMBLY 05-02-6
INSTALLATION 05-02-8
DRIVE PULLEY ADJUSTMENT 05-02-8

DRIVEN PULLEY **05-03-1**
S-SERIES AND F-SERIES *05-03-1*
SKANDIC WT *05-03-2*
REMOVAL 05-03-3
DISASSEMBLY 05-03-3
CLEANING 05-03-3
INSPECTION 05-03-3
ASSEMBLY 05-03-5
INSTALLATION 05-03-5
ADJUSTMENT 05-03-5

PULLEY DISTANCE AND ALIGNMENT **05-04-1**
GENERAL 05-04-1
GENERAL PROCEDURE 05-04-1
PULLEY ALIGNMENT AND DISTANCE SPECIFICATIONS CHART 05-04-2

BRAKE **05-05-1**
SUMMIT 583 ..... *05-05-1*
MX Z 440 / 583 / 670, SUMMIT 670, FORMULA Z / SS / III / III LT AND MACH Z / Z LT *05-05-2*
SKANDIC WT *05-05-3*
REMOVAL 05-05-4
INSTALLATION 05-05-5
ADJUSTMENT 05-05-6

AINCASE **05-06-1**
; SERIES AND F SERIES WITHOUT REVERSE GEAR *05-06-1*
EMOVAL 05-06-2
NSPECTION 05-06-2
EAR RATIO MODIFICATION 05-06-2
NSTALLATION 05-06-2
RIVE CHAIN ADJUSTMENT 05-06-3
DJUSTMENT 05-06-4

ARBOX **05-07-1**
-SPEED GEARBOX (SHIFTER MECHANISM) **05-07-1**
SKANDIC WT *05-07-1*
EMOVAL 05-07-2
DJUSTMENT 05-07-2
SKANDIC WT *05-07-3*
EMOVAL 05-07-4
ISASSEMBLY 05-07-4
NSPECTION 05-07-6
SSEMBLY 05-07-6
NSTALLATION 05-07-7
IL LEVEL 05-07-7

VE CHAIN **05-08-1**
ILENT CHAIN 05-08-1

DRIVE BELT

1996 APPLICATION CHART

MODEL	PART NUMBER	WIDTH (NEW) ± 0.25 mm (.010 in)	MINIMUM WIDTH (WEAR LIMIT)
MX Z 440 / 583 FORMULA Z SUMMIT 583	414 8607 00	35 mm (1-3/8'')	32.5 mm (1-9/32'')
SKANDIC WT	414 6175 00	34.6 mm (1-3/8'')	32 mm (1-1/4'')
FORMULA SS, SUMMIT 670, MX Z 670, FORMULA III / III LT and MACH Z / Z LT	414 9182 00	35.5 mm (1-25/64'')	33 mm (1-19/64'')

ROTATION DIRECTION

The maximum drive belt life span is obtained when the drive belt is installed as shown. This will ensure that correct direction of rotation is respected.

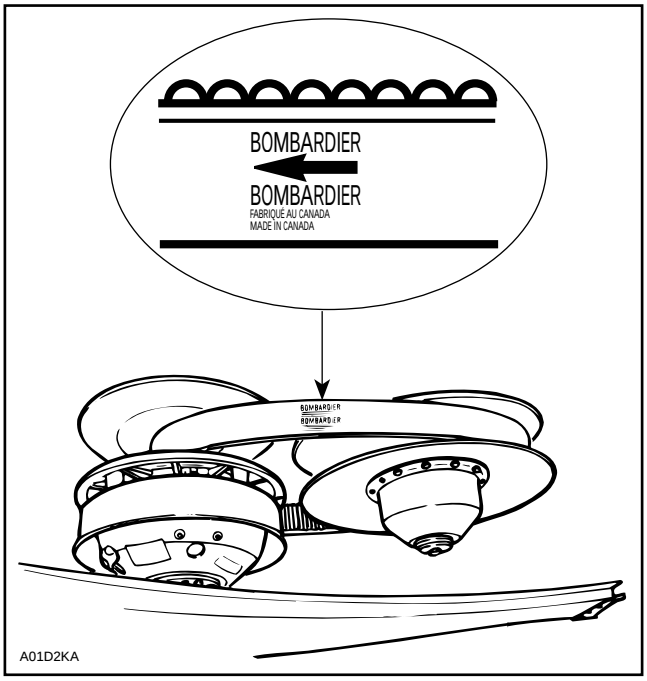

CORRECT

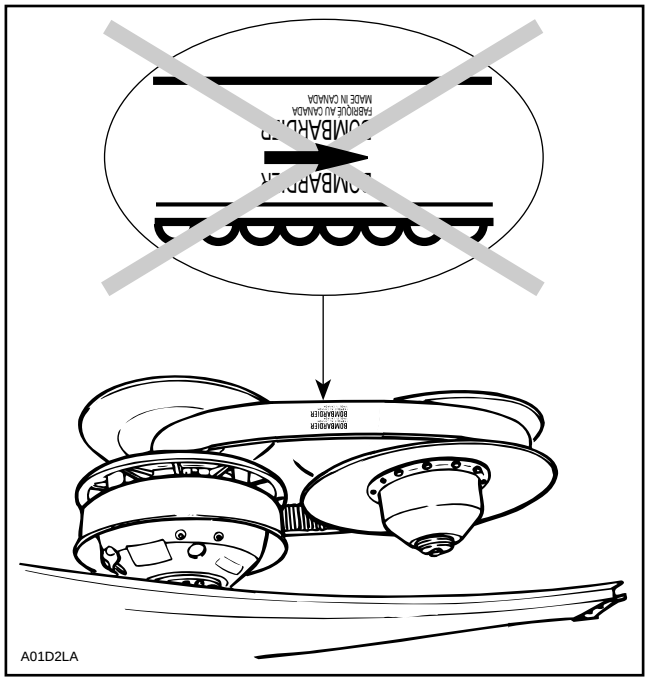

INCORRECT

NOTE : For used drive belt, mark and reinstall in the same position.

DRIVE BELT DEFLECTION MEASUREMENT

NOTE : The drive belt deflection measurement must be performed each time a new drive belt is installed.

NOTE : To obtain an accurate drive belt deflection measurement, it is suggested to allow a break-in period of 50 km (30 mi).

Before checking the belt deflection, ensure vehicle has the proper belt (Refer to the application chart).

Adjust pulley distance and alignment. Refer to 05-04 PULLEY DISTANCE AND ALIGNMENT.

To obtain maximum vehicle performance, the belt tension must be adjusted according to specifications shown in the accompanying chart.

MODEL	DEFLECTION mm (in)	FORCE kg (lb)	HEIGHT† OVER DRIVEN PULLEY
All	32 ± 5 (1-1/4 ± 13/64)	6.8 (15)	0 - 1.5 mm (0 - 1/16'')

† For reference only

To Check Tension

Position a reference rule on drive belt.

Wooden Stick and Spring Scale Method :

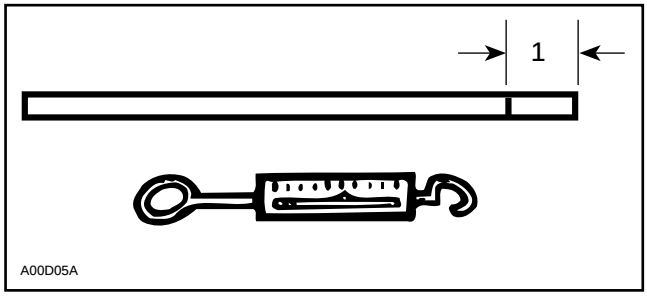

1. Mark specified deflection

Using spring scale and stick, apply specified force on drive belt halfway between pulleys as shown.

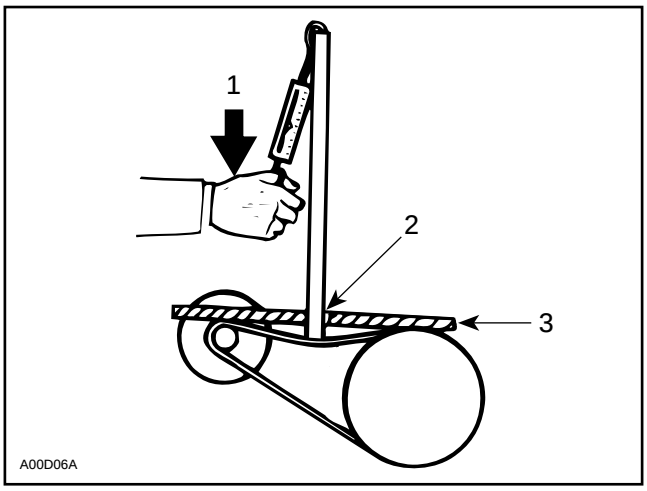

1. Force
2. Read deflection here
3. Reference rule

Or use the belt tension tester (P / N 414 3482 00).

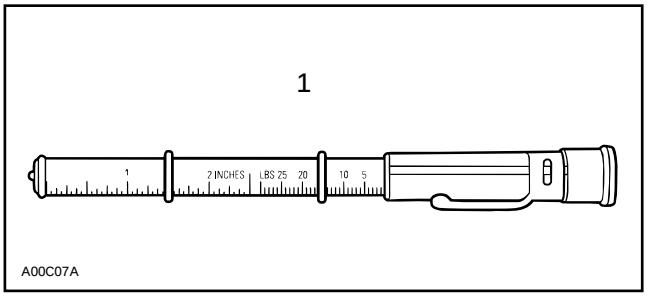

1. Lower O-ring
2. Upper O-ring
3. Force (read down)
4. Deflection (read up)

1. Slide lower O-ring of deflection scale to specified measure.
2. Slide upper O-ring to zero on the force scale.
3. Apply pressure until lower O-ring is flush with edge of rule and read force on the upper scale at top edge of O-ring.

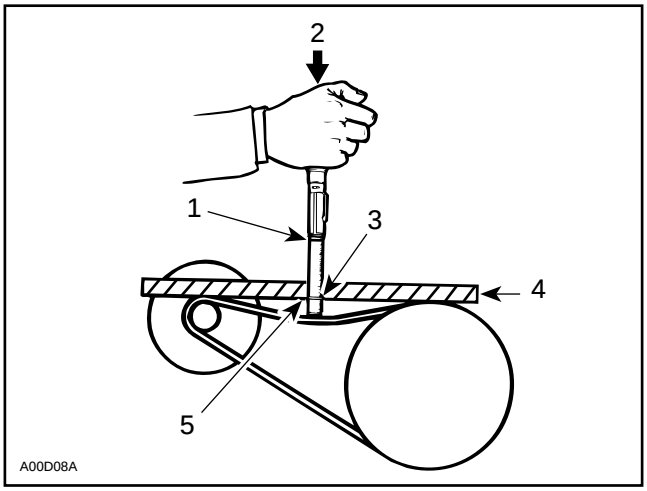

1. Upper O-ring
2. Force
3. Deflection
4. Reference rule
5. Lower O-ring

DEFLECTION ADJUSTMENT

All S-Series and F-Series

Adjust pulley distance according to specification, refer to PULLEY DISTANCE AND ALIGNMENT 05-04, then adjust drive belt deflection using Allen screw, as shown.

To increase deflection : turn Allen screws clockwise.

To decrease deflection : turn Allen screws counterclockwise.

NOTE : Turn Allen screws 1/4 turn at a time, then rotate driven pulley to allow drive belt to settle in pulley. Check deflection, repeat as required.

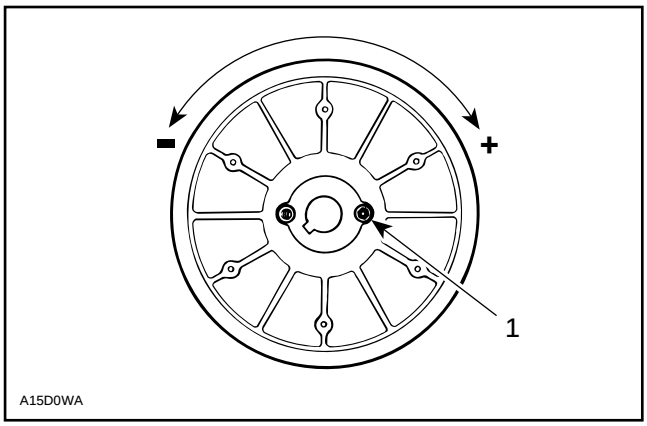

1. Allen screw with jam nut

Allen screws should be restrained while tightening jam nut to prevent throwing adjustment out. Use drive belt tension adjuster (P / N 529 0087 00).

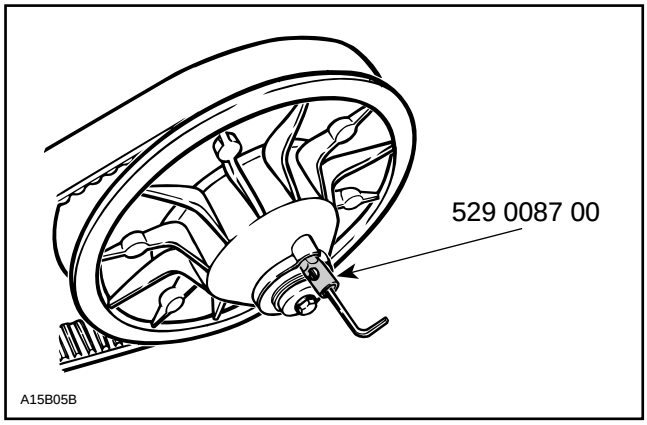

Restrain Allen screws with the wrench and tighten nut with the socket using socket handle provided in tool box.

NOTE : After belt deflection adjustment is performed, the height of the top of the drive belt over the driven pulley should be according to specifications (see table above). If not, check pulley distance and make sure proper belt is used.

DRIVE PULLEY

TRA

All Models

NOTE : This is a lubrication free drive pulley.

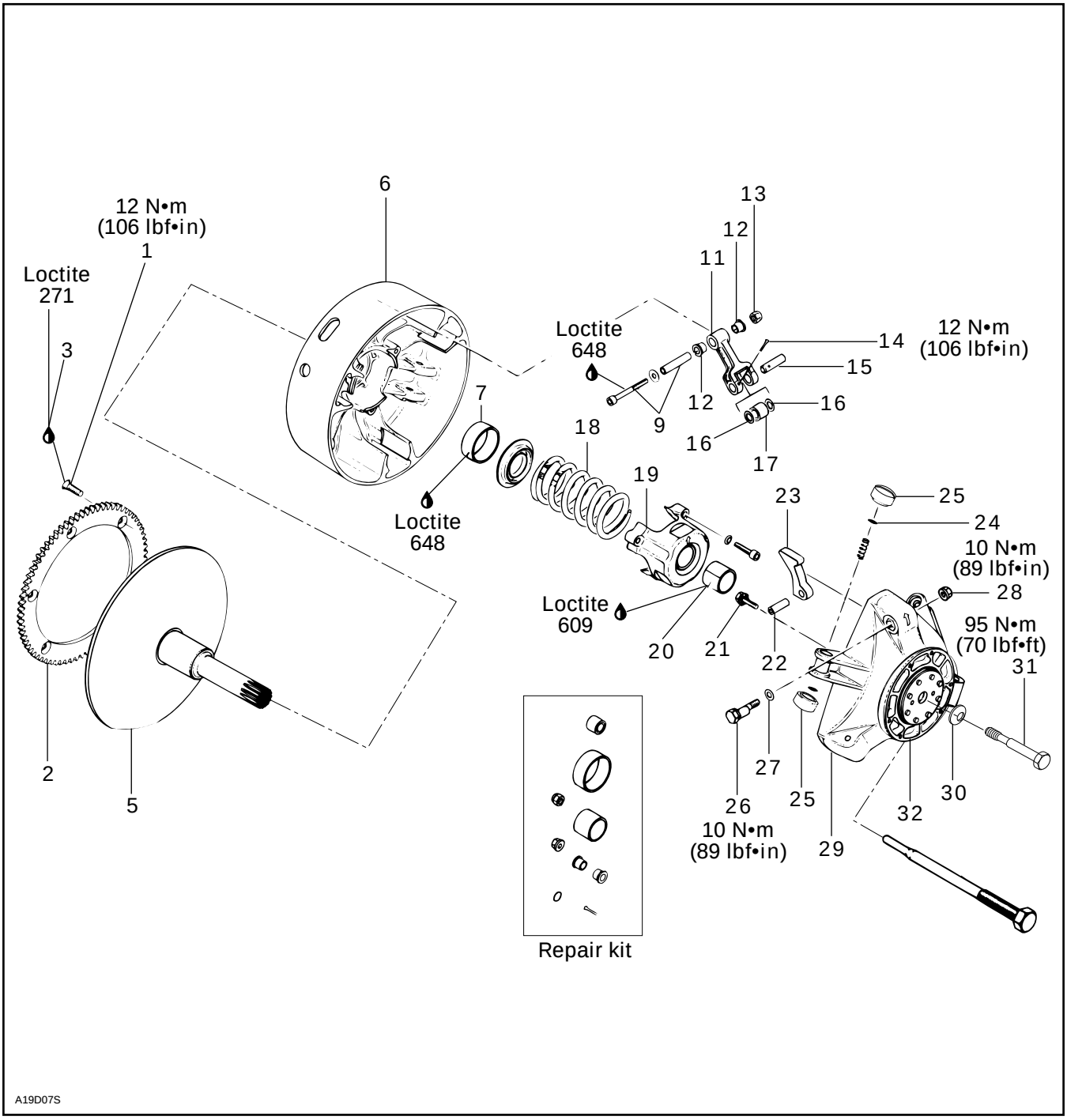

GENERAL

Some drive pulley components (return spring, ramp) can be changed to improve vehicle performance in high altitude regions. The High Altitude Technical Data booklet (P / N 484 0624 00 and 484 0545 00 for binder) gives information about calibration according to altitude.

CAUTION : Such modifications should only be performed by experienced mechanics since they can greatly affect vehicle performance. Verify spring specifications before installation. Do not only refer to the spring color code.

NOTE : TRA clutch stands for Total Range Adjustable clutch.

WARNING : Any drive pulley repairs must be performed by an authorized Bombardier snowmobile dealer, or other such qualified person. Sub-component installation and assembly tolerances require strict adherence to procedures detailed.

REMOVAL

30,31, Conical Spring Washer and Screw

Use clutch holder (P / N 529 0064 00).

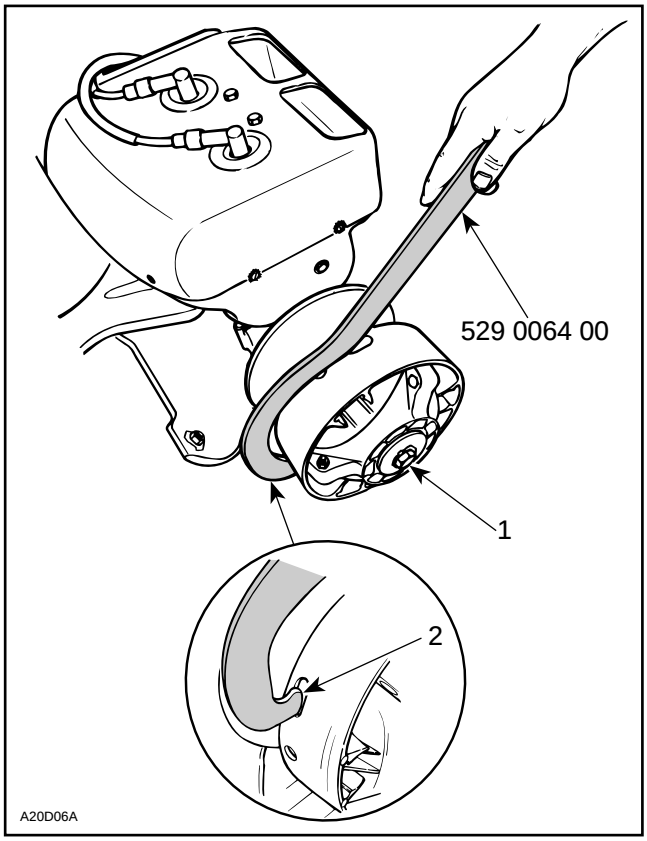

TYPICAL

1. *Retaining screw*
2. *Insert in any slot*

NOTE : Sliding half can be removed while fixed half remains on crankshaft.

WARNING : Never use any type of impact wrench at drive pulley removal and installation.

Remove retaining screw.

To remove drive pulley ass'y and / or fixed half from engine, use puller (P / N 529 0079 00) for 503 and 583 engines. Use puller (P / N 529 0224 00) for 454, 494, 599, 670 and 779 engines.

CAUTION : These pulleys have metric threads. Do not use imperial threads puller. Always tighten puller by hand to ensure that the drive pulley have the same type of threads (metric vs imperial) prior to fully tighten.

To Remove Drive Pulley Ass'y :

Retain drive pulley with clutch holder.

Install puller in pulley shaft then tighten.

DISASSEMBLY

1,2, Screw and Ring Gear

CAUTION : Retaining screws must be heated before disassembly.

5,6, Fixed and Sliding Half

CAUTION : Do not tap on governor cup.

Screw puller into fixed half shaft about 13 mm (1/2 in). Raise drive pulley and hold it by the sliding half while knocking on puller head to disengage fixed half.

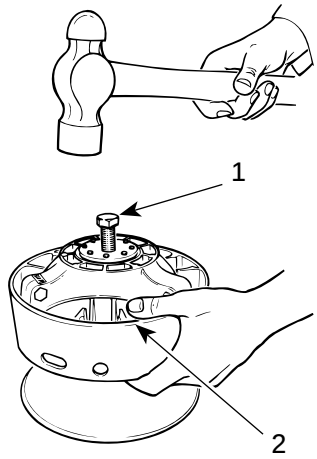

1. Puller
2. Holding sliding half

NOTE : No components marking is required before disassembling this drive pulley since it has factory mark and arrows as indexing reference.

25,29, Slider Shoe and Governor Cup

Carefully lift governor cup until slider shoes come at their highest position into guides.

Hold a slider shoe set then carefully lift its housing and remove them. Proceed the same way for other housings lifting one at a time.

32, Cushion Drive

CAUTION : Do not disassemble cushion drive. Governor cup and cushion drive are factory balanced as an assembly.

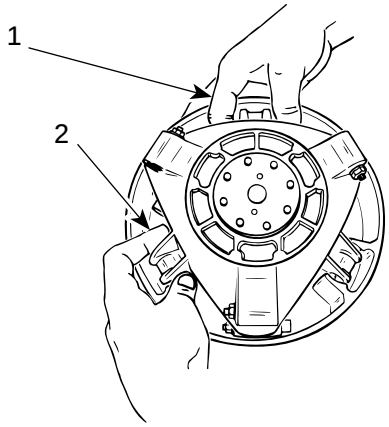

1. Hold slider shoes
2. Lift one housing at a time

NOTE : To ease disassembly, forks (P / N 529 0055 00) should be used to hold slider shoes prior to removing governor cup.

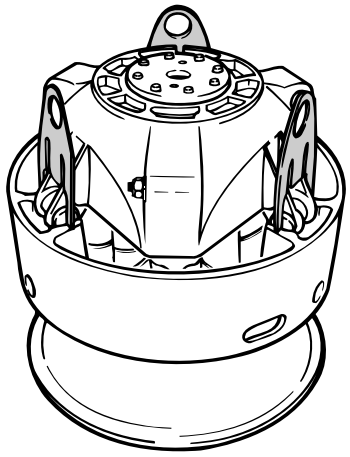

19, Spring Cover Ass'y

It is pushed by clutch spring pressure.

WARNING : Clutch spring is very strong. Never attempt to remove spring cover without the recommended tools.

Use spring compressor (P / N 529 0151 00).

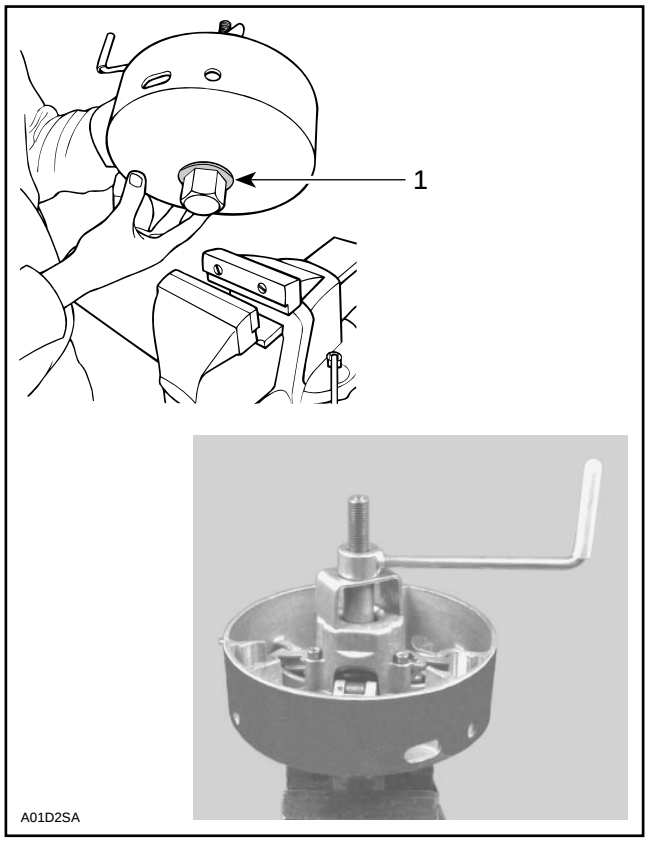

1. Washer must be here

Install tools as shown. Remove 3 Allen screws retaining spring cover then unscrew compressor.

CLEANING

5,6, Fixed and Sliding Half

Clean pulley faces and shaft with fine steel wool and dry cloth.

5, Fixed Half and Crankshaft End

Parts must be at room temperature before cleaning.

Using a paper towel with cleaning solvent (P / N 413 7082 00), clean crankshaft tapered end and the taper inside the fixed half of the drive pulley, crankshaft threads and retaining screw threads.

◆ WARNING : This procedure must be performed in a well ventilated area.

▼ CAUTION : Avoid contact between cleaner and crankshaft seal because damage may occur.

Remove all harden oil deposits that have baked on crankshaft and pulley tapered surfaces with coarse or medium steel wool and / or sand paper no. 600.

▼ CAUTION : Do not use any other type of abrasive.

Reclean mounting surfaces with paper towel and cleaning solvent (P / N 413 7082 00).

Wipe off the mounting surfaces with a clean, dry paper towel.

▼ CAUTION : Mounting surfaces must be free of any oil, cleaner or towel residue.

7,20, Bushing

Only use petrol base cleaner when cleaning bushings.

▼ CAUTION : Do not use acetone to clean bush-ing.

INSPECTION

Drive pulley should be inspected annually.

16,17, Thrust Washer and Roller

Check roller for roundness of external diameter. Check thrust washer for thickness wear. Replace as required.

▼ CAUTION : Ensure rollers are in good condi-tion. Replace as required.

9,12, Fitting Bolt Ass'y and Flanged Bushing

Check for wear, replace as required. When installing old style flanged bushing (made of black plastic), use a size "O" (letter) drill bit to ream inside diameter.

24,25, O-ring and Slider Shoe

Check if O-rings are cracked, cut or crushed. Replace as required.

Check slider shoes for wear. Replace if groove is not apparent on top.

5,29, Fixed Half and Governor Cup

Inspect splines and free play between both parts. Maximum free-play is 0.5 mm (.020 in) measured at calibration screw radius. Replace if required.

7,20, Sliding Half and Spring Cover Kahrlon Bushing

Visually inspect kahrlon coating. Replace if worn.

Sliding Half Bushing Replacement

Use a suitable pusher to remove the old bushing. Clean sliding half with ethyl alcohol.

▼CAUTION : Bushing must be bonded with re-taining compound (P / N 413 7031 00) then flared to prevent displacement in sliding half.

To flare bushing, use spring compressor (P / N 529 0151 00) and appropriate flare tools.

FLARE TOOL	STAMPED LETTER	P / N
INTERIOR	C	529 0184 00
EXTERIOR	C	529 0185 00

Apply retaining compound (P / N 413 7031 00) outside of bushing then insert into its housing making sure there is the same distance both sides.

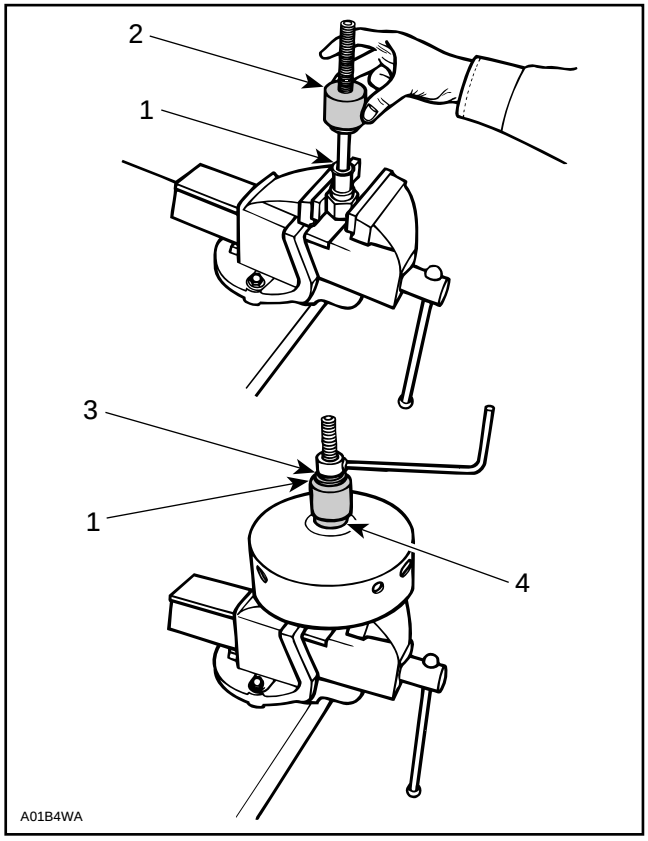

1. *Washer*
2. *Flat surface*
3. *Flaring side*
4. *Bushing*

Then flare bushing.

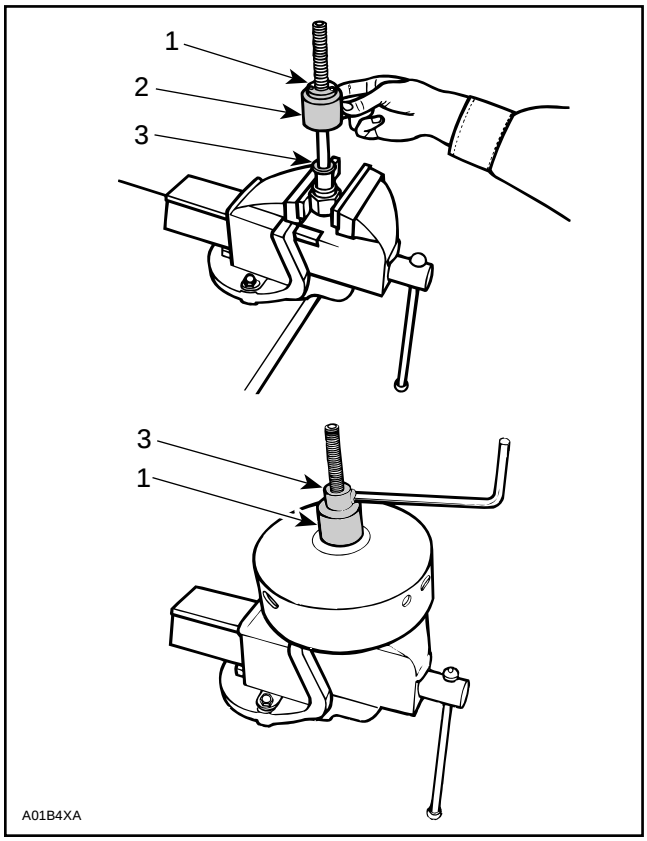

1. *Flaring side*
2. *Tool with holes*
3. *Washer*

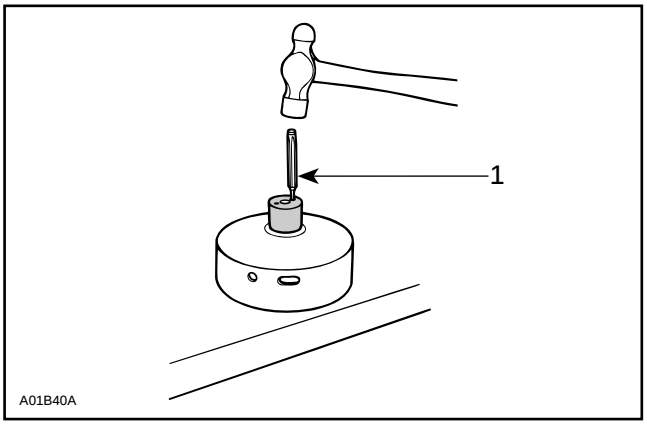

TOOL REMOVAL

1. *Strike in holes alternately*

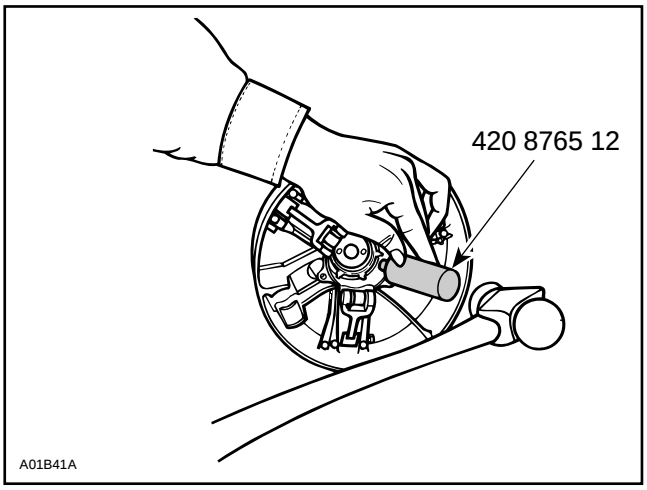

TOOL REMOVAL

CAUTION : Do not install sliding half on a vise to remove remaining tool.

Spring Cover Bushing Replacement

Under normal use there is no need to replace this bushing.

Use tools (P / N 529 0313 00 and 529 0312 00) to remove old bushing.

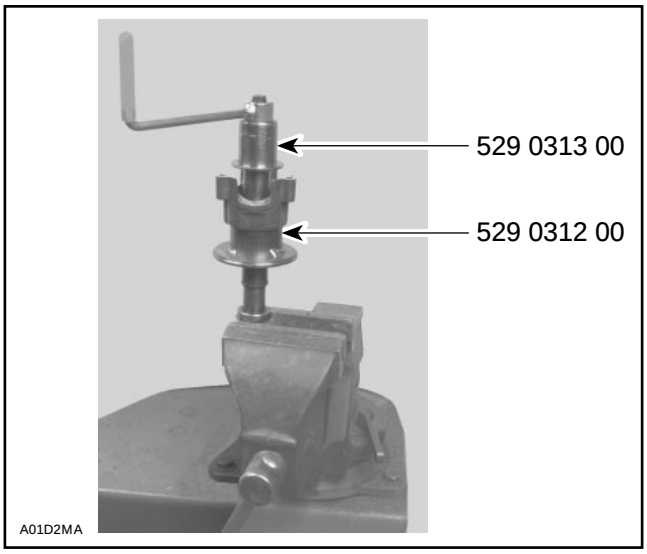

CAUTION : Bushing must be bonded with re-taining compound.

Apply retaining compound outside of bushing then press it down to counterbore from sliding half side. Use spring compressor (P / N 529 0151 00) and appropriate flare tools.

CAUTION : Insert bushing from sliding half side (inner) of spring cover.

Start driving bushing into spring cover.

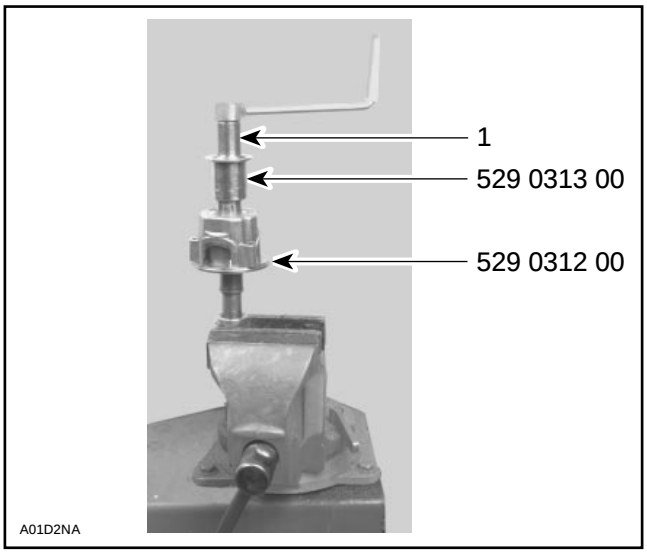

1. Note upper tool side

Press bushing.

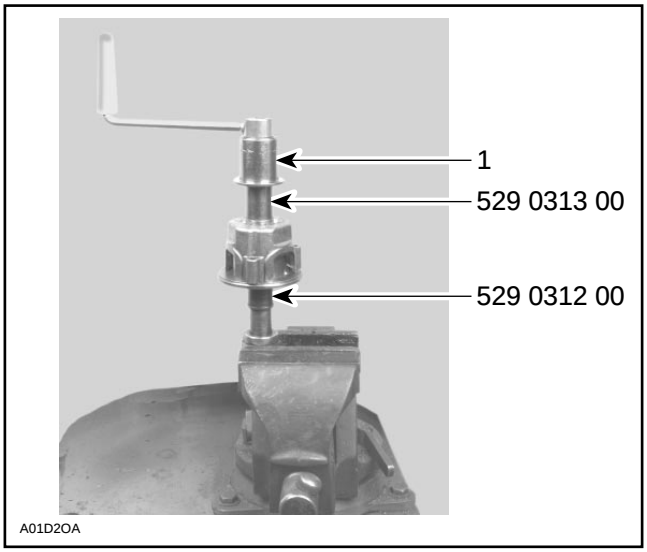

1. Note upper tool side.

ASSEMBLY

NOTE : This drive pulley is lubrication free. Do not lubricate any component.

1,2,3, Screw, Ring Gear and Loctite 271

Apply Loctite 271 (P / N 413 7029 00) on threads and under head then torque to 15 N•m (33 lbf•in).

26,27,28, Calibration Screw, Washer and Locking Nut

When installing calibration screw, make sure to install washer as shown.

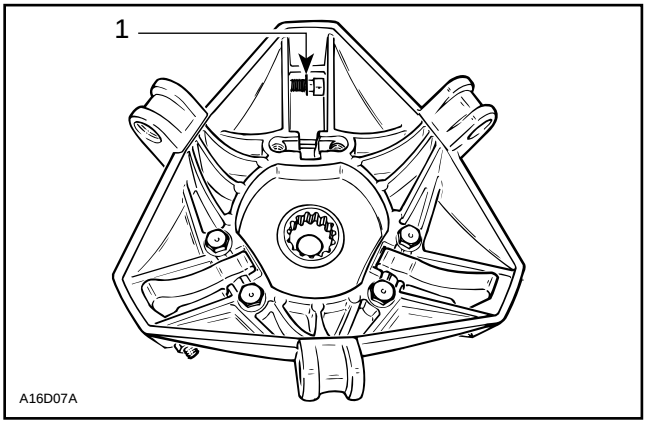

1. Washer

Torque locking nut to 10 N•m (89 lbf•in).

15, Pin

Always use the same type of pin as originally installed when servicing. Different types have different weights for calibration purpose. Refer to TECHNICAL DATA 10.

21,22,23, Ramp, Dowel Tube and Screw

Insert dowel tube from chamfered side. Make sure ramp is centered on dowel tube.

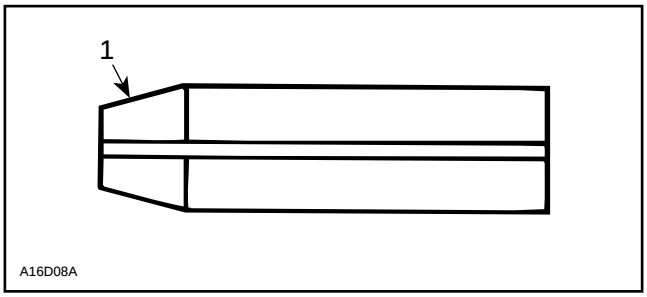

1. Chamfer side

Position dowel tube split at the illustrated angle.

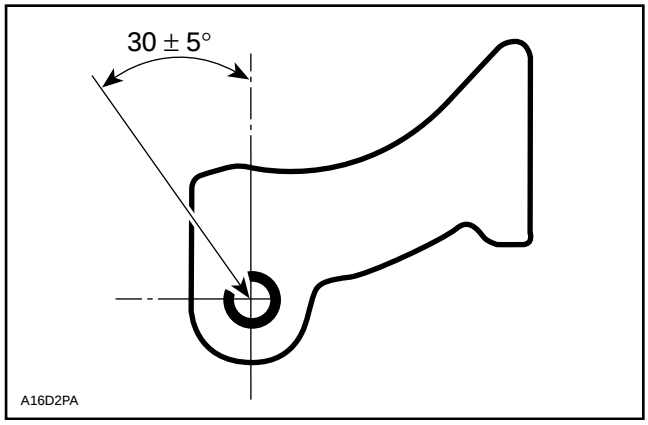

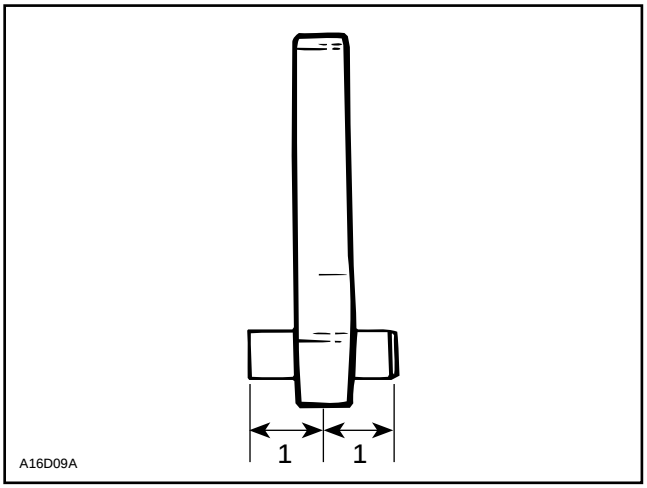

1. Equal distance

Torque screws to 10 N•m (89 lbf•in).

9,11,13,14, Screw, Lever Ass'y, Nut and Cotter Pin

Always install lever assemblies so that cotter pins are at the shown side. Besides install cotter pin head on top when lever is sat at bottom of sliding half. Bend cotter pin ends to sit perfectly against lever.

◆ WARNING : Whenever replacing centrifugal levers, always replace all 3 at the same time. Otherwise, clutch misbalancing will occur because of levers difference.

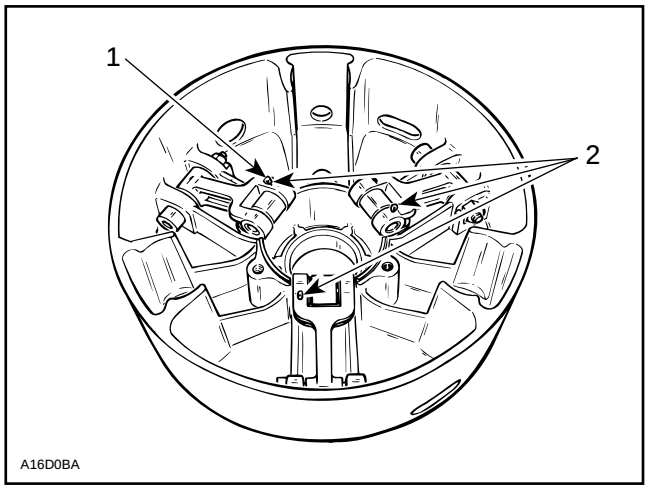

1. Head on top
2. All on the same side

▼ CAUTION : Lever assemblies must be installed so that cotter pins are on the same side.

Torque nuts to 12 N•m (106 lbf•in).

CAUTION : Lever ass'y and rollers must move easily after installation.

5,6,18,19, Fixed Half, Sliding Half, Spring, Spring Cover and Screw

To install spring cover, use spring compressor (P / N 529 0151 00).

Assemble fixed and sliding halves. Note that fixed halves have different cone angle. Match cone angle with crankshaft.

Lift sliding half against spring cover and align spring cover arrow with sliding half mark.

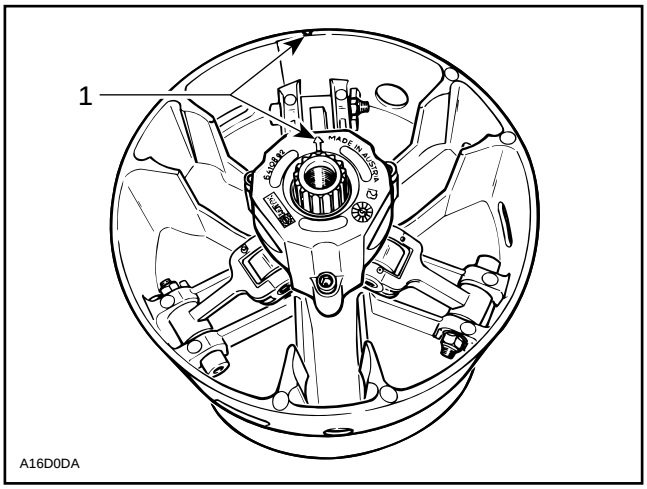

1. Align

Install and torque screws to 10 N•m (89 lbf•in).

6,25,29, Sliding Half, Slider Shoe and Governor Cup

To install governor cup, use following tool :

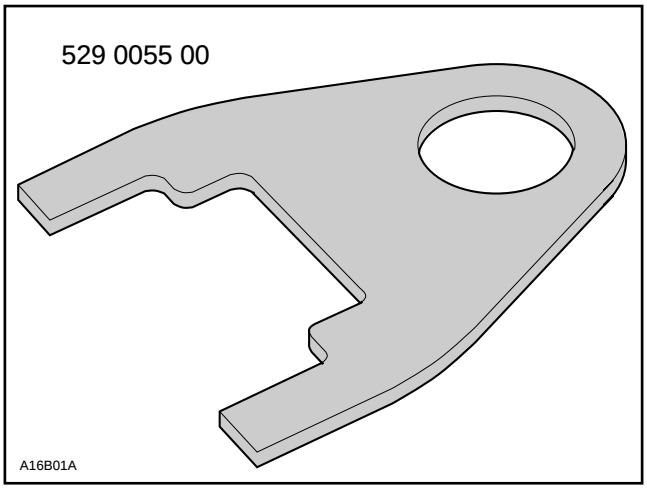

Insert spring and slider shoes into governor cup so that groove in each slider shoe is vertical to properly slide in guides.

CAUTION : Make sure O-rings are installed on slider shoes and their grooves are positioned vertically.

Install fork (P / N 529 0055 00) into slider shoe grooves to maintain them for governor cup installation. Proceed on 3 set of slider shoes.

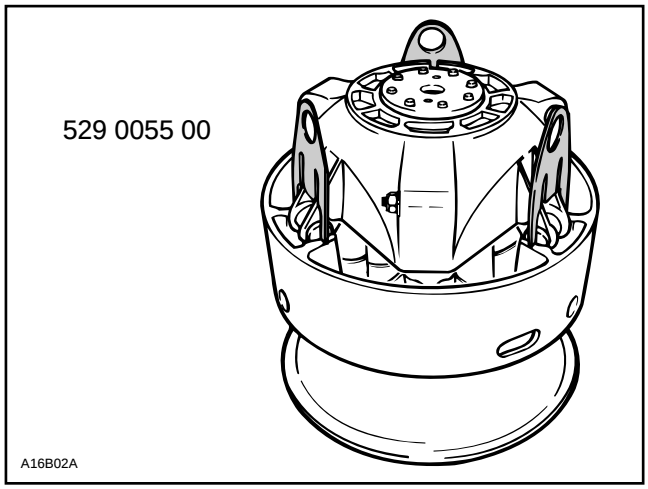

Make sure to align governor cup arrow with sliding half and fixed half mark.

NOTE : If fixed half has no mark, align governor cup mark with segment no. 1 of inner half. Segments are identified on engine side.

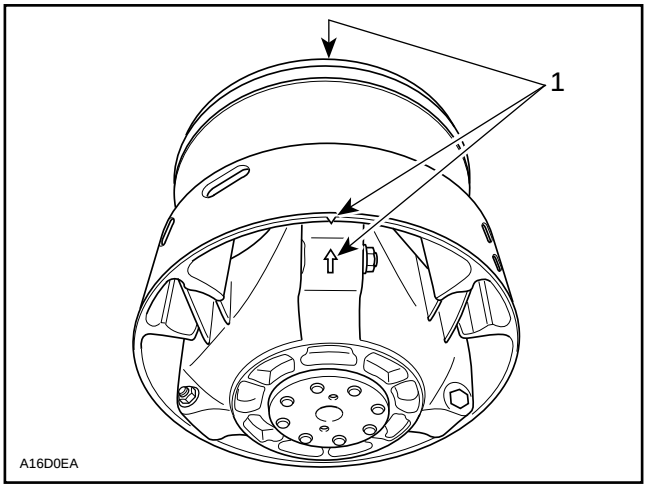

1. Align

Carefully slide governor cup into sliding half. Align mark of governor cup with mark of fixed half.

Remove forks and push governor cup so that its splines engage with fixed half shaft splines.

CAUTION : Make sure splines of both parts are fully engaged.

INSTALLATION

WARNING : Do not apply anti-seize or any lu-bricant on crankshaft and drive pulley tapers.

WARNING : Never use any type of impact wrench at drive pulley removal and installation.

Clean mounting surfaces as described in CLEANING above.

Drive Pulley Ass'y

The installation procedure must be strictly adhered to as follows.

Lock crankshaft in position as explained in removal procedure.

Install drive pulley on crankshaft extension.

Install conical washer with its concave side towards drive pulley then install screw.

WARNING : Never substitute lock washer and / or screw with jobber ones. Always use Bombardier genuine parts for this particular case.

Torque screw to 90 to 100 N•m (66 to 74 lbf•ft).

Install drive belt and belt guard.

Raise and block the rear of the vehicle and support it with a mechanical stand.

WARNING : Ensure that the track is free of particles which could be thrown out while track is rotating. Keep hands, tools, feet and clothing clear of track. Ensure nobody is standing near the vehicle.

Accelerate the vehicle at low speed (maximum 30 km / h (20 MPH) and apply the brake, repeat 5 times.

Recheck the torque of 90 to 100 N•m (66 to 74 lbf•ft).

WARNING : After 10 hours of operation the transmission system of the vehicle must be inspected to ensure the retaining screw is properly torqued.

DRIVE PULLEY ADJUSTMENT

The drive pulley is factory calibrated to transmit maximum engine power at a predefined RPM. Factors such as ambient temperature, altitude or surface condition may vary this critical engine RPM thus affecting snowmobile efficiency.

This adjustable drive pulley allows setting maximum engine RPM in the vehicle to maintain maximum power.

Calibration screws should be adjusted so that actual maximum engine RPM in vehicle matches with the maximum horsepower RPM given in TECHNICAL DATA 10.

NOTE : Use precision digital tachometer for engine RPM adjustment.

NOTE : The adjustment has an effect on high RPM only.

To adjust, modify ramp end position by turning calibration screws.

26,28,29, Calibration Screw, Locking Nut and Governor Cup

Calibration screw has a notch on top of its head.

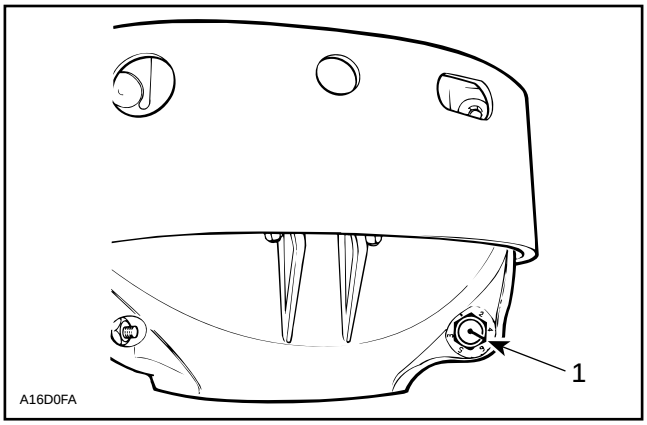

1. Notch

Governor cup has 6 positions numbered 2 to 6. Note that in position 1 the number is substituted by a dot (due to its location on casting).

See TECHNICAL DATA 10 for original setting.

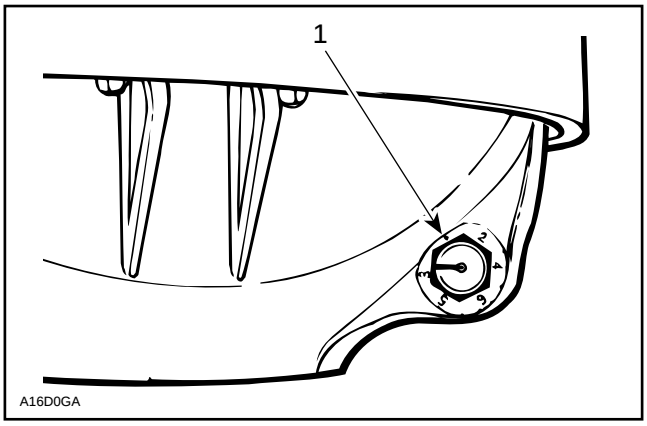

1. Position 1 (not numbered)

Each number modifies maximum engine RPM by about 200 RPM.

Lower numbers decrease engine RPM in steps of 200 RPM and higher numbers increase it in steps of 200 RPM.

Example :

Calibration screw is set at position 4 and is changed to position 6. So maximum engine RPM is increased of 400 RPM.

To Adjust :

Just loosen locking nut enough to pull calibration screw partially out and adjust to desired position. Do not completely remove the locking nut. Torque locking nuts to 10 N•m (89 lbf•in).

CAUTION : Do not completely remove calibration screw or its inside washer will fall off.

CAUTION : Always adjust all 3 calibration screws and make sure they are all set at the same number.

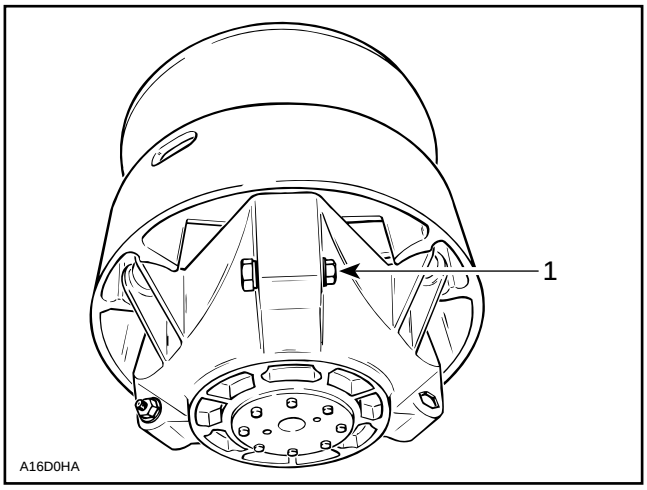

1. Loosen just enough to permit rotating of calibrate screw

DRIVEN PULLEY

S-Series and F-Series

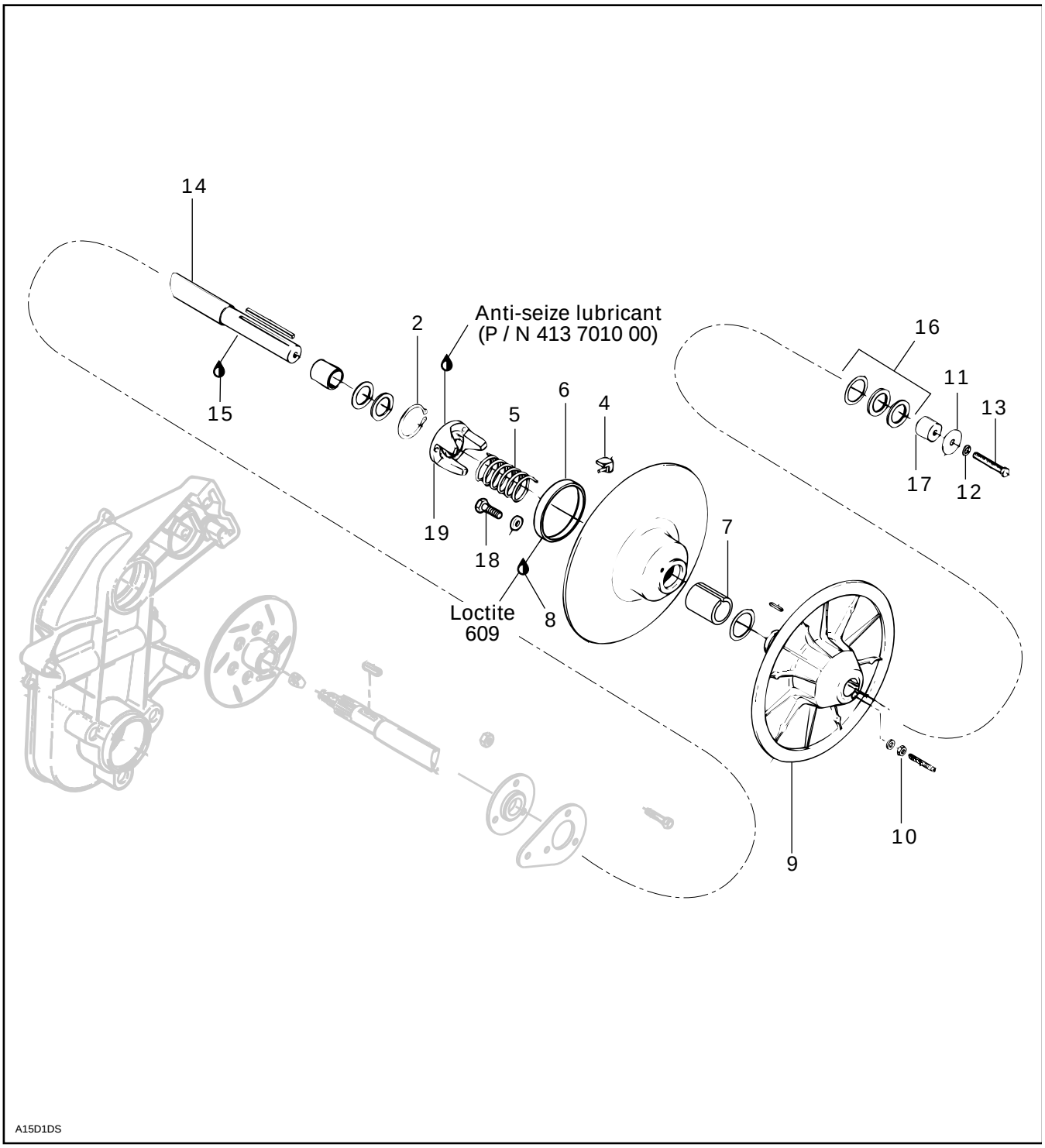

Skandic WT

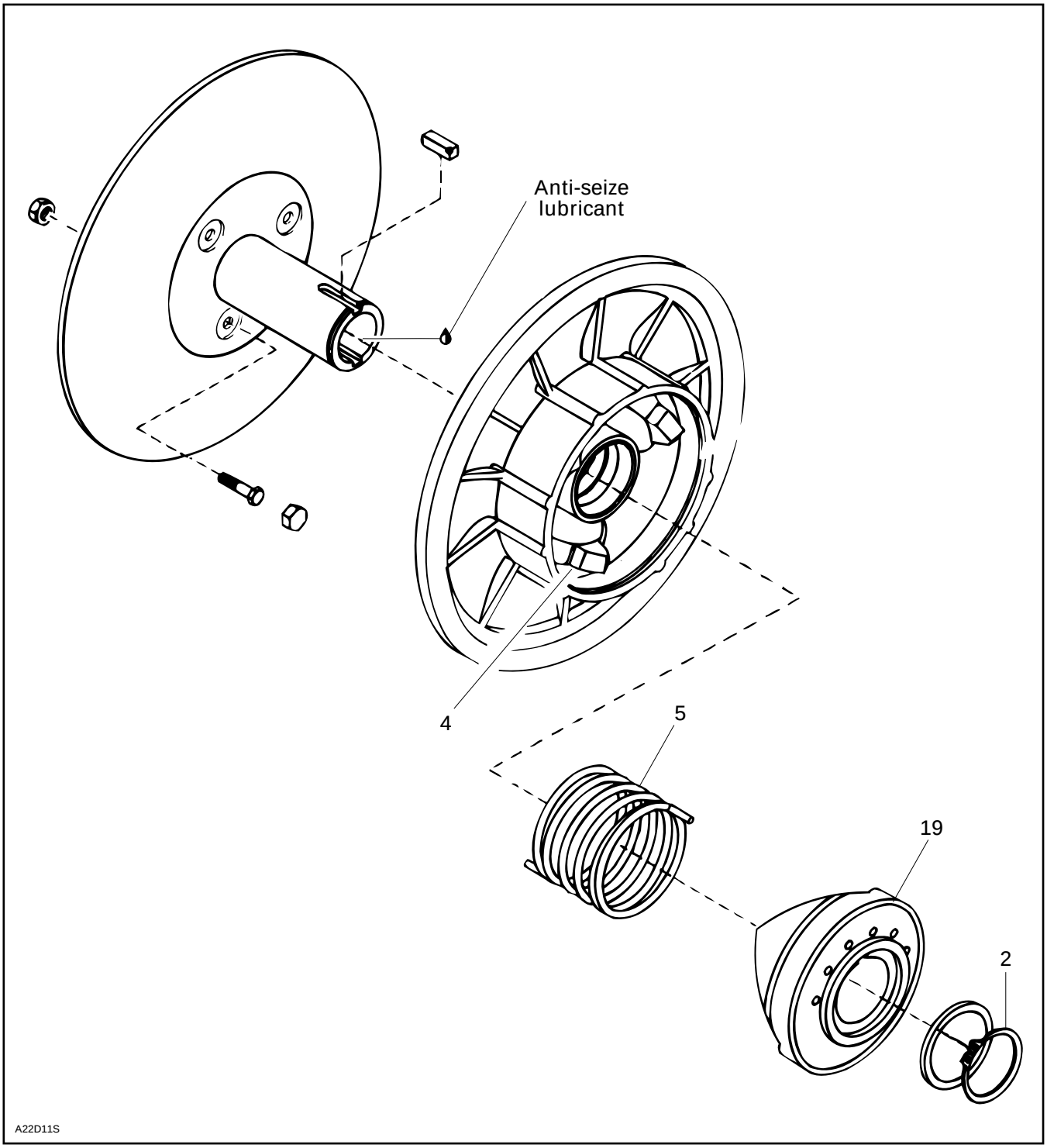

REMOVAL

Belt Guard and Drive Belt

Remove from vehicle.

11,12,13,16,17, Washer, Lock Washer, Screw, Shim and Extension

Remove the cap screw, pull the driven pulley from the countershaft.

14, Countershaft

Should removal be required, refer to BRAKE 05-05 then look for Countershaft and Brake Disc Removal.

DISASSEMBLY

2, Snap Ring

Use spring compressor (P / N 529 0151 00).

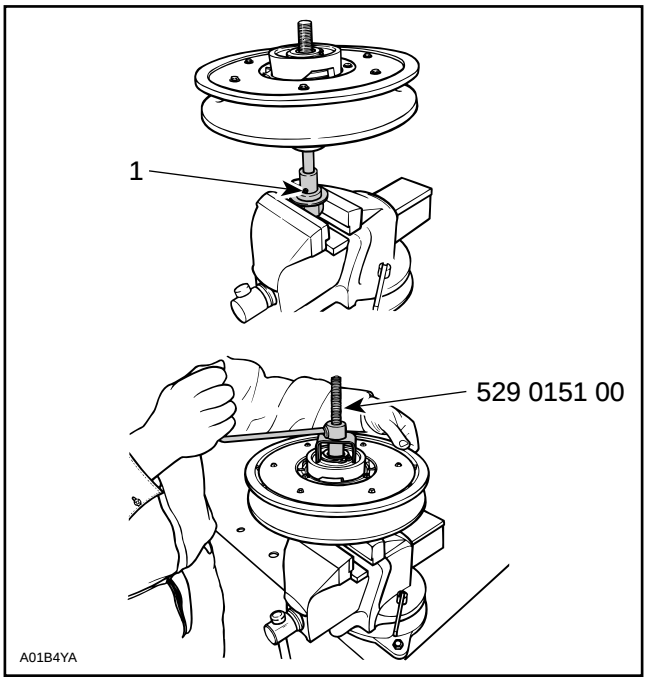

TYPICAL

1. Insert this pin in keyway

Remove snap ring to disassemble the outer cam and the 2 pulley halves.

◆ WARNING : Driven pulley cam is spring loaded, use above mentioned tool.

CLEANING

6,7, Large Bushing and Small Bushing

During break-in period (about 10 hours of use), teflon from bushing moves to cam or shaft surface. A teflon over teflon running condition occurs, leading to low friction. So it is normal to see gray teflon deposit on cam or shaft. Do not remove that deposit, it is not dust.

When a dust deposit has to be removed from the cam or the shaft, use dry cloth to avoid removing transferred teflon.

Pulley Half Cleaning

Use Loctite Safety Solvent (P / N 413 7082 00).

INSPECTION

6,7, Bushings

Check for cracks, scratch and for free movement when assembled to fixed half.

Using a dial bore gauge measure bushing diameter. Measuring point must be at least 5 mm (1/4 in) from bushing edge.

Replace bushing(s) if worn more than specified.

DRIVEN PULLEY BUSHING WEAR LIMIT mm (in)	
Small bushing	38.30 (1.299)
Large bushing	89.15 (3.510)

4, Slider Shoe

Check cam slider shoes for wear. Replace when inside edge of cam slider shoe slope base is worn to 1 mm (.039 in) or less.

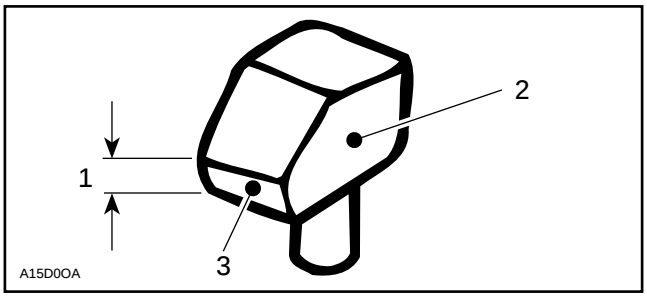

1. Measure thickness of slope base here
2. Sliding pulley side
3. Slope base

Bushing Replacement

Large Bushing

Remove Allen screws if applicable. Heat to break Loctite bond.

Remove all 3 slider shoes.

Install support plate (P / N 529 0311 03) inside sliding half.

Place puller (P / N 529 0311 02) below bushing.

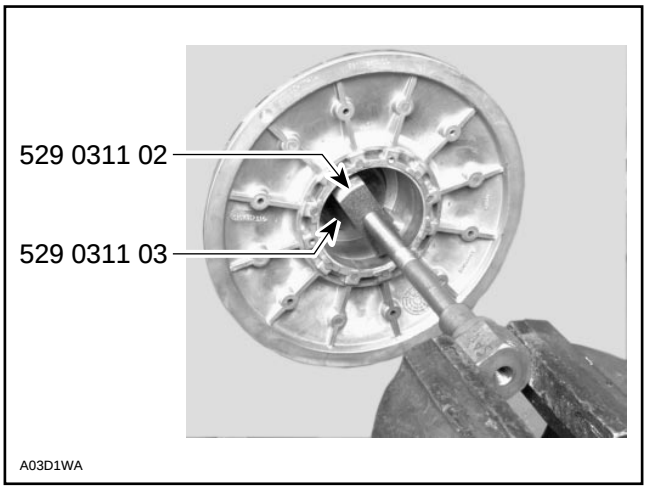

Mount puller screw head in a vise.

Turn pulley half by hand to extract old bushing.

Before bushing installation, file sliding half bore to remove burrs from crimping areas.

Coat bushing outside diameter with Loctite 609 (P / N 413 7031 00). Place new bushing on sliding half and slightly tap to engage squarely the bushing in the sliding. Use tools (P / N 529 0312 00 and 529 0313 00) to install bushing.

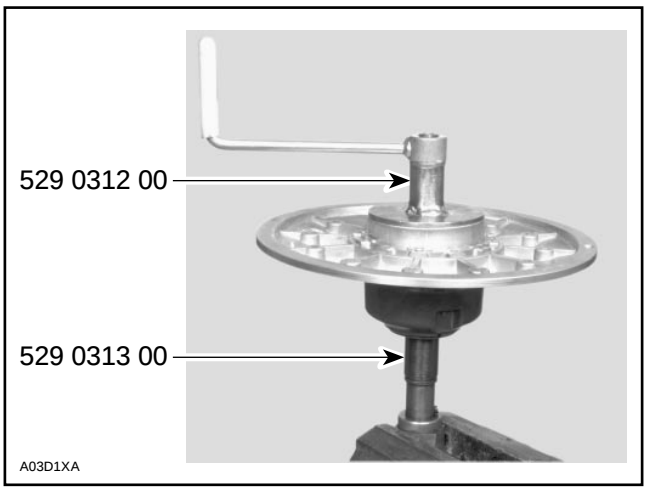

Small Bushing

NOTE : Following procedure can be done with a press using the same tools.

Install puller in a vise.

Heat bushing area.

Turn puller handle and sliding half at once to extract the bushing.

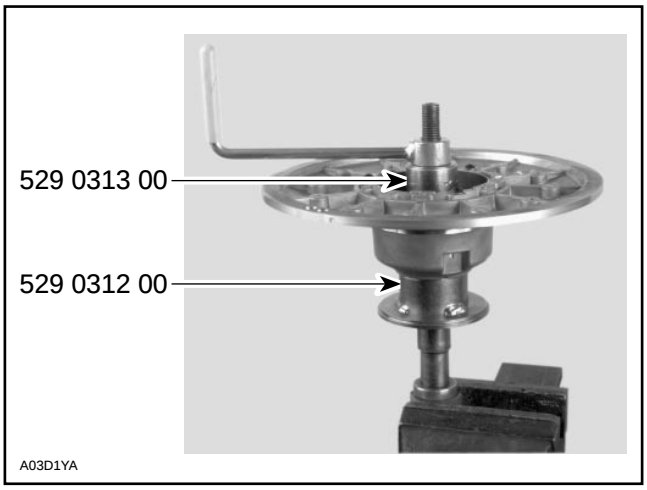

IMPORTANT: Large bushing retaining screws and washers must be removed before small bushing installation.

Coat bushing outside diameter with Loctite 609 (P / N 413 7031 00).

Install bushing as following photo.

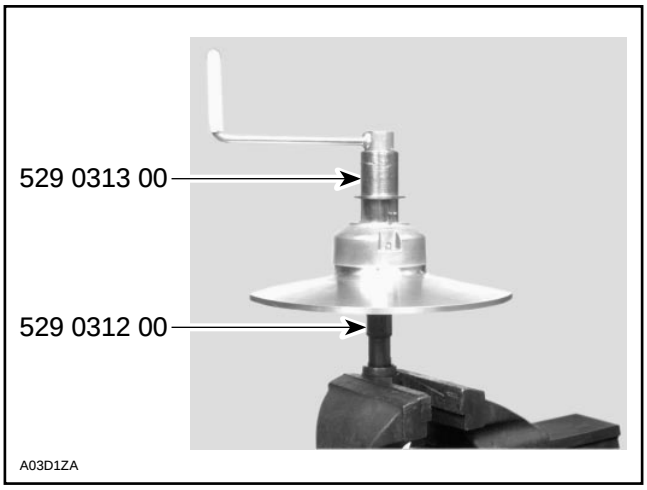

ASSEMBLY

4, Cam Slider Shoe

When replacing slider shoes, always install a new set (3 shoes) to maintain equal pressure on the cam.

Assemble driven pulley components by reversing the disassembly procedure.

18, Cam

Coat cam interior with anti-seize lubricant.

INSTALLATION

14,15, Countershaft and Anti-seize Lubricant

CAUTION : Always apply anti-seize lubricant (P / N 413 7010 00) on the countershaft before final pulley installation.

F-Series and S-Series Only

Should installation procedure be required, refer to BRAKE 05-05 then look for Brake Disc and Countershaft Bearing Adjustment.

Reinstall the pulley on the countershaft by reversing the removal procedure.

All Models

Check end play of driven pulley on countershaft by pushing pulley towards outer housing so that the inner shims (P / N 504 1082 00) contact it. Measure end play at the mounting screw end between shim(s) and pulley. See illustration.

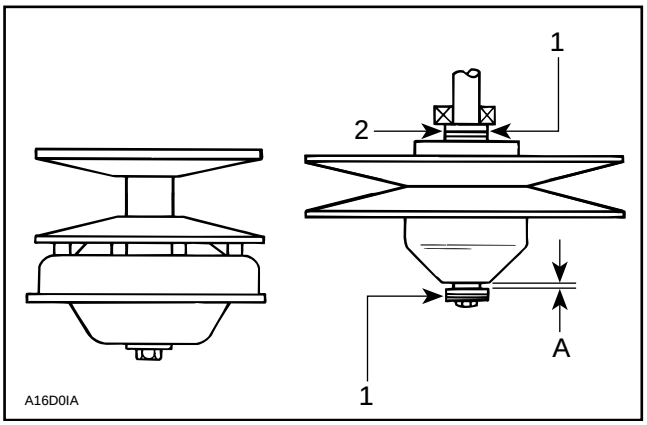

TYPICAL

1. *Shim (P / N 504 1082 00) (as required)*
2. *Contact*

A. 0 to 1 mm (0 to 3/64 in)

13, Pulley Retaining Screw

Torque to 25 N•m (18 lbf•ft).

ADJUSTMENT

Refer to PULLEY DISTANCE AND ALIGNMENT 05-04 to adjust pulley distance. Adjust drive belt height between pulley halves to obtain specified belt deflection.

5, Spring

Spring Torsional Pre-Load

To check spring pre-load adjustment, use spring scale hook (P / N 529 0065 00) and a spring scale.

Remove drive belt.

Install the hook on the sliding half. Preventing fixed half from turning, pull sliding half with the spring scale perpendicularly with pulley axle.

Take 1st measurement when sliding half begins to turn. Rotate sliding half to 10 mm (3/8 in) of rotation. Hold fish scale at this position. Slowly release tension from fish scale and take 2nd measurement when sliding half begins to return. Spring pre-load is the average measurement between these 2.

$$\frac{\text{1st measurement (when opening)} + \text{2nd measurement (when closing)}}{2} = \text{Spring pre-load}$$

$$\text{Example : } \frac{\text{3.8 kg (8.4 lb) (when opening)} + \text{3.4 kg (7.5 lb) (when closing)}}{2} = \text{3.6 kg (8 lb) Actual spring pre-load}$$

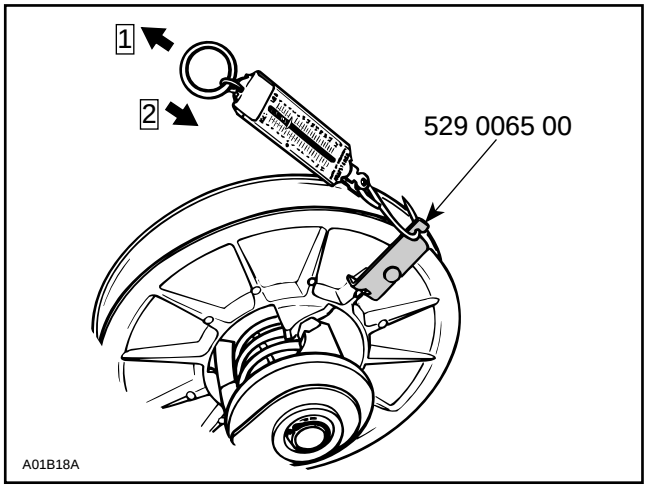

Step 1 : 1st measurement
Step 2 : 2nd measurement

To adjust spring pre-load, relocate spring end in cam, moving it clockwise to increase the pre-load and counterclockwise to decrease it. Refer to 10 TECHNICAL DATA.

NOTE : If spring pre-load can not be adjusted, try to relocate the other end of spring in sliding pulley (holes A, B, C).

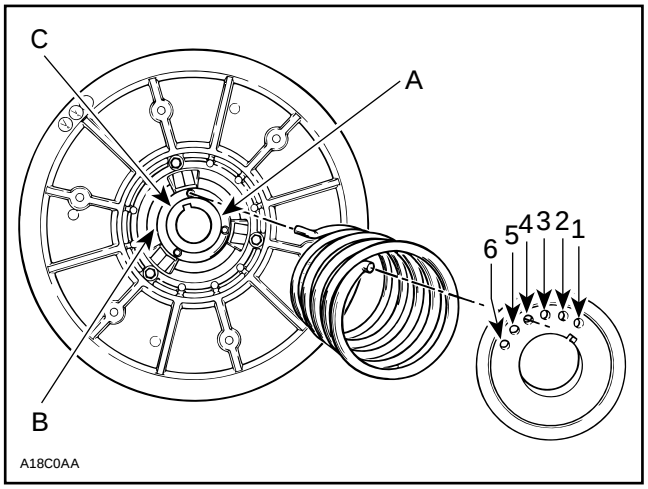

Letters and numbers shown in illustration are actual letters and numbers embossed on parts.

NOTE : Always recheck torsional pre-load after adjusting.

Pulley Alignment and Drive Belt Deflection

Refer to PULLEY DISTANCE AND ALIGNMENT 05-04 and DRIVE BELT 05-01 to perform adjustments.

CAUTION : Drive belt and pulley adjustments must always be checked whenever pulleys have been removed, replaced or disassembled.

3, Outer Cam

Make sure to install proper cam. Refer to TECHNICAL DATA.

Cam angle is identified on cam.

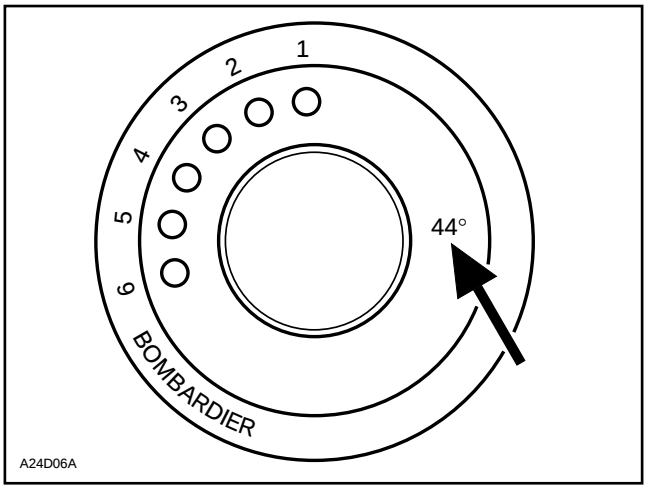

NOTE : For high altitude regions, the High Altitude Technical Data Booklet (P / N 484 0624 00 and 484 0545 00 for binder) gives information about calibration according to altitude.

PULLEY DISTANCE AND ALIGNMENT

GENERAL

The pulley distance we will refer to, in this section, is the space separating the drive and driven pulley outside diameters (Z measure).

This basic distance is provided as an assembly guide and indicates the dimensions between which satisfactory belt deflection will be obtained.

Both pulley distance adjustment and pulley alignment must be carried out to ensure the highest efficiency of the transmission system. Furthermore, optimum drive belt operation and minimal wear will be obtained only with proper pulley alignment.

▼CAUTION : Before checking pulley adjustment, the rear suspension must be mounted on the vehicle and track tension / alignment must be done. Always check pulley adjustment after suspension is adjusted.

◆ WARNING : Failure to correctly perform pulley alignment may cause the vehicle to creep forward at idle.

All pulley alignment specifications refer to :

X = Distance between straight bar and drive pulley fixed half edge, measured between pulleys.

Y = Distance between straight bar and drive pulley fixed half edge, measured at the end of straight bar.

Z = Distance between outside diameter of pulleys.

GENERAL PROCEDURE

Remove belt guard and drive belt.

By turning and pushing the sliding half, open the driven pulley. Insert a straight bar 9.5 mm (.375 in) square, 48 cm (19 in) long or the proper alignment template into the opened driven pulley.

Measuring Procedure

Using Straight Bar :

Always measure distances X and Y from the farther straight bar side (including its thickness to the fixed half edge.)

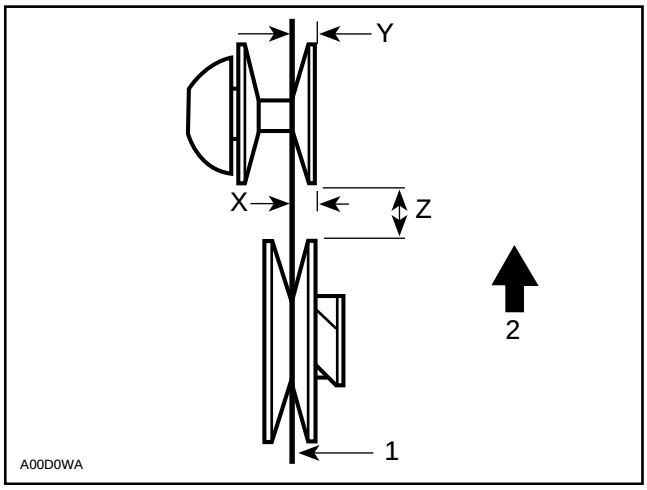

1. Straight bar
2. Front

On all models, the distance Y must exceed distance X to compensate for the twist due to the engine torque.

Nominal Value Procedure and Quick Alignment and Distance Check

Alignment template tabs must fully contact fixed half of drive pulley.

Pulley distance is correct when tab contacts both pulley halves.

Refer to below chart for proper alignment template.

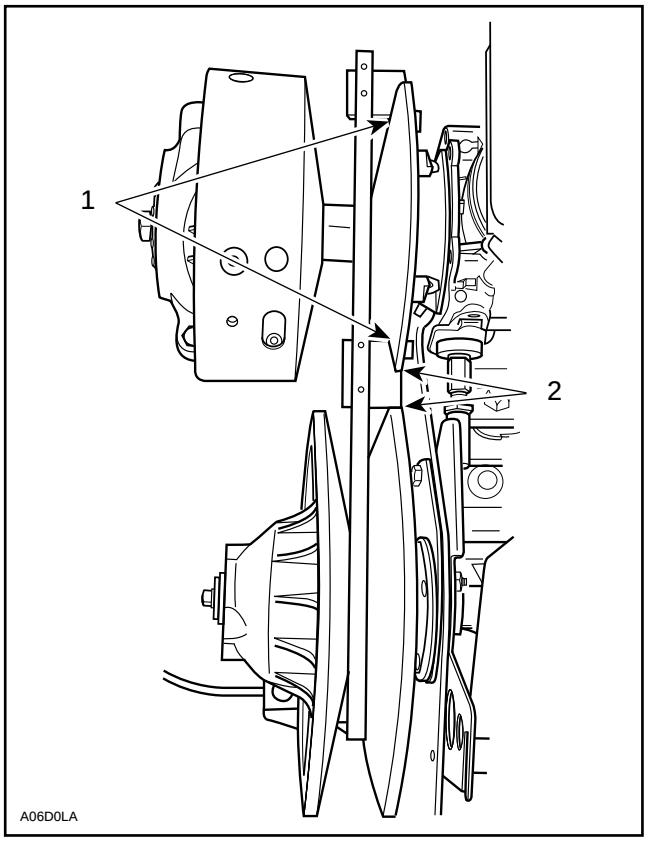

TYPICAL

1. *Contact (alignment)*
2. *Contact (distance)*

Drive Belt Deflection

NOTE : When pulley distance and alignment are adjusted to specifications, refer to DRIVE BELT 05-01 to adjust drive belt deflection.

CAUTION : This section deals mainly with ad-justment procedures. For complete assembly requirements, refer to the proper ENGINE or TRANSMISSION installation section.

PULLEY ALIGNMENT AND DISTANCE SPECIFICATIONS CHART

MODEL	PULLEY DISTANCE	OFFSET		ALIGNMENT TEMPLATE
	Z	X	Y-X	¿
	+ 0, – 1 mm (+ 0, – 0.040 in)	± 0.50 mm (0.020 in)	± 0.5 mm (0.020 in)	P / N
S-Series and F-Series	16.5 (0.650)	35.0 (1.380)	1.5 (0.060)	529 0267 00
Skandic WT	32.75 (1.289)	36.25 (1.427)	1.5 (0.060)	529 0267 00

① Alignment templates have been made according to pulley alignment nominal values. However, they do not take into account allowed tolerances for alignment specifications. They are used as GO / NO GO gauges for quick alignment and pulley distance check and as templates to reach alignment nominal values.

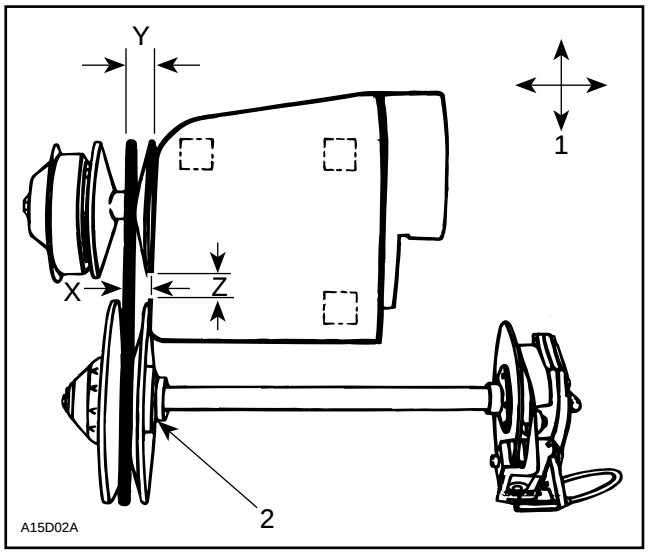

TYPICAL

1. *Engine movement*
2. *Contact*

NOTE : Prior to performing pulley adjustment, loosen torque rod nut to allow engine movement. Engine brackets have tendency to stick to frame, work engine loose prior to aligning.

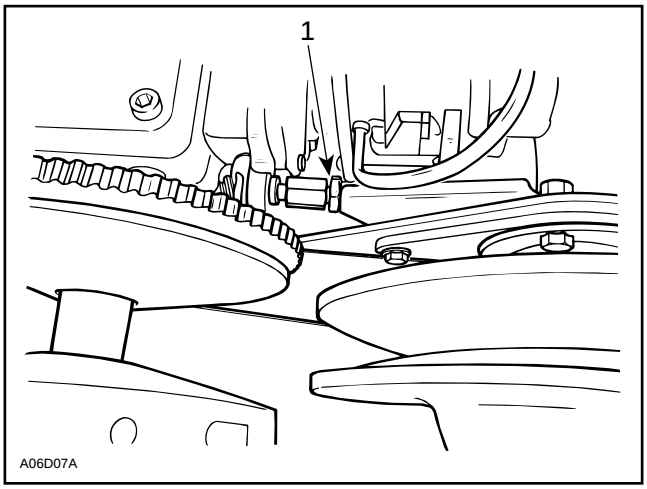

1. *Loosen*

Pulley Distance Adjustment Method

Engine Movement

The engine bracket has slotted mounting holes. Move engine to obtain specified distance between pulleys.

Pulley Alignment Method

Driven Pulley Movement

When engine slotted mounting holes do not allow to set proper pulley offset (X), adjust with shims (P / N 504 1082 00) between pulley and countershaft bearing support (pulley pushed toward brake disc).

Engine Movement

Loosen the 4 bolts retaining engine bracket to the frame. Position engine to obtain the specified alignment.

NOTE : After adjustment, just tighten torque rod nut so it sits against washer. Do not over tighten, it will disalign pulleys.

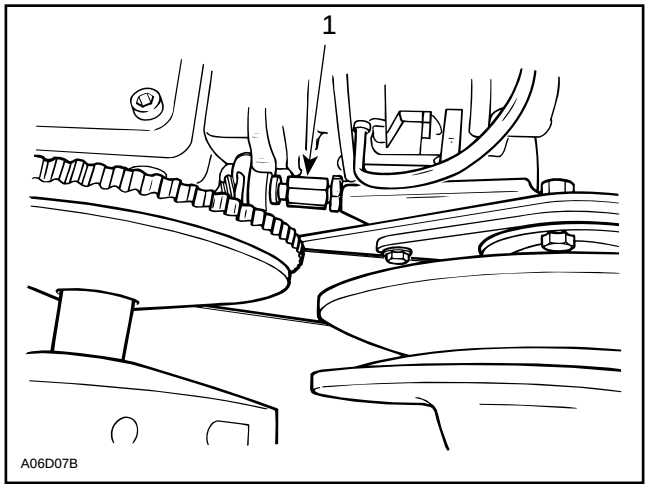

TYPICAL

1. *Retighten*

BRAKE

Summit 583

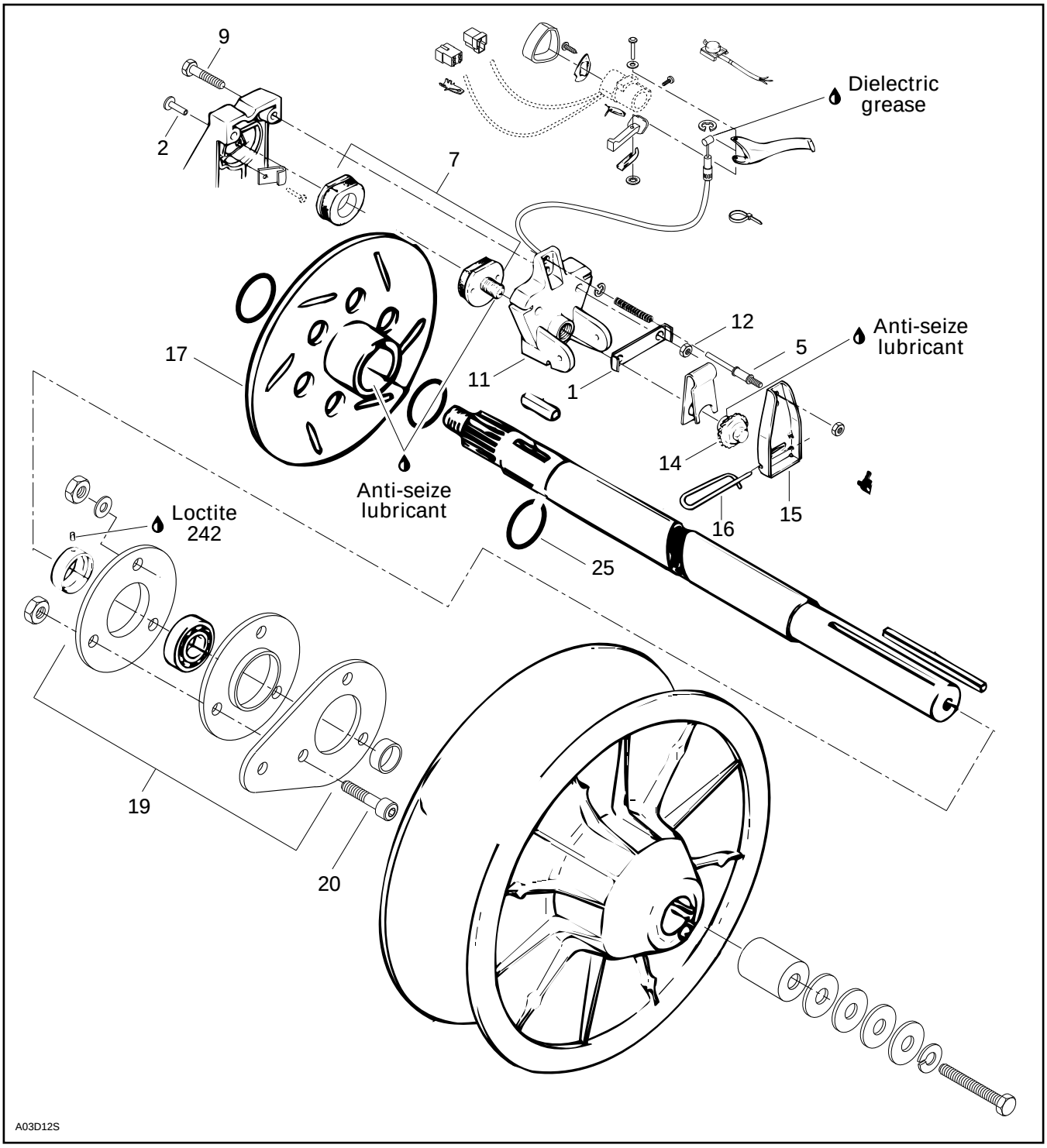

MX Z 440 / 583 / 670, Summit 670, Formula Z / SS / III / III LT and Mach Z / Z LT

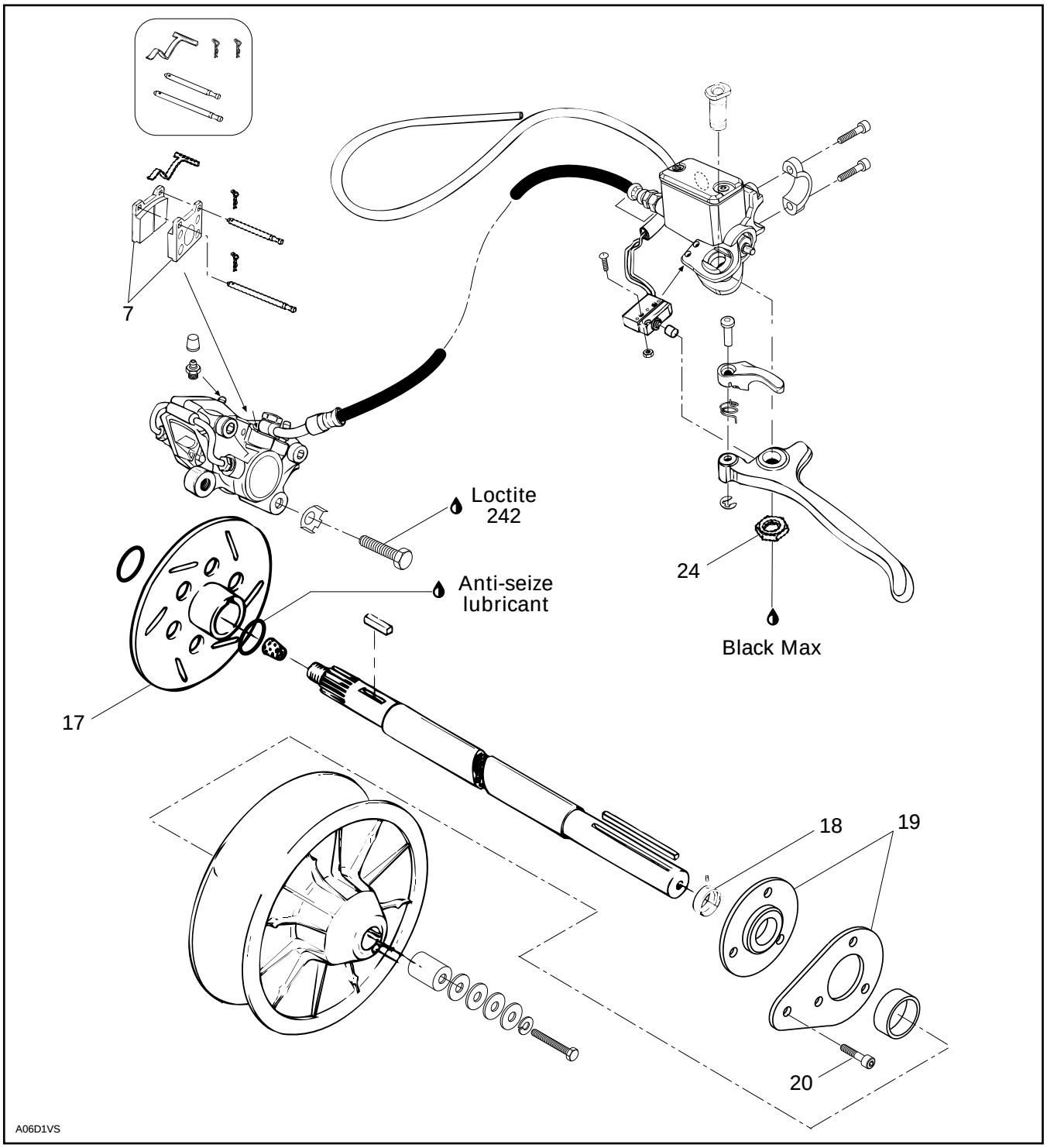

Skandic WT

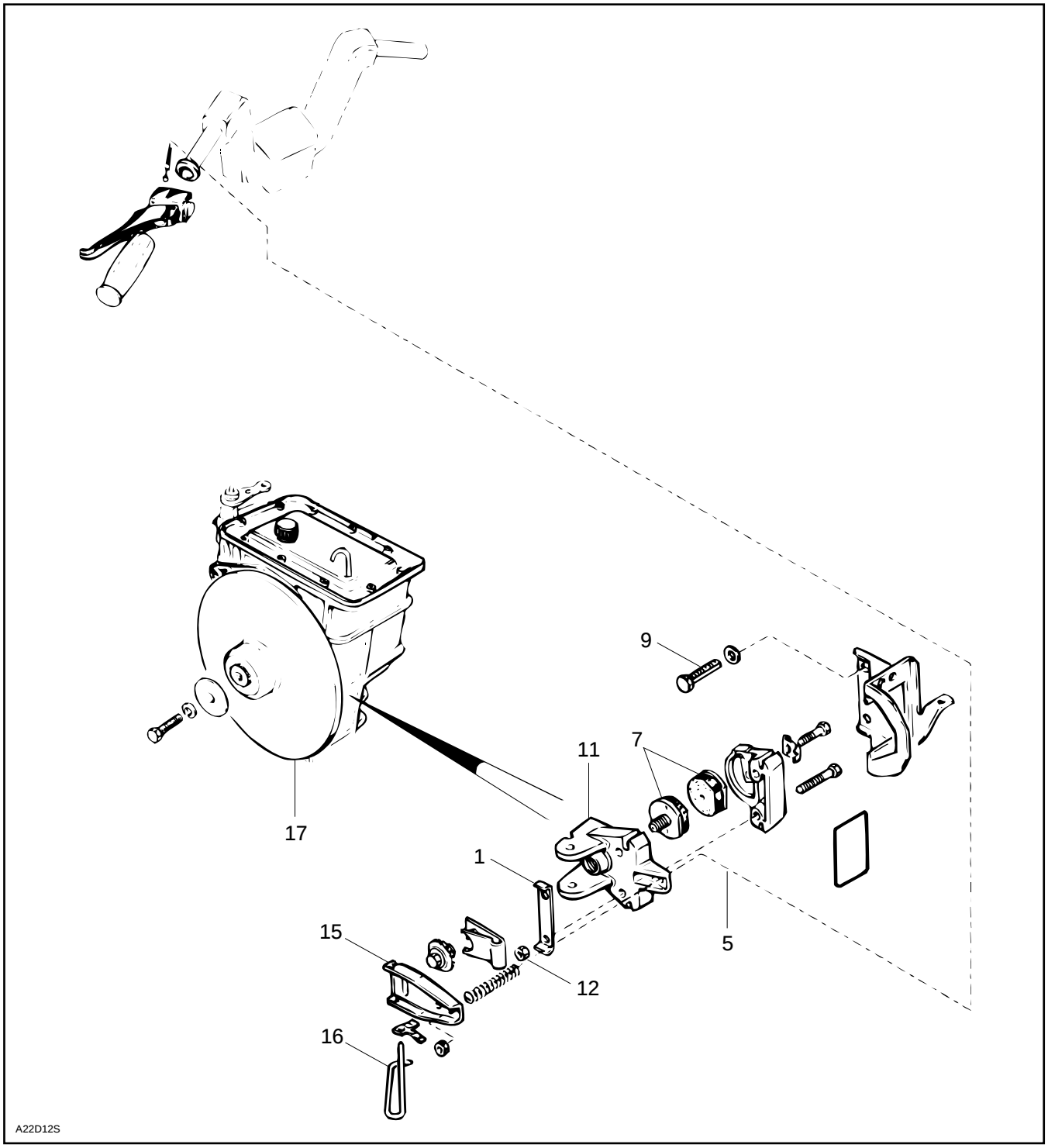

REMOVAL

BRAKE DISC REMOVAL

Summit 583

Brake disc can be withdraw without removing caliper. Proceed as follows :

– Remove belt guard, belt and driven pulley.
– Remove air silencer.
– Remove clip no. 25 on countershaft.

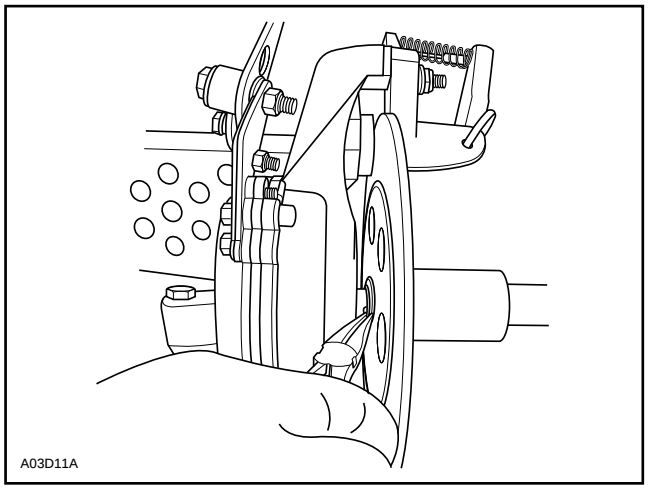

– Unbolt bearing support from chassis.
– Open chaincase and remove upper sprocket.
– Pull countershaft toward driven pulley side to free from chaincase and disc.
– Remove disc.

Skandic WT

– Remove reinforcement aluminum strip from bumper on brake disc side.
– Remove screw from output shaft.
– Unbolt caliper from gearbox then remove brake disc and caliper as an assembly.

COUNTERSHAFT REMOVAL

Mechanical Brake Models

Proceed the same as for brake disc removal but unlock bearing collar on driven pulley side.

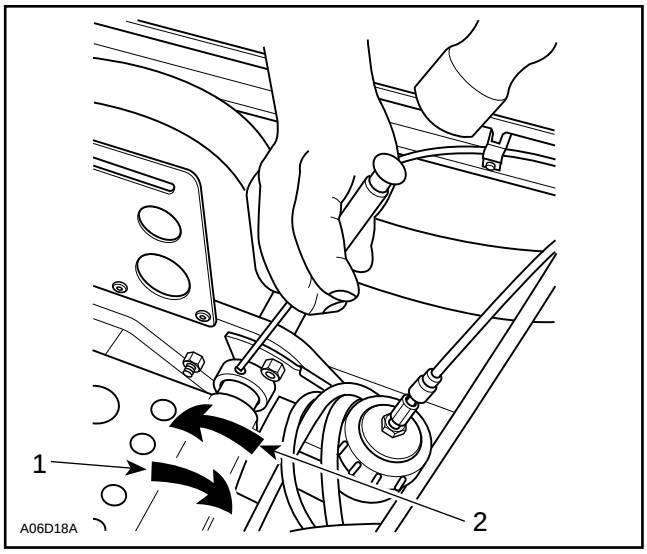

1. Unlock
2. Lock

Unbolt bearing plates then push bearing to driven pulley side out of countershaft.

COUNTERSHAFT AND BRAKE DISC REMOVAL

Hydraulic Brake Models

– Remove muffler.
– Refer to CHAINCASE 05-06 in order to remove chaincase cover.
– Remove upper sprocket castellated nut.
– Remove belt guard, drive belt and driven pulley referring to DRIVEN PULLEY 05-03.

- Slacken set screw and unlock collar no. 18 if bearing is needed to be disassembled. See above S-Series illustration and procedure.
- Remove 3 retaining screws no. 20 from countershaft bearing housing.
- Unbolt coolant tank support to make room for countershaft or brake disc removal.
- Pull countershaft toward driven pulley side to free from chaincase. Withdraw countershaft toward chaincase.
- Remove brake disc from countershaft.
- Remove connecting pipe between tuned pipe and after muffler.
- Disconnect brake line from caliper and plug it.
- Unbolt caliper from chaincase.

To remove brake disc, refer to procedure on mechanical brake models.

INSTALLATION

To install brake, reverse removal procedure paying attention to the following.

◆ WARNING : Avoid getting oil on brake pads. Do not lubricate or apply antirust or antifreeze solution in brake cable.

17, Brake Disc

The brake disc must be floating on countershaft for efficient operation of brake.

Apply anti-seize lubricant (P / N 413 7010 00) on shaft and check that disc slides freely.

The disc hub exceeds the disc more from one side than from the other. Install disc with the longer exceeding portion toward driven pulley.

Push O-rings inside disc hub.

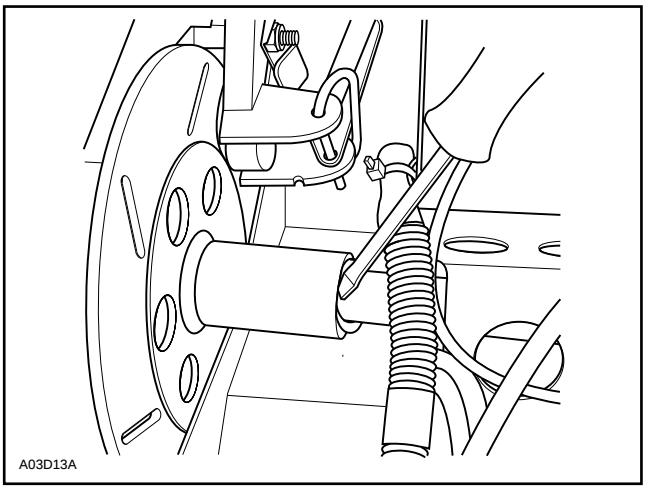

Countershaft Bearing Adjustment

Insert countershaft (with brake disc) from chaincase side through countershaft support (driven pulley side), then insert into chaincase.

Install countershaft bearing no. 19 and ensure that countershaft is properly aligned, then tighten 3 retaining screws.

○ NOTE : A misaligned countershaft will result in difficulty to center the bearing in its support.

Refer to DRIVE AXLE 05-03 then look Chaincase Perpendicularity Adjustment.

Torque castellated nut of upper sprocket to 53 N•m (39 lbf•ft).

▼ CAUTION : Upper sprocket castellated nut must be tightened before adjusting bearing collar.

Slide collar no. 18 towards bearing and turn, by hand, to engage the eccentric. This should require about a quarter turn.

Turn collar in direction of countershaft rotation until collar and inner race lock together.

Insert a punch into collar hole and strike sharply in the same direction to lock firmly.

Apply medium strength threadlocker (P / N 413 7030 00) on set screw threads, then tighten.

Close chaincase referring to CHAINCASE 05-06.

1,11,12, Locking Tab, Outer Caliper and Nut

Mechanical Brake Models

Install caliper retaining bolts.

Assemble outer caliper. Install locking tab then nuts. Torque nuts to 24 N•m (18 lbf•ft). Bend locking tab over a flat of each nut.

5,10, Brake Cable and Nut

Insert brake cable into upper hole in brake lever and caliper. Install nut and tighten until a few threads exceed.

◆ WARNING : At least 3 threads must exceed the elastic stop nut.

24, Brake Lever Lock Nut

Hydraulic Brake Models

◆ WARNING : Always install a new nut when servicing.

Tighten nut to 3.0 N•m (27 lbf•in). Check free movement of brake lever.

Apply Loctite Black Max Gel (Loctite item no. 18398) over nut and on bolt threads.

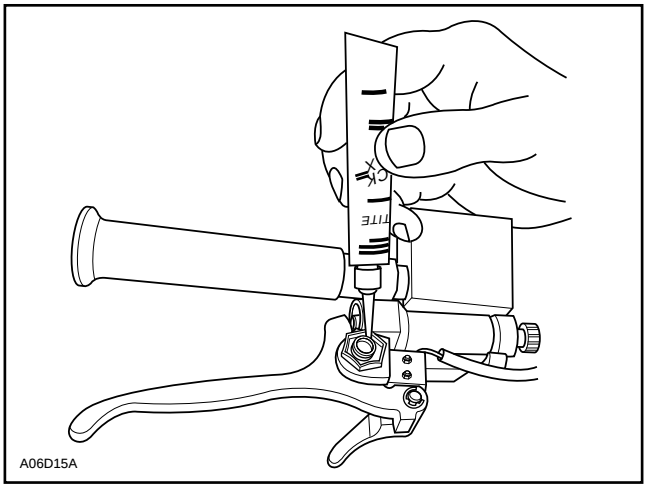

ADJUSTMENT

Brake

Mechanical Brake Models

Fully depress brake handle several times to obtain 13 mm (1/2 in) between brake handle and handlebar grip when brake is fully applied.

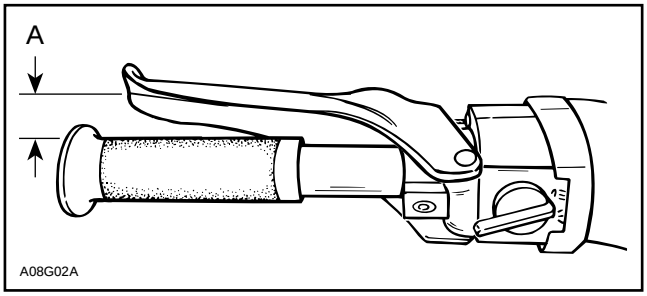

A. 13 mm (1/2 in) approx.

Should this adjustment be unattainable, retighten nut no. 10 as needed.

Hydraulic Brake Models

Change brake fluid once a year.

Bleed brake system as follows :

Keep sufficient DOT 4 (DOT 3 for normal use) brake fluid in reservoir at all times.

▼ CAUTION : Use only DOT 4 brake fluid for heavy duty or racing applications.

Install a hose on left side bleeder. Route this hose to a container.

Pump a few times brake lever and while holding brake lever depressed, open bleeder and check for air to escape.

Repeat with the same bleeder until no air appears in hose.

Proceed the same way with the right side bleeder.

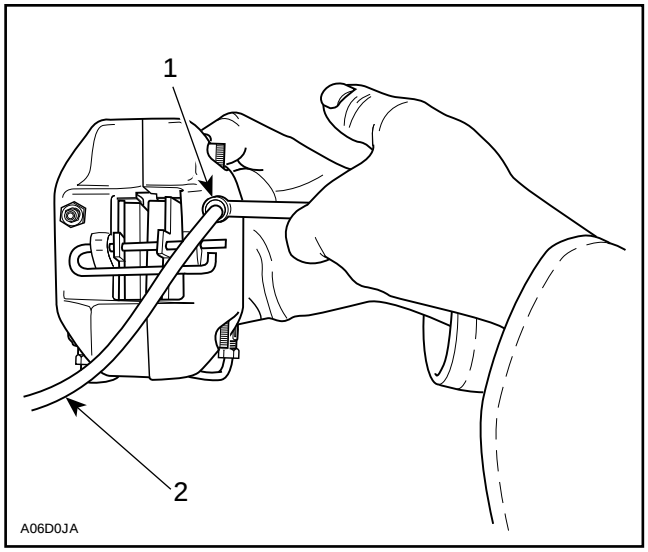

1. Open bleeder
2. Clear hose to catch used brake fluid

Brake Light

Mechanical Brake Models

Brake light should light up before brake pads touch brake disc. To adjust, unscrew nut no. 10 until brake light goes on.

◆ WARNING : At least one full thread must ex-ceed the elastic stop nut.

Check brake adjustment as described above.

○ NOTE : If brake light adjustment is unattainable while respecting brake adjustment, ratchet wheel may be too far out. If so, tighten ratchet wheel.

CHAINCASE

S Series and F Series Without Reverse Gear

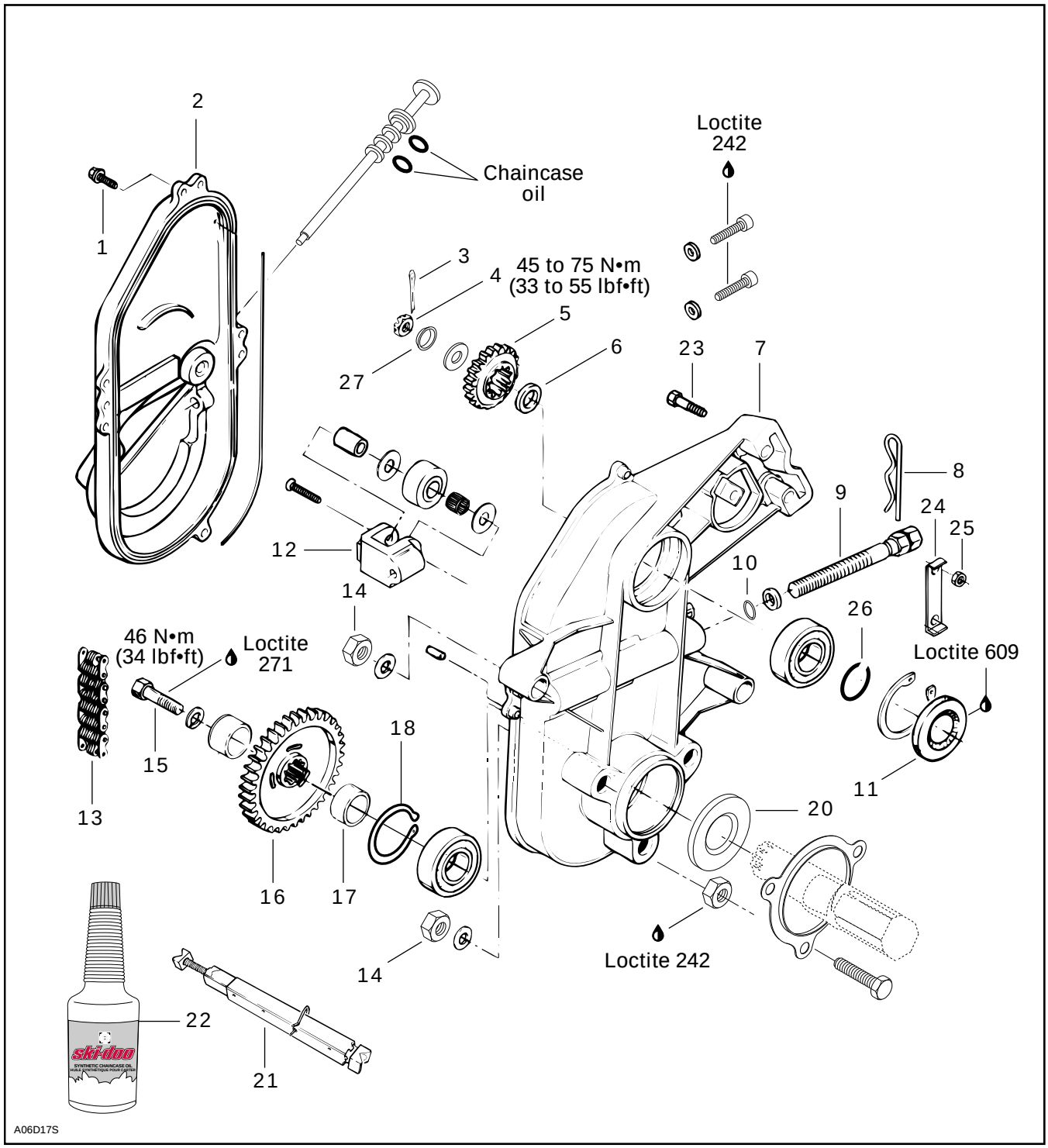

REMOVAL

To remove chaincase proceed as follows.

Remove tuned exhaust pipe and muffler.

◆ WARNING : Never remove exhaust components when engine is hot.

8,9,12, Hair Pin, Adjustment Screw and Chain Tensioner

Remove hair pin. Release drive chain tension by unscrewing tensioner adjustment screw.

1,2, Chaincase Cover and Screw

Drain oil by removing chaincase cover.

3,4,5,6,13,16,17, Cotter Pin, Nut, Sprocket, Shim and Drive Chain

Remove cotter pin, nut, washer retaining upper sprocket and screw retaining lower sprocket. Pull sprockets and drive chain simultaneously. Remove shims.

○ NOTE : Should countershaft removal be required, refer to BRAKE 05-05 then look for Brake disc.

26, Circlip

Remove circlip. Refer to BRAKE 05-05 then lock for brake disc.

14, Nut

Remove 5 nuts. 3 nuts are behind the lower sprocket.

23,24,25, Screw, Locking Tab and Nut

Unfold locking tab, unscrew nuts then remove caliper retaining screws.

21, Drive Axle Holder

Release track tension, use drive axle holder (P / N 529 0072 00).

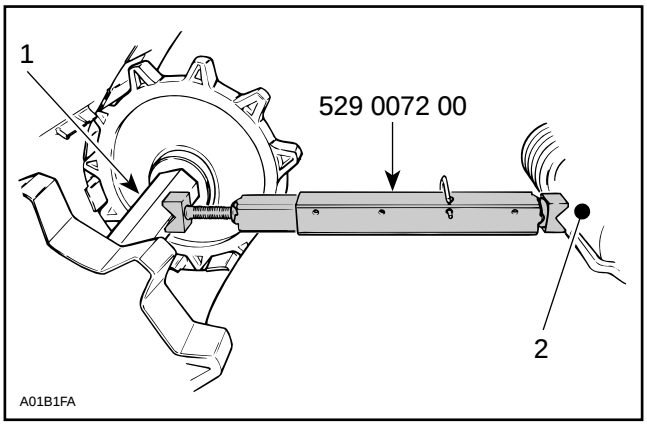

TYPICAL

1. *Drive axle*
2. *Suspension cross shaft*

20, Drive Axle Oil Seal

Pry out from chaincase.

Pull chaincase from drive axle and countershaft.

7, Chaincase

Using two large screwdrivers inserted between chaincase and frame, pry complete assembly from vehicle.

INSPECTION

Visually inspect the chain for cracked, damaged or missing links. Check for worn or defective bearings, sprockets and chain tensioner components.

◆ WARNING : If chain deflection is greater than 38 mm (1.5 in) (without chain tensioner), replace chain and check condition of sprockets.

GEAR RATIO MODIFICATION

For particular applications, the number of teeth of the sprockets can be increased or decreased on lower and upper sprockets.

Refer to TECHNICAL DATA 10-03 for gear ratio.

▼ CAUTION : Gear ratio modifications should only be performed by experienced mechanics since they can greatly affect vehicle performance.

○ NOTE : For high altitude regions, the *High Altitude Technical Booklet* (P / N 484 0624 00 and P / N 484 0545 00 for binder) gives information about calibration according to altitude.

INSTALLATION

Reverse removal procedure and pay attention to the following. Replace oil seals, gaskets and O-rings.

Refer to DRIVE AXLE 07-04 for drive axle axial play adjustment.

11, Oil Seal

Clean chaincase bore with Loctite Safety Solvent (P / N 413 7082 00) then apply Loctite 609 to oil seal mounting surface (outside).

Using an appropriate pusher, press the oil seal into chaincase hud. Oil seal must fit flush with the chaincase edge.

NOTE : Should installation procedure for countershaft be required, refer to BRAKE 05-05 then look for Brake disc and Countershaft bearing adjustment.

5,16, Sprockets

Position the sprockets with the writing facing the chaincase cover.

27, Conical Spring Washer

Install washer with its concave side towards drive pulley.

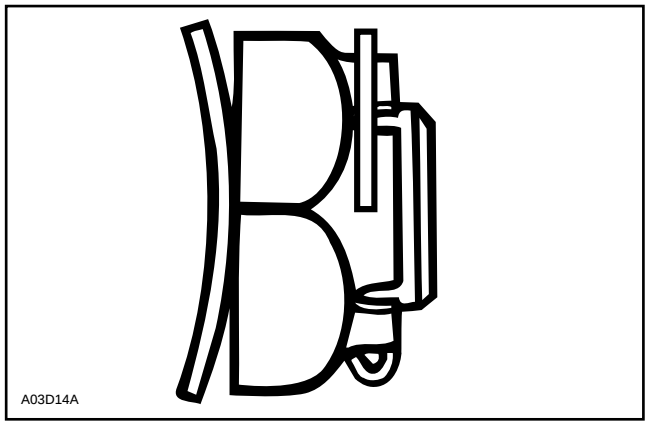

4, Upper Sprocket Castellated Nut

Torque to 45 to 7 in in the position shown.

CAUTION : When removing a cotter pin al-ways replace with a new one.

CAUTION : Cotter pin will rub on chain-case cover if installed otherwise.

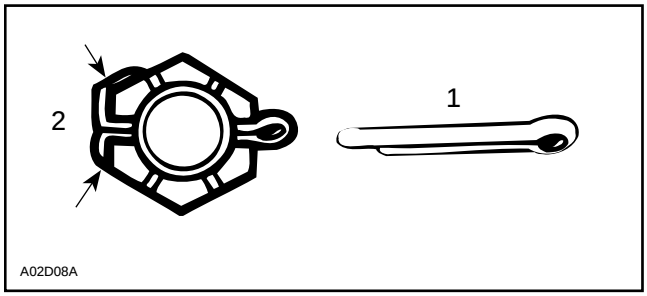

1. New
2. Fold cotter pin over castellated nut flats only

18, Circlip

CAUTION : It is of the utmost importance to install the circlip otherwise damage to the chaincase components may occur.

DRIVE CHAIN ADJUSTMENT

10, O-r ing

Replace O-ring on tensioner adjustment screw. Fully tighten tensioner adjustment screw by hand, then back off only far enough for hair pin to engage in locking hole.

This initial adjustment should provide 3-5 mm (1/8-13/64 in) free-play when measured at the outer circumference of the brake disk.

CAUTION : Free-play must not exceed 5 mm (13/64 in), readjust if necessary.

WARNING : If the specified free-play is not reached with the tensioner screw fully tightened, replace chain and check the condition of sprockets.

22, Chaincase Oil

Pour 250 mL (8.5 fl. oz) of synthetic chaincase oil (P / N 413 8028 00) into chaincase.

NOTE : Chaincase oil capacity is 250 mL (8.5 fl. oz).

Check oil level with the dipstick unscrewed then add if required.

NOTE : Chaincase must be in its proper position when checking oil level.

ADJUSTMENT

Pulley Alignment

Refer to PULLEY DISTANCE AND ALIGNMENT 05-04.

Track Tension and Alignment

Refer to TRACK 07-05.

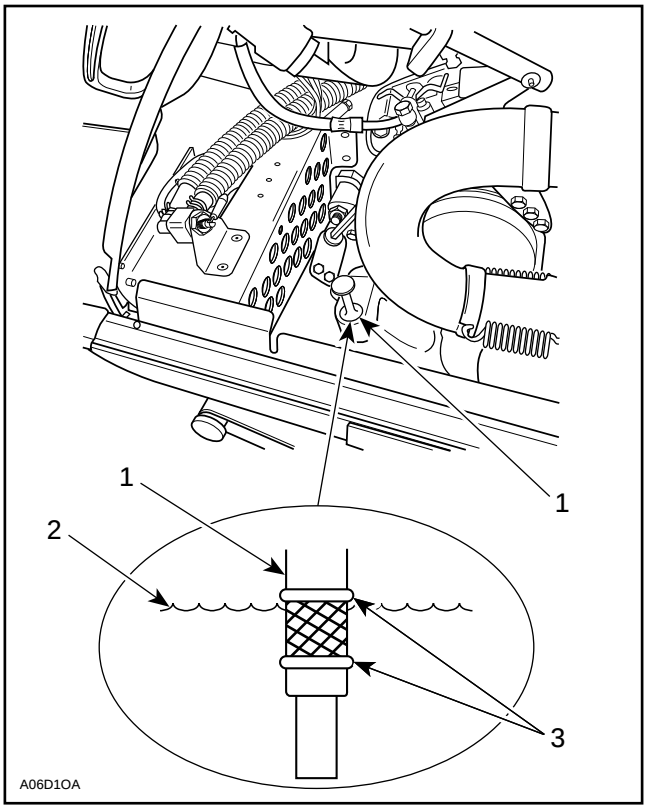

1. *Dipstick*
2. *Oil lever*
3. *Level between marks*

GEARBOX

3-SPEED GEARBOX (SHIFTER MECHANISM)

Skandic WT

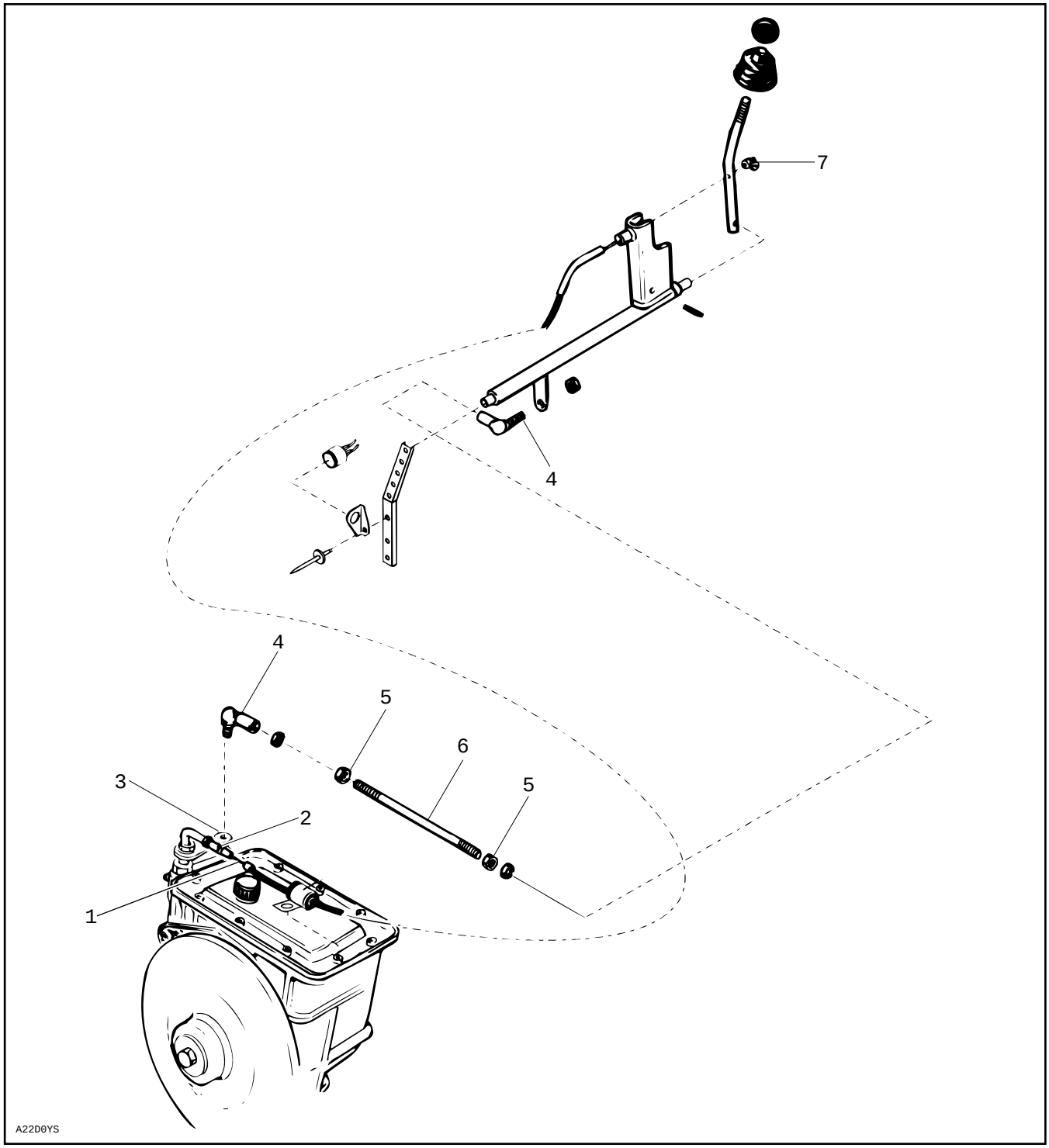

REMOVAL

1,2, Cable and Cable Housing

Remove screw from underneath top portion of transmission. Remove cable barrel from shifter : see last photo.

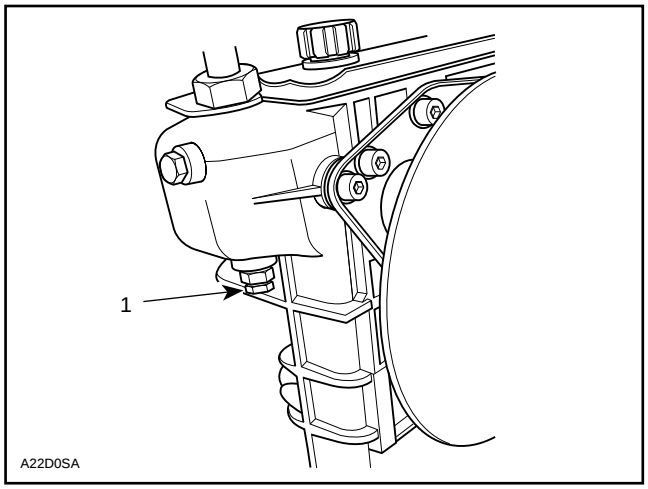

1. Remove this screw

Pull out cable from underneath top portion of transmission.

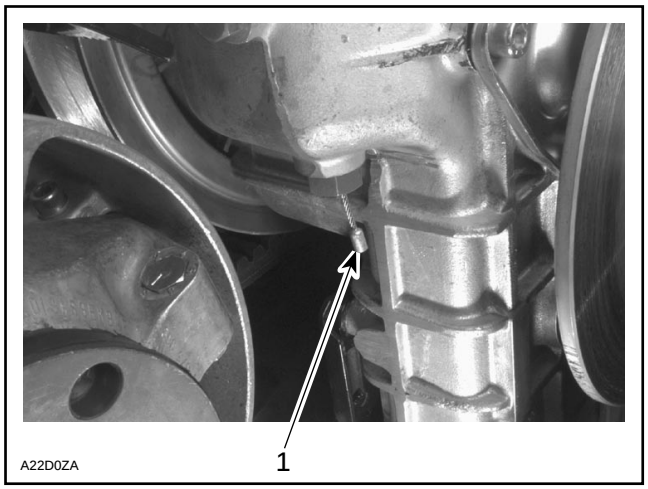

1. Cable

ADJUSTMENT

6, Tie Rod

Slacken tie rod lock nut.

Unfasten tie rod end by removing its clip.

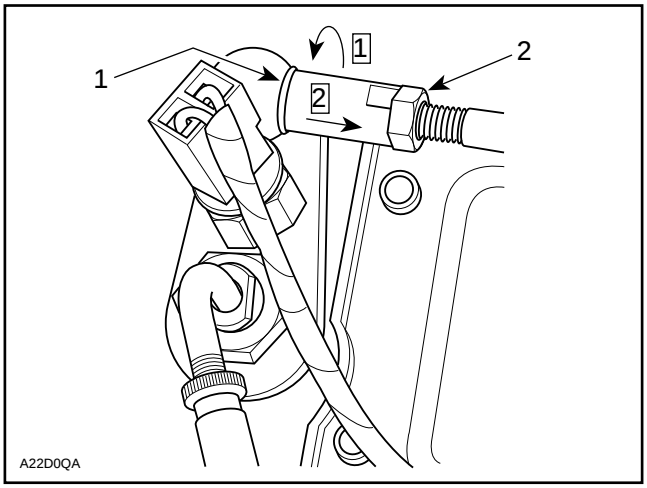

1. Clip
1. Lock nut

Adjust tie rod length in a way that gear shift lever do not contact console. Check 2nd gear position. Retighten ball joint lock nuts.

1, Cable

With gear shift lever in neutral position, there should be no cable free play.

Adjust reverse lock out cable by cable housing adjuster no. 2. If more adjustment is needed, slacken or tighten cable barrel accordingly.

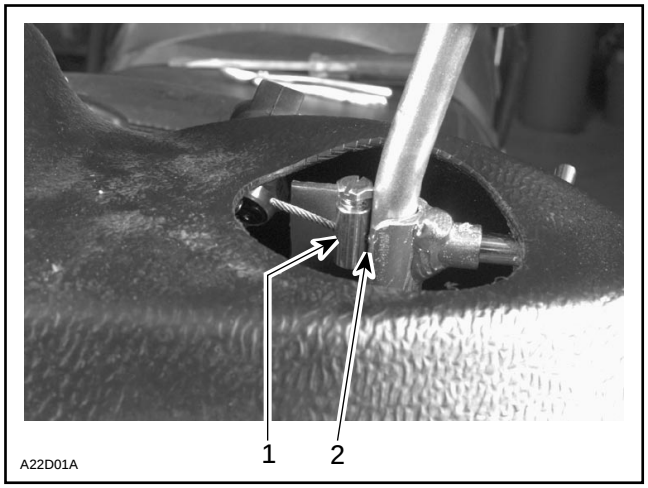

1. Cable barrel
2. No free play

Skandic WT

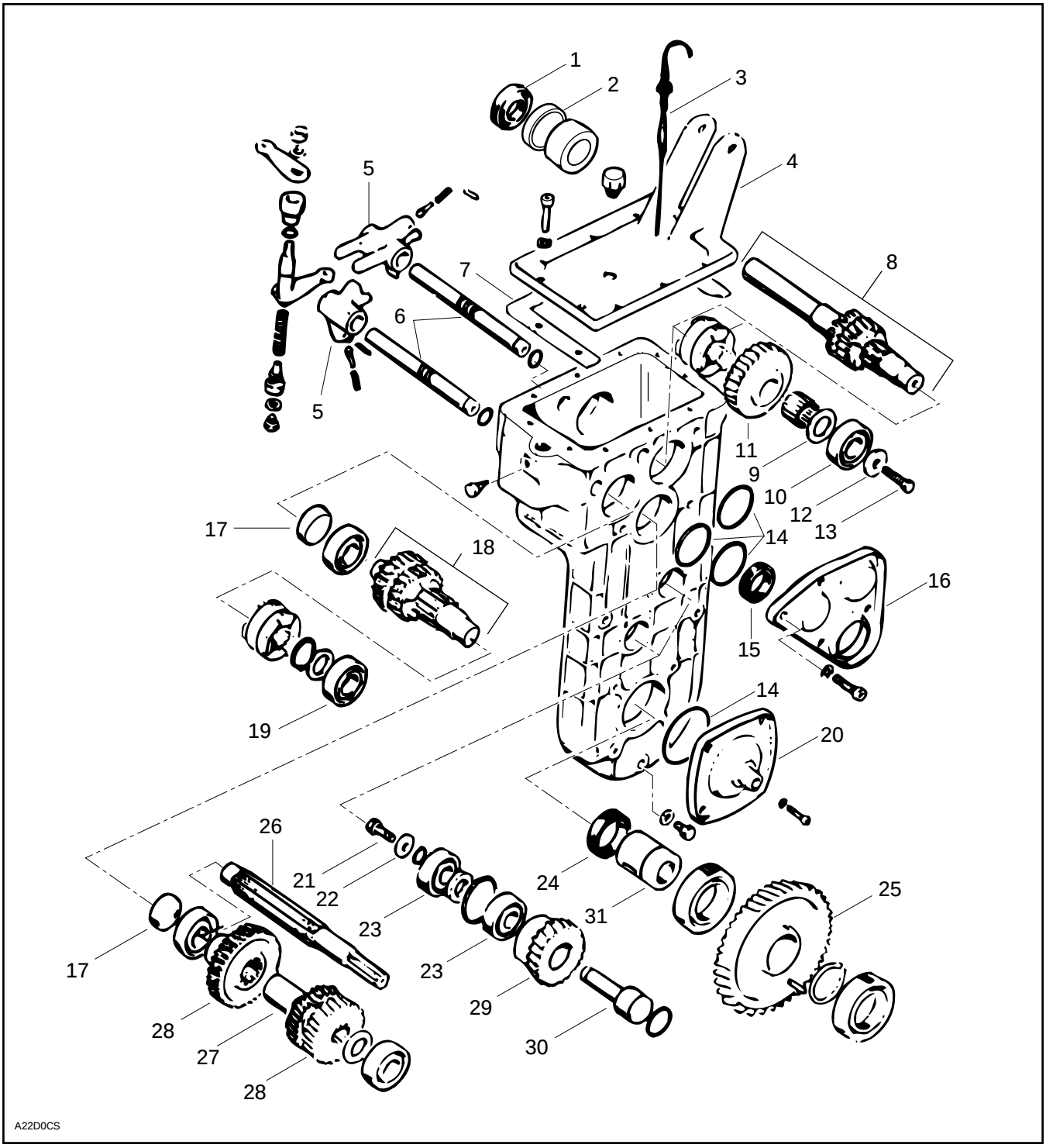
1
2
3
4
5
5
6
7
8
9
10
11
12
13
14
14
15
16
17
17
18
19
20
21
22
23
23
24
25
26
27
28
28
29
30
31
A22D0CS

REMOVAL

Remove brake disc and driven pulley. Unfasten shifting rod and cable. See above CABLE REMOVAL.

Remove rear suspension.

Remove angle drive and square pin.

Remove RH end bearing then push drive axle toward right side.

Unbolt gearbox from chassis.

DISASSEMBLY

For the following procedure, right hand side refers to driven pulley side and left hand side to brake disc side.

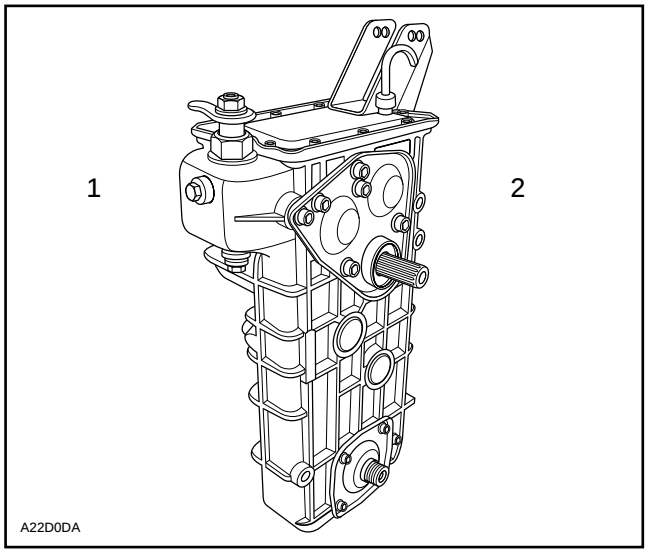

1. RH side driven pulley side
2. LH side brake disc side

3,4,7,14,16,20, Dipstick, Top Cover, Gasket, O-ring, Upper Side and Lower Side Cover

Remove dipstick. Unfasten top cover, upper side cover and lower side cover from gearbox housing.

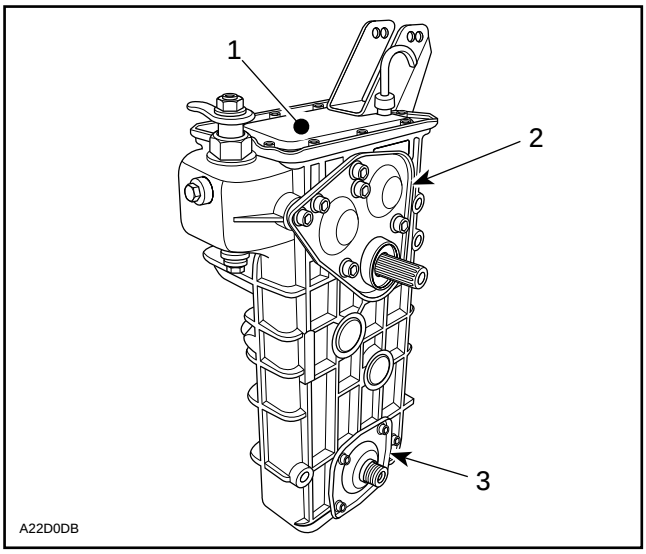

1. Top cover
2. Upper side cover
3. Lower side cover

Discard O-rings and top gasket.

5,6, Fork and Fork Axle

Using a pusher, drive out from LH side both fork axles starting with top one. Remove forks.

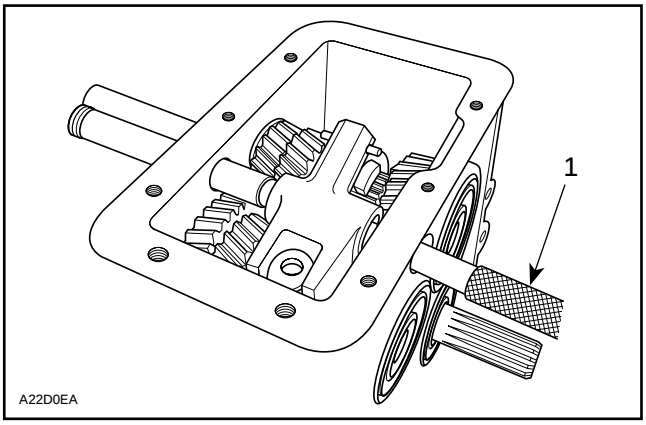

1. Pusher

12,13, Washer and Screw

Remove screw and washer from driven pulley shaft end.

17, Plug

Drill a 10 mm (3/8 in) dia. hole through brake shaft plug.

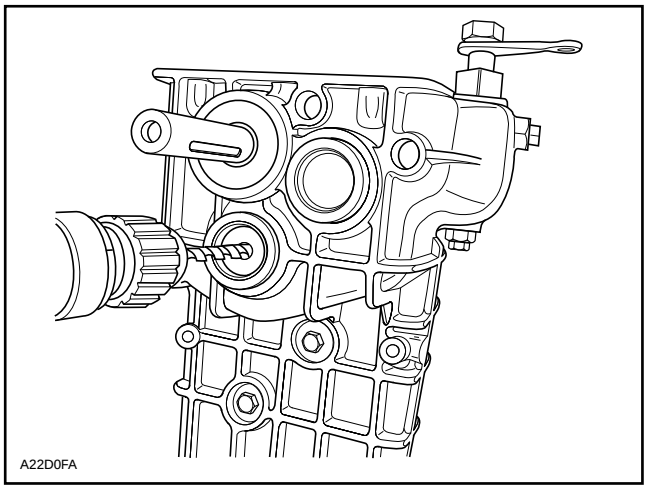

18,19,26,27,28, Reverse Shaft, LH Side Bearing, Brake Shaft, Sleeve and Gear

Drive brake shaft out of gearbox housing.

Remove sleeve.

NOTE : Brake shaft gears remain in gearbox hous-ing.

Proceed the same for reverse shaft plug.

Drive reverse shaft out until its LH side bearing is free. Use a puller to extract this bearing.

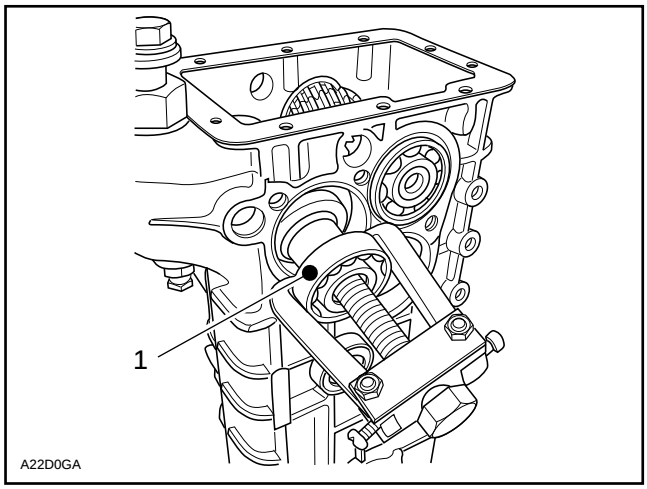

1. Extract reverse shaft LH side bearing

Remove reverse shaft from gearbox housing. Remove brake shaft gears.

1,2,8,9, Oil Seal, Circlip, Driven Pulley Shaft and Shim

Pry oil seal out of gearbox housing. Remove snap ring.

Drive out driven pulley shaft. Use alignment tool (P / N 420 4760 10) as a supporting plate to extract last gear and bearing. Spacer will fall into gearbox housing.

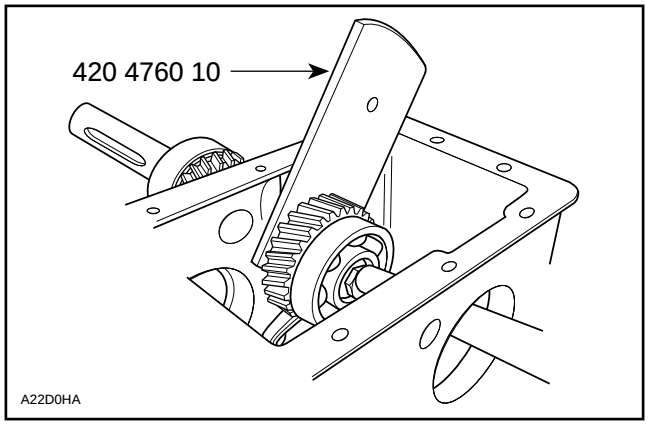

21,22,29,30, Screw, Washer, Intermediate Gear and Intermediate Axle

Remove screws and washers from both intermediate axles. Fasten a long M8 x 1.25 screw in axle end then drive it out, beginning with top one.

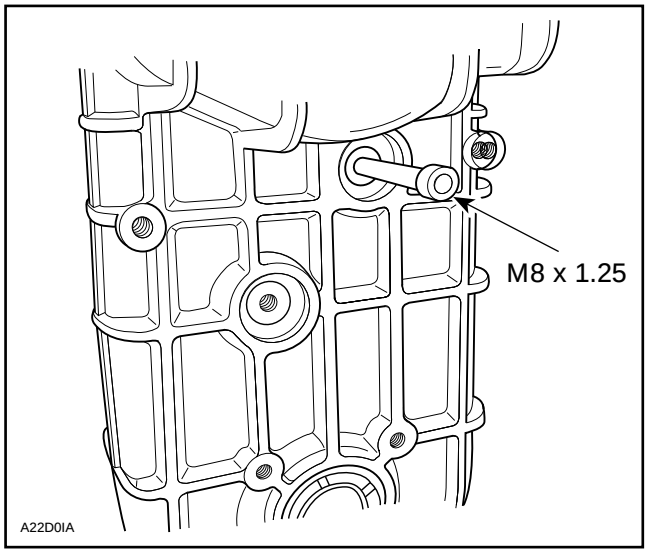

Remove intermediate gears.

Do not disassemble bearings of intermediate gears needlessly.

24,25, Bottom Seal and Lower Gear

Pry out bottom seal from gearbox housing.

Using a press, drive out lower gear from left side.

CAUTION : Do not push against inner bearing race.

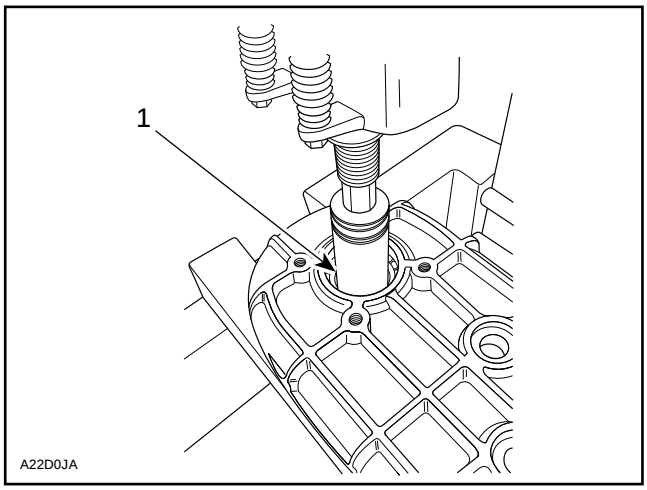

1. Push against gear shoulder

INSPECTION

Check bearing condition. There must be no discoloration, missing rollers or balls, broken cages, etc.

Check sprocket teeth.

ASSEMBLY

Reverse disassembly procedure, paying attention to the following :

31, Output Shaft

Install output shaft with its hollow side (no splines) on RH side.

25,29, Lower Gear and Intermediate Gear

Install all gears with their shoulder towards RH side.

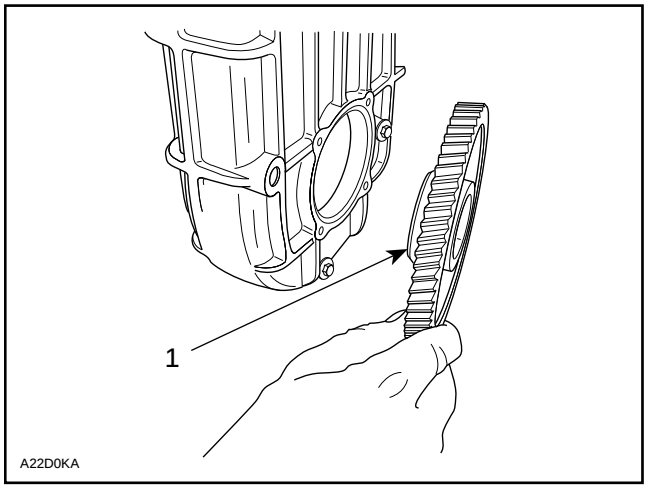

1. Gear shoulder towards RH side

18,19,26,27,28, Reverse Shaft, LH Side Bearing, Brake Shaft, Sleeve and Gear

Install brake shaft taking care that gear shoulders face RH side.

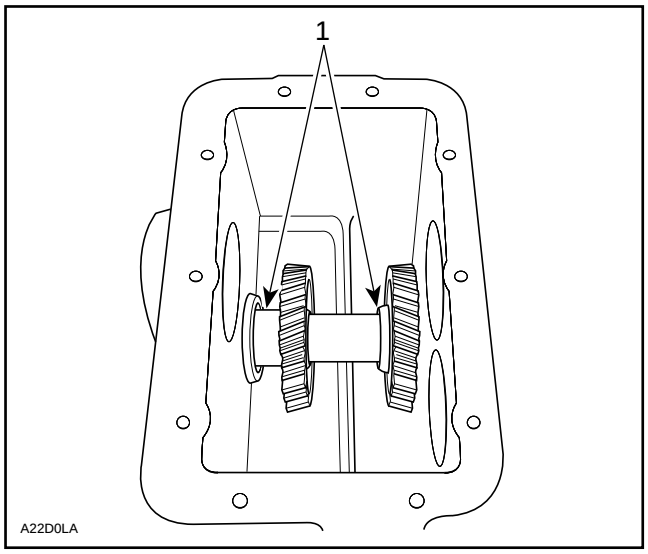

1. Gear shoulders face RH side

Install reverse shaft, its smaller end first.

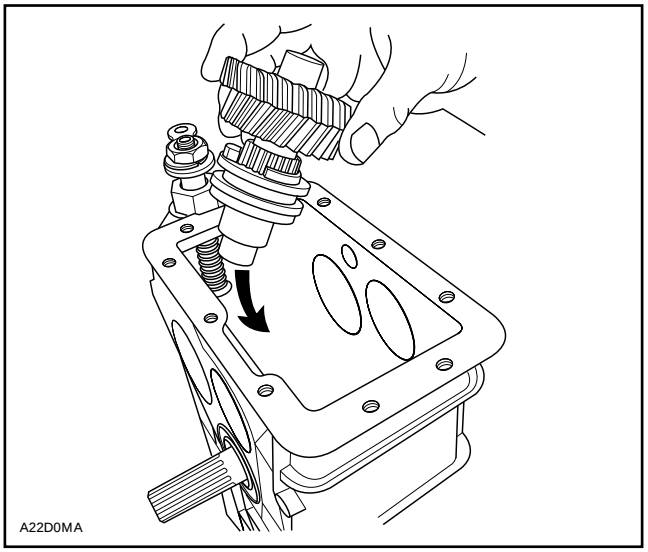

Install shim and bearing on LH side.

Install driven pulley shaft, sliding sleeve then gear. Turn brake shaft during installation and check that gears mesh.

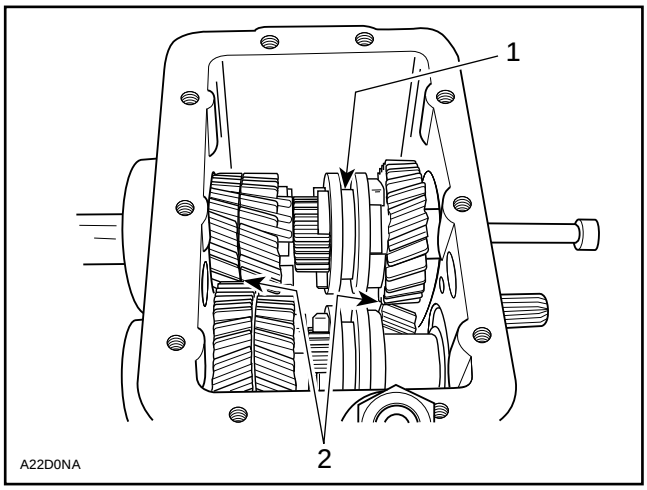

1. Sliding sleeve
1. Gears mesh

Install shim, bearing and circlip.

5,6, Fork and Fork Axle

Mount forks and fork axles using a screwdriver to hold index ball. See illustration for fork axle positions.

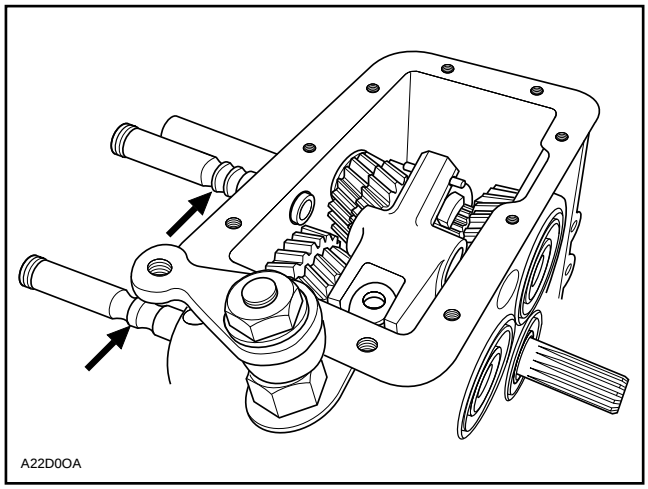

INSTALLATION

Reverse removal procedure. Check pulley alignment.

OIL LEVEL

To check, pull dipstick. Oil should reach level mark.

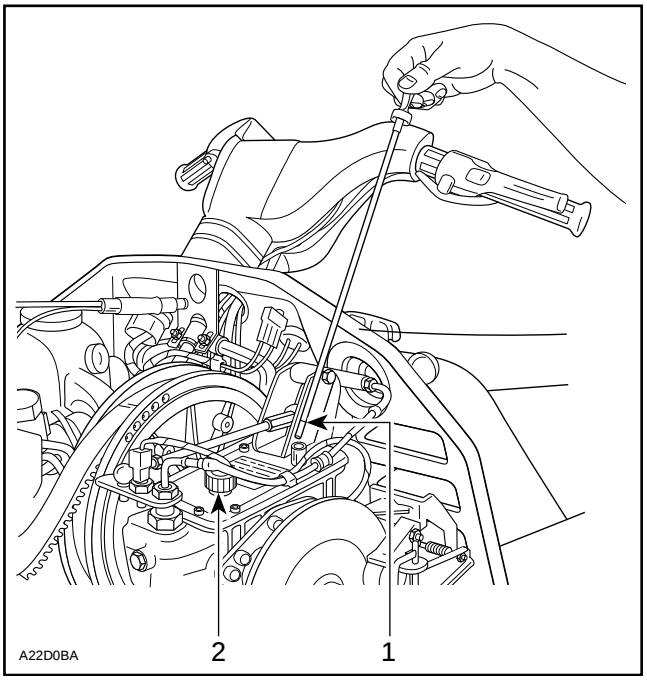

TYPICAL

1. Level mark
2. Filler plug

To fill, remove filler plug from top of transmission. Refill as required using Bombardier synthetic chaincase oil (P / N 413 8028 00).

DRIVE CHAIN

SILENT CHAIN

There are 2 types of silent chain. One is 11-link wide and the other (stronger) is 13-link wide. Do not interchange sprockets. Fit chain on sprockets to make sure using right ones according to width. Refer to TECHNICAL DATA 10.

NOTE : No work (separation, lengthening) can be done on the silent chain type.

TABLE OF CONTENTS

WIRING DIAGRAMS **06-01-1**
CHART CODES 06-01-1
UNPLUGING CONNECTORS 06-01-3
TAB AND RECEPTACLE CONNECTORS REMOVAL 06-01-3
TAB AND RECEPTACLE CONNECTORS INSTALLATION 06-01-4
ACCESSORIES INSTALLATION 06-01-4

IGNITION TIMING **06-02-1**
NIPPONDENSO TRIGGER COIL SYSTEM **06-02-1**
DUCATI CDI SYSTEM **06-02-4**

SPARK PLUGS **06-03-1**
NGK SPARK PLUG **06-03-1**
NGK SPARK PLUG NUMBERING SYSTEM 06-03-1
1996 REFERENCE CHART 06-03-1
DESIGN SYMBOLS USED IN NGK SPARK PLUGS **06-03-2**
DISASSEMBLY 06-03-3
HEAT RANGE 06-03-3
FOULING 06-03-3
SPARK PLUG ANALYSIS 06-03-3
SPARK PLUG INSTALLATION 06-03-4
SPARK PLUG TIGHTENING TORQUE 06-03-4

BATTERY **06-04-1**
REMOVAL 06-04-1
CLEANING 06-04-2
INSPECTION 06-04-2
HYDROMETER TEST 06-04-2
BATTERY STORAGE 06-04-3
ACTIVATION OF NEW BATTERY 06-04-3
SERVICING 06-04-6
TIPS FOR CHARGING A USED BATTERY 06-04-6
BATTERY CHARGING EQUIPMENT 06-04-6
INSTALLATION OF BATTERY 06-04-7

ELECTRIC STARTER **06-05-1**
SKANDIC WT, S SERIES AND F SERIES WITH ELECTRIC STARTING *06-05-1*
REMOVAL 06-05-2
DISASSEMBLY 06-05-2
CLEANING AND INSPECTION 06-05-4
ASSEMBLY 06-05-4
INSTALLATION 06-05-5
CLEANING AND INSPECTION **06-05-6**
CLEANING 06-05-6
INSPECTION 06-05-6
SOLENOID SWITCH 06-05-8

TESTING PROCEDURE **06-06-1**
GENERAL 06-06-1
USE OF BOMBARDIER IGNITION TESTER 06-06-3
NIPPONDENSO CDI TRIGGER COIL SYSTEM TESTING **06-06-4**
TRIGGER COIL OUTPUT 06-06-4
IGNITION COIL OUTPUT 06-06-4
IGNITION MODULE 06-06-5
MAGNETO OUTPUT (IGNITION GENERATOR COIL) 06-06-5
LIGHTING GENERATOR COIL OUTPUT 06-06-6
SUMMARY TABLE 06-06-7
RESISTANCE MEASUREMENTS 06-06-8
DUCATI CDI SYSTEM TESTING **06-06-9**
TRIGGER COIL OUTPUT 06-06-9
MAGNETO OUTPUT 06-06-9
IGNITION COIL OUTPUT 06-06-10
IGNITION MODULE 06-06-10
LIGHTING GENERATOR COIL OUTPUT 06-06-10
SUMMARY TABLE 06-06-11
RESISTANCE MEASUREMENTS 06-06-12
VOLTAGE REGULATOR INSPECTION **06-06-13**
TESTING PROCEDURE 06-06-13
INSPECTION OF AC CIRCUIT ISOLATION **06-06-14**
INSPECTION 06-06-14
INSPECTION OF HEATING ELEMENTS **06-06-15**

WIRING DIAGRAMS

MODEL	WIRING DIAGRAM PAGE	HEADLIGHT (watt)	TAILLIGHT (watt)	ELECTRICAL SYSTEM OUTPUT (watt)
MX Z 440 / 583 / 670	Annex 1	60 / 55 hal.	8 / 27	220
Summit 583 / 670	Annex 2	60 / 55 hal.	8 / 27	220
Formula Z	Annex 3	60 / 55 hal.	8 / 27	220
Formula SS	Annex 4	60 / 55 hal.	8 / 27	220
Formula III / III LT and Mach Z / Z LT	Annex 5	60 / 55 hal.	8 / 27	220
Skandic WT	Annex 6	60 / 55 hal.	8 / 27	240

hal. = halogen

CHART CODES

Wiring Color Code

The first color of a wire is the main color, second color is the stripe.

Example : YL / BK is a YELLOW wire with a BLACK stripe.

COLOR CODE	
BK – BLACK	GN – GREEN
WH – WHITE	GY – GREY
RD – RED	VI – VIOLET
BL – BLUE	OR – ORANGE
YL – YELLOW	BR – BROWN

Following table shows wire colors related to electrical circuits.

WIRE COLORS	ELECTRICAL CIRCUIT	ADDITIONAL INFORMATION
BLACK / YELLOW	ENGINE SHUT OFF – Key switch – Tether cord switch – Emergency switch	Must be grounded to stop engine.
BLACK (small)	Ground for shut off	
BLACK (Big)	Ground for starter (–)	
YELLOW YELLOW / BLACK	12 volts (A.C.)	If shorted, magneto stops producing electricity.
RED	12 volts (D.C.) (+) For starter motor	
RED / GREEN	12 volts (D.C.) (+) For starter solenoid	
RED / BLUE	12 volts (D.C.) (+) Rectifier output	
GREY	12 volts (A.C.) High beam	Current returns by YELLOW / BLACK wire connected to headlamp.
VIOLET / GREY	12 volts (A.C.) Low beam	
WHITE	12 volts (A.C.) Brake light	Current returns by YELLOW / BLACK wire connected to taillight.
WHITE / RED	12 volts (A.C.) Low oil level	Current returns by YELLOW / BLACK wire connected to oil level sensor.
BLUE	12 volts (A.C.) Fuel level indicator	Current returns by YELLOW wire connected to fuel level sensor.
ORANGE	12 volts (A.C.) Heated grips (max.)	Current returns by YELLOW / BLACK wire connected to heating elements.
ORANGE / VIOLET	12 volts (A.C.) Heated grips (min.)	
BROWN	12 volts (A.C.) Heated throttle level (max.)	
BROWN / YELLOW	12 volts (A.C.) Heated throttle level (min.)	
GREEN	12 volts (A.C.) Temperature gauge	Current returns by YELLOW wire connected to sensor.
VIOLET	12 volts (A.C.) Engine overheating light.	

Connector Location

Connectors on wiring diagrams carry the letter C followed by a number. Use this code with wiring diagram legend to find connector location on vehicle.

UNPLUGING CONNECTORS

Always unplug connectors by pulling on housing not on wire. This is particularly important with connectors on temperature sender and heating element switches.

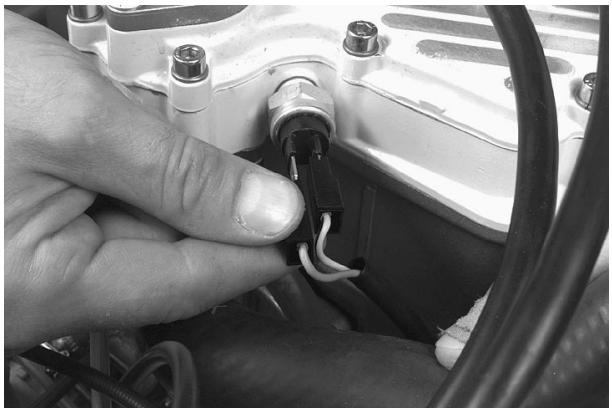

A06E1PA

TAB AND RECEPTACLE CONNECTORS REMOVAL

Tab Connector

It is locked in its housing by a spring tab on its side. Removal is done by squeezing this tab.

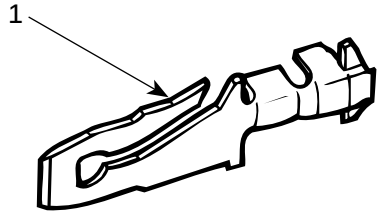

A00E1DA

1. Locking tab

To remove :

- Insert a screwdriver or Snap-on TT 600-5 from side opposite of wire and pry locking tab.
- While holding locking tab pryed, pull connector toward wire side.

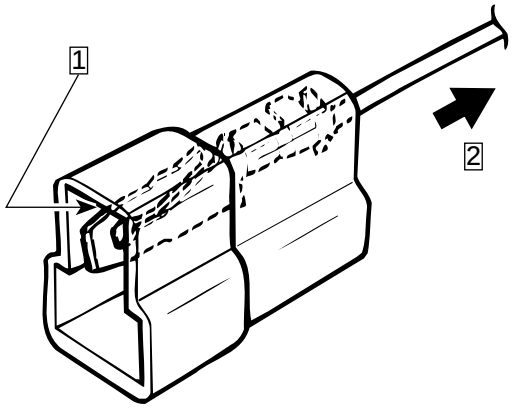

A00E1EA

Step 1 : Insert screwdriver here
Step 2 : Pull this side

Receptacle Connector

It is locked in its housing by a small tab on top. Removal is done by squeezing this tab.

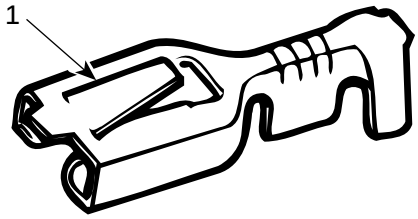

A00E1BA

1. Locking tab

To remove :

- insert a small screwdriver or Snap-on TT 600-5 in access opening, opposite of wire side, between receptacle and its housing and squeeze locking tab.
- While holding locking tab squeezed, pull connector toward wire side.

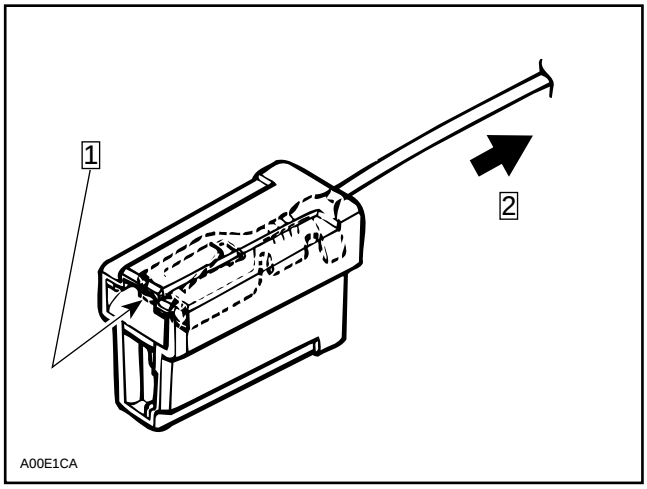

Step 1 : Insert screwdriver here
Step 2 : Pull this side

Locking Receptacle Connector

To remove :

– Insert Snap-on tool TT 600-5 in access opening then pull housing.

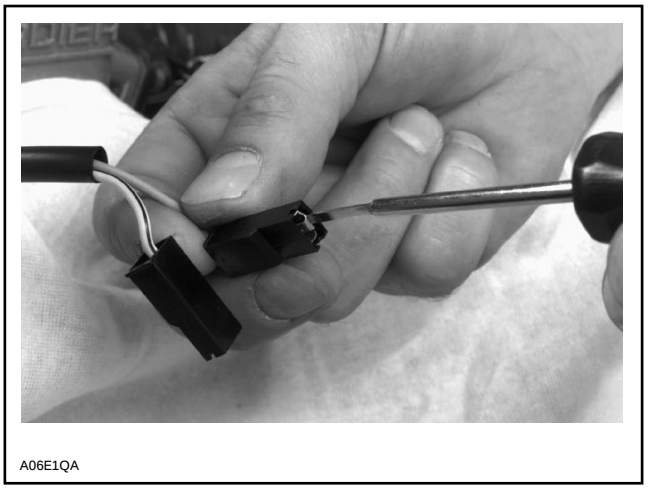

TAB AND RECEPTACLE CONNECTORS INSTALLATION

Prior to installing, make sure locking tab is sufficiently lifted to properly lock.

Insert tab and receptacle connectors in their respective housings as shown in following illustrations. Push sufficiently so that they snap. Try pulling wire to ensure they are properly locked.

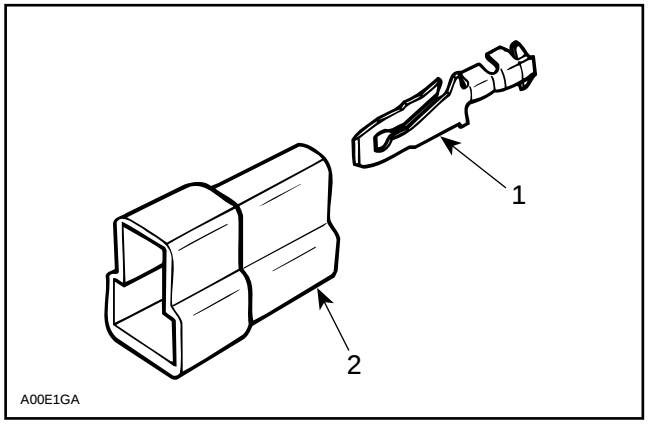

1. Tab
2. Housing

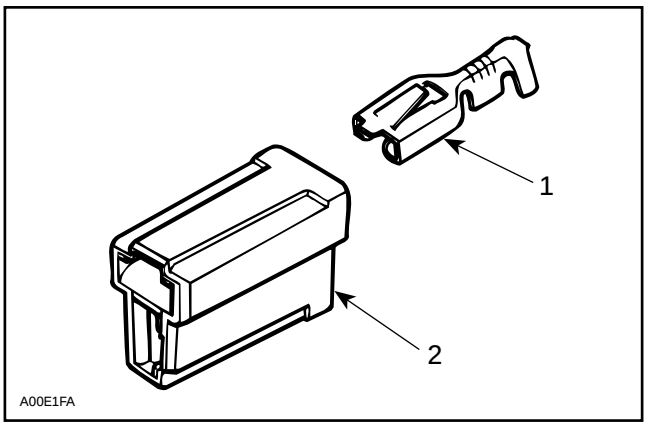

1. Receptacle
2. Housing

ACCESSORIES INSTALLATION

On all electric start models : The direct current (DC) utilizes the snowmobile frame as ground “wire” while all alternating current (AC) consumers (lights, heated grips, fuel gauge, etc.) utilize a separate ground wire.

Never interconnect AC and DC grounds as an AC voltage drop will result. When installing accessories on any snowmobile, connect their wires directly to the YELLOW and YELLOW / BLACK lighting coil wires.

Even if manual start models have an AC ground to the chassis (on voltage regulator), all accessories utilize a ground wire isolated from chassis. When an electric starter kit is installed, the voltage regulator and its ground wire are replaced by a voltage rectifier / regulator unit permitting a completely isolated AC circuit.

◆ WARNING : Never secure electrical wires / cables with fuel lines. Keep wires away from any rotating, moving, heating, vibrating or sharp edge. Use proper fastening devices as required.

IGNITION TIMING

NIPPONDENSO TRIGGER COIL SYSTEM

454, 583, 599, 670 and 779 Engine Types

Ignition timing is adjusted by movement of trigger coil. Raising position of trigger coil retards ignition. Lowering position of trigger advances ignition. On 454 and 670 engines, moving trigger coil to right retards ignition and moving to left advances ignition.

▼CAUTION : Each time ignition timing is adjusted by moving trigger coil, air-gap must be adjusted.

Refer to CDI MAGNETO 04-05 then look for Trigger Coil Adjustment after adjusting ignition timing.

Verifying Magneto Flywheel Timing Mark Position

Prior to checking the timing, it may be necessary to verify the position of the timing mark on the magneto flywheel, for the following reasons :

1. To detect a missing or broken magneto flywheel Woodruff key which would allow a change of timing to occur, with eventual break down of the engine.
2. To correctly locate and mark a timing mark on a new service magneto flywheel.
3. To verify the correct location of the factory timing mark.
4. To detect a wrong magneto flywheel.

To verify the position of the timing mark on the magneto flywheel or to scribe a timing mark, proceed as follows :

1. Clean the area around the spark plugs, and remove them.
2. Remove the rewind starter from the engine.
3. Install the TDC gauge in the spark plug hole, (magneto side) and adjust as follows :
   a. Position the magneto flywheel at approximately TDC.

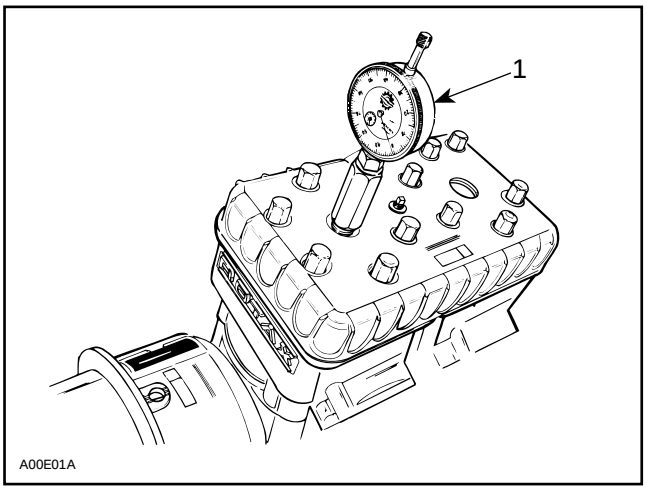

TYPICAL
1. TDC gauge MAG side

   b. Assemble the gauge to the adaptor and tighten the roller lock nut. Do not tighten the adaptor lock nut.
   c. Screw the adaptor into the spark plug hole and tighten to prevent movement in the plug hole.
   d. Position the dial face toward the magneto. Move the gauge down until the needle just begins to move, then move down a further 5 or 6 mm (approximately 1/4 in). Tighten adaptor lock nut by hand.
4. Locate the piston TDC position as follows :
   a. Slowly rotate the magneto flywheel back and forth across TDC while observing the needle. Note that the needle stops moving only as the piston is changing direction.
   b. Rotate the dial face so that “0” is in line with the needle when it stops moving.
   c. Again, slowly rotate the magneto flywheel back and forth across TDC and adjust the dial face to “0”, until the needle always stops exactly at “0” before changing direction.
   d. “0” now indicates exact TDC.
5. Verify the position of the timing mark on the magneto flywheel as follows :

NOTE : When checking timing, certain procedures require that the magneto flywheel be turned in a clockwise direction, viewed facing the magneto. If it is necessary to turn back (counterclockwise) for any reason, rotate the magneto flywheel at least one-quarter turn counterclockwise, and then rotate it clockwise. The last magneto flywheel movement when making a critical check must always be in a clockwise direction, to ensure that the slack in engine moving parts is taken-up.

a. Rotate the magneto flywheel counterclockwise, one-quarter turn then carefully rotate it clockwise until the needle indicates the specified measurement, indicated in TECHNICAL DATA 10.

b. Make sure that the dot located on the side of the magneto flywheel protrusion perfectly aligns with center of trigger coil core, refer to illustration.

c. If the marks do not align, slacken trigger coil screws and move trigger coil to align dot with center of trigger coil core.

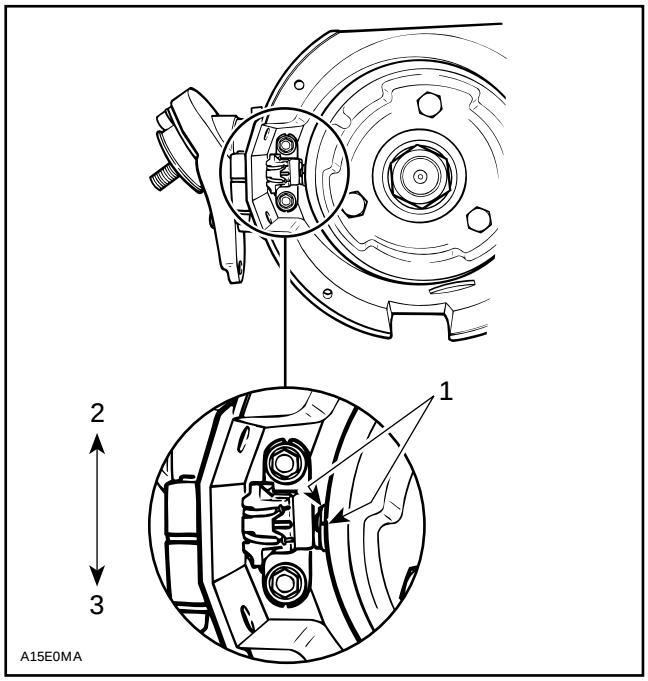

583, 599 AND 779 ENGINES

1. *Dot aligned with center of trigger coil core*
2. *Retard*
3. *Advance*

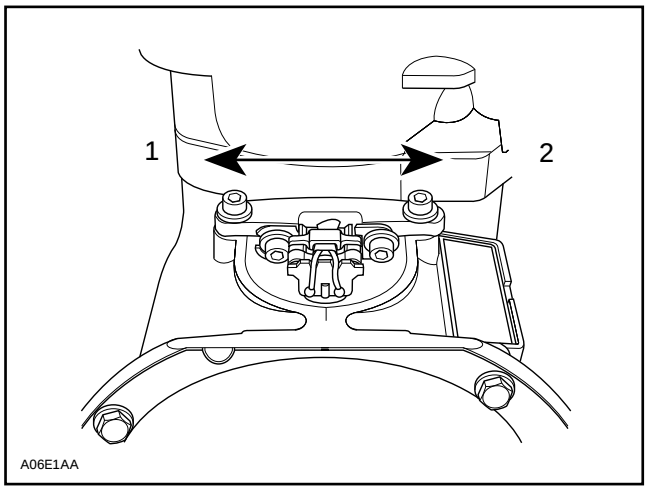

454 AND 670 ENGINES

1. *Advance*
2. *Retard*

NOTE : These marks can not be used to check dynamic (with engine running) ignition timing with a timing light : an other mark is scribed on magneto flywheel or damper for this purpose. When flywheel protrusion dot aligns with center of trigger coil core, flywheel mark and crankcase center mark must be aligned.

Checking Ignition Timing

A timing light capable of flashing reliably over 6000 RPM should be used. The following timing lights are recommended : SNAP-ON no. MT 212, ELECTRO-SPECIALTY no. 978 and ELECTRO-SPECIALTY no. TL 2802 which uses its own type C alkaline batteries.

To check the ignition timing, refer to illustration and proceed as follows :

NOTE : Engine should be cold when checking timing. Do not idle engine for more than 20 seconds and make checks quickly. Use a 12 V battery to power the timing light when working on manual start models, if light is not self-powered.

WARNING : Place ski tips against a wall, raise rear of vehicle on a stand, so that track does not contact the ground. Do not allow anyone in front of or behind the vehicle while engine is running. Keep clear of track and do not wear loose clothing which can get caught in moving parts.

1. Connect the timing light pick-up to a spark plug cable and the power connections to the battery.

NOTE : To avoid an incorrect reading due to parallax, view the magneto flywheel and the crankcase timing marks in a straight line.

2. Start the engine and point timing light straight in line with the crankcase timing mark. Bring engine to 6000 RPM for a brief instant.

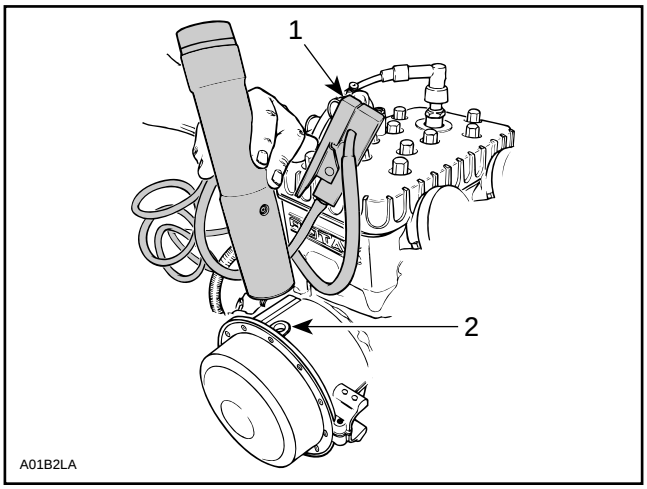

TYPICAL

1. *Timing light pick-up on MAG side*
2. *Timing inspection hole*

The magneto / damper mark must be aligned with center mark. If not, move trigger coil as explained above and recheck ignition timing. Tolerance is ± 1°.

If the marks still do not align, a faulty trigger coil (check proper grounding of coil) or a faulty CDI module could be the cause : substitute one part at a time and recheck timing marks (check connectors condition prior to substituting any part).

DUCATI CDI SYSTEM

503 Engine Type

Proper ignition timing is determined by trigger coil position.

If for any reason, ignition timing accuracy is suspected, it can be verified as follows.

Verifying Magneto Flywheel Timing Mark Position

Prior to checking the timing, it may be necessary to verify the position of the timing mark on the magneto flywheel, for the following reasons :

1. To detect a missing or broken magneto flywheel Woodruff key which would allow a change of timing to occur, with eventual break down of the engine.
2. To correctly locate and mark a timing mark on a new service magneto flywheel.
3. To verify the correct location of the factory timing mark.
4. To detect a wrong magneto flywheel.

To verify the position of the timing mark on the magneto flywheel, proceed as follows :

1. Clean the area around the spark plugs, and remove them.
2. Remove the rewind starter from the engine.
3. Install the TDC gauge in the spark plug hole, (magneto / generator side) and adjust as follows :
   a. Position the magneto flywheel at approximately TDC.

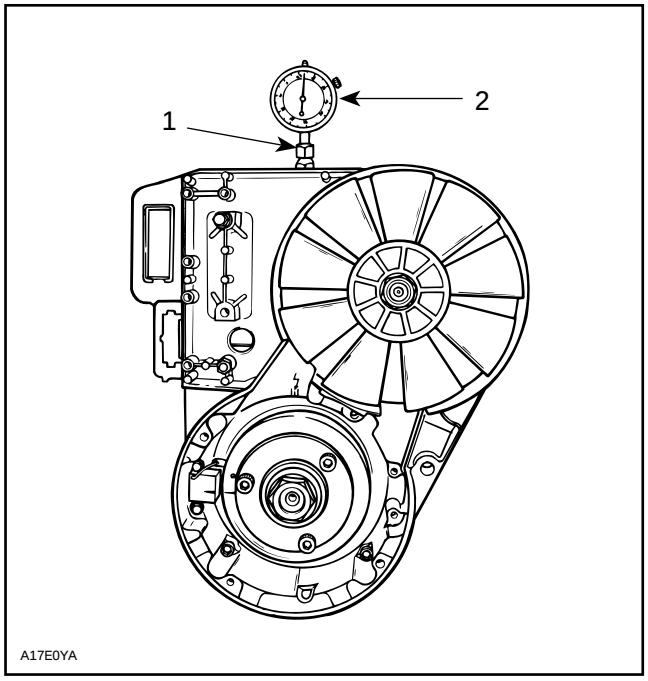

INSTALLATION OF TDC GAUGE
1. Adaptor lock nut
2. Gauge on MAG side cylinder

   b. Assemble the gauge to the adaptor and tighten the roller lock nut. Do not tighten the adaptor lock nut.
   c. Screw the adaptor into the spark plug hole and tighten to prevent movement in the plug hole.
   d. Position the dial face toward the magneto / generator. Move the gauge down until the needle just begins to move, then move down a further 5 or 6 mm (approximately 1/4 in). Tighten adaptor lock nut by hand.
4. Locate the piston TDC position as follows :
   a. Slowly rotate the magneto flywheel back and forth across TDC while observing the needle. Note that the needle stops moving only as the piston is changing direction.
   b. Rotate the dial face so that “0” is in line with the needle when it stops moving.
   c. Again, slowly rotate the magneto flywheel back and forth across TDC and adjust the dial face to “0”, until the needle always stops exactly at “0” before changing direction.
   d. “0” now indicates exact TDC.
5. Verify the position of the timing mark on the magneto flywheel as follows :

NOTE : When checking timing, certain procedures require that the magneto flywheel be turned in a clockwise direction, viewed facing the magneto /generator. If it is necessary to turn back (counterclockwise) for any reason, rotate the magneto flywheel at least one-quarter turn counterclockwise, and then rotate it clockwise. The last magneto flywheel movement when making a critical check must always be in a clockwise direction, to ensure that the slack in engine moving parts is taken-up.

a. Rotate the magneto flywheel counterclockwise, one-quarter turn then carefully rotate it clockwise until the needle indicates the specified measurement. Refer to 10 TECHNICAL DATA.

b. Verify that the magneto flywheel mark perfectly aligns with the mark on the trigger coil, refer to illustration.

c. If the marks do not align, check magneto flywheel and trigger coil part numbers and check Woodruff key condition. If all parts are the appropriate ones and if Woodruff key is in good condition, continue the procedure.

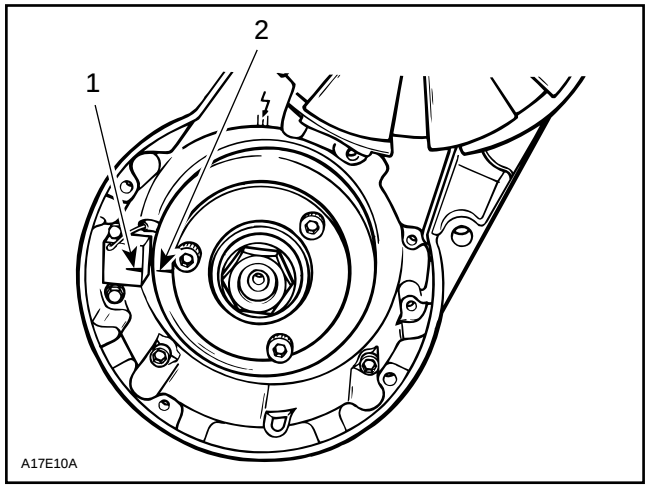

1. Trigger coil mark
2. Magneto flywheel mark

NOTE : These marks can not be used to check dynamic (with engine running) ignition timing with a timing light : a new mark must be scribed on magneto flywheel for this purpose.

6. Scribe a new mark on magneto flywheel as follows.

a. Remove the fan cover from the engine.

b. Maintain magneto flywheel so that previous marks remain aligned.

c. Scribe or punch a mark on magneto flywheel so that it perfectly aligns with the arrow on crankcase, refer to illustration. This new timing mark should be used for future timing checks (dynamic timing).

d. Reinstall rewind starter.

e. Check the timing with a timing light.

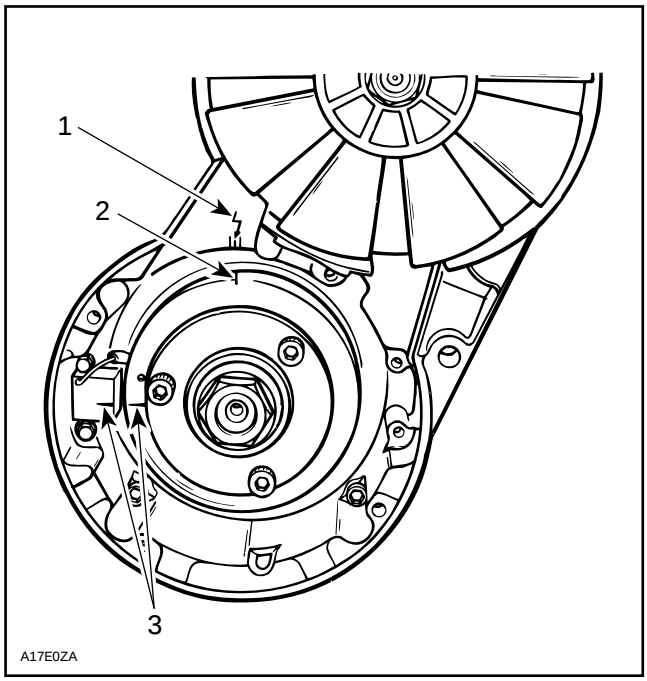

1. Crankcase arrow
2. Scribe a mark here
3. Maintain verified timing marks aligned (static timing)

Checking Ignition Timing

Use timing light (P / N 529 0092 00).

To check the ignition timing, refer to illustration and proceed as follows :

NOTE : Engine should be cold when checking timing. Do not idle engine for more than 20 seconds and make checks quickly.

WARNING : Place ski tips against a wall, raise rear of vehicle on a stand, so that track does not contact the ground. Do not allow anyone in front of or behind the vehicle while engine is running. Keep clear of track and do not wear loose clothing which can get caught in moving parts.

SPARK PLUGS

NGK SPARK PLUG

NGK SPARK PLUG NUMBERING SYSTEM

The heat range identification system is :

High number ⟶ cold plug
Low number ⟶ hot plug

1996 REFERENCE CHART

NGK spark plugs used on 1996 Bombardier snowmobiles :

- BR8ES
- BR9ES
- BR10ES

DESIGN SYMBOLS USED IN NGK SPARK PLUGS

PREFIX — SUFFIX

B R 9 E S – 15

WIDE GAP

- 10 : 1.0 mm (.040")
- 11 : 1.1 mm (.044")
- 13 : 1.3 mm (.050")
- 14 : 1.4 mm (.055")
- 15 : 1.5 mm (.060")
- 20 : 2.0 mm (.080")

Thread diameter

- **A :** 18 mm
- **B :** 14 mm
- **C :** 10 mm
- **D :** 12 mm
- **E :** 8 mm
- **J :** 12 mm x 19 mm Reach

Construction

- **M :** Compact Type
- **P :** Projected Insulator Type
- **R :** Resistor Type
- **U :** Surface Discharge
- **Z :** Inductive Suppressor Type

Heat rating numbers

2	Hot
4	
5	
6	
7	
8	
9	
10	Cold

Reach

- **E :** 19 mm (3/4")
- **F :** Taper Seat
- **H :** 12.7 mm (1/2")
- **L :** 11.2 mm (7/16")
- **Z :** 21 mm (53/54")

Blank

- 18 mm ø 12 mm (31/64")
- 14 mm ø 9.5 mm (3/8")

Firing end construction

- **A :** Special Design
- **B :** Single Ground Special Alloy
- **C :** Dual Ground Special Alloy
- **G :** Racing Type
- **GV :** Racing Version of V-Type
- **L :** Half Heat Range
- **S :** Standard Center Electrode
- **V :** Fine Wire Center Electrode
- **X :** Booster Gap
- **Y :** V-Grooved Center Electrode

A00E4NS

CROSSCUTS AND GAP STYLES OF SPARK PLUGS

Standard Type | Projected Insulator Type | Taper Seat Type | V-Type | Surface Discharge Type

A01E1PS

DISASSEMBLY

First unscrew the spark plug 1 turn.

Clean the spark plug and cylinder head with pressurize air then completely unscrew.

◆ WARNING : Whenever using compressed air, always wear protective eye wear.

HEAT RANGE

The proper operating temperature or heat range of the spark plugs is determined by the spark plug ability to dissipate the heat generated by combustion.

The longer the heat path between the electrode tip to the plug shell, the hotter the spark plug operating temperature will be – and inversely, the shorter the heat path, the colder the operating temperature will be.

A "cold" type plug has a relatively short insulator nose and transfers heat very rapidly into the cylinder head.

Such a plug is used in heavy duty or continuous high speed operation to avoid overheating.

The "hot" type plug has a longer insulator nose and transfers heat more slowly away from its firing end. It runs hotter and burns off combustion deposits which might tend to foul the plug during prolonged idle or low speed operation.

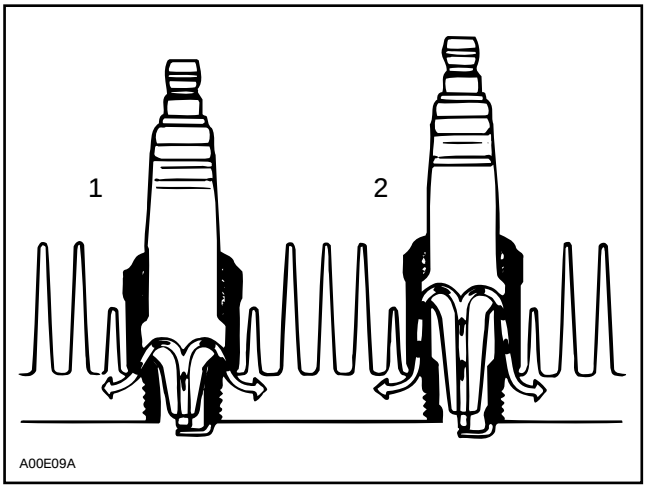

1. Cold
2. Hot

▼ CAUTION : Severe engine damage might occur if a wrong heat range plug is used.

A too "hot" plug will result in overheating and pre-ignition, etc.

A too "cold" plug will result in fouling (shorting the spark plug) or may create carbon build up which can heat up red-hot and cause pre-ignition or detonation.

FOULING

Fouling of the spark plug is indicated by irregular running of the engine, decreased engine speed due to misfiring, reduced performance, and increased fuel consumption. This is due to a loss of compression. Other possible causes are : prolonged idling, or running on a too rich mixture due to a faulty carburetor adjustment or incorrect fuel and / or fuel mixing. The plug face of a fouled spark plug has either a dry coating of soot or an oily, glossy coating given by an excess either of oil or of oil with soot. Such coatings form a conductive connection between the center electrode and ground.

SPARK PLUG ANALYSIS

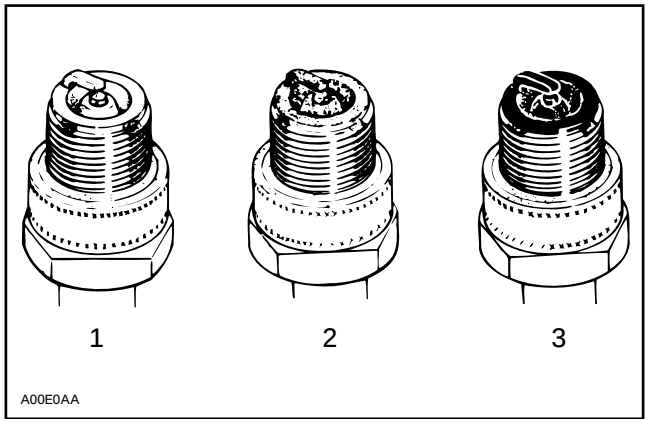

1. Overheated (light grey)
2. Normal (brownish)
3. Fouled (black)

The plug face (and piston dome) reveals the condition of the engine, operating condition, method of driving and fuel mixture. For this reason it is advisable to inspect the spark plug at regular intervals, examining the plug face (i.e. the part of the plug projecting into the combustion chamber) and the piston dome.

SPARK PLUG INSTALLATION

Prior to installation make sure that contact surfaces of the cylinder head and spark plug are free of grime.

1. Using a wire feeler gauge, set electrode gap according to TECHNICAL DATA 10.
2. Apply anti-seize lubricant (P / N 413 7010 00) over the spark plug threads to prevent possible seizure.
3. Hand screw spark plug into cylinder head and tighten with a torque wrench and a proper socket.

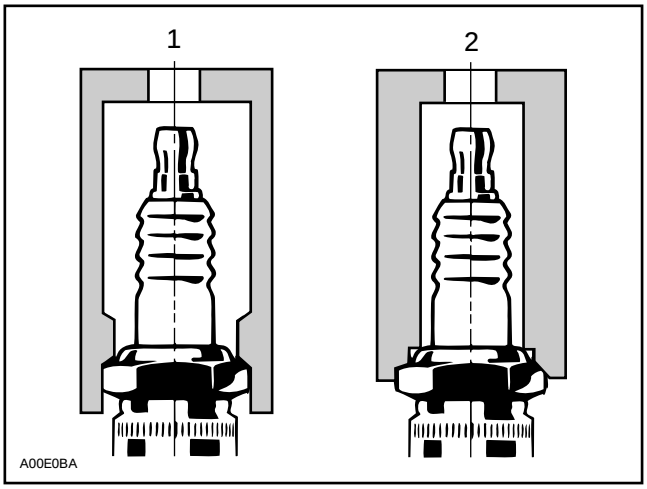

1. Proper socket
2. Improper socket

SPARK PLUG TIGHTENING TORQUE

Models	Spark plugs	Torque N•m (lbf•ft)
All models	NGK	27 (20)

BATTERY

REMOVAL

All Models

◆ WARNING : Battery BLACK negative cable must always be disconnected first and connected last.

◆ WARNING : Never charge or boost battery while installed on vehicle.

S Series with Electric Starting

Remove belt guard.

Unfasten spark plug cables from fan housing. Unplug spark plug caps.

Remove throttle cable and primer hose attachment from air silencer.

Unplug CDI box harness connector.

Slacken collar on carburetor adaptors. Remove air silencer. CDI box will come along with.

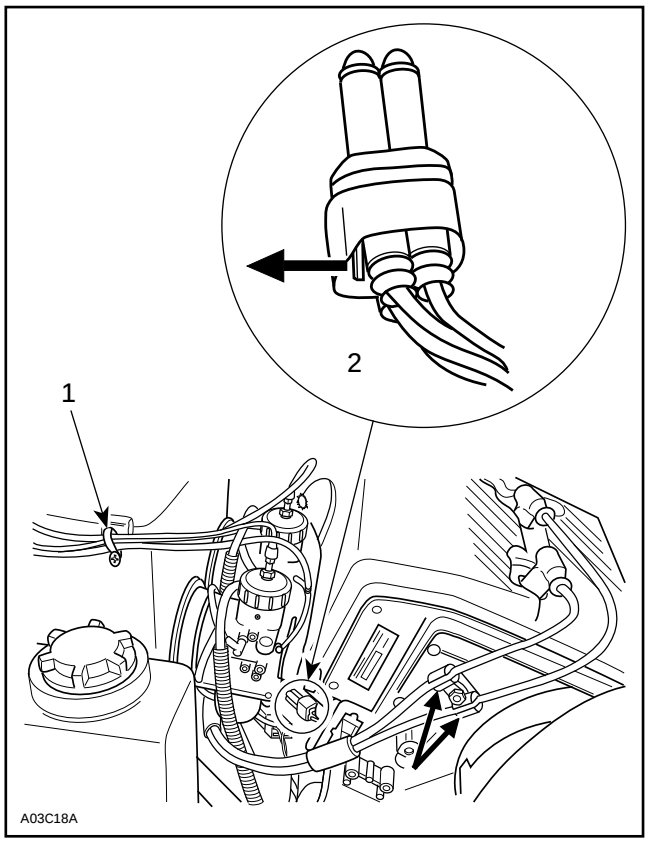

1. *Attachment*
2. *CDI box harness connector*

F Series with Electric Starting

Remove air intake silencer.

All Models Except Skandic WT

Unfasten retaining strips.

Open strips and lift battery protective boot.

Remove vent tube.

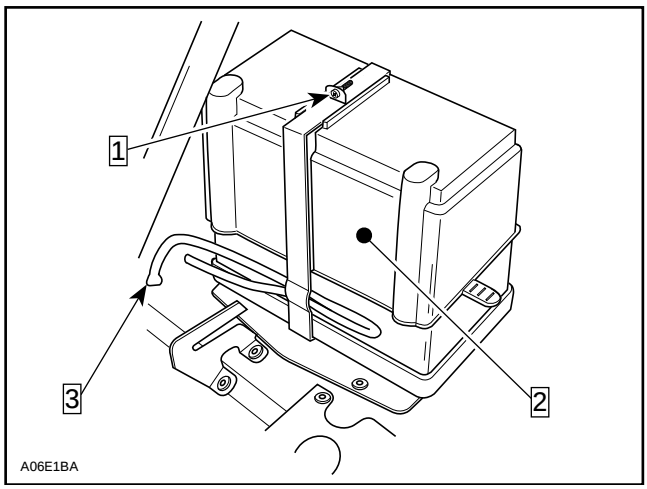

Step 1 *: Unfasten and open*
Step 2 *: Lift protective boot*
Step 3 *: Remove vent tube*

Skandic WT

Remove air intake silencer.

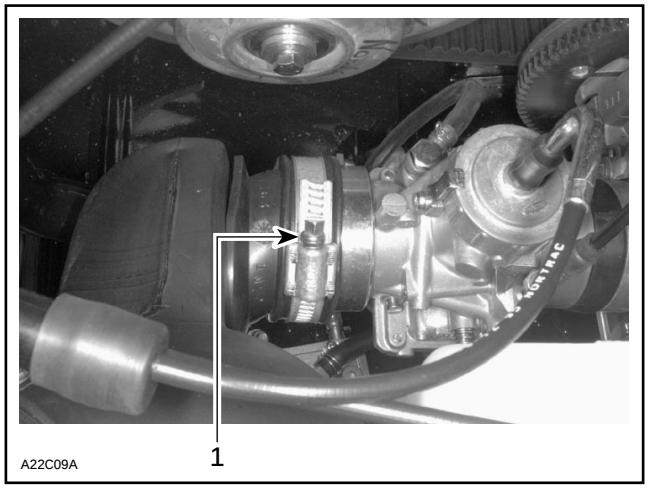

1. *Loosen clamp*

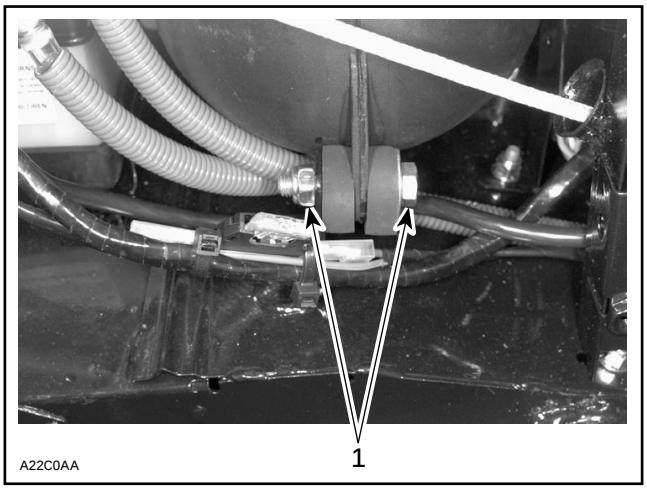

1. Remove bolt and lock nut

Unfasten battery brackets.

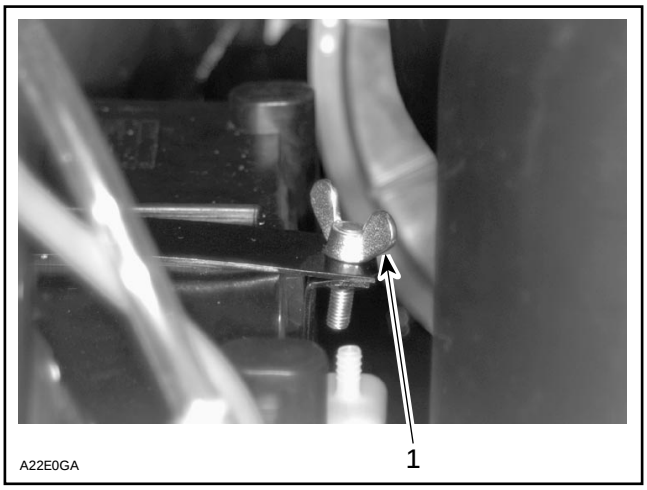

1. Wing screw

All Models

Withdraw battery from vehicle being careful not lean it so that electrolyte flows out of vent tube.

▼CAUTION : Should any electrolyte spillage occur, immediately wash off with a solution of baking soda and water to prevent damage to vehicle components.

CLEANING

Clean the battery, battery casing, vent tube, caps, cables and battery posts using a solution of baking soda and water.

▼CAUTION : Do not allow cleaning solution to enter battery interior since it will destroy the electrolyte.

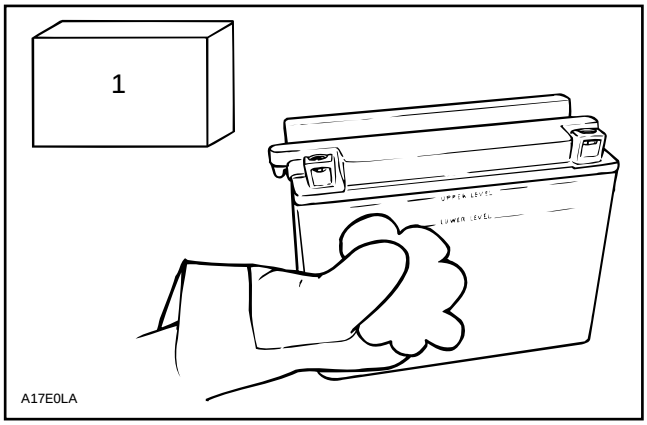

1. Baking soda

Remove corrosion from battery cable terminals and battery posts using a firm wire brush.

INSPECTION

Visually inspect battery casing for cracks or other possible damage. If casting is damaged, replace battery and thoroughly clean battery tray and close area with water and baking soda.

◆WARNING : Should the battery casing be damaged, wear a suitable pair of non-absorbent gloves when removing the battery by hand.

Inspect battery posts for security of mounting.

Inspect for cracked or damaged battery caps, replace defective caps.

◆WARNING : Battery caps do not have vent holes. Make sure that vent tube is not obstructed.

HYDROMETER TEST

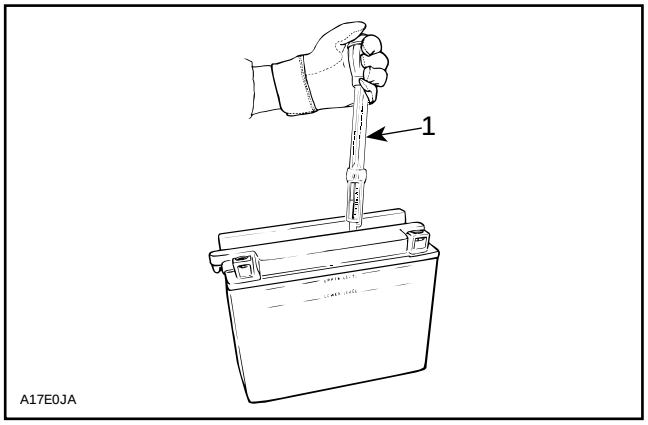

1. Specific gravity 1.260

A hydrometer measures the charge of a battery in terms of specific gravity of the electrolyte. Most hydrometers give a true reading at 27°C (80°F).

In order to obtain correct readings, adjust the initial reading by adding .004 points to the hydrometer readings for each 5.5°C (10°F) above 27°C (80°F) and by subtracting .004 point for every 5.5°C (10°F) below 27°C (80°F).

This chart will be useful to find the correct reading.

ELECTROLYTE TEMPERATURE		OPERATION TO PERFORM		
°C	°F			
38 32	100 90	add	.008 .004	to the reading
27	80	correct reading		
21 16 10 4 –1 –7 –12 –18 –23 –29 –34 –40	70 60 50 40 30 20 10 0 –10 –20 –30 –40	substract	.004 .008 .012 .016 .020 .024 .028 .032 .036 .040 .044 .048	from the reading

EXAMPLE NO. 1
Temperature below 27°C (80°F) :
Hydrometer Reading : 1.250
Electrolyte temperature : –7°C (20°F)
Subtract .024 Sp. Gr.
Corrected Sp. Gr. is 1.226

EXAMPLE NO. 2
Temperature above 27°C (80°F) :
Hydrometer Reading : 1.235
Electrolyte temperature : 38°C(100 (100°F)
Add .008 Sp. Gr.
Corrected Sp. Gr. is 1.243

CAUTION : Do not install a partially charged battery on a snowmobile since the casing might crack at freezing temperature. The following chart shows the freezing point of the electrolyte in relation to the charge of the battery.

Temperature - Corrected Specific Gravity	Battery Charge	Freezing Point of Electrolyte	
1.260	Fully charged	–59°C	(–74°F)
1.230	3/4 Charged	–40°C	(–40°F)
1.200	1/2 Charged	–27°C	(–16°F)
1.170	1/4 Charged	–18°C	(0°F)
1.110	Discharged	–7°C	(+19°F)

BATTERY STORAGE

Disconnect and remove battery from the vehicle.

Check electrolyte level in each cell, add distilled water up to upper level line.

CAUTION : Do not overfill.

The battery must always be stored in fully charged condition. If required, charge until specific gravity of 1.260 is obtained.

CAUTION : Battery electrolyte temperature must not exceed 50°C (122°F). The casing should not feel hot.

Clean battery terminals and cable connections using a wire brush. Apply a light coat of dielectric grease (P / N 413 7017 00) or petroleum jelly on terminals.

Clean battery casing and caps using a solution of baking soda and water. Do not allow cleaning solution to enter battery, otherwise it will destroy the electrolyte. Rinse battery with clear water and dry well using a clean cloth.

Store battery on a wooden shelf in a cool dry place. Such conditions reduce self-discharging and keep fluid evaporation to a minimum.

During the storage period, recheck electrolyte level and specific gravity readings at least every 40 days. As necessary, keep the battery at its upper level line and near full charge as possible (trickle charge).

ACTIVATION OF NEW BATTERY

WARNING : Never charge or boost battery while installed on vehicle.

CAUTION : Prior to charging the battery, al-ways remove it from the vehicle to prevent electrolyte spillage.

A new battery is factory fresh dry charged. For storage purposes, it is fitted with a temporary sealing tube.

Do not remove the sealing tube or loosen battery caps unless activation is desired.

In case of accidental premature removal of caps or sealing tube, battery should be given a full charge.

Perform the following operations anytime a new battery is to be installed.

1. Remove the sealing tube from the vent elbow. Install vent tube, included in the battery kit, to battery elbow.

◆ WARNING : Failure to remove the sealing tube could result in an explosion.

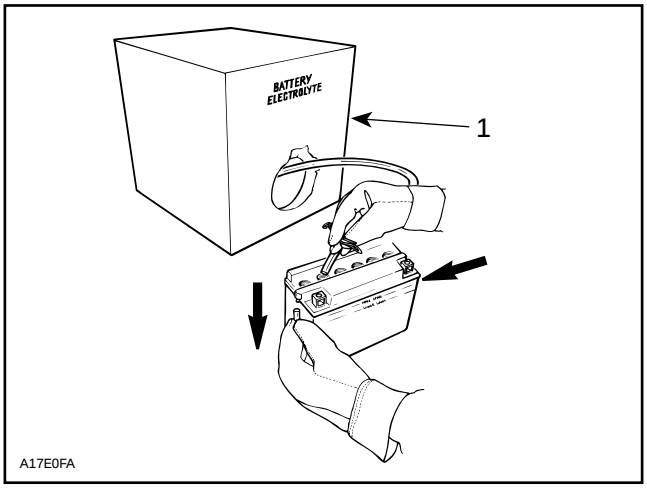

1. Battery electrolyte

2. Remove caps and fill battery to UPPER LEVEL line with electrolyte (specific gravity : 1.260 at 20°C (68°F)).
3. Allow the battery to stand for 30 minutes MINIMUM so that electrolyte soak through battery cells.

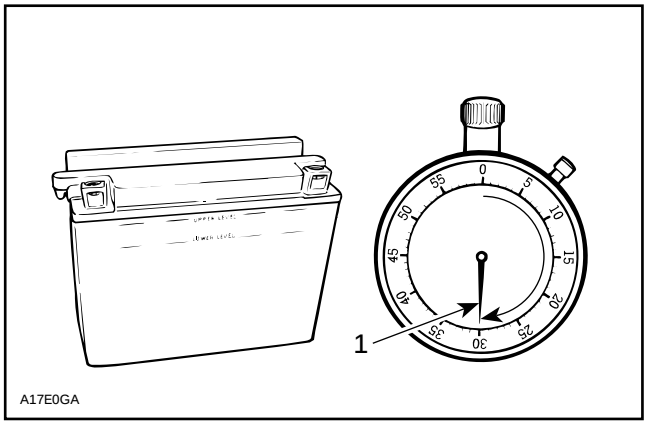

1. 30 minutes

4. Allow gas bubbles to escape by lightly shaking battery by hand.

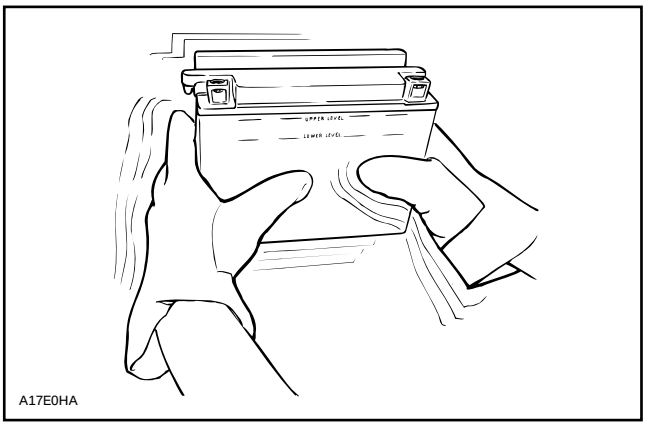

5. Readjust the electrolyte level to the UPPER LEVEL line.

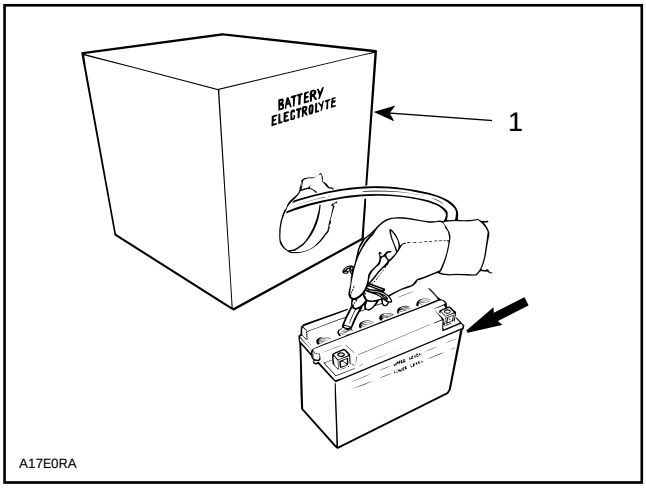

1. Battery electrolyte

6. Connect a 2 A battery charger for 10 to 20 hours.

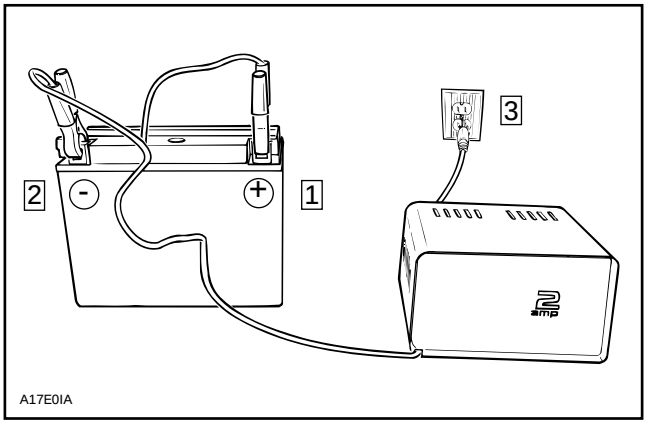

▼CAUTION : If charging rate raises higher than 2.4 A reduce it immediately. If cell temperature rises higher than 50°C (122°F) (if the casing feels hot) discontinue charging temporarily or reduce the charging rate.

◆ WARNING : Gases given off by a battery being charged are highly explosive. Always charge in a well ventilated area. Keep battery away from cigarettes or open flames. Always turn battery charger off **prior to** disconnecting cables. Otherwise a spark will occur and battery might explode.

7. Disconnect battery charger.

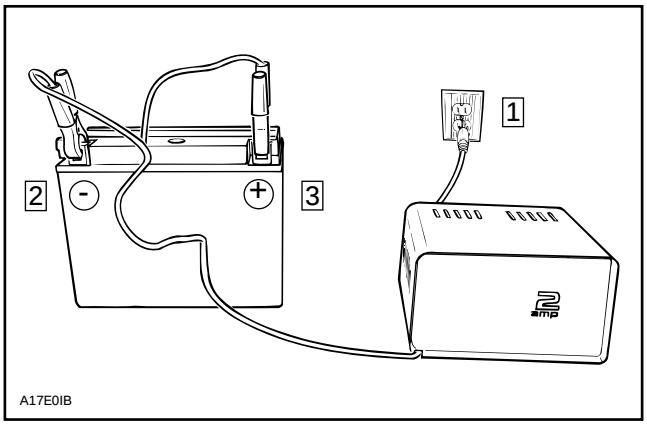

8. Test battery state of charge. Use a hydrometer.

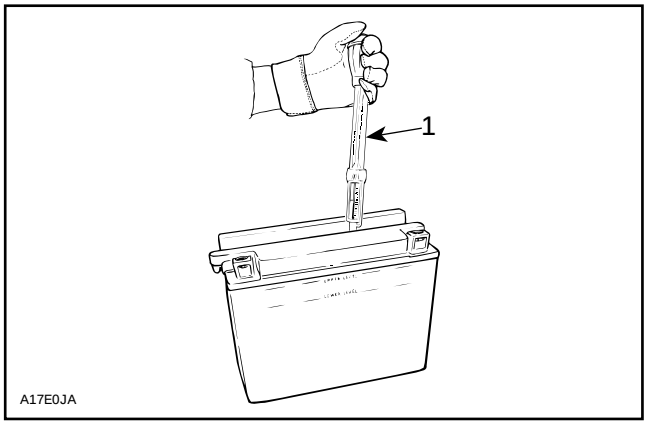

1. Specific gravity 1.260

9. Let battery settles for one hour.

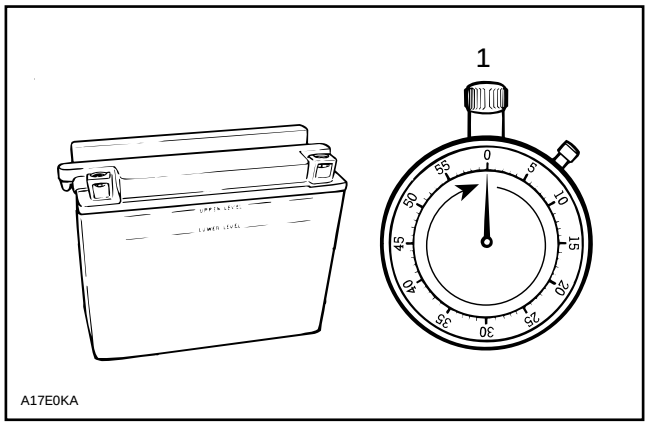

1. 60 minutes

10. Allow gas bubbles to escape by lightly shake battery.

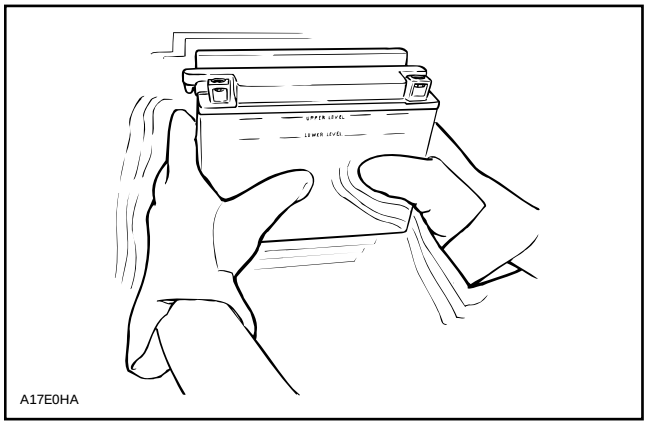

11. Readjust electrolyte level.

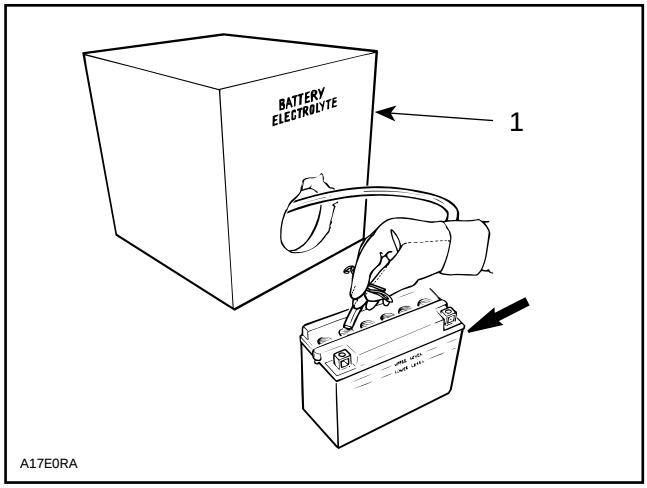

1. Battery electrolyte

12. Reinstall caps and clean any electrolyte spillage using a solution of baking soda and water.

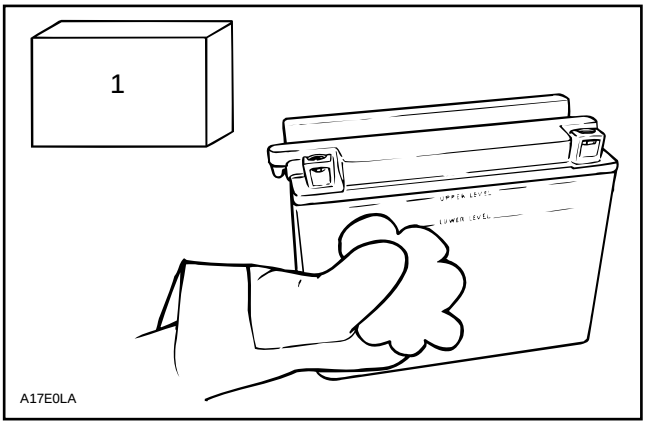

1. Baking soda

▼CAUTION : Do not allow cleaning solution to enter battery interior since it will destroy the electrolyte.

○NOTE : It is recommended to verify the battery charge once a month. If necessary, fully charge battery.

SERVICING

Electrolyte Level

Since a battery has been activated (see above), add distilled water to top up electrolyte.

TIPS FOR CHARGING A USED BATTERY

▼CAUTION : Prior to charging the battery, always remove it from the vehicle to prevent electrolyte spillage.

For best results, battery should be charged when the electrolyte and the plates are at room temperature. A battery that is cold may not accept current for several hours after charging begun.

Do not charge frozen battery. If the battery charge is very low, the battery may freeze. If it is suspected to be frozen, keep it in a heated area for about two hours before charging.

◆WARNING : Do not place battery near open flame.

The time required to charge a battery will vary depending some factors such as :

– Battery temperature : The charging time is increased as the temperature goes down. The current accepted by a cold battery will remain low. As the battery warms up, it will accept a higher rate of charge.
– State of charge : Because the electrolyte is nearly pure water in a completely discharged battery, it cannot accept current as well as electrolyte. This is the reason the battery will not accept current when the charging cycle first begins. As the battery remains on the charger, the current from the charger causes the electrolytic acid content to rise which makes the electrolyte a better conductor and then, the battery will accept a higher charging rate.
– Type of charger : Battery chargers vary in the amount of voltage and current that they can supply. Therefore, the time required for the battery to begin accepting measurable current will also vary.

Charging a Very Flat or Completely Discharged Battery :

Unless this procedure is properly followed, a good battery may be needlessly replaced.

– Measure the voltage at the battery posts with an accurate voltmeter. If it is below 10 volts, the battery will accept current at very low rate, in term of milliamperes, because electrolyte is nearly pure water as explained above. It could be some time before the charging rate increases. Such low current flow may not be detectable on some charger ammeters and the battery will seem not to accept any charge.
– Only for this particular case, set the charger to a high rate.

○NOTE : Some chargers have a polarity protection feature which prevents charging unless the charger leads are connected to the correct battery terminals. A completely discharged battery may not have enough voltage to activate this circuitry, even though the leads are connected properly. This will make it appear that the battery will not accept a charge. Follow the charger manufacturer's instruction telling how to bypass or override this circuitry so that the charger will turn on and charge a low-voltage battery.

– Since the battery chargers vary in the amount of voltage and current they provide, the time required for the battery to accept measurable charger current might be up to approximatively 10 hours or more.
– If the charging current is not up to a measurable amount at the end of about 10 hours, the battery should be replaced.

– If the charging current is measurable before the end or at the end of about 10 hours, the battery is good and charging should be completed in the normal manner as specified in Activation of a new battery.
– It is recommended that any battery recharged by this procedure be load tested prior to returning it to service.

BATTERY CHARGING EQUIPMENT

The battery charger should have an adjustable charging rate. Variable adjustment is preferred, but a unit which can be adjusted in small increments is acceptable.

The battery charger must be equipped with an ammeter capable of accurately measuring current of less than one ampere.

If the present charger is not adjustable to the proper current values, a rheostat can be connected in series with the battery to provide adjustment. 12 Ohm, 50 watt rheostats, such as OHMITE – 0314 or MALLORY 50K 12P, are available from electronic parts supply shops and they are suitable for use with most chargers if the peak current is to be held below 2 amps.

If you need an accurate ammeter, we recommend the use of : SHURITE – 5202 (0 to 3 amps) or – 5203 (0 to 5 amps) available from electronic parts supply shops.

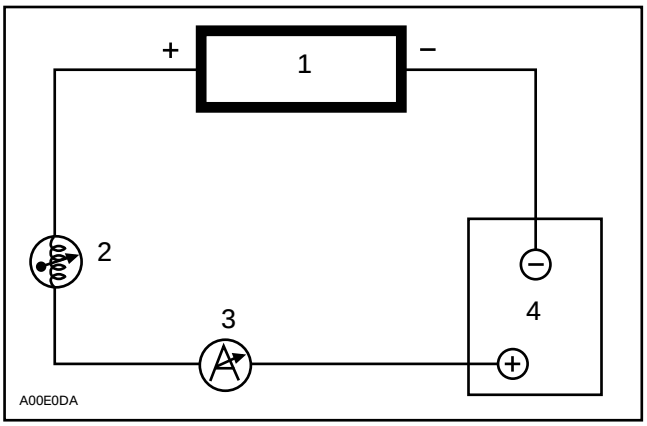

1. Charger
2. Rheostat 12 Ω, 50 W
3. Ammeter
4. Battery

For a service application and a permanent installation, both ammeter and rheostat can be built into a small box adjacent to your charger.

CAUTION : Adequate ventilation MUST be provided to cool the rheostat.

Charging 2 or More Batteries at a Time

Connect all positives together and use a charger with a capacities (rated) equal to : number of battery to be charged multiply by 2 A.

For example : charging five batteries at a time requires a 10 A rated charger (5 x 2 A = 10 A).

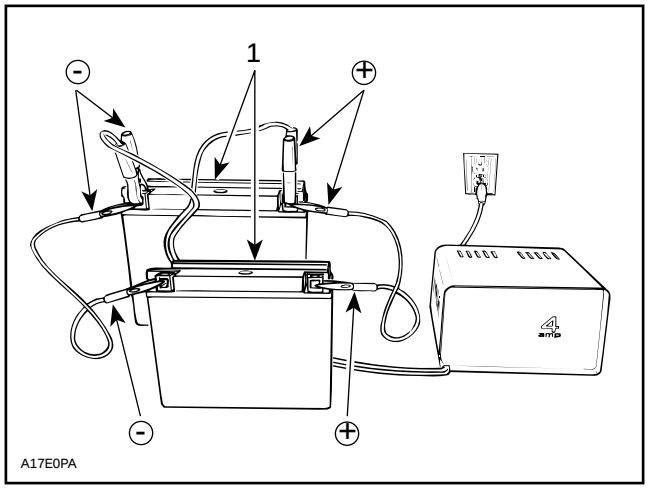

TYPICAL
1. 2 batteries = 4 A

INSTALLATION OF BATTERY

S Series and F Series with Electric Starting

Ensure vent tube is properly installed on battery elbow, then install protective boot over battery.

Bent rear strip by 15° to facilitate installation. That strip can also be taped on its hook portion so it stays in place.

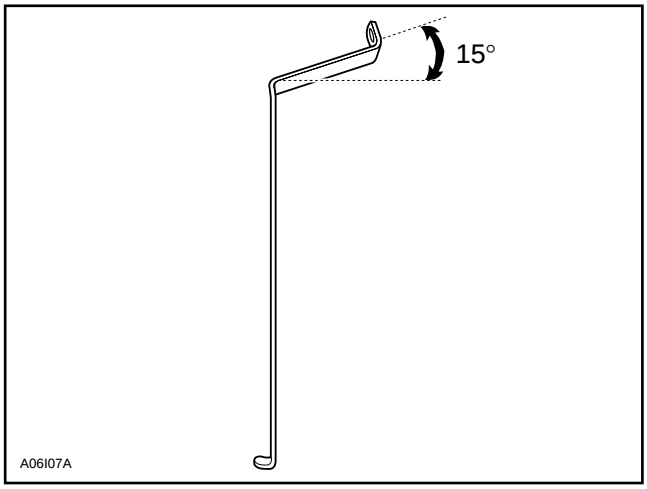

Close and fasten retaining strips.

Connect vent tube to vehicle fitting on front frame.

Route RED positive cable behing retaining strip and connect it to positive battery terminal.

Connect BLACK negative cable LAST.

▼CAUTION : Negative battery terminal should always be disconnected FIRST and reconnected LAST.

Apply silicone dielectric grease (P / N 413 7017 00) on battery posts and connectors.

Connect vent tube to vehicle fitting on front frame.

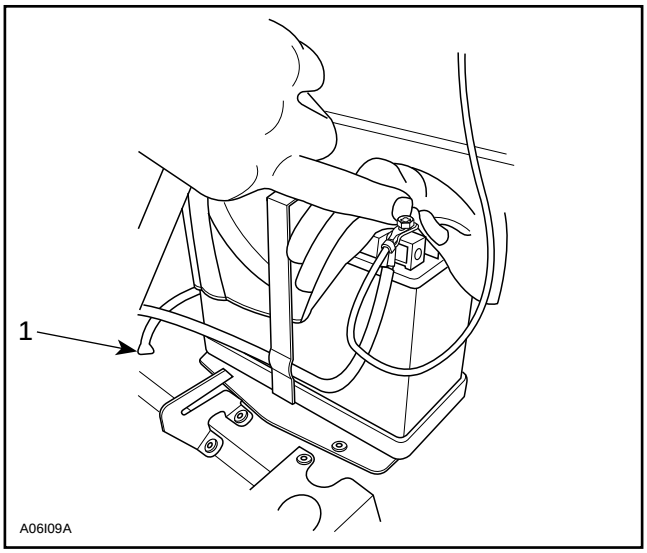

1. Vent tube on fitting

Ensure that vent tube is not kinked or blocked.

Reinstall air silencer.

◆ WARNING : Vent tube must be free and open. A kinked or bent tube will restrict ventilation and create gas accumulation that might result in an explosion.

S Series With Electric Starting

Fasten spark plug cables to fan housing.

Reinstall throttle cable and primer hose attachment to air silencer. See removal illustration.

Skandic WT

Secure battery brackets.

Connect battery cables.

▼CAUTION : Negative BLACK battery terminal should always be disconnected FIRST and reconnected LAST.

Apply silicone dielectric grease (P / N 413 7017 00) on battery posts and connectors.

Ensure vent tube is properly installed on battery elbow and that is not kinked or blocked.

Reinstall air intake silencer.

Secure oil injection pump cable to air intake silencer using a locking tie. Install locking tie loosely as per following illustration.

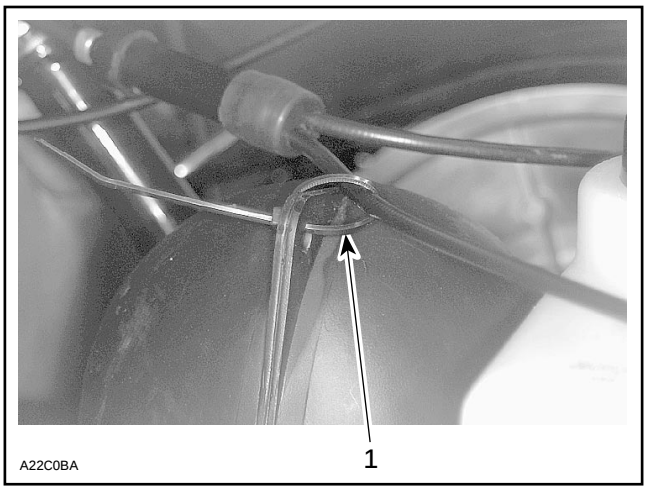

1. Locking tie

ELECTRIC STARTER

Skandic WT, S Series and F Series with Electric Starting

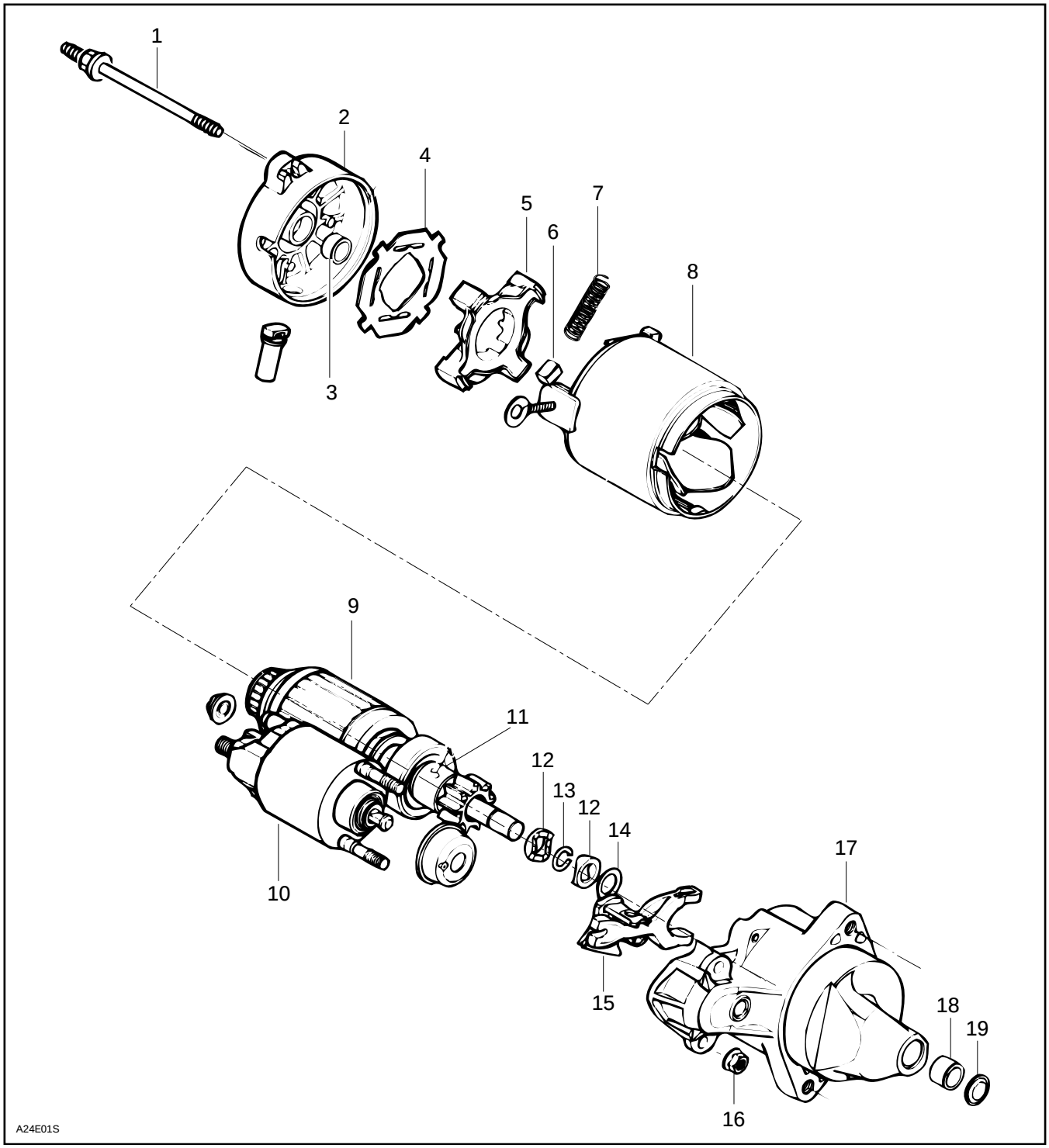

REMOVAL

– Disconnect BLACK ground cable from battery.
– Disconnect RED positive cable from battery.

◆ WARNING : Always disconnect ground cable first and connect last.

– Disconnect RED cable and RED / GREEN wire from starter solenoid switch.
– Remove starter from engine.

DISASSEMBLY

Disconnect bare wire linking starter and solenoid.

10,15,16, Solenoid Switch, Drive Lever and Nut

Remove nuts then solenoid switch by lifting and pulling to disengage from drive lever.

1,2,8,17, Screw, End Frame, Yoke and Drive Housing

Unscrew starter longer screws then pull yoke with end frame to separate from drive housing.

9,14,15, Armature, Thrust Washer and Drive Lever

Pull armature with drive lever being careful not to lose thrust washer at shaft end.

4,5,7, Insulator, Brush Holder and Spring

Remove insulator then brush springs being careful not to lose them since they will be projected out.

Pull brush holder from yoke.

11,12,13, Overrunning Clutch, Circlip and Stop Collar

Insert blade of a small screwdriver between stop collars.

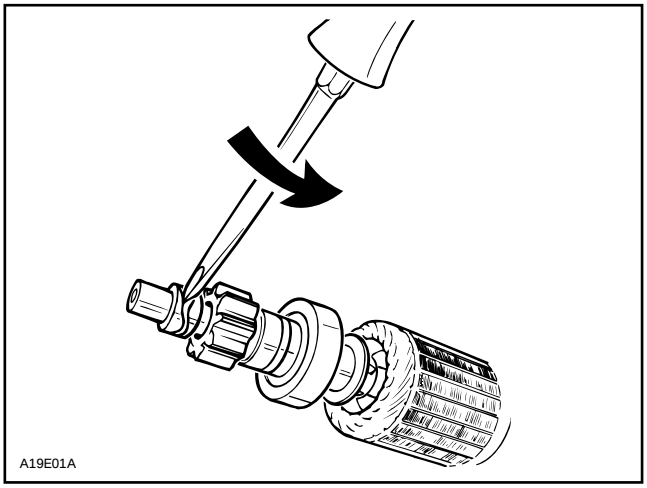

Twist screwdriver to separate stop collars thus giving access to circlip.

Remove outer collar, circlip then inner collar.

Remove overrunning clutch.

18,19, Bushing (Drive Housing) and Cover

Check the wear on bushing by measuring the amount of radial play between the armature shaft and the bushing.

The radial play should not exceed 0.20 mm (0.008 in). If greater, replace the bushing. To replace, press out the old one toward bushing cover and press in a new one with a bushing pusher. The correct size of the bushing pusher to use is given on next illustration.

▼ CAUTION : Support drive housing adequately to prevent damage when pressing bushing.

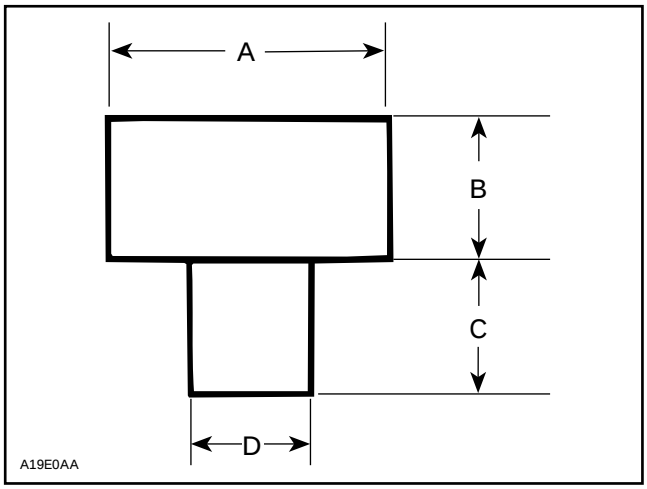

BUSHING PUSHER

A. 16 mm (5/8 in) dia.
B. 13 mm (1/2 in)
C. 11 mm (7/16 in)
D. 11 mm (.433 in) dia.

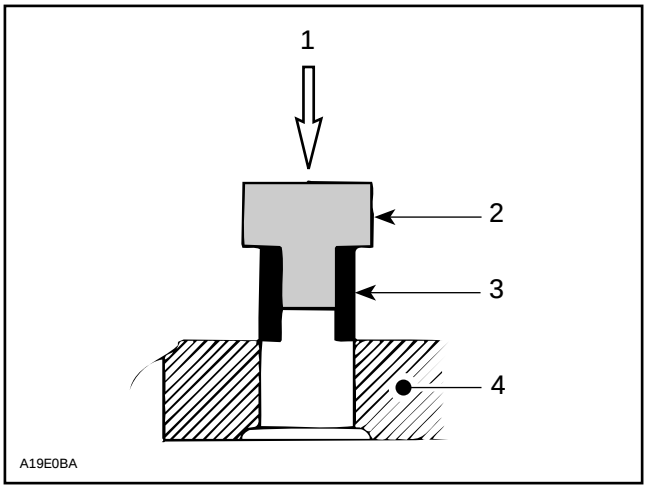

1. Press-in
2. Bushing pusher
3. Bushing
4. Drive housing

Install bushing cover then, using a punch, stake bushing cover in place.

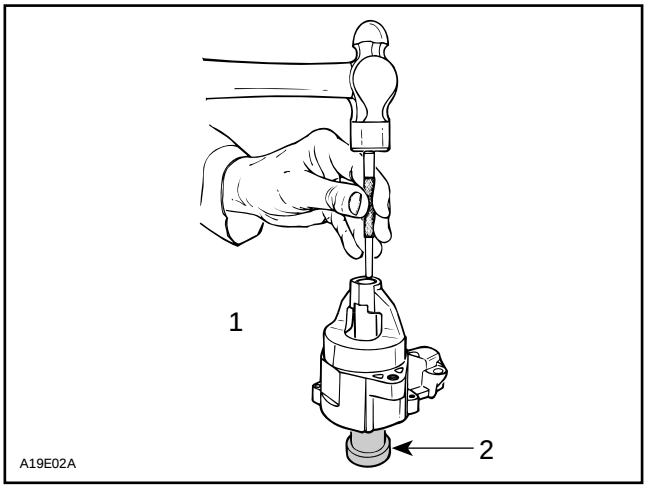

1. Stake bushing cover
2. Support

3, Bushing (End Frame)

Check the wear on bushing by measuring the amount of radial play between the armature shaft and the bushing.

The radial play should not exceed 0.20 mm (.008 in). If greater, replace bushing as follows :

Using a 12 mm tap, cut threads into bushing so that the tap contacts the end frame. Continue to rotate tap until the bushing comes free.

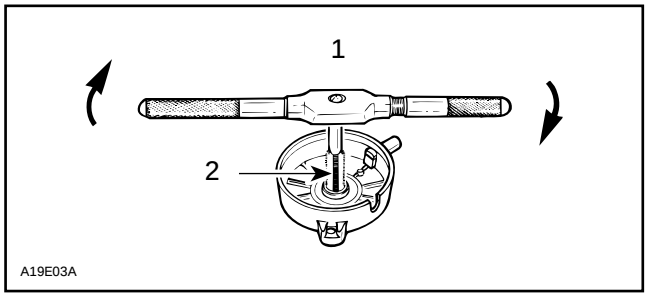

1. Turn until bushing goes out
2. 12 mm tap

To install new bushing, use the same bushing pusher as for drive housing bushing installation.

6, Brush

To replace, proceed as follows :

Cut brush wire close to connector at the welded portion.

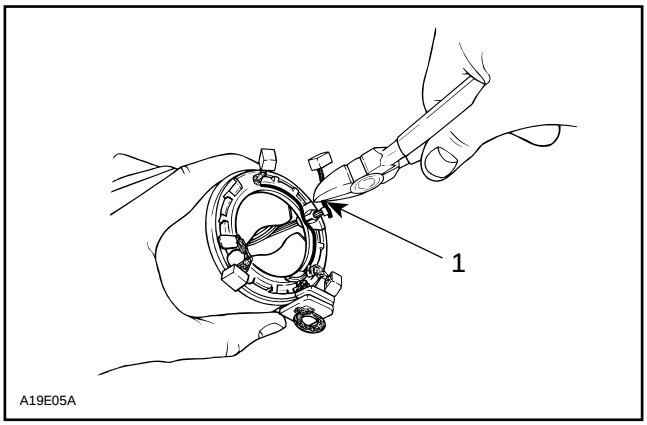

1. Cut close to connector

Remove burrs with a file on the remaining welded portion.

CAUTION : Be careful not to damage plastic portion of yoke.

Place spare brush plate edge against yoke connector edge (welded portion).

Crimp plate over yoke connector with a pair of pliers.

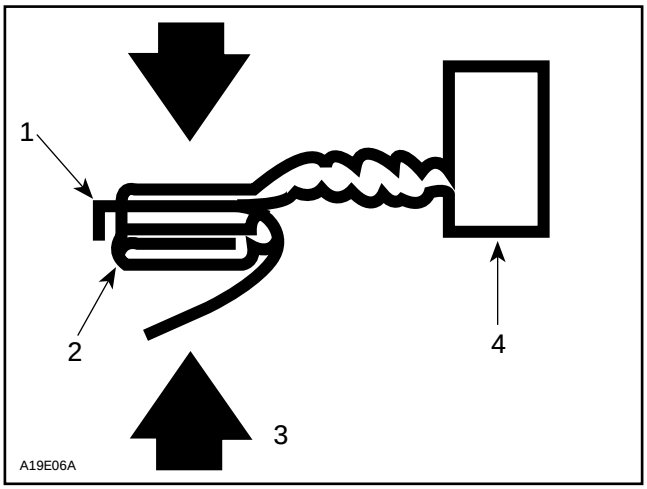

1. Plate edge
2. Yoke connector
3. Crimp
4. Spare brush

Solder the crimped portion.

CAUTION : Do not overheat and quickly per-form soldering to prevent solder from flowing to the brush through the wire. Preferably use a heat sink.

CLEANING AND INSPECTION

Refer to the end of this sub-section.

ASSEMBLY

Prior to assembling, coat sliding surfaces and moving parts on armature shaft splines, overrunning clutch, solenoid switch plunger, drive lever and bushings with G.E. Versilube G 321 (P / N 413 7040 00) lubricant.

Proceed as follows for assembling.

Secure drive housing in a vise.

CAUTION : Do not overtighten since housing might be damaged.

12,13, Stop Collar and Circlip

Install overrunning clutch onto armature shaft. Insert inner collar onto shaft. Install a new circlip.

CAUTION : Always install a new circlip when servicing.

Insert outer collar being careful to match protrusions with notches of collars.

Using a pair of pliers on each side of stop collars, squeeze evenly until collars sit over circlip.

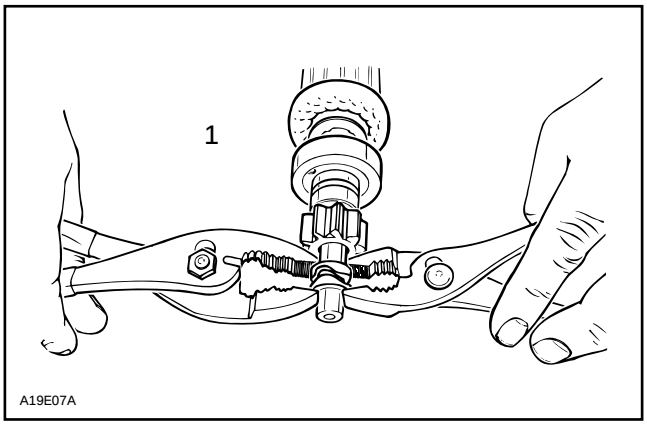

1. Squeeze evenly

12,14,15,17, Stop Collar, Thrust Washer, Drive Lever and Drive Housing

Install thrust washer against outer stop collar. Place drive lever onto overrunning clutch then insert into drive housing.

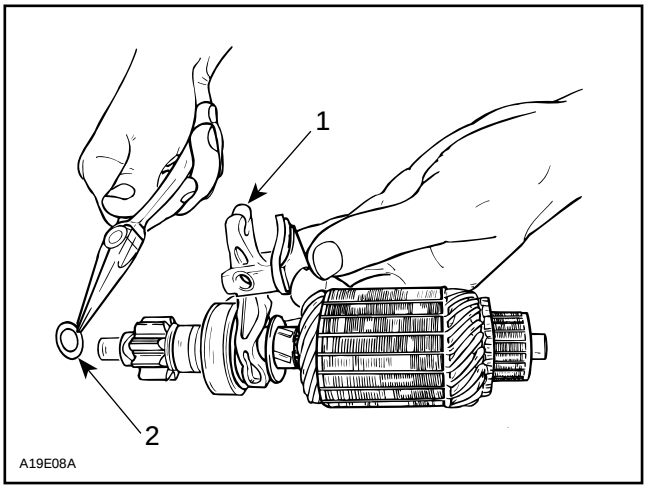

1. Install on overrunning clutch
2. Install thrust washer

5,6,7,8,9, Brush Holder, Brush, Spring, Yoke and Armature

Slide yoke over armature.

Install brush holder then brushes in their housings. Insert springs as follows : place one end of spring against brush, compress, then push the other end of spring onto its housing. Repeat for remaining springs.

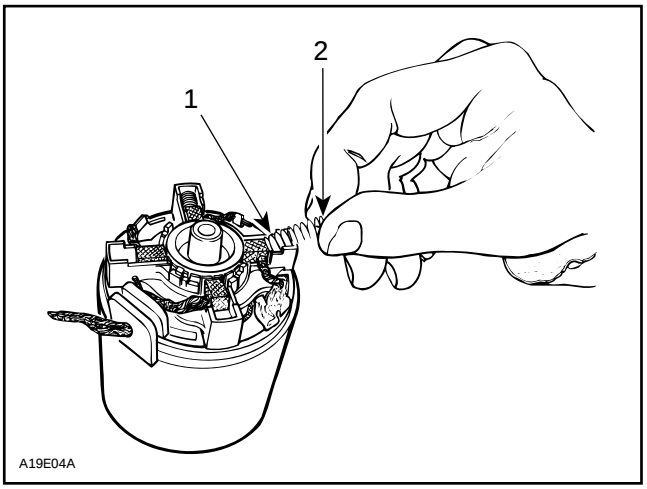

1. This end first
2. Push this end to complete

1,2,4, Screw, End Frame and Insulator

Secure insulator over brushes and springs. Properly install end frame and tighten screws.

10,15,17, Solenoid, Drive Lever and Drive Housing

Insert solenoid plunger inside of drive lever fork and secure to drive housing.

Connect starter bare wire to solenoid.

NOTE : Connect this wire on the shorter solenoid stud.

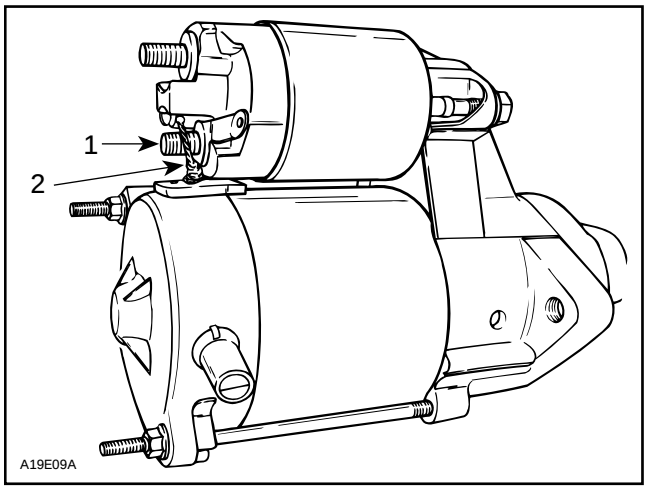

1. Shorter stud
2. Bare wire

INSTALLATION

Make sure that starter and engine mating surfaces are free of grime. Serious trouble may arise if starter is not properly aligned.

Install starter.

NOTE : Check proper engaging depth of starter pinion teeth to ring gear teeth (see illustration). Install hardened washers (P / N 503 0079 00) between engine and starter support and / or starter bracket accordingly.

CAUTION : All starter and starter bracket fasteners must be secured with Loctite 271 (P / N 413 7074 00).

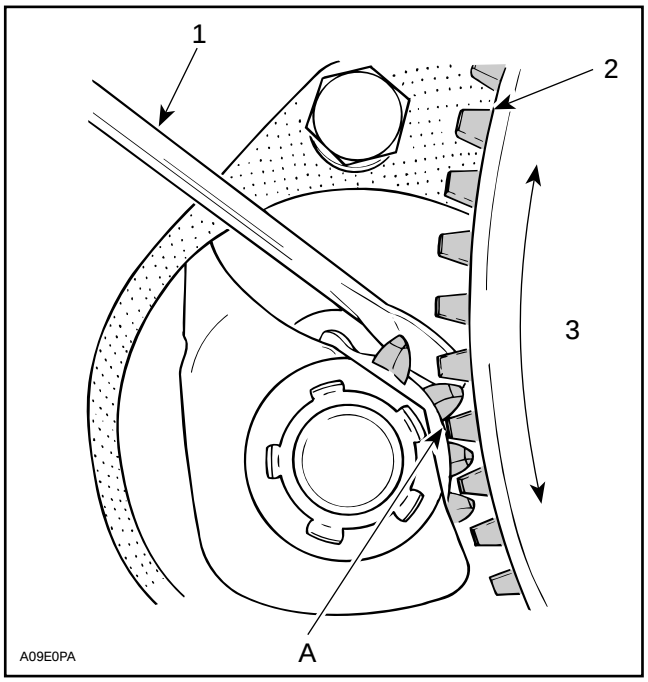

1. Screwdriver pulling starter pinion
2. Ring gear
3. No excessive backlash
A. 0.5 to 1.5 mm (.020 to .060 in)

Connect the RED battery cable and the red wire to the large terminal of the solenoid. Connect RED / GREEN wire to small terminal of solenoid.

Connect BLACK cable to battery.

◆ WARNING : Always disconnect ground cable first and connect last.

CLEANING AND INSPECTION

CLEANING

CAUTION : Armature starter yoke ass'y and drive unit assembly must not be immersed in cleaning solvent.

Clean brushes and holder with a clean cloth soaked in solvent. Brushes must be dried thoroughly with a clean cloth.

Blow brush holder clean using compressed air.

WARNING : Always wear safety goggles when using compressed air.

Remove dirt, oil or grease from commutator using a clean cloth soaked in suitable solvent. Dry well using a clean, dry cloth.

Clean engine starter gear teeth and drive unit (clutch).

NOTE : Bushings must not be cleaned with grease dissolving agents.

Immerse all metal components in cleaning solution. Dry using a clean, dry cloth.

INSPECTION

Armature

NOTE : An ohmmeter may be used for the following testing procedures, except for the one concerning the shorted windings in the armature.

Check the commutator for roughness, burnt or scored surface. If necessary, turn the commutator on a lathe, enough to remove grime only.

Check the commutator for mica depth. If the depth is less than 0.20 mm (0.008 in), undercut the mica. Be sure that no burrs are left and no copper dust remains between the segments after the undercutting operation is completed.

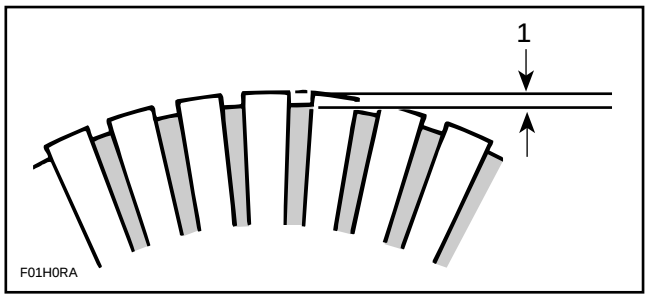

1. Commutator undercut 0.20 mm (.008 in)

Check the commutator out-of-round condition with V- Blocks and an indicator. If the commutator out-of-round is more than 0.40 mm (.016 in), the commutator should be turned on a lathe.

Check commutator outer diameter. If less than specified value, replace.

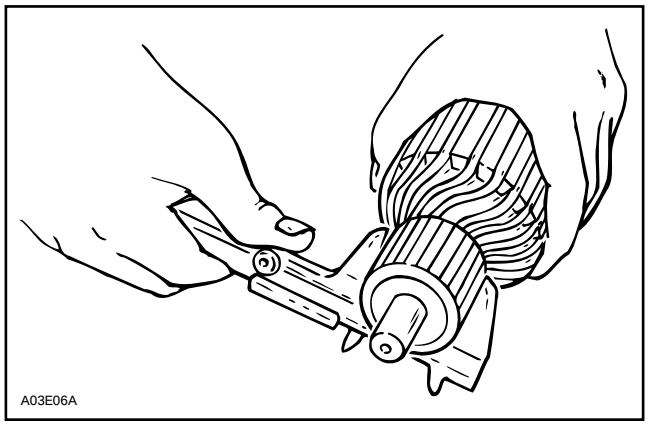

MODEL	WEAR LIMIT
All	27 mm (1.063 in)

Test for Ground Circuit in the Armature :

Use growler test probes. Check between armature core and the commutator bars. If growler lamp turns on, bars are grounded.

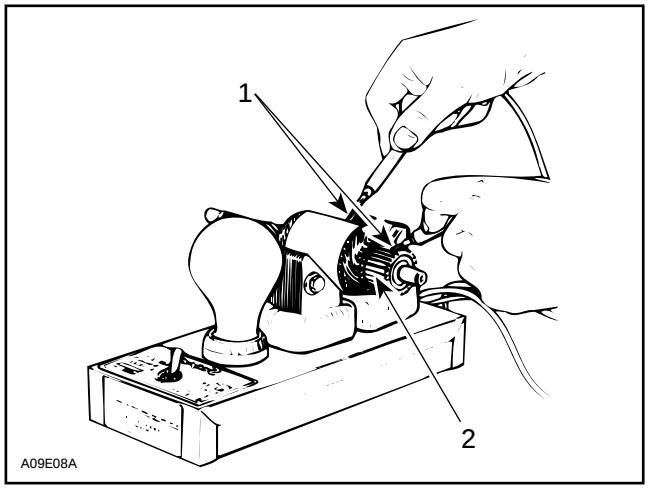

1. Test probes
2. Commutator bars

Test Armature for Shorted Winding :

When the armature is rotated in the growler with a steel strip (hack-saw blade) held above it, the strip will vibrate over that area of the armature which has short circuited.

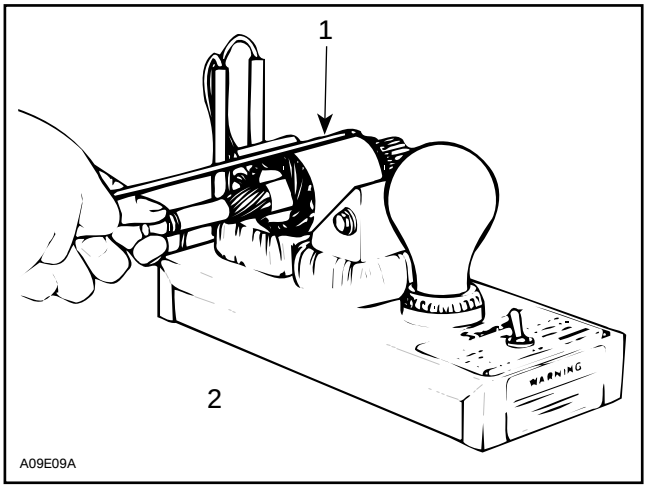

1. Steel strip (hack-saw blade)
2. Growler

Test the Armature for Open Circuit :

Use growler test probes. Place one test probe on a commutator bar and the other test probe on the neighboring bar. Repeat this operation for all bars, moving one test probe at a time. If the growler lamp does not turn on, the armature circuit between these two bars is opened. The armature should be replaced or repaired ; open circuits most often occur at the commutator riser where coils are soldered. (Burnt commutator bars are usually an indication of an open-circuited armature coil).

Field Windings and Brushes

Test the Field Winding for Open Circuit

Use growler test probes. Place one test probe on the negative brush and the other test probe on the yoke. If growler lamp does not turn on, the field winding has an open-circuit. The yoke has to be repaired or replaced.

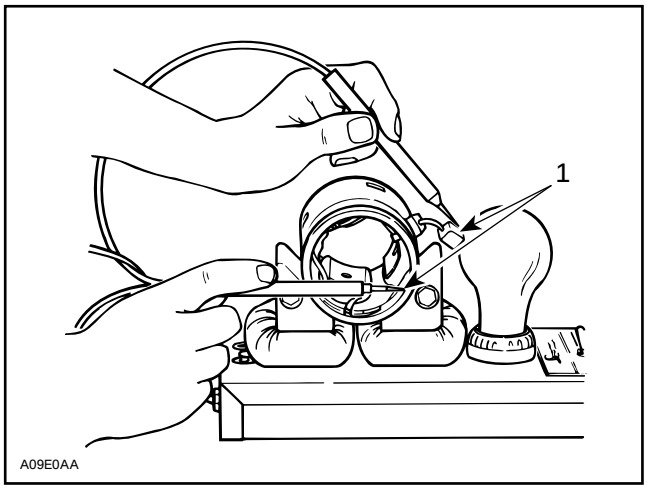

1. Test probes

Check the dynamic brake winding for open circuit by placing one test probe on the positive brush and the other probe on the negative brush.

If growler lamp does not turn on, the winding circuit is open-circuit and the yoke has to be repaired or replaced.

Brush Holder

Check the brush holder for insulation using growler test probes. Place one test probe on the insulated brush holder and the other test probe on the brush holder plate. If the growler lamp turns on, the brush holder has to be repaired or replaced.

Brush Length

Measure brush length. If less than the specified value, replace them.

MODEL	LENGTH	
	New	Wear limit
All	10 mm (.400 in)	6 mm (.236 in)

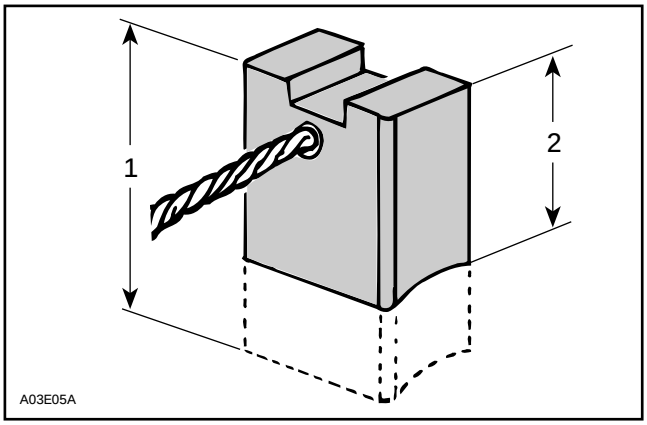

TYPICAL

1. *New*
2. *Wear limit*

Overrunning Clutch

The pinion of the overrunning clutch should turn smoothly in the clockwise direction, and should not slip in a counterclockwise direction. If defective, replace.

Check the pinion teeth for wear and damage. If defective, replace.

SOLENOID SWITCH

Inspect connections and clean as necessary. Solenoid switch condition can be checked with an ohmmeter. Install test probes on large connectors of solenoid when it is activated (+ on RED / GREEN wire and – on solenoid body).

IMPORTANT: No current must be present on large cables when using ohmmeter, otherwise meter could be damaged.

TESTING PROCEDURE

GENERAL

The following chart gives the engine types with their implemented system.

ENGINE TYPE	IGNITION SYSTEM	CHARGING SYSTEM OUTPUT
454, 494, 582, 583 and 670	①NIPPONDENSO (CDI) TRIGGER COIL	220
599 and 779	②NIPPONDENSO (CDI) TRIGGER COIL WITH 3 H.T. COILS	220
503	③DUCATI (ADC)	240

CDI System Identification

Nippondenso

The NIPPONDENSO CDI system has a separate ignition coil which is mounted on the reservoir cluster.

1. Ignition module is connected to the ignition generator coil via a 3-wire connector (RED, BLACK / RED and BLACK wires).

582 and 583 Engines

Ignition module stamped P / N : 070000-2281

Ignition coil stamped P / N : 129700-2982

Flywheel stamped P / N : 032000-7860

454, 494 and 670 Engines

Ignition module stamped P / N : 070000-2281

Ignition coil stamped P / N : 129700-2982

Flywheel stamped P / N : 032700-5900

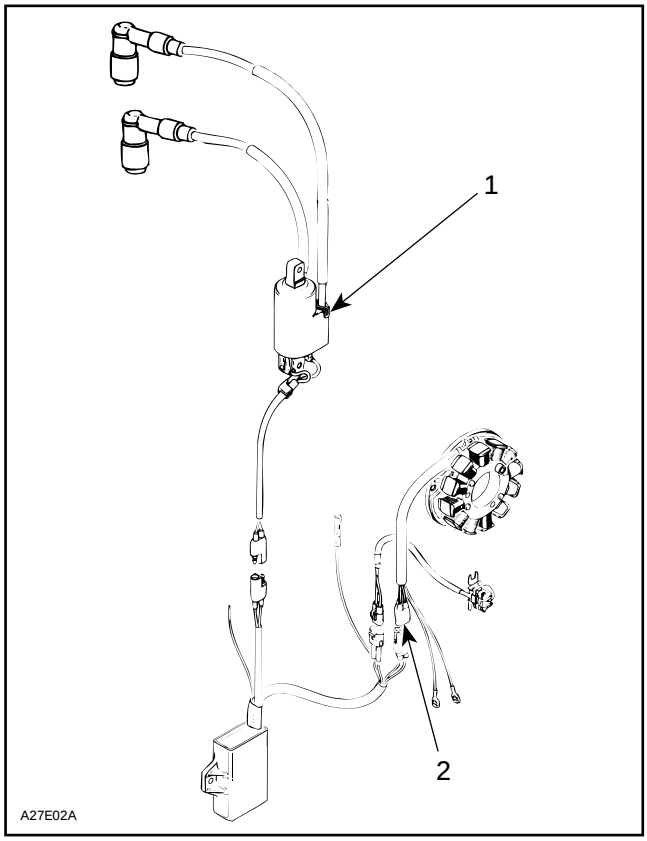

①NIPPONDENSO CDI TRIGGER COIL SYSTEM

1. Separate ignition coil mounted on reservoir cluster
2. Three-wire connector (RED, BLACK / RED and BLACK)

2. Ignition module is connected to the ignition generator coil via a 3-wire connector (BLACK / RED, WHITE and RED wires).

599 and 779 Engines

Ignition module stamped P / N : 070000-2341

Ignition coil stamped P / N : 129700-2990 or 129700-2991

Flywheel stamped P / N : 032000-7902

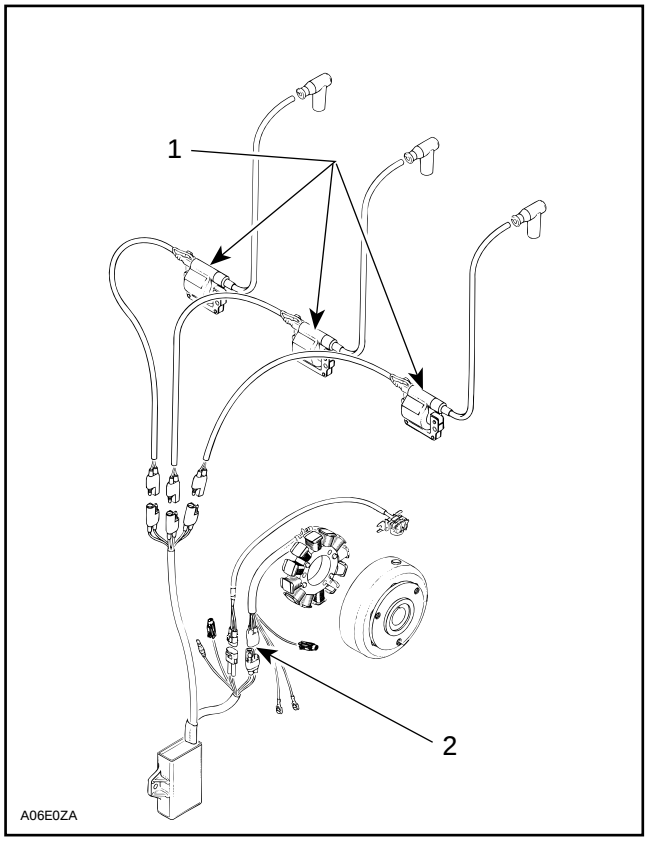

②*NIPPONDENSO CDI TRIGGER COIL THREE H.T. COILS*

1. *Separate ignition coils mounted on carburetor flanges*
2. *Three-wire connector (BLACK / RED, WHITE and RED)*

Ducati

The DUCATI CDI system has a combined ignition module / ignition coil which are mounted on oil reservoir support.

Ignition module is connected to the ignition generator coils via a 2-wire connector (GREEN and WHITE wires).

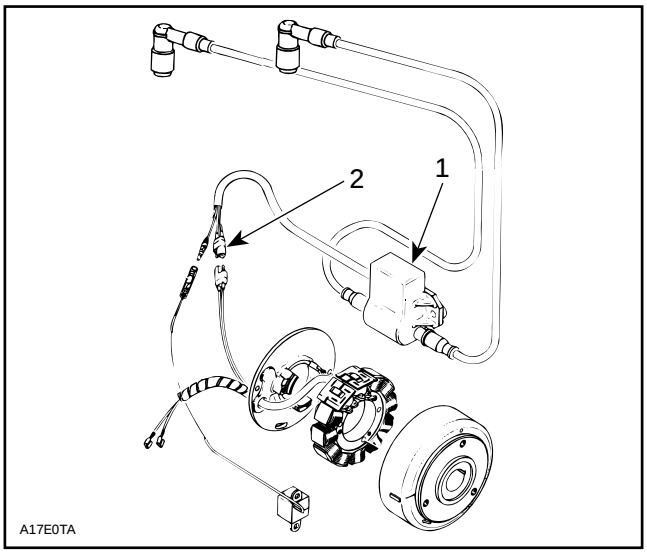

③*DUCATI CDI SYSTEM*

1. *Combined ignition module / ignition coil mounted on air silencer below carburetor*
2. *Two-wire connector (GREEN / WHITE wires)*

Ignition System Testing Sequence

When dealing with ignition problems, the following items should be verified in this order.

Nippondenso

1. Spark occurrence / spark plug condition.
2. Electrical connections.
3. Engine stop / tether cord switches.
4. Ignition coil output.
5. Ignition module output.
6. Magneto output (ignition generator coil).

▼CAUTION : Whenever replacing a component in ignition system, check ignition timing.

Ducati

1. Spark occurence / spark plug condition.
2. Electrical connections.
3. Engine stop / tether crod switches.
4. Trigger coil output.
5. Magneto output (ignition generator coil).
6. Ignition coil output.
7. Ignition module.

All Systems

The first 2 items can be checked with known automotive equipment and other items as follows.

Engine Stop / Tether Cut-Out Switches Verification

Engine Stop Switch

Unplug stop switch connector from main harness then using an ohmmeter, connect test probes to BLACK / YELLOW and BLACK wires.

Measure resistance, it must be an open circuit in its operating position and close to 0 ohm when depressed.

Tether Cut-Out Switch

Unplug tether cut-out switch connector from main harness then using an ohmmeter, connect test probes to BLACK / YELLOW and BLACK wires.

Measure resistance, it must be an open circuit when cap is over switch and close to 0 ohm when removed.

Magneto System Verification

System verification can be performed using the Bombardier ignition tester (P / N 419 0033 00), a digital ohmmeter or by substituting parts.

USE OF BOMBARDIER IGNITION TESTER

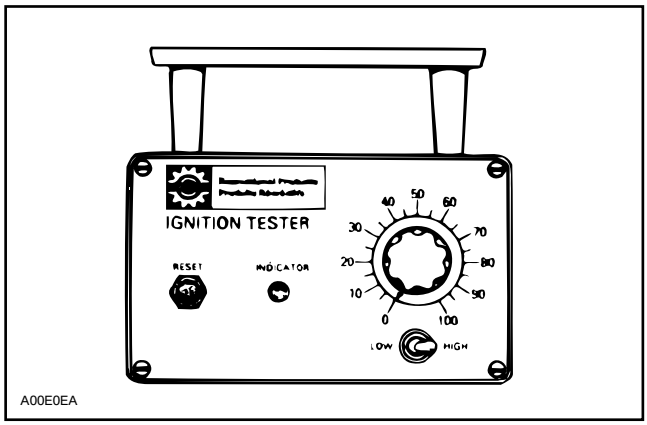

NOTE : For more information about operating and maintenance of the tester, refer to its instruction manual.

Test Condition

All tests are performed on the vehicle at cranking speed

Vigorous manual cranking against compression causes the flywheel to snap over, raising the output higher than by cranking without compression, therefore, do not remove spark plug.

Test values listed are taken against compression

Always crank vigorously as in actual starting.

Always proceed in the following order :

1. Connect tester P and N clip leads as illustrated for each specific test.
2. Follow test procedure sequence.
3. After every test that lights the indicator lamp, reset the indicator circuit by depressing the reset button.

Analysis of Test Results

Indicator Lamp Lights at Specific Setting

Output is as specified. Test results should repeat 3 times. If readings do not repeat, output is erratic and cause should be investigated (loose connections or components etc.).

Indicator Lamp Lights at Lower Setting

This indicates that the output is less than that designed to operate in a satisfactory manner. However, before coming to the conclusion of a faulty condition, be certain that correct engine cranking conditions were met before condemning the tested part.

Indicator Lamp Does Not Light

One component is defective. Proceed as instructed to find defective component.

Intermittent Ignition Problems

In dealing with intermittent problems there is no easy diagnosis. For example, problems that occur only at normal engine operating temperature have to be tested under similar conditions.

In most cases of temperature and / or vibration failure, only parts replacement can solve the problem as most of these failures return to normal when engine is not running.

Multiple Problems

There is always the possibility of more than one faulty part. If after a component has been replaced, the problem still persists, carefully repeat the complete test procedure to find the other faulty part.

NIPPONDENSO CDI TRIGGER COIL SYSTEM TESTING

Applicable to 454, 583, 599, 670 and 779 Engine Types

NOTE : Ensure ignition cut-out switches are properly working and they are in the ON position prior to performing the following tests.

WARNING : To prevent powerful electric shocks while cranking engine, do not touch neither electronic ignition components (ignition coil, high tension wire, wire harness, etc.) nor tester leads.

TRIGGER COIL OUTPUT

1. Disconnect connector housing of trigger coil at ignition module.
2. Connect tester wires then set switch and dial as follows :

Tester wires	Component wires	Tester switch position	Tester dial position
N	BLUE / YELLOW wire of trigger coil	LOW	(All except 599 and 779) 35
P	WHITE / YELLOW wire of trigger coil		(599 and 799) 85

3. Crank engine and observe indicator.
4. Push reset button and repeat step 3 twice.

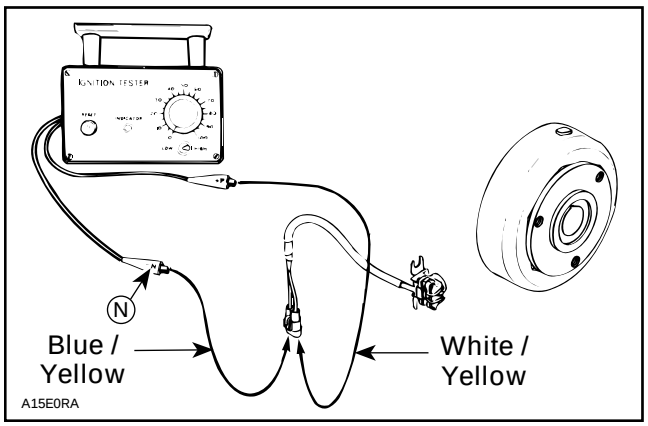

TYPICAL
1. White / Yellow
2. Blue / Yellow

Results :

a. Indicator lamp lights : Trigger coil output is up to specifications.

b. Indicator lamp does not light : The problem is a faulty trigger coil or bad grounding.

IGNITION COIL OUTPUT

A paper clip of approximately 20 mm (3/4 in) will be used as a test adapter for the following test.

1. Install the test adapter to spark plug cable close to MAG side spark plug.
2. Connect tester wires then set switch and dial as follows :

Tester wires	Component wires	Tester switch position	Tester dial position
N	Engine ground	LOW	(All except 599 and 779) 45
P	Test adapter (paper clip) spark plug cable		(599 and 799) 60

NOTE : Different reading occurs if N tester wire is connected to PTO or MAG side spark plug cable.

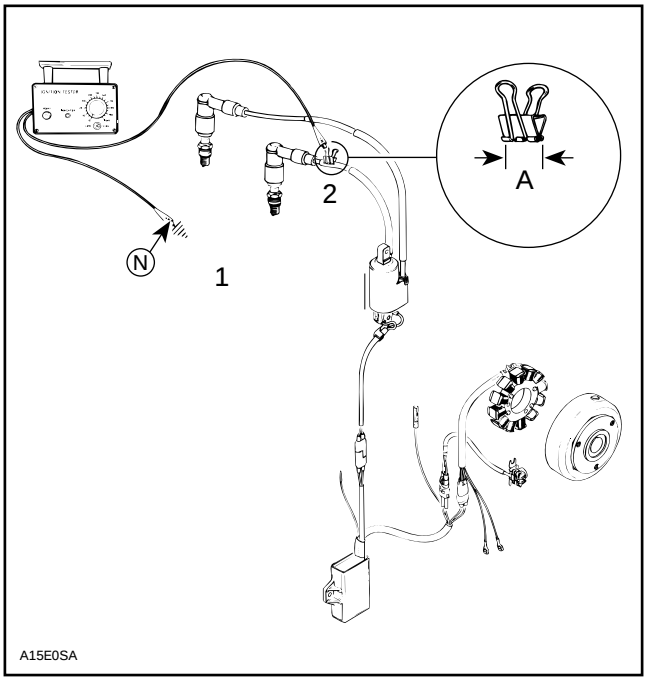

TYPICAL
1. Engine ground
2. MAG side
A. 20 mm (3/4 in)

3. Crank engine and observe indicator.

NOTE : If engine starts, allow it to idle while observing indicator. Then, shut engine off.

4. Push reset button and repeat step 3 twice.

Results :

a. Indicator lamp lights : Ignition system is OK.

b. Indicator lamp does not light on one or both cylinder : Proceed to following tests.

IGNITION MODULE

1. Disconnect both connectors at ignition coil.

At assembly, secure with new locking ties.

2. Connect an ignition coil (known as being in good condition) to the spark plug(s).
3. Connect CDI module to replacement ignition coil paying attention to connect the WHITE / BLUE wire to the positive (+) terminal and the BLACK wire to the negative (–) terminal.

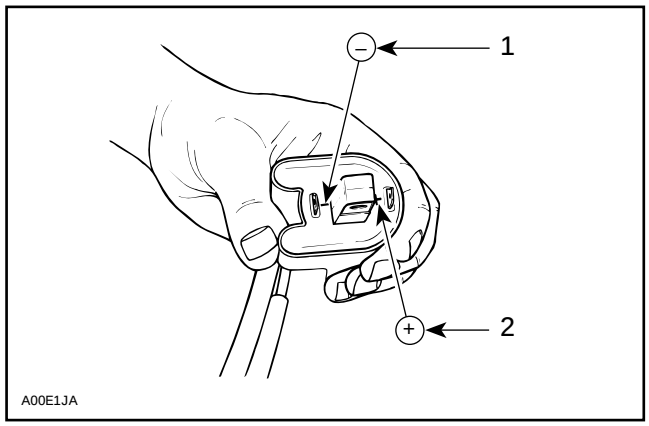

4. Slip plastic protectors out of coil terminals.
5. Connect tester wires to coil terminals then set switch and dial as follows :

NOTE : If necessary use jumper wires from coil terminals to tester wires.

Tester wires	Component wires	Tester switch position	Tester dial position
N	WHITE / BLUE wire (+) of ignition coil	LOW	85
P	BLACK wire (–) of ignition coil		

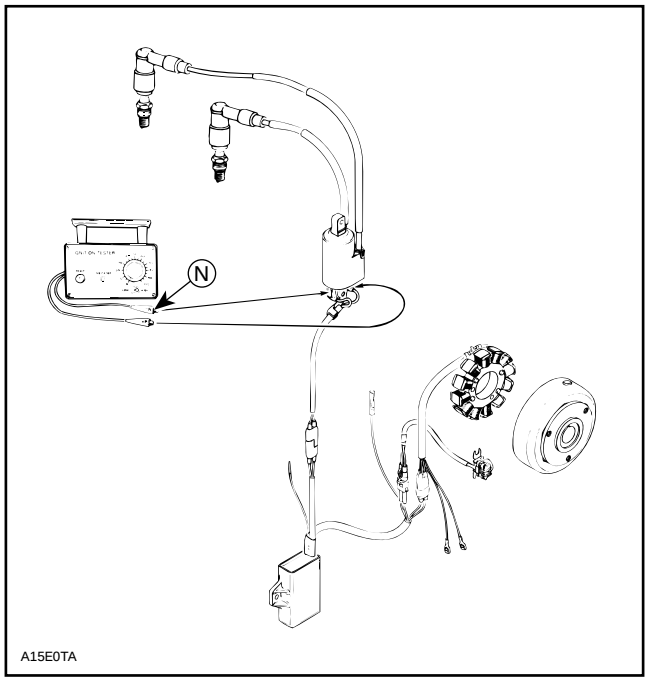

TYPICAL

6. Crank engine and observe indicator.
7. Push reset button and repeat step 6 twice.

Results :

a. Indicator lamp lights : Ignition module output is up to specifications. The problem is a faulty ignition coil.

b. Indicator lamp does not light : Proceed to following test. If magneto output tests good, the problem is a faulty ignition module.

MAGNETO OUTPUT (IGNITION GENERATOR COIL)

1. Disconnect the 3-wire connector between ignition module and magneto harness.

   At installation, secure with new locking ties.

2. Connect tester wires then set switch and dial as follows :

All Engines Except 599 and 799

Tester wires	Component wires	Tester switch position	Tester dial position
N	RED wire of magneto harness	LOW	85
P	BLACK / RED wire of magneto harness		

599 and 779 Engines Only

Tester wires	Component wires	Tester switch position	Tester dial position
N	WHITE wire of magneto harness	LOW	75
P	BLACK / RED wire of magneto harness		
N	WHITE wire of magneto harness	LOW	85
P	RED wire of magneto harness		

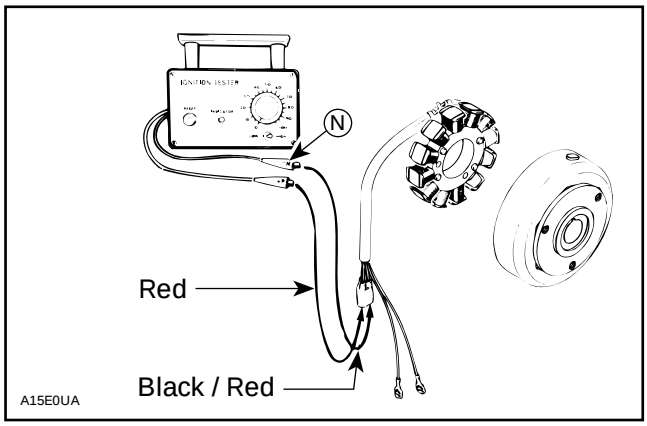

TYPICAL

1. *Black / Red*
2. *Red*

All Engines

3. Crank engine and observe indicator.
4. Push reset button and repeat step 3 twice.

LIGHTING GENERATOR COIL OUTPUT

NOTE : The lighting generator coil is not part of the ignition system. It is a separate system that supplies current to the lighting system and AC-powered devices. However it can be tested with the same tester.

1. Disconnect wiring harness junction block at engine (the one with YELLOW wires).
2. Connect tester wires then set switch and dial as follows :

Tester wires	Component wires	Tester switch position	Tester dial position
N	YELLOW wire of magneto harness	LOW	75
P	YELLOW wire of magneto harness		

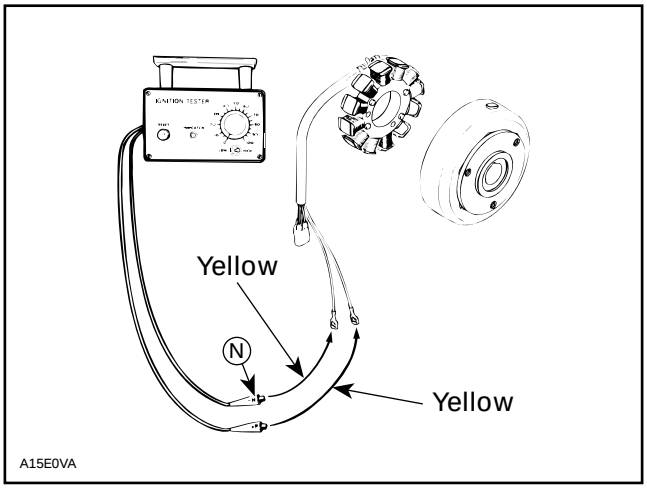

1. *Yellow*

3. Crank engine and observe indicator.
4. Push reset button and repeat step 3 twice.

Results :

a. **Indicator lamp lights** : Lighting generator coil output is up to specifications.

b. **Indicator lamp does not light** : Lighting generator coil is faulty.

SUMMARY TABLE

Test to perform	Tester wires	Components wires	Switch	Dial
Trigger coil output	N	BLUE / YELLOW wire of trigger coil	LOW	(All except 599 and 779) 35
	P	WHITE / YELLOW wire of trigger coil		(599 and 779) 85
Ignition coil output	N	Engine ground	LOW	(All except 599 and 779) 45
	P	Test adapter on MAG spark plug cable		(599 and 779) 60
Ignition module output	N	WHITE / BLUE wire (+) of ignition coil	LOW	85
	P	BLACK wire (–) of ignition coil		
Magneto output (ignition generator coil) (All engines except 599 and 779)	N	RED wire of magneto harness	LOW	85
	P	BLACK / RED wire of magneto harness		
Magneto output (ignition generator coil) (599 and 779 engines only)	N	WHITE wire of magneto harness	LOW	75
	P	BLACK / RED wire of magneto harness		
Magneto output (ignition generator coil) (599 and 799 engines only)	N	WHITE wire of magneto harness	LOW	85
	P	RED wire of magneto harness		
Lighting generator coil output	N	YELLOW wire of magneto harness	LOW	75
	P	YELLOW wire of magneto harness		

RESISTANCE MEASUREMENTS

As an alternate method, magneto system components can be checked with a digital ohmmeter.

NOTE : All resistance measurements must be performed with parts at room temperature (approx. 20°C (68°F)). Temperature greatly affects resistance measurements.

Disconnect connector at ignition coil and magneto junction. Measure resistance between each terminal. Refer to the following table for values and wire colors.

NOTE : An ignition coil with good resistance measurement can still be faulty. Voltage leak can occur at high voltage level which is not detectable with an ohmmeter.

	PART NAME	WIRE COLOR*	RESISTANCE OHM	REMARKS
MAGNETO	Trigger coil	BL / YL with WH / YL	190 - 300	No display change means open circuit.
	Ignition generator coil (All except 599 and 779)	RD with BK / RD	10 - 17	
	Ignition generator coil (599 and 779) engines) Low speed	WH with RD	49 - 75	
	High speed	WH with BK / RD	2.8 - 4.3	
	Lighting generator coil	YL with YL	0.20 - 0.35	
IGNITION COIL	Primary winding	BK with WH / BL	0.3 - 0.7	Display showing zero (0) means short circuit.
	Secondary winding (spark plug cap remove)	End of each high tension wire	8 - 16 K (8000 - 16000)	
	Insulation	WH / BL with core	∞Ω	
		WH / BL with high tension wire		
SPARK PLUG CAP	Spark plug cap	—	4.5 - 5.5 K	

∞ : Infinity (extremely large number)

*	COLOR CODE	
	BK — BLACK WH — WHITE RD — RED BL — BLUE YL — YELLOW	GN — GREEN GY — GREY VI — VIOLET OR — ORANGE BR — BROWN

DUCATI CDI SYSTEM TESTING
(Applicable to 503 Engine Type)

NOTE : Ensure ignition cut-out switches are properly working and they are in the ON position prior to performing the following tests.

WARNING : To prevent powerful electric shocks while cranking engine, do not touch neither electronic ignition components (ignition coil, high tension wire, wire harness, etc.) nor tester leads.

TRIGGER COIL OUTPUT

1. Disconnect the connector of RED wire at ignition module.
2. Connect tester wires then set switch and dial as follows :

Tester wires	Component wires	Tester switch position	Tester dial position
N	WHITE / RED wire of trigger coil	LOW	45
P	Engine ground		

3. Crank engine and observe indicator.
4. Push reset button and repeat step 3 twice.

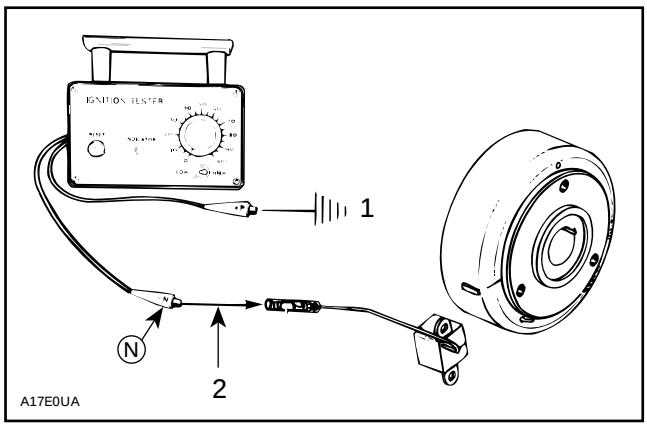

Results :

a. Indicator lamp lights : Trigger coil output is up to specifications.

b. Indicator lamp does not light : The problem is a faulty trigger coil or bad grounding.

MAGNETO OUTPUT
(Ignition Generator Coil)

1. Disconnect the 2-wire connector between ignition module and magneto harness.
2. Connect tester wires then set switch and dial as follows :

Tester wires	Component wires	Tester switch position	Tester dial position
N	GREEN wire of magneto harness	LOW	80
P	WHITE wire of magneto harness		

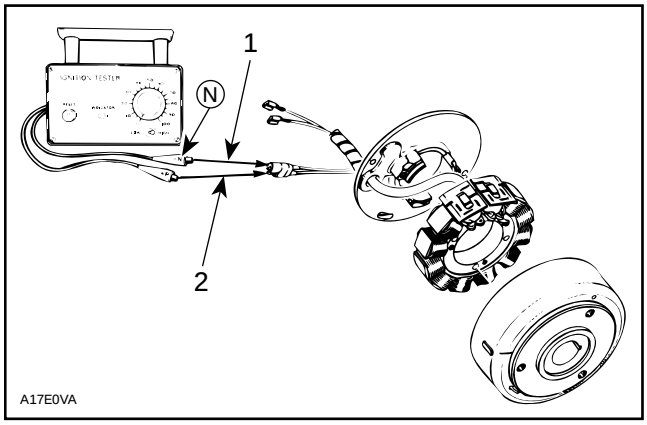

3. Crank engine and observe indicator.
4. Push reset button and repeat step 3 twice.

Results :

a. Indicator lamp lights : Ignition generator coil output up to specifications.

b. Indicator lamp does not light : The problem is a faulty ignition generator.

IGNITION COIL OUTPUT

A paper clip of approximately 20 mm (3/4 in) will be used as a test adapter for the following test.

1. Clip the test adapter around spark plug cable close to MAG side spark plug.

2. Connect tester wires then set switch and dial as follows :

Tester wires	Component wires	Tester switch position	Tester dial position
N	Test adapter (paper clip) on spark plug cable	LOW	80
P	Engine ground		

NOTE : Different reading occurs if N tester wire is connected to PTO side spark plug cable.

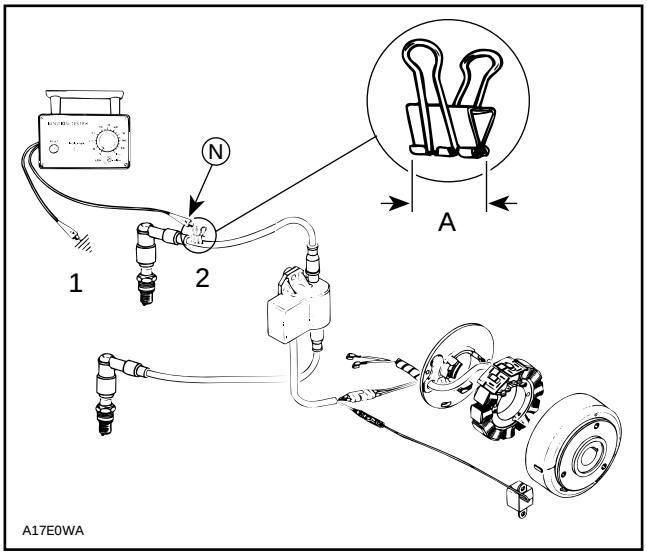

1. Engine ground
2. MAG side
A. 20 mm (3/4 in)

3. Crank engine and observe indicator.

NOTE : If engine starts, allow it to idle while observing indicator. Then, shut engine off.

4. Push reset button and repeat step 3 twice.

Results :

a. Indicator lamp lights : Ignition system is OK.

b. Indicator lamp does not light on one or both cylinder : The problem is a faulty ignition coil / module.

IGNITION MODULE

Ignition module can not be tested with the Bombardier ignition tester. When other components test good, the module is probably faulty. Try a new module.

LIGHTING GENERATOR COIL OUTPUT

NOTE : The lighting generator coil is not part of the ignition system. It is a separate system that supplies current to the lighting system and AC-powered devices. However it can be tested with the same tester.

1. Disconnect wiring harness junction block at engine (the one with YELLOW and YELLOW wires).
2. Connect tester wires then set switch and dial as follows :

Tester wires	Component wires	Tester switch position	Tester dial position
N	YELLOW wire of magneto harness	LOW	80
P	YELLOW wire of magneto harness		

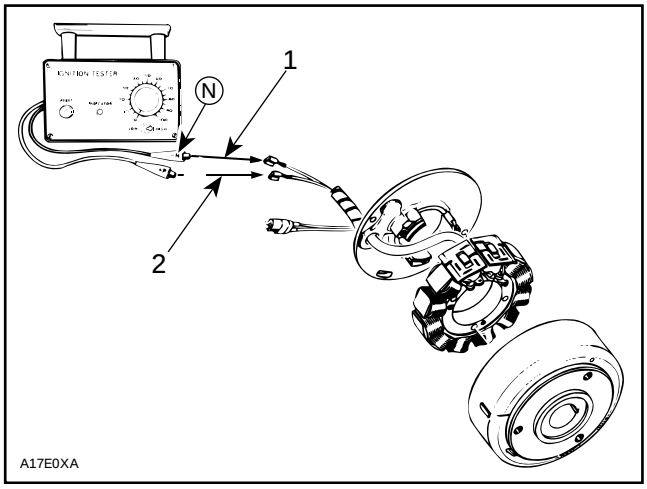

3. Crank engine and observe indicator.
4. Push reset button and repeat step 3 twice.

Results :

a. **Indicator lamp lights** : Lighting generator coil output is up to specifications.

b. **Indicator lamp does not light** : Lighting generator coil is faulty.

SUMMARY TABLE

Test to perform	Tester wires	Component wires	Switch	Dial
Trigger coil output	N	WHITE / RED wire of trigger coil	LOW	45
	P	Engine ground		
Magneto output (ignition generator coil)	N	GREEN wire of magneto harness	LOW	80
	P	WHITE wire of magneto harness		
Ignition coil output	N	Test adapter on MAG spark plug cable	LOW	70
	P	Engine ground		
Lighting generator coil output	N	YELLOW wire of magneto harness	LOW	80
	P	YELLOW wire of magneto harness		

RESISTANCE MEASUREMENTS

As an alternate method, magneto system components can be checked with a digital ohmmeter.

NOTE : All resistance measurements must be performed with parts at room temperature (approx. 20°C (68°F)). Temperature greatly affects resistance measurements.

Disconnect connector at ignition coil and magneto junction. Measure resistance between each terminal. Refer to the following table for values and wire colors.

NOTE : An ignition coil with good resistance measurement can still be faulty. Voltage leak can occur at high voltage level which is not detectable with an ohmmeter.

	PART NAME	WIRE COLOR*	RESISTANCE OHM	REMARKS
MAGNETO	Trigger coil	RD with engine ground	140 - 180	No display change means open circuit.
	Ignition generator coil	WH with GN	230 - 330	
	Lighting generator coil	YL with YL	0.23 - 0.28	
IGNITION COIL	Secondary winding ① (spark plug cap removed)	End of each high tension wire	5.1 - 6.3 K (5100 - 6300)	Display showing zero (0) means short circuit.
SPARK PLUG CAP	Spark plug cap	—	4.5 - 5.5 K	

① : The primary winding of ignition coil can not be measures because there is no external connection.

*	COLOR CODE	
	BK — BLACK WH — WHITE RD — RED BL — BLUE YL — YELLOW	GN — GREEN GY — GREY VI — VIOLET OR — ORANGE BR — BROWN

VOLTAGE REGULATOR INSPECTION

A faulty voltage regulator is often responsible for frequent burned bulbs.

CAUTION : Never run an engine with a faulty or inoperative voltage regulator. This could damage the DUCATI CDI module.

TESTING PROCEDURE

The regulator ground must be checked to ensure the circuit is complete. If necessary, connect a good ground wire from the regulator to the engine.

A) Quick Test Without Voltmeter

CAUTION : Do not perform this test on engines that have a DUCATI CDI system.

If a voltmeter is not available, a visual test can be performed with satisfactory results.

Disconnect all lights and electric equipment.

While engine is running, disconnect and connect regulator connector several times checking for a spark.

A spark on regulator terminal indicates a good and working regulator.

B) Voltmeter Test

NOTE : Use a voltmeter able to read alternating current (AC). For accurate reading, use a RMS voltmeter.

Connect a wire of the voltmeter to a BLACK / YELLOW wire.

Connect the other wire of the voltmeter to a YELLOW wire.

Lift the rear of vehicle and support with a mechanical stand.

Start the engine at an idle without opening the throttle.

WARNING : Ensure the track is free of particles which might be thrown out while track is rotating. Keep hands, tools, feet and clothing clear of track. Ensure no-one is standing in close proximity to the vehicle.

Slowly open the throttle and accelerate the engine to increase the RPM.

If the meter reads over 15 volts, the regulator is defective and must be replaced.

CAUTION : Do not increase the RPM so the voltage exceeds 15 V as the bulb(s) will burn.

NOTE : Whatever the voltmeter type used (peak voltage or RMS) the voltage must not exceed 15 V (a defective regulator will allow voltage to exceed 15 V as engine RPM is increased).

INSPECTION OF AC CIRCUIT ISOLATION

All Electric Start Models

If AC circuit is not isolated from frame, headlamp beam will weaken.

INSPECTION

Disconnect regulator / rectifier.

Connect one digital ohmmeter probe (needle ohmmeter will not offer enough precision) to frame and other probe to one of 2 yellow magneto wires.

Measured resistance must be infinite. If such is not the case, it means there is a connection between AC circuit and DC circuit.

Disconnect one accessory at the time to identify the faulty circuit.

INSPECTION OF HEATING ELEMENTS

All Models Except Skandic WT

All measurement must be performed at 21°C (70°F).

Throttle Lever Heating Element

HIGH INTENSITY	YELLOW / BLACK wire BROWN wire	1.96 to 3.64 ohms
LOW INTENSITY	YELLOW / BLACK wire BROWN / YELLOW wire	8.05 to 14.95 ohms

Handlebar Grip Heating Element

HIGH INTENSITY	YELLOW / BLACK wire ORANGE wire	8.73 to 10.67 ohms
LOW INTENSITY	YELLOW / BLACK wire ORANGE / VIOLET wire	17.7 to 20.7 ohms

TABLE OF CONTENTS

SUSPENSION SC-10 HIGH PERFORMANCE, CROSS-COUNTRY AND MOUNTAIN 07-01-1
ALL S-SERIES AND F-SERIES EXCEPT FORMULA III / III LT AND MACH Z / Z LT 07-01-1
COMPONENT REMOVAL AND INSTALLATION 07-01-2
REMOVAL 07-01-4
DISASSEMBLY AND ASSEMBLY 07-01-5
SHOCK ABSORBER SERVICING 07-01-6
INSTALLATION 07-01-14
RIDE ADJUSTMENT 07-01-14
LUBRICATION 07-01-14

SKANDIC WT SUSPENSION 07-02-1
SKANDIC WT 07-02-1
REMOVAL 07-02-2
DISASSEMBLY AND ASSEMBLY 07-02-2
SHOCK ABSORBER SERVICING 07-02-3

IMPROVED C-7 SUSPENSION 07-03-1
FORMULA III / III LT AND MACH Z / Z LT 07-03-1
REMOVAL 07-03-2
DISASSEMBLY AND ASSEMBLY 07-03-2
INSTALLATION 07-03-3
SHOCK ABSORBER SPRING REPLACEMENT 07-03-3
SHOCK ABSORBER SERVICING 07-03-4
SUSPENSION ADJUSTMENT 07-03-4

DRIVE AXLE 07-04-1
S-SERIES AND F-SERIES 07-04-1
SKANDIC WT 07-04-2
REMOVAL 07-04-3
DISASSEMBLY 07-04-3
ASSEMBLY 07-04-4
AXIAL PLAY 07-04-6
INSTALLATION 07-04-9
LUBRICATION 07-04-9
ADJUSTMENT 07-04-9

TRACK 07-05-1
TRACK TYPE APPLICATION 07-05-1
GENERAL 07-05-1
INSPECTION 07-05-1
REMOVAL 07-05-1
INSTALLATION 07-05-1

SUSPENSION SC-10 HIGH PERFORMANCE, CROSS-COUNTRY AND MOUNTAIN

All S-Series and F-Series Except Formula III / III LT and Mach Z / Z LT

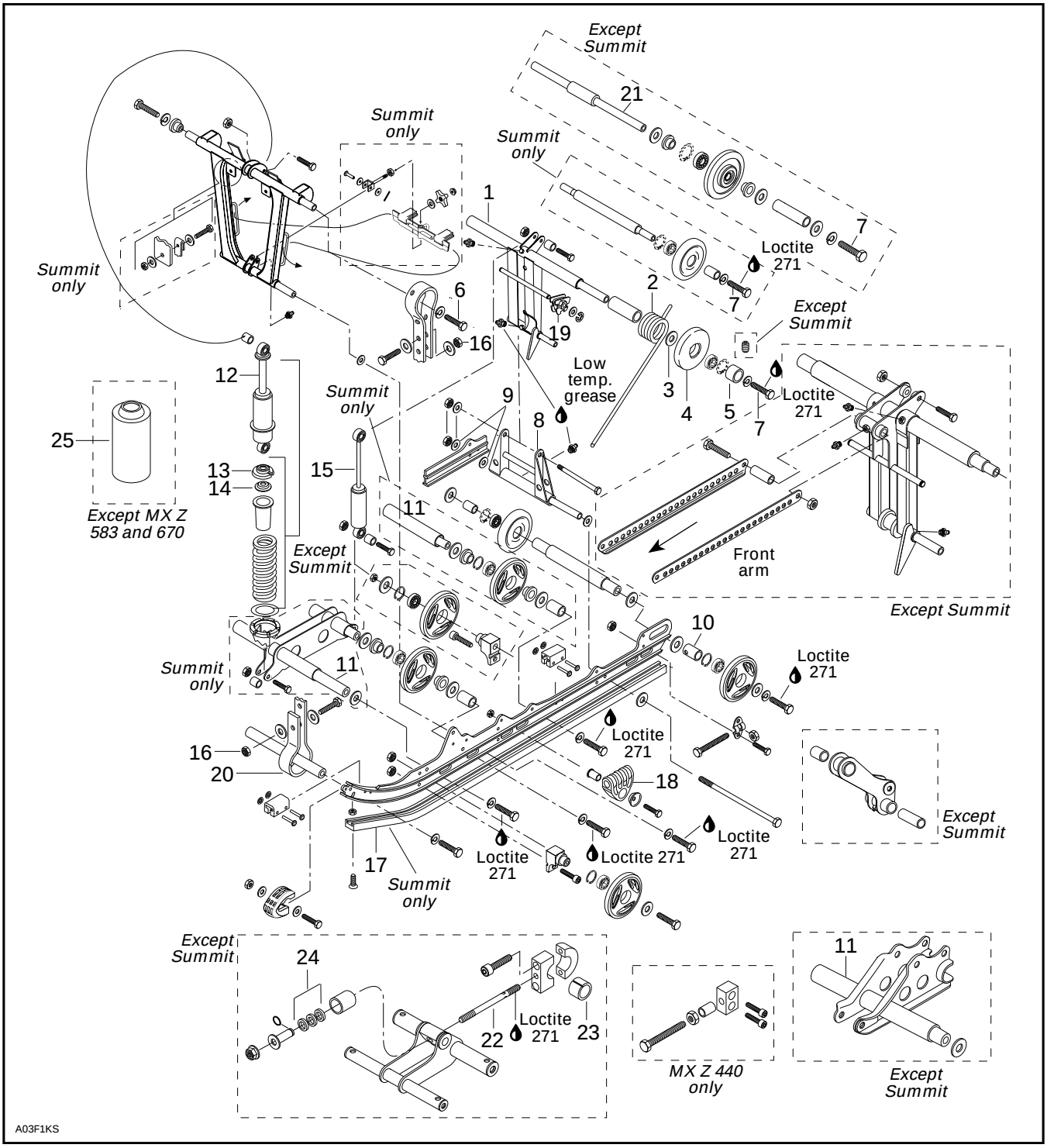

COMPONENT REMOVAL AND INSTALLATION

Lift rear of vehicle and support it off the ground.

21, Rear Axle

Completely loosen track tension.

Unscrew one rear idler wheel screw.

Pull out rear axle from opposite side of offset inner wheel. Proceed either side for models with 4 wheels on rear axle.

At assembly, temporary loosen rear shackle lower pivot nut and ACM (Acceleration and Control Modulator) support rear bolt.

Align spacer hole with adjusting bolt.

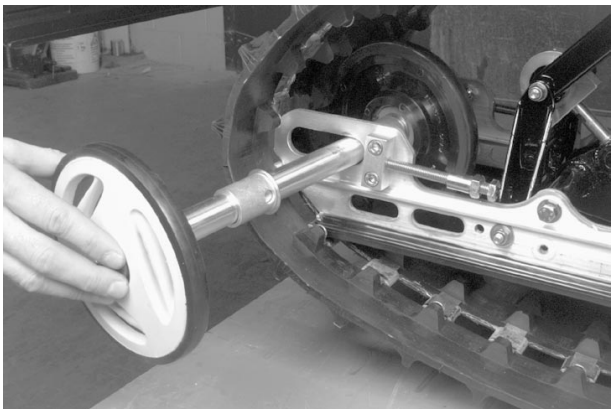

A03F1LA

TYPICAL

All Models Except Summit

22, Threaded Rod

Remove adjusting nut then unscrew threaded rod from pivot block.

Remove threaded rod.

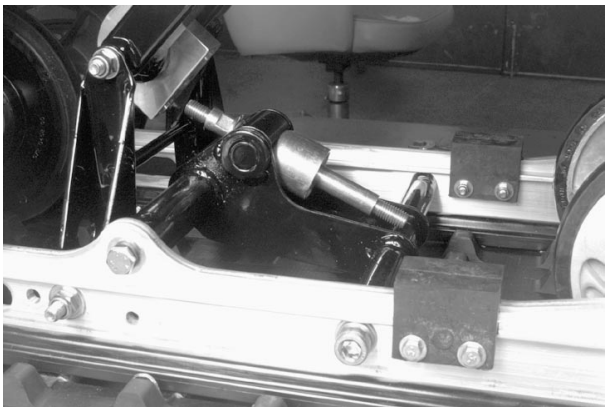

A03F1MA

23, Cushion

After threaded rod removal, unscrew pivot block.

Remove cushion.

Apply lithium grease at reassembly.

24, Rubber Stopper

After threaded rod removal, unfasten circlip.

Remove bushing then rubber stoppers.

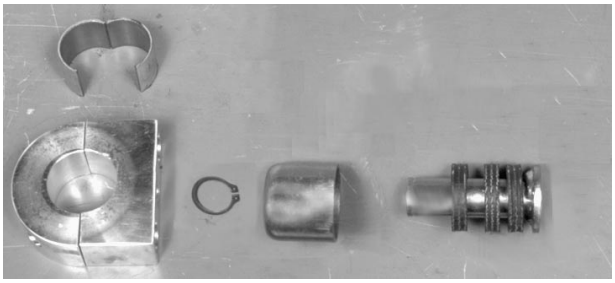

A03F1NA

At assembly, match marked side of both pivot blocks.

When cup is dissassembled, it may be too difficult to install circlip before reinstalling this assembly. Install all parts and the circlip loosely around threaded rod. Compress rear of vehicle or lift the front to easily install circlip in its groove.

25, MCA Support

Remove threaded rod. Loosen rear axle screw on one side and rear shackle screws.

Unbolt MCA support and remove it.

Remove cup.

15, Rear Shock

Lift rear of vehicle.

Slightly turn adjusting cam to expose spring end. Using spring installer (P / N 529 0050 00), remove left spring from adjusting cam.

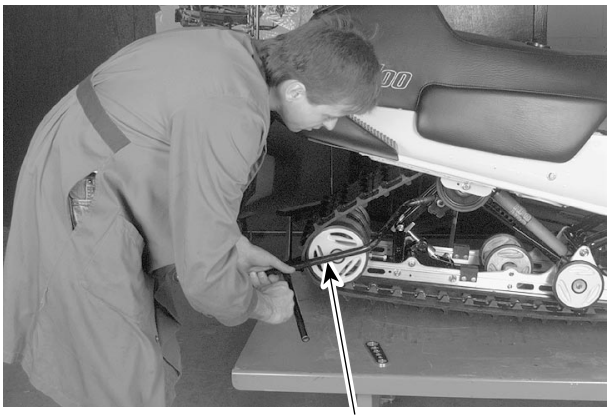

A03F1OA

Remove nut on top end of shock.

Remove nut on bottom end of shock. Pry up shock bottom end to ease removing bolt. (gas shock only). See installation illustration below.

Installation is reverse of removal procedure. To easily compress gas shock absorber, use a pry bar and locking pliers as a stopper.

▼ CAUTION : Take care not to damage grease fitting.

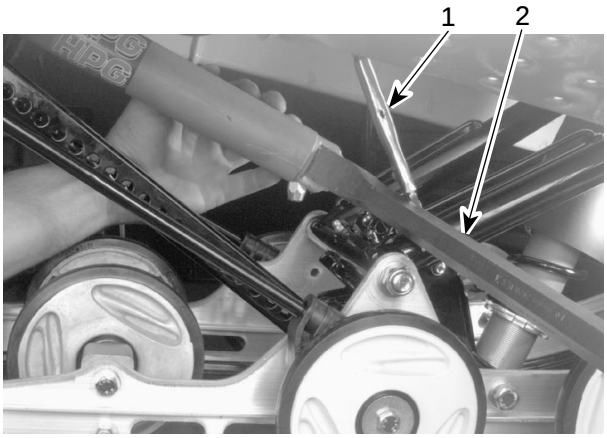

A03F1PA

1. Locking pliers
2. Pry bar

All Models

12, Front Shock

Unbolt shock and remove it.

MX Z Only

At installation, Schrader valve must face rearward and rubber boot forward.

All Models

2, Rear Spring

Remove spring ends from adjusting cams.

Unbolt rear arm top axle from chassis.

All Models Except Summit

Unscrew set screws from locking ring at each end of top axle.

All Models

Remove locking rings (spacers on Summit) and top idler wheels.

Remove springs.

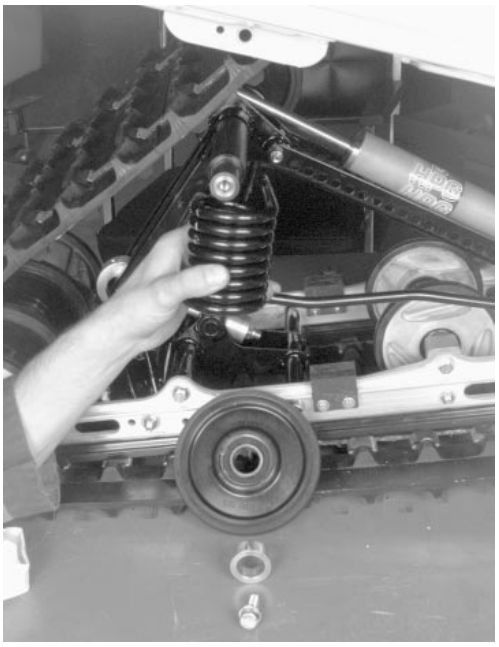

TYPICAL

At reassembly, wheel circlip must face outward.

REMOVAL

19, Cam

Decrease spring preload by turning LH cam clockwise and RH cam counterclockwise.

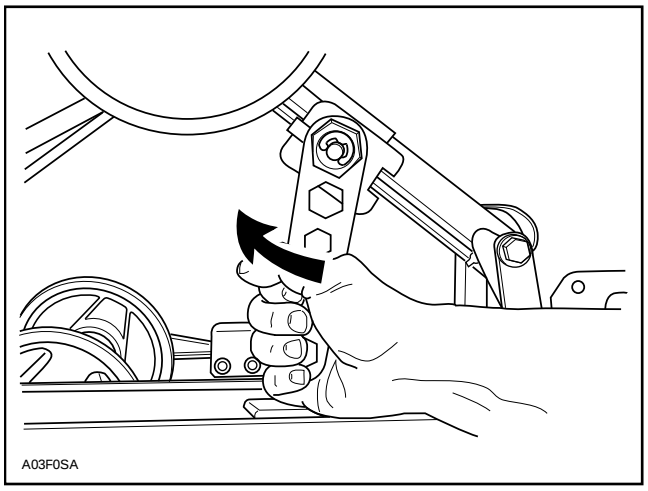

LH SIDE SHOWN

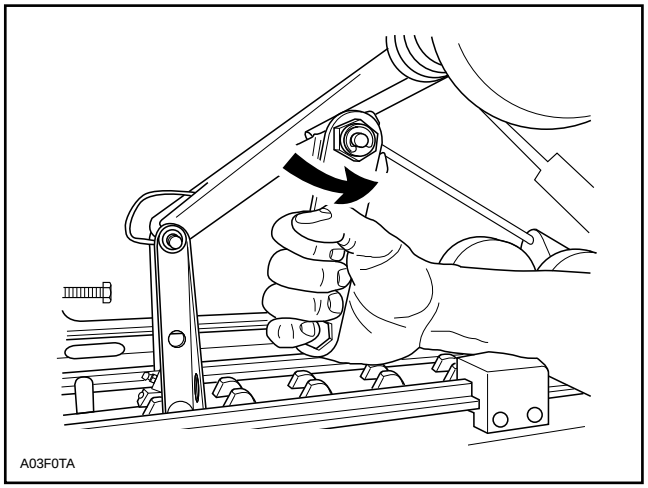

RH SIDE SHOWN

Lift rear of vehicle and support it off the ground.

Loosen track tension.

7, Screw

Unscrew rear arm top axle from chassis.

NOTE : To prevent axle from turning when un-screwing screws assembled with threadlocker, proceed as follows :

- Knock on screw head and / or heat to break threadlocker bond.
- Loosen one screw then retighten.
- Remove the opposite screw.
- Remove the first one.

Unscrew center idler wheel axle from tunnel then remove.

Lift rear of vehicle at least 1 m (3 ft).

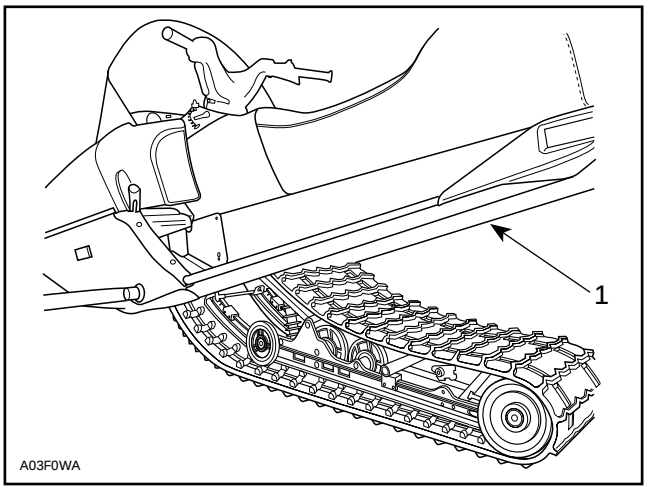

1. At least 1 m (3 ft)

6, Screw

Remove both screws retaining front arm to tunnel.

Remove suspension.

DISASSEMBLY AND ASSEMBLY

Inspect track throughly before reinstalling suspension. Refer to TRACK 07-05.

1, Rear Arm

At installation, rear arm stroke limiter must be on rear side.

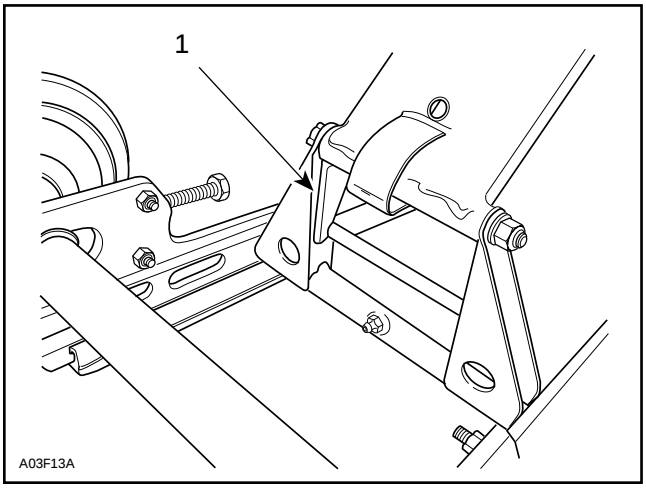

1. Stroke limiter on rear side

8,9, Pivot Arm and Flat Washer

At installation pivot arm grease fitting must face rearward.

10, Outer Bushing

At installation, hole must face adjustment screw.

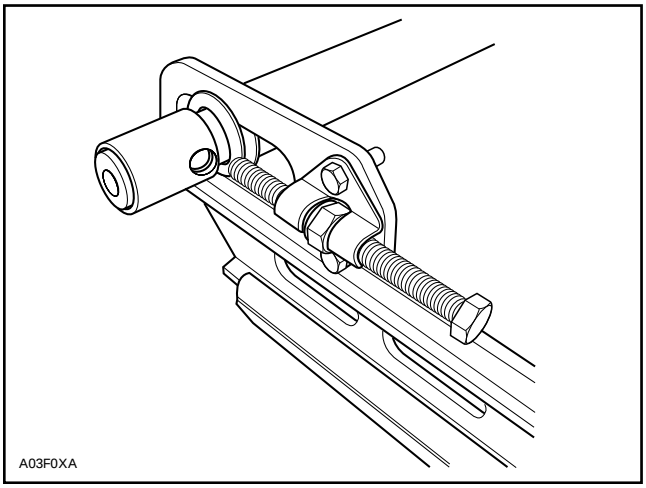

11, Axle

Note position of axles at disassembly. Axles with a paint stripe serve as idler wheel axles. These are more precise than those used as pivot axles. Idler wheel axles can be used as pivot axles but the opposite is not true.

12,13,14, Front Shock, Spring Stopper and Cap

Use shock spring remover (P / N 529 0271 00) in a vise. Mount shock in it and turn shock so that spring coils matched spring compressor.

Close and lock bar. Adjust handle horizontal by changing position of clevis pin.

Push down on handle until it locks. Remove spring stopper and cap then release handle.

At installation, cap opening must be 180° from spring stopper opening.

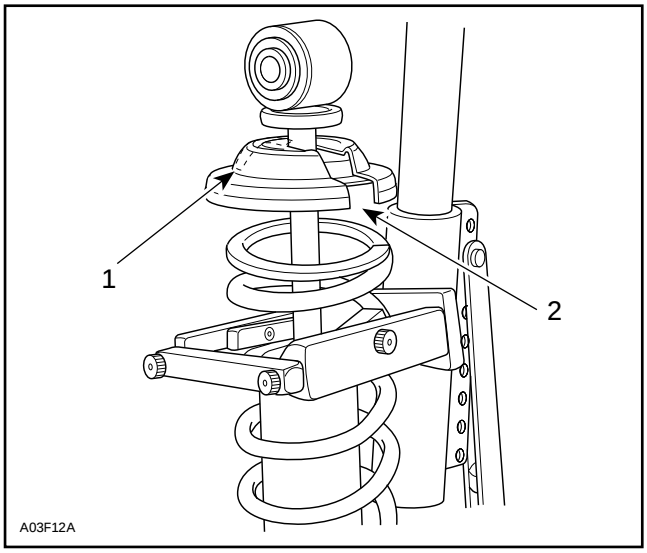

1. Cap opening
2. Spring stopper opening

20, Stopper Strap

Inspect strap for wear or cracks, bolt and nut for tightness. If loose, inspect hole for deformation. Replace as required. Make sure it is attached through the 2nd hole from the end on all MX Z and to the 1st hole on Formula Z / SS. Torque nut to 11 N•m (97 lbf•in).

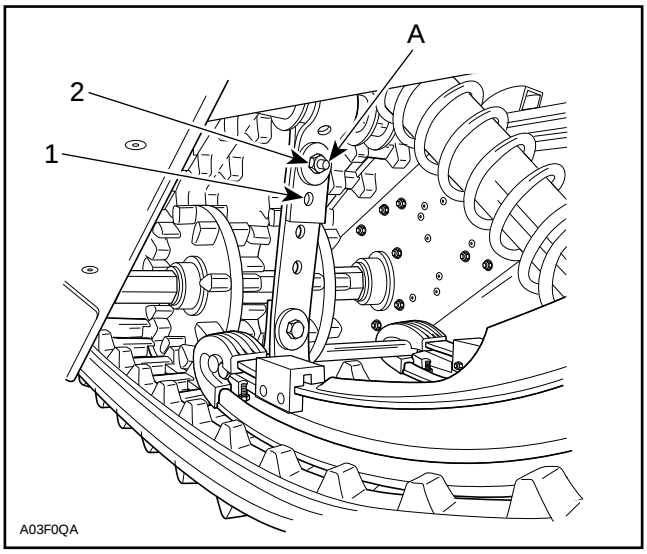

1. 1st hole
2. 2nd hole
A. 11 N•m (97 lbf•in)

17, Slider Shoe

Replace slider shoes when it is worn to the line.

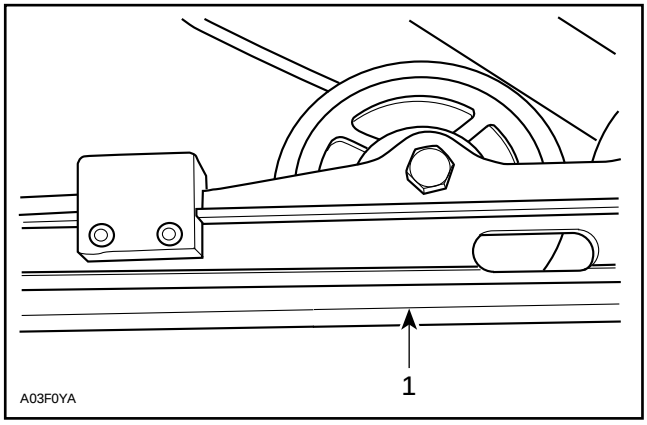

1. Wear limit line

CAUTION : Slider shoes must always be re-placed in pairs.

18, Spring Support

CAUTION : To avoid track damage, spring supports must be mounted upward.

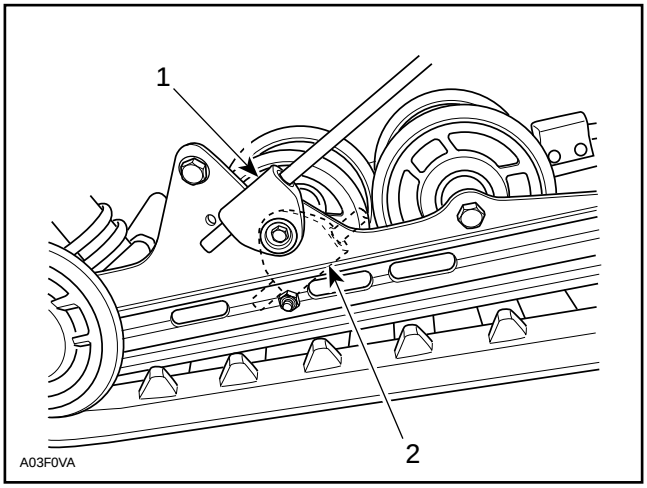

RIGHT SIDE SHOWN

1. Right position : upward
2. Wrong position

SHOCK ABSORBER SERVICING

All Models Equipped with HPG Shock Except MX Z 440

Because of gas pressure, strong resistance is felt when compressing shock. When released, the shock will extend unassisted. Renew as required.

HPG, T / A (Take Apart) Shock Servicing

MX Z 440 Only

This damper is completely rebuildable. It offers the options of replacing valves or revalving and / or the option of replacing seals (should it be needed).

Although the adjustments are internal, rather than external as in the MVA, the rider is able to select the exact damping adjustment required for his / her riding style.

Bombardier offers 2 valving adjustment options through normal parts channels. A standard setting with each damper (either from parts or on the snowmobile) and a cross country setting, which will offer a stiffer or harder ride for high speed riding or racing.

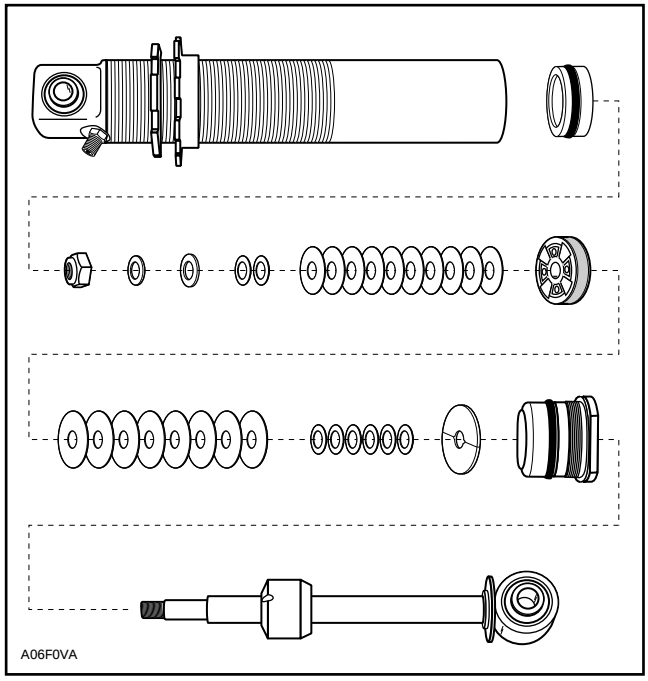

Disassembly and Assembly

Release N_2 (nitrogen) pressure from the damper Schrader valve.

◆ WARNING : Nitrogen gas is under extreme pressure. Use caution when releasing this gas volume. Protective eye wear should be used.

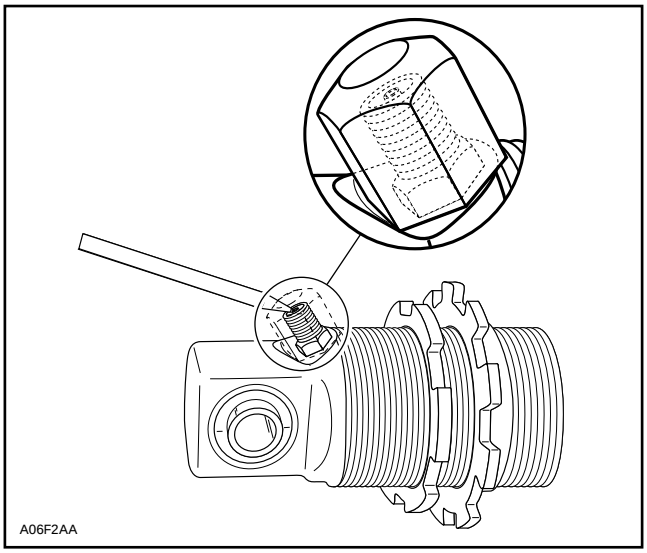

Use tools (P / N 861 7439 00) to remove damper spring by unthreading spring pre-load rings, then removing spring retainer.

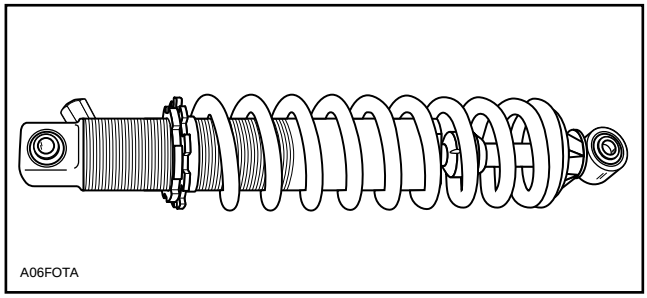

TYPICAL

Holding damper assembly in bench vise, unthread seal assembly from damper body using a 32 mm (1.25 in) spanner wrench. This assembly uses a right hand thread.

NOTE : Before unscrewing pre-load rings, mark position for reinstallation. For factory adjustment refer to the end of this section.

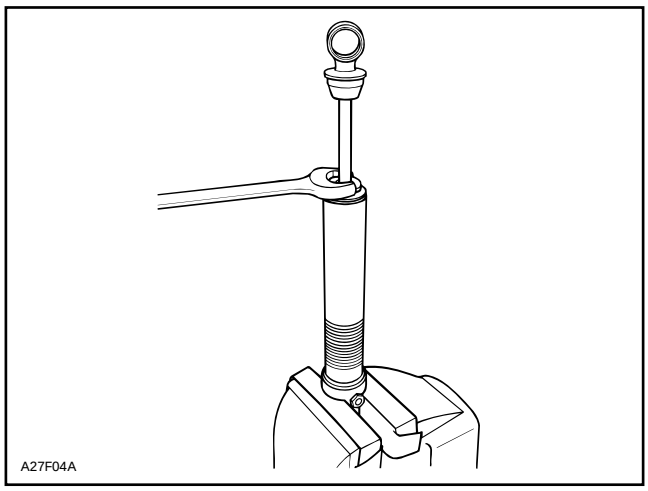

TYPICAL

With the seal assembly removed, slowly lift and remove damper rod assembly from the damper body.

NOTE : Remove damper rod assembly slowly to reduce oil spillage and prevent piston seal damage by damper body threads. Wrap the damper body with a shop cloth to capture possible overflow oil while removing the damper piston.

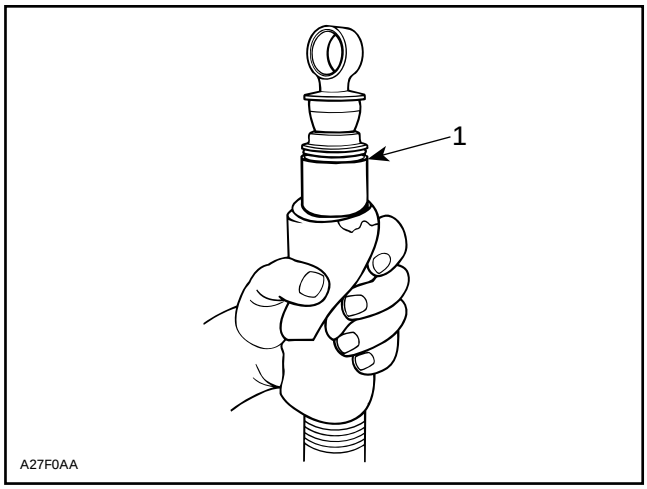

1. Oil flows

Discard old oil into storage container. Never reuse damper oil during shock rebuild.

Remove Schrader valve core. Using compressed air pressure, carefully remove floating piston from damper body. Hold shop cloth over damper body opening to catch released floating piston. Allow room for floating piston to leave damper body.

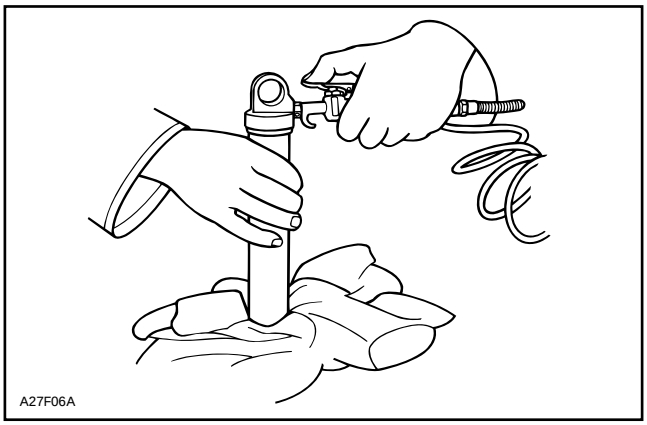

TYPICAL

◆ WARNING : Whenever using compressed air, use an O.S.H.A. approved air gun and wear protective eye wear.

Thoroughly clean, with a typical cleaning solution, and blow dry using low pressure air. Carefully inspect the damper body for any imperfections or signs of wear in the damper bore. Replace damper body if wear is identified.

Holding the damper rod assembly in a bench vise, begin piston and valve removal.

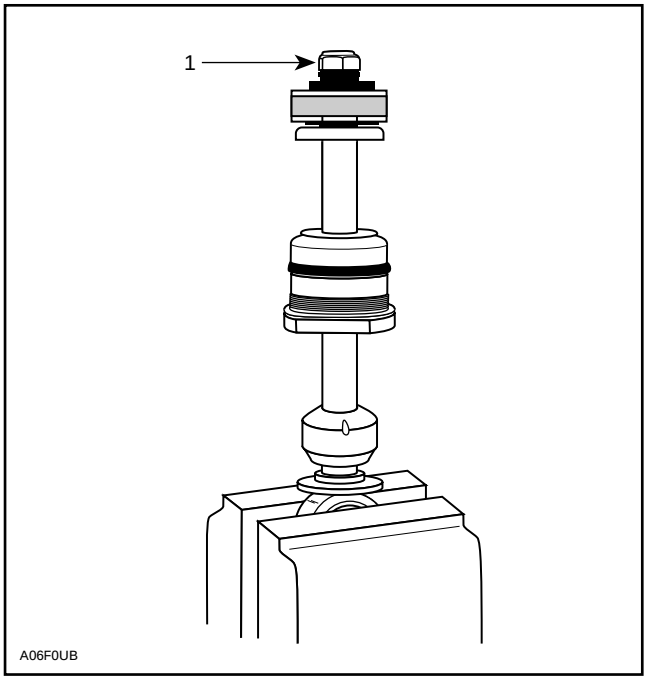

1. Damper shaft nut torque 11-13 N•m (96-108 lbf•in)

Always arrange parts removed in the sequence of disassembly.

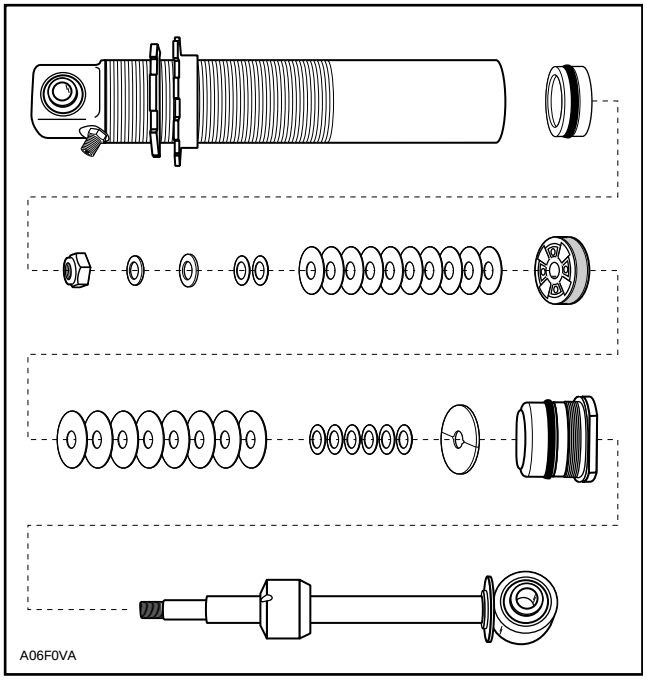

NOTE : As a general rule we suggest replacing the damper rod lock-nut after 4 rebuilds to ensure good locking friction.

NOTE : If revalving is to be done, it is imperative that you identify the original shim pack (size and number of shims). The seal carrier need not be removed if only revalving is to be done.

Shims can be measured by using a vernier caliper or a micrometer.

The damper rod is constructed of a plated shaft design. This damper shaft must be inspected for any visible wear on the surface of the damper rod.

Another check that must be completed if damper seal leakage has been noticed, is damper rod "run-out". This damper rod must not exceed .025 mm (.001 in).

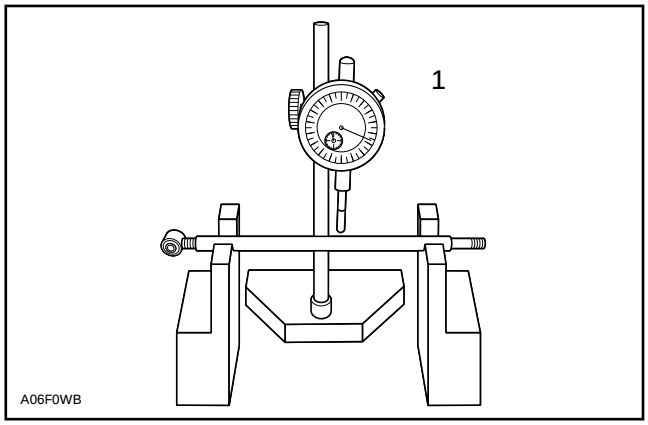

1. Maximum deflection 0.025 mm (.001 in)

After the new or replacement shim pack has been selected, reassemble in the reverse order of disassembly. Torque piston nut 11-13 N•m (96-108 lbf•in).

1.CAUTION : The damper rod nut can only be reused 4 times, then, must be replaced. Do not substitute this part for non – O.E.M.

2. This washer (s) used as required to allow adequate threads for damper rod nut.
3. Valve stopper with round edge down.

4.NOTE : Rebound shim stack must not reach into threads of damper shaft. Washer under damper shaft nut is used to prevent damper shaft nut from bottoming on threads.

Rebound damping options from Bombardier include a x-country kit.

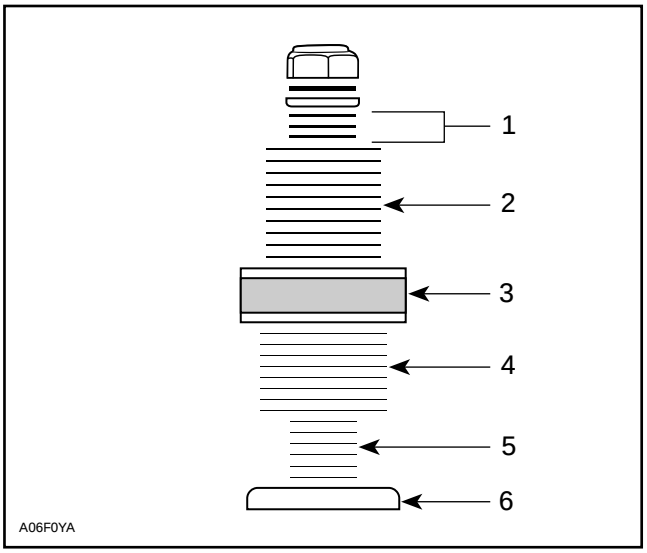

Rebound

1. Approximately 0.203 mm (.008 in) clearance must be allowed between shim stack and stopper washer.
2. Whenever tuning for more rebound damping always use 26 mm (1.02 in) shims against piston to properly close piston orifice holes. More thin shims will offer less damping than a few thick shims of the same overall thickness.

   Tuning for less damping it is important to remember, never use less than 3 × 26 mm (1.02 in) shims against piston. This will guard against fatigue breakage.
3. Piston options include 4 pistons, 0, 2, 4, 6, slits for rebound damping bleeds. These bleed slits will offer a damping variation to the function of the shims.

Compression

4. Whenever tuning for more compression damping always use 30 mm (1.18 in) shims against piston to properly close piston orifice holes. Two thin shims will offer less damping than one thick shims of the equal thickness.

   Tuning for less damping it is important to remember, never use less than 3 shims against piston. This will guard against fatigue breakage.

5. One 0.114 mm spacer washers minimum (2 or more recommended) should always be used between shim stack and valve stopper washer. This will allow needed room for the valve shims to function.
6. Compression valve stop must have slots facing shim stack.

General Information

Over damping is a common error by suspension tuners. When operating an over-damped snowmobile, you will experience a packing of the suspension. The over-damping will not allow the suspension to recycle to full extension after an obstacle compresses the suspension. This situation will eventually bottom the suspension (pack up) and not allow it to cycle properly.

Under damping can result in insufficient or uncontrolled damping. This condition would allow the damper to move freely (unrestricted) in both directions. The most noticeable symptom will be a bouncing of the snowmobile when encountering bumps.

NOTE : Careful inspection of the damping shims should be completed. Any bent shims must be replaced to insure redamping (valving) will be in perfect order.

Under damping symptoms can be mistaken for an aerated shock due to low gas pressure. Although it is exceptional, the gas pressure should be checked.

If the seal carrier assembly is replaced, use seal pilot (P / N 529 0265 00) to guide seal over damper shaft. Lubricate seal carrier guide pilot before use.

CAUTION : Failure to use seal pilot will result in seal damage.

Reassemble damper rod assembly, using care to properly assemble shim packs as required for your damping needs.

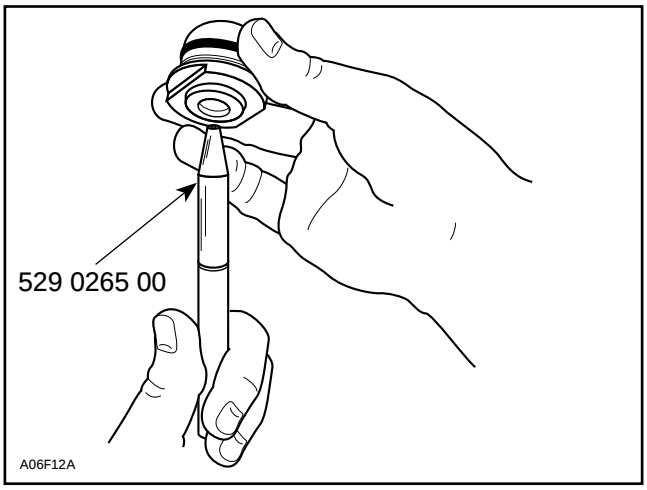

SHIM EQUIVALENCE FOR SAME DIAMETER			
THICKNESS mm	SHIM QUANTITY		
0.114	11	5.6	2.4
0.152	4.7	2.4	1
0.203	2	1	
0.254	1		

	FRONT		
	QTY	D mm (in)	Thick mm (in)
Spacer	1	12 mm (0.472 in)	0.023 mm (0.008 in)
Extension shims	5	26 mm (1.020 in)	0.203 mm (0.008 in)
Piston slit	4		
Compression shims	8	30 mm (1.180 in)	0.152 mm (0.006 in)
Spacer	2	15 mm (0.590)	0.114 mm (0.0045 in)

	CENTER		
	QTY	D mm (in)	Thick mm (in)
Spacer	1	12 mm (0.472 in)	0.023 mm (0.008 in)
Extension shims	8	26 mm (1.020 in)	0.152 mm (0.006 in)
Piston slit	4		
Compression shims	10	30 mm (1.180 in)	0.203 mm (0.008 in)
Spacer	3	16 mm (0.630)	0.203 mm (0.008 in)

	REAR		
	QTY	D mm (in)	Thick mm (in)
Spacer	1	15 mm (0.590 in)	0.023 mm (0.008 in)
Extension shims	10	26 mm (1.02 in)	0.152 mm (0.006 in)
Piston slit	2		
Compression shims	7	30 mm (1.180 in)	0.203 mm (0.008 in)
Spacer	3	15 mm (0.590)	0.203 mm (0.008 in)

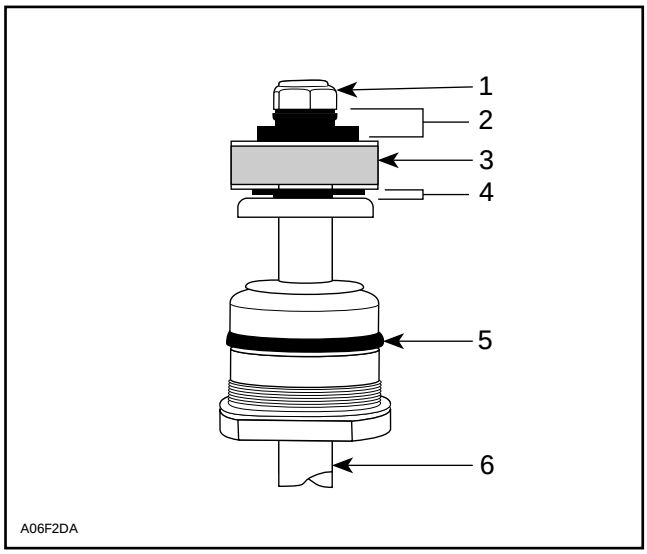

1. Damper nut torque 11-13 N•m (96-108 lbf•in).
2. Rebound shim pack.
3. Piston.
4. Compression shim pack.
5. O-ring visual inspection seal carrier assembly.
6. Damper rod.

Reinstall floating piston into damper body. Use molybdenum disulfide grease (example : molykote GN paste (P / N 413 7037 00) to ease O-ring past damper body threads with floating piston guide (P / N 529 0266 00).

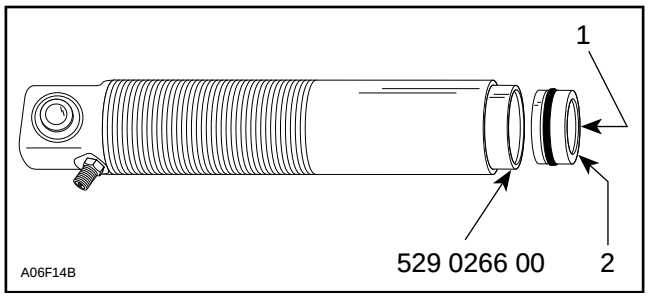

1. Push (slowly) by hand
2. Hollow side of floating piston must face rod side

NOTE : Lubricate inside of piston guide with molykote GN paste (P / N 413 7037 00).

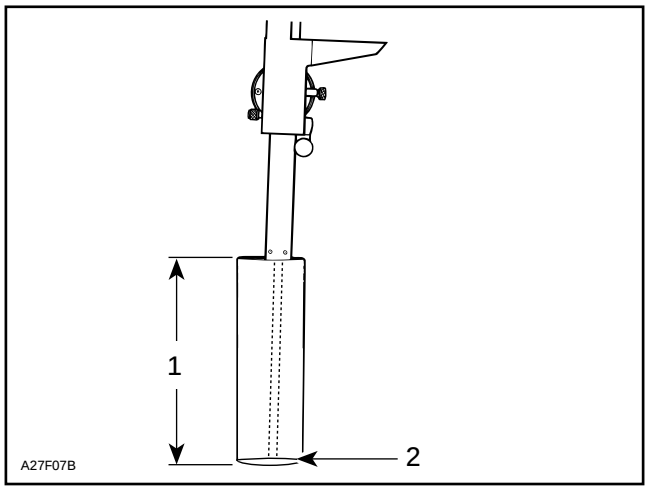

1. Required distance
2. Top of the piston

Install floating piston to depth of 151 mm (5.94 in) for front damper, 190 mm (7.48 in) for rear damper and 141 mm (5.55 in) for center damper. Measure from the top edge of the damper body.

NOTE : If the floating piston is installed too far into the damper body, light air pressure through Schrader valve (with core removed) will move piston outward.

WARNING : Whenever using compressed air exercise extreme caution, cover damper opening with shop cloth to reduce chance of possible injury.

CAUTION : Moisture laden compressed air will contaminate the gas chamber and rust floating piston.

WARNING : Always wear protective eye wear whenever using compressed air.

Replace shock oil with Bombardier HPG shock oil, (P / N 413 7094 00), to approximately 10 mm (.393 in), from the base of seal carrier threads.

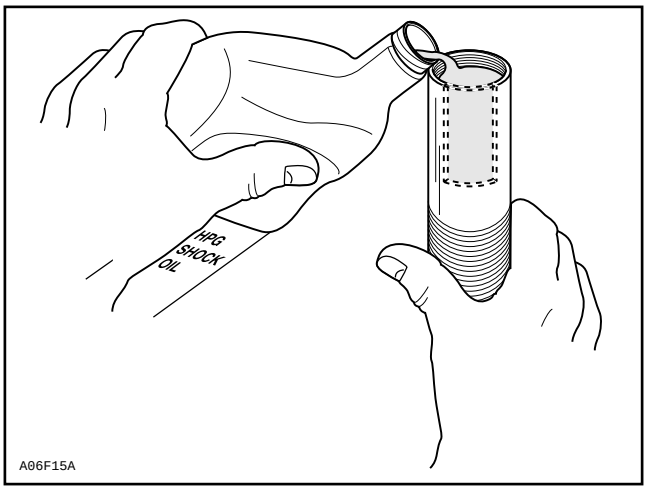

NOTE : Reinstall Schrader valve core before next step.

Install damper rod assembly into the damper body. Lightly oil damper piston seal ring with shock oil to ease installation.

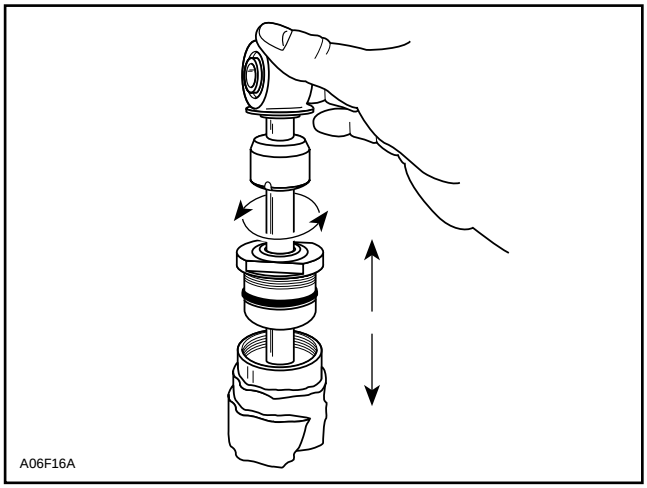

Seal carrier should be installed close to piston assembly. Careful inspection of damper oil capacity is required to insure that no air is in damper body during assembly.

NOTE : Some shock oil will overflow when installing damper for assembly. Wrap damper with shop cloth to catch possible overflow oil.

CAUTION : Use care when passing piston into damper body at damper body threads.

Slight oscillation of damper rod may be required to allow piston to enter damper body bore.

Slowly push piston into damper body. Slight up and down movement may be required to allow all air to pass through piston assembly.

NOTE : Fast installation of the damper rod may displace the floating piston from its original position. This must not occur if the damper is expected to perform as designed.

With damper rod piston into oil volume, re-top damper oil volume. Oil level should be to damper body thread base.

Seal carrier assembly can now be threaded into damper body. This should be done slowly to allow weapage of shock oil from body while installing.

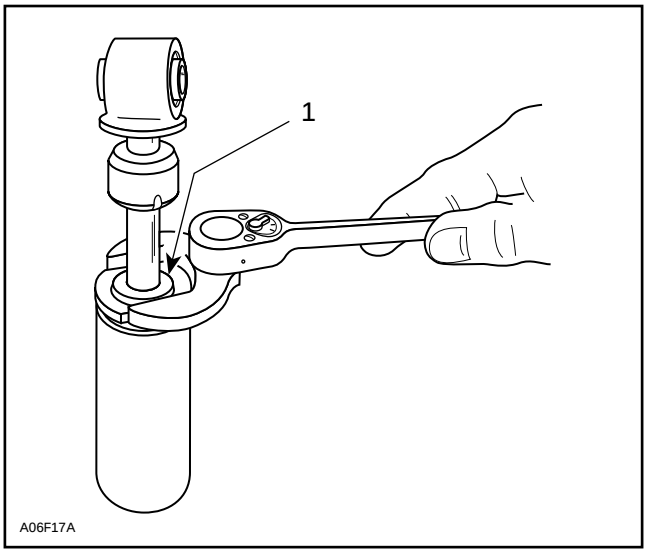

1. Torque seal carrier to 88-98 N•m (64-72 lbf•ft)

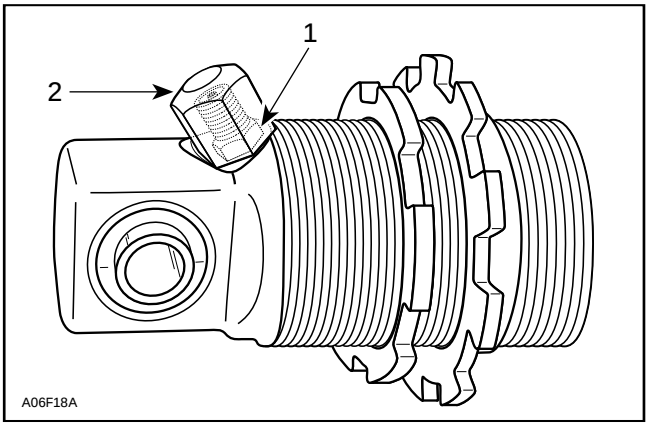

1. Schrader valve 1.5-2 N•m (13-17 lbf•in)
2. Schrader cap 5-6.5 N•m (44-57 lbf•in)

Gas Pressure Adjustment

Nitrogen (N_2) can now be added to damper body. Reinstall Schrader valve using teflon tape on valve threads into damper body.

Preset your pressure regulator to 2070 kPa (300 PSI) nitrogen (N_2), this gas pressure will restore the correct pressure for your damper.

CAUTION : Do not exceed the recommended pressure values.

WARNING : Whenever working with high pressure gas, use eye wear protection. Never direct gas pressure toward anybody.

NOTE : Carefully inspect damper for gas or oil leaks. Any leaks must be corrected before continuing.

Damper gas pressure can be confirmed by using a pressure gauge available through your local industrial gas supplier.

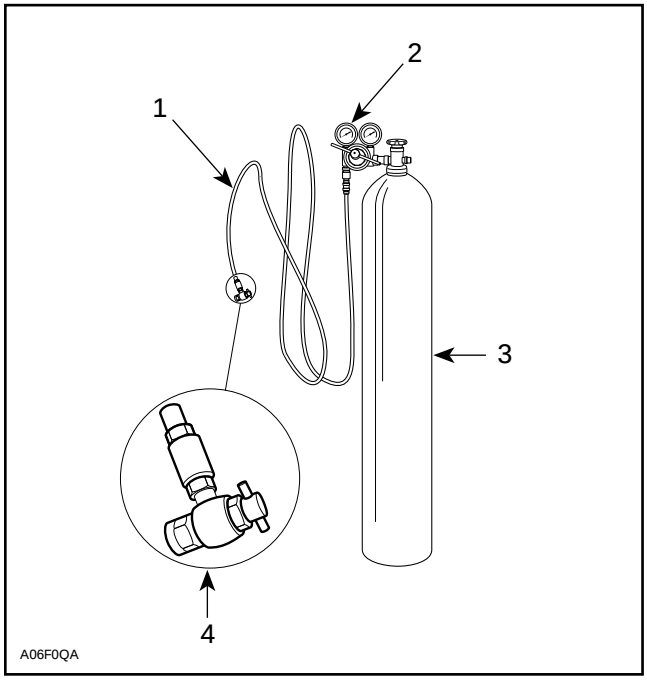

1. Automotive type air pressure hose
2. Two stage regulator, delivery pressure range 2070 KPa (300 PSI)
3. High pressure cylinder filled with industrial grade nitrogen
4. Valve tip

Reinstall damper spring retainer, then your spring. Next, thread the spring pre-load rings up to the spring. Set pre-load according to recommended spring length specifications. Your damper is now ready for reinstallation to your snowmobile.

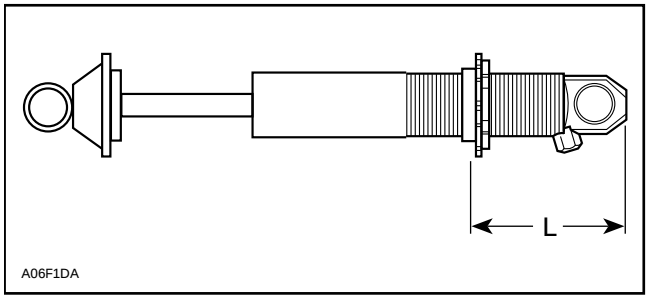

L : FRONT = 76 MM (3 IN)
CENTER = 70 MM (2-3/4 IN)

Miscellaneous Information

– Never substitute the nitrogen gas fill for another gas product. The nitrogen gas has been selected because of its inert qualities. As well as being a dry gas (moisture free), it will not contaminate the gas chamber portion of the damper.

– When selecting shim stacks, 2 thin shims of equal thickness to one thick shim will offer less resistance than one thick shim. Refer to SHIM EQUIVALENCE FOR SAME DIAMETER table above.
– Whenever building a rebound shim stack, always use 26 mm (1.02 in) diameter shims against the piston. No less than 3 shims should be used in any valve stack to prevent bending or breakage. Approximately .203 mm (.008 in) clearance should be allowed between shim stack and valve stopper washer.
– Whenever building a compression shim stack, always use 30 mm (1.181 in) diameter shims against the piston. No less than 3 shims should be used in any valve stack to prevent bending or breakage. One .114 mm spacer washer minimum (2 or more recommended) should be used between shim stack and valve stopper.

Hydraulic Shock Servicing

Refer to SKANDIC WT SUSPENSION 07-02 then look for Shock Absorber Servicing.

25, Protector

At assembly, mount protector with its notch toward front.

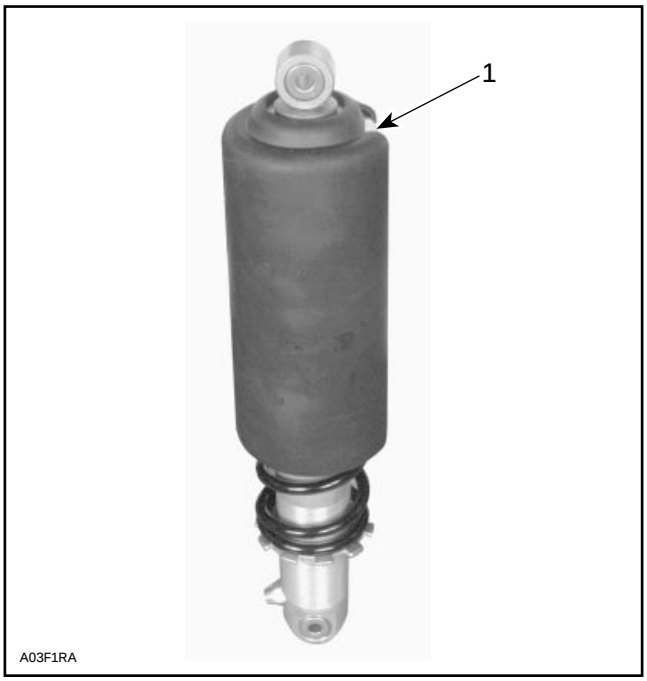

1. Notch

INSTALLATION

Install assembled suspension into track with front portion first.

Insert rear portion of suspension into track.

Bolt front arm, rear arm then center top idler wheel axle.

Adjust track tension.

RIDE ADJUSTMENT

Refer to *Operator's Guide*.

LUBRICATION

Lubricate front and rear arms at grease fittings using low temperature grease (P / N 413 7061 00).

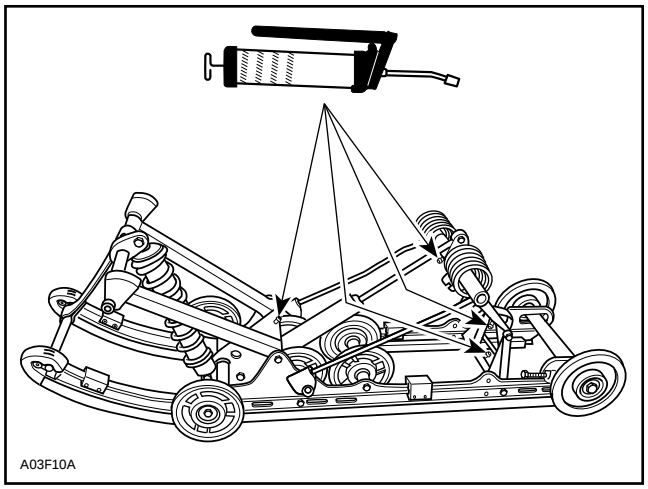

SUMMIT : 4 GREASE FITTINGS

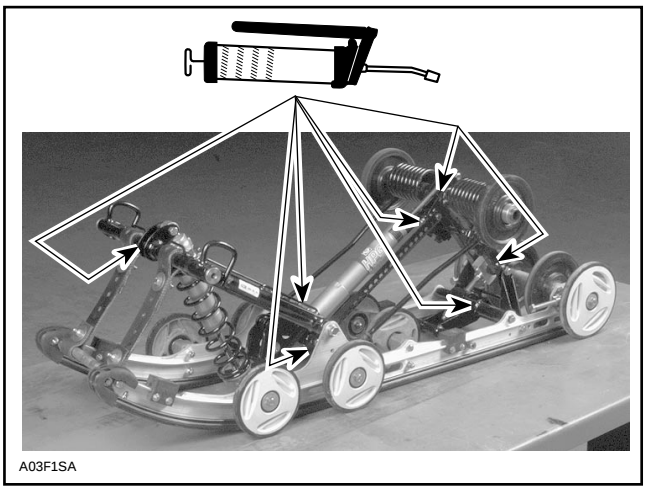

ALL MODELS EXCEPT SUMMIT : 7 GREASE FITTINGS

SKANDIC WT SUSPENSION

Skandic WT

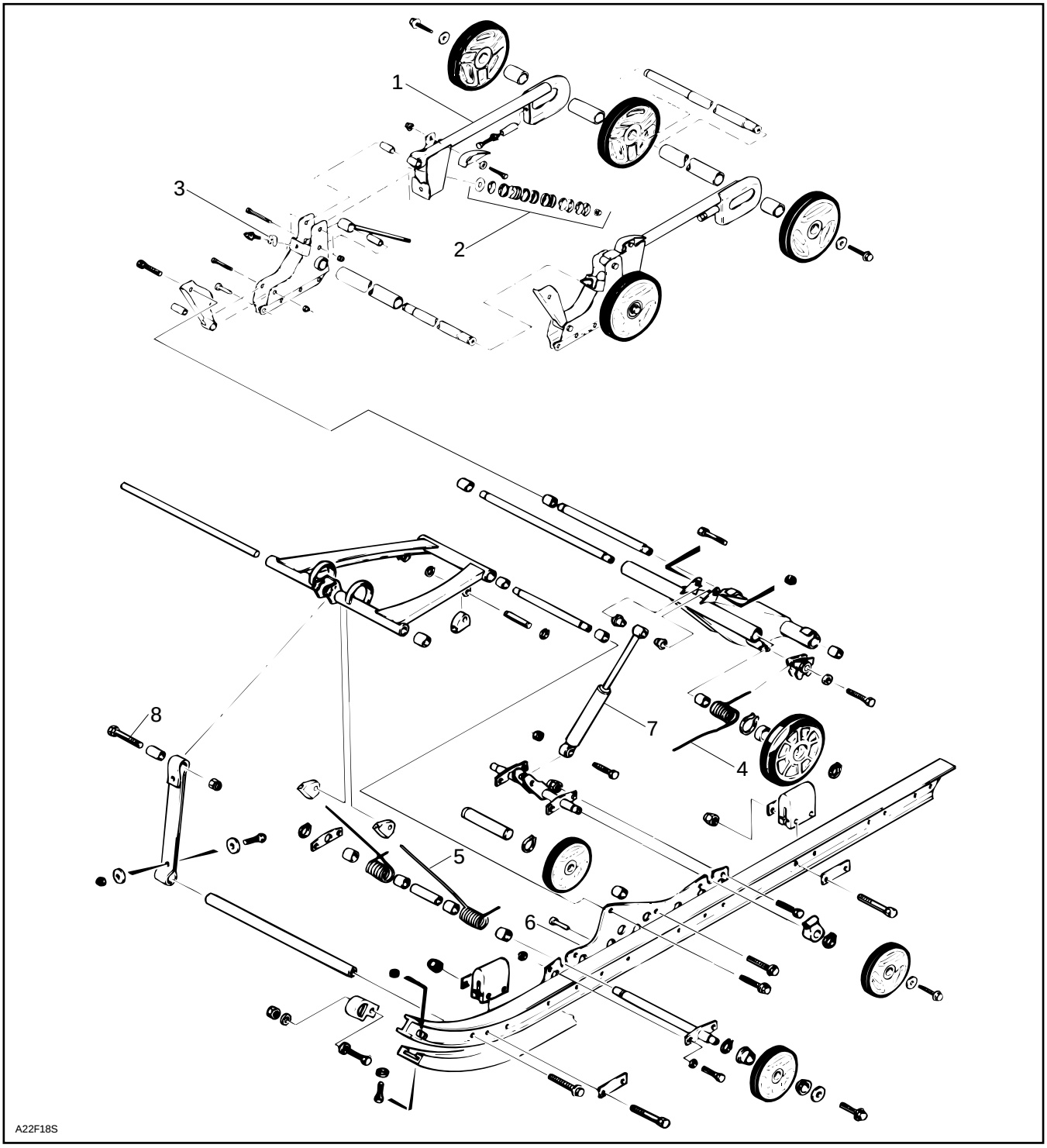

REMOVAL

Release track tension.

Lift rear of vehicle and support it off the ground.

Unbolt front arm then rear arm.

NOTE : To prevent cross shaft from turning when unscrewing screws assembled with threadlocker, proceed as follows :

– Knock on screw head to break threadlocker bond.
– Loosen one screw then retighten.
– Remove the opposite screw.
– Remove the first one.

Remove suspension ass'y.

A22F1EA

DISASSEMBLY AND ASSEMBLY

1, Extension

Remove nuts and conical washers from the eye bolt adjuster. Remove bolt retaining eye bolt adjuster to support.

Remove rear idler wheel on appropriate side.

Remove idler wheel from support.

Unbolt extension from its support.

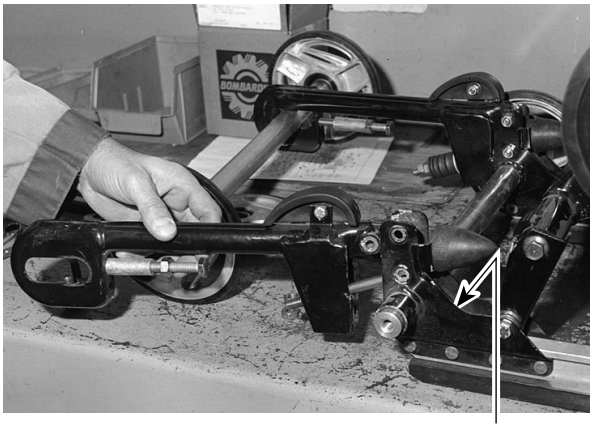

A22F19A

1. Support

2, Conical Washer

At installation, position conical washers as shown.

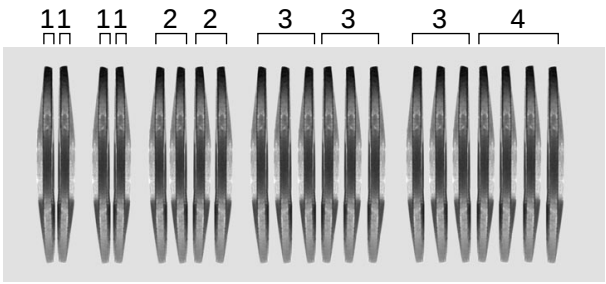

A22F1AA

WASHER QUANTITY AND MOUNTING POSITION

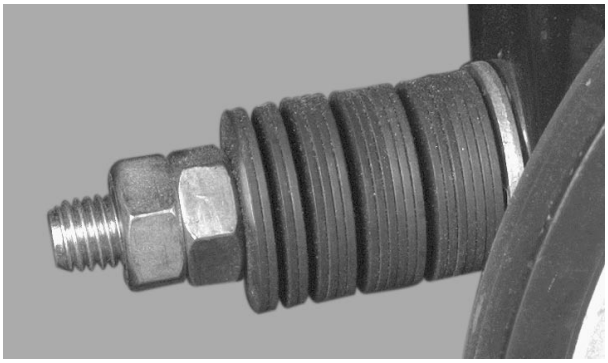

A22F1BA

Tighten nut 3/4 turn after contacting washers for better deep snow performance. Maximum pre-load is 3 turns after nut touching washers. This last adjustment is for trail riding with or without a load and for pulling a load.

4, Rear Spring

Remove top idler wheels.

Unscrew one end of shock.

Remove spring.

5, Front Spring

Remove circlips retaining spring support to top and bottom of front arm.

Holding spring end, remove lock pin of top spring support then bottom support lock pin.

Unbolt front idler wheel axle.

Remove idler wheel on side where axle retaining plate is not welded.

Remove springs.

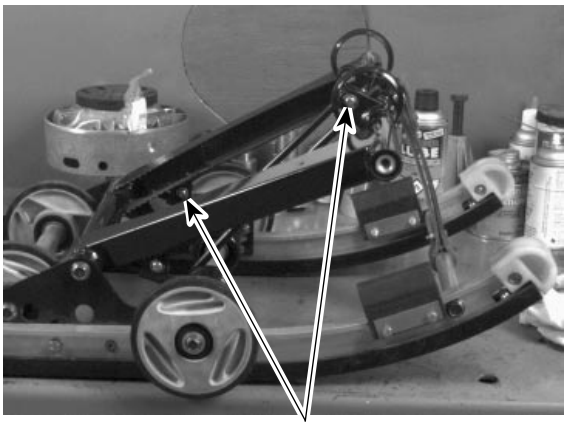

A22F1CA

1. Circlips

6, Support Plate

Drill rivets to remove support plate. Use a 8 mm (21/64 in) drill bit.

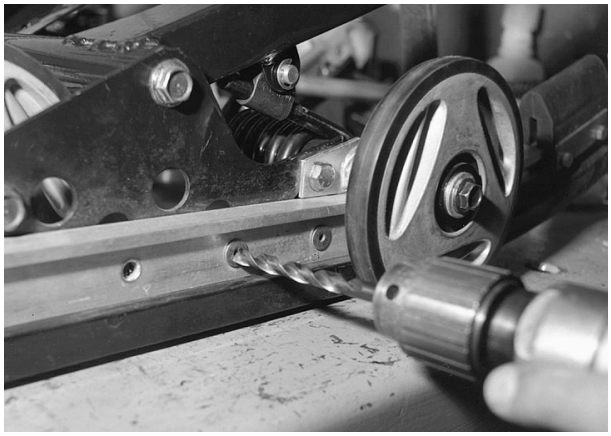

A22F1DA

Rivets can be substitued by M8 X 20 bolts and nuts.

8, Stopper Strap Bolt

Install it in center hole of front arm.

3, Horse-Shoe Washer

For deep snow riding, do not install washer nor rubber stoppers.

For trail riding with passenger and / or weight, install 1 washer under each rubber stoppers.

For trail riding with heavy load and / or pulling a load, use 2 washers under each rubber stoppers.

7, Shock

Install shock with its rod upward.

SHOCK ABSORBER SERVICING

Secure the shock body end in a vise.

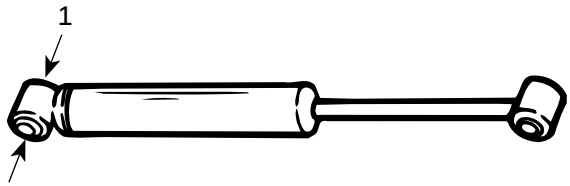

A14F0BA

TYPICAL

1. Clamp

CAUTION : Do not clamp directly on shock body.

Examine each shock for leaks. Extend and compress the piston several times over its entire stroke then check that it moves smoothly and with uniform resistance.

Pay attention to the following conditions that will denote a faulty shock :

- A skip or a hang back when reversing stroke at mid travel.
- Seizing or binding condition except at extreme ends of stroke.
- Oil leakage.
- A gurgling noise, after completing one full compression and extension stroke.

Renew if any fault is present.

IMPROVED C-7 SUSPENSION

Formula III / III LT and Mach Z / Z LT

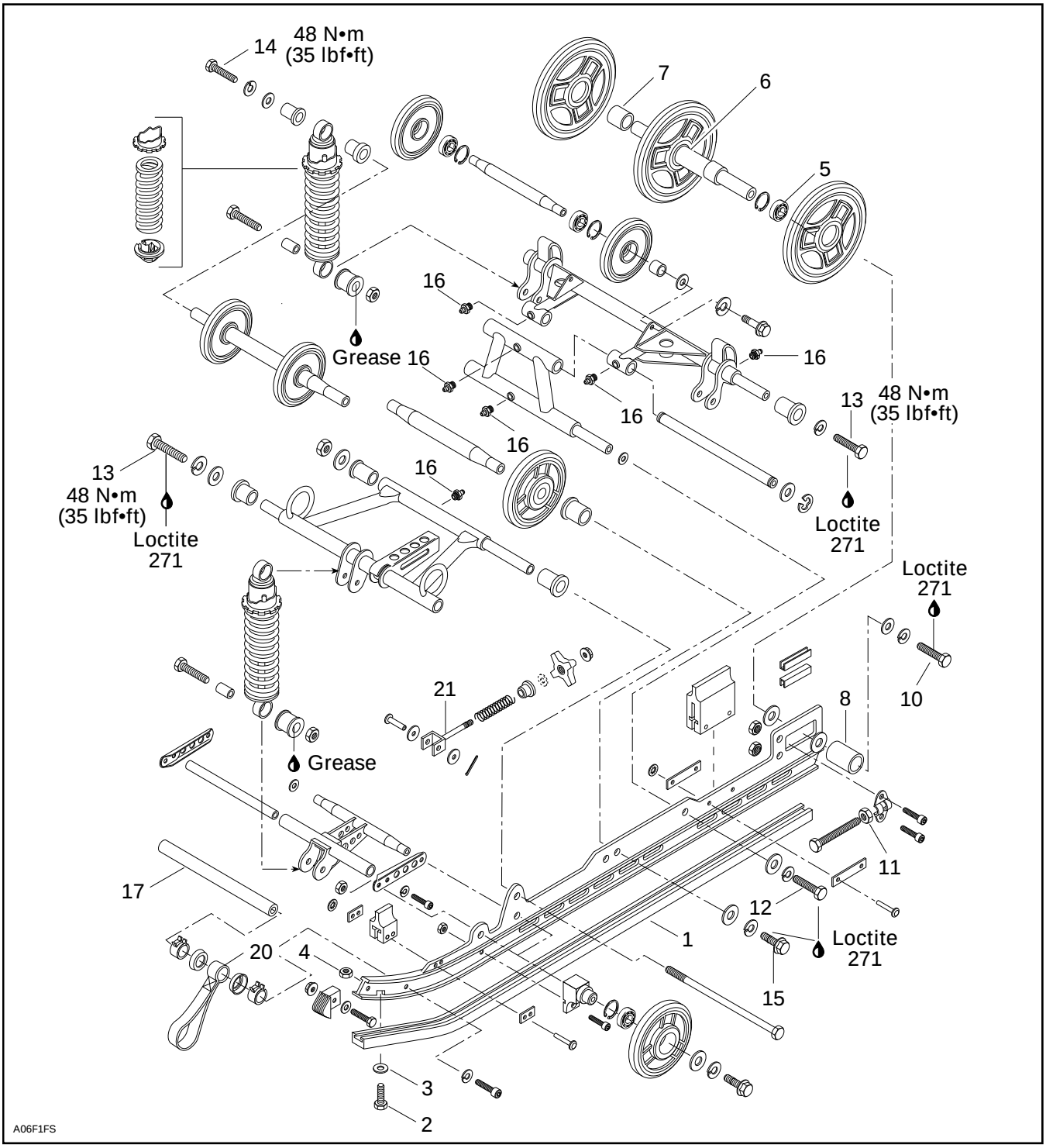

REMOVAL

NOTE : To prevent cross shaft from turning when unscrewing screws assembled with threadlocker, proceed as follows :

– Loosen one screw then retighten.
– Remove the other screw.
– Remove the first one.

CAUTION : Close fuel shut-off valve before lifting vehicle.

Lift rear of vehicle off the ground about 850 mm (33-1/2 in).

Unscrew 6 screws retaining front arm, shock pivot and rear arm to frame in the illustrated sequence.

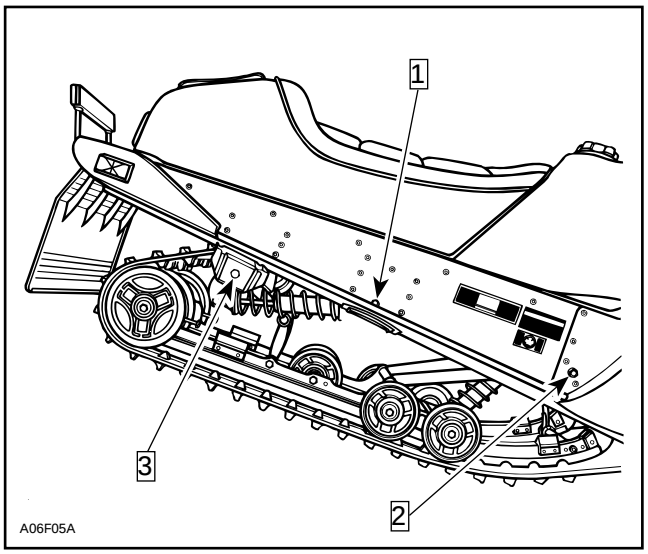

TYPICAL

1. Remove suspension.

DISASSEMBLY AND ASSEMBLY

20, Stopper Strap

Inspect strap for wear or cracks. Check seams. Replace as required.

At installation, slide washers no. 19 and spring clamps no. 18 on axle no. 17 until stopper strap is in line with its tensioner mounted on front arm. See illustration below.

1,2,3,4, Slider Shoe, Bolt, Washer and Nut

To replace a worn shoe, remove the front bolt and stop nut, then slide the shoe rearward out of the runner.

NOTE : Slider shoe minimum thickness : 10 mm (25/64 in).

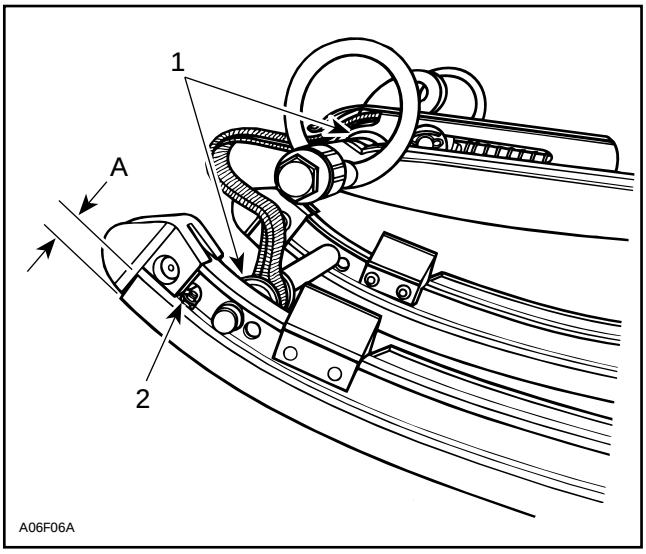

TYPICAL

1. In line
2. Front screw and nut
A. 10 mm (25/64 in)

CAUTION : Slider shoes must always be replaced in pairs.

5,6,7,8,9, Rear Axle, Long Spacer, Short Spacer, Outer Spacer and Screw

At assembly, center idler wheel must be offset to the right (opposite side of stopper strap).

Position outer spacer as shown.

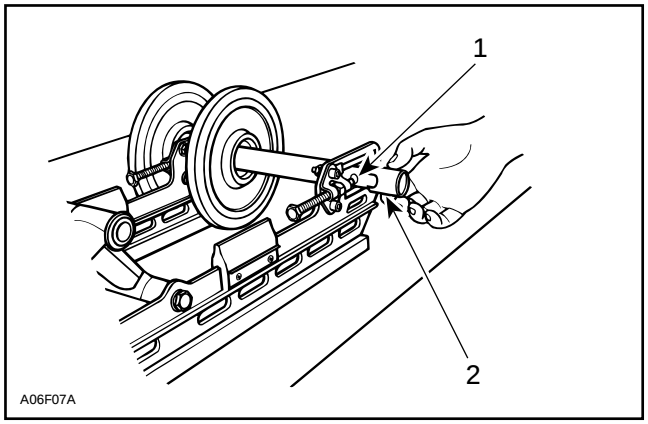

1. Rear axle hole
2. Outer spacer

CAUTION : It is important to properly position the outer spacer. Disregarding this notice might cause rear axle failure.

Position hole on rear axle forward.

Position notch in outer spacer forward and inward onto the rear axle.

10,12,13,14,15, Screw

Clean all screw threads and axle hole threads. Prior to assembly, apply low temperature grease (P / N 413 7061 00) on axles and Loctite 271 (P / N 413 7074 00) on screw threads.

11, Elastic Stop Nut

Inspect for damage and replace as required.

INSTALLATION

CAUTION : Close fuel shut-off valve(s) before lifting vehicle.

Lift rear of vehicle off the ground about 850 mm (33-1/2 in). Install assembled suspension into track with front portion first. Insert rear portion of suspension into track.

Bolt suspension to tunnel following sequence and torque values as follows.

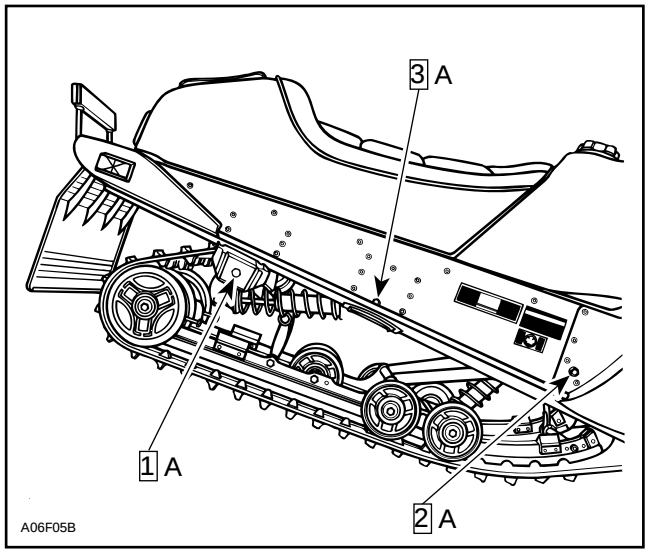

TYPICAL

A. 48 N•m (35 lbf•ft)

16, Grease Fitting

Lubricate until grease appears at joints using low temperature grease (P / N 412 7061 00) :

– Front arm : upper and lower axles.

– Rear arm : upper and lower axles.

– Rear shackle.

NOTE : There are 7 lubrication points.

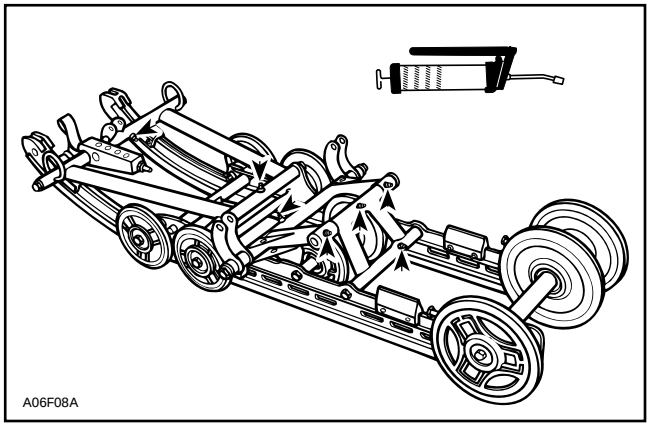

TYPICMAL

SHOCK ABSORBER SPRING REPLACEMENT

WARNING : Do not attempt to dismantle a shock absorber spring without using the proper spring compressor. Do not apply heat or flame to the rear gas pressurized shocks.

NOTE : Before attempting to compress the spring, push the rubber bumper against the shock body and place the adjuster ring at its lowest position.

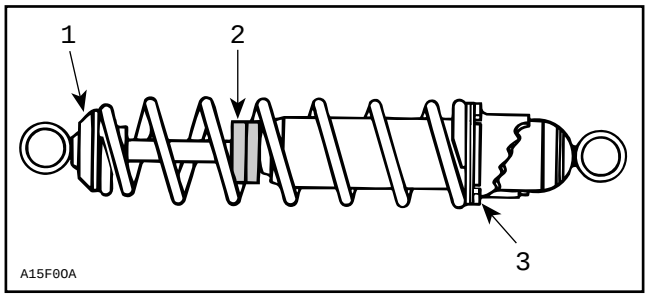

TYPICAL

1. *Spring collar*
2. *Bumper against shock body*
3. *Lowest position*

Install spring compressor (P / N 529 0271 00) in a vise. Mount shock in it and turn shock so that spring coils matched spring compressor.

Close and lock bar. Adjust handle horizontal by changing position of clevis pin.

Push down on handle until it locks. Remove spring stopper then release handle.

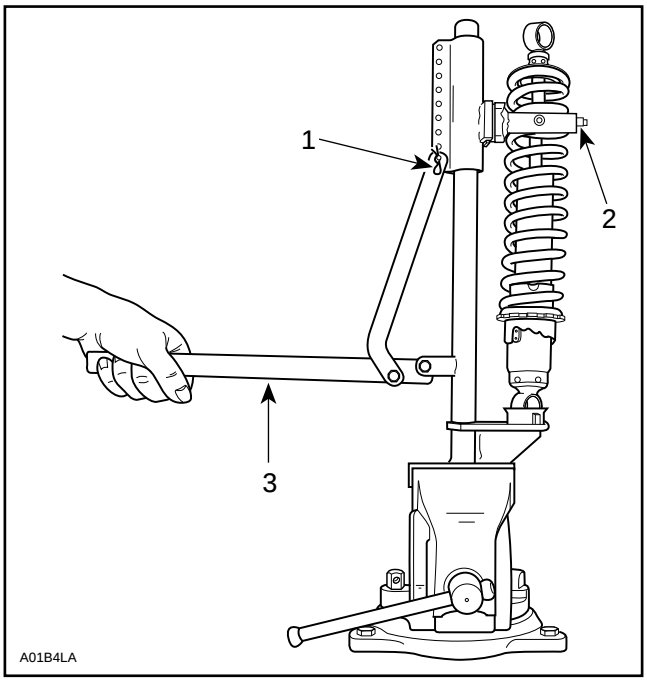

1. *Clevis pin*
2. *Bar*
3. *Handle horizontal*

At installation, position spring stopper slit on opposite side of spring coil end.

SHOCK ABSORBER SERVICING

Because of gas pressure, strong resistance is felt when compressing shock. When released, the shock will extend unassisted. Renew as required.

SUSPENSION ADJUSTMENT

Refer to *Operator's Guide*.

DRIVE AXLE

S-Series and F-Series

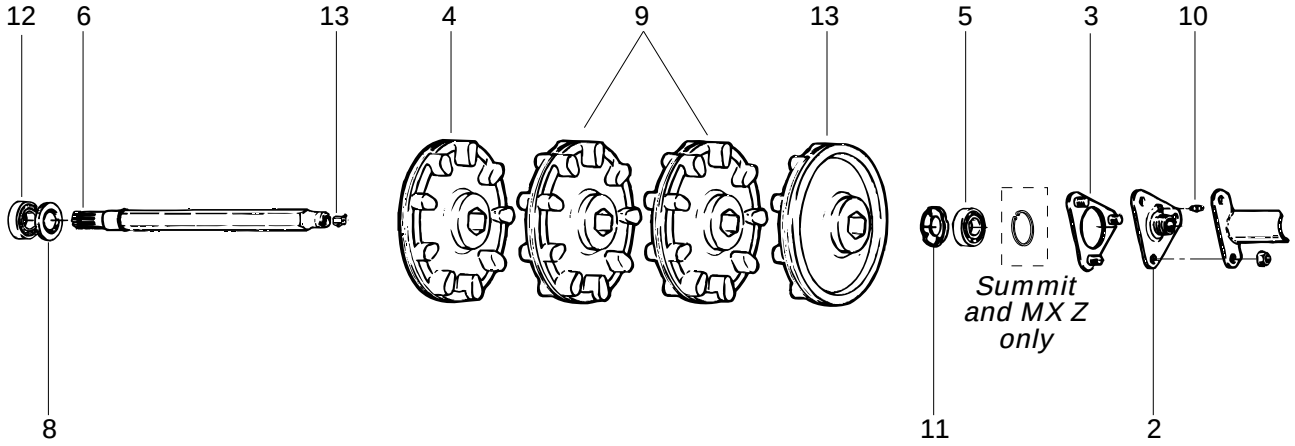

A03D20S

Skandic WT

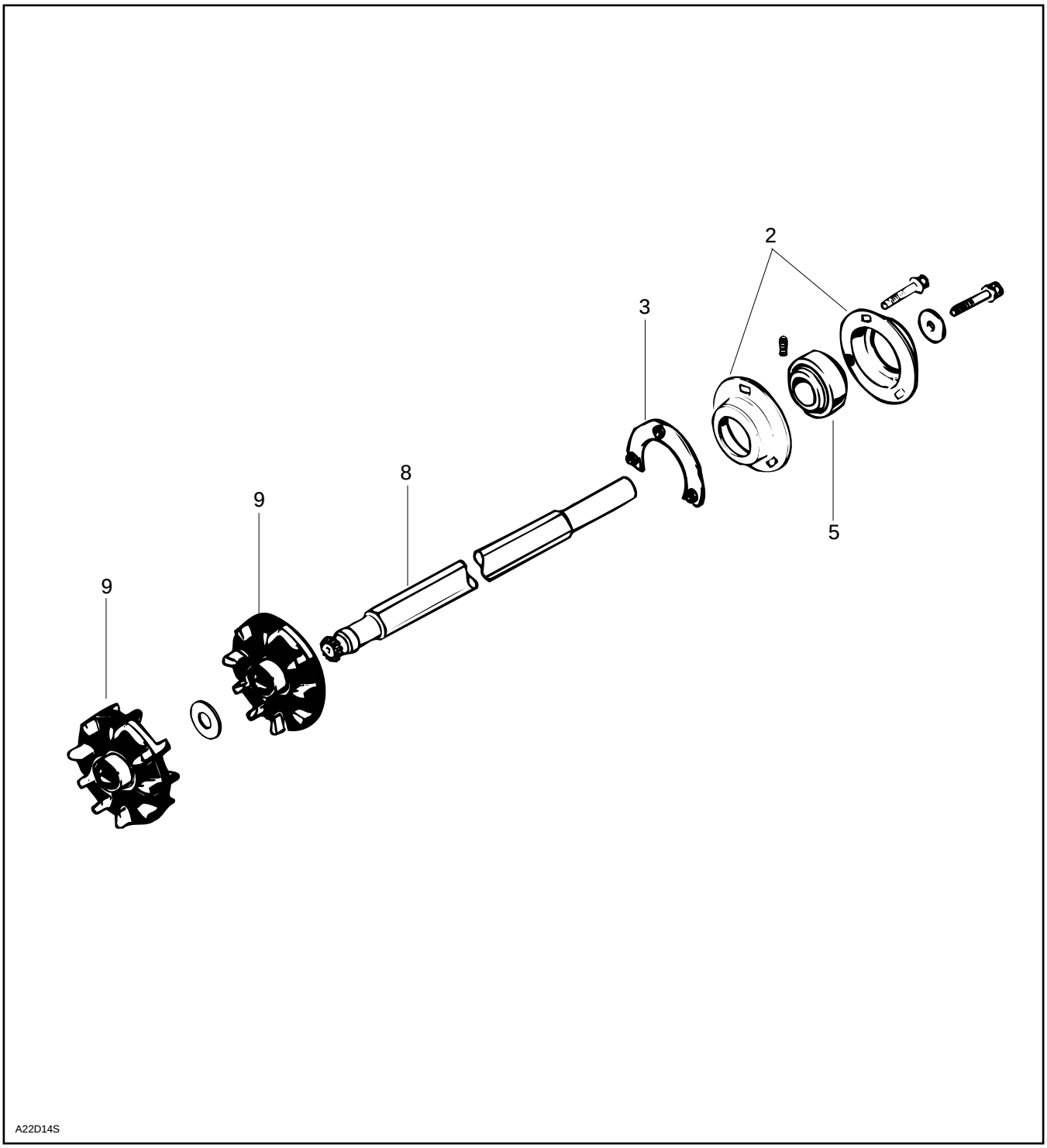

REMOVAL

All Models Except Skandic WT

Drain oil from chaincase or gearbox. Release drive chain tension. Remove chaincase cover.

Raise and block rear of vehicle off the ground.

Remove suspension. Refer to REAR SUSPENSION 07.

2,6, End Bearing Housing and Seal

Remove angle drive unit and coupling cable. On Summit and MX Z, remove circlip from drive axle.

Remove chain and sprocket then circlip and bearing from drive axle.

Pry oil seals from chaincase and end bearing housing.

8,9, Drive Axle and Sprocket

Release drive axle sprocket from track and at the same time, pulling the drive axle towards the end bearing housing side.

Remove drive axle from vehicle.

Skandic WT Only

Drain gearbox.

Raise and block rear of vehicle off the ground.

Remove suspension. Refer to REAR SUSPENSION 07.

Remove muffler. Unfasten screw from drive axle end. Loosen both Allen screws from end bearing.

Remove 3 screws retaining end bearing then remove inner plate.

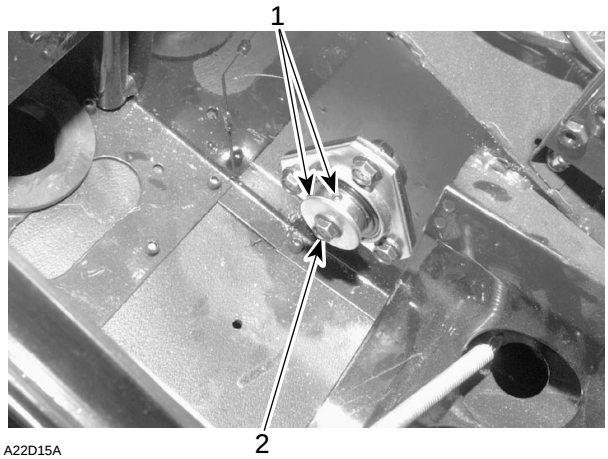

1. Allen screws
2. Screw

Remove angle drive and square pin from bottom of gearbox.

Remove belt guard and belt.

Loosen gearbox retaining screws then move gearbox sideway. Do not remove brake mechanism nor driven pulley.

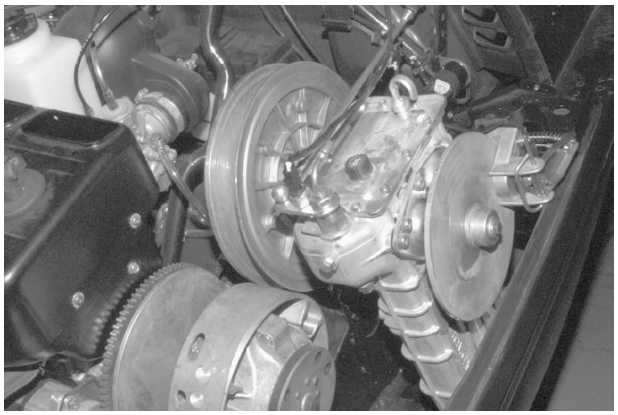

Remove drive axle.

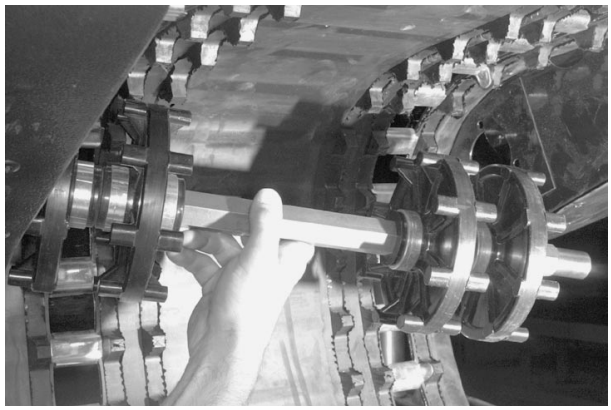

DISASSEMBLY

4, Speedometer Drive Insert

Remove speedometer drive insert.

5,12, Bearing

To remove bearings, use puller assembly, ring and half rings as illustrated.

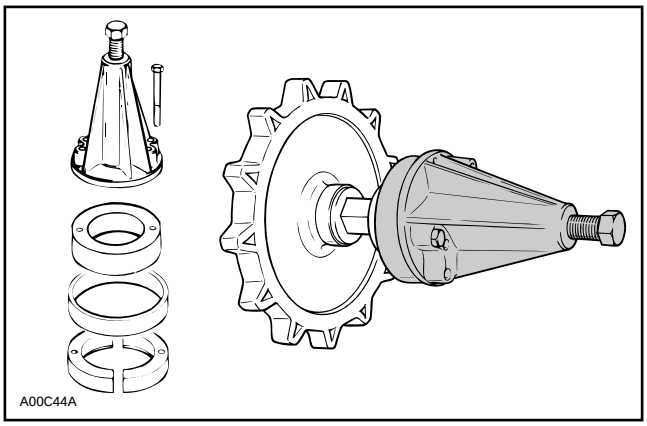

9,13, Sprocket and Half-Sprocket

To remove press fit sprockets, use a press and a suitable support as illustrated.

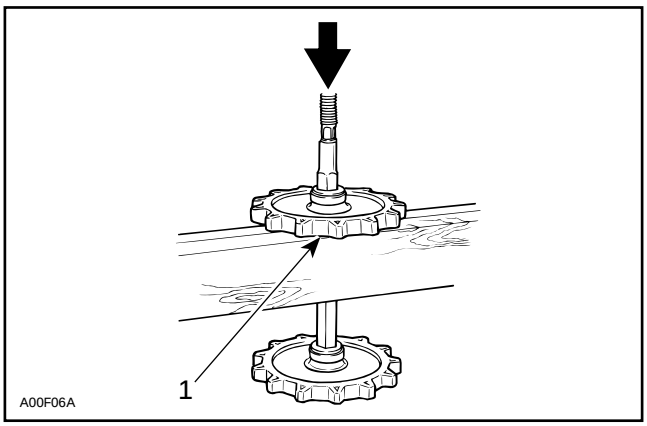

TYPICAL

1. Support sprocket near hub

NOTE : Two different types of sprocket press fit can be found. Ensure to replace ring reinforced sprockets with the same type.

ASSEMBLY

8,9,13, Drive Axle and Sprocket

To assemble press fit sprockets, use a press and a suitable pipe as illustrated. Sprockets must be assembled according to the following dimensions.

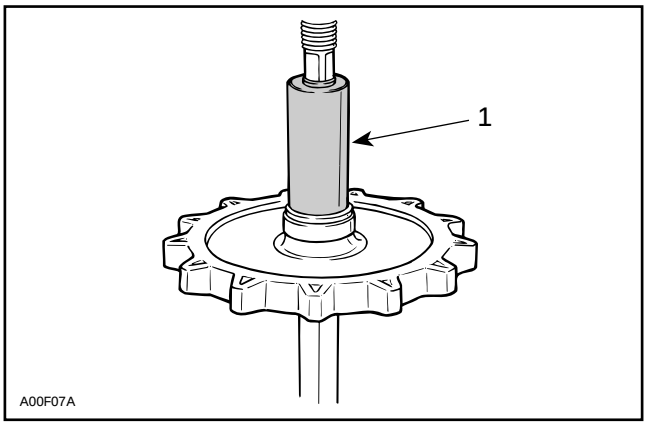

1. Pipe

S-Series and F-Series

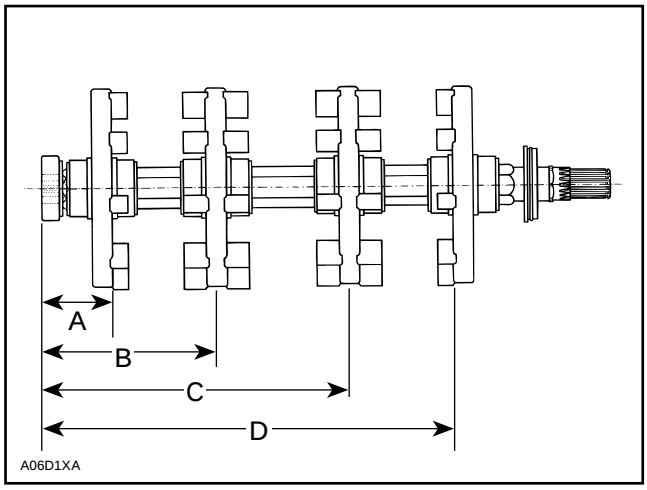

A. 65.8 mm (2-19/32 in)
B. 159.3 mm (6-17/64 in)
C. 282.3 mm (11-7/64 in)
D. 375.8 mm (14-51/64 in)

Skandic WT

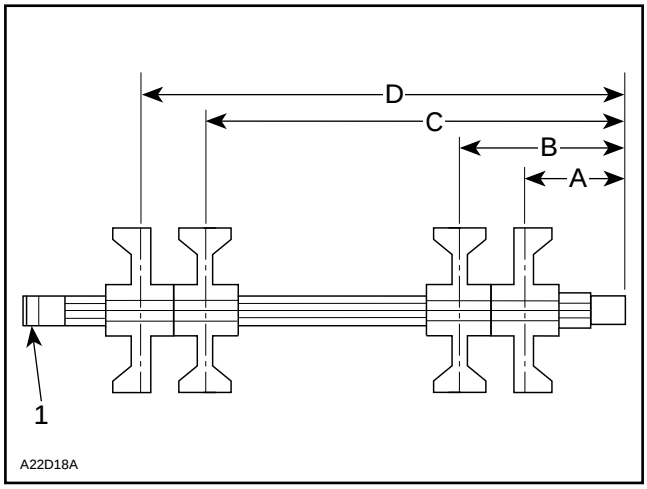

1. Gearbox side
A. 95.5 mm (3-49/64 in)
B. 159 mm (6-17/64 in)
C. 401 mm (15-25/32 in)
D. 464.5 mm (18-9/32 in)

All Models

Ensure to align indexing marks of each sprocket when assembling.

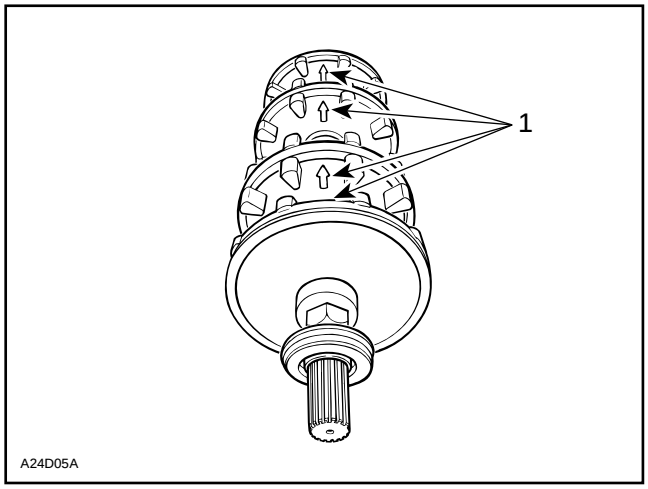

TYPICAL
1. Indexing marks aligned

The maximum desynchronization for the sprockets is 1.5 mm (1/16 in).

To check this tolerance, place axle assembly on a plane surface and measure the gap between sprocket tooth and surface.

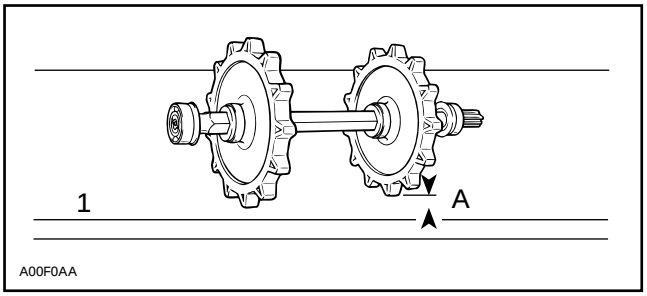

1. Plane surface
A. 1.5 mm (1/16 in) MAXIMUM

CAUTION : The same sprocket must not be pressed twice on the axle. If synchronization is found to be defective, use a new sprocket.

6,8, Drive Axle and Seal

When assembling drive axle, always position a new seal on each end of drive axle (if applicable). Locate seal lip as illustrated.

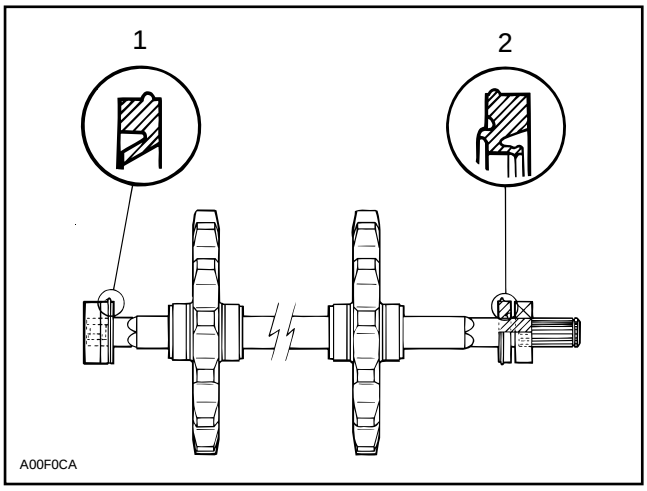

1. Grease seal type
2. Oil seal type

11, Bearing Protector

At assembly, flat side of bearing protector must be against bearing.

5,12, Bearing

Always push bearing by inner race.

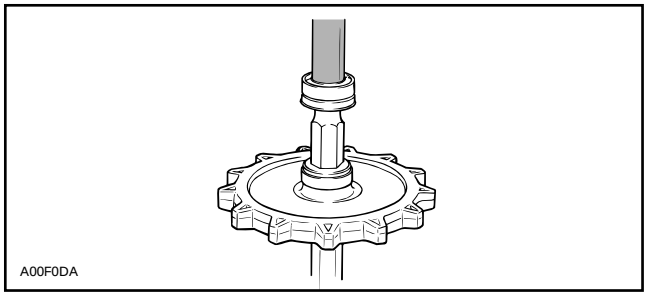

The bearing on the splined side of axle must be pushed until it is seated on shaft shoulder. The end bearing housing bearing must be flush with end of drive axle. Each bearing must have its shield facing the sprocket.

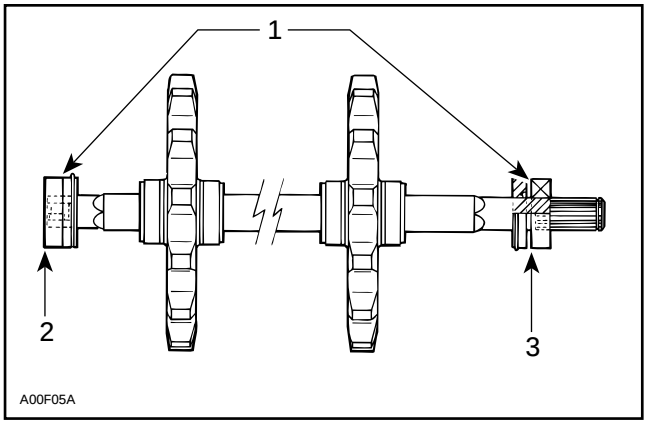

1. Bearing shield on this side
2. Flush with drive axle
3. Seated on shaft shoulder

AXIAL PLAY

S-Series and F-Series

Ensure there is no deformation of the sheet metal around the end bearing housing. Straighten as required.

Before attempting to adjust the drive axle axial play, check the chaincase perpendicularity as follows :

CHAINCASE PERPENDICULARITY ADJUSTMENT

– Remove driven pulley.

– Slacken bearing collar set screw and working from the driven pulley side, turn bearing collar clockwise.

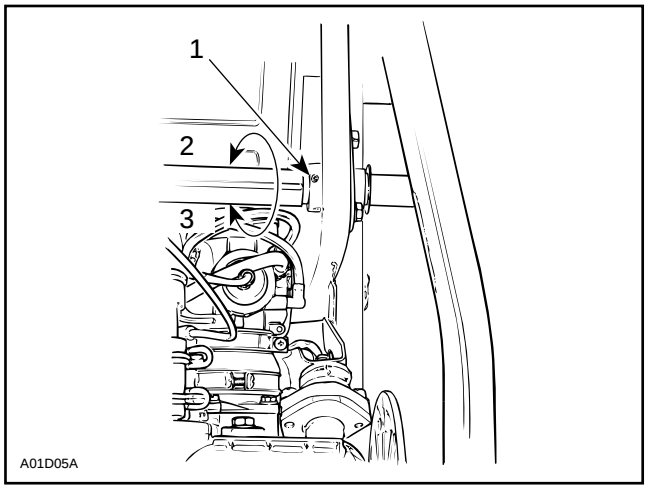

TYPICAL

1. Set screw
2. Slacken
3. Tighten

– Extract bearing from its support.

Wrong chaincase perpendicularity will make it difficult to correctly install the bearing in its support due to the countershaft and support misalignment.

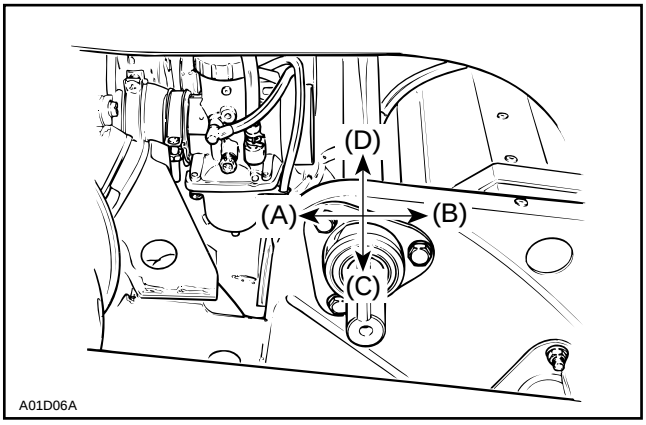

TYPICAL

– Add shim(s) (P / N 504 0398 00) between chaincase and frame to obtain easy bearing installation.

▼CAUTION : When installing one shim or more between chaincase and frame, secure with 50 mm long screws.

	BEARING POSITION			
	(A) TOWARD FRONT OF VEHICLE	(B) TOWARD REAR OF VEHICLE	(C) TOWARD BOTTOM OF VEHICLE	(D) TOWARD TOP OF VEHICLE
SHIM LOCATION	LOWER	UPPER	UPPER	LOWER

This chart can be use as a “starting point” to correct the chaincase perpendicularity.

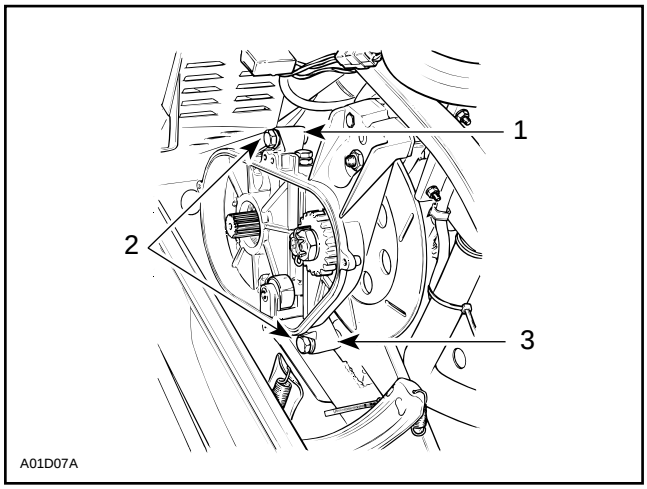

TYPICAL

1. *Upper shim location*
2. *50 mm long screws when installing one shim or more*
3. *Lower shim location*

– Do not reinstall the driven pulley at this time.

AXIAL PLAY ADJUSTMENT

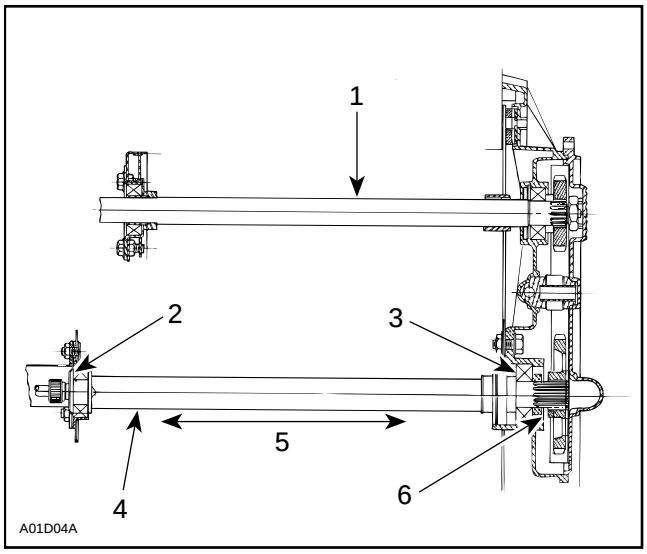

TOP VIEW

1. *Countershaft*
2. *Shim position on end bearing housing side*
3. *Shim position on chaincase side*
4. *Drive axle*
5. *Axial play*
6. *Shim between sprocket and spacer*

– Push the drive axle toward chaincase and take note of the distance between the sprocket and tunnel.

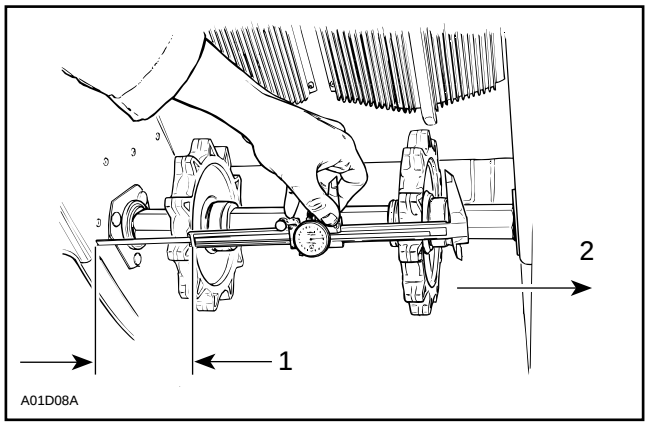

1. *Distance between sprocket and tunnel*
2. *Drive axle pushed toward chaincase*

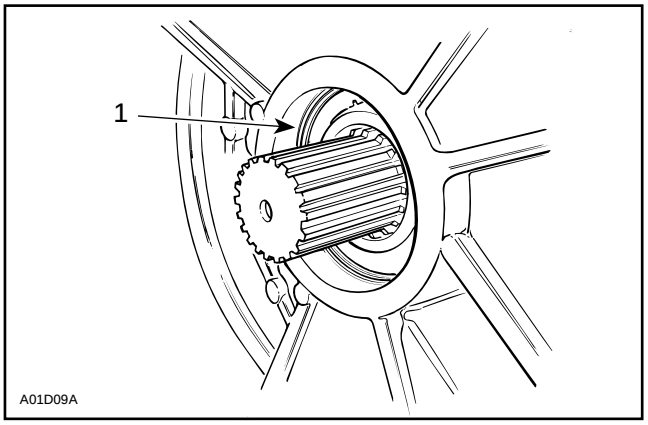

1. No gap all around

– Pull drive axle toward the end bearing housing and take note of the measurement between sprocket and tunnel.

The drive axle axial play is the difference between these 2 measurements.

– Repeat this procedure 2 or 3 times to obtain an accurate measurement.

The allowable drive axle axial play is 0 to 1.5 mm (0 to .060 in).

The drive axle axial play, as calculated above, should be within the allowable axial play, add shim(s) accordingly.

– Remove drive axle, install required shim(s) as per the shim position chart, reinstall drive axle without the suspension and track.

SHIM POSITION

Shim position is important to maintain proper sprocket alignment.

CAUTION : Install shim(s) following the pattern shown in the chart.

SHIM(S) REQUIRED	SHIM POSITION AND QUANTITY	
	END BEARING HOUSING SIDE	CHAINCASE SIDE
1	1	
2	1	1
3	2	1

When installing shims between the chaincase and the drive axle bearing, there must be same quantity of shims between the drive chain sprocket and spacer.

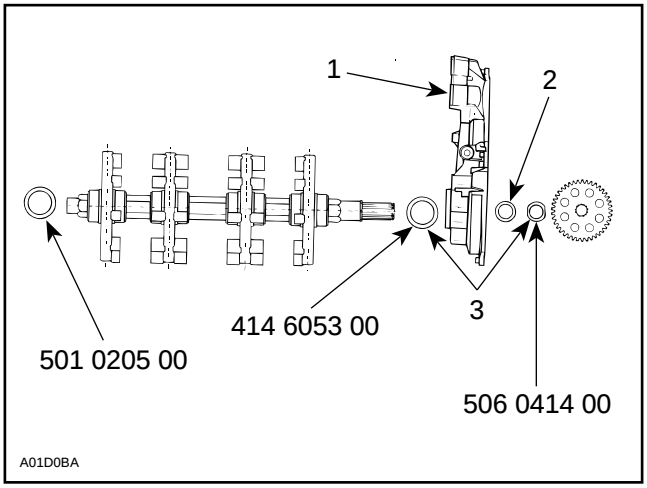

1. Chaincase
2. Spacer
3. Same quantity

– Doublecheck drive axle axial play as described above.

– Modify total shim thickness as required.

– Reinstall track and suspension. Adjust track tension and alignment.

NOTE : Center the track suspension to ensure that the alignment check made in the next step is accurate.

– To center, grasp the track suspension and move it sideways, left and right. Position the track suspension at the midpoint of its sideways movement.

– Check track front alignment by measuring the gap, on each side between guide cleat and the slider shoe, behind the suspension front axle as shown.

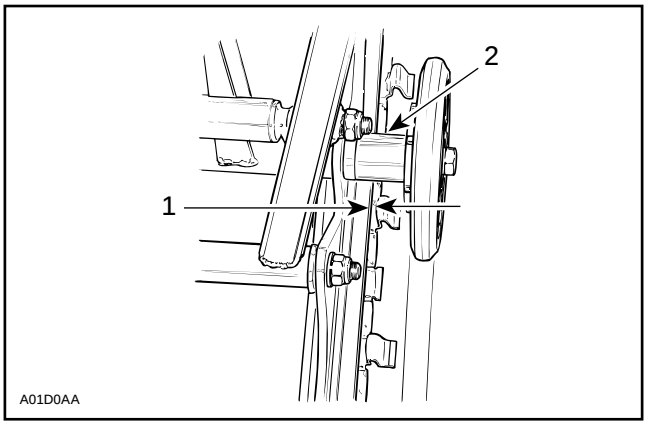

1. Distance between guide cleat and slider shoe
2. Suspension front axle

If the difference between each side exceeds 3 mm (1/8 in), redistribute drive axle shims as follows :

DIFFERENCE BETWEEN EACH SIDE	DRIVE AXLE SHIM REDISTRIBUTION
3 to 4.5 mm (1/8 to 3/16 in)	Remove 1 shim from larger gap side. Add 1 shim on smaller gap side.
4.5 to 6 mm (3/16 to 1/4 in)	Remove 2 shims from larger gap side. Add 2 shims on smaller gap side.

INSTALLATION

4, Speedometer Drive Insert

If the drive axle to be installed is a new part and the vehicle is equipped with a speedometer, a correct size speedometer drive insert must be installed into the axle end. Ensure that insert is flush with end of axle (not applicable to Alpine II).

Position drive axle assembly into location. Install end bearing housing. Install spacer (if applicable) between bearing and lower chaincase sprocket (on Alpine II, place spacers prior to installing drive axle).

Install chaincase and position seals (if applicable), making sure that a gap of approximately 2 mm (1/16 in) exists between end of bearing housing and each seal.

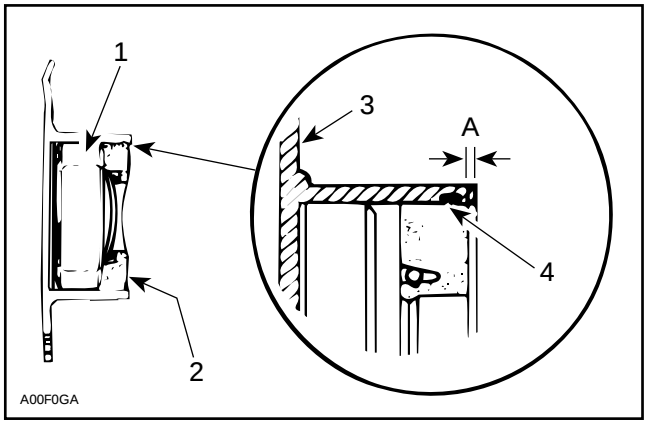

SIDE VIEW

1. *Bearing*
2. *Seal*
3. *Housing*
4. *Seal lip*

A. 2 mm approx.

3, Retainer Ring

Make sure that welded nuts are toward inside of tunnel.

Lock drive axle sprocket with a circlip.

Reinstall the chaincase cover.

Refill with chaincase oil. Refer to TECHNICAL DATA 10.

Install the suspension. Refer to TRACK 07-05 and adjust track tension and carry out track alignment procedure.

LUBRICATION

15, Grease Fitting

Lubricate end housing bearing with low temperature grease (P / N 413 7061 00).

ADJUSTMENT

Sprocket / Track Alignment

▼CAUTION : Do not temper with sprocket / track alignment if frame or suspension is damaged.

Sprockets might be repositioned to fit lugs without removing drive axle.

Use drive axle sprocket adjuster kit (P / N 861 7257 00).

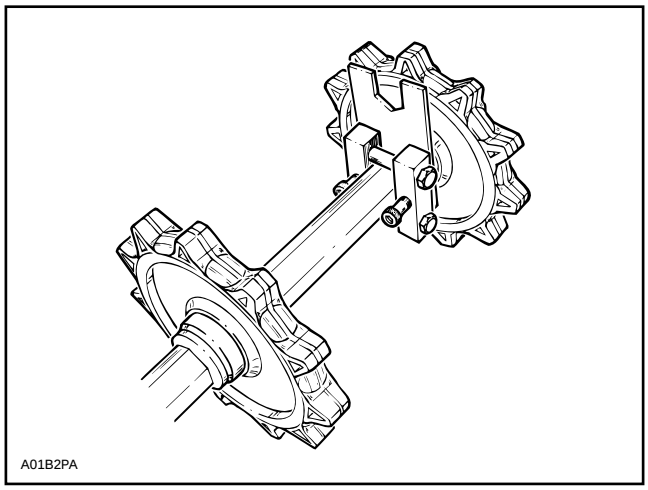

TYPICAL

TRACK

TRACK TYPE APPLICATION

Refer to TECHNICAL DATA section10.

GENERAL

This section gives guidelines for track removal. Some components require more detailed disassembly procedures. In these particular cases, refer to the pertaining section in this manual.

INSPECTION

Visually inspect track for :

– cuts and abnormal wear
– broken rods
– broken or missing track cleats

If track is damaged or rods are broken, replace track. For damaged or missing cleats, replace by new ones, using cleat remover (P / N 529 0287 00). Use small-cleat installer (P / N 529 0085 00).

◆ WARNING : Do not operate a snowmobile with a cut, torn or damaged track.

REMOVAL

S Series and F Series

Remove the following parts :

– speedometer cable
– muffler
– chaincase cover
– suspension
– drive axle seal
– end bearing housing
– sprockets and chain
– drive axle (toward end bearing housing)
– track

Skandic WT

Remove the following parts :

– rear suspension
– muffler
– RH drive axle end bearing
– angle drive and square pin

Move transmission sideway. Do not remove brake mechanism nor driven pulley. Refer to SKANDIC WT SUSPENSION 07-02.

Remove drive axle then track.

INSTALLATION

All Models

Reverse the removal procedure.

NOTE : When installing the track, respect rotation direction indicated by an arrow on track thread.

Check sprocket / track alignment as described in DRIVE AXLE 07-04.

Track Tension and Alignment

Track tension and alignment are inter-related. Do not adjust one without checking the other. Track tension procedure must be carried out prior to track alignment.

Tension

Lift the rear of vehicle and support with a mechanical stand. Allow the slide to extend normally. Check the gap half-way between front and rear idler wheels. Measure between slider shoe and bottom inside of track.

When using the track tension gauge (P / N 529 0215 00), slide U shape extrusion to proper deflection.

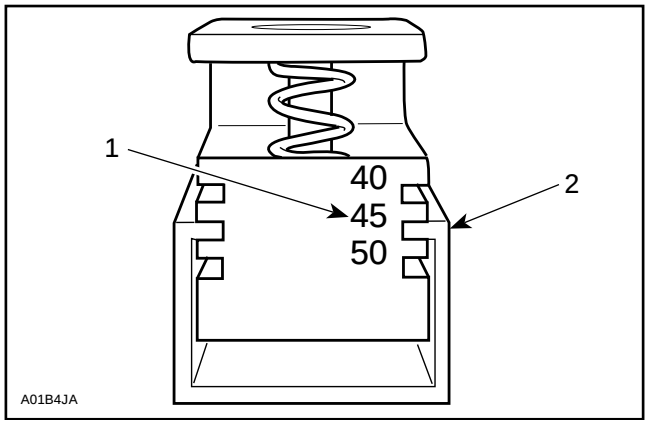

1. Example 45 mm
2. Extrusion

Insert pre-setted gauge between slider shoe and track. Allow gauge to settle by forcing track up and down. Track tension is as specified when edge of gauge reaches lign.

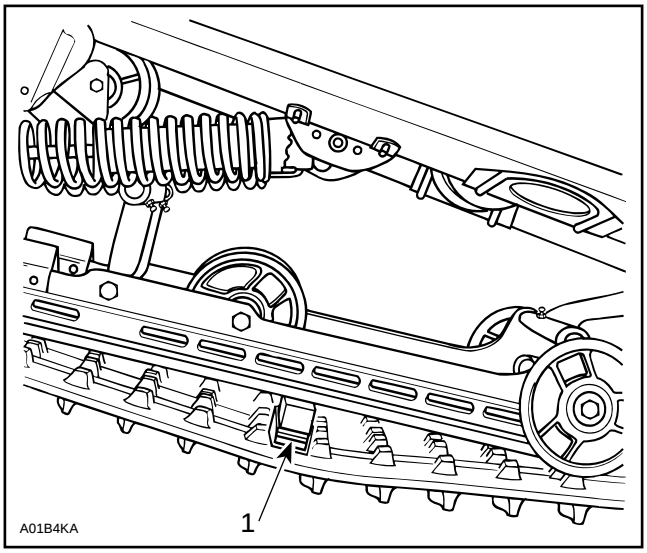

TYPICAL
1. Lign

NOTE : Lightly oil track tension gauge center pin to avoid sticking.

All Models

45 to 50 mm (1-25/32 to 1-31/32 in) when exerting a downward pull of 7.3 kg (16 lb).

CAUTION : Too much tension will result in power loss and excessive stress on suspension components. If too loose, the track will have a tendency to thump.

To adjust, loosen the rear idler wheel retaining screws then loosen or tighten the adjuster bolts located on the inner side of the rear idler wheels.

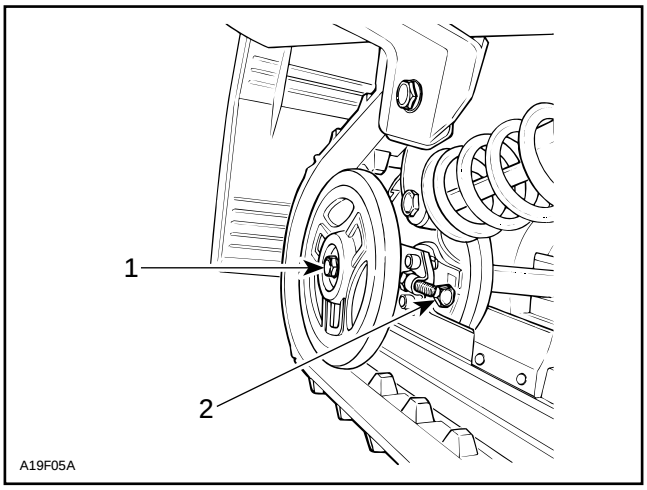

TYPICAL
1. Retaining screw
2. Adjuster bolt

Alignment

WARNING : Before checking track tension, ensure that the track is free of all particles which could be thrown out while it is rotating. Keep hands, tools, feet and clothing clear of track. Ensure no one is standing in close proximity to the vehicle.

All Models

With rear of vehicle supported off the ground, start engine and allow the track to rotate slowly.

Check that the track is well centered ; equal distance on both sides between edges of track guides and slider shoes.

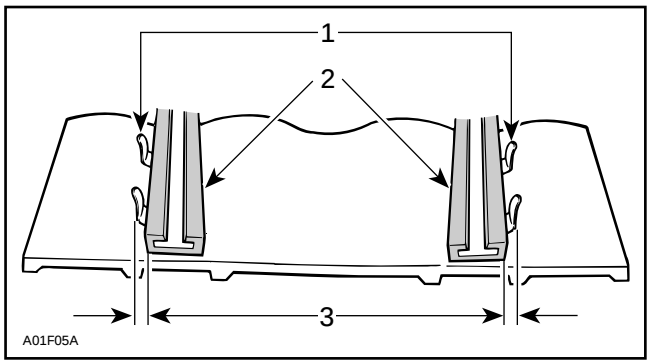

1. Guides
2. Slider shoes
3. Equal distance

WARNING : Before checking track alignment, ensure that the track is free of all particles which could be thrown out while track is rotating. Keep hands, tools, feet and clothing clear of track.

To correct, stop engine then tighten the adjuster bolt on side where guides are farthest to slide. Re-check alignment.

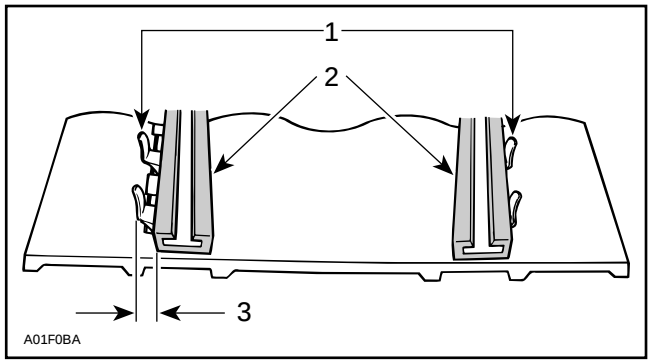

1. Guides
2. Slider shoes
3. Tighten on this side

NOTE : Torque retaining screw to 48 N•m (35 lbf•ft) after adjustment.

Tighten the idler wheel retaining screws.

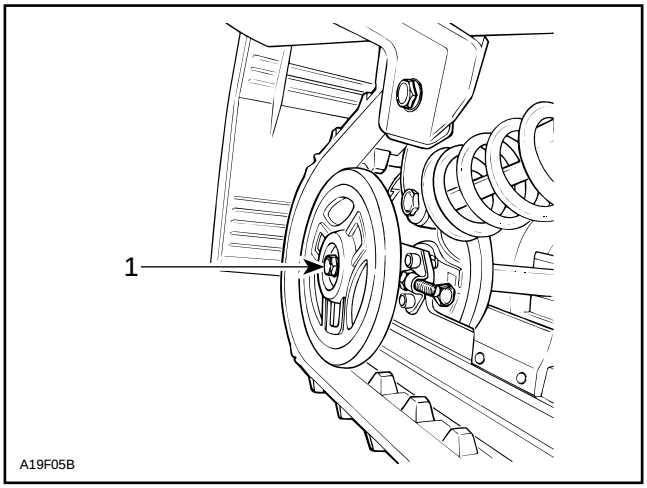

TYPICAL
1. Retighten

Restart engine, rotate track slowly and recheck alignment.

TRACK CLEAT

Removal

– Raise rear of vehicle off the ground and lift snowguard then rotate track to expose a cleat to be replaced.

– Using track cleat remover (P / N 529 0087 00) for all models.

Installation

NOTE : Keep the same pitch between guide cleats.

– Place new cleat in position and using small track cleat installer (P / N 529 0085 00) bend cleat then push tabs into rubber.

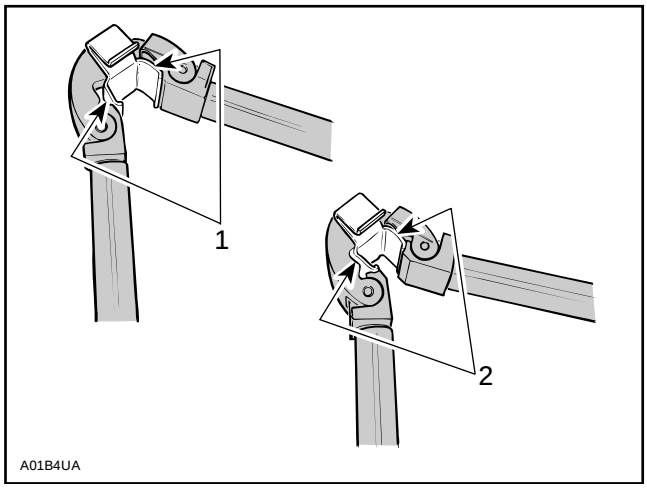

TYPICAL
1. First step
2. Second step (to push tabs into rubber)

TABLE OF CONTENTS

STEERING SYSTEM **08-01-1**
S-SERIES *08-01-1*
F-SERIES *08-01-2*
SKANDIC WT *08-01-3*
INSPECTION 08-01-4
DISASSEMBLY AND ASSEMBLY 08-01-4
INSPECTION 08-01-4
ADJUSTABLE HANDLEBAR 08-01-6
STEERING ADJUSTMENT (SKIS) 08-01-7
LUBRICATION 08-01-9
S-SERIES AND F-SERIES ..... *08-01-1(*

SUSPENSION AND SKI SYSTEM **08-02-1**
F SERIES AND S SERIES *08-02-1*
DISASSEMBLY 08-02-2
INSPECTION 08-02-3
INSTALLATION 08-02-3
SKANDIC WT *08-02-5*
ON-VEHICLE COMPONENT VERIFICATION 08-02-6
DISASSEMBLY 08-02-7
INSPECTION 08-02-8
INSTALLATION 08-02-8

STEERING SYSTEM

S-Series

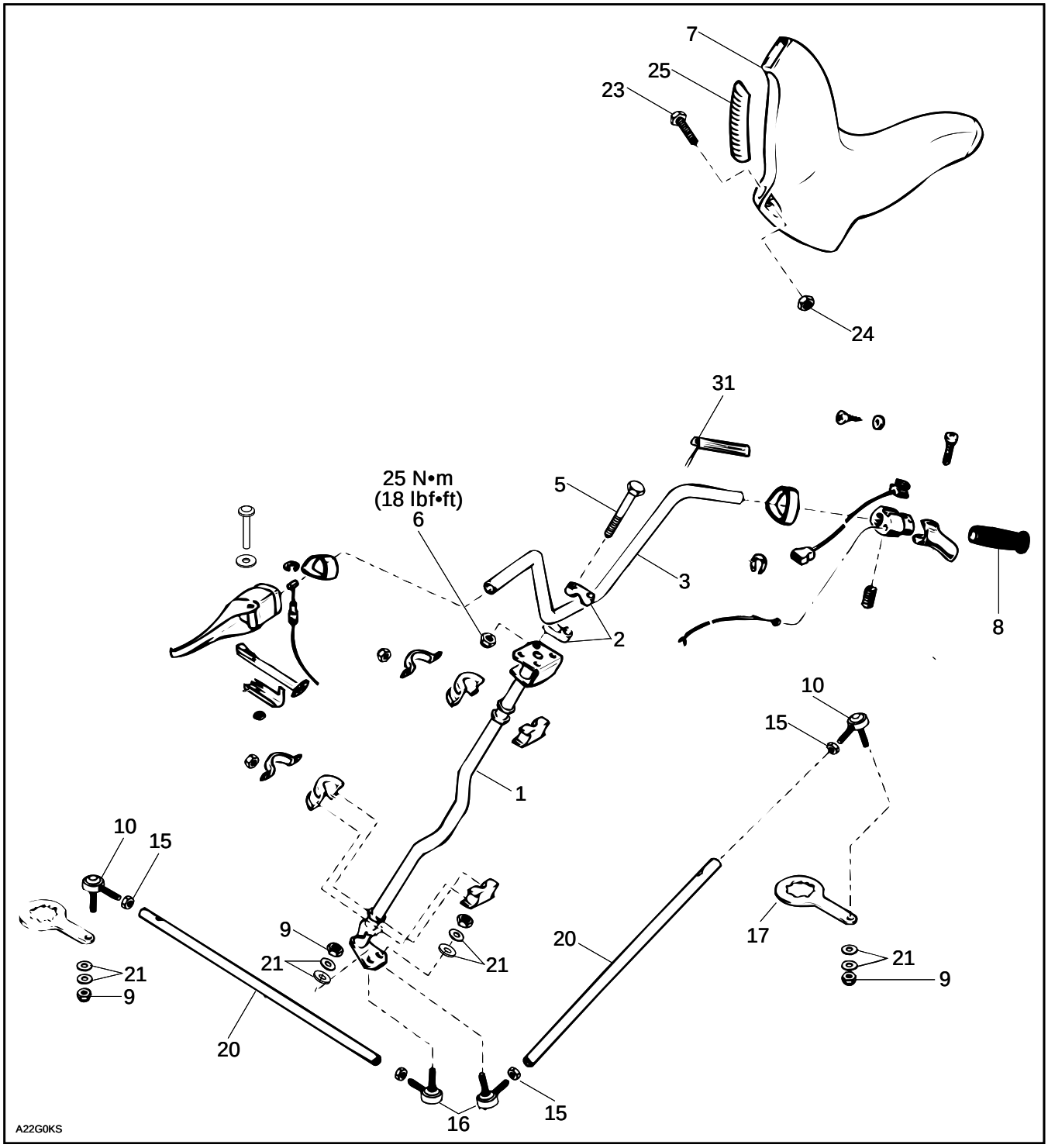

F-Series

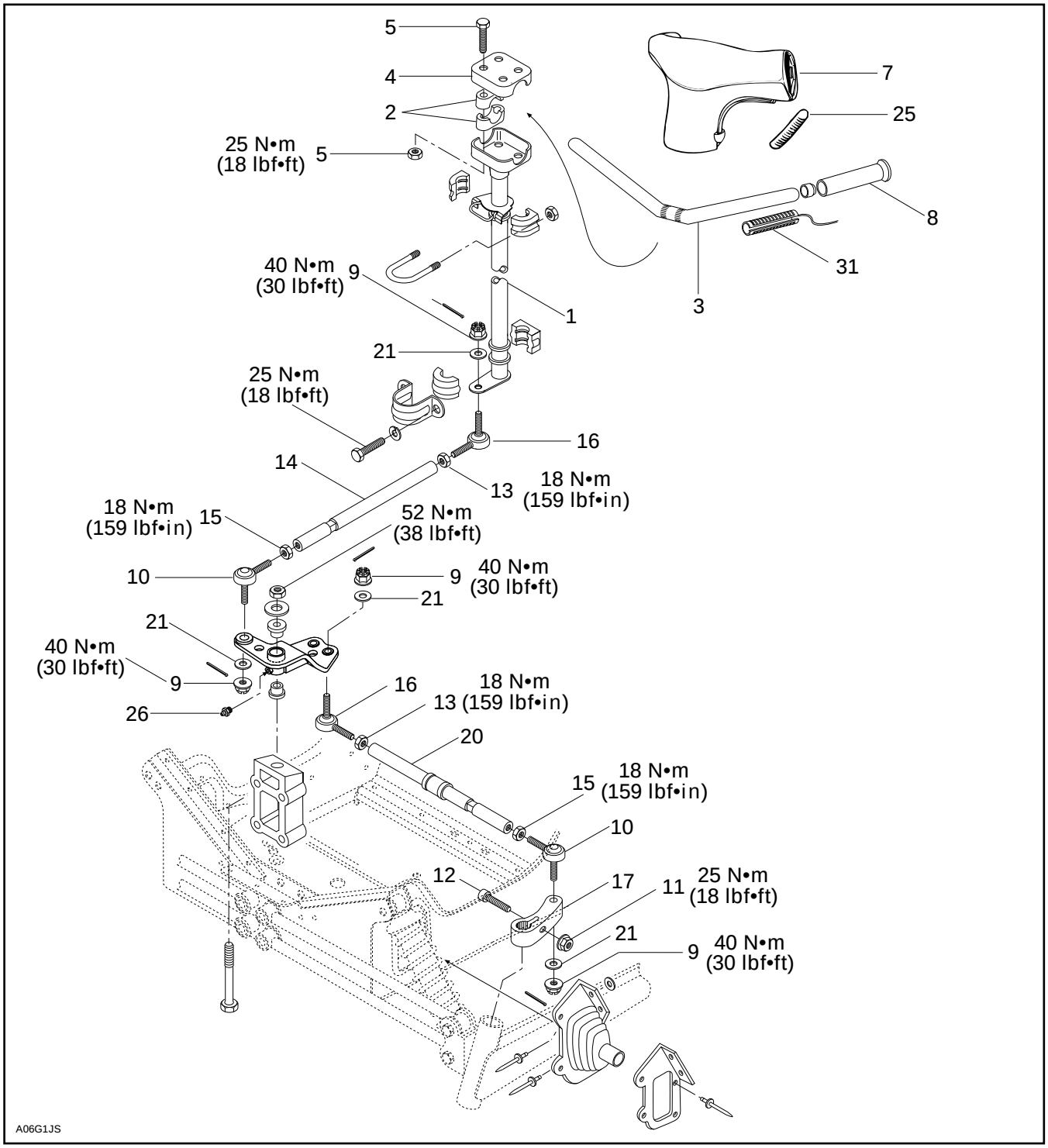
5
4
2
25 N•m
(18 lbf•ft)
5
7
25
8
31
3
40 N•m
(30 lbf•ft)
9
1
21
25 N•m
(18 lbf•ft)
16
14
13
18 N•m
(159 lbf•in)
18 N•m
(159 lbf•in)
15
52 N•m
(38 lbf•ft)
10
9
40 N•m
(30 lbf•ft)
21
21
40 N•m
(30 lbf•ft)
9
26
16
18 N•m
13 (159 lbf•in)
20
15
18 N•m
(159 lbf•in)
10
12
17
11
25 N•m
(18 lbf•ft)
21
9
40 N•m
(30 lbf•ft)
A06G1JS

Skandic WT

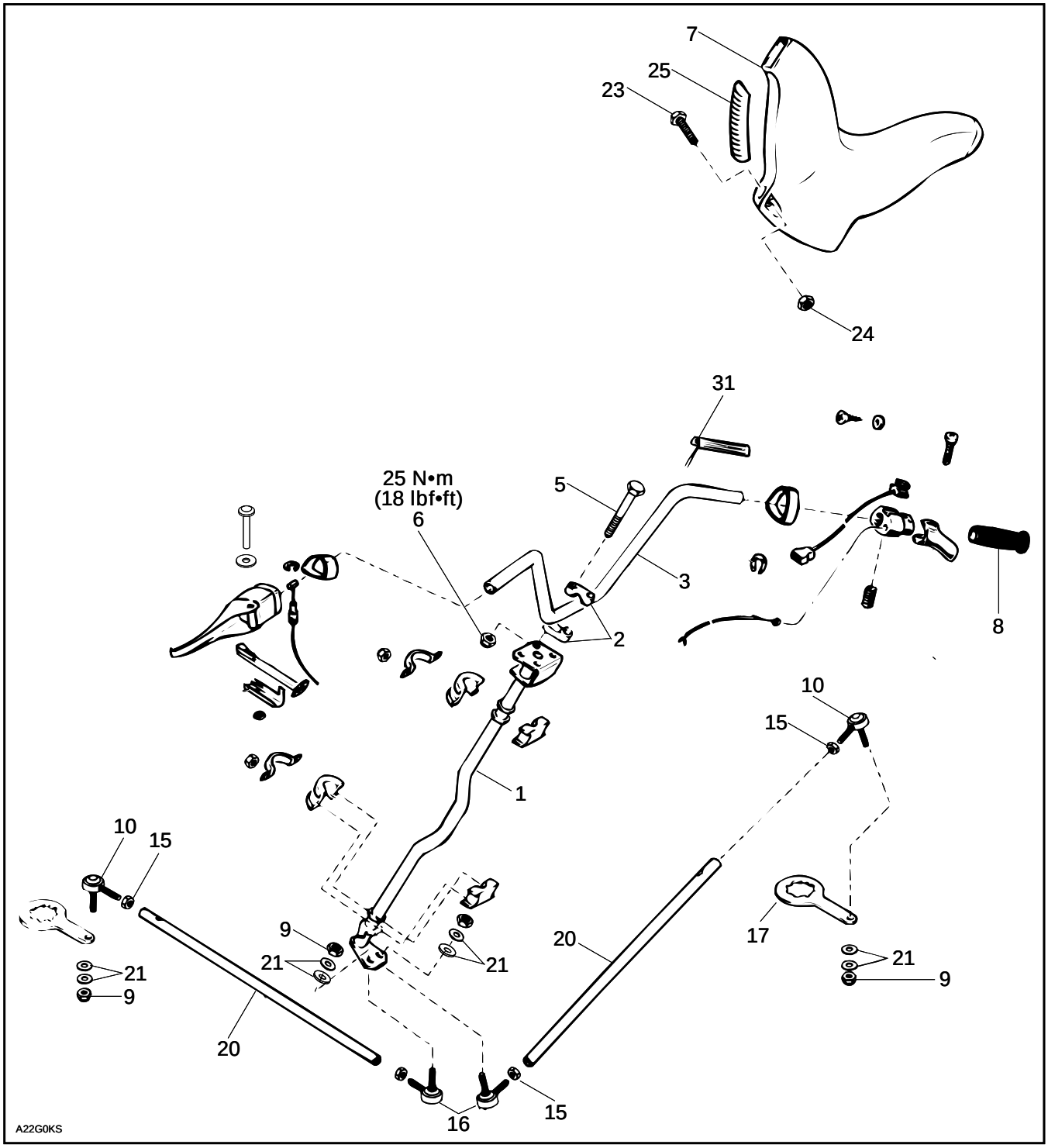
7
25
23
24
31
25 N•m
(18 lbf•ft)
6
5
3
2
8
10
15
1
10
15
9
21
21
21
9
20
20
17
21
9
16
15
A22G0KS

INSPECTION

Check skis and runner shoes for wear, replace as necessary. (See section 08-02).

17, Steering Arm and Ski Leg

Make sure steering arm and ski leg splines interlock.

◆ WARNING : Any parts having worn splines have to be replaces with new ones.

Check the general condition of the steering system components for wear. Replace if necessary.

DISASSEMBLY AND ASSEMBLY

8, Grip

Grips can be removed and installed without any damage by injecting compressed air into the handlebar or by heating them with a heat gun.

1, Steering Column

Remove steering pad then handlebar ass'y.

To gain access remove the air intake silencer and carburetor(s).

Detach the short tie rod (under the engine) from the steering column.

17, Steering Arm

To maintain correct steering geometry for reassembling, punch mark the steering arm and ski leg before disassembly.

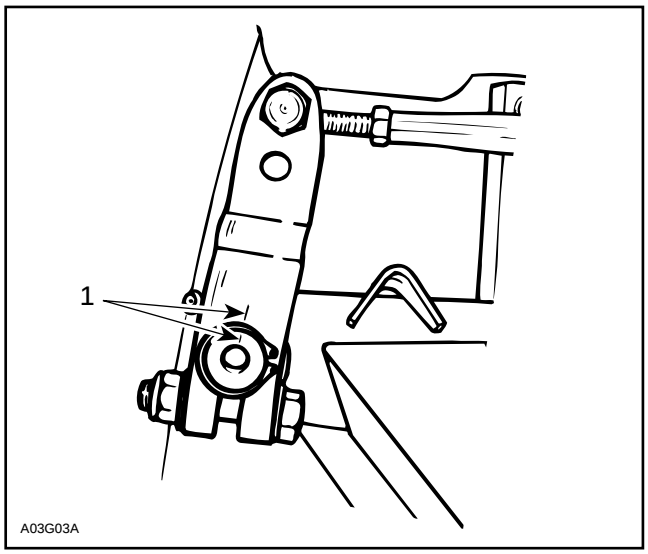

TYPICAL
1. Punch marks

31, Heating Grip Element

On vehicles is equipped with heating, the grips, might be unremovable as explained above, in this case, carefully proceed as follows to prevent damaging the heating elements.

Locate the element wires inside the handlebar ; look through end of grip. Start cutting the grip exactly opposite the element wires and immediately peel it open to locate the gap in the heating element, as shown.

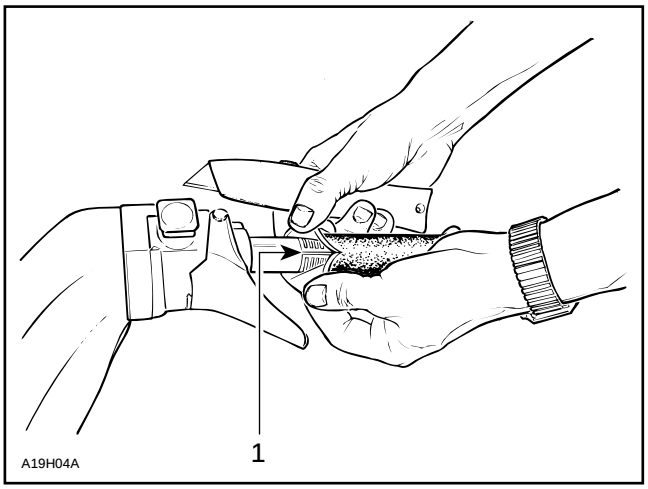

1. Gap in the heating element opposite the wires

Continue cutting along the gap and remove the grip. If required, slowly peel heating element from handlebar and remove it.

To install, stick the heating element to the handlebar making sure the wires do not interfere with operation of the accelerator or brake handle.

◆ WARNING : Never use lubricants (e.g. soap, only grease, etc.) to install the handlebar grip, use a mix of soap and water. Mix 40 parts of water with one part of dish washing soap (recom-mended : Ultra Joy, Sunlight or Palmolive).

Heat the grip with a heater gun or a spot light to ease installation. Insert new grip with a rubber mallet.

INSPECTION

Refer to TESTING PROCEDURE 06-06.

10,16, Ball Joint (Left Hand and Right Hand Threads)

Inspect ball joint ends for wear or looseness, if excessive, replace them.

Screw threaded end of the ball joint into the tie rod. The maximum external threaded length not engaged in the tie rod must not exceed the value L in the following thread length chart :

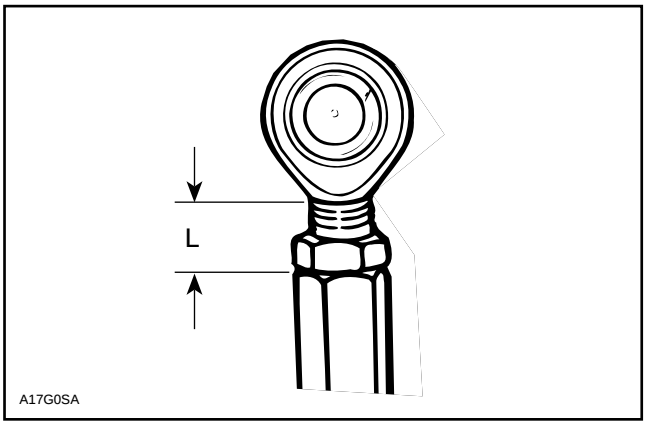

TYPICAL

MODEL	L	
	mm	(in)
All	20	(25/32)

The ball joint should be restrained when tightening the tie rod end lock nut. Align it so the tie rod end is parallel to the steering arm when assembled on the vehicle, refer to the following illustration.

For proper torque specifications refer to the specific exploded view for the vehicle being serviced.

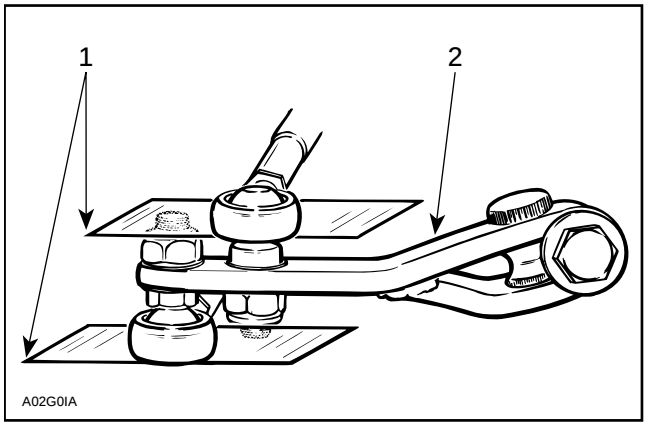

TYPICAL

1. Parallel with steering arm
1. Steering arm

◆ WARNING : The cut off section of the ball joint must run parallel with the steering arm. When tightening lock nuts, restrain ball joint with appropriate size wrench. Ensure not too many threads are kept outside of the tie rod according to the thread length chart.

21, Hardened Washer

All Models Except Skandic WT

Install a hardened washer on each side of the arm.

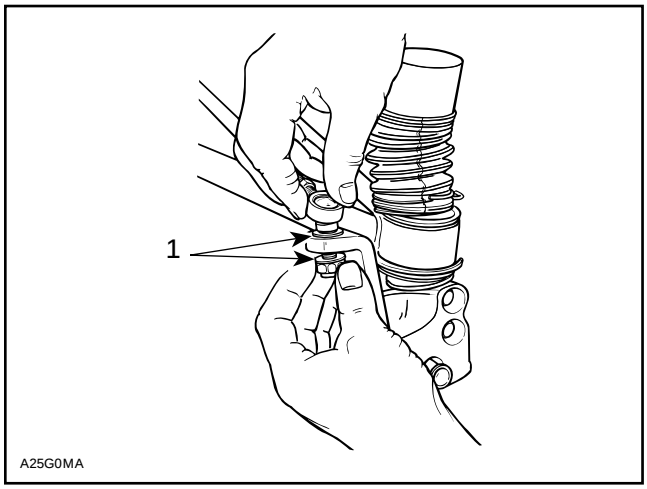

TYPICAL

1. Hardened washers

Skandic WT Only

Install special washers (locking disks) with teeth facing each others.

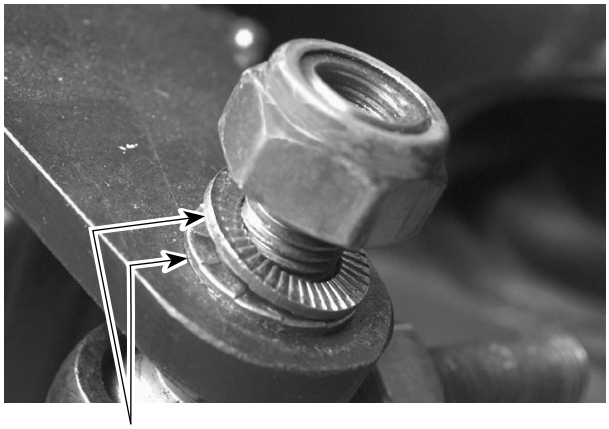

1. Large teeth

All Models Except Skandic WT

17, Steering Arm

The steering arm angles should be equal on both sides when skis are parallel with vehicle.

Steering arm must run parallel to ski.

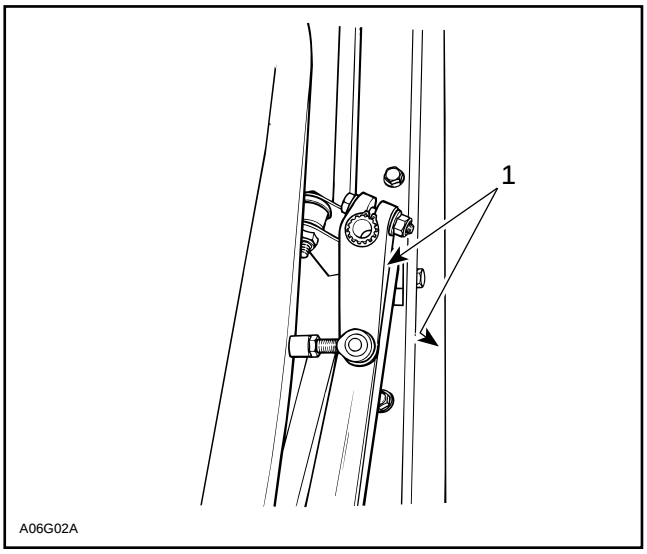

TYPICAL
1. Parallel

Tighten the steering arm pinch bolt to the torque specified in the exploded view.

Skandic WT Only

Install steering arm at mid-travel position when handlebar is facing straight ahead.

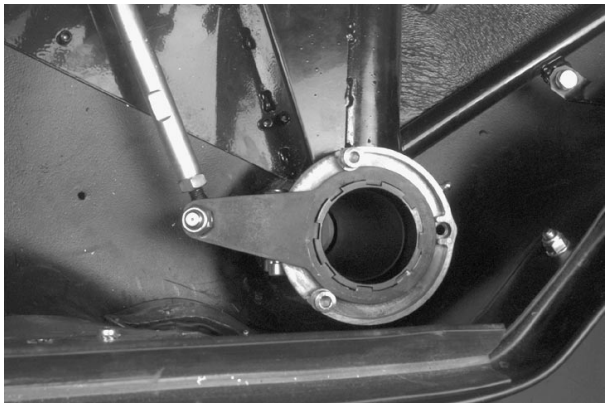

9,13,15, Ball Joint Nut and Jam Nut

Tighten ball joint, nuts and jam nuts to specified torque (see exploded view).

9, F-Series Vehicles with a Castle Nut

After proper torque has been applied to the ball joint nut, insert a cotter pin through the hole in the tie rod end bending the ends around the nut as shown in the following illustration.

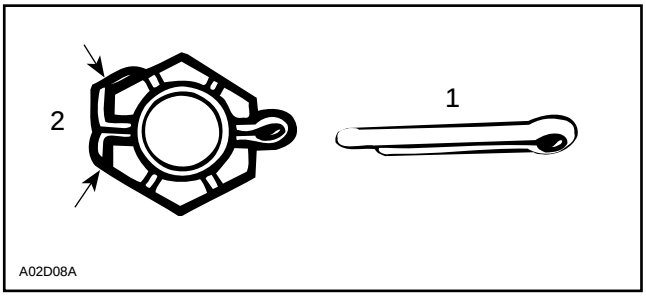

1. New
2. Fold cotter pin over castellated nut flats only

11,12, Steering Arm Nut and Bolt

Tighten steering arm nuts to specified torque (see exploded view).

ADJUSTABLE HANDLEBAR

1,3, Steering Column and Handlebar

If applicable, remove the steering clamp and nuts holding the handlebar to the steering column.

2,4,5,6, Handlebar Support, Steering Clamp, Bolt and Nut

Install the handlebar support, steering clamp, the 4 screws and nuts to the column, as illustrated.

See applicable exploded view for each model.

Adjust the steering handlebar to the desired position.

Lock the handlebar in place by tightening the 4 nuts as specified in the illustrations.

▼CAUTION : Tighten the nuts equally in a criss-cross sequence and ensure there is an equal gap on each side of the clamps.

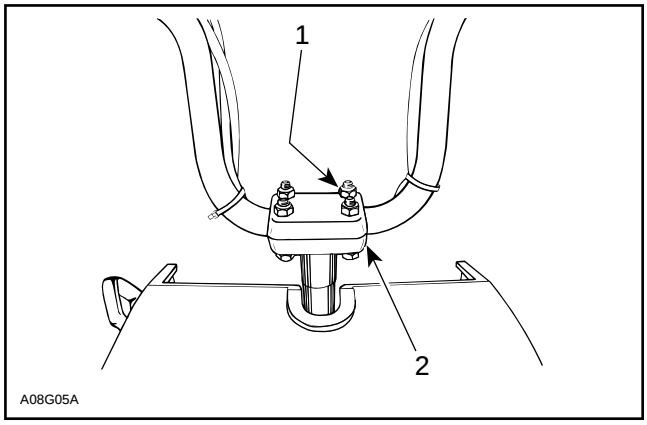

TYPICAL

1. *Torque to 26 N•m (19 lbf•ft)*
2. *Equal gap all around*

◆ WARNING : Avoid contact between the brake handle and the windshield by NOT adjusting the handlebar too high.

◆ WARNING : Make sure that the steering pad and all controls are properly fixed to their normal location on the handlebar.

7,23,24,26, Steering Pad, Bolt, Nut and Rubber Attachment

▼CAUTION : Prior to installation, perform handlebar adjustment.

Properly fit the steering pad to the handlebar. Assemble using the 2 rubber attachments, nuts and bolts where applicable.

◆ WARNING : Make sure that the steering pad and all controls are properly fixed to their normal location on the handlebar.

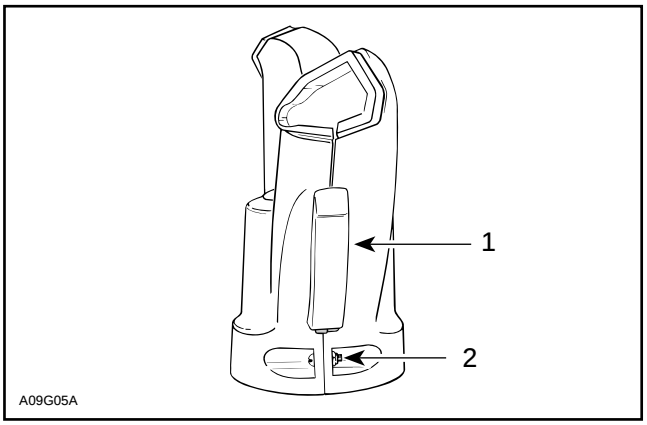

1. *Rubber attachment*
2. *Nut and bolt (where applicable)*

STEERING ADJUSTMENT (SKIS)

Definitions

TOE-OUT :

A difference measured between the front edge of the skis “A” and rear edge “B” as viewed from the top. It is adjustable.

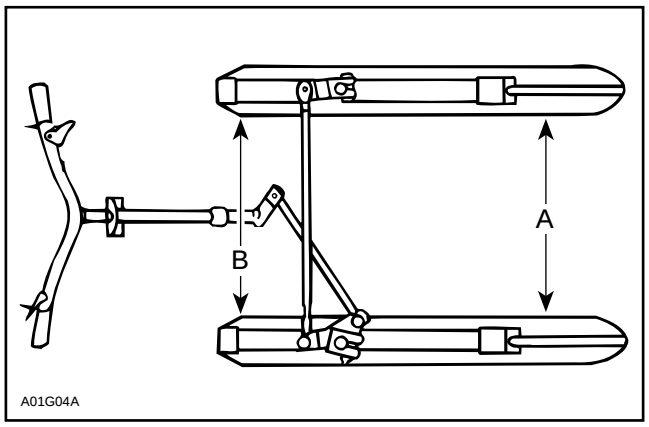

CAMBER :

A specific inward or outward tilt angle of ski leg compared to a vertical line when viewing the vehicle from front. This angle is adjustable on some models only.

Adjustments

F and S-Series

Adjustments should be performed following this sequence :

– Pivot arm centering.
– Set camber angle (some models).
– Check for a horizontal handlebar.
– Set toe-out.

DSA System

PIVOT ARM CENTERING

WARNING : Do not attempt to adjust straight ahead ski position by turning the ball joint on tie rod no.14.

13,14,15,22, Jam Nut, Tie Rod and Pivot Arm

With handlebar in straight ahead position, the center of the pivot arm must be in line with the end of the bolt. Loosen the jam nuts on tie rod no. 14 (LH threads on steering column end) and turn tie rod accordingly. Align and retighten the jam nuts to 18 N•m (159 lbf•in).

WARNING : Never lengthen tie rod so that threaded portion of ball joint exceeds 20 mm (25/32 in).

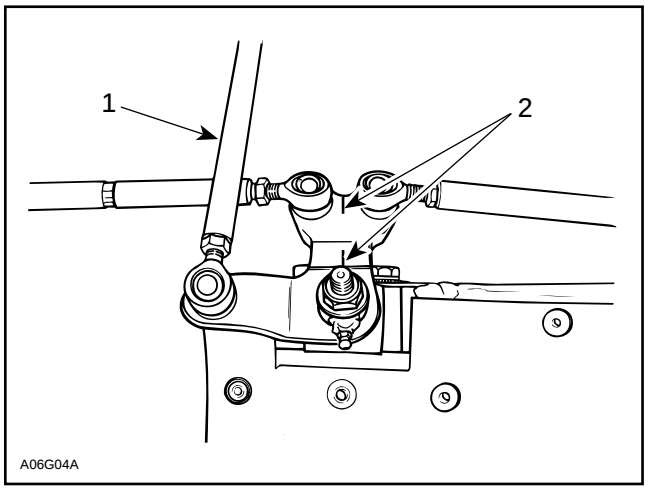

1. Tie rod no. 14
2. Center of pivot arm in line with bolt end

CAMBER

NOTE : On vehicles without adjustable radius arms (no. 7) the camber is not adjustable.

NOTE : Identical adjustments are required on both sides of the vehicle.

– Make sure the vehicle is leveled by placing an angle finder under the main frame member as shown on the following illustration.

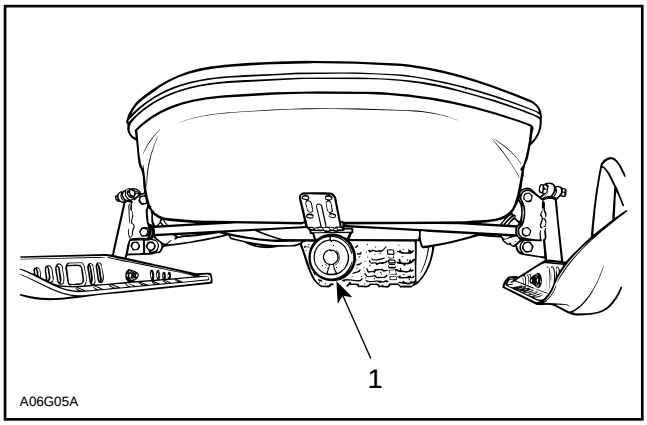

1. Angle finder

Using special tool P / N 529 0216 00 mounted to the ski leg position the angle finder on the tool as shown in the following illustration. An alternate location for the angle finder if the special tool is not available is the outside of the ski leg housing.

Adjust the camber to 0° ± 0.5°.

CAUTION : Angle finder must sit square against swing arm. Positioning angle finder against weld bead or decal may result in false reading.

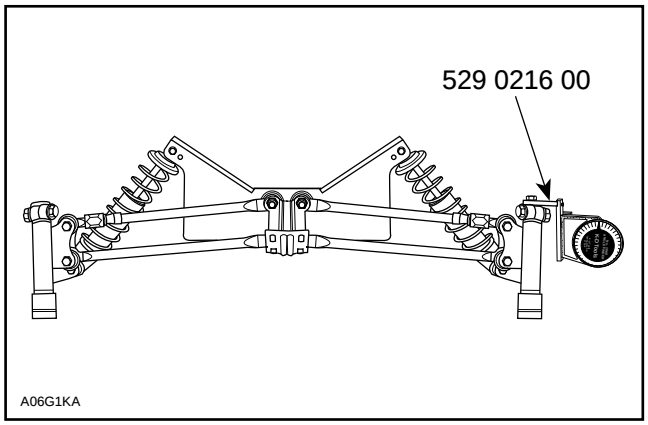

TYPICAL – DSA CAMBER ADJUSTMENT SET-UP

Adjusting

– Loosen lock nut on both lower control arms.
– Unbolt both lower control arms at ski leg housing. Turn control arm one complete turn at a time to obtain a vertical ski leg (0° 0.5°). Bolt lower control arms.

If a control arm is to be assembled, respect the A center-to-center measurement.

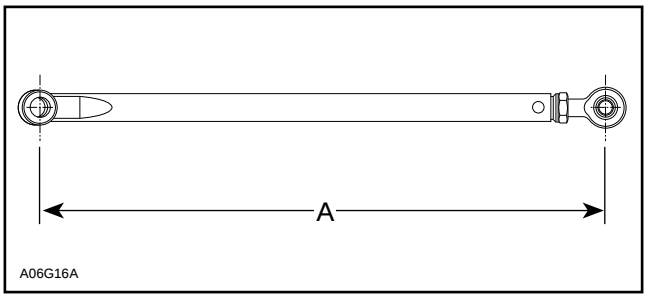

1. 459.3 mm (18-5/64 in)

HANDLEBAR AND SKI TOE-OUT

Check that handlebar is horizontal when skis are in straight ahead position by measuring from the extremities of the grips to the rearmost edge of the tunnel, as shown.

NOTE : The reference point must be the same relative to each side.

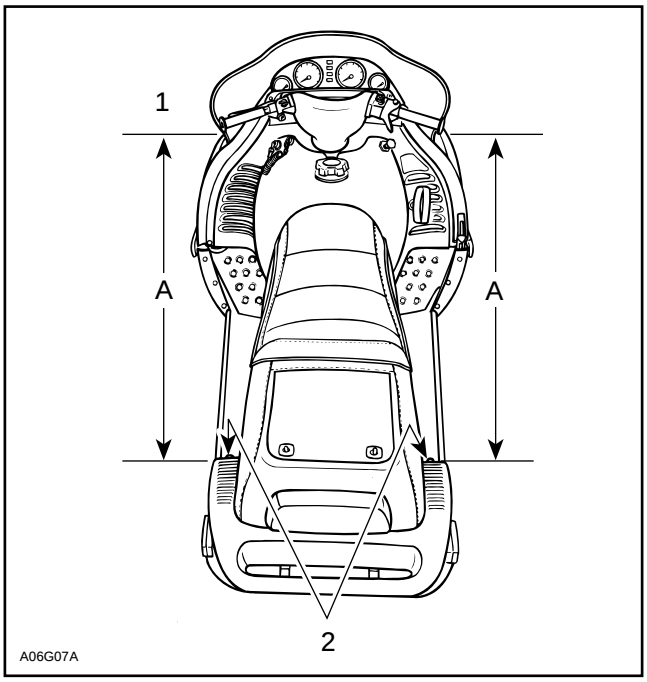

TYPICAL

1. Equal distance A on each side
2. Same reference point (rivet)

Adjustment is performed by adjusting length of left and right tie rods no. 20.

WARNING : Do not attempt to adjust skis straight ahead position by turning ball joint on tie rod no. 14.

Procedure :

– Loosen jam nuts no. 13 and no. 15 of both tie rods no. 20.
– Turn the tie rod on one side to shorten its length.
– Lengthen the other one by turning it exactly the same amount, so that toe-out is not changed.

WARNING : Never lengthen tie rod so that threated portion of ball joint exceeds 20 mm (25/32 in).

– Close front of skis manually to take all slack from steering mechanism.

NOTE : A rubber cord must be hooked in front of skis to keep them closed.

Skandic WT Only

– Skis should have a toe-out of 10 mm (3/8 in) when they are in a straight-ahead position and the vehicle is resting on the ground.

NOTE : To make sure skis are in a straight-ahead position, place a straight edge against pre-adjusted track and measure the distance between front and rear of skis and straight edge. Distances should be equal. After the ski toe-out adjustment, distance at front of ski must be 5 mm (3/16 in) more than at rear on both sides for a total toe-out of 10 mm (3/8 in).

Sand F-Series

Toe-out is 0 mm (0 in) when skis are in a straight-ahead position and the front of vehicle is lifted off the ground.

NOTE : To make sure skis are in a straight-ahead position, place a straight edge against pre-adjusted track and measure the distance between front and rear of skis and straight edge. Distances should be equal. After the ski toe-out adjustment, distance must be equal.

All Models

To reduce tolerance when measuring, set one ski to proper toe-out then measure from that ski to the opposite ski.

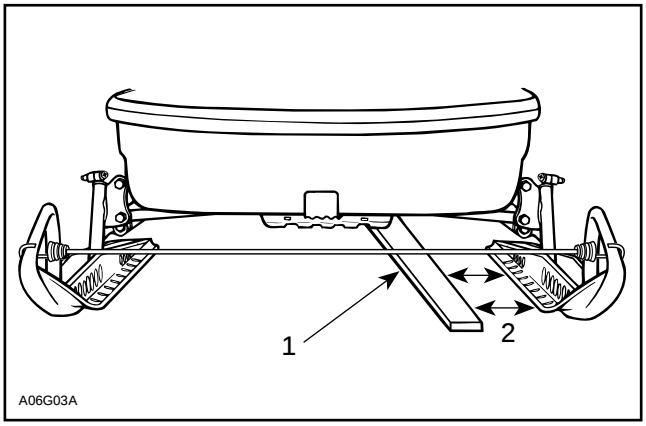

TYPICAL

1. *Straight edge*
2. *Measure here*

LUBRICATION

◆ WARNING : Do not lubricate throttle and / or brake cable, housing and spring coupler bolts.

26, Grease Fittings

Only use low temperature grease (P / N 413 7061 00).

The following symbols will be used to show what type of lubricant should be used at the suitable locations.

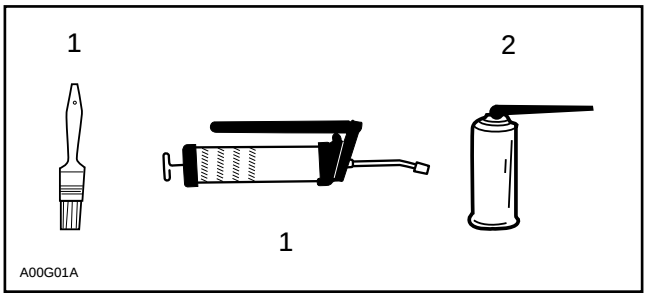

1. *Low temperature grease*
2. *Penetrating lubricant (P / N 293 6000 16)*

Lubricate :

– Steering column.
– Upper and lower control arms drop link and tie rod ends.
– Grease ski legs, ski pivots and idler arm.
– Coat stabilizer sliders with grease, and oil their ball joints if so equipped.

S-Series and F-Series

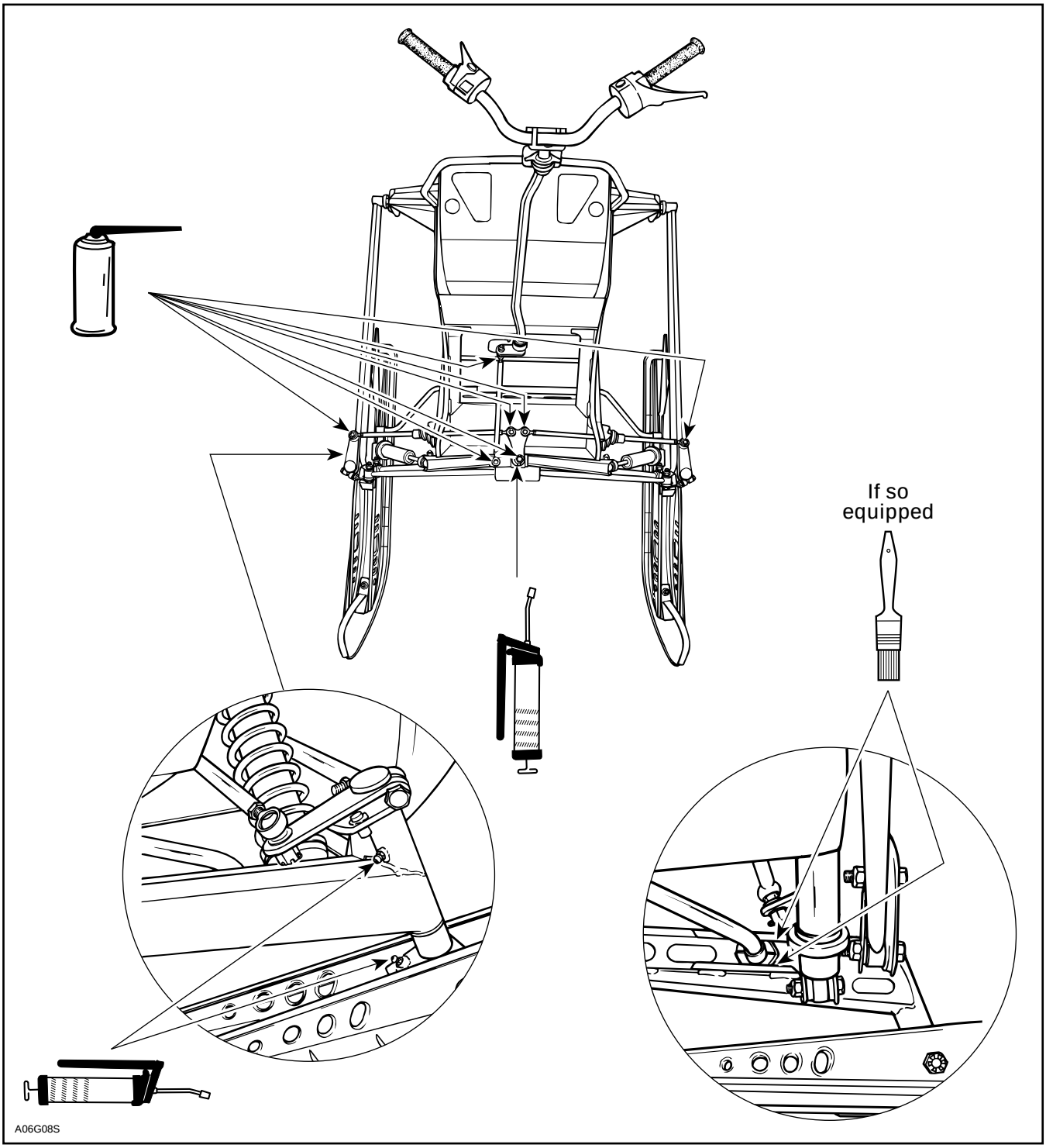

SUSPENSION AND SKI SYSTEM

F Series and S Series

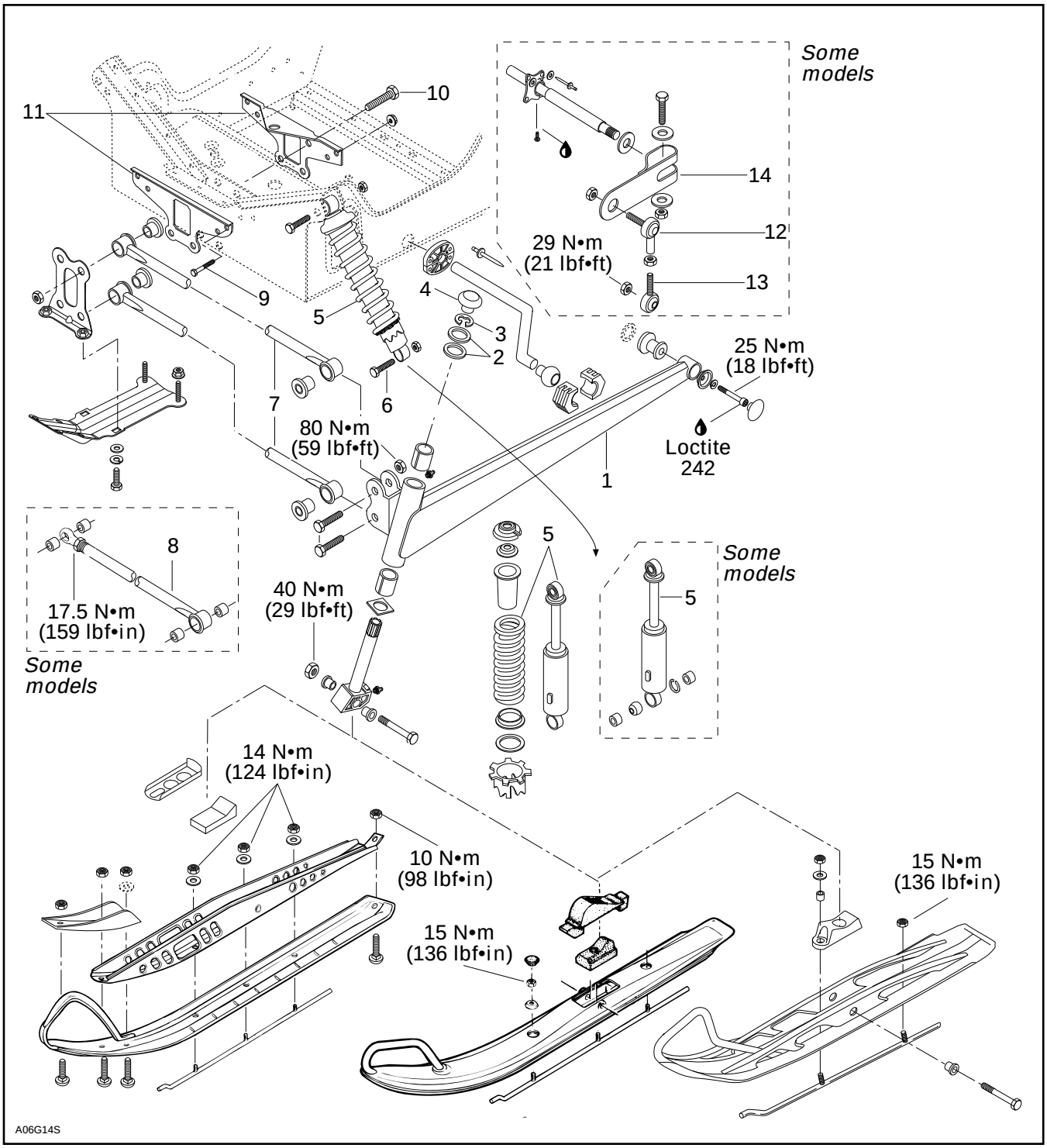

DISASSEMBLY

5, Shock

Lift front of vehicle and support it off the ground.

Reduce spring preload by turning adjusting ring accordingly with the adjustment wrench in vehicle tool box.

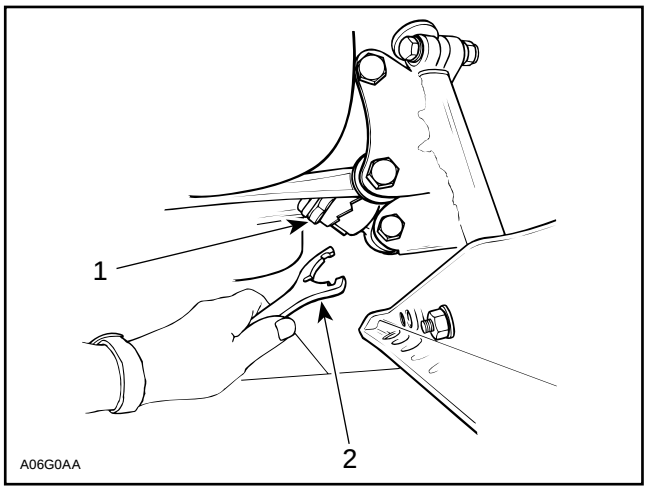

1. Shock cam
2. Adjustment wrench

Remove lower bolt then upper bolt of shock.

For shock spring disassembly use shock spring remover (P / N 529 0271 00) in a vise. Mount shock in it and turn shock so that spring coils matched spring compressor.

Close and lock the bar. Adjust the handle horizontal position by changing the position of the clevis pin.

Push down on the handle until it locks. Remove spring stopper and cap then release handle.

When installing the cap opening must be 180° from the spring stopper opening.

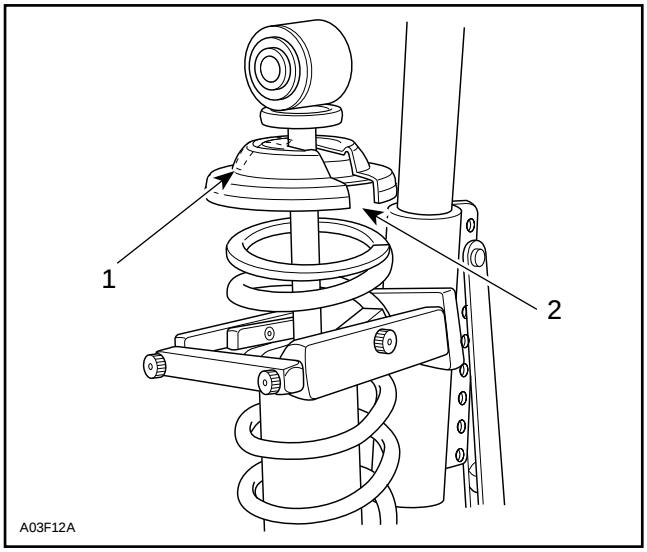

1. Cap opening
2. Spring stopper opening

1, Swing Arm

Lift front of vehicle and support it off the ground.

Remove cap, circlip then slacken steering arm bolt and pull up steering arm. Note shim positions. Ski leg may fall off from swing arm.

Unbolt lower end of shock from swing arm.

Unbolt radius rod.

14, Lever

Models with adjustable stabilizer bar : unbolt lower no. 13 ball joint from swing arm, do not change stabilizer adjustments at this time.

Unbolt rear of swing arm from frame.

Pull swing arm off the vehicle. Stabilizer bar will disengage ball joint at swing arm inside rails.

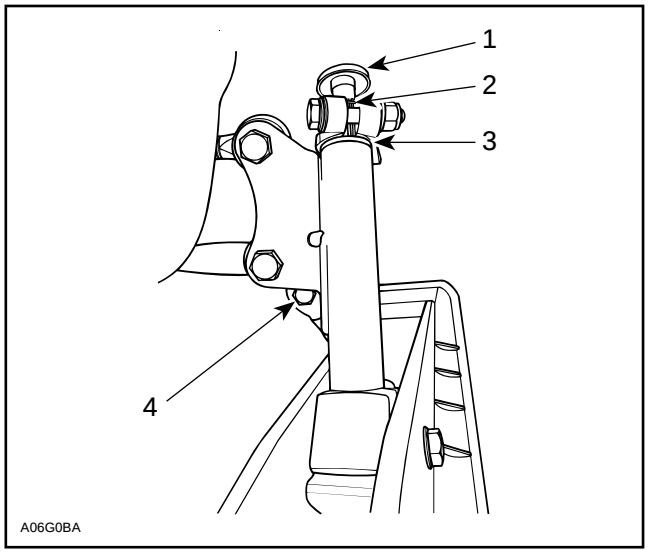

1. Cap no. 4
2. Circlip no. 3
3. Shims no. 2
4. Bolt retaining lower end of shock no. 6

INSPECTION

Check all rubber cushions for crack and wear. Replace as required.

Check straightness of splines and proper interlocking with steering arm. Replace as required.

Check for straightness of swing arm. Replace as required.

Check for clogged grease fittings. Clean or replace as required.

Check for proper action of sliding blocks in swing arm.

Check skis and runners for wear, replace as necessary.

Check condition of ski stopper. Replace it when deteriorated.

To check condition of shock, refer to IMPROVED C-7 SUSPENSION 07-02 then look for Shock Servicing.

INSTALLATION

For assembly, reverse the disassembly procedure. However, pay attention to the following.

Apply low temperature grease (P / N 413 7061 00) to ski leg components.

Tighten nuts and screws to proper torque as mentioned in exploded view.

7,8, Upper and Lower Half Arms

Position half arms and tie rods horizontally before tightening nuts.

9,10,11, Bolt, Nut and Link Plate

Attach link plate to frame with additional nuts and bolts, if applicable.

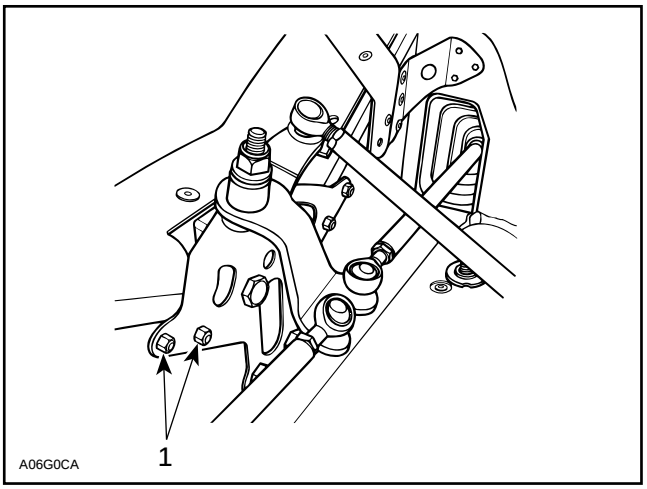

SOME MODELS
1. Nuts and bolts

13,14, Ball Joint and Lever

Install levers on both sides at same angle (about horizontal). Lengthen ball joints accordingly to fasten in lower control arm without play nor preload.

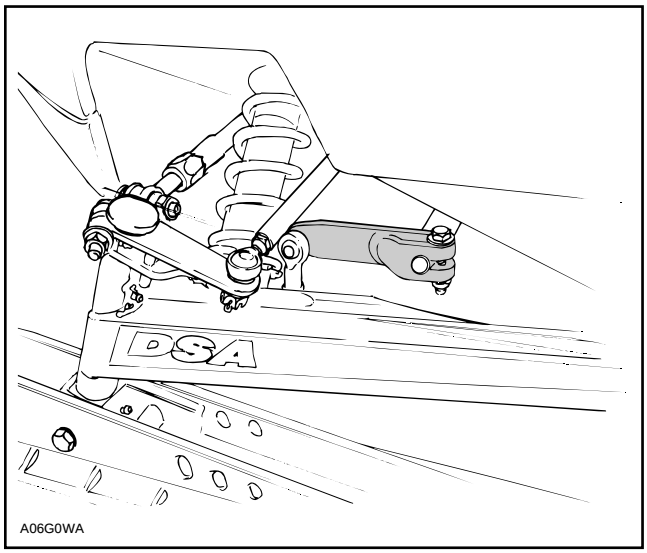

TYPICAL

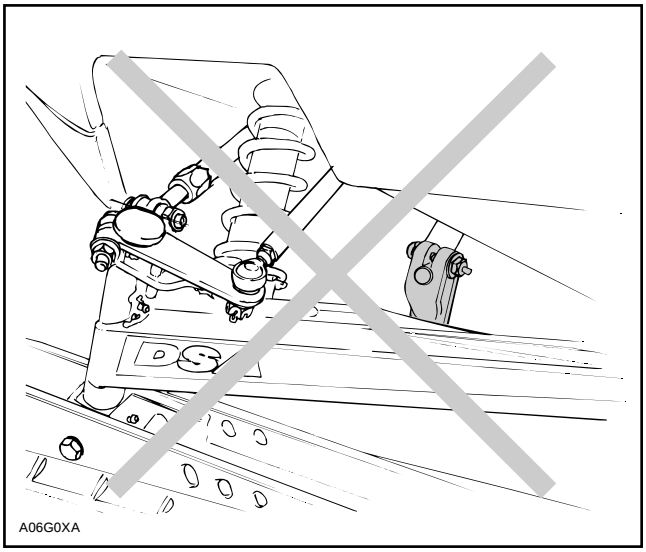

WRONG POSITION

Skandic WT

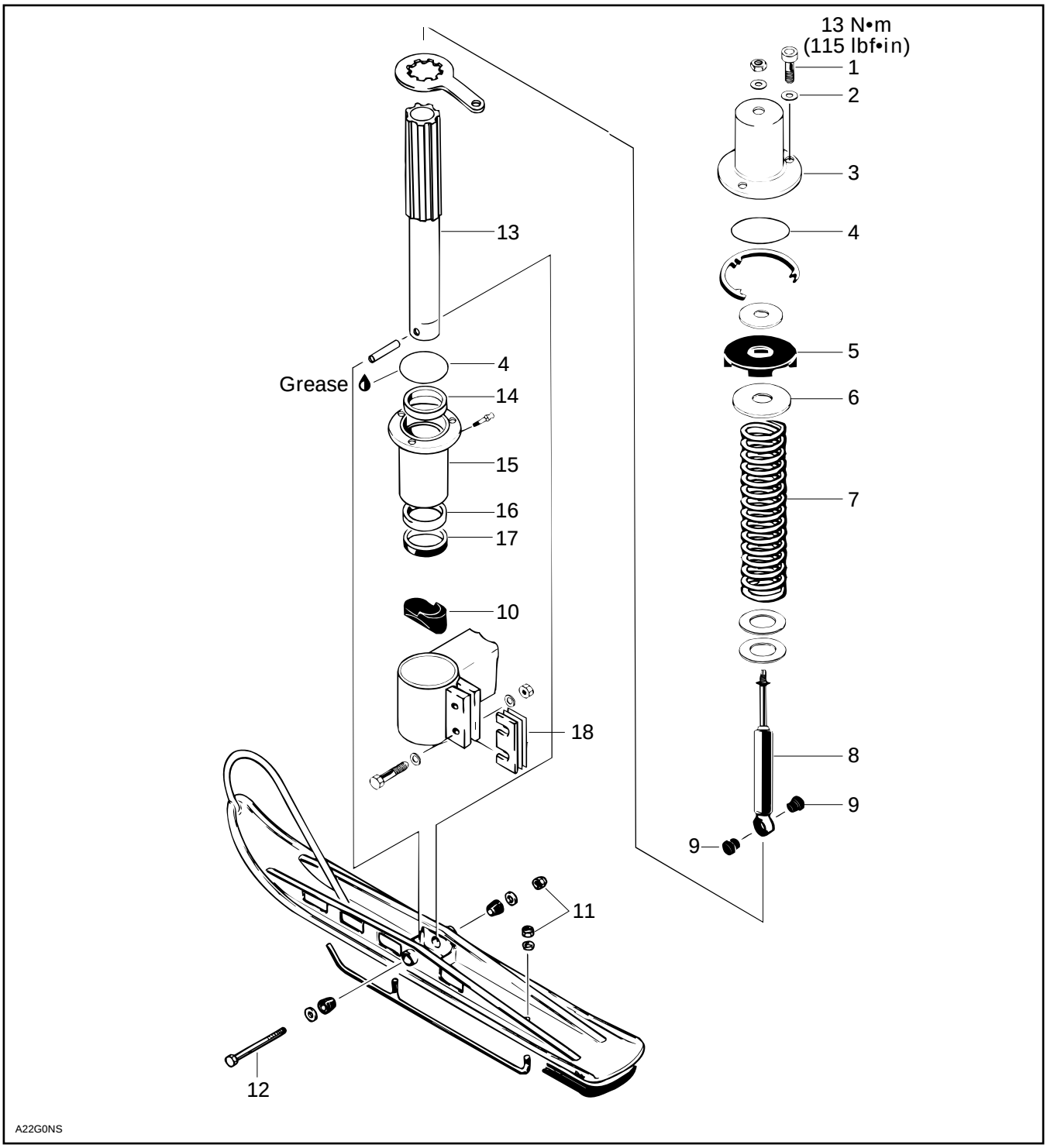
13 N•m
(115 lbf•in)
1
2
3
4
5
6
7
8
9
9
10
11
12
13
14
15
16
17
18
4
Grease
A22G0NS

ON-VEHICLE COMPONENT VERIFICATION

8, Shock

Lift front of vehicle and support off the ground.

Remove ski bolt and nut.

Remove steel bushing from ski using a pusher. See pusher dimensions below.

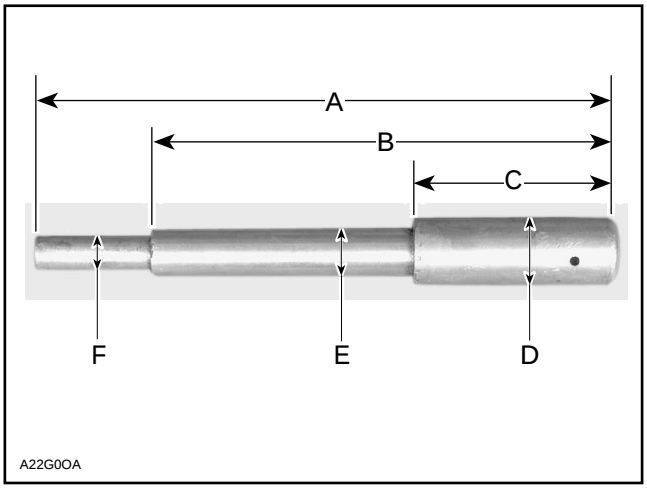

A. 220 mm (8.66 in)
B. 180 mm (7.09 in)
C. 70 mm (2.75 in)
D. 25 mm (1.0 in)
E. 15 mm (.59 in)
F. 9 mm (.35 in)

Unfasten rod nut then pull out shock from bottom. Check shock as described below in inspection. At installation, make sure bushings are in place.

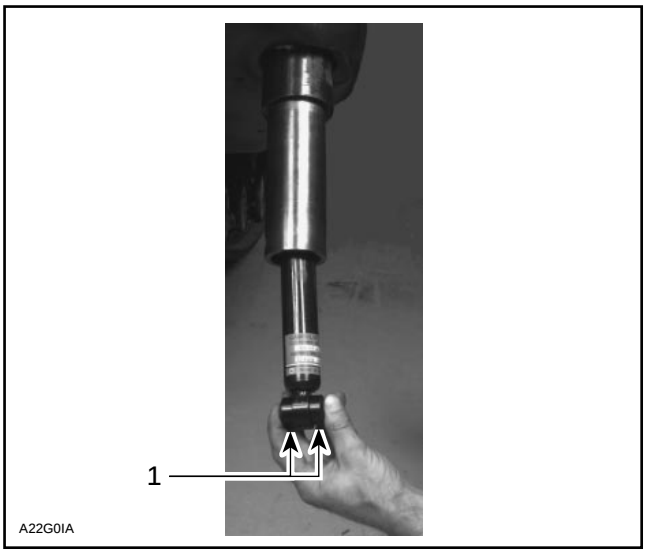

1. Bushings

7, Spring

Unscrew shock piston pin nut then remove washer. Unscrew 3 Allen screws retaining cover no. 3, then remove stopper no. 5, washers no. 6, washer no. 7.

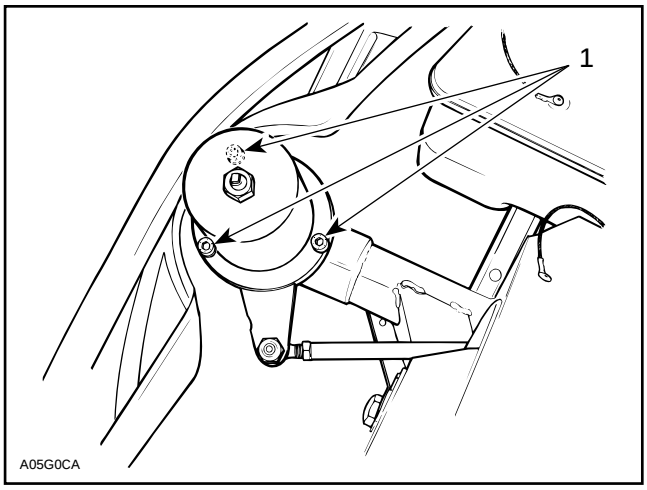

1. Allen screws

NOTE : These washers and stopper can be wedged in cover.

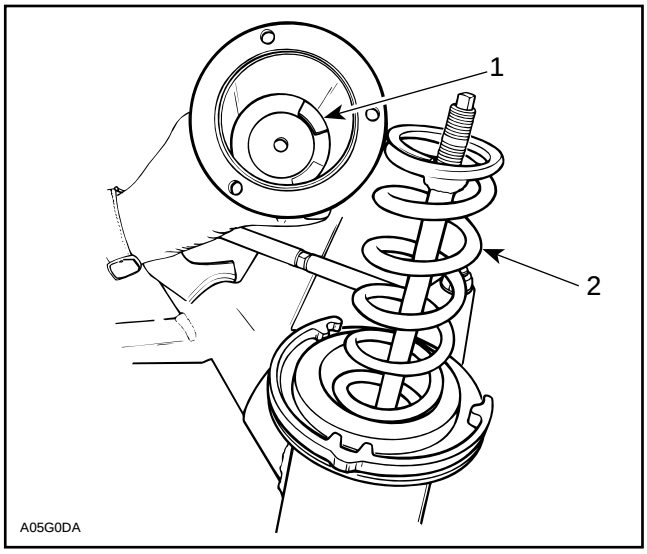

1. Washers and stopper wedged in cover
2. Spring

Pull out spring.

Suspension Free Operation

Remove cover and check for free movement of ski leg by lifting end of ski.

DISASSEMBLY

Lift front of vehicle and support off the ground.

1,2,3,5,6,9,11,12, Bolt, Lock Washer, Cover, Stopper, Bushing and Nut

Remove ski bolt, nut, bushings and ski.

Unscrew shock piston pin nut then remove washer. Shock will fall off the ski leg.

Unscrew 3 Allen screws retaining cover, then remove stopper and washers.

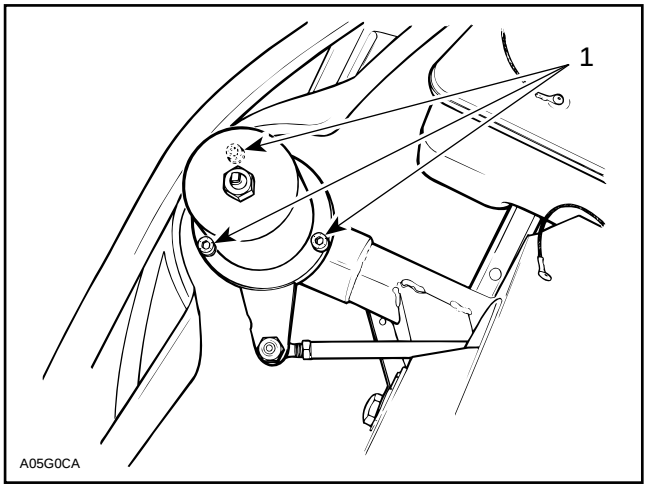

1. Allen screws

NOTE : These washers and stopper can be wedged in cap.

4,13,14,16,17, O-ring, Ski Leg, Bushing and Seal

Pull up ski leg. Steering arm will not interfere.

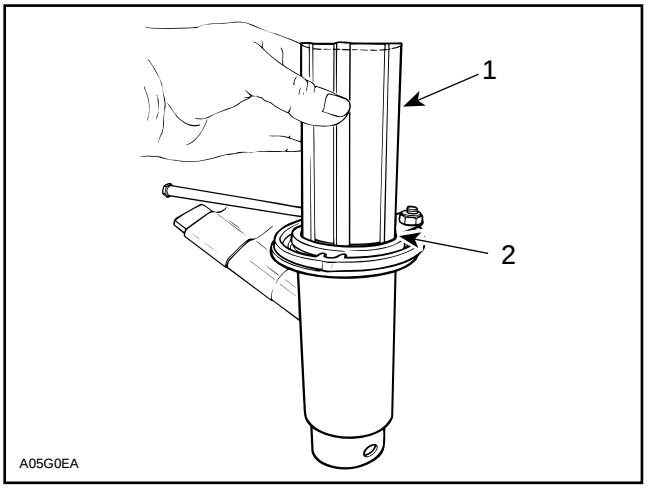

1. Pull up ski leg
2. Steering arm in place

Remove seal and O-rings. Drive out bushing if worn out.

15, Leg Housing

Unbolt leg housing. Keep shim(s) 18 for further installation. Using a pry bar spread clamp and pull up leg housing.

TYPICAL

INSPECTION

13, Ski Leg

Check straightness of ski leg. Check for scored or scratched surface. Replace as required.

5, Stopper

Check condition of stopper. Replace it when deteriorated.

Grease Fitting

Ensure that grease fittings are not clogged.

10, Stopper

Check stopper for crack or deterioration. Replace as required.

13, Ski Leg

Check that splines on ski leg and steering arm interlock properly with no excessive free play. Renew as necessary.

8, Shock Absorber

Secure the shock body end in a vise.

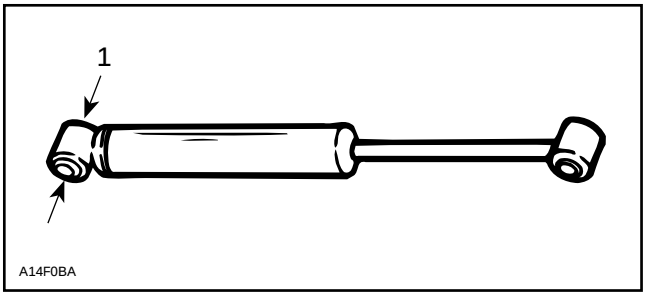

1. Clamp

CAUTION : Do not clamp directly on shock body.

Examine each shock for leaks. Extend and compress the piston several times over its entire stroke then check that it moves smoothly and with uniform resistance.

Pay attention to the following conditions that will denote a defective shock :

- A skip or a hang back when reversing stroke at mid travel.
- Seizing or binding condition except at extreme end of either stroke.
- Oil leakage.
- A gurgling noise, after completing one full compression and extension stroke.

Renew if any faults are present.

INSTALLATION

For assembly, reverse the disassembly procedure. However, pay attention to the following.

Apply low temperature grease (P / N 413 7061 00) as illustrated in exploded view above.

Tighten nuts and screws to proper torque as mentioned in exploded view.

Steering arm with the bent angle toward the bottom.

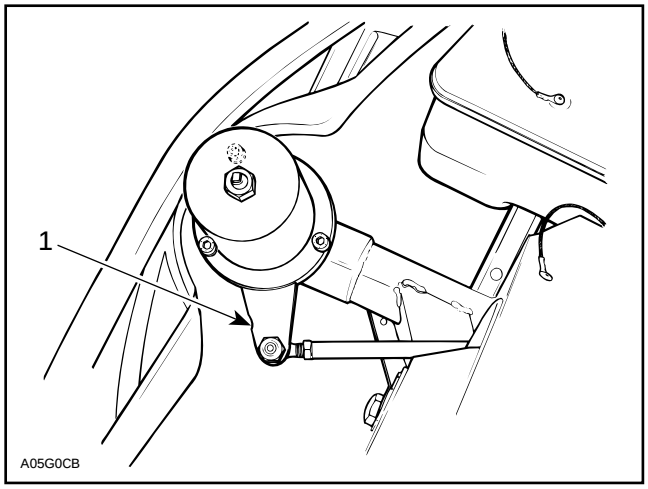

TYPICAL

1. Bent angle toward the bottom

16,17, Seal

Install seal before reinstalling ski leg.

TABLE OF CONTENTS

BODY **09-01-1**

INSTALLATION AND ADJUSTMENT **09-01-1**
HEADLAMP BEAM AIMING 09-01-1
BULB REPLACEMENT 09-01-1
DECAL 09-01-2
WINDSHIELD INSTALLATION 09-01-2
HOOD 09-01-2
BELT GUARD 09-01-3
WIRING HARNESS 09-01-3
CABLES 09-01-3
PIPING 09-01-3

PLASTIC MAINTENANCE AND REPAIR **09-01-4**
MAINTENANCE 09-01-4
REPAIR 09-01-5
MATERIAL REPAIR PROCEDURE 09-01-6
REPAIR PROCEDURE FOR R.I.M. URETHANE 09-01-6

FRAME **09-02-1**
FRAME CLEANING 09-02-1
FRAME WELDING 09-02-1
FRAME COMPONENT REPLACEMENT 09-02-2

BODY

INSTALLATION AND ADJUSTMENT

HEADLAMP BEAM AIMING

Beam aiming is correct when center of high beam is 25 mm (1 in) below the headlamp horizontal center line, scribed on a test surface, 381 cm (12 ft 6 in) away.

Measure headlamp center distance from ground. Scribe a line at this height on test surface (wall or screen). Light beam center should be 25 mm (1 in) below scribed line.

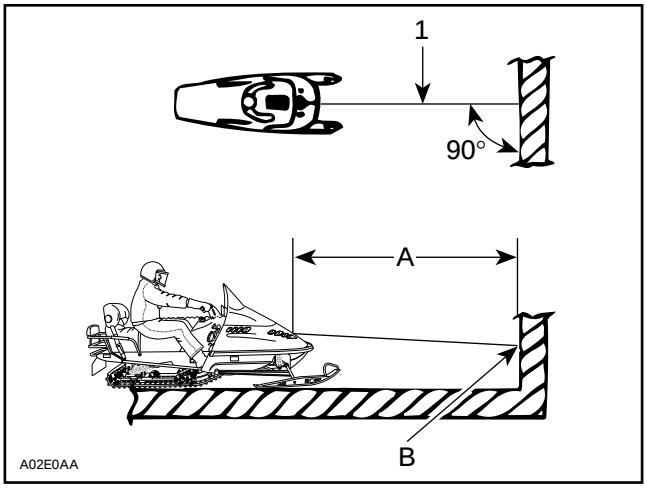

1. Headlamp center line
A. 381 cm (12 ft 6 in)
B. 25 mm (1 in) below center line

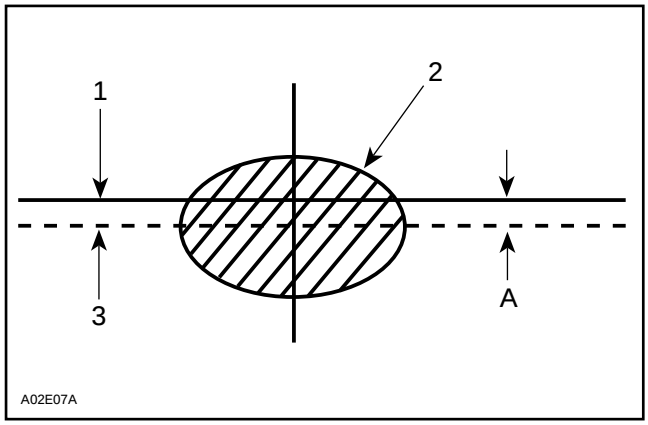

1. Headlamp horizontal
2. Light beam (high beam) (projected on the wall)
3. Light beam center
A. 25 mm (1 in)

Required Conditions

Place the vehicle on a flat surface perpendicular to test surface (wall or screen) and 381 cm (12 ft 6 in) away from it.

Rider or equivalent weight must be on the vehicle.

Select high beam.

BULB REPLACEMENT

If headlamp bulb is burnt, tilt cab and unplug the connector from the headlamp. Remove the rubber boot and unfasten the bulb retainer clips or locking ring.

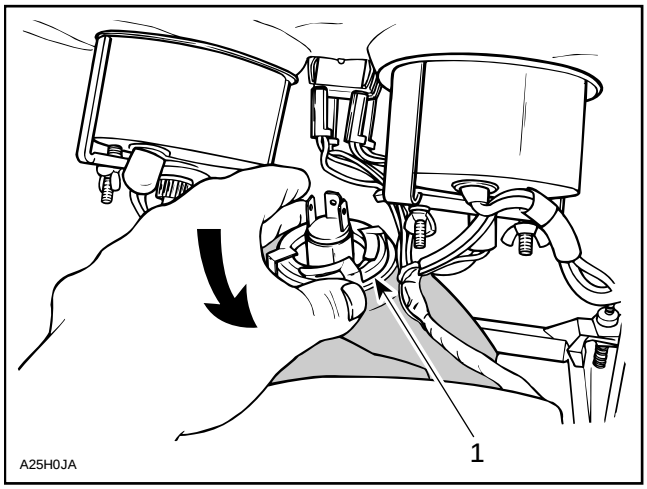

TYPICAL
1. Locking ring

Replace bulb. If the taillight bulb is burnt, expose the bulb by removing red plastic lens. To remove, unscrew the 2 retaining screws. Verify all lights after replacement.

▼CAUTION : Never touch glass portion of an halogen bulb with bare fingers, as it shortens its operating life. If by mistake glass is touched, clean it with isopropyl alcohol which will not leave a film on the bulb.

DECAL

To remove a decal ; heat old decal with a heat gun and peel off slowly.

Using isopropyl alcohol, clean the surface and dry thoroughly.

Apply liquid soap to new decal and carefully position the decal. Using a sponge or a squeegee, remove the air bubbles and surplus water working from the center toward the edges. Allow to air dry.

CAUTION : Do not apply isopropyl alcohol or solvant directly on decals.

WINDSHIELD INSTALLATION

When peeling off the protective film some polyethylene particles may remain on the windshield. A soft clean cloth moistened with naphtha (camping equipment fuel) will easily remove the remaining particles.

WARNING : Naphtha is flammable and explosive under certain conditions. Always manipulate in a well ventilated area. Do not smoke or allow open flames or sparks in the vicinity.

Position the windshield on the hood then push it down until the tabs are fully inserted into the hood slots. Lock the windshield tabs in position using latches as shown.

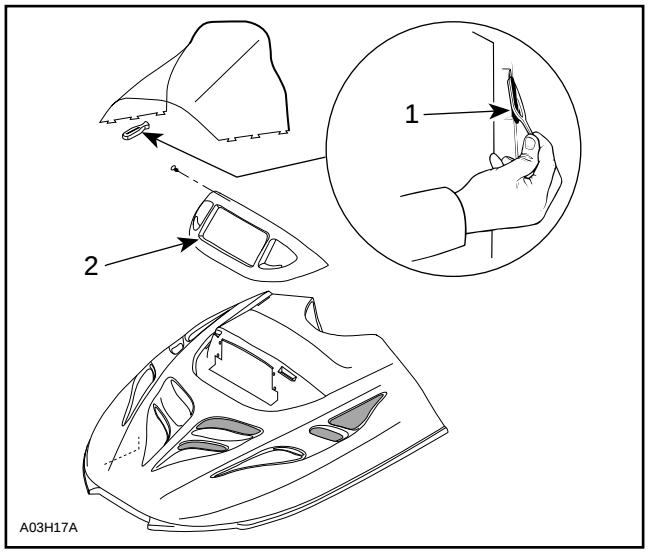

S SERIES

1. *Latch*
2. *Temporary remove headlamp molding for windshield installation*

HOOD

S Series

Working from within engine compartment, remove exterior nuts retaining both hinges. Then, close hood and remove interior nuts through the access holes.

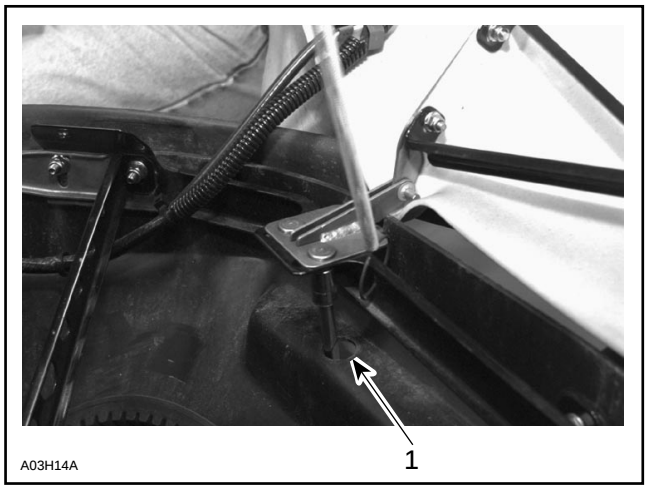

1. *Access hole*

At installation, loosely install nuts, close hood then adjust before tightening interior nuts through access holes.

F Series

Unfasten speedometer cable, wiring harnesses then retaining cables.

Unbolt front molding and unclip it.

Close hood.

Remove molding.

Remove hinge pin.

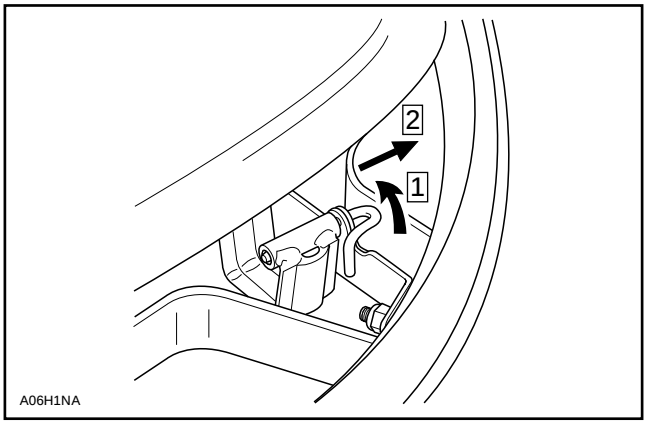

At installation, half close hood to install front molding.

BELT GUARD

Disassembly and Assembly

NOTE : For additional information (ex. : exploded view) refer to the correspondent parts catalog.

WARNING : Engine should be running only with belt guard and / or pulley guard well secured in place.

Inspection

All Models

Check belt guard and / or pulley guard mounting bosses, clips and retainers for wear.

WIRING HARNESS

WARNING : Ensure all terminals are properly crimped on the wires and that all connector housings are properly fastened. Keep wires away from any rotating, moving, heating and vibrating parts. Use proper fastening devices as required.

CABLES

WARNING : Before installation, ensure that all cables are in perfect condition. Properly install the cable ends and secure them in place. Pay attention to route them properly, away from any rotating, moving, heating, or vibrating parts.

PIPING

WARNING : Always ensure that the fuel, vent, primer, impulse, injection oil and rotary valve oil lines are properly fixed to their connectors, that they are not perforated or kinked and that they are properly routed away from any rotating, moving, heating or vibrating parts. Also check for leaks. Replace if required.

NOTE : Refer to proper Parts Catalog to find suitable clip part numbers.

PLASTIC MAINTENANCE AND REPAIR

MAINTENANCE

Clean the vehicle thoroughly, removing all dirt and grease accumulation.

To clean use a soft clean cloth and either soapy water or isopropyl alcohol.

To remove grease, oil or glue use isopropyl alcohol.

CAUTION : Do not apply isopropyl alcohol or acetone directly on decals.

CAUTION : The following products must not be used to clean or wax any of the plastic components used on the vehicles :

- gasoline
- brake fluid
- kerosene
- diesel fuel
- lighter fluid
- varsol
- naphtha
- acetone
- strong detergents
- abrasive cleaners
- waxes containing an abrasive or a cleaning agent in their formula

CAUTION : Clean R.I.M. Metton® with isopropyl alcohol only. Never use cleaners or products containing chlorine.

Apply wax on glossy finish only. Protect the vehicle with a cover to prevent dust accumulation during storage.

CAUTION : If for some reason the snowmobile has to be stored outside it is preferable to cover it with an opaque tarpaulin. This will prevent the sun rays from affecting the plastic components and the vehicle finish.

REPAIR

The very first step before repairing plastic materials is to find out exactly which type of material is involved. Refer to following chart.

▼ CAUTION : Consult chart and repair kit instructions carefully, some repair products are not compatible with certain plastics.

◆ WARNING : Polycarbonate windshields must never be repaired by welding or otherwise.

		REPAIRABLE		
PART	MODEL	FIBERGLASS	R.I.M. URETHANE	POLYETHYLENE
HOOD 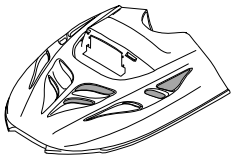 A06H194	Skandic WT			
	S Serie F Serie			
BOTTOM PAN 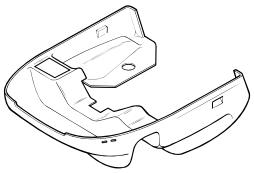 A06H1A4	Skandic WT S Serie F Serie			
SIDE PANEL AND REAR MOLDING 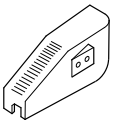 A06H1B4	S Serie F Serie			

MATERIAL REPAIR PROCEDURE

Fiberglass

This material is repairable and repaintable, using any one of several kits available on the market.

R.I.M. Urethane

R.I.M. Urethane is light colored (tan) on the inside with a smooth surface.

◆ WARNING : Material should be repaired and repainted in a well ventilated area only.

▼ CAUTION : Clean R.I.M. with isopropyl alchol or Crest Hi-Solv product. Never use cleaners or products that contain chlorine.

▼ CAUTION : R.I.M. should never be exposed to temperatures exceeding 93°C (200°F).

○ NOTE : When working on a R.I.M. surface, never use a grinder or a high revolution tool such as an air or electric buffer. Use of such tools could overheat material and liberate agents in it thus causing a bad adhesion.

REPAIR PROCEDURE FOR R.I.M. URETHANE

Small Scratches

- Sand and scuff area.
- Feather out edges.
- Paint with a matching acrylic auto touch-up paint.

Deep Scratches

- Sand and scuff area.
- Make a V groove using a knife or a rough round file.
- Clean surface with isopropyl alcohol or Crest Hi-Solv stock no. AH-S product.
- Cover with TP-E epoxy mixed in equal quantities.
- Heat the surface with a heater lamp placed at 38 cm (15 in) for a period of 15 minutes.
- Sand the repair using a smooth dry sand paper.
- Use the same product if a final finish is required.
- Clean surface with Crest Hi-Solv product.
- Apply a flexible primer such as Crest Prima Flex stock no. AP-F.
- Wait 10 minutes.
- Repaint (air dry during 72 hours (approximately)).

Large Crack

- Sand and scuff outside and inside area by exceeding it 31.7 mm (1-1/4 in) on each side and 12.7 mm (1/2 in) at each end.
- Make a V groove (appr. 90°) on both sides of hood using a knife or a rough round file.
- Enlarge the crack to 2.4 mm (3/32 in) – 3.2 mm (1/8 in) using a sharp knife.
- Clean outside and inside surface with isopropyl alcohol or Crest Hi-Solv product.
- Repair inside surface first.
- Cover inside area with Crest TP-E epoxy.
- Apply a 50 mm × 30 mm (2 in × 1-1/4 in) patch. If no room for the patch, use tape.
- Cover exterior surface with same product. Damaged area should be slightly higher.
- Heat surface with a heater lamp placed at 38 mm (15 in) for a period of 15 minutes.
- Sand outside repair using a smooth dry sand paper.
- Use same product if a final finish is required.
- Apply a flexible primer.
- Wait 10 minutes.
- Repaint (air dry during 72 hours approximately).

○ NOTE : Both R.I.M. materials are high static plastics, painting must be done in a dust free area such as a paint booth.

CREST MAIN OFFICE AND MANUFACTURING PLANT	
CREST INDUSTRIES, INC. 3841 13th Street Wyandotte, Michigan 48192	Phone : 313-283-4100 Toll Free : 1-800-822-4100 Fax : 1-800-344-4461 Fax : 313-283-4461

Crest products used in R.I.M. repair procedure are available from following locations :

DISTRIBUTOR WAREHOUSE LOCATIONS		
UNITED STATES		**CANADA**
CREST EAST COAST, INC. P.O. Box 550 1109 Industrial Parkway Brick, New Jersey 08723 Phone : 908-458-9000 Fax : 908-458-5753 CREST PRODUCTS, INC. *Shipping Address :* 125 Production Drive Yorktown, Virginia 23693 Phone : 804-599-6572 Virginia : 1-800-572-5025 Outstate : 1-800-368-5033 Fax : 804-599-6630 *Mailing Address :* P.O. Box 2018 Grafton, Virginia 23692 CREST INDUSTRIES SOUTHEAST, INC. *Shipping Address :* 4300 Glen Haven Drive Decatur, Georgia 30035 Phone : 404-288-4658 Toll Free : 1-800-552-0876 Fax : 404-288-4658 *Mailing Address :* P.O. Box 254 Decatur, Georgia 30031	CREST INDUSTRIES, INC. (CREST MID-WEST) 231 Larkin Williams Ind. Court St. Louis, Missouri 63026 Phone : 314-349-4800 Toll Free : 1-800-733-2737 Fax : 314-349-4888 Toll Free Fax : 1-800-776-2737 CREST MID WEST Regional Branch Warehouses CREST INDUSTRIES, INC. P.O. Box 635 Mountain Home, Arkansas 72653 Phone : 501-491-5583 Toll Free : 1-800-733-2737 4200 Jackson Street, Unit 9 Denver, Colorado 80216 Phone : 303-320-3900 Toll Free : 1-800-733-2737 Fax : 303-320-6509 REM-CO DISTRIBUTING, INC. 5625 S. Adams Tacoma, Washington 98409 Phone : 206-474-5414 Toll Free : 1-800-735-7224 Fax : 206-474-7339	J2 PRODUCTS A Division of Sawill Ltd. 54 Audia Court, Unit 2A Concord, Ontario, L4K 3N4 *Phone :* *Toronto : 416-665-1404* *Concord : 905-669-9410* *Montréal : 514-655-6505* *Fax :* Concord : 905-669-9419 Montréal : 514-655-6505 WHEEL-IN AUTOMOTIVE SUPPLY *Shipping Address :* # 1, 3911A Brandon St. S.E. Calgary, Alberta, T2G 4A7 Office : 403-287-0775 *Mailing Address :* P.O. Box 40036 929-42nd Avenue S.E. Calgary, Alberta, T2G 5G5

FRAME

FRAME CLEANING

NOTE : For aluminum frames use only aluminum cleaner and follow instructions on container. (Dursol cleaner or equivalent).

Clean frame and tunnel with appropriate cleaners and rinse with high pressure hose.

On liquid cooled models carefully clean radiators and check condition of radiator protectors. The protectors should extend far enough to keep the track from rubbing on the radiators.

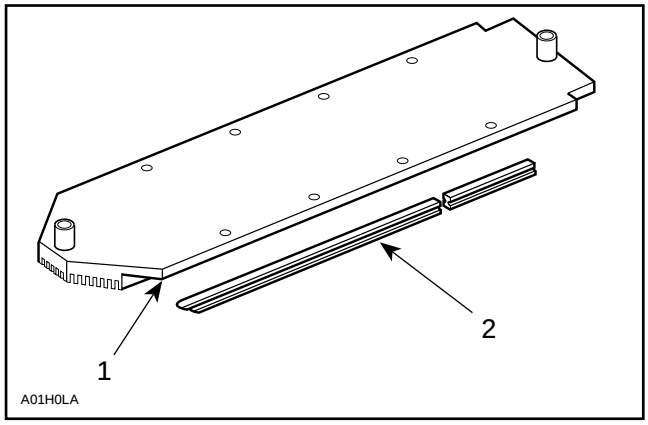

1. Radiator
2. Radiator protector

Touch up all metal spots where paint has been scratched off. Spray all bare metal parts of vehicle with metal protector.

Seat Cleaning

For all models, it is recommend to clean the seat with a solution of warm soapy water using a soft clean cloth.

CAUTION : Avoid use of harsh detergent such as strong soaps, degreasing solvents, abrasive cleaners, paint thinners, etc. that may cause damage to the seat cover.

FRAME WELDING

Steel Frame :

- electric welding
- amperage : 70-110 A
- voltage : 20-24 V
- rod : E-7014 (3/32 in)

Aluminum Frame :
(Refer to Specialized Welding Shop)

- argon-oxygen / acetylene welding
- rod : ER-4043 (3/32 in)

CAUTION : Before performing electrical welding anywhere on the vehicle, unplug the multiple connector at the electronic box for models equipped with a battery, unplug the negative cable. This will protect the electronic box and battery against damage caused by flowing current when welding.

NOTE : This procedure applies to all electronic ignition systems.

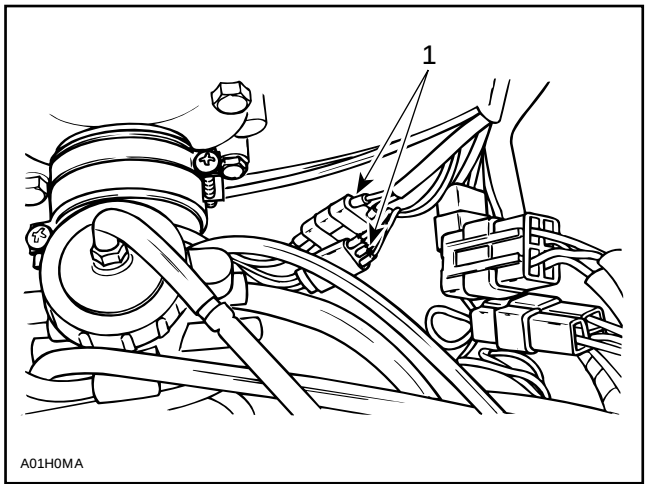

TYPICAL
1. Unplug before electrical welding

CAUTION : If welding is to be done near plastic material, it is recommended to either remove the part from the area or to protect it with aluminum foil to prevent damage.

FRAME COMPONENT REPLACEMENT

DSA Suspension Models

▼CAUTION : Do not attempt to drill hardened self-piercing rivets. Always grind rivet heads for removal.

Rear Cap

Grind rivet heads from top of rear cap and underneath for side retaining rivets.

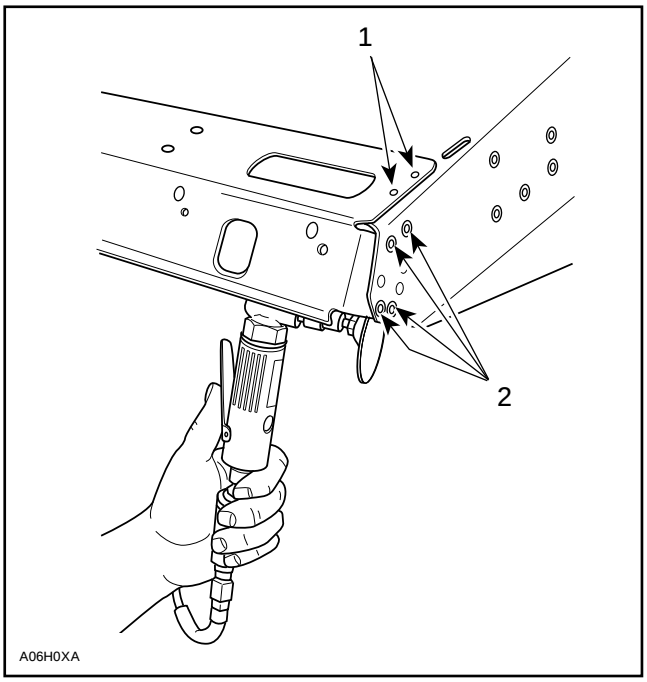

1. Rivets heads ground
2. Rivets to be ground from underneath

To remove rivet, strike with a punch from rivet head side.

Make a chamfer from underneath on all four corner holes.

Radiator

Grind outside rivet heads from top of tunnel beginning from the side of tunnel to the center to avoid scratching visible part of tunnel.

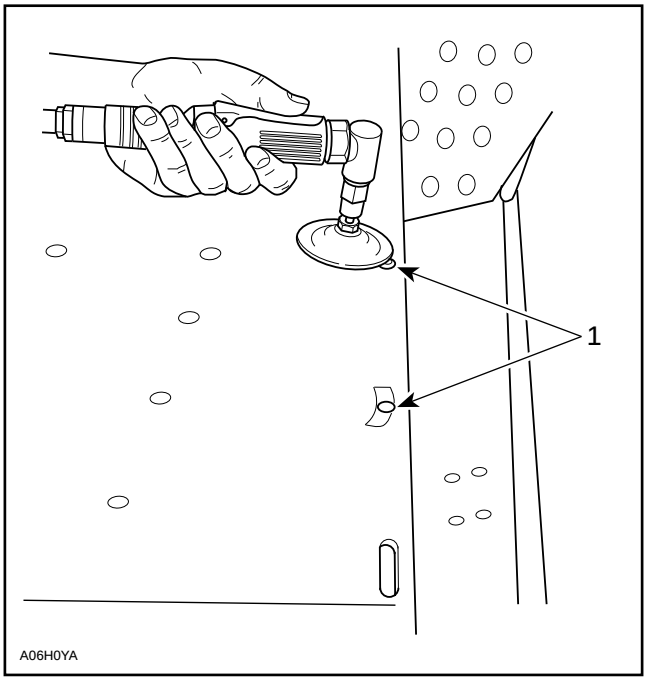

1. Outside rivets

Grind inside rivets from underneath of tunnel.

Make paint touch-ups.

Rivet new radiator. Install a washer under rivet head when rivet hole is enlarged.

TECHNICAL DATA

SI* METRIC INFORMATION GUIDE

BASE UNITS

DESCRIPTION	UNIT	SYMBOL
length	meter	m
mass	kilogram	kg
force	newton	N
liquid	liter	L
temperature	Celsius	°C
pressure	kilopascal	kPa
torque	newton•meter	N•m
speed	kilometer per hour	km/h

PREFIXES

PREFIX	SYMBOL	MEANING	VALUE
kilo	k	one thousand	1,000
centi	m	one hundredth	0.01
milli	c	one thousandth	0.001
micro	µ	one millionth	0.000001

CONVERSION FACTORS

TO CONVERT	TO †	MULTIPLY BY
in	mm	25.4
in	cm	2.54
in^2	cm^2	6.45
in^3	cm^3	16.39
ft	m	0.3
oz	g	28.35
lbf	kg	0.45
lbf•in	N	4.4
lbf•ft	N•m	0.11
lbf•ft	N•m	1.36
PSI (lbf/in^2)	lbf•in	12
imp. oz	kPa	6.89
U.S. oz	U.S. oz	0.96
U.S. oz	mL	28.41
imp. gal	U.S. gal	1.2
imp. gal	L	4.55
U.S. oz	mL	29.57
U.S. gal	L	3.79
MPH	km/h	1.61
Fahrenheit	Celsius	(°F – 32) ÷ 1.8
Celsius	Fahrenheit	(°C × 1.8) + 32

* The international system of units abbreviates SI in all languages.

† To obtain the inverse sequence, divide by the given factor. To convert ''mm'' to ''in'', divide by 25.4.

NOTE : Conversion factors are rounded off to 2 decimals for easier use.

VEHICLE MODEL			SKANDIC WT	MX Z 440	MX Z 583	MX Z 670	SUMMIT 583
ENGINE TYPE			503	454	583	670	583 HAC
Number of Cylinders			2	2	2	2	2
Bore		mm (in)	72.00 (2.835)	67.50 (2.657)	76.00 (2.992)	78.00 (3.071)	76.00 (2.992)
Stroke		mm (in)	61.00 (2.402)	61.00 (2.402)	64.00 (2.520)	70.00 (2.760)	64.00 (2.520)
Displacement		cm^3 (in^3)	496.70 (30.31)	436.57 (26.6)	580.70 (35.44)	668.97 (40.82)	580.70 (35.44)
Compression Ratio (corrected)			6.20	6.60	6.10	6.0	6.10
Maximum Power Engine Speed ①		RPM	6400 – 6600	7900 – 8100	7800 – 8000	7600 – 7800	7700 – 7900
Piston Ring Type		1st / 2nd	ST / R	ST / R	ST / N.A.	ST / R	ST / N.A.
Ring End Gap	(new)	mm (in)	0.200 (.0079)	0.250 (.010)	0.250 (.0100)	0.250 (.0100)	0.250 (.001)
	(wear limit)	mm (in)	1.000 (.0394)	1.000 (.0394)	1.000 (.0400)	1.000 (.0400)	1.000 (.0394)
Ring / Piston Groove Clearance	(new)	mm (in)	0.040 (.0016)	0.040 (.0016)	0.040 (.0016)	0.030 (.0012)	0.040 (.0016)
	(wear limit)	mm (in)	0.200 (.0079)	0.200 (.0079)	0.200 (.0080)	0.200 (.0080)	0.200 (.0079)
Piston / Cylinder Wall Clearance	(new)	mm (in)	0.080 (.0031)	0.110 (.0043)	0.050 (.0020)	0.070 (.0028)	0.050 (.0020)
	(wear limit)	mm (in)	0.200 (.0079)	0.200 (.0079)	0.150 (.0060)	0.150 (.0060)	0.150 (.0059)
Connecting Rod Big End Axial Play	(new)	mm (in)	0.200 (.0079)	0.390 (.0154)	0.390 (.0156)	0.390 (.0156)	0.390 (.0154)
	(wear limit)	mm (in)	1.000 (.0394)	1.200 (.0472)	1.200 (.0480)	1.200 (.0480)	1.200 (.0472)
Maximum Crankshaft End-play		mm (in)	0.300 (.0118)	0.300 (.0118)	0.300 (.0120)	0.300 (.0120)	0.300 (.0118)
Maximum Crankshaft Deflection		mm (in)	0.080 (.0031)	0.080 (.0031)	0.080 (.0032)	0.080 (.0032)	0.080 (.0031)
Rotary Valve Timing ② and P / N 420 924 XXX		Opening Closing	N.A.	146° – 65° 509	140° – 71° 502	145° – 76° 501	135° – 64° 504
Magneto Generator Output		W	240	220	220	220	220
Ignition Type			CDI	CDI	CDI	CDI	CDI
Spark Plug Make and Type			NGK BR8ES	NGK BR9ES	NGK BR9ES	NGK BR9ES	NGK BR9ES
Spark Plug Gap		mm (in)	0.45 (.018)	0.45 (.018)	0.45 (.018)	0.45 (.018)	0.45 (.018)
Ignition Timing BTDC ③		mm (in)	1.66 (.065)	1.48 (.058)	1.75 (.069)	1.93 (.076)	1.75 (.069)
Generating Coil ⑤		Low Speed : Ω	N.A.	10-17	10 – 17	10 – 17	10 – 17
		High Speed : Ω	230 – 330	N.A.	N.A.	N.A.	N.A.
Lighting Coil ⑤		Ω	0.23 – 0.28	0.20 – 0.35	0.20 – 0.35	0.20 – 0.35	0.20 – 0.35
High Tension Coil ⑤	Primary	Ω	N.A.	0.3 – 0.7	0.3 – 0.7	0.3 – 0.7	0.3 – 0.7
	Secondary	kΩ	5.1 – 6.3	8 – 16	8 – 16	8 – 16	8 – 16
Carburetor Type		PTO / MAG	VM 32	VM 34 469 / 470	VM 40 76 / 77	VM 40 84 / 85	VM 38 319 / 320
Main Jet		PTO / MAG	220	230 / 210	270 / 260	300 / 270	330 / 320
Needle Jet			159 O-0	159 P-8	224-AA2	224 AA-2	480 Q-6
Pilot Jet			25	40	45	60	75
Needle Identification – Clip Position			6DH8-4	6FJ43-2	7ECY1-3	7EDY1-3	6BGY15-2
Slide Cut-away			3	2.5	2.5	2.5	2.5
Float Adjustment		± 1 mm (± 0.40 in)	23.9 (.94)	23.9 (.94)	18.1 (.71)	18.1 (.71)	19.6 (.77)
Air Screw Adjustment		± 1/16 Turn	1.5	0.5	1-7/8	2.25	1.5
Idle Speed RPM		RPM	1500 – 1800	1600 – 1800	1800 – 2000	1800 – 2000	1800 – 2000
Gas Type / Pump Octane number			Unleaded / 87	Unleaded / 87	Unleaded / 87	Unleaded / 87	Unleaded / 87
Gas / Oil Ratio			Injection	Injection	Injection	Injection	Injection
Type			Axial Fan	Liquid	Liquid	Liquid	Liquid
Axial Fan Belt Adjustment	Deflection	mm in	9 – 10 (.35 – .39)	N.A.	N.A.	N.A.	N.A.
	Force	kg (lbf)	5 (11)	N.A.	N.A.	N.A.	N.A.
Thermostat Opening Temperature		°C (°F)	N.A.	42 (108)	42 (108)	42 (108)	42 (108)
Radiator Cap Opening Pressure		kPa (PSI)	N.A.	90.0 (13.0)	90.0 (13.0)	90.0 (13.0)	90.0 (13.0)
ENGINE COLD N•m (lb•ft)	Drive Pulley Retaining Screw		Ð	Ð	Ð	Ð	Ð
	Exhaust Manifold Nuts or Bolts		22 (16)	23 (17)	23 (17)	23 (17)	10 (7)
	Magneto Ring Nut		105 (77)	125 (92)	125 (92)	125 (92)	125 (92)
	Crankcase Nuts or Screws	M6 M8	— 22 (16)	10 (7) 29 (21)	9 (6.5) 29 (21)	9 (6.5) 29 (21)	10 (7) 24 (18)
	Crankcase / Engine Support Nuts or Screws		38 (28)	38 (28)	40 (29)	40 (29)	38 (28)
	Cylinder Head Nuts		22 (16)	30 (22)	29 (21)	29 (21)	30 (22)
	Crankcase / Cylinder Nuts or Screws		N.A.	30 (22)	29 (21)	29 (21)	30 (22)
	Axial Fan Shaft Nut		55 (41)	N.A.	N.A.	N.A.	N.A.

VEHICLE MODEL	SUMMIT 670	FORMULA Z	FORMULA SS	FORMULA III / III LT	MACH Z / Z LT
ENGINE TYPE	670 HAC	583	670	599	779
Number of Cylinders	2	2	2	3	3
Bore mm (in)	78.00 (3.071)	76.00 (2.992)	78.00 (3.071)	64.50 (2.539)	69.50 (2.736)
Stroke mm (in)	70.00 (2.760)	64.00 (2.520)	70.00 (2.760)	61.00 (2.402)	68.00 (2.680)
Displacement cm^3 (in^3)	668.97 (40.82)	580.70 (35.44)	668.97 (40.82)	597.94 (36.49)	773.90 (47.23)
Compression Ratio (corrected)	6.20	6.10	6.20	6.80	6.80
Maximum Power Engine Speed ① RPM	7600 – 7800	7800 – 8000	7600 – 7800	8100 – 8300	8100 – 8300
Piston Ring Type 1st / 2nd	ST / R	ST / N.A.	ST / R	ST / R	ST / R
Ring End Gap (new) mm (in)	0.250 (.0098)	0.250 (.0100)	0.250 (.0100)	0.200 (.0079)	0.200 (.0079)
Ring End Gap (wear limit) mm (in)	1.000 (.0394)	1.000 (.0400)	1.000 (.0400)	1.000 (.0394)	1.000 (.0394)
Ring / Piston Groove Clearance (new) mm (in)	0.030 (.0012)	0.040 (.0016)	0.030 (.0012)	0.030 (.0012)	0.030 (.0012)
Ring / Piston Groove Clearance (wear limit) mm (in)	0.200 (.0079)	0.200 (.0080)	0.200 (.0080)	0.200 (.0079)	0.200 (.0079)
Piston / Cylinder Wall Clearance (new) mm (in)	0.070 (.0028)	0.050 (.0020)	0.070 (.0028)	0.085 (.0035)	0.120 (.0048)
Piston / Cylinder Wall Clearance (wear limit) mm (in)	0.150 (.0059)	0.150 (.0060)	0.150 (.0060)	0.200 (.0079)	0.200 (.0079)
Connecting Rod Big End Axial Play (new) mm (in)	0.390 (.0154)	0.390 (.0156)	0.390 (.0156)	0.390 (.0154)	0.390 (.0154)
Connecting Rod Big End Axial Play (wear limit) mm (in)	1.200 (.0472)	1.200 (.0480)	1.200 (.0480)	1.200 (.0472)	1.200 (.0472)
Maximum Crankshaft End-play mm (in)	0.300 (.0118)	0.300 (.0120)	0.300 (.0120)	0.300 (.0118)	0.300 (.0118)
Maximum Crankshaft Deflection mm (in)	0.080 (.0031)	0.080 (.0032)	0.080 (.0032)	0.080 (.0031)	0.080 (.0031)
Rotary Valve Timing ② and P / N 420 924 XXX Opening / Closing	144° – 72° 500	140° – 71° 502	144° – 72° 500	N.A.	N.A.
Magneto Generator Output W	220	220	220	220	220
Ignition Type	CDI	CDI	CDI	CDI	CDI
Spark Plug Make and Type	NGK BR9ES	NGK BR9ES	NGK BR9ES	NGK BR10ES	NGK BR10ES
Spark Plug Gap mm (in)	0.45 (.018)	0.45 (.018)	0.45 (.018)	0.45 (.018)	0.45 (.018)
Ignition Timing BTDC ③ mm (in)	1.93 (.076)	1.75 (.069)	1.93 (.076)	2.18 (.086)	2.11 (.083)
Generating Coil ⑤ Low Speed : Ω	10 – 17	10 – 17	10 – 17	49 – 75	49 – 75
Generating Coil ⑤ High Speed : Ω	N.A.	N.A.	N.A.	2.8 – 4.3	2.8 – 4.3
Lighting Coil ⑤ Ω	0.20 – 0.35	0.20 – 0.35	0.20 – 0.35	0.20 – 0.35	0.20 – 0.35
High Tension Coil ⑤ Primary Ω	0.3 – 0.7	0.3 – 0.7	0.3 – 0.7	0.2 – 0.5	0.2 – 0.5
High Tension Coil ⑤ Secondary kΩ	8 – 16	8 – 16	8 – 16	6 – 13	6 – 13
Carburetor Type PTO / CENTER/ MAG	VM 40 81 / 82	VM 38 325 / 326	VM 40 79 / 79	VM 36 172 / VM 36-173 / VM 36-174	TM 38-C152
Main Jet PTO / CENTER/ MAG	380 / 370	320 / 330	360 / 360	330 / 320 / 330	380 / 370 / 380
Needle Jet	224 AA-2	480 P-0	224 AA-3	286 P-0	327 O-4
Pilot Jet	75	40	50	50 / 55 / 50	40 / 45 / 45
Needle Identification – Clip Position	7DPI1-3	6DHN44-3	7EDY1-3	6DEY2-3	8AGY1-41-3
Slide Cut-away	2.5	2.5	2.5	2.5	2.0
Float Adjustment ± 1 mm (± 0.40 in)	19.6 (.77)	18.1 (.71)	18.1 (.71)	18.1 (.713)	20.0 (.787)
Air Screw Adjustment ± 1/16 Turn	2.25	1.5	2.25	1.5 / 1.5 / 1.5	4.5 / 4.0 / 3.5
Idle Speed RPM RPM	1800 – 2000	1800 – 2000	1800 – 2000	1800 – 2000	1700 – 1800
Gas Type / Pump Octane number	Unleaded / 87	Unleaded / 87	Unleaded / 87	Unleaded / 87	Unleaded / 87
Gas / Oil Ratio	Injection	Injection	Injection	Injection	Injection
Type	Liquid	Liquid	Liquid	Liquid	Liquid
Axial Fan Belt Adjustment Deflection mm in	N.A.	N.A.	N.A.	N.A.	N.A.
Axial Fan Belt Adjustment Force kg (lbf)	N.A.	N.A.	N.A.	N.A.	N.A.
Thermostat Opening Temperature °C (°F)	42 (108)	42 (108)	42 (108)	42 (108)	42 (108)
Radiator Cap Opening Pressure kPa (PSI)	90.0 (13.0)	90.0 (13.0)	90.0 (13.0)	90.0 (13.0)	90.0 (13.0)
ENGINE COLD N•m (lb•ft) Drive Pulley Retaining Screw	Ð	Ð	Ð	Ð	«
Exhaust Manifold Nuts or Bolts	10 (7)	23 (17)	23 (17)	10 (7)	25 (18)
Magneto Ring Nut	125 (92)	125 (92)	125 (92)	125 (92)	125 (92)
Crankcase Nuts or Screws M6	10 (7)	9 (6.5)	9 (6.5)	13 (9)	13 (9)
Crankcase Nuts or Screws M8	24 (18)	29 (21)	29 (21)	29 (21)	29 (22)
Crankcase / Engine Support Nuts or Screws	38 (28)	40 (29)	40 (29)	13 (9)	13 (9)
Cylinder Head Nuts	30 (22)	29 (21)	29 (21)	29 (21)	29 (21)
Crankcase / Cylinder Nuts or Screws	30 (22)	29 (21)	29 (21)	29 (21)	29 (21)
Axial Fan Shaft Nut	N.A.	N.A.	N.A.	N.A.	N.A.

VEHICLE MODEL				SKANDIC WT	MX-Z 440	MX-Z 583	MX-Z 670
ENGINE TYPE				503	454	583	670
Chain Drive Ratio				N.A.	23/44	25/44	26/44
Chain	Pitch		(in)	N.A.	3/8	3/8	3/8
	Type, Links – Plates Qty			N.A.	Silent 72 – 13	Silent 74 – 13	Silent 74 – 13
Drive Pulley	Type of Drive Pulley			TRAC	TRAC	TRAC	TRAC
	Ramp Identification			146 ⑤	283 ⑤	286 ⑤	286 ⑤
	Calibration Screw Position or Calibration Disc Quantity			3	3	2	3
	Spring Color			Blue / Violet	Pink / White	Green / Blue	Violet / Yellow
	Spring Length		± 1.5 mm ± (0.060 in)	96.6 (3.80)	124.5 (4.9)	147.4 (5.80)	157.9 (6.22)
	Clutch Engagement		RPM	2800 – 3000	4300 – 4500	4300 – 4500	3700 – 3900
Driven Pulley Spring Preload Cam Angle			kg (lb) degree	5.7 – 7.1 (12.6 – 15.7) 40°	5.4 – 6.8 (11.9 – 15.0) 44°	5.4 – 6.8 (11.9 – 15.0) 50°	5.4 – 6.8 (11.9 – 15.0) 50°
Pulley Distance Z			(±0, –1) mm ((±0, –1/32) in)	32.75 (1-19/64)	16.5 (21/32)	16.5 (21/32)	16.5 (21/32)
Offset	X		± 0.4 mm (± 1/64 in)	36.25 (1-27/64)	35.0 (1-3/8)	35.0 (1-3/8)	35.0 (1-3/8)
	Y – X			1.0 – 2.0 (0.039 – 0.079)	1.0 – 2.0 (0.039 – 0.079)	1.0 – 2.0 (0.039 – 0.079)	1.0 – 2.0 (0.039 – 0.079)
Drive Belt Part Number (P / N)				414 6175 00	414 8607 00	414 8607 00	414 9182 00
Drive Belt Width (new) ①			mm (in)	34.6 (1-23/64)	34.9 (1-3/8)	34.9 (1-3/8)	35.2 (1-3/8)
Drive Belt Adjustment		Deflection	mm (in)	32 (1-1/4)	32 (1-1/4)	32 (1-1/4)	32 (1-1/4)
		Force ②	kg (lbf)	6.8 (15)	6.8 (15)	6.8 (15)	6.8 (15)
Track	Width		cm (in)	50 (19.7)	38 (15.0)	38 (15.0)	38 (15.0)
	Length		cm (in)	394 (155)	307 (121)	307 (121)	307 (121)
	Adjustment	Deflection	mm (in)	40 – 45 (1-9/16 – 1-3/4)	45 – 50 (1-3/4 – 1-31/32)	45 – 50 (1-3/4 – 1-31/32)	45 – 50 (1-3/4 – 1-31/32)
		Force ③	kg (lbf)	7.3 (16)	7.3 (16)	7.3 (16)	7.3 (16)
Suspension Type		Track		Slide	SC10 XC	SC10 XC	SC10 XC
		Ski		Telescopic Strut	DSA	DSA	DSA
Length			cm (in)	302 (119)	272.5 (107.3)	272.5 (107.3)	272.5 (107.3)
Width			cm (in)	104.5 (41.1)	117.2 (46.1)	117.2 (46.1)	117.2 (46.1)
Height			cm (in)	120.0 (47.2)	108 (42.5)	108 (42.5)	108 (42.5)
Ski Stance			cm (in)	90.0 (35.4)	104.5 (41.0)	104.5 (41.0)	104.5 (41.0)
Mass (dry)			kg (lb)	258 (568)	220 (485)	228 (502)	216 (475)
Ground Contact Area			cm^2 (in^2)	10793 (1673)	6629 (1028)	6629 (1028)	6629 (1028)
Ground Contact Pressure			kPa (PSI)	2.35 (.341)	3.29 (.477)	3.29 (.477)	3.2 (.464)
Frame Material				Steel	Aluminum	Aluminum	Aluminum
Bottom Pan Material				Polyethylene	Impact copolymer	Impact copolymer	Impact copolymer
Cab Material				Fiberglass	RRIM Polyurethane	RRIM Polyurethane	RRIM Polyurethane
Nose Piece Material				N.A.	N.A.	N.A.	N.A.
Battery			V (A•h)	12 (22)	N.A.	N.A.	N.A.
Headlight			W	H4 60/55	H4 60/55	H4 60/55	H4 60/55
Taillight and Stoplight			W	8/27	8/27	8/27	8/27
Tachometer and Speedometer Bulb			W	2 x 3	2 x 3	2 x 3	2 x 3
Fuel and Temperature Gauge Bulb			W	N.A.	N.A.	N.A.	N.A.
Fuse	Starter Solenoid		A	20	N.A.	N.A.	N.A.
	Tachometer		A	N.A.	N.A.	N.A.	N.A.
Fuel Tank			L (U.S. gal)	40 (10.6)	37.0 (9.8)	37.0 (9.8)	37.0 (9.8)
Chaincase / Gearbox			mL (U.S. oz)	500 (17)	250 (8.5)	250 (8.5)	250 (8.5)
Cooling System ④			L (U.S. oz)	N.A.	4.7 (159)	4.7 (159)	4.7 (159)
Injection Oil Reservoir			L (U.S. oz)	2.55 (86)	2.8 (95)	2.8 (95)	2.8 (95)

VEHICLE MODEL				SUMMIT 583	SUMMIT 670	FORMULA Z	FORMULA SS
ENGINE TYPE				583	670	583	670
Chain Drive Ratio				22/44	23/44	25/44	26/44
Chain	Pitch		(in)	3/8	3/8	3/8	3/8
	Type / Links – Plates Qty			Silent 72 – 13	Silent 72 – 13	Silent	Silent 74 – 13
Drive Pulley	Type of Drive Pulley			TRAC	TRAC	TRAC 74 – 11	TRAC
	Ramp Identification			285 ⑤	286 ⑤	228 ⑤	286 ⑥
	Calibration Screw Position or Calibration Disc Quantity			5	5	4	3
	Spring Color			Green / Blue	Violet / Yellow	Yellow	Violet / Yellow
	Spring Length		± 1.5 mm ± (0.060 in)	147.4 (5.80)	157.9 (6.22)	122 (4.80)	157.9 (6.22)
	Clutch Engagement		RPM	4400 – 4600	4000 – 4200	3700 – 3900	3700 – 3900
Driven Pulley Spring Preload Cam Angle			kg (lb) degree	5.4 – 6.8 (11.9 – 15.0) 50°	5.4 – 6.8 (11.9 – 15.0) 50°	5.4 – 6.8 (11.9 – 15.0) 50°	5.4 – 6.8 (11.9 – 15.0) 47°
Pulley Distance Z			(±0, –1) mm ((±0, –1/32) in)	16.5 (21/32)	16.5 (21/32)	16.5 (21/32)	16.5 (21/32)
Offset	X		± 0.4 mm (± 1/64 in)	35.0 (1-3/8)	35.0 (1-3/8)	35.0 (1-3/8)	35.0 (1-3/8)
	Y – X			1.0 – 2.0 (0.039 – 0.079)	1.0 – 2.0 (0.039 – 0.079)	1.0 – 2.0 (0.039 – 0.079)	1.0 – 2.0 (0.039 – 0.079)
Drive Belt Part Number (P / N)				414 9182 00	414 9182 00	414 8607 00	414 9182 00
Drive Belt Width (new) ①			mm (in)	35.2 (1-3/8)	35.2 (1-3/8)	34.90 (1-3/8)	35.2 (1-3/8)
Drive Belt Adjustment		Deflection	mm (in)	32 (1-1/4)	32 (1-1/4)	32 (1-1/4)	32 (1-1/4)
		Force ②	kg (lbf)	6.8 (15)	6.8 (15)	6.8 (15)	6.8 (15)
Track	Width		cm (in)	38 (15.0)	38 (15.0)	38.1 (15.0)	38.1 (15)
	Length		cm (in)	345 (136)	345 (136)	307 (121)	307 (121)
	Adjustment	Deflection	mm (in)	45 – 50 (1-3/4 – 1-31/32)	45 – 50 (1-3/4 – 1-31/32)	45 – 50 (1-3/4 – 1-31/32)	45 – 50 (1-3/4 – 1-31/32)
		Force ③	kg (lbf)	7.3 (16)	7.3 (16)	7.3 (16)	7.3 (16)
Suspension Type		Track		SC10 Mountain	SC10 Mountain	SC10 HP	SC10 HP
		Ski		DSA	DSA	DSA	DSA
Length			cm (in)	292 (115)	292 (115)	272 (107.1)	272 (107.1)
Width			cm (in)	108 (42.5)	108 (42.5)	121 (47.6)	121 (47.6)
Height			cm (in)	112 (44.1)	112 (44.1)	112 (44.1)	112 (44.1)
Ski Stance			cm (in)	94 (37)	94 (37)	107 (42)	107 (42)
Mass (dry)			kg (lb)	226 (498)	229 (503)	238 (524)	238 (524)
Ground Contact Area			cm^2 (in^2)	6629 (1028)	6629 (1028)	6793 (1053)	6692 (1037)
Ground Contact Pressure			kPa (PSI)	3.29 (.477)	3.29 (.477)	3.33 (.483)	3.56 (.516)
Frame Material				Aluminum	Aluminum	Aluminum	Aluminum
Bottom Pan Material				Impact copolymer	Impact copolymer	Impact copolymer	Impact copolymer
Cab Material				RRIM Polyurethane	RRIM Polyurethane	RRIM Polyurethane	RRIM Polyurethane
Nose Piece Material				N.A.	N.A.	N.A.	N.A.
Battery			V (A•h)	N.A.	N.A.	N.A.	N.A.
Headlight			W	H4 60/55	H4 60/55	H4 60/55	H4 60/55
Taillight and Stoplight			W	8/27	8/27	8/27	8/27
Tachometer and Speedometer Bulb			W	2 x 3	2 x 3	2 x 3	2 x 3
Fuel and Temperature Gauge Bulb			W	N.A.	N.A.	3 / 3	N.A.
Fuse	Starter Solenoid		A	N.A.	N.A.	N.A.	N.A.
	Tachometer		A	N.A.	N.A.	N.A.	N.A.
Fuel Tank			L (U.S. gal)	40 (10.6)	40 (10.6)	42.1 (11.1)	42.1 (11.1)
Chaincase / Gearbox			mL (U.S. oz)	250 (8.5)	250 (8.5)	250 (8.5)	250 (8.5)
Cooling System ④			L (U.S. oz)	5.0 (169)	5.0 (169)	4.7 (159)	4.7 (159)
Injection Oil Reservoir			L (U.S. oz)	2.8 (95)	2.8 (95)	4.1 (138.7)	4.1 (139)

VEHICLE MODEL				FORMULA III	FORMULA III LT	MACH Z	MACH Z LT
ENGINE TYPE				599	599	779	779
Chain Drive Ratio				25/44	23/44	26/44	25/44
Chain	Pitch		(in)	3/8	3/8	3/8	3/8
	Type, Links – Plates Qty			Silent 74 – 13	Silent 72 – 13	Silent 74 – 13	Silent 74 – 13
Drive Pulley	Type of Drive Pulley			TRAC	TRAC	TRAC	TRAC
	Ramp Identification			281 ⑥	281 ⑥	286 ⑥	286 ⑥
	Calibration Screw Position or Calibration Disc Quantity			4	4	3	4
	Spring Color			Pink / White	Pink / White	Green / Violet	Green / Violet
	Spring Length		± 1.5 mm ± (0.060 in)	124.5 (4.902)	124.5 (4.902)	126.7 (4.99)	126.7 (4.99)
	Clutch Engagement		RPM	4400 – 4600	4400 – 4600	4000 – 4200	4000 – 4200
Driven Pulley Spring Preload Cam Angle			kg (lb) degree	5.4 – 6.8 (11.9 – 15.0) 50°	5.4 – 6.8 (11.9 – 15.0) 50°	5.4 – 6.8 (11.9 – 15.0) 50°	5.4 – 6.8 (11.9 – 15.0) 50°
Pulley Distance Z			(±0, –1) mm ((±0, –1/32) in)	16.5 (1-5/8)	16.5 (1-5/8)	16.5 (1-5/8)	16.5 (1-5/8)
Offset	X		± 0.4 mm (± 1/64 in)	35.0 (1-3/8)	35.0 (1-3/8)	35.0 (1-3/8)	35.0 (1-3/8)
	Y – X			1.0 – 2.0 (0.039 – 0.079)	1.0 – 2.0 (0.039 – 0.079)	1.0 – 2.0 (0.039 – 0.079)	1.0 – 2.0 (0.039 – 0.079)
Drive Belt Part Number (P / N)				414 9182 00	414 9182 00	414 9182 00	414 9182 00
Drive Belt Width (new) ①			mm (in)	35.2 (1-3/8)	35.2 (1-3/8)	35.2 (1-3/8)	35.2 (1-3/8)
Drive Belt Adjustment		Deflection	mm (in)	32 (1-1/4)	32 (1-1/4)	32 (1-1/4)	32 (1-1/4)
		Force ②	kg (lbf)	6.8 (15)	6.8 (15)	6.8 (15)	6.8 (15)
Track	Width		cm (in)	38.1 (15)	38.1 (15)	38.1 (15)	38.1 (15)
	Length		cm (in)	307 (121)	345.5 (136)	307 (121)	345.5 (136)
	Adjustment	Deflection	mm (in)	45 – 50 (1-3/4 – 1-31/32)	45 – 50 (1-3/4 – 1-31/32)	45 – 50 (1-3/4 – 1-31/32)	45 – 50 (1-3/4 – 1-31/32)
		Force ③	kg (lbf)	7.3 (16)	7.3 (16)	7.3 (16)	7.3 (16)
Suspension Type		Track		Improved C-7	Improved C-7	Improved C-7	Improved C-7
		Ski		DSA	DSA	DSA	DSA
Length			cm (in)	272 (107.1)	291 (114.6)	272 (107.1)	291 (114.6)
Width			cm (in)	118.5 (46.7)	118.5 (46.7)	118.5 (46.7)	118.5 (46.7)
Height			cm (in)	108 (42.5)	108 (42.5)	108 (42.5)	108 (42.5)
Ski Stance			cm (in)	104.5 (41)	104.5 (41)	104.5 (41)	104.5 (41)
Mass (dry)			kg (lb)	248 (546)	251 (552)	257 (566)	260 (572)
Ground Contact Area			cm^2 (in^2)	6793 (1053)	7441 (1153)	6793 (1053)	7441 (1153)
Ground Contact Pressure			kPa (PSI)	3.58 (.519)	3.31 (.480)	3.71 (.538)	3.56 (.512)
Frame Material				Aluminum	Aluminum	Aluminum	Aluminum
Bottom Pan Material				Impact copolymer	Impact copolymer	Impact copolymer	Impact copolymer
Cab Material				RRIM Polyurethane	RRIM Polyurethane	RRIM Polyurethane	RRIM Polyurethane
Nose Piece Material				N.A.	N.A.	N.A.	N.A.
Battery			V (A•h)	N.A.	N.A.	N.A.	N.A.
Headlight			W	H4 60/55	H4 60/55	H4 60/55	H4 60/55
Taillight and Stoplight			W	8/27	8/27	8/27	8/27
Tachometer and Speedometer Bulb			W	2 x 3	2 x 3	2 x 3	2 x 3
Fuel and Temperature Gauge Bulb			W	3 / 3	3 / 3	3 / 3	3 / 3
Fuse	Starter Solenoid		A	N.A.	N.A.	N.A.	N.A.
	Tachometer		A	N.A.	N.A.	N.A.	N.A.
Fuel Tank			L (U.S. gal)	42.1 (11.1)	42.1 (11.1)	42.1 (11.1)	42.1 (11.1)
Chaincase / Gearbox			mL (U.S. oz)	250 (8.5)	250 (8.5)	250 (8.5)	250 (8.5)
Cooling System ④			L (U.S. oz)	5.0 (169)	5.0 (169)	5.0 (169)	5.3 (179)
Injection Oil Reservoir			L (U.S. oz)	4.1 (138.7)	4.1 (139)	4.1 (138.7)	4.1 (138.7)

ENGINE LEGEND

BTDC : Before Top Dead Center
CDI : Capacitor Discharge Ignition
CTR : Center
K : Kilo (× 1000)
MAG : Magneto Side
N.A. : Not Applicable
PTO : Power Take Off Side
R : Rectangular
ST : Semi-trapez

① The maximum horsepower RPM is applicable on the vehicle. It may be different under certain circumstances and BOMBARDIER INC. reserves the right to modify it without obligation.

② Rotary valve to crankcase clearance : 0.27 – 0.48 mm (.011 – .019 in).

③ At 6000 RPM (engine cold) with headlamp turned on.

④ Drive pulley retaining screw : torque to 90 to 100 N•m (66 to 74 lbf•ft), install drive belt, accelerate the vehicle at low speed (maximum 30 km / h (20 MPH)) and apply the brake ; repeat 5 times. Recheck the torque of 90 to 100 N•m (66 to 74 lbf•ft).

⑤ All resistance measurements must be performed with parts at room temperature (approx. 20°C (68°F)). Temperature greatly affects resistance measurements.

VEHICLE LEGEND

DSA : Direct Shock Action
HPG : High Pressure Gas
PRS : Progressive Rate Suspension
RAVE : Rotax Adjustable Variable Exhaust
RRIM : Reinforced Reaction Injection Molding
TRAC : Total Range Adjustable Clutch
N.A. : Not Applicable

① Minimum allowable width may not be less than 3.0 mm (1/8 in) of new drive belt.

② Force applied midway between pulleys to obtain specified tension deflection.

③ Force or downward pull applied to track to obtain specified tension deflection.

④ Coolant mixture : 60 % antifreeze / 40 % water.

⑤ Lever with roller pin P / N 420 4291 40. (Hollow)

⑥ Lever with roller pin P / N 504 2596 00. (Solid)

ANNEX 1 MX Z 440 / 583 / 670

MX-Z 440 '96
MX-Z 583
MX-Z 670

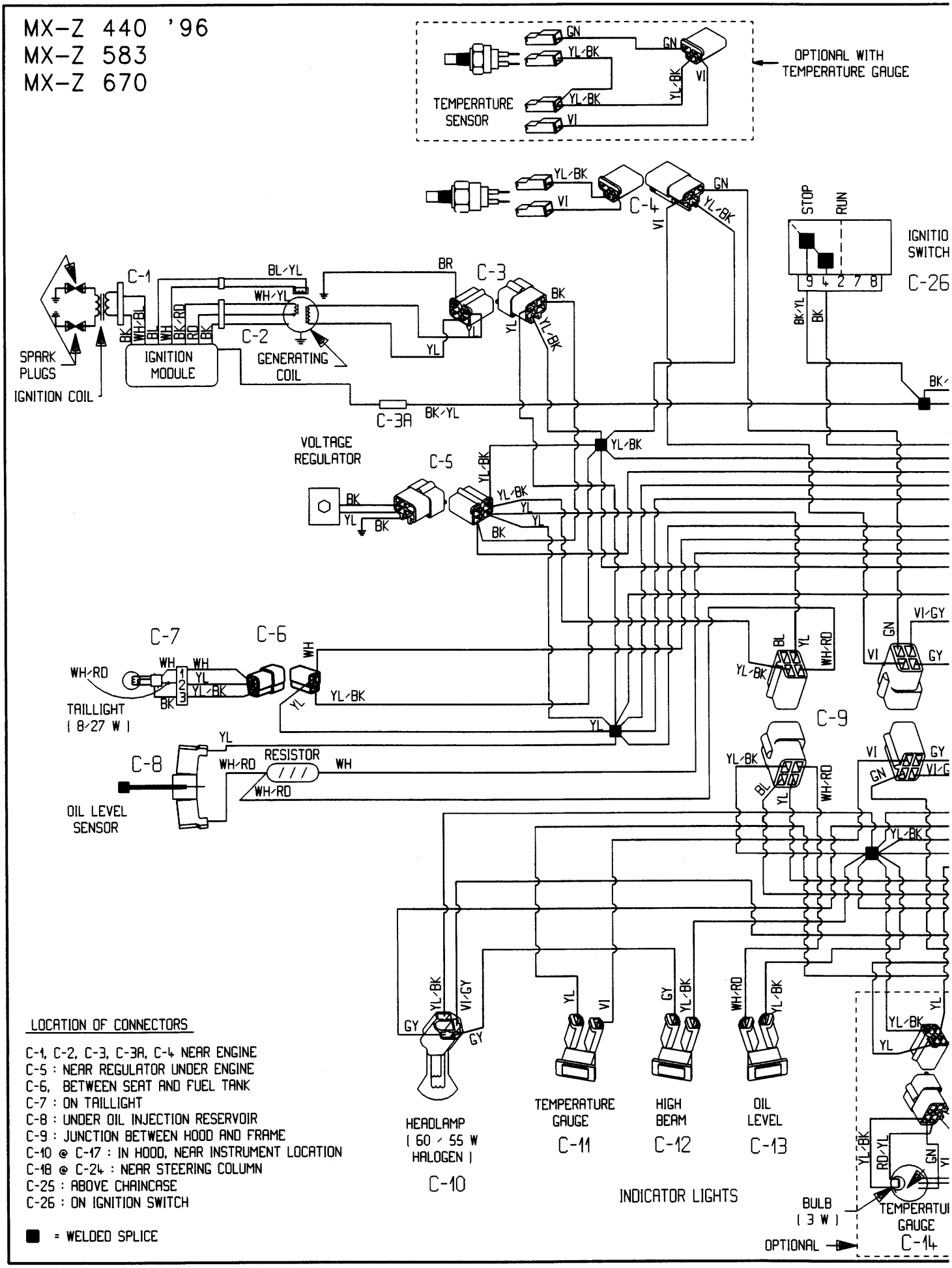

LOCATION OF CONNECTORS

C-1, C-2, C-3, C-3A, C-4 NEAR ENGINE
C-5 : NEAR REGULATOR UNDER ENGINE
C-6, BETWEEN SEAT AND FUEL TANK
C-7 : ON TAILLIGHT
C-8 : UNDER OIL INJECTION RESERVOIR
C-9 : JUNCTION BETWEEN HOOD AND FRAME
C-10 @ C-17 : IN HOOD, NEAR INSTRUMENT LOCATION
C-18 @ C-24 : NEAR STEERING COLUMN
C-25 : ABOVE CHAINCASE
C-26 : ON IGNITION SWITCH

■ = WELDED SPLICE

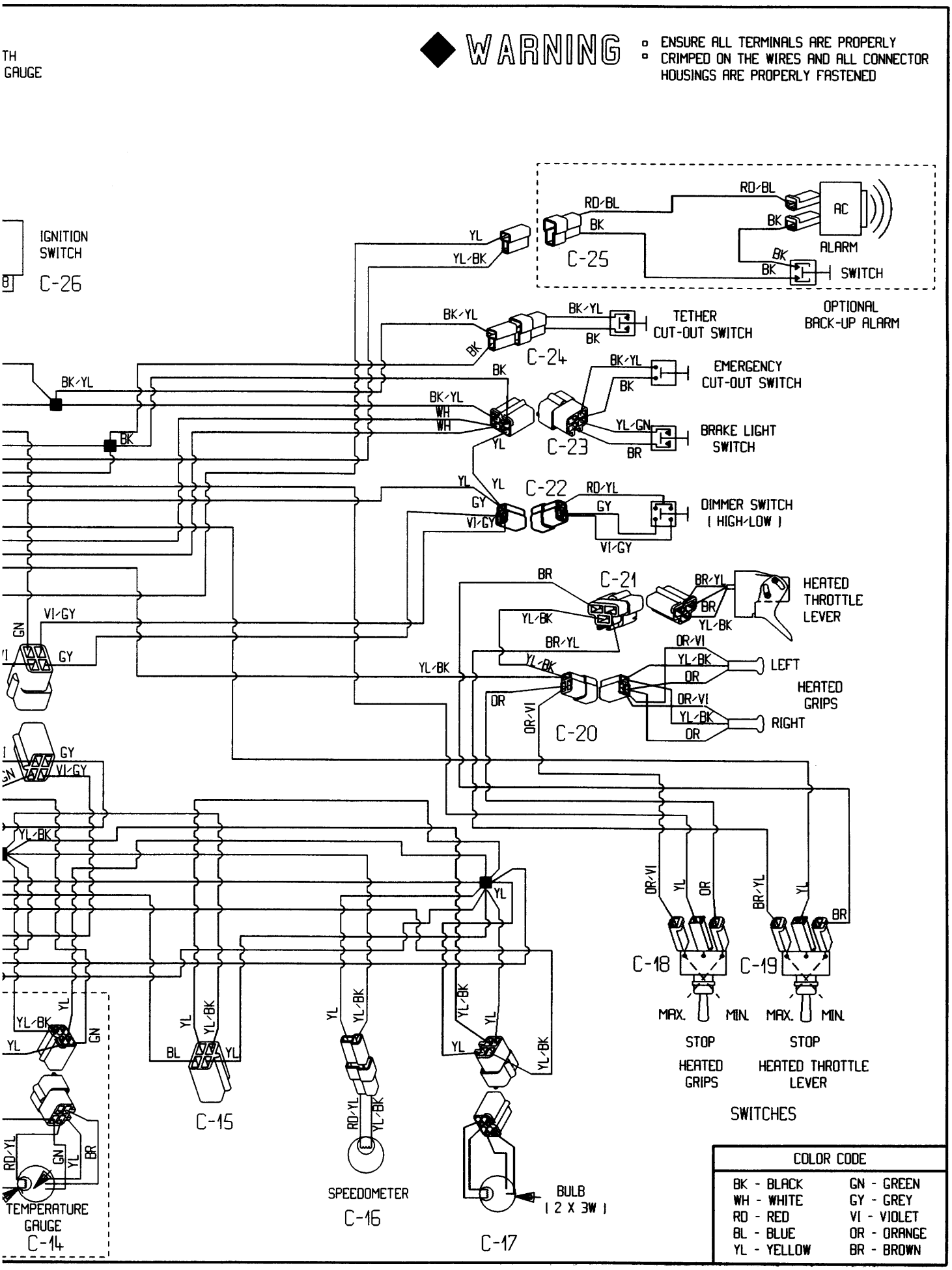
WARNING
ENSURE ALL TERMINALS ARE PROPERLY CRIMPED ON THE WIRES AND ALL CONNECTOR HOUSINGS ARE PROPERLY FASTENED
TH
GAUGE
IGNITION SWITCH
C-26
C-25
AC
ALARM
SWITCH
OPTIONAL BACK-UP ALARM
TETHER CUT-OUT SWITCH
C-24
EMERGENCY CUT-OUT SWITCH
BRAKE LIGHT SWITCH
C-23
C-22
DIMMER SWITCH (HIGH/LOW)
C-21
HEATED THROTTLE LEVER
HEATED GRIPS
LEFT
RIGHT
C-20
C-18
C-19
MAX.
MIN.
STOP
HEATED GRIPS
HEATED THROTTLE LEVER
SWITCHES
C-15
SPEEDOMETER
C-16
BULB (2 X 3W)
C-17
TEMPERATURE GAUGE
C-14
COLOR CODE
BK - BLACK
WH - WHITE
RD - RED
BL - BLUE
YL - YELLOW
GN - GREEN
GY - GREY
VI - VIOLET
OR - ORANGE
BR - BROWN

ANNEX 2 SUMMIT 583 / 670

FORMULA SLS '96
SUMMIT 500/583/670

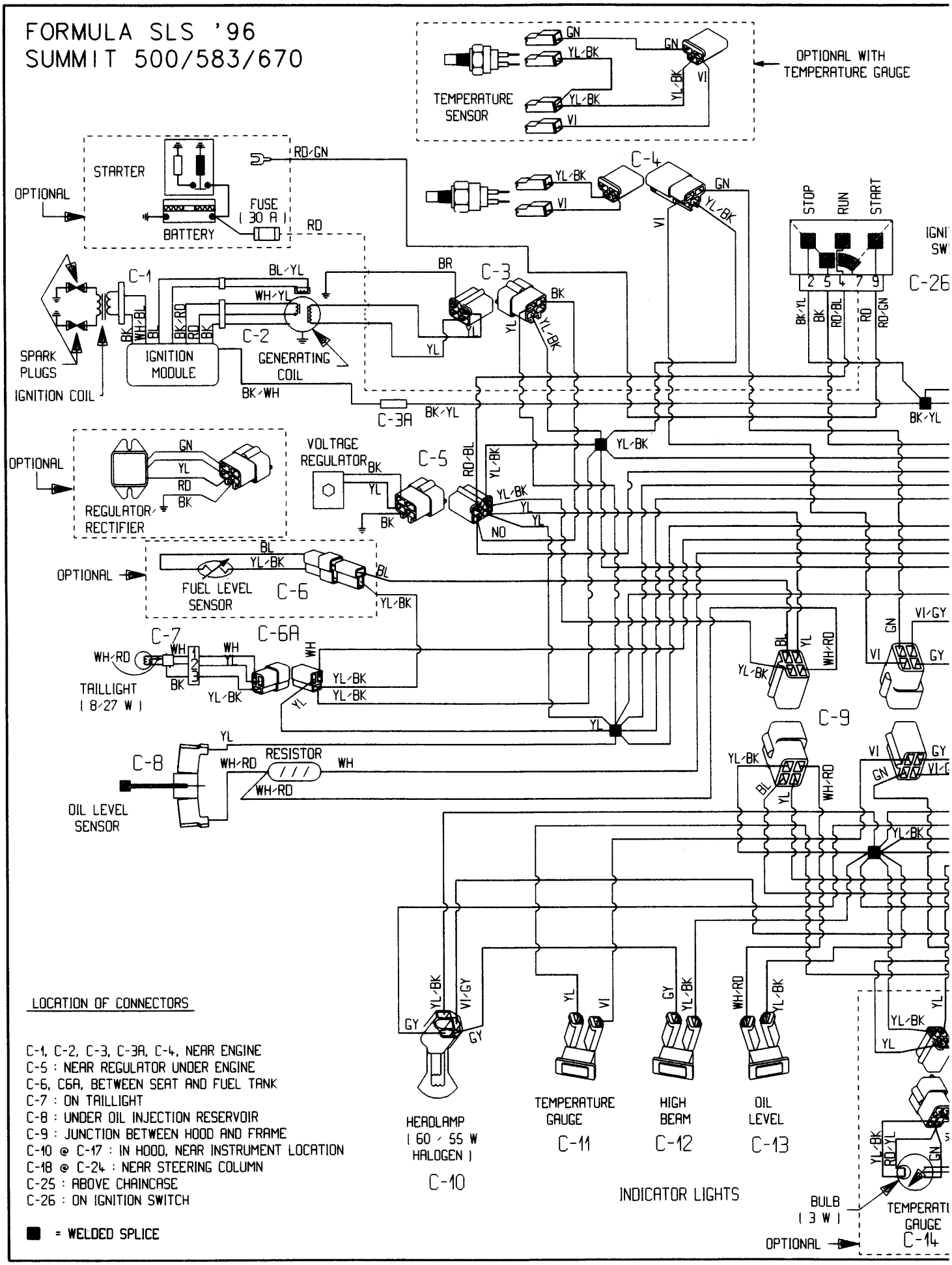

LOCATION OF CONNECTORS

C-1, C-2, C-3, C-3A, C-4, NEAR ENGINE
C-5 : NEAR REGULATOR UNDER ENGINE
C-6, C6A, BETWEEN SEAT AND FUEL TANK
C-7 : ON TAILLIGHT
C-8 : UNDER OIL INJECTION RESERVOIR
C-9 : JUNCTION BETWEEN HOOD AND FRAME
C-10 @ C-17 : IN HOOD, NEAR INSTRUMENT LOCATION
C-18 @ C-24 : NEAR STEERING COLUMN
C-25 : ABOVE CHAINCASE
C-26 : ON IGNITION SWITCH

■ = WELDED SPLICE

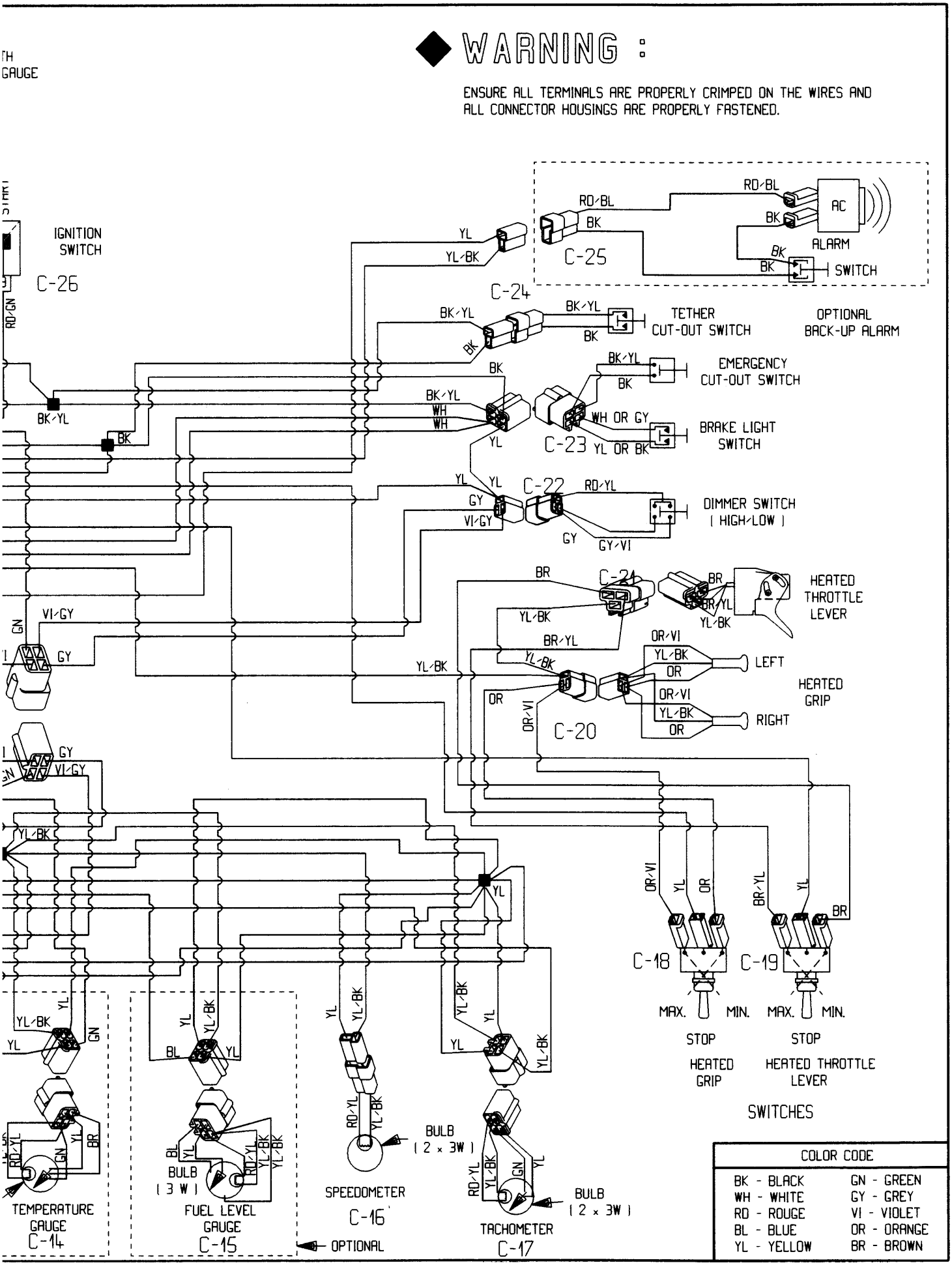
WARNING :
ENSURE ALL TERMINALS ARE PROPERLY CRIMPED ON THE WIRES AND ALL CONNECTOR HOUSINGS ARE PROPERLY FASTENED.
IGNITION SWITCH
C-26
C-25
C-24
AC
ALARM
SWITCH
TETHER CUT-OUT SWITCH
OPTIONAL BACK-UP ALARM
EMERGENCY CUT-OUT SWITCH
BRAKE LIGHT SWITCH
C-23
C-22
DIMMER SWITCH (HIGH/LOW)
C-21
HEATED THROTTLE LEVER
C-20
LEFT
RIGHT
HEATED GRIP
C-18
C-19
MAX.
MIN.
STOP
HEATED GRIP
HEATED THROTTLE LEVER
SWITCHES
TEMPERATURE GAUGE
C-14
BULB (3 W)
FUEL LEVEL GAUGE
C-15
OPTIONAL
BULB (2 x 3W)
SPEEDOMETER
C-16
TACHOMETER
C-17
COLOR CODE
BK - BLACK
WH - WHITE
RD - ROUGE
BL - BLUE
YL - YELLOW
GN - GREEN
GY - GREY
VI - VIOLET
OR - ORANGE
BR - BROWN

ANNEX 3

FORMULA Z

MACH 1 '96
FORMULA Z

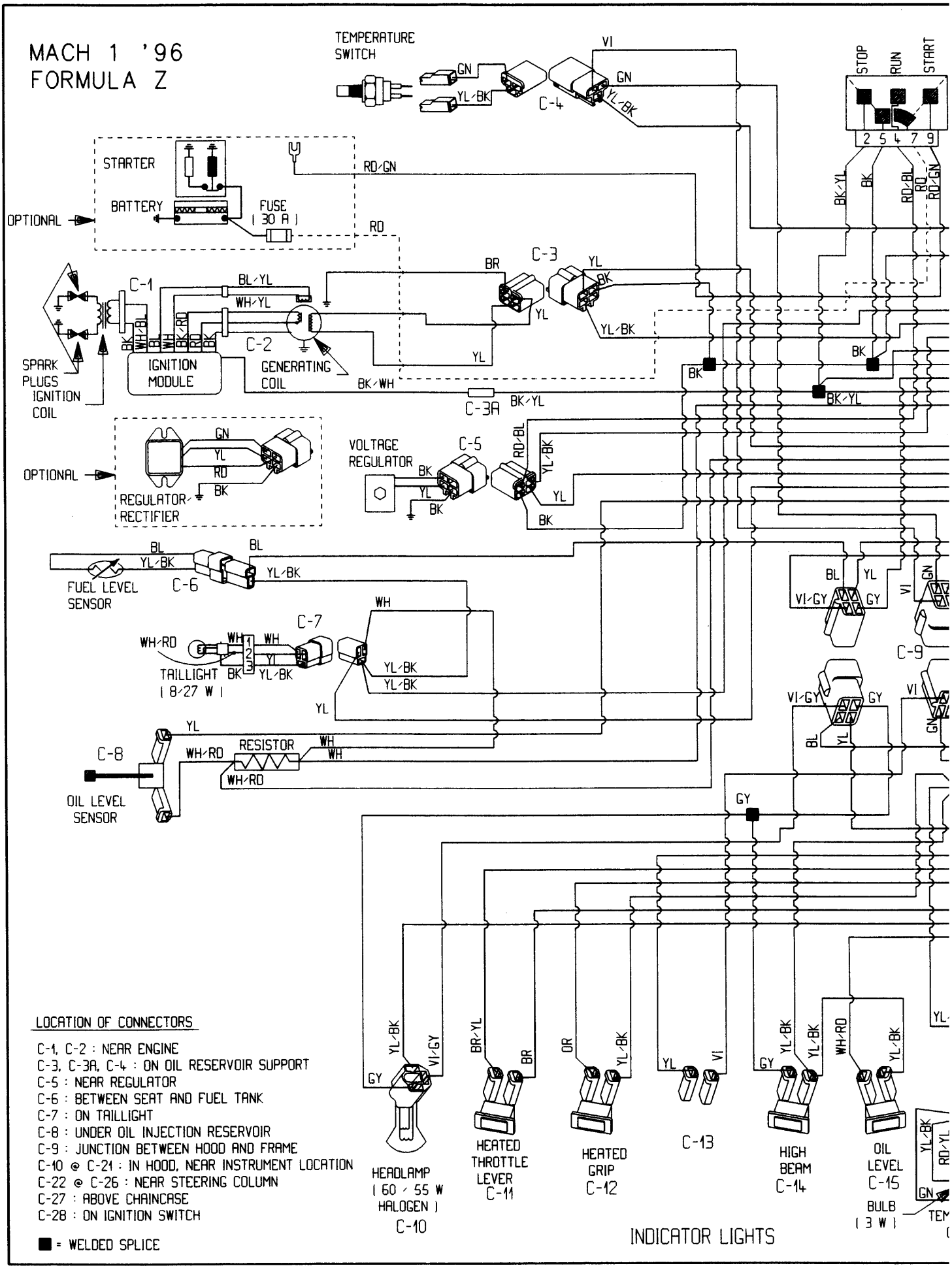

LOCATION OF CONNECTORS

C-1, C-2 : NEAR ENGINE
C-3, C-3A, C-4 : ON OIL RESERVOIR SUPPORT
C-5 : NEAR REGULATOR
C-6 : BETWEEN SEAT AND FUEL TANK
C-7 : ON TAILLIGHT
C-8 : UNDER OIL INJECTION RESERVOIR
C-9 : JUNCTION BETWEEN HOOD AND FRAME
C-10 @ C-21 : IN HOOD, NEAR INSTRUMENT LOCATION
C-22 @ C-26 : NEAR STEERING COLUMN
C-27 : ABOVE CHAINCASE
C-28 : ON IGNITION SWITCH

■ = WELDED SPLICE

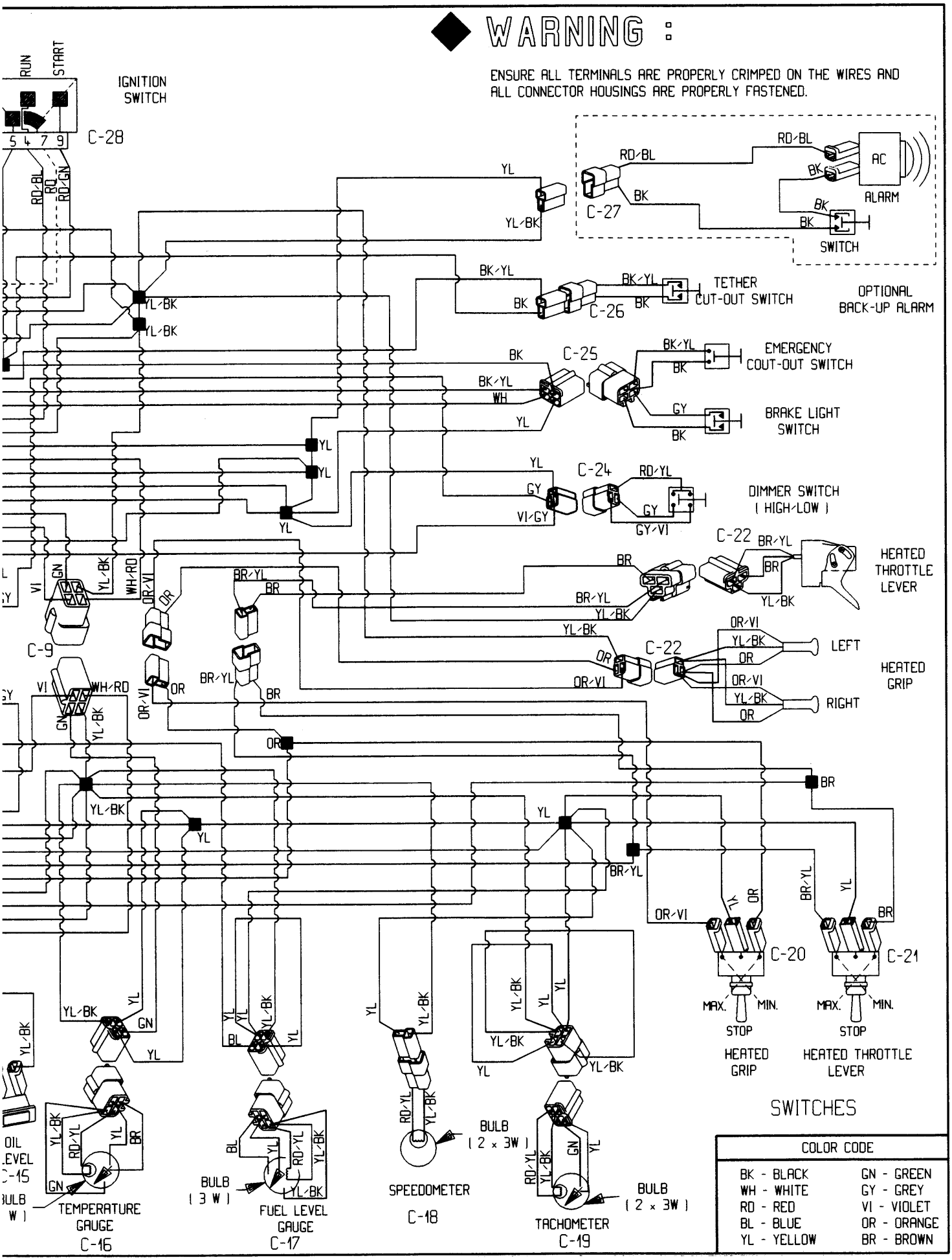
WARNING :
ENSURE ALL TERMINALS ARE PROPERLY CRIMPED ON THE WIRES AND ALL CONNECTOR HOUSINGS ARE PROPERLY FASTENED.
IGNITION SWITCH
RUN
START
C-28
C-27
AC
ALARM
SWITCH
TETHER CUT-OUT SWITCH
OPTIONAL BACK-UP ALARM
C-26
C-25
EMERGENCY COUT-OUT SWITCH
BRAKE LIGHT SWITCH
C-24
DIMMER SWITCH (HIGH/LOW)
C-22
HEATED THROTTLE LEVER
HEATED GRIP
LEFT
RIGHT
C-9
C-20
C-21
MAX.
MIN.
STOP
HEATED GRIP
HEATED THROTTLE LEVER
SWITCHES
OIL LEVEL C-15
TEMPERATURE GAUGE C-16
BULB (3 W)
FUEL LEVEL GAUGE C-17
SPEEDOMETER C-18
BULB (2 x 3W)
TACHOMETER C-19
COLOR CODE
BK - BLACK
WH - WHITE
RD - RED
BL - BLUE
YL - YELLOW
GN - GREEN
GY - GREY
VI - VIOLET
OR - ORANGE
BR - BROWN

ANNEX 4 FORMULA SS

FORMULA SS '96
FORMULA STX
FORMULA STX LT

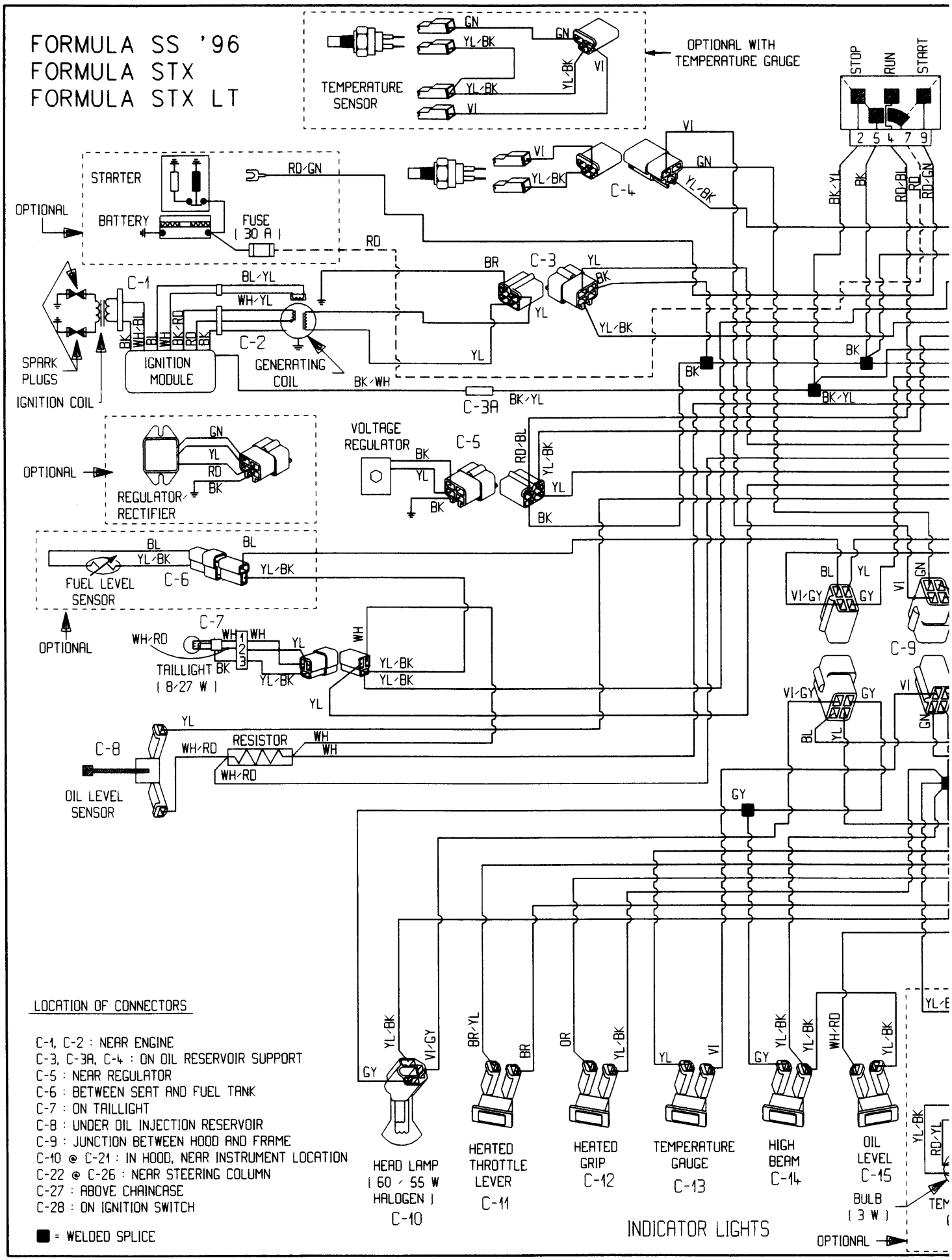

LOCATION OF CONNECTORS

C-1, C-2 : NEAR ENGINE
C-3, C-3A, C-4 : ON OIL RESERVOIR SUPPORT
C-5 : NEAR REGULATOR
C-6 : BETWEEN SEAT AND FUEL TANK
C-7 : ON TAILLIGHT
C-8 : UNDER OIL INJECTION RESERVOIR
C-9 : JUNCTION BETWEEN HOOD AND FRAME
C-10 @ C-21 : IN HOOD, NEAR INSTRUMENT LOCATION
C-22 @ C-26 : NEAR STEERING COLUMN
C-27 : ABOVE CHAINCASE
C-28 : ON IGNITION SWITCH

■ = WELDED SPLICE

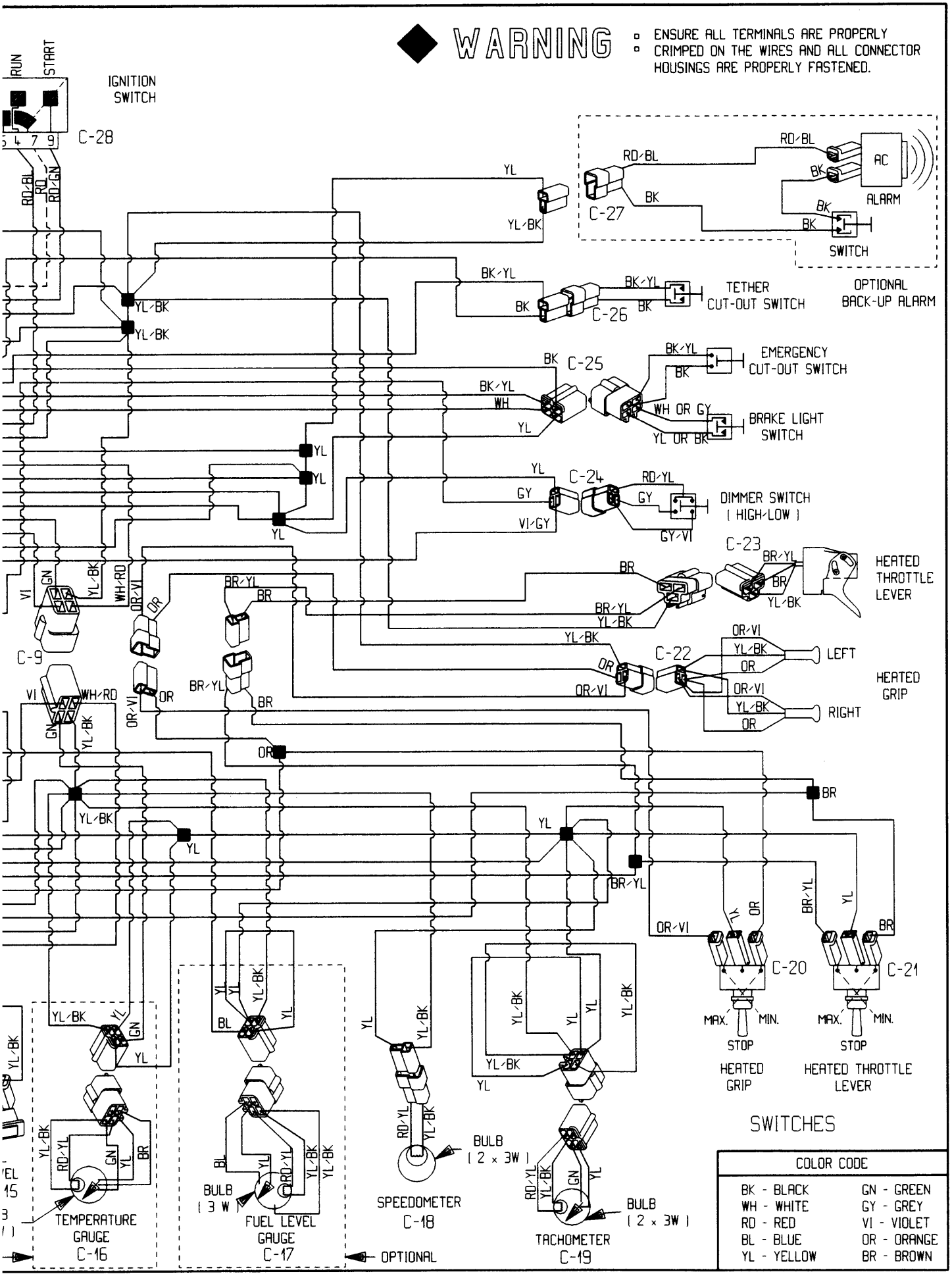
WARNING
ENSURE ALL TERMINALS ARE PROPERLY CRIMPED ON THE WIRES AND ALL CONNECTOR HOUSINGS ARE PROPERLY FASTENED.
RUN
START
IGNITION SWITCH
C-28
C-27
AC
ALARM
SWITCH
OPTIONAL BACK-UP ALARM
C-26
TETHER CUT-OUT SWITCH
C-25
EMERGENCY CUT-OUT SWITCH
BRAKE LIGHT SWITCH
C-24
DIMMER SWITCH (HIGH/LOW)
C-23
HEATED THROTTLE LEVER
C-9
C-22
LEFT
RIGHT
HEATED GRIP
C-20
C-21
MAX.
MIN.
STOP
HEATED GRIP
HEATED THROTTLE LEVER
SWITCHES
TEMPERATURE GAUGE C-16
BULB (3 W)
FUEL LEVEL GAUGE C-17
OPTIONAL
BULB (2 x 3W)
SPEEDOMETER C-18
BULB (2 x 3W)
TACHOMETER C-19
COLOR CODE
BK - BLACK
WH - WHITE
RD - RED
BL - BLUE
YL - YELLOW
GN - GREEN
GY - GREY
VI - VIOLET
OR - ORANGE
BR - BROWN

ANNEX 5

FORMULA III / III LT
MACH Z / Z LT

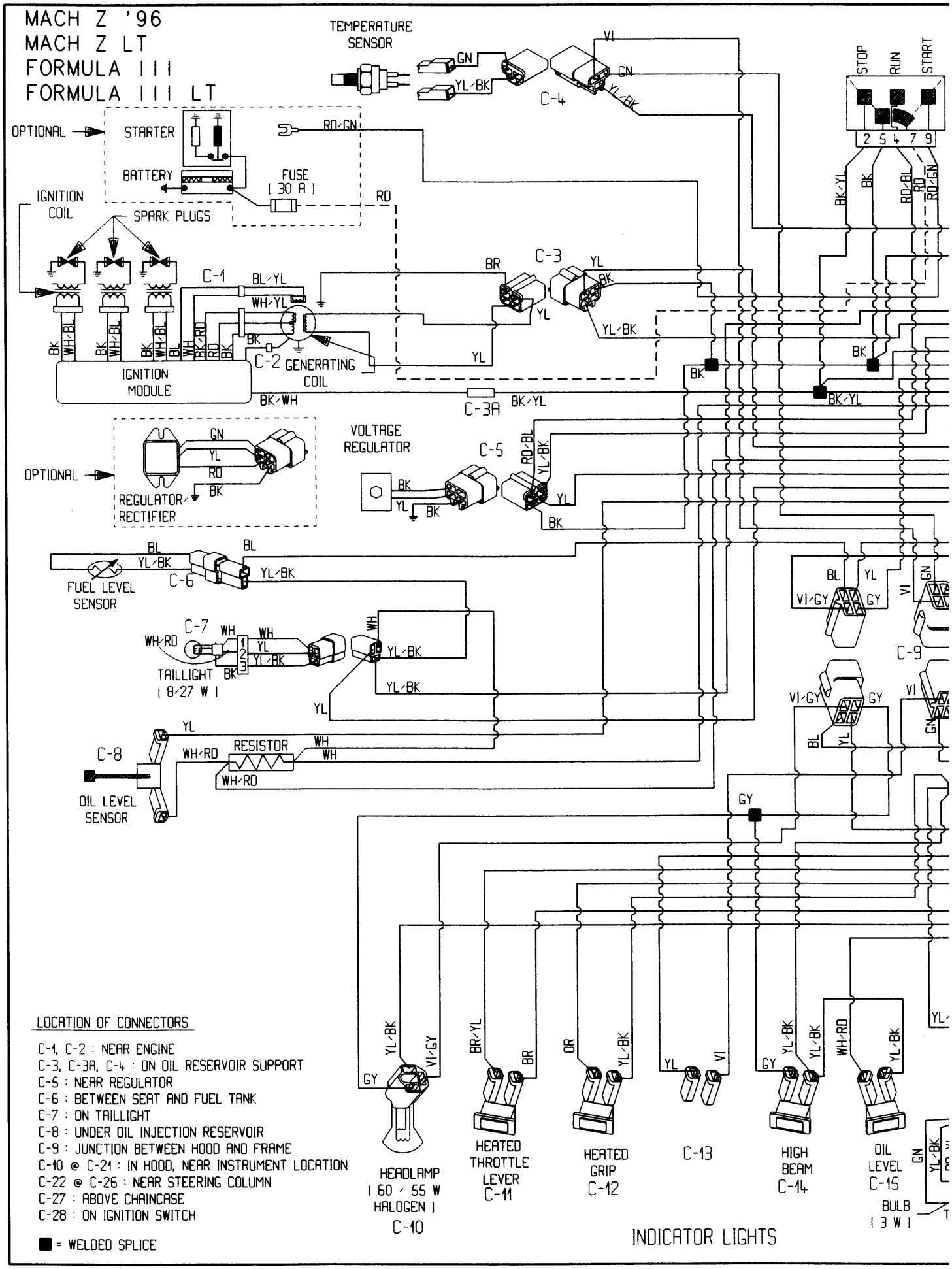
MACH Z '96
MACH Z LT
FORMULA III
FORMULA III LT
TEMPERATURE SENSOR
OPTIONAL
STARTER
BATTERY
FUSE (30 A)
IGNITION COIL
SPARK PLUGS
IGNITION MODULE
GENERATING COIL
C-1
C-2
C-3
C-3A
C-4
C-5
C-6
C-7
C-8
C-9
C-10
C-11
C-12
C-13
C-14
C-15
STOP
RUN
START
VOLTAGE REGULATOR
REGULATOR/RECTIFIER
FUEL LEVEL SENSOR
TAILLIGHT (8/27 W)
RESISTOR
OIL LEVEL SENSOR
HEADLAMP (60 / 55 W HALOGEN)
HEATED THROTTLE LEVER
HEATED GRIP
HIGH BEAM
OIL LEVEL
BULB (3 W)
INDICATOR LIGHTS
LOCATION OF CONNECTORS
C-1, C-2 : NEAR ENGINE
C-3, C-3A, C-4 : ON OIL RESERVOIR SUPPORT
C-5 : NEAR REGULATOR
C-6 : BETWEEN SEAT AND FUEL TANK
C-7 : ON TAILLIGHT
C-8 : UNDER OIL INJECTION RESERVOIR
C-9 : JUNCTION BETWEEN HOOD AND FRAME
C-10 @ C-21 : IN HOOD, NEAR INSTRUMENT LOCATION
C-22 @ C-26 : NEAR STEERING COLUMN
C-27 : ABOVE CHAINCASE
C-28 : ON IGNITION SWITCH
■ = WELDED SPLICE

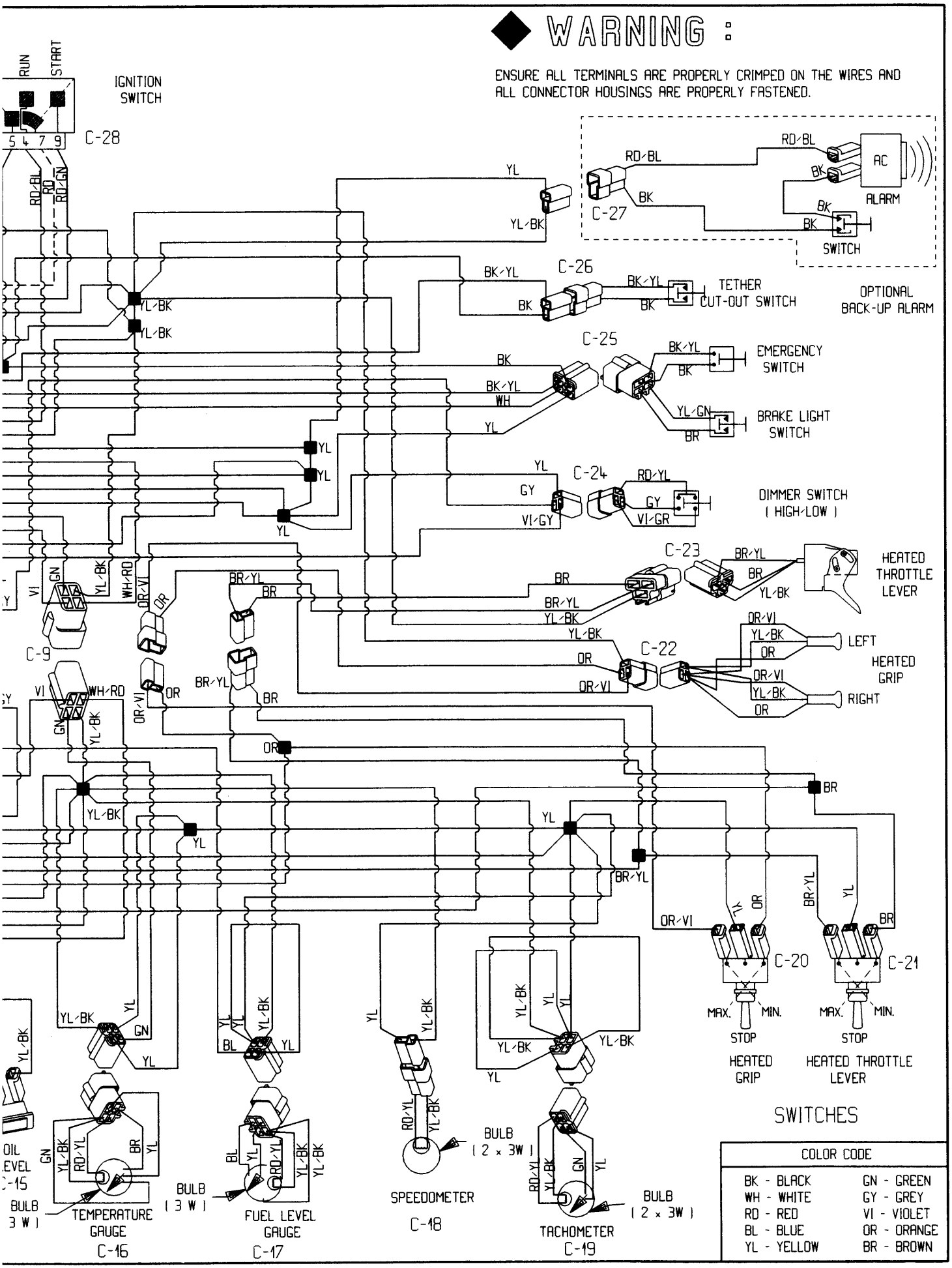
WARNING :
ENSURE ALL TERMINALS ARE PROPERLY CRIMPED ON THE WIRES AND ALL CONNECTOR HOUSINGS ARE PROPERLY FASTENED.
RUN
START
IGNITION SWITCH
C-28
5 4 7 9
RD/BL
RD
RD/GN
C-27
RD/BL
BK
AC
ALARM
SWITCH
YL
YL/BK
C-26
BK/YL
BK
TETHER CUT-OUT SWITCH
OPTIONAL BACK-UP ALARM
C-25
EMERGENCY SWITCH
BRAKE LIGHT SWITCH
YL/GN
WH
C-24
RD/YL
GY
VI/GY
VI/GR
DIMMER SWITCH (HIGH/LOW)
C-23
BR/YL
BR
YL/BK
HEATED THROTTLE LEVER
C-9
GN
VI
WH/RD
OR/VI
OR
C-22
LEFT
HEATED GRIP
RIGHT
C-20
C-21
MAX.
MIN.
STOP
HEATED GRIP
HEATED THROTTLE LEVER
SWITCHES
OIL LEVEL
C-15
BULB (3 W)
TEMPERATURE GAUGE
C-16
BULB (3 W)
FUEL LEVEL GAUGE
C-17
SPEEDOMETER
C-18
BULB (2 x 3W)
TACHOMETER
C-19
BULB (2 x 3W)
COLOR CODE
BK - BLACK
WH - WHITE
RD - RED
BL - BLUE
YL - YELLOW
GN - GREEN
GY - GREY
VI - VIOLET
OR - ORANGE
BR - BROWN

ANNEX 6

SKANDIC WT

SKANDIC WT '96

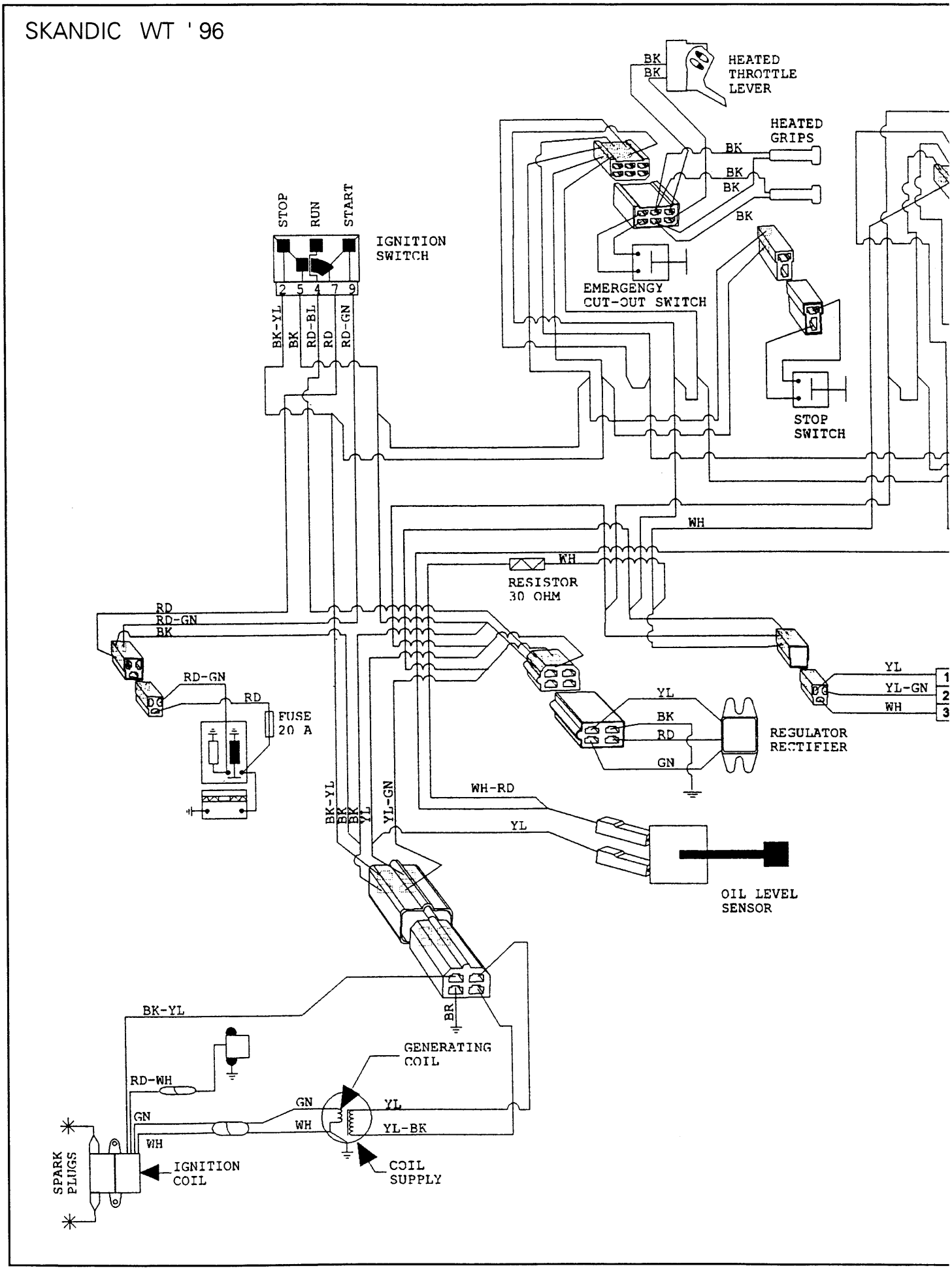

◆ WARNING :

ENSURE ALL TERMINALS ARE PROPERLY CRIMPED ON THE WIRES AND ALL CONNECTOR HOUSINGS ARE PROPERLY FASTENED.

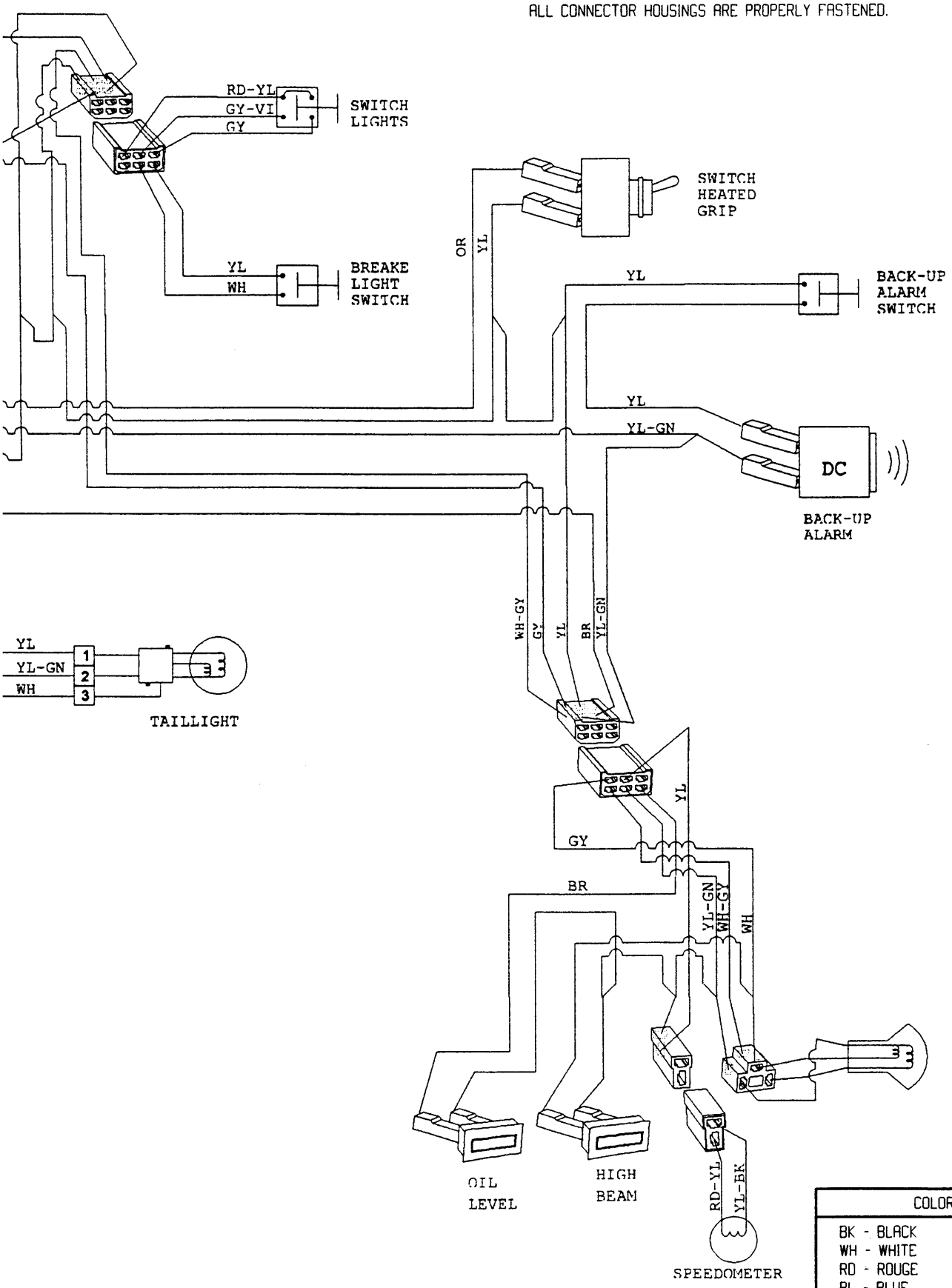

COLOR CODE	
BK - BLACK	GN - GREEN
WH - WHITE	GY - GREY
RD - ROUGE	VI - VIOLET
BL - BLUE	OR - ORANGE
YL - YELLOW	BR - BROWN

®*MARQUES DE COMMERCE DE BOMBARDIER INC.
TOUS DROITS RÉSERVÉS© 1995 BOMBARDIER INC.
LITHOGRAPHIÉ AU CANADA

®*TRADEMARKS OF BOMBARDIER INC.
ALL RIGHTS RESERVED© 1995 BOMBARDIER INC.
LITHO'D IN CANADA