2017 Can-Am Commander Series
Repair & Maintenance Master Collection

This manual may cover later years than listed above.

If you bought this manual from any other seller, they are reselling my work.

Please leave them negative feedback & email me at bestshopmanuals@gmail.com.

Our goal is to be one of the BEST sellers on eBay and the internet by providing you with the BEST customer service and the BEST manuals on the market.

Thank you for choosing us.



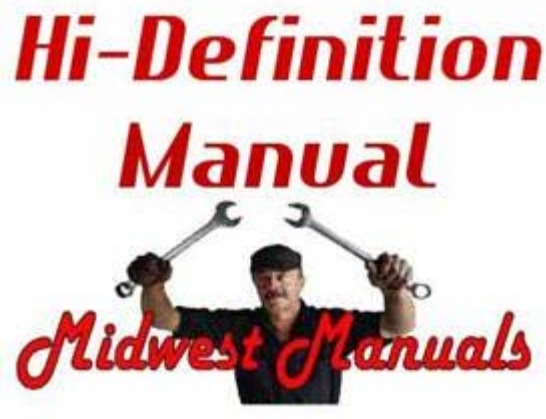

SAFETY NOTICE

This manual has been prepared as a guide to correctly service and repair the Can-Am™ Commander™ or Maverick™.

This edition was primarily published to be used by mechanical technicians who are already familiar with all service procedures relating to BRP products. Mechanical technicians should attend training courses given by BRPTI.

Please note that the instructions in this manual will apply only if proper hand tools and special service tools are used.

The contents of this manual depicts parts and/or procedures applicable to a particular product at the time of writing. Service and warranty bulletins may be published to update the content of this manual. Dealer modifications that were carried out after manufacturing of the product, whether or not authorized by BRP, are not included.

In addition, the sole purpose of the illustrations throughout the manual, is to assist identification of the general configuration of the parts. They are not to be interpreted as technical drawings or exact replicas of the parts.

The use of BRP parts is most strongly recommended when considering replacement of any component. Dealer and/or distributor assistance should be sought in case of doubt.

The engines and the corresponding components identified in this document should not be utilized on product(s) other than those mentioned in this document.

It is understood that certain modifications may render use of the vehicle illegal under existing federal, provincial and state regulations.

This manual emphasizes particular information which, is denoted by the following wording and symbols:

⚠ WARNING

Indicates a potential hazard that, if not avoided, could result in serious injury or death.

⚠ CAUTION Indicates a hazardous situation which, if not avoided, could result in minor or moderate injury.

NOTICE Indicates an instruction which, if not followed, could result in severe damage to vehicle components or other property.

NOTE: Indicates supplementary information required to fully complete an instruction.

Although the mere reading of such information does not eliminate the hazard, your understanding of the information provided will promote its correct use.

Always observe common shop safety practice.

Unless otherwise noted, the engine must be stopped and the tether cord must be removed prior to perform any services.

Torque wrench tightening specifications must be strictly adhered to. Use the torque values and service products as in the exploded views or in the procedures when noted.

Locking devices when removed must be replaced (e.g.: locking tabs, elastic stop nuts, self-locking fasteners, cotter pins, etc.).

Hoses, cables and locking ties removed during a procedure must be reinstalled as per factory standards.

When ordering parts always refer to the specific model *PARTS CATALOGS*.

We strongly recommend that any services be carried out and/or verified by a highly skilled professional mechanic.

It is understood that this manual may be translated into another language. In the event of any discrepancy, the English version shall prevail.

BRP disclaims liability for all damages and/or injuries resulting from the improper use of the contents of this publication.

INTRODUCTION

The information and component/system descriptions contained in this manual are correct at time of writing. BRP however, maintains a policy of continuous improvement of its products without imposing upon itself any obligation to install them on products previously manufactured.

Due to late changes, there may be some differences between the manufactured product and the description and/or specifications in this document.

BRP reserves the right at any time to discontinue or change specifications, designs, features, models or equipment without incurring obligation.

VEHICLE INFORMATION

VEHICLE IDENTIFICATION NUMBER (VIN)

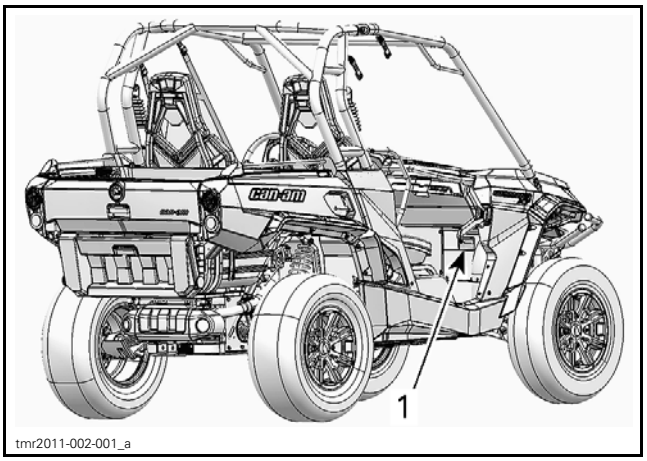

TYPICAL
1. VIN (Vehicle Identification Number) location

The VIN (Vehicle Identification Number) decal is located under the glove box on the passenger side.

VIN Decal Description



TYPICAL — VEHICLE IDENTIFICATION NUMBER LABEL
1. VIN (Vehicle Identification Number)
2. Model number
3. Manufacturing date

ENGINE IDENTIFICATION NUMBER (EIN)

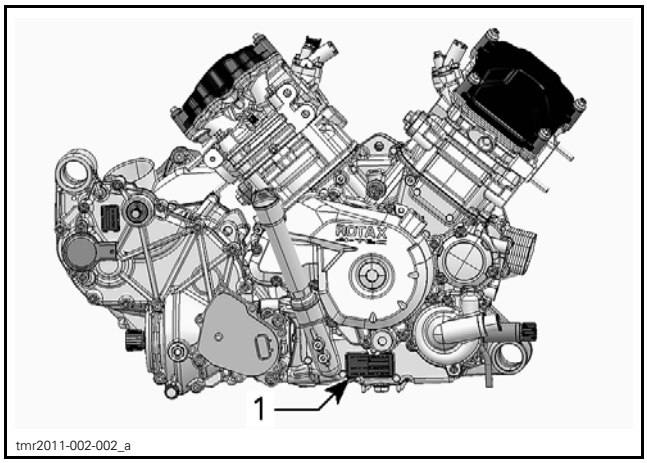

TYPICAL - RH SIDE OF ENGINE
1. Engine Identification Number (EIN)

LIFTING AND SUPPORTING THE VEHICLE (2-UP MODELS)

Front of Vehicle

1. Place vehicle on a flat non slippery ground.
2. Ensure vehicle shift lever is set to PARK.
3. Install an hydraulic jack under front skid plate.
4. Lift front of vehicle and install a jack stand on each side under frame section in front of the lip for center skid plate.

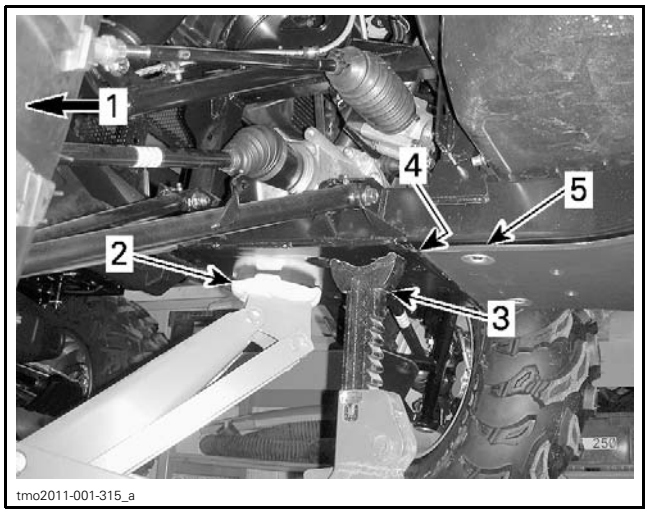

tmo2011-001-315_a

1. *Front of vehicle*
2. *Hydraulic jack*
3. *Jack stand*
4. *Lip for center skid plate*
5. *Center skid plate*

5. Lower hydraulic lift and ensure vehicle is supported safely onto both jack stands.

Rear of Vehicle

1. Place vehicle on a flat non slippery ground.
2. Activate 4WD mode.
3. Ensure vehicle shift lever is set to PARK.
4. Install a hydraulic jack under the trailer hitch.

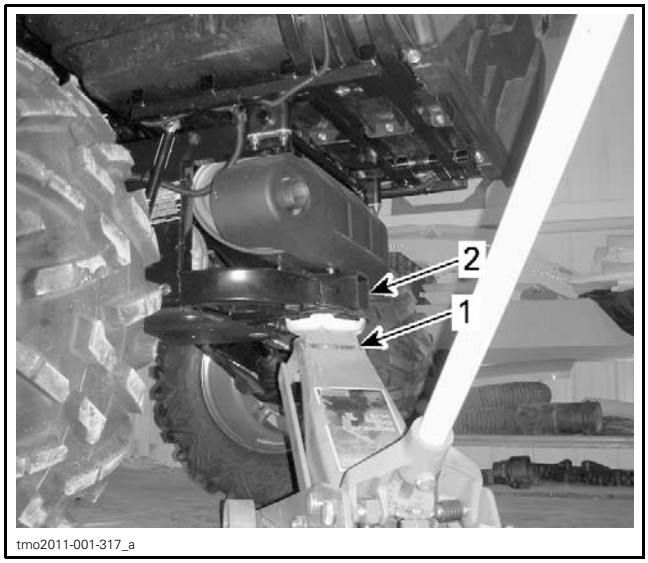

tmo2011-001-317_a

1. *Hydraulic jack*
2. *Trailer hitch*

5. Lift rear of vehicle and install a jack stand on each side under frame section in front of rear wheel.

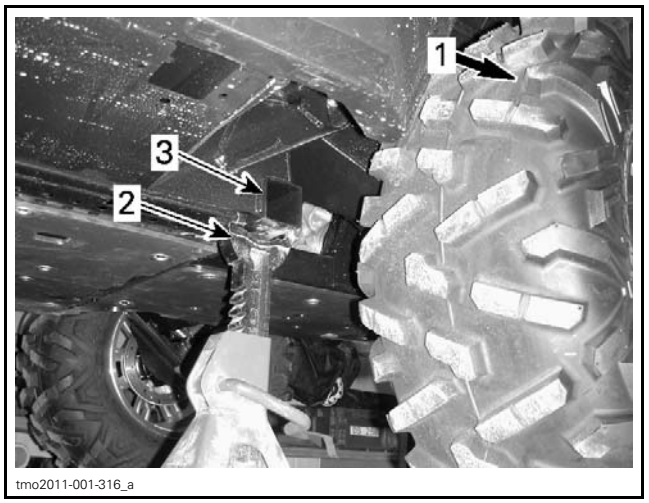

tmo2011-001-316_a

1. *Rear of vehicle*
2. *Jack stand*
3. *Frame section*

6. Lower hydraulic lift and ensure vehicle is supported safely onto both jack stands.

LIFTING AND SUPPORTING THE VEHICLE (MAX MODELS)

To lift your vehicle, you must be on a flat and non slippery ground. Make sure the wheel jack base gives a good support. Remove all debris that could cause the wheel jack to tip over.

⚠ WARNING

– **Do not allow anyone in the vehicle while it is being lifted.**

Front of Vehicle

Place vehicle on a flat non slippery ground.

Ensure vehicle shift lever is set to PARK.

Place wheel jack on one of the identified points shown in the following images.

Install two jack stands before lowering wheel jack. Ensure vehicle is supported safely.

Rear of Vehicle

Place vehicle on a flat non slippery ground.

Activate 4WD mode.

Ensure vehicle shift lever is set to PARK.

Place wheel jack on one of the identified points shown in the following images.

Install two jack stands before lowering wheel jack. Ensure vehicle is supported safely.

Identification of lifting points

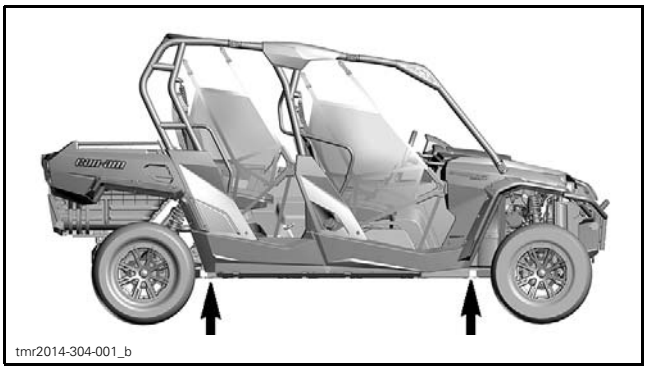
tmr2014-304-001_b

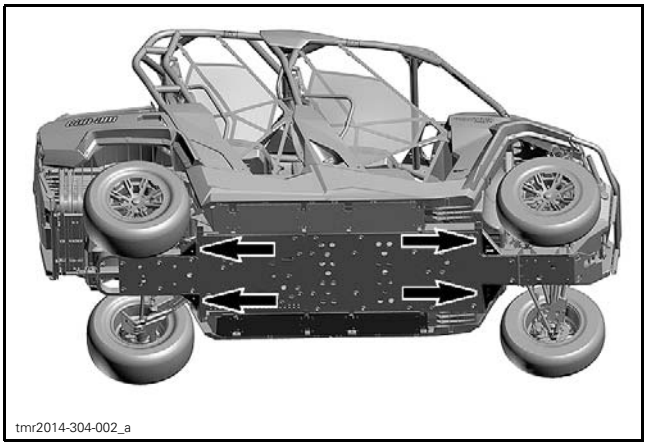
tmr2014-304-002_a

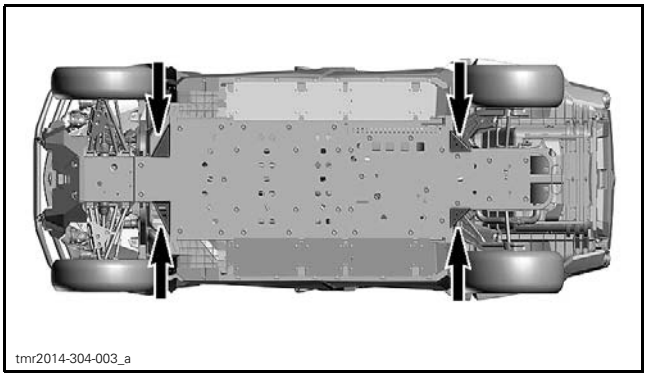
tmr2014-304-003_a

LIFTING THE VEHICLE WITH A LIFTING TABLE (MAX MODELS)

Roll vehicle above lifting table.

Install two 4 x 4 horizontally across vehicle as close as possible to lifting points. Refer to *IDENTIFICATION OF LIFTING POINTS* in this subsection.

NOTICE Ensure 4 x 4 are as close to lifting points as possible.

Lift vehicle using table.

NOTE: If repositioning of vehicle is needed, lift either front or rear of vehicle using the lower portion of applicable bumper.

⚠ WARNING

- Do not allow anyone in the vehicle while it is being lifted.

HOISTING THE VEHICLE (2-UP MODELS)

The vehicle may be lifted off the ground by the cage using a hoist and a lifting strap.

NOTICE The lifting strap must be wrapped around the horizontal side tubes at the top of the cage, NOT fore and aft. Lifting vehicle by the fore and aft tubes of the cage can cause damage.

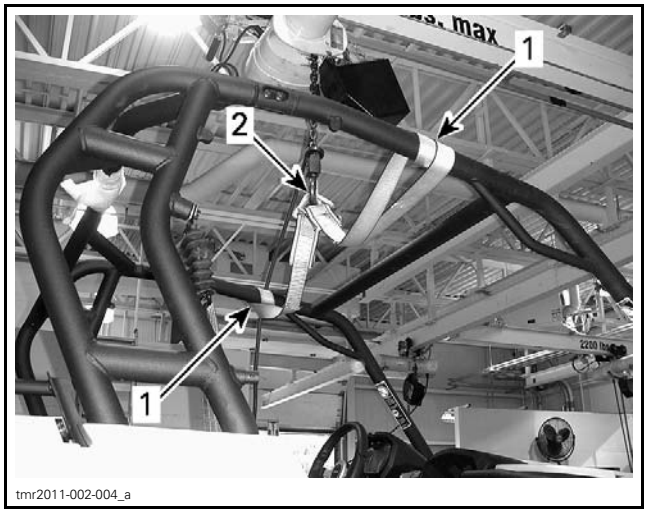

tmr2011-002-004_a

1. Lifting strap around horizontal side tubes (top)
2. Hoist hook

⚠ WARNING

- Ensure hoist and lifting strap are rated for lifting the total vehicle weight. Refer to applicable manufactures instructions.
- Ensure lifting strap is in good condition before lifting vehicle.
- Do not allow anyone in the vehicle or under any portion of the vehicle while it is suspended by a hoist.
- Do not perform any work on the vehicle while it is suspended by a hoist.

HOISTING THE VEHICLE (MAX MODELS)

The vehicle may be lifted off the ground by the cage using a hoist and a lifting strap.

NOTICE The lifting strap must be wrapped around the horizontal side tubes, at the center of the middle section, at the top of the cage, NOT fore and aft. Lifting vehicle by the fore and aft tubes of the cage can cause damage.

Remove both cage covers.

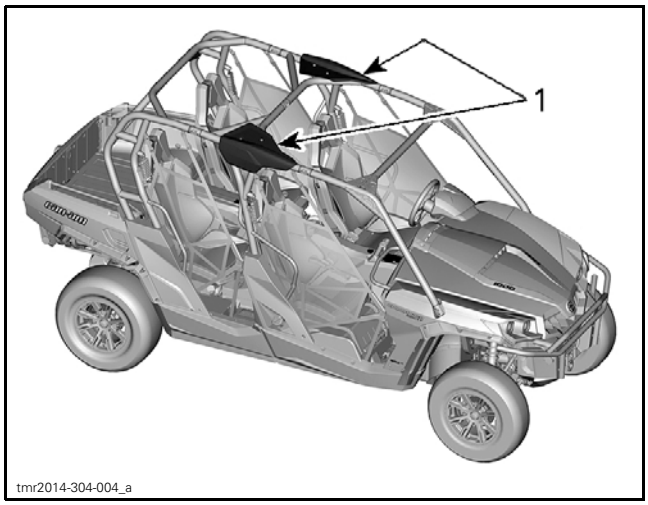

1. Cage covers

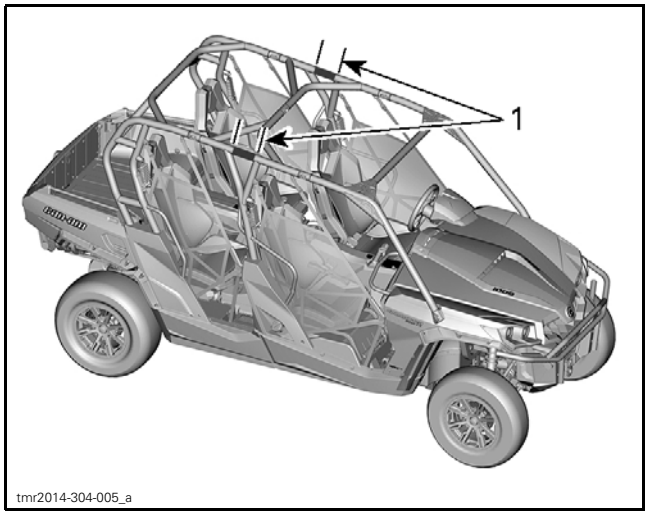

1. Lifting strap at the center of the middle section, around horizontal side tubes (top)

⚠ WARNING

- Ensure hoist and lifting strap are rated for lifting the total vehicle weight. Refer to applicable manufactures instructions.
- Ensure lifting strap is in good condition before lifting vehicle.
- Do not allow anyone in the vehicle or under any portion of the vehicle while it is suspended by a hoist.
- Do not perform any work on the vehicle while it is suspended by a hoist.

TRANSPORTING THE VEHICLE

If the vehicle needs to be transported, it should be carried inside a full size pick-up box or on a flatbed trailer of the appropriate size and capacity.

NOTICE Do not tow this vehicle - towing can seriously damage the vehicle drive system.

When contacting a towing or transporting service, be sure to ask for tie-down straps, a flatbed trailer, loading ramp or power ramp to safely lift and secure the vehicle. Ensure the vehicle is properly transported as specified in this section.

NOTICE Avoid using chains to tie down the vehicle - they may damage the surface finish or plastic components.

To load the vehicle for transport, proceed as follows:

1. Set gear shift lever to NEUTRAL (N).
2. Remove the key from the ignition switch.
3. If the vehicle is equipped with a winch, use the winch to roll the vehicle onto the transport vehicle.
4. If the vehicle is not equipped with a winch, proceed as follows:
   - 4.1 Put a strap around the lower arm of each front suspension.
   - 4.2 Attach the straps to the winch cable of the towing vehicle.
   - 4.3 Pull the vehicle on the flatbed trailers with the winch.

   .

NOTE: Be sure to leave the gear shift lever in NEUTRAL (N).

5. Set ACS suspension setting to 1 (softest).
6. Tie down the front wheels to the front of the trailer using tire towing straps.

7. Pass a tie-down strap inside each rear wheel.
8. Firmly attach the rear wheels tie-down straps to both sides of the rear of the trailer with ratchets.
9. Ensure that both the front and rear wheels are firmly secured to the trailer.

ENGINE EMISSIONS INFORMATION

MANUFACTURER'S RESPONSIBILITY

Manufacturers of engines must determine the exhaust emission levels for each engine horsepower family and certify these engines with the United States of America Environmental Protection Agency (EPA). An emissions control information label, showing emission levels and engine specifications, must be placed on each vehicle at the time of manufacture.

DEALER RESPONSIBILITY

When servicing any vehicle that carry an emissions control information label, adjustments must be kept within published factory specifications.

Replacement or repair of any emission related component must be executed in a manner that maintains emission levels within the prescribed certification standards.

Dealers are not to modify the engine in any manner that would alter the horsepower or allow emission levels to exceed their predetermined factory specifications.

Exceptions include manufacturer's prescribed changes, such as altitude adjustments.

OWNER RESPONSIBILITY

The owner/operator is required to have engine maintenance performed to maintain emission levels within prescribed certification standards.

The owner/operator is not to, and should not allow anyone else to modify the engine in any manner that would alter the horsepower or allow emissions levels to exceed their predetermined factory specifications.

EPA EMISSION REGULATIONS

Vehicles manufactured by BRP are certified to the EPA standards as conforming to the requirements of the regulations for the control of air pollution emitted from new vehicle engines. This certification is contingent on certain adjustments being set to factory standards. For this reason, the factory procedure for servicing the product must be strictly followed and, whenever practicable, returned to the original intent of the design.

The responsibilities listed above are general and in no way a complete listing of the rules and regulations pertaining to the EPA requirements on exhaust emissions. For more detailed information on this subject, you may contact the following locations:

FOR ALL COURIER SERVICES:
U.S. Environmental Protection Agency
Office of Transportation and Air Quality
1310 L Street NW
Washington D.C. 20005

REGULAR US POSTAL MAIL:
1200 Pennsylvania Ave. NW
Mail Code 6403J
Washington D.C. 20460

INTERNET: http://www.epa.gov/otaq/

E-MAIL: otaqpublicweb@epa.gov

MANUAL INFORMATION

MANUAL PROCEDURES

Many of the procedures in this manual are interrelated. Before undertaking any task, you should read and thoroughly understand the entire section or subsection in which the procedure is contained.

⚠ WARNING

Unless otherwise specified, the engine should be turned OFF and cold for all maintenance and repair procedures.

A number of procedures throughout the book require the use of special tools. Before starting any procedure, be sure that you have on hand all required tools, or their approved equivalents.

The use of RIGHT and LEFT indications in the text are always referenced to the driving position (sitting on the vehicle).

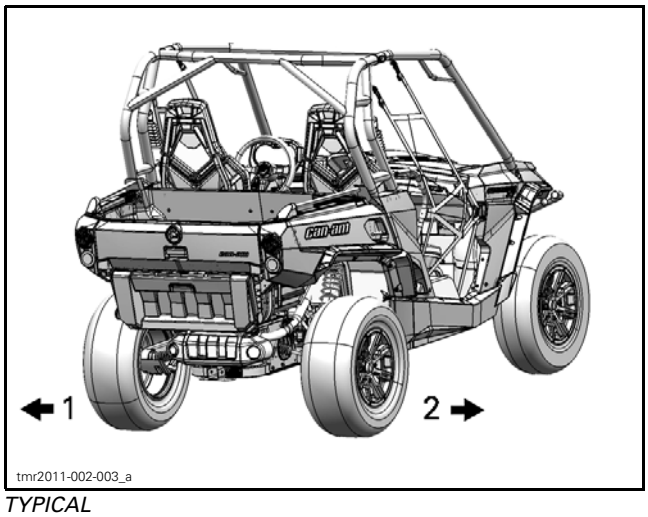

TYPICAL
1. Left
2. Right

This manual uses technical terms which may be different from the ones of the *PARTS CATALOGS*.

When ordering parts always refer to the specific model *PARTS CATALOGS*.

NOTICE **Most fasteners are metric, and most components are built with parts dimensioned using the metric system. Consult the appropriate *PARTS CATALOG* to obtain and use the correct parts and fasteners. Mismatched or incorrect fasteners could cause damage to the vehicle.**

MANUAL LAYOUT

This manual is divided into many major sections as can be seen in the main table of contents at the beginning of the manual.

Each section is divided into various subsections, and again, each subsection has one or more divisions.

Illustrations and photos show the typical construction of various assemblies and, in all cases, may not reproduce the full detail or exact shape of the parts used in a particular model vehicle. However, they represent parts which have the same or a similar function.

Midwest Manuals
Green Manuals
Paperless Manuals
For a Better Tomorrow
If you bought this manual from any other seller please leave them
NEGATIVE feedback and notify me at bestshopmanuals@gmail.com

TYPICAL PAGE

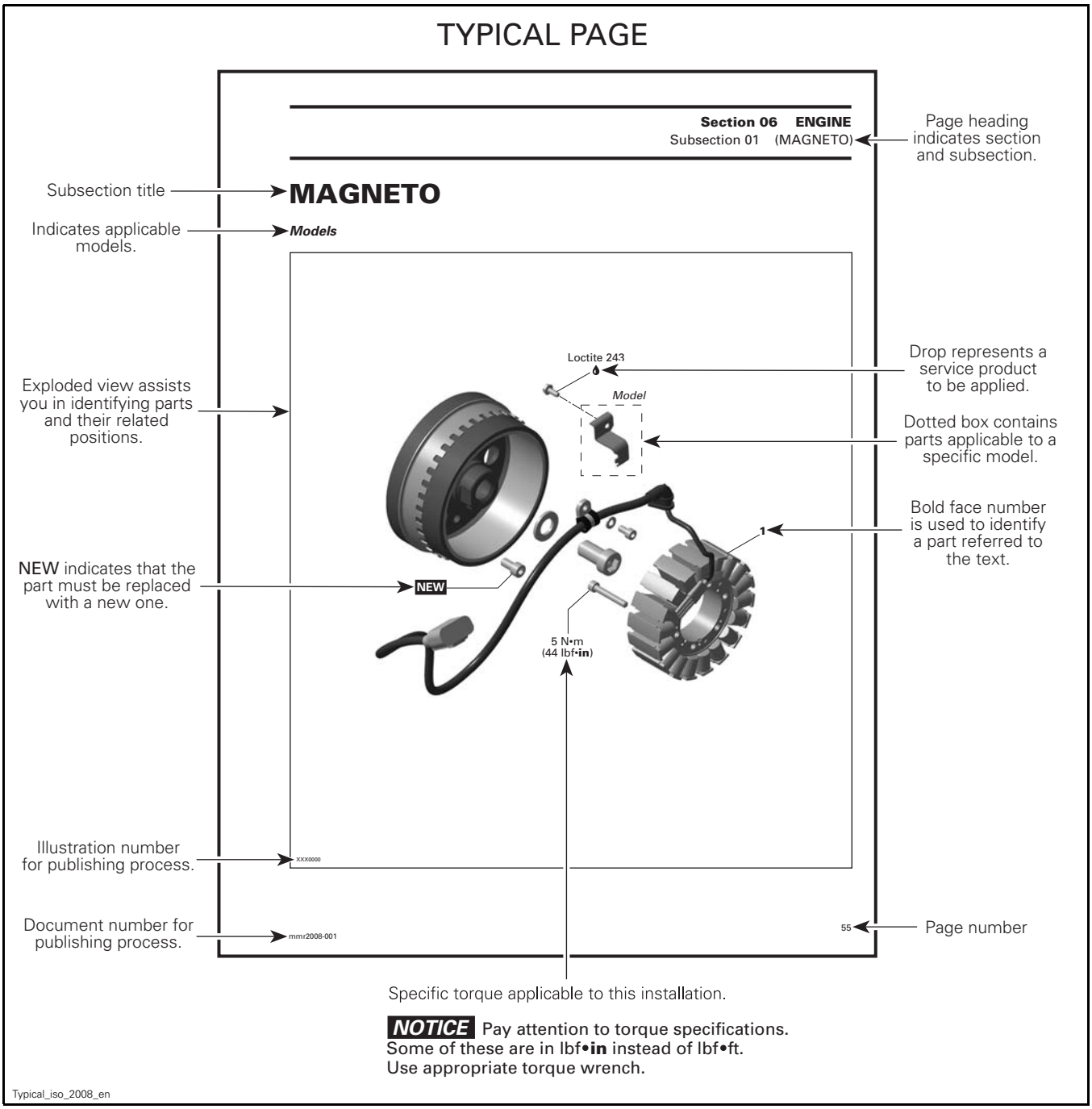

TYPICAL PAGE

Tittle in bold indicates category of information to be carried out.

GENERAL

NOTE: The following procedures can be done without removing the engine.

During assembly/installation, use the torque values and service products as in the exploded views.

Clean threads before applying a threadlocker. Refer to *SELF-LOCKING FASTENERS* and *LOCTITE APPLICATION* sections at the beginning of this manual for complete procedure.

Reference to a specific section or subsection.

⚠ WARNING

Torque wrench tightening specifications must be strictly adhered to.
Locking devices (e.g.: locking tabs, elastic stop nuts, self-locking fasteners, etc.) must be replaced with new ones.

PROCEDURES

Indicates component procedures apply to.

MAGNETO FLYWHEEL

Magneto Flywheel Cleaning

Clean all metal components in a non-ferrous metal cleaner.

CAUTION: Clean magneto flywheel using only a clean cloth.

Indicates specific procedure to be carried out.

Magneto Flywheel Removal

Remove muffler, refer to the *EXHAUST SYSTEM* section.

Remove acoustic panel.

Remove rewind starter.

Remove starting pulley **no. 2**.

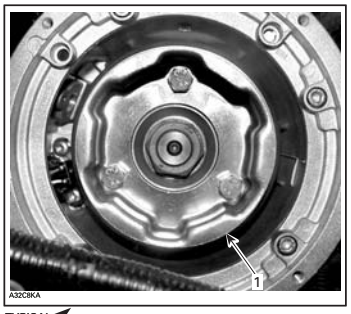

TYPICAL
1. Starting pulley

"TYPICAL" indicates a general view which may not represent exact details.

Call-outs pertaining to above illustration.

NOTE: To remove starting pulley bolts, hold magneto flywheel with a socket as shown.



TYPICAL

Illustration always follows text to which it applies.

Models

Remove the connecting flange retaining the rewind starter to the engine housing.

Italic bold face typesetting indicates a procedure applicable to a specific model(s).

Bold face number following part name refers to exploded view at beginning of subsection.

typical_txt_2008_en

TIGHTENING TORQUE

Tighten fasteners to the torque specified in the exploded view(s) and/or in the written procedure. When a torque is not specified, refer to the following table.

⚠ WARNING

Torque wrench tightening specifications must be strictly adhered to.
Locking devices when removed (e.g.: locking tabs, elastic stop nuts, self-locking fasteners, cotter pins, etc.) must be replaced.

In order to avoid a poor assembly, tighten screws, bolts, or nuts in accordance with the following procedure:

1. Manually screw all screws, bolts and/or nuts.
2. Apply half the recommended torque value.
3. Tighten fastener to the recommended torque value.

NOTICE **Be sure to use the recommended tightening torque for the specified fastener used.**

NOTE: When possible, always apply torque on the nut.

NOTE: Always torque screws, bolts and/or nuts using a crisscross pattern when multiple fasteners are used to secure a part (eg. a cylinder head). Some parts must be torqued according to a specific sequence and torque pattern as detailed in the installation procedure.

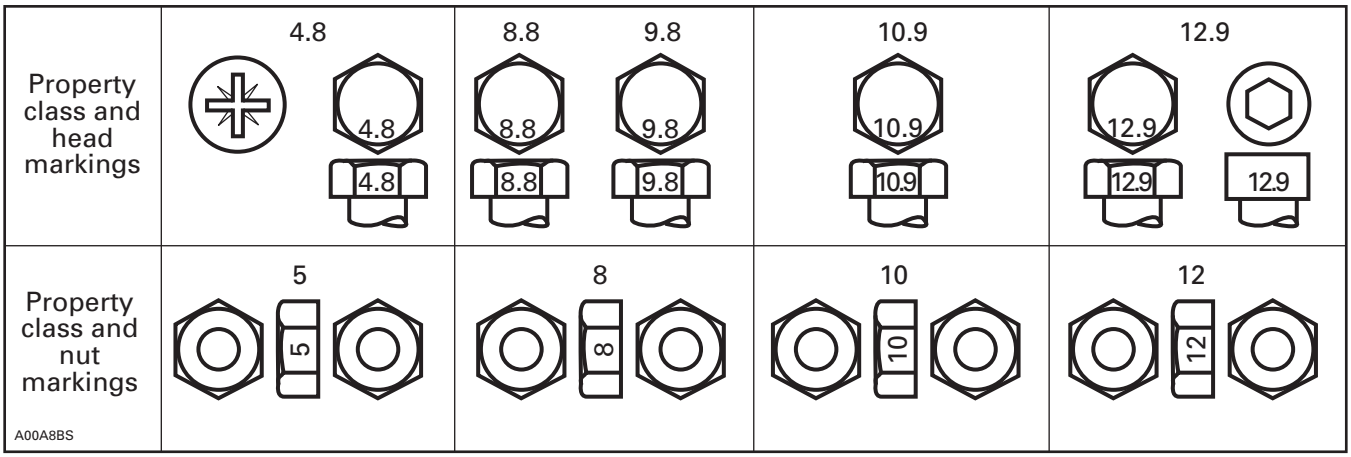

FASTENER SIZE	FASTENER GRADE/TORQUE			
	5.8 Grade	8.8 Grade	10.9 Grade	12.9 Grade
M4	1.5 – 2 N•m (13 – 18 lbf•**in**)	2.5 – 3 N•m (22 – 27 lbf•**in**)	3.5 N•m - 4 N•m (31 lbf•**in** - 35 lbf•**in**)	4 N•m - 5 N•m (35 lbf•**in** - 44 lbf•**in**)
M5	3 N•m - 3.5 N•m (27 lbf•**in** - 31 lbf•**in**)	4.5 N•m - 5.5 N•m (40 lbf•**in** - 49 lbf•**in**)	7 N•m - 8.5 N•m (62 lbf•**in** - 75 lbf•**in**)	8 N•m - 10 N•m (71 lbf•**in** - 89 lbf•**in**)
M6	6.5 N•m - 8.5 N•m (58 lbf•**in** - 75 lbf•**in**)	8 N•m - 12 N•m (71 lbf•**in** - 106 lbf•**in**)	10.5 – 15 N•m (93 – 133 lbf•**in**)	16 N•m (142 lbf•**in**)
M8	15 N•m (133 lbf•**in**)	25 N•m (18 lbf•ft)	32 N•m (24 lbf•ft)	40 N•m (30 lbf•ft)
M10	29 N•m (21 lbf•ft)	48 N•m (35 lbf•ft)	61 N•m (45 lbf•ft)	73 N•m (54 lbf•ft)
M12	52 N•m (38 lbf•ft)	85 N•m (63 lbf•ft)	105 N•m (77 lbf•ft)	128 N•m (94 lbf•ft)
M14	85 N•m (63 lbf•ft)	135 N•m (100 lbf•ft)	170 N•m (125 lbf•ft)	200 N•m (148 lbf•ft)

FASTENER INFORMATION

NOTICE Most components in the vehicles are built with parts dimensioned in the metric system. Most fasteners are metric and must not be replaced by customary fasteners or vice-versa. Mismatched or incorrect fasteners could cause damage to the vehicle or possible personal injury.

SELF-LOCKING FASTENERS PROCEDURE

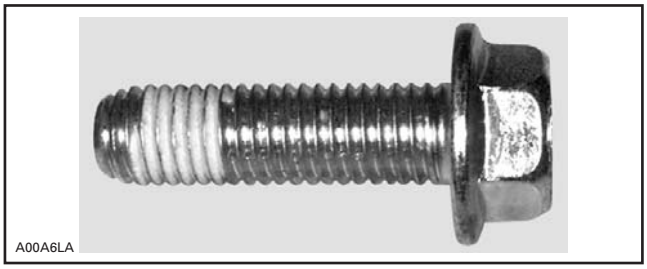

TYPICAL — SELF-LOCKING FASTENER

The following describes common procedures used when working with self-locking fasteners.

Use a metal brush or a tap to properly clean a threaded hole, then use a solvent. Allow the solvent time to act, approximately 30 minutes, then wipe off. Solvent utilization is to ensure proper adhesion of the product used for locking the fastener.

LOCTITE® APPLICATION PROCEDURE

The following describes common procedures used when working with Loctite products.

NOTE: Always use proper strength Loctite product as recommended in this shop manual.

Threadlocker Application for Uncovered Holes (Bolts and Nuts)

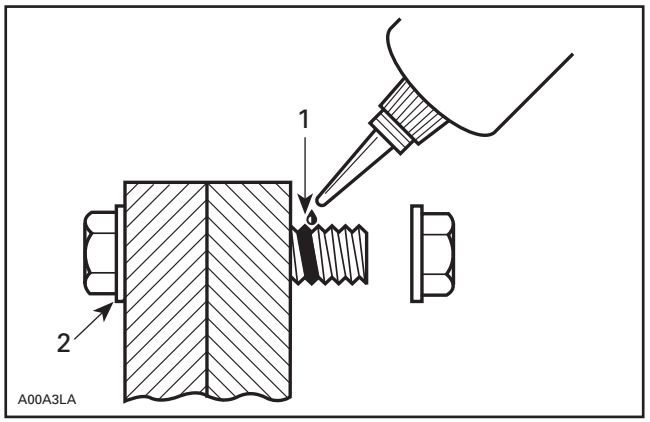

1. Apply here
2. Do not apply

1. Clean threads (bolt and nut) with solvent.
2. Apply LOCTITE 7649 (PRIMER) (P/N 293 800 041) on threads and allow to dry.
3. Choose proper strength Loctite threadlocker.
4. Fit bolt in the hole.
5. Apply a few drops of threadlocker at proposed tightened nut engagement area.
6. Position nut and tighten as required.

Threadlocker Application for Blind Holes

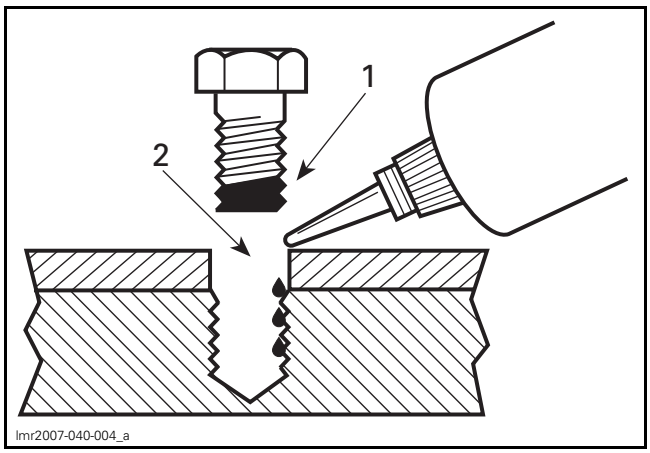

1. On fastener threads
2. On threads and at the bottom of hole

1. Clean threads (bolt and hole) with solvent.
2. Apply LOCTITE 7649 (PRIMER) (P/N 293 800 041) on threads (bolt and nut) and allow to dry for 30 seconds.
3. Choose proper strength Loctite threadlocker.

4. Apply several drops along the threaded hole and at the bottom of the hole.
5. Apply several drops on bolt threads.
6. Tighten as required.

Threadlocker Application for Stud Installation in Blind Holes

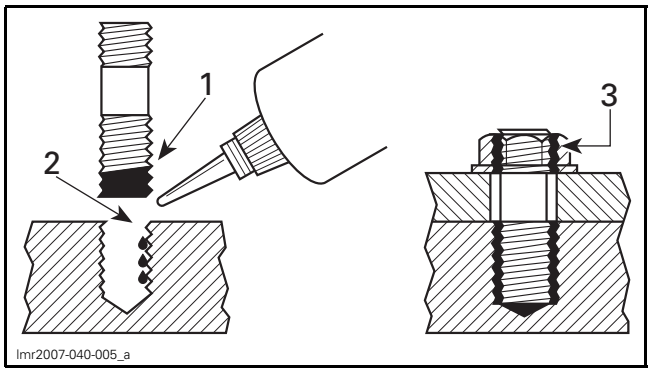

1. On stud threads
2. On threads and in the hole
3. On retaining nut threads

1. Clean threads (stud and hole) with solvent.
2. Apply LOCTITE 7649 (PRIMER) (P/N 293 800 041) on threads and allow to dry.
3. Put 2 or 3 drops of proper strength Loctite threadlocker on female threads and in hole.

NOTE: To avoid a hydro lock situation, do not apply too much Loctite.

4. Apply several drops of proper strength Loctite on stud threads.
5. Install stud.
6. Install cover, part, etc.
7. Apply a few drops of proper strength Loctite on uncovered stud threads.
8. Install and tighten retaining nut(s) as required.

Threadlocker Application for Pre-Assembled Parts

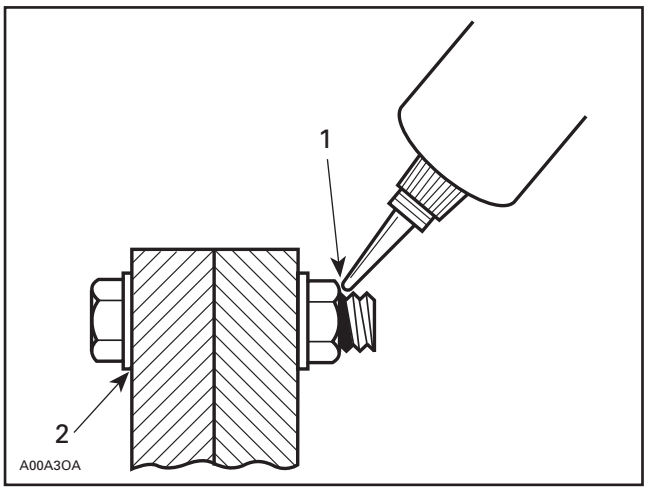

1. Apply here
2. Do not apply

1. Clean bolts and nuts with solvent.
2. Assemble components.
3. Tighten nuts.
4. Apply a few drops of proper strength Loctite on bolt/nut contact surfaces.
5. Avoid touching metal with tip of flask.

NOTE: For preventive maintenance on existing equipment, retighten nuts and apply proper strength Loctite on bolt/nut contact surfaces.

Threadlocker Application for an Adjustment Screw

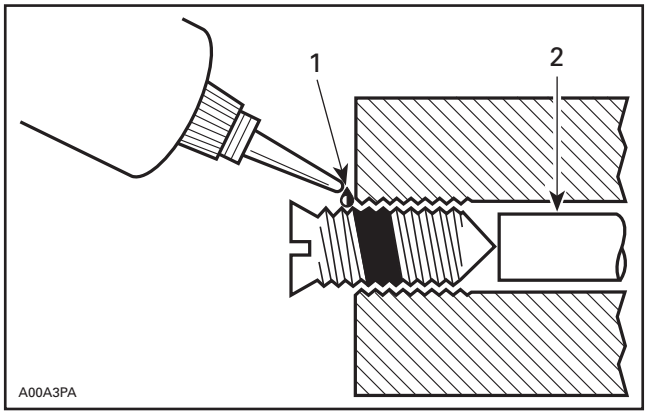

1. Apply here
2. Plunger

1. Adjust screw to proper setting.
2. Apply a few drops of proper strength Loctite threadlocker on screw/body contact surfaces.
3. Avoid touching metal with tip of flask.

NOTE: If it is difficult to readjust, heat screw with a soldering iron (232°C (450°F)).

Application for Stripped Thread Repair

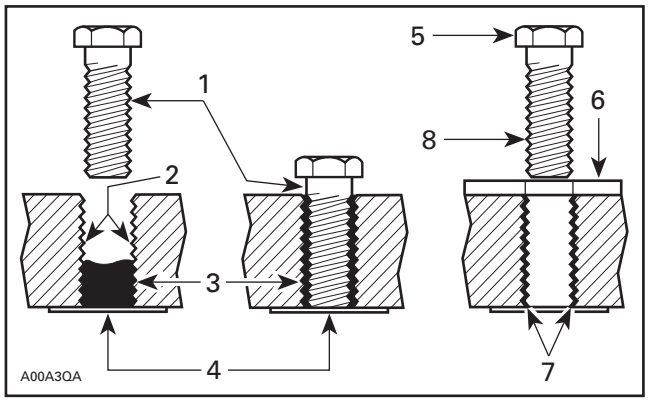

1. Release agent
2. Stripped threads
3. Form-A-Thread
4. Tapes
5. Cleaned bolt
6. Plate
7. New threads
8. Threadlocker

Standard Thread Repair

Follow instructions on Loctite FORM-A-THREAD 81668 package.

If a plate is used to align bolt:

1. Apply release agent on mating surfaces.
2. Put waxed paper or similar film on the surfaces.
3. Twist bolt when inserting it to improve thread conformation.

NOTE: NOT intended for engine stud repairs.

Repair of Small Holes/Fine Threads

Option 1: Enlarge damaged hole, then follow *STANDARD THREAD REPAIR* procedure.

Option 2: Apply FORM-A-THREAD on the screw and insert in damaged hole.

Permanent Stud Installation (Light Duty)

1. Use a stud of the desired thread length.
2. DO NOT apply release agent on stud.
3. Follow Standard Thread Repair procedure.
4. Allow 30 minutes for Loctite FORM-A-THREAD to cure.
5. Complete part assembly.

Gasket Compound Application

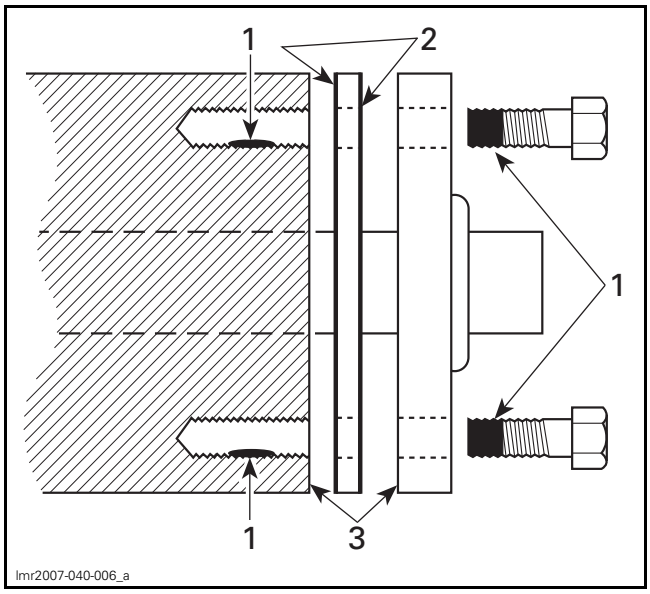

1. Proper strength Loctite
2. Loctite Primer N (P/N 293 800 041) and Gasket Eliminator 518 (P/N 293 800 038) on both sides of gasket
3. Loctite Primer N only

1. Remove old gasket and other contaminants using LOCTITE CHISEL (GASKET REMOVER) (P/N 413 708 500). Use a mechanical means only if necessary.

NOTE: Avoid grinding.

2. Clean both mating surfaces with solvent.
3. Spray Loctite Primer N on both mating surfaces and on both sides of gasket and allow to dry 1 or 2 minutes.
4. Apply LOCTITE 518 (P/N 293 800 038) on both sides of gasket, using a clean applicator.
5. Place gasket on mating surfaces and assemble parts immediately.

NOTE: If the cover is bolted to blind holes, apply proper strength Loctite in the hole and on threads. Tighten fastener.

If holes are sunken, apply proper strength Loctite on bolt threads.

6. Tighten as usual.

Threadlocker Application for Mounting on a Shaft

Mounting with a Press

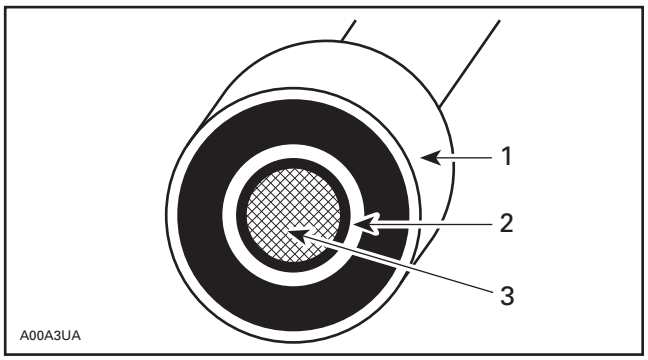

1. Bearing
2. Proper strength Loctite
3. Shaft

1. Clean shaft external contact surface.
2. Clean internal contact surface of part to be installed on shaft.
3. Apply a strip of proper strength Loctite on circumference of shaft contact surface at insertion or engagement point.

NOTE: Retaining compound is always forced out when applied on shaft.

4. DO NOT use antiseize Loctite or any similar product.
5. No curing period is required.

Mounting in Tandem

1. Apply retaining compound on internal contact surface (bore) of parts to be installed.
2. Continue parts assembly as per previous illustration.

Threadlocker Application for Case-In Components (Metallic Gaskets)

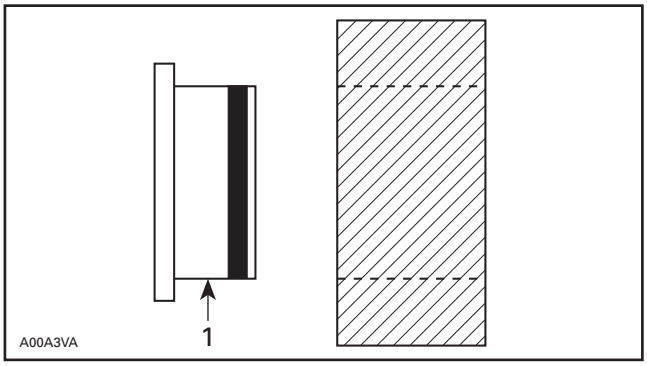

1. Proper strength Loctite

1. Clean inner housing diameter and outer gasket diameter.
2. Spray housing and gasket with LOCTITE 7649 (PRIMER) (P/N 293 800 041).
3. Apply a strip of proper strength Loctite on leading edge of outer metallic gasket diameter.

NOTE: Any Loctite product can be used here. A low strength liquid is recommended as normal strength and gap are required.

4. Install according to standard procedure.
5. Wipe off excess product.
6. Allow 30 minutes for product to cure.

NOTE: Normally used on worn-out housings to prevent leaking or sliding.

It is generally not necessary to remove gasket compound applied on outer gasket diameter.

PERIODIC MAINTENANCE SCHEDULE

Maintenance is very important for keeping your vehicle in safe operating condition. Proper maintenance is the owner's responsibility. The vehicle should be serviced as per the maintenance schedule.

The following message appears in the gauge after every 50 hours of operation, to remind you of maintenance requirements: MAINTENANCE SOON. To erase message, use B.U.D.S.

⚠ WARNING

Failure to properly maintain the vehicle according to the maintenance schedule and procedures can make it unsafe to operate.

Operation in trail riding conditions
Operation in severe riding conditions (dusty or muddy) or carrying heavy loads condition

EVERY 1 500 KM (1,000 MI) OR 50 HOURS (whichever comes first)
EVERY 750 KM (500 MI) OR 25 HOURS (whichever comes first)
Verify and clean engine air filter. Replace as needed
Verify battery connections
Inspect front differential and rear final drive oil level and look for contamination (X mr model)
Lubricate rear propeller shaft joints
Lubricate front stabilizer bar bushings
Inspect tie rod ends and ball joints for play and boots condition
Lubricate suspension arm bushings
Lubricate rear stabilizer bar bushings (Maverick models)
Inspect the drive shaft boots and protectors
Inspect brake pads. Replace as needed
Inspect wheel bearings for abnormal play
Clean exhaust area
Tighten cage fasteners (Max models)
Tighten beadlock screws (if equipped)
Inspect both rear wheel scrapers (Maverick models)
Inspect and clean CVT air filters (service more often in dusty conditions)
Inspect front and rear lower shock absorber spherical bearing boots (Maverick models)
Inspect, clean and lubricate front and rear shock absorber spherical bearings (Commander LTD/XT-P)
Inspect, clean and lubricate front and rear **upper** shock absorber spherical bearings (Maverick models)

EVERY 3 000 KM (2,000 MI) OR 100 HOURS (whichever comes first)
EVERY 1 500 KM (1,000 MI) OR 50 HOURS (whichever comes first)
Adjust valve clearance
Clean muffler spark arrester
Verify and clean throttle body
Replace fuel vent breather filter
Verify CVT drive belt and clean CVT pulleys

EVERY 3 000 KM (2,000 MI) OR 100 HOURS (whichever comes first)
EVERY 1 500 KM (1,000 MI) OR 50 HOURS (whichever comes first)
Inspect, clean and lubricate CVT one way bearing
Inspect centrifugal levers and rollers of the drive pulley. Replace as needed
Inspect ACS shock absorber hoses and fittings (ACS equipped model)
Replace rear shock absorber spherical bearings (Commander LTD/XT-P)
Replace all rear shock absorber spherical bearings, except for those with rubber boot (Maverick models)
Inspect all stabilizer bar bushings. Replace as needed
Inspect all suspension arm bushings and wear plates. Replace as needed
Tighten rear stabilizer bar bolts (Commander models)
The following must be performed at least once a year:
Change engine oil and filter
Inspect and clean brake system
Inspect battery condition
Verify steering system for abnormal play
Verify front differential and rear final drive oil level and look for contamination
Verify gearbox oil level and look for contamination

PERFORM AT THE FIRST 3 000 KM (2,000 MI)AND AT 6 000 KM (4,000 MI) THEN FOLLOW THE REGULAR SCHEDULE
PERFORM AT THE FIRST 1 500 KM (1,000 MI) AND AT 3 000 KM (2,000 MI) THEN FOLLOW THE REGULAR SCHEDULE
Replace gearbox oil
Clean the vehicle speed sensor (VSS)

EVERY 6 000 KM (4,000 MI) OR 200 HOURS (whichever comes first)
EVERY 3 000 KM (2,000 MI) OR 100 HOURS (whichever comes first)
Verify the cooling system
Test engine coolant strength
Verify fuel system for leaks
Verify fuel pump pressure
Replace spark plugs
Replace front differential oil
Replace rear final drive oil
Replace gearbox oil
Inspect input and output shaft seals (gearbox, differential and final drive)
Clean vehicle speed sensor
Inspect cam and sliding sheave bushings from the driven pulley. Replace worn parts (Turbo model)
Inspect the sliding sheave bushing of the drive pulley. Replace worn parts (Turbo model)
The following must be performed every 2 years:
Replace the brake fluid

EVERY 12 000 KM (8,000 MI) OR 5 YEARS (whichever comes first)
EVERY 6 000 KM (4,000 MI) OR 5 YEARS (whichever comes first)
Replace engine coolant

PERIODIC MAINTENANCE PROCEDURES

SERVICE PRODUCTS

Description	Part Number	Page
PROPELLER SHAFT GREASE	293 550 063	3
XPS 4-STROKE SYNTH. BLEND OIL (SUMMER)	293 600 121	2
XPS 4-STROKE SYNTHETIC OIL (ALL CLIMATE)	293 600 112	2
XPS BRAKES AND PARTS CLEANER (CAN)	219 701 776	3
XPS BRAKES AND PARTS CLEANER (USA)	219 701 705	3
XPS SYNTHETIC GEAR OIL (75W 140)	293 600 140	3

GENERAL

This subsection provides:
– Fluid level verifications
– Maintenance procedures.

The following systems should be serviced according to the *PERIODIC MAINTENANCE SCHEDULE*.

PROCEDURES

ENGINE (LUBRICATION SYSTEM)

Engine Oil Change

Place vehicle on a level surface.

Oil change and oil filter replacement should be done with a warm engine.

⚠ CAUTION The engine oil can be very hot. Wait until engine oil is warm.

Ensure vehicle is on a level surface.

Remove dipstick.

Place a drain pan under the engine drain plug area.

Clean the drain plug area.

Unscrew drain plug and discard the gasket ring.

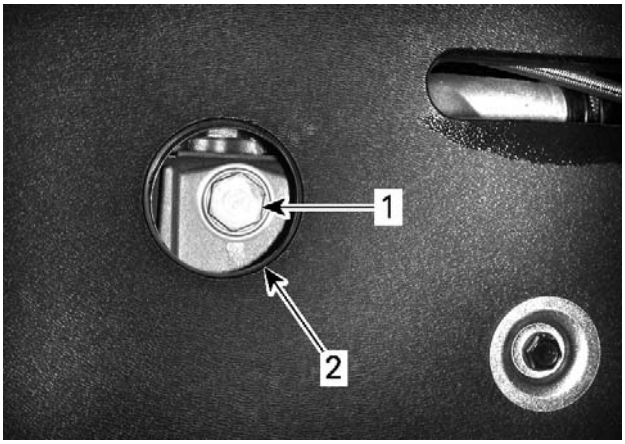

tmo2011-001-090_a

DRAIN PLUG ACCESS
1. *Oil drain plug*
2. *Skid plate*

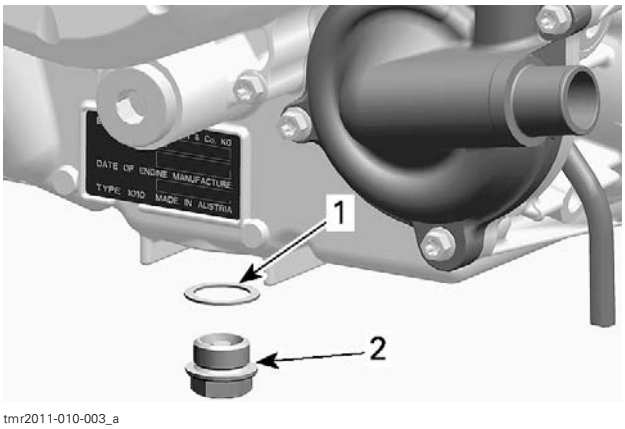

tmr2011-010-003_a

1. *Gasket ring*
2. *Drain plug*

Allow oil to drain completely from the crankcase.

Clean the magnetic drain plug from metal shavings and residue. Presence of debris gives an indication of internal engine damage.

Install a NEW gasket ring on the drain plug.

NOTICE Never use the gasket ring a second time. Always replace by a NEW one.

Install and tighten drain plug to the specified torque.

DRAIN PLUG	
Tightening torque	30 N•m ± 2 N•m (22 lbf•ft ± 1 lbf•ft)

Replace oil filter. Refer to *ENGINE OIL FILTER REPLACEMENT* in this subsection.

Refill engine with recommended engine oil.

ENGINE OIL CAPACITY
2 L (2.11 qt (U.S. liq.))

RECOMMENDED ENGINE OIL	
SEASON	TYPE
Summer	XPS 4-STROKE SYNTH. BLEND OIL (SUMMER) (P/N 293 600 121)
Winter	XPS 4-STROKE SYNTHETIC OIL (ALL CLIMATE) (P/N 293 600 112)

If recommended XPS oil is not available, use a 4-stroke SAE 5W40 engine oil that meets or exceeds the requirements for API service classification SM, SL or SJ. Always check the API service label certification on the oil container, it must contain at least one of the above standards.

After filling, check the oil level, refer to *ENGINE OIL LEVEL VERIFICATION* in this subsection.

Start engine and let it idle for a few minutes.

Ensure oil filter and drain plug areas are not leaking.

Stop engine.

Wait a while to allow oil to flow down to crankcase, then check oil level again.

Dispose oil and filter as per your local environmental regulations.

DRIVE SYSTEM

Rear Final Drive Oil Level Verification

Ensure vehicle is on a level surface.

Clean filler plug area.

Remove filler plug.

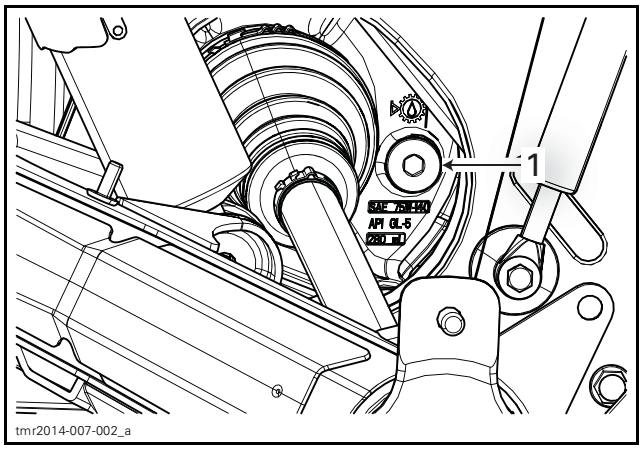

LH REAR SIDE OF VEHICLE
1. Filler plug

With vehicle on a level surface, check oil level by removing filler plug. Oil level must reach the lower edge.

Reinstall filler plug.

FILLER PLUG	
Tightening torque	16.5 N•m ± 2.5 N•m (146 lbf•**in** ± 22 lbf•**in**)

Rear Final Drive Oil Replacement

Ensure vehicle is on a level surface.

Clean filler and drain plug areas.

Place a drain pan under rear final drive.

Unscrew filler plug.

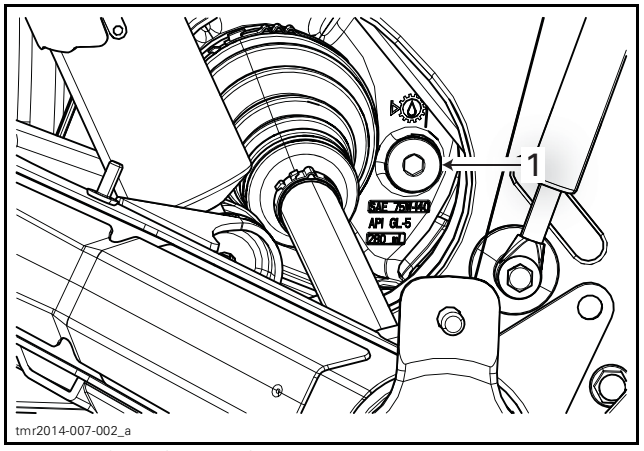

LH REAR SIDE OF VEHICLE
1. Filler plug

Remove drain plug.

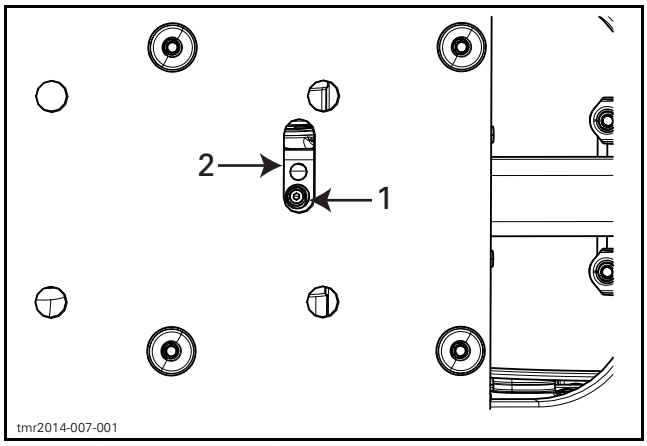

VIEW FROM UNDER VEHICLE
1. *Drain plug*
2. *Skid plate*

Install drain plug.

DRAIN PLUG	
Tightening torque	2.5 N•m ± 0.5 N•m (22 lbf•**in** ± 4 lbf•**in**)

Refill the rear final drive.

RECOMMENDED OIL	QUANTITY
XPS SYNTHETIC GEAR OIL (75W 140) (P/N 293 600 140) or a 75W 140 (API GL-5) gear oil	280 ml (9.5 U.S. oz)

Reinstall filler plug.

FILLER PLUG	
Tightening torque	16.5 N•m ± 2.5 N•m (146 lbf•**in** ± 22 lbf•**in**)

Propeller Shaft U-Joint Lubrication

PROPELLER SHAFT U-JOINT LUBRICATION
PROPELLER SHAFT GREASE (P/N 293 550 063)

CHASSIS (BRAKES)

Brake System Inspection and Cleaning

NOTICE **Do not clean brake components in petroleum based solvent. Use brake system cleaner only. Soiled brake pads must be replaced with new ones.**

Brake Caliper

1. Remove calipers then check the following components:
   – Check brake pad pins
   – Check caliper boots for cracks
   – Check caliper movement on its support
   – Check pistons movement
   – Check pistons for scratches, rust or other damages.
2. Clean the following components using XPS BRAKES AND PARTS CLEANER (CAN) (P/N 219 701 776) or XPS BRAKES AND PARTS CLEANER (USA) (P/N 219 701 705):
   – Brake pads
   – Caliper support and slider
   – Caliper pistons, spring and pins.

NOTE: Do not remove pistons from caliper for cleaning them.

3. Lubricate caliper sliders using an appropriate *BRAKE CALIPER SYNTHETIC GREASE*.

STORAGE PROCEDURE

SERVICE PRODUCTS

Description	Part Number	Page
BRP HEAVY DUTY CLEANER	293 110 001	3
XPS ALL PURPOSE CLEANER	219 701 709	2
XPS FUEL STABILIZER	413 408 601	1
XPS LUBE	293 600 016	2–3
XPS STORAGE OIL (EXCEPT U.S. COUNTRY)	413 711 600	1
XPS STORAGE OIL (U.S. COUNTRY ONLY)	413 711 900	1

GENERAL

If the SSV is not used or is to be stored for an extended period of time, more than 4 months, be sure to perform the storage procedures described below.

Where applicable, refer to the appropriate subsections in this manual for the required tasks outlined in these procedures.

PROCEDURES

NOTE: To facilitate the inspection and ensure adequate lubrication of components, it is recommended to clean the entire vehicle. Refer to *VEHICLE CLEANING* in this subsection.

FUEL SYSTEM

Fuel System Protection

With the new fuel additives, it is critical to use the XPS FUEL STABILIZER (P/N 413 408 601) or an equivalent to prevent fuel deterioration and fuel system gumming. Follow the manufacturer's instructions for proper use.

NOTICE **Fuel stabilizer should be added prior to engine lubrication to ensure fuel system components protection against varnish deposits.**

Pour fuel stabilizer in fuel tank. Fill up fuel tank.

ENGINE

Engine Internal Lubrication

Engine internal parts must be lubricated to protect them from rust formation during the storage period.

Proceed as follows:

1. Remove lateral console panels.
2. Remove spark plugs.
3. Spray storage oil into each cylinder.

NOTE: Use the storage oil as per country availability.

STORAGE OIL
XPS STORAGE OIL (EXCEPT U.S. COUNTRY) (P/N 413 711 600)
XPS STORAGE OIL (U.S. COUNTRY ONLY) (P/N 413 711 900)

4. Press start button, 1 or 2 seconds maximum, to lubricate cylinders.
5. Reinstall the spark plugs.

NOTE: Do not run engine during storage period.

6. Block muffler outlet with a rag.

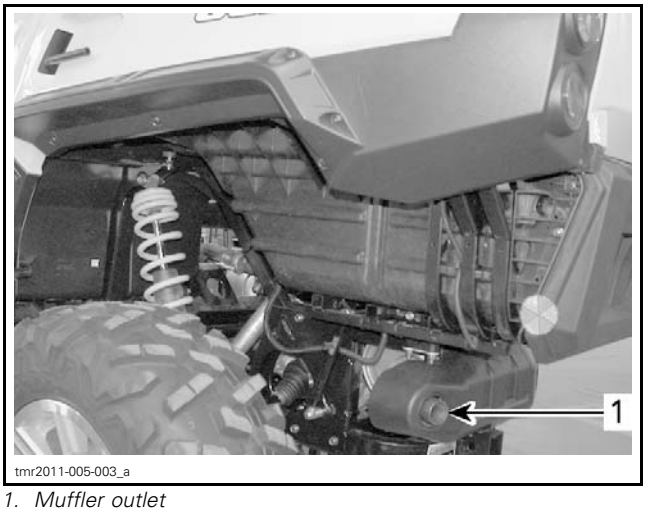

1. Muffler outlet

CVT Protection

2-UP Models

Remove drive belt. Refer to *ENGINE, CVT AND GEARBOX*.

Close CVT cover.

Block CVT outlet with a rag.

NOTE: To reach the CVT outlet, tilt the cargo box.



tmr2011-005-001_a

1. Tilted cargo box

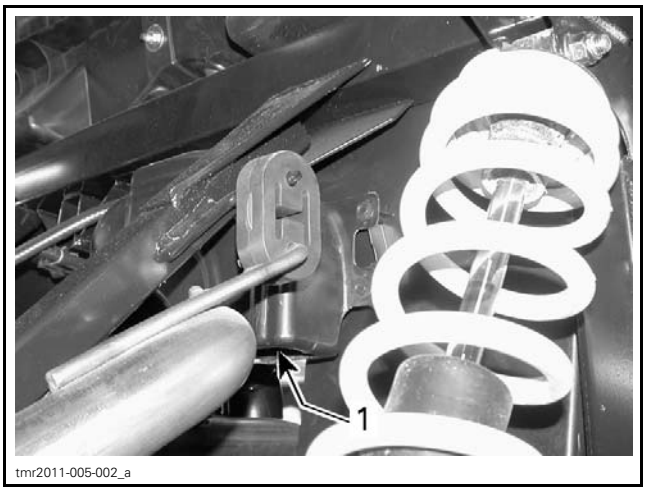

tmr2011-005-002_a

1. CVT outlet

MAX Models

Remove drive belt. Refer to *CVT*.

Inspect and clean pulleys.

Protect pulleys by spraying XPS LUBE (P/N 293 600 016) on pulley faces.

NOTE: Do not reinstall drive belt.

Close CVT cover.

Block rear CVT inlets with a rag.

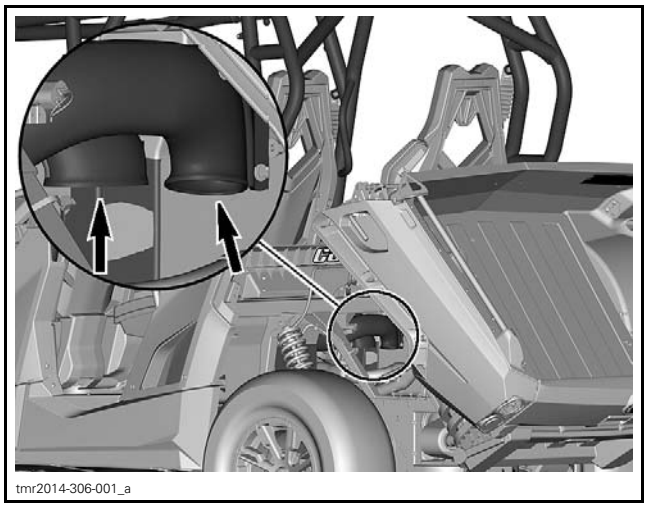
tmr2014-306-001_a

ELECTRICAL SYSTEM

Battery Removal

Remove the battery.

Charge and store battery.

DRIVE SYSTEM

Lubricate front and rear propeller joints.

Lubricate the engine output shaft with XPS LUBE (P/N 293 600 016).

CHASSIS

Lubrication

Lubricate front suspension (no lube on rear).

Tire Pressure

Inflate tires to the recommended pressure.

Vehicle Cleaning

Wash and dry the vehicle.

NOTICE **Never use a high pressure washer to clean the vehicle. USE LOW PRESSURE ONLY (like a garden hose). The high pressure can cause electrical or mechanical damages.**

Remove any dirt or rust.

To clean the vinyl or plastic parts, use only flannel clothes with XPS ALL PURPOSE CLEANER (P/N 219 701 709).

NOTICE **It is necessary to use flannel cloths on plastic parts to avoid damaging surfaces. Never clean plastic parts with strong detergent, degreasing agent, paint thinner, acetone, products containing chlorine, etc.**

To clean the entire vehicle, including metallic parts use BRP HEAVY DUTY CLEANER (P/N 293 110 001).

Inspect the vehicle and repair any damage. Touch up all metal spots where paint has been scratched off. Spray all metal parts with XPS LUBE (P/N 293 600 016).

Vehicle Protection

Protect the vehicle with a cover to prevent dust accumulation during storage.

NOTICE The vehicle has to be stored in a cool and dry place and covered with an opaque tarpaulin. This will prevent sun rays and grime from affecting plastic components and vehicle finish.

Midwest Manuals
Green-Manuals
Paperless Manuals
For a Better Tomorrow
If you bought this manual from any other seller please leave them NEGATIVE feedback and notify me at bestshopmanuals@gmail.com

PRESEASON PREPARATION

Prior to using vehicle, proper vehicle preparation is required after a storage period.

If any worn, broken or damaged parts are found, replace them.

Remove rags that were installed for storage: CVT outlet hose and muffler.

Disconnect air inlet hose from the air filter housing and inspect for animal nests etc. Reinstall hose.

Drain fuel tank and fill with fresh fuel if a fuel stabilizer was not used for the storage.

Reinstall battery. Refer to *CHARGING SYSTEM*.

Using the maintenance chart, perform the items titled EVERY 3 000 km (2,000 mi) OR 100 HOURS OF OPERATION OR 1 YEAR.

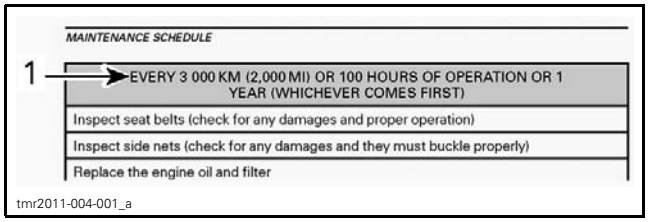

1. Use this chart

NOTE: If the "every 6 000 km (4,000 mi) or 200 hours of operation or 2 years" maintenance service is due, also perform the related items as per the maintenance chart.

Test drive vehicle to confirm proper operation.

SPECIAL PROCEDURES

SERVICE PRODUCTS

Description	Part Number	Page
XPS LUBE	293 600 016	38

GENERAL

NOTE: Component failures resulting from these events are not warrantable.

Refer to the appropriate subsections in this manual for the required tasks outlined in these procedures.

ROLLED OVER VEHICLE

In the event the vehicle was rolled over, check the following.

Inspect suspension components and steering system components.

Inspect body and chassis for damage (welded joints, bent or cracked parts).

Pay particular attention to the cage, shoulder protector, side nets, seat belts and their mechanisms.

⚠ WARNING

Do not use vehicle if any of the safety devices are damaged or inoperative.

Check all fluids level before restarting engine.

NOTICE **Check for oil accumulation in the air intake system. Check air filter.**

After restarting engine, check multifunction gauge if any malfunction is detected.

Troubleshoot and repair as required before using vehicle.

SUBMERGED VEHICLE

In the event the vehicle was submerged, proceed with the following.

NOTICE **A submerged vehicle may cause several damages (short and long term) if not serviced adequately or soon enough. Do not crank or start engine.**

Drain the entire air intake system. Inspect the throttle body. Remove parts as required.

Replace the air filter.

Drain, inspect and clean the CVT.

Empty muffler (removal required).

Unplug ECM, multifunction gauge and DPS connectors, and open fuse boxes. Check for presence of water. Dry as necessary.

Inspect all lights for water intrusion. Dry as required.

Replace the engine oil (without starting the engine).

Remove spark plugs. Crank engine in drowned mode to expel any water.

⚠ CAUTION Keep away from spark plug holes to avoid to be splashed when cranking engine.

Add a small quantity of engine oil in cylinders (approximately 2 teaspoonfuls).

Install spark plugs (replace if required).

Look for water in fuel tank, in doubt, flush fuel tank and refill with new gas.

Look for water in brake system. Replace brake fluid as required.

⚠ WARNING

Before starting engine, use B.U.D.S. and check vehicle for fault codes.

Start the engine and allow it to run at idle speed until the engine reaches its operating temperature.

Stop the engine.

Change engine oil and filter.

NOTE: Change oil as many times as necessary, until there is no whitish appearance in engine oil.

Check gearbox oil. Replace oil if contaminated with water.

Replace oil of front differential.

Replace oil of rear final drive.

Replace the ACS air filter.

Lubricate front and rear suspensions and propeller shaft joints. Refer to *FRONT AND REAR SUSPENSIONS*.

Spray all metal parts with XPS LUBE (P/N 293 600 016).

Test drive to confirm proper operation.

ENGINE REMOVAL AND INSTALLATION

SERVICE TOOLS

Description	Part Number	Page
ENGINE LIFTING TOOL	529 036 022	3

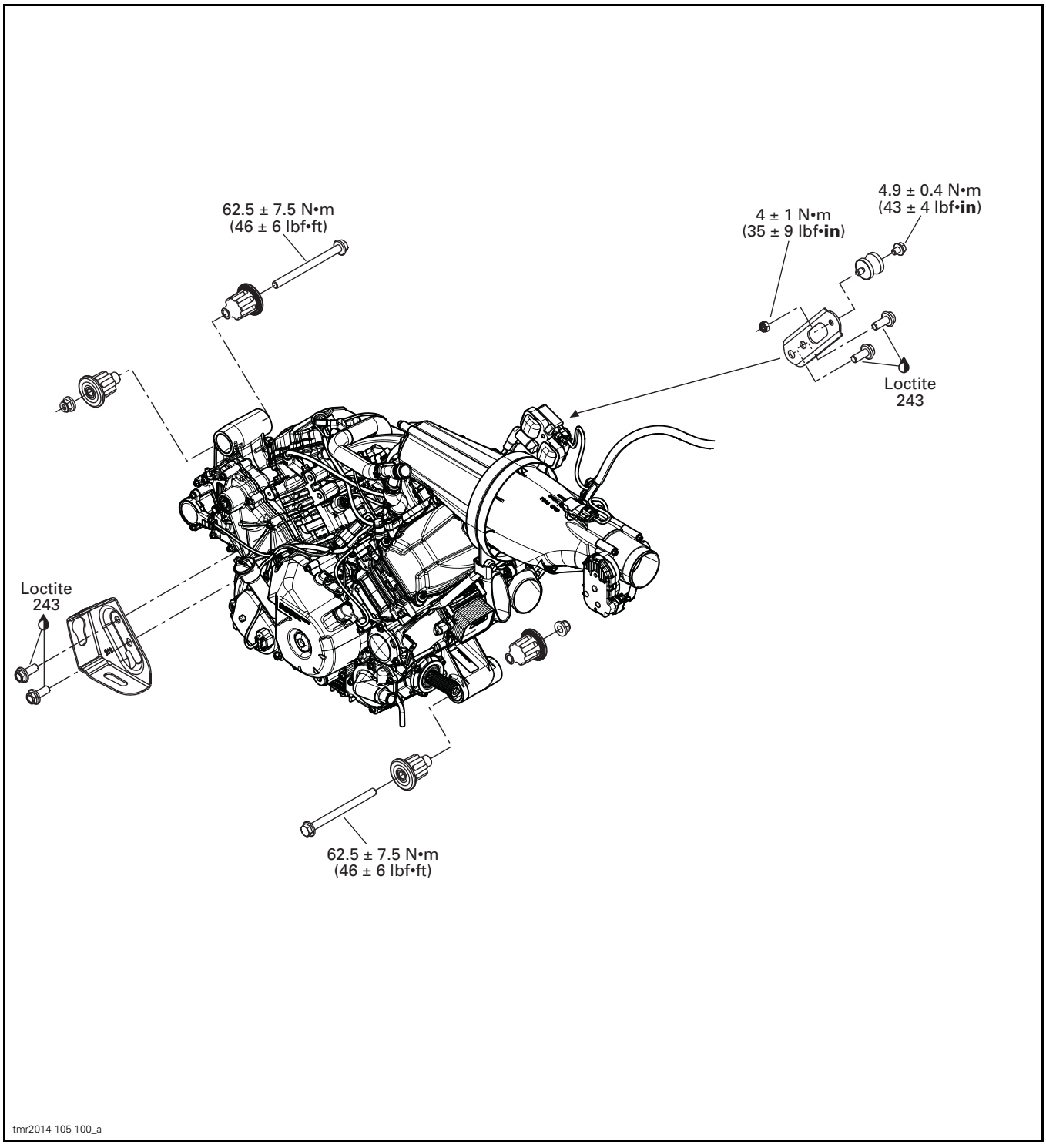

PROCEDURES

ENGINE REMOVAL

Vehicle and Engine Preparation

1. Place vehicle on a workstation that will have access to an engine-lifting hoist.
2. Safely lift and support the vehicle. Refer to *INTRODUCTION* subsection.
3. Remove seats.
4. Remove battery cover and battery. Refer to *CHARGING SYSTEM* subsection.
5. Disconnect voltage regulator/rectifier. Refer to *CHARGING SYSTEM* subsection.

NOTICE **Always unplug battery cables exactly in the specified order, the BLACK (-) cable first.**

6. Refer to *BODY* subsection and remove the following plastic parts:
   - Upper and lower consoles
   - Rear upper and lower consoles
   - Front LH and RH lateral console panels
   - Rear LH and RH lateral console panels
   - LH rear floor panel
7. Drain engine oil. Refer to *ENGINE OIL CHANGE* in the *PERIODIC MAINTENANCE PROCEDURES* subsection.

NOTE: Drain engine oil only if engine overhaul is necessary.

8. Drain the engine coolant. Refer to *ENGINE COOLANT REPLACEMENT* in the *PERIODIC MAINTENANCE PROCEDURES* subsection.
9. Remove thermostat cover from rear cylinder head while carefully lifting the thermostat cover.

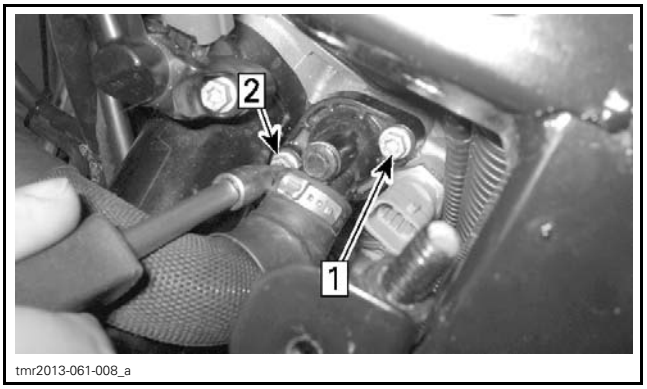

tmr2013-061-008_a

THERMOSTAT COVER ON REAR CYLINDER HEAD
1. *First screw to remove*
2. *Second screw to remove*

10. Disconnect both engine coolant hoses.
11. Disconnect throttle body connector.
12. Remove the plenum with the air intake manifolds and throttle body. Refer to *INTAKE MANIFOLD*.

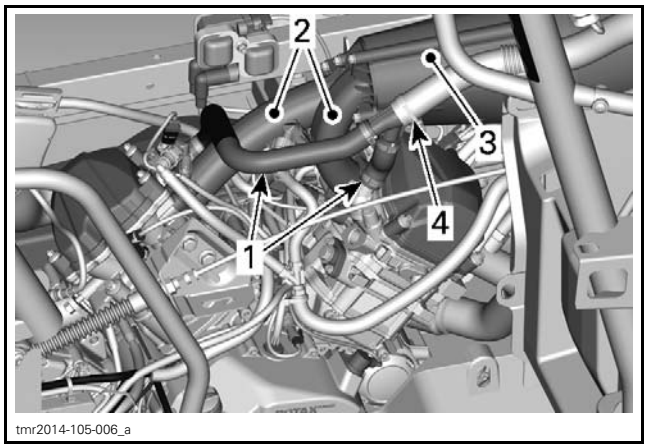

tmr2014-105-006_a

1. *Engine coolant hoses*
2. *Intake manifolds*
3. *Plenum*
4. *Disconnect enging coolant hoses here.*

13. Remove the shift plate.
14. Remove the shifter cable bracket.

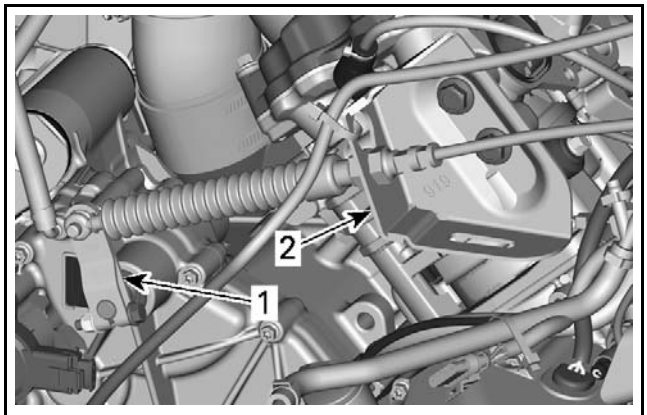

tmr2013-061-005_a

1. *Shift plate*
2. *Shifter cable bracket*

15. Remove the front and rear head pipes. Refer to *EXHAUST SYSTEM* subsection.
16. Disconnect the coolant hose at water pump.
17. Disconnect the gearbox vent hose.
18. Remove the CVT outlet duct.
19. Unplug and remove the CTS (coolant temperature sensor).

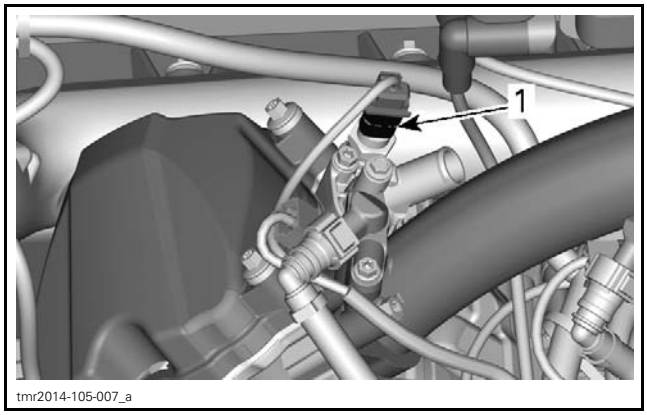

1. CTS

20. Remove the upper engine support.

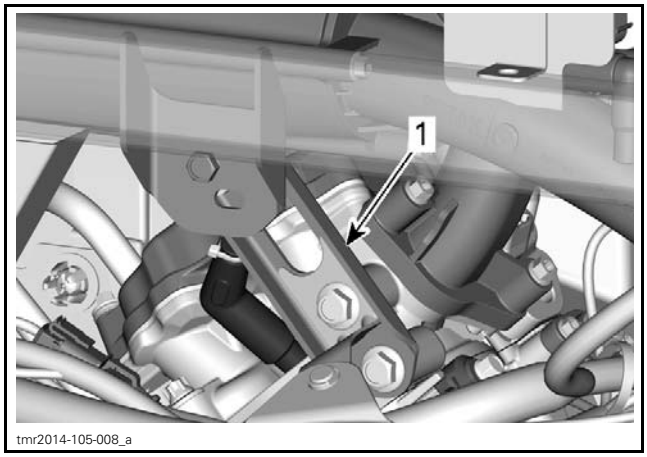

1. Upper engine support

21. Disconnect the CVT inlet ducts from the CVT cover.
22. Disconnect the crankcase vent hose.
23. Unplug all remaining connectors and remove required cables from engine. Cut all necessary locking ties.
    - Spark plug cables
    - Starter cable (retaining nut on starter body)
    - GBPS (Gear Box Position Sensor)
    - Vehicle speed sensor
    - Actuator connector
    - Neutral switch
    - OPS (Oil Pressure Sensor)
    - CPS (Crankshaft Position Sensor)
    - Engine ground cable (screwed on LH side of the engine)
    - KS (Knock Sensor) of front and rear cylinder
    - Stator
    - 4WD indicator switch.

Lifting Engine

1. Remove front drive shaft extension.
2. Install the ENGINE LIFTING TOOL (P/N 529 036 022).



TYPICAL

3. Remove retaining screws on rear propeller shaft.
4. Remove the front and rear engine support bolts.
5. Lift engine and move it towards RH side.
6. Gently lower engine on RH rear passenger side.
7. Undo lifting strap and reattach engine lifting tool after passing the strap outside the cage.
8. Remove engine from vehicle.

ENGINE INSTALLATION

The installation is the reverse of the removal procedure. However, pay attention to the following.

Prior to install engine, inspect condition of engine mounts.

Install the rear propeller shaft onto engine output shaft.

Connect the front propeller shaft extension to engine output shaft while lowering engine.

Install rear and front engine mounting bolts then torque all mounting bolts.

NOTE: Do not install plastic parts and seats prior to *FINAL ASSEMBLY*.

Final Assembly Procedure

1. Fill engine with the recommended oil and quantity. Refer to *ENGINE OIL CHANGE* in the *PERIODIC MAINTENANCE PROCEDURES* subsection.
2. Fill and bleed cooling system. Refer to *ENGINE COOLANT REPLACEMENT* in the *PERIODIC MAINTENANCE PROCEDURES* subsection.
3. Check for any leaks.

4. Reinstall plastic parts and seats.
5. Test drive vehicle to confirm proper operation.

ENGINE MOUNTS

NOTE: Use the same procedure for the front and rear engine mounts.

Engine Mount Removal

Insert a punch into engine mount bushing and push the opposite engine mount out.

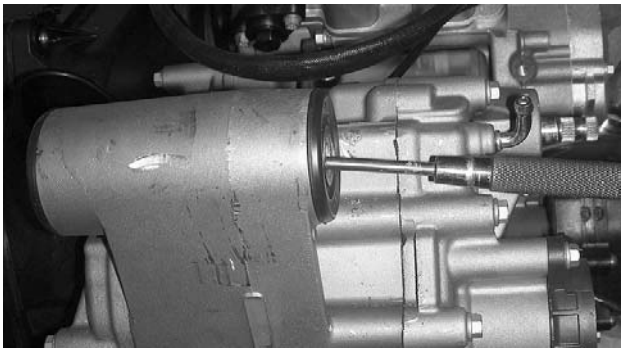
tmr2011-007-011

TYPICAL

Engine Mount Installation

The installation is the reverse of the removal procedure.

AIR INTAKE SYSTEM

SERVICE PRODUCTS

Description	Part Number	Page
LOCTITE 5910	293 800 081	6

AIR FILTER HOUSING

2-UP Models

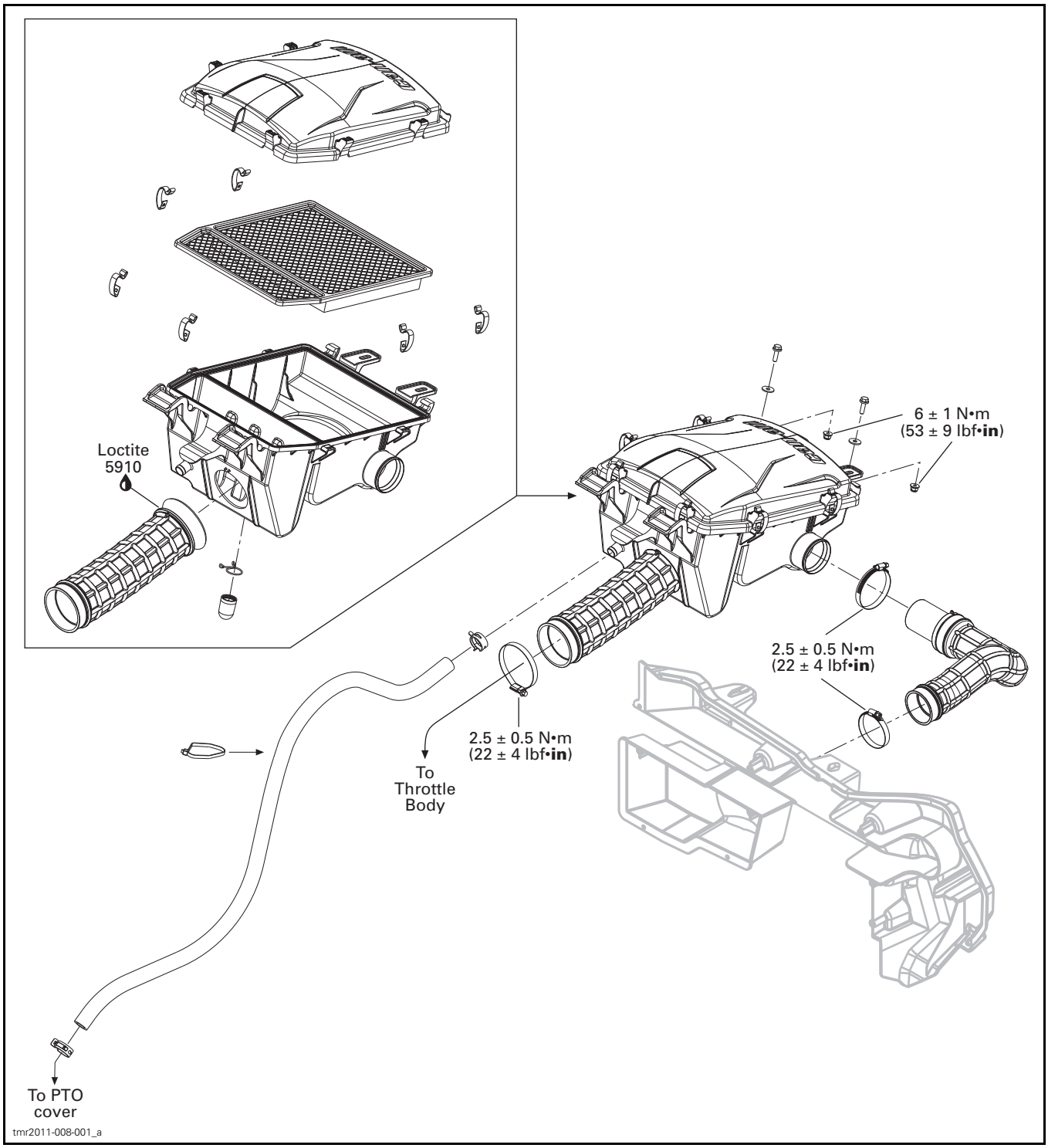

AIR FILTER HOUSING

MAX Models

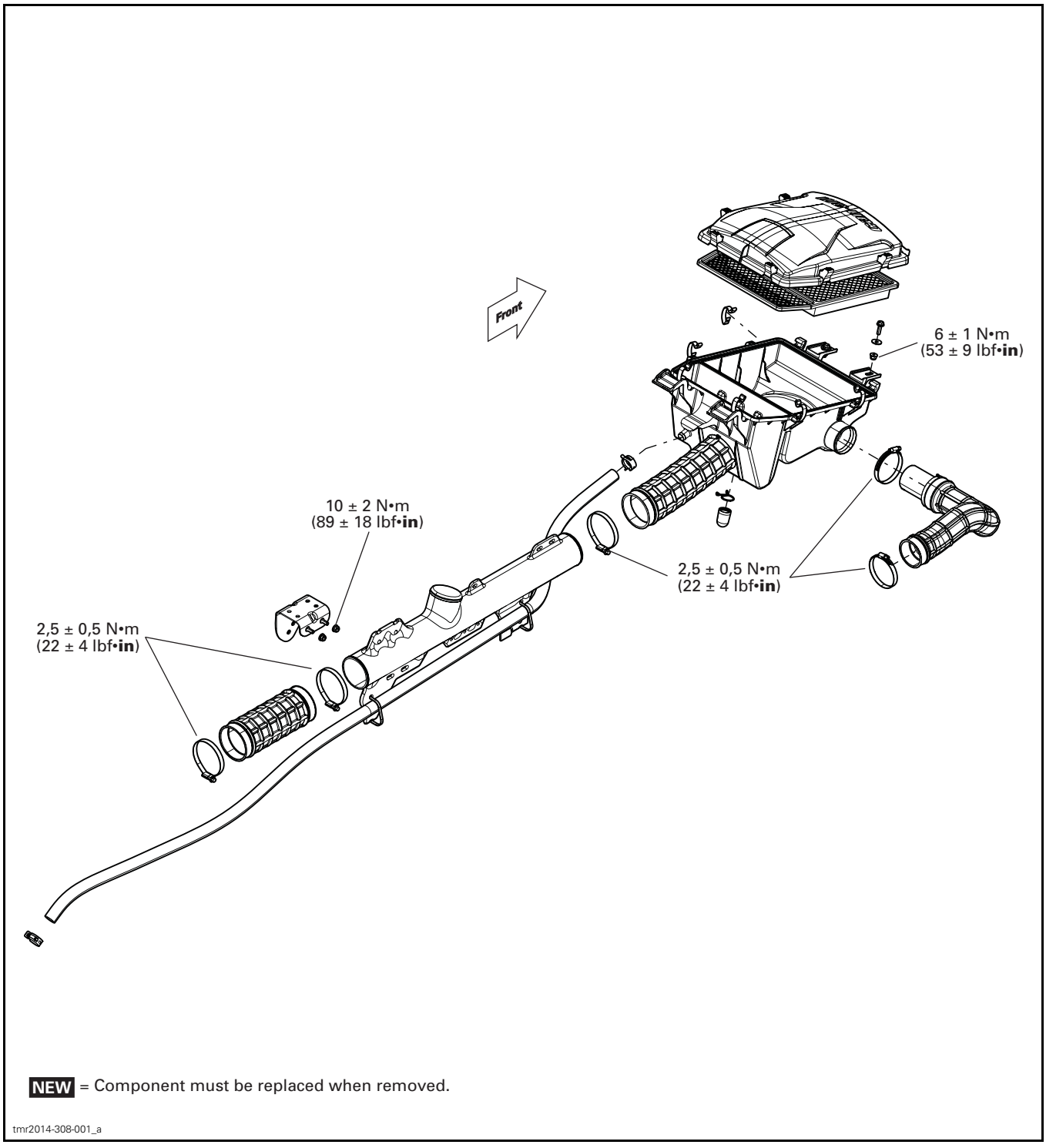

NEW = Component must be replaced when removed.

tmr2014-308-001_a

GENERAL

NOTICE Never modify the air intake system. Otherwise, engine performance degradation or damage can occur. The engine is calibrated to operate specifically with these components.

PROCEDURES

AIR FILTER

For air filter servicing, refer to *PERIODIC MAINTENANCE PROCEDURES* subsection.

AIR FILTER HOUSING

Air Filter Housing Removal

2-UP Models

1. Remove the following parts:
   1.1 Service cover

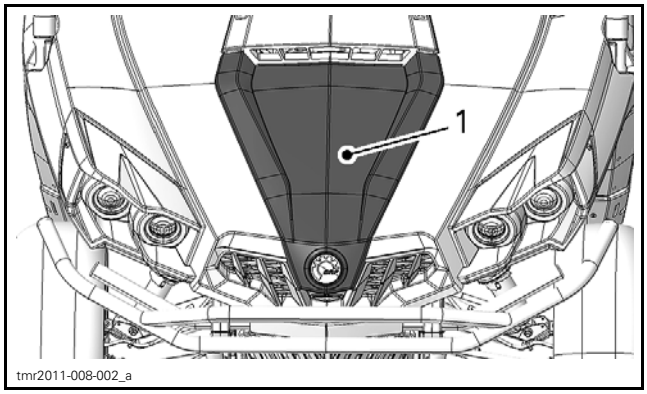

1. Service cover

   1.2 RH inner panel.

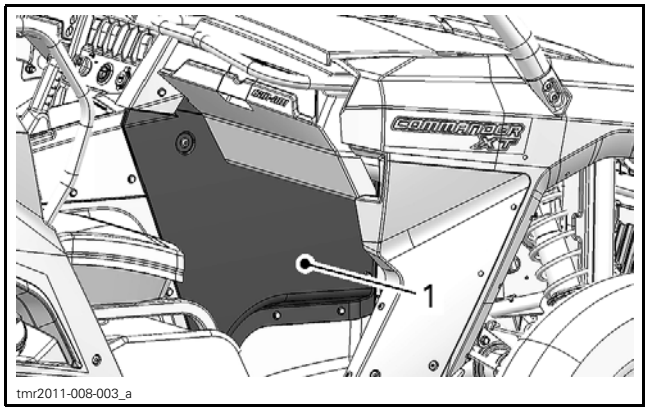

FROM INSIDE OF COCKPIT – PASSENGER SIDE
1. RH inner panel

2. Remove retaining bolts of air filter housing.

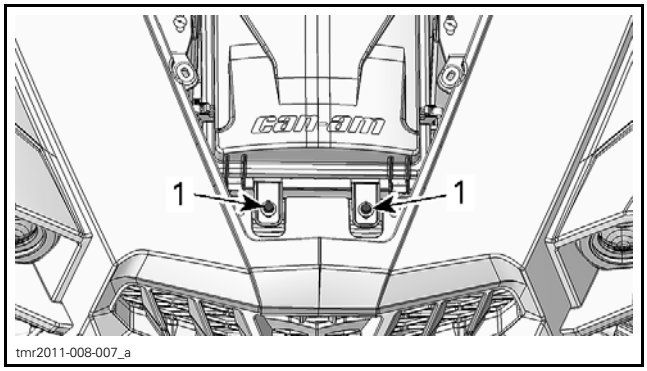

1. Air filter housing retaining bolts

3. Disconnect air inlet hose from the LH side of air filter housing.

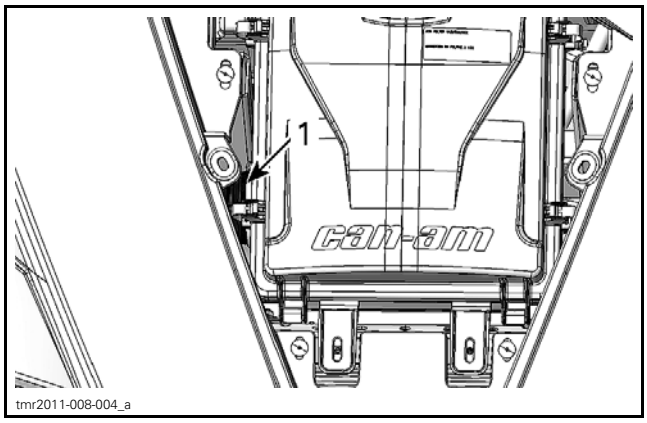

1. Air inlet hose

4. Disconnect intake adapter from throttle body.

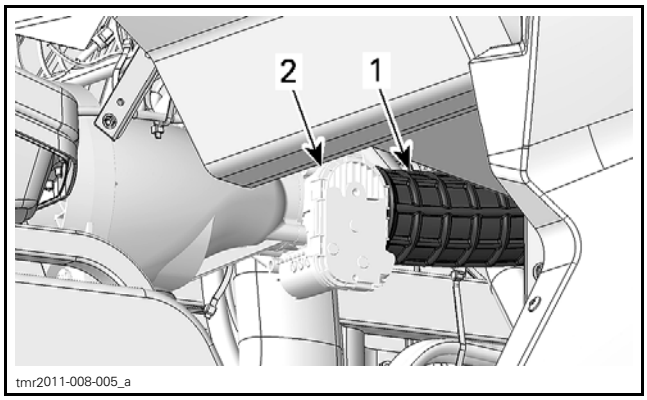

FROM INSIDE OF COCKPIT – PASSENGER SIDE
1. Intake adapter
2. Throttle body

5. Disconnect vent hose from the rear of air filter housing.

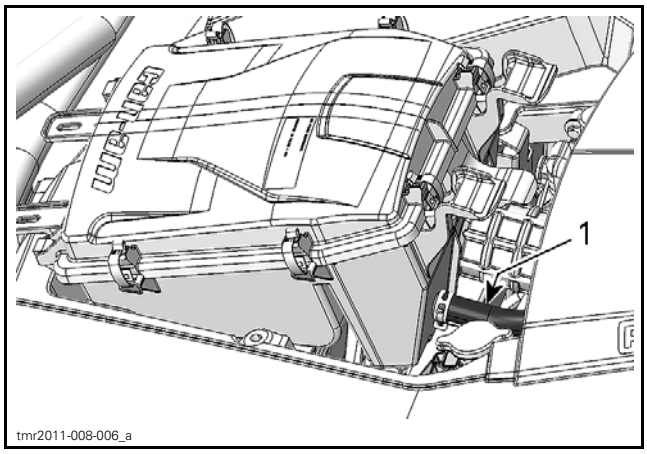

1. Vent hose

MAX Models

1. Refer to *BODY* and remove the following parts:
   – Service cover
   – RH inner kick panel
2. Remove retaining screws and washers of air filter housing.

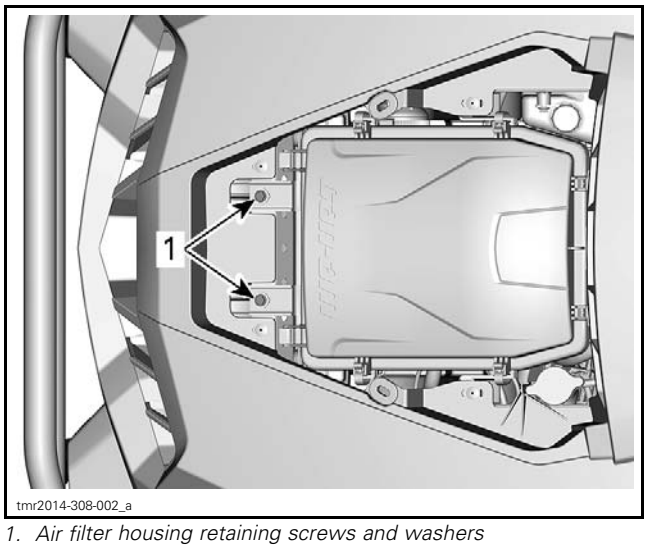

1. Air filter housing retaining screws and washers

3. Disconnect air inlet hose from the RH side of air filter housing.

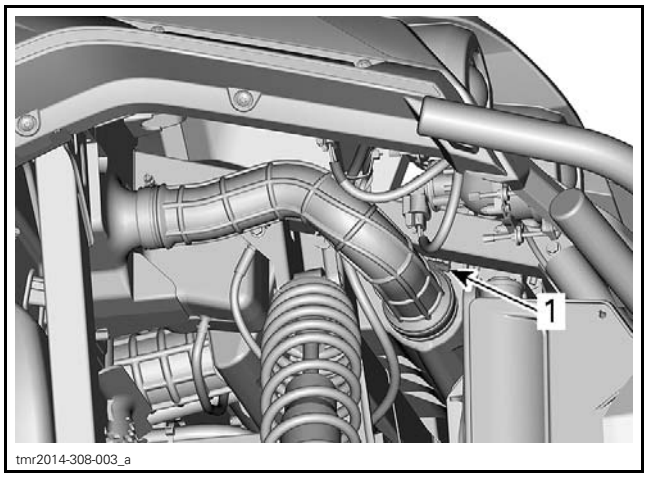

1. Air inlet hose

4. Disconnect intake adapter from central air intake adapter.

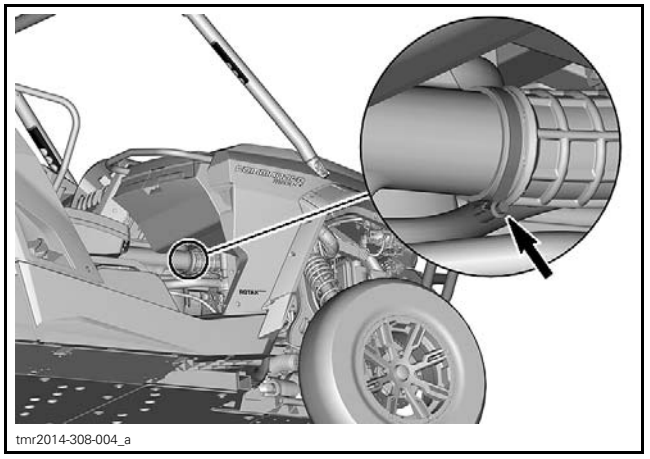

FROM INSIDE OF COCKPIT - PASSENGER SIDE
1. Central air intake adapter

5. Disconnect vent hose from the rear of air filter housing.

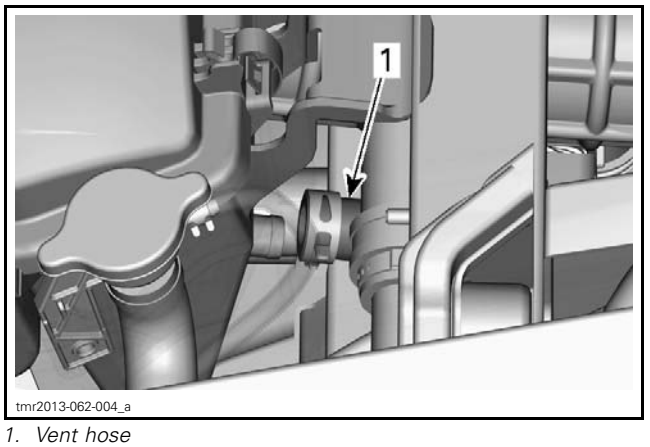

1. Vent hose

Air Filter Housing Installation

For installation, reverse the removal procedure but pay attention to the following.

If the intake adapter is removed, reseal it with LOCTITE 5910 (P/N 293 800 081) and align its recess with the notch on air filter housing.

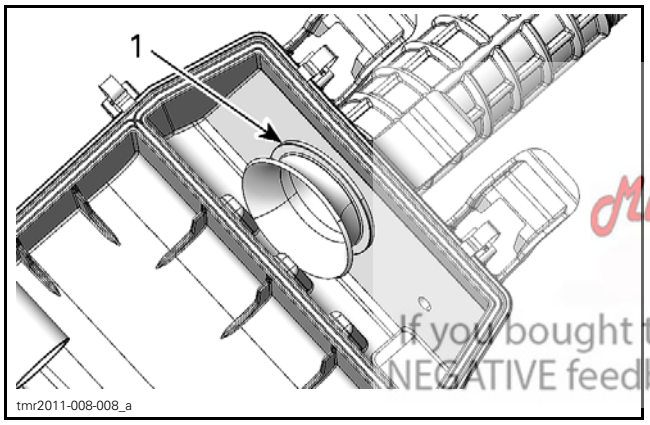

1. Apply Loctite 5910 between intake adapter lips and housing wall

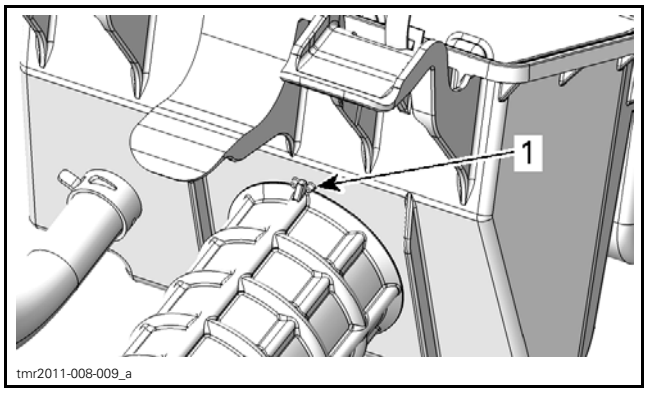

1. Intake adapter recess into air filter housing notch

TORQUE	
Gear clamps	2.5 N•m ± 0.5 N•m (22 lbf•**in** ± 4 lbf•**in**)
Air filter housing nuts	6 N•m ± 1 N•m (53 lbf•**in** ± 9 lbf•**in**)

Midwest Manuals
Green Manuals
Paperless Manuals
For a Better Tomorrow
If you bought this manual from any other seller please leave them NEGATIVE feedback and notify me at bestshopmanuals@gmail.com

EXHAUST SYSTEM

CAN, USA and Int'l Models

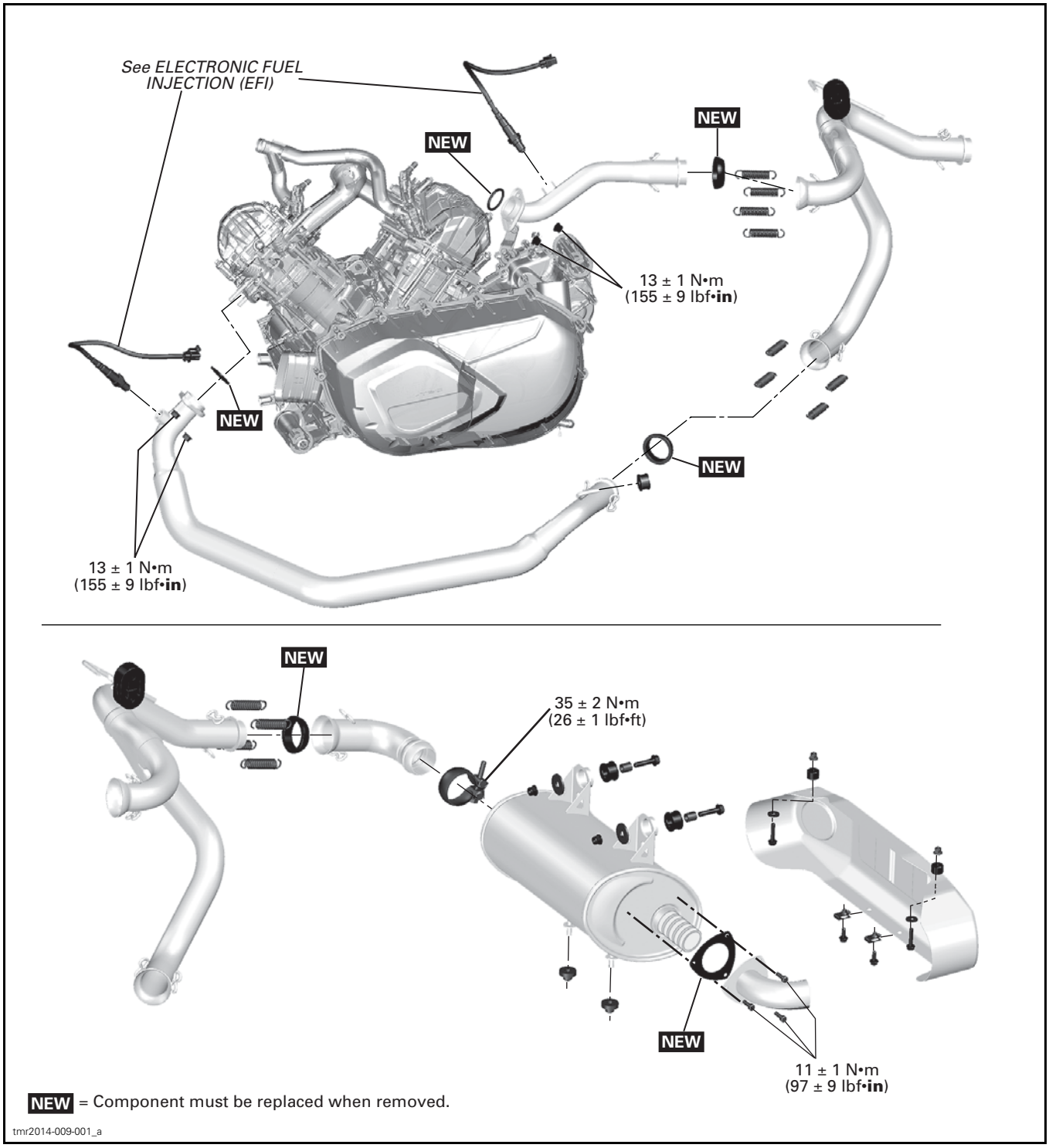

CE Models

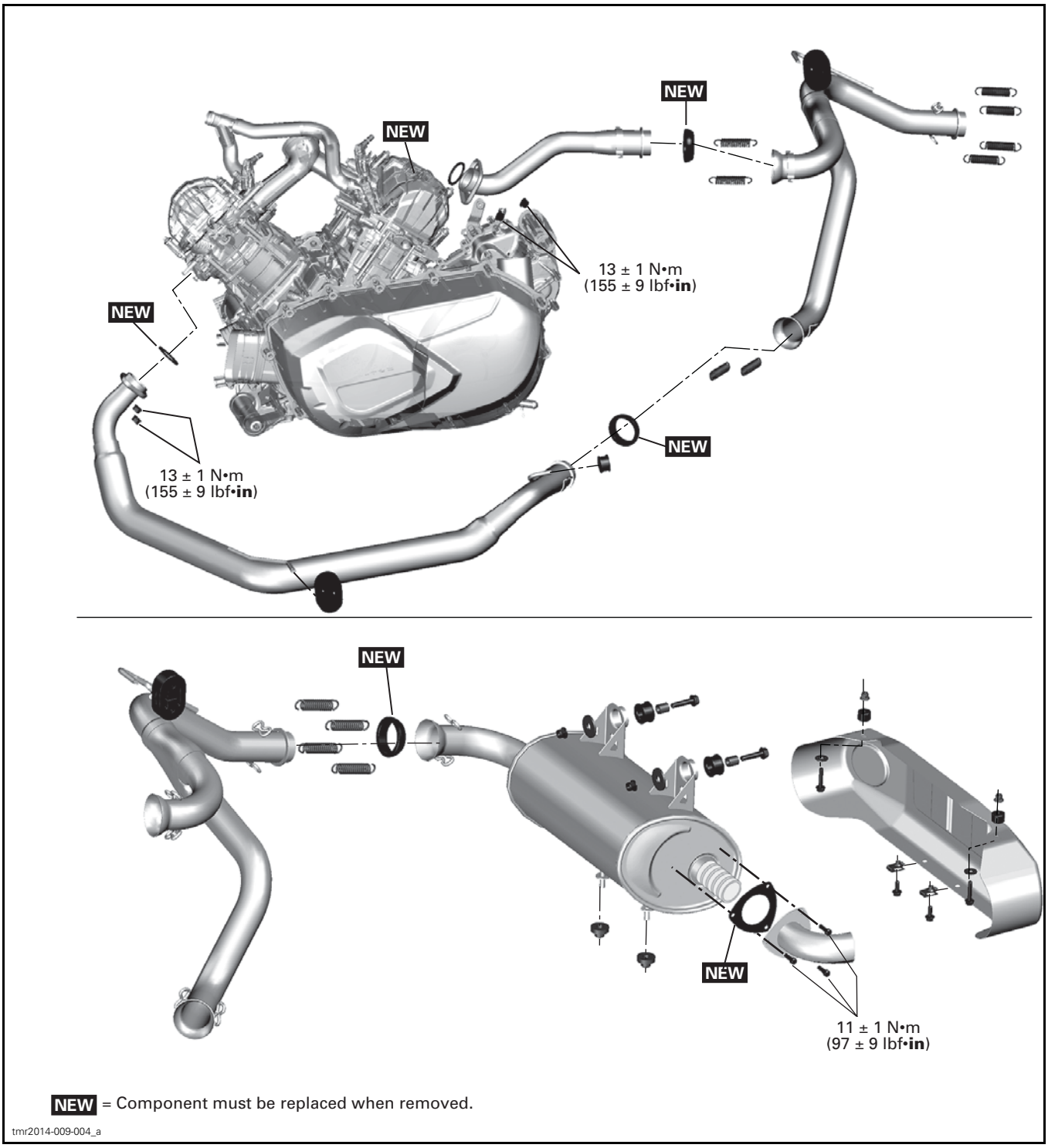

NEW = Component must be replaced when removed.

tmr2014-009-004_a

GENERAL

⚠ WARNING

Never touch exhaust system components immediately after the engine has run.

PROCEDURES

SPARK ARRESTER

For spark arrester servicing, refer to *PERIODIC MAINTENANCE PROCEDURES* subsection.

MUFFLER

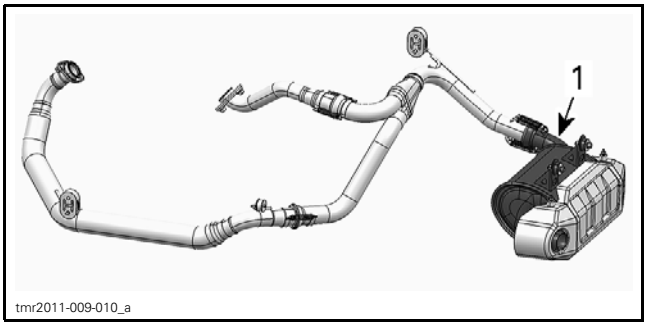

tmr2011-009-010_a

1. Muffler

Muffler Removal

1. Remove the muffler cover.

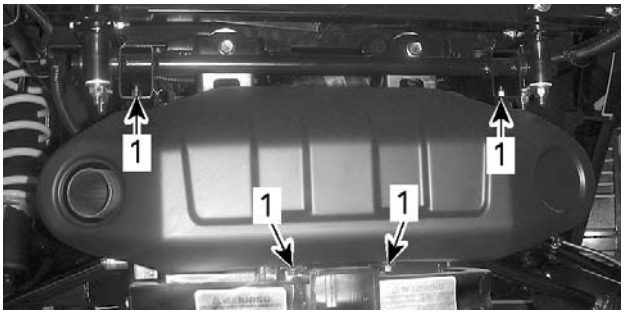

tmr2011-009-002_a

1. Muffler cover bolts

2. Open cargo box and detach springs from the "Y" exhaust pipe.

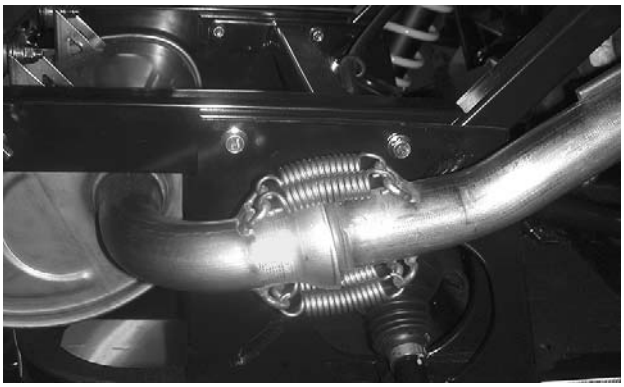

tmr2011-009-003

3. Remove muffler retaining bolts.

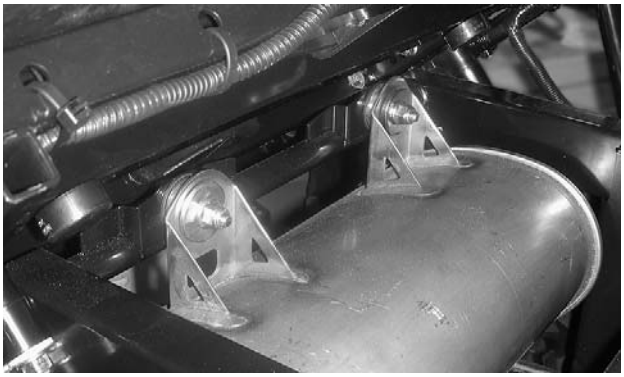

tmr2011-009-004

4. Remove the muffler.
5. Discard the gasket at the end of "Y" exhaust pipe.

Muffler Inspection

Check muffler for cracks or other damages. Replace if necessary.

Muffler Installation

For installation refer to *EXHAUST SYSTEM INSTALLATION SEQUENCE* procedure.

"Y" EXHAUST PIPE

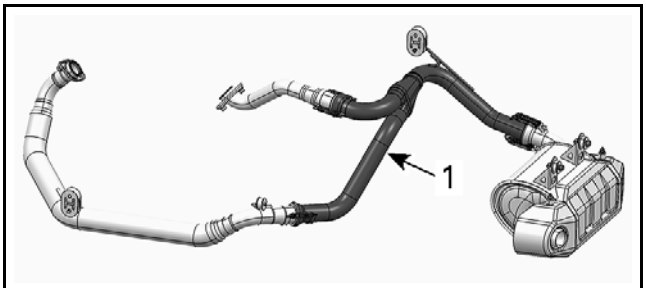

tmr2011-009-011_a

1. "Y" exhaust pipe

"Y" Exhaust Pipe Removal

1. Open the cargo box.
2. Remove the following parts:
   – Springs from head pipes
   – Muffler
   – "Y" exhaust pipe from vehicle.

"Y" Exhaust Pipe Inspection

Check "Y" exhaust pipe for cracks, bending or other damages. Replace if need.

Check if the rubber support is brittle, hard or otherwise damage. Replace if need.

"Y" Exhaust Pipe Installation

For installation refer to *EXHAUST SYSTEM INSTALLATION SEQUENCE* procedure.

HEAD PIPE (FRONT CYLINDER)

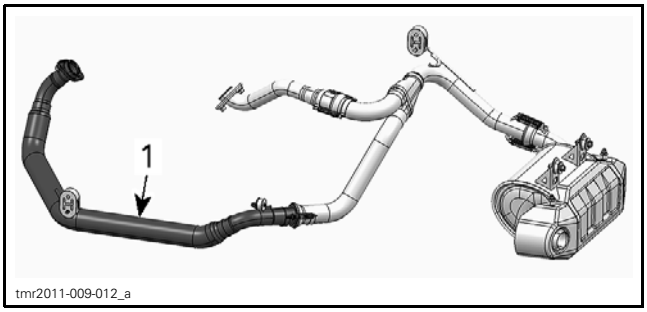

1. Front head pipe

Front Head Pipe Removal

1. Refer to *BODY* subsection and remove the following plastic parts:
   – LH lateral console panel
   – Under seat storage compartment.
2. Remove the following parts:
   – Springs from "Y" exhaust pipe
   – Rubber support
   – Head pipe nuts.
3. Remove front head pipe from vehicle according to following sub-steps:

   NOTE: The space to remove the front head pipe is limited. When the head pipe is positioned correctly as shown, it can be removed easily without force.

   3.1 Position the rubber support rod near the front of the seat bracket.

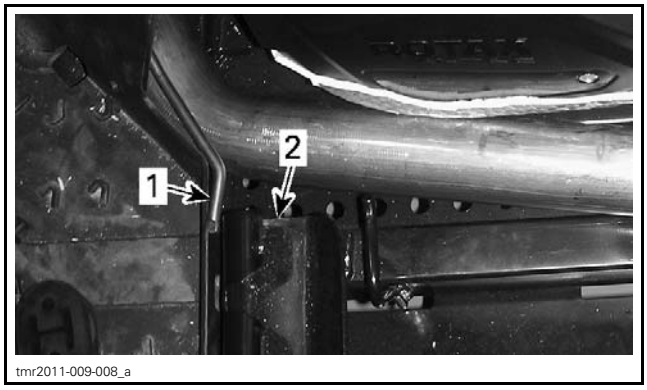

1. Rubber support rod
2. Seat bracket

3.2 Turn and lift the rear end of the head pipe.

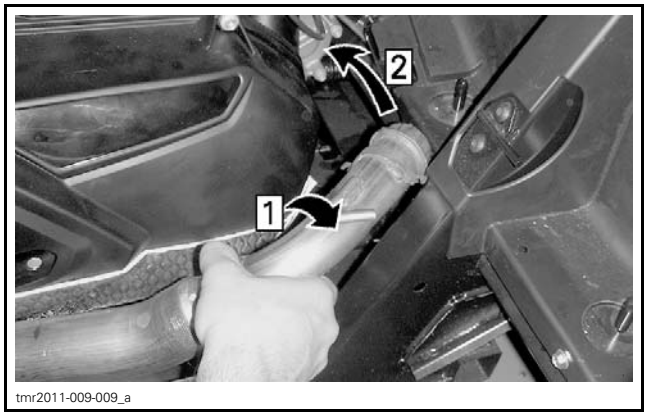

Step 1: Turn outward
Step 2: Lift

3.3 Remove head pipe from vehicle.

Front Head Pipe Inspection

Check head pipe for cracks, bending or other damages. Replace if need.

Check if the rubber support is brittle, hard or otherwise damage. Replace if need.

Front Head Pipe Installation

For installation refer to *EXHAUST SYSTEM INSTALLATION SEQUENCE* procedure.

HEAD PIPE (REAR CYLINDER)

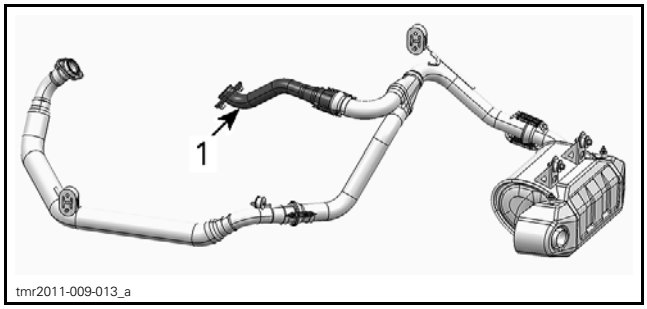

1. Rear head pipe

Rear Head Pipe Removal

1. Remove the following parts:
   – Springs from "Y" exhaust pipe
   – RH lateral console panel, refer to *BODY* subsection
   – Head pipe nuts.
2. Remove head pipe from the vehicle.
3. Remove and discard exhaust gaskets.

Rear Head Pipe Inspection

Check head pipe for cracks, bending or other damages. Replace if need.

Check if the rubber support is brittle, hard or otherwise damage. Replace if need.

Rear Head Pipe Installation

For installation refer to *EXHAUST SYSTEM INSTALLATION SEQUENCE* procedure.

EXHAUST SYSTEM INSTALLATION SEQUENCE

When a part of the exhaust system needs to be removed, a specific sequence must be met during the installation to avoid leaks or damaging parts.

CAN, USA and Int'l Models

1. Tighten muffler retaining bolts.

TIGHTENING TORQUE	
Muffler retaining bolts	24.5 N•m ± 3.5 N•m (18 lbf•ft ± 3 lbf•ft)

2. Install front and rear head pipes to cylinder heads. Finger tight retaining nuts.

NOTICE **During front head pipe installation, a minimum gap of 10 mm (3/8 in) between head pipe and frame must be kept. Use any M10 or M12 screw as a gauge.**

3. Insert the front head pipe hook into the anti-vibration rubber.
4. Install the muffler inlet elbow to the muffler using the clamp. Tighten clamp just enough to be able to rotate the elbow.
5. Position the "Y" exhaust pipe by installing gaskets (3x), springs (12x) and inserting the head pipe hook into rubber support.
6. Align front and rear head pipes, "Y" exhaust pipe and inlet elbow.

NOTE: During the alignment of pipes, make sure to keep joints all with springs straight as possible, however a slight angle is allowed.

7. Tighten head pipe nuts.

TIGHTENING TORQUE	
Head pipe nuts	13 N•m ± 1 N•m (115 lbf•**in** ± 9 lbf•**in**)

8. Tighten the muffler extension pipe clamp.

TIGHTENING TORQUE	
Muffler extension pipe clamp	35 N•m ± 2 N•m (26 lbf•ft ± 1 lbf•ft)

CE Models

1. Tighten muffler retaining bolts.

TIGHTENING TORQUE	
Muffler retaining bolts	24.5 N•m ± 3.5 N•m (18 lbf•ft ± 3 lbf•ft)

2. Install front and rear head pipes to cylinder heads. Finger tight retaining nuts.

NOTICE **During front head pipe installation, a minimum gap of 10 mm (3/8 in) between head pipe and frame must be kept. Use any M10 or M12 screw as a gauge.**

3. Insert the front head pipe hook into the rubber bushing.
4. Position the "Y" exhaust pipe by installing gaskets (3x), springs (8x) and inserting the hanger rod into rubber support.
5. Align front and rear head pipes, "Y" exhaust pipe and inlet elbow.

NOTE: During the alignment of pipes, make sure to keep joints all with springs straight as possible, however a slight angle is allowed.

6. Tighten head pipe nuts.

TIGHTENING TORQUE	
Head pipe nuts	13 N•m ± 1 N•m (115 lbf•**in** ± 9 lbf•**in**)

LUBRICATION SYSTEM

SERVICE TOOLS

Description	Part Number	Page
ADAPTER HOSE	529 035 652	54
DISCONNECT TOOL	529 035 714	54
PRESSURE GAUGE	529 035 709	54

SERVICE PRODUCTS

Description	Part Number	Page
LOCTITE 243 (BLUE)	293 800 060	56, 60

COMPONENTS

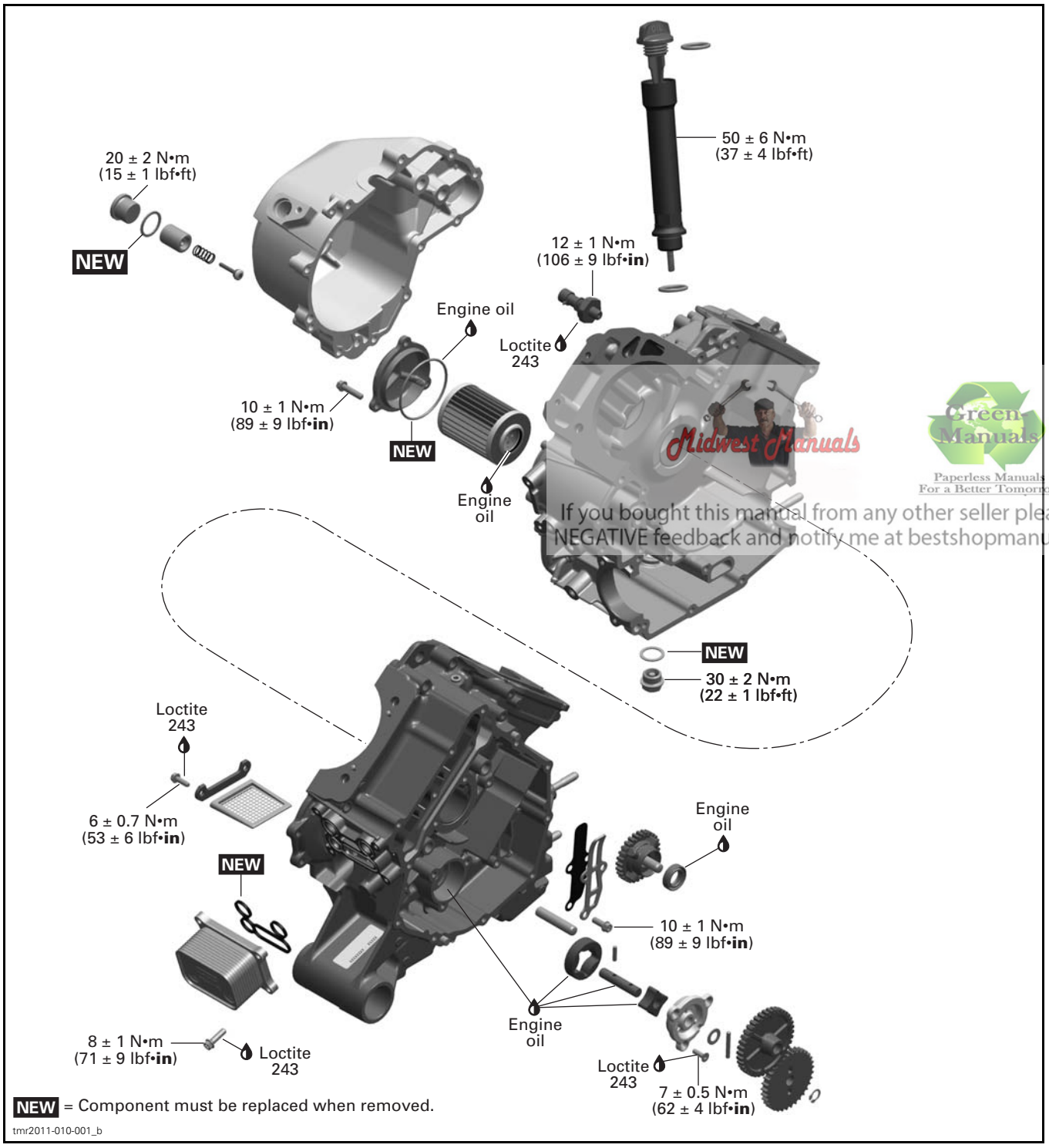

NEW = Component must be replaced when removed.

tmr2011-010-001_b

Midwest Manuals
Green Manuals
Paperless Manuals
For a Better Tomorrow
If you bought this manual from any other seller please leave them NEGATIVE feedback and notify me at bestshopmanuals@gmail.com

ENGINE LUBRICATION CIRCUIT

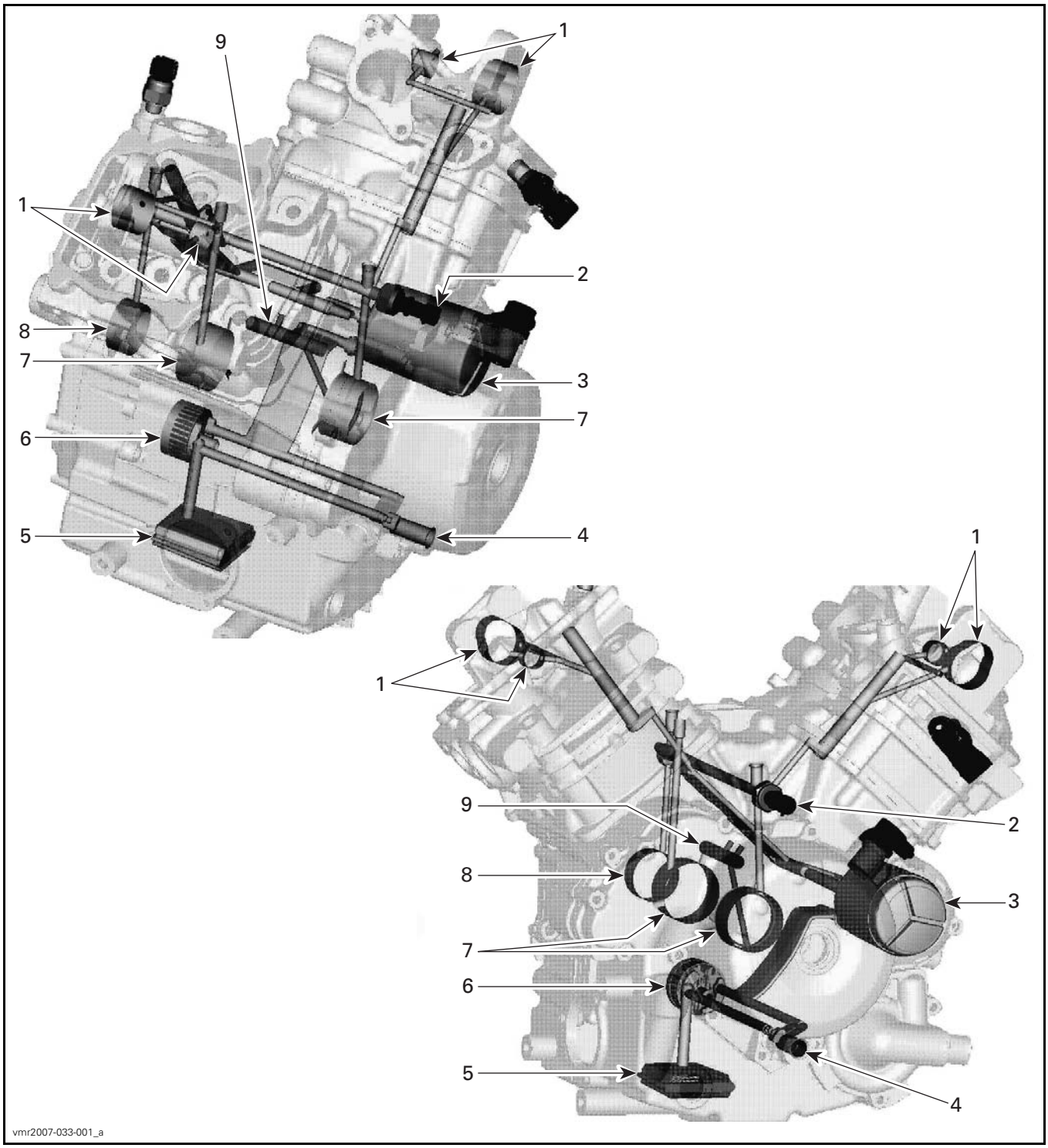

1. *Camshaft bearings*
2. *Oil pressure switch*
3. *Oil filter*
4. *Oil pressure regulator valve*
5. *Oil strainer*
6. *Oil pump*
7. *Crankshaft main bearings*
8. *Crankshaft support bearing*
9. *Connecting rod bearings*

INSPECTION

ENGINE OIL PRESSURE

NOTE: The engine oil pressure test should be done with a warm engine 100°C (212°F) and the recommended oil.

Remove the oil pressure switch. Refer to *OIL PRESSURE SWITCH* in this subsection.

Use the pressure gauge with the proper adapter hose.

REQUIRED TOOL	
PRESSURE GAUGE (P/N 529 035 709)	
ADAPTER HOSE (P/N 529 035 652)	

The engine oil pressure should be within the following values.

OIL PRESSURE	1250 RPM	6000 RPM
MINIMAL	70 kPa (10 PSI)	300 kPa (44 PSI)
NOMINAL	150 kPa (22 PSI)	350 kPa (51 PSI)
MAXIMAL	250 kPa (36 PSI)	450 kPa (65 PSI)

If the engine oil pressure is out of specifications, check the points described in *TROUBLESHOOTING* in this subsection.

Remove oil pressure gauge and adapter hose.

NOTE: To remove adapter hose from oil pressure gauge, use the disconnect tool.

REQUIRED TOOL	
DISCONNECT TOOL (P/N 529 035 714)	

Reinstall the oil pressure switch.

TROUBLESHOOTING

LOW OR NO OIL PRESSURE

1. Oil level is too low.
   - *Refill engine with recommended engine oil. Refer to OIL LEVEL VERIFICATION in the PERIODIC MAINTENANCE PROCEDURES subsection.*
   - *Check for high oil consumption, refer to HIGH OIL CONSUMPTION in the TROUBLESHOOTING subsection.*
   - *Check for engine oil leaks. For leak indicator hole, refer to COOLING SYSTEM INSPECTION in the PERIODIC MAINTENANCE PROCEDURES subsection. Repair if necessary.*
2. Use of unsuitable engine oil type.
   - *Replace engine oil by the recommended engine oil.*
3. Clogged oil filter.
   - *Replace oil and oil filter at the same time.*
4. Defective oil pressure switch.
   - *Test oil pressure switch, see procedure in this subsection.*
5. Defective or worn oil pump.
   - *Check oil pump, see procedure in this subsection.*
6. Defective engine oil pressure regulator.
   - *Check engine oil pressure regulator, see procedure in this subsection.*
7. Worn plain bearings in crankcase.
   - *Check plain bearings clearance, refer to BOTTOM END subsection.*
8. Clogged engine oil strainer.
   - *Clean engine oil strainer, see procedure in this subsection.*

OIL CONTAMINATION

1. Defective water pump seal ring or rotary seal.
   - *Check for oil or coolant leak from indicator hole near water pump, refer to COOLING SYSTEM INSPECTION in the PERIODIC MAINTENANCE PROCEDURES subsection. Replace seal if necessary.*
2. Cylinder head or cylinder base gasket leak.
   - *Retighten cylinder head to specified torque, refer to TOP END subsection. Replace gasket if tightening does not solve the problem.*
3. Engine internal damage.
   - *Repair engine.*
4. Oil cooler gasket leak.
   - *Replace oil cooler gasket and change engine oil.*

HIGH OIL CONSUMPTION

1. Leaking breather oil seal.
   - *Check if the oil seal of the breather is brittle, hard or damaged. Refer to BOTTOM END subsection.*
2. Valve stem seals worn or damaged.
   - *Replace valve stem seals.*
3. Worn piston rings (blue exhaust smoke).
   - *Replace piston rings.*

PROCEDURES

OIL COOLER

Oil Cooler Access

Refer to *BODY* and remove:
– Upper console
– Lower console
– RH lateral console panel
– RH inner panel
– Fuel tank cowl.

Oil Cooler Removal

Refer to the *PERIODIC MAINTENANCE PROCEDURES* subsection to:
– Drain engine oil.
– Drain engine coolant.

Remove oil cooler retaining screws.

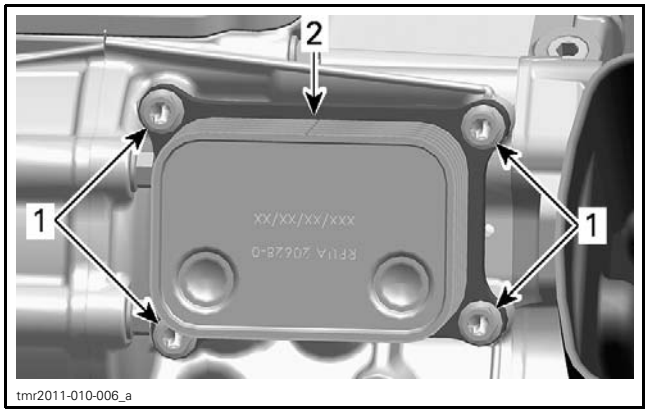

tmr2011-010-006_a

1. Retaining screws
2. Oil cooler

Place rags or towels under oil cooler to catch remaining oil and coolant.

Remove oil cooler and discard gasket.

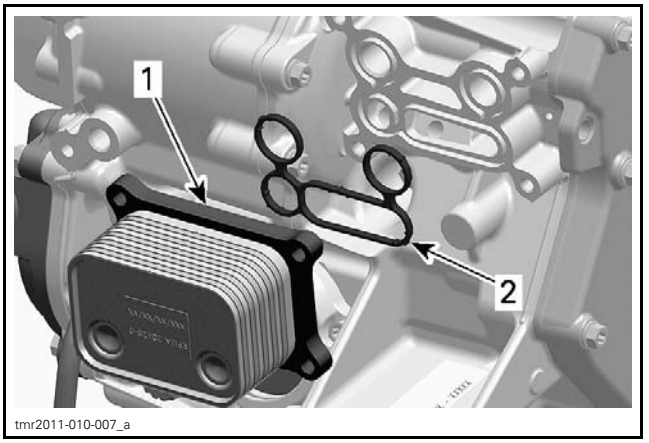

tmr2011-010-007_a

1. Oil cooler
2. Gasket

Oil Cooler Inspection

Check oil cooler for cracks or other damage.

Replace if necessary.

Oil Cooler Installation

For installation, reverse the removal procedure. Pay attention to the following details.

Wipe off any oil and coolant spillage.

Install a NEW gasket.

Refer to *PERIODIC MAINTENANCE PROCEDURES* subsection and carry out the following:
– Refill engine oil with recommended oil and at the proper oil lever.
– Refill and bleed cooling system.

OIL PRESSURE SWITCH (OPS)

Oil Pressure Switch Location

The oil pressure switch is located at engine MAG side above the magneto cover.

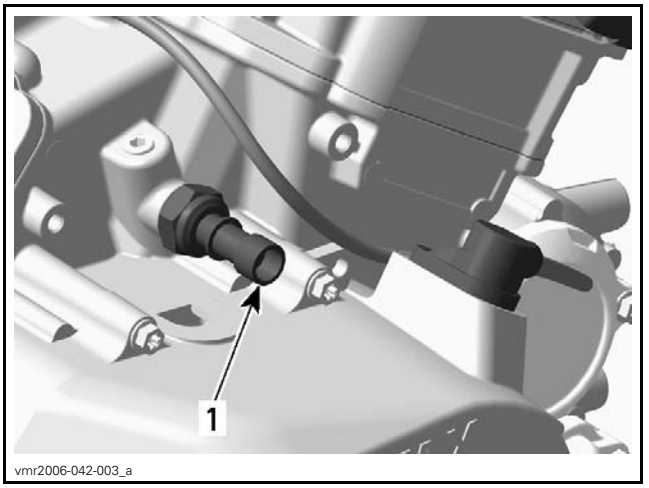

vmr2006-042-003_a

1. Oil pressure switch

Oil Pressure Switch Access

Refer to *BODY* and remove:
– Upper console
– Lower console
– RH lateral console panel
– RH inner panel
– Fuel tank cowl.

Oil Pressure Switch Activation

The oil pressure switch activates when the engine oil pressure is lower than the operating pressure.

OIL PRESSURE SWITCH OPERATING PRESSURE
30 kPa ± 10 kPa (4.35 PSI ± 1.45 PSI)

To check the function of the oil pressure switch, an oil pressure test has to be performed. Refer to *ENGINE OIL PRESSURE* in this subsection.

If the engine oil pressure is good perform the oil pressure switch resistance test.

Oil Pressure Switch Resistance Test

Disconnect the connector from the oil pressure switch.

Use a multimeter to check the resistance between as shown.

OPS CONNECTOR		ENGINE NOT RUNNING	ENGINE RUNNING
PIN		RESISTANCE (Ω)	
4	Engine ground	Close to 0 Ω (normally closed switch)	Infinite (open) when pressure reaches 30 kPa ± 10 kPa (4.35 PSI ± 1.45 PSI)

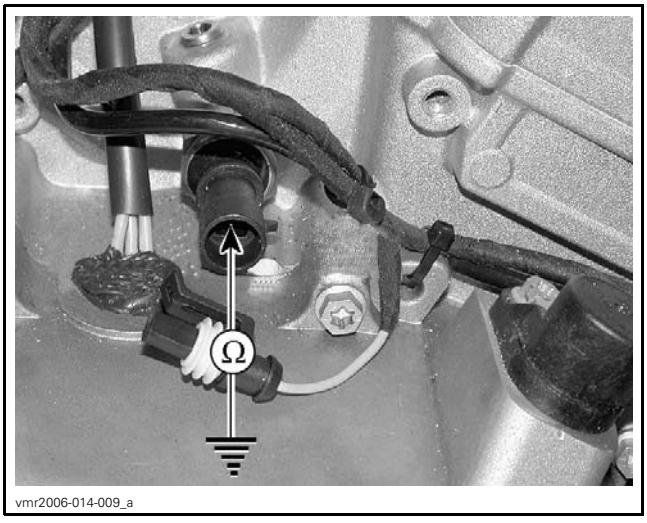

vmr2006-014-009_a

If resistance values are incorrect, replace the oil pressure switch.

If the values are correct, check wiring.

Oil Pressure Switch Removal

Unplug the oil pressure switch connector.

Unscrew and remove oil pressure switch.

Oil Pressure Switch Installation

Tighten oil pressure switch to specified torque.

OIL PRESSURE SWITCH	
Service product	LOCTITE 243 (BLUE) (P/N 293 800 060)
Tightening torque	12 N•m ± 1 N•m (106 lbf•**in** ± 9 lbf•**in**)

ENGINE OIL PRESSURE REGULATOR

Oil Pressure Regulator Location

The oil pressure regulator is located on the engine magneto side (inside magneto cover).

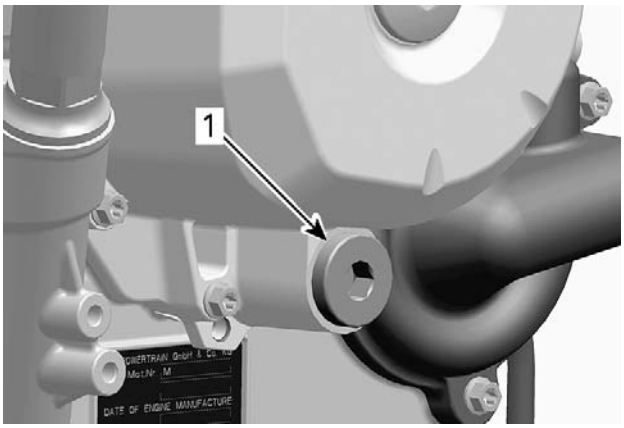

tmr2011-010-010_a

1. Engine oil pressure regulator

NOTE: The oil pressure regulator system works when the oil pressure exceeds 400 kPa (58 PSI).

Oil Pressure Regulator Access

Refer to *BODY* and remove:
– Upper console
– Lower console
– RH lateral console panel
– RH inner panel
– Fuel tank cowl.

Oil Pressure Regulator Removal

Remove plug screw and pull oil pressure regulator out.

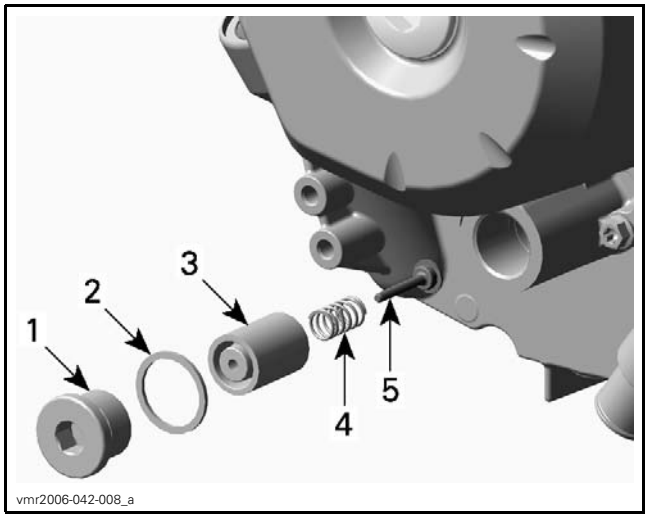

1. *Plug screw*
2. *Gasket ring*
3. *Pressure regulator housing*
4. *Spring*
5. *Pressure regulator valve*

Oil Pressure Regulator Inspection

Inspect pressure regulator housing and valve for scoring or other damages.

Check spring for free length.

SPRING FREE LENGTH	
NEW NOMINAL	39 mm (1.535 in)
SERVICE LIMIT	37 mm (1.457 in)

NOTE: Replace worn or damaged components.

Clean bore and thread in the magneto housing from metal shavings and other contaminations.

Oil Pressure Regulator Installation

For installation, reverse the removal procedure. Pay attention to the following details.

NOTE: At installation always replace the gasket ring of the plug screw by a new one.

OIL PUMP

Oil Pump Location

The oil pump is located on the engine PTO side (behind PTO cover).

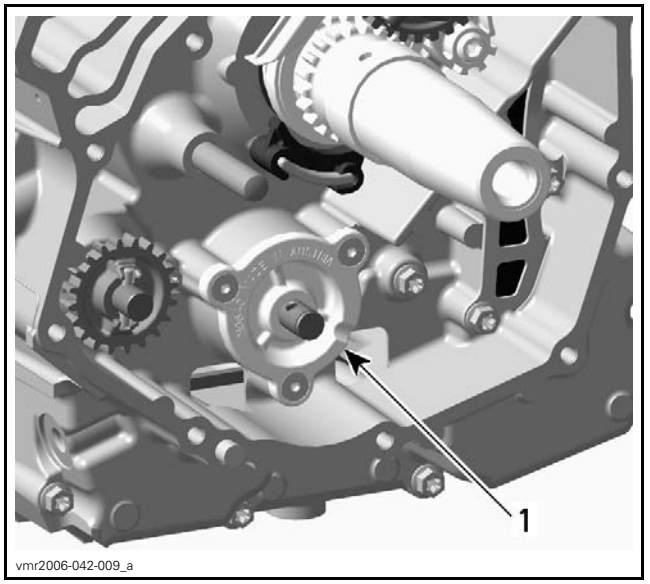

1. *Oil pump*

Oil Pump Removal

Remove the PTO cover. Refer to *PTO COVER* in the *BOTTOM END* subsection.

1. Remove:
   - Retaining ring
   - Oil pump gear
   - Needle pin
   - Thrust washer.

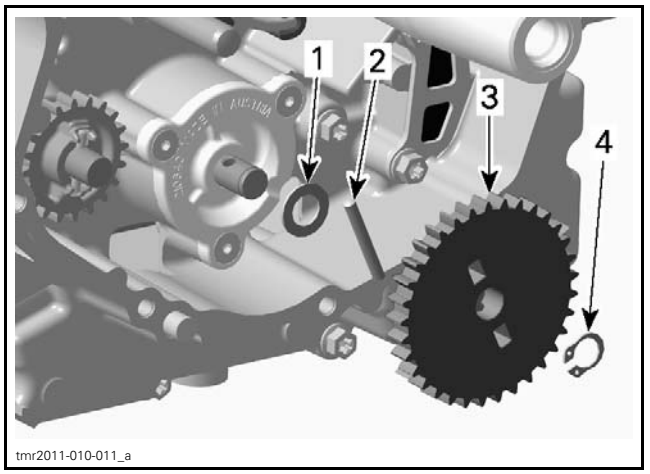

1. *Thrust washer*
2. *Needle pin*
3. *Oil pump gear*
4. *Retaining ring*

2. Remove oil pump cover screws and pull oil pump cover out.

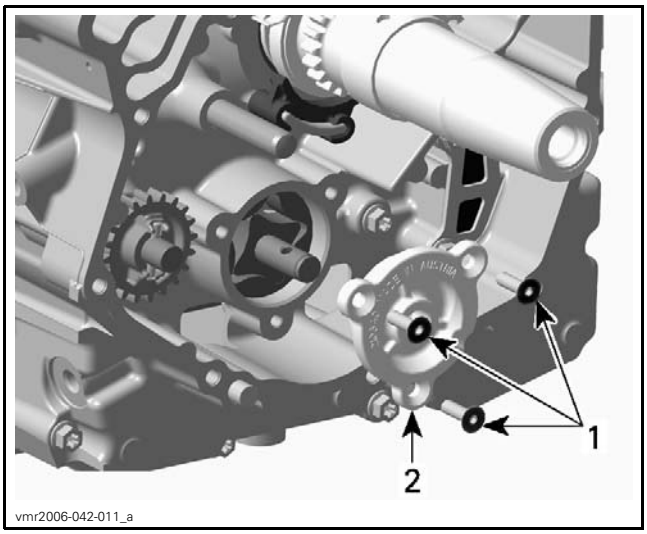

1. Retaining screws
2. Oil pump cover

3. Remove oil pump shaft with needle pin and inner rotor.
4. Remove outer rotor.

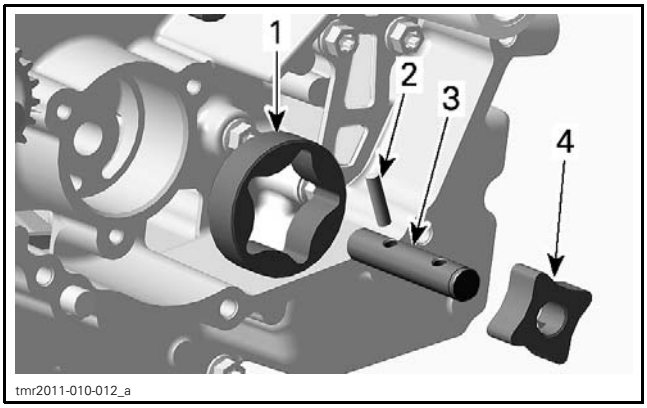

1. Outer rotor
2. Needle pin
3. Oil pump shaft
4. Inner rotor

Oil Pump Inspection

Inspect oil pump and oil pump cover bore for marks, scratches or other damages. Check for scratches in crankcase between outer rotor and oil pump bore. If so, replace damaged parts.

Check oil pump cover for damages and for surface straightness with a straightedge.

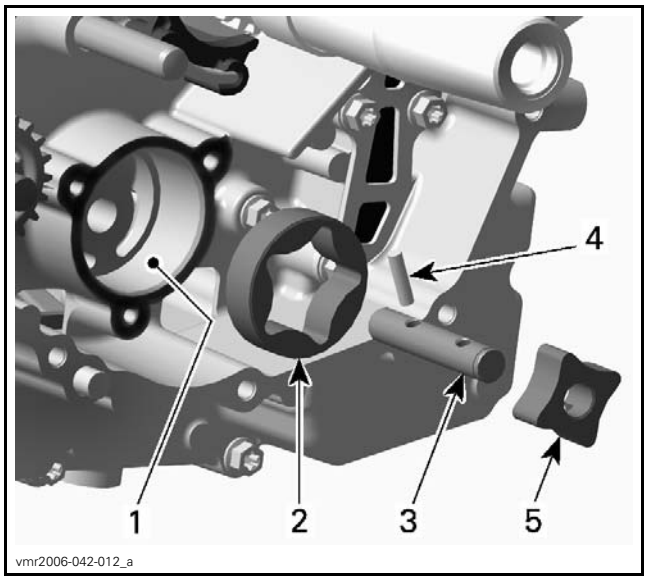

1. Oil pump bore
2. Outer rotor
3. Oil pump shaft
4. Needle pin
5. Inner rotor

Check inner rotor for corrosion pin holes or other damages. If so, replace oil pump shaft assembly.

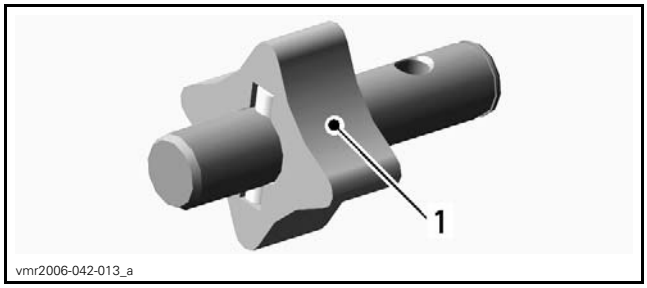

1. Pittings on the teeth

Using a feeler gauge, measure the clearance of inner and outer rotors as shown.

CLEARANCE OF INNER AND OUTER ROTOR	
SERVICE LIMIT	0.25 mm (.0098 in)

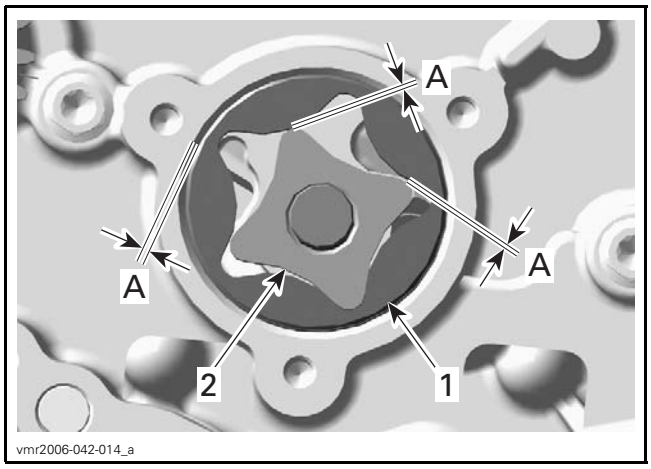

1. Outer rotor
2. Inner rotor
A. 0.25 mm (.0098 in)

If clearance of inner and outer rotors exceeds the tolerance, replace oil pump rotors. Ensure to also check oil pump cover. If damaged, replace the complete oil pump assembly.

If clearance between outer rotor and its bore in crankcase exceeds the tolerance, replace the complete oil pump rotors and/or the crankcase.

Using a depth gauge, measure the axial clearance of the oil pump as shown.

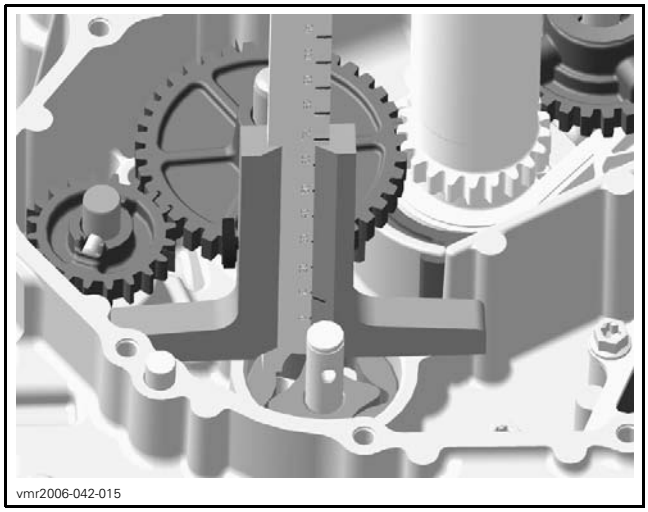

OIL PUMP — MEASUREMENT "A"

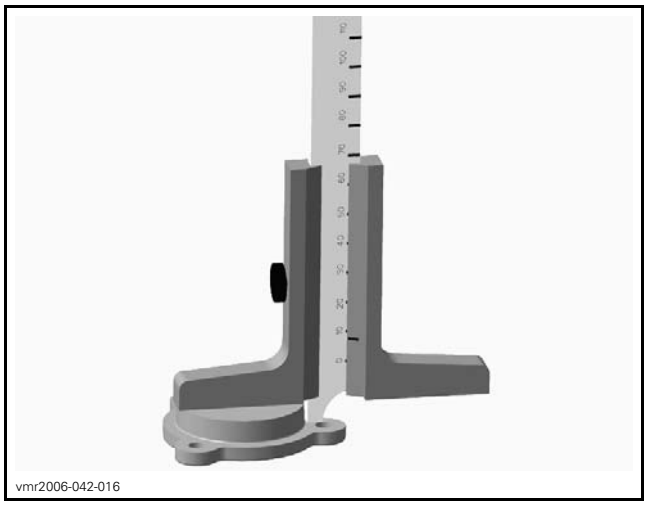

OIL PUMP COVER — MEASUREMENT "B"

Substract measurement "B" from measurement "A" to obtain axial clearance.

OIL PUMP AXIAL CLEARANCE	
SERVICE LIMIT	0.2 mm (.0079 in)

NOTE: When the axial clearance of the oil pump shaft assembly increases, the oil pressure decreases.

Oil Pump Installation

For installation, reverse the removal procedure.

Pay attention to the following details.

NOTE: When installing the oil pump rotors, make sure both markings are on the outer side.

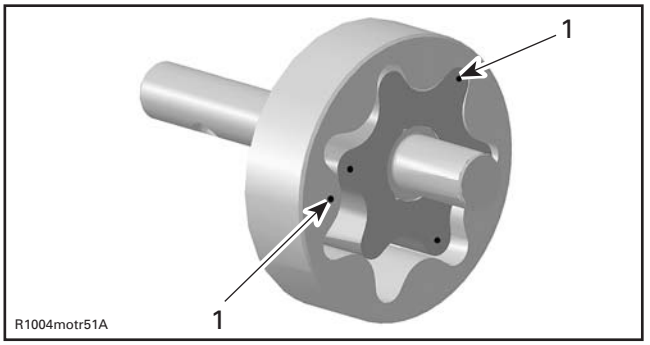

TYPICAL
1. Markings

After reinstallation of the remaining parts, check for smooth operation of the oil pump assembly.

Oil Pump Final Test

After engine is completely reassembled, start engine and make sure oil pressure is within specifications (refer to *ENGINE OIL PRESSURE* in this subsection).

ENGINE OIL STRAINER

Oil Strainer Location

The engine oil strainer is located between both crankcase halves.

Oil Strainer Removal

Separate crankcase halves. Refer to *BOTTOM END* subsection.

Remove screws and retaining plate.

Pull out engine oil strainer.

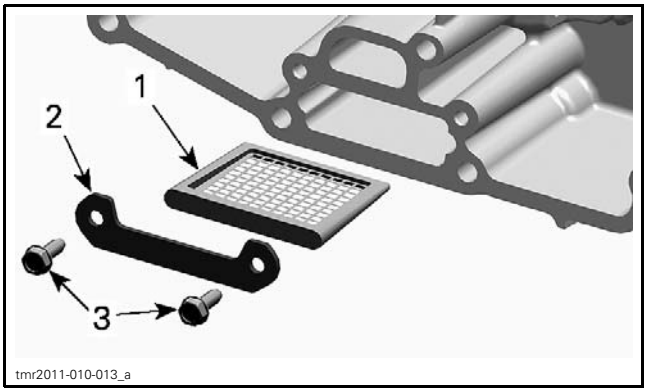

1. Engine oil strainer
2. Retaining plate
3. Screws

Oil Strainer Cleaning and Inspection

Clean engine oil strainer with a part cleaner then use an air gun to dry it.

⚠ WARNING

Always wear eye protector. Chemicals can cause a rash break out and injure your eyes.

Check engine oil strainer for cracks or other damage. Replace if damaged.

Oil Strainer Installation

The installation is the reverse of the removal procedure.

OIL STRAINER RETAINING SCREWS	
Service product	LOCTITE 243 (BLUE) (P/N 293 800 060)
Tightening torque	6 N•m ± 0.7 N•m (53 lbf•**in** ± 6 lbf•**in**)

REED VALVE

The engine is equipped with a reed valve which prevents accumulation of larger oil quantities in the crankcase. The reed valve is fitted into the crankcase.

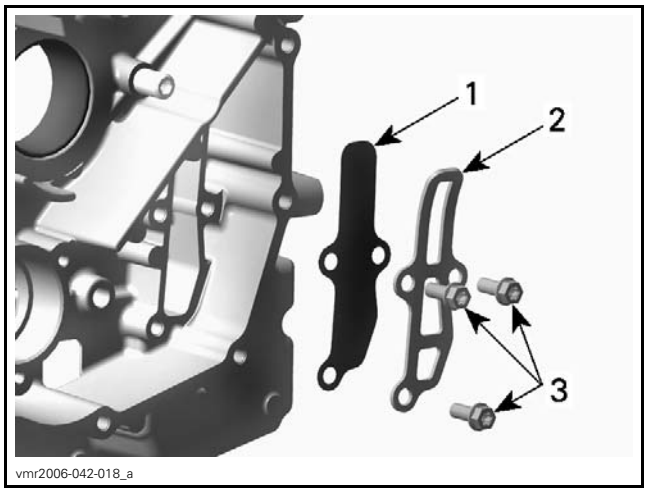

1. Reed valve
2. Stopper
3. Screws

Reed Valve Removal

Remove:

– PTO cover (refer to *PTO COVER* in the *BOTTOM END* subsection)
– Reed valve retaining screws
– Stopper plate
– Reed valve.

Reed Valve Inspection

Check reed valve for cracks or other damage.

Replace reed valve if damaged.

Reed Valve Installation

The installation is the reverse of the removal procedure.

REED VALVE RETAINING SCREWS	
Tightening torque	10 N•m ± 1 N•m (89 lbf•**in** ± 9 lbf•**in**)

COOLING SYSTEM

SERVICE TOOLS

Description	Part Number	Page
BLIND HOLE PULLER KIT	529 036 056	18
HANDLE	420 877 650	19
LARGE HOSE PINCHER	529 032 500	7–8
OIL SEAL PUSHER	529 035 757	19
ROTARY SEAL PUSHER PLATE	529 036 130	16
SEAL PUSHER	529 035 766	16, 20

SERVICE PRODUCTS

Description	Part Number	Page
DOW CORNING 111	413 707 000	19
LOCTITE 243 (BLUE)	293 800 060	8

RADIATOR

2-UP Models - 800R Engine

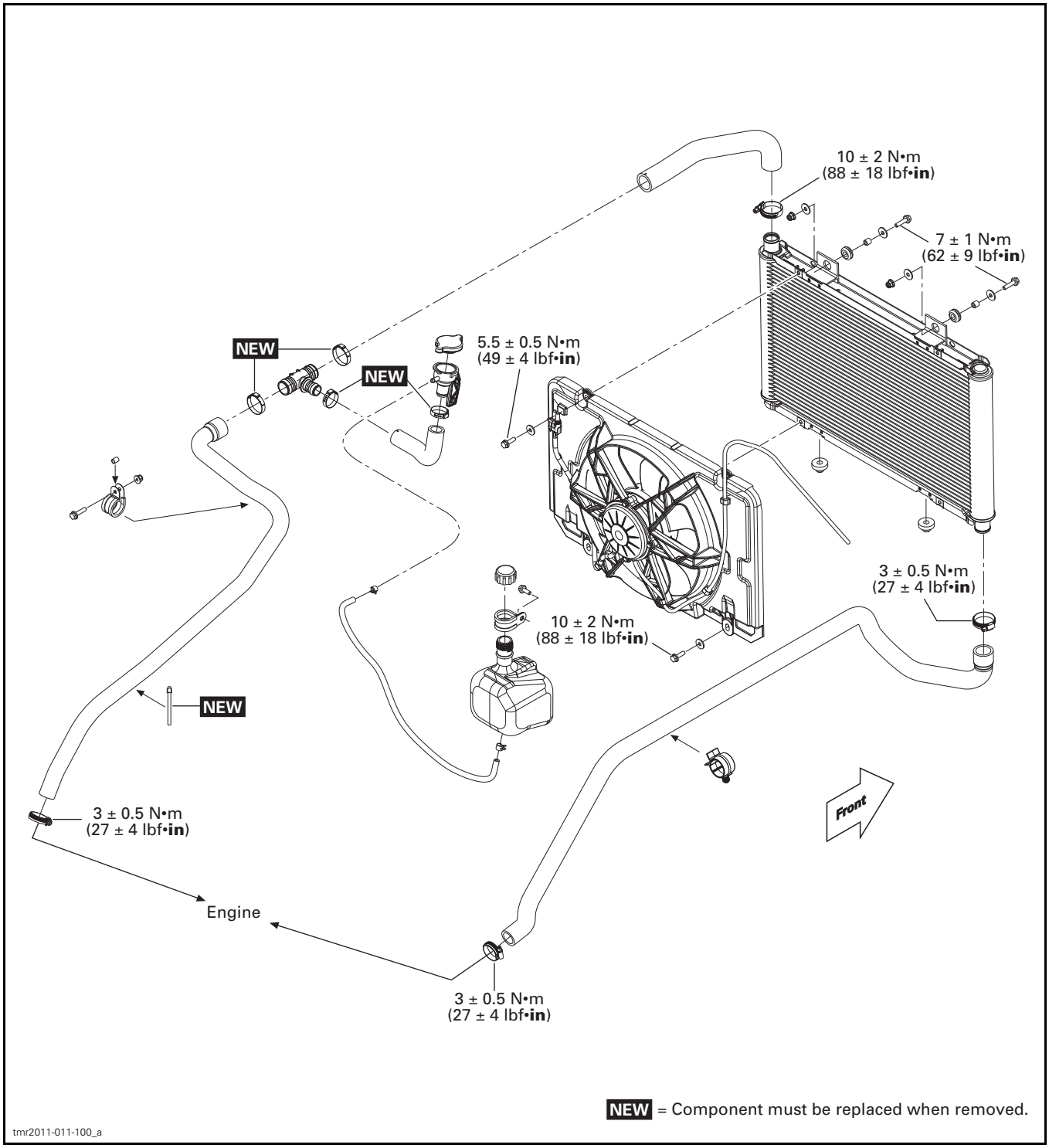

RADIATOR

2-UP Models - 1000 Engine

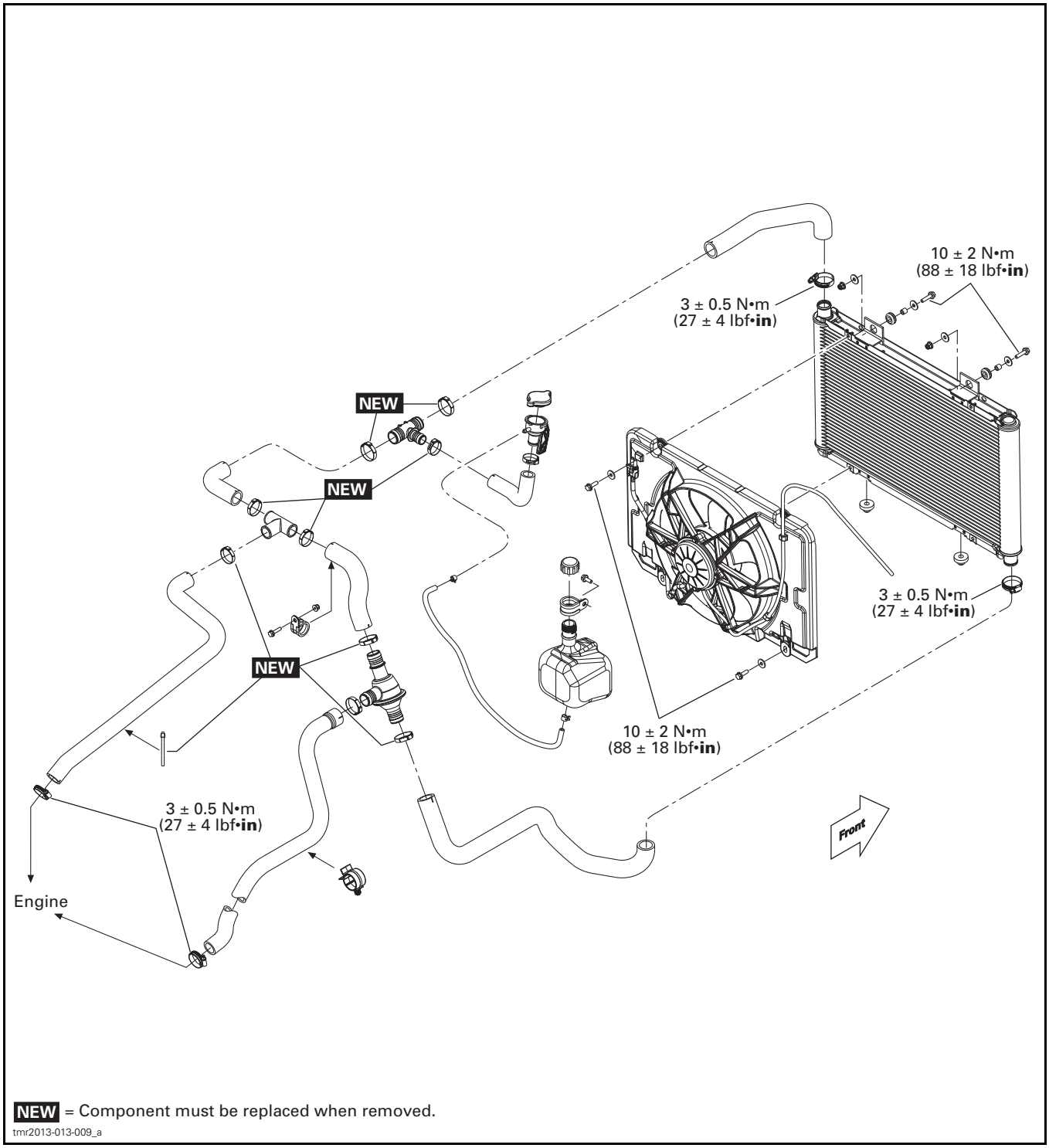

RADIATOR

MAX Models

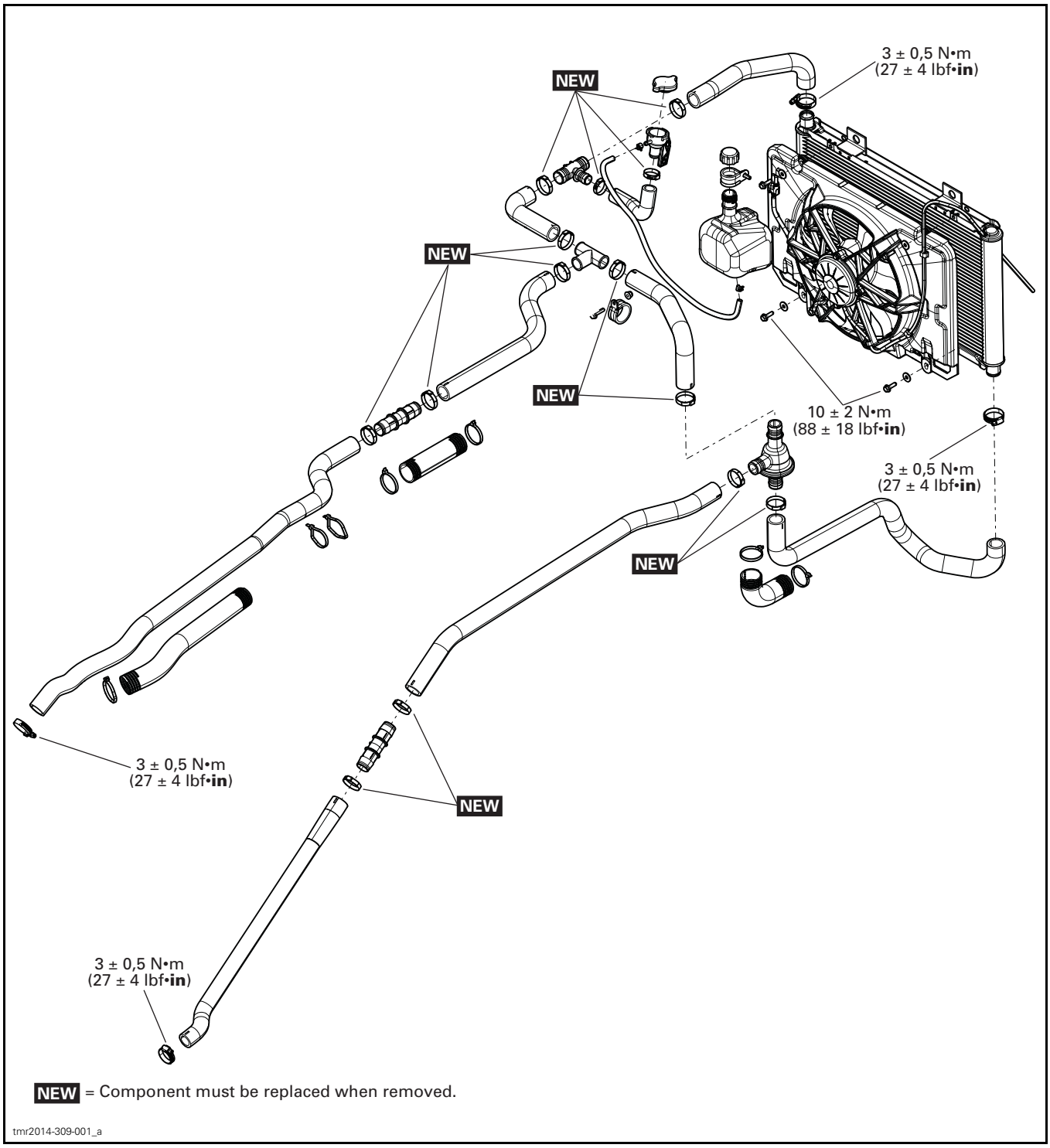

WATER PUMP

800R Engine

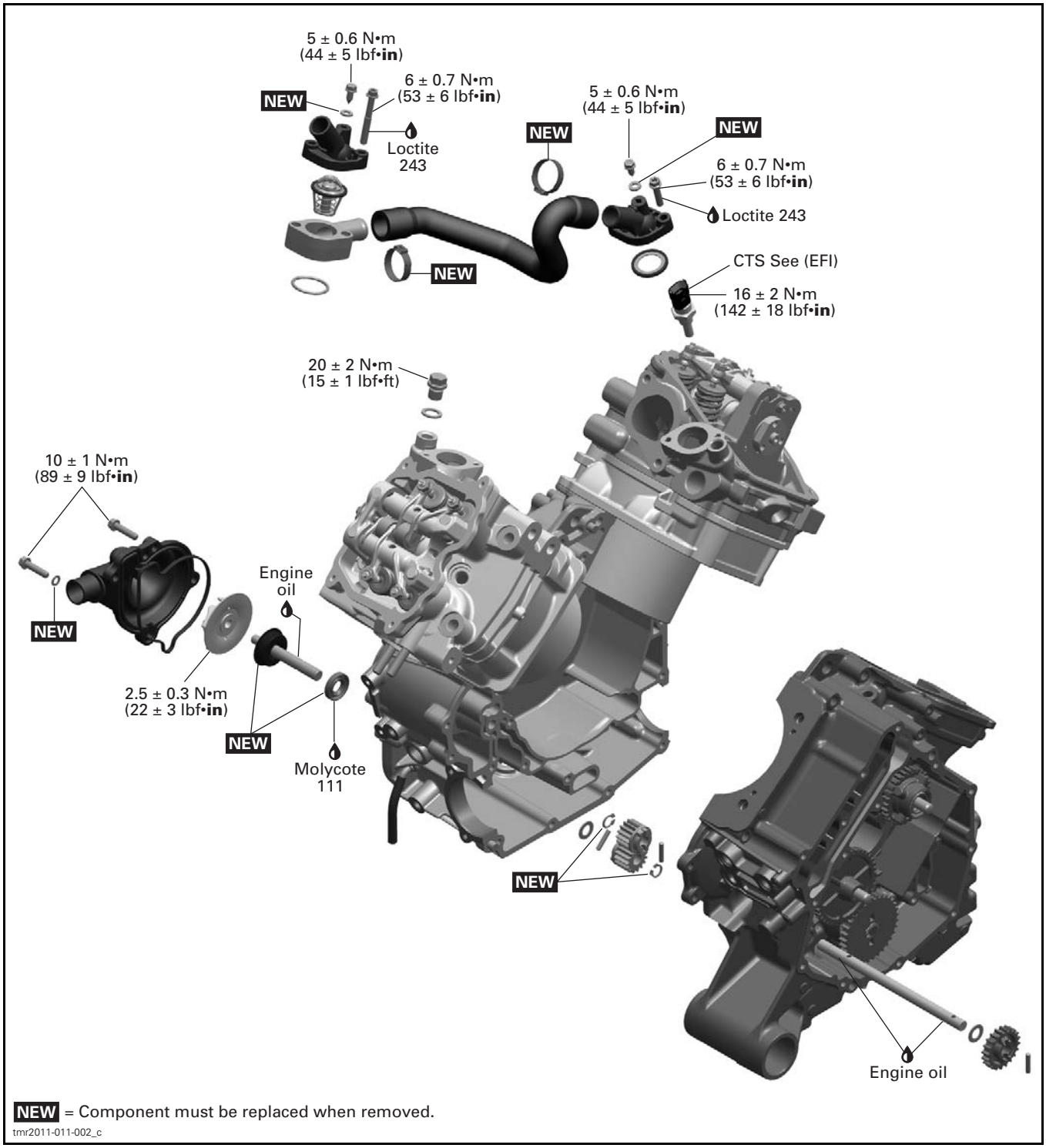

NEW = Component must be replaced when removed.

tmr2011-011-002_c

WATER PUMP

1000 Engine

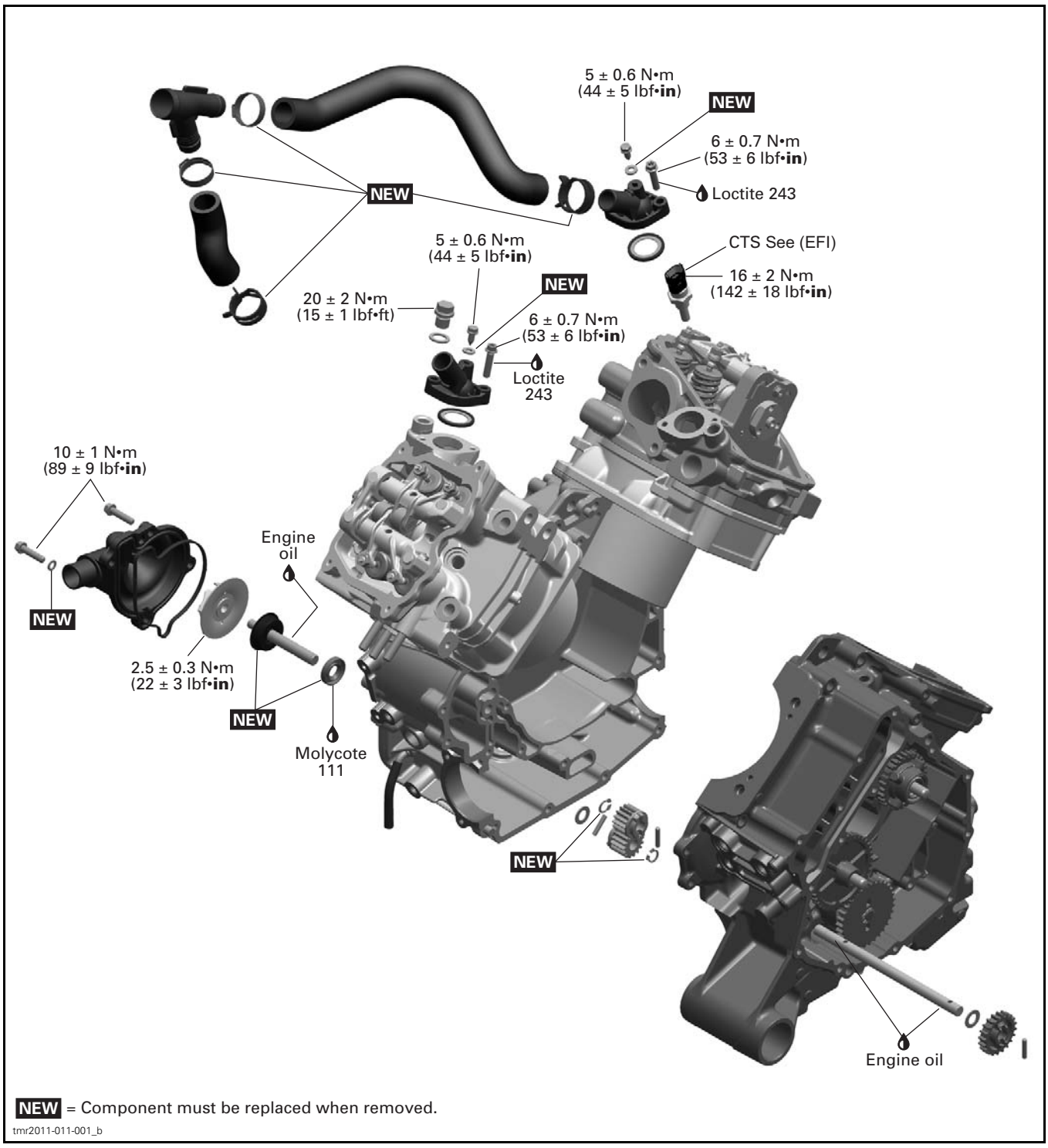

NEW = Component must be replaced when removed.

tmr2011-011-001_b

GENERAL

NOTICE Never start engine without coolant. Some engine parts such as the rotary seal on the water pump shaft can be damaged.

PROCEDURES

THERMOSTAT

The thermostat is a single action type.

Thermostat Location

800R Models

The thermostat is located in the thermostat housing at the top of the front cylinder (RH side).

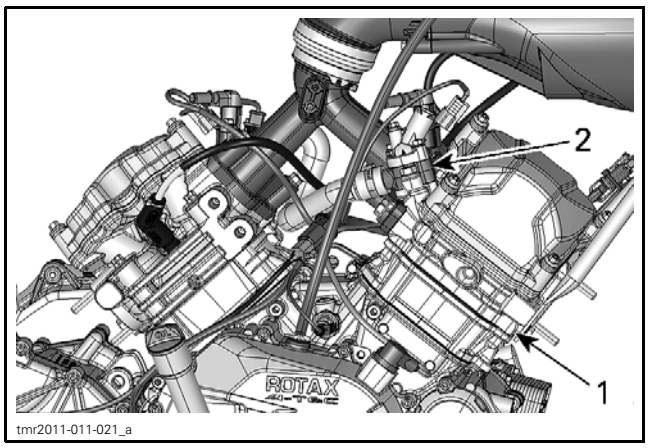

TYPICAL - THERMOSTAT LOCATION 800R MODELS
1. *Front cylinder*
2. *Thermostat housing*

1000 Models

The thermostat is mounted in-line in the cooling system circuit.

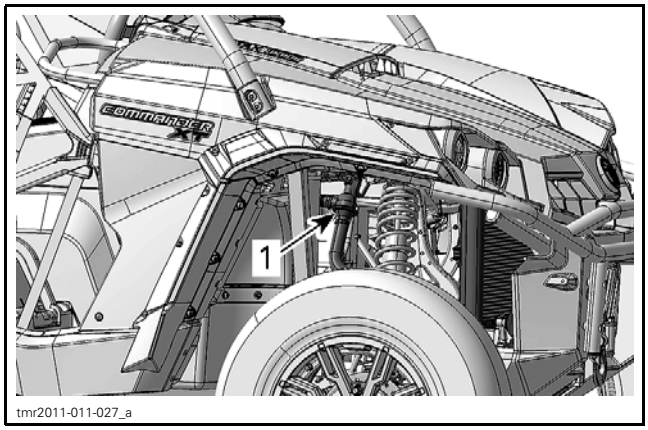

THERMOSTAT LOCATION - RH FRONT WHEEL WELL ACCESS
1. *In-line thermostat*

Thermostat Removal

800R Models

1. Install a hose pincher on both radiator hoses.

REQUIRED TOOL	
LARGE HOSE PINCHER (P/N 529 032 500)	

2. Drain remainder of cooling system, refer to *PERIODIC MAINTENANCE PROCEDURES* subsection.
3. Remove thermostat housing screws and remove thermostat cover.

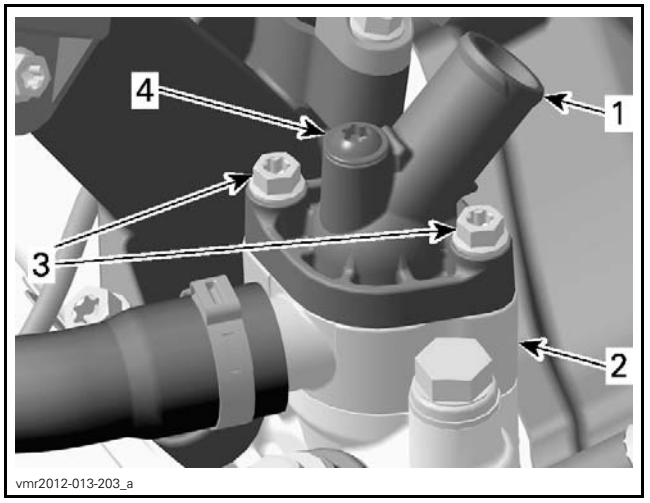

THERMOSTAT LOCATION - FRONT CYLINDER HEAD
1. *Thermostat cover*
2. *Thermostat housing*
3. *Cover screws*
4. *Bleed screw*

4. Pull thermostat and gasket from thermostat housing.

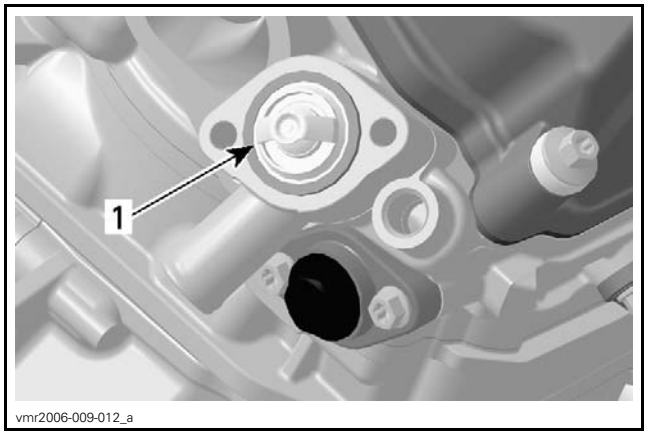

TYPICAL
1. *Thermostat with gasket*

1000 Models

1. Install a hose pincher on both radiator hoses.

REQUIRED TOOL	
LARGE HOSE PINCHER (P/N 529 032 500)	

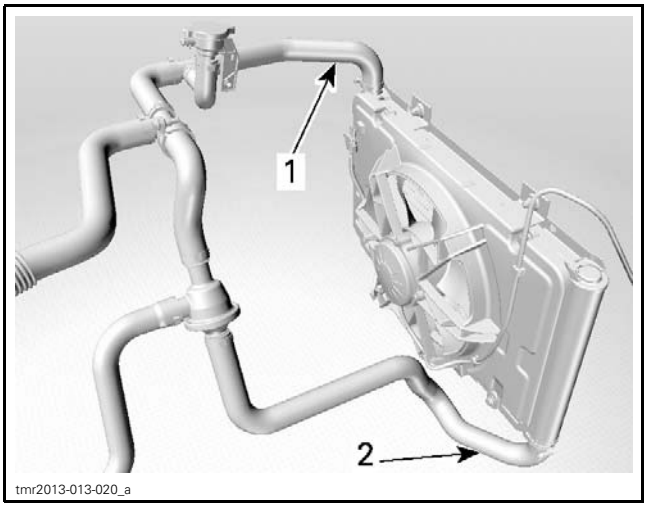

1. Install hose pincher from LH side
2. Install hose pincher from RH side

2. Drain remainder of cooling system, refer to *PERIODIC MAINTENANCE PROCEDURES* subsection.
3. Remove Oetiker clamps that secure hoses to thermostat.
4. Remove thermostat.

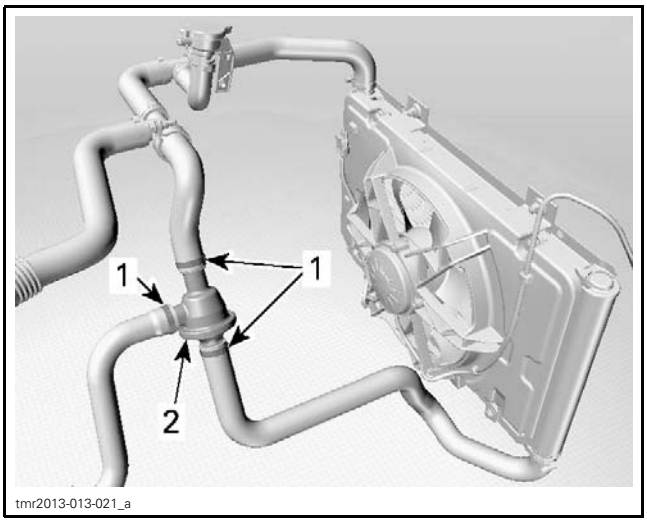

1. Clamps
2. Thermostat

Thermostat Test

To check thermostat, put it in water and heat the water.

THERMOSTAT OPENING TEMPERATURE		
MODELS	STARTS TO OPEN	FULLY OPEN
800R	65°C (149°F)	75°C (167°F)
1000	65°C (149°F)	88°C (190°F)

Replace thermostat if it does not begin to open at specified temperature.

Check if gasket is brittle, hard or damaged. If so, replace gasket.

Thermostat Installation

800R Models

For installation, reverse the removal procedure. Pay attention to the following.

THERMOSTAT COVER INSTALLATION		
GASKET	PRODUCT	TIGHTENING TORQUE
New	LOCTITE 243 (BLUE) (P/N 293 800 060) on screws	6 N•m ± 0.6 N•m (53 lbf•**in** ± 5 lbf•**in**)

1000 Models

Reverse removal procedures.

All Models

Refill cooling system.

Bleed cooling system, refer to *PERIODIC MAINTENANCE PROCEDURES* subsection.

NOTICE **The cooling system must be bled as specified.**

Check for coolant leaks.

RADIATOR

Radiator Inspection

Check radiating fins for clogging or damage.

Remove insects, mud or other obstructions with compressed air or low pressure water.

Radiator Removal

1. Install a hose pincher on both radiator hoses.

REQUIRED TOOL	
LARGE HOSE PINCHER (P/N 529 032 500)	

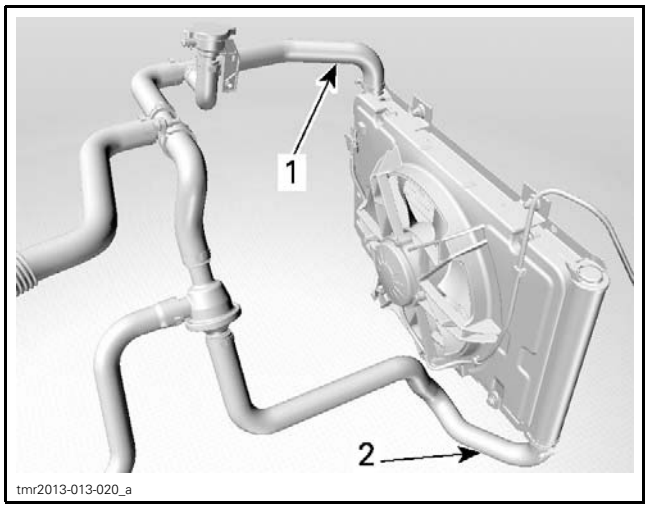

1. Install hose pincher from LH side
2. Install hose pincher from RH side

2. Lift front of vehicle to extend suspension.
3. Remove the following parts from the radiator:
   – Radiator inlet hose (LH upper)
   – Radiator outlet hose (RH lower)
   – Radiator mounting screws (2 at top of radiator).
4. Disconnect cooling fan electrical connector.
5. Remove cooling fan vent hose from frame.
6. Remove the 2 forward air filter housing mounting screws.

NOTE: This will make room for lifting the radiator off its lower mounting bushings.

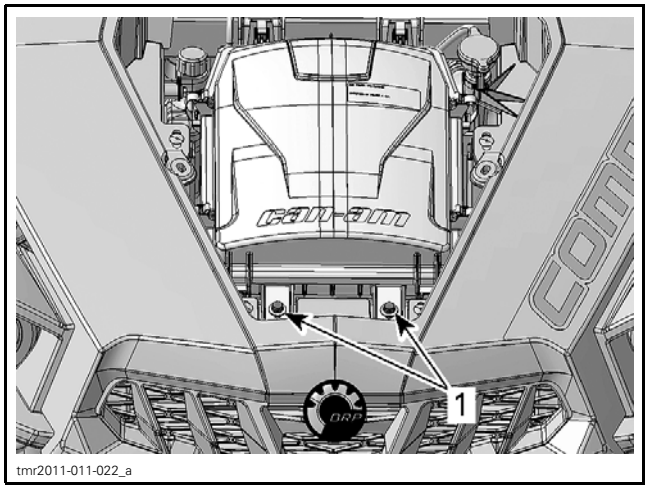

1. Forward air filter housing mounting screws to remove

Models Equipped with a Winch

7. Remove the winch, refer to *LIGHTS, GAUGE AND ACCESSORIES* subsection.

All Models

8. Lift radiator and tilt its lower end towards the front of the vehicle.

NOTE: Turning steering to LH stop or removing LH front wheel assembly provides greater access for radiator removal.

9. Carefully remove radiator through LH wheel well.

Radiator Installation

1. For installation, reverse the removal procedure however, pay attention to the following details.
2. Install the rubber bushings between bottom of radiator and radiator support.
3. Ensure the vent hose on the cooling fan motor is properly routed as illustrated.

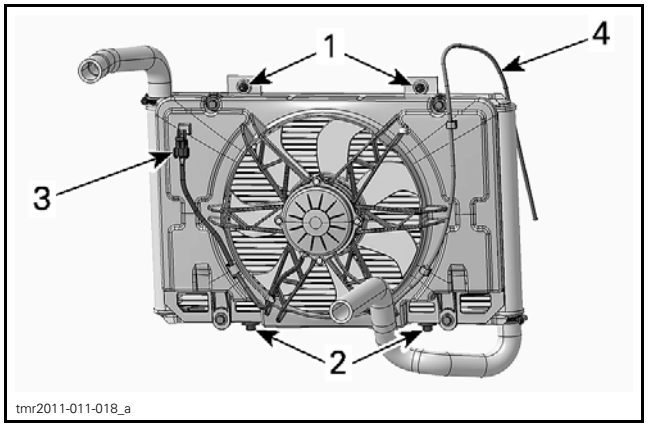

RADIATOR - REAR VIEW
1. Radiator mounting screws
2. Lower mounting bushings
3. Radiator fan electrical connector
4. Fan motor vent hose

NOTE: Cooling fan vent hose must pass over the top RH frame member, then be inserted down into the RH vertical bumper tube.

NOTICE **If the vent hose on the cooling fan motor is not properly routed, the fan motor may be damaged due to improper venting.**

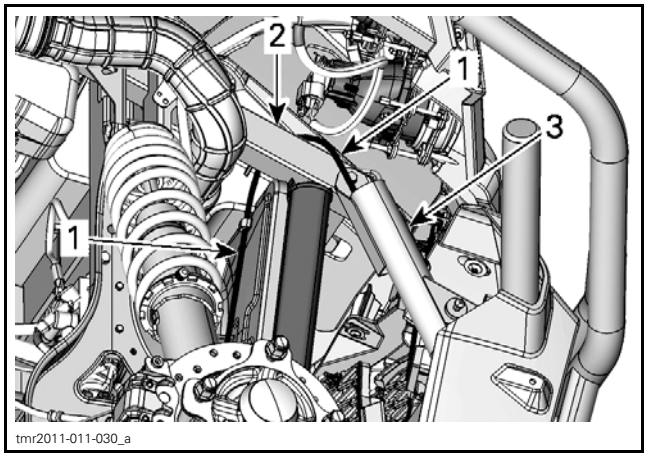

1. Cooling fan vent hose
2. RH top frame member
3. RH vertical bumper tube

4. Fill radiator with the recommended coolant. Refer to *PERIODIC MAINTENANCE PROCEDURES* subsection.
5. Bleed the cooling system, refer to *PERIODIC MAINTENANCE PROCEDURES* subsection.

NOTICE **The cooling system must be bled as specified.**

6. Check for coolant leaks from radiator and hoses.

COOLANT TEMPERATURE SENSOR (CTS)

Refer to *ELECTRONIC FUEL INJECTION (EFI)* subsection.

RADIATOR COOLING FAN RELAY (R1)

Relay Installation (Radiator Cooling Fan)

NOTE: Relay may be inverted by 180° at installation and it will work correctly. Ensure to align tabs of relay with terminals of fuse holder at installation.

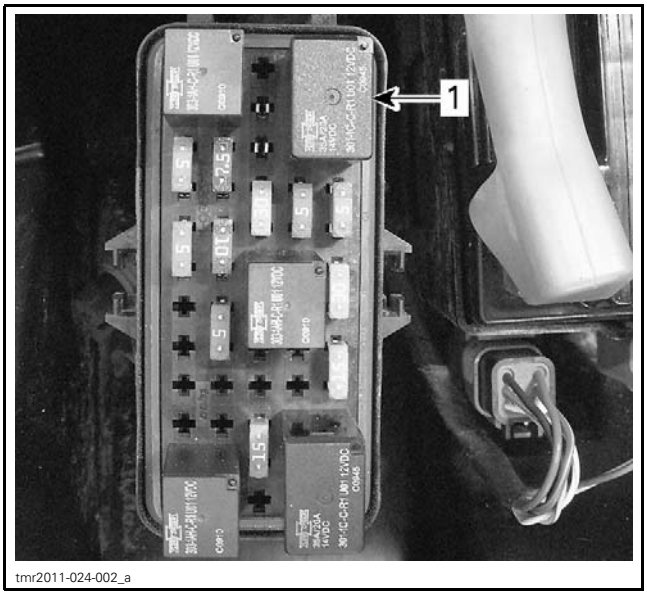

1. R1: Radiator cooling fan relay

Relay Operation Test (Radiator Cooling Fan)

The easiest way to check the relay is to remove it and temporarily substitute with the accessory relay. If the radiator cooling fan operates, replace the relay.

RADIATOR COOLING FAN

Radiator Cooling Fan Operation

The ECM controls the radiator cooling fan via the inputs of the coolant temperature sensor (CTS) and the manifold air pressure and temperature sensor (MAPTS). Refer to the following table.

ENGINE TEMPERATURE	INTAKE TEMPERATURE	COOLING FAN	CHECK ENGINE LIGHT	MESSAGE IN MULTIFUNCTION GAUGE	LIMP HOME MODE
—	88°C (190°F)	Turns ON	—	—	—
—	85°C (185°F)	Turns OFF	—	—	—
96°C (205°F)	—	Turns ON	—	—	—
92°C (198°F)	—	Turn OFF	—	—	—
115°C (239°F)	—	ON	Turns ON	- Check engine - Hi Temp	—
118°C (244°F)	—	ON	Flashes	Limp Home	Engine RPM limited to 4000

Radiator Cooling Fan Fuse Location

The fuse is located in the fuse box underneath the dashboard on the driver's side.

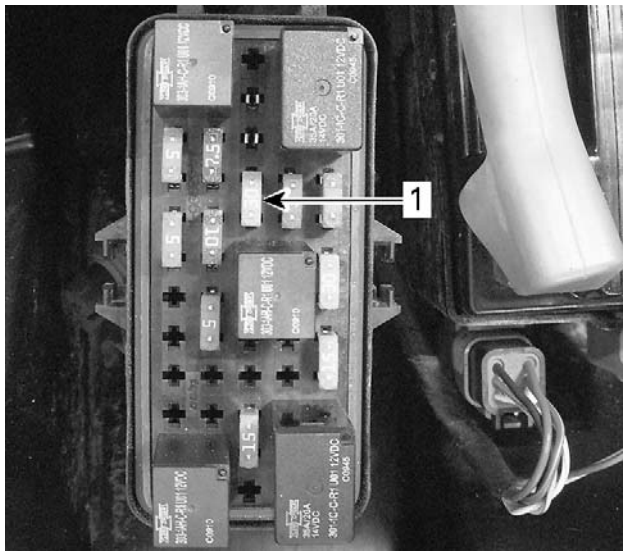

1. Cooling fan fuse

Radiator Cooling Fan Test

1. Connect the vehicle to B.U.D.S., refer to *COMMUNICATION TOOLS AND B.U.D.S.* for procedure and connector location.
2. In B.U.D.S. software, select the following:
   - **Read Data** button
   - **Activation** tab
   - **ECM** tab
   - **Cooling Fan** button.

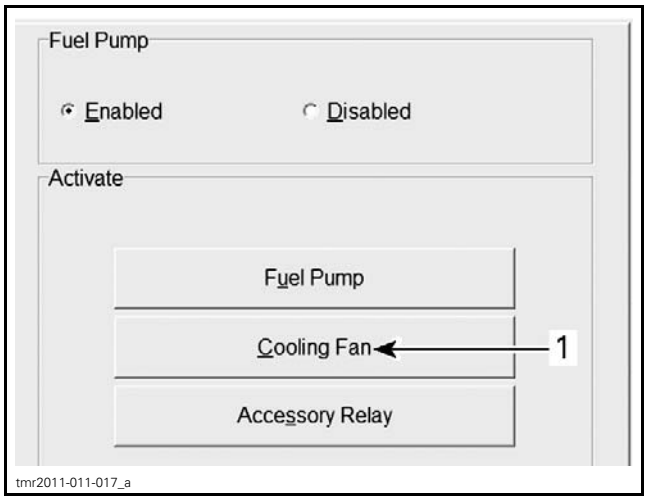

1. Cooling Fan activation button

If fan turns on, check CTS, wiring harness and connectors. If all parts are good, replace the ECM.

If fan does not turn on when the **Cooling Fan** button is pressed, refer to the following troubleshooting chart.

COOLING FAN TROUBLESHOOTING CHART		
Is fan working?	YES →	Everything is OK
NO ↓		
Check "Relay driver" fuse (5A) and fan fuse (30A). Is fuse burnt?	YES →	Replace fuse Is fan working?
NO ↓		
Bypass fan relay R1		
↓		
Fan turns?	YES →	Replace relay Is fan working?
NO ↓		
Apply 12 Vdc to fan connector		
↓		
Fan turns?	NO →	Replace fan Is fan working?
YES ↓		
Check CTS		
↓		
CTS works?	NO →	Replace CTS Is fan working?
YES ↓		
Check wiring harness and connectors		
↓		
Harness and connectors good?	NO →	Repair or replace defective part(s)
YES ↓		
Try a new ECM	→	Is fan working?

Radiator Cooling Fan Removal

1. Disconnect fan motor electrical connector.
2. Remove fan motor vent tube from vehicle frame.
3. Remove 4 fan retaining screws.
4. Remove the radiator fan.

Radiator Cooling Fan Installation

For the installation, reverse the removal procedure.

WATER PUMP HOUSING

Water Pump Housing Location

It is located on the engine MAG side (RH side of engine).

Water Pump Housing Access

Remove fuel tank. Refer to *FUEL SYSTEM* subsection.

Water Pump Housing Removal

⚠ WARNING

To avoid potential burns, do not remove the radiator cap or loosen the coolant drain plug if the engine is hot.

Drain cooling system. Refer to *PERIODIC MAINTENANCE PROCEDURES* subsection.

Remove radiator outlet hose from water pump housing.

Remove screws retaining water pump housing.

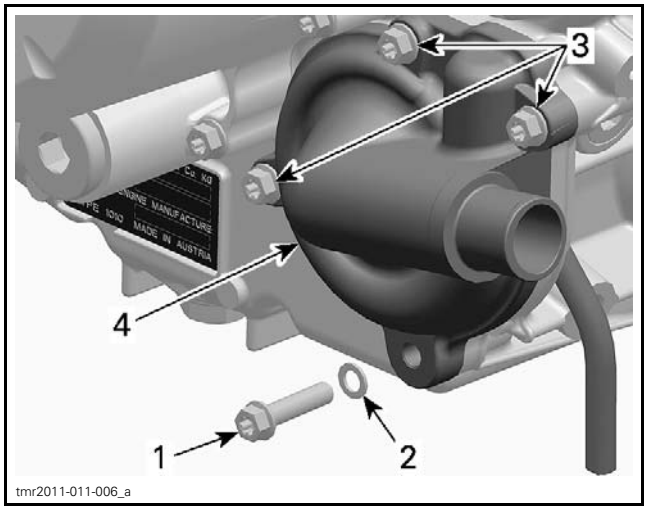

1. Coolant drain plug
2. Sealing ring
3. Screws
4. Water pump housing

Pull water pump housing to remove it.

Water Pump Housing Inspection

Check if gasket is brittle, hard or damaged and replace as necessary.

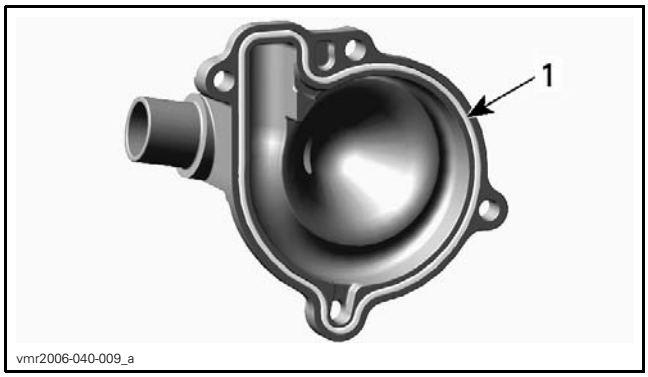

TYPICAL
1. Gasket

Water Pump Housing Installation

The installation is the opposite of the removal procedure.

NOTICE To prevent leaking, take care that the gasket is exactly in groove when you reinstall the water pump housing.

Tighten screws of water pump housing in a criss cross sequence to specification.

TIGHTENING TORQUE	
Water pump housing screws	10 N•m ± 1 N•m (89 lbf•**in** ± 9 lbf•**in**)

WATER PUMP IMPELLER

Water Pump Impeller Removal

Remove water pump housing.

Unscrew impeller.

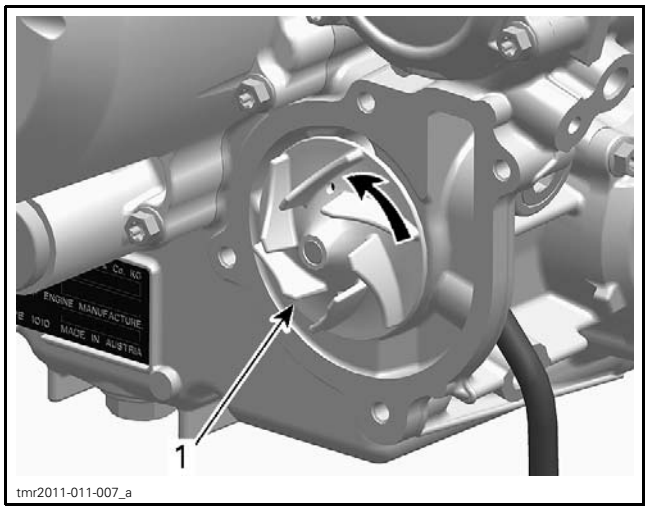

1. Turn counterclockwise to unscrew

NOTICE Water pump shaft and impeller have right-hand threads. Remove by turning counterclockwise and install by turning clockwise.

Water Pump Impeller Inspection

Check impeller for cracks or other damage. Replace impeller if damaged.

Water Pump Impeller Installation

The installation is the opposite of the removal procedure.

NOTICE Be careful not to damage impeller fins during installation.

WATER PUMP SHAFT AND SEALS

Use these guidelines to service these parts.

DEFECTIVE PART	ACTION
Rotary seal	Replace: - Rotary seal - Oil seal (assembled engine)
Oil seal	Replace: - Rotary seal - Oil seal (assembled engine)
Water pump shaft	Replace: - Water pump shaft assembly (including rotary seal) - Oil seal (engine disassembled)

NOTICE Rotary seal must be replaced if water pump shaft is to be replaced.

Water Pump Seals Replacement (Assembled Engine)

NOTE: Read and thoroughly understand the entire procedure before starting it.

Seals Removal

Remove water pump housing, refer to *WATER PUMP HOUSING* in this subsection.

1. Remove the following parts, see procedure in this subsection.
   – *WATER PUMP HOUSING*
   – *WATER PUMP IMPELLER*.
2. Carefully pry out inner part of the rotary seal using 2 screwdrivers.

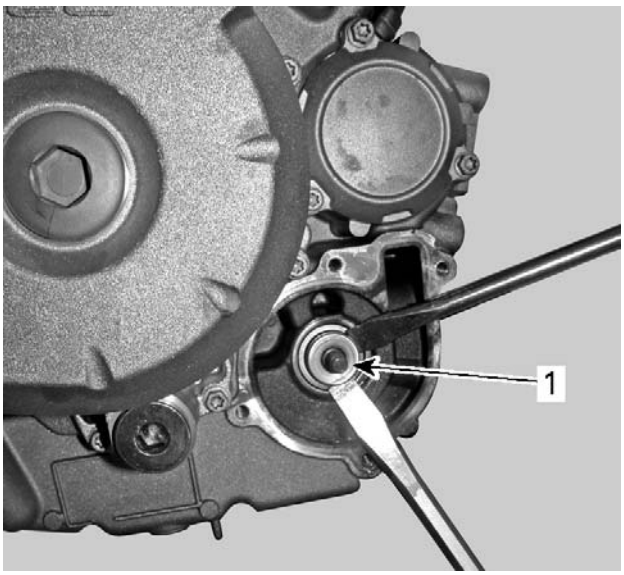

1. Inner part of rotary seal

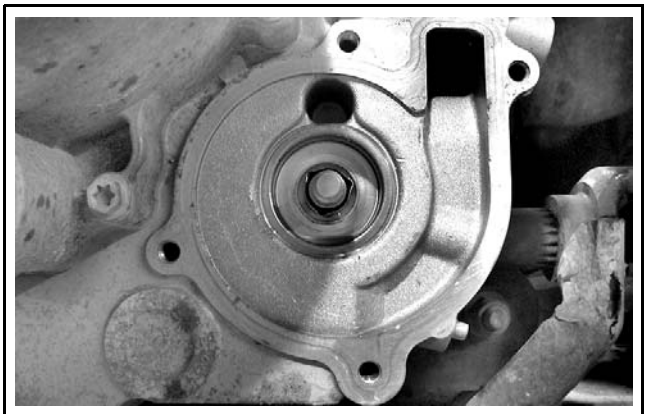

TYPICAL - INNER PART OF ROTARY SEAL REMOVED

3. Carefully bend down the outer part of rotary seal lip using a small chisel.

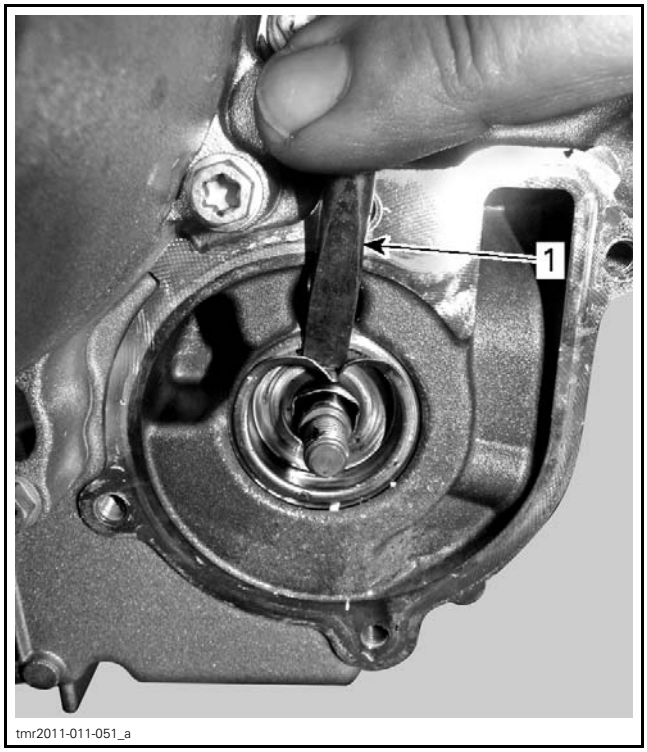

1. Small chisel

4. Use 2 screwdrivers and carefully remove the outer part of the rotary seal.

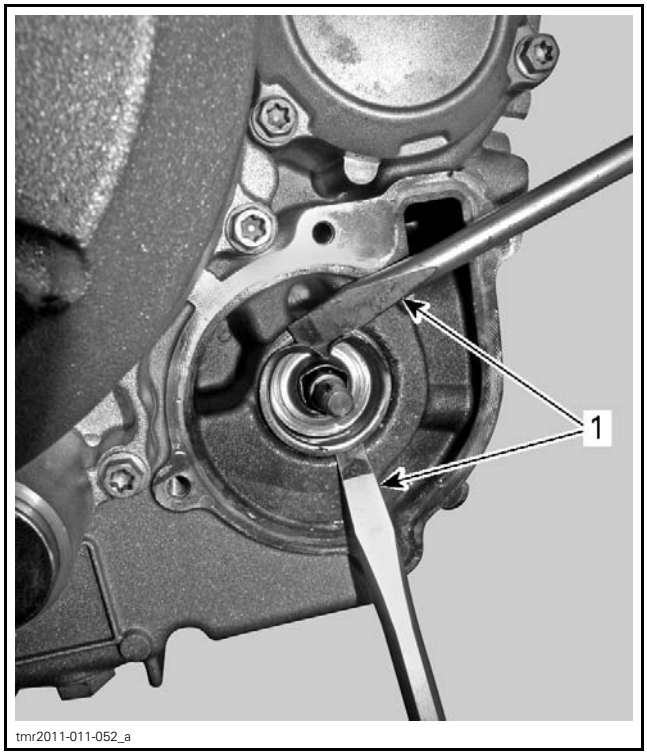

1. Screwdrivers

NOTICE Be careful not to damage the crankcase while removing outer part of the rotary seal.

5. Thoroughly remove carefully sealing residue and burr of rotary seal using a scraper.

NOTICE Be careful not to damage water pump shaft.

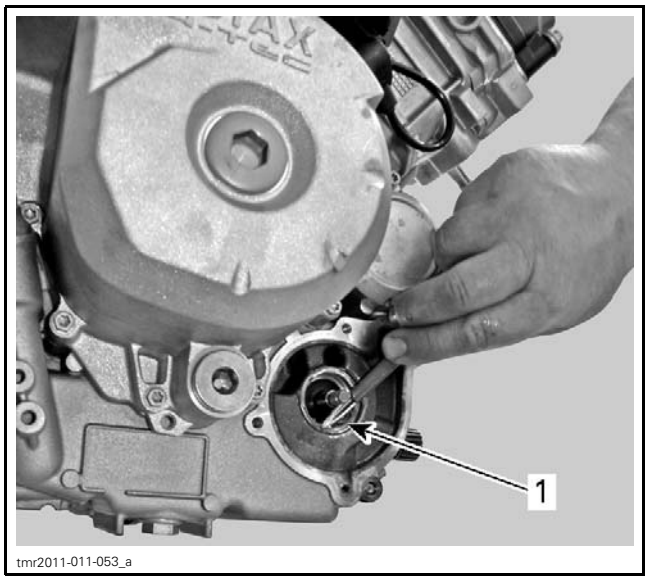

tmr2011-011-053_a

1. Scraper

6. Install 2 wooden screws in the seal.

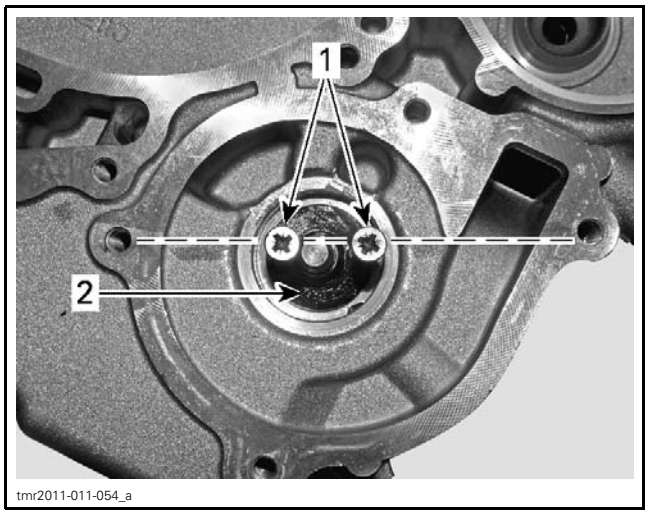

tmr2011-011-054_a

1. Wooden screws
2. Oil seal

7. Remove oil seal from crankcase by pulling screws with pliers.

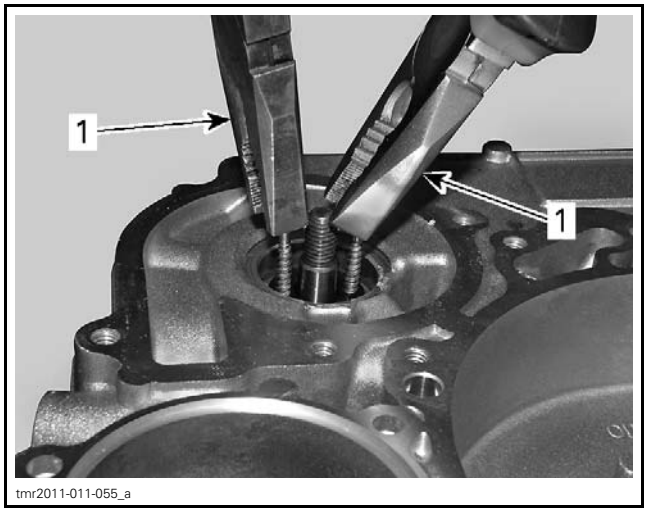

tmr2011-011-055_a

1. Pull on screws to remove seal

8. Check water pump shaft axial play. If not adequate, engine must be disassembled to replace the water pump shaft.
9. Clean oil seal seat.

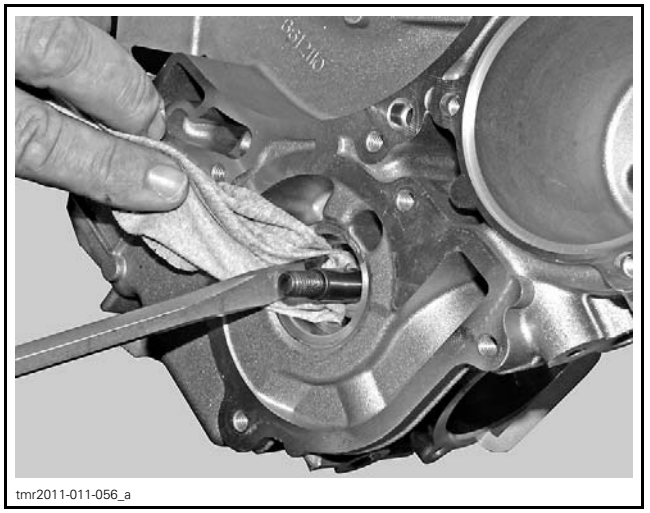
tmr2011-011-056_a

Seals Installation

1. Apply engine oil on water pump shaft.
2. Apply grease to the lips of the oil seal.
3. Carefully install the oil seal over the water pump shaft.
4. Push the oil seal into the water pump cavity.

REQUIRED TOOL
17 mm (11/16 in) deep socket

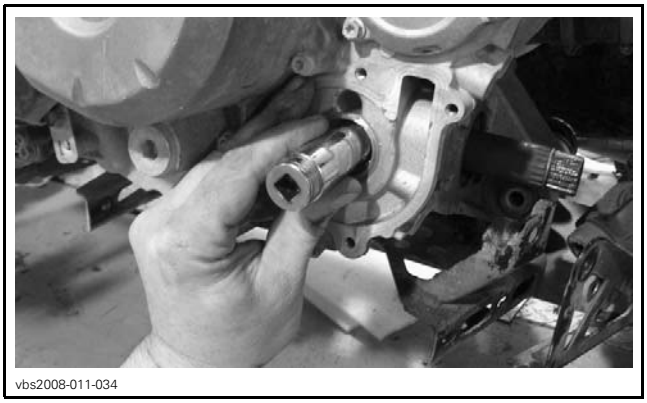
vbs2008-011-034

OIL SEAL INSTALLATION

5. Ensure that the oil seal is properly seated in water pump cavity.

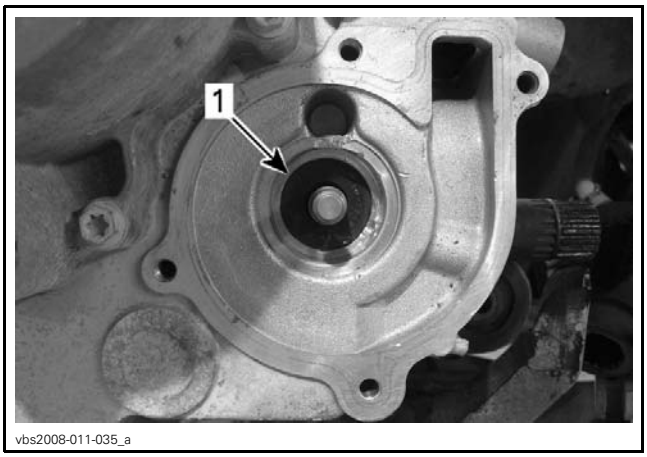

vbs2008-011-035_a

TYPICAL
1. Oil seal properly seated

6. Apply engine oil on water pump shaft.
7. Place rotary seal onto water pump shaft and pull out water pump shaft by hand.

NOTICE **Do not install the rotary seal completely into the crankcase to prevent the water pump shaft plastic gear from breaking. Push it partially in, then pull the shaft.**

8. Place a robust M8 flat washer (P/N 420 227 935) onto water pump shaft.
9. Install a M8 x 1.25 nut onto water pump shaft by hand.
10. Then thread nut **1-1/2 turns** to pull the shaft into rotary seal.

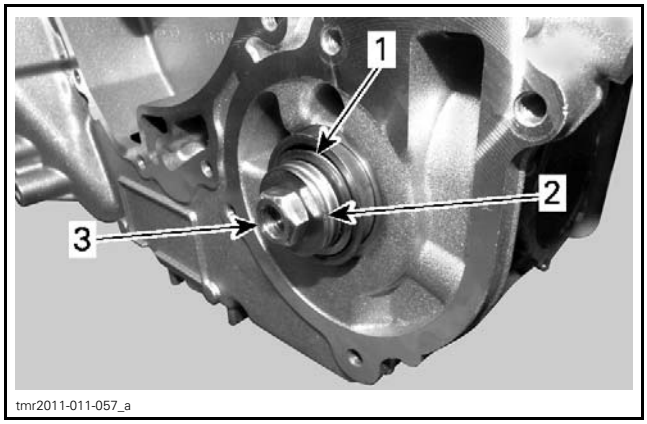

tmr2011-011-057_a

1. Rotary seal
2. M8 robust flat washer (P/N 420 227 935)
3. M8 x 1.25 nut (P/N 233 281 414)

11. Remove M8 nut.

NOTE: The robust M8 flat washer remains on water pump shaft.

12. Install rotary seal installation tools on crankcase as follows.

REQUIRED TOOLS
ROTARY SEAL PUSHER PLATE (P/N 529 036 130)
4x M6 x 85 screws (P/N 420 440 347)
4x tubes 70 mm (2.75 in)
SEAL PUSHER (P/N 529 035 766)

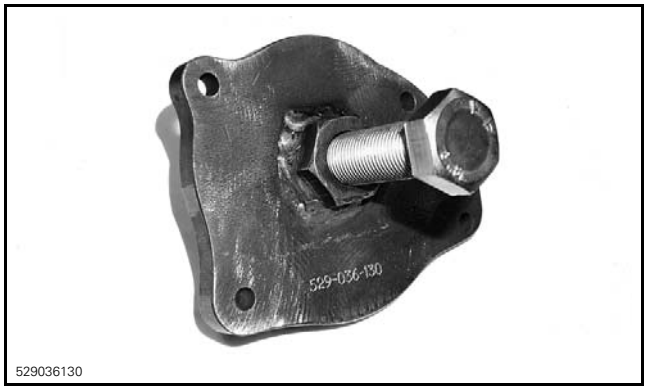

529036130

ROTARY SEAL PUSHER PLATE (P/N 529 036 130)

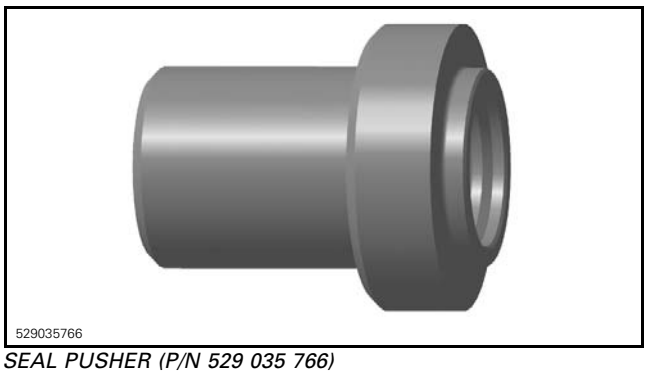
529035766

SEAL PUSHER (P/N 529 035 766)

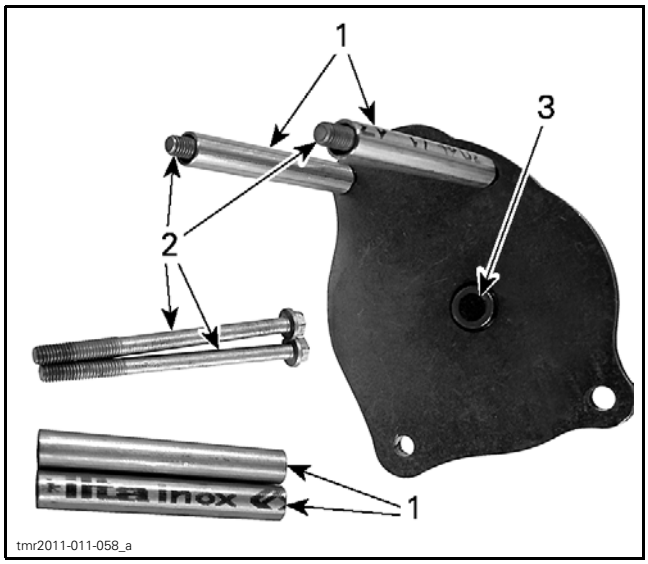

ROTARY SEAL PUSHER PLATE ASSEMBLY
1. *4 x tubes (70 mm (2.75 in) length)*
2. *4 x screws M6 x 85*
3. *Plane surface on pusher bolt*

NOTE: Make sure pusher bolt has a plane surface.

12.1 Apply a little grease at the end of tool pusher bolt.

12.2 Ensure that pusher bolt is completely unscrewed.

12.3 Install rotary seal pusher plate on crankcase by tightening M6 screws.

NOTICE Do not use pneumatic or electric tools for tightening screws.

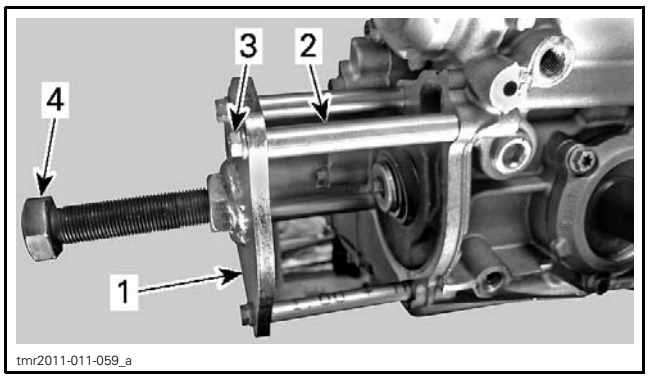

ROTARY SEAL PUSHER PLATE INSTALLATION
1. *Rotary seal pusher plate*
2. *Tube (70 mm (2.75 in) length)*
3. *M6 x 85 screw*
4. *Pusher bolt*

12.4 Install seal pusher between rotary seal pusher plate and water pump shaft.

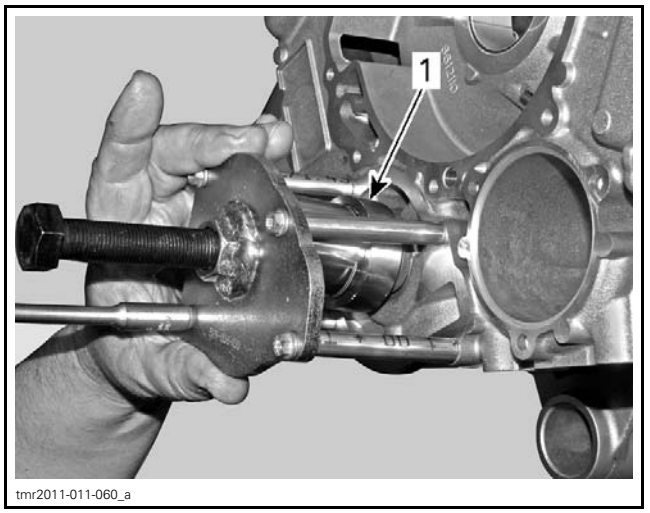

SEAL PUSHER INSTALLATION
1. *Seal pusher aligned with pusher bolt*

12.5 Tighten the pusher bolt by hand until it stops against the seal pusher.

13. Carefully thread the pusher bolt **1-1/2 turns**.
14. Ensure that the rotary seal is going straight into crankcase.
15. Remove rotary seal installation tools from crankcase.

Repeat the steps 9 to 15 until rotary seal is completely seated in the crankcase.

16. Remove tools from crankcase.

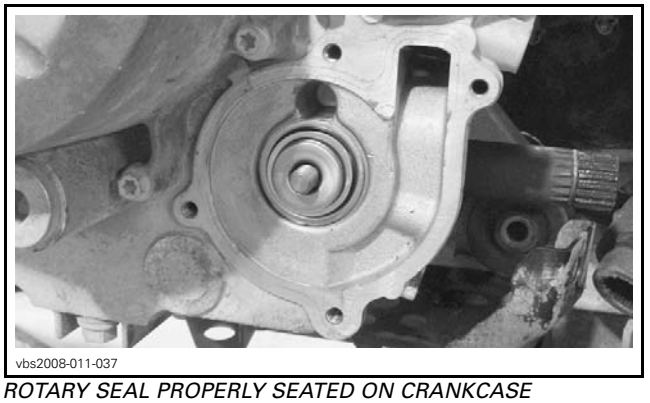

ROTARY SEAL PROPERLY SEATED ON CRANKCASE

17. Carry out the final adjustment of the water pump shaft as follows.

17.1 Install M8 x 1.25 nut (P/N 233 281 414) onto water pump shaft.

17.2 Carefully thread M8 nut until the rotary seal is flush with the end of water pump shaft threads.

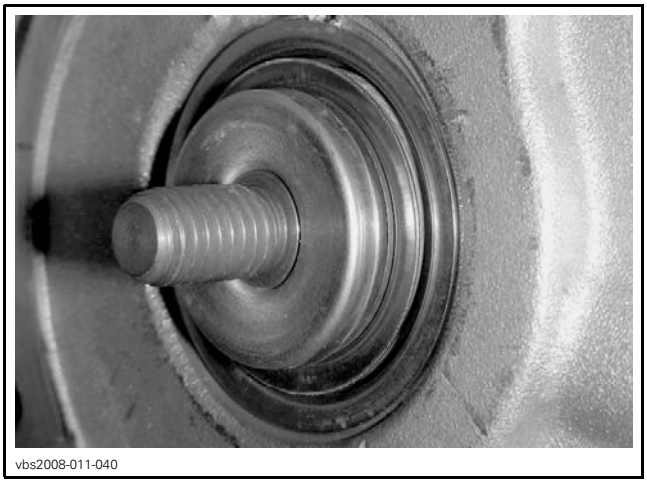
vbs2008-011-040

WATER PUMP SHAFT PROPERLY ADJUSTED WITH ROTARY SEAL

NOTICE The water pump shaft must be properly adjusted with rotary seal. The water pump shaft must move freely while pushing it toward the crankcase.

18. Install the following parts, see procedure in this subsection.
    - *WATER PUMP IMPELLER*
    - *WATER PUMP HOUSING*.
19. Refill and bleed cooling system. Refer to *PERIODIC MAINTENANCE PROCEDURES* subsection.
20. Check cooling system for leaks.

Water Pump Shaft and Seals Replacement (Disassembled Engine)

Water Pump Shaft and Seals Removal

1. Remove the following parts:
    - *WATER PUMP HOUSING*
    - *WATER PUMP IMPELLER*
    - *WATER PUMP GEARS*.
2. Push out water pump shaft with inner portion of rotary seal from inside of crankcase MAG side.

REQUIRED TOOL
Soft hammer

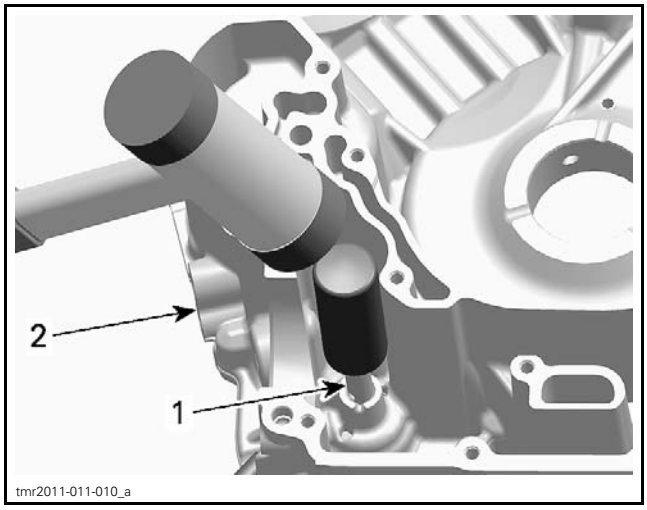

tmr2011-011-010_a

1. *Water pump shaft*
2. *Crankcase MAG side*

3. Remove outer part of rotary seal.

REQUIRED TOOL	
BLIND HOLE PULLER KIT (P/N 529 036 056)	

4. Install expander snugly against outer part of rotary seal and pull seal out.

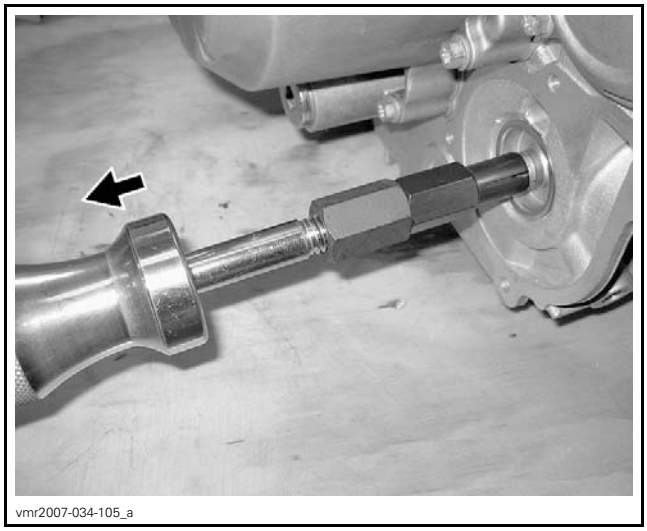
vmr2007-034-105_a

TYPICAL

5. Remove oil seal from inside of crankcase MAG side using a pusher tool.

NOTICE Be careful not to damage the rotary seal surface in crankcase.

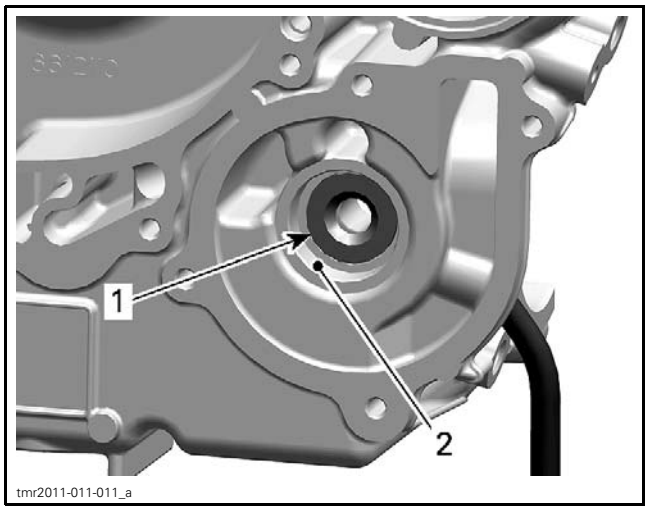

1. Oil seal
2. Machined surface for rotary seal

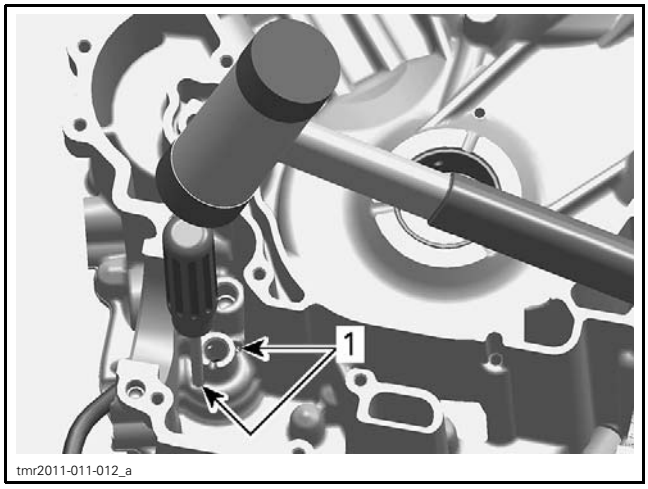

OIL SEAL REMOVAL - VIEW FROM INSIDE CRANKCASE MAG SIDE
1. Orifices for oil seal removal

Water Pump Shaft and Seals Installation

The installation is the reverse of the removal procedure. However, pay attention to the following.

Use tightening torque values specified in the exploded view.

NOTE: Never apply oil on the press fit area of the oil seal and rotary seal.

Clean rotary seal surface of any old sealant.

Install oil seal.

REQUIRED TOOL
OIL SEAL PUSHER (P/N 529 035 757)
HANDLE (P/N 420 877 650)

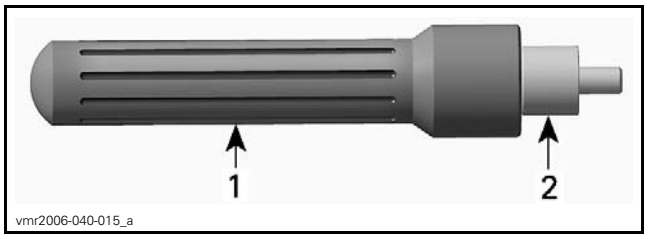

1. Handle
2. Pusher

When installing the oil seal on the pusher, make sure the sealing lip points outwards.

Push NEW oil seal in place.

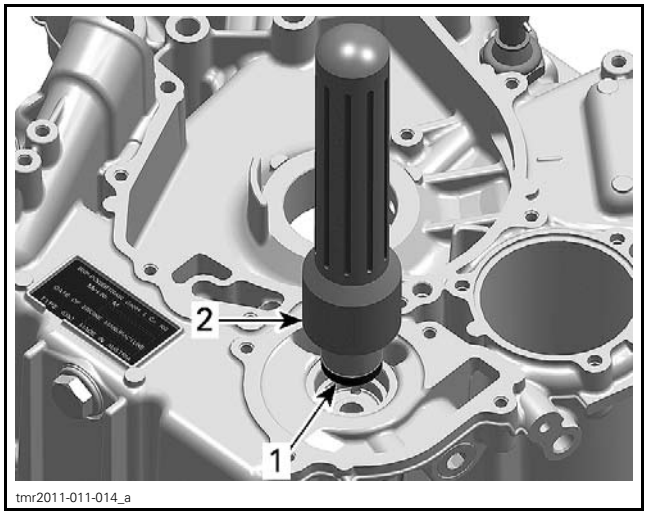

1. Oil seal
2. Installer handle with oil seal pusher

Apply DOW CORNING 111 (P/N 413 707 000) on sealing lip of the oil seal.

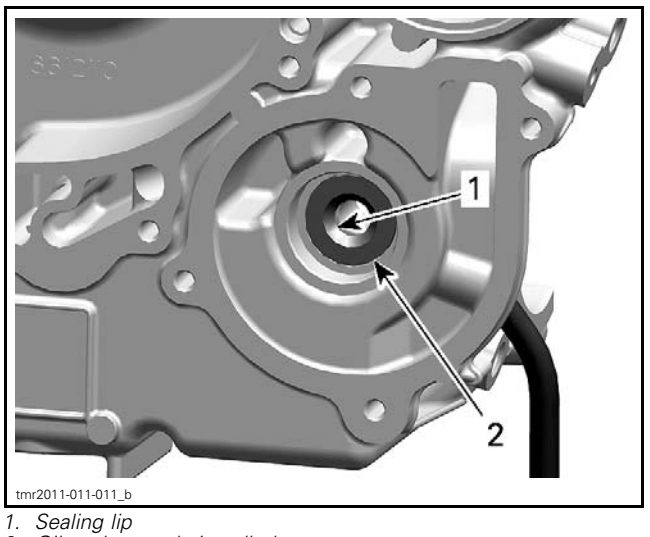

1. Sealing lip
2. Oil seal properly installed

Apply engine oil on the water pump shaft and intermediate shaft.

Slide NEW water pump shaft assembly into crankcase.

REQUIRED TOOL	
SEAL PUSHER (P/N 529 035 766)	

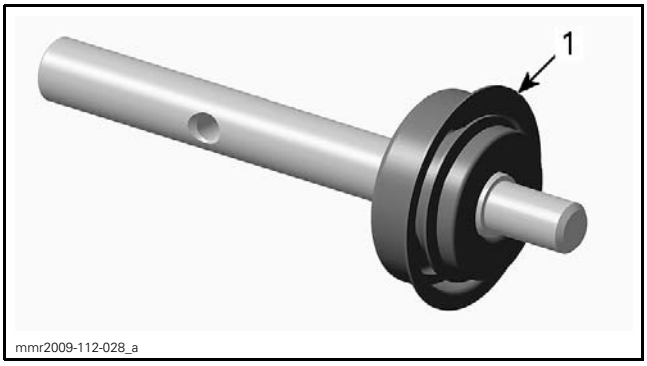

1. Surface where rotary seal is pushed by tool

Water Pump Shaft Assembly

NOTICE Never use a hammer for rotary seal installation. Only use a press to avoid damaging the ceramic component.

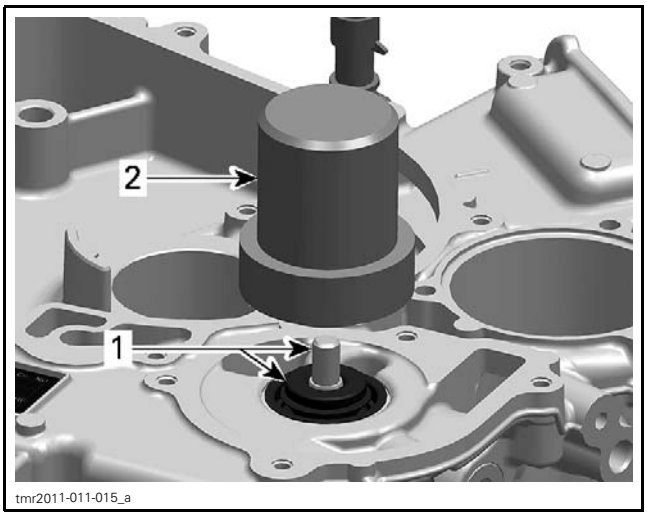

1. Water pump shaft with rotary seal
2. Water pump seal installer

NOTICE After installation, water pump shaft with rotary seal must rotate freely.

WATER PUMP GEARS

Water Pump Gears Identification

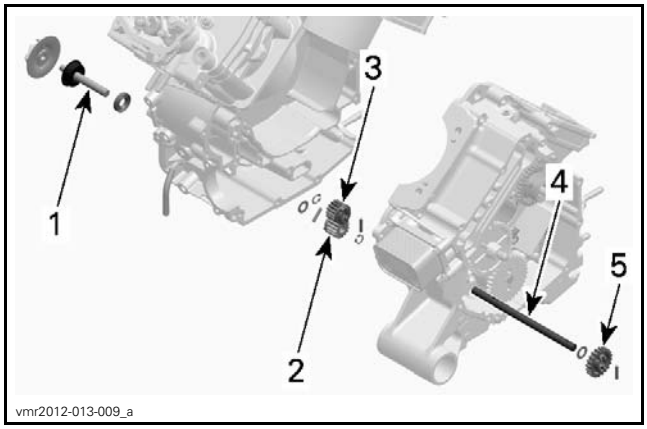

1. Water pump shaft
2. Water pump gear
3. Water pump **intermediate drive** *gear*
4. Water pump **intermediate** *shaft*
5. Water pump **drive** *gear (See BOTTOM END subsection)*

Water Pump Gears Inspection

Water Pump Gear

Inspect water pump gear for wear and damage on the snap mechanism to the needle pin. Replace if damaged.

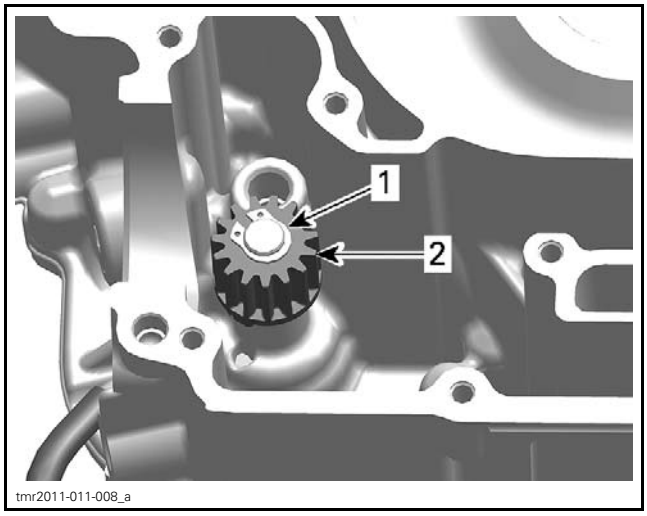

CRANKCASE MAG SIDE
1. Circlip
2. Water pump gear

Water Pump Intermediate Drive Gear

Check water pump intermediate drive gear for wear or broken teeth. Replace if damaged.

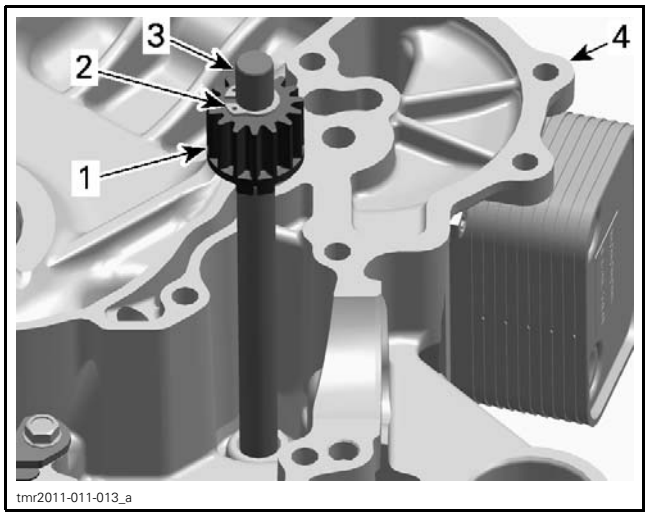

CRANKCASE PTO SIDE
1. *Water pump intermediate drive gear*
2. *Circlip*
3. *Water pump intermediate shaft*
4. *Crankcase PTO side*

Water Pump Drive Gear

See *BOTTOM END* subsection.

Water Pump Gears Removal

Water Pump Gear

1. Remove circlip retaining water pump gear and discard it.

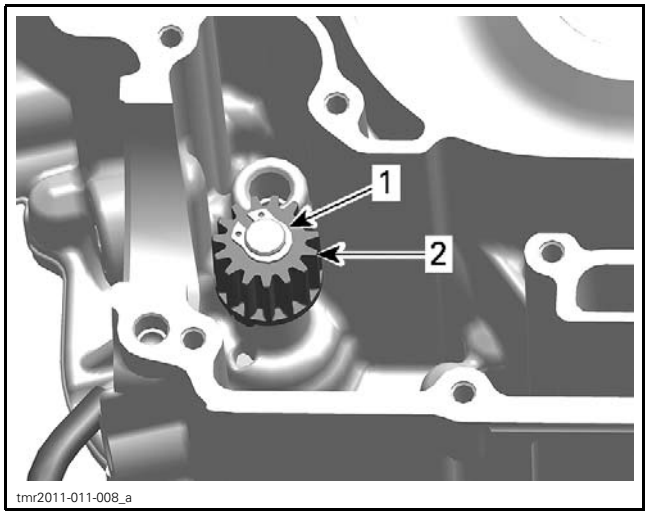

CRANKCASE MAG SIDE
1. *Circlip*
2. *Water pump gear*

2. Remove the following parts:
   – Water pump gear
   – Needle pin
   – Thrust washer.

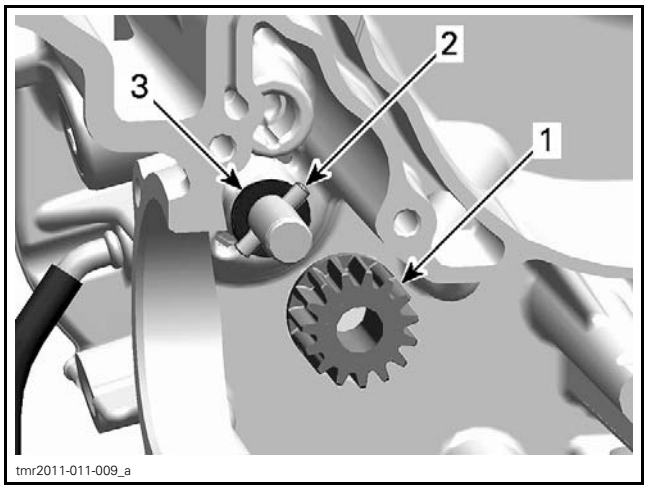

CRANKCASE MAG SIDE
1. *Water pump gear*
2. *Needle pin*
3. *Thrust washer*

Water Pump Intermediate Drive Gear

1. Remove circlip retaining water pump intermediate drive gear and discard it.

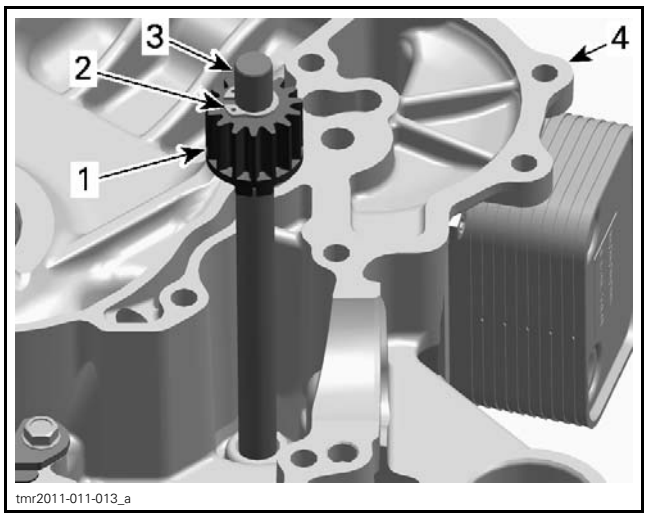

CRANKCASE PTO SIDE
1. *Water pump intermediate drive gear*
2. *Circlip*
3. *Water pump intermediate shaft*
4. *Crankcase PTO side*

2. Remove the following parts:
   – Water pump intermediate drive gear
   – Needle pin.

Water Pump Drive Gear

See *BOTTOM END* subsection.

Water Pump Gears Installation

Water Pump Gear

Install the following parts on water pump shaft.
– Thrust washer

– Needle pin
– Water pump gear.

NOTICE A missing thrust washer will cause a leaking rotary seal.

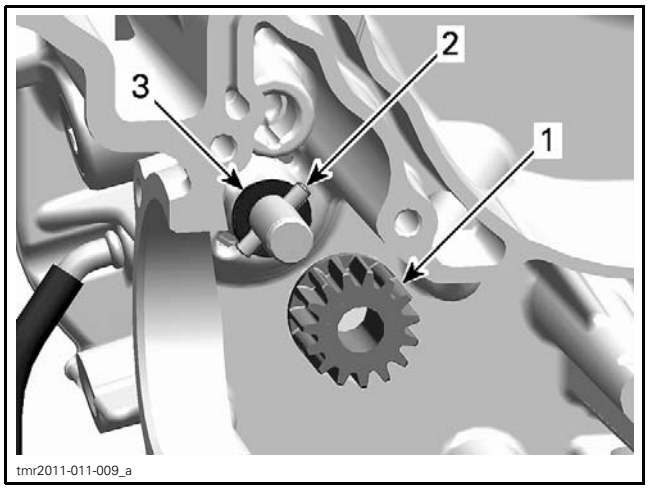

1. Water pump gear
2. Needle pin
3. Thrust washer

NOTE: Ensure water pump gear snaps properly onto needle pin.

Install NEW circlip to retain water pump gear.

NOTICE Never use the circlip a second time. Always install a NEW one.

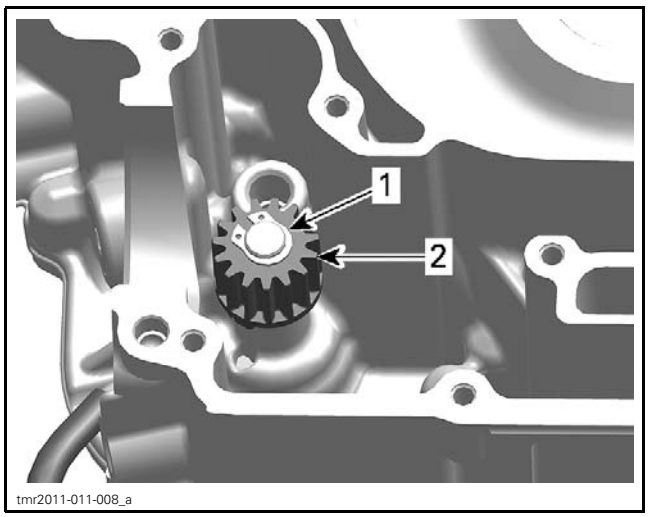

1. Circlip
2. Water pump gear

Water Pump Intermediate Drive Gear

Install the following parts on water pump intermediate shaft.
– Needle pin
– Water pump intermediate drive gear.

Install NEW circlip to retain water pump intermediate drive gear.

NOTICE Never use the circlip a second time. Always install a NEW one.

Water Pump Drive Gear

See *BOTTOM END* subsection.

MAGNETO SYSTEM

SERVICE TOOLS

Description	Part Number	Page
BACK PROBE TEST WIRES	529 036 063	87
CRANKSHAFT LOCKING BOLT	529 035 617	88
CRANKSHAFT PROTECTOR	529 036 034	88
FLUKE 115 MULTIMETER	529 035 868	86–87
MAGNETO PULLER	529 035 748	88

SERVICE PRODUCTS

Description	Part Number	Page
DREI BOND SEALING COMPOUND	420 297 906	85
LOCTITE 243 (BLUE)	293 800 060	88
LOCTITE 648 (GREEN)	413 711 400	89–90
LOCTITE 767 (ANTISEIZE LUBRICANT)	293 800 070	91
LOCTITE CHISEL (GASKET REMOVER)	413 708 500	85
PULLEY FLANGE CLEANER	413 711 809	89

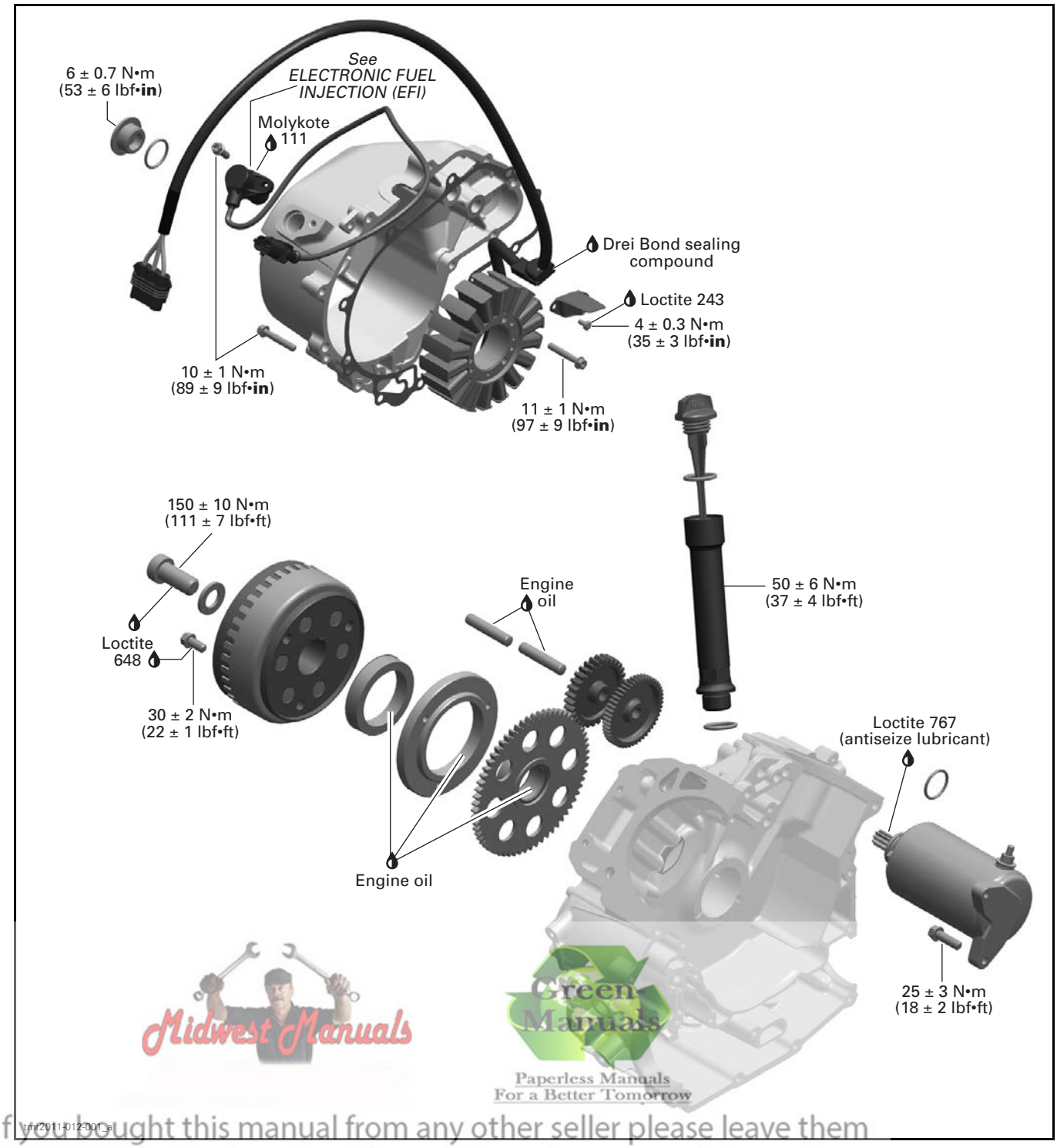

Midwest Manuals
Green Manuals
Paperless Manuals
For a Better Tomorrow
If you bought this manual from any other seller please leave them
NEGATIVE feedback and notify me at bestshopmanuals@gmail.com

PROCEDURES

MAGNETO COVER

Magneto Cover Access

Remove fuel tank, refer to *FUEL TANK AND FUEL PUMP*.

Magneto Cover Removal

Drain engine oil (refer to *PERIODIC MAINTENANCE PROCEDURES* subsection).

Remove crankshaft position sensor (CPS) and cut tie raps.

Remove dipstick and oil level tube with O-rings.

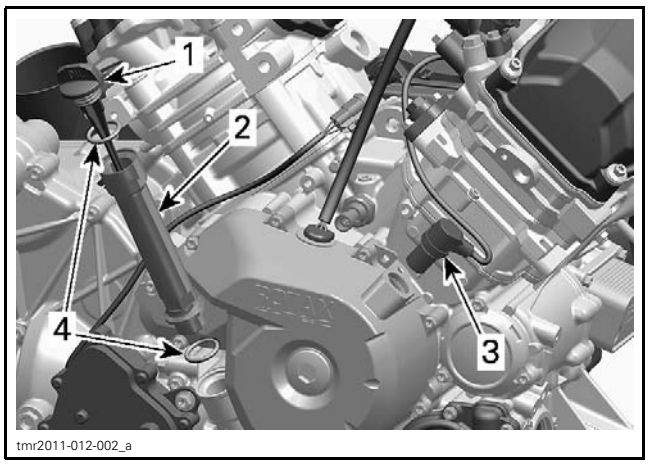

tmr2011-012-002_a

1. Dipstick
2. Oil level tube
3. Crank position sensor (CPS)
4. O-rings

Remove magneto cover retaining screws.

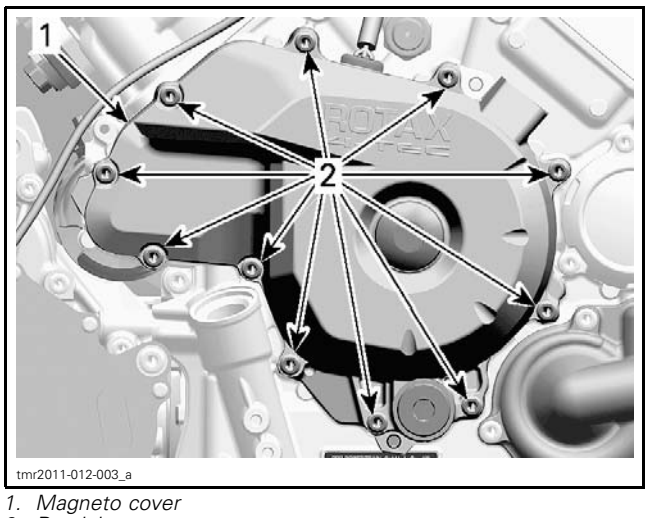

tmr2011-012-003_a

1. Magneto cover
2. Retaining screws

Pull out magneto cover.

NOTE: If required, remove stator and harness from magneto cover.

Magneto Cover Inspection and Cleaning

Check magneto cover for cracks or other damage. Replace if necessary.

NOTE: Clean all metal components in a non-ferrous metal cleaner. Use LOCTITE CHISEL (GASKET REMOVER) (P/N 413 708 500), or suitable equivalent.

⚠ WARNING

Wear safety glasses and work in a well ventilated area when working with strong chemical products. Also wear suitable non-absorbent gloves to protect your hands.

Magneto Cover Installation

For installation, reverse the removal procedure. However, pay attention to the following.

NOTE: Install a NEW magneto cover gasket.

Apply DREI BOND SEALING COMPOUND (P/N 420 297 906) on stator cable grommet as shown in next illustration.

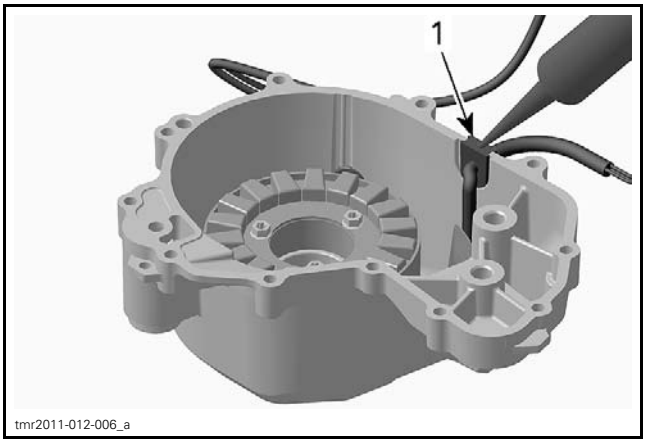

tmr2011-012-006_a

1. Stator cable grommet (apply Drei Bond sealing compound)

Tighten screws using the following sequence.

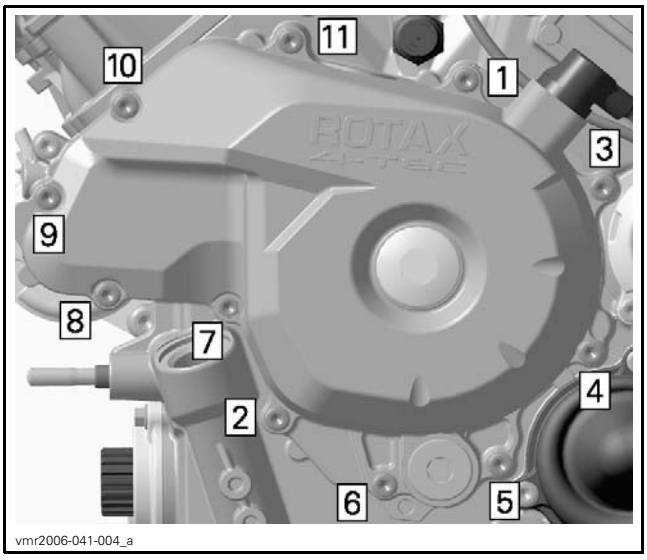

TIGHTENING SEQUENCE

MAGNETO COVER SCREWS	
Tightening torque	10 N•m ± 1 N•m (89 lbf•**in** ± 9 lbf•**in**)

Refill engine with recommended oil.

STATOR

Stator Connector Access

NOTE: The stator is directly connected to the voltage regulator/rectifier.

Stator Static Test: Continuity

1. Disconnect the stator connector from the voltage regulator/rectifier.
2. Check resistance between YELLOW wires.

REQUIRED TOOL	
FLUKE 115 MULTIMETER (P/N 529 035 868)	

TERMINAL	RESISTANCE @ 20°C (68°F)
1 and 2	0.15 - 0.30 Ω
1 and 3	
2 and 3	

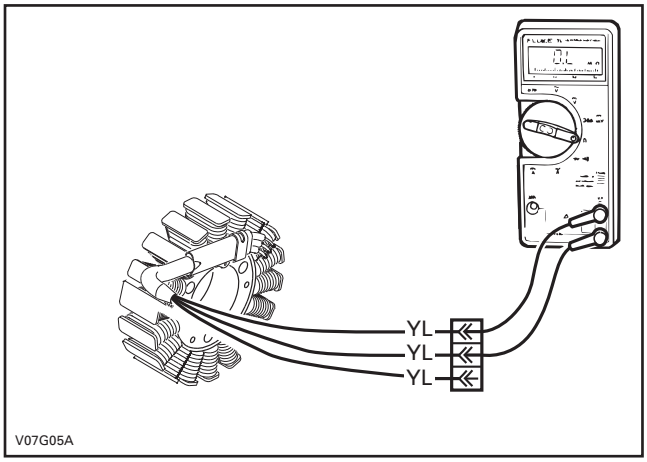

TYPICAL

3. If any reading is out of specification, replace stator.
4. Re-plug connectors properly.

Stator Static Test: Insulation

1. Disconnect the stator connector from the voltage regulator/rectifier.
2. Connect multimeter between any YELLOW wire (on stator connector) and engine ground.

REQUIRED TOOL	
FLUKE 115 MULTIMETER (P/N 529 035 868)	

TEST PROBES	RESISTANCE @ 20°C (68°F)
Any YELLOW wire and engine ground	Infinite (open circuit)

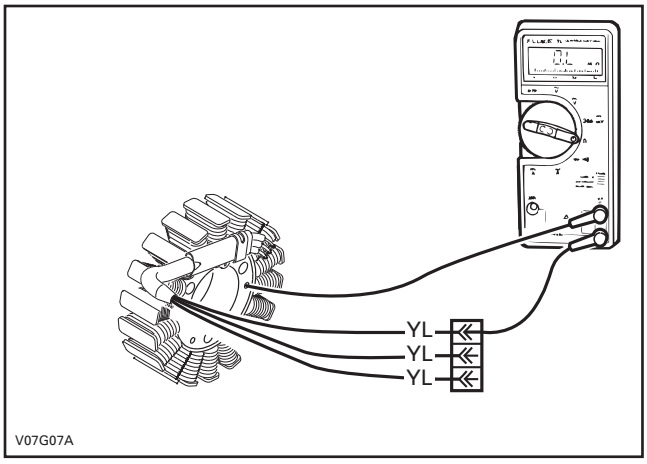

TYPICAL

3. If there is a resistance or continuity, the stator coils and/or the wiring is shorted to ground and needs to be repaired or replaced.
4. Re-plug connectors properly.

Stator Dynamic Test: AC Voltage Output

1. Disconnect stator connector at voltage regulator/rectifier.
2. Start engine.
3. Check AC voltage output as follow:

REQUIRED TOOL	
BACK PROBE TEST WIRES (P/N 529 036 063)	
FLUKE 115 MULTIMETER (P/N 529 035 868)	

4. Read voltage as per following table.

TEST ENGINE SPEED	TERMINAL	VOLTAGE
4000 RPM	1 and 2	15 Vac MINIMUM
	1 and 3	
	2 and 3	

5. If voltage is lower than specification, replace stator.
6. Re-plug connectors properly.

Stator Removal

Remove *MAGNETO COVER*. See procedure in this subsection.

Remove screws securing the wire holding strip.

Remove stator retaining screws then the stator.

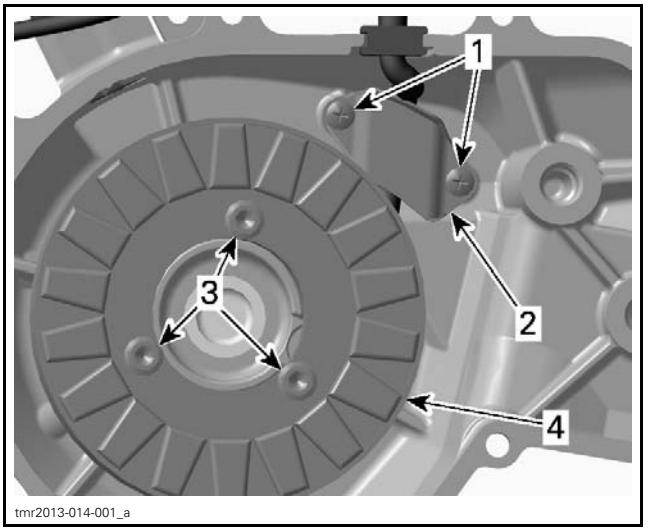

tmr2013-014-001_a

1. Holding strip screws
2. Wire holding strip
3. Stator retaining screws
4. Stator

Stator Inspection

Check stator windings and insulation for cracks or other damages. If damaged replace it.

Check if stator wires are brittle, hard or otherwise damaged.

Stator Installation

For installation, reverse the removal procedure. However, pay attention to the following.

NOTICE **When installing the stator take care to route wires properly and install retaining strip.**

NOTE: There is only one position for the stator (notch in the magneto housing cover).

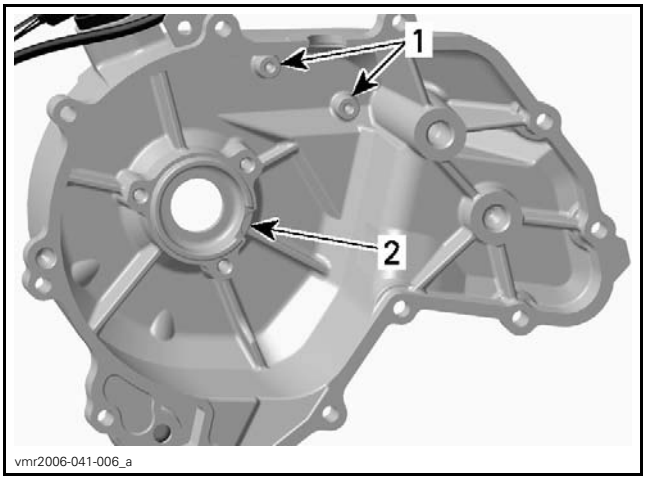

vmr2006-041-006_a

1. Threads for cable holding strip
2. Notch for stator

HOLDING STRIP SCREWS	
Service product	LOCTITE 243 (BLUE) (P/N 293 800 060)
Tightening torque	4 N•m ± 0.5 N•m (35 lbf•**in** ± 4 lbf•**in**)

STATOR RETAINING SCREWS	
Tightening torque	11 N•m ± 1 N•m (97 lbf•**in** ± 9 lbf•**in**)

ROTOR

Rotor Removal

Remove *MAGNETO COVER*. See procedure in this subsection.

Lock crankshaft (refer to *CRANKSHAFT LOCKING PROCEDURE* in the *BOTTOM END* subsection).

REQUIRED TOOL	
CRANKSHAFT LOCKING BOLT (P/N 529 035 617)	

Heat screw in order to break the Loctite.

Remove screw and washer securing rotor to crankshaft.

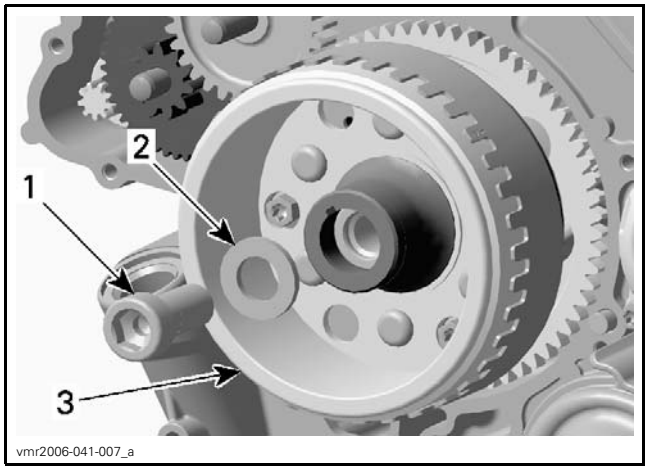

1. Screw M16
2. Washer
3. Rotor

Remove rotor.

REQUIRED TOOL	
MAGNETO PULLER (P/N 529 035 748)	
CRANKSHAFT PROTECTOR (P/N 529 036 034)	

NOTE: Use grease to place protector on crankshaft end prior to screw on the magneto puller.

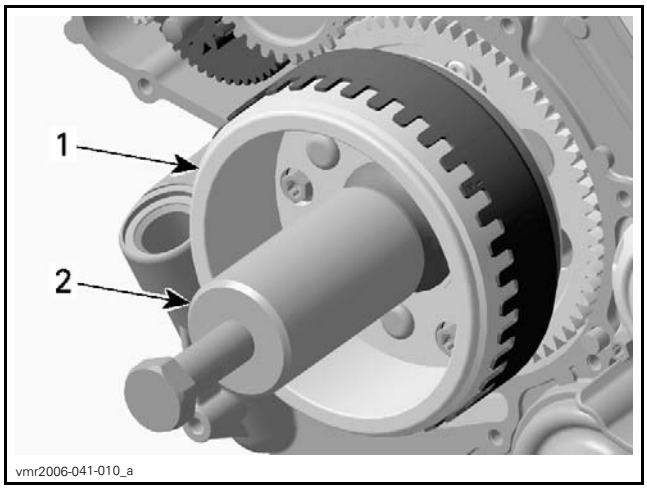

1. Rotor
2. Magneto puller

Screw magneto puller bolt to remove rotor.

Rotor Inspection

Check inner side of rotor for scratches or other damage.

Blow pressurized air in the rotor oil bore and make sure it is not clogged.

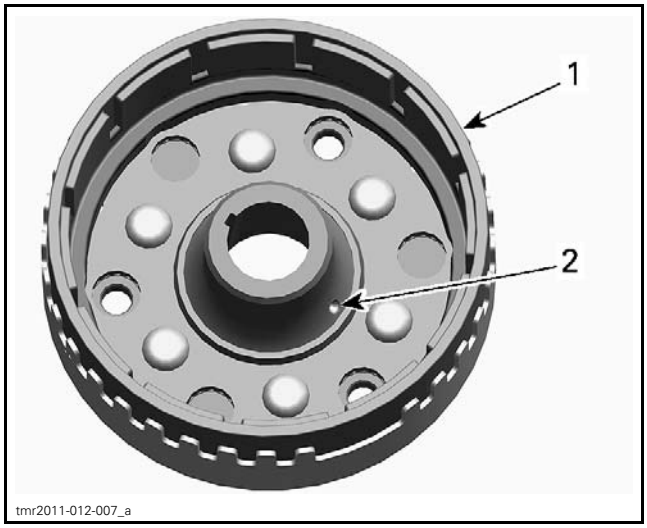

1. Rotor
2. Oil bore

Check keyway of the rotor for wear or damages.

Check if trigger wheel teeth are bent or otherwise damaged.

Check woodruff key and keyway on the crankshaft for wear or damages.

Replace parts as necessary.

Rotor Installation

For installation, reverse the removal procedure. However, pay attention to the following.

Use PULLEY FLANGE CLEANER (P/N 413 711 809) to clean following:

– Crankshaft taper
– Oil passage in crankshaft taper
– Thread in crankshaft
– Rotor taper
– Oil bore in rotor.

NOTICE Taper on crankshaft and rotor must be free of grease.

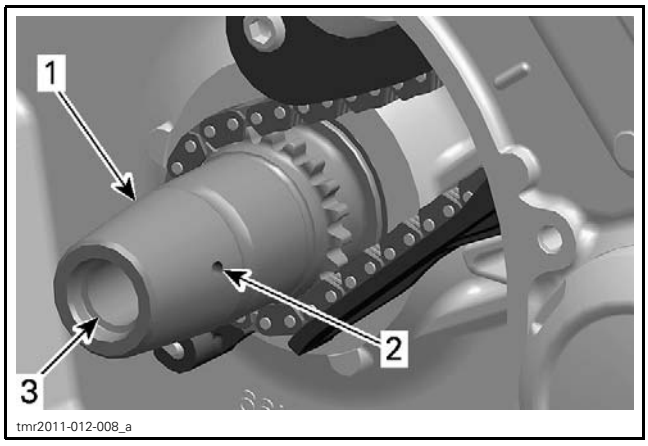

tmr2011-012-008_a

1. Crankshaft (MAG side)
2. Oil passage
3. Threads

Oil sprag clutch and install sprag clutch gear.

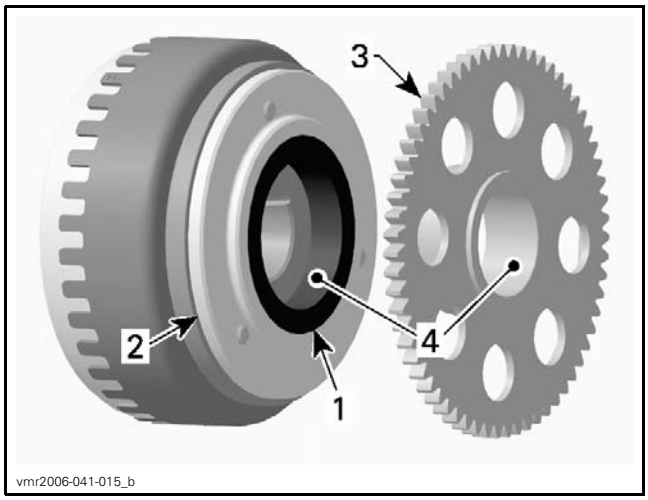

vmr2006-041-015_b

1. Sprag clutch
2. Sprag clutch housing
3. Sprag clutch gear
4. Apply engine oil here

Slide rotor onto crankshaft. The woodruff key and the keyway must be aligned.

Rotate starter double gear counterclockwise to align intermediate gear teeth with sprag clutch gear.

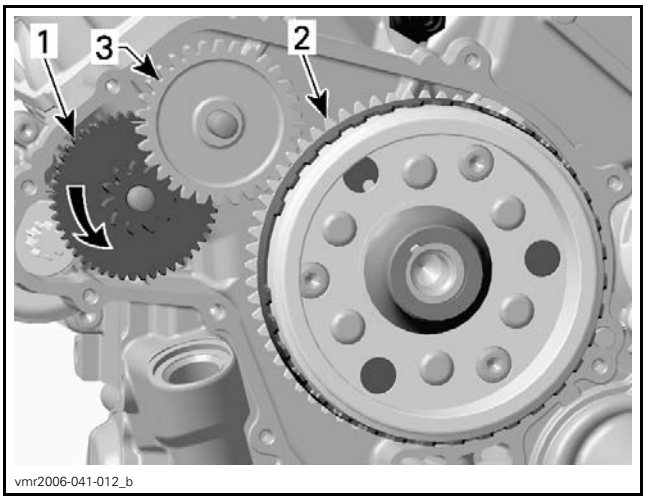

vmr2006-041-012_b

1. Starter double gear
2. Sprag clutch gear
3. Intermediate gear

ROTOR RETAINING SCREW	
Service product	LOCTITE 648 (GREEN) (P/N 413 711 400)
Tightening torque	150 N•m ± 10 N•m (111 lbf•ft ± 7 lbf•ft)

SPRAG CLUTCH

Sprag Clutch Removal

Remove *MAGNETO COVER*. See procedure in this subsection.

Heat screws in order to break the Loctite.

Loosen sprag clutch housing screws located inside rotor.

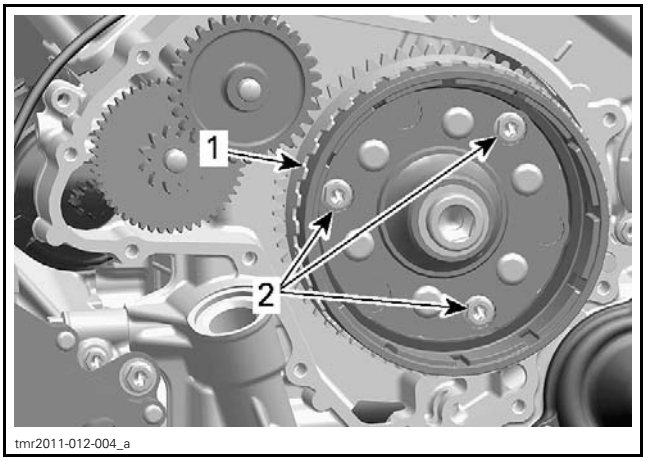

tmr2011-012-004_a

1. Rotor
2. Sprag clutch housing screws

Remove rotor (refer to *ROTOR* in this subsection).

Remove sprag clutch gear.

Remove sprag clutch housing screws and sprag clutch housing.

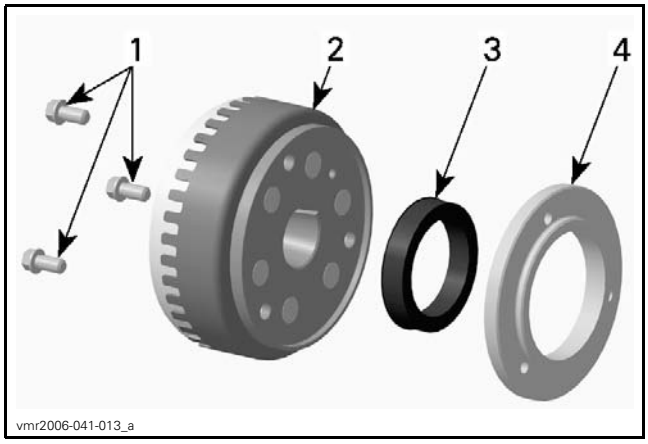

1. *Sprag clutch housing screws*
2. *Rotor*
3. *Sprag clutch*
4. *Sprag clutch housing*

Sprag Clutch Inspection

Inspect sprag clutch and sprag clutch housing for wear and damage.

Also check the collar of the sprag clutch gear.

Rotate sprag clutch gear in sprag clutch.

NOTE: Sprag clutch must lock in counterclockwise direction.

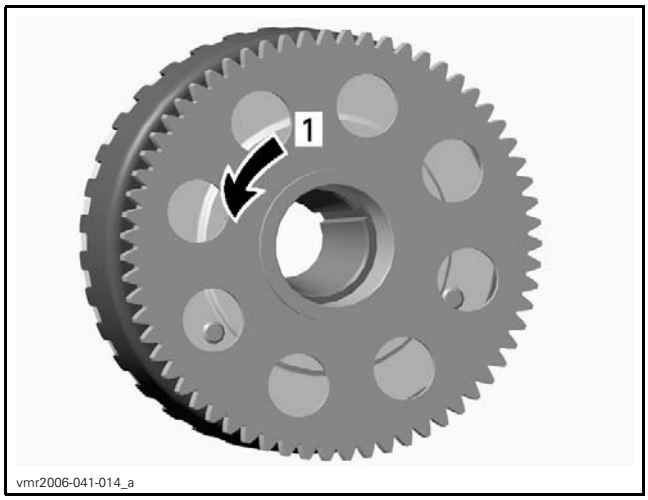

SPRAG CLUTCH FUNCTIONAL TEST
1. *Lock*

NOTE: Sprag clutch, housing and gear must be replaced at the same time, if damaged.

Sprag Clutch Installation

For installation, reverse the removal procedure. Pay attention to the following details.

Apply LOCTITE 648 (GREEN) (P/N 413 711 400) on threads of sprag clutch housing screws.

Install screws but do not torque yet.

Apply engine oil on sprag clutch and sprag clutch gear needle bearing.

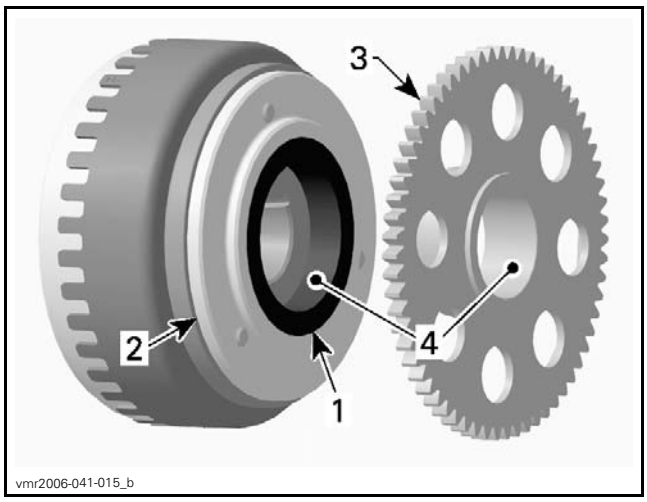

1. *Sprag clutch*
2. *Sprag clutch housing*
3. *Sprag clutch gear*
4. *Apply engine oil here*

Install rotor, refer to *ROTOR* in this subsection.

Tighten sprag clutch housing screws to specification.

SPRAG CLUTCH HOUSING SCREWS	
Tightening torque	30 N•m ± 2 N•m (22 lbf•ft ± 1 lbf•ft)

SPRAG CLUTCH GEAR

Sprag Clutch Gear Removal

Remove *ROTOR*. See procedure in this subsection.

Pull sprag clutch gear out of the rotor.

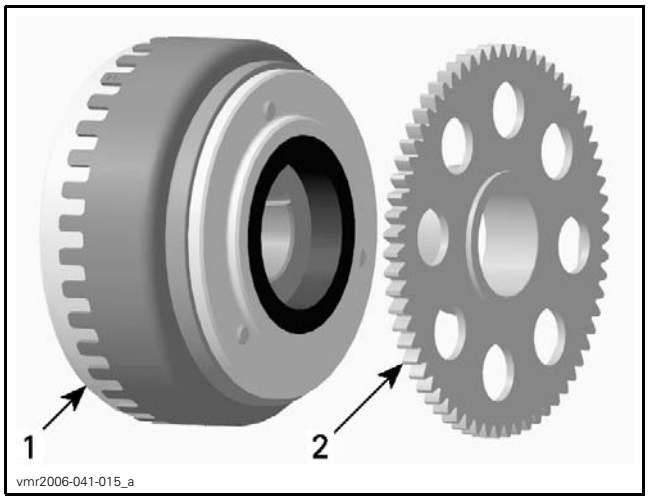

1. Rotor
2. Sprag clutch gear

Sprag Clutch Gear Inspection

Inspect gear, especially teeth and sprag clutch collar, for wear and other damage.

Check needle bearing condition. Replace sprag clutch gear if necessary.

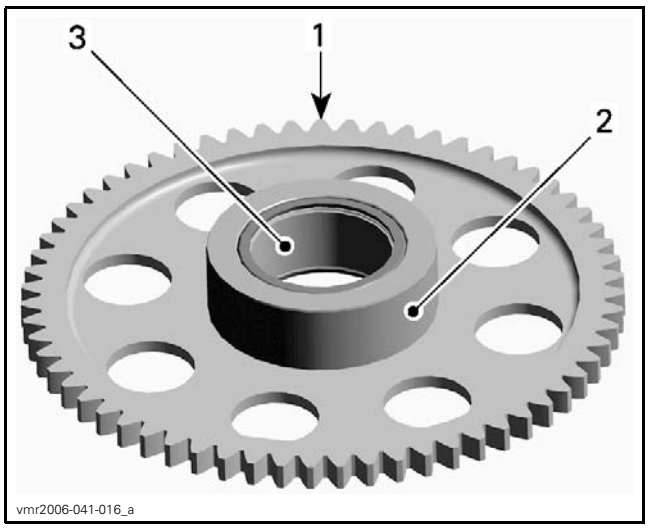

INSPECT
1. Teeth
2. Collar
3. Needle bearing

Sprag Clutch Gear Installation

The installation is the reverse of the removal procedure.

NOTE: Apply engine oil on needle bearing and collar of sprag clutch gear.

STARTER DRIVE GEARS

Starter Drive Gear Location

The starter drive gears are located on the engine MAG side behind the magneto cover.

Starter Drive Gear Removal

Remove *MAGNETO COVER*. See procedure in this subsection.

Remove location pins, starter double gear and intermediate gear.

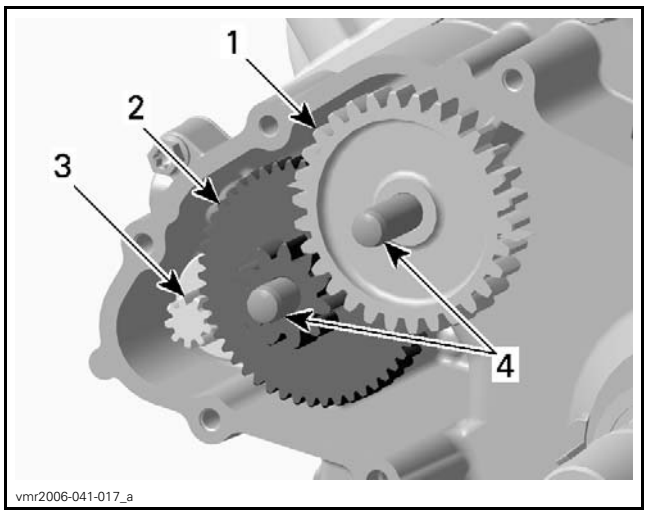

1. Intermediate gear
2. Starter double gear
3. Starter gear
4. Location pins

Starter Drive Gear Inspection

Inspect gears and location pins for wear and damage.

Replace parts as necessary.

Starter Drive Gear Installation

The installation is the reverse of the removal procedure. Pay attention to the following details.

Apply LOCTITE 767 (ANTISEIZE LUBRICANT) (P/N 293 800 070) on starter gear before installing the starter double gear.

Apply engine oil on location pins.

INTAKE MANIFOLD

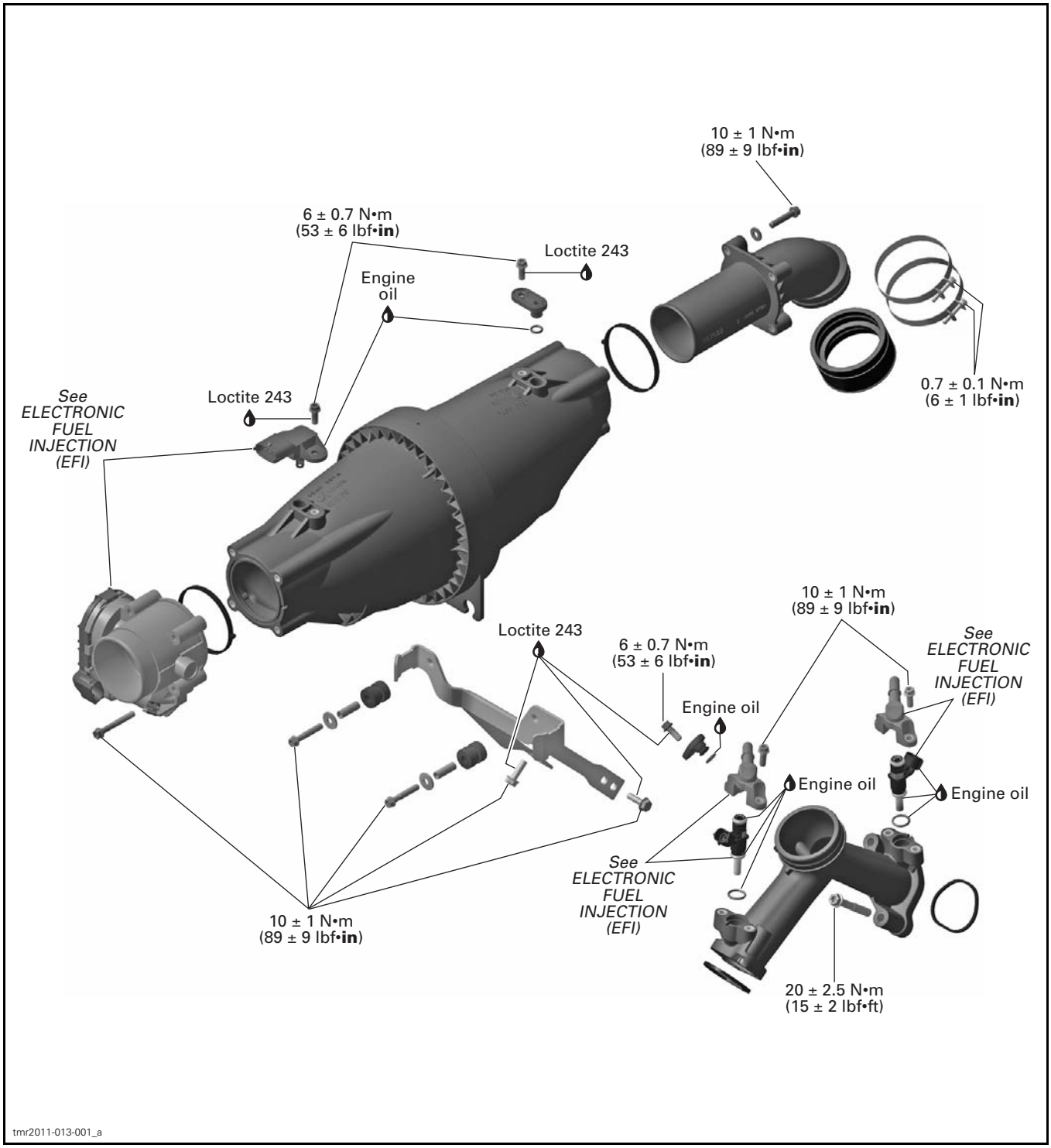

PROCEDURES

PLENUM BRACKET

Plenum Bracket Installation

On cylinder 1, install the plenum bracket using the appropriate mounting holes.

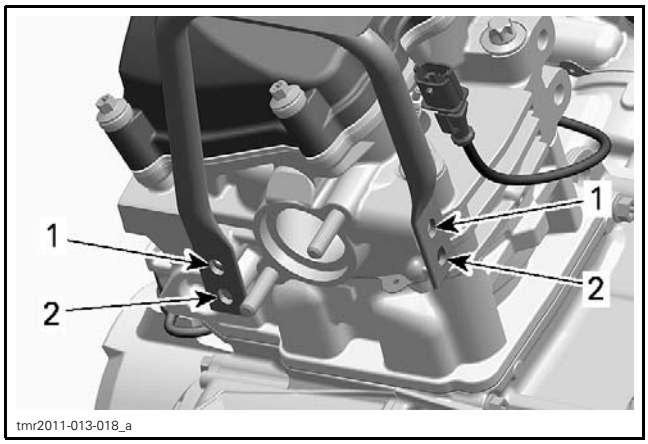

tmr2011-013-018_a

1. Mounting holes for the 1000 engine
2. Mounting holes for the 800R engine

Tighten plenum bracket retaining screws to specification.

PLENUM BRACKET RETAINING SCREWS	
Tightening torque	10 N•m ± 1 N•m (89 lbf•**in** ± 9 lbf•**in**)

INTAKE MANIFOLD

Intake Manifold Access

Refer to *BODY* and remove the lower console.

Intake Manifold Removal

1. Disable fuel pump using B.U.D.S. Select the **ECM** and **Activation** tabs, then click on **Disabled** in the fuel pump area.

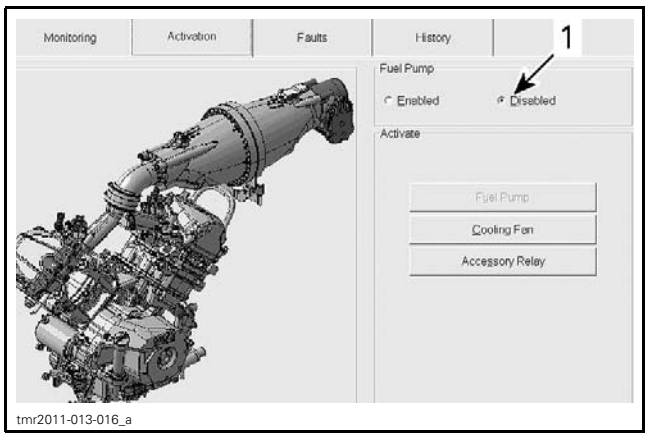

tmr2011-013-016_a

1. Click "Disabled"

2. Release fuel pressure by running engine until it runs out of gas.
3. Disconnect the fuel hoses at the fuel injectors, refer to *ELECTRONIC FUEL INJECTION (EFI).*

⚠ CAUTION The fuel hose may still be under pressure.

4. Disconnect fuel injectors electrical connectors.
5. Remove plenum adapter elbow.

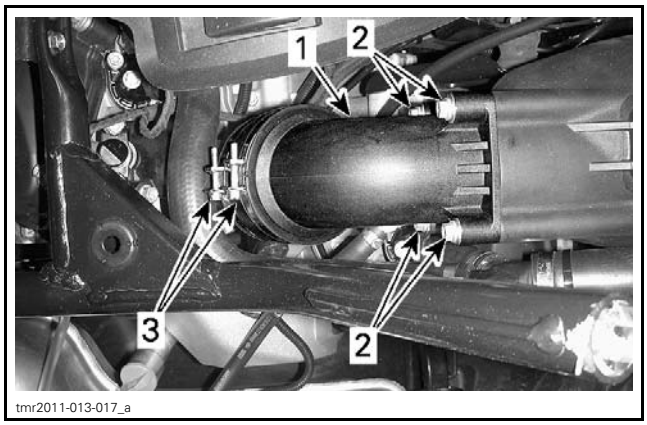

tmr2011-013-017_a

1. Plenum adapter elbow
2. Remove retaining screws
3. Remove clamps

6. Remove intake manifold from engine.

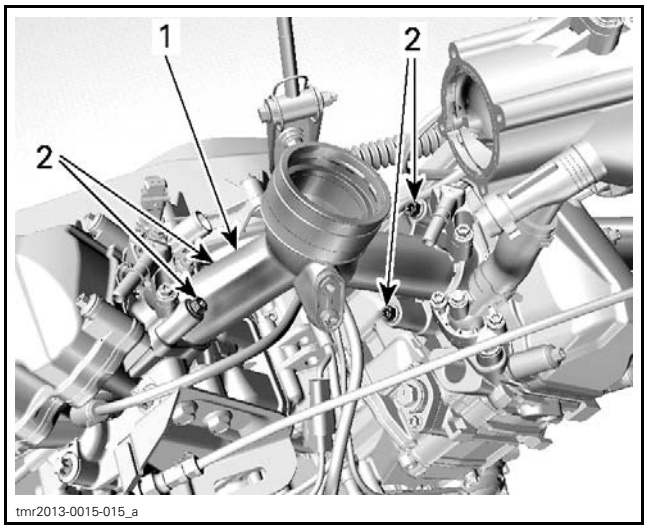

tmr2013-0015-015_a

SOME PARTS REMOVED FOR CLARITY
1. Intake manifold
2. Remove retaining screws (x4)

Intake Manifold Inspection

Check intake manifold for cracks, warping at flanges or any other damage. Replace if necessary.

Intake Manifold Installation

The installation is the reverse of the removal procedure. However, pay attention to the following.

Tighten intake manifold retaining screws to specified torque one cylinder at a time.

INTAKE MANIFOLD RETAINING SCREWS	
Tightening torque	20 N•m ± 2.5 N•m (15 lbf•ft ± 2 lbf•ft)

Tighten elbow retaining screws to specification.

ELBOW RETAINING SCREWS	
Tightening torque	10 N•m ± 1 N•m (89 lbf•**in** ± 9 lbf•**in**)

Tighten intake manifold clamps to specification.

INTAKE MANIFOLD CLAMPS	
Tightening torque	0.7 N•m ± 0.1 N•m (6 lbf•**in** ± 1 lbf•**in**)

Enable fuel pump using B.U.D.S.

TOP END

SERVICE TOOLS

Description	Part Number	Page
CRANKSHAFT LOCKING BOLT	529 035 617	117
ENGINE LEAK DOWN TEST KIT	529 035 661	103
PISTON CIRCLIP INSTALLER	529 035 921	121
PISTON CIRCLIP INSTALLER	529 036 153	121
PISTON RING COMPRESSOR	529 035 919	117
TDC DIAL INDICATOR	414 104 700	103
VALVE GUIDE INSTALLER	529 036 140	116
VALVE GUIDE REMOVER 5 MM	529 035 924	115
VALVE SPRING COMPRESSOR CUP	529 035 764	112
VALVE SPRING COMPRESSOR	529 035 724	112

SERVICE TOOLS – OTHER SUPPLIER

Description	Part Number	Page
SNAP-ON PLIERS	YA 8230	113

SERVICE PRODUCTS

Description	Part Number	Page
LOCTITE 767 (ANTISEIZE LUBRICANT)	293 800 070	116

CYLINDER HEAD NO. 1

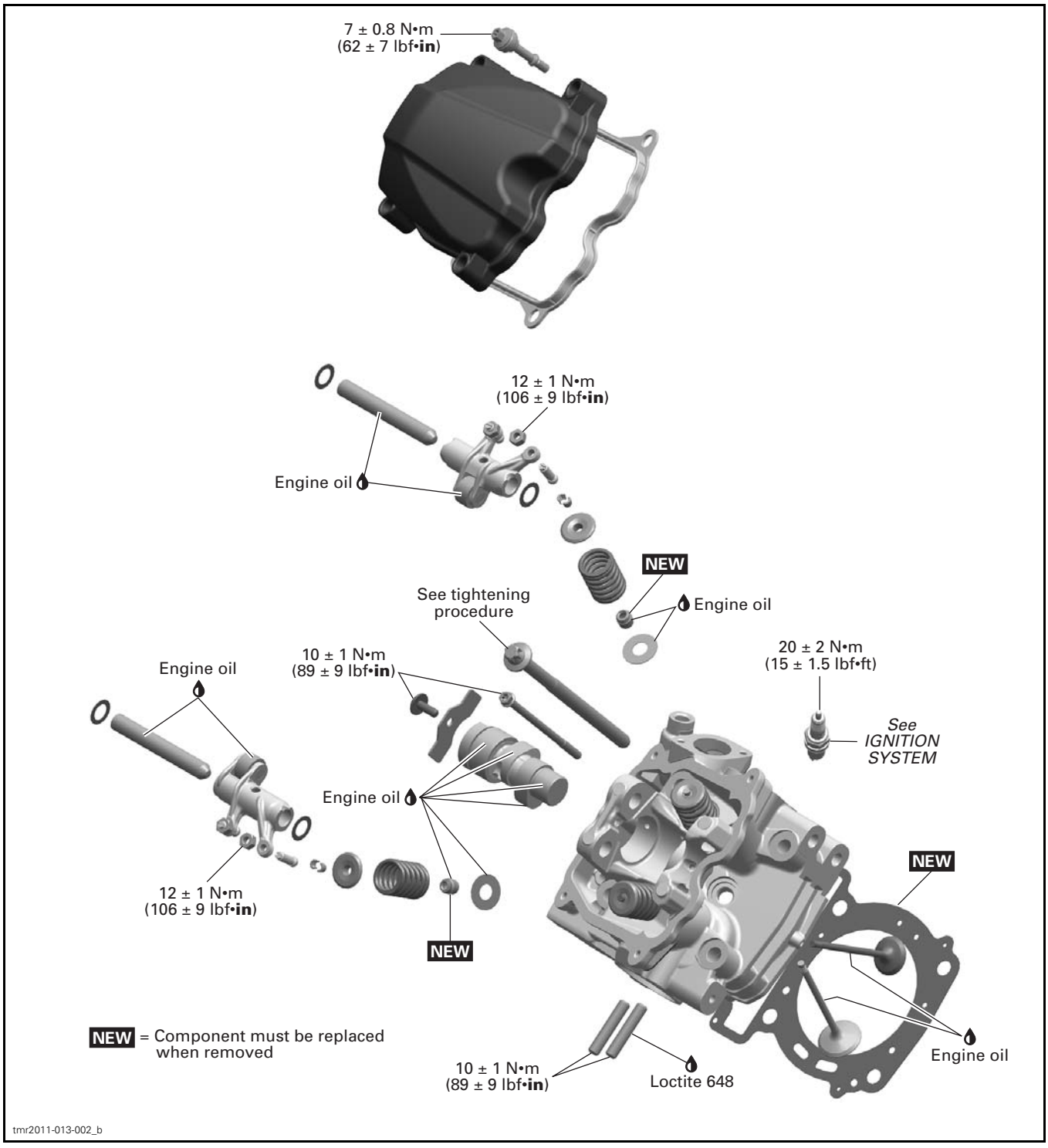

CYLINDER HEAD NO. 2

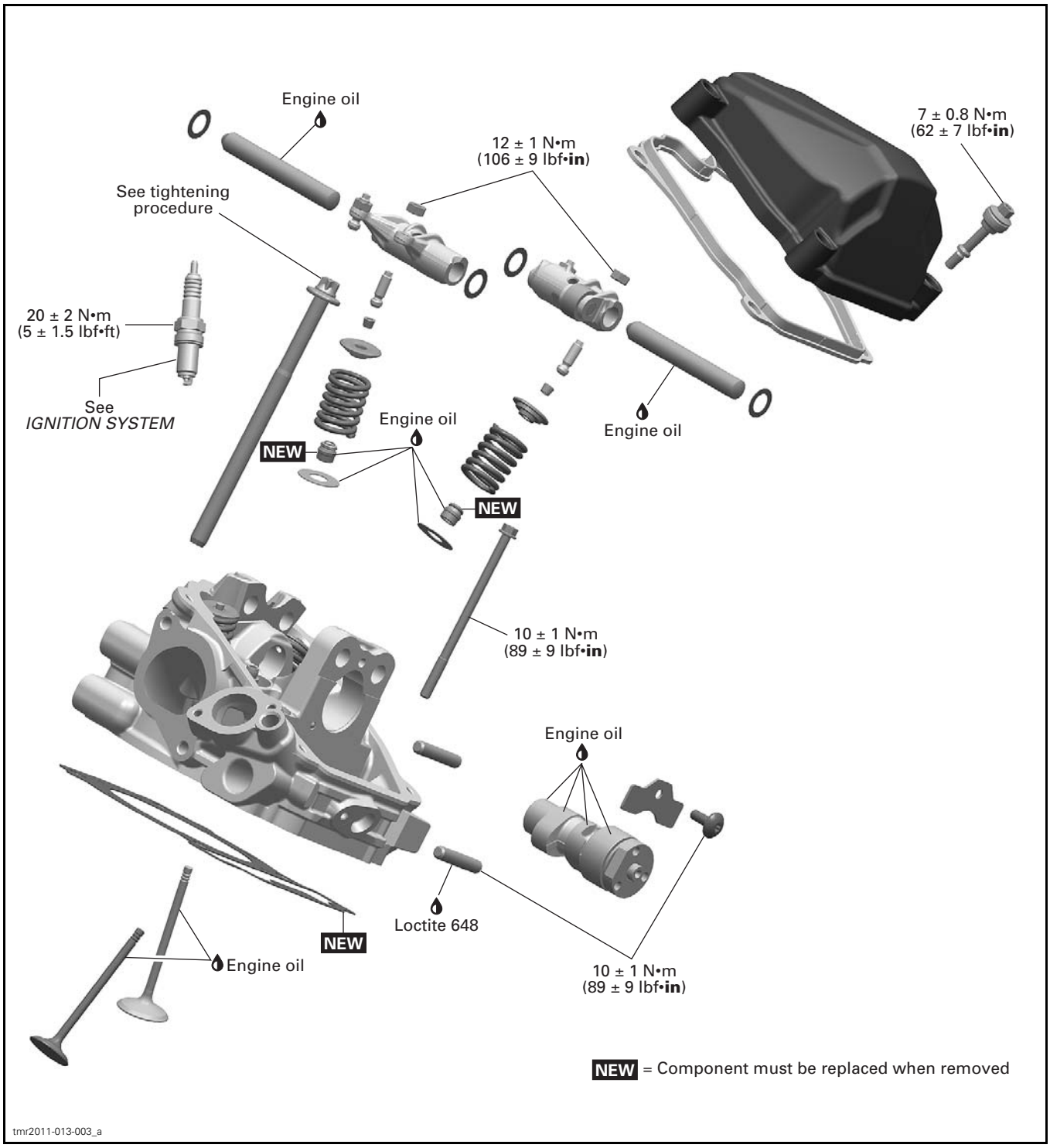

CYLINDERS AND PISTONS

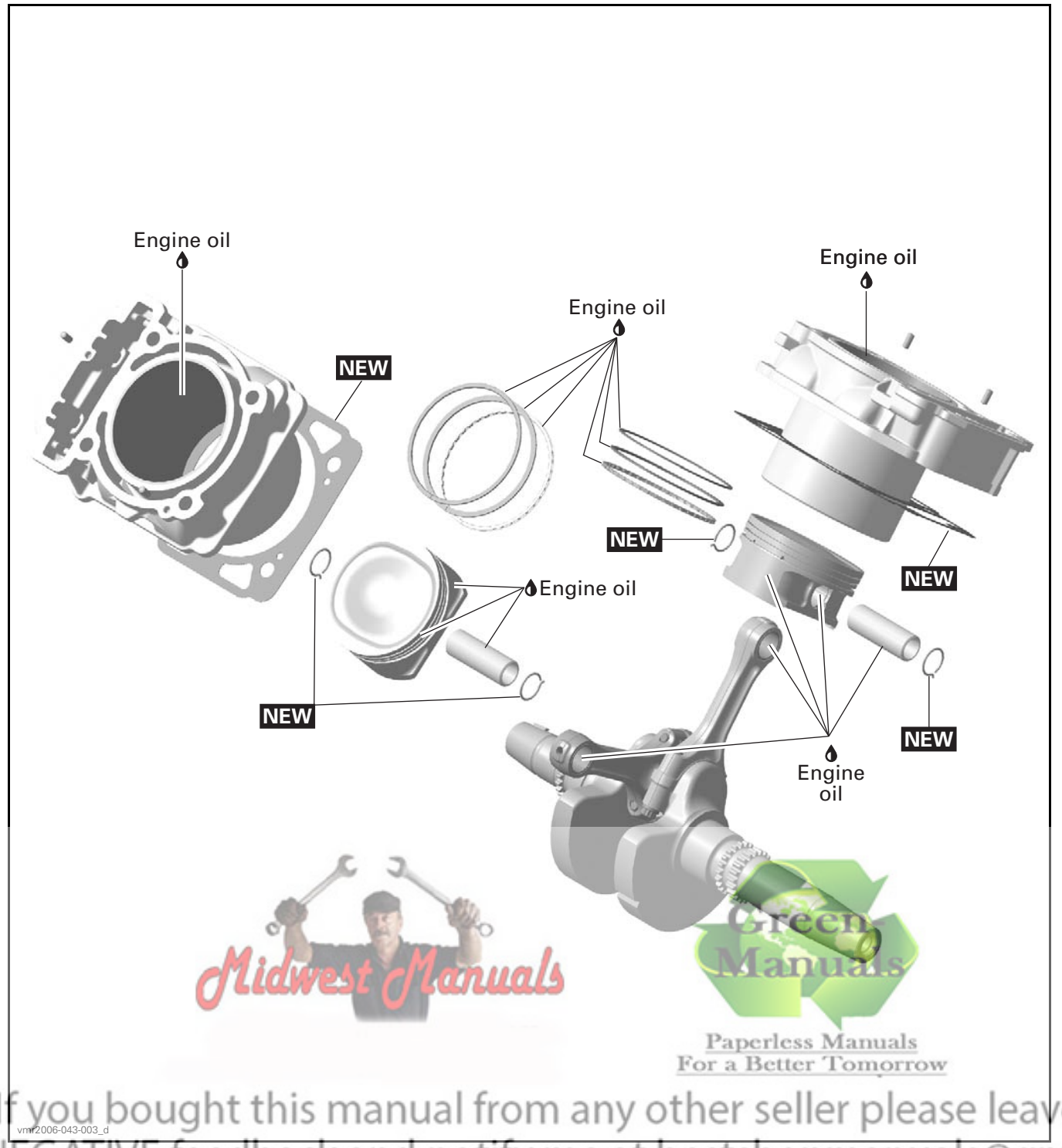

Midwest Manuals
Green Manuals
Paperless Manuals
For a Better Tomorrow
If you bought this manual from any other seller please leave them
NEGATIVE feedback and notify me at bestshopmanuals@gmail.com

GENERAL

Special reference are made in the text for procedures which are different for cylinder no. 1 and cylinder no. 2.

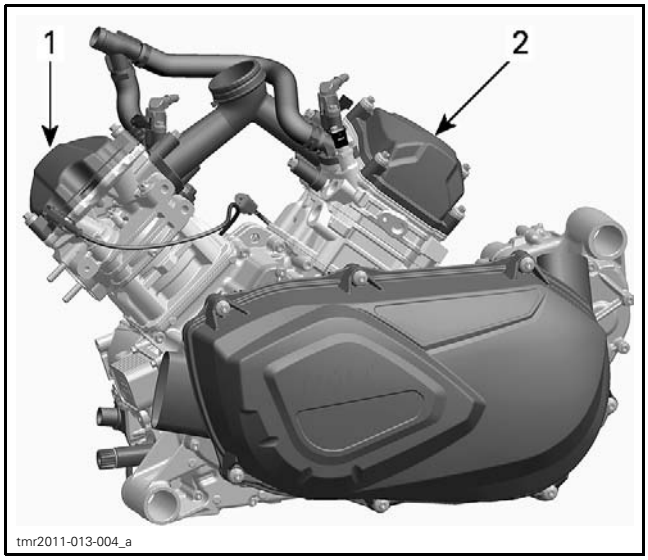

1. Cylinder 1 (front)
2. Cylinder 2 (rear)

When diagnosing an engine problem, always perform a cylinder leak test.

NOTE: Even though the following procedures do not require the engine removal, many illustrations show the engine out of the vehicle for more clarity.

IMPORTANT: Note position of parts on disassembly. This may help to find the root cause of a problem. A component that is not replaced should be reinstalled in the same position as originally mounted.

INSPECTION

LEAK TEST

Before performing the cylinder leak test, verify the following:

– Clamp(s) tightness
– Radiator and hoses.

NOTE: For best accuracy, the leak test should be done with the engine at normal operating temperature.

⚠ WARNING

Prevent burning yourself on hot engine parts.

Preparation

Disconnect battery.

⚠ WARNING

Always respect this order for disassembly; disconnect BLACK (-) cable first.

Remove radiator cap.

⚠ WARNING

To prevent burning yourself only remove the radiator cap by wearing the appropriate safety equipment.

Unplug spark plug cable.

Clean spark plug area and remove spark plug from cylinder head.

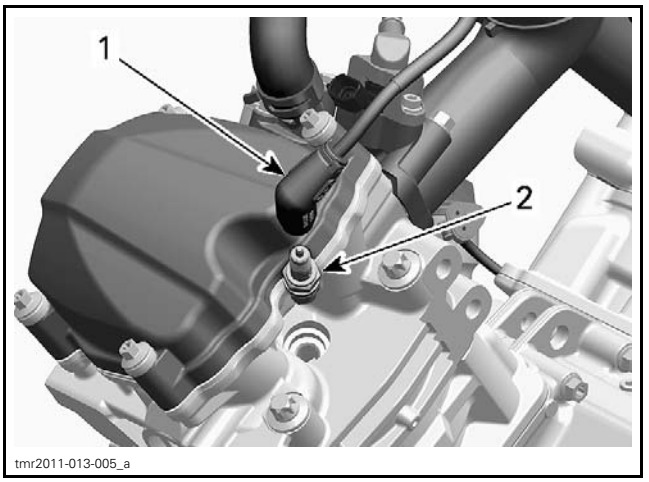

1. Spark plug cable
2. Spark plug

Remove valve cover.

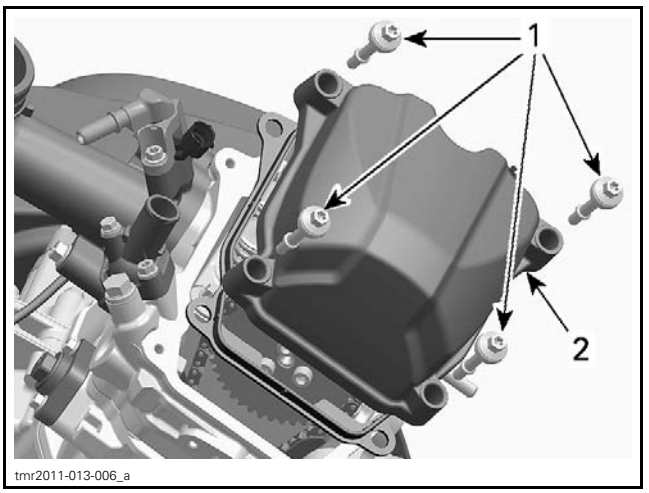

1. Valve cover screws
2. Valve cover

Rotate crankshaft until piston is at ignition TDC.

To turn crankshaft, there are two possible procedures.

First Procedure

Turn the drive pulley.

Second Procedure

1. Remove plug screw with O-ring from magneto cover.
2. Use a 14 mm Allen key and turn crankshaft.

NOTICE Turn only clockwise to avoid loosening of magneto flywheel Allen screw.

Set the piston to precisely ignition TDC.

REQUIRED TOOL	
TDC DIAL INDICATOR (P/N 414 104 700)	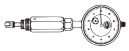

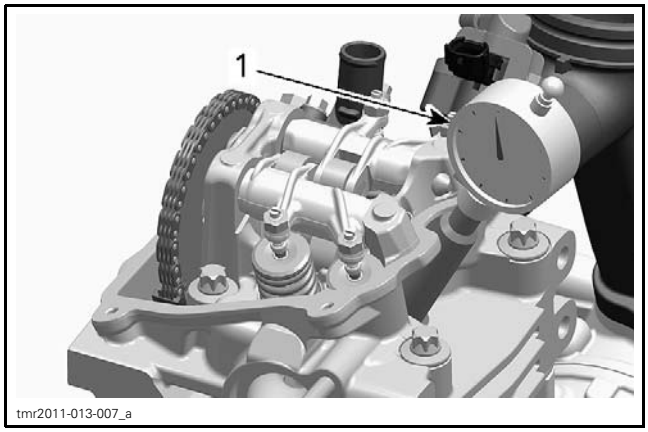

1. Dial gauge

NOTE: If a dial gauge is not available, use a screwdriver or another similarly suitable tool.

NOTICE Do not scratch or damage piston/cylinder surface.

NOTE: At ignition TDC the marks on the camshaft timing gear have to be parallel to cylinder head base as per following illustration.

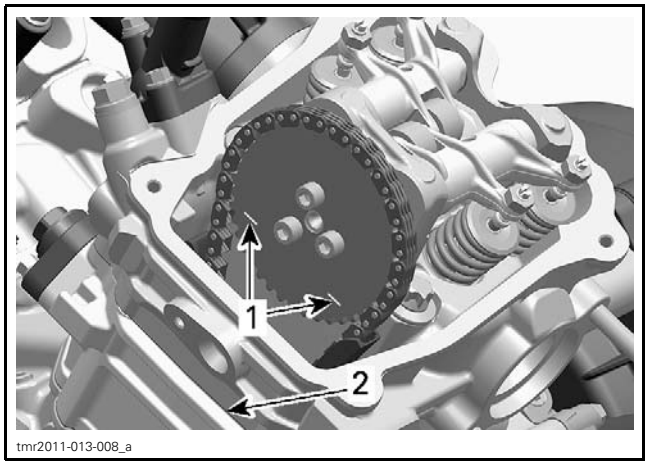

1. Marks on camshaft timing gear
2. Cylinder head base

Leak Test

REQUIRED TOOL	
ENGINE LEAK DOWN TEST KIT (P/N 529 035 661)	

Connect leak tester to adequate air supply.

Set needle of measuring gauge to zero.

NOTE: All testers have specific instructions on gauge operation and required pressure.

Install gauge adapter into previously cleaned spark plug hole.

Supply combustion chamber with air pressure.

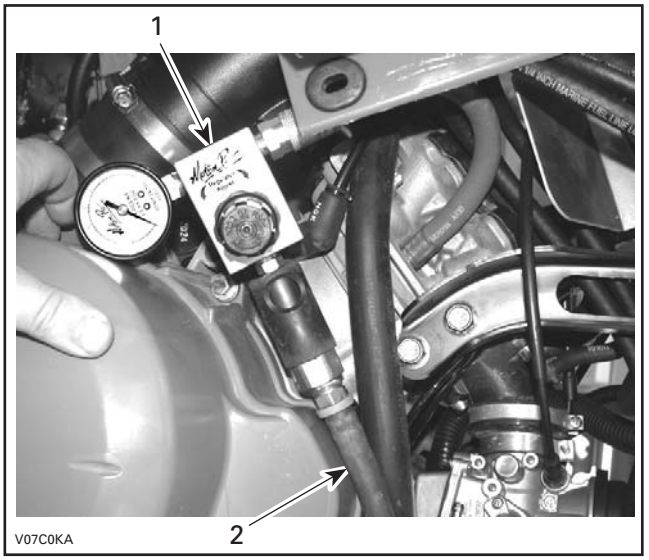

TYPICAL
1. Leak tester
2. Air supply hose

Note the amount or percentage of leakage (depending on tester).

LEAKAGE PERCENTAGE	ENGINE CONDITION
0% to 15%	Excellent condition
16% to 25%	Good condition
26% to 40%	Fair condition; reduced engine performance
41% and higher	Poor condition, diagnose and repair engine

NOTE: To make sure there is no false reading due to a valves not perfectly seated, tap each valve adjustment screw (on the rocker) using a soft hammer.

Diagnosis

Listen for air leaks.

- Air escaping in intake port/throttle body means leaking intake valve(s).
- Air escaping in exhaust port means leaking exhaust valve(s).
- Air bubbles in the coolant (radiator) means leaking cylinder head gasket.
- Air/coolant escaping from cylinder/head means damaged gasket(s) and/or loosened screws.

– Air escaping into crankcase area means excessively worn cylinder and/or broken piston rings.
– Air/oil escaping from crankcase means damaged gasket and/or loosened screws (refer to *BOTTOM END* subsection).

NOTE: For all the checkpoints mentioned above, see the appropriate engine section to diagnose and repair the engine.

Reassembly

Reverse the preparation procedure. Ensure to respect torque values and use of appropriate products/lubricants. Refer to exploded views in other subsections of this manual as required.

PROCEDURES

VALVE COVER

Valve Cover Access

Refer to *BODY* and remove:
– Upper console
– Lower console
– LH and RH lateral console panels.

Valve Cover Removal

Remove valve cover screws of valve cover.

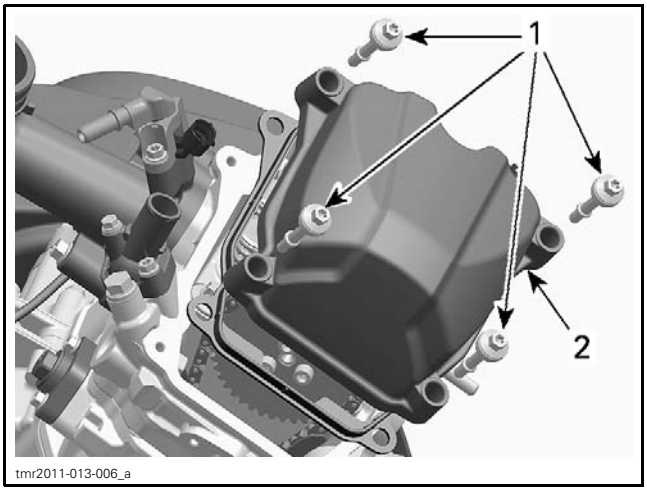

1. Valve cover screws
2. Valve cover

Remove valve cover and gasket.

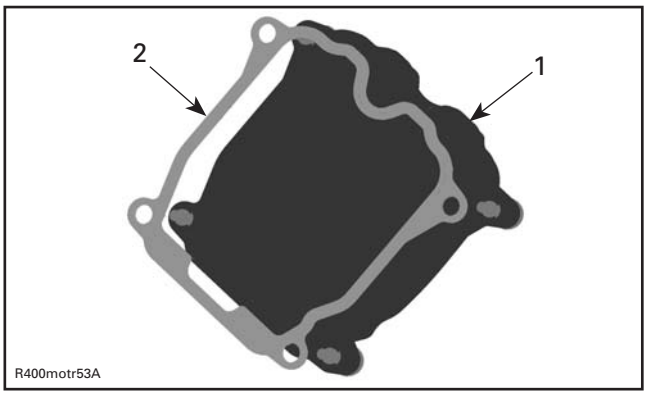

1. Valve cover
2. Gasket

Repeat the procedure for the other valve cover if required.

Valve Cover Inspection

Check the gasket on the valve cover if it is brittle, cracked or hard. If so, replace the gasket.

Valve Cover Installation

For installation, reverse the removal procedure.

Tighten valve cover retaining screws to specified torque in a criss-cross sequence.

VALVE COVER RETAINING SCREWS	
Tightening torque	7 N•m ± 0.8 N•m (62 lbf•**in** ± 7 lbf•**in**)

ROCKER ARM

Rocker Arm Removal

Remove valve cover.

Refer to *TIMING CHAIN* subsection and remove the following parts:
– Timing chain tensioner
– Camshaft timing gear.

Remove pan head screw and camshaft retaining plate.

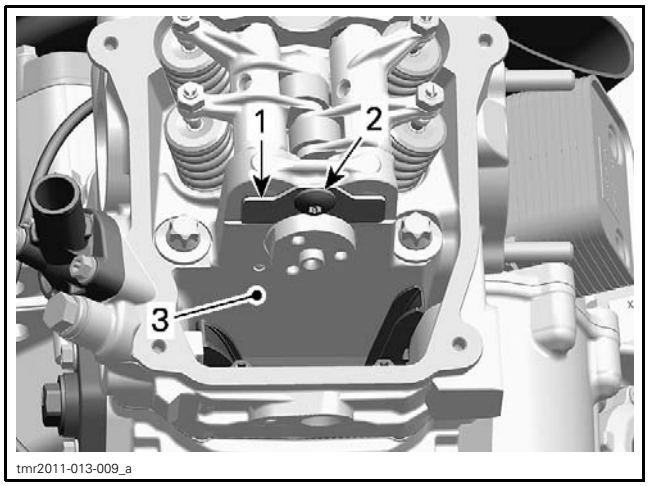

1. *Camshaft retaining plate*
2. *Pan head screw*
3. *Cylinder head*

Remove rocker arm shafts.

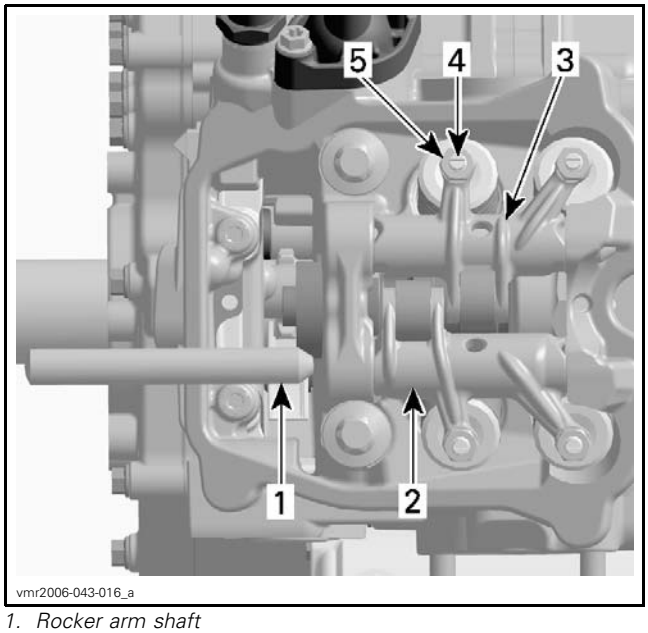

1. *Rocker arm shaft*
2. *Rocker arm (exhaust side)*
3. *Rocker arm (intake side)*
4. *Adjustment screw*
5. *Lock nut*

Remove rocker arm assembly (exhaust side and intake side) with adjustment screws and lock nuts.

Remove thrust washers.

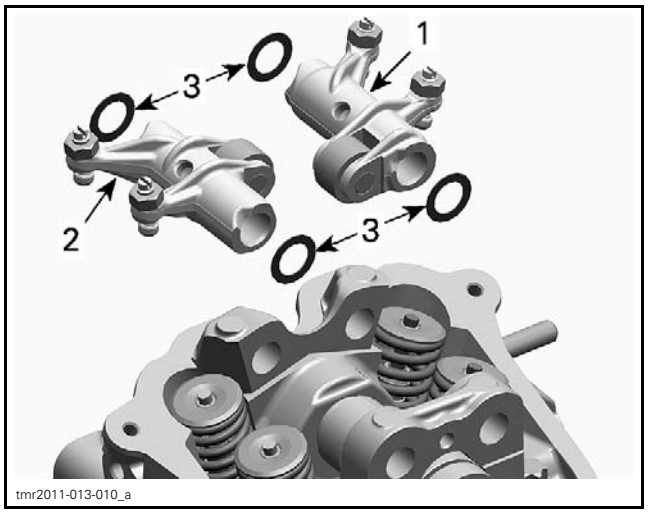

1. *Rocker arm (exhaust side)*
2. *Rocker arm (intake side)*
3. *Thrust washers*

NOTICE Pay attention not to lose thrust washers or drop them into the timing chain compartment.

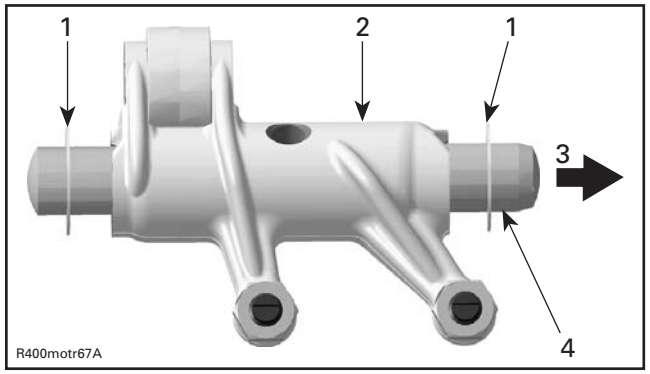

1. *2 thrust washers*
2. *Rocker arm (exhaust side)*
3. *Cylinder head (spark plug side)*
4. *Big taper to spark plug side*

Rocker Arm Inspection

Inspect each rocker arm for cracks and scored friction surfaces. If so, replace rocker arm assembly.

Check the rocker arm rollers for free movement, wear and excessive radial play. Replace rocker arm assembly if necessary.

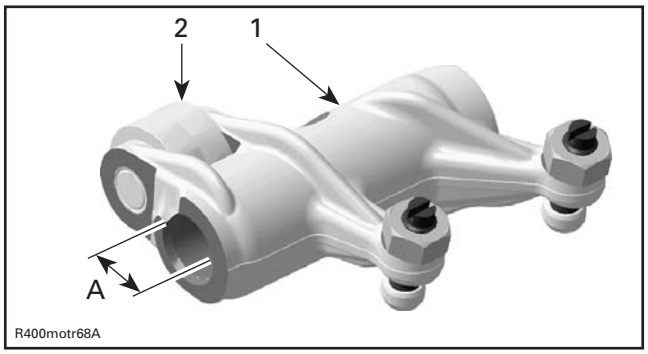

1. Rocker arm (exhaust side)
2. Roller
A. Bore for rocker arm shaft

Measure rocker arm bore diameter. If diameter is out of specification, change the rocker arm assembly.

ROCKER ARM BORE DIAMETER	
NEW	12.036 mm to 12.050 mm (.4739 in to .4744 in)
SERVICE LIMIT	12.060 mm (.4748 in)

Check adjustment screws for free movement, cracks and/or excessive play.

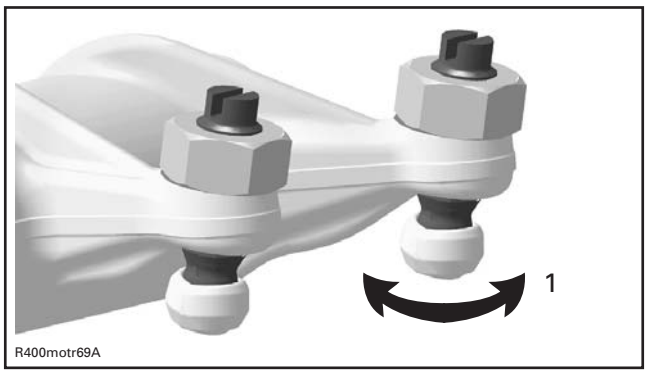

1. Free movement of adjustment screw top

Rocker Arm Shaft Inspection

Check for scored friction surfaces; if so, replace parts.

Measure rocker arm shaft diameter.

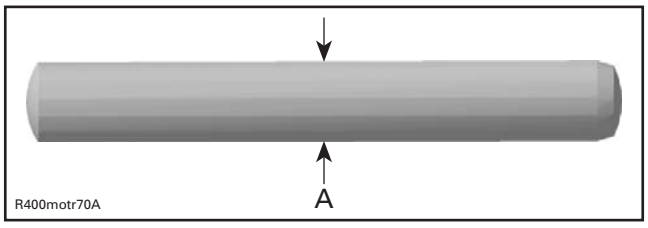

A. Measure rocker arm shaft diameter here

ROCKER ARM SHAFT DIAMETER	
NEW	12.00 mm to 12.018 mm (.4724 in to .4731 in)
SERVICE LIMIT	11.990 mm (.472 in)

Any area worn excessively will require parts replacement.

Rocker Arm Installation

NOTE: Use the same procedure for exhaust and intake rocker arm.

Apply engine oil on rocker arm shaft.

Install the rocker arm shafts with the chamfered edge first and use following procedure.

Insert a rocker arm pin through rocker arm pin bore.

Install a thrust washer at timing chain side, then the proper rocker arm (exhaust side or intake side).

Push in rocker arm shaft until its chamfer reaches the end of rocker arm bore.

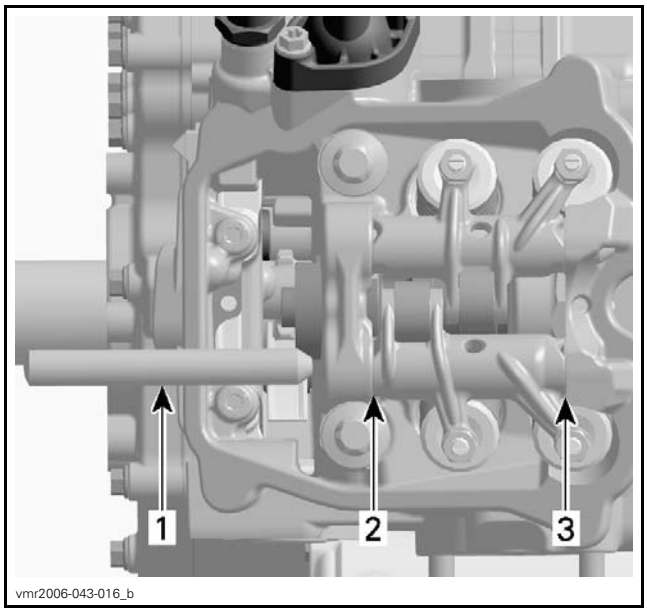

1. Rocker arm shaft
2. Thrust washer (timing chain side)
3. Thrust washer (spark plug side)

Place the other thrust washer and push rocker arm shaft to end position.

Install the camshaft retaining plate.

Adjust valve clearance, refer to *PERIODIC MAINTENANCE PROCEDURE*.

CAMSHAFT

NOTE: The engine is equipped with two different camshafts.

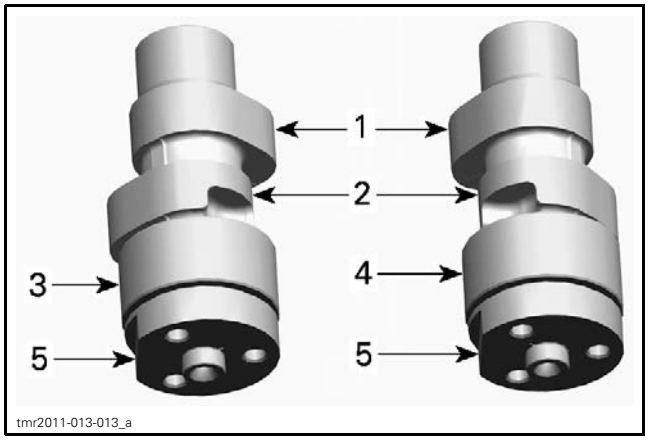

tmr2011-013-013_a

1. *Intake cam*
2. *Exhaust cam*
3. *Camshaft of cylinder 1*
4. *Camshaft of cylinder 2*
5. *Flat spot*

Camshaft Removal

The removal procedure is the same for both camshafts.

NOTICE **Each camshaft is different in design. Thus, it is important not to mix up any parts of the camshaft assembly with that of the other cylinder. Keep parts as a group.**

Remove valve cover (see *VALVE COVER* in this subsection).

Refer to *TIMING CHAIN* subsection and remove the following parts:

– Timing chain tensioner
– Camshaft timing gear.

Remove the camshaft retaining plate.

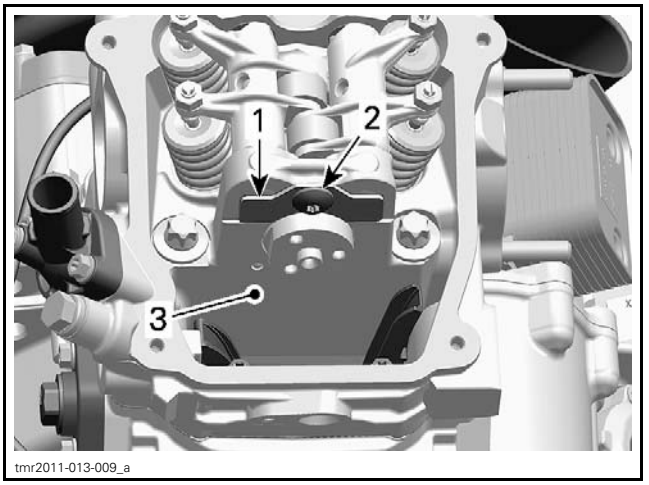

tmr2011-013-009_a

1. *Camshaft retaining plate*
2. *Pan head screw*
3. *Cylinder head*

Remove rocker arms (see *ROCKER ARM* in this subsection).

Remove the camshaft.

NOTE: For removal rotate camshaft so that intake/exhaust lobe shows to upper side of cylinder head.

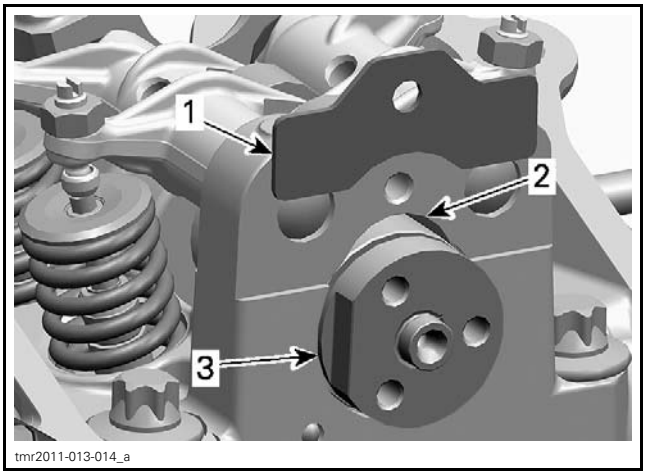

tmr2011-013-014_a

1. *Camshaft retaining plate*
2. *Area for camshaft lobes*
3. *Camshaft*

Camshaft Inspection

Camshaft Lobe Inspection

Check each lobe for scoring, scuffing, cracks or other signs of wear.

Measure camshaft lobe height using a micrometer.

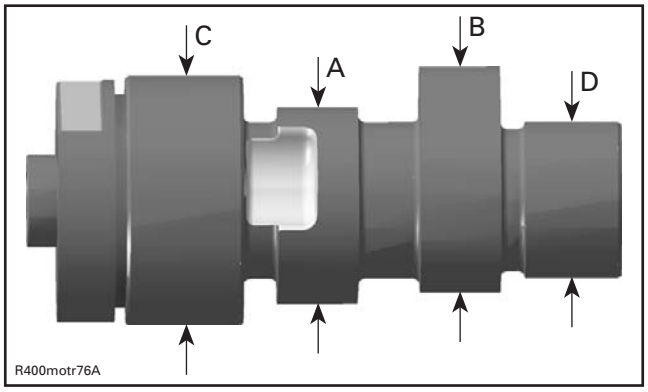

A. Camshaft lobe (exhaust valves)
B. Camshaft lobe (intake valves)
C. Camshaft journal (timing chain side)
D. Camshaft journal (spark plug side)

CAMSHAFT LOBE (EXHAUST)		
800R ENGINE	NEW	32.950 mm to 33.150 mm (1.2972 in to 1.3051 in)
	SERVICE LIMIT	32.930 mm (1.2965 in)
1000 ENGINE	NEW	32.860 mm to 33.060 mm (1.294 in to 1.302 in)
	SERVICE LIMIT	32.840 mm (1.293 in)

CAMSHAFT LOBE (INTAKE)		
800R ENGINE	NEW	32.890 mm to 33.090 mm (1.2949 in to 1.3028 in)
	SERVICE LIMIT	32.870 mm (1.2941 in)
1000 ENGINE	NEW	32.960 mm to 33.160 mm (1.298 in to 1.306 in)
	SERVICE LIMIT	32.940 mm (1.297 in)

Measure camshaft bearing in cylinder head. Refer to *CYLINDER HEAD INSPECTION* in this subsection.

Camshaft Journal Inspection

Check each journal for scoring, scuffing, cracks or other signs of wear.

Measure camshaft journal using a micrometer.

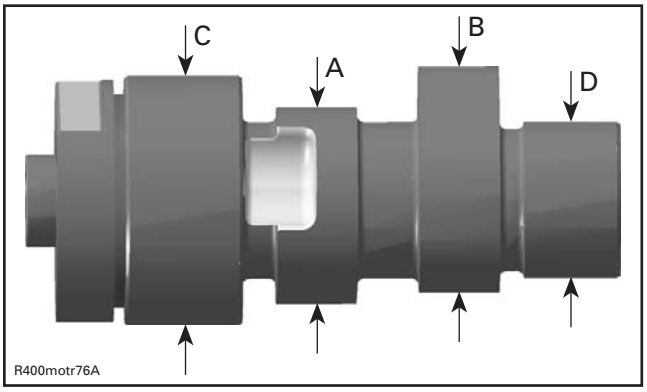

A. Camshaft lobe (exhaust valves)
B. Camshaft lobe (intake valves)
C. Camshaft journal (timing chain side)
D. Camshaft journal (spark plug side)

CAMSHAFT JOURNAL (TIMING CHAIN SIDE)	
NEW	34.959 mm to 34.975 mm (1.3763 in to 1.377 in)
SERVICE LIMIT	34.950 mm (1.376 in)

CAMSHAFT JOURNAL (SPARK PLUG SIDE)	
NEW	21.959 mm to 21.980 mm (.8645 in to .8654 in)
SERVICE LIMIT	21.950 mm (.8642 in)

Camshaft Installation

For installation, reverse the removal procedure. Pay attention to the following details.

NOTICE **The camshafts are not identical in design. Do not invert the camshafts during assembly. Any mix-up of the components will lead to engine damage.**

Place the camshaft retaining plate in the slot of the camshaft.

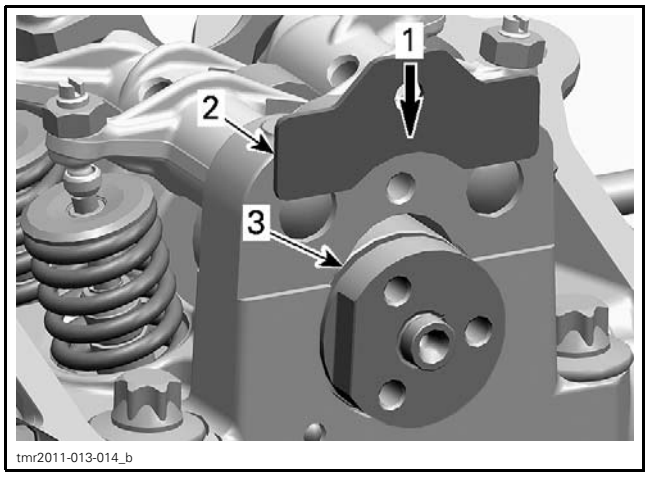

1. Direction of movement
2. Camshaft retaining plate
3. Slot retaining camshaft

For other parts, refer to proper installation procedure.

CYLINDER HEAD

Cylinder Head Access

Refer to *BODY* and remove:
– Lower console
– LH and RH lateral console panels.

Remove LH passenger handhold bar.

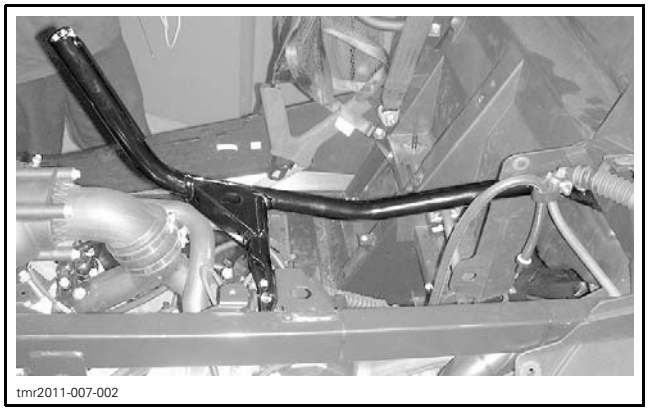

LH PASSENGER HANDHOLD BAR

On cylinder 2, remove the shift cable bracket.

Refer to *INTAKE MANIFOLD* subsection to remove following parts:
– Plenum, for cylinder 1
– Intake manifold.

Cylinder Head Removal

The removal procedure is the same for both cylinder heads.

Drain coolant. Refer to *ENGINE COOLANT REPLACEMENT* in the *PERIODIC MAINTENANCE PROCEDURES* subsection.

NOTE: Before removing cylinder head, blow out remaining coolant by air pressure. During cylinder head removal, the remaining coolant in cylinder head could overflow into the engine and a little quantity of coolant could drop into the engine. In this case, the engine oil will be contaminated.

Disconnect spark plug wire.

Disconnect temperature sensor connector, located at rear cylinder head.

Remove the valve cover and its gasket (see *VALVE COVER* in this subsection).

Refer to *TIMING CHAIN* subsection and remove the following parts:
– Timing chain tensioner
– Camshaft timing gear.

First remove the M6 cylinder head screws, then the M10 cylinder head screws.

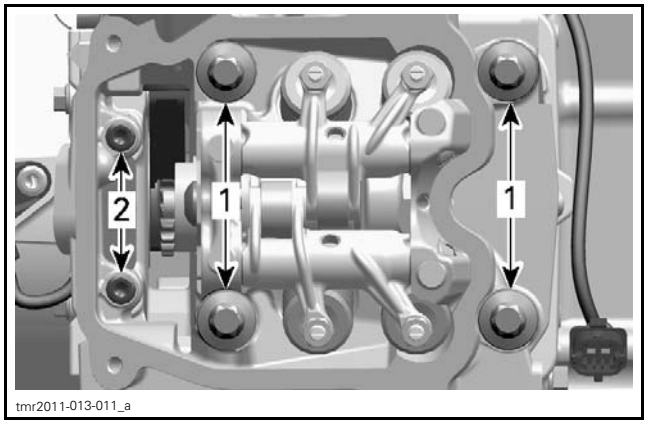

1. Cylinder head screws M10
2. Cylinder head screws M6

Pull up cylinder head.

Remove timing chain guide (fixed).

Remove and discard the cylinder head gasket.

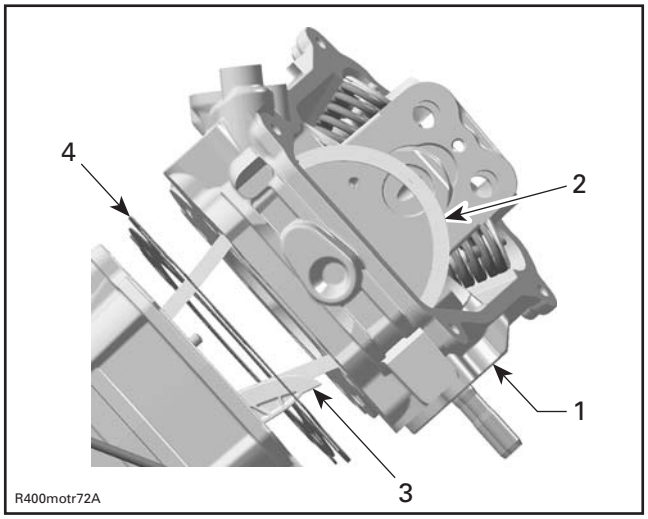

1. Cylinder head
2. Timing chain
3. Chain guide (fixed)
4. Cylinder head gasket

Cylinder Head Inspection

Inspect timing chain guide (fixed) for wear, cracks or other damages. Replace if necessary.

Check for cracks between valve seats, if so, replace cylinder head.

Check mating surface between cylinder and cylinder head for contamination. If so, clean both surfaces.

Clean oil support through the cylinder head from contamination.

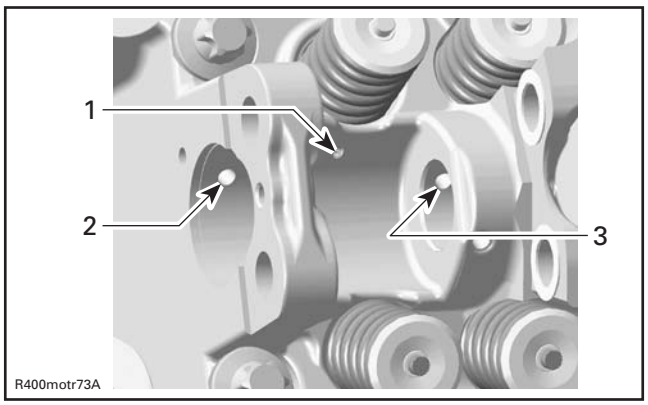

1. Oil port to lubricate camshaft lobes intake/exhaust
2. Oil supply to camshaft bearing journal (timing chain side)
3. Oil supply to camshaft bearing journal (spark plug side)

Cylinder Head Camshaft Bearing Inspection

Measure camshaft bearing in cylinder head.

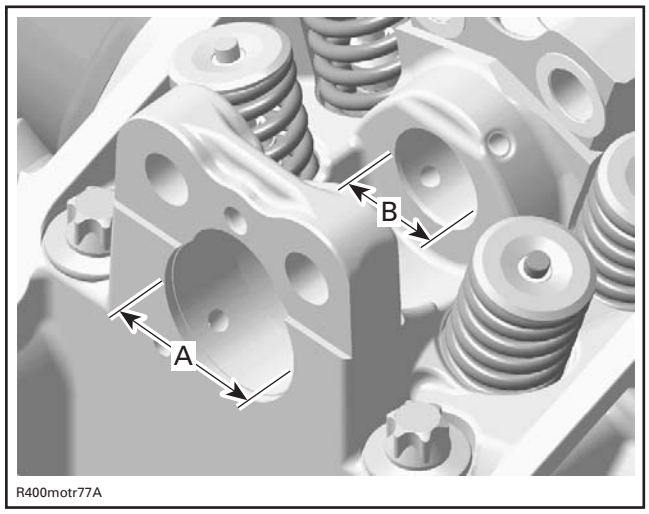

A. Camshaft bearing (timing chain side)
B. Camshaft bearing (spark plug side)

CAMSHAFT BEARING (TIMING CHAIN SIDE)	
NEW	35.000 mm to 35.025 mm (1.378 in to 1.3789 in)
SERVICE LIMIT	35.040 mm (1.3795 in)
CAMSHAFT BEARING (SPARK PLUG SIDE)	
NEW	22.000 mm to 22.021 mm (.8661 in to .867 in)
SERVICE LIMIT	22.040 mm (.8677 in)

Cylinder Head Installation

NOTE: Never invert front and rear cylinder heads. On the 800R, cylinder heads are not identical.

For installation, reverse the removal procedure. Pay attention to the following details.

Ensure dowel pins are in place.

NOTICE **Timing chain guide (fixed) has to be fixed between cylinder and cylinder head.**

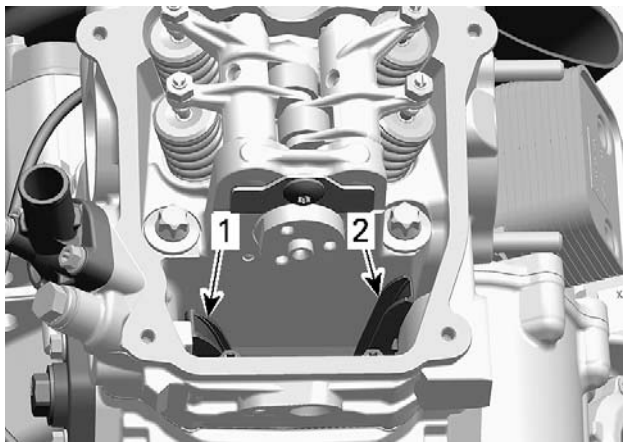

tmr2011-013-009_b

TYPICAL
1. *Timing chain guide (tensioner side) mounted in crankcase*
2. *Timing chain guide (fixed) between cylinder and cylinder head*

Install a NEW cylinder head gasket.

Install cylinder head screws in correct position.

NOTICE Cylinder head screws have different sizes and lengths.

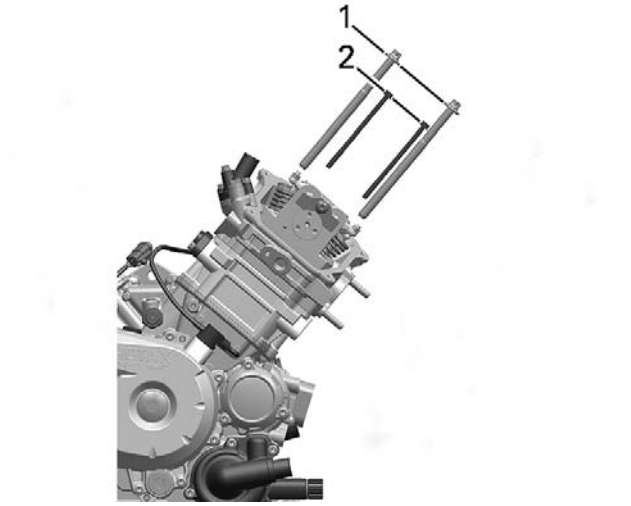

tmr2013-016-001_a

1. *Location no. 1*
2. *Location no. 2*

CYLINDER HEAD SCREW IDENTIFICATION		
800R engine	Location no. 1	M10 x 140
	Location no. 2	M6 x 85
1000 engine	Location no. 1	M10 x 159
	Location no. 2	M6 x 105

Tighten M10 cylinder head screws FIRST as per following specifications.

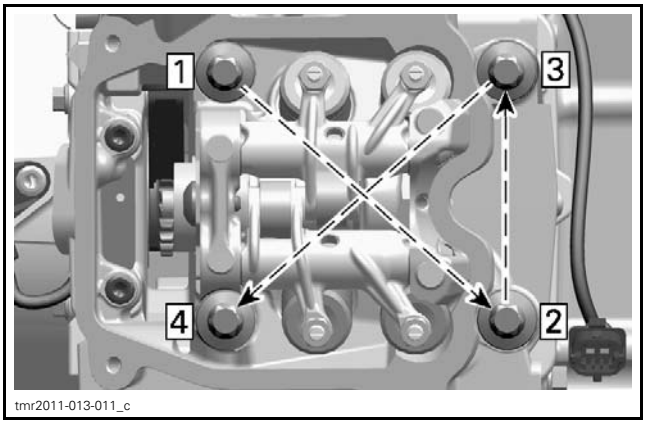

tmr2011-013-011_c

TIGHTENING SEQUENCE - M10 CYLINDER HEAD SCREWS

M10 CYLINDER HEAD SCREWS	
Tightening torque (step 1)	20 N•m ± 1 N•m (15 lbf•ft ± 1 lbf•ft)

M10 CYLINDER HEAD SCREWS	
Tightening torque (step 2)	180° +/- 5°

Tighten M6 cylinder head screws as per following specification.

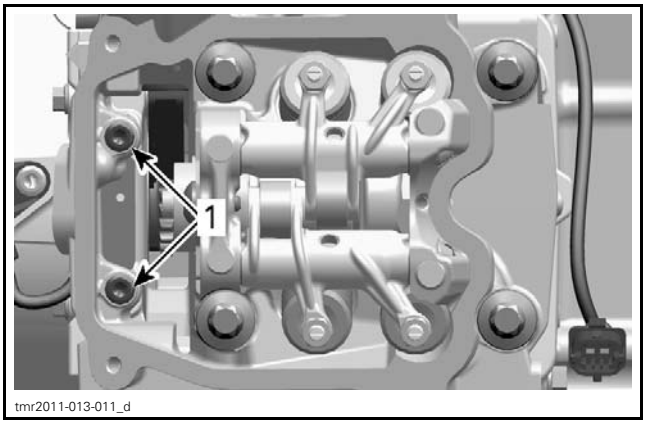

tmr2011-013-011_d

1. *M6 Screws*

M6 CYLINDER HEAD SCREWS	
Tightening torque	10 N•m ± 1 N•m (89 lbf•**in** ± 9 lbf•**in**)

Check timing chain guide (tensioner side) for movement.

On cylinder 1, install the plenum bracket, refer to *INTAKE MANIFOLD* subsection.

VALVE SPRINGS

Valve Spring Removal

Refer to following procedures in this subsection to remove:

– *CAMSHAFT*
– *CYLINDER HEAD*.

Compress valve spring.

REQUIRED TOOL	
VALVE SPRING COMPRESSOR (P/N 529 035 724)	
VALVE SPRING COMPRESSOR CUP (P/N 529 035 764)	

⚠ WARNING

Always wear safety glasses when disassembling valve springs. Be careful when unlocking valves. Components could fly away because of the strong spring preload.

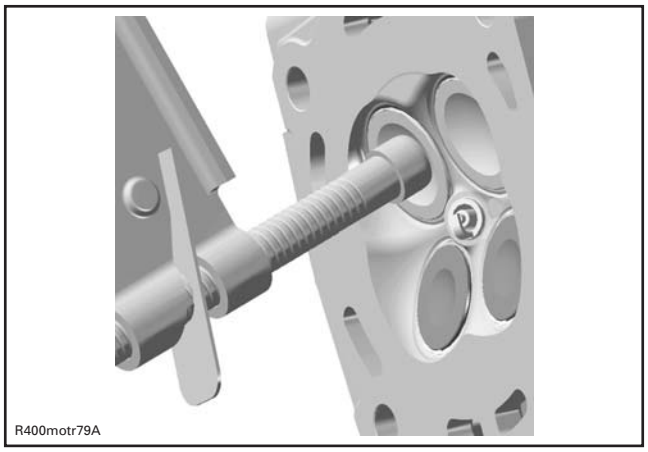

LOCATE VALVE SPRING COMPRESSOR CLAMP IN CENTER OF THE VALVE

Remove valve cotters.

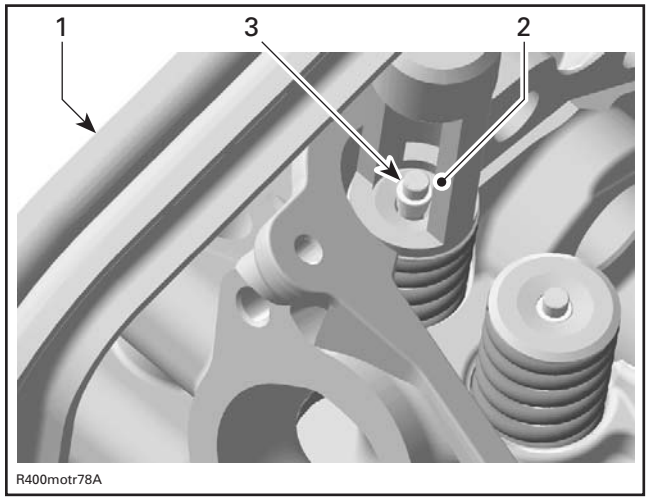

1. Valve spring compressor clamp
2. Valve spring compressor cup
3. Valve cotter

Remove tools and withdraw valve spring retainer and valve spring.

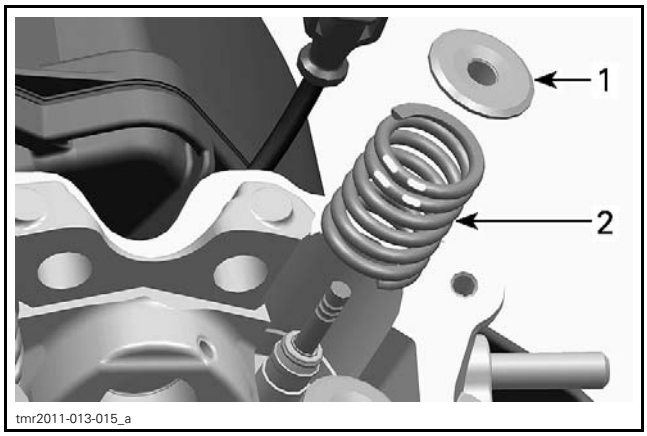

1. Valve spring retainer
2. Valve spring

Valve Spring Inspection

Check valve spring for visible damage. If so, replace valve spring.

Check valve spring for free length and straightness.

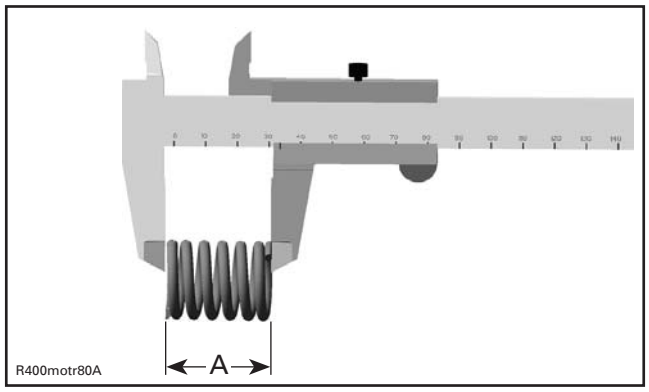

A. Valve spring length

VALVE SPRING FREE LENGTH	
NEW	40.81 mm (1.607 in)
SERVICE LIMIT	39.00 mm (1.535 in)

Replace valve springs if not within specifications.

Valve Spring Installation

For installation, reverse the removal procedure. Pay attention to the following details.

Colored area of the valve spring must be placed on top.

To ease installation of cotters, apply oil or grease on them so that they remain in place while releasing the spring.

NOTE: Valve cotter must be properly engaged in valve stem grooves.

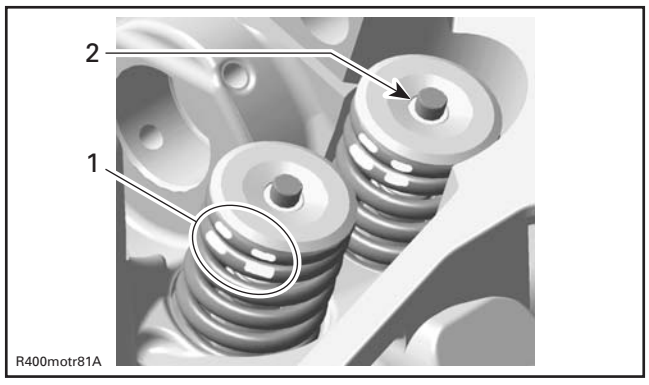

1. Position of the valve spring
2. Valve cotter

After spring is installed, ensure it is properly locked by tapping on valve stem end with a soft hammer so that valve opens and closes a few times.

NOTICE An improperly locked valve spring will cause engine damage.

VALVES

Valve Removal

Remove valve spring, see *VALVE SPRING* in this subsection.

Push valve stem, then pull valves (intake and exhaust) out of valve guide.

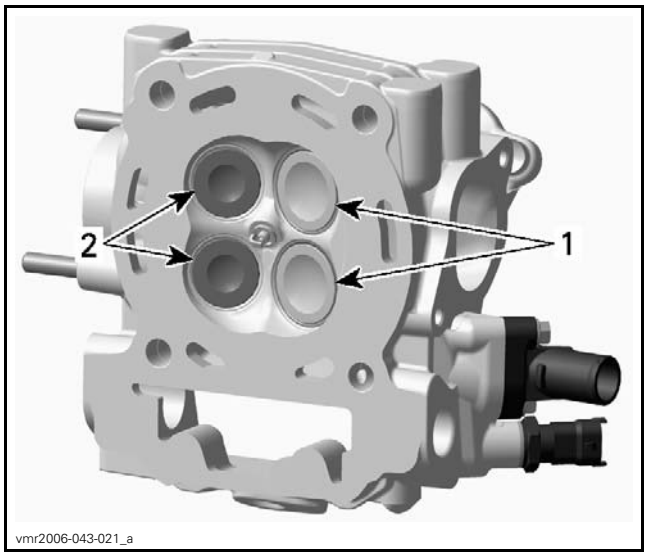

1. Intake valves 31 mm
2. Exhaust valves 27 mm

Remove valve stem seal and discard it.

REQUIRED TOOL	
SNAP-ON PLIERS (P/N YA 8230)	



Valve Inspection

Whenever valves are removed always inspect valve guides. Refer to *VALVE GUIDES* in this subsection.

Valve Stem Seal

Always install NEW seals whenever valves are removed.

Valve

Inspect valve surface, check for abnormal stem wear and bending. If out of specification, replace by a new one.

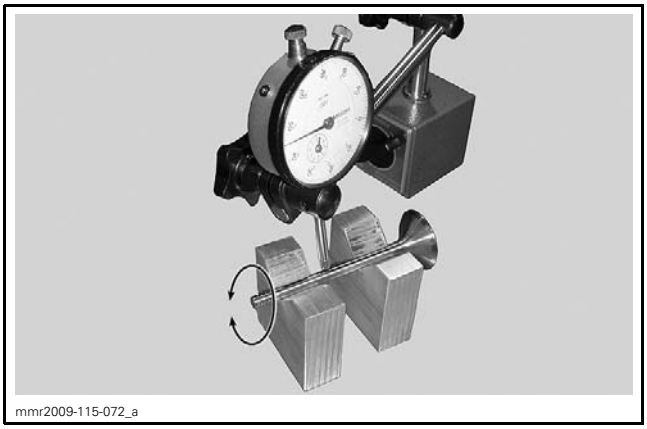
mmr2009-115-072_a

VALVE OUT OF ROUND (INTAKE AND EXHAUST VALVES)	
NEW	0.005 mm (.0002 in)
SERVICE LIMIT	0.06 mm (.0024 in)

Valve Stem

Measure valve stem in three places using a micrometer.

Replace valve if valve stem is out of specification or has other damages such as wear or friction surface.

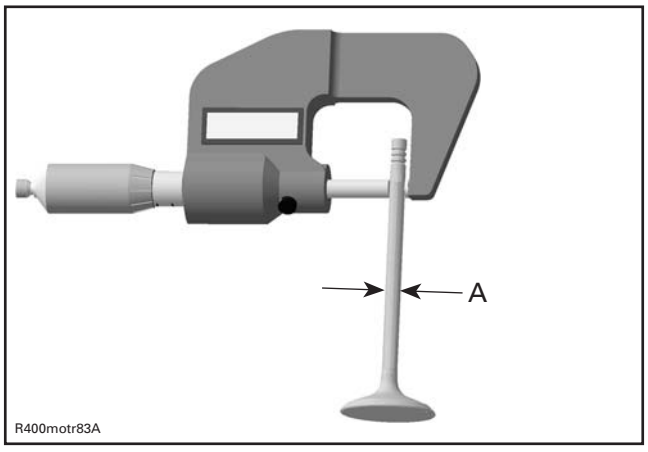

A. Valve stem diameter

VALVE STEM DIAMETER	
EXHAUST VALVE	
NEW	4.956 mm to 4.970 mm (.1951 in to .1957 in)
SERVICE LIMIT	4.930 mm (.1941 in)
INTAKE VALVE	
NEW	4.966 mm to 4.980 mm (.1955 in to .1961 in)
SERVICE LIMIT	4.930 mm (.1941 in)

Valve Face and Seat

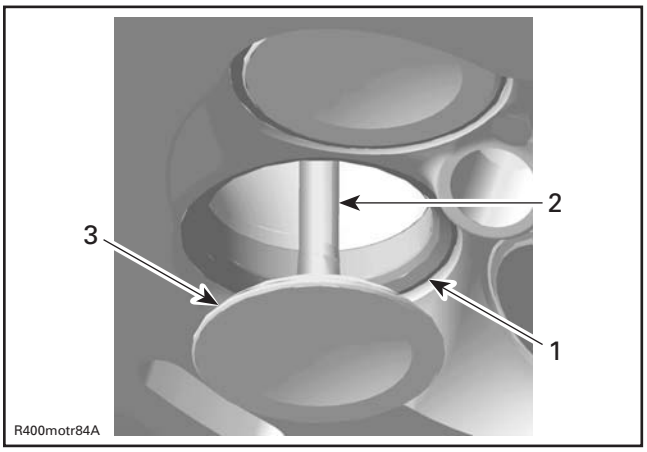

1. Valve seat
2. Exhaust valve contaminated area
3. Valve face (contact surface to valve seat)

Check valve face and seat for burning or pittings and replace valve or cylinder head if there are signs of damage.

Ensure to seat valves properly. Apply some lapping compound to valve face and work valve on its seat with a lapping tool (see *VALVE GUIDES* in this subsection).

Measure valve face contact width.

NOTE: The location of contact area should be in center of valve seat.

Measure valve seat width using a caliper.

VALVE SEAT CONTACT WIDTH	
EXHAUST VALVE	
NEW	1.25 mm to 1.55 mm (.049 in to .061 in)
SERVICE LIMIT	2.00 mm (.079 in)
INTAKE VALVE	
NEW	1.05 mm to 1.35 mm (.041 in to .053 in)
SERVICE LIMIT	1.80 mm (.071 in)

If valve seat contact width is too wide or has dark spots, replace the cylinder head.

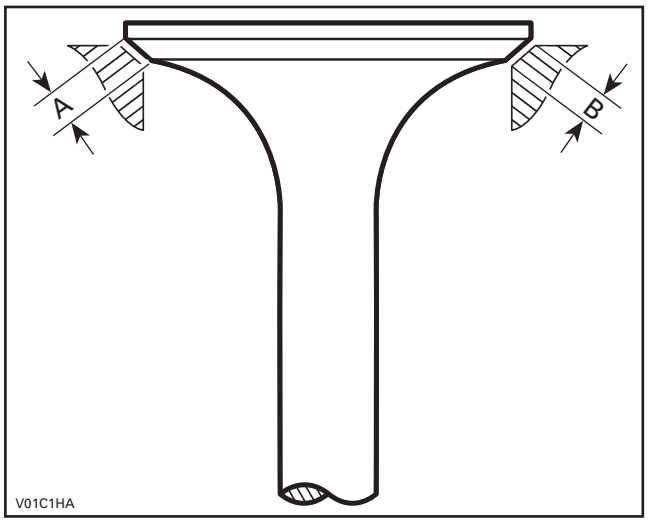

A. Valve face contact width
B. Valve seat contact width

Valve Installation

For installation, reverse the removal procedure. Pay attention to the following details.

Install a NEW valve stem seal. Make sure thrust washer is installed before installing seal.

Apply engine oil on valve stem and install it.

NOTICE **Be careful when valve stem is passed through sealing lips of valve stem seal.**

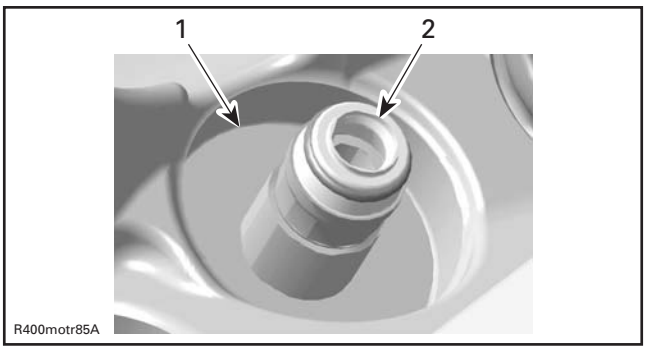

1. Thrust washer
2. Sealing lips of valve stem seal

To ease installation of cotters, apply oil or grease on them so that they remain in place while releasing the spring.

After spring is installed, ensure it is properly locked by tapping on valve stem end with a soft hammer so that valve opens and closes a few times.

NOTICE **An improperly locked valve spring will cause engine damage.**

VALVE GUIDES

Valve Guide Inspection

Always replace valve stem seals whenever valve guides are removed.

Measure valve guide in three places using a small bore gauge.

NOTE: Clean valve guide to remove carbon deposits before measuring.

Replace valve guide if it is out of specification or has other damages such as wear or friction surface.

VALVE GUIDE DIAMETER (INTAKE AND EXHAUST VALVES)	
NEW	4.998 mm to 5.018 mm (.1968 in to .1976 in)
SERVICE LIMIT	5.050 mm (.1988 in)

Valve Guide Removal

Refer to following procedures in this subsection to remove:
– Cylinder head
– Valves.

NOTE: Clean valve guide area from contamination before removal.

Drive the valve guide out of cylinder head.

REQUIRED TOOL	
Hammer	
VALVE GUIDE REMOVER 5 MM (P/N 529 035 924)	

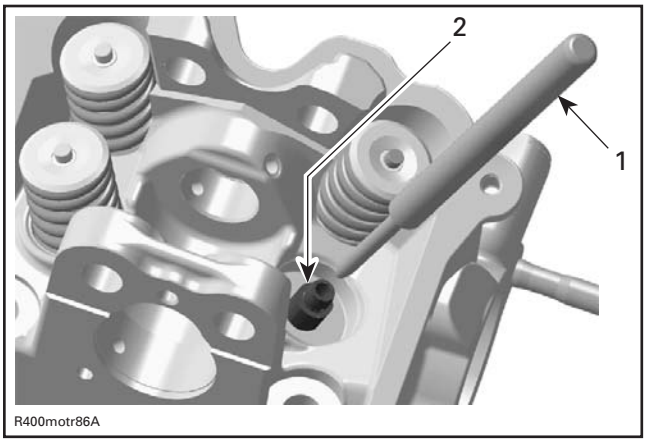

1. Valve guide remover
2. Valve guide

Valve Guide Installation

For installation, reverse the removal procedure. Pay attention to the following details.

Clean the valve guide bore before reinstalling the valve guide into cylinder head.

Install valve guide.

REQUIRED TOOL	
VALVE GUIDE INSTALLER (P/N 529 036 140)	

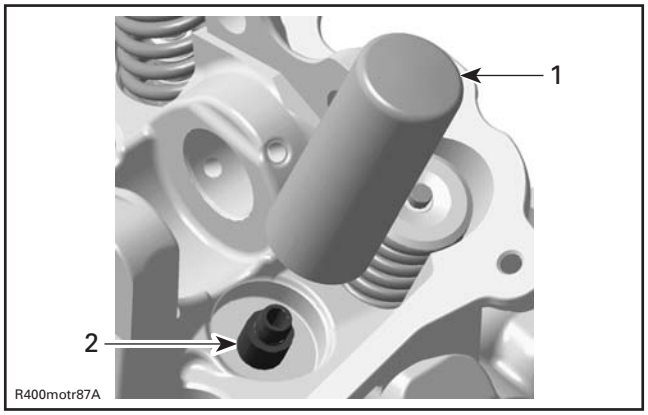

1. Valve guide installer
2. Valve guide

NOTE: Apply LOCTITE 767 (ANTISEIZE LUBRICANT) (P/N 293 800 070) on valve guide prior to install it into the cylinder head.

NOTICE **Push valve guide in the cold cylinder head as per following illustration.**

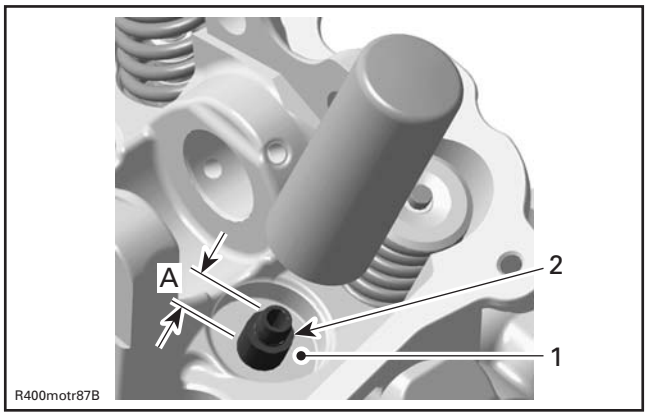

1. Thrust surface of cylinder head
2. Valve guide
A. Measurement from thrust surface to valve guide top

VALVE GUIDE (MEASUREMENT "A")	
NEW	14.00 mm to 14.40 mm (.5512 in to .5669 in)

Apply some lapping compound to valve face and work valve on its seat with a lapping tool.

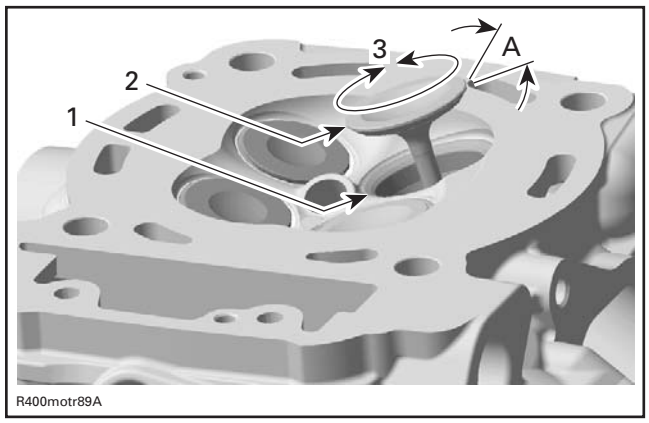

1. Valve seat
2. Valve face (contact surface to valve seat)
3. Turn valve while pushing against cylinder head
A. Valve seat angle 45°

NOTE: Ensure to seat valves properly. Apply marking paste to ease checking contact pattern.

Repeat procedure until valve seat/valve face fits together.

CYLINDER

Cylinder Removal

Refer to *TIMING CHAIN* subsection and remove the following parts:

– Timing chain tensioner
– Camshaft timing gear.

Remove the cylinder head (see *CYLINDER HEAD* in this subsection).

Pull cylinder.

Discard cylinder base gaskets.

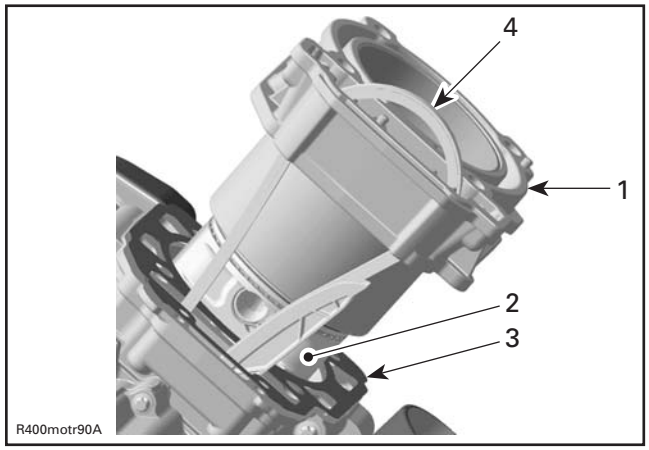

1. Cylinder
2. Piston assembly
3. Cylinder base gasket
4. Camshaft timing chain

Cylinder Inspection

Check cylinder for cracks, scoring and wear ridges on the top and bottom of the cylinder. If so, replace cylinder.

Cylinder Taper

Measure cylinder bore at 3 recommended positions.

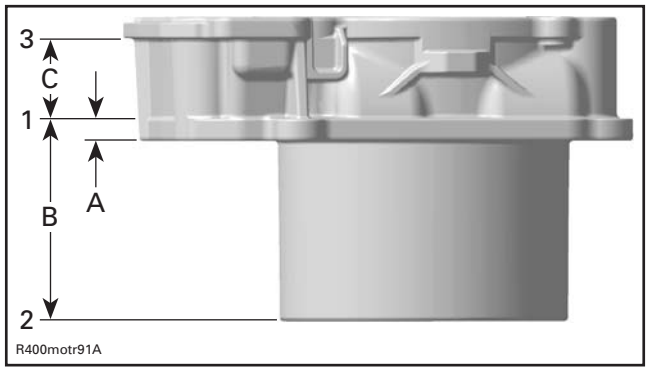

A. First measurement (from cylinder bottom)
B. Second measurement
C. Third measurement

CYLINDER TAPER MEASUREMENTS		
ENGINE	MEASUREMENT	SPECIFICATION
800R engine	A	5 mm (.197 in)
	B	63 mm (2.48 in)
	C	32 mm (1.26 in)
1000 engine	A	5 mm (.197 in)
	B	58 mm (2.283 in)
	C	52 mm (2.047 in)

CYLINDER TAPER SPECIFICATION	
NEW (MAXIMUM)	0.038 mm (.0015 in)
SERVICE LIMIT	0.090 mm (.0035 in)

Distance between measurements should not exceed the service limit mentioned above. Otherwise, replace cylinder and piston rings.

Cylinder Out of Round

Measure cylinder diameter in piston axis direction from top of cylinder. Take another measurement 90° from first one and compare.

NOTE: Take the same measuring points like described in *CYLINDER TAPER* above.

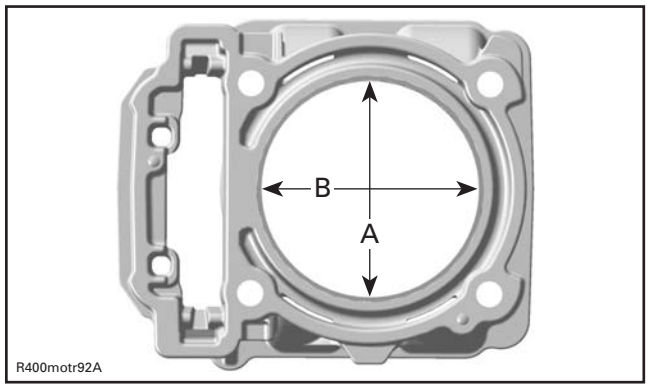

A. Perpendicular to crankshaft axis
B. Parallel to crankshaft axis

CYLINDER OUT OF ROUND	
NEW (MAXIMUM)	0.015 mm (.0006 in)
SERVICE LIMIT	0.020 mm (.0008 in)

Cylinder Installation

For installation, reverse the removal procedure. Pay attention to the following details.

NOTICE **Always replace cylinder base gasket before installing the cylinder.**

NOTE: Make sure piston rings are properly spaced, refer to *PISTON RINGS* in this subsection.

Apply engine oil:
- In the bottom area of the cylinder bore
- On the piston rings
- On the compressor tool.

Compress piston rings.

REQUIRED TOOL	
PISTON RING COMPRESSOR (P/N 529 035 919)	

First mount cylinder 2.

NOTE: The cylinder can not be pushed fully over the piston unless the piston is located at TDC.

Then remove the CRANKSHAFT LOCKING BOLT (P/N 529 035 617).

Crank the engine further and position piston 1 at TDC.

Mount cylinder 1.

Put timing chain through the chain pit then put the cylinder in place.

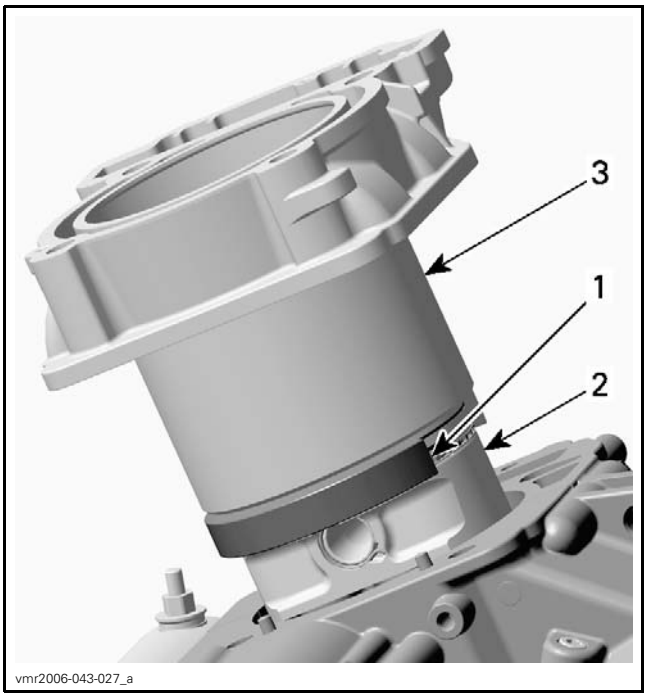

1. Piston ring compressor tool
2. Piston
3. Cylinder

NOTICE **Chain guide has to be fixed between cylinder and cylinder head.**

NOTE: After both cylinders are installed, turn crankshaft until piston of cylinder 2 is at TDC and lock crankshaft. Refer to *CRANKSHAFT* in the *BOTTOM END* subsection.

Install cylinder head and the other parts in accordance with the proper installation procedures.

PISTON

Piston Removal

Refer to following procedures in this subsection to remove:
– Cylinder head
– Cylinder.

Place a rag under piston and in the area of timing chain compartment.

⚠ WARNING

Piston circlips are spring loaded.

Remove one piston circlip and discard it.

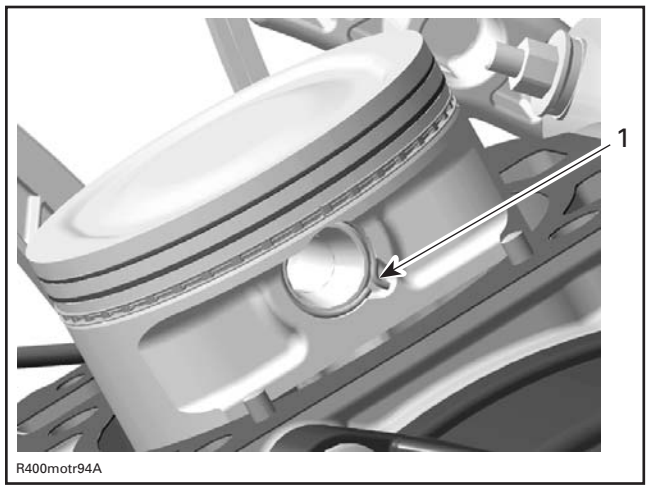

1. Piston circlip

NOTE: The removal of both piston circlips is not necessary to remove piston pin.

Push piston pin out of piston.

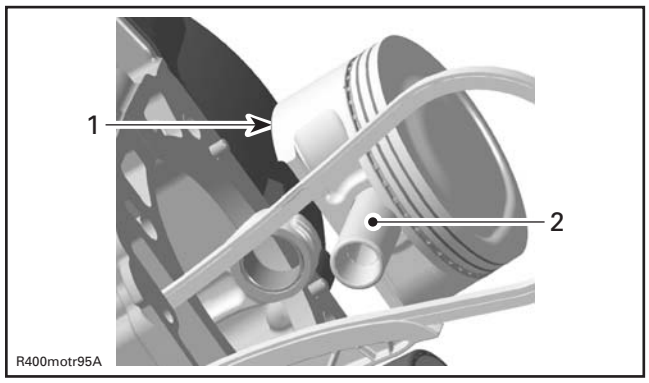

1. Piston
2. Piston pin

Detach piston from connecting rod.

Piston Inspection

Inspect piston for scoring, cracking or other damages. Replace piston and piston rings if necessary.

Using a micrometer, measure piston at 8 mm (.315 in) perpendicularly (90°) to piston pin.

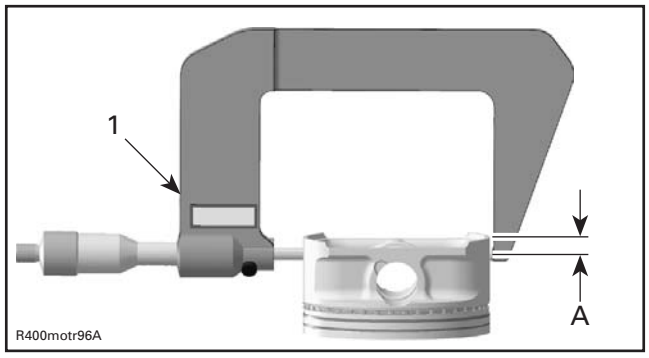

1. Measuring perpendicularly (90°) to piston pin
A. 8 mm (.315 in)

The measured dimension should be as described in the following tables. If not, replace piston.

PISTON MEASUREMENT	
NEW	90.950 mm to 90.966 mm (3.5807 in to 3.5813 in)
SERVICE LIMIT	90.850 mm (3.577 in)

Piston/Cylinder Clearance

Adjust and lock a micrometer to the piston dimension.

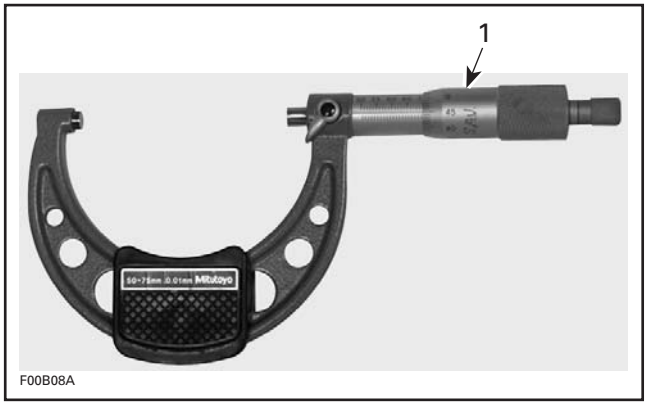

1. Micrometer set to the piston dimension

With the micrometer set to the dimension, adjust a cylinder bore gauge to the micrometer dimension and set the indicator to 0 (zero).

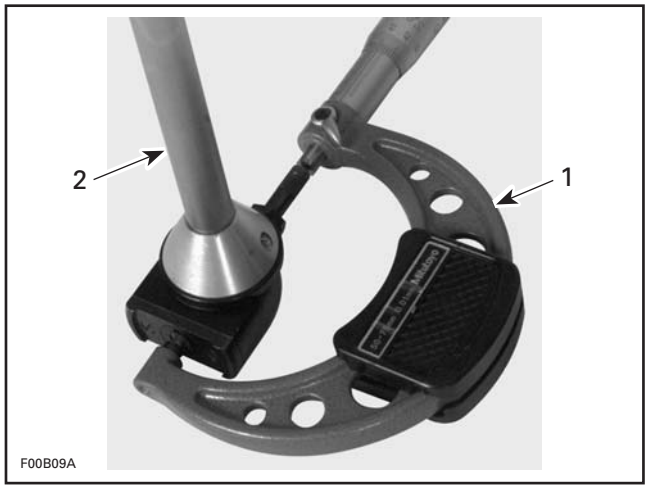

1. Use the micrometer to set the cylinder bore gauge
2. Dial bore gauge

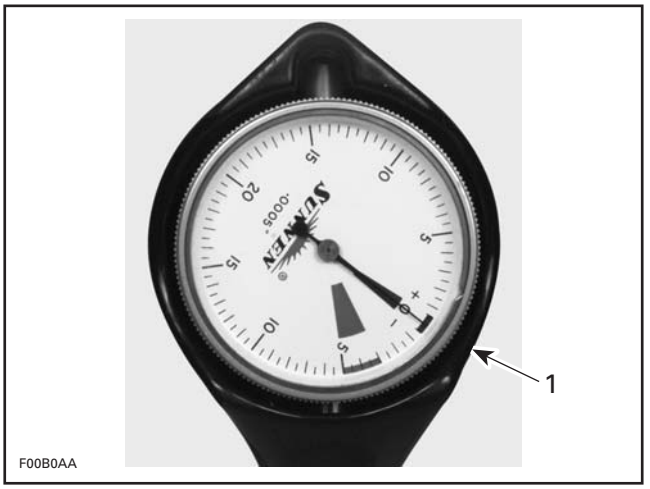

TYPICAL
1. Indicator set to 0 (zero)

Position the dial bore gauge 20 mm (.787 in) above cylinder base, measuring perpendicularly (90°) to piston pin axis.

Read the measurement on the cylinder bore gauge. The result is the exact piston/cylinder wall clearance.

PISTON/CYLINDER CLEARANCE	
NEW	0.027 mm to 0.057 mm (.0011 in to .0022 in)
SERVICE LIMIT	0.100 mm (.0039 in)

NOTE: Make sure used piston is not worn.

If clearance exceeds specified tolerance, replace piston by a new one and measure piston/cylinder clearance again.

NOTE: Make sure the cylinder bore gauge indicator is set exactly at the same position as with the micrometer, otherwise the reading will be false.

Connecting Rod/Piston Pin Clearance

Using synthetic abrasive woven, clean piston pin from deposits.

Inspect piston pin for scoring, cracking or other damages.

Measure piston pin. See the following illustration for the proper measurement positions.

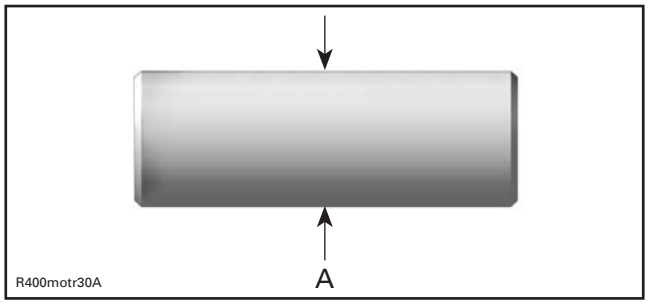

A. Piston pin diameter

PISTON PIN DIAMETER	
800R	
NEW	19.996 mm to 20.000 mm (.7872 in to .7874 in)
SERVICE LIMIT	19.980 mm (.7866 in)
1000	
NEW	21.996 mm to 22.000 mm (.866 in to .8661 in)
SERVICE LIMIT	21.980 mm (.8654 in)

Replace piston pin if diameter is out of specifications.

Measure inside diameter of connecting rod small end bushing.

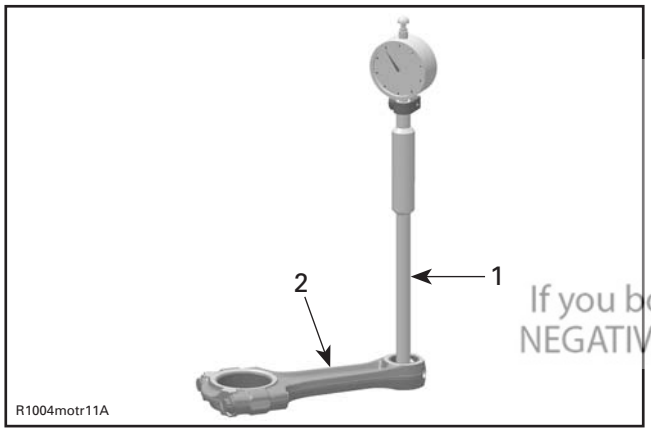

1. Bore gauge
2. Connecting rod

CONNECTING ROD SMALL END DIAMETER	
800R	
NEW	20.010 mm to 20.020 mm (.7878 in to .7882 in)
SERVICE LIMIT	20.060 mm (.7898 in)
1000	
NEW	20.010 mm to 20.020 mm (.7878 in to .7882 in)
SERVICE LIMIT	20.050 mm (.7894 in)

Replace connecting rod if diameter of connecting rod small end is out of specifications. Refer to *BOTTOM END* subsection for removal procedure.

Compare measurements to obtain the connecting rod/piston pin clearance.

CONNECTING ROD/ PISTON PIN CLEARANCE	
SERVICE LIMIT	0.080 mm (.0031 in)

Piston Installation

For installation, reverse the removal procedure. Pay attention to the following details.

Apply engine oil on the piston pin.

Insert piston pin into piston and connecting rod.

For each cylinder, install piston with the punched arrow on piston dome is pointing toward the rear side of the engine.

Front cylinder: Mark on top of piston must show to intake side.

Rear cylinder: Mark on top of piston must show to exhaust side.

Midwest Manuals
Green Manuals
Paperless Manuals
For a Better Tomorrow
If you bought this manual from any other seller please leave them NEGATIVE feedback and notify me at bestshopmanuals@gmail.com

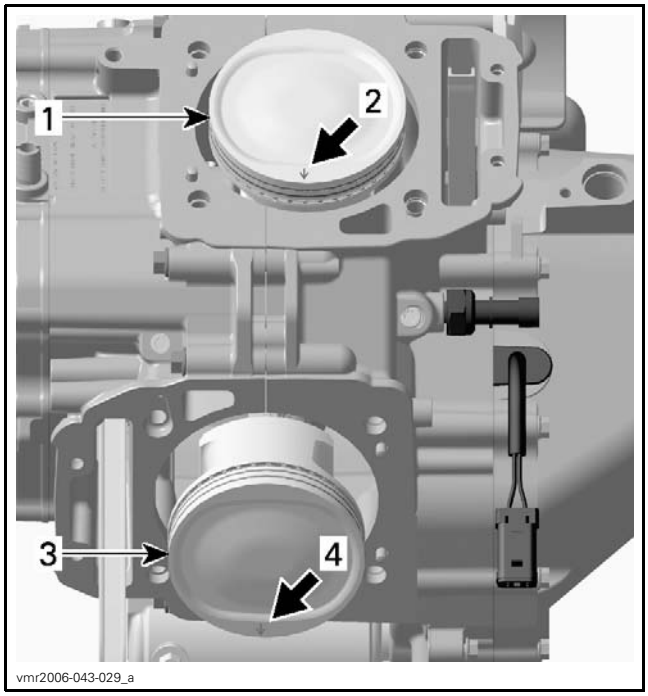

1. *Piston of cylinder 1*
2. *Mark on piston must show to intake side of cylinder 1*
3. *Piston of cylinder 2*
4. *Mark on piston must show to exhaust side of cylinder 2*

Use the piston appropriate circlip installer to assemble the NEW piston circlip as per following procedure:

ENGINE TYPE	TOOL
800R	PISTON CIRCLIP INSTALLER (P/N 529 035 921)
1000	PISTON CIRCLIP INSTALLER (P/N 529 036 153)

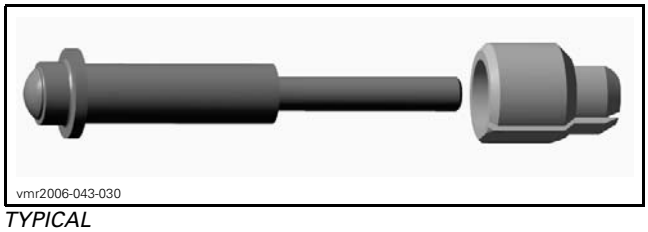

TYPICAL

NOTICE Always replace disassembled piston circlip(s) by NEW ones. Place a rag on cylinder base to avoid dropping the circlip inside the engine.

Place circlip in sleeve as per following illustration.

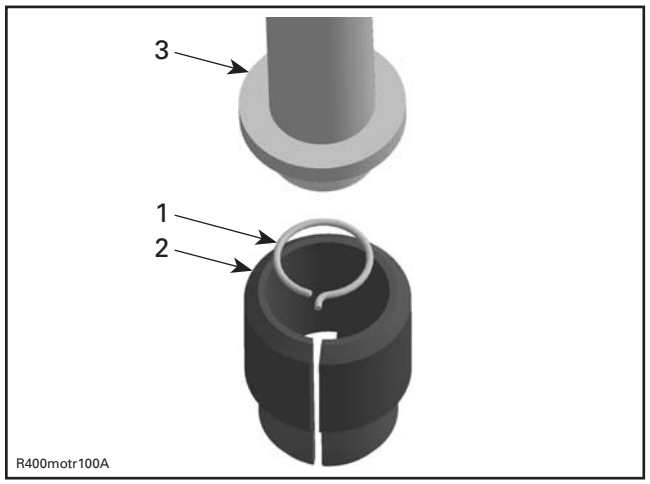

1. *Circlip*
2. *Sleeve*
3. *Assembly jig from piston clip installer*

Push taper side of assembly jig until circlip reaches middle of sleeve.

Align sleeve with piston pin axis and push assembly jig until circlip engages in piston.

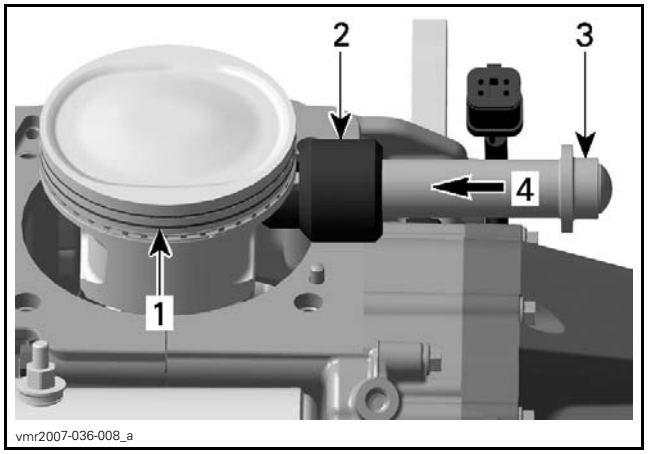

1. *Hold piston while pushing circlip in place*
2. *Sleeve*
3. *Assembly jig*
4. *Direction to push circlip*

NOTE: Take care that the hook of the piston circlip is positioned properly.

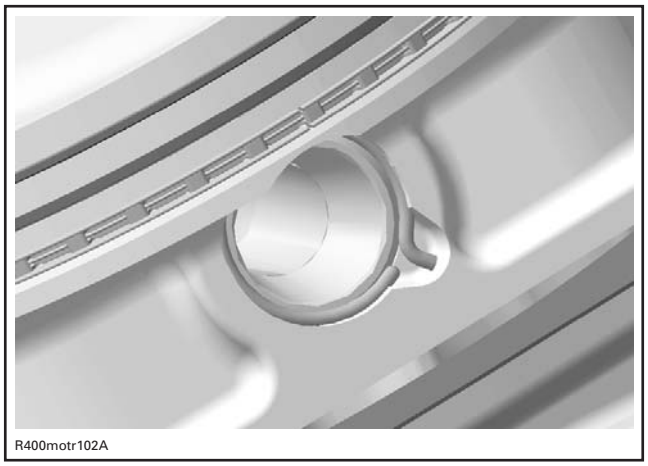
R400motr102A

CORRECT POSITION OF THE PISTON CIRCLIP

PISTON RINGS

Ring Removal

Remove the piston (see *PISTON* in this subsection).

Ring Inspection

Ring/Piston Groove Clearance

Using a feeler gauge measure each ring/piston groove clearance. If the clearance is too large, the piston and the piston rings should be replaced.

RING/PISTON GROOVE CLEARANCE	
UPPER COMPRESSION RING	
NEW	0.03 mm to 0.07 mm (.0012 in to .0028 in)
SERVICE LIMIT	0.150 mm (.0059 in)
LOWER COMPRESSION RING	
NEW	0.02 mm to 0.06 mm (.0008 in to .0024 in)
SERVICE LIMIT	0.150 mm (.0059 in)
OIL SCRAPER RING	
NEW	0.01 mm to 0.18 mm (.0004 in to .0071 in)
SERVICE LIMIT	0.250 mm (.0098 in)

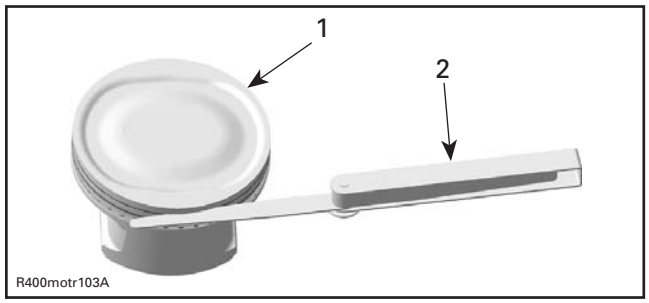

R400motr103A

1. Piston
2. Feeler gauge

Ring End Gap

RING END GAP	
UPPER COMPRESSION RING	
NEW	0.20 mm to 0.40 mm (.008 in to .016 in)
SERVICE LIMIT	0.60 mm (.024 in)
LOWER COMPRESSION RING	
NEW	0.20 mm to 0.40 mm (.008 in to .016 in)
SERVICE LIMIT	0.70 mm (.028 in)
OIL SCRAPER RING	
NEW	0.20 mm to 0.70 mm (.008 in to .028 in)
SERVICE LIMIT	1.00 mm (.039 in)

To measure the ring end gap place the ring in the cylinder in the area of 8 mm to 16 mm (5/16 in to 5/8 in) from top of cylinder.

NOTE: In order to correctly position the ring in the cylinder, use piston as a pusher.

Using a feeler gauge, check ring end gap. Replace ring if gap exceeds above described specified tolerance.

Ring Installation

For installation, reverse the removal procedure. Pay attention to the following details.

NOTE: Use a ring expander to prevent breakage during installation. The oil ring must be installed by hand.

NOTE: First install spring and then rings of oil scraper ring.

Install the oil scraper ring first, then the lower compression ring with the word "N and TOP " facing up, then the upper compression ring with the word "N and TOP" facing up.

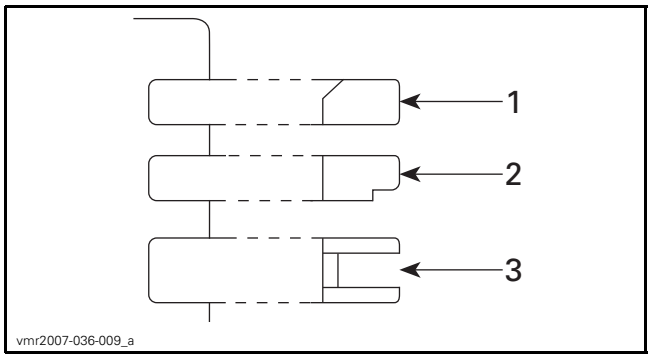

1. Upper compression ring
2. Lower compression ring
3. Oil scraper ring

NOTICE Ensure that top and second rings are not interchanged.

Check that rings rotate smoothly after installation.

Space the piston ring end gaps 120° apart and do not align the gaps with the piston pin bore or the thrust side axis.

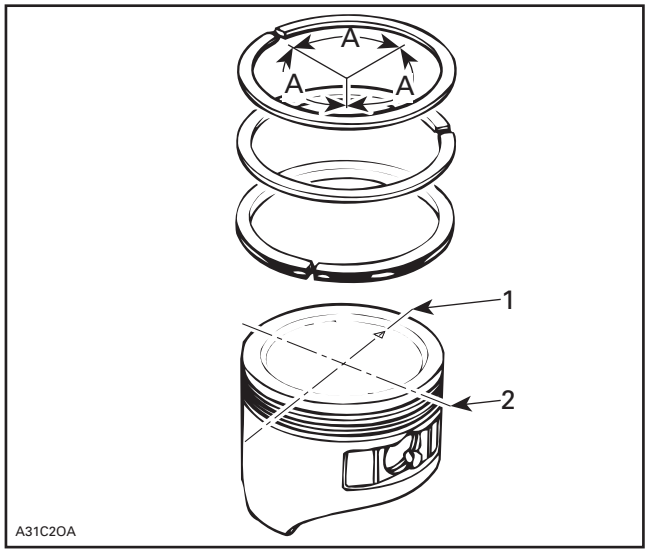

1. DO NOT align ring gap with piston thrust side axis
2. DO NOT align ring gap with piston pin bore axis
A. 120°

TIMING CHAIN

SERVICE TOOLS

Description	Part Number	Page
CAMSHAFT TIMING TOOL	529 036 231	129–130
CRANKSHAFT TDC POSITION TOOL	529 036 201	133

SERVICE PRODUCTS

Description	Part Number	Page
LOCTITE 243 (BLUE)	293 800 060	130, 135

TIMING CHAIN

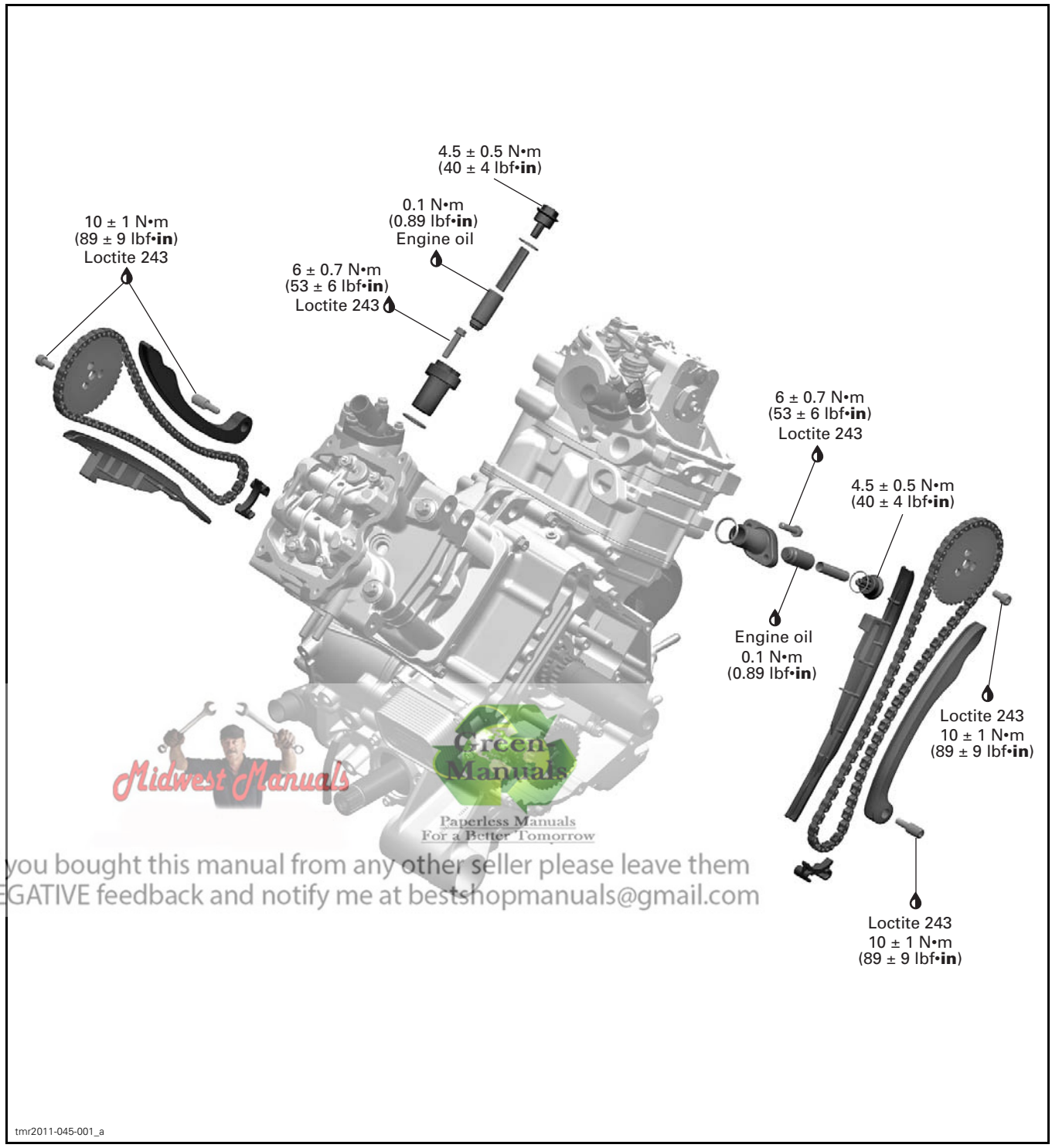

Midwest Manuals
Green Manuals
Paperless Manuals
For a Better Tomorrow
If you bought this manual from any other seller please leave them
NEGATIVE feedback and notify me at bestshopmanuals@gmail.com

GENERAL

IMPORTANT: Note position of parts on disassembly. This may help to find the root cause of a problem. A component that is not replaced should be reinstalled in the same position as originally mounted.

TROUBLESHOOTING

UNUSUAL ENGINE NOISE OR VIBRATION

1. IMPROPER VALVE CLEARANCE ADJUSTMENT AND/OR WORN OUT ROCKER ARM(S)
   - *Readjust valve clearance and/or replace defective part(s), refer to TOP END subsection.*
2. DEFECTIVE CHAIN TENSIONER
   - *Replace chain tensioner.*
3. WORN OUT TIMING CHAIN GUIDE(S)
   - *Replace timing chain guide(s).*
4. STRETCHED TIMING CHAIN OR WORN OUT TIMING GEARS
   - *Replace timing chain and timing gears.*
5. LOOSE TIMING GEAR RETAINING SCREWS
   - *Retighten screws to recommended torque.*
6. INCORRECT CAMSHAFT TIMING
   - *Replace damaged components and readjust camshaft timing.*

ENGINE LACKS ACCELERATION OR POWER

1. INCORRECT CAMSHAFT TIMING
   - *Replace damaged components and readjust camshaft timing.*

PROCEDURES

TIMING CHAIN TENSIONERS

Timing Chain Tensioner Location

800R Engine

The timing chain tensioner is located in the cylinder head.

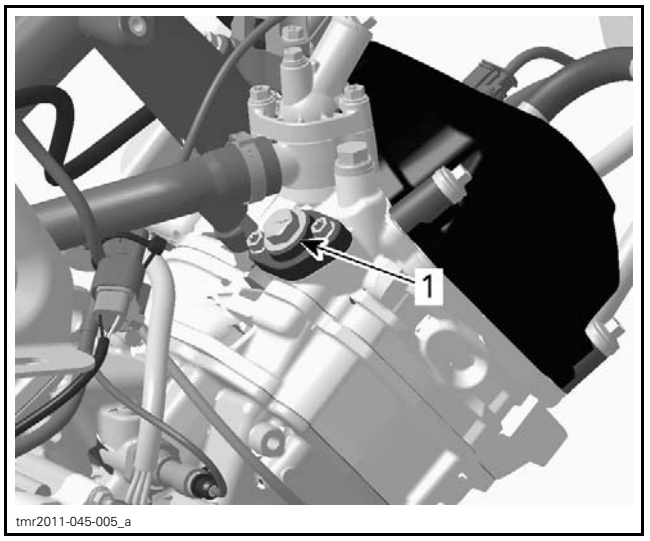

800R ENGINE - (FRONT CYLINDER SHOWN)
1. Timing chain tensioner

1000 Engine

The timing chain tensioner is located in the cylinder.

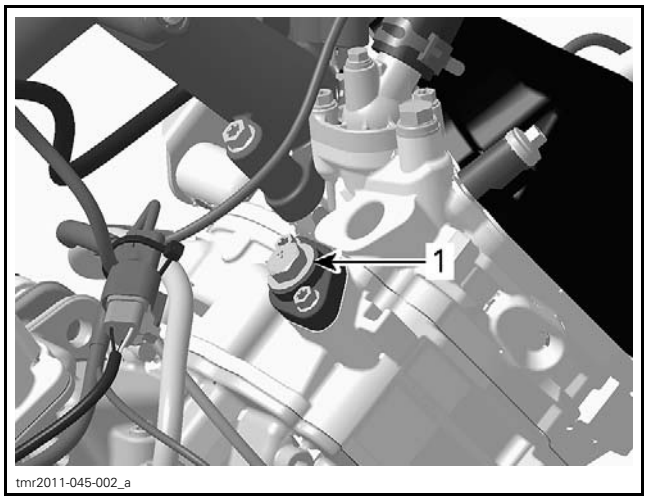

1000 ENGINE - (FRONT CYLINDER SHOWN)
1. Timing chain tensioner

Timing Chain Tensioner Removal

1. Make sure the respective cylinder is set to TDC ignition. Refer to *CAMSHAFT TIMING GEARS* in this subsection.
2. Carefully unscrew chain tensioner plug and release spring tension.

⚠ CAUTION **Tensioner is spring loaded.**

3. Remove:
   – O-ring
   – Spring
   – Chain tensioner plunger.

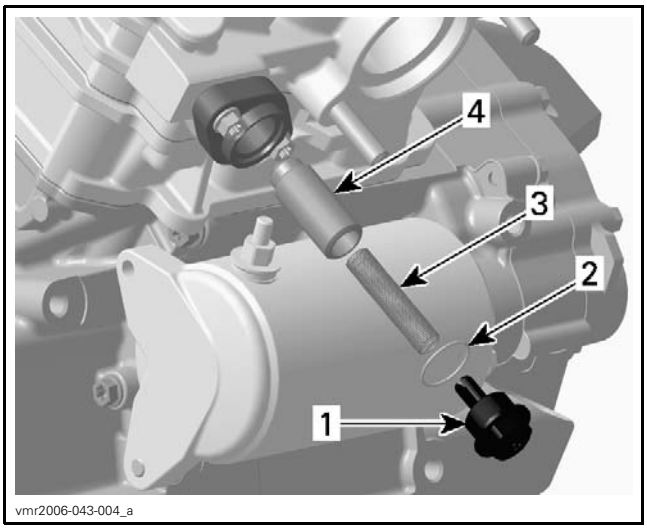

1. Chain tensioner plug
2. O-ring
3. Spring
4. Chain tensioner plunger

4. Remove:
   – Chain tensioner housing retaining screws
   – Chain tensioner housing
   – O-ring.

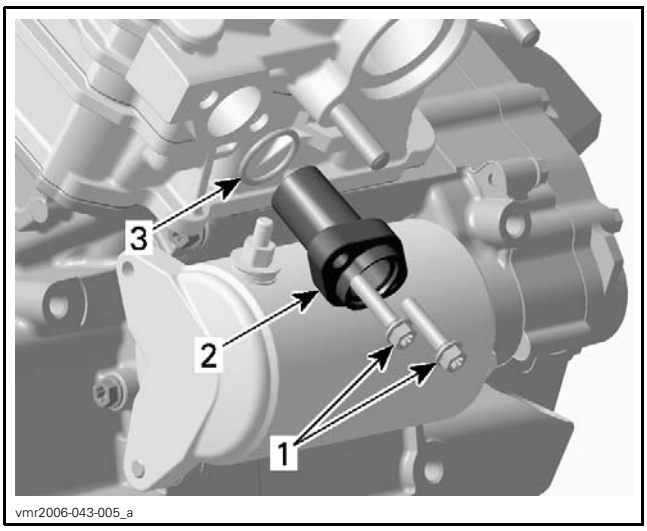

1. Screws
2. Chain tensioner housing
3. O-ring

Timing Chain Tensioner Inspection

Check the chain tensioner housing and plug for cracks or other damages. Replace if necessary.

Check chain tensioner plunger for free movement and/or scoring.

Check if O-rings are brittle, cracked or hard. Replace if necessary.

Check spring condition. Replace if bent, broken or worn.

Timing Chain Tensioner Installation

1. For installation, reverse the removal procedure. However, pay attention to the following.

NOTE: Before installing the chain tensioner make sure, that the camshaft timing gear can be moved back and forth.

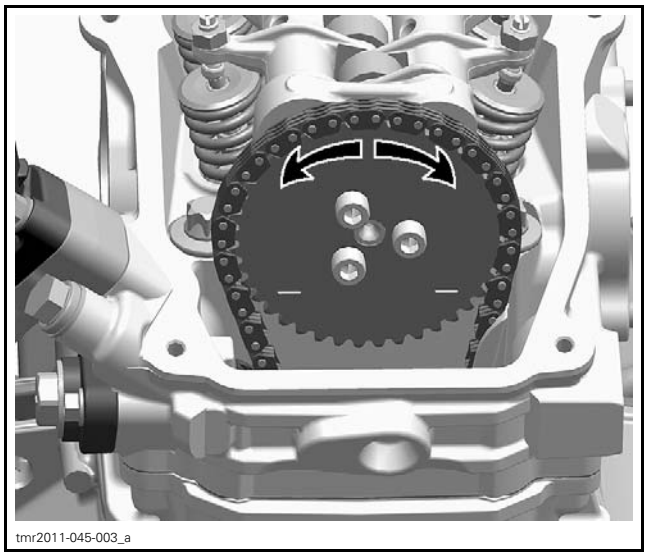

MOVE GEAR BACK AND FORTH

2. Apply engine oil on the plunger before installation.
3. Slightly turn the camshaft timing gear in order to get the timing chain play on the tensioner side.
4. Slightly screw the plunger in until the timing chain allows no more back and forth movement of the camshaft timing gear.
5. Screw the plunger in an additional 1/8 turn to reach the required specified torque.

TIMING CHAIN TENSIONER ADJUSTMENT (TORQUE)
0.1 N•m (.9 lbf•**in**)

NOTICE **Improper adjustment of the timing chain will lead to severe engine damage.**

6. Fit the spring on one side into the slot of the plug and on the other side into the plunger.

NOTE: Turn spring only clockwise in order to fit the spring end into the notch of the plunger to avoid loosening the plunger during spring installation. Do not preload the spring.

NOTE: Do not forget to place the O-ring on chain tensioner plug.

7. Then compress the spring and screw the plug in.

NOTE: To avoid overstressed timing chain, the plug must engage into threads within the first full turn.

8. Remove locking tool and install all other removed parts.
9. Finally, tighten the plug.

CAMSHAFT TIMING GEARS

Camshaft Timing Gear Removal

Remove the valve cover, refer to *TOP END* subsection.

Turn crankshaft to TDC ignition of the respective cylinder and lock magneto flywheel, see *CAMSHAFT TIMING* in this subsection.

Unscrew timing chain tensioner. Refer to *TIMING CHAIN TENSIONERS* in this subsection.

Remove camshaft timing gear retaining screws.

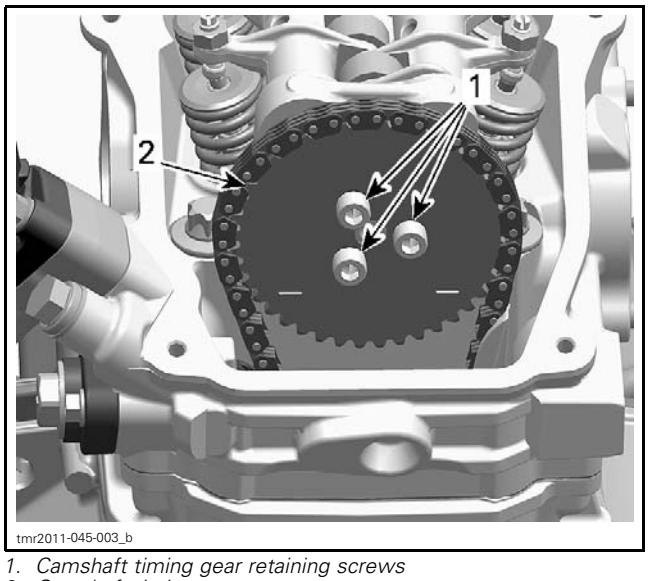

1. Camshaft timing gear retaining screws
2. Camshaft timing gear

Remove the camshaft timing gear.

NOTE: Secure timing chain with a piece of wire.

Camshaft Timing Gear Inspection

Check camshaft timing gear for wear or deterioration.

If gear is worn or damaged, replace it as a set with the timing chain.

For crankshaft gear, refer to *BOTTOM END* subsection, see *CRANKSHAFT*.

Camshaft Timing Gear Installation

For installation, reverse the removal procedure. Pay attention to the following details.

1. Clean mating surface and threads of camshaft prior installing camshaft timing gear.

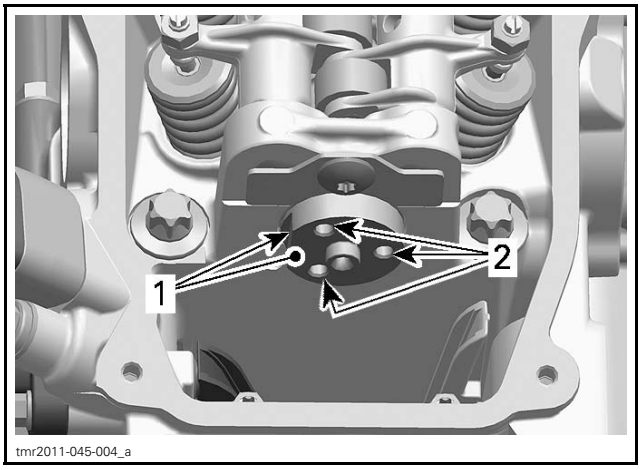

1. Mating surface on camshaft
2. Threads for camshaft screws

2. Crankshaft must be set to TDC ignition position before installing the timing chain, refer to *CAMSHAFT TIMING* in this subsection.
3. Install the camshaft timing tool on the cylinder head.

REQUIRED TOOL	
CAMSHAFT TIMING TOOL (P/N 529 036 231)	

NOTE: Align tube of camshaft adjustment tool properly with machined radius on cylinder head.

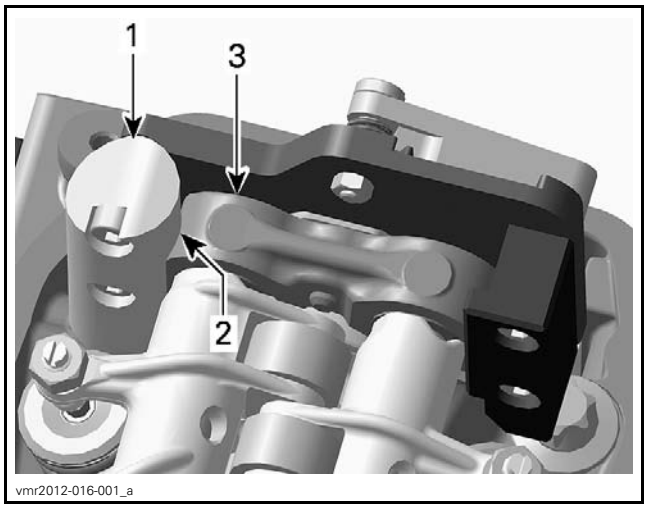

CAMSHAFT TIMING TOOL INSTALLED
1. Tube (camshaft adjustment tool)
2. Machined radius (camshaft adjustment tool)
3. Cylinder head

4. Set camshaft to TDC ignition position by aligning the camshaft flange flat spot with the tool lever.

NOTE: In addition, to ensure proper camshaft timing, press camshaft adjustment tool lever downwards.

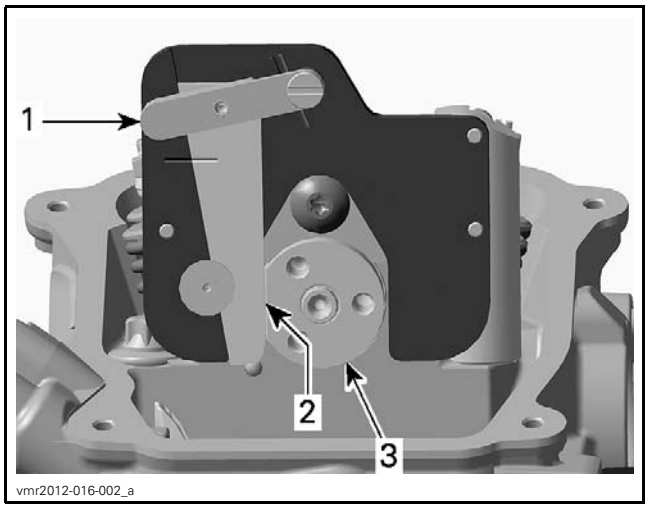

PRESS TOOL LEVER DOWN
1. *Lever*
2. *Flat spot*
3. *Camshaft*

NOTICE **Crankshaft and camshaft must be locked at TDC ignition position to place camshaft timing gear and timing chain in the proper position.**

5. Place camshaft timing gear along with the timing chain on the camshaft.

NOTE: The printed marks on the camshaft timing gear must be parallel to the cylinder head base.

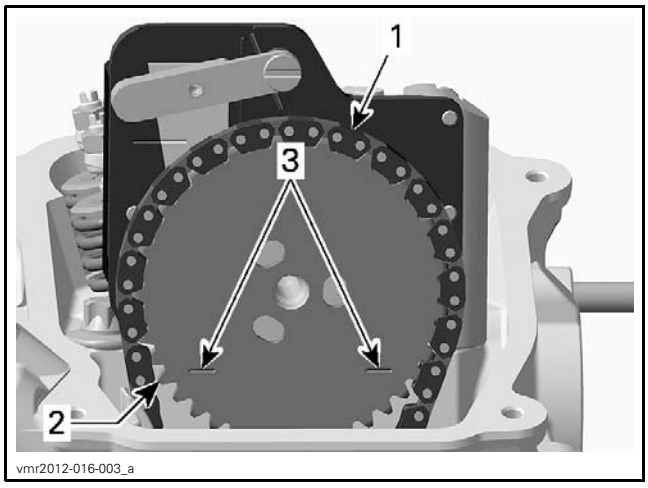

1. *Timing chain*
2. *Camshaft timing gear*
3. *Printed marks on camshaft timing gear*

6. Install and adjust timing chain tensioner, refer to *TIMING CHAIN TENSIONER* in this subsection.

7. Install and tighten camshaft timing gear retaining screws to specified torque.

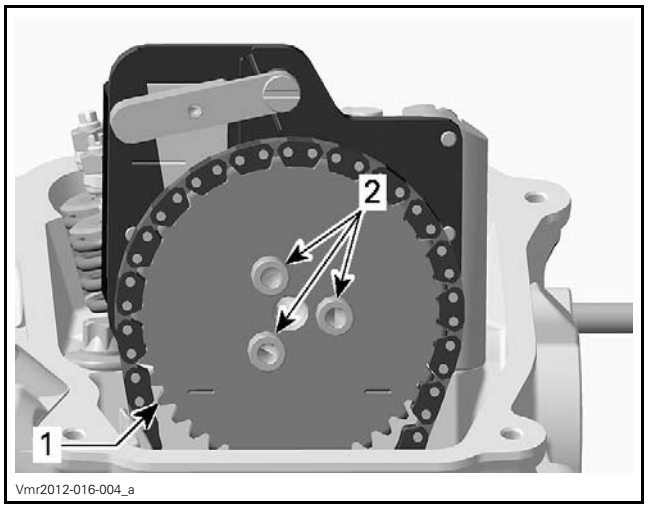

1. *Camshaft timing gear*
2. *Timing gear retaining screws*

CAMSHAFT TIMING GEAR RETAINING SCREWS	
Service product	LOCTITE 243 (BLUE) (P/N 293 800 060)
Tightening torque	10 N•m ± 1 N•m (89 lbf•**in** ± 9 lbf•**in**)

8. Remove the CAMSHAFT TIMING TOOL (P/N 529 036 231).

Camshaft Timing

NOTE: If a piston (of cylinder 1 or 2) is set to TDC ignition, the camshaft timing gear of the opposite cylinder must be in the following position.

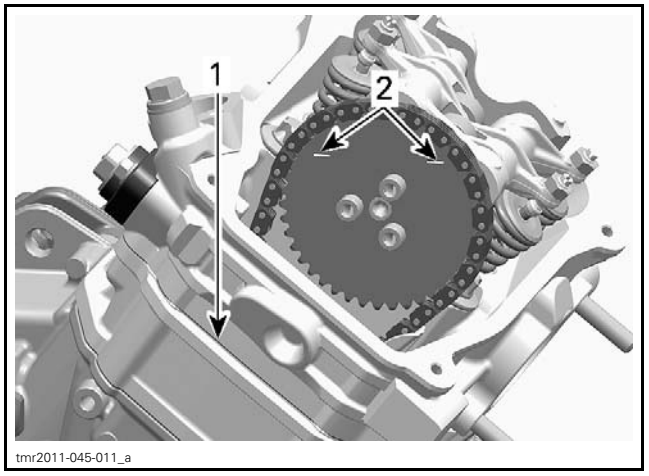

TYPICAL
1. *Cylinder head base*
2. *Marks on timing gear of the opposite cylinder*

Camshaft Timing Piston No. 2 (rear)

1. Remove spark plugs of both cylinders.

2. Remove valve covers of both cylinders.
3. Remove the plug and O-ring of magneto cover.

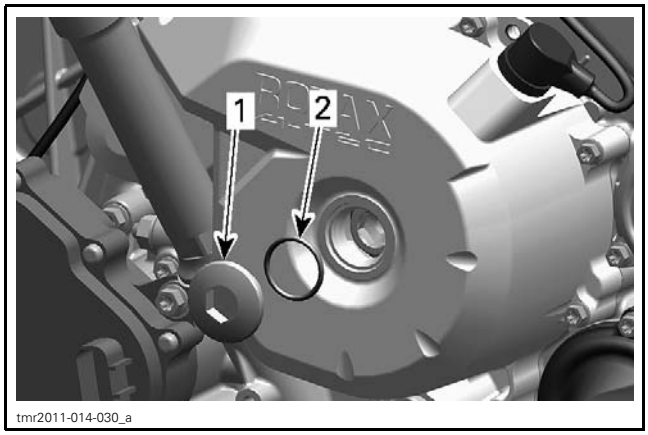

1. Plug
2. O-ring

4. Remove the crankshaft position sensor (CPS).

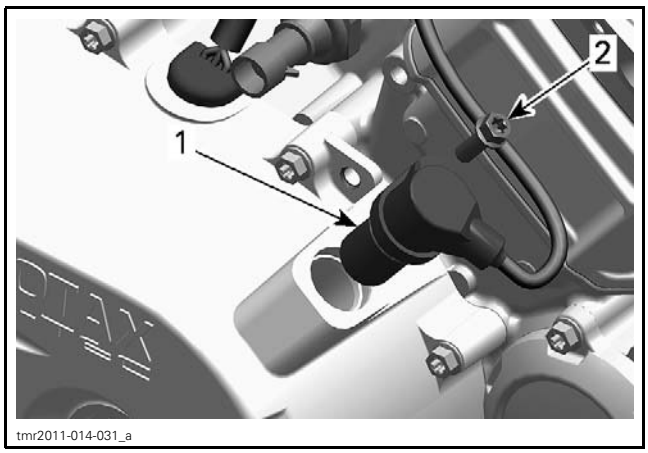

1. CPS
2. Screw

5. Set piston no. 2 to TDC ignition by turning the crankshaft.

REQUIRED TOOL
Allen key 14 mm

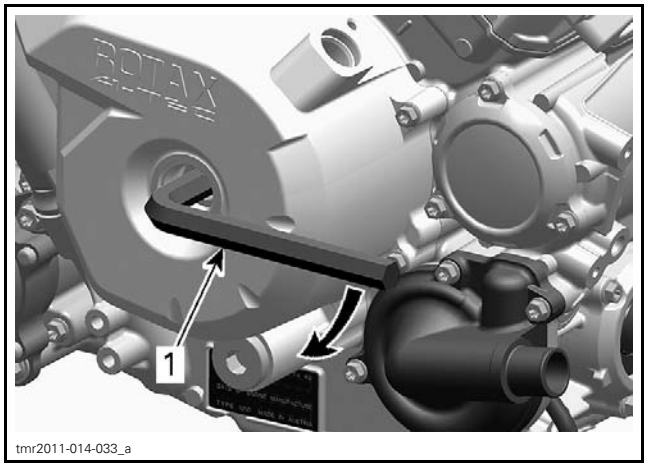

1. Allen key 14 mm

5.1 The rear piston is at TDC when it's index mark on the magneto flywheel is aligned with notch in the magneto cover.

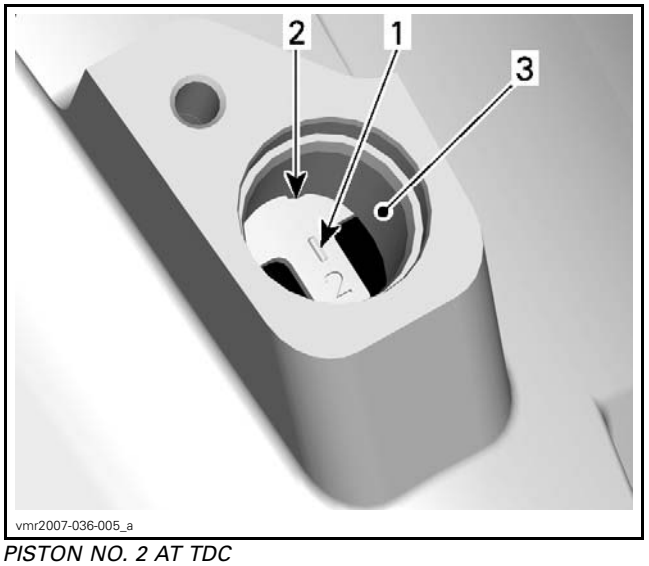

PISTON NO. 2 AT TDC
1. Mark "2" on magneto flywheel
2. Notch on magneto cover
3. Crankshaft position sensor location

5.2 Confirm printed marks on the camshaft timing gear are parallel to cylinder head base, in the lower position.

NOTE: If printed marks on camshaft timing gear are not as specified, turn crankshaft 360°.

NOTE: In this position the piston is set to TDC ignition.

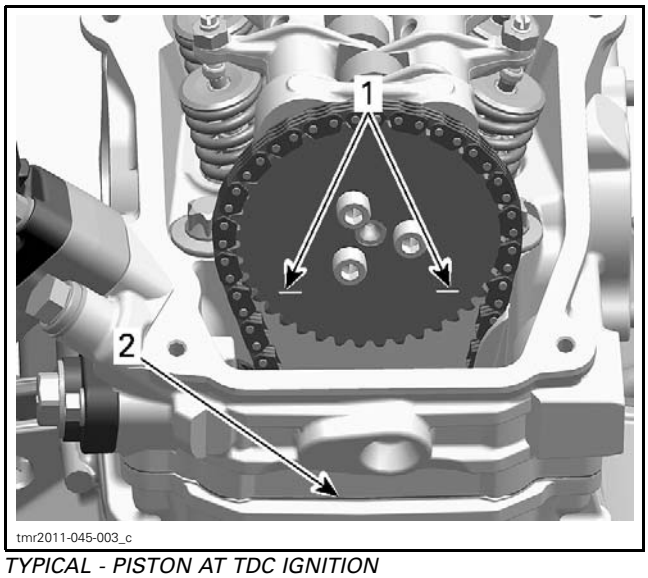

TYPICAL - PISTON AT TDC IGNITION
1. *Printed marks on camshaft timing gear*
2. *Cylinder head base*

6. Install the crankshaft TDC position tool to lock crankshaft in position. Refer to *CRANKSHAFT TDC POSITION TOOL* in this subsection.

Camshaft Timing Piston No. 1 (front)

1. Set piston no. 2 (rear) to TDC ignition, see *CAMSHAFT TIMING PISTON NO. 2 (REAR)* in this subsection.
2. Remove crankshaft TDC position tool.
3. To set front piston no. 1 to **TDC ignition** turn crankshaft 280° counterclockwise.

REQUIRED TOOL
Allen key 14 mm

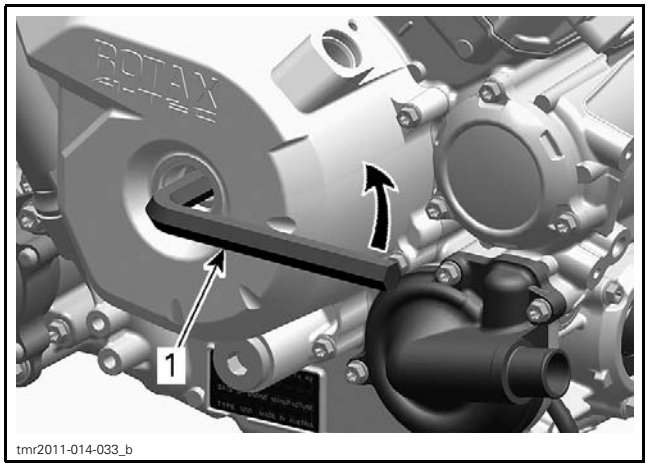

TURN CRANKSHAFT 280° COUNTERCLOCKWISE
1. *Allen key 14 mm*

3.1 The front piston is at TDC when it's index mark on the magneto flywheel is aligned with the notch in the magneto cover.

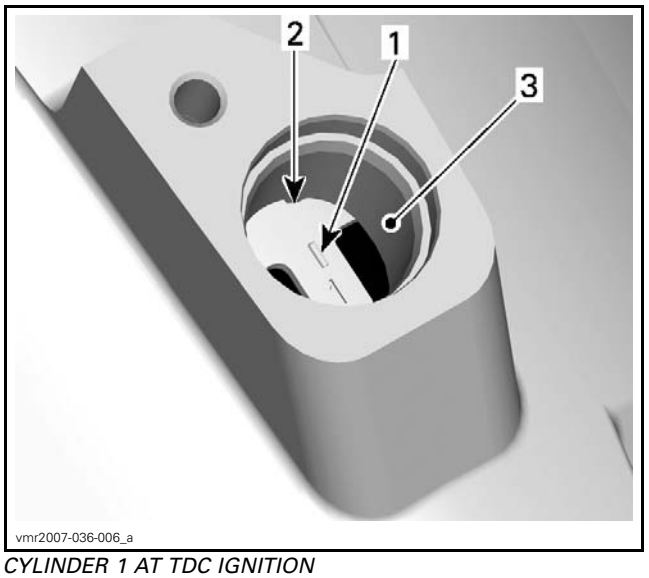

CYLINDER 1 AT TDC IGNITION
1. *Mark "1" on magneto flywheel*
2. *Notch on magneto cover*
3. *Location of crankshaft position sensor*

3.2 Confirm printed marks on the camshaft timing gear are parallel with cylinder head base, in the lowest position.

NOTE: In this position the piston is set to TDC ignition.

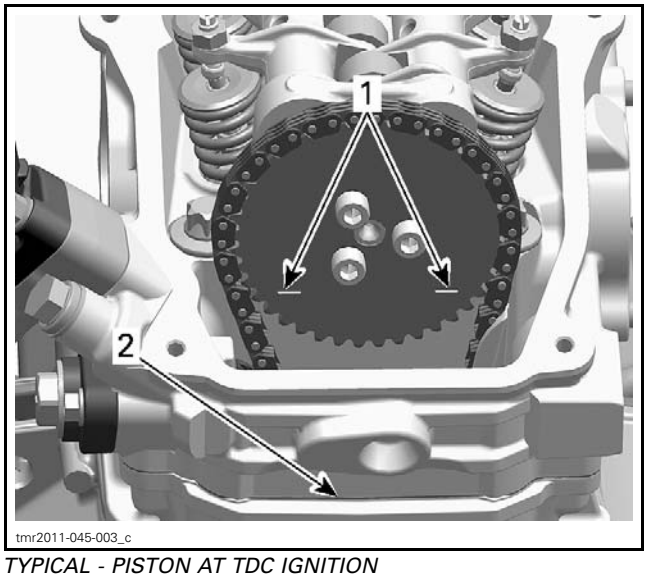

TYPICAL - PISTON AT TDC IGNITION
1. *Printed marks on camshaft timing gear*
2. *Cylinder head base*

Crankshaft TDC Position Tool Installation

Install tool in magneto cover CPS bore.

REQUIRED TOOL	
CRANKSHAFT TDC POSITION TOOL (P/N 529 036 201)	

NOTE: Make sure to match the teeth on the crankshaft TDC position tool with the magneto rotor.

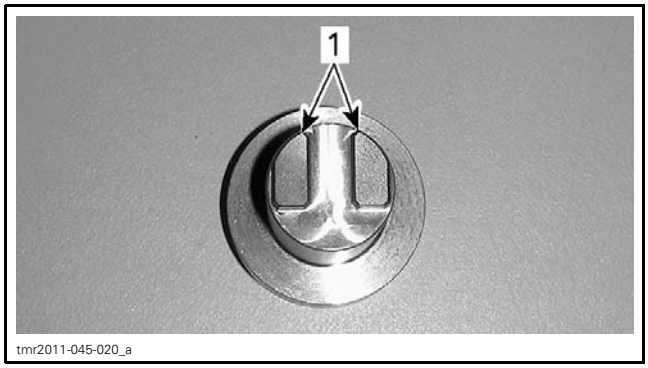

tmr2011-045-020_a

1. Crankshaft TDC position tool teeth (end view)

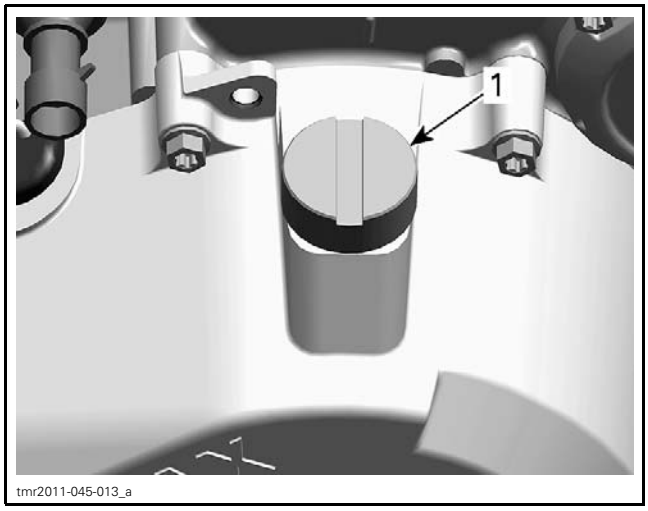

tmr2011-045-013_a

MAGNETO COVER
1. Crankshaft TDC position tool installed in CPS bore

NOTICE Tool must be fully inserted.

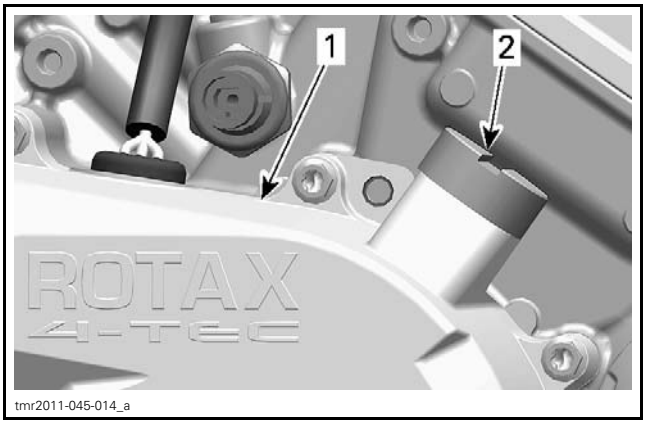

tmr2011-045-014_a

1. Magneto cover
2. TDC position tool

TIMING CHAIN

The engine is equipped with two timing chains.
– MAG side timing chain is located behind the magneto cover.
– PTO side timing chain is located behind the PTO cover.

Timing Chain Removal (MAG Side)

Refer to *MAGNETO SYSTEM* subsection and remove following parts:
– Magneto cover
– Rotor
– Sprag clutch gear.

Refer to *TOP END* subsection and remove following parts:
– Valve cover.

Refer to following procedures in this subsection and remove following parts:
– Chain tensioner
– Camshaft timing gear.

Remove timing chain guide (tensioner side) and lower timing chain guide.

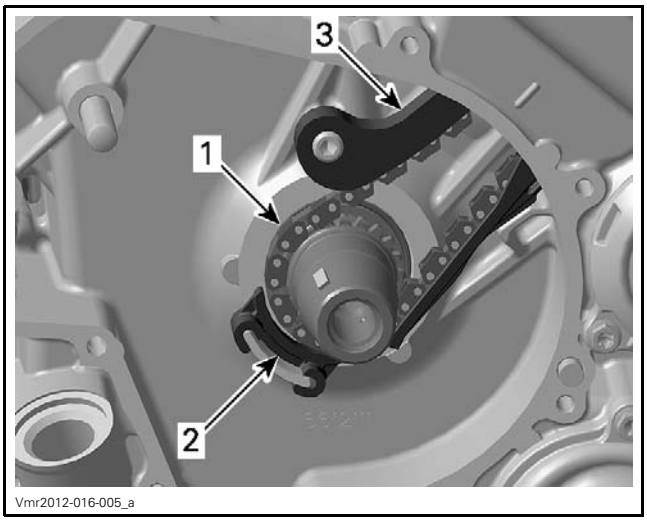

1. Timing chain
2. Lower timing chain guide
3. Timing chain guide (tensioner side)

NOTE: Mark the operating direction of the timing chain and check for excessive radial play before removal. Refer to *TIMING CHAIN INSPECTION*.

Carefully pull the timing chain downwards and sideways, then out of the crankcase.

Timing Chain Removal (PTO Side)

Refer to *BOTTOM END* subsection and remove following parts:

– PTO cover
– Breather gear
– Intermediate gear.

Refer to *TOP END* subsection and remove following parts:

– Valve cover.

Refer to following procedures in this subsection and remove following parts:

– Chain tensioner
– Camshaft timing gear.

Remove timing chain guide (tensioner side) and lower timing chain guide.

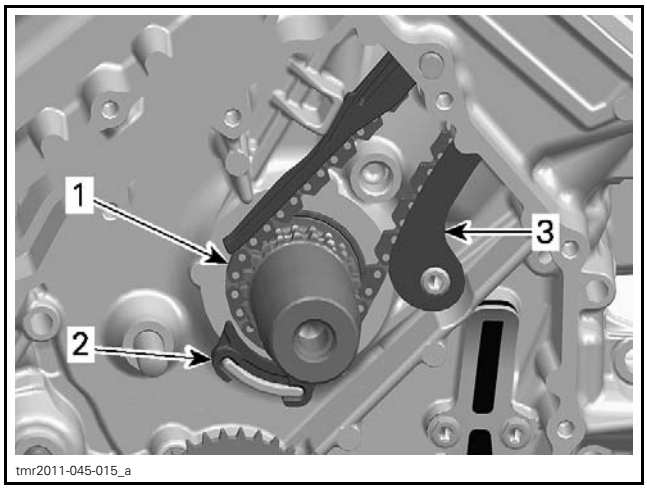

1. Timing chain
2. Lower timing chain guide
3. Timing chain guide (tensioner side)

Carefully pull the timing chain sideward and down from the crankcase.

NOTE: Mark the operating direction of the timing chain and check for excessive radial play before removal. Refer to *TIMING CHAIN INSPECTION*.

Timing Chain Inspection

Inspection is the same for both timing chains.

Check timing chain on camshaft timing gear for excessive radial play.

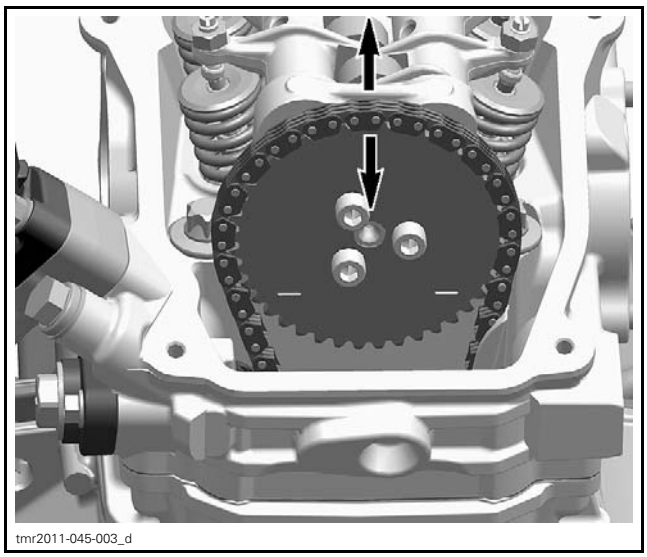

CHECKING TIMING CHAIN RADIAL PLAY

Check chain condition for wear and teeth condition.

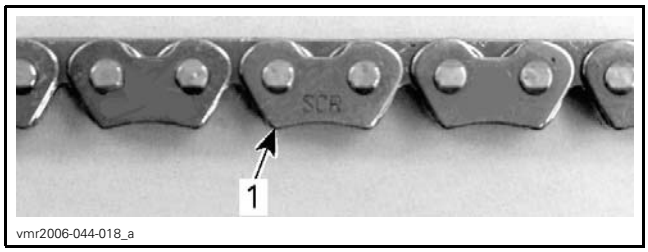

1. Timing chain

If chain is excessively worn or damaged, replace it as a set (camshaft timing gear and timing chain).

Check timing chain guides for wear, cracks or deforming. Replace as required.

NOTE: Check also the timing chain guide (tensioner side).

Timing Chain Installation

The installation is essentially the reverse of the removal procedure, but pay attention to the following details.

NOTE: Installation is the same for both timing chains.

Install timing chain with camshaft timing gear.

NOTE: Ensure to carry out proper valve timing, refer to *CAMSHAFT TIMING GEARS* in this subsection.

NOTICE **Improper valve timing will damage engine components.**

TIMING CHAIN GUIDE (TENSIONER SIDE)

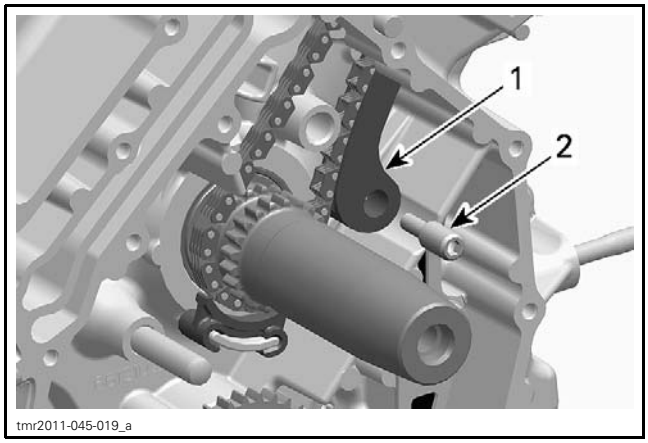

1. Timing chain guide (tensioner side)
2. Bearing screw

Timing Chain Guide Removal (Tensioner Side)

Refer to *TIMING CHAIN* in this subsection.

Timing Chain Guide Inspection (Tensioner Side)

Check timing chain guide for wear, cracks or deforming. Replace if necessary.

Timing Chain Guide Installation (Tensioner Side)

The installation is the reverse of the removal procedure.

TIMING CHAIN GUIDE BEARING SCREW	
Service product	LOCTITE 243 (BLUE) (P/N 293 800 060)
Tightening torque	10 N•m ± 1 N•m (89 lbf•**in** ± 9 lbf•**in**)

BOTTOM END

SERVICE TOOLS

Description	Part Number	Page
CRANKCASE SUPPORT MAG/PTO	529 036 031	151
CRANKSHAFT LOCKING BOLT	529 035 617	154
DRIVE SHAFT OIL SEAL INSTALLER	529 036 028	143–144
DRIVE SHAFT OIL SEAL PROTECTOR	529 036 029	142
PLAIN BEARING REMOVER/INSTALLER	529 035 917	151
PLAIN BEARING REMOVER/INSTALLER	529 036 032	146
PTO COVER OIL SEAL INSTALLER	529 036 033	145

SERVICE PRODUCTS

Description	Part Number	Page
LOCTITE 243 (BLUE)	293 800 060	143
LOCTITE 5910	293 800 081	142
LOCTITE CHISEL (GASKET REMOVER)	413 708 500	142

ENGINE DRIVE SHAFT

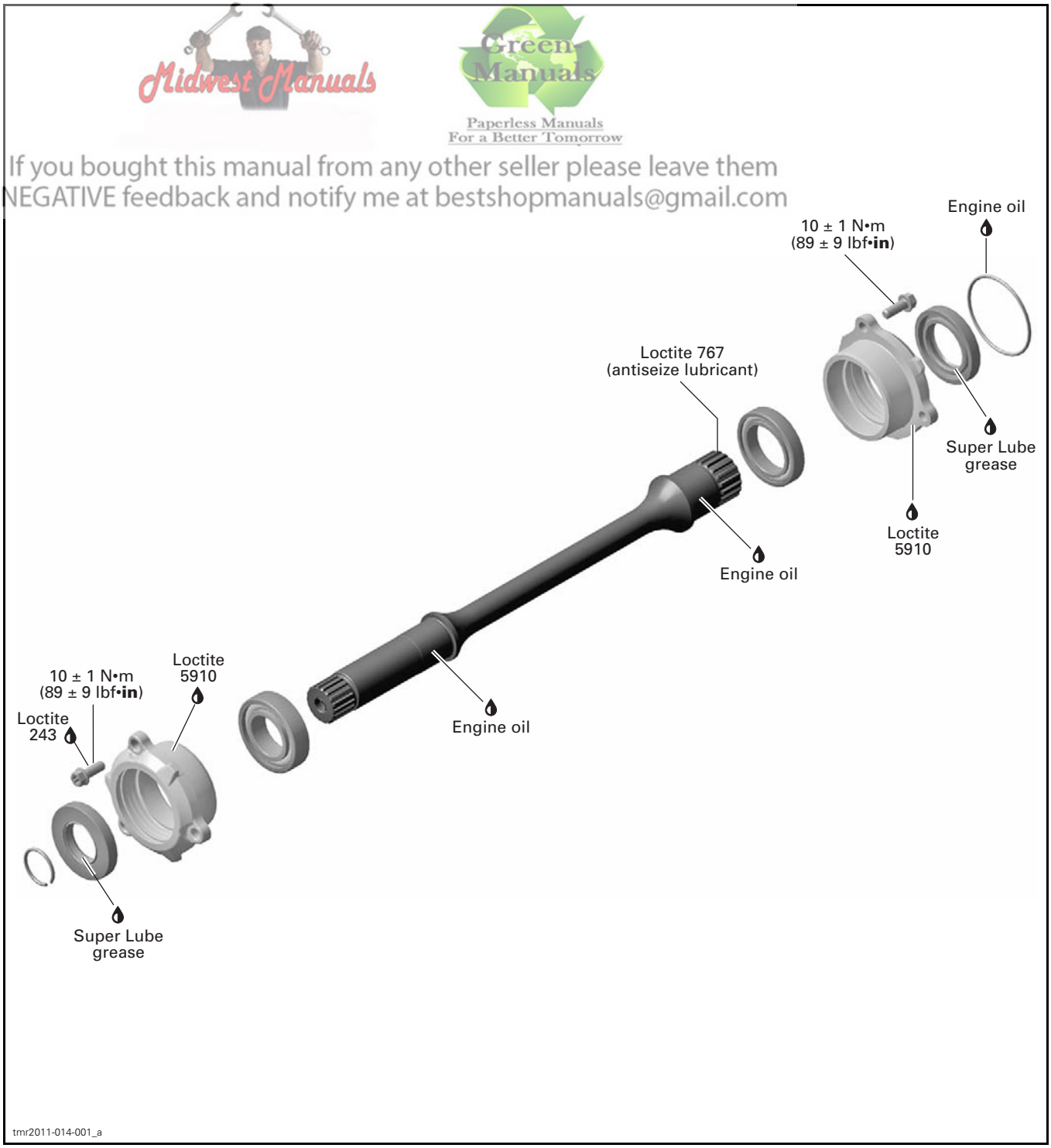

CRANKCASE AND PTO COVER

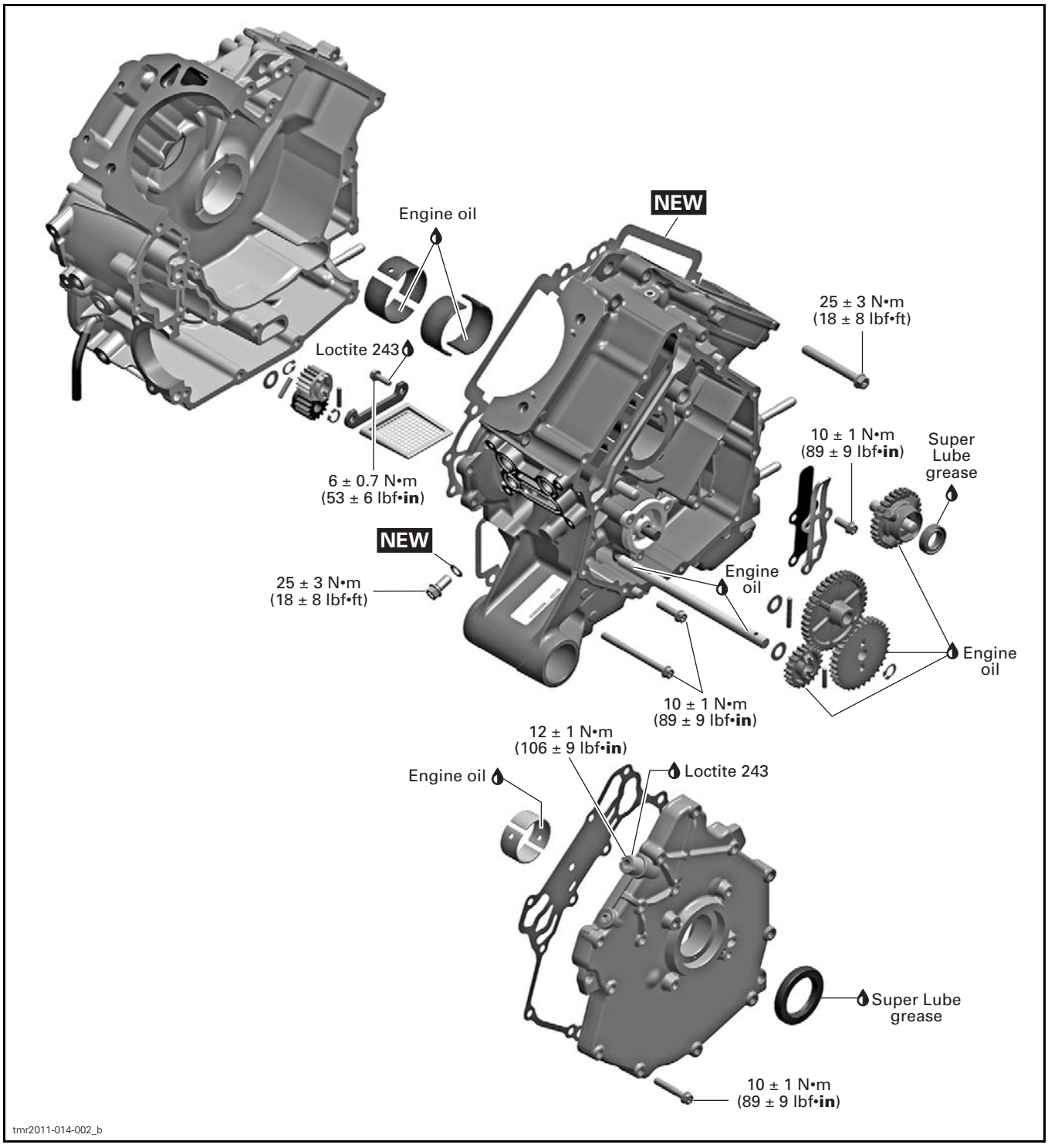

CRANKSHAFT

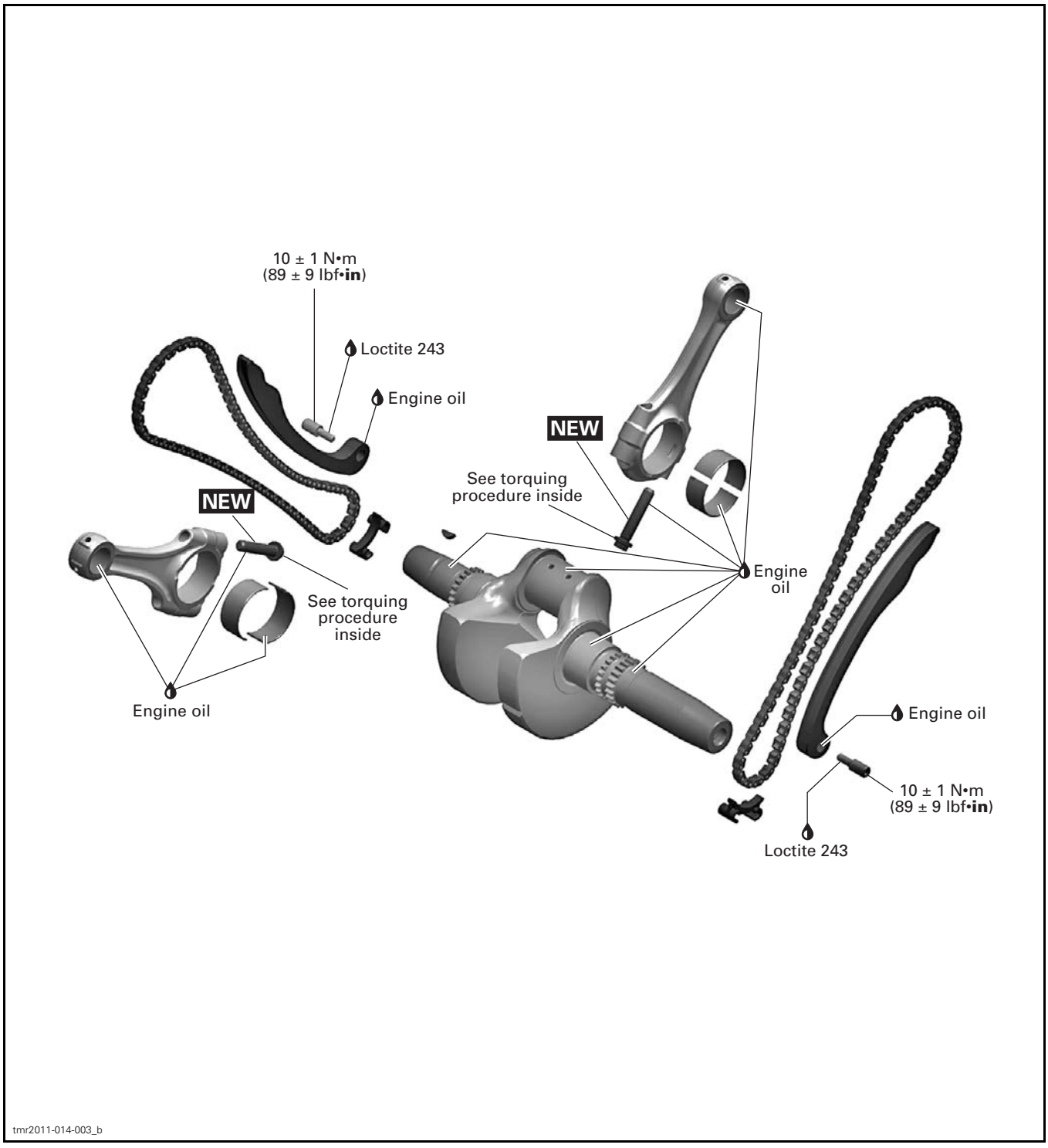
10 ± 1 N•m
(89 ± 9 lbf•in)
Loctite 243
Engine oil
NEW
See torquing
procedure inside
NEW
See torquing
procedure inside
Engine oil
Engine
oil
Engine oil
10 ± 1 N•m
(89 ± 9 lbf•in)
Loctite 243
tmr2011-014-003_b

GENERAL

IMPORTANT: Note position of parts on disassembly. This may help to find the root cause of a problem. A component that is not replaced should be reinstalled in the same position as originally mounted.

PROCEDURES

ENGINE DRIVE SHAFT

NOTE: The engine drive shaft transmits the power from the gearbox to the front differential and is located inside the crankcase.

Engine Drive Shaft Removal

Remove the engine. Refer to *ENGINE REMOVAL AND INSTALLATION* subsection.

Rear Bearing Cover Removal

Detach gearbox from engine, refer to *GEARBOX AND 4X4 COUPLING UNIT* subsection.

At rear of engine, remove the bearing cover and its O-ring.

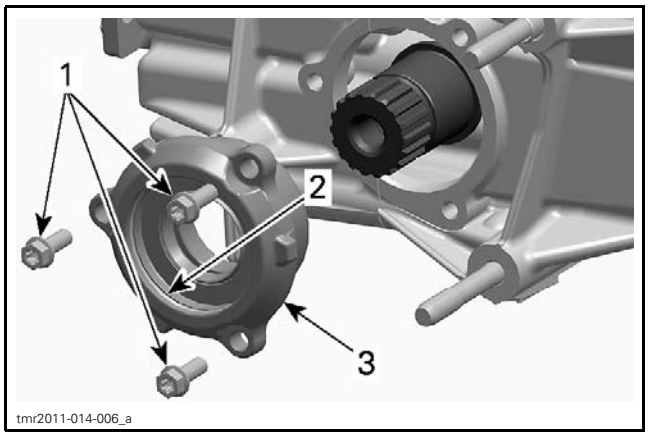

1. Bearing cover screws
2. O-ring
3. Bearing cover gearbox side

Front Bearing Cover Removal

Remove the bearing cover at the front of the engine.

NOTICE Check ends of the circlip for sharp edges or burr before removing the drive shaft, to avoid damaging the oil seal.

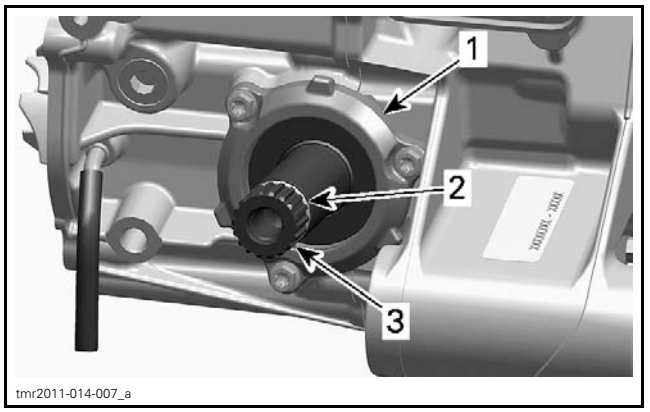

1. Bearing cover front drive side
2. Circlip
3. Drive shaft

Engine Drive Shaft Removal

Split crankcase, refer to *CRANKCASE* in this subsection.

Remove engine drive shaft from the crankcase.

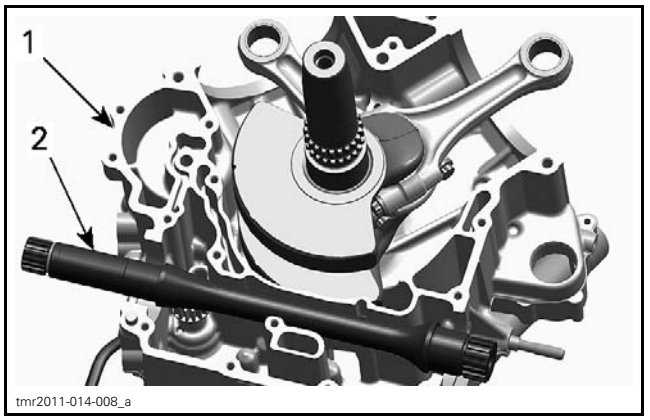

1. Crankcase MAG side
2. Engine drive shaft

Engine Drive Shaft Inspection

Replace oil seals and/or O-ring (bearing cover gearbox side) if they are brittle, hard or damaged.

Check drive shaft bearings for contamination and/or metal shavings. Check if bearings turn freely and smoothly. Replace if necessary.

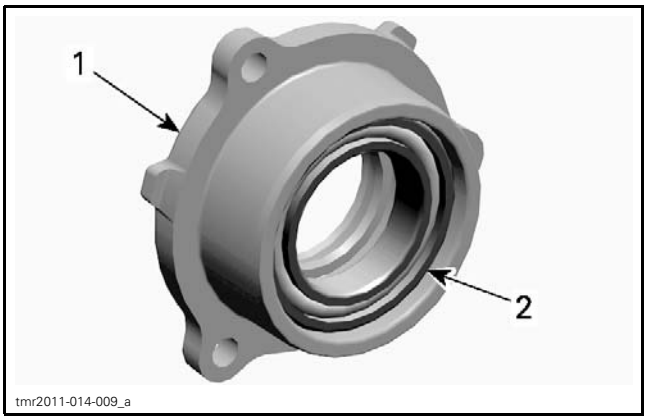

1. Bearing cover
2. Drive shaft bearing

Check drive shaft for cracks, bend, pitting or other visible damages.

Check drive shaft splines for wear or damages.

Check oil seal running surface of the drive shaft for scratches. Replace if necessary.

Engine Drive Shaft Installation

The installation is the reverse of removal procedure. Pay attention to the following details.

Clean all metal components in solvent.

Crankcase surfaces and bearing covers are best cleaned using a combination of LOCTITE CHISEL (GASKET REMOVER) (P/N 413 708 500) and a brass brush. Brush a first pass in one direction then make the final brushing perpendicularly (90°) to the first pass.

NOTICE **Do not wipe with rags. Use a new clean hand towel only.**

Use a suitable installer for installing bearings.

Use LOCTITE 5910 (P/N 293 800 081) on mating surfaces.

IMPORTANT: When beginning the application of the bearing cover sealant, the assembly and the first torquing should be done within 10 minutes. It is suggested to have all you need on hand to save time.

Use a plexiglass plate and apply some sealant on it. Use a soft rubber roller 50 mm - 75 mm (2 in - 3 in), available in arts products suppliers for printing, and roll the sealant to get a thin uniform coat on the plate (spread as necessary). When ready, apply the sealant on bearing cover surfaces.

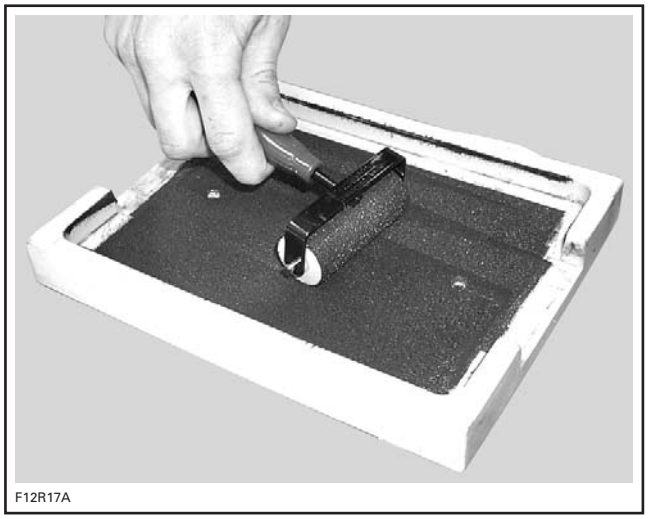

Do not apply in excess as it will spread out inside crankcase.

NOTE: It is recommended to apply this specific sealant as described here to get a uniform application without lumps. If you do not use the roller method, you may use your finger to uniformly distribute the sealant (using a finger will not affect the adhesion).

Rear Bearing Cover Installation

For bearing cover installation on gearbox side, protect the oil seal to avoid damaging the sealing lip.

REQUIRED TOOL	
DRIVE SHAFT OIL SEAL PROTECTOR (P/N 529 036 029)	

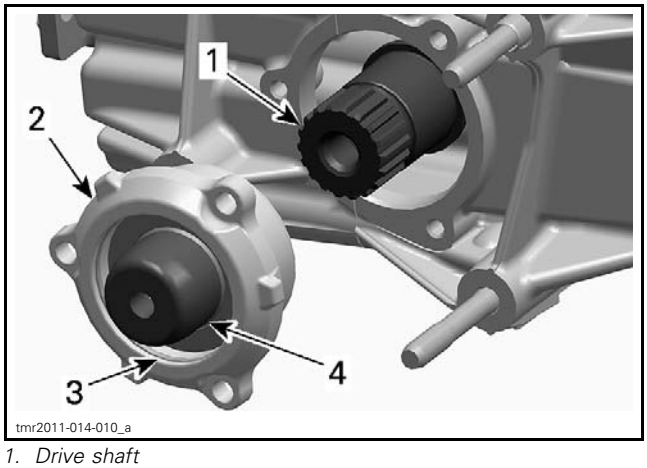

1. Drive shaft
2. Bearing cover gearbox side
3. O-ring
4. Protection sleeve

REAR BEARING COVER SCREWS	
Tightening torque	10 N•m ± 1 N•m (89 lbf•**in** ± 9 lbf•**in**)

Front Bearing Cover Installation

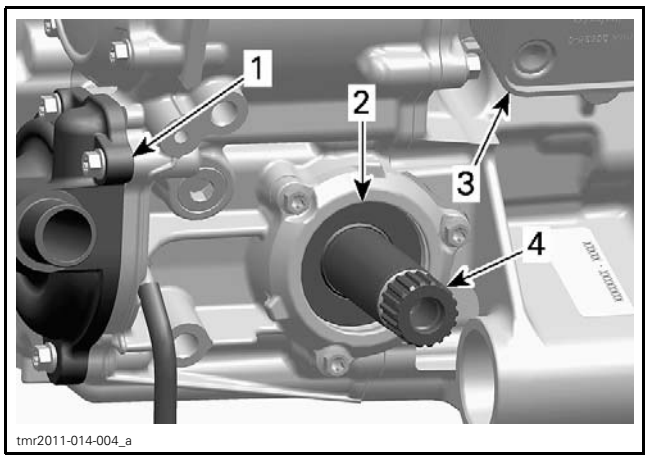

FRONT OF ENGINE
1. *Water pump cover*
2. *Oil seal front side*
3. *Oil cooler*
4. *Drive shaft*

FRONT BEARING COVER SCREWS	
Service product	LOCTITE 243 (BLUE) (P/N 293 800 060)
Tightening torque	10 N•m ± 1 N•m (89 lbf•**in** ± 9 lbf•**in**)

Engine Drive Shaft Installation

Finally check for axial play of the drive shaft.

FRONT OIL SEAL (ENGINE DRIVE SHAFT)

Front Oil Seal Replacement (Engine Drive Shaft)

NOTE: The front oil seal can be replaced with the engine installed.

1. Remove front propeller shaft.
2. Remove adapter sleeve between propeller shaft and front engine drive shaft.
3. Remove the front bearing cover, refer to *ENGINE DRIVE SHAFT REMOVAL/INSTALLATION* in this subsection.
4. Remove drive shaft seal from bearing cover.

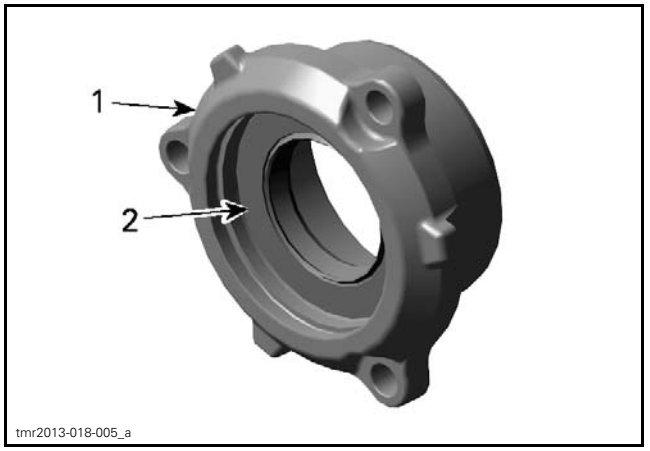

1. *Bearing cover*
2. *Oil seal*

5. Install drive shaft oil seal using the following tool.

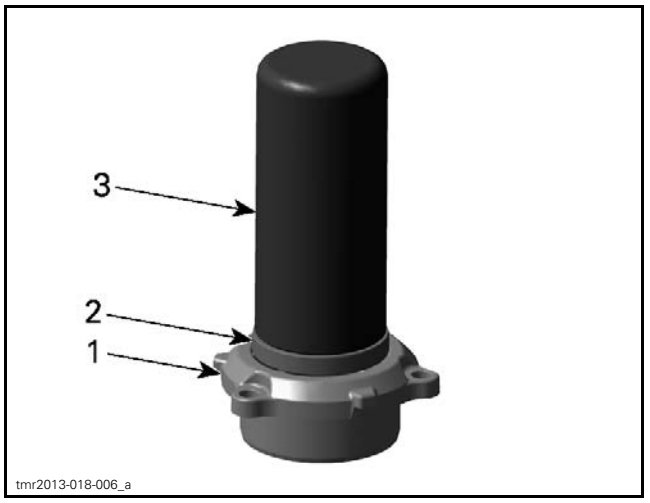

1. *Bearing cover*
2. *Oil seal*
3. *Oil seal installer*

REQUIRED TOOL	
DRIVE SHAFT OIL SEAL INSTALLER (P/N 529 036 028)	

6. Reinstall remaining parts in the reverse order of removal.

REAR OIL SEAL (ENGINE DRIVE SHAFT)

Rear Oil Seal Replacement (Engine Drive Shaft)

1. Remove rear bearing cover, refer to *ENGINE DRIVE SHAFT REMOVAL/INSTALLATION* in this subsection.
2. Remove drive shaft seal from bearing cover.
3. Remove O-ring from bearing cover.

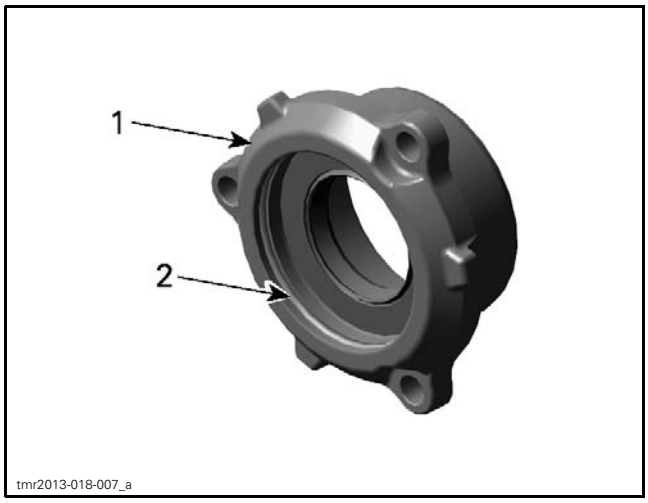

1. Bearing cover
2. O-ring

4. Install drive shaft oil seal using the following tool.

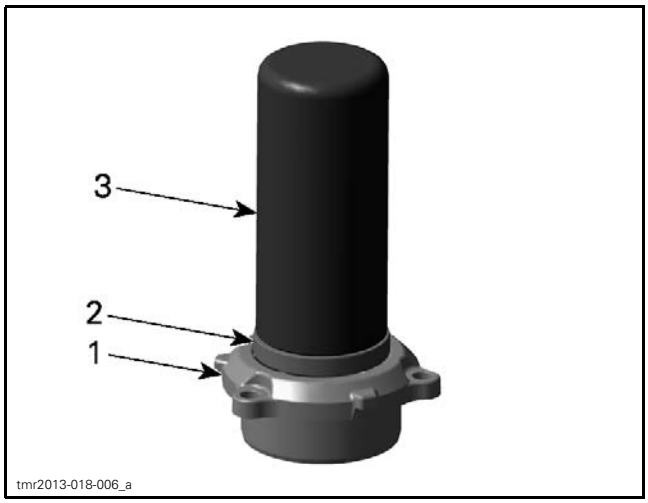

1. Bearing cover
2. Oil seal
3. Oil seal installer

REQUIRED TOOL	
DRIVE SHAFT OIL SEAL INSTALLER (P/N 529 036 028)	

5. Install O-ring in rear bearing cover.

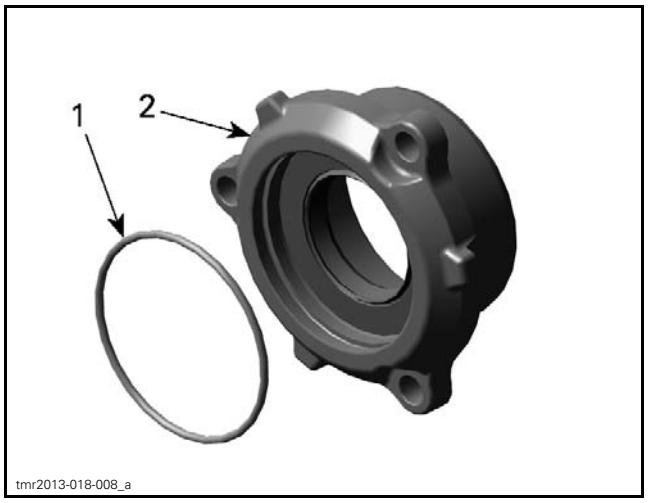

1. O-ring
2. Bearing cover

6. Reinstall remaining parts in the reverse order of removal.

PTO COVER OIL SEAL

To replace oil seal it is not necessary to remove engine from vehicle.

PTO Oil Seal Removal

Refer to *CONTINUOUSLY VARIABLE TRANSMISSION (CVT)* subsection to remove the following parts:

– CVT cover
– Drive pulley
– Driven pulley
– CVT air guide.

Remove oil seal with a small flat screwdriver.

NOTICE Avoid scoring surfaces with tool.

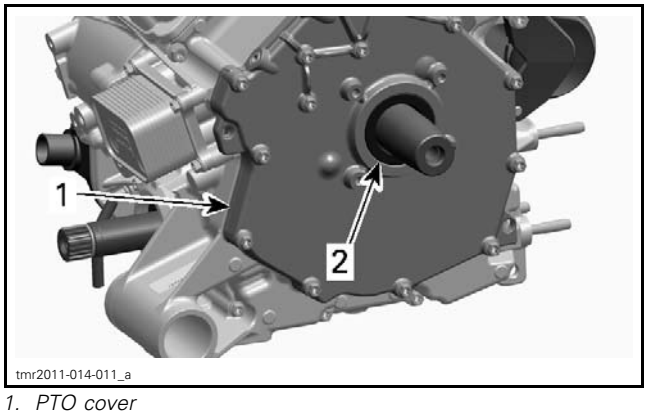

1. PTO cover
2. Oil seal

PTO Oil Seal Inspection

Check oil seal running surface of crankshaft PTO side for grooves. Replace if necessary.

PTO Oil Seal Installation

The installation is the reverse of the removal procedure.

Pay attention to the following details.

NOTICE **Oil seal must be installed with sealing lip toward the engine.**

Push oil seal in place.

REQUIRED TOOL	
PTO COVER OIL SEAL INSTALLER (P/N 529 036 033)	

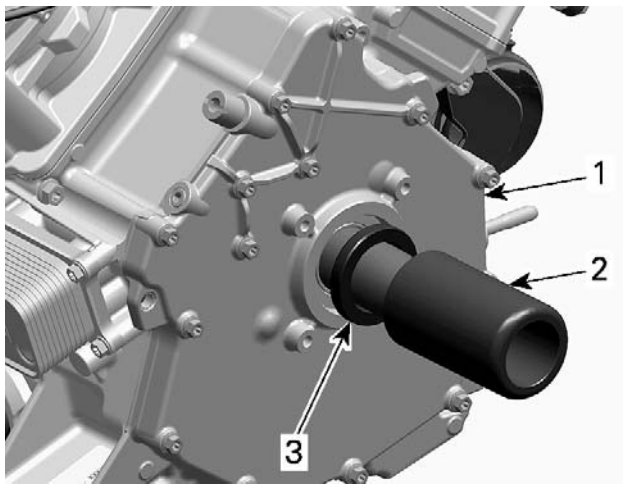

tmr2011-014-012_a

1. PTO cover
2. Oil seal installer
3. Oil seal

PTO COVER

PTO Cover Removal

Refer to *CONTINUOUSLY VARIABLE TRANSMISSION (CVT)* subsection to remove the following parts:

– CVT cover
– Drive pulley
– Driven pulley
– CVT air guide.

Disconnect vent hose.

Remove PTO cover screws and pull PTO cover.

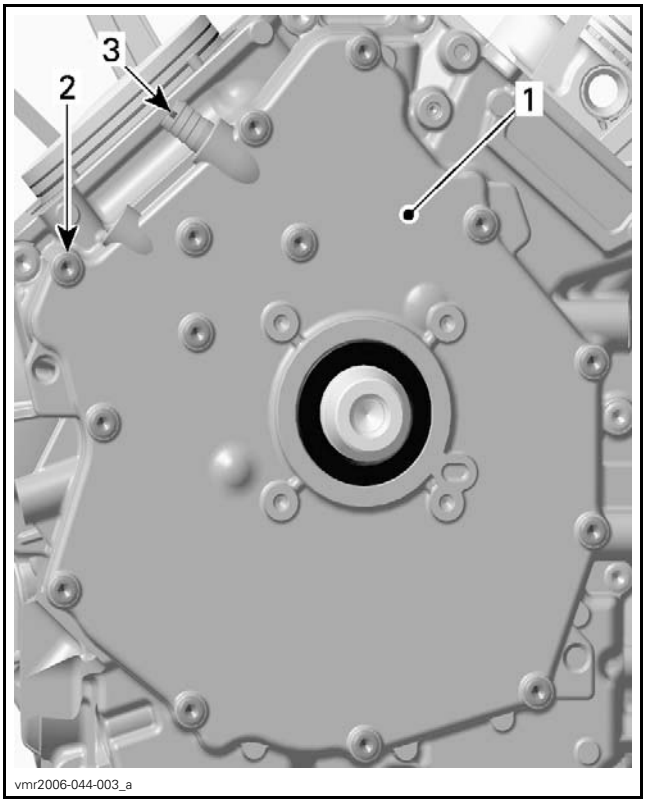

vmr2006-044-003_a

1. PTO cover
2. PTO cover screws
3. Vent hose nipple

PTO Cover Inspection

Check the PTO cover for cracks or other damage.

Replace PTO cover if damaged.

Clean oil breather bore in PTO cover from contaminations with part cleaner then use pressurized air to dry it.

⚠ WARNING

Always wear skin and eye protection. Chemicals can cause skin rash, skin burns and severe eye injury.

Check surface of sealing sleeve for wear or other damages. Replace PTO cover if damaged.

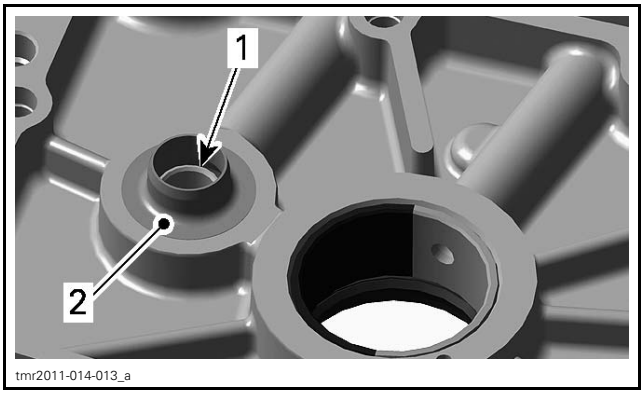

1. Oil breather bore
2. Surface of sealing sleeve

Check plain bearings for scorings or other damages.

NOTE: Measure plain bearing inside diameter (PTO cover) and compare to crankshaft journal diameter (PTO cover bearing). Refer to *CRANKSHAFT* in this section. Replace if the measurement is out of specification.

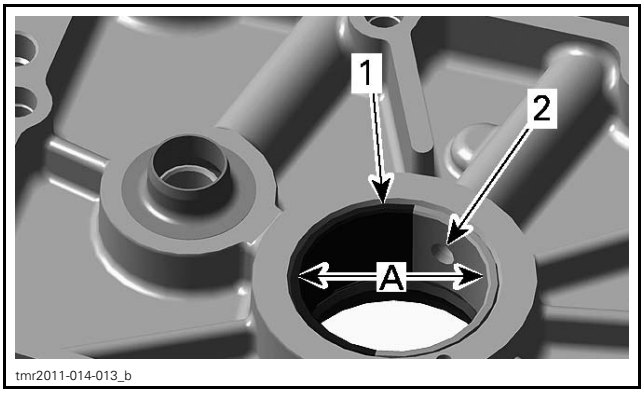

1. Plain bearing
2. Oil bore
A. Measure plain bearing inside diameter

PLAIN BEARING INSIDE DIAMETER (PTO COVER)	
SERVICE LIMIT	34.120 mm (1.3433 in)

Plain Bearing Replacement (PTO Cover)

Plain Bearing Removal

NOTICE Unless otherwise instructed, never use a hammer to install plain bearings. Use a press only.

Carefully remove the PTO oil seal with a screwdriver, without damaging the PTO cover.

Press out the plain bearings from the outside towards the inside.

REQUIRED TOOL	
PLAIN BEARING REMOVER/INSTALLER (P/N 529 036 032)	

The PTO cover has to be supported from below with suitable support with straight surface, in order to prevent damage of the sealing surface.

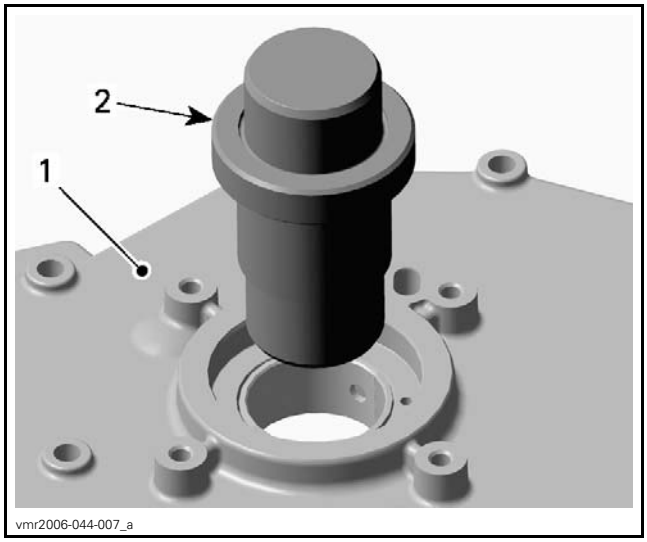

1. PTO cover
2. Plain bearing remover/installer

Plain Bearing Installation

NOTE: Do not lubricate plain bearings and/or PTO cover for installation.

Install plain bearings in a cool PTO cover.

REQUIRED TOOL	
PLAIN BEARING REMOVER/INSTALLER (P/N 529 036 032)	

NOTICE Mark position of oil bore on PTO cover and on plain bearing remover/installer. Align mark on plain bearing remover/installer with mark on PTO cover.

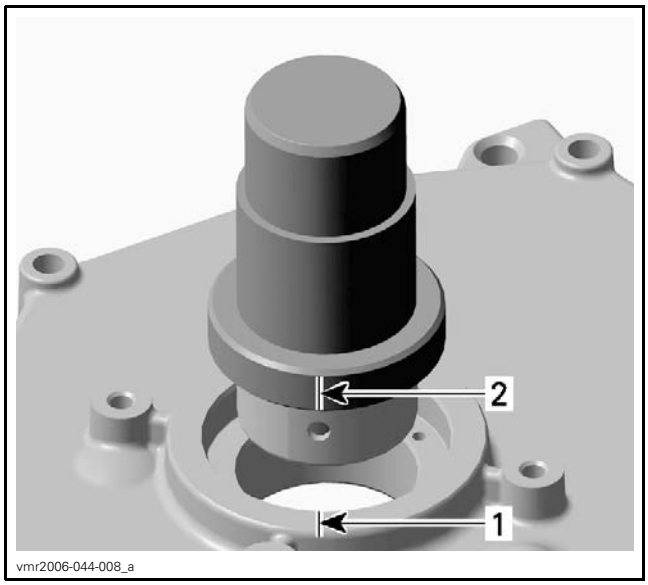

1. Mark position of oil bore on PTO cover
2. Mark position of oil bore on plain bearing remover/installer

Carefully press-in the plain bearings in the same direction as during disassembly, from the outside towards the inside. Support PTO cover with suitable support with straight surface, in order to prevent damage of the sealing surface.

NOTE: Wrong oil bore position will stop oil supply to plain bearings and will damage the engine.

NOTICE **The partition of the plain bearings must be positioned near to oil bore in counterclockwise direction.**

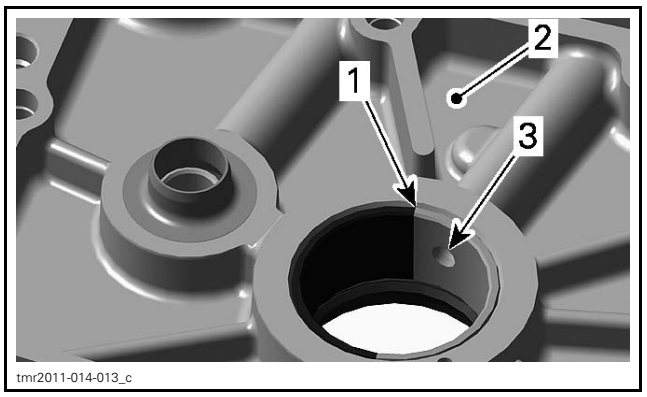

1. Partition
2. PTO cover (inside)
3. Oil bore

PTO Cover Installation

For installation, reverse the removal procedure.

Pay attention to the following details.

NOTE: At installation, replace PTO cover gasket and oil seal.

Tighten PTO cover screws following the illustrated sequence.

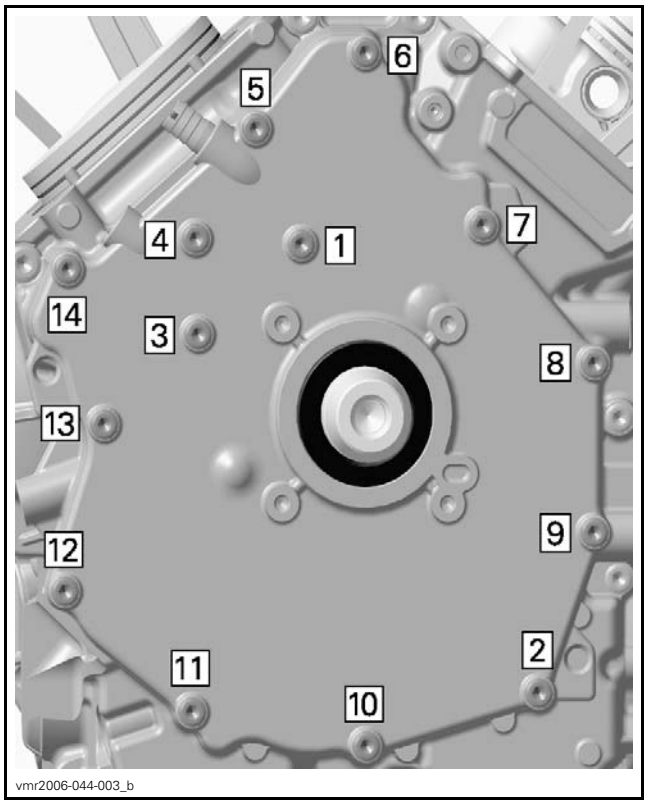

TIGHTENING SEQUENCE

PTO COVER SCREWS	
Tightening torque	10 N•m ± 1 N•m (89 lbf•**in** ± 9 lbf•**in**)

DRIVE GEARS

Drive Gears Location

The engine is equipped with a breather gear which prevents engine oil coming out through the breathing system into the air intake system.

The drive gears are located on the engine PTO side behind the PTO cover.

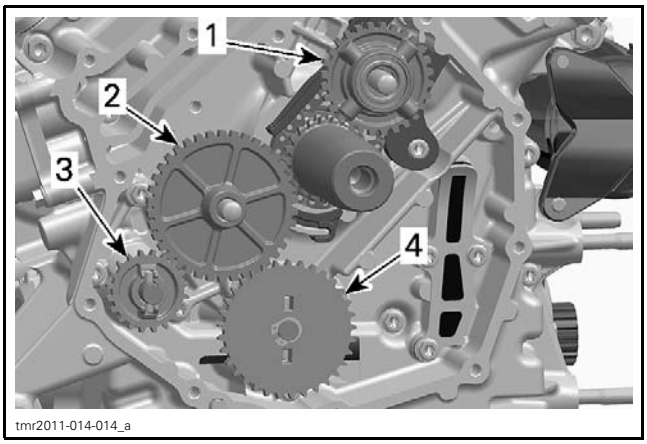

1. *Breather gear*
2. *Intermediate gear*
3. *Water pump drive gear*
4. *Oil pump drive gear*

Drive Gears Removal

Remove PTO cover (refer to *PTO COVER*).

Withdraw intermediate gear and breather gear.

For oil pump drive gear removal, refer to *OIL PUMP* in the *LUBRICATION SYSTEM* subsection.

To remove water pump drive gear, pull the shaft assembly a bit out and turn it about one teeth until it stays out.

Then push water pump drive gear in.

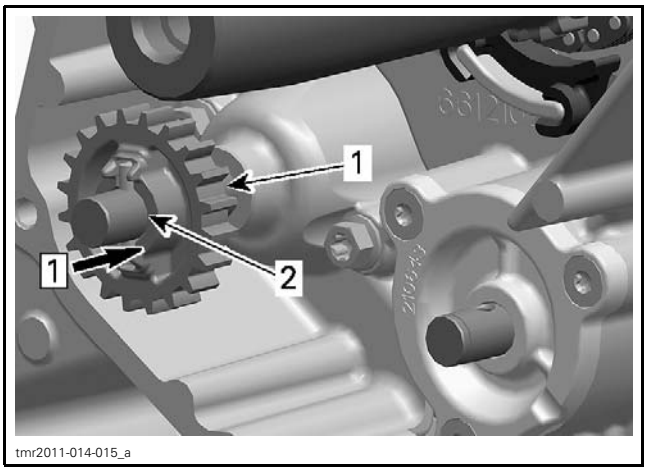

Step 1: Push gear in

1. *Water pump drive gear*
2. *Intermediate shaft*

Remove needle pin and pull water pump drive gear out.

Remove thrust washer from intermediate shaft.

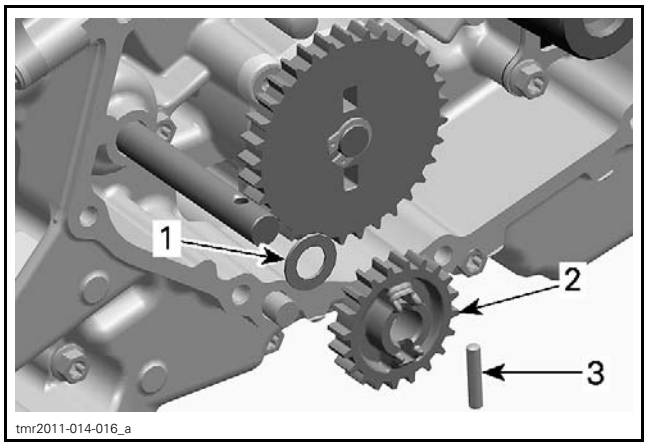

1. *Thrust washer*
2. *Water pump drive gear*
3. *Needle pin*

Drive Gears Inspection

Intermediate Gear/Oil Pump Drive Gear/Water Pump Drive Gear

Inspect gears for wear or other damage. Replace if damaged.

Breather Gear

Check if oil seal is brittle, hard or damaged. Replace if necessary.

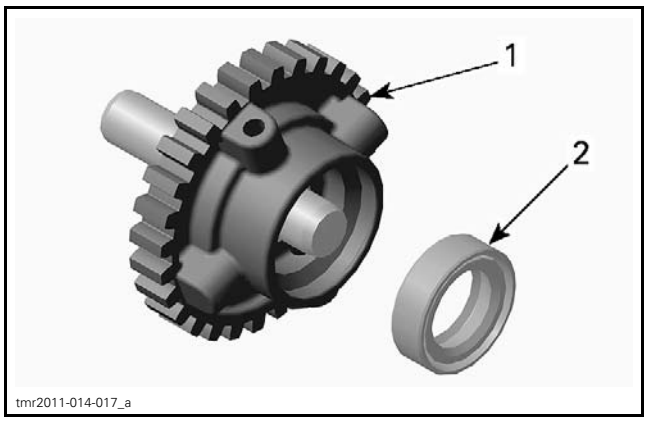

1. *Breather gear*
2. *Oil seal*

Inspect gear for wear or other damage.

Check ball bearing for excessive play and smooth operation. Replace breather gear assembly if necessary.

Drive Gears Installation

The installation is essentially the reverse of the removal procedure.

Adequately oil the ball bearing of the breather gear.

CRANKCASE

Crankcase Disassembly

1. Refer to *PERIODIC MAINTENANCE PROCEDURES* subsection and:
   1.1 Drain cooling system.
   1.2 Drain engine oil.
   1.3 Drain gearbox oil.
2. Lock crankshaft. Refer to *CRANKSHAFT LOCKING PROCEDURE* in the this subsection.
3. Refer to *CONTINUOUSLY VARIABLE TRANSMISSION (CVT)* subsection to remove following parts:
   – CVT cover
   – Drive pulley
   – Driven pulley
   – CVT air guide.
4. Remove engine from vehicle. Refer to *ENGINE REMOVAL AND INSTALLATION* subsection.
5. Detach gearbox from engine. Refer to *GEARBOX AND 4X4 COUPLING UNIT*.
6. Refer to *MAGNETO SYSTEM* subsection to remove the following parts:
   – Magneto cover
   – Rotor with sprag clutch gear
   – Starter drive gears.
7. Refer to following procedures in this subsection to remove the following parts:
   – PTO cover
   – Drive gears
   – Bearing covers of engine drive shaft.
8. Refer to *TIMING CHAIN* subsection to remove following parts:
   – Chain tensioners
   – Camshaft timing gears
   – Timing chains
   – Timing chain guides.
9. Refer to *TOP END* subsection to remove following parts:
   – Front cylinder head
   – Rear cylinder head
   – Cylinders.
10. Refer to *COOLING SYSTEM* subsection to remove following parts:
    – Water pump housing.
11. Refer to *LUBRICATION SYSTEM* subsection to remove following parts:
    – Oil filter
    – Oil cooler
    – Oil pump drive gear.

NOTE: Oil pump removal from crankcase is not necessary, but recommended to see condition of oil pump (refer to *LUBRICATION SYSTEM* subsection).

12. Remove electric starter.

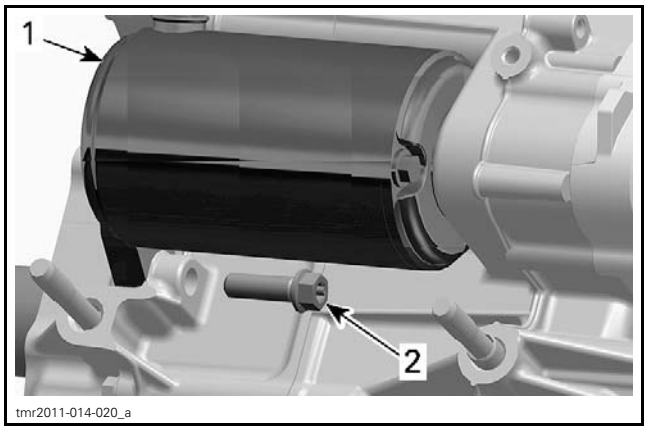

1. Electric starter
2. Screw

NOTE: Before splitting the crankcase, measure crankshaft axial play. Refer to *CRANKSHAFT*.

Remove retaining screws of crankcase.

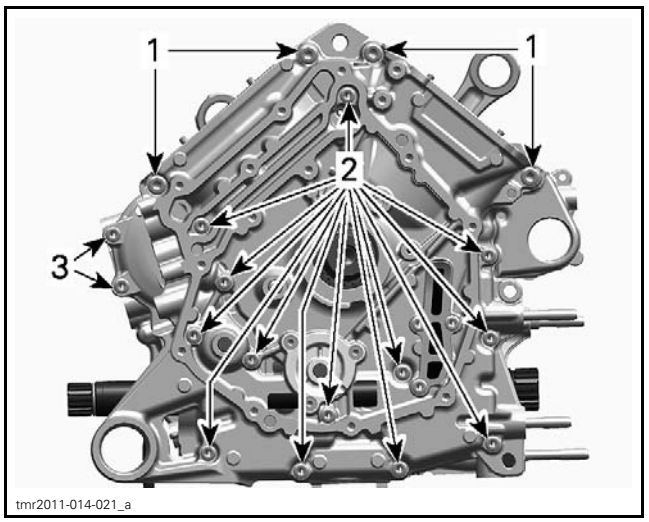

1. Four screws M8 x 65
2. 13 screws M6 x 75
3. Two screws M6 x 25

Carefully split crankcase halves by using a screwdriver and a soft hammer.

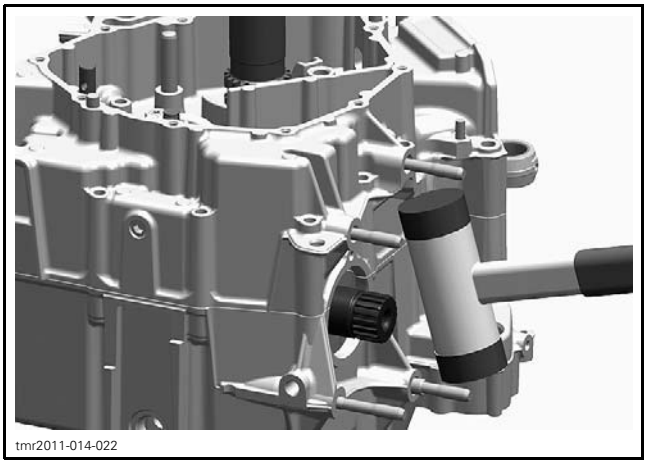
tmr2011-014-022

NOTE: During disassembly, do not damage the sealing surfaces of the crankcase halves.

Pull crankshaft out of crankcase.

Remove the water pump intermediate shaft.

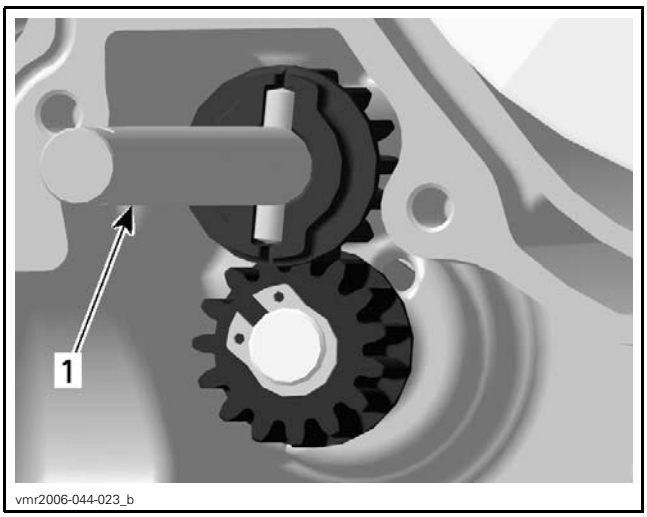

vmr2006-044-023_b

1. Water pump intermediate shaft

Remove engine oil strainer.

NOTE: Oil strainer removal for inspection and cleaning is recommended. Refer to *LUBRICATION SYSTEM* subsection.

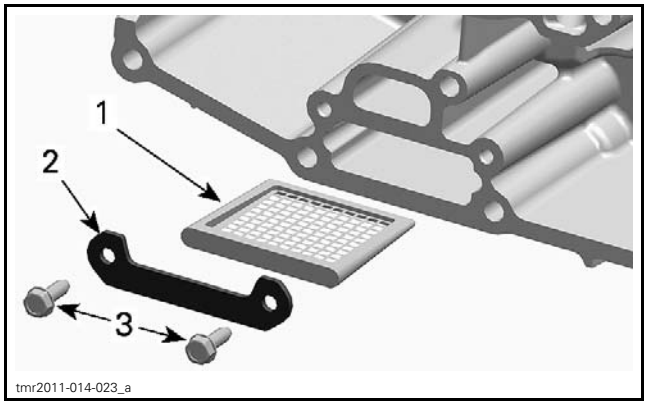

tmr2011-014-023_a

1. Engine oil strainer
2. Retaining plate
3. Screws

Crankcase Cleaning

⚠ WARNING

Use safety goggles to avoid eye injuries.

Clean crankcase using a part cleaner.

Dry crankcase using compressed air.

Blow the oil supply lines.

Crankcase Inspection

Check crankcase halves for cracks or other damage. Replace if damaged.

Check MAG and PTO plain bearings in for scoring or other damages.

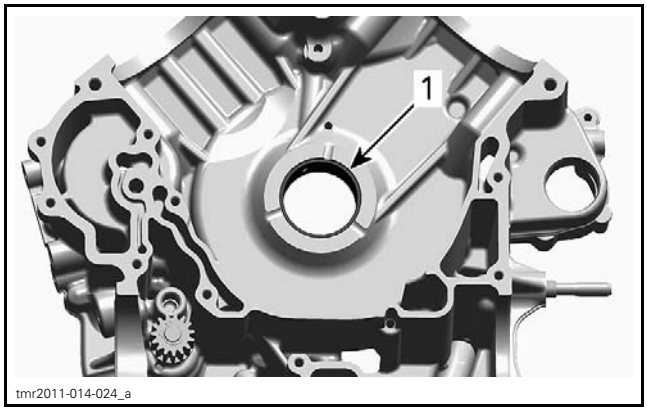

tmr2011-014-024_a

1. Plain bearing

NOTE: Measure plain bearing inside diameter and compare to PTO/MAG main journal diameters of crankshaft (refer to *CRANKSHAFT*). Replace if the measurements are out of specification.

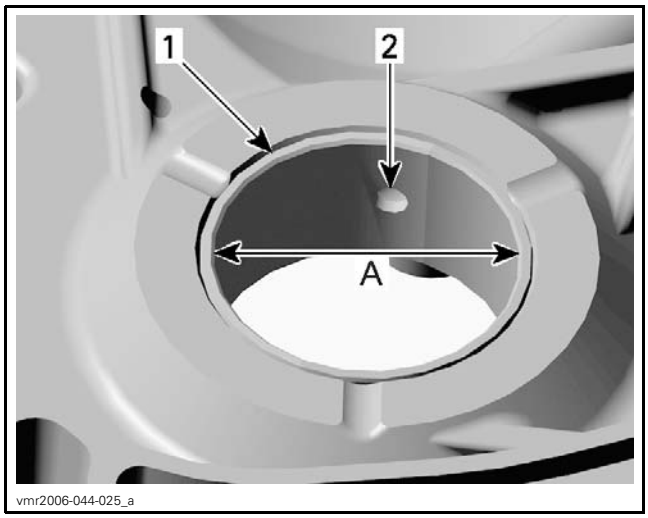

1. Plain bearing
2. Oil bore
A. Measure plain bearing inside diameter

MAIN BEARING INSIDE DIAMETER (PTO/MAG)	
SERVICE LIMIT	42.100 mm (1.6575 in)

Plain Bearing Replacement (Main)

Plain Bearing Removal

NOTICE Always support crankcase halves properly when plain bearings are removed. Damages to crankcase halves may occur if this procedure is not performed correctly.

NOTE: Always use a press for removal of plain bearings.

Carefully press the plain bearings out, from the crankcase half inside towards the outside.

REQUIRED TOOLS	
CRANKCASE SUPPORT MAG/PTO (P/N 529 036 031)	
PLAIN BEARING REMOVER/INSTALLER (P/N 529 035 917)	

NOTE: During disassembly, make sure not to damage the sealing surfaces of the crankcase halves.

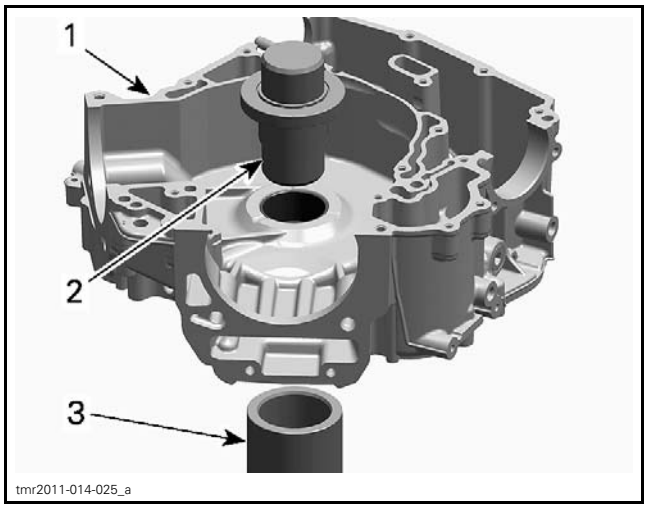

PUSH PLAIN BEARINGS OUTSIDE
1. Crankcase half
2. Plain bearing remover/installer
3. Crankcase support sleeve (P/N 529 036 031)

Plain Bearing Installation (Main)

NOTICE Unless otherwise instructed, never use hammer to install plain bearings. Use press only.

NOTE: Place the proper crankcase support sleeve under crankcase halves before installing the plain bearings (refer to *BEARING REMOVAL PROCEDURE*).

Carefully press in the plain bearings in the same direction as during disassembly, from the crankcase inside towards the outside.

During reassembly, make sure not to damage the sealing surfaces of the crankcase halves.

Install plain bearings in a cold crankcase.

NOTE: Do not lubricate plain bearings and/or crankcase for installation.

REQUIRED TOOL	
PLAIN BEARING REMOVER/INSTALLER (P/N 529 035 917)	

Use an O-ring (Ø 42 x 1 mm to 1.5 mm (.04 in to .06 in) thickness) to hold plain bearings in place during installation. The O-ring will disappear in the groove of the plain bearing remover/installer.

Mark position of plain bearing oil bore on plain bearing remover/installer.

Mark position of oil bore on crankcase half.

Align mark on plain bearing remover/installer with mark on crankcase half.

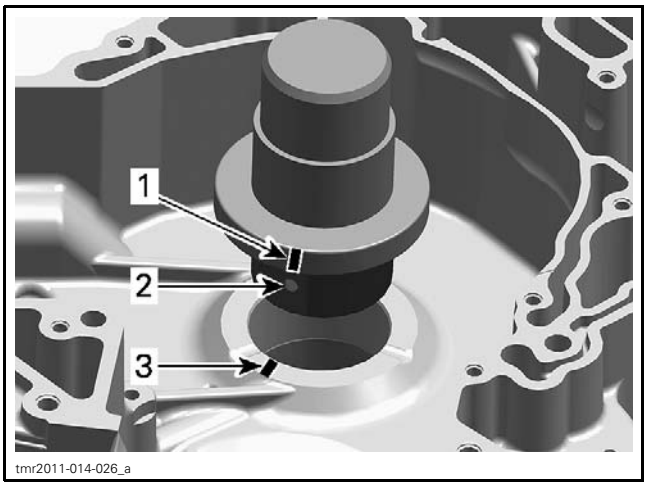

1. Oil bore position marked on plain bearing remover/installer
2. Plain bearing oil bore
3. Oil bore position marked on crankcase

NOTICE Misalignment of the plain bearing and crankcase oil bores will prevent proper oil supply to plain bearings.

Carefully press in the plain bearings from inside the crankcase towards the outside.

NOTICE The partition of the plain bearings in crankcase half MAG side must be positioned near to oil bore in clockwise direction.

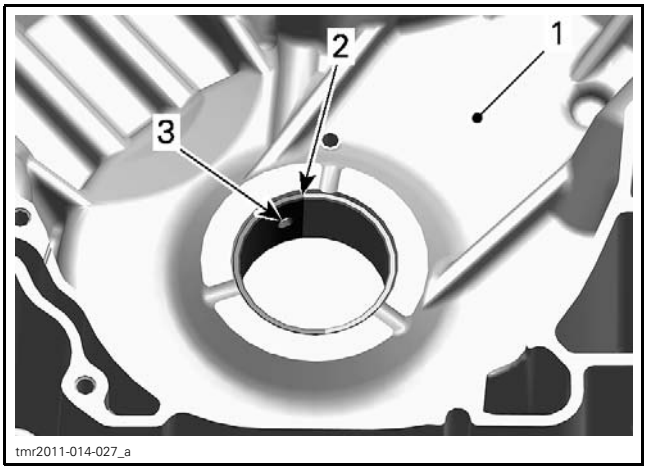

1. Crankcase half MAG (inside surface)
2. Partition
3. Oil bore

NOTICE The partition of the plain bearings in crankcase half PTO side must be positioned near to oil bore in counterclockwise direction.

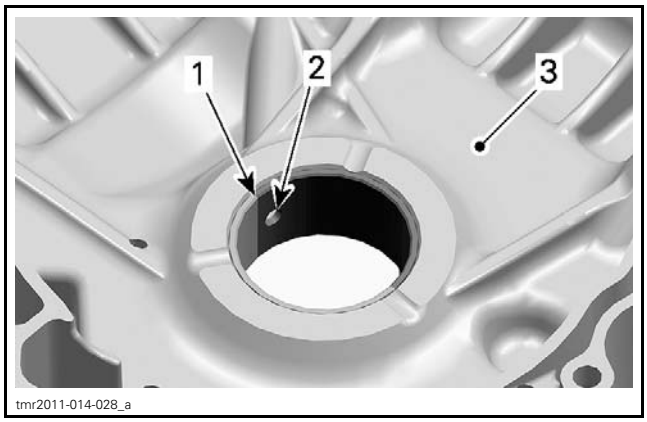

1. Partition
2. Oil bore
3. Crankcase half PTO (inside)

Crankcase Assembly

The assembly of crankcase is essentially the reverse of removal procedure. However, pay attention to the following details.

Install a NEW crankcase gasket.

Oil the plain bearings before mounting the crankshaft.

NOTICE Correctly reinstall crankshaft (refer to *CRANKSHAFT*).

Properly reinstall engine oil strainer and screws. Refer to *LUBRICATION SYSTEM* subsection.

Reinstall water pump intermediate shaft and gears. Refer to *WATER PUMP GEARS* in the *COOLING SYSTEM* subsection.

Tightening sequence for screws on crankcase is as per following illustration.

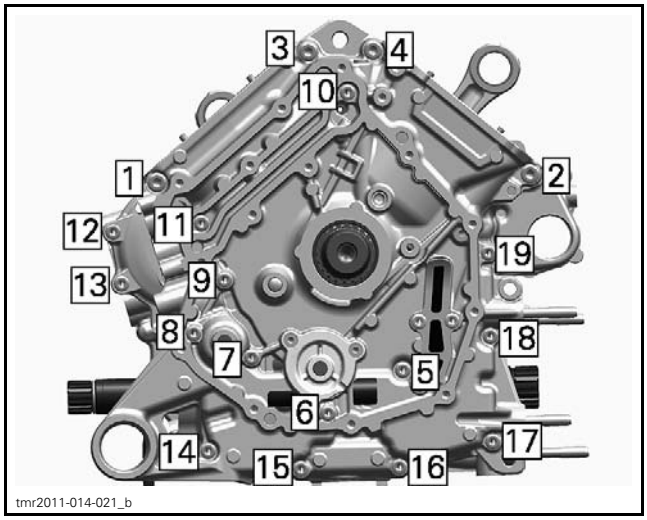

TIGHTENING SEQUENCE

CRANKCASE SCREWS	
Tightening torque - M6	10 N•m ± 1 N•m (89 lbf•**in** ± 9 lbf•**in**)
Tightening torque - M8	25 N•m ± 3 N•m (18 lbf•ft ± 2 lbf•ft)

CRANKSHAFT

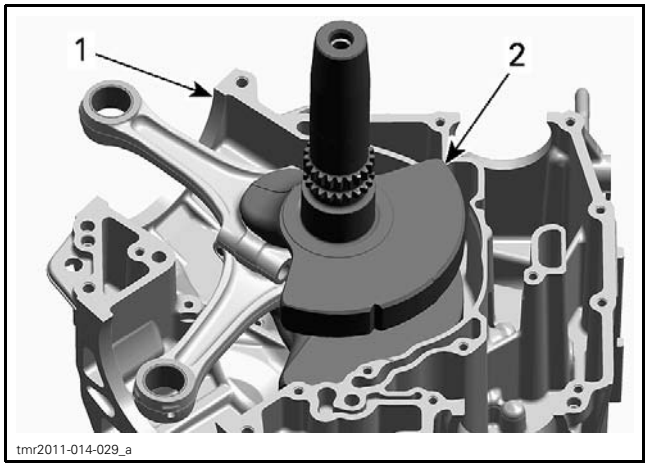

1. *Crankcase MAG*
2. *Crankshaft*

Crankshaft Locking Procedure

NOTE: When crankshaft is locked, the rear piston no. 2 is at TDC. Crankshaft can not be locked at piston no.1 TDC.

NOTICE To see if the rear piston no. 2 is at TDC ignition refer to *CAMSHAFT TIMING GEAR* in the *TIMING CHAIN* subsection.

Remove:

1. Spark plug cables and spark plugs of both cylinders.
2. Plug screw and O-ring of magneto cover.

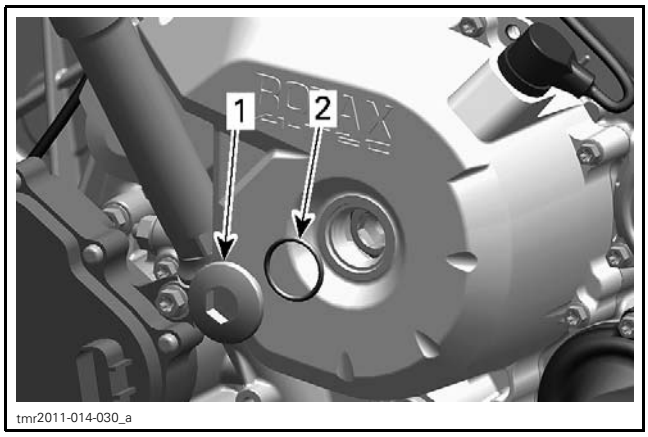

1. *Plug screw*
2. *O-ring*

3. Crankshaft position sensor.

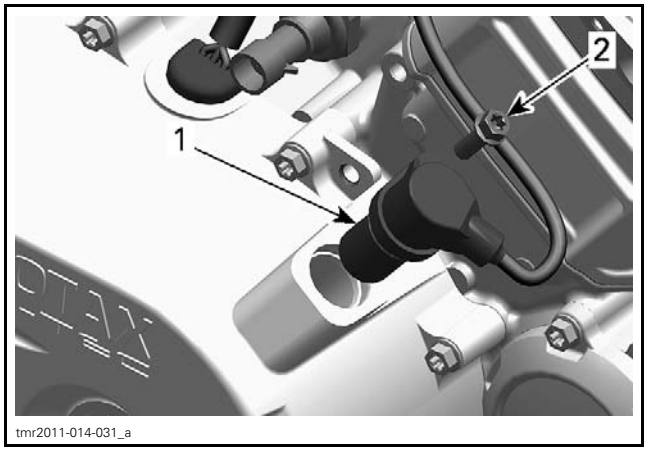

1. *Crankshaft position sensor*
2. *Screw*

4. Plug screw and discard sealing ring.

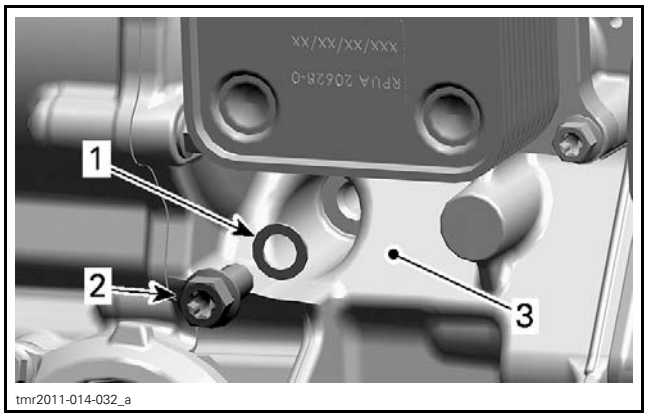

1. *Sealing ring*
2. *Plug screw*
3. *Crankcase PTO side, front side*

Use a 14 mm Allen key to turn crankshaft until piston no. 2 is at TDC.

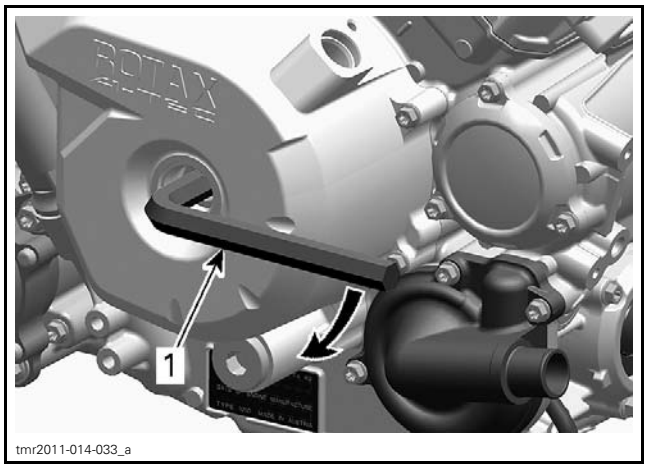

1. *Allen key 14 mm*

When rear piston is at TDC marks on magneto flywheel "2" and on the magneto cover are aligned.

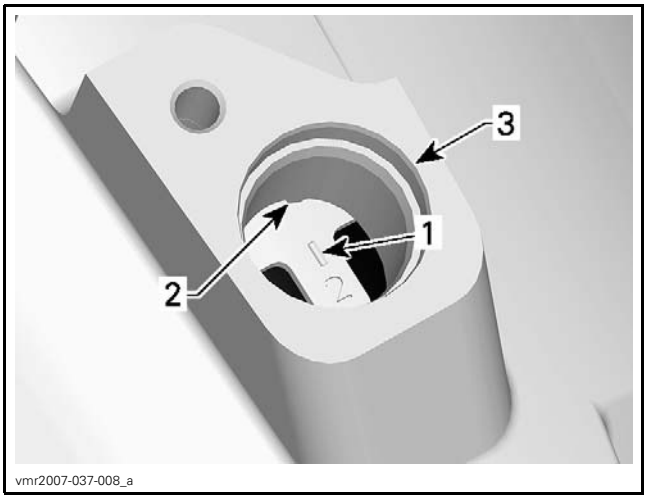

vmr2007-037-008_a

1. *Mark "2" on magneto flywheel*
2. *Notch on magneto cover*
3. *Crankshaft position sensor location*

Use a screwdriver to check if the groove in the crankshaft is aligned with the hole.

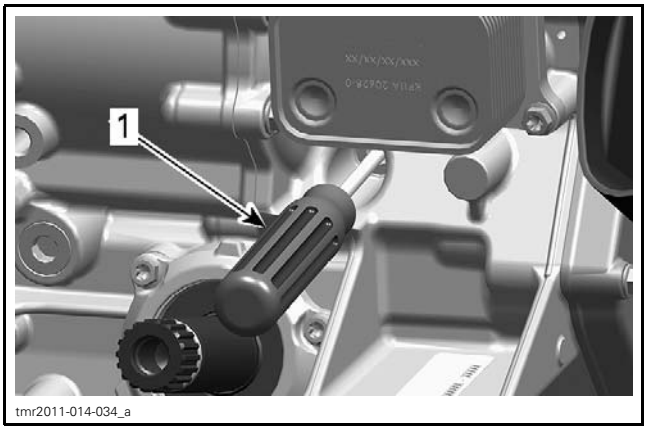

tmr2011-014-034_a

1. *Screwdriver*

Lock crankshaft.

REQUIRED TOOL	
CRANKSHAFT LOCKING BOLT (P/N 529 035 617)	

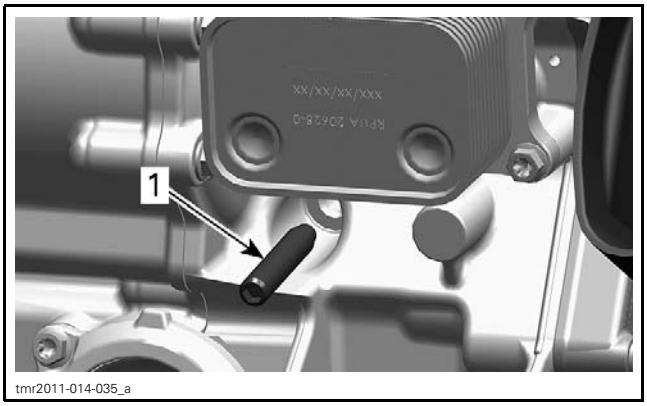

tmr2011-014-035_a

1. *Crankshaft locking bolt*

Gradually insert the tool in the crankshaft groove. Make sure that the tool tip enters the groove and does not jam on the crankshaft balancer surface.

Crankshaft Removal

Refer to *CRANKCASE*.

Crankshaft Inspection

NOTE: Check each bearing journal of crankshaft for scoring, scuffing, cracks or other signs of wear.

NOTE: Replace crankshaft if the gears are worn or otherwise damaged.

NOTICE **Components out of specifications always have to be replaced. If this is not observed, severe damage may be caused to the engine.**

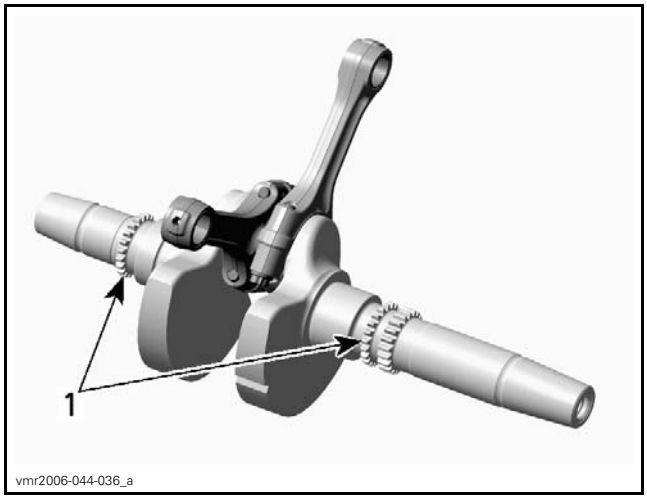

vmr2006-044-036_a

1. *Crankshaft timing gears*

Crankshaft Axial Play

NOTE: Axial play needs to be measured before splitting the crankcase.

Measure play on PTO end, using a dial indicator.

CRANKSHAFT AXIAL PLAY	
NEW	0.200 mm to 0.500 mm (.008 in to .02 in)
SERVICE LIMIT	0.600 mm (.024 in)

If play is out of specification, replace crankcase and/or crankshaft.

Connecting Rod Big End Axial Play

Using a feeler gauge, measure distance between butting face of connecting rods and crankshaft counterweight. If the distance exceeds specified tolerance, replace the crankshaft.

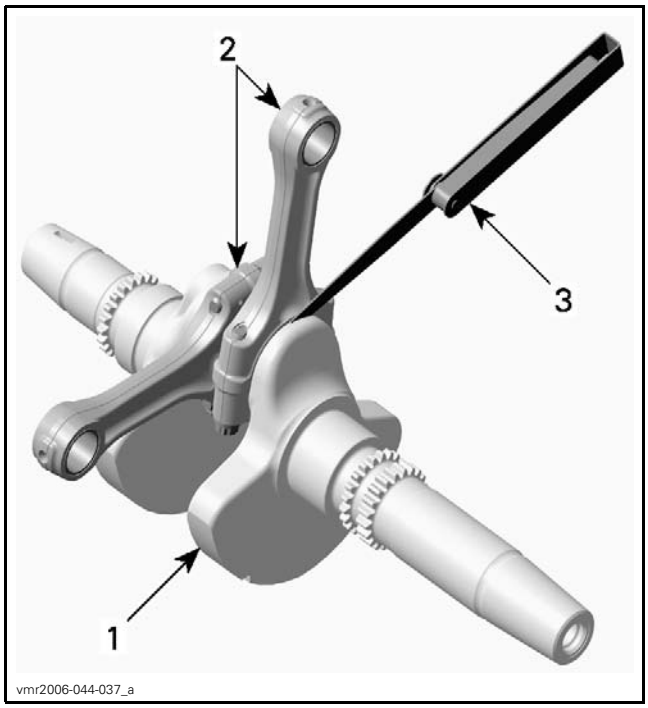

1. *Crankshaft*
2. *Connecting rods*
3. *Feeler gauge*

CONNECTING ROD BIG END AXIAL PLAY		
800R ENGINE	NEW	0.200 mm to 0.500 mm (.008 in to .02 in)
	SERVICE LIMIT	0.600 mm (.024 in)
1000 ENGINE	NEW	0.250 mm to 0.550 mm (.01 in to .022 in)
	SERVICE LIMIT	0.600 mm (.024 in)

Connecting Rod/Piston Pin Clearance

Refer to *TOP END* section.

Connecting Rod Big End Radial Play

NOTE: Prior to remove connecting rod from the crankshaft, mark big end halves together to ensure a correct reinstallation (cracked surface fits in only one position).

Remove connecting rods from crankshaft.

NOTICE **Connecting rod screws are not reusable. Always discard screws and replace by NEW ones. It is recommended to install new plain bearings when reinstalling connecting rods.**

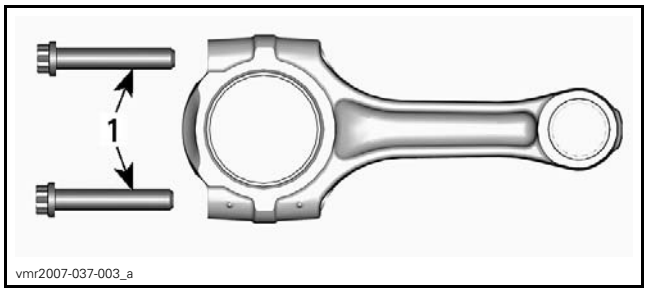

1. *Connecting rod screws*

Measure crankpin. Compare to inside diameter of connecting rod big end.

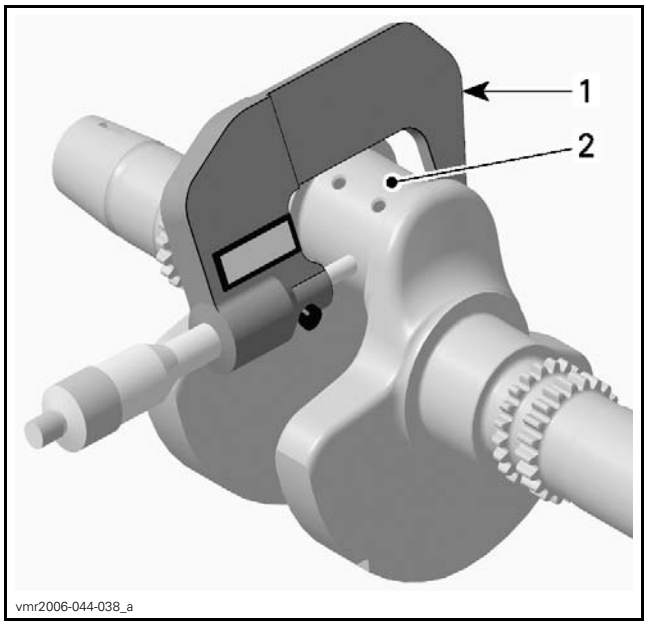

1. *Micrometer*
2. *Crankpin area for plain bearing*

CRANK PIN DIAMETER		
800R ENGINE	NEW	40.009 mm to 40.025 mm (1.5752 in to 1.5758 in)
	SERVICE LIMIT	39.990 mm (1.5744 in)
1000 ENGINE	NEW	41.986 mm to 42.010 mm (1.653 in to 1.6539 in)
	SERVICE LIMIT	41.967 mm (1.6522 in)

If the crank pin diameter is out of specification, replace crankshaft.

To measure the connecting rod big end diameter, use the OLD connecting rod screws.

Install the OLD plain bearings as they were mounted initially.

Carry out the tightening procedure described in *CRANKSHAFT ASSEMBLY* in this subsection.

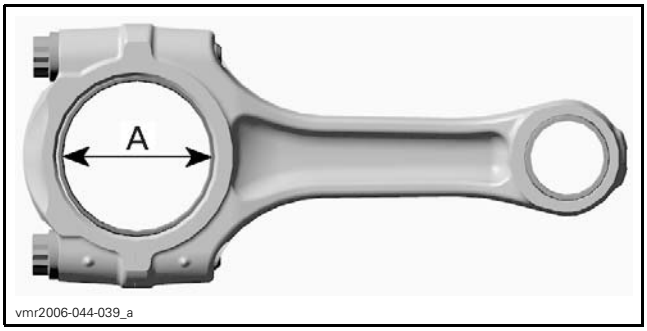

A. Connecting rod big end plain bearing

CONNECTING ROD BIG END DIAMETER		
800R ENGINE	SERVICE LIMIT	40.100 mm (1.5787 in)
1000 ENGINE		42.100 mm (1.6575 in)

If connecting rod big end diameter is out of specification, replace plain bearings and recheck.

CONNECTING ROD BIG END RADIAL CLEARANCE		
800R/1000 ENGINES	SERVICE LIMIT	0.09 mm (.0035 in)

If connecting rod big end radial clearance is out of specification, replace plain bearings and recheck.

Crankshaft Radial Play MAG/PTO Side

Measure crankshaft on MAG/PTO side. Compare to inside diameter of MAG/PTO plain bearing (refer to *CRANKCASE*).

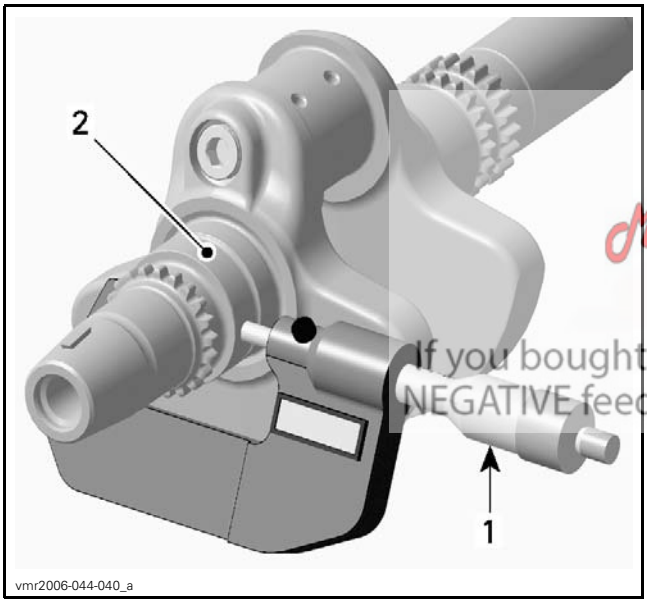

1. *Micrometer*
2. *Crankshaft area for MAG plain bearing*

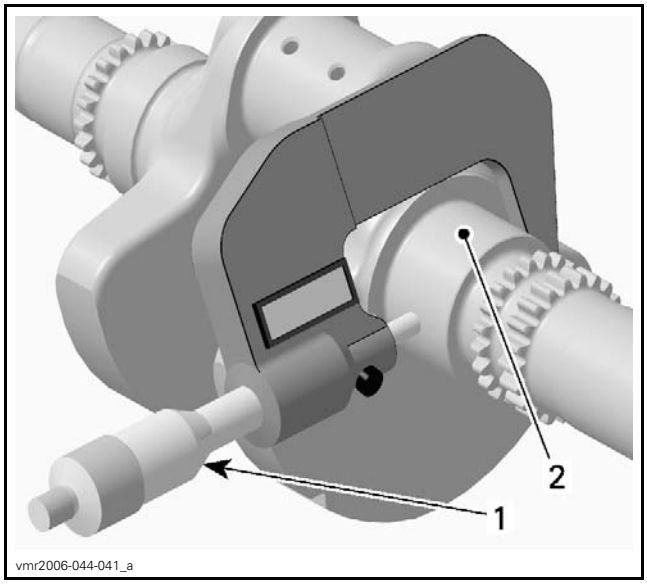

1. *Micrometer*
2. *Crankshaft area for PTO plain bearing*

CRANKSHAFT MAIN BEARING JOURNAL DIAMETER (MAG/PTO SIDE)	
NEW	42.016 mm to 42.040 mm (1.6542 in to 1.6551 in)
SERVICE LIMIT	42.000 mm (1.6535 in)

CRANKSHAFT RADIAL PLAY (MAG/PTO SIDE)	
SERVICE LIMIT	0.07 mm (.0028 in)

Crankshaft Radial Play (PTO Cover Bearing)

Measure crankshaft journal diameter (PTO cover bearing). Compare to plain bearing inside diameter (PTO cover). Refer to *PTO COVER* in this subsection.

Midwest Manuals
Green Manuals
Paperless Manuals
For a Better Tomorrow
If you bought this manual from any other seller please leave them NEGATIVE feedback and notify me at bestshopmanuals@gmail.com

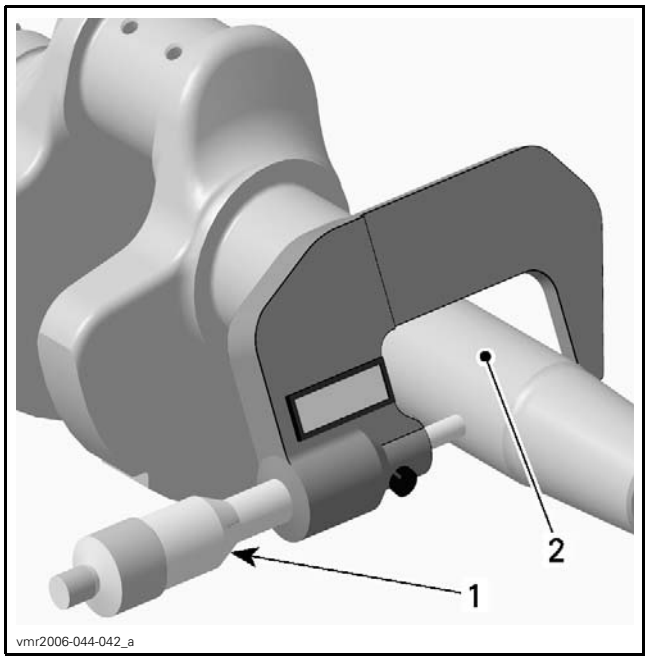

1. Micrometer
2. Crankshaft journal (PTO support bearing)

CRANKSHAFT JOURNAL DIAMETER (PTO COVER BEARING)	
NEW	34.004 mm to 34.020 mm (1.3387 in to 1.3394 in)
SERVICE LIMIT	33.998 mm (1.3385 in)

CRANKSHAFT RADIAL PLAY (PTO COVER BEARING)	
SERVICE LIMIT	0.10 mm (.0039 in)

If crankshaft journal diameter is out of specification, replace crankshaft.

If crankshaft radial play (PTO cover bearing) out of specification, replace plain bearings and recheck.

Crankshaft Assembly

For assembly, reverse the disassembly procedure. Pay attention to following details.

Clean the split surface on both sides (cracked area) carefully with compressed air.

Put plain bearings correctly in place.

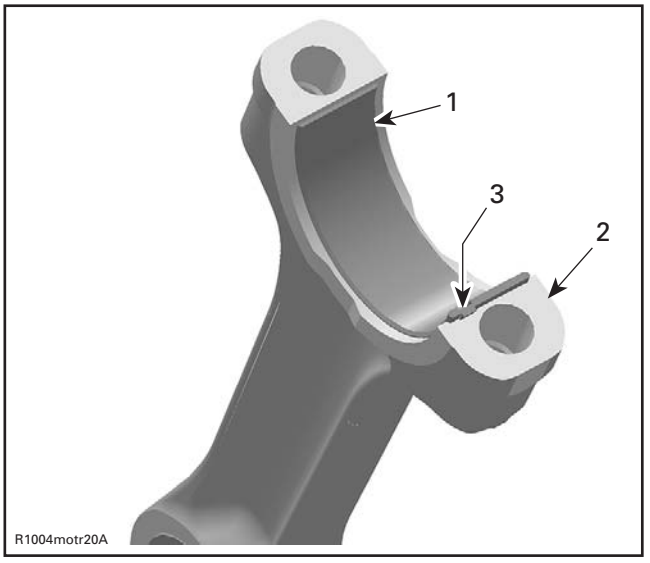

1. Half plain bearing of connecting rod big end
2. Split surface of the connecting rod
3. Nose of plain bearing in line with connecting rod groove

Oil the plain bearing surface of the connecting rod and crank pin before installation.

NOTICE Lower cap and rod must match together since there is a cracked surface.

Oil NEW connecting rod screws.

NOTICE Always use NEW connecting rod screws at final assembly. They are not reusable.

Thread screws in the connecting rods, then tighten as per following procedure.

NOTICE Strictly adhere following instructions:

- Do not apply any thread locker.
- The running direction of the big end bearings and of the piston pins must not change.
- Always perform each step on both connecting rod screws before going to the next step.
- Failure to strictly follow procedure may cause connecting rod screws to loosen and lead to severe engine damage.

REQUIRED TOOLS
Torque wrench
Angle torque wrench

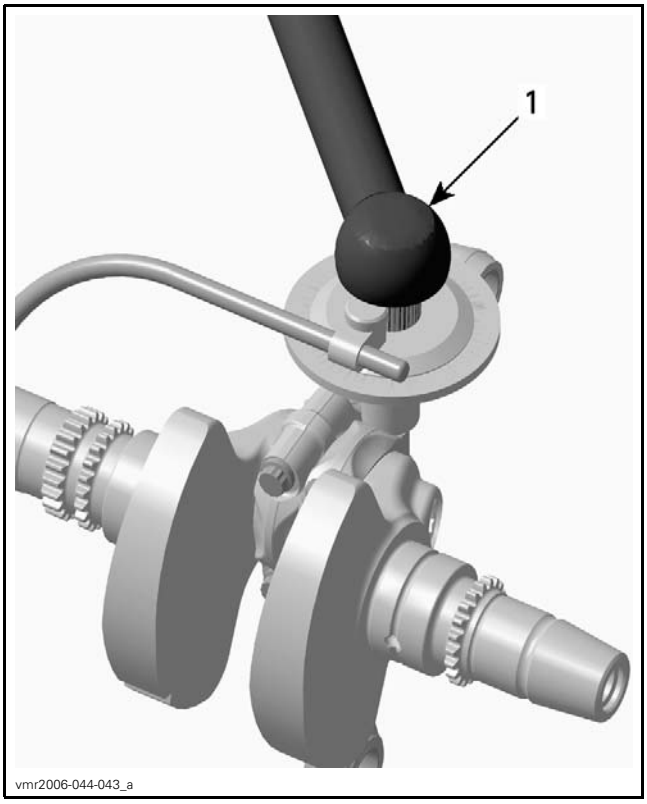

1. Angle torque wrench

800R Engine:

NOTE: NEW connecting rods can be installed either way.

CONNECTING RODS SCREWS TIGHTENING SEQUENCE	
1.	Tighten to 1/2 of specified torque
2.	Tighten to 20 N•m ± 2 N•m (15 lbf•ft ± 1 lbf•ft)
3.	Torque by an additional 60 ± 5° turn using an angle torque wrench

1000 Engine:

NOTICE Connecting rods are asymmetric. There must be no gap between the small ends when they face each other.

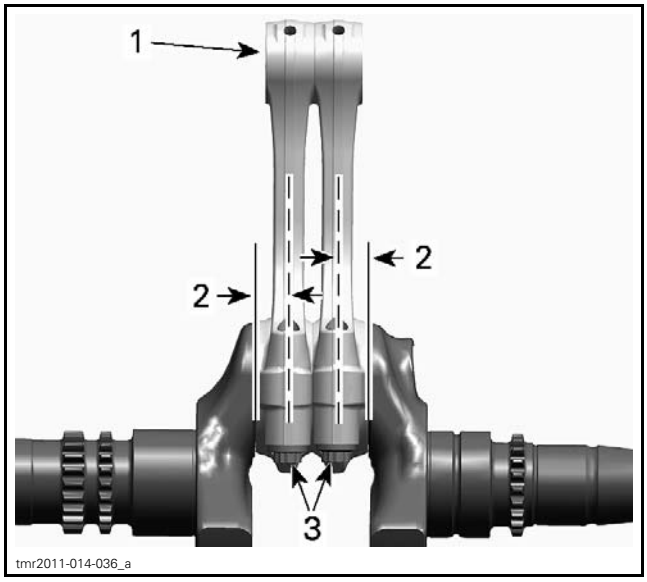

1. Connecting rod small ends
2. Connecting rod offset
3. Connecting rod screws

CONNECTING RODS SCREWS TIGHTENING SEQUENCE	
1.	Tighten to 1/2 of specified torque
2.	Tighten to 30 N•m ± 2 N•m (22 lbf•ft ± 1 lbf•ft)
3.	Torque by an additional 90 ± 5° turn using an angle torque wrench

Crankshaft Installation

For installation of crankshaft in crankcase reverse the removal procedure. Pay attention to the following details.

Do not mix up the connecting rods of cylinders 1 and 2 during installation.

NOTICE Observe the correct installation position when fitting the crankshaft with the connecting rods. The connecting rod MAG side has to face cylinder no. 1.

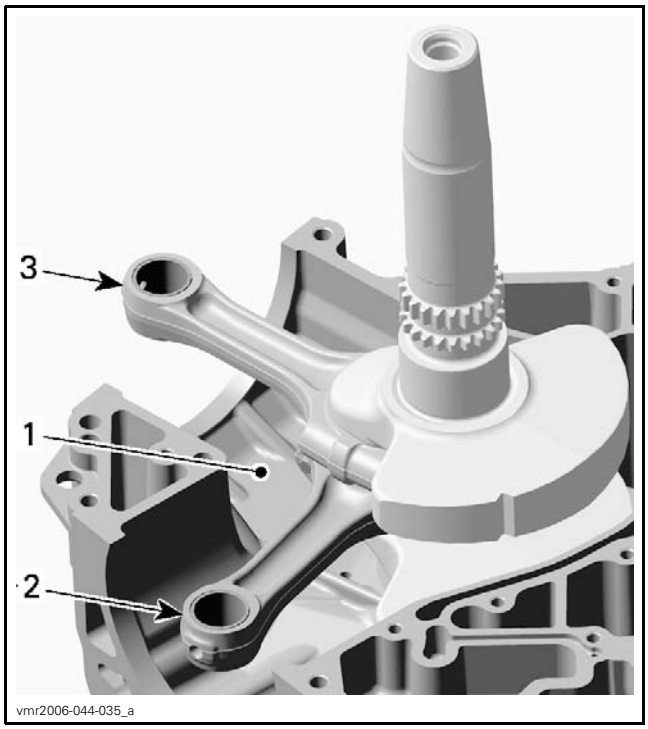

1. *Crankcase half MAG side*
2. *Connecting rod cylinder 1*
3. *Connecting rod cylinder 2*

CONTINUOUSLY VARIABLE TRANSMISSION (CVT)

SERVICE TOOLS

Description	Part Number	Page
CLUTCH HOLDER	529 036 238	6, 13, 21, 24
CLUTCH PULLER	529 035 746	6
COUNTERSHAFT RETAINER TOOL	529 036 312	15, 23
DRIVEN PULLEY STUD TOOL	529 036 360	15, 22
PULLER/LOCKING TOOL	529 036 098	5, 24

SERVICE PRODUCTS

Description	Part Number	Page
ISOFLEX GREASE TOPAS NB 52	293 550 021	11–12
LOCTITE 767 (ANTISEIZE LUBRICANT)	293 800 070	23
PULLEY FLANGE CLEANER	413 711 809	8
XPS BRAKES AND PARTS CLEANER (USA)	219 701 705	16
XPS BRAKES AND PARTS CLEANER	219 701 776	16

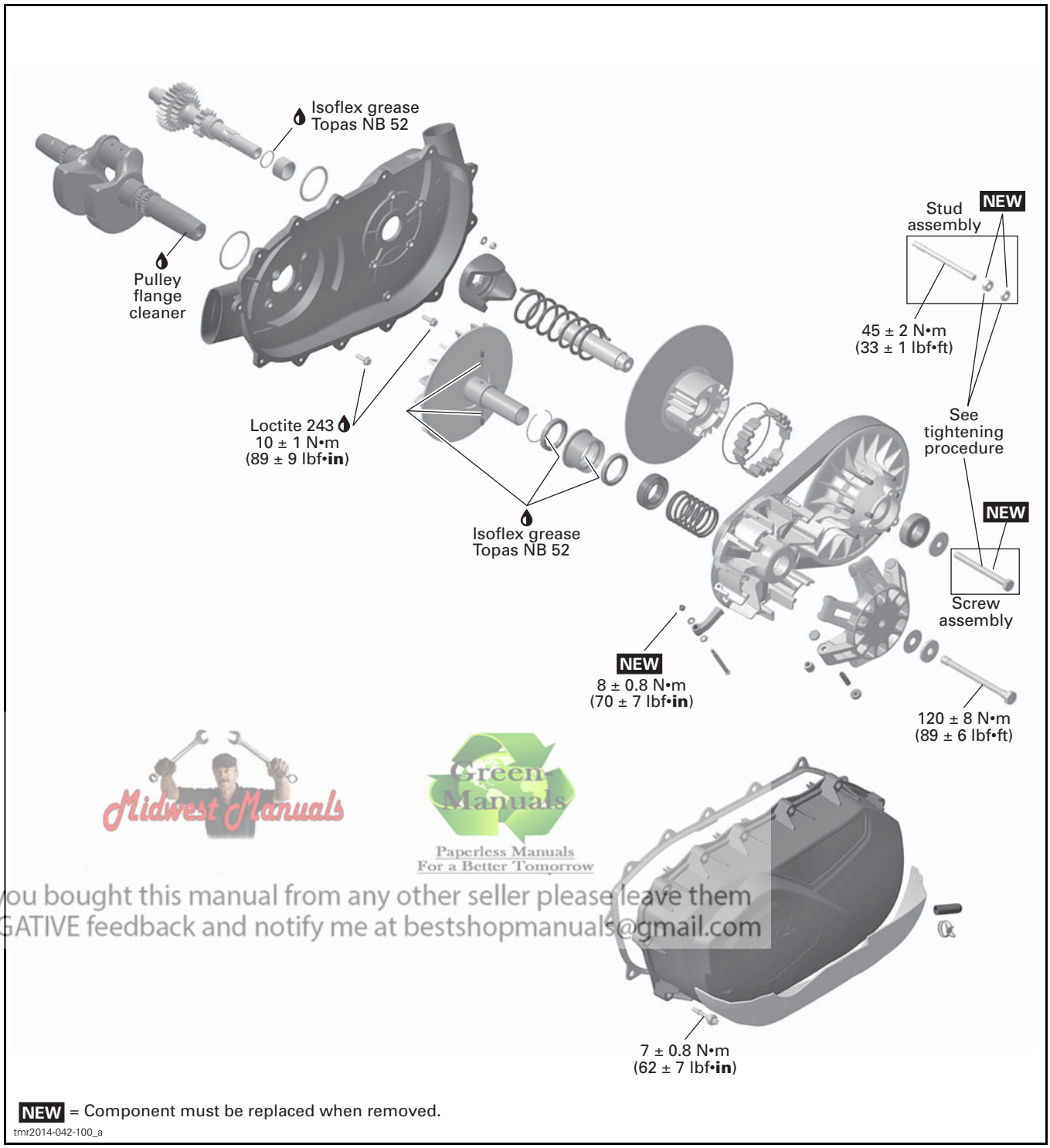

NEW = Component must be replaced when removed.

tmr2014-042-100_a

Midwest Manuals
Green Manuals
Paperless Manuals
For a Better Tomorrow
If you bought this manual from any other seller please leave them
NEGATIVE feedback and notify me at bestshopmanuals@gmail.com

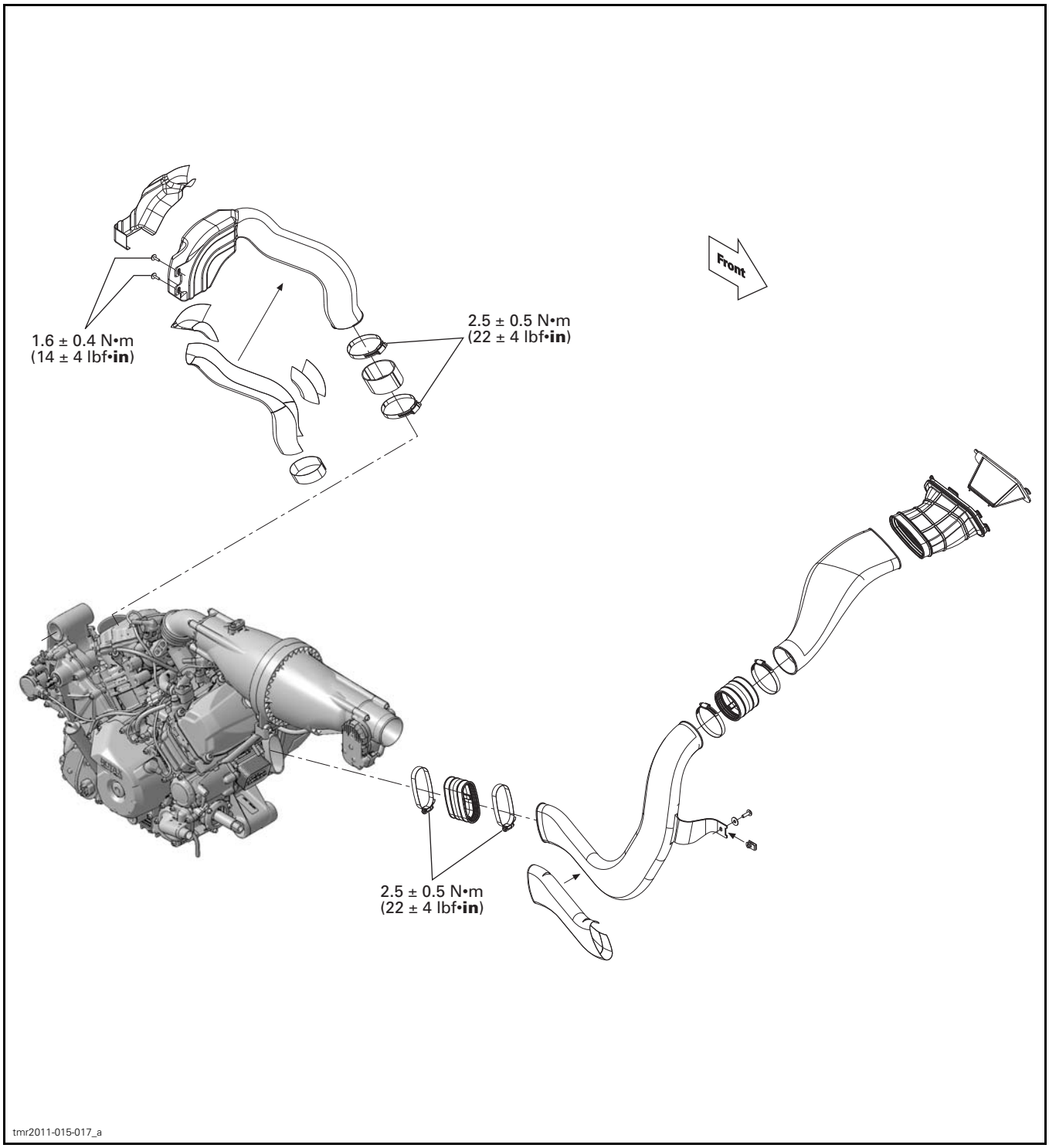
1.6 ± 0.4 N•m
(14 ± 4 lbf•in)
2.5 ± 0.5 N•m
(22 ± 4 lbf•in)
Front
2.5 ± 0.5 N•m
(22 ± 4 lbf•in)
tmr2011-015-017_a

GENERAL

NOTE: For a better understanding, the following illustrations are taken with engine out of vehicle. To perform the following instructions, it is not necessary to remove engine.

This CVT is lubrication free. Never lubricate any components except drive pulley one-way clutch.

⚠ WARNING

Never touch CVT while engine is running. Never drive vehicle when CVT cover is removed.

⚠ WARNING

Any drive pulley repairs must be performed by an authorized Can-Am dealer. Subcomponent installation and assembly tolerances require strict adherence to procedures detailed.

⚠ WARNING

The clutch assembly is a precisely balanced unit. Never replace parts with used parts from another clutch assembly.

PROCEDURES

CVT COVER

CVT Cover Access

1. Refer to *BODY* and remove:
   – LH seat
   – LH lateral console panel.
2. Remove under seat storage compartment.

NOTE: The CVT cover lower screws are accessible through the square holes in the central skid plate.

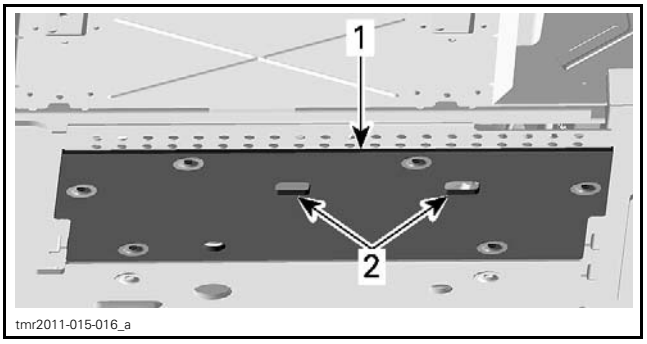

1. Central skid plate
2. Access holes

CVT Cover Draining

If water is present in CVT cover, it can be drained as follows:

1. Remove drain reservoir from CVT cover.

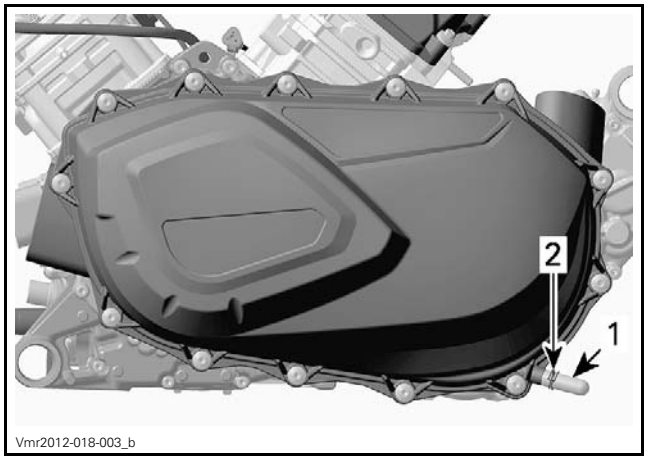

1. Drain reservoir
2. Spring clip

2. Let water drain from CVT cover.
3. Reinstall drain reservoir.

NOTICE **If any debris entered the CVT cover, CVT must be cleaned and inspected.**

CVT Cover Removal

Remove CVT cover screws.

NOTE: Remove the center top screw last to support the cover during removal.

NOTE: Do not use and impact tool to remove CVT cover screws.

Remove the CVT cover and its gasket.

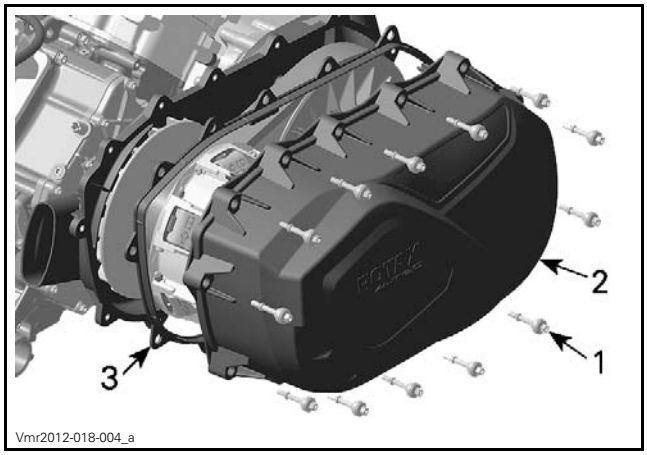

1. CVT cover screw
2. CVT cover
3. Gasket

CVT Cover Installation

Install the center top screw of first.

Tighten the CVT cover screws as per following sequence.

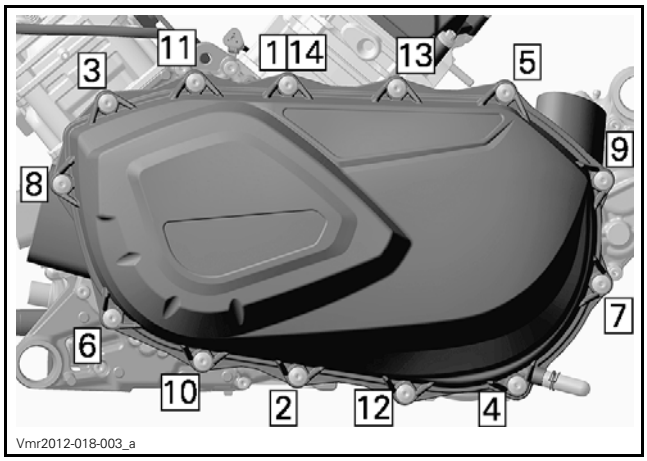

CVT COVER TIGHTENING SEQUENCE

CVT COVER SCREWS	
Tightening torque	7 N•m ± 0.8 N•m (62 lbf•**in** ± 7 lbf•**in**)

DRIVE BELT

Drive Belt Removal

NOTICE In case of a drive belt failure, the CVT, cover and air outlet must be cleaned.

Remove *CVT COVER*.

Open driven pulley.

REQUIRED TOOL	
PULLER/LOCKING TOOL (P/N 529 036 098)	

Screw tool in the threaded hole of driven pulley and tighten to open the pulley.

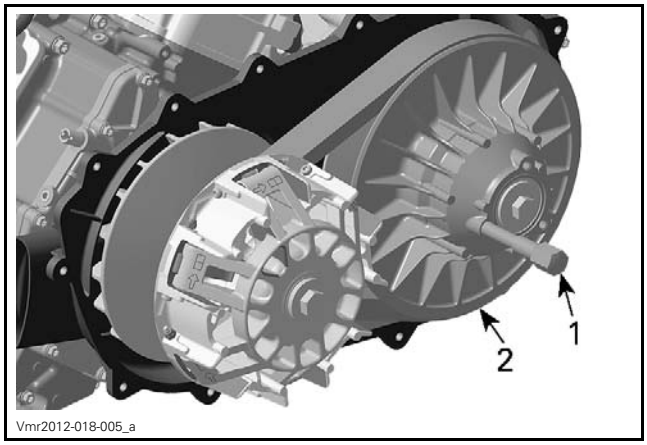

TYPICAL
1. *Puller/locking tool*
2. *Fixed sheave of driven pulley*

To remove belt, slip the belt over the top edge of fixed sheave, as shown.

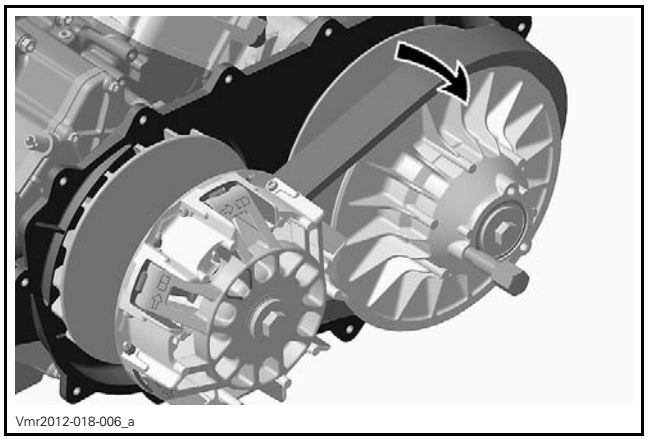

Drive Belt Inspection

For drive belt inspection refer to *DRIVE BELT INSPECTION* in the *PERIODIC MAINTENANCE PROCEDURES* subsection.

Drive Belt Installation

For installation, reverse the removal procedure. Pay attention to following details.

The maximum drive belt life span is obtained when the drive belt has the proper rotation direction. Install it so that the arrow printed on belt is pointing towards front of the vehicle, viewed from top.

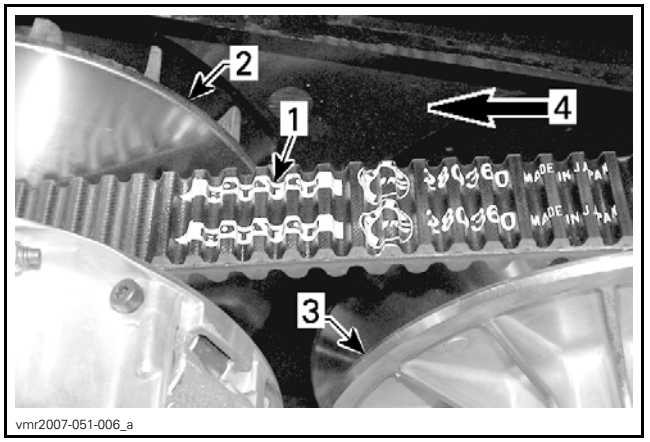

1. *Arrow printed on belt*
2. *Drive pulley (front)*
3. *Driven pulley (rear)*
4. *Rotation direction*

DRIVE PULLEY

Drive Pulley Removal

1. Remove *DRIVE BELT*, see procedure in this subsection.

2. Prior to removing the drive pulley, mark sliding sheave and governor cup to ensure correct indexation at reinstallation.

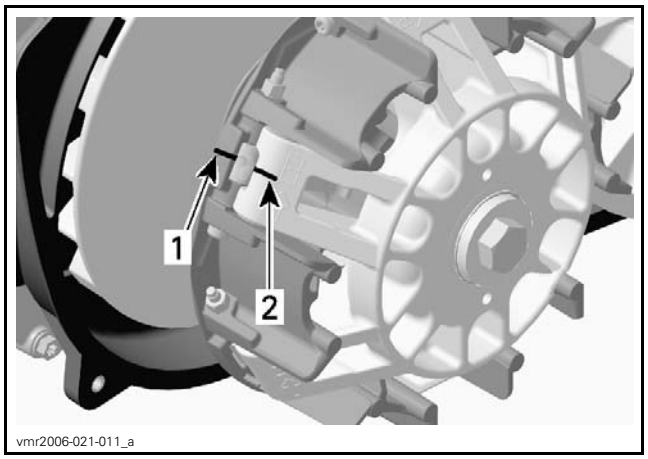

1. Mark on drive pulley sliding sheave
2. Mark on governor cup

3. Lock the drive pulley.

REQUIRED TOOL	
CLUTCH HOLDER (P/N 529 036 238)	

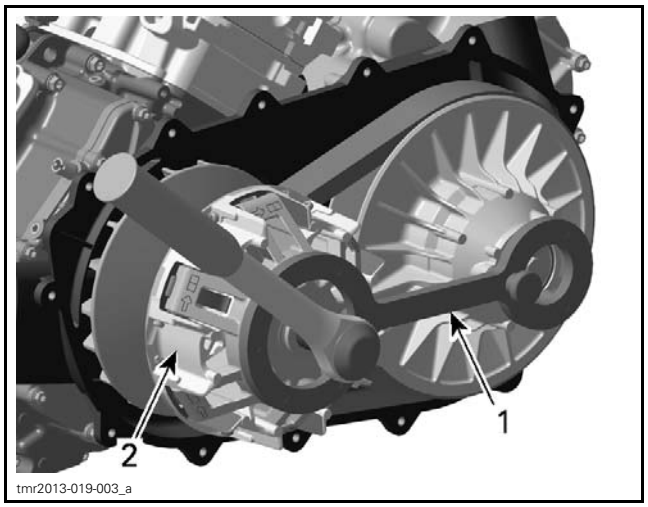

1. Clutch holder
2. Drive pulley sliding sheave

4. Loosen the drive pulley screw.

NOTICE Never use any type of impact wrench for drive pulley removal.

NOTE: Do not unscrew the drive pulley screw completely. If governor cup is stuck, hit it using a soft hammer.

5. Remove service tool.

6. Apply axial pressure with your hand on the sliding sheave and governor cup.

7. Remove drive pulley screw with its conical spring washer and thrust washer.

⚠ CAUTION Sliding sheave of drive pulley is spring loaded.

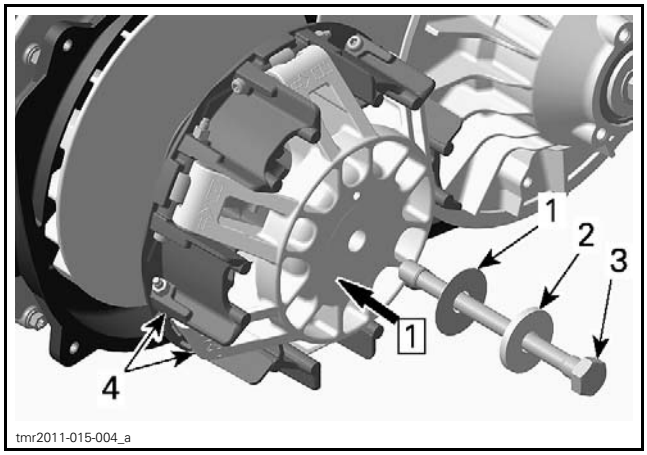

Step 1: Push

1. Thrust washer
2. Conical spring washer
3. Drive pulley screw
4. Sliding sheave with governor cup

8. Slowly release and remove sliding sheave.

9. Screw clutch puller in fixed sheave to remove fixed pulley.

NOTICE Use only recommended tool.

REQUIRED TOOL	
CLUTCH PULLER (P/N 529 035 746)	

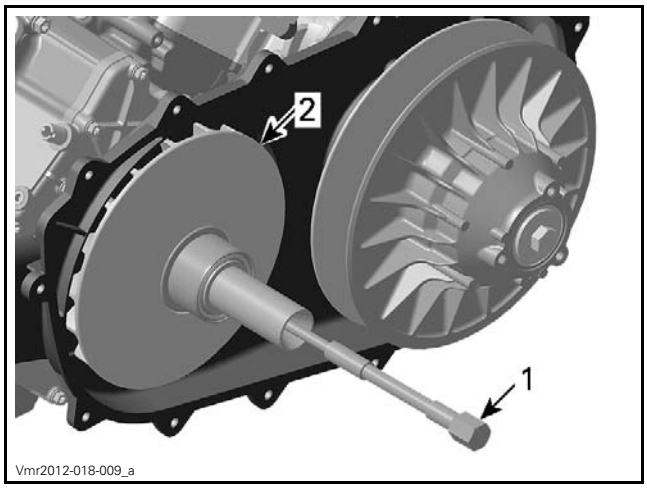

1. Drive pulley puller
2. Fixed sheave

Drive Pulley Disassembly

Governor Cup

Carefully lift governor cup until slider shoes come at their highest position into guides.

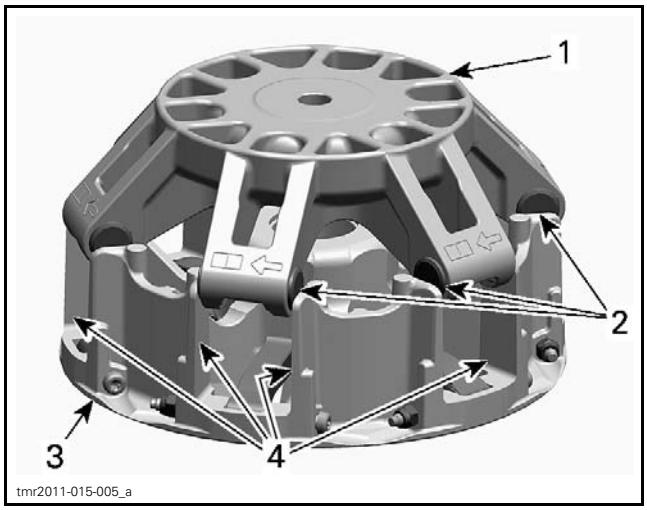

1. *Governor cup*
2. *Slider shoes*
3. *Sliding shave*
4. *Guides*

NOTE: The following procedure is not necessary except if roller must be removed. Refer to *INSPECTION* before proceeding.

Remove slider shoes out of each bearing sleeve. Use a flat screwdriver if necessary.

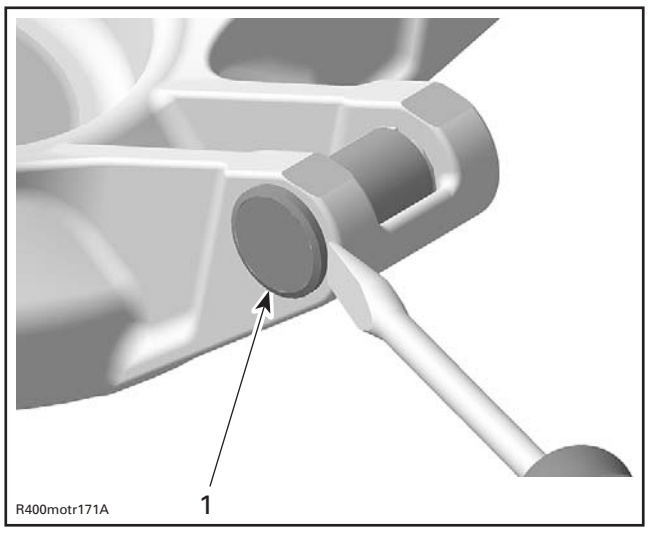

1. *Slider shoe*

Put governor cup on a vice to push out bearing sleeve of roller in the foreseen direction (against arrow). Use an appropriate punch (diameter of punch must be smaller than the bearing sleeve diameter).

NOTICE Do not clamp the governor cup in the vice to push out bearing sleeve. Governor cup will be damaged.

NOTE: Use protection plates to avoid marks and/or damages to the governor cup.

NOTICE Always replace all rollers at the same time. Partly worn rollers may cause damage to the CVT system.

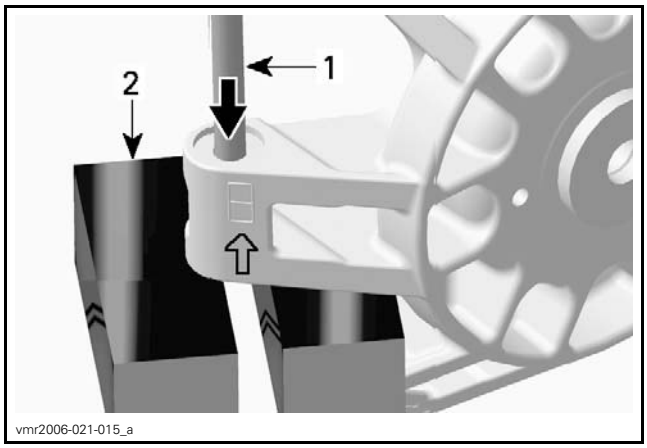

1. *Punch*
2. *Vice*

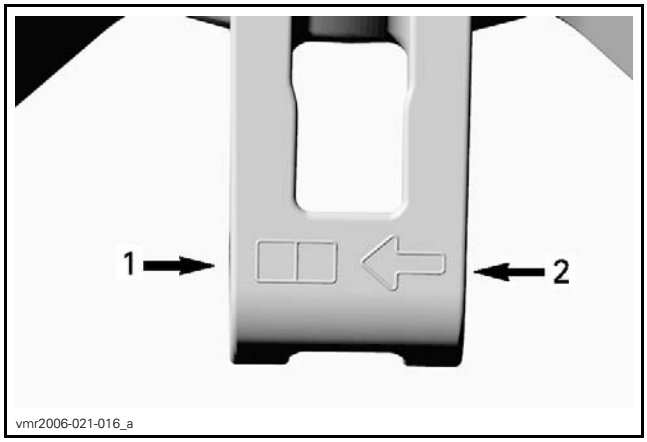

1. *Removal direction*
2. *Assembly direction*

NOTE: Whenever removing a governor cup with already two marked boxes replace it by a new one.

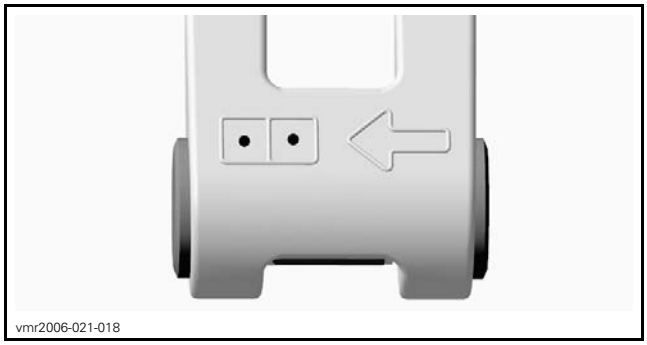

Sliding Sheave

Unscrew lock nut and remove centrifugal lever pivot bolt. This drive pulley is equipped with 6 levers.

Remove centrifugal lever and both thrust washers.

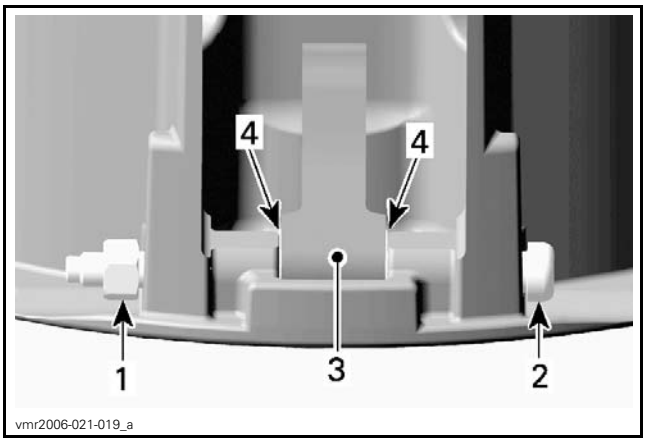

1. *Lock nut*
2. *Centrifugal lever pivot bolt*
3. *Centrifugal lever*
4. *Thrust washers*

Fixed Sheave

⚠ WARNING

Always wear safety glasses to remove spring sleeves.

Pull and rotate one-way clutch slowly until the sheave of spring sleeves are visible.

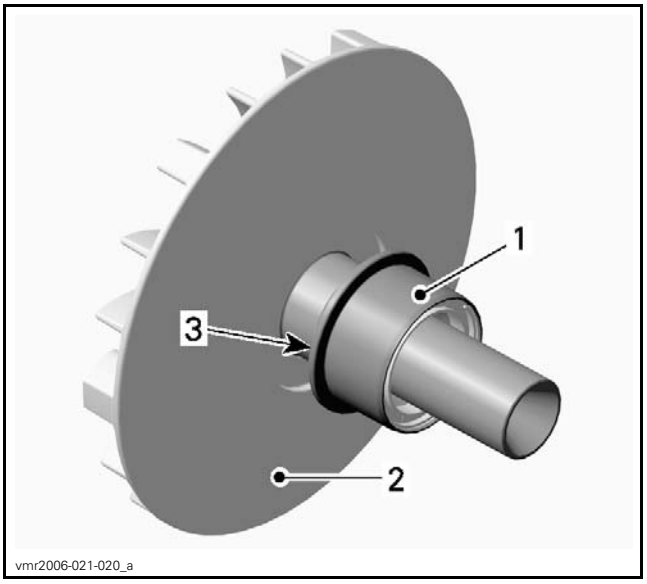

1. *One-way clutch*
2. *Fixed sheave*
3. *Spring sleeve area*

Hold both spring sleeves with fingers and release when one-way clutch is disengaged.

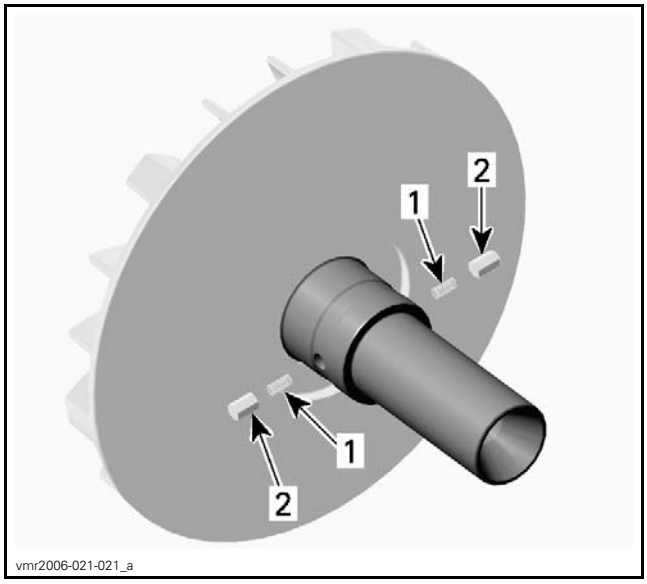

1. *Springs*
2. *Spring sleeves*

Drive Pulley Cleaning

Clean pulley faces and shaft with fine steel wool and dry cloth.

Using a paper towel with PULLEY FLANGE CLEANER (P/N 413 711 809) cleaning solvent, clean crankshaft tapered end and the taper inside the fixed sheave of the drive pulley, crankshaft threads and threads of drive pulley screw.

NOTICE **Avoid contact between cleaner and crankshaft seal because damage may occur.**

Remove all hardened oil deposits that have baked on crankshaft and pulley tapered surfaces with coarse or medium steel wool and/or sand paper no. 600.

NOTICE **Do not use any other type of abrasive.**

Reclean mounting surfaces with paper towel and PULLEY FLANGE CLEANER (P/N 413 711 809).

Wipe off the mounting surfaces with a clean, dry paper towel.

NOTICE **Mounting surfaces must be free of any oil, cleaner or towel residue.**

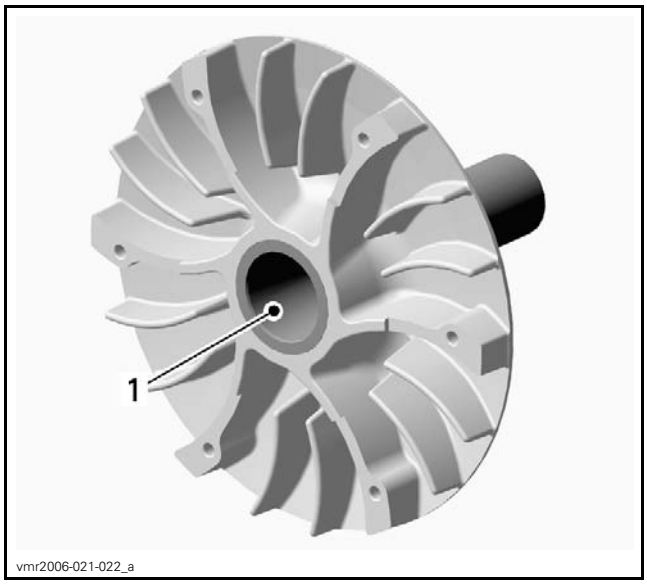

1. Taper of fixed sheave

Only use petrol base cleaner when cleaning bushings of sliding sheave.

NOTICE Do not use acetone to clean bushing.

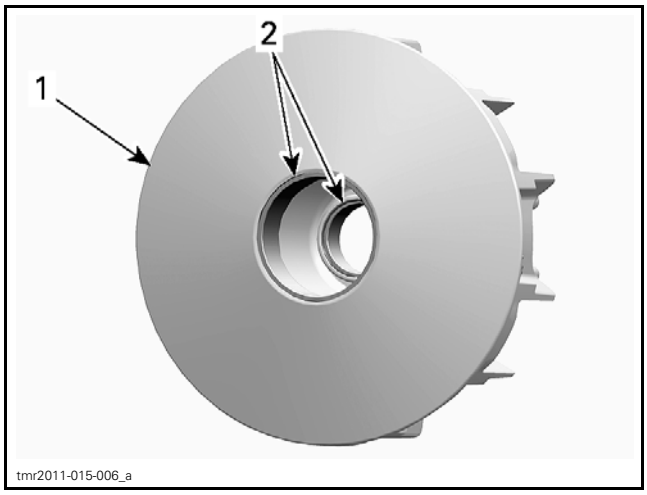

1. Sliding sheave
2. Bushings

Drive Pulley Inspection

Bushings

For bushing inspection, refer to *SLIDING SHEAVE* in this subsection.

Governor Cup

Check governor cup for cracks or other visible damage. Replace if necessary.

Roller and Slider Shoe

Check each roller for roundness of external diameter.

Check if rollers move freely.

NOTICE Whenever replacing rollers and slider shoes, always replace all rollers and slider shoes at the same time.

Check slider shoes for visible wear and replace if damaged.

NOTE: If necessary, use a screwdriver to remove slider shoes.

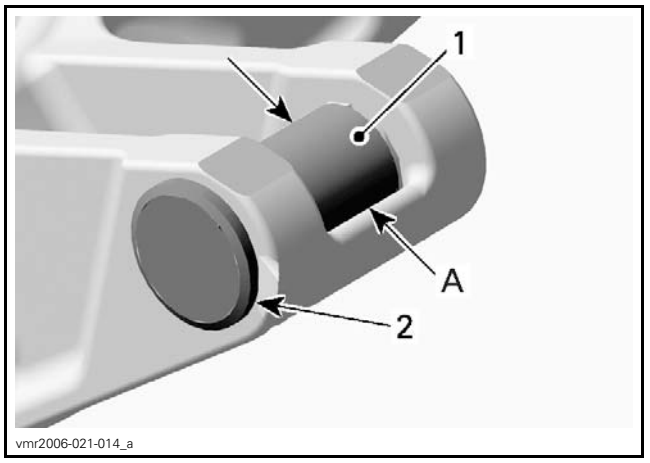

1. Roller
2. Slider shoe
A. Roller outer diameter

ROLLER OUTER DIAMETER	
NEW	13.70 mm to 13.80 mm (.539 in to .543 in)
SERVICE LIMIT	13.20 mm (.519 in)
ROLLER INNER DIAMETER	
NEW	8.05 to 8.15 mm (.317 to .321 in)
SERVICE LIMIT	9 mm (.354 in)

Centrifugal Lever Pivot Bolt

Measure diameter of centrifugal lever pivot bolt, replace if it is out of specification.

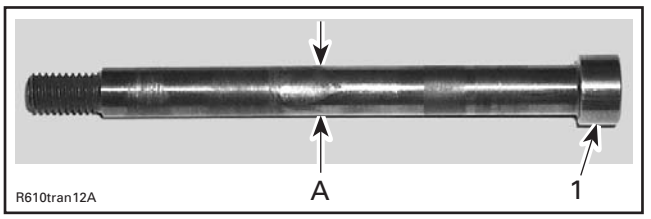

1. Centrifugal lever pivot bolt
A. Measure diameter here

CENTRIFUGAL LEVER PIVOT BOLT DIAMETER	
NEW	6.078 mm to 6.100 mm (.239 in to .24 in)
SERVICE LIMIT	6.00 mm (.236 in)

Centrifugal Lever

Check bushing diameter in the centrifugal lever for wear. Replace centrifugal lever if necessary.

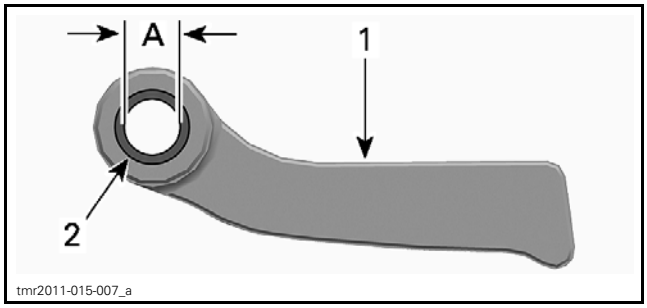

1. Centrifugal lever
2. Bushing
A. Bushing inner diameter

CENTRIFUGAL LEVER BORE DIAMETER	
NEW	6.035 mm to 6.078 mm (.238 in to .239 in)
SERVICE LIMIT	6.200 mm (.244 in)

Replace centrifugal lever, thrust washers, centrifugal lever pivot bolts and lock nuts if the contact surfaces show heavy visible wear.

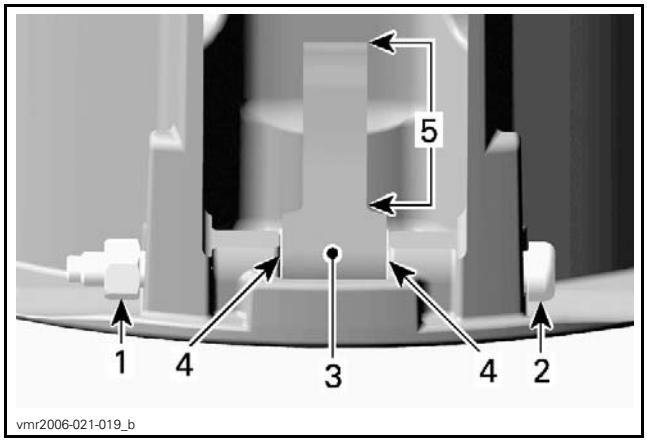

1. Lock nut
2. Centrifugal lever pivot bolt
3. Centrifugal lever
4. Thrust washers
5. Contact surface to the roller

⚠ WARNING

Whenever replacing centrifugal levers, always replace all lever at the same time. Otherwise, unbalanced drive pulley will occur because of levers difference.

Sliding Sheave

Check sliding sheave for cracks and sliding contact surface for excessive wear. Replace sliding sheave if necessary.

Measure centrifugal lever pivot bolt bores. Replace sliding sheave if bores are out of specification or otherwise damaged.

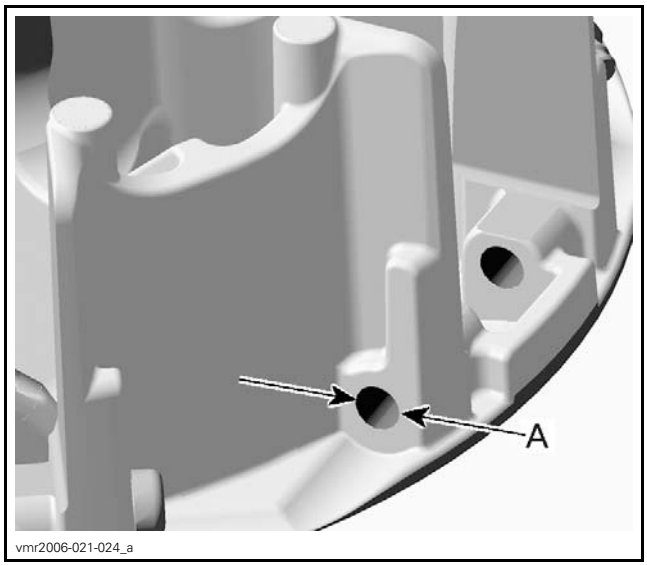

A. Centrifugal lever pivot bolt bore diameter

CENTRIFUGAL LEVER PIVOT BOLT BORE DIAMETER	
NEW	6.113 mm to 6.171 mm (.241 in to .243 in)
SERVICE LIMIT	6.300 mm (.248 in)

Measure bushing diameters of sliding sheave.

Use a dial bore gauge to measure bushing diameter. Measuring point must be at least 5 mm (1/4 in) from bushing edge.

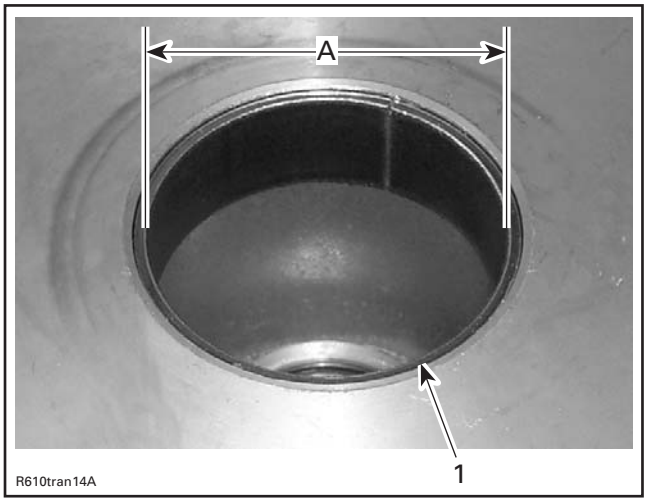

1. Bushing on fixed sheave side
A. Bore diameter of bushing

SLIDING SHEAVE LARGE BUSHING	
NEW	55.000 mm to 55.040 mm (2.165 in to 2.167 in)
SERVICE LIMIT	55.200 mm (2.173 in)

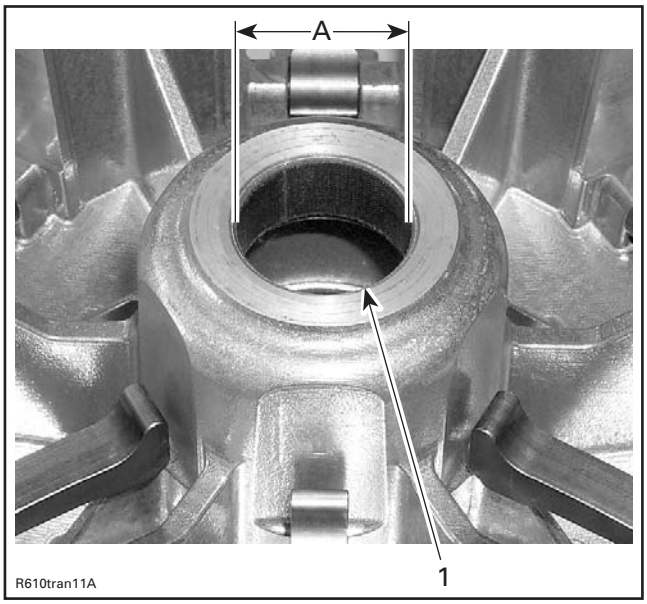

1. Bushing on governor cup side
A. Bore diameter of bushing

SLIDING SHEAVE SMALL BUSHING	
NEW	32.000 mm to 32.040 mm (1.26 in to 1.261 in)
SERVICE LIMIT	32.200 mm (1.268 in)

Replace sliding sheave if one of the bushings is out of specification. Visually inspect coatings.

Fixed Sheave

Check fixed sheave contact surface to the governor cup for scratches or other damages. If so, replace fixed sheave.

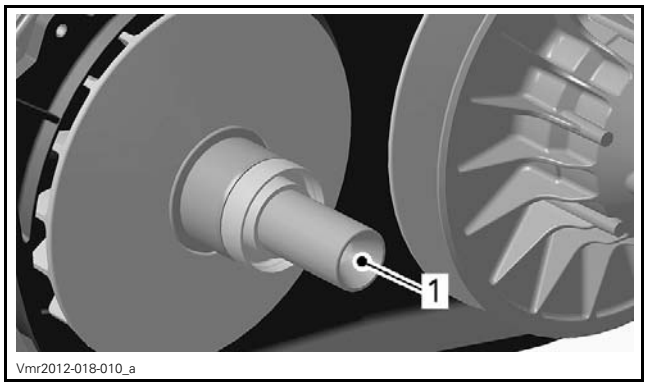

1. Visually check here

Check for any marks on fixed sheave plate. Replace if necessary.

Spring

Measure spring free length and squareness. If spring is out of specification, replace by a new one.

CLUTCH SPRING SQUARENESS	
SERVICE LIMIT	4 mm (.157 in)

One-Way Clutch

Check bearings for excessive play and smooth operation. Replace one-way clutch bearings if necessary.

NOTICE Be careful not to damage the inside of one-way clutch during bearing removal.

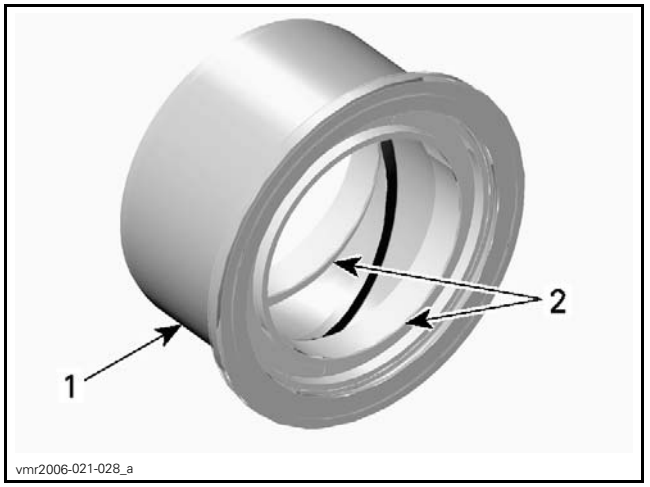

1. One-way clutch
2. Bearings

Measure length of spring sleeves and check if edges on top of the spring sleeve are excessively worn. If they out of specifications, replace both spring sleeves at the same time.

SPRING SLEEVE LENGTH	
NEW	9.2 mm to 9.4 mm (.362 in to .37 in)
SERVICE LIMIT	9 mm (.354 in)

Drive Pulley Assembly

For assembly, reverse the disassembly procedure. Pay attention to following details.

One-Way Clutch

Clean parts.

Lubricate springs, spring sleeves and between one way clutch bearings using ISOFLEX GREASE TOPAS NB 52 (P/N 293 550 021). Push grease inside bearings to ensure adequate lubrication.

NOTE: Ball bearings have a seal on one side only. Install bearings with the seal towards the outside of the one-way clutch.

NOTE: Apply ISOFLEX GREASE TOPAS NB 52 (P/N 293 550 021) inside ball bearings to ensure adequate lubrication.

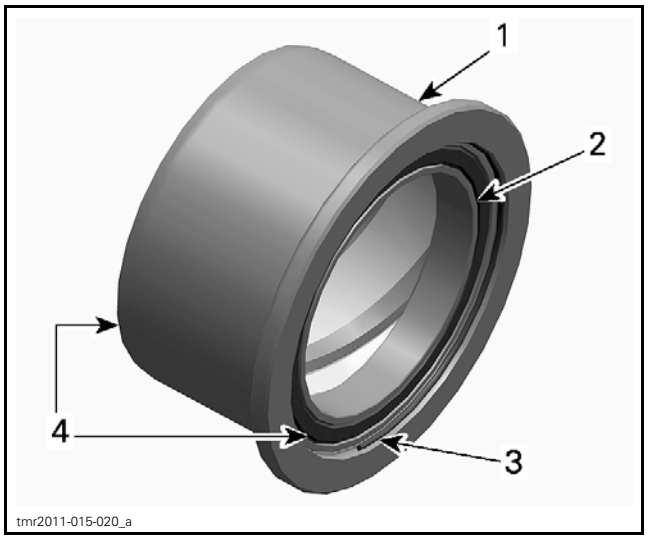

1. *One-way clutch*
2. *Bearing*
3. *Retaining ring*
4. *Seal*

Sliding Sheave

Install centrifugal levers with their thrust washers.

NOTICE Centrifugal levers must move easily after installation.

Governor Cup

Rebuild governor cup with new bearing sleeves, thrust washers, rollers and slider shoes.

NOTICE Final position has to be aligned with the contact surface of the slider shoes (no protrusion).

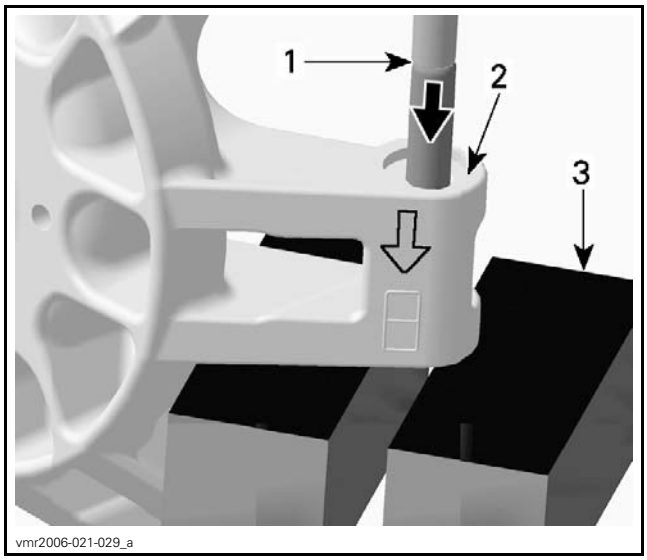

1. *Top edge of bearing sleeve*
2. *Mating surface of slider shoes*
3. *Vice*

Each time when replacing the bearing sleeves sign the foreseen box with a punch.

NOTICE Do not tap too hard. Violent damage of the governor cup may appear.

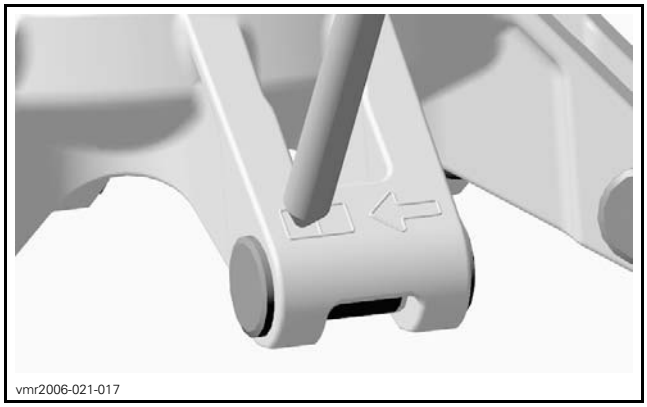

NOTICE Rollers must move easily after installation.

Insert slider shoes into governor cup to properly slide in guides.

Drive Pulley Installation

For installation, reverse the removal procedure. Pay attention to the following details.

⚠ WARNING

Do not apply antiseize or any lubricant on crankshaft and drive pulley tapers.

NOTICE Never use any type of impact wrench at drive pulley removal and installation.

Clean mounting surfaces as described in *CLEANING* above.

Install drive pulley on crankshaft extension.

NOTICE Do not forget to place thrust washer prior to install conical spring washer.

Install conical spring washer with its concave side towards drive pulley then install drive pulley screw.

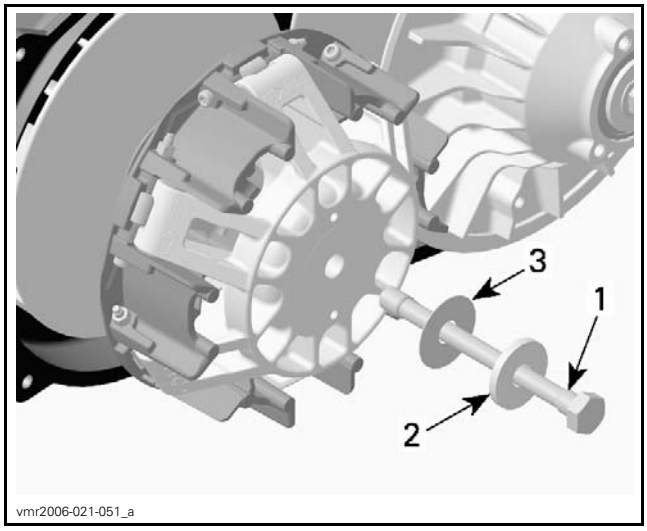

1. *Drive pulley screw*
2. *Conical spring washer*
3. *Thrust washer*

⚠ WARNING

Never substitute conical spring washer and/or screw with jobber ones. Always use BRP genuine parts for this particular case.

Lock the drive pulley as per removal procedure.

Tighten drive pulley screw to specified torque.

NOTICE Never use any type of impact wrench for drive pulley installation.

DRIVE PULLEY SCREW	
Tightening torque	120 N•m ± 8 N•m (89 lbf•ft ± 6 lbf•ft)

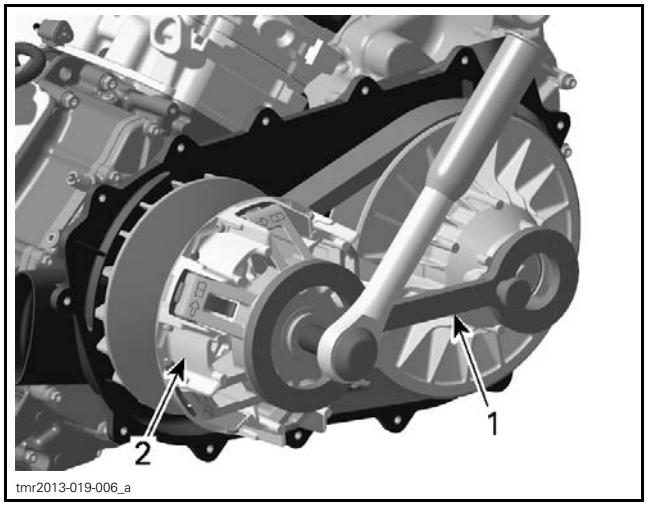

1. *Clutch holder (P/N 529 036 238)*
2. *Drive pulley*

DRIVEN PULLEY

Driven Pulley Removal

Remove *DRIVE BELT*.

Screw Assembly

Hold the driven pulley and loosen the driven pulley screw.

NOTE: Do not unscrew the driven pulley screw completely.

REQUIRED TOOL	
CLUTCH HOLDER (P/N 529 036 238)	

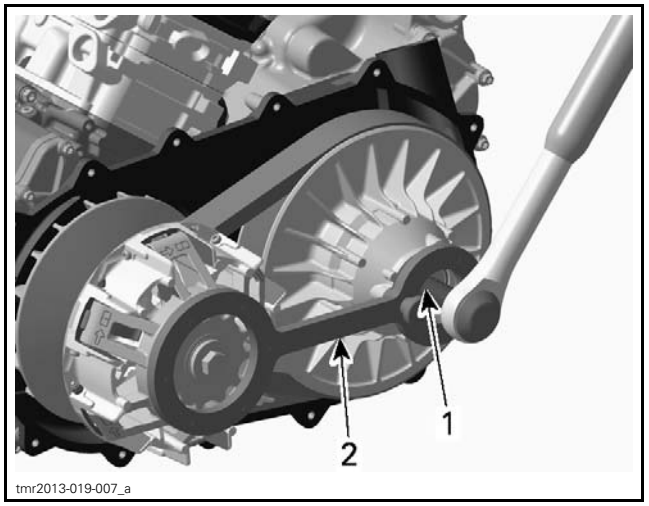

1. *Driven pulley screw (to discard)*
2. *Clutch holder*

Remove service tool.

Apply axial pressure with your hand on driven pulley and maintain during screw removal.

Remove driven pulley screw and washer.

Discard screw.

⚠ CAUTION Driven pulley is spring loaded. Hold driven pulley tight and slowly remove the driven pulley screw to release spring tension.

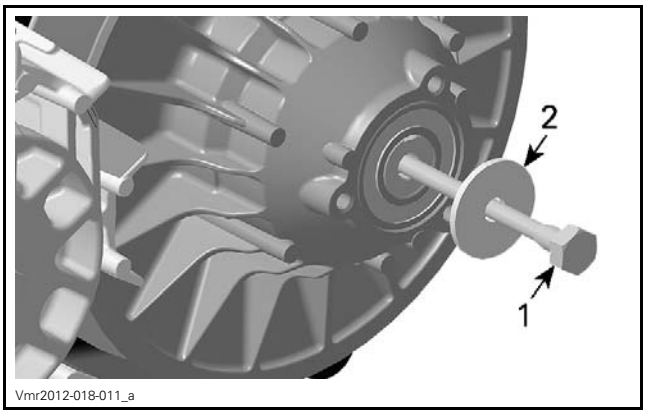

1. Driven pulley screw
2. Thrust washer

Remove the driven pulley with the spring and the cam.

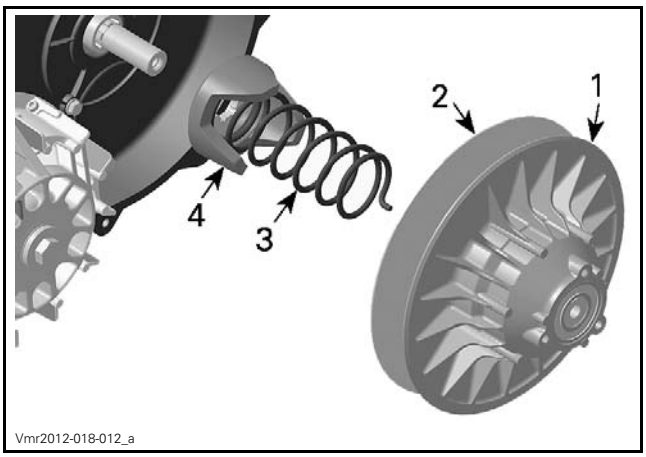

1. Fixed sheave of driven pulley
2. Sliding sheave of driven pulley
3. Spring
4. Cam

Stud Assembly

Remove the counter nut and discard it.

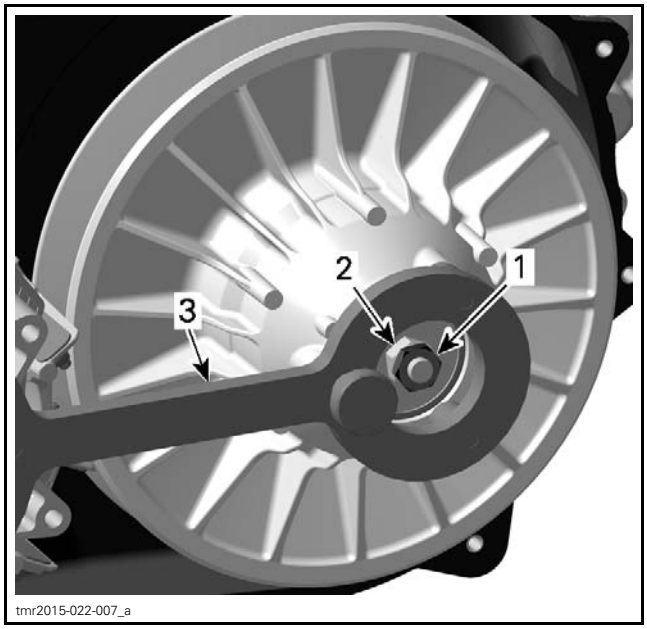

1. Counter nut
2. Driven pulley nut
3. Clutch holder

Loosen the driven pulley nut.

NOTE: Do not unscrew the driven pulley nut completely.

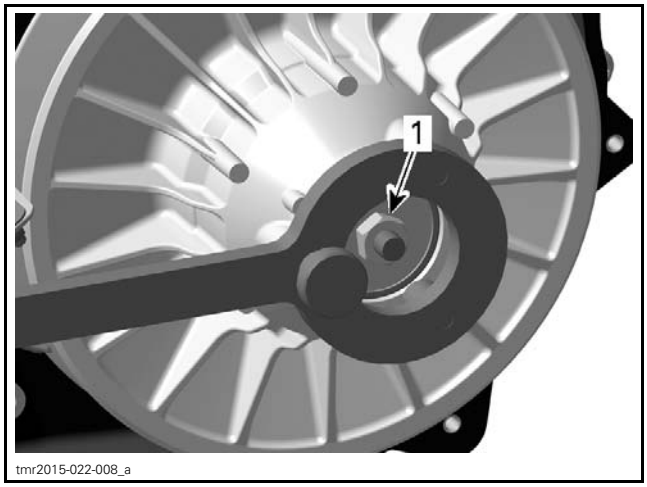

1. Driven pulley nut

Remove service tool.

Apply axial pressure with your hand on driven pulley and maintain during nut removal.

Remove driven pulley nut (discard) and washer.

⚠ CAUTION Driven pulley is spring loaded. Hold driven pulley tight and slowly remove the driven pulley nut to release spring tension.

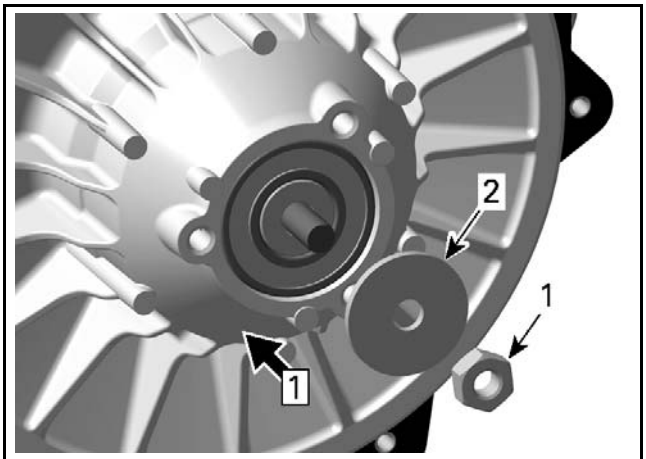

Step 1: Push

1. *Driven pulley nut (discard)*
2. *Thrust washer*

Remove:
- Driven pulley
- Spring
- Shaft
- Cam.

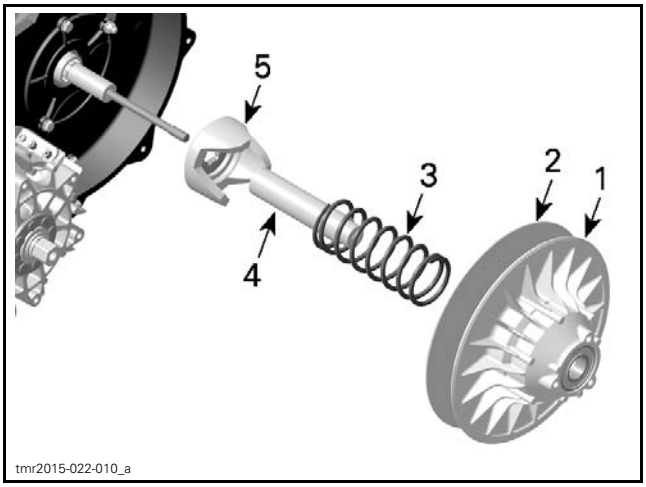

1. *Fixed sheave of driven pulley*
2. *Sliding sheave of driven pulley*
3. *Spring*
4. *Shaft*
5. *Cam*

Install the tightening tool on the stud.

REQUIRED TOOL	
DRIVEN PULLEY STUD TOOL (P/N 529 036 360)	

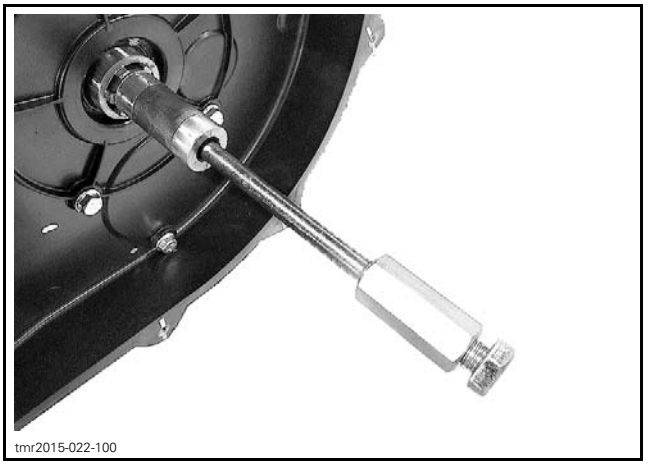

Block countershaft.

REQUIRED TOOL	
COUNTERSHAFT RETAINER TOOL (P/N 529 036 312)	

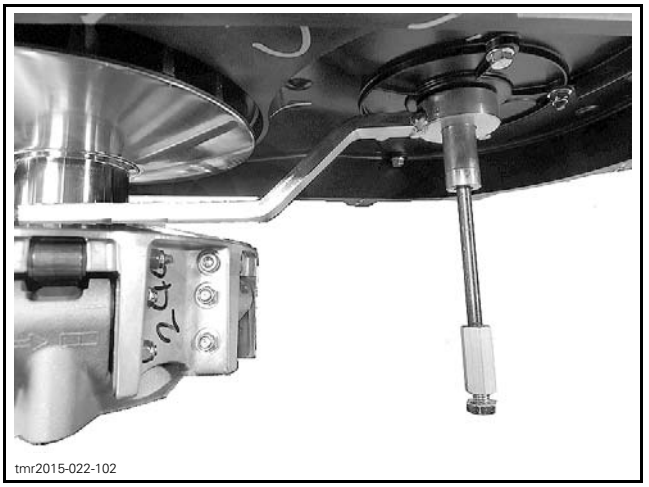

Remove stud.

Driven Pulley Disassembly

Fixed Sheave

Remove retaining ring and lift torque gear.

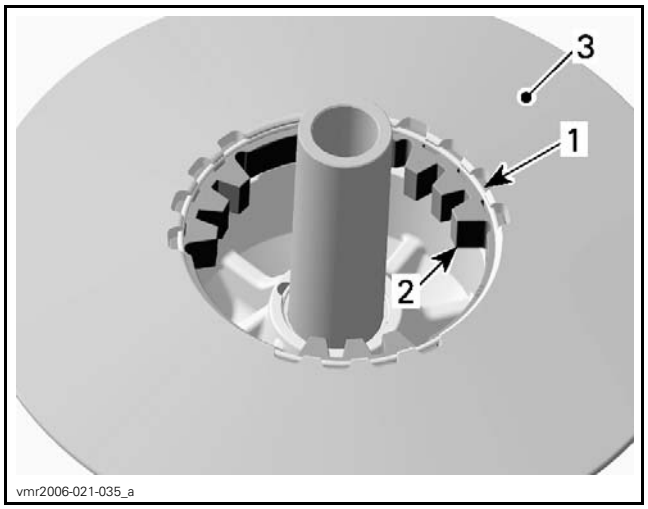

1. Retaining ring
2. Torque gear
3. Fixed sheave of driven pulley

NOTE: The following procedure is not necessary except if ball bearing or shaft must be removed. Refer to *INSPECTION* before proceeding.

Heat ball bearing area up to 100°C (212°F) before removing ball bearing.

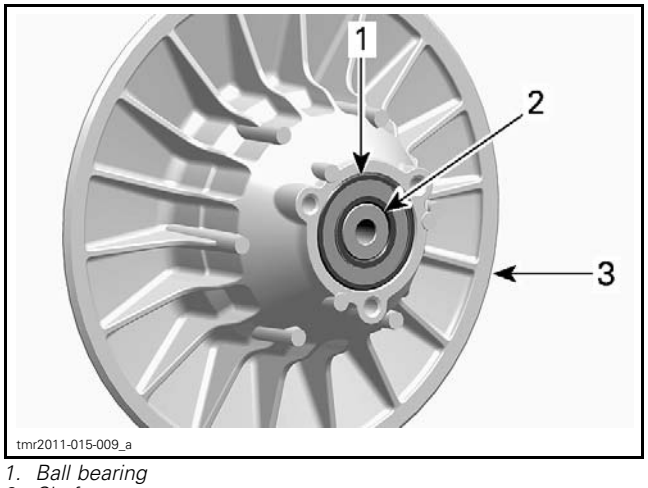

1. Ball bearing
2. Shaft
3. Fixed sheave of driven pulley

Use a soft hammer to push shaft with bearing out of fixed sheave.

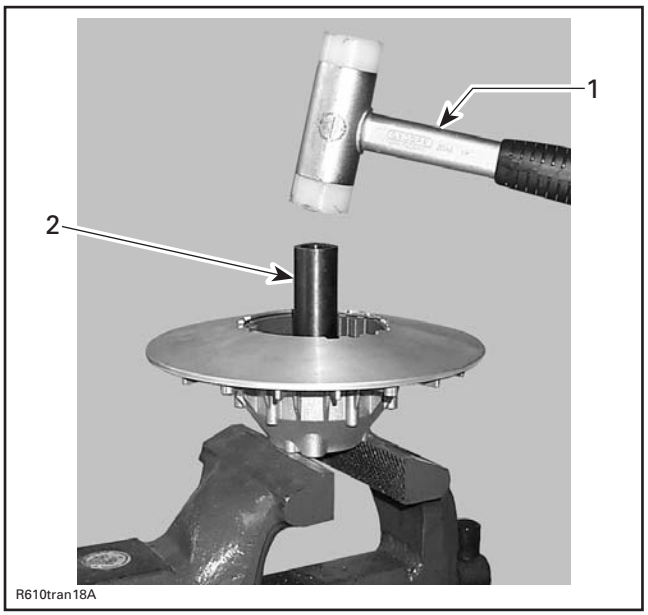

1. Soft hammer
2. Shaft

Remove shaft from ball bearing.

Remove distance sleeve and O-ring from countershaft.

Replace O-ring if brittle, hard or damaged.

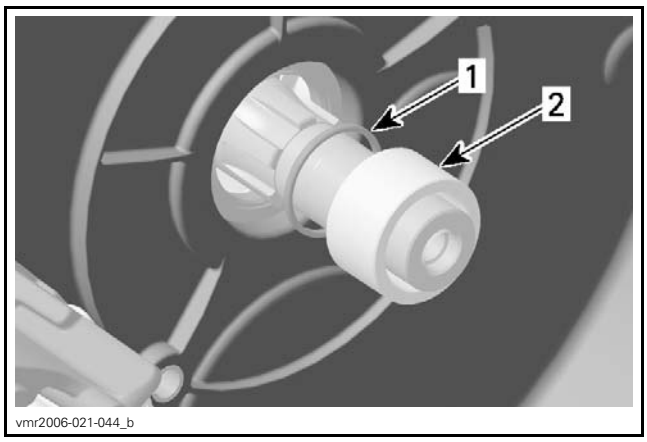

1. O-ring
2. Distance sleeve

Driven Pulley Cleaning

Clean the CVT air guide area from contamination.

Using a small brush, paper towel and XPS BRAKES AND PARTS CLEANER (P/N 219 701 776) or XPS BRAKES AND PARTS CLEANER (USA) (P/N 219 701 705), clean all the mounting surfaces and threads as shown.

NOTICE **Avoid contact between cleaner and countershaft oil seal or damage may occur.**

Remove all deposits that have baked on pulley tapered surfaces with medium steel wool and/or sand paper no. 600.

NOTICE Do not use any other type of abrasive.

Reclean surfaces after steel wool use.

Blow compressed air on all cleaned parts and surfaces to remove any residue.

NOTICE Mounting surfaces and threads must be free of any oil, cleaner or towel residue.

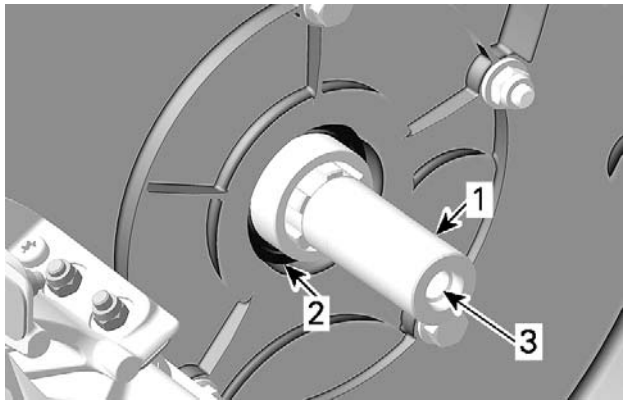

1. Countershaft end
2. Countershaft oil seal
3. Countershaft inner threads

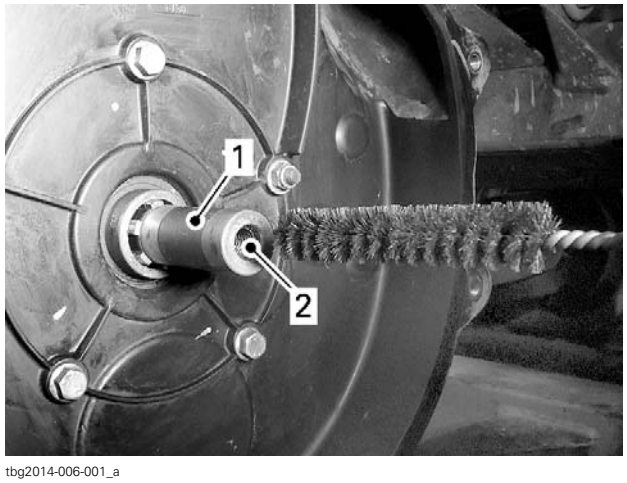

GEARBOX COUNTERSHAFT

1. Countershaft outer surface
2. Countershaft inner threads

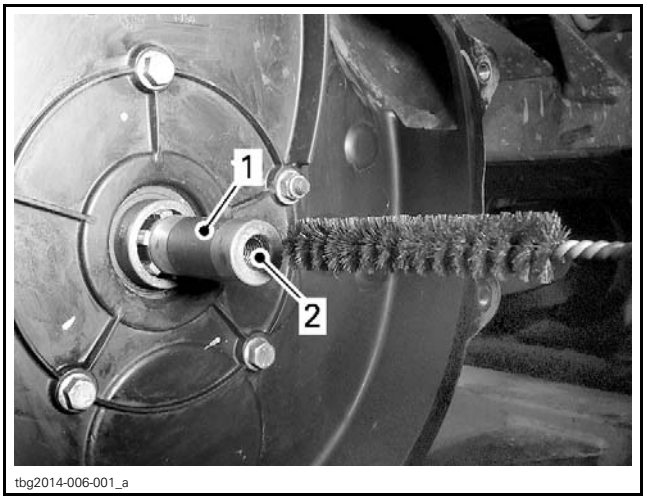

GEARBOX COUNTERSHAFT

1. Countershaft outer surface
2. Countershaft inner threads



COUNTERSHAFT END OF STUD

Stud Assembly



STUD END RECEIVING COUNTER NUTS

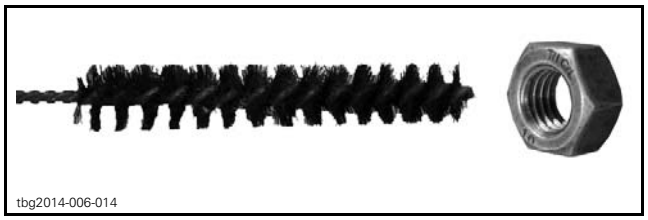
tbg2014-006-014

THREADS OF DRIVEN PULLEY NUT

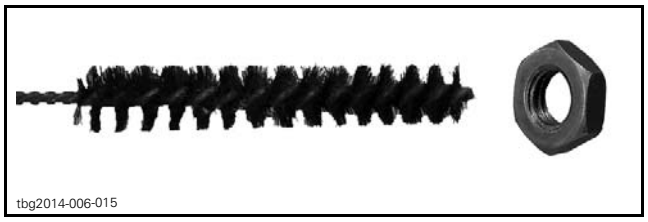
tbg2014-006-015

THREADS OF COUNTER NUT

Driven Pulley Inspection

Sliding Sheave

Check sliding sheave for cracks and sliding contact surface for excessive wear. Replace sliding sheave if necessary.

Check bushings for cracks, scratch and for free movement when assembled to sliding sheave.

Using a dial bore gauge measure bushing diameter. Measuring point must be at least 5 mm (1/4 in) from bushing edge.

This bushing can not be replaced. Replace sliding sheave if bushings are out of specification. Visually inspect coatings.

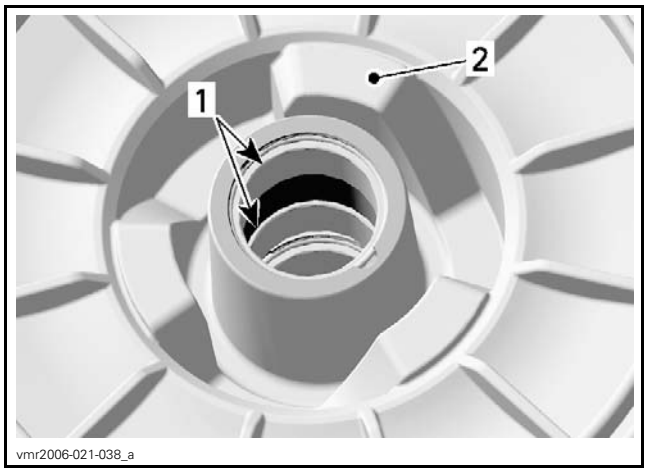

vmr2006-021-038_a

1. Bushings
2. Backside of sliding sheave of driven pulley

BUSHINGS BORE DIAMETER	
NEW	30.060 mm to 30.100 mm (1.183 in to 1.185 in)
SERVICE LIMIT	30.200 mm (1.189 in)

Fixed Sheave

Check fixed sheave for cracks and excessive wear. Replace fixed sheave if necessary.

Check ball bearing for free play and smooth operation. Replace if necessary.

Check shaft for heavy wear or visible damage. Replace if necessary.

If the shaft is removed, using a dial bore gauge, measure bushing diameter. Measuring point must be at least 5 mm (1/4 in) from bushing edge.

This bushing can not be replaced. Replace fixed sheave if bushing is out of specification. Visually inspect coatings.

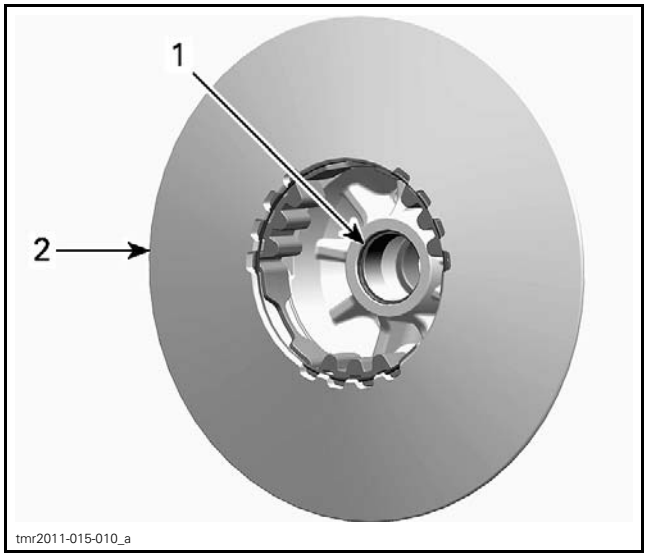

tmr2011-015-010_a

1. Bushing
2. Fixed sheave of driven pulley

BUSHING BORE DIAMETER	
NEW	30.060 mm to 30.100 mm (1.183 in to 1.185 in)
SERVICE LIMIT	30.200 mm (1.189 in)

Check torque gear for visible damage and cracks.

Measure wear limit with a caliper.

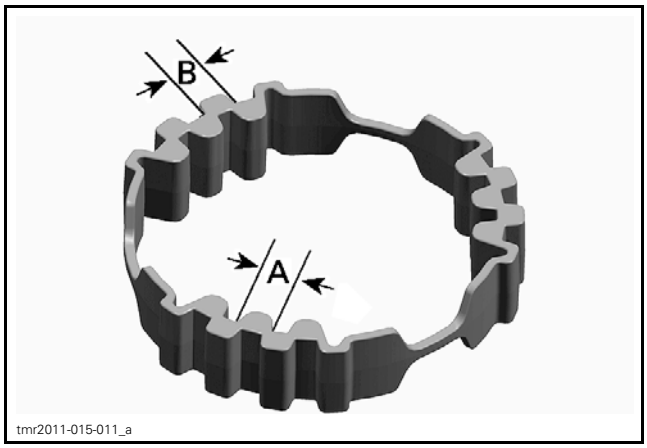

A. Measurement inside
B. Measurement outside

WEAR ON TEETH BOTH SIDES	
SERVICE LIMIT	7.500 mm (.295 in)

Cam

Check cam for visible damage and wear limit with a caliper.

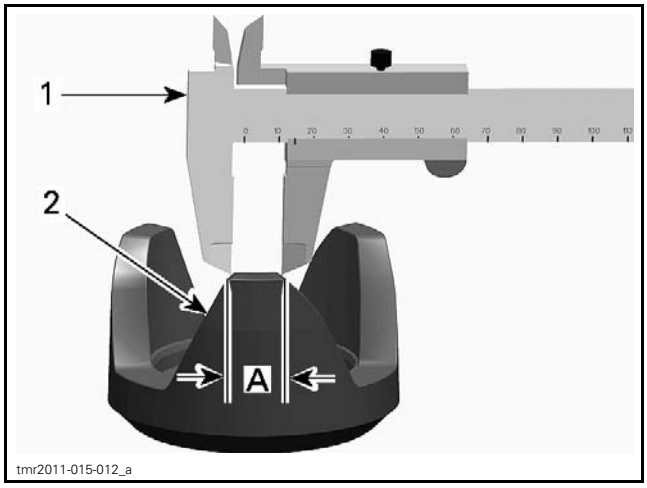

1. Caliper
2. Contact surface
A. Width to be measured due to wear on contact surface

WIDTH ON TOP SURFACE	
SERVICE LIMIT	9.00 mm (.354 in)

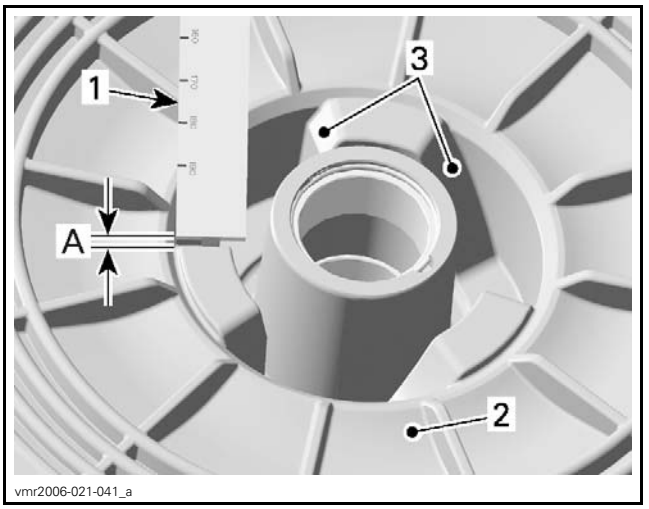

1. Caliper
2. Sliding sheave
3. Contact surface
A. Wear to be measured

WEAR ON CONTACT SURFACE	
SERVICE LIMIT	1.00 mm (.039 in)

Spring

Measure spring free length and squareness. If spring is out of specification, replace by a new.

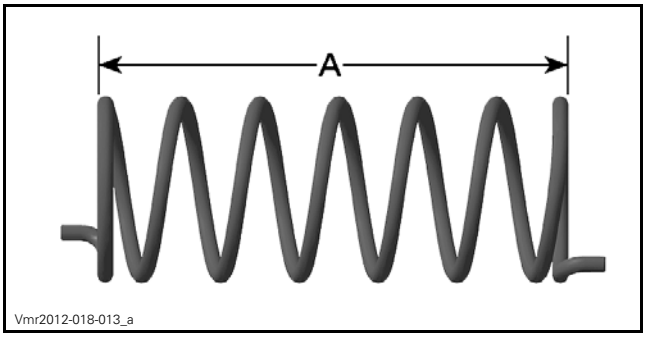

CVT DRIVEN SPRING
A. Spring free length

SPRING FREE LENGTH	
SERVICE LIMIT	125 mm (4.921 in)
CLUTCH SPRING SQUARENESS	
SERVICE LIMIT	3.8 mm (.15 in)

Driven Pulley Assembly

For installation, reverse the removal procedure. Pay attention to following details.

Heat ball bearing area up to 100°C (212°F) before ball bearing installation.

NOTE: Place new ball bearing in a freezer for 10 minutes before installation.

Install ball bearing with the writing on top and push only on the outer ring.

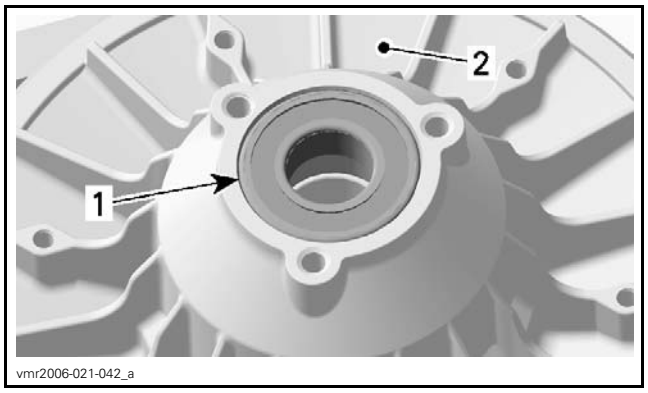

1. *Ball bearing*
2. *Fixed sheave of driven pulley*

NOTICE Do not use hammer, use press machine only.

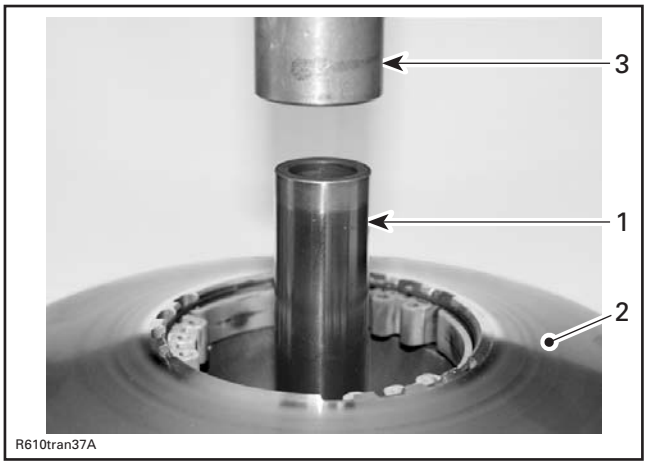

1. *Shaft*
2. *Fixed sheave*
3. *Press machine*

Install torque gear then secure it with retaining ring.

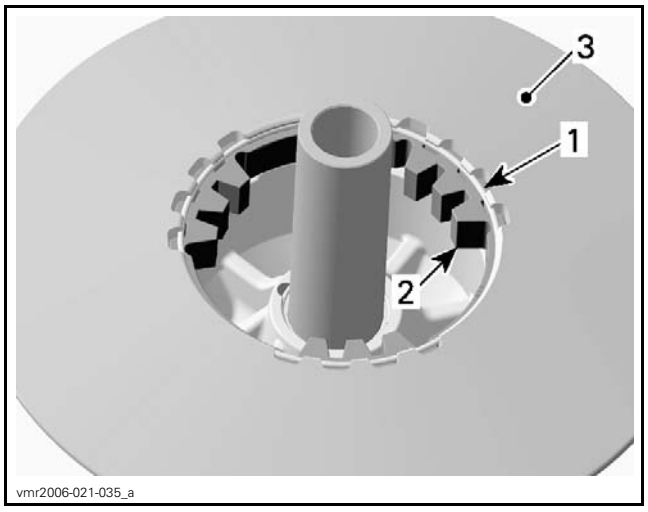

1. *Retaining ring*
2. *Torque gear*
3. *Fixed sheave of driven pulley*

Driven Pulley Installation

For installation, reverse the removal procedure. Pay attention to the following details.

NOTICE Never use any type of impact wrench at drive pulley removal and installation.

Clean mounting surfaces and parts as described in *CLEANING* above.

Place O-ring on countershaft splines and move it with distance sleeve in end position.

NOTICE Chamfer on inside diameter of the distance sleeve must face to gearbox side.

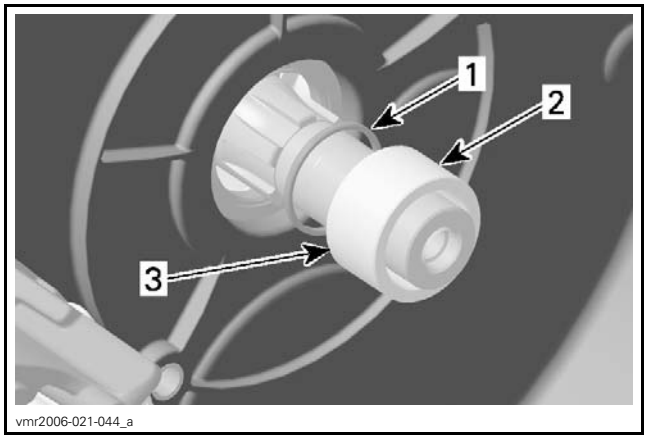

1. *O-ring*
2. *Distance sleeve*
3. *Chamfered area of distance sleeve*

Screw Assembly

Insert the sliding sheave in the fixed sheave.

Place spring behind sliding sheave and engage spring end in the sliding sheave spring bore.

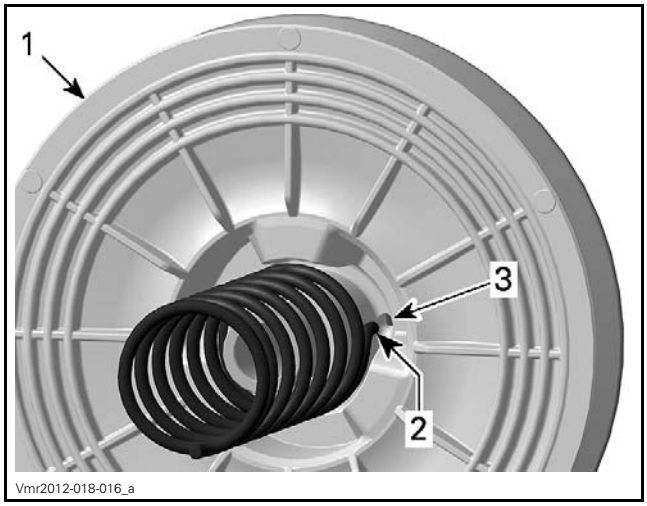

1000 ENGINE
1. *Sliding sheave*
2. *Spring end*
3. *Spring bore*

Place cam on the opposite end of the spring and engage the other spring end in the cam spring bore.

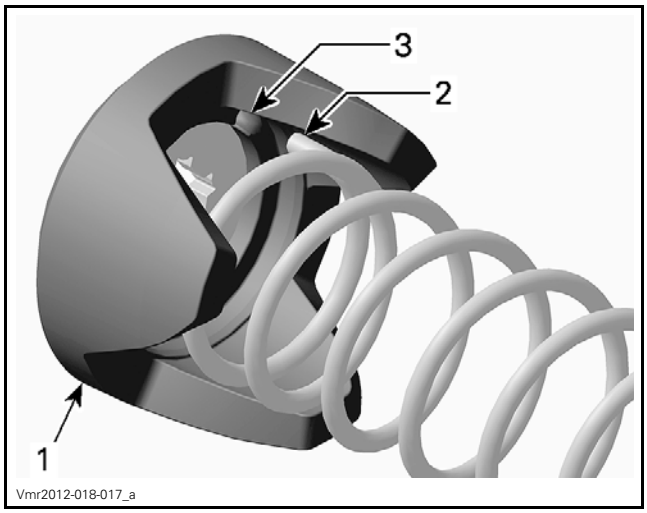

1000 ENGINE
1. *Cam*
2. *Spring end*
3. *Spring bore*

Install pre-assembled cam with spring and driven pulley on countershaft end.

NOTICE Cam must engage on countershaft splines.

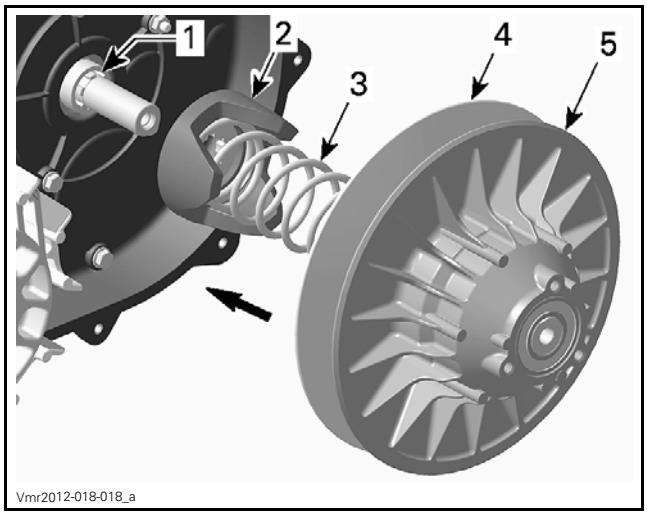

1000 ENGINE
1. *Countershaft splines*
2. *Cam*
3. *Spring*
4. *Sliding sheave*
5. *Fixed sheave*

With your hand, push the driven pulley onto the shaft to compress the spring.

As you hold the pulley in, install a NEW driven pulley screw and thrust washer.

NOTICE This assembly uses a stretch screw. Always install a **NEW** screw.

NOTE: Tighten the screw with your hand approximately 3 to 4 turns.

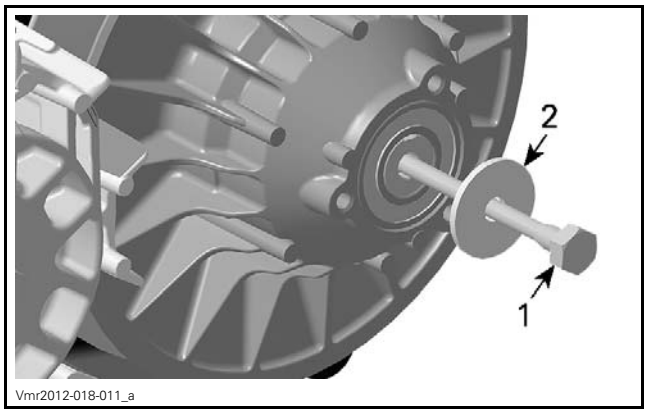

1. *Driven pulley screw*
2. *Thrust washer*

Insert a screwdriver of approximately 5 mm (.197 in) diameter in the cam.

NOTE: For clarity of understanding, some parts not shown in the following illustration.

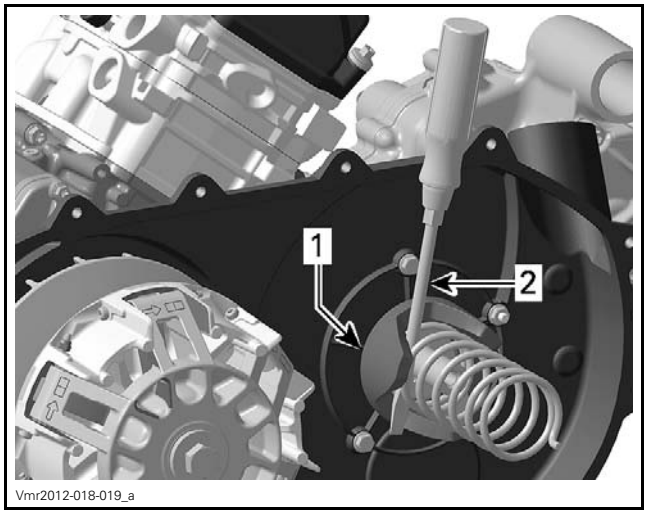

1000 ENGINE
1. *Cam*
2. *Screwdriver, diameter 5 mm (.197 in)*

Hold the driven pulley in a fix position.

REQUIRED TOOL	
CLUTCH HOLDER (P/N 529 036 238)	

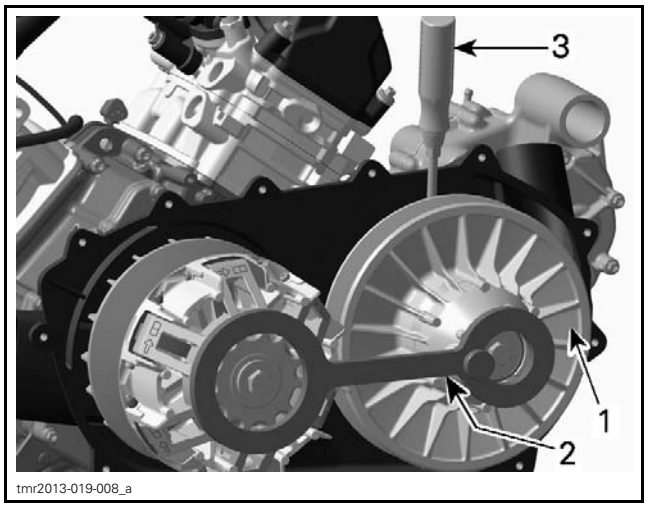

1. Fixed sheave
2. Clutch holder
3. Screwdriver

Turn the screwdriver approximately 20° counterclockwise until cam engages in the driven pulley sliding sheave and hold it in this position (spring preload).

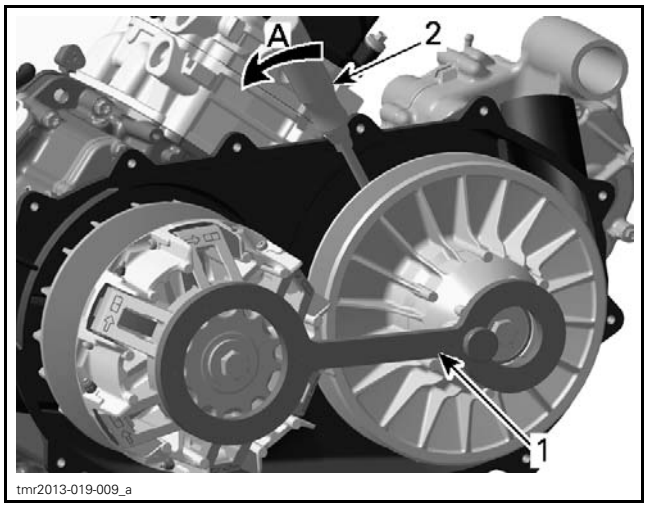

1. Clutch holder
2. Screwdriver
A. 20° turn

Using a socket and extension, hand tighten the driven pulley screw.

NOTE: Do not apply specified torque at this time.

Move the screwdriver back and forth to check cam for free movement.

NOTICE A cam not correctly engaged will cause damage to the driven pulley and cam.

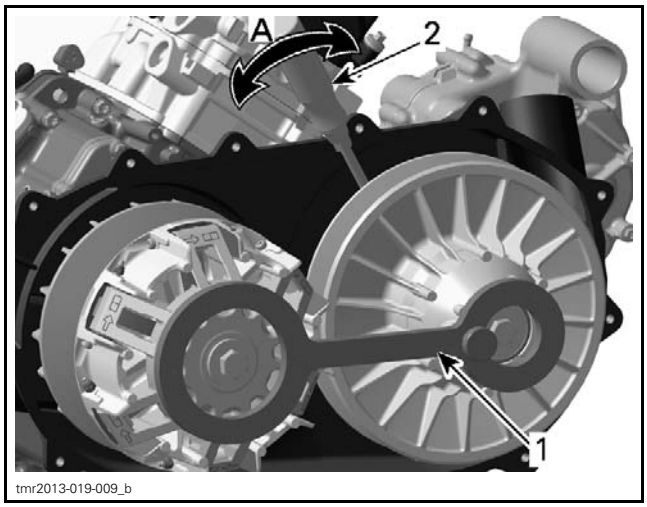

1. Clutch holder
2. Screwdriver
A. Cam freedom of movement

Tighten driven pulley screw as specified.

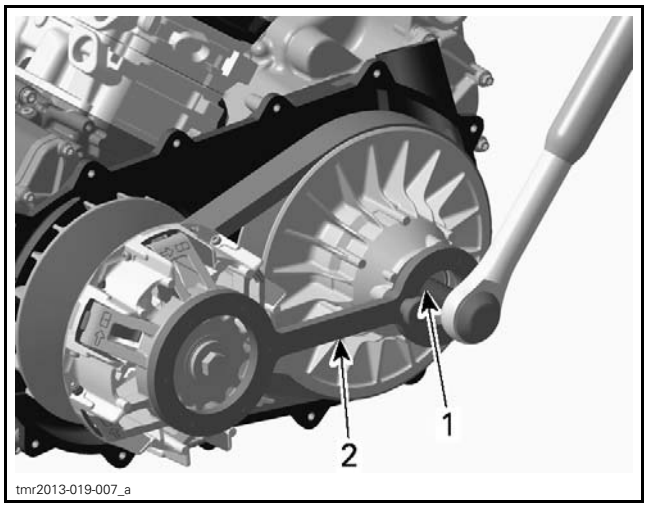

1. Driven pulley screw
2. Clutch holder

TIGHTENING SEQUENCE (DRIVEN PULLEY SCREW)	
STEP 1	20 N•m ± 1 N•m (15 lbf•ft ± 1 lbf•ft)
STEP 2	180° ± 5°

Remove service tool.

Stud Assembly

Hand tighten the stud in the countershaft.

Install the tightening tool on the stud.

REQUIRED TOOL	
DRIVEN PULLEY STUD TOOL (P/N 529 036 360)	

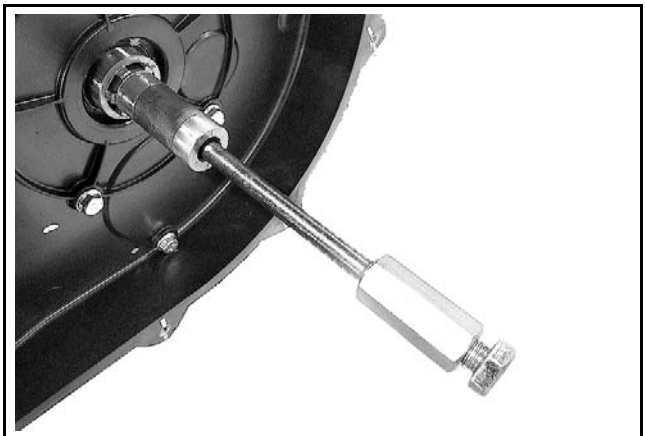
tmr2015-022-100

Block countershaft.

REQUIRED TOOL	
COUNTERSHAFT RETAINER TOOL (P/N 529 036 312)	

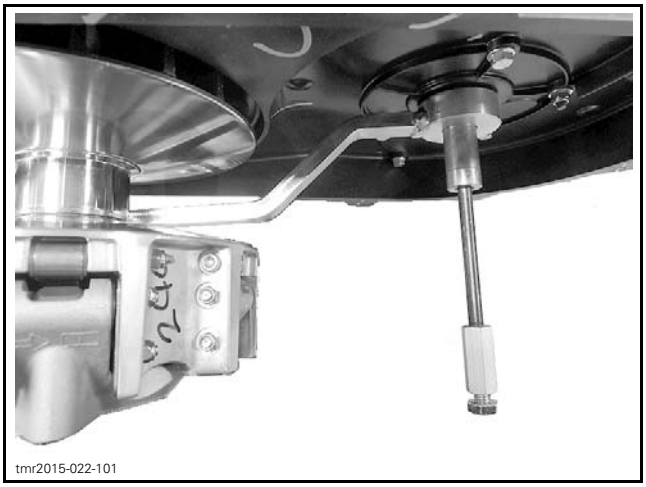
tmr2015-022-101

Tighten the stud to specification.

TIGHTENING TORQUE	
Stud	45 N•m ± 2 N•m (33 lbf•ft ± 1 lbf•ft)

Remove the tightening tool from the stud.

Remove countershaft retainer tool.

Lubricate:
- Countershaft splines
- Countershaft outer surface.

SERVICE PRODUCT	
Countershaft splines and countershaft outer surface	LOCTITE 767 (ANTISEIZE LUBRICANT) (P/N 293 800 070)

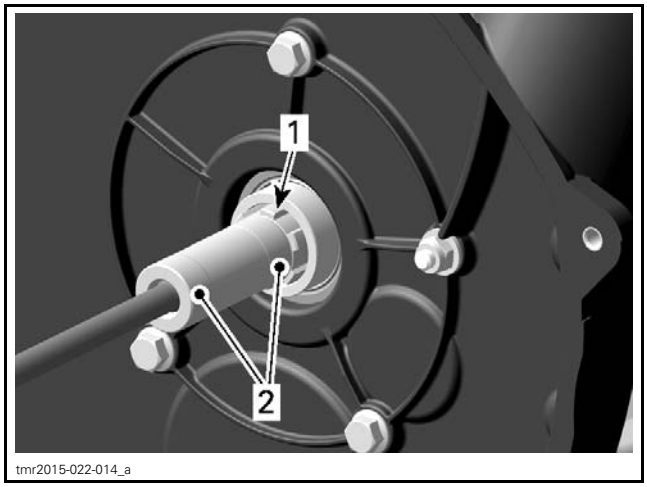

tmr2015-022-014_a

1. *Countershaft splines*
2. *Countershaft outer surface*

Install:
- Cam
- Shaft
- Spring.

NOTICE **Cam splines must engage on countershaft splines.**

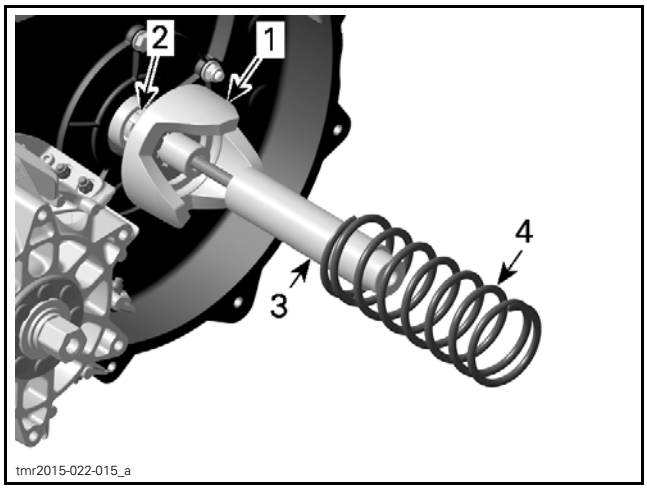

tmr2015-022-015_a

1. *Cam*
2. *Countershaft splines*
3. *Shaft*
4. *Spring*

Insert the sliding sheave in the fixed sheave.

Align sliding sheave of driven pulley with cam.

NOTICE **Sliding sheave must engage on cam.**

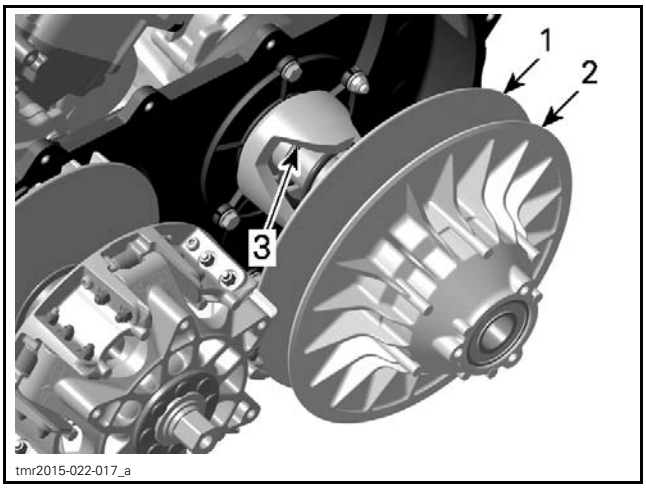

1. Sliding sheave
2. Fixed sheave
3. Cam

Push the driven pulley onto the shaft to compress the spring.

NOTICE A cam not correctly engaged will cause damage to the driven pulley and cam.

As you hold the pulley in, install thrust washer and a NEW driven pulley nut.

NOTE: Finger tighten the driven pulley nut sufficiently so that the cam remains engaged.

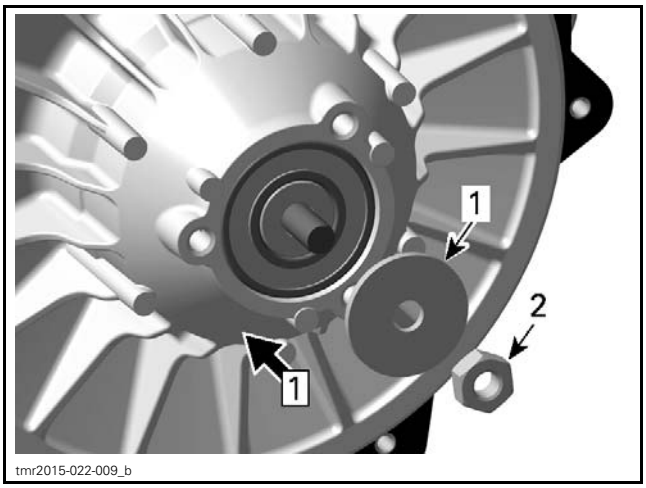

Step 1: Push

1. Thrust washer
2. NEW driven pulley nut

Tighten driven pulley nut as specified.

REQUIRED TOOL	
CLUTCH HOLDER (P/N 529 036 238)	

TIGHTENING TORQUE		
Driven pulley nut	STEP 1	20 N•m ± 1 N•m (15 lbf•ft ± 1 lbf•ft)
	STEP 2	180° ± 5°

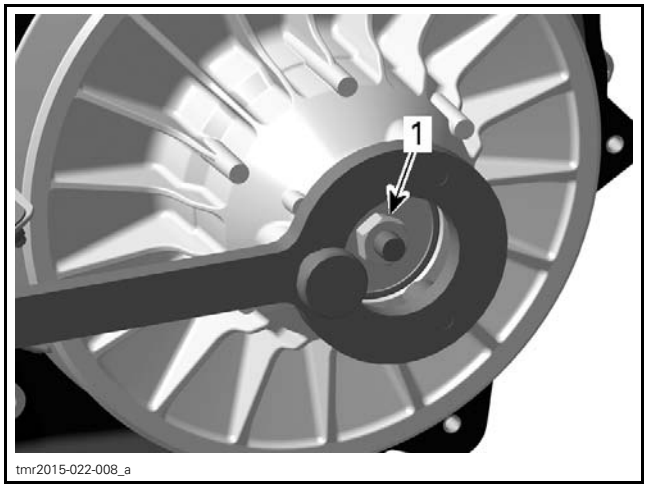

1. Driven pulley nut

Remove service tool.

Hold driven pulley nut using a spanner and tighten the NEW counter nut to specification.

TIGHTENING TORQUE	
Counter nut	35 N•m ± 1 N•m (26 lbf•ft ± 1 lbf•ft)

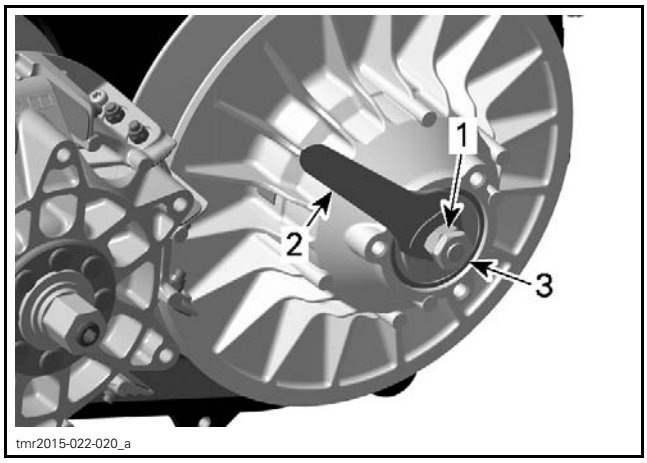

1. Driven pulley nut
2. Spanner
3. Counter nut

Install drive belt. Refer to *DRIVE BELT* in this subsection.

REQUIRED TOOL	
PULLER/LOCKING TOOL (P/N 529 036 098)	

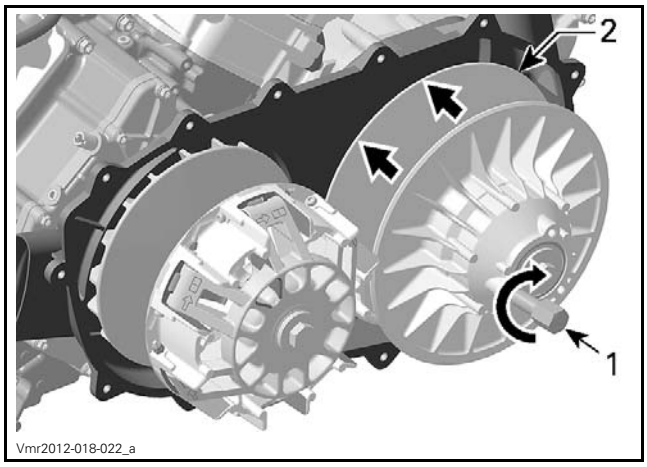

1. *Puller/locking tool*
2. *Sliding sheave*

NOTE: If driven pulley sheaves can to be opened when the service tool is screwed in, the cam is not correctly engaged in the sliding sheave.

CVT AIR GUIDE

CVT Air Guide Removal

Remove the *DRIVE PULLEY* and the *DRIVEN PULLEY*.

Unscrew the clamps retaining the CVT air hoses.

Remove CVT air guide.

CVT Air Guide Inspection

Clean CVT air guide from contamination

Check O-rings if brittle, hard or damaged. Replace if necessary.

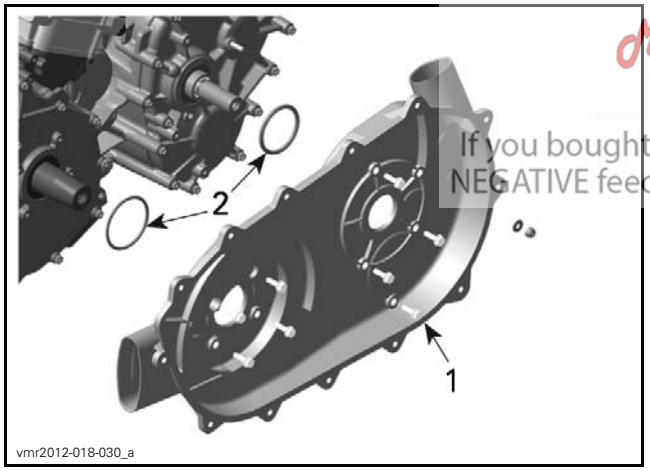

1. *CVT air guide*
2. *O-rings*

Midwest Manuals
Green Manuals
Paperless Manuals
For a Better Tomorrow
If you bought this manual from any other seller please leave them NEGATIVE feedback and notify me at bestshopmanuals@gmail.com

CVT Air Guide Installation

For installation reverse the removal procedure.

GEARBOX AND 4X4 COUPLING UNIT

SERVICE TOOLS

Description	Part Number	Page
BLIND HOLE BEARING PULLER SET	529 036 117	199
COUNTERSHAFT OIL SEAL PUSHER	529 036 222	192
ECM ADAPTER TOOL	529 036 166	188
FLUKE 115 MULTIMETER	529 035 868	186, 190
HANDLE	420 877 650	192
OIL SEAL INSTALLER (GEARBOX)	529 035 758	192
OIL SEAL INSTALLER	529 036 204	193

SERVICE TOOLS – OTHER SUPPLIER

Description	Part Number	Page
BACK PROBE TEST WIRES	529 036 063	186, 188

SERVICE PRODUCTS

Description	Part Number	Page
LOCTITE 5910	293 800 081	189, 205
LOCTITE CHISEL (GASKET REMOVER)	413 708 500	205
SUPER LUBE GREASE	293 550 030	187, 190, 193

GEARBOX COMPONENTS AND 4X4 COUPLING MECHANISM

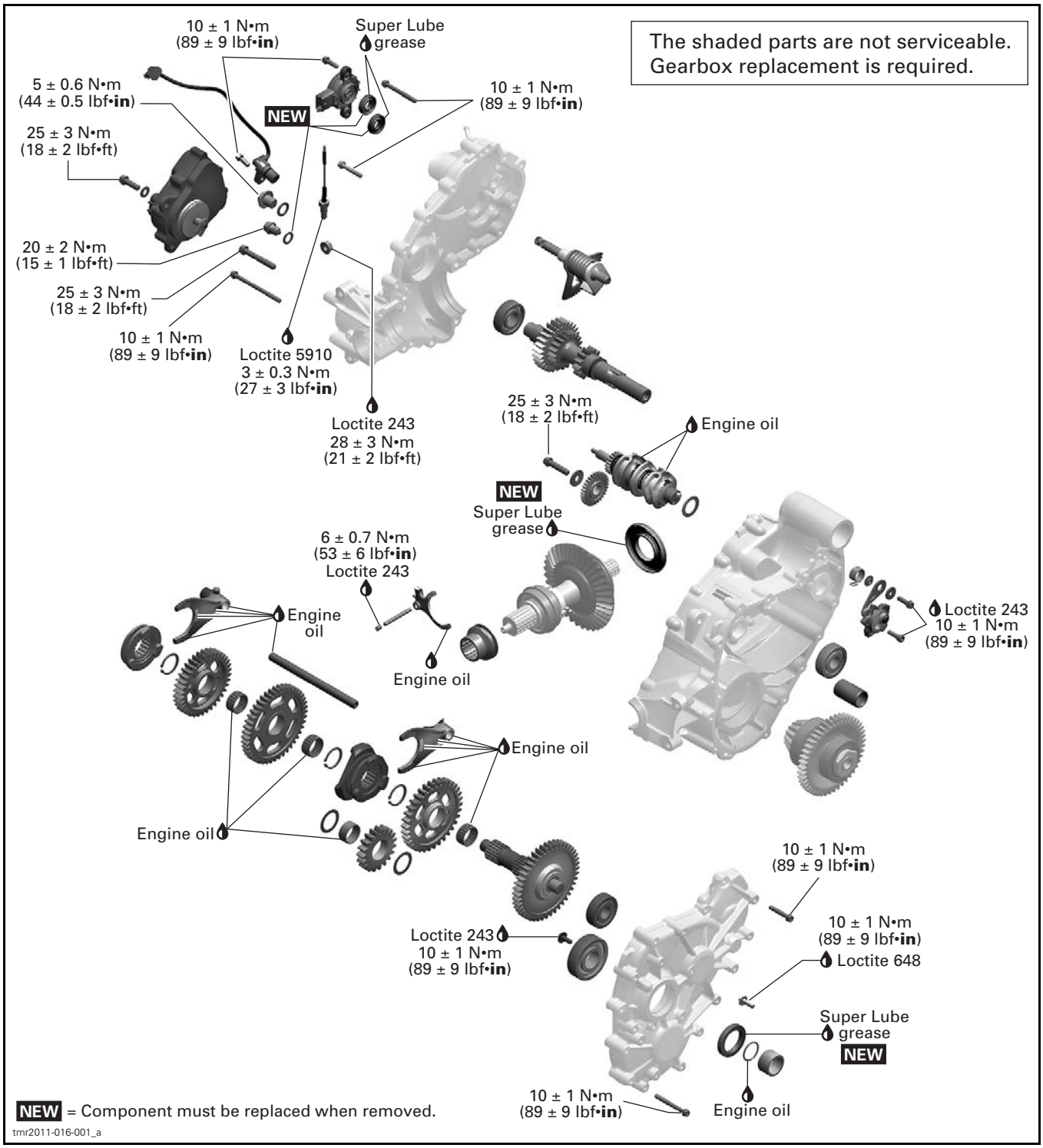

GENERAL

GEARBOX OVERVIEW

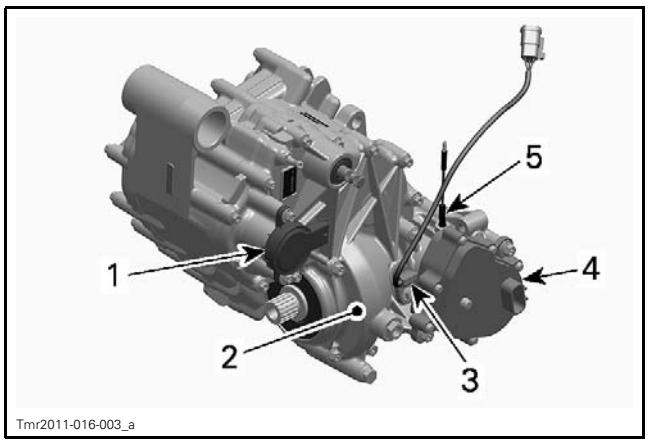

1. *Gearbox position sensor (GBPS)*
2. *Right cover*
3. *Vehicle speed sensor (VSS)*
4. *Actuator*
5. *4WD indicator switch*

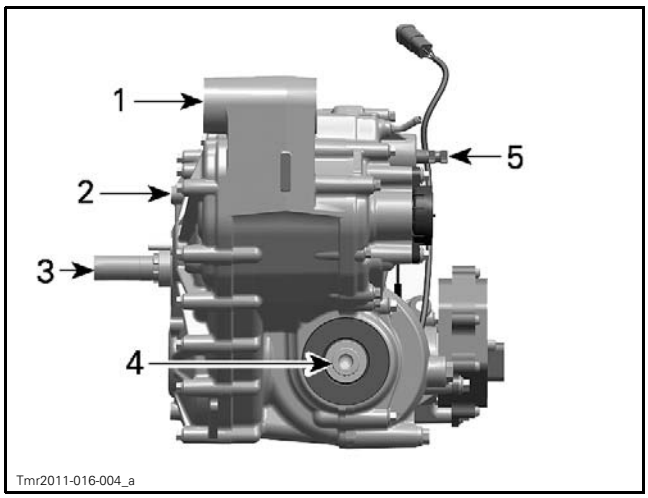

1. *Center housing*
2. *Left cover*
3. *Countershaft*
4. *Output shaft*
5. *Shift shaft*

TROUBLESHOOTING

UNUSUAL GEARBOX NOISE AND/OR VIBRATIONS

1. Low oil level in gearbox.
   - *Oil leakage from gearbox. Replace damaged gasket(s) and/or oil seal(s).*
2. Defective bearings.
   - *Bearing(s) do(es) not turn smoothly. Replace bearing(s).*
3. Damaged or worn gears.
   - *Inspect gears for damages or missing teeth. Replace respective gears.*

GEAR INDICATION FAILS

1. Defective gearbox position sensor (GBPS).
   - *Perform a gearbox position sensor test.*
   - *Damaged wires. Repair as required.*

GEAR(S) IS (ARE) HARD TO SHIFT

1. Incorrect shifter cable adjustment.
   - *Adjust shifter cable (refer to SHIFTER CABLE in SHIFTER subsection.*

4 WHEEL DRIVE INDICATION FAILS

1. 4WD indicator switch failure.
   - *Test 4WD indicator switch. Replace as required.*
   - *Bad contact. Check for corrosion or loose connector.*
   - *Damaged wires. Repair as required.*

4 WHEEL DRIVE DOES NOT ENGAGE OR DISENGAGE

1. Defective 4WD switch.
   - *Check 4WD switch operation.*
2. Defective actuator.
   - *Test actuator.*
3. Damaged or worn shifting fork or sleeve.
   - *Remove actuator and inspect shifting fork and sleeve.*

PROCEDURES

VSS (VEHICLE SPEED SENSOR)

VSS Location

The vehicle speed sensor is located on the right housing of the gearbox behind the actuator.

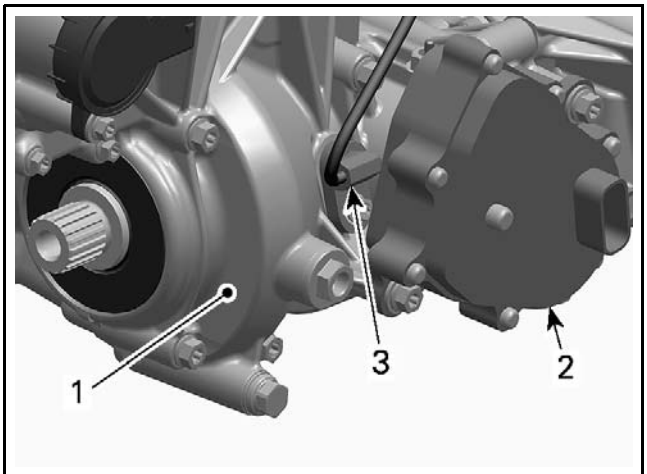

Tmr2011-016-006_a

1. Right housing of gearbox
2. Actuator
3. VSS (Vehicle Speed Sensor)

VSS Access

To reach the VSS, remove the following parts:
– Passenger seat
– RH lateral console panel
– Fuel tank cowl.

VSS Wire Identification

FUNCTION	PIN	COLOR
12-volt input from fuse F5	A	RED
Speed signal (to ECM-A E1)	B	WHITE
Ground (to ECM-A D4)	C	BLACK/GREEN

VSS Circuit Protection

CONDITION	CIRCUIT PROTECTION
Supplied with main relay activated	Fuse 5 of fuse block 1 (from main relay R2)

VSS Input Voltage Test

1. Turn ignition switch ON.
2. Back-probe the VSS connector and measure voltage.

REQUIRED TOOLS	
BACK PROBE TEST WIRES (P/N 529 036 063)	
FLUKE 115 MULTIMETER (P/N 529 035 868)	

VSS INPUT VOLTAGE TEST		
TEST PROBES		RESULT (KEY ON)
PIN A (RED wire)	PIN C (BLACK/GREEN wire)	Battery voltage

If voltage is not as specified, test positive and ground separately.

VSS Signal Test

1. Lift rear of vehicle so that rear wheels are off the ground.
2. Set transmission to 2WD and to Neutral.
3. Turn ignition switch ON.
4. Back-probe the VSS connector and measure voltage while slowly rotating rear wheels by hand.

REQUIRED TOOLS	
BACK PROBE TEST WIRES (P/N 529 036 063)	
FLUKE 115 MULTIMETER (P/N 529 035 868)	

VSS SIGNAL TEST		
TEST PROBES		RESULT (WHILE ROTATING WHEELS)
PIN B (WHITE wire)	PIN C (BLACK/GREEN wire)	Alternate reading between battery voltage and 0 Vdc

NOTE: Since we measure pulsating voltage, the numeric display will continuously change. The analog display may be easier to follow.

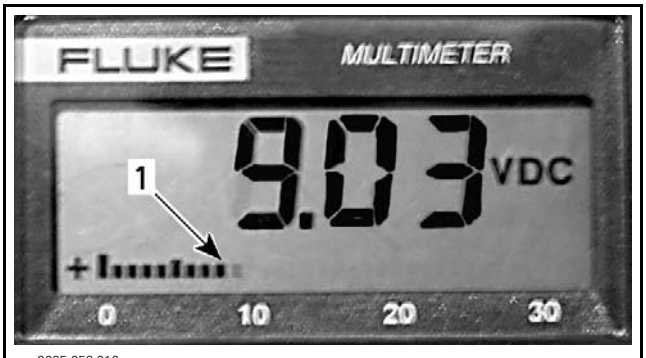

smr2005-056-010_a

1. Analog display

VSS Removal

Remove screw retaining the VSS.

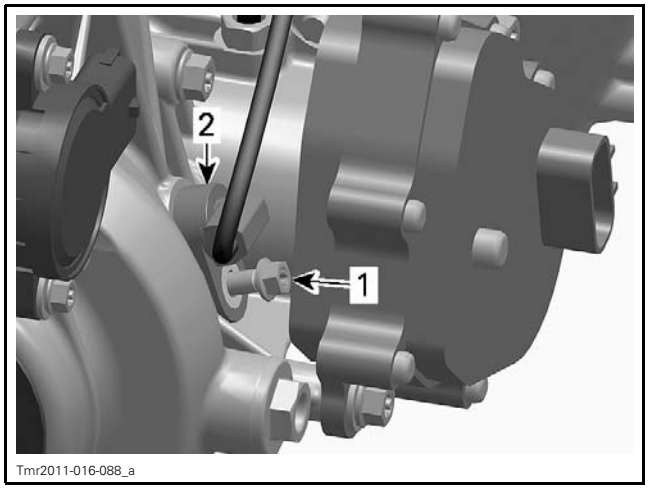

1. Screw
2. VSS

Turn sensor and weave it out of the gearbox right cover.

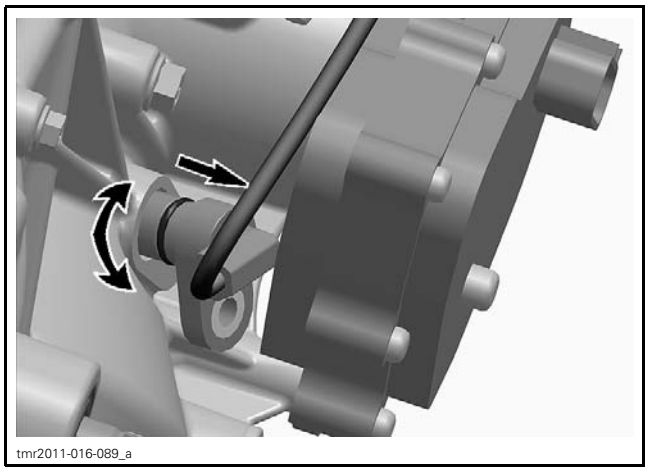

VSS Installation

For installation, reverse the removal procedure. Pay attention to the following.

Apply SUPER LUBE GREASE (P/N 293 550 030) on VSS O-ring.

GBPS (GEARBOX POSITION SENSOR)

GBPS Reset

When replacing the gearbox position sensor (GBPS), it is required to reset (re-zero) its values for proper operation.

A reset must be carried out each time any of the following parts has been replaced:

– Gearbox assembly
– Shift drum
– GBPS
– ECM.

1. Connect vehicle to the latest applicable version of B.U.D.S. software, refer to *COMMUNICATION TOOLS AND B.U.D.S.* subsection.

NOTE: Ignition key must stay ON during the reset procedure. If the key is turned off, the procedure must be carried out again.

2. In B.U.D.S., select the following:
   – **Read Data** button
   – **Setting** page tab
   – **ECM** tab.

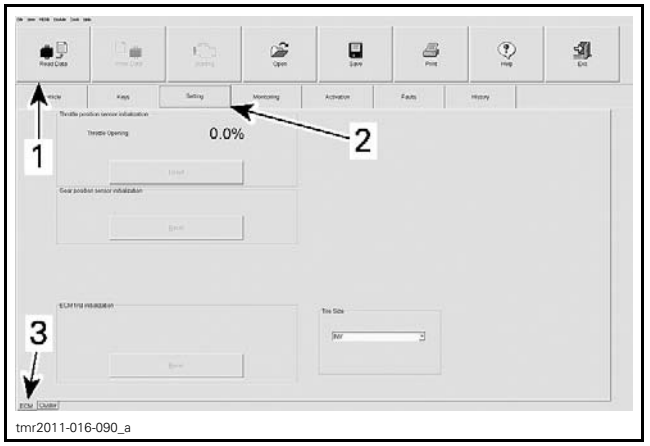

1. Read data button
2. Setting page tab
3. ECM tab

3. Make sure that gearbox is set to NEUTRAL position.
4. In the **Gear Position Sensor Initialization** field, click on the **Reset** button.

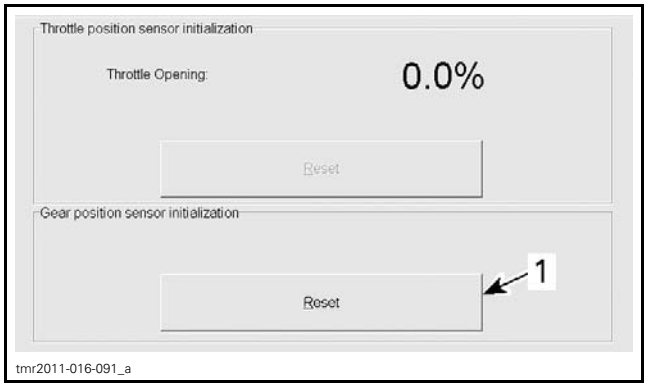

GEAR POSITION SENSOR INITIALIZATION
1. Reset button

A message will be displayed if the operation is successful.

If an error occurred or the GBPS is not within the allowed range while resetting, the ECM will generate a fault code and will not accept the setting.

5. If a fault message is displayed, follow the instructions in the message(s).
6. Check for fault codes.

If a fault code is generated:

– Carry out the service action.
– Reset the fault code.
– Repeat the reset procedure.

7. Close and disconnect B.U.D.S.

NOTE: Do not turn ignition key OFF.

8. Verify gears engagement.
   8.1 With the vehicle on ground and in NEUTRAL position, start engine.
   8.2 During 4-5 seconds, rev engine to 2500 ± 200 RPM.
   8.3 Let engine returns to idle.
   8.4 Select an other position (P, R, H or L). Repeat substeps 8.2 and 8.3 until all position are verified.

   NOTE: The vehicle must be in movement to complete the procedure on R, H and L position.

GBPS Access

To reach the GBPS sensor, remove the following parts:

– Passenger seat
– RH lateral console panel
– Fuel tank cowl.

GBPS Input Voltage Test

NOTE: Prior to conduct testing, check fault codes in B.U.D.S.

Set shift lever in NEUTRAL position.

Back-probe the GBPS connector.

REQUIRED TOOL	
BACK PROBE TEST WIRES (P/N 529 036 063)	

Test as follow:

MULTIMETER PROBE POSITIONS	VOLTAGE
PIN 1 and PIN 3 of the GBPS connector 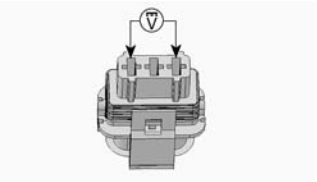	5 volts

If voltage is adequate, check GBPS communication link (CAN).

If there is no voltage, check each GBPS input as follows.

MULTIMETER PROBE POSITIONS	VOLTAGE
GBPS connector (pin 1) and battery ground 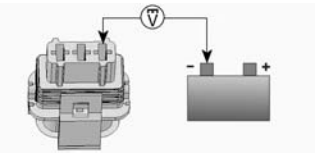	5 volts
GBPS connector (pin 3) and battery + terminal 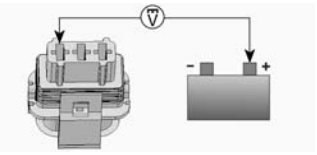	Battery voltage

If there is no voltage, check wires and connector pins. Replace or repair defective parts and reset fault codes.

GBPS Communication Link Continuity Test

Unplug connector "A" from ECM and connect it to the ECM ADAPTER TOOL (P/N 529 036 166).

MULTIMETER PROBE POSITIONS	RESISTANCE @ 20°C (68°F)
GBPS connector (pin 2) and ECM adapter tool (pin F4) 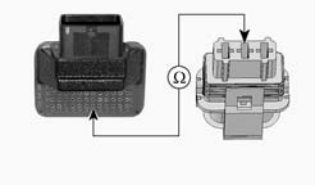	Below 1 Ω

If resistance is out of specification, check wires and connectors. Repair and reset fault codes.

If resistance is good and the other tests succeeded, replace the GBPS and reset fault codes.

NOTE: The GBPS must be reset.

GBPS Removal

Set shift lever in NEUTRAL position.

Unplug GBPS connector.

Remove screws and withdraw GBPS.

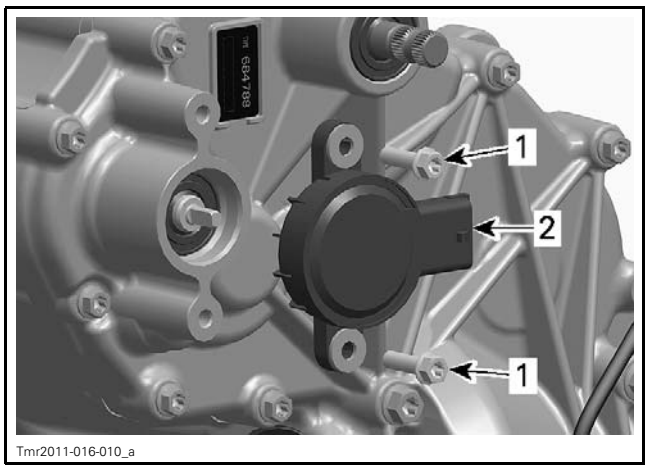

1. *Screws*
2. *Gearbox Position Sensor (GBPS)*

GBPS Installation

For installation, reverse the removal procedure. Pay attention to the following details.

Shift lever must be in the NEUTRAL position.

Align GBPS with the flat on the shift drum shaft.

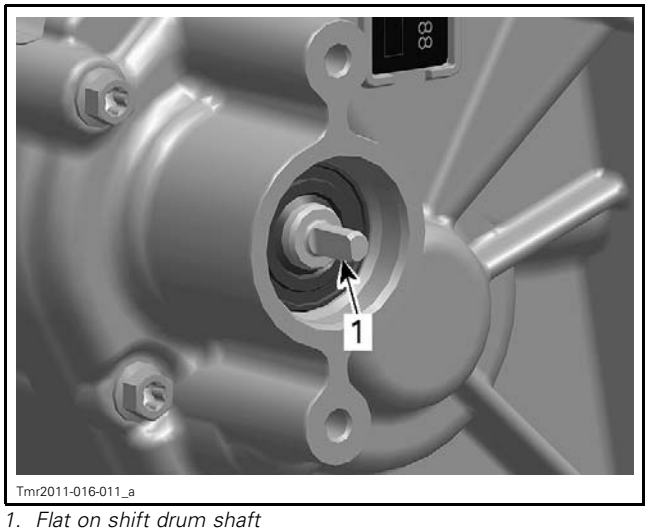

1. *Flat on shift drum shaft*

Reset the GBPS. Refer to *GBPS RESET* in this subsection.

4WD INDICATOR SWITCH

4WD Indicator Switch Access

To reach the 4WD indicator switch, remove the following parts:

– Passenger seat
– RH lateral console panel
– Fuel tank cowl.

4WD Indicator Switch Removal

Disconnect 4WD indicator switch connector.

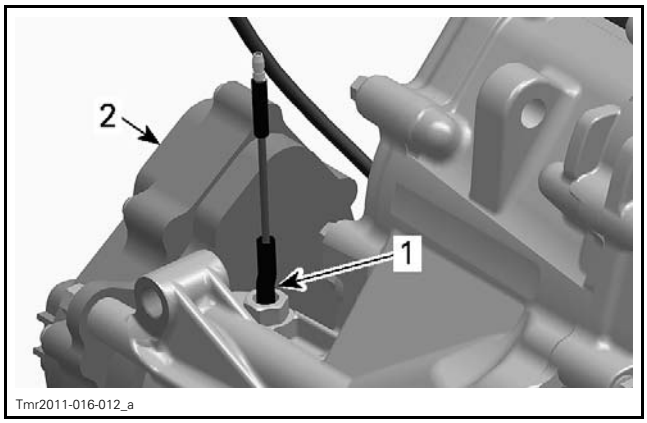

1. *4 WD indicator switch*
2. *Actuator*

4WD Indicator Switch Test

Measure switch resistance as follows.

SWITCH POSITION	SWITCH WIRE		RESISTANCE
2WD	BLACK/ BEIGE	Engine ground	Infinite (OL)

If the resistance is out of specification, replace the 4WD indicator switch.

4WD Indicator Switch Installation

For installation, reverse the removal procedure. Pay attention to the following details.

Take care do not damage indicator switch threads during installation.

Apply carefully some LOCTITE 5910 (P/N 293 800 081) on threads of indicator switch.

NOTICE **Do not apply Loctite 5910 on switch plunger, as it will lead to switch malfunction.**

ACTUATOR

Actuator Access

To access the actuator, remove the following parts:

– Passenger seat
– RH lateral console panel
– Fuel tank cowl.

Remove screws securing fuel tank and move tank on passenger's floor without disconnecting hoses and connector from fuel pump.

Actuator Test

Check if the 2WD/4WD selector works properly.

Unplug actuator connector.

Turn ignition key ON.

Measure voltage as follows.

REQUIRED TOOL	
FLUKE 115 MULTIMETER (P/N 529 035 868)	

SWITCH POSITION	SWITCH WIRE		VOLTAGE
2WD	WHITE/BLUE	WHITE	Battery voltage
4WD	WHITE/BLACK		

If the selector is out of specifications, check wires, connectors and replace the selector if necessary.

If the selector is good, check the vehicle harness.

If the vehicle harness is good, replace the actuator.

Actuator Removal

NOTE: Before beginning any servicing on the actuator, make sure the vehicle is in 4WD position. No need to remove engine from vehicle.

Place a drain pan under actuator.

Remove actuator screws.

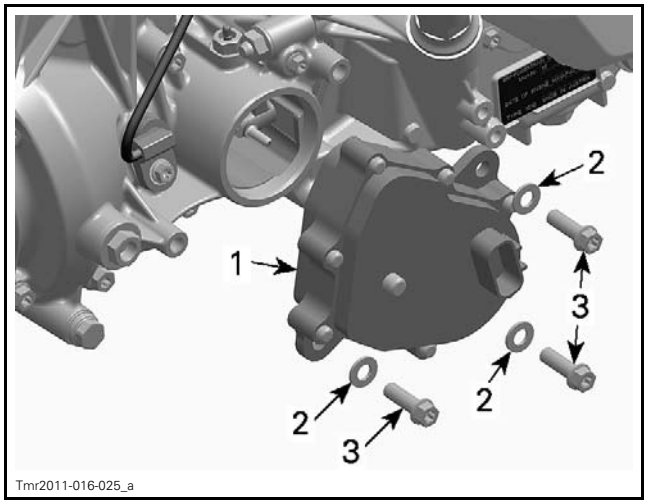

1. Actuator
2. Washer
3. Screw

Pull the actuator out of housing.

Actuator Installation

Apply a small amount of SUPER LUBE GREASE (P/N 293 550 030) on actuator O-ring.

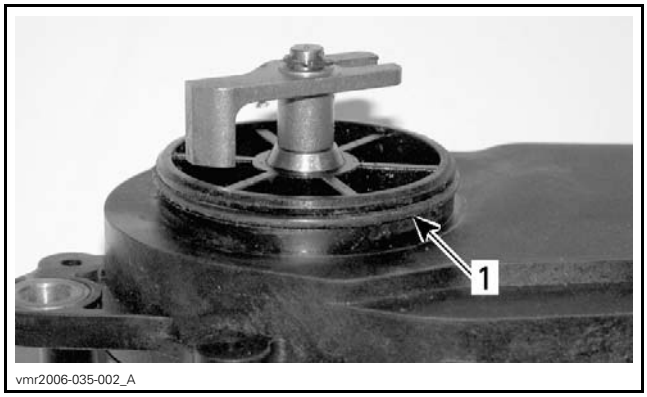

1. Actuator O-ring

Ensure coupling fork is in 4WD position (toward the front of vehicle).

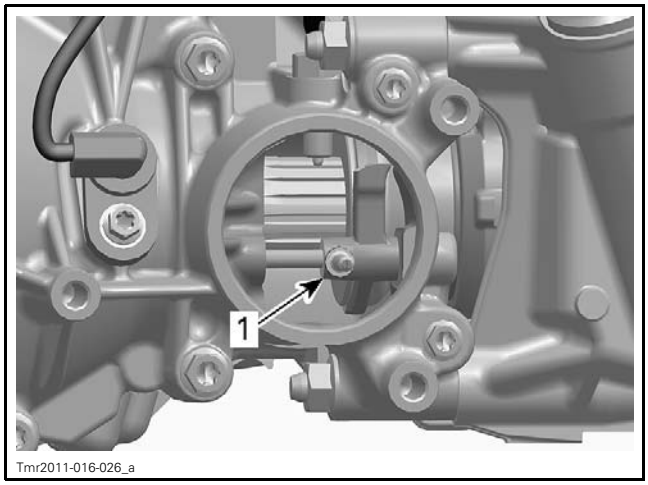

1. Coupling fork in 4WD position

Align the actuator fork with the pin on coupling fork then push the actuator in the housing. See the following illustration to position the actuator correctly.

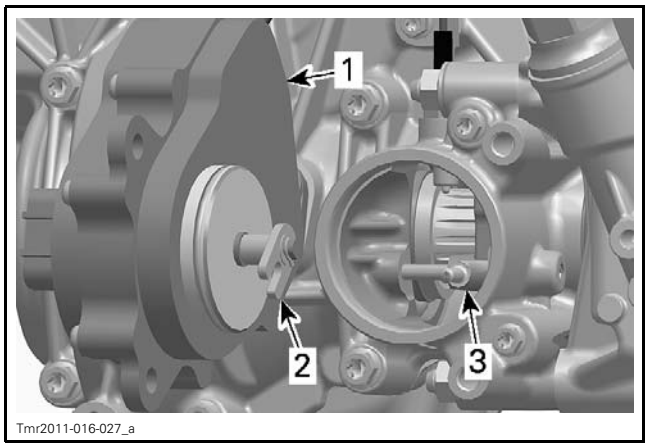

1. Actuator
2. Actuator fork
3. Coupling fork

Rotate the actuator counterclockwise until it orients itself to mounting position.

NOTICE **Do not cut or break the actuator O-ring.**

Install all actuator screws and tighten them.

ACTUATOR SCREWS	
Tightening torque	25 N•m ± 3 N•m (18 lbf•ft ± 2 lbf•ft)

Connect actuator.

Lift the front of vehicle.

Turn front wheels. The front propeller shaft should not turn (the PARK position must be selected).

If the front propeller shaft turns, the actuator is not installed correctly. Remove actuator and reinstall it.

Place ignition switch to ON position and select the 2WD position.

Turn front wheel again. The front propeller shaft should turn easily.

If the front propeller shaft does not turn, the actuator is not installed correctly. Remove actuator and reinstall it.

NOTICE **Refill missing gearbox oil, refer to *GEARBOX OIL REPLACEMENT* in *PERIODIC MAINTENANCE PROCEDURES* subsection.**

Install all other removed parts.

GEARBOX OIL SEALS

Gearbox Oil Seal Replacement

Replace oil seals if they are brittle, hard or damaged.

A small flat screwdriver can be used to remove most of these oil seals.

NOTICE **Avoid scoring parts during oil seal removal.**

When replacing an oil seal, take this opportunity to inspect the following:
– Check bearings behind each oil seal for contamination and/or metal shavings.
– Check oil seal running surfaces for scratches.

Countershaft Oil Seal

To replace the countershaft oil seal, remove:
– Drive and driven pulleys
– CVT air guide.

NOTE: When oil seal is removed also inspect O-ring behind distance sleeve.

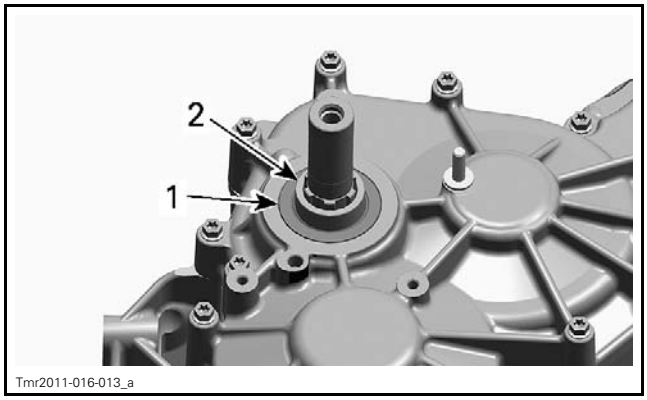

1. Countershaft oil seal
2. Distance sleeve

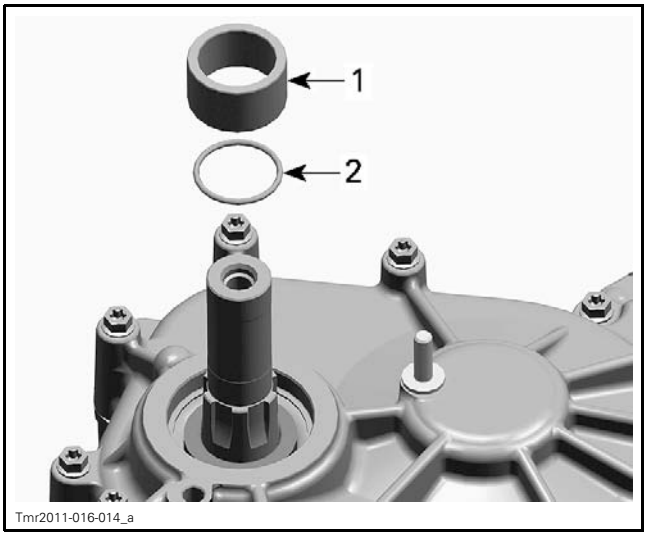

1. Distance sleeve
2. O-ring

Install countershaft oil seal.

REQUIRED TOOL	
COUNTERSHAFT OIL SEAL PUSHER (P/N 529 036 222)	

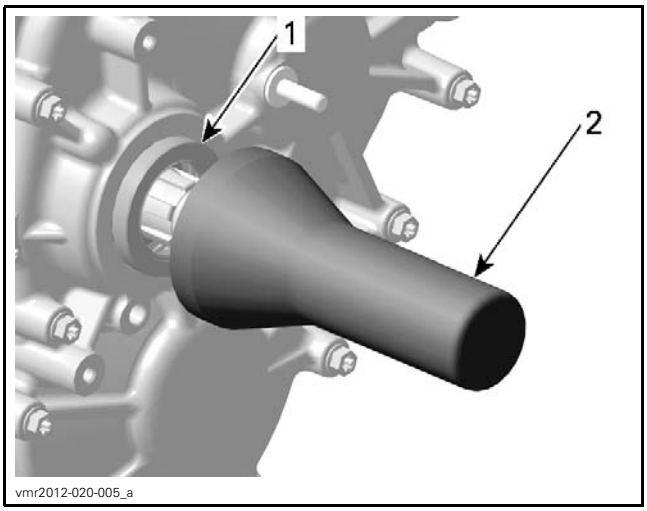

1. Countershaft oil seal
2. Oil seal installer

Shift Shaft Oil Seal

To replace the shift shaft oil seal, remove:
– RH lateral console panel and fuel tank cowl, refer to *BODY* subsection.
– Shift plate from shift shaft.

The shift shaft oil seal can be removed without removing the gearbox from the vehicle.

Use a suitable tube with the proper diameter to install the oil seal.

If gearbox housing is apart, use following tools for shift shaft oil seal installation.

REQUIRED TOOL	
OIL SEAL INSTALLER (GEARBOX) (P/N 529 035 758)	
HANDLE (P/N 420 877 650)	

NOTICE Oil seal must be installed with sealing lip toward gearbox.

Shift Drum Shaft Oil Seal

To replace the shift drum shaft oil seal, remove the *GBPS (GEARBOX POSITION SENSOR)*. See procedure in this subsection.

Use a suitable tube with the proper diameter to install the oil seal.

NOTICE Oil seal must be installed with sealing lip toward gearbox.

Output Shaft Oil Seal

To replace the output shaft oil seal, proceed as follows:

Remove propeller shaft screw from gearbox output shaft.

Remove rear final drive bolts.

Move the rear final drive rearward to dislodge the propeller shaft from the gearbox output shaft.

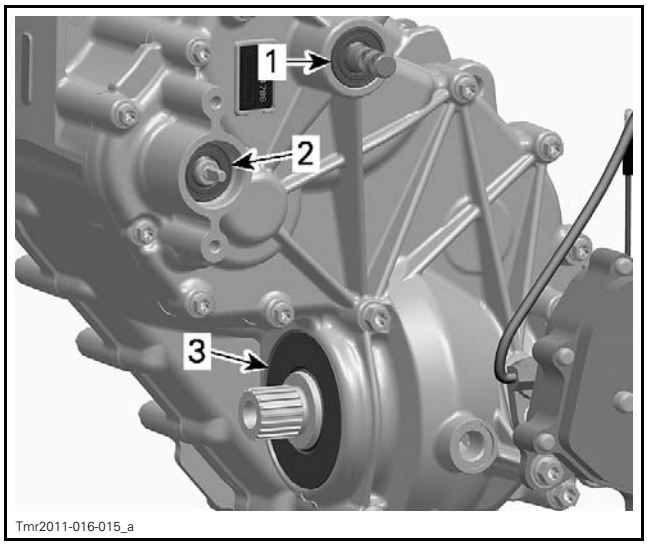

1. Shift shaft oil seal
2. Shift drum shaft oil seal
3. Output shaft oil seal

Punch a sharp screwdriver through oil seal for removal.

NOTE: Position screwdriver only in marked areas to avoid damaging the ball bearing underneath oil seal during removal.

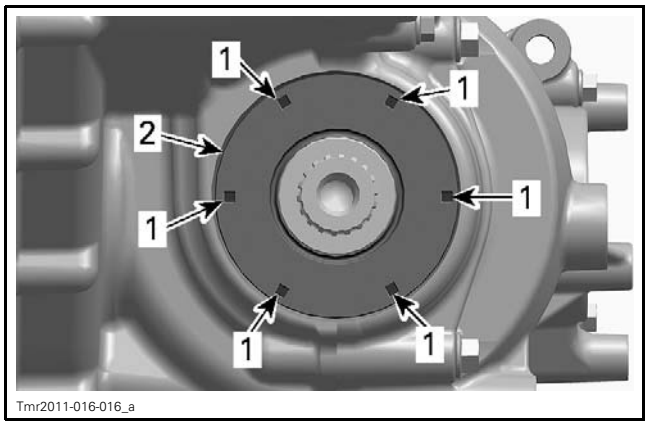

1. Marked areas for removal
2. Output shaft oil seal

Before beginning the installation ensure gearbox is set to PARK position.

Apply SUPER LUBE GREASE (P/N 293 550 030) on sealing lips.

Apply engine oil on outer diameter of oil seal to avoid damaging it during installation.

Place oil seal on output shaft and install it using the following tools.

REQUIRED TOOLS AND PARTS	
OIL SEAL INSTALLER (P/N 529 036 204)	
Flat washer (P/N 250 200 102)	
M12 x 1.25 x 35 hexagonal screw	

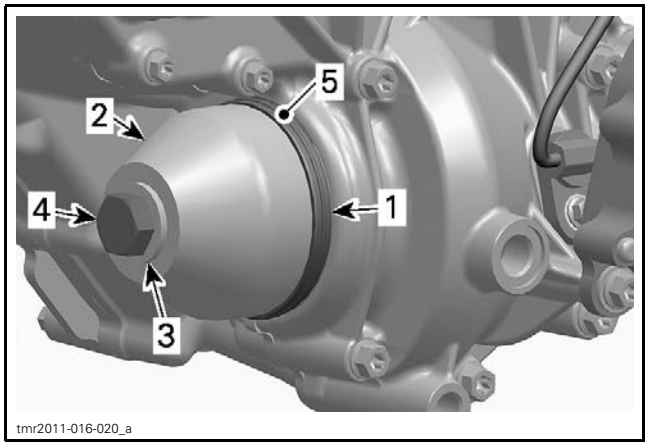

1. Output shaft oil seal
2. Oil seal installer
3. Flat washer (P/N 250 200 102)
4. M12 x 1.25 x 35 hexagonal screw (P/N 207 683 544)
5. Apply engine oil on outer diameter of oil seal

GEARBOX

Gearbox Removal

Remove engine from vehicle. Refer to *ENGINE REMOVAL AND INSTALLATION* for the procedure.

Refer to *CONTINUOUSLY VARIABLE TRANSMISSION (CVT)* subsection to remove following parts:
– CVT cover
– Drive and driven pulleys
– CVT air guide.

Drain gearbox. Refer to *GEARBOX OIL REPLACEMENT* in *PERIODIC MAINTENANCE PROCEDURES* subsection.

Remove *ACTUATOR*, see procedure in this subsection.

Unscrew the four (4) nuts that attach the gearbox to the engine.

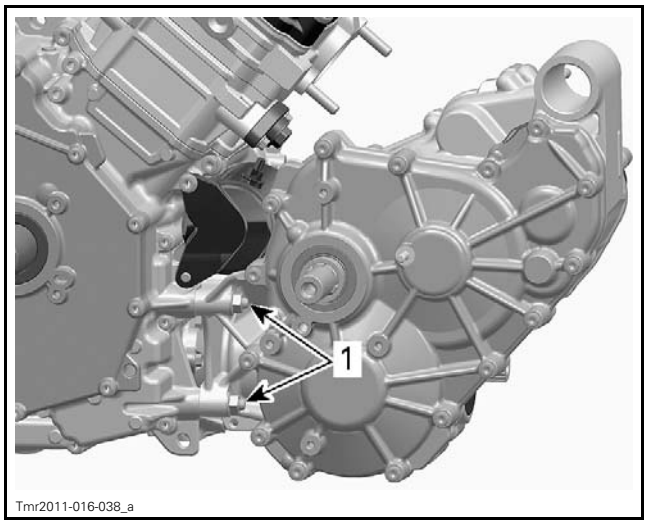

LH SIDE OF ENGINE
1. Nut M8

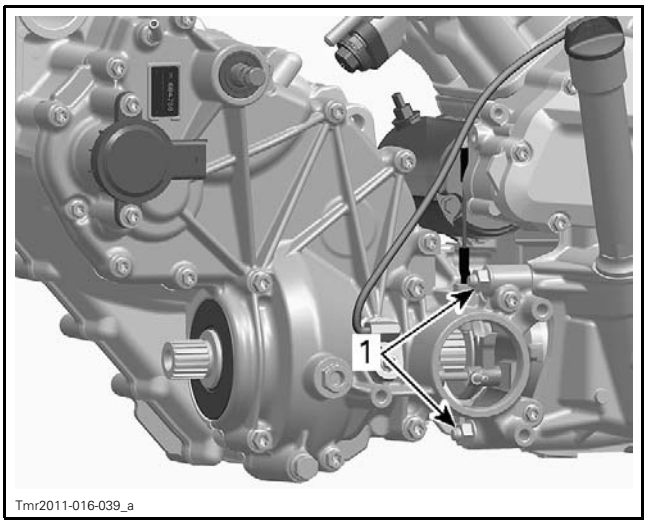

RH SIDE OF ENGINE
1. Nut M8

Pull gearbox to separate it from engine.

Gearbox Disassembly

NOTE: During gearbox disassembly, inspect the condition of each part closely.

Gearbox Left Cover

Set gearbox to NEUTRAL position.

Unscrew all bolts retaining the gearbox left cover.

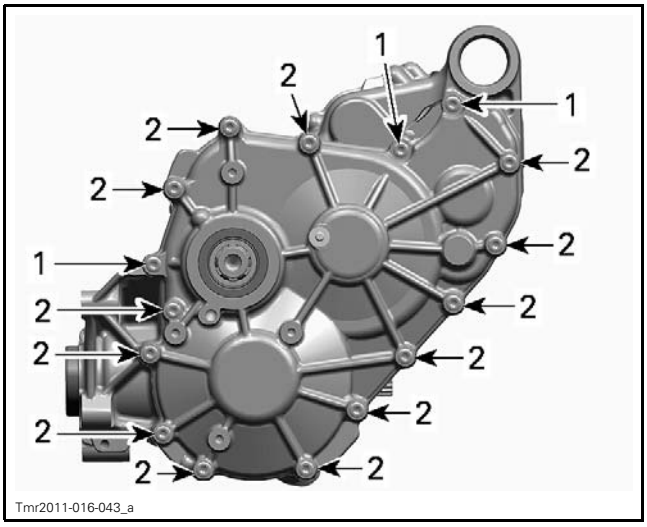

1. 3 screws M6 x 35
2. 13 screws M6 x 55

Place the center housing on a wood stand, left cover pointing upwards.

Using a big flat screwdriver and a soft hammer to lift the left cover.

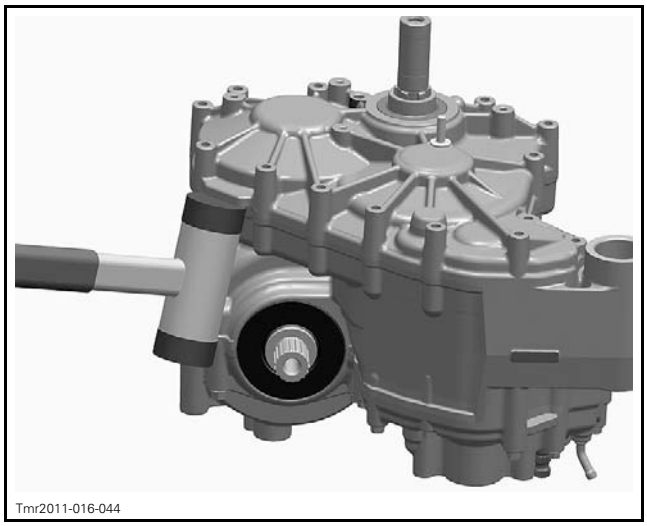

POSITION FOR SOFT HAMMER

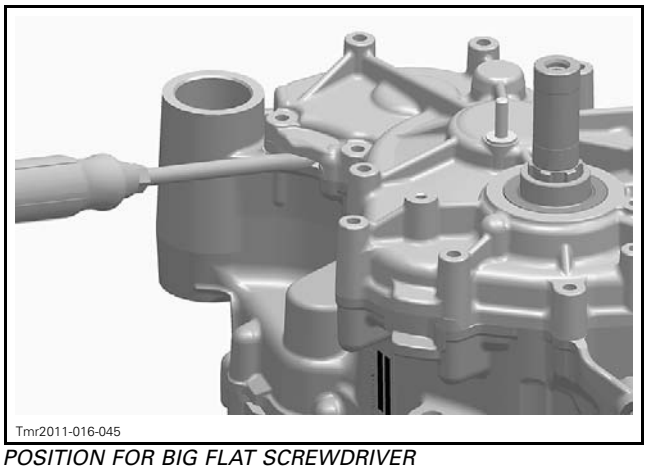

POSITION FOR BIG FLAT SCREWDRIVER

Index Lever and Index Washer

Set gearbox to NEUTRAL position.

Remove screw retaining the index washer to the shift drum.

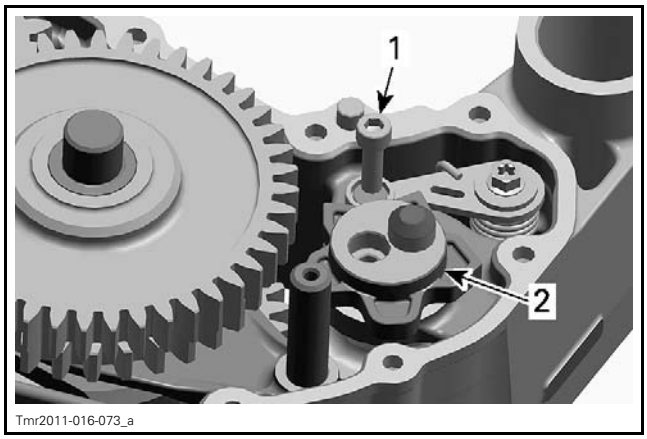

1. Screw
2. Index washer

Insert a flat screwdriver in the slot of index lever. Turn screwdriver clockwise and remove index washer.

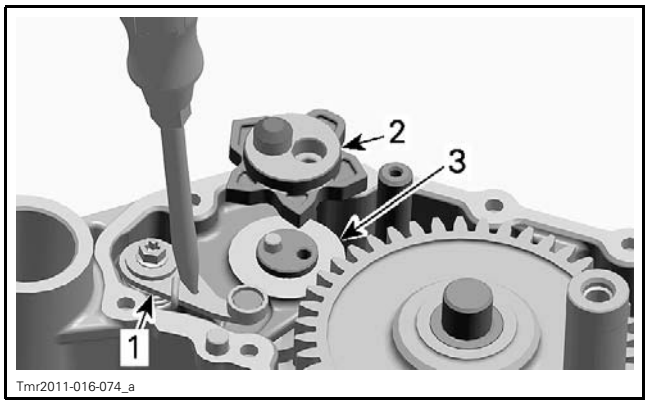

Tmr2011-016-074_a

1. Index lever
2. Index washer
3. Shift drum

Remove the index lever with washer, step ring and spring.

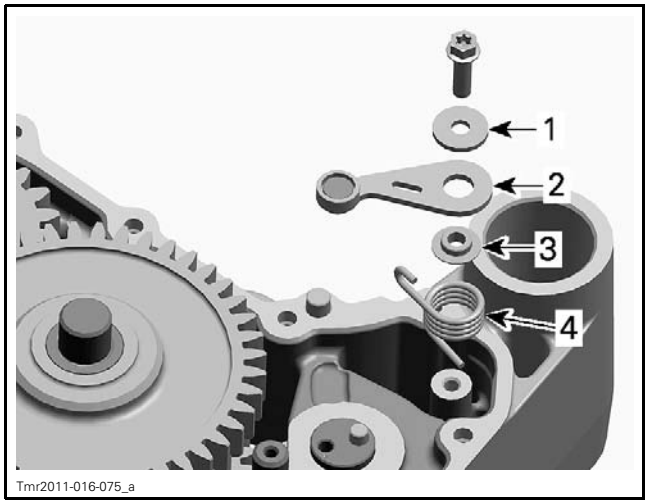

Tmr2011-016-075_a

1. Washer
2. Index lever
3. Step ring
4. Index spring

Main Shaft and Shift Forks

Remove bearing pin, reverse intermediate gear and thrust washers.

NOTE: Take care not to lose lower thrust washer during removal.

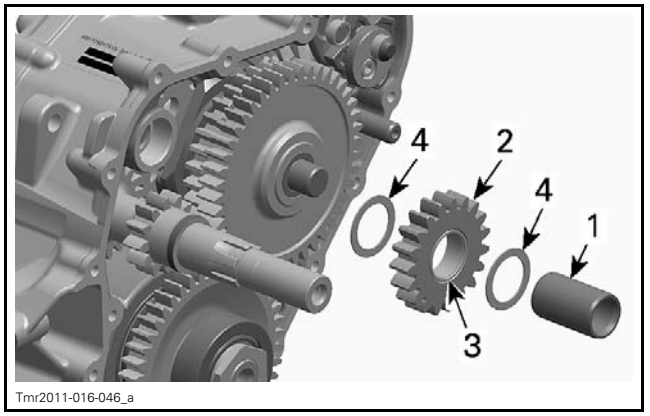

Tmr2011-016-046_a

1. Bearing pin
2. Reverse intermediate gear
3. Needle bearing
4. Thrust washers

Remove shift fork shaft.

Disengage shift forks from shift drum.

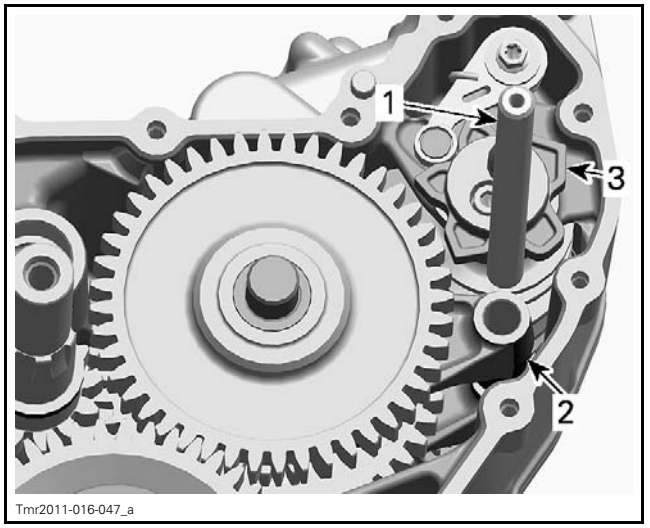

Tmr2011-016-047_a

1. Shift fork shaft
2. Shift fork
3. Shift drum

Remove main shaft assembly with shift fork.

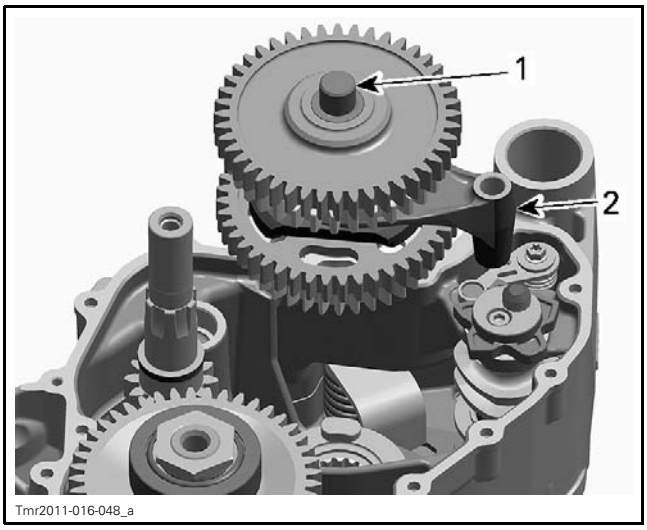

1. Main shaft assembly
2. Shift fork

Remove shifting sleeve (HIGH range gear) and shift fork.

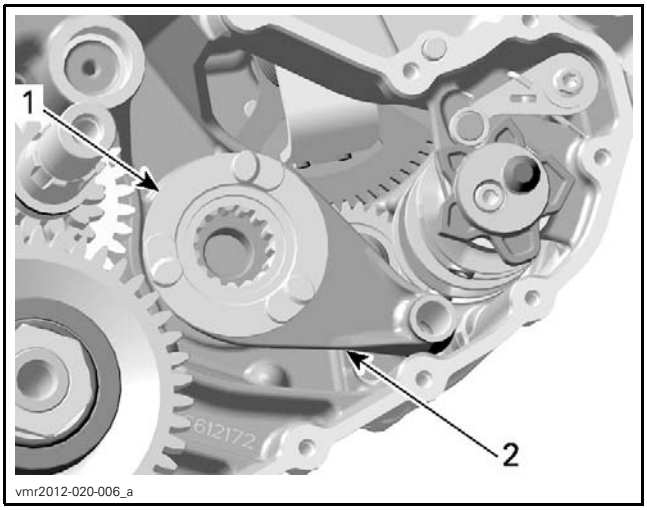

1. Shifting sleeve (HIGH range gear)
2. Shift fork

When required, remove from main shaft assembly:
– Snap ring (discard)
– HIGH range gear
– LOW range gear
– Needle bearings.

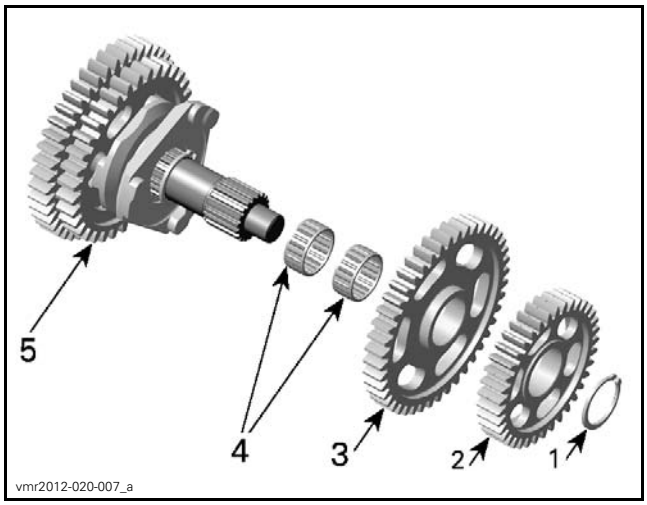

1. Snap ring
2. Free pinion (HIGH range gear)
3. Free pinion (LOW range gear)
4. Needle bearing
5. Main shaft assembly

Remove from main shaft assembly:
– Snap ring (discard)
– Shifting sleeve (LOW/REVERSE range gear)
– Snap ring (discard)
– REVERSE range gear
– Needle bearing.

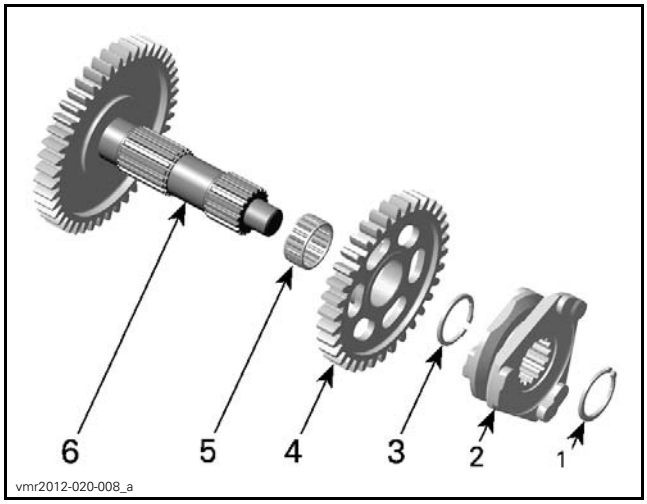

1. Snap ring
2. Shifting sleeve (LOW/REVERSE range gear)
3. Snap ring
4. Free pinion (REVERSE range gear)
5. Needle bearing
6. Main shaft assembly

Gearbox Right Cover

Remove *ACTUATOR* and *GBPS (GEARBOX POSITION SENSOR)*, see procedures in this subsection.

Unscrew all bolts retaining the gearbox right cover.

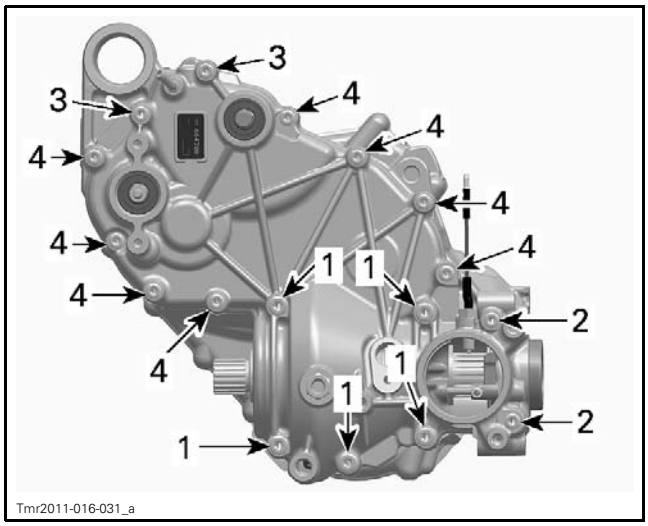

1. *5 screws M8 x 55*
2. *2 screws M6 x 85*
3. *2 screws M6 x 55*
4. *8 screws M6 x 35*

To remove cover, use 2 big screwdrivers.

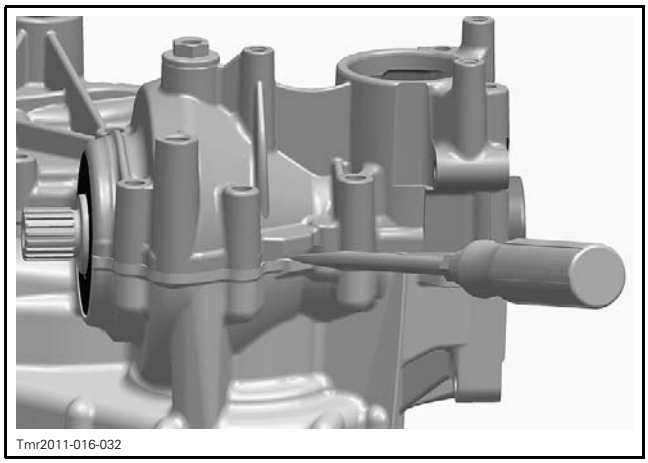

POSITION FOR BIG FLAT SCREWDRIVER

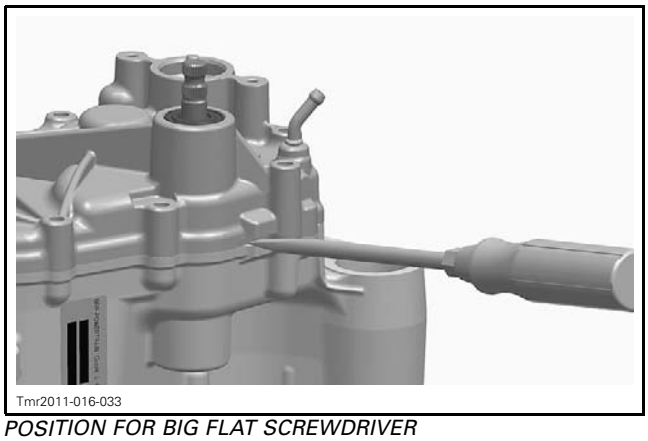

POSITION FOR BIG FLAT SCREWDRIVER

Shift Shaft and Shift Drum

Withdraw shift shaft assembly.

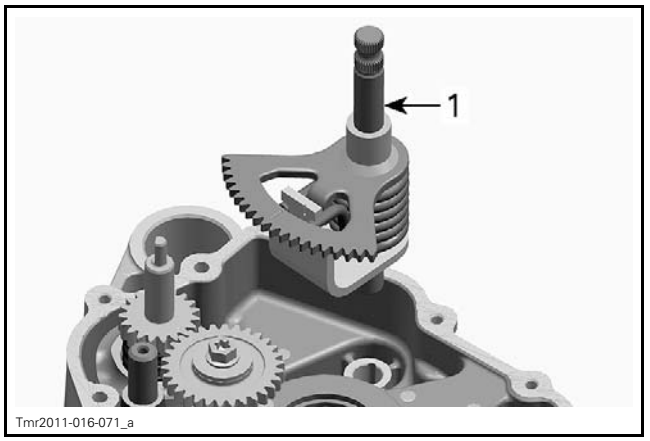

1. *Shift shaft assembly*

Remove screw retaining the shifting intermediate gear.

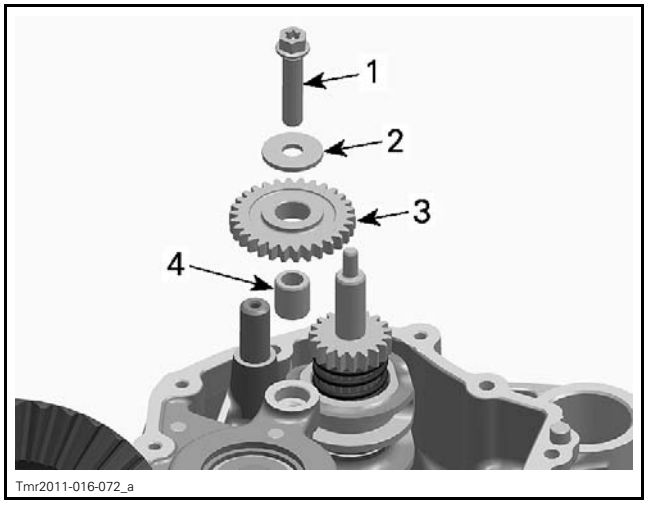

1. *Screw*
2. *Washer*
3. *Intermediate gear*
4. *Dowel pin*

Remove shift fork shaft.

Disengage shift forks from shift drum.

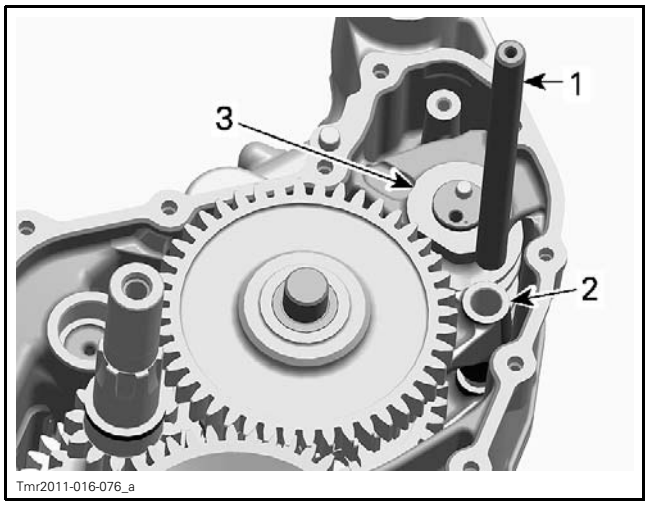

1. *Shift fork shaft*
2. *Shift fork*
3. *Shift drum*

Remove shift drum and thrust washer.

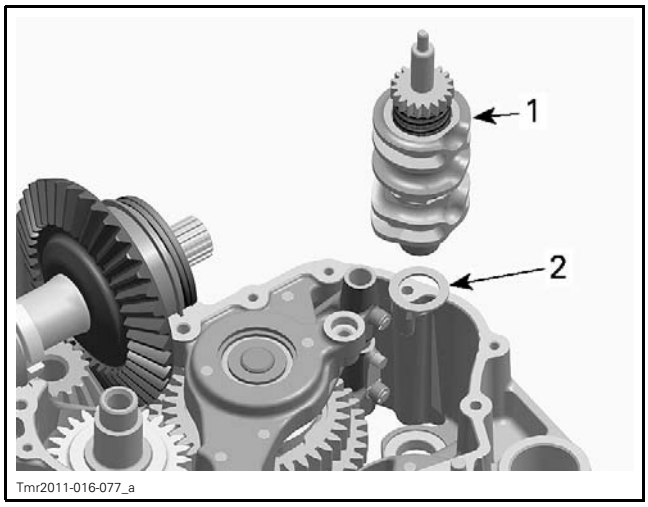

1. *Shift drum*
2. *Thrust washer*

Output Shaft and 4X4 Coupling Mechanism

Remove output shaft from center housing and withdraw 4X4 coupling sleeve.

NOTICE **Use a soft hammer to remove output shaft.**

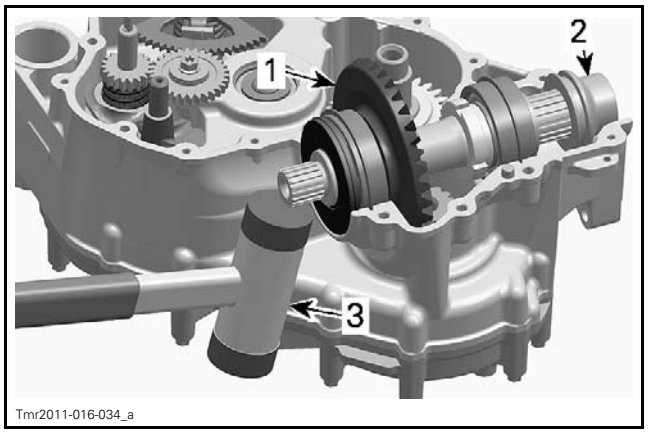

1. *Output shaft*
2. *4X4 coupling sleeve*
3. *Soft hammer*

Remove set screw, coupling fork shaft and coupling fork from right cover.

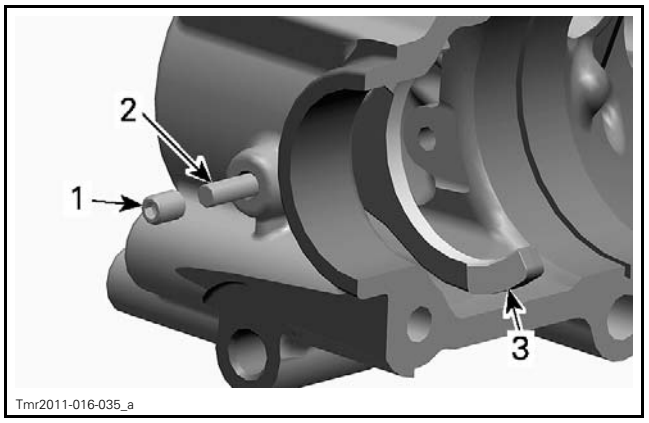

1. *Set screw*
2. *Coupling fork shaft*
3. *Coupling fork*

Countershaft

Use a soft hammer to push out countershaft from gearbox CVT side.

Remove distance sleeve and O-ring.

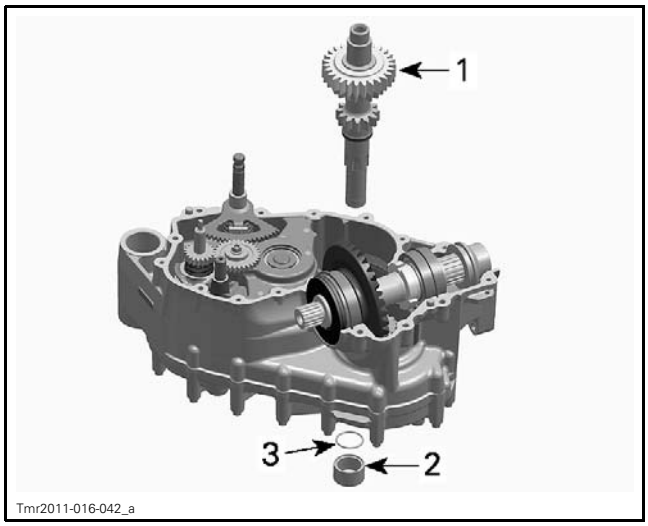

1. *Countershaft*
2. *Distance sleeve*
3. *O-ring*

Gearbox Bearings

If necessary heat housing up to 100°C (212°F) before removing ball bearings.

⚠ WARNING

Clean oil, outside and inside, from housing before heating.

NOTICE **Always support gearbox housings properly when ball bearings are removed. Housing damages may occur if this procedure is not performed correctly.**

To remove ball bearings of countershaft (right cover) and main shaft (left cover) use following tool.

REQUIRED TOOL	
BLIND HOLE BEARING PULLER SET (P/N 529 036 117)	

Remove screw securing the countershaft bearing in the left cover.

For ball bearings of countershaft (left cover) and main shaft (center housing) push with a suitable puller from outside in.

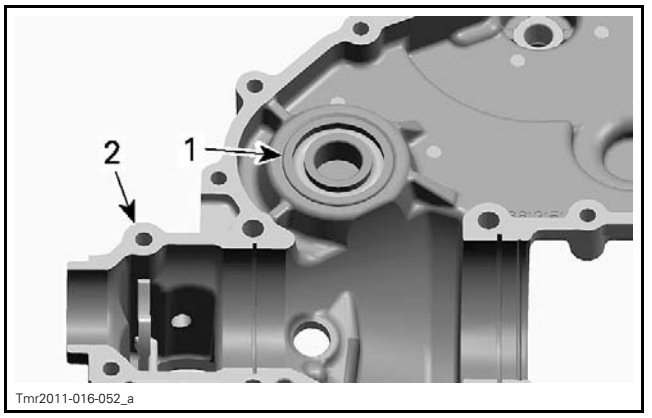

1. *Ball bearing countershaft*
2. *Right cover*

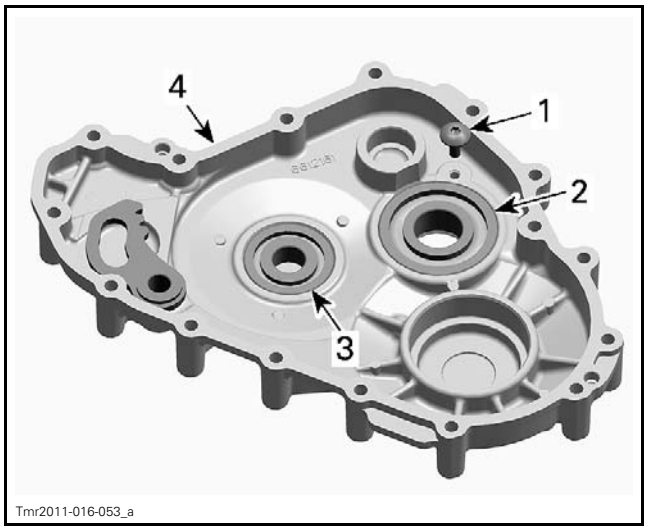

1. *Screw*
2. *Ball bearing countershaft*
3. *Ball bearing main shaft*
4. *Left cover*

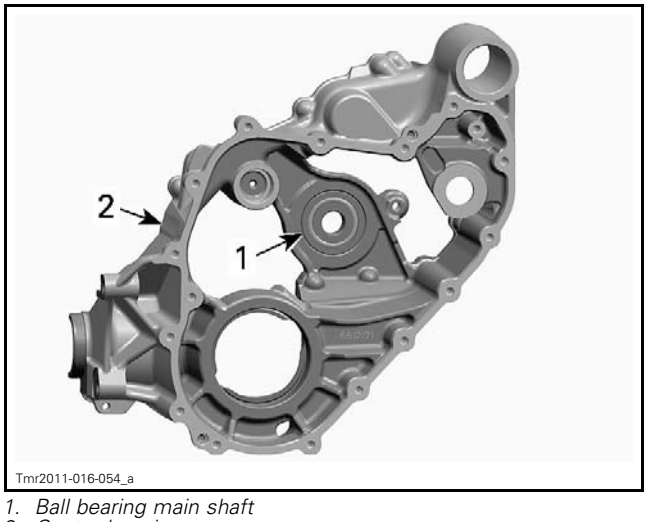

1. *Ball bearing main shaft*
2. *Center housing*

Gearbox Inspection

Always verify for the following when inspecting gearbox components:
- Gear teeth damage
- Worn or scoured bearing surfaces
- Rounded engagement dogs and slots
- Worn shift fork engagement groove
- Worn splines on shafts and shifting sleeves.

Bearings

Check if ball bearings turn freely and smoothly.

Check all bearings, bearing points, tooth flanks and taper grooves.

Free Pinions

NOTE: Always replace snap rings and use special pliers to install them.

Check free pinions for wear.

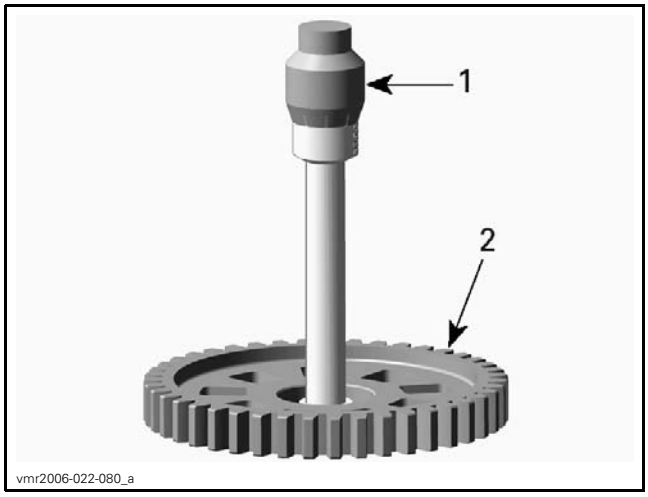

TYPICAL
1. Micrometer
2. Free pinion

DIAMETER FREE PINION	
NEW	29.000 mm to 29.013 mm (1.1417 in to 1.1422 in)
SERVICE LIMIT	29.015 mm (1.1423 in)

Shifting Sleeves

Check shifting sleeves for worn inner splines and rounded or damaged engagement dogs.

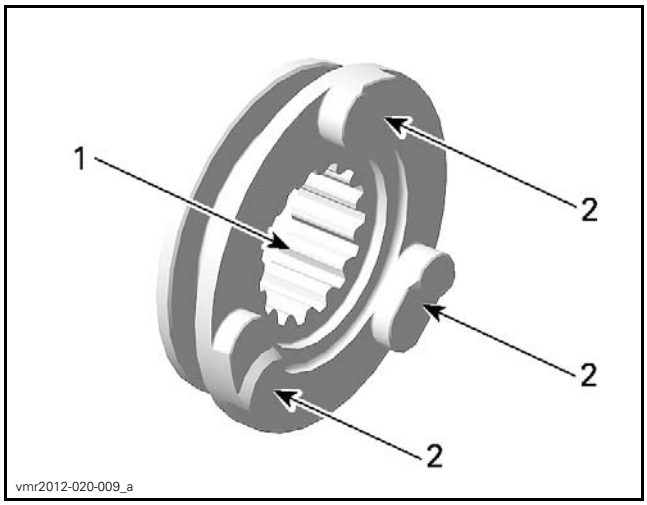

TYPICAL
1. Inner splines
2. Engagement dogs

Measure the width of shift fork engagement groove.

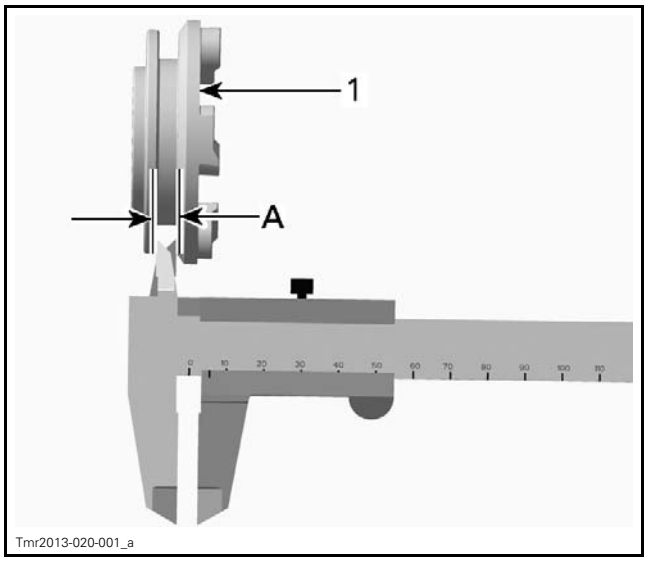

TYPICAL
1. Shifting sleeve
A. Width of shift fork engagement groove

WIDTH OF SHIFT FORK ENGAGEMENT GROOVE	
NEW	5.30 mm to 5.40 mm (.209 in to .213 in)
SERVICE LIMIT	5.50 mm (.217 in)

Shafts

Check bearing pin of reverse intermediate gear for wear.

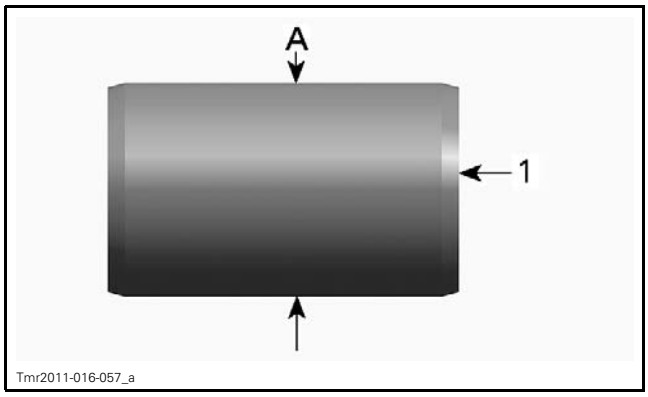

1. Bearing pin
A. Outer diameter

BEARING PIN OUTER DIAMETER	
NEW	24.987 mm to 25.000 mm (.984 in to .984 in)
SERVICE LIMIT	24.977 mm (.9833 in)

Check countershaft bearing journals for wear.

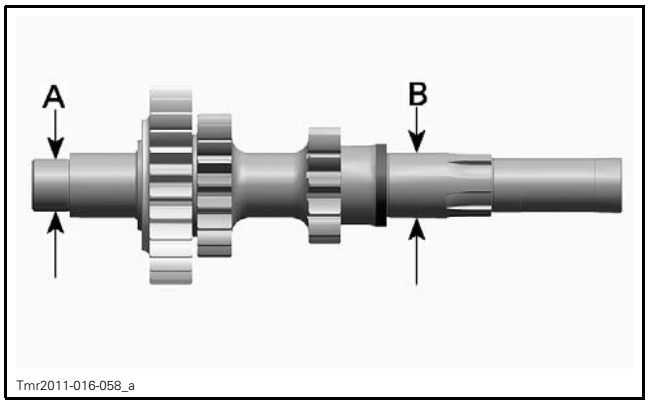

A. MAG side
B. Bearing journal CVT side

COUNTERSHAFT BEARING JOURNALS	
MAG SIDE	
NEW	19.977 mm to 19.990 mm (.786 in to .787 in)
SERVICE LIMIT	19.973 mm (.786 in)
CVT SIDE	
NEW	24.977 mm to 24.990 mm (.983 in to .984 in)
SERVICE LIMIT	24.970 mm (.983 in)

Check main shaft for wear.

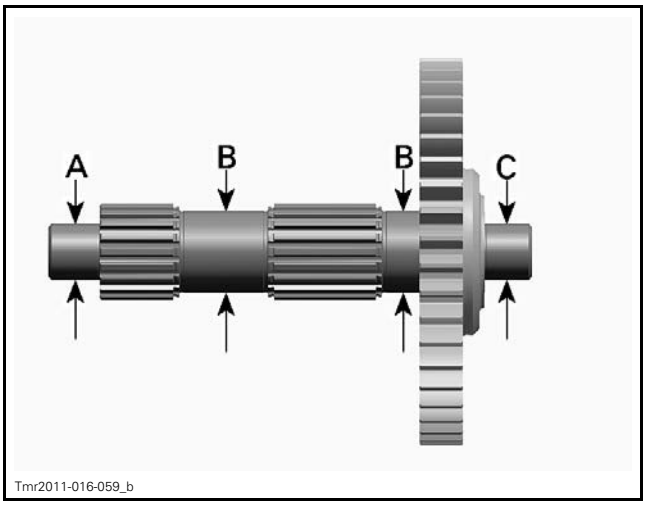

A. Bearing journal MAG side
B. Free pinion bearing
C. Bearing journal CVT side

MAIN SHAFT	
FREE PINION BEARING	
NEW	24.987 mm to 25.000 mm (.984 in to .984 in)
SERVICE LIMIT	24.984 mm (.984 in)
BEARING JOURNAL CVT/MAG SIDE	
NEW	16.980 mm to 16.991 mm (.669 in to .669 in)
SERVICE LIMIT	16.976 mm (.668 in)

Shift Shaft

Check shift shaft for worn splines and gears.

Check shift shaft spring for damages.

Shift Drum

NOTICE Do not disassemble shift drum.

Check if shifting gates move easily on shift drum splines and check condition of springs.

Check shift drum tracks for scouring or heavy wear, like rounded engagement slots.

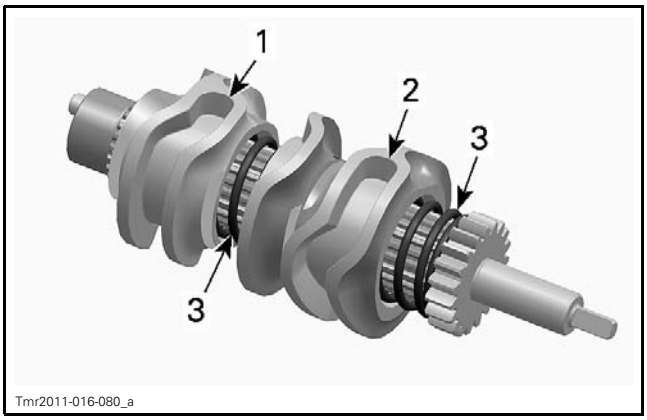

1. Track for the low/reverse range gear shift fork
2. Track for the high range gear shift fork
3. Springs

Shift Forks

Check both shift forks for visible damage, wear or bent shift fork claws.

Check engagement rollers for wear and smooth movement.

Measure the shift fork claw thickness.

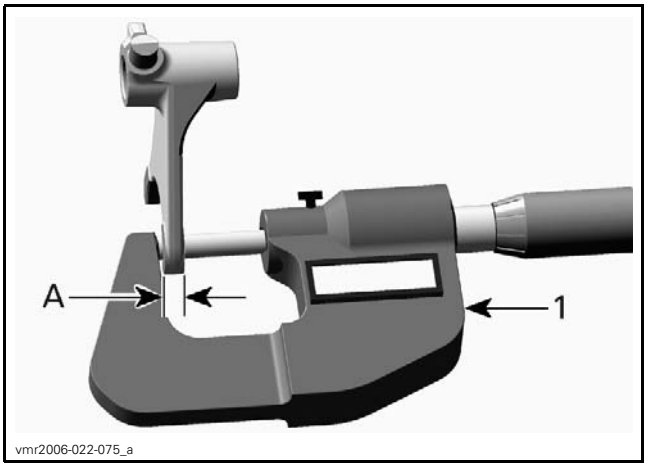

1. Micrometer
A. Shift fork claw thickness

SHIFT FORK CLAW THICKNESS	
NEW	5.10 mm to 5.20 mm (.201 in to .205 in)
SERVICE LIMIT	5.00 mm (.197 in)

Shift Fork Shaft

Check shift fork shaft for visible damage or wear.

Check if shift fork shaft is straight.

Index Lever and Parking Lever

Index lever with roller must move freely.

Check parking lever for cracks or other damages.

Output Shaft

Check output shaft and its gear for cracks, bend, pitting or other visible damages.

Check output shaft splines for wear or other damages.

Check if the output shaft bearings turn freely and smoothly.

Replace oil seal if brittle, hard or damaged.

4X4 Coupling Sleeve

Check splines of coupling sleeve for wear or other damages.

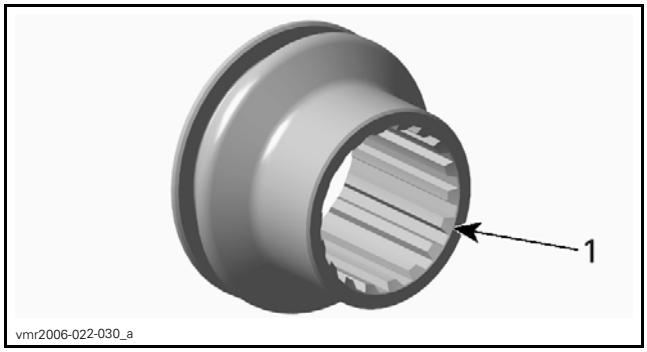

1. Inspect splines

Measure the coupling sleeve groove width.

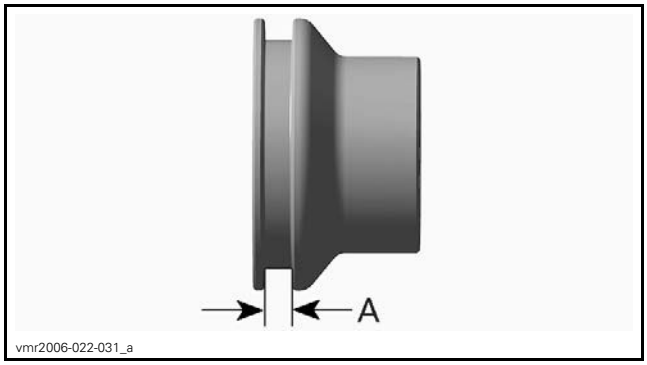

A. Groove width

COUPLING SLEEVE GROOVE WIDTH	
NEW	5.25 mm to 5.35 mm (.207 in to .211 in)
SERVICE LIMIT	5.50 mm (.217 in)

Coupling Fork

Check coupling fork for visible damage, wear or bent coupling fork claws.

Check coupling fork claw thickness.

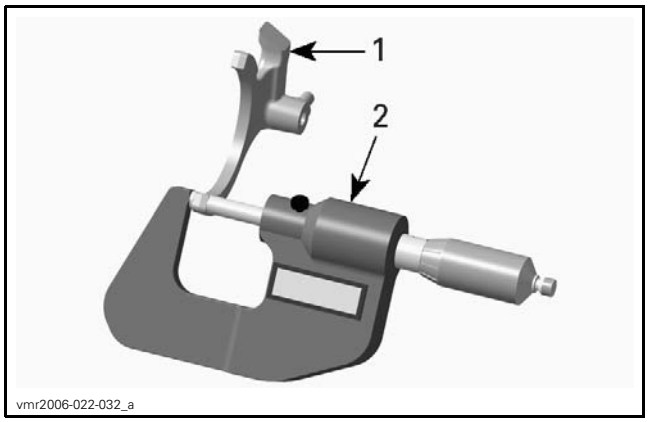

1. Coupling fork
2. Micrometer

COUPLING FORK CLAW THICKNESS	
NEW	4.95 mm to 5.05 mm (.195 in to .199 in)
SERVICE LIMIT	4.80 mm (.189 in)

Gearbox Assembly

The assembly of gearbox is essentially the reverse of disassembly procedure. However, pay attention to the following details.

Gearbox Bearings

Unless otherwise instructed, never use hammer to install ball bearings. Use press machine only.

If necessary heat housings up to 100°C (212°F) before installing ball bearings.

⚠ WARNING

Clean oil, outside and inside, from housing before heating.

Place new bearing in freezer for 10 minutes before installation.

Use a suitable installer for installing ball bearings of countershaft and main shaft.

NOTE: Place gearbox housings on a wood stand before installing ball bearings.

Install new oil seals with the proper installer (refer to *OIL SEALS* in this subsection).

Main Shaft and Shift Forks

Install NEW snap rings.

NOTE: Ensure snap rings are installed in the grooves properly.

Install free pinion (REVERSE range gear) and shifting sleeve (LOW/REVERSE range gear) properly.

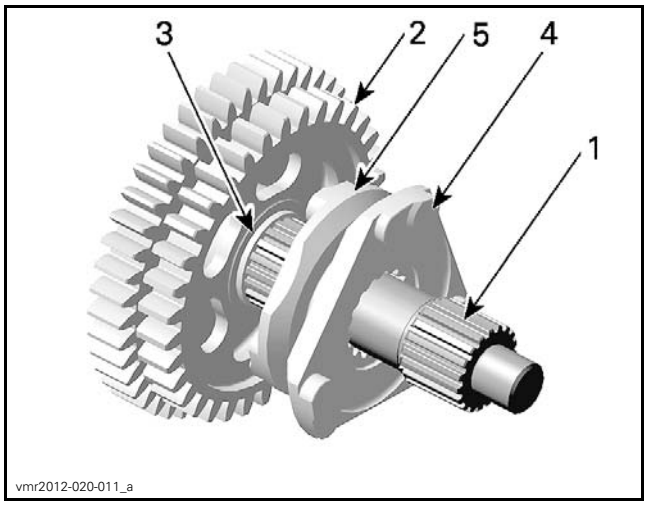

1. Main shaft
2. Free pinion (REVERSE range gear)
3. Snap ring
4. Shifting sleeve (LOW/REVERSE range gear)
5. Shifting dogs (REVERSE range gear)

Collars of free pinion (LOW range gear) and free pinion (HIGH range gear) must point together.

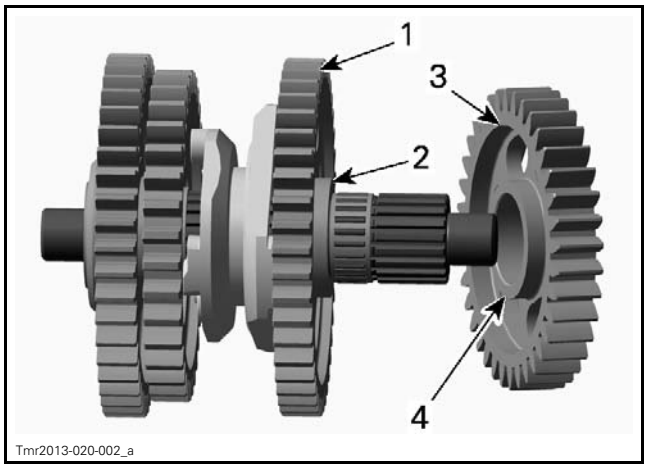

1. Free pinion (LOW range gear), 44 T
2. Collar
3. Free pinion (HIGH range gear), 36 T
4. Collar

Place shifting sleeve (HIGH range gear) with shift fork in the center of on main shaft bearing in center housing.

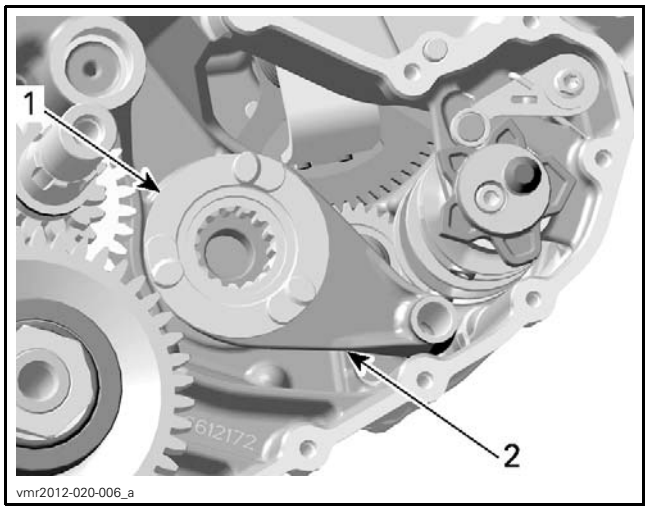

1. Shifting sleeve (HIGH range gear)
2. Shift fork

Carefully fit main shaft assembly with shift fork (LOW/REVERSE range gear) into inner splines of shifting sleeve (HIGH range gear).

Install reverse intermediate gear.

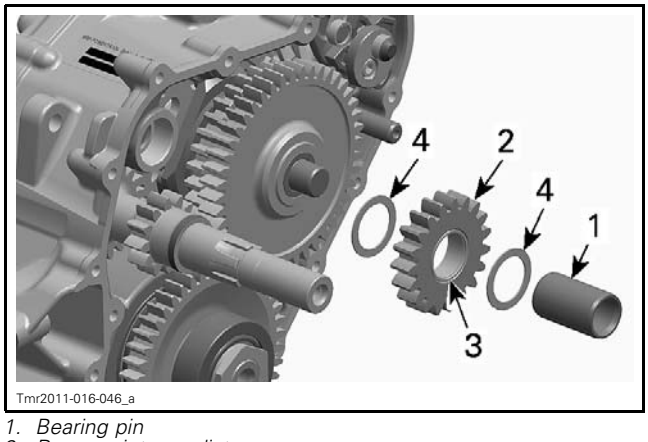

1. Bearing pin
2. Reverse intermediate gear
3. Needle bearing
4. Thrust washers

Finally engage shift forks in shift drum and install shift fork shaft.

NOTE: Run all gears as a final function check before installing left housing.

Index Lever and Index Washer

Fit step ring into index lever.

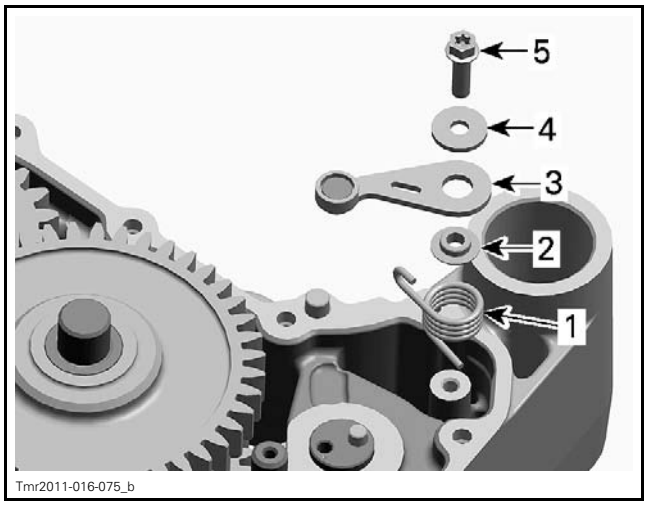

1. Index spring
2. Step ring
3. Index lever
4. Washer
5. Screw

Install index washer on shift drum.

Insert a flat screwdriver in the slot of the index lever, turn screwdriver clockwise and engage lever in index washer in neutral position as per following illustration.

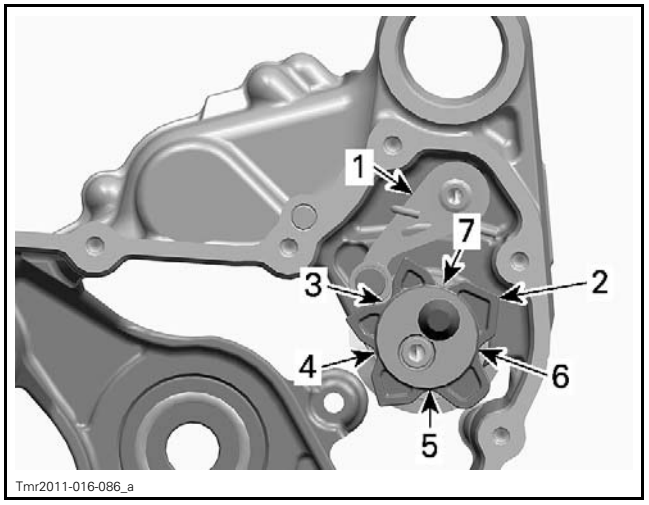

1. Index lever
2. Index washer
3. Neutral position
4. High range gear position
5. Low range gear position
6. Parking position
7. Reverse range gear position

Output Shaft and 4X4 Coupling Mechanism

Install coupling sleeve onto the output shaft.

Place the output shaft with oil seal and coupling sleeve into the center housing.

NOTE: If same oil seal is installed, turn oil seal 90° offset to its original position to avoid leakage at housing mating surface.

Install coupling fork, coupling fork shaft and set screw in right cover before applying sealant to the mating surface.

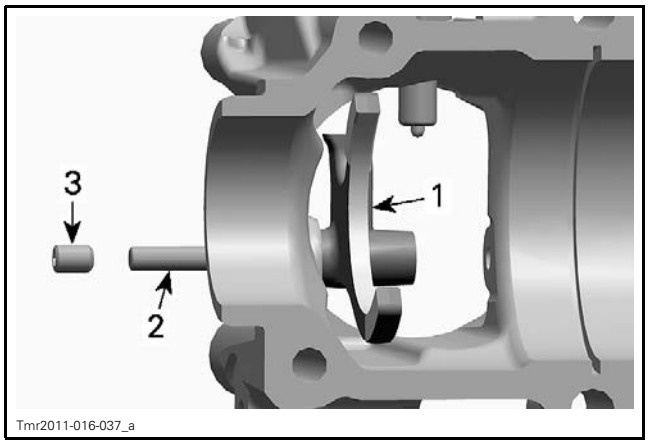

1. Coupling fork
2. Coupling fork shaft
3. Set screw

Shift Shaft and Shift Drum

Install shift drum and shift shaft.

Install shifting intermediate gear. Align its marks with the marks on shift drum gear and shift shaft.

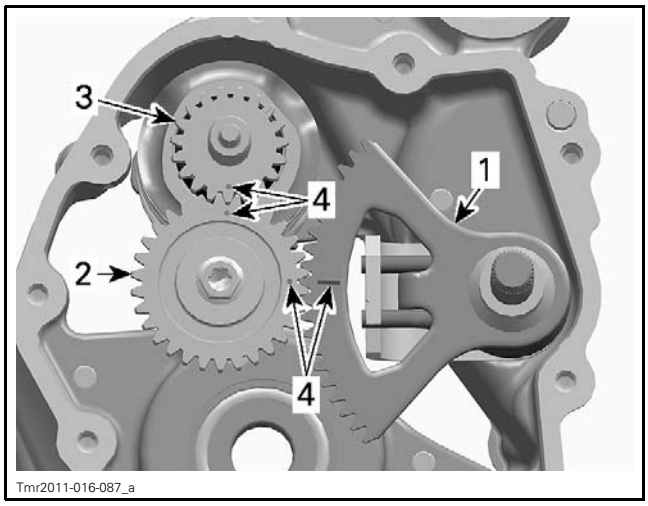

1. Shift shaft assembly
2. Shifting intermediate gear
3. Shift drum gear
4. Marks

Engage both shift fork pins in their corresponding groove on the shift drum.

Install shift fork shaft.

NOTE: Turn gears to validate proper operation.

Sealing Compound Application

NOTE: Unless otherwise specify, the procedure to apply the sealant is the same for right or left cover.

Clean all metal components in a solvent.

Gearbox housing mating surfaces are best cleaned using a combination of LOCTITE CHISEL (GASKET REMOVER) (P/N 413 708 500) and a brass brush. Brush a first pass in one direction then make the final brushing perpendicularly (90°) to the first pass cross (hatch).

NOTICE **Do not wipe with rags. Use a new clean hand towel only.**

IMPORTANT: When beginning the application of the gear housing sealant, the assembly and the first torquing should be done within 10 minutes. It is suggested to have all you need on hand to save time.

Use LOCTITE 5910 (P/N 293 800 081) on mating surfaces.

Use a plexiglass plate and apply some sealant on it. Use a soft rubber roller (50 mm - 75 mm (2 in - 3 in)), available in arts products suppliers for printing, and roll the sealant to get a thin uniform coat on the plate (spread as necessary). When ready, apply the sealant on gear housing mating surfaces.

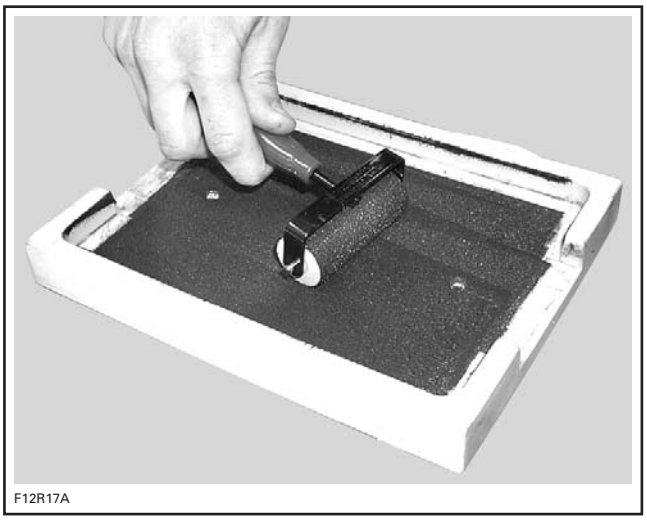

Do not apply in excess as it will spread out inside gear housing.

NOTE: It is recommended to apply this specific sealant as described here to get a uniform application without lumps. If you do not use the roller method, you may use your finger to uniformly distribute the sealant (using a finger will not affect the adhesion).

Left Cover

Apply sealing compound on mating surfaces of central housing. Refer to *SEALING COMPOUND APPLICATION*.

At installation of left cover, engage parking lock lever slot onto index washer pin.

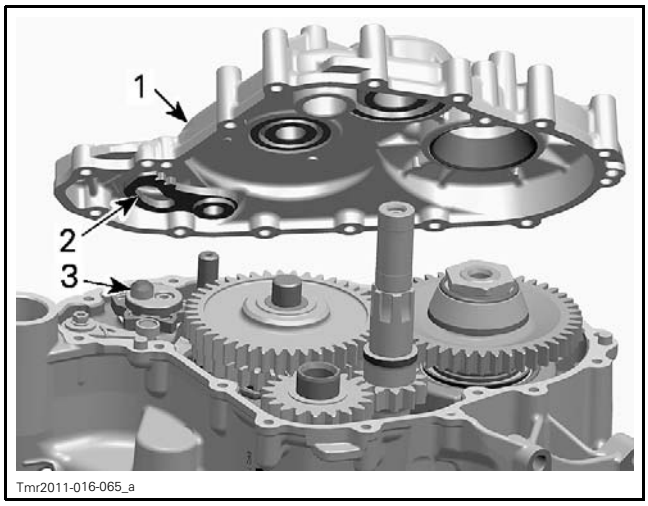

Tmr2011-016-065_a

1. Left cover
2. Parking lock lever slot
3. Index washer pin

Install all screws on left cover and tighten them as per following sequence.

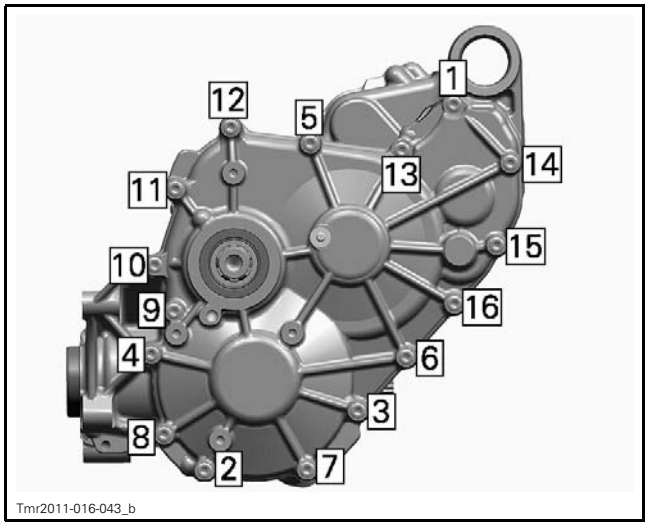

Tmr2011-016-043_b

M6 SCREWS - LEFT COVER	
Tightening torque	10 N•m ± 1 N•m (89 lbf•**in** ± 9 lbf•**in**)

Install O-ring including distance sleeve on countershaft CVT side.

NOTICE **Place O-ring including distance sleeve right away. Chamfered bore of distance sleeve has to face the gearbox.**

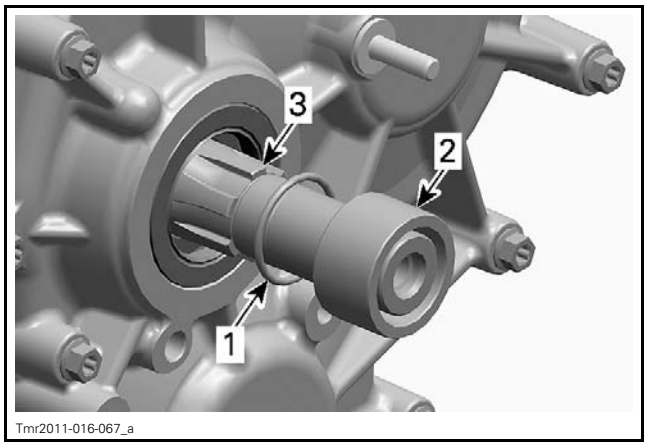

Tmr2011-016-067_a

COUNTERSHAFT END CVT SIDE
1. O-ring
2. Distance sleeve
3. Countershaft end CVT side

Right Cover

Apply sealing compound on mating surfaces of central housing. Refer to *SEALING COMPOUND APPLICATION*.

To install the right cover align the coupling fork with the groove in the coupling sleeve.

Install all screws on right cover and tighten them as per following sequence.

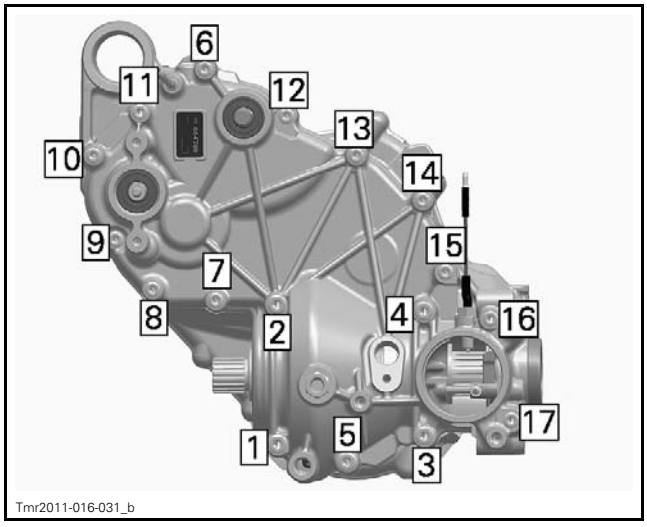

Tmr2011-016-031_b

SCREWS - RIGHT COVER	
Tightening torque - M6	10 N•m ± 1 N•m (89 lbf•**in** ± 9 lbf•**in**)
Tightening torque - M8	25 N•m ± 3 N•m (18 lbf•ft ± 2 lbf•ft)

Install the actuator, refer to *ACTUATOR*.

Gearbox Installation

For installation reverse the removal procedure. Pay attention to following.

Before gearbox installation check O-ring in bearing cover if brittle, hard or damaged. Replace if necessary.

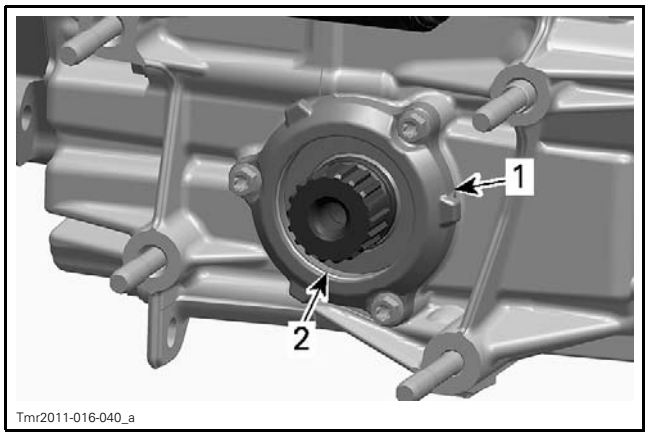

1. Bearing cover
2. O-ring

After installation refill gearbox oil, refer to *PERIODIC MAINTENANCE PROCEDURES*.

SHIFTER

SERVICE TOOLS

Description	Part Number	Page
TRANSMISSION ADJUSTMENT TOOL	529 036 252	3

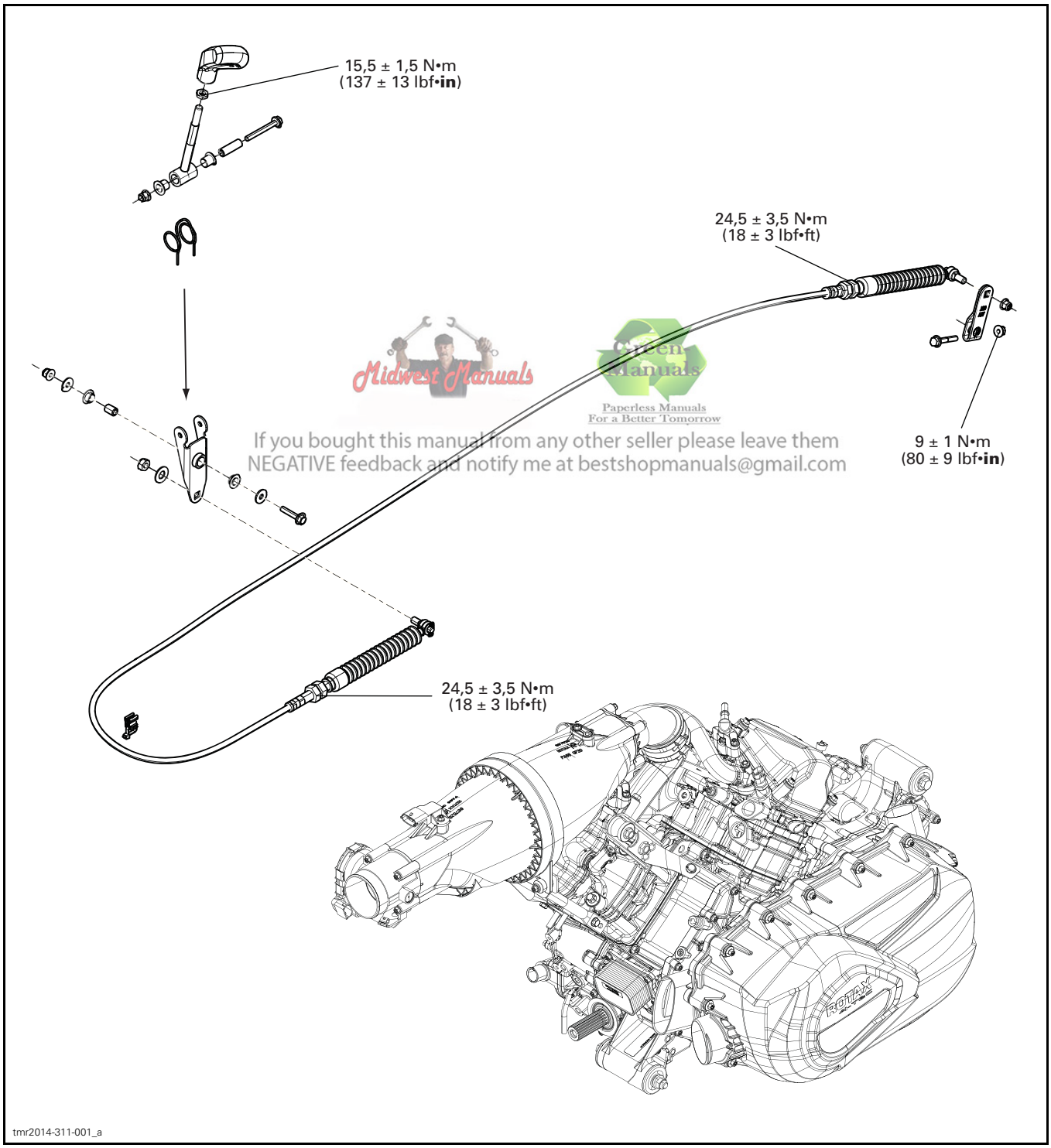

Midwest Manuals
Green Manuals
Paperless Manuals
For a Better Tomorrow
If you bought this manual from any other seller please leave them
NEGATIVE feedback and notify me at bestshopmanuals@gmail.com

PROCEDURES

SHIFT LEVER

Shift Lever Access

1. Refer to *BODY* subsection and remove the following components:
   – Seats
   – Lower console
   – RH and LH lateral console panels.

NOTE: Move upper console upwards to access to lower console.

Shift Lever Removal

1. Place vehicle on a level surface.
2. Place shift lever in NEUTRAL position.
3. Secure vehicle using wheel blocks.
4. Unscrew shift lever handle.

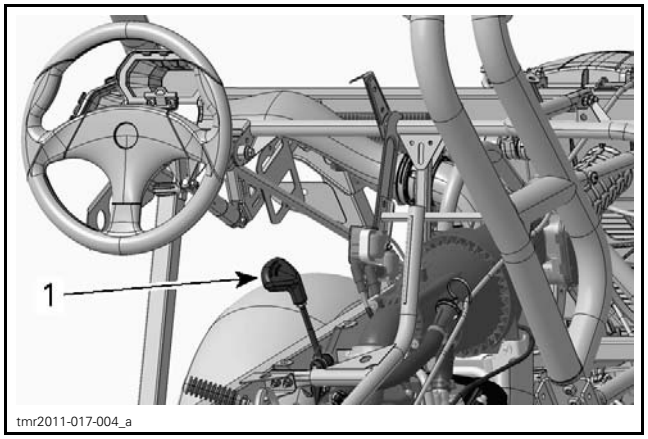

TYPICAL
1. Shift lever handle

5. On CE models, remove locking device from vehicle.

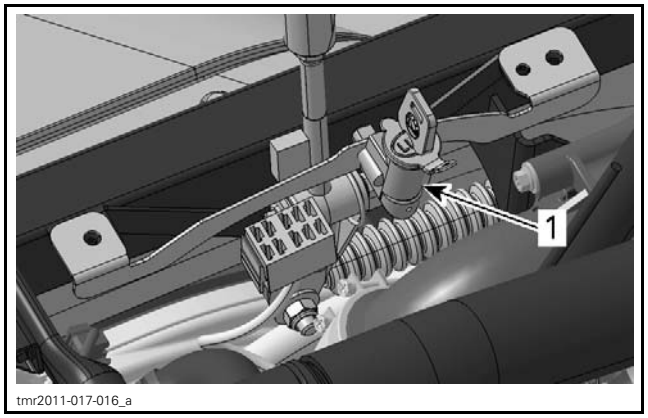

CE MODELS
1. Locking device

6. Detach shifter cable from shift lever by removing nut and washer.

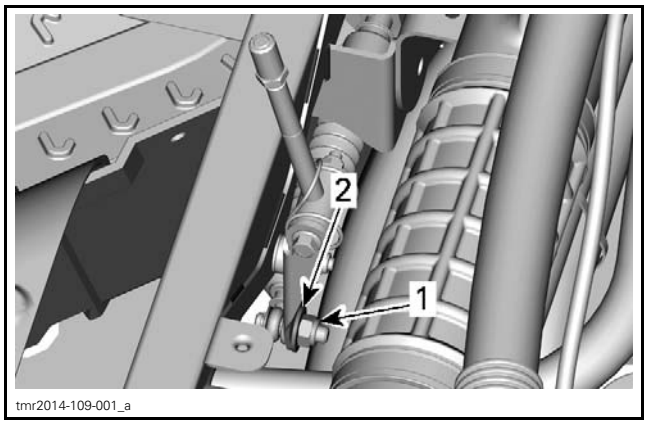

1. Shift lever nut
2. Shift lever washer

7. Remove shift lever pivot bolt, washers and nut.

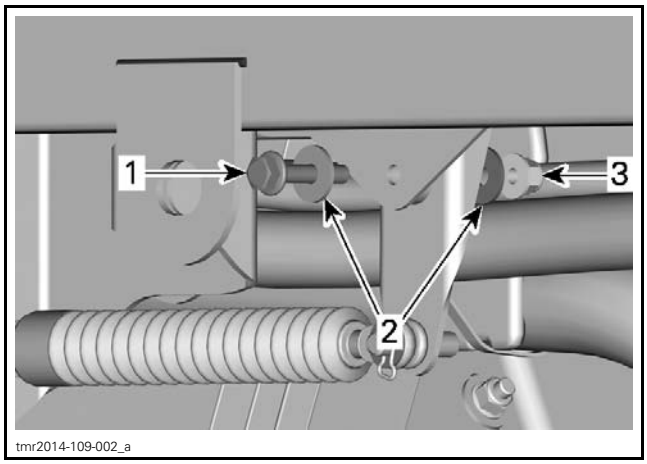

1. Shift lever pivot bolt
2. Shift lever pivot washers
3. Shift lever pivot nut

8. Remove shift lever.

Shift Lever Inspection

Check shift lever for bending or cracks.

Check spring and bushing condition.

Replace all damaged parts.

Shift Lever Installation

The installation is the reverse of the removal procedure. However, pay attention to the following.

Adjust shift lever handle as per the following illustration.

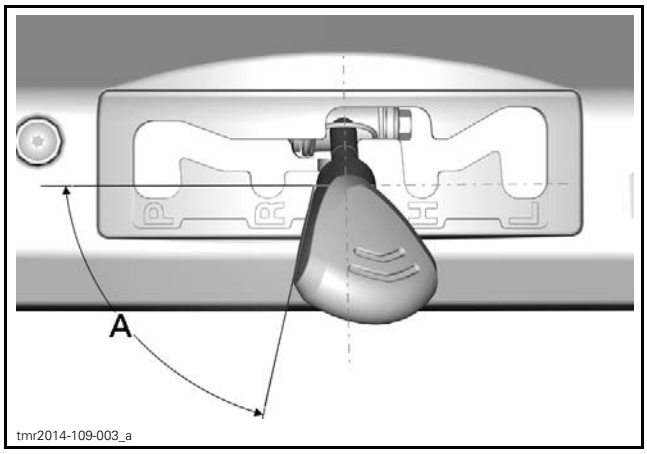

SHIFT LEVER HANDLE ANGLE
A. 78° ± 5°

Tighten shift lever handle nut to specification.

SHIFT LEVER HANDLE NUT	
Tightening torque	15.5 N•m ± 1.5 N•m (137 lbf•**in** ± 13 lbf•**in**)

Adjust shifter cable, refer to *SHIFTER CABLE ADJUSTMENT* in this subsection.

SHIFTER CABLE

Shifter Cable Adjustment

REQUIRED TOOLS		
TRANSMISSION ADJUSTMENT TOOL (P/N 529 036 252)		
T1	Shift Lever Locking Tool (included in P/N 529 036 252)	
T2	Shift Plate Locking Tool (included in P/N 529 036 252)	

1. Place shift lever in **NEUTRAL** position.

NOTICE **Move vehicle back and forth to ensure gearbox is set in neutral position.**

2. Secure vehicle using wheel blocks.
3. Remove body parts as required. Refer to *SHIFT LEVER ACCESS* in this subsection.
4. Loosen shift lever end cable adjustment nuts.

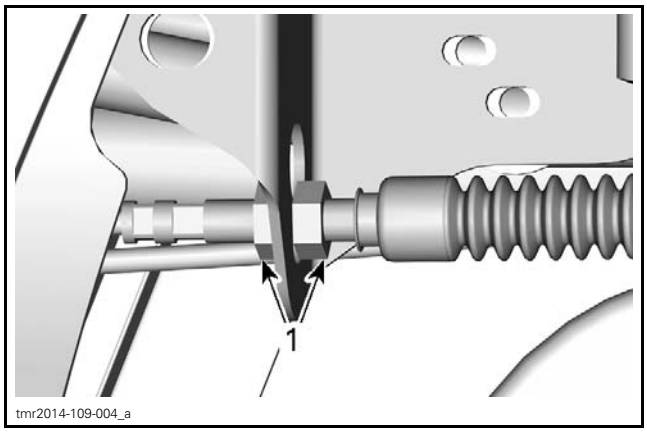

1. Adjustment nuts

5. Rock forward and backward the shift plate on the gearbox to ensure it is well centered in the "N" position.
6. Using the shift plate locking tool **no. T2**, lock shift plate with and screwed the knob in the rear cylinder head.

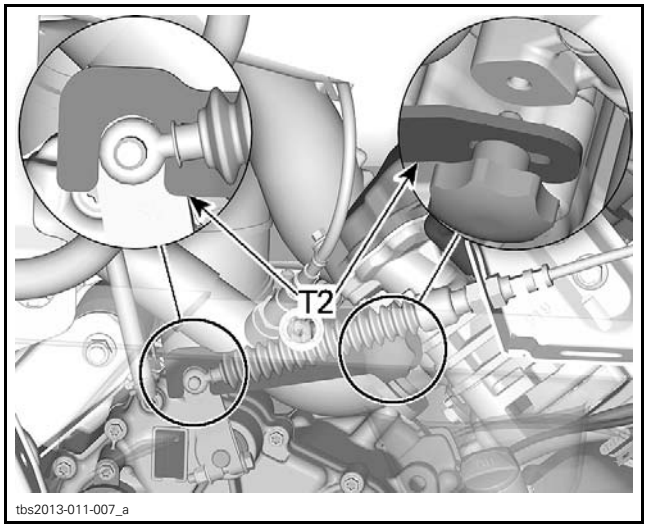

7. Insert the shift lever locking tool **no. T1** in shift lever indicator to lock shift lever in place. Leave a gap of 2 mm to 3 mm (5/64 in to 1/8 in) between locking tool and shift lever.

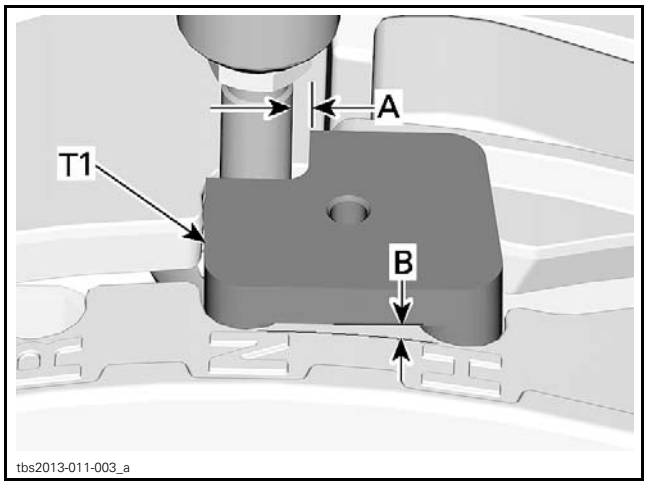

A. Gap between shift lever and locking tool
B. Normal angle between shift lever indicator and locking tool

8. Tighten the cable front adjustment nut by hand until gap between shift lever and locking tool disappear.
9. Tighten second adjustment nut to specification.

CABLE FRONT ADJUSTMENT NUT	
Tightening torque	24.5 N•m ± 3.5 N•m (18 lbf•ft ± 3 lbf•ft)

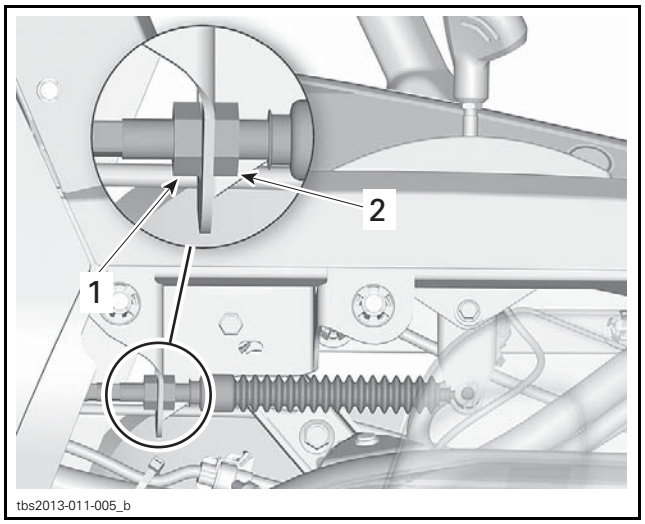

TYPICAL
1. Tighten to remove the gap
2. Torque to specification

10. Remove shift plate locking tool **no. T2**.
11. Remove shift lever locking tool **no. T1**. It should be easy to do. If not, repeat tightening sequence with less pressure from the shift lever on the locking tool.
12. Shift transmission to R, L, P,H and back to N.
13. Verify maximum free play in cable. Shift lever should move from P to L without high restriction (only spring load restriction).

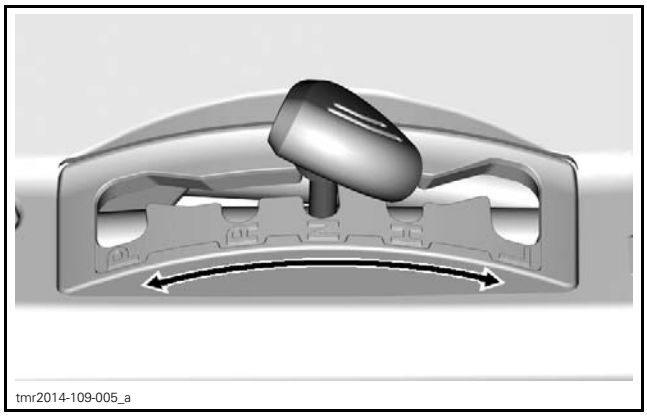

14. Reinstall all removed parts. Start engine, select P-R-N-H and L to ensure the transmission shifts into every gear.

⚠ WARNING

After adjustment, make sure that PARK position works properly.

ENGINE MANAGEMENT SYSTEM (EMS)

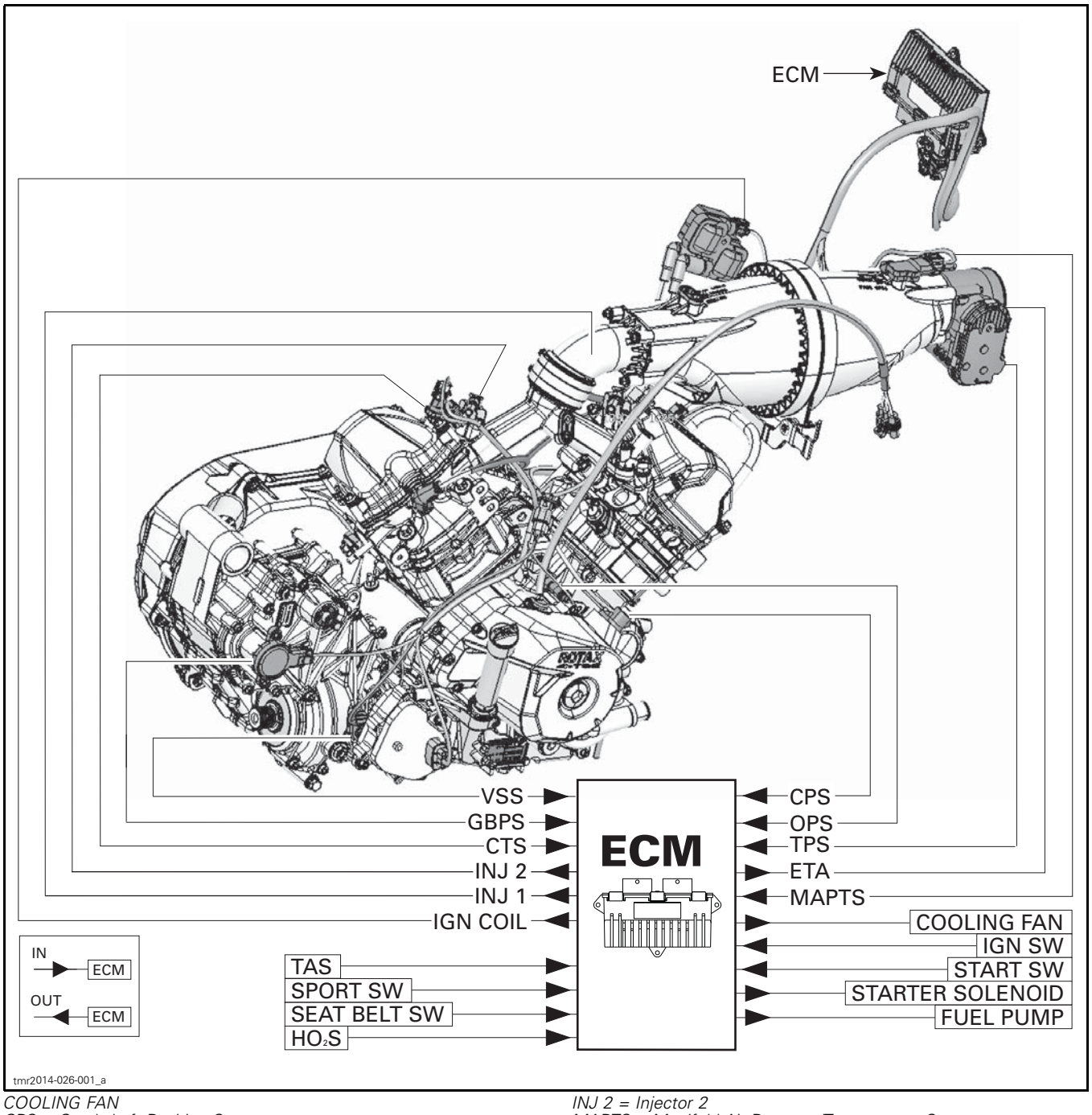

COOLING FAN
CPS = Crankshaft Position Sensor
CTS = Cooling Temperature Sensor
ECM = Engine Control Module
ETA = Electric Throttle Actuator
FUEL PUMP
GBPS = Gear Box Position Sensor
HO_2S (Heated Oxygen Sensor)
IGN COIL = Ignition coil
IGN SW = Ignition switch
IN = Input
INJ 1= Injector 1
INJ 2 = Injector 2
MAPTS = Manifold Air Pressure/Temperature Sensor
OPS = Oil Pressure Switch
OUT = Output
SEAT BELT SWITCH
SPORT SWITCH
START SWITCH
STARTER SOLENOID
SW = Switch
TAS = Throttle Accelerator Sensor
TPS = Throttle Position Sensor
VSS = Vehicle Speed Sensor

GENERAL

SYSTEM DESCRIPTION

A highly advanced engine management system (EMS) is used to ensure a high power output with cleaner combustion.

There are 7 main systems that are controlled by the engine management system (EMS):

1. Electronic Fuel Injection (EFI)
2. Intelligent throttle control
3. Cooling system (cooling fan)
4. Ignition system
5. Starting system
6. Fuel pump system
7. D.E.S.S. system.

NOTE: For further information related to these systems, refer to the applicable subsection.

The ECM (Engine Control Module) is the central point of the engine management system.

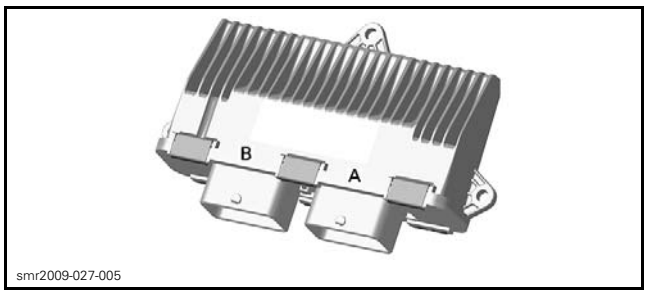

TYPICAL - ECM

The ECM is located under the dashboard on the driver's side, above the control pedals.

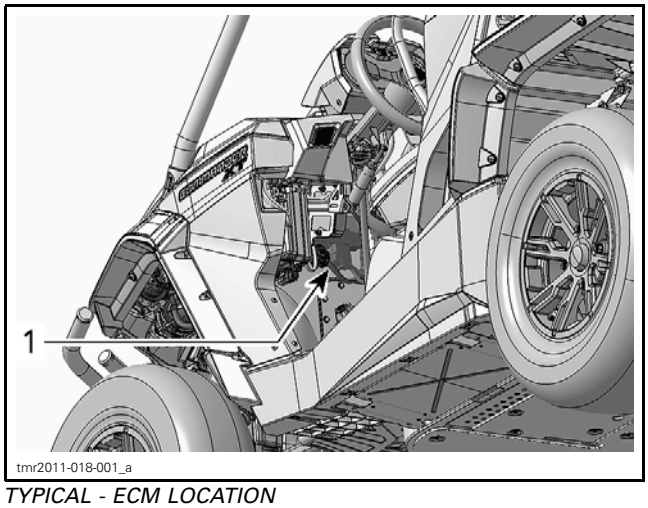

TYPICAL - ECM LOCATION
1. ECM location

The ECM reads input signals from various switches, controls, and sensors, that it compares to pre-determined parameters, makes computations, and provides control signal outputs required for proper engine management.

The ECM also interacts through CAN bus with the gauge module for various functions, information exchange and display of messages. Refer to *CONTROLLER AREA NETWORK (CAN)* and *LIGHTS, GAUGE AND ACCESSORIES* subsections.

The ECM also features a permanent memory that will store the information on the various ignition keys programmed to the vehicle, fault codes, customer information, and other engine information, even when the battery is removed from the vehicle.

Diagnostic Mode

The ECM features a self-diagnostic mode that is activated on system power up (ignition key ON) for certain systems and components, and when the engine is running for others. Refer to *DIAGNOSTIC SYSTEM AND FAULT CODES* subsection for more information.

Monitoring System

The MONITORING SYSTEM monitors various electrical and electronic components of the engine control systems such as the:

– ETA (Electric Throttle Actuator)
– TPS (Throttle Position Sensor)
– TAS (Throttle Accelerator Sensor)
– ECM (Engine Control Module).

The engine management system provides for redundancies in these components should a failure or partial failure occur to which it will adjust system operation to protect the vehicle and most of importantly, the driver.

Should the engine management system not respond (or not respond correctly) to a failure, then the monitoring system will react to ensure vehicle and driver safety.

The monitoring system therefore ensures the engine management system is functioning correctly.

Limp Home Mode

The ECM may automatically put the engine in LIMP HOME MODE using default parameters when certain major faults are detected. LIMP HOME MODE may also be manually engaged

under certain fault conditions. For more information, refer to *DIAGNOSTIC SYSTEM AND FAULT CODES*.

CONTROLLER AREA NETWORK (CAN)

GENERAL

SYSTEM DESCRIPTION

The CAN (Controller Area Network) protocol is an ISO standard for serial data communication.

The CAN bus links the following modules together so that they communicate to interact as required.

– ECM (Engine Control Module)
– Multifunction gauge
– DPS (Dynamic Power Steering)
– SCM (Suspension Control Module).

The components are connected together by 2 wires and they are in constant communication with each other at a rate of about every 20 milliseconds. CAN lines consist of a pair of wires (WHITE/BEIGE and WHITE/BLACK).

If a component or system malfunction is detected, a module may generate a fault code, which it transmits through the CAN bus as a signal. The fault signal may be used for various functions such as triggering the display of an error message in the multifunction gauge cluster, turning on a fault indicator light, limiting or inhibiting vehicle or engine operation, or viewed using the B.U.D.S. software for troubleshooting.

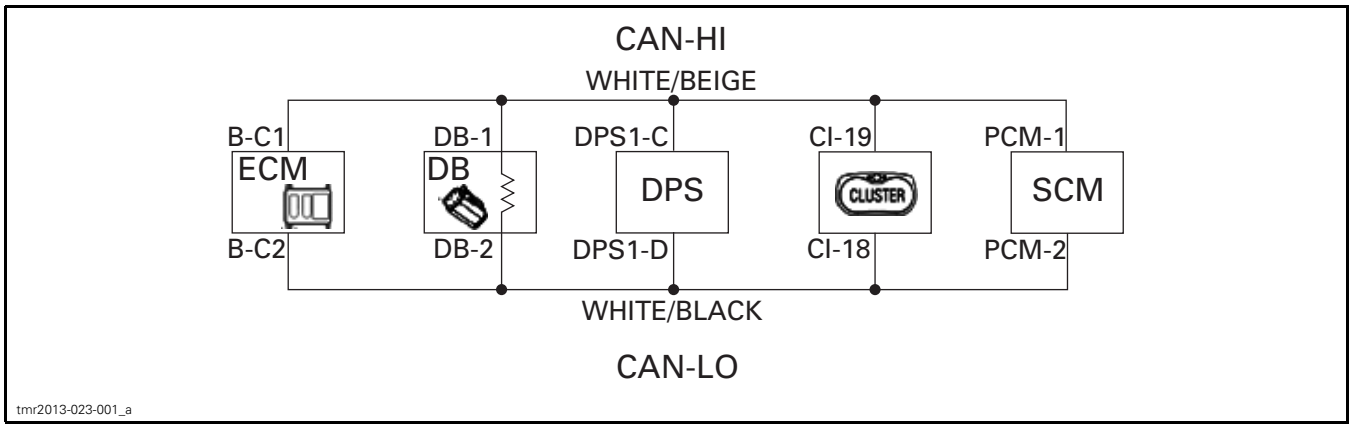

CLUSTER: Multifunction Gauge
DB: Diagnostic Connector
DPS: Dynamic Power Steering
ECM: Engine Control Module
SCM: Suspension Control Module

COMMUNICATION TOOLS AND B.U.D.S.

SERVICE TOOLS

Description	Part Number	Page
DIAGNOSTIC CABLE	710 000 851	2

GENERAL

Refer to the **B.U.D.S. directory** on *KNOWLEDGE CENTER* for all diagnostic software related information, including:

- Diagnostic software version required according to the vehicle
- Current version download link
- User manual (programming keys, reading fault codes, writing data to modules etc.)
- Installation instructions
- Navigation through menus
- BRP BUDS chart

Search keyword: "BUDS".

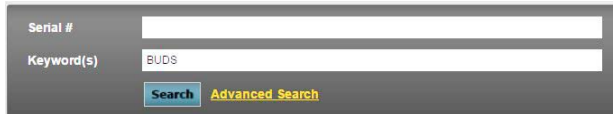

mmr2017-025-001

TROUBLESHOOTING

Refer to the BRP BUDS chart to ensure you are using the appropriate hardware and tools.

COMMUNICATION PROBLEMS

MPI Connection Troubleshooting

MPI Status Lights

The MPI includes 2 status lights to show the connection conditions: USB and CAN. **Both lights must be GREEN** for the MPI to function properly. Otherwise, refer to the following charts.

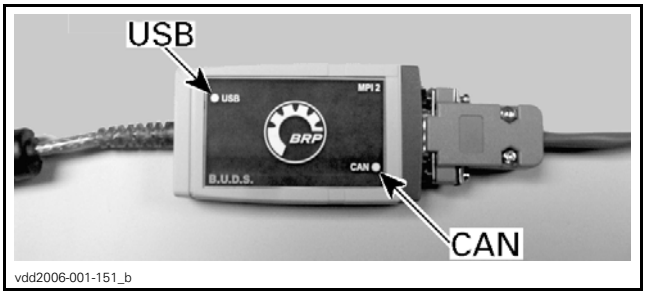

vdd2006-001-151_b

MPI-2 CARD

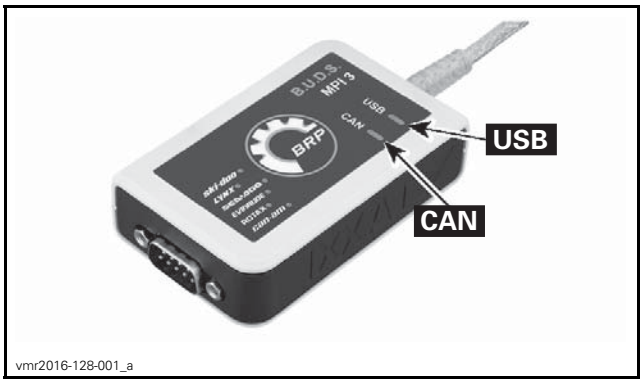

vmr2016-128-001_a

MPI-3 CARD

Prerequisite for USB Communication:

- PC Computer turned ON
- MPI connected to PC computer.

COMMUNICATION PROBLEM (USB)	
STATUS	WHAT TO DO
USB Light is OFF	– Check USB connection between MPI-2 and PC computer. – Check USB operation on PC computer (hardware or Windows drivers).
USB Light is GREEN	– Connections are GOOD. Communication can take place on USB side.

Prerequisite for CAN Communication:

1. MPI connected to diagnostic connector.

2. The tether cord cap (D.E.S.S. key) is installed on the engine cut-off switch and pull the emergency stop switch.
3. The diagnostic software started and logged.
4. ECM is powered.

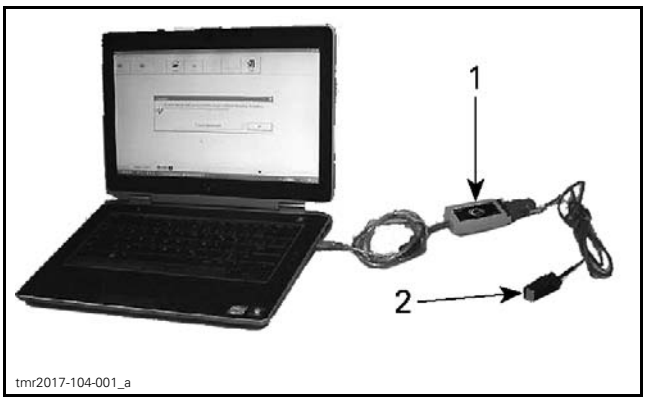

1. MPI Interface carn
2. DIAGNOSTIC CABLE (P/N 710 000 851)

COMMUNICATION PROBLEM (CAN)	
STATUS	WHAT TO DO
CAN Light is OFF	– The diagnostic software does not communicate with the vehicle. – Check connections from computer to vehicle. – Check if the diagnostic software is started. – Check if vehicle is powered: is cluster turned ON. If it is not ON, install the tether cord cap (D.E.S.S. key) on the engine cut-off switch and pull the emergency stop switch.
CAN Light is RED	This occurs when the diagnostic software loses communication with vehicle. – Check connections from computer to vehicle. – Check if vehicle is powered: is cluster turned ON? If not, install the tether cord cap (D.E.S.S. key) on the engine cut-off switch and pull the emergency stop switch.
CAN Light is GREEN	– Connections are GOOD. The diagnostic software communicates normally with the vehicle.

DIAGNOSTIC SYSTEM AND FAULT CODES

GENERAL

MONITORING SYSTEM

The Engine Management System (EMS) features a monitoring system that self-diagnoses various electrical and electronic components. This mode becomes active when the ignition key is turned ON.

NOTE: Some components require the engine to be running to be monitored (fuel injectors for example).

The monitoring system continuously validates that the components (control modules, sensors and actuators) are not faulty or defective. When a malfunction is detected, the related electronic module(s):

– Sets an active fault code.
– Adapts the proper protection strategy according to the failure.
– Sends out signals to the multifunction gauge to inform the rider of a particular condition.

If a minor fault occurs, the engine and vehicle will continue to operate without noticeable loss of performance.

If a more important fault occurs, engine RPM may be limited. The engine/vehicle will continue to operate with reduced performance.

If a major component of the EMS fails, engine RPM will be limited as well as vehicle speed.

These strategies are used to protect engine/electrical system from damage and to maintain safe operation of the vehicle. In extreme cases, the engine may also be completely shut down.

Messages in Gauge for Problematic Conditions

If an abnormal condition occurs, the gauge will display one of the following messages. It can be combined with a pilot lamp.

MESSAGE	DESCRIPTION
CHECK ENGINE	All active or previously activated faults that require attention. No engine limitation engaged.
LIMP HOME	Critical faults requiring diagnostic as soon as possible. An engine limitation is engaged and/or the engine behavior is modified.
LO BATT VOLT	Low battery voltage detected by ECM.
HIGH BATT VOLT	High battery voltage detected by ECM.
LOW OIL	Low oil pressure detected by the ECM.
D.E.S.S. KEY NOT RECOGNIZED	D.E.S.S. KEY is not recognized by ECM.
HI TEMP	High temperature detected by the ECM.
ECM CRC ERROR	Error message from ECM.
TPS FAULT	TPS (throttle position sensor) fault, generally followed by a Limp Home message.
BRAKE SWITCH FAULT	Brake signal fault.
ECM NOT RECOGNIZED	Message displayed when the gauge is unable to identify the ECM.
CHECK DPS	Check engine pilot light on. Indicates that the DPS (Dynamic Power Steering) does not work properly. See an authorized Can-Am dealer.

MESSAGE	DESCRIPTION
TRANSMISSION SIGNAL FAULT	Gearbox position sensor fault active. "E" is also displayed in the gear display.
PPS FAULT	When one or both sensor of the TAS (throttle accelerator sensor) is/are faulty, erratic or out of range or that the ratio between the two is incorrect, the message will be displayed and the check engine pilot lamp will be lit.
MANUAL LIMP HOME	When the TAS Limp Home (throttle accelerator sensor) is engaged, the message will be displayed.
ACS FAULT	Leak or problem detected in the ACS system.
SUSPENSION PUMP OVERHEAT	ACS compressor overheated. Do not run compressor for more than 2 minutes. Let compressor cool down.

Limp Home Mode

When a major component of the EMS is not operating properly, limp home mode will be set.

Engine RPM will be limited and/or engine behavior and control may be modified depending on the cause of the failure.

This mode allows the rider to return home, which would otherwise not be possible without this advanced system.

LIMP HOME will be displayed in the multifunction gauge and the CHECK ENGINE light symbol will be on in the gauge.

FAULT CODES

Fault Code Categories

A fault code consists of an alphanumeric designator followed by a hexadecimal number of 3 digits. The alphanumeric designator defines the category of the fault code while the hexadecimal number refers to a unique fault.

FAULT CODE CATEGORIES		
ALPHANUMERIC DESIGNATOR	MODULE/ SYSTEM	EXAMPLE OF FAULT CODE
From P0 to P3	Power train and DPS	P0116
From U0 to U3	Communication between module and sensors	U0073

RELATED MODULE AND FAULTS	
MODULE	FAULT CODE CATEGORY
ECM	P and U
DPS	P and U
Cluster	P and U

Fault Code States

Fault codes have 3 possible states:

– Active
– Occurred
– Inactive.

Click the **Fault** tab then click on the drop-down list on the LH lower corner.

Choose the fault code state you want to display.

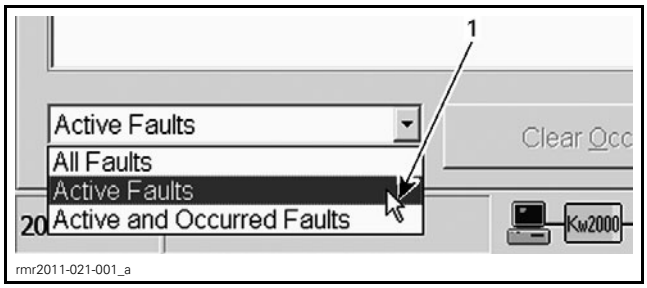

TYPICAL
1. Drop down list

Active Fault Codes

An active fault code is an indication of a fault that is **currently triggered**.

The active fault may or may not compromise normal operation of the system(s). Service action should be taken to correct the problem that caused the fault code.

Once the fault condition(s) of the active fault is no longer present, its state will change to "occurred".

Occurred Fault Codes

An occurred fault code indicates a fault that was active, but **no longer** is.

The occurred fault does not presently affect system or component operation but is retained as a history of the faults that were detected.

The fault may have been generated due to a system or component that was momentarily operating outside normal parameters. Repeated occurred faults of this type should be considered when troubleshooting a problem, and may require that maintenance action be taken.

An occurred fault may also be generated when disconnecting and reconnecting a component, replacing a burnt fuse, when the software update of an electronic module has been carried out, or may be due to a momentary high or low voltage.

Inactive Fault Codes

An inactive fault code represents a fault code that is neither active, nor occurred. It is simply part of a list of all possible faults that can be monitored by the ECM and multifunction gauge, which may become active or occurred if the monitoring system detects an applicable fault. These codes can be viewed in B.U.D.S.

How to Read Fault Codes Using B.U.D.S. Software

1. Connect vehicle to the applicable version of B.U.D.S. software, refer to *COMMUNICATION TOOLS AND B.U.D.S. SOFTWARE* subsection.
2. Click on the **Read Data** button.
3. Select the **Faults** tab.

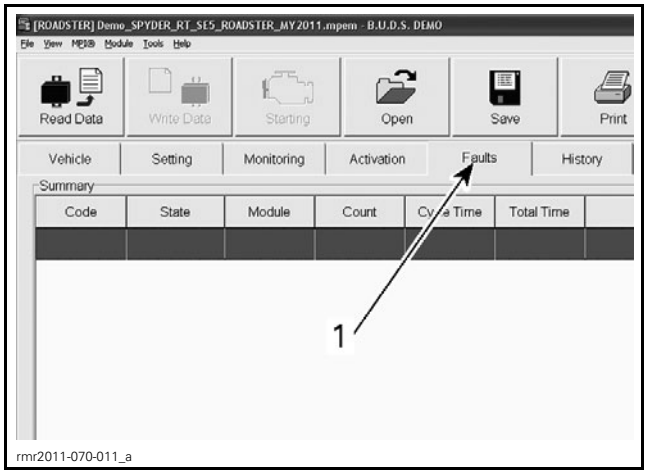

1. Fault tab

4. Click on the drop-down list on the LH lower corner.
5. Choose the fault state to display.

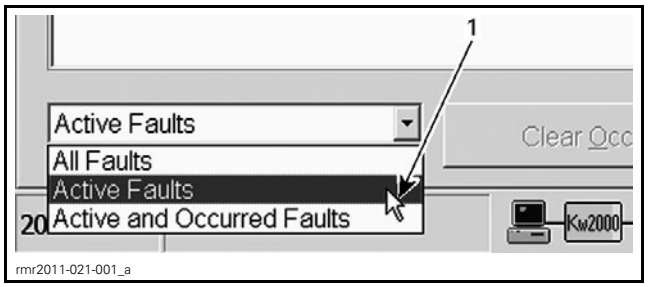

1. Drop down list

FAULT STATE	INFORMATION
All faults	Display all possible faults regardless of state
Active faults	Display only faults matching this state Empty area if there is no active fault
Active and occurred faults	Display only faults that have either state Empty area if there is neither active nor occurred fault

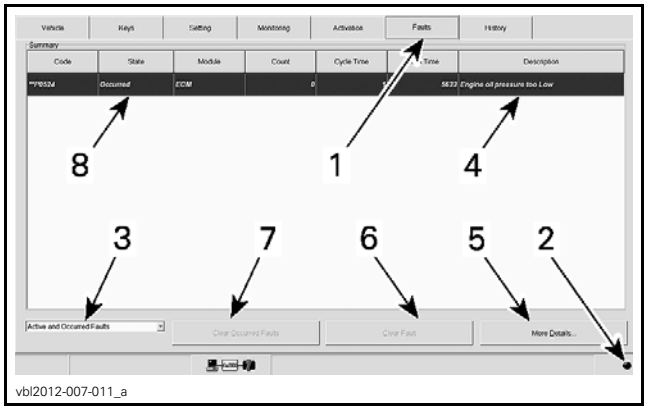

FAULT PAGE
1. **Fault** *tab*
2. *Fault indicator light*
3. *Fault code state drop box*
4. *Fault description*
5. *More Details button*
6. *Clear Fault button*
7. *Clear Occurred Faults button*
8. *Selected fault*

FAULT PAGE DESCRIPTION	
ITEM	INFORMATION
Faults tab	Click tab to display the fault page
Fault indicator light	When flashing, it indicates there is active fault(s)
Fault code state drop box	Click drop box to select the type of faults to display
Fault description	Display specific information related to the fault

FAULT PAGE DESCRIPTION	
ITEM	INFORMATION
More Details button	To display possible causes and service actions related to the selected fault
Clear Occurred Faults button	To clear all occurred faults in related ECU(s)
Selected fault	When a fault is selected, additional information pertaining to that fault will be displayed when clicking the "More details" button. To select a fault, click on the fault with the mouse or use the cursor up or down to scroll to the desired fault

FAULT DESCRIPTION	
COLUMN	INFORMATION
Code	Fault code number. When 2 stars (**) precedes the code, detailed conditions when the fault occurred, can be displayed by clicking the "More details" button
State	Display the fault state (active, occurred, inactive)
Module	Displays the module that reports the fault code. This is the module that detects or has received a message of an anomaly and reports it. List of modules: - Cluster (multifunction gauge) - DPS (dynamic power steering) - ECM (engine control module)
Count	Number of times this fault occurred within the driving cycle. Value: From 0 to 255
Total time	Engine hours when the fault happened. Displayed in hours and minutes format.
Description	Provides a short description of the fault

When reading a fault code in B.U.D.S., pay particular attention to which module reports a fault. It is indicated in the **Module** column.

The **Description** column gives a short description of the fault.

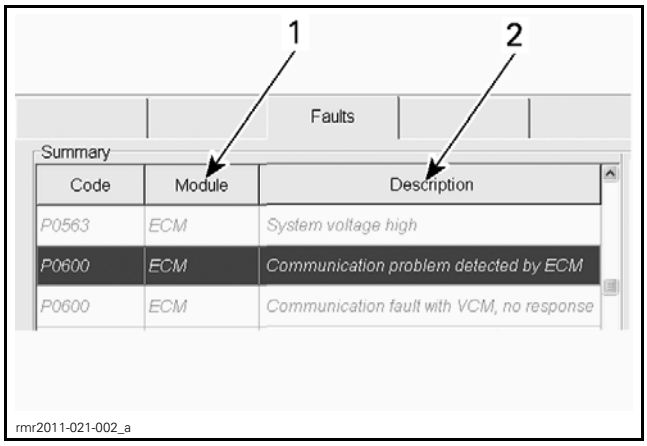

SOME COLUMNS REMOVED FOR CLARITY PURPOSE
1. *Module that reports a fault*
2. *Fault description*

Click on the **More Details** button, on the RH lower corner, to display the "Possible Causes" and the "Service Actions" to step further in the diagnosis.

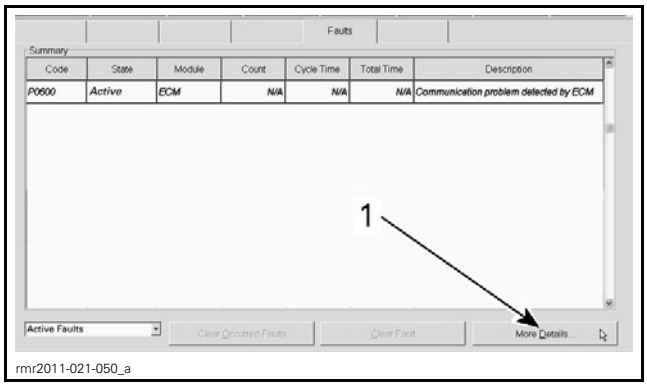

1. *Click here*

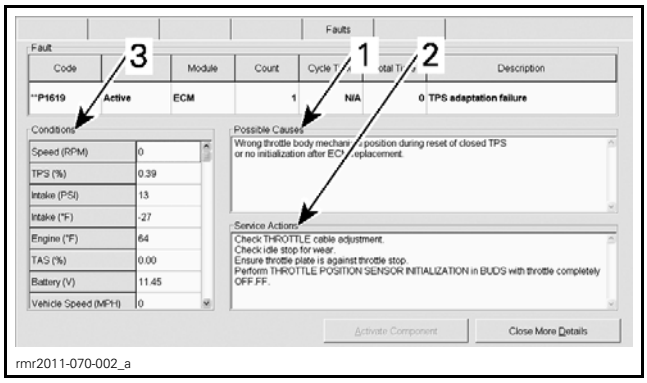

MORE DETAILS PAGE
1. *Possible causes related to the selected fault*
2. *Service actions*
3. *Operating conditions when fault occurred*

MORE DETAILS PAGE DESCRIPTION	
ITEM	INFORMATION
Possible causes	List the possible causes that triggered the fault
Service actions	List the possible actions to perform to solve the fault
Conditions when fault occurred	List the operating conditions of the engine and/or vehicle when the fault was triggered

How to Clear Fault Codes Using B.U.D.S.

1. Connect vehicle to the latest applicable B.U.D.S. software. Refer to *COMMUNICATION TOOLS AND B.U.D.S.* subsection.
2. Click on the **Read Data** button.
3. Click on the **Faults** tab.

The fault(s) (occurred state only) can be cleared by pressing the **Clear Occurred Faults**or **Clear Fault** buttons in B.U.D.S.

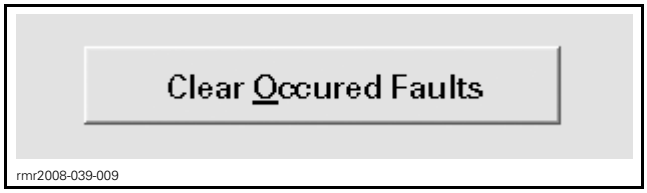

FAULTS PAGE TAB, CLEAR OCCURRED FAULTS

4. Click YES on the following message box.

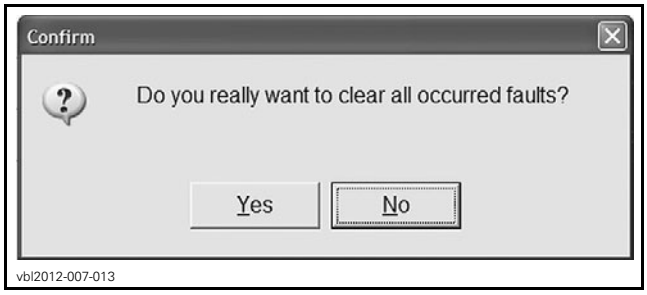

5. Turn ignition OFF and wait until the message disappears.

This will reset the appropriate counter(s) and will also record that the problem has been fixed in the related ECU memory.

NOTE: An active fault code cannot be cleared. In other words, the problem relevant to the fault code must be repaired before the fault can be cleared.

How to Read Fault Codes Using the Multifunction Gauge

NOTE: A fault code must be in an "Active" state to be displayed in the multifunction gauge. B.U.D.S. must be used to read all fault codes states.

Analog/Digital Gauge

Proceed as follows to view the active fault codes:

1. Turn ignition key to ON **with lights** position.

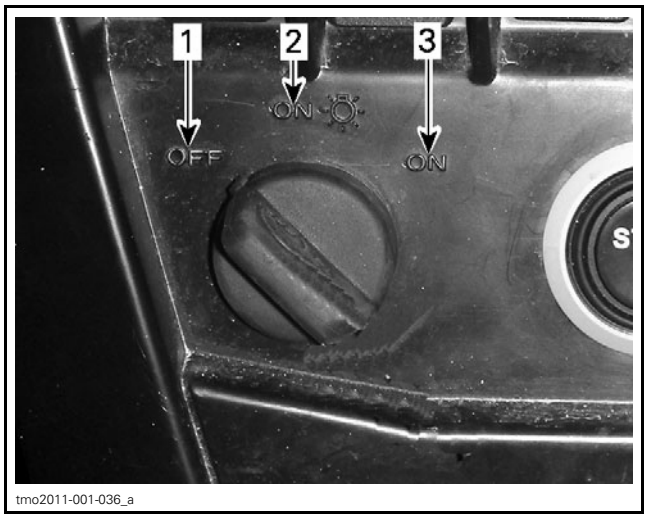

IGNITION SWITCH POSITION
1. *OFF*
2. *ON with lights (turn key to this selection)*
3. *ON*

2. Wait for the multifunction gauge to complete its self test function.
3. Press the S (set) button repeatedly until Hr (hour) is displayed in the secondary digital display.

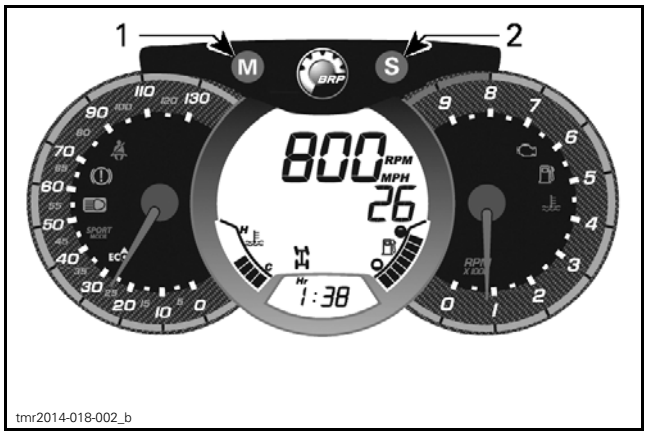

1. *M (mode) button*
2. *S (set) button (pressed repeatedly to toggle secondary display)*

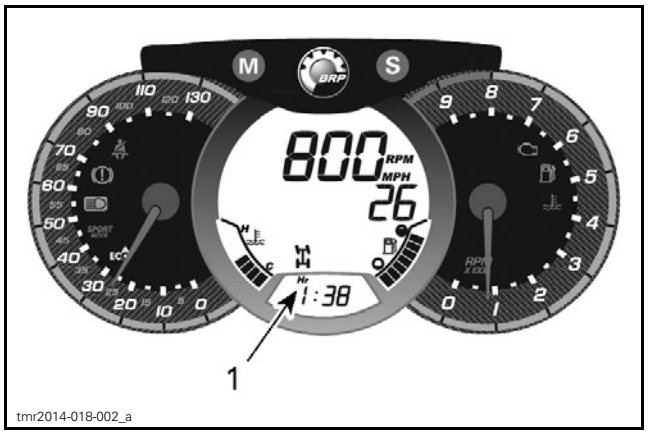

tmr2014-018-002_a

1. Toggle this digital display to Hr

4. Press and hold the M (mode) button while quickly toggling the HI - LO beam switch to enter the fault code display function.

NOTE: A minimum of 3 HI - LO toggles must be completed within 2 seconds.



tmo2011-001-507_c

1. Low/High beam headlight switch

If a fault code is active, it will be displayed in the main digital display.

If no fault code is active, a scrolling NO ACTIVE FAULT CODE message will be displayed.

If there are multiple fault codes, the display will cycle through each fault code repeatedly. A maximum of 10 fault codes may be displayed.

If the fault code display function has been interrupted by another message, a fault code(s) may not have been displayed. Repeat the fault code display procedure to view all active fault codes.

To exit the fault code display function, press both the M and S buttons simultaneously.

LCD Gauge

1. Turn ignition key to ON **with lights** position.

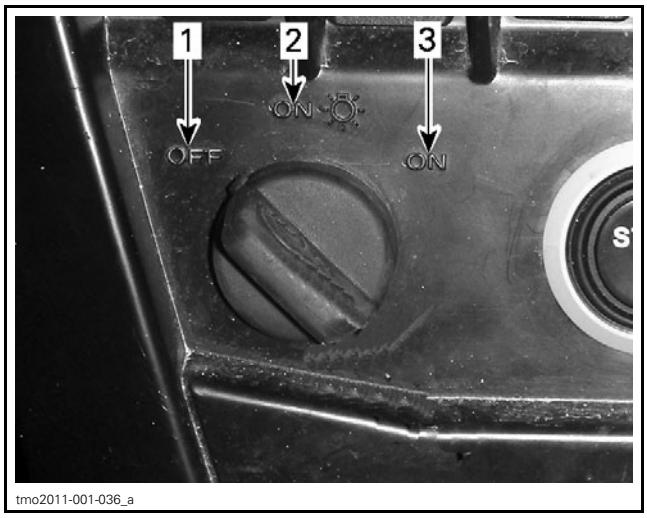

tmo2011-001-036_a

IGNITION SWITCH POSITION
1. OFF
2. ON (with lights)
3. ON

2. Press the selector button on the gauge repeatedly until Engine Hour (EH) is displayed on the gauge.

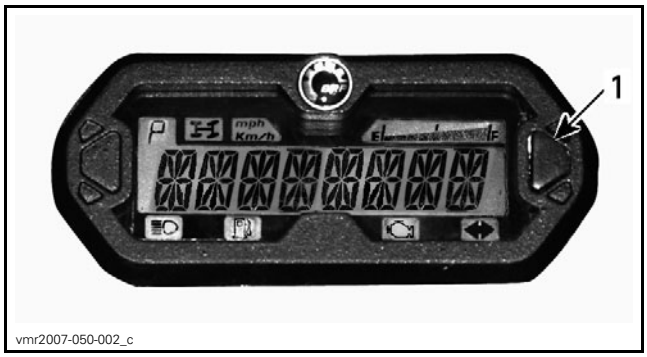

vmr2007-050-002_c

1. Selector button to toggle indication



vdd2008-001-095

TYPICAL - EH (ENGINE HOUR DISPLAY)

3. Press and HOLD the M button while QUICKLY toggling HI - LO beam switch to enter the fault code display function.

NOTE: A minimum of 3 HI - LO toggles must be completed within 2 seconds.



1. Low/High beam headlight switch to toggle quickly

If no P-Code is active, a "No Active P Codes" scrolling message will be displayed.

If there is an active P-Code, it will be displayed.

If there are multiple fault codes, the display will cycle through each fault code.

Once the last fault code is displayed, the gauge displays END then defaults back to normal operation.

How to Find Fault Code Descriptions

For the latest fault code table, use the **Info Center** submenu in BOSSWeb and enter the following search criteria:

– Enclose the search within quotes " "
– Enter: "2014 ATV and SSV DTC Table".

FAULT CODE DIAGNOSTIC

Missing Module

If a module is missing, several fault codes will appear.

To quickly find which module is missing, perform the following:

1. Connect vehicle to the latest applicable B.U.D.S. software. Refer to *COMMUNICATION TOOLS AND B.U.D.S.* subsection.
2. Click on the **Read Data** button.
3. Click **Module** in the menu bar.
4. Look at the list of modules.
5. If a module is not visible, then it is not communicating through the CAN bus (controller area network).

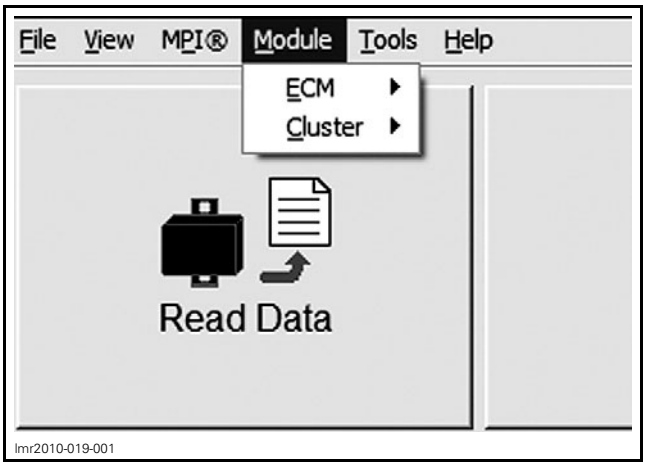

TYPICAL - MODULE SUBMENU LIST

6. Refer to the following table to find the appropriate subsection in this manual to diagnose the missing module.

MISSING MODULE	SECTION TO REFER TO
ECM	*ELECTRONIC FUEL INJECTION (EFI)*
Cluster	*LIGHTS, GAUGE AND ACCESSORIES*
ACS	*AIR CONTROLLED SUSPENSION (ACS)*
DPS	*DYNAMIC POWER STEERING (DPS)*

Diagnostic Tips

To see the last minute of operating conditions, click on the **History** tab in B.U.D.S.

NOTE: The page displays data whatever there is fault code(s) or not.

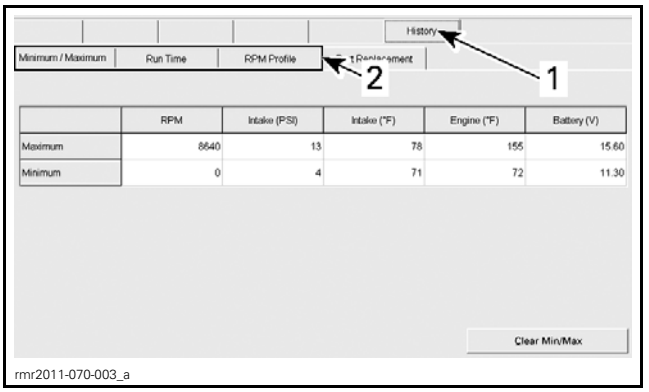

1. History tab
2. Additional history pages

HISTORY PAGE DESCRIPTION	
ITEM	INFORMATION
Minimum/ Maximum	Display the minimum and maximum values encountered since last clear. Click "Clear Min/Max" to reset the values
Run time	Display the time proportion in what mode the engine was running in
RPM profile	Display the RPM range proportion in which the engine was running in

When a minor fault occurs:

– Turn ignition key OFF.
– Wait 30 seconds.
– Turn ignition key ON.

This should change the fault state from "Active" to "Occurred".

The vehicle should then operate normally.

If a sensor-related fault persists, you may try disconnecting/reconnecting the sensor.

Read the following for a general approach to troubleshoot fault codes (active or occurred).

GENERAL GUIDELINES TO SOLVE FAULT CODES	
CONDITION	ACTION
Troubleshooting vehicle	Use B.U.D.S. to: Read fault codes. Display "Active" faults to see components currently not operating normally. Display "Occurred" faults to troubleshoot intermittent problems. Monitor system(s), sensor(s), switches and actual conditions. Activate component(s) for troubleshooting. Set components (resets etc). Know the last minute of operating conditions by using the "History" page. Know the operating conditions, if available, when a fault code occurred by using the "More details" button in the fault page.
New fault(s) appear after a vehicle maintenance or repair	Check sensor connections or mixed up connections. Before vehicle maintenance: Read the electronic modules with B.U.D.S. Save and print the B.U.D.S. file (keep faults option only). After vehicle maintenance: Read the electronic modules with B.U.D.S. Compare the fault code(s) before and after the maintenance using the printed copy and the current B.U.D.S. reading. Investigate only the newly fault codes. Clear all occurred faults in B.U.D.S.
Sensor "Active" fault	Read the fault description in B.U.D.S. Click on the "More Details" button. Look at the "Conditions" when available. Read the "Possible Causes". Apply the "Service Actions".
Low system voltage on one module. Power problem on sensor(s)	Check related fuse(s) and relay. Check related power and ground wires. Check for common power supply to several sensors/modules (refer to *POWER DISTRIBUTION AND GROUNDS)*. NOTE: Some sensors are supplied by the battery while others are supplied by a module.
Low system voltage on several modules (several communication faults will also appear)	Check battery condition and connections. Check related fuse(s) and relay. Check voltage regulator/rectifier.
High system voltage on several modules	A battery charger has likely been used to substitute the vehicle battery. Clear all occurred faults and check again. Check voltage regulator/rectifier.
When all modules report that a module is missing	Check the module that is reported as missing. Check related fuse(s) and relay. Check related power and ground wires.
When several modules are in fault	Search for a common problem such as a faulty sensor.
CAN buss OFF	When several modules and sensors report that a module is missing. A missing module may be reported as CAN bus off by any other module. Check related CAN wires (continuity, short to ground, short between CAN low and high). Check module pins and wiring terminals. Then, the other modules should stop reporting that module is missing.

GENERAL GUIDELINES TO SOLVE FAULT CODES	
CONDITION	ACTION
Occurred fault(s)	May have been generated due to a system or component that was momentarily operating outside normal parameters.
	May be generated when disconnecting and reconnecting a component, replacing a burnt fuse, or may be due to a momentary high or low voltage.
	Before being "Occurred", a fault has always been "Active" for a certain time, indicating that an unexpected condition or problem has been present during the driving cycle. A frequent momentarily fault or an intermittent fault may never be seen as "Active" in B.U.D.S. while there is still a pending problem. This type of malfunctions can be discovered by looking at the "Occurred" faults and then by evaluating the fault count. As long as a fault is present, it is displayed as "Active".
Fault count (0 - 255)	**Low value:** Suggests handling problems (connections, terminal contact/ shape etc.). **High value:** Suggests a frequent and unsolved problem. The problem should be investigated.
Fault conditions (more details button)	Look for abnormal, excessive values.
Hard to find problems	When the basic troubleshooting has been done and the fault code(s) persists, often the problem is related to the wiring harness, connections or electromechanical components. Short to ground, to battery or between wires. Wire splices, chafing, terminal problems (pulled out, bent, out of shape, corroded etc.). Bad contacts in switch or relay.

ECUs share information and their systems may interact with each other. Certain faults may cause more than one ECU to set a fault code or indication (pilot lamp or message) as the failure of some components may affect the operation of several systems.

SPECIFIC FAULTS

TPS Fault

A TPS fault may be considered to be a major fault as the TPS provides the most important feedback (2 signals) to the ECM on throttle position.

A TPS fault affects engine control as the throttle plate is moved by the ETA (electric throttle actuator) which, is controlled by the ECM (see *INTELLIGENT THROTTLE CONTROL (ITC)* subsection).

A TPS fault is generally followed by LIMP HOME mode and the engine is brought back to idle, or may be completely shutdown.

Low Battery Voltage Fault

If the battery voltage is low when the engine is running at idle RPM, the ECM will command an increase in RPM to a set value, thereby increasing the charging system output in order to prevent the battery from being discharged, and to allow normal system operation.

TAS Fault

If one TAS (throttle accelerator sensor) signal is missing, LIMP HOME MODE will be activated and the check engine light will come ON. Pressing and holding the OVERRIDE button will allow normal control of the accelerator pedal.

If both sensors in the TAS are at fault, a TAS FAULT message will appear in the gauge, the check engine light will come ON and the engine will run at idle. The accelerator pedal will not have any affect on engine RPM. However, the vehicle may be driven in LIMP HOME MODE by pressing the OVERRIDE button.

When limp home mode is engaged using the override button, a MANUAL LIMP HOME message will appear in the gauge. The OVERRIDE button can then be used as the accelerator, vehicle speed is controlled by pressing and/or releasing the button.

BRAKE ACTIVATION Fault Message in Gauge

If a brake signal is received continuously for 15 seconds above 5 km/h (3 MPH), a BRAKE message will be displayed in the gauge.

DIAGNOSTIC AND FAULT CODES

GENERAL

FAULT CODE TABLE

PCODE	MODULE	DESCRIPTION	CAUSE	ACTION
C0051	DPS GLOBE	ROTOR ENCODER SPI COM FAIL	internal comm fail error or damaged DPS	change dps if condition still active after key-on cycle
C0052	DPS GLOBE	ROTOR INCODER VARIANCE	internal INCODER fail or damaged DPS	change dps if condition still active after key-on cycle
C1203	DPS GLOBE	TORQUE SENSOR OUT OF RANGE	internal error or damaged DPS	change dps if condition still active after key-on cycle
C1304	DPS GLOBE	TORQUE SENSOR LINEARITY CHECK FAIL	internal error or damaged DPS	change dps if condition still active after key-on cycle
C1309	DPS GLOBE	TEMPERATURE HIGH	DPS temp upper range due to excessive use of DPS	verify with customer condition when dps ovr show-up
C1310	DPS GLOBE	TEMPERATURE OVER	DPS temp exceed due to excessive use of DPS	verify with customer condition when dps ovr show-up
C1318	DPS GLOBE	SEPIC LOW	internal error or damaged DPS	change DPS
C1319	DPS GLOBE	SEPIC HIGH	internal error or damaged DPS	change DPS
C2109	SCM	Release Valve Activation delay Exceed	If pressure threshold not reach after calibrated time delay (When release valve activated)	Open SCM Activation page in BUDS, performe a combined test in System self test sequence section
C210A	SCM	Suspension Valve Activation time Exceed	If the suspension valve maximum allowed activation time in a specific time window is exceeded for (counter > CntExceed).	Open SCM Activation page in BUDS, performe a combined test in System self test sequence section
C210B	SCM	Outlet Valve Activation time Exceed	If the suspension valve maximum allowed activation time in a specific time window is exceeded for (counter > CntExceed).	Open SCM Activation page in BUDS, performe a combined test in System self test sequence section
C2111	SCM	Pressure sensor signal Invalid	Sensor input voltage < 0.5V for hardcoded debounce time	Open SCM Activation page in BUDS, performe a pressure sensor test in System self test sequence section

PCODE	MODULE	DESCRIPTION	CAUSE	ACTION
C21D0	SCM	Pressure threshold not Reach outlet adjustment	If pressure threshold not reach after calibrated time delay (threshold change in function of compressor temperature) (When outlet pressure adjustment activated)	Open SCM Activation page in BUDS, performe a combined test in System self test sequence section
C21D2	SCM	Compressor over temperature condition	If over temp threshold reach for time delay	Open SCM Activation page in BUDS, performe a pressure test in System self test sequence section
C21D3	SCM	Over pressure detected	If pressure > 350PSI	Open SCM Activation page in BUDS, performe a pressure sensor test in System self test sequence section
C21E0	SCM	Pressure threshold not reach Rear suspension adjustment	If pressure threshold not reach after calibrated time delay (threshold change in function of compressor temperature) (When Rear suspension adjustment activated)	Open SCM Activation page in BUDS, performe a combined test in System self test sequence section
C21E1	SCM	Air Leak Plausibility check Rear suspension	If maximum number of readjustment for rear suspension is reach	Open SCM Activation page in BUDS, performe a combined test in System self test sequence section
C21F0	SCM	Pressure threshold not reach Front suspension adjustment	If pressure threshold not reach after calibrated time delay (threshold change in function of compressor temperature) (When front suspension adjustment activated)	Open SCM Activation page in BUDS, performe a combined test in System self test sequence section
C21F3	SCM	Air Leak Plausibility check Front Right suspension	If maximum number of readjustment for front right suspension is reach	Open SCM Activation page in BUDS, performe a combined test in System self test sequence section
C21F4	SCM	Air Leak Plausibility check Front left suspension	If maximum number of readjustment for front left suspension is reach	Open SCM Activation page in BUDS, performe a combined test in System self test sequence section

PCODE	MODULE	DESCRIPTION	CAUSE	ACTION
P0030	ECM	Internal fault path number for Signal error : power stage of heater of Sensor upstream catalyst	Damaged O2 sensor, damaged circuit wires, damaged connector or damaged ECM output pins.	Check related fuse(s) Disconnect the 1st oxygen sensor (FRONT cylinder) and measure his resistance (Expected value: 7 to 12 Ohms) Measure the voltage of the harness power wire relative to ground (Expected value: Battery voltage) Disconnect the associated ECM connector and measure resistance between harness wires and ground (Expected value: open) Measure the resistance of the harness wires, between the ECM and sensor connectors (Expected value < 2 Ohms)
P0031	ECM	Internal fault path number for Min error : power stage of heater of Sensor upstream catalyst	Damaged O2 sensor, damaged circuit wires,damaged connector or damaged ECM output pins.	Check related fuse(s) Disconnect the 1st oxygen sensor (FRONT cylinder) and measure his resistance (Expected value: 7 to 12 Ohms) Measure the voltage of the harness power wire relative to ground (Expected value: Battery voltage) Disconnect the associated ECM connector and measure resistance between harness wires and ground (Expected value: open) Measure the resistance of the harness wires, between the ECM and sensor connectors (Expected value < 2 Ohms)

PCODE	MODULE	DESCRIPTION	CAUSE	ACTION
P0032	ECM	Internal fault path number for Max error: power stage of heater of Sensor upstream catalyst	Damaged O2 sensor, damaged circuit wires,damaged connector or damaged ECM output pins.	Check related fuse(s) Disconnect the 1st oxygen sensor (FRONT cylinder) and measure his resistance (Expected value: 7 to 12 Ohms) Measure the voltage of the harness power wire relative to ground (Expected value: Battery voltage) Disconnect the associated ECM connector and measure resistance between harness wires and ground (Expected value: open) Measure the resistance of the harness wires, between the ECM and sensor connectors (Expected value < 2 Ohms)
P0037	ECM	Internal fault path number for Min error : power stage of heater of Sensor upstream catalyst, LSU 2	Blown fuse, damaged or disconnected O2 sensor, damaged or disconnected circuit wires, damaged ECM output pins.	Check related fuse(s) Disconnect the 2nd oxygen sensor (REAR cylinder) and measure his resistance (Expected value: 7 to 12 Ohms) Measure the voltage of the harness power wire relative to ground (Expected value: Battery voltage) Disconnect the associated ECM connector and measure resistance between harness wires and ground (Expected value: open) Measure the resistance of the harness wires, between the ECM and sensor connectors (Expected value < 2 Ohms)

Midwest Manuals
Green Manuals
Paperless Manuals
For a Better Tomorrow
If you bought this manual from any other seller please leave them NEGATIVE feedback and notify me at bestshopmanuals@gmail.com

PCODE	MODULE	DESCRIPTION	CAUSE	ACTION
P0038	ECM	Internal fault path number for Max error: power stage of heater of Sensor upstream catalyst, LSU 2	Blown fuse, damaged or disconnected O2 sensor, damaged or disconnected circuit wires, damaged ECM output pins.	Check related fuse(s) Disconnect the 2nd oxygen sensor (REAR cylinder) and measure his resistance (Expected value: 7 to 12 Ohms) Measure the voltage of the harness power wire relative to ground (Expected value: Battery voltage) Disconnect the associated ECM connector and measure resistance between harness wires and ground (Expected value: open) Measure the resistance of the harness wires, between the ECM and sensor connectors (Expected value < 2 Ohms)
P0106	ECM	Manifold Absolute Pressure circuit range/performance	Damaged sensor, damaged circuit wires, damaged connector or damaged ECM pins, ECM voltage supply	Make sure sensor connector is well inserted Disconnect the sensor, measure the voltage of the harness power wires (Expected value: 4.8 to 5.1 Volts) Measure the resistance of the harness wires, between the ECM and sensor connectors (Expected value < 2 Ohms)
P0107	ECM	Manifold Air Pressure Sensor voltage too Low	Damaged sensor, damaged circuit wires, damaged connector or damaged ECM pins, ECM voltage supply Low	Make sure sensor connector is well inserted Disconnect the sensor, measure the voltage of the harness power wires (Expected value: 4.8 to 5.1 Volts) Measure the resistance of the harness wires, between the ECM and sensor connectors (Expected value < 2 Ohms)

PCODE	MODULE	DESCRIPTION	CAUSE	ACTION
P0108	ECM	Manifold Air Pressure Sensor voltage too High	Damaged sensor, wires shorted to battery +, ECM voltage supply too High.	Make sure sensor connector is well inserted Disconnect the sensor, measure the voltage of the harness power wires (Expected value: 4.8 to 5.1 Volts) Measure the resistance of the harness wires, between the ECM and sensor connectors (Expected value < 2 Ohms)
P0112	ECM	Intake Air Temperature Sensor 1 circuit Low	Damaged sensor, damaged circuit wires, damaged connector or damaged ECM pins, ECM voltage supply Low	Make sure sensor connector is well inserted Disconnect the sensor, measure the voltage of the harness power wires (Expected value: 4.8 to 5.1 Volts) Measure the resistance of the harness wires, between the ECM and sensor connectors (Expected value < 2 Ohms)
P0113	ECM	Intake Air Temperature Sensor 1 circuit High	Damaged sensor, wires shorted to battery +, ECM voltage supply too High.	Make sure sensor connector is well inserted Disconnect the sensor, measure the voltage of the harness power wires (Expected value: 4.8 to 5.1 Volts) Measure the resistance of the harness wires, between the ECM and sensor connectors (Expected value < 2 Ohms)

PCODE	MODULE	DESCRIPTION	CAUSE	ACTION
P0116	ECM	Engine Coolant Temperature Sensor 1 circuit range/performance	Damaged sensor, wires shorted to battery +, ECM voltage supply.	Disconnect the sensor and check for a change in the fault code. If the fault code stays the same, look for a short circuit on the harness. If the fault code is different, replace the sensor Measure the sensor resistance (Expected value: 2280 to 2736 Ohms at 19 to 21°C (66 to 70°F)) Measure the resistance of the harness wires, between the ECM and sensor connectors (Expected value < 2 Ohms)
P0117	ECM	Engine Coolant Temperature Sensor 1 circuit Low	Engine temperature sensor or circuit wires shorted to ground.	Disconnect the sensor and check for a change in the fault code. If the fault code stays the same, look for a short circuit on the harness. If the fault code is different, replace the sensor Measure the sensor resistance (Expected value: 2280 to 2736 Ohms at 19 to 21°C (66 to 70°F)) Measure the resistance of the harness wires, between the ECM and sensor connectors (Expected value < 2 Ohms)
P0118	ECM	Engine Coolant Temperature Sensor 1 circuit High	Disconnected sensor, or sensor resistance too High.	Make sure sensor connector is well inserted Measure the sensor resistance (Expected value: 2280 to 2736 Ohms at 19 to 21°C (66 to 70°F)) Measure the resistance of the harness wires, between the ECM and sensor connectors (Expected value < 2 Ohms)

PCODE	MODULE	DESCRIPTION	CAUSE	ACTION
P0122	ECM	First Throttle Accelerator Sensor (TAS) Short circuit to GND	Damaged circuit wires, damaged sensor or damaged ECM pins.	Make sure sensor connector is well inserted Measure the resistance of the harness wires, between the ECM and sensor connectors (Expected value < 2 Ohms)
P0123	ECM	First Throttle Accelerator Sensor (TAS) shorted to battery +	Damaged circuit wires, damaged sensor or damaged ECM pins.	Make sure sensor connector is well inserted Measure the resistance of the harness wires, between the ECM and sensor connectors (Expected value < 2 Ohms)
P0127	ECM	Intake Air Temperature too High	Air Temperature in intake High	
P0130	ECM	ECU int. fault path no.: electrical diagnosis for lambda sensor upstream catalyst. npl-error	Damaged O2 sensor, damaged circuit wires, damaged connector or damaged ECM output pins.	Check related fuse(s) Disconnect the 1st oxygen sensor (FRONT cylinder) and measure his resistance (Expected value: 7 to 12 Ohms) Measure the voltage of the harness power wire relative to ground (Expected value: Battery voltage) Disconnect the associated ECM connector and measure resistance between harness wires and ground (Expected value: open) Measure the resistance of the harness wires, between the ECM and sensor connectors (Expected value < 2 Ohms)

PCODE	MODULE	DESCRIPTION	CAUSE	ACTION
P0131	ECM	ECU int. fault path no.: electrical diagnosis for lambda sensor upstream cat. min-error	Damaged O2 sensor, damaged circuit wires, damaged connector or damaged ECM output pins.	Check related fuse(s) Disconnect the 1st oxygen sensor (FRONT cylinder) and measure his resistance (Expected value: 7 to 12 Ohms) Measure the voltage of the harness power wire relative to ground (Expected value: Battery voltage) Disconnect the associated ECM connector and measure resistance between harness wires and ground (Expected value: open) Measure the resistance of the harness wires, between the ECM and sensor connectors (Expected value < 2 Ohms)
P0132	ECM	ECU int. fault path no.: electrical diagnosis for lambda sensor upstream cat. max-error	Damaged O2 sensor, damaged circuit wires, damaged connector or damaged ECM output pins.	Check related fuse(s) Disconnect the 1st oxygen sensor (FRONT cylinder) and measure his resistance (Expected value: 7 to 12 Ohms) Measure the voltage of the harness power wire relative to ground (Expected value: Battery voltage) Disconnect the associated ECM connector and measure resistance between harness wires and ground (Expected value: open) Measure the resistance of the harness wires, between the ECM and sensor connectors (Expected value < 2 Ohms)

PCODE	MODULE	DESCRIPTION	CAUSE	ACTION
P0133	ECM	ECU int. fault path no.: diagnosis lambda sensor upstream catalyst	Damaged O2 sensor, damaged circuit wires, damaged connector or damaged ECM output pins.	Check related fuse(s) Disconnect the 1st oxygen sensor (FRONT cylinder) and measure his resistance (Expected value: 7 to 12 Ohms) Measure the voltage of the harness power wire relative to ground (Expected value: Battery voltage) Disconnect the associated ECM connector and measure resistance between harness wires and ground (Expected value: open) Measure the resistance of the harness wires, between the ECM and sensor connectors (Expected value < 2 Ohms)
P0135	ECM	ECU int. fault path no.: lambda sensor heating upstream cat.	Damaged O2 sensor, damaged circuit wires, damaged connector or damaged ECM output pins.	Check related fuse(s) Disconnect the 1st oxygen sensor (FRONT cylinder) and measure his resistance (Expected value: 7 to 12 Ohms) Measure the voltage of the harness power wire relative to ground (Expected value: Battery voltage) Disconnect the associated ECM connector and measure resistance between harness wires and ground (Expected value: open) Measure the resistance of the harness wires, between the ECM and sensor connectors (Expected value < 2 Ohms)

PCODE	MODULE	DESCRIPTION	CAUSE	ACTION
P0136	ECM	ECU int. fault path no.: electrical diagnosis for second lambda sensor upstream cat. npl-error	Damaged O2 sensor, damaged circuit wires, damaged connector or damaged ECM output pins.	Check related fuse(s) Disconnect the 2nd oxygen sensor (REAR cylinder) and measure his resistance (Expected value: 7 to 12 Ohms) Measure the voltage of the harness power wire relative to ground (Expected value: Battery voltage) Disconnect the associated ECM connector and measure resistance between harness wires and ground (Expected value: open) Measure the resistance of the harness wires, between the ECM and sensor connectors (Expected value < 2 Ohms)
P0137	ECM	ECU int. fault path no.: electrical diagnosis for second lambda sensor upstream cat. min-error	Damaged O2 sensor, damaged circuit wires, damaged connector or damaged ECM output pins.	Check related fuse(s) Disconnect the 2nd oxygen sensor (REAR cylinder) and measure his resistance (Expected value: 7 to 12 Ohms) Measure the voltage of the harness power wire relative to ground (Expected value: Battery voltage) Disconnect the associated ECM connector and measure resistance between harness wires and ground (Expected value: open) Measure the resistance of the harness wires, between the ECM and sensor connectors (Expected value < 2 Ohms)

Midwest Manuals
Green Manuals
Paperless Manuals
For a Better Tomorrow
If you bought this manual from any other seller please leave them NEGATIVE feedback and notify me at bestshopmanuals@gmail.com

PCODE	MODULE	DESCRIPTION	CAUSE	ACTION
P0138	ECM	ECU int. fault path no.: electrical diagnosis for second lambda sensor upstream cat. max-error	Damaged O2 sensor, damaged circuit wires, damaged connector or damaged ECM output pins.	Check related fuse(s) Disconnect the 2nd oxygen sensor (REAR cylinder) and measure his resistance (Expected value: 7 to 12 Ohms) Measure the voltage of the harness power wire relative to ground (Expected value: Battery voltage) Disconnect the associated ECM connector and measure resistance between harness wires and ground (Expected value: open) Measure the resistance of the harness wires, between the ECM and sensor connectors (Expected value < 2 Ohms)
P0139	ECM	ECU int. fault path no.: diagnosis lambda sensor upstream catalyst (exhaust bank2)	Damaged O2 sensor, damaged circuit wires, damaged connector or damaged ECM output pins.	Check related fuse(s) Disconnect the 2nd oxygen sensor (REAR cylinder) and measure his resistance (Expected value: 7 to 12 Ohms) Measure the voltage of the harness power wire relative to ground (Expected value: Battery voltage) Disconnect the associated ECM connector and measure resistance between harness wires and ground (Expected value: open) Measure the resistance of the harness wires, between the ECM and sensor connectors (Expected value < 2 Ohms)

PCODE	MODULE	DESCRIPTION	CAUSE	ACTION
P0141	ECM	ECU int. fault path no.: lambda sensor heating upstream cat.	Damaged O2 sensor, damaged circuit wires, damaged connector or damaged ECM output pins.	Check related fuse(s) Disconnect the 2nd oxygen sensor (REAR cylinder) and measure his resistance (Expected value: 7 to 12 Ohms) Measure the voltage of the harness power wire relative to ground (Expected value: Battery voltage) Disconnect the associated ECM connector and measure resistance between harness wires and ground (Expected value: open) Measure the resistance of the harness wires, between the ECM and sensor connectors (Expected value < 2 Ohms)
P0201	ECM	Power stage sig error injector 2	ECM injector power stage error	Open ECM ACTIVATION page in BUDS. Activate injector and check if injector is reacting as expected
P0202	ECM	Power stage sig error injector 1	ECM injector power stage error	Open ECM ACTIVATION page in BUDS. Activate injector and check if injector is reacting as expected
P0217	ECM	Engine Coolant over temperature condition	Coolant fluid temperature too high	Check for coolant fluid leak and coolant fluid level Check radiator condition Check for other fault, Check thermostat
P0222	ECM	2nd Throttle Accelerator Sensor (TAS) shorted to GND	Damaged circuit wires, damaged sensor, or damaged ECM pins.	Make sure sensor connector is well inserted Measure the resistance of the harness wires, between the ECM and sensor connectors (Expected value < 2 Ohms)

PCODE	MODULE	DESCRIPTION	CAUSE	ACTION
P0223	ECM	2nd Throttle Accelerator Sensor (TAS) shorted to battery +	Damaged circuit wires, damaged sensor, or damaged ECM pins.	Make sure sensor connector is well inserted Measure the resistance of the harness wires, between the ECM and sensor connectors (Expected value < 2 Ohms)
P0231	ECM	Fuel Pump circuit shorted to ground, or open circuit	Blown fuse, damaged or disconnected fuel pump, damaged circuit wires, damaged connectors or damaged ECM output pins.	Check related fuse(s) Disconnect the fuel pump and measure his winding resistance (Expected value < 2 Ohms) Measure the voltage of the harness power wire relative to ground (Expected value: Battery voltage) Disconnect the associated ECM connector Measure the resistance of the harness wire, between the ECM and fuel pump connectors (Expected value < 2 Ohms)
P0232	ECM	Fuel Pump circuit shorted to battery +	Damaged fuel pump, damaged circuit wires, damaged connectors or damaged ECM output pins.	Check related fuse(s) Disconnect the fuel pump and measure his winding resistance (Expected value < 2 Ohms) Measure the voltage of the harness power wire relative to ground (Expected value: Battery voltage) Disconnect the associated ECM connector Measure the resistance of the harness wire, between the ECM and fuel pump connectors (Expected value < 2 Ohms)

PCODE	MODULE	DESCRIPTION	CAUSE	ACTION
P0261	ECM	Cylinder 1 injector open circuit or shorted to ground	Blown fuse, damaged or disconnected injector, damaged or disconnected circuit wires, damaged ECM output pins.	Check related fuse(s) Disconnect injector 1 and measure his resistance (Expected value: 14 to 15 Ohms) Measure the voltage of the harness power wire relative to ground (Expected value: Battery voltage) Disconnect the associated ECM connector Measure the resistance of the harness wire, between the ECM and injector 1 connectors (Expected value < 2 Ohms) Check if HIC connector is connecting the engine harness to the vehicle harness
P0262	ECM	Cylinder 1 injector shorted to battery +	Damaged injector, damaged circuit wires, damaged connector or damaged ECM output pins.	Check related fuse(s) Disconnect injector 1 and measure his resistance (Expected value: 14 to 15 Ohms) Measure the voltage of the harness power wire relative to ground (Expected value: Battery voltage) Disconnect the associated ECM connector Verify the isolation between harness injectors signals (Expected value: open) Measure the resistance of the harness wire, between the ECM and injector 1 connectors (Expected value < 2 Ohms) Check if HIC connector is connecting the engine harness to the vehicle harness

PCODE	MODULE	DESCRIPTION	CAUSE	ACTION
P0264	ECM	Cylinder 2 injector open circuit or shorted to ground	Blown fuse, damaged or disconnected injector, damaged or disconnected circuit wires, damaged ECM output pins.	Check related fuse(s) Disconnect injector 2 and measure his resistance (Expected value: 14 to 15 Ohms) Measure the voltage of the harness power wire relative to ground (Expected value: Battery voltage) Disconnect the associated ECM connector Measure the resistance of the harness wire, between the ECM and injector 2 connectors (Expected value < 2 Ohms) Check if HIC connector is connecting the engine harness to the vehicle harness
P0265	ECM	Cylinder 2 injector shorted to battery +	Damaged injector, damaged circuit wires, damaged connector or damaged ECM output pins.	Check related fuse(s) Disconnect injector 2 and measure his resistance (Expected value: 14 to 15 Ohms) Measure the voltage of the harness power wire relative to ground (Expected value: Battery voltage) Disconnect the associated ECM connector Verify the isolation between harness injectors signals (Expected value: open) Measure the resistance of the harness wire, between the ECM and injector 2 connectors (Expected value < 2 Ohms) Check if HIC connector is connecting the engine harness to the vehicle harness
P0324	ECM	Diagnostic Fault Code for min error of knock sensor	Damaged knock sensor, damaged circuit wires, damaged connector or damaged ECM output pins.	Make sure sensor connector is fully inserted and check knock system.

PCODE	MODULE	DESCRIPTION	CAUSE	ACTION
P032A	ECM	Diagnostic Fault Code for min error of knock sensor	Damaged knock sensor, damaged circuit wires, damaged connector or damaged ECM output pins.	Make sure sensor connector is fully inserted and check knock system.
P0335	ECM	Crankshaft Position Sensor	Damaged CPS, damaged circuit wires, damaged connector or damaged ECM output pins.	Make sure sensor connector is well inserted Disconnect the associated ECM connector Measure the resistance of the harness wires, between the ECM and sensor connectors (Expected value < 2 Ohms)
P0359	ECM	Ignition coil	Damaged ignition coil, damaged circuit wires, damaged connector or damaged ECM output pins.	Open the ECM Activation page in BUDS Perform an ignition coil activation and check if ignition coil is reacting as expected Check related fuse(s) Measure the voltage of the harness power wire relative to ground (Expected value: Battery voltage) Disconnect the associated ECM connector Measure the resistance of the harness wires, between the ECM and tested device connectors (Expected value < 2 Ohms) Check if HIC connector is connecting the engine harness to the vehicle harness Refer to the service manual for detailed ignition coil testing procedure

PCODE	MODULE	DESCRIPTION	CAUSE	ACTION
P0360	ECM	Ignition coil	Damaged ignition coil, damaged circuit wires, damaged connector or damaged ECM output pins.	Open the ECM Activation page in BUDS Perform an ignition coil activation and check if ignition coil is reacting as expected Check related fuse(s) Measure the voltage of the harness power wire relative to ground (Expected value: Battery voltage) Disconnect the associated ECM connector Measure the resistance of the harness wires, between the ECM and tested device connectors (Expected value < 2 Ohms) Check if HIC connector is connecting the engine harness to the vehicle harness Refer to the service manual for detailed ignition coil testing procedure
P0361	ECM	Ignition coil range/performance	Damaged ignition coil, damaged circuit wires, damaged connector or damaged ECM output pins.	Open the ECM Activation page in BUDS Perform an ignition coil activation and check if ignition coil is reacting as expected Check related fuse(s) Measure the voltage of the harness power wire relative to ground (Expected value: Battery voltage) Disconnect the associated ECM connector Measure the resistance of the harness wires, between the ECM and tested device connectors (Expected value < 2 Ohms) Check if HIC connector is connecting the engine harness to the vehicle harness Refer to the service manual for detailed ignition coil testing procedure

PCODE	MODULE	DESCRIPTION	CAUSE	ACTION
P0362	ECM	Ignition coil range/performance	Damaged ignition coil, damaged circuit wires, damaged connector or damaged ECM output pins.	Open the ECM Activation page in BUDS Perform an ignition coil activation and check if ignition coil is reacting as expected Check related fuse(s) Measure the voltage of the harness power wire relative to ground (Expected value: Battery voltage) Disconnect the associated ECM connector Measure the resistance of the harness wires, between the ECM and tested device connectors (Expected value < 2 Ohms) Check if HIC connector is connecting the engine harness to the vehicle harness Refer to the service manual for detailed ignition coil testing procedure
P0480	ECM	Radiator cooling fan relay	Blown fuse, damaged or disconnected relay, damaged circuit wires or connectors, damaged ECM output pins, damaged Relay.	Check related fuse(s) Disconnect relay and measure his coil resistance (Expected value: 70 to 90 Ohms) Disconnect the associated ECM connector and measure resistance between harness wires and ground (Expected value: open) Measure the resistance of the harness wire, between the ECM and tested device connectors (Expected value < 2 Ohms)

PCODE	MODULE	DESCRIPTION	CAUSE	ACTION
P0500	DPS	Invalid or missing vehicle speed	No vehicle speed available & Vehicle is in (H or L Gear) with Engine RPM over 4000RPM. Damaged Vehicle Speed sensor circuit, Damaged sensor, Wrong mounting position of speed sensor.	Check if vehicle speed is available in BUDS Monitoring page Check related fuse(s) Disconnect the sensor, measure the voltage of the harness power wire relative to ground (Expected value: Battery voltage) Measure the resistance of the harness wires, between the ECM and sensor connectors (Expected value < 5 Ohms)
P0501	ECM	Vehicle speed not plausible	Vehicle speed correlation check failed	Check if vehicle speed is available in Monitoring page in BUDS Check related fuse(s) Disconnect the sensor, measure the voltage of the harness power wire relative to ground (Expected value: Battery voltage) Measure the resistance of the harness wires, between the ECM and sensor connectors (Expected value < 5 Ohms)
P0504	ECM	Brake signal not plausible	Brake signal correlation check failed	Open the ECM Monitoring page in BUDS. Check fuse Press on brake pedal. Ensure that brake switch light comes on ECM Monitoring page
P0512	ECM	Starter control circuit	Damaged or disconnected relay, damaged circuit wires, damaged connectors or damaged ECM output pins.	Measure voltage between harness connector SS1 and ground (Expected value: 11 to 13 volts) Measure resistance from connector: ECMB-L4 to SS2 (Expected value: < 2 ohms)
P0513	ECM	Invalid Access Key Detected	A non stored access key was detected when key switch was turned to ON.	Use a stored access key to turn key switch. If no stored access keys are available program one and try again

PCODE	MODULE	DESCRIPTION	CAUSE	ACTION
P0520	ECM	Engine oil pressure sensor circuit malfunction	Damaged switch, damaged circuit wires, damaged connector, damaged ECM pins.	Measure resistance between harness connector EOP and ground When engine stopped. (Expected value < 2 Ohms) Measure resistance between harness connector EOP and ground When engine running. (Expected value = open) Measure resistance from harness connector: EOP to ECMA-E3 (Expected value: < 2 Ohms) Check if HIC connector is properly connected (engine harness to the vehicle harness).
P0523	ECM	Engine oil pressure sensor sticking	Damaged switch, damaged circuit wires, damaged connector, damaged ECM pins.	Measure resistance between harness connector EOP and ground When engine stopped. (Expected value < 2 Ohms) Measure resistance between harness connector EOP and ground When engine running. (Expected value = open) Measure resistance from harness connector: EOP to ECMA-E3 (Expected value: < 2 Ohms) Check if HIC connector is properly connected (engine harness to the vehicle harness).

PCODE	MODULE	DESCRIPTION	CAUSE	ACTION
P0524	ECM	Engine oil pressure too Low	Damaged switch, damaged circuit wires, damaged connector, damaged ECM pins.	Measure resistance between harness connector EOP and ground When engine stopped. (Expected value < 2 Ohms) Measure resistance between harness connector EOP and ground When engine running. (Expected value = open) Measure resistance from harness connector: EOP to ECMA-E3 (Expected value: < 2 Ohms) Check if HIC connector is properly connected (engine harness to the vehicle harness)
P0551	DPS	TORQUE_SENSOR_ OPEN	Damaged DPS	External troubleshooting is not possible Clear the Fault. If Fault becomes Active Replace the DPS
P0552	DPS	TORQUE_SENSOR_ SHORT_GND	Damaged DPS	External troubleshooting is not possible Clear the Fault. If Fault becomes Active Replace the DPS
P0553	DPS	TORQUE_SENSOR_ SHORT_5V	Damaged DPS	External troubleshooting is not possible Clear the Fault. If Fault becomes Active Replace the DPS
P0560	ECM	Non-plausibility error on system voltage	Battery failure, voltage regulator failure, damaged circuit wires or connection, damaged magneto generator. An external battery charger may have been used.	Measure battery voltage with engine stopped. (Expected value: 11 to 13 volts) Measure battery voltage with engine running. (Expected value: 13 to 14.7 volts) Check connections on voltage regulator. Check ground and positive connections on battery. Check ground on vehicle frame

PCODE	MODULE	DESCRIPTION	CAUSE	ACTION
P0562	DPS	System voltage low	Blown fuse, battery low (damaged magneto/regulator), damaged circuit wires or connection, Intense usage of WINCH	Check related fuse(s) Measure battery voltage with engine stopped (Expected value: 11 to 13 Volts) Check ground and positive connections on battery Validate that all the DPS connectors are secured On the DPS power connector, measure the voltage between the two harness wires (Expected value: Battery voltage)
P0562	DPS GLOBE	BATTERY LOW	Battery low (damaged magneto/regulator), damaged circuit wires or connection. Intense usage of WINCH	Measure battery voltage with engine stopped (Expected value: 11 to 13 Volts) Check ground and positive connections on battery Validate that all the DPS connectors are secured On the DPS power connector pins, measure the voltage between the two harness power wires (Expected value: Battery voltage) Measure the resistance of the harness wire, between the DPS power connector and ground (Expected value < 2 Ohms)
P0562	ECM	System voltage low	Blown fuse FC, battery failure, voltage regulator failure, damaged circuit wires or connection, damaged magneto generator. An external battery charger may have been used. Intense usage of WINCH	Measure battery voltage with engine stopped. (Expected value: 11 to 13 volts) Measure battery voltage with engine running. (Expected value: 13 to 14.7 volts) Check connections on voltage regulator. Check ground and positive connections on battery. Check ground on vehicle frame

PCODE	MODULE	DESCRIPTION	CAUSE	ACTION
P0563	DPS	system voltage high	Rectifier failure, damaged circuit wires or connection.	Measure battery voltage with engine stopped. (Expected value: 11 to 13 volts) Measure battery voltage with engine Running at 3500RPM. (Expected value: 13 to 14.7 volts) Check connections on voltage regulator. Check ground and positive connections on battery.
P0563	DPS GLOBE	BATTERY HIGH	Rectifier failure, damaged circuit wires or connection./ Improper battery charger could raise that fault	Measure battery voltage with engine stopped. (Expected value: 11 to 13 volts) Measure battery voltage with engine Running at 3500RPM. (Expected value: 13 to 14.7 volts) Check connections on voltage regulator. Check ground and positive connections on battery.
P0563	ECM	System voltage high	Damaged regulator. An external battery charger may have been used.	Measure battery voltage with engine stopped. (Expected value: 11 to 13 volts) Measure battery voltage with engine running. (Expected value: 13 to 14.7 volts) Check connections on voltage regulator. Check ground and positive connections on battery. Check ground on vehicle frame
P0601	DPS	CALIBRATION FAULT	DPS not calibrated or damage DPS	Try updating the DPS
P0601	SCM	SCM calibration fault	Calibration Checksum err	Update SCM
P0602	DPS GLOBE	Manufacturing CRC Programming Error	Internal error or damaged DPS	change dps if condition always active
P0605	SCM	EEPROM COMMUNICATION FAULT	Last minute memory or last modes memory check	External troubleshooting is not possible Check for communication fault using BUDS
P0606	DPS GLOBE	Application CRC(boot)	Application CRC(boot)	reflash DPS

PCODE	MODULE	DESCRIPTION	CAUSE	ACTION
P0606	ECM	Control Module Processor	Faulty calibration Faulty programming Damaged ECM	Try updating the ECM calibration If the problem persists, reflash ECM If the problem persists, replace the ECM.
P0607	DPS GLOBE	Boot Count(boot)	Battery low (damaged magneto/regulator), damaged circuit wires or connection. Intense usage of WINCH	Measure battery voltage with engine stopped (Expected value: 11 to 13 Volts) Check ground and positive connections on battery Validate that all the DPS connectors are secured On the DPS power connector, measure the voltage between the two harness power wires (Expected value: Battery voltage)
P060D	ECM	Throttle Accelerator Sensor (TAS) synchronistic error between sensor 1 and 2	Throttle Accelerator Sensors (TAS) plausibility check error	Make sure sensor connector is well inserted Disconnect the associated ECM connector Measure the resistance of the harness wires, between the ECM and sensor connectors (Expected value < 2 Ohms)
P060E	ECM	Throttle position performance	TPS plausibility check error	Disconnect the associated ECM connector Measure the resistance of the harness wires, between the ECM and sensor connectors (Expected value < 2 Ohms)
P0610	ECM	Variant Coding error	Faulty variant coding Faulty programming Wrong ECM after replacement	Try updating the ECM variant or calibration If the problem persists, reflash ECM If the problem persists, replace ECM.
P062F	DPS GLOBE	EEPROM SPI	internal error or damaged DPS, EEPROM SPI	change dps if condition still active after key-on cycle external troobleshooting not possible

PCODE	MODULE	DESCRIPTION	CAUSE	ACTION
P062F	ECM	Internal control module EEPROM error	Faulty calibration or variant Faulty programming Damaged ECM	Try updating the ECM variant or calibration If the problem persists, reflash ECM If the problem persists, replace ECM.
P0635	DPS GLOBE	EXCESSIVE ERROR CURRENT	internal error or damaged DPS	change DPS
P0636	DPS	MOTOR LOW CURRENT FAULT	Internal error or damaged DPS	External troubleshooting is not possible Clear the Fault. If Fault becomes Active Replace the DPS
P0637	DPS	MOTOR HIGH CURRENT FAULT	Internal error or damaged DPS	External troubleshooting is not possible Clear the Fault. If Fault becomes Active Replace the DPS
P0637	DPS GLOBE	OVER CURRENT	short-circuit in motor/ internal error	change DPS
P0658	DPS	PHASE A_LOW	DPS motor supply Damaged DPS	External troubleshooting is not possible Clear the Fault. If Fault becomes Active Replace the DPS
P0659	DPS	PHASE A_HIGH	DPS motor supply Damaged DPS	External troubleshooting is not possible Clear the Fault. If Fault becomes Active Replace the DPS
P0666	DPS	HIGH TEMPERATURE	High temperature of the DPS. Extreme usage of the unit.	Let the unit cool down.
P0685	ECM	Accessory relay circuit	Blown fuse, damaged or disconnected relay, damaged circuit wires, damaged connectors or damaged ECM output pins	Check related fuse(s) Disconnect Accessories and Lights relays, turn key switch (on w/lights) Measure coil resistance of both relays (Expected value: 70 to 90 Ohms) Measure the voltage of the harness power wires of both relays relative to ground (Expected value: Battery voltage) Disconnect the associated ECM connector Measure the resistance of the harness wires, between the ECM and both relays (Expected value < 2 Ohms)

PCODE	MODULE	DESCRIPTION	CAUSE	ACTION
P0686	ECM	Accessory relay circuit shorted to ground or open circuit	Blown fuse, damaged or disconnected relay, damaged circuit wires, damaged connectors or damaged ECM output pins	Check related fuse(s) Disconnect Accessories and Lights relays, turn key switch (on w/lights) Measure coil resistance of both relays (Expected value: 70 to 90 Ohms) Measure the voltage of the harness power wires of both relays relative to ground (Expected value: Battery voltage) Disconnect the associated ECM connector Measure the resistance of the harness wires, between the ECM and both relays (Expected value < 2 Ohms)
P0687	ECM	Accessory relay circuit shorted to battery +	Damaged relay, damaged circuit wires, damaged connector or damaged ECM output pins.	Check related fuse(s) Disconnect Accessories and Lights relays, turn key switch (on w/lights) Measure coil resistance of both relays (Expected value: 70 to 90 Ohms) Measure the voltage of the harness power wires of both relays relative to ground (Expected value: Battery voltage) Disconnect the associated ECM connector Measure the resistance of the harness wires, between the ECM and both relays (Expected value < 2 Ohms)
P0691	ECM	Radiator fan circuit shorted to ground or open circuit	Blown fuse, damaged or disconnected fan relay, damaged circuit wires, damaged connectors or damaged ECM output pins.	Check related fuse(s) Disconnect radiator fan relay and measure his coil resistance (Expected value: 70 to 90 Ohms) Measure the voltage of the harness power wire of relay relative to ground (Expected value: Battery voltage) Disconnect the associated ECM connector Measure the resistance of the harness wire, between the ECM and relay (Expected value < 2 Ohms)

PCODE	MODULE	DESCRIPTION	CAUSE	ACTION
P0692	ECM	Radiator fan circuit shorted to battery +	Damaged fan relay, damaged circuit wires, damaged connector or damaged ECM output pins.	Check related fuse(s) Disconnect radiator fan relay and measure his coil resistance (Expected value: 70 to 90 Ohms) Measure the voltage of the harness power wire of relay relative to ground (Expected value: Battery voltage) Disconnect the associated ECM connector Measure the resistance of the harness wire, between the ECM and relay (Expected value < 2 Ohms)
P0790	ECM	Check of Override Button	Damaged switch, damaged circuit wires, damaged connector, damaged ECM pins.	Open the ECM Monitoring page in BUDS. Press on Override button. Ensure that the 2 switch light change of state.
P0811	ECM	Clutch slippage detected	Excessive clutch slippage	Check clutch for proper clutch behavior
P1036	ECM	Internal fault path number for Signal error : power stage of heater of Sensor upstream catalyst, LSU 2	Blown fuse, damaged or disconnected O2 sensor, damaged or disconnected circuit wires, damaged ECM output pins.	Check related fuse(s) Disconnect the 2nd oxygen sensor and measure his resistance (Expected value: 7 to 12 Ohms) Measure the voltage of the harness power wire relative to ground (Expected value: Battery voltage) Disconnect the associated ECM connector and measure resistance between harness wires and ground (Expected value: open) Measure the resistance of the harness wires, between the ECM and sensor connectors (Expected value < 2 Ohms)
P1120	ECM	Wrong Throttle Accelerator Sensor (TPS) position	Wrong TPS sensor position. Both TPS position failed test.	Check TAS adjustment.

PCODE	MODULE	DESCRIPTION	CAUSE	ACTION
P1130	ECM	ECU int. fault path no.: electrical diagnosis for lambda sensor upstream cat. Sig-error	Damaged O2 sensor, damaged circuit wires, damaged connector or damaged ECM output pins.	Check related fuse(s) Disconnect the 1st oxygen sensor (FRONT cylinder) and measure his resistance (Expected value: 7 to 12 Ohms) Measure the voltage of the harness power wire relative to ground (Expected value: Battery voltage) Disconnect the associated ECM connector and measure resistance between harness wires and ground (Expected value: open) Measure the resistance of the harness wires, between the ECM and sensor connectors (Expected value < 2 Ohms)
P1136	ECM	ECU int. fault path no.: electrical diagnosis for second lambda sensor upstream cat. Sig-error	Damaged O2 sensor, damaged circuit wires, damaged connector or damaged ECM output pins.	Check related fuse(s) Disconnect the 2nd oxygen sensor (REAR cylinder) and measure his resistance (Expected value: 7 to 12 Ohms) Measure the voltage of the harness power wire relative to ground (Expected value: Battery voltage) Disconnect the associated ECM connector and measure resistance between harness wires and ground (Expected value: open) Measure the resistance of the harness wires, between the ECM and sensor connectors (Expected value < 2 Ohms)

Midwest Manuals
Green Manuals
Paperless Manuals
For a Better Tomorrow
If you bought this manual from any other seller please leave them NEGATIVE feedback and notify me at bestshopmanuals@gmail.com

PCODE	MODULE	DESCRIPTION	CAUSE	ACTION
P1171	ECM	Diagnostic Fault code for Fuel Supply System (ORA Max Fault) Exhaust Bank1	Injection and fuel supply system. Adaptation of the air charge reaching the limits (min and max) based on the lambda sensors feedback. Too much variation in the engine itself in reference to a nominal engine. It can be cause by an engine that has been modified or out of spec (airbox, air filter, injectors, exhaust system, valve clearance, etc.) or any other components that can influence the engine performance.	Check injector and fuel supply system.
P1172	ECM	Diagnostic Fault code for Fuel Supply System (ORA Min Fault) Exhaust Bank1	Injection and fuel supply system. Adaptation of the air charge reaching the limits (min and max) based on the lambda sensors feedback. Too much variation in the engine itself in reference to a nominal engine. It can be cause by an engine that has been modified or out of spec (airbox, air filter, injectors, exhaust system, valve clearance, etc.) or any other components that can influence the engine performance.	Check injector and fuel supply system.
P1174	ECM	Diagnostic Fault code for Fuel Supply System (ORA Max Fault) Exhaust Bank2	Injection and fuel supply system. Adaptation of the air charge reaching the limits (min and max) based on the lambda sensors feedback. Too much variation in the engine itself in reference to a nominal engine. It can be cause by an engine that has been modified or out of spec (airbox, air filter, injectors, exhaust system, valve clearance, etc.) or any other components that can influence the engine performance.	Check injector and fuel supply system.

PCODE	MODULE	DESCRIPTION	CAUSE	ACTION
P1175	ECM	Diagnostic Fault code for Fuel Supply System (ORA Min Fault) Exhaust Bank2	Injection and fuel supply system. Adaptation of the air charge reaching the limits (min and max) based on the lambda sensors feedback. Too much variation in the engine itself in reference to a nominal engine. It can be cause by an engine that has been modified or out of spec (airbox, air filter, injectors, exhaust system, valve clearance, etc.) or any other components that can influence the engine performance.	Check injector and fuel supply system.
P1339	ECM	Signal fault at phase determination	backup phase detection strategies not able to find the correct phase	
P1606	ECM	Control Module Processor	Internal ECM problem	Check for ECM fault External troubleshooting not possible
P160E	ECM	Electrical Throttle Actuator (ETA) control fault	Damaged ETC, damaged circuit wires, damaged connector or damaged ECM output pins.	Disconnect ETC Measure the resistance of the harness wires, between the ECM and tested device connectors (Expected value < 2 Ohms)
P1610	ECM	Electrical Throttle Actuator (ETA) shorted to V +	Damaged ETC, damaged circuit wires, damaged connector or damaged ECM output pins.	Disconnect ETC Measure the resistance of the harness wires, between the ECM and tested device connectors (Expected value < 2 Ohms)
P1611	ECM	Electrical Throttle Actuator (ETA) shorted to ground	Damaged ETC, damaged circuit wires, damaged connector or damaged ECM output pins.	Disconnect ETC Measure the resistance of the harness wires, between the ECM and tested device connectors (Expected value < 2 Ohms)
P1612	ECM	Electrical Throttle Actuator (ETA) signal not plausible	Damaged ETC, damaged circuit wires, damaged connector or damaged ECM output pins.	Disconnect ETC Measure the resistance of the harness wires, between the ECM and tested device connectors (Expected value < 2 Ohms)

PCODE	MODULE	DESCRIPTION	CAUSE	ACTION
P1613	ECM	Electrical Throttle Actuator (ETA)	Damaged ETC, damaged circuit wires, damaged connector or damaged ECM output pins.	Disconnect ETC Measure the resistance of the harness wires, between the ECM and tested device connectors (Expected value < 2 Ohms)
P1614	ECM	Throttle idle position failure on throttle release	Throttle mechanical adjustment No initialization after throttle body/ ECM replacement	Check throttle mechanical adjustment. Check idle stop for wear. Ensure throttle plate is against throttle stop. Check throttle angle at idle. Perform THROTTLE POSITION SENSOR RESET in BUDS with throttle completely OFF. Refer to the service manual for more details.
P1615	ECM	TPS position deviation fault	Throttle mechanical adjustment No initialization after throttle body/ ECM replacement	Check throttle mechanical adjustment. Check idle stop for wear. Ensure throttle plate is against throttle stop. Check throttle angle at idle. Perform THROTTLE POSITION SENSOR INITIALIZATION in BUDS with throttle completely OFF. Refer to the service manual for more details.
P1616	ECM	Throttle limp-home-position failed	Throttle mechanical stop No initialization after throttle body/ ECM replacement	Check throttle mechanical adjustment. Check idle stop for wear. Ensure throttle plate is against throttle stop. Check throttle angle at idle. Perform THROTTLE POSITION SENSOR INITIALIZATION in BUDS with throttle completely OFF.. Refer to the service manual for more details.

PCODE	MODULE	DESCRIPTION	CAUSE	ACTION
P1619	ECM	TPS adaptation failure	Wrong throttle body mechanical position during reset of closed TPS or no initialization after ECM replacement.	Check THROTTLE cable adjustment. Check idle stop for wear. Ensure throttle plate is against throttle stop. Perform THROTTLE POSITION SENSOR INITIALIZATION in BUDS with throttle completely OFF.FF.
P1620	ECM	TPS adaptation failure	Wrong throttle body mechanical position during reset of closed TPS or no initialization after ECM replacement.	Check cable adjustment. Check idle stop for wear. Make sure throttle plate is against throttle stop. Perform THROTTLE POSITION SENSOR INITIALIZATION in BUDS with throttle completely OFF.
P1621	ECM	TPS adaptation cancelled lower mechanical stop failed	Throttle mechanical stop No initialization after throttle body/ ECM replacement	Check cable adjustment. Check idle stop for wear. Ensure throttle plate is against throttle stop. Check throttle angle at idle. Perform THROTTLE POSITION SENSOR INITIALIZATION in BUDS with throttle completely OFF. Refer to the service manual for more details.
P1622	ECM	TPS adaptation failed	Throttle mechanical stop No initialization after throttle body/ ECM replacement	Check cable adjustment. Check idle stop for wear. Ensure throttle plate is against throttle stop.. Check throttle angle at idle. Perform THROTTLE POSITION SENSOR INITIALIZATION in BUDS with throttle completely OFF. Refer to the service manual for more details.
P16C0	ECM	ECU ADC plausibility check	Monitoring plausibility check failed	Check for ECM fault
P16C1	ECM	ECU ADC test failed	Monitoring plausibility check failed	Check for ECM fault
P16C2	ECM	ECU monitoring error	Monitoring plausibility check failed	Check for ECM fault
P16C3	ECM	Throttle Accelerator Sensors (TAS) monitoring check fault	Monitoring plausibility check failed	Check for ECM fault

PCODE	MODULE	DESCRIPTION	CAUSE	ACTION
P16C4	ECM	Engine speed monitoring check fault	Monitoring plausibility check failed	Check for ECM fault
P16C5	ECM	Safety fuel cut-off activated monitoring check level 1	Monitoring plausibility check failed	Check for ECM fault
P16C6	ECM	Safety fuel cut-off activated monitoring check level 2	Monitoring plausibility check failed	Check for ECM fault
P16C7	ECM	Throttle valve plausibility check failed	Monitoring plausibility check failed	Check for ECM fault
P16C8	ECM	Permitted throttle valve position monitoring check exceeded	Monitoring plausibility check failed	Check for ECM fault
P1F01	DPS	Power output overload	Motor short circuit or power output failed	Reset fault, If fault re-occur, replace DPS unit
P1F02	DPS	Power output overload (18V).	High voltage at the unit input.	Measure battery voltage with engine stopped. (Expected value: 11 to 13 volts) Measure battery voltage with engine running. (Expected value: 13 to 14.7 volts) test charging system as per shop manual
P1F03	DPS	Electronic Circuit Overheat	Hi temperature detected by on board temperature sensor.	Fault may become Active in extreme use situations. Reset fault and let DPS cool down. If fault re-occur in normal riding conditions, replace DPS unit
P1F05	DPS	Motor current sensor range/performance	Motor input vs output Current correlation check failed	External troubleshooting is not possible Clear the Fault. If Fault becomes Active Replace the DPS
P20EB	ECM	Main relay de-energized too late or sticking	Damaged circuit wires, damaged connectors or damaged ECM output pins. Damaged relay	Disconnect main relay and measure his coil resistance (Expected value: 70 to 90 Ohms)

PCODE	MODULE	DESCRIPTION	CAUSE	ACTION
P212C	ECM	2nd Throttle Accelerator Sensors (TPS) low	Damaged TPS, damaged circuit wires, damaged connector or damaged ECM output pins.	Make sure sensor connector is well inserted Disconnect the sensor and associated ECM connector Measure the resistance of the harness wires, between the ECM and sensor connectors (Expected value < 2 Ohms)
P212D	ECM	2nd Throttle Accelerator Sensors (TPS) high	Damaged TPS, damaged circuit wires, damaged connector or damaged ECM output pins.	Make sure sensor connector is well inserted Disconnect the sensor and associated ECM connector Measure the resistance of the harness wires, between the ECM and sensor connectors (Expected value < 2 Ohms)
P2228	ECM	Ambient pressure sensor shorted to ground	Damaged sensor, damaged circuit wires, damaged connector or damaged ECM pins, ECM voltage supply low	Make sure sensor connector is well inserted Disconnect the sensor, measure the voltage of the harness power wires (Expected value: 4.8 to 5.1 Volts) Measure the resistance of the harness wires, between the ECM and sensor connectors (Expected value < 2 Ohms)
P2229	ECM	Ambient pressure sensor short to V +	Damaged sensor, wires shorted to battery +, ECM voltage supply too high.	Make sure sensor connector is well inserted Disconnect the sensor, measure the voltage of the harness power wires (Expected value: 4.8 to 5.1 Volts) Measure the resistance of the harness wires, between the ECM and sensor connectors (Expected value < 2 Ohms)
P2279	ECM	Intake Air System leak	Check for cracked plenum	Intake or throttle body air leak

PCODE	MODULE	DESCRIPTION	CAUSE	ACTION
P2299	ECM	Throttle and break pedal are used at the same time	If the accelerator pedal and the brake are activated simultaneously for a delay time and the vehicle is moving faster than Speed-threshold	
P2416	ECM	exchanged lambda sensors upstream catalyst	Wrong O2 sensor position after O2 replacement or wire replacement.	Swap O2 sensor wires.
P2530	ECM	Ignition switch state not plausible	Ignition key switch connection or internal switch fault	Check ignition key contacts and wire connections
P2620	ECM	Throttle Accelerator Sensors (TPS) position	Wrong TPS sensor position.	Check TAS adjustment.
P2621	ECM	First Throttle Accelerator Sensor (TPS) low	Damaged TPS, damaged circuit wires, damaged connector or damaged ECM output pins.	Make sure sensor connector is well inserted Disconnect the sensor and associated ECM connector Measure the resistance of the harness wires, between the ECM and sensor connectors (Expected value < 2 Ohms)
P2622	ECM	First Throttle Accelerator Sensors (TPS) high	Damaged TPS, damaged circuit wires, damaged connector or damaged ECM output pins.	Make sure sensor connector is well inserted Disconnect the sensor and associated ECM connector Measure the resistance of the harness wires, between the ECM and sensor connectors (Expected value < 2 Ohms)
P2670	DPS	PHASE B_LOW	DPS motor supply Damaged DPS	External troubleshooting is not possible Clear the Fault. If Fault becomes Active Replace the DPS
P2671	DPS	PHASE B_HIGH	DPS motor supply Damaged DPS	External troubleshooting is not possible Clear the Fault. If Fault becomes Active Replace the DPS

PCODE	MODULE	DESCRIPTION	CAUSE	ACTION
P2801	ECM	Gear position sensor invalid range	Damaged circuit wires, damaged gear position sensor, damaged ECM pins or damaged transmission.	Open ECM Monitoring page in BUDS, Verify that gear position information changes with gear selection changes on vehicle. Disconnect GBPS Measure voltage between harness connector 5-GBPS-1 and 5-GBPS-3. (Expected value: 4.8 to 5.1 Volts) Measure resistance from connector: 5-ECM-B13 to 5-GBPS-2 (Expected value: < 2 Ohms) Measure resistance from connector: 5-ECM-B22 to 5-GBPS-3 (Expected value: < 2 Ohms)
P2806	ECM	Gear position sensor angle defined area vs position not plausible	Damaged circuit wires, damaged gear position sensor, damaged ECM pins or damaged transmission.	Open ECM Monitoring page in BUDS, Verify that gear position information changes with gear selection changes on vehicle. Disconnect GBPS Measure voltage between harness connector 5-GBPS-1 and 5-GBPS-3. (Expected value: 4.8 to 5.1 Volts) Measure resistance from connector: 5-ECM-B13 to 5-GBPS-2 (Expected value: < 2 Ohms) Measure resistance from connector: 5-ECM-B22 to 5-GBPS-3 (Expected value: < 2 Ohms)
U0073	DPS	CAN bus off, no messages	Damaged circuit wires or damaged DPS pins.	On the Diagnostic connector, measure the resistance between the two CAN lines (Expected value: 50 to 70 Ohms) Measure the resistance of each CAN wire in the harness, between the Diagnostic and DPS connectors (Expected value < 5 Ohms)

PCODE	MODULE	DESCRIPTION	CAUSE	ACTION
U0073	DPS GLOBE	CAN LOSS/CANBUS FAILURE/CANBUSS OFF	Damaged CAN Bus wires to Network, damaged DPS pins or wires.	On the Diagnostic connector, measure the resistance between the two CAN lines (Expected value: 50 to 70 Ohms) Measure the resistance of each CAN wire in the harness, between the Diagnostic and DPS connectors (Expected value < 5 Ohms)
U0073	SCM	CAN-Bus failure, CAN-Bus OFF	Damaged circuit wires or damaged SCM pins.	On the Diagnostic connector, measure the resistance between the two CAN lines (Expected value: 50 to 70 Ohms) Measure the resistance of each CAN wire in the harness, between the Diagnostic and SCM connectors (Expected value < 2 Ohms)
U0100	DPS	Lost communication with ECM (lost of CAN ID's)	Damaged CAN Bus wires to ECM, damaged DPS/ECM pins.	On the Diagnostic connector, measure the resistance between the two CAN lines (Expected value: 50 to 70 Ohms) Measure the resistance of each CAN wire in the harness, between the Diagnostic and ECM connectors (Expected value < 5 Ohms)
U0100	DPS GLOBE	ECM CAN COMMUNICATION OFF	Damaged CAN Bus wires to Network, damaged DPS pins or wires.	On the Diagnostic connector, measure the resistance between the two CAN lines (Expected value: 50 to 70 Ohms) Measure the resistance of each CAN wire in the harness, between the Diagnostic and DPS connectors (Expected value < 5 Ohms)
U0100	SCM	Lost Communication With ECM (lost of CAN ID's)	Missing CAN ID from ECM Internal module error Damaged circuit wires or damaged module pins.	On the Diagnostic connector, measure the resistance between the two CAN lines (Expected value: 50 to 70 Ohms) Measure the resistance of each CAN wire in the harness, between the Diagnostic and ECM connectors (Expected value < 2 Ohms)

PCODE	MODULE	DESCRIPTION	CAUSE	ACTION
U0155	DPS	Lost communication with CLUSTER	Damage CAN Bus wires to cluster Damaged circuit wires or damaged Cluster module pins.	On the Cluster power connector, measure the voltage between the two harness power wires (Expected value: Battery voltage) On the Diagnostic connector, measure the resistance between the two CAN lines (Expected value: 50 to 70 Ohms) Measure the resistance of each CAN wire in the harness, between the Diagnostic and Cluster connectors (Expected value < 2 Ohms)
U0155	ECM	Lost communication with CLUSTER (lost of CAN ID's)	Missing CAN ID Module internal error Damaged circuit wires or damaged module pins.	With vehicle connected to BUDS with MPI2, check for CLUSTER fault or ECM fault Disconnect the cluster connector Measure the voltage of the harness power wires relative to ground (Expected value: Battery voltage) Disconnect MPI2 from DB connector Measure the resistance between the two CAN lines (Expected value: 50 to 70 Ohms) Disconnect the ECM connector Measure the resistance of each CAN wire in the harness, between the Diagnostic and ECM connectors (Expected value < 2 Ohms) Measure the resistance of each CAN wire in the harness, between the Diagnostic and Cluster connectors (Expected value < 2 Ohms)

PCODE	MODULE	DESCRIPTION	CAUSE	ACTION
U0155	ECM	Lost communication with CLUSTER (lost of CAN ID's)	Missing CAN ID Module internal error Damaged circuit wires or damaged module pins.	With vehicle connected to BUDS with MPI2, check for CLUSTER fault or ECM fault Disconnect the cluster connector Measure the voltage of the harness power wires relative to ground (Expected value: Battery voltage) Disconnect MPI2 from DB connector Measure the resistance between the two CAN lines (Expected value: 50 to 70 Ohms) Disconnect the ECM connector Measure the resistance of each CAN wire in the harness, between the Diagnostic and ECM connectors (Expected value < 2 Ohms) Measure the resistance of each CAN wire in the harness, between the Diagnostic and Cluster connectors (Expected value < 2 Ohms)
U0155	SCM	Lost Communication With Cluster (lost of CAN ID's)	Missing CAN ID Module internal error Damaged circuit wires or damaged module pins.	Check for Cluster fault Measure the voltage of the cluster harness power wires relative to ground (Expected value: Battery voltage) On the Diagnostic connector, measure the resistance between the two CAN lines (Expected value: 50 to 70 Ohms) Measure the resistance of each CAN wire in the harness, between the Diagnostic and SCM connectors (Expected value < 2 Ohms) Measure the resistance of each CAN wire in the harness, between the Diagnostic and Cluster connectors (Expected value < 2 Ohms)

PCODE	MODULE	DESCRIPTION	CAUSE	ACTION
U0167	ECM	Lost communication with Vehicle Immobilizer Control Module	The Vehicle Immobilizer is reporting an electrical fault on the communication line.	Check for dirty or oxidized Key contact. Clean key contact if needed. Check for broke key contact Ensure sensor connector is fully inserted. Measure resistance between ECMB-A1 and CC-C (Expected value < 2 Ohms). Measure resistance between ECMB-C2 and CC-E (Expected value < 2 Ohms).
U0300	ECM	Invalid Security Exchange received	Incorrect ECM or CLUSTER, Incorrect software version.	Install the proper ECM or CLUSTER on vehicle. Update security coding using BUDS
U0301	ECM	Variant Coding, software incompatibility (DFC_MoFVar)	Faulty calibration or variant Faulty programming Damaged ECM	Try updating the ECM variant or calibration If the problem persists, reflash ECM If the problem persists, replace ECM.
U0302	ECM	Variant Coding, software incompatibility (DFC_MTVARNPL)	Faulty calibration or variant Faulty programming Damaged ECM	Try updating the ECM variant or calibration If the problem persists, reflash ECM If the problem persists, replace ECM.
U0400	DPS	Variant Coding failure Software incompatibility	Faulty variant coding Faulty programming	Check in the BUDS Tab "vehicle configuration" if the DPS option is checked. Reflash the DPS with the latest software
U0400	DPS GLOBE	VARIANT IMCOMPATIBILITY	vehicle configuration error or DPS software mismatch or error	look at BUDS vehicle config. check DPS for reflash write config and cycle on/off vehicle
U0400	SCM	Variant Coding failure Software incompatibility	SCM not install on expected vehicle Faulty programming	Check if SCM is install on a valid vehicle Update SCM Open Vehicle Configuration in Setting page in BUDS & if check vehicle configuration is set as expected for the vehicle.

PCODE	MODULE	DESCRIPTION	CAUSE	ACTION
U0416	DPS GLOBE	VEHICLE SPEED ERROR VALUE	vehicle speed error value received from ECM	Check if vehicle speed is available in Monitoring page in BUDS Check related fuse(s) Remove the sensor connector, measure the voltage of the harness power wire relative to ground (Expected value: Battery voltage) Measure the resistance of the harness wires, between the ECM and sensor connectors (Expected value < 5 Ohms)
U0426	ECM	Invalid Data Received From Vehicle Immobilizer Control Module	The Vehicle Immobilizer could not read the number of the access key.	Check for dirty or oxidized Key contact. Clean key contact if needed. Check for broke key contact Ensure sensor connector is fully inserted. Measure resistance between ECMB-A1 and CC-C (Expected value < 2 Ohms). Measure resistance between ECMB-C2 and CC-E (Expected value < 2 Ohms).
U220E	ECM	Invalid Check Sum from CLUSTER message	Check Sum error	External troubleshooting is not possible Check for communication fault
U3001	DPS	Module improper shutdown	Lost of power on DPS that can be caused by damaged circuit wires or damaged DPS pins.	Check the two DPS fuses Ensure DPS connector is fully inserted. Check for Damaged tail light, DPS, Cluster circuit wires Check for damaged DPS pins.
U3001	SCM	Module improper shutdown	Lost of power on SCM Damaged circuit wires or damaged SCM pins.	Check fuse Ensure SCM connector is fully inserted. Check for Damaged circuit wires or damaged SCM pins.

INTELLIGENT THROTTLE CONTROL (iTC)

GENERAL

SYSTEM DESCRIPTION

The iTC is an electronic throttle control system that includes:

– Throttle accelerator sensor (TAS)
– Electric throttle actuator (ETA)
– Throttle position sensor (TPS).

The TAS is part of the accelerator pedal module. The ETA and TPS are comprised in the throttle body.

The iTC is often referred to as a "throttle by wire" system (no throttle cable is used).

According to the accelerator pedal position and other EMS inputs, the ECM powers the ETA motor using pulse width modulation (PWM), to control the throttle plate. When the ECM detects through the TPS that the throttle plate has reached the targeted position, the ECM stops the throttle actuator.

Depending on various conditions and the type of key used, the iTC can modify the ETA response, limit the engine torque or vehicle speed.

For torque limitation, the ECM processes the TAS input differently depending on the specific mode. In other words, the driver's demand may not necessarily result in the corresponding throttle opening.

For vehicle speed limitation, the iTC controls the throttle opening to maintain a maximum set speed even if the accelerator is pedal fully depressed.

SYSTEM MAIN FEATURES

The use of the iTC allows the following features:

– Key modes
– Sport/ECO modes
– Override functions.

Key Modes

Normal Key

When a normal key is used, engine delivers approximately 70% of the accelerator pedal demand (less if normal mode is selected). Vehicle speed is limited to 70 km/h (43 MPH).

Performance Key

When a performance key is used, engine delivers 100% of the accelerator pedal demand (less if normal mode is selected). The vehicle speed is limited to 120 km/h (75 MPH).

Work Key (Option)

When a work key is used, engine delivers approximately 50% of the accelerator pedal demand (less if normal mode is selected). Vehicle speed is limited to 40 km/h (25 MPH).

Sport/ECO Modes

When sport mode is selected, the full potential of the specific ignition key is deployed except when gearbox is in reverse or low gear. This mode can be activated with all key types.

NOTE: The sport mode is not available in low and reverse gears (ECO mode automatically enabled).

When ECO (fuel economy mode) mode is selected, the fuel consumption is reduced by limiting throttle response and maximum throttle opening to maintain an optimal cruising setting.

Reverse Override Function

In reverse gear, engine delivers less than the accelerator pedal demand and vehicle speed is limited to 20 km/h (12 MPH). Also, the accelerator pedal response is smoother than in high gear.

If the override button is depressed, vehicle speed and engine acceleration are increased. Even with the override is activated, the ECM will not allow the engine to deliver 100% of the accelerator pedal demand.

SYSTEM OTHER FEATURES

Driver's Seat Belt Monitoring

If driver's seat belt not fastened, speed is limited to approximately 20 km/h (12 MPH).

Brake Monitoring

If the ECM receives a brake switch signal while gearbox is in gear and the vehicle moving, the ETA will decrease throttle plate opening and engine speed will drop to idle.

NOTE: A defective brake light switch that would stay in a closed position would force the engine to run at idle.

Low Range Operation

When gearbox is in low range, engine delivers less than the accelerator pedal demand and the accelerator pedal response is smoother than in high gear.

Drive Shaft Saver

In a case where the drive wheels would momentarily leave the ground while the driver holds the throttle, this mode protects the drive system.

The system will enter the drive shaft saver mode if the ECM detects an excessive wheel acceleration rate. In such a case, the iTC will reduce the engine torque. When the wheels slow down, the system returns to normal mode.

Engine Temperature Monitoring

If coolant gets too hot, engine will deliver less than the accelerator pedal demand. The limitation is proportional to the overheat degree.

Battery Voltage Monitoring

If the battery voltage gets low, the engine idle RPM will be increased at approximately 1500 RPM.

Drowned Mode

In case of a fuel flood, the engine can be cranked without fuel injection.

To enter the drowned mode, depress and hold accelerator pedal (at least 20% of the travel) while cranking engine.

Limp Home Mode

When certain faults are occurring, the ECM will enter the limp home mode. In this mode, the engine will deliver less than the accelerator pedal demand.

PROCEDURES

SPORT/NORMAL SWITCH

Sport/Normal Switch Wire Information

FUNCTION	PIN	COLOR
Signal (to ECM B pin D4)	1	BROWN/GREEN
Ground through ECM (to ECM B pin A1)	2	ORANGE/VIOLET

SEAT BELT SWITCH

Seat Belt Switch Wire Information

FUNCTION	PIN	COLOR
Signal (to ECM B pin E3)	1	YELLOW/GREY
Ground through ECM (to ECM B pin A1)	2	ORANGE/VIOLET

OVERRIDE SWITCH

Override Switch Wire Information

FUNCTION	PIN	COLOR
Normal position signal (to ECM B pin D3)	1	VIOLET/YELLOW
Ground through ECM (to ECM B pin B1)	2	VIOLET/GREY
Override position signal (to ECM B pin F3)	3	VIOLET/ORANGE

THROTTLE ACCELERATOR SENSOR (TAS)

TAS Description

The throttle accelerator sensor (TAS) is a double hall effect sensor that sends a signal to the ECM which is proportional to the accelerator pedal. The redundancy is used for security purposes.

The voltage output of the hall effect sensors are different.

TAS Removal and Installation

The TAS is part of the accelerator pedal.

1. Note the wire routing and tie-wrap position.
2. Disconnect electrical connector.
3. Remove both accelerator pedal retaining nuts by outside the passenger compartment. Reach nuts by the RH side of the vehicle.

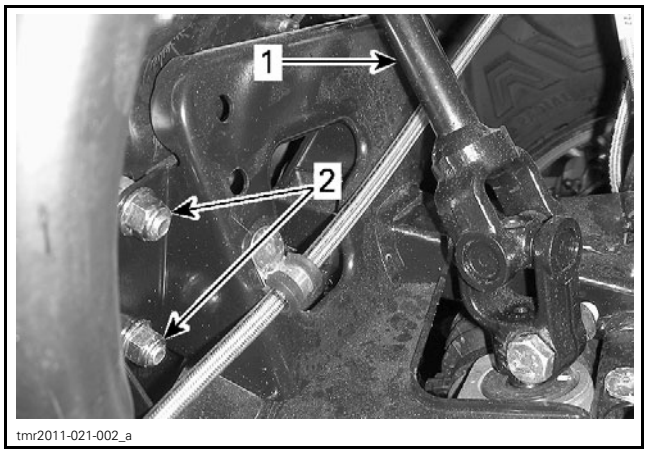

1. Steering column
2. Accelerator pedal retaining nuts

To install, reverse the removal procedure, however pay attention to the following:

Route and attach wires correctly.

Tighten nuts to the specified torque.

ACCELERATOR PEDAL RETAINING NUTS TIGHTENING TORQUE
13 N•m ± 1 N•m (115 lbf•**in** ± 9 lbf•**in**)

Carry out the *ECM FIRST INITIALIZATION*, refer to *ELECTRONIC FUEL INJECTION (EFI)* subsection.

TAS Wire Information

FUNCTION	PIN	COLOR
Signal	A	BLUE/GREEN
Ground through ECM	B	BLUE/RED
Voltage input (5 volt)	C	BLUE/ORANGE
Voltage input (5 volt)	D	BLUE/BLACK
Signal	E	BLUE/PINK
Ground through ECM	F	BLUE/VIOLET

TAS Failure

If one TAS signal fails, the vehicle will enter the limp home mode. In this case, depressing the override button will temporarily restore accelerator pedal operation (while button is depressed).

If both TAS signals fail, the engine speed will drop to idle. Depressing the override button will force the ECM to open the ETA to an angle that allows the vehicle to move.

TAS Test with B.U.D.S.

The TAS signal can be monitored in B.U.D.S.

Connect to the latest applicable B.U.D.S. software. Refer to *COMMUNICATION TOOLS AND B.U.D.S.*zd subsection.

Select the **Monitoring** and **ECM** tabs.

Look at the **TAS (%)** window as you depress the accelerator pedal.

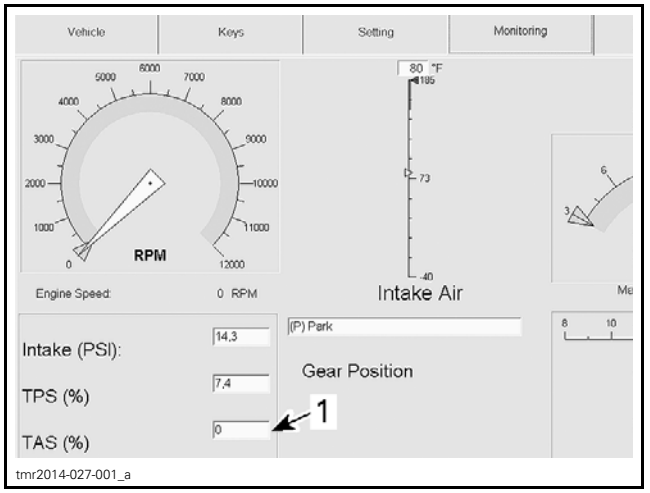

1. TAS % window

The TAS signal should vary from near 0% to near 100% depending on the pedal position, which confirms the TAS signal reaches the ECM.

ELECTRONIC FUEL INJECTION (EFI)

SERVICE TOOLS

Description	Part Number	Page
DIGITAL INDUCTION TACHOMETER	529 014 500	2
ECM ADAPTER TOOL	529 036 166	5, 16, 18–21, 24
FLUKE 115 MULTIMETER	529 035 868	5, 11, 16, 19–20, 24
OETIKER PLIERS	295 000 070	13

SERVICE PRODUCTS

Description	Part Number	Page
LOCTITE 243 (BLUE)	293 800 060	21
LOCTITE 767 (ANTISEIZE LUBRICANT)	293 800 070	24–25
XPS SYNTHETIC GREASE	293 550 010	18

GENERAL

⚠ WARNING

Fuel is flammable and explosive under certain conditions.
Ensure work area is well ventilated.
Do not smoke or allow open flames or sparks in the vicinity.
Fuel lines remain under pressure at all times.
Always proceed with care and use appropriate safety equipment when working on pressurized fuel system.
Wipe off any fuel spillage.
Do not allow fuel to spill on hot engine parts and/or on electrical connectors.
Replace any damaged, leaking or deteriorated fuel lines or connections.
Always, pressurize the fuel system if any fuel related component was disconnected or removed.
Proceed with care when removing/installing high pressure test equipment.

SYSTEM DESCRIPTION

The electronic fuel injection system (EFI) is comprised of various sensors used for detecting ongoing operating conditions of the engine and vehicle, and includes all the components that perform the required adjustments to the engine.

Electrical System

ECM (Electronic Control Module)

From input signals, the ECM acknowledges driver demands and converts them to an engine torque requirement through calculation of several variables. Then, the ECM controls the iTC, the injection system and the ignition system to meet the torque requirement.

The ECM manages the engine torque requirements and controls engine operation to ensure it is delivering optimum performance and fuel economy. The ECM also controls idle RPM and limits maximum engine speed through the iTC system.

EFI Sensors

The ECM reads the inputs from the sensors which it compares to predetermined parameters stored in the ECM, makes computations, and activates the outputs accordingly (injectors, ignition coils etc.).

Signals from sensors are used by the ECM to determine the injection and ignition parameters (referenced to fuel maps) as required to maintain the optimum air-fuel ratio.

Air Intake System

Air Filter

Air, drawn into the air filter housing, first passes through an inlet duct.

After it passes through the air filter, an air duct (intake adapter) is used to channel the air to the throttle body.

Throttle Body

The throttle body is mounted on the front end of the plenum, aft of the air filter housing.

Air for combustion, drawn in by the engine, flows through the air intake system, then through the throttle body where it is regulated by a throttle plate.

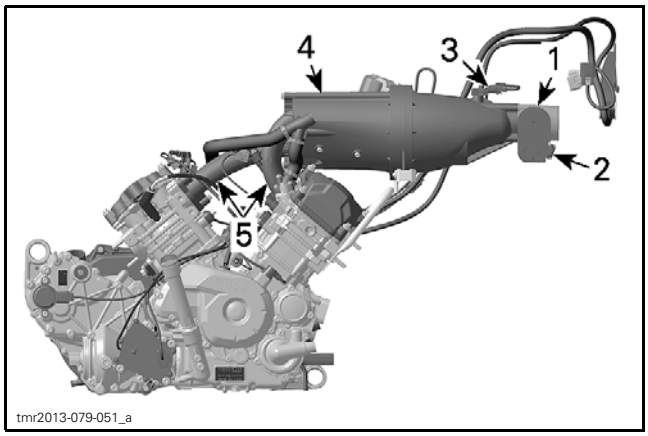

1. *Throttle body*
2. *ETA and TPS*
3. *MAPTS (Manifold Air Pressure Temperature Sensor)*
4. *Plenum*
5. *Air intake manifolds*

Fitted on the throttle body, an electronic throttle actuator (ETA) allows the ECM to electronically control the throttle plate opening which regulates the amount of air that enters the engine, and therefore engine torque.

There is no idle air control valve (IACV).

The TPS is also incorporated in the throttle body. It provides a signal to the ECM of the actual throttle plate position.

Plenum

After the air flows through the throttle body, it enters the plenum. The plenum provides a resonance effect which leads to an improved cylinder charge.

Fuel System

Fuel Rail

Two fuel rails, one for each injector, are mounted on the intake manifold. The fuel rails, which are used to secure the injectors to the manifold, also provide to the injectors the fuel pressure that they receive from the fuel pump.

The fuel pressure applied to the fuel rails is regulated by the fuel pressure regulator located in the fuel pump module.

Fuel Injectors

The fuel injectors are used to inject fuel into the intake ports of the cylinder head. One injector is used per cylinder.

Fuel Pump

An electric fuel pump with an integrated pressure regulator and fuel system filters is used. For more details on the fuel pump unit, refer to *FUEL TANK AND FUEL PUMP* subsection.

ADJUSTMENT

IDLE SPEED

Idle speed is not adjustable. The ECM controls the idle speed of the engine primarily through control of the throttle plate position.

The vehicle multifunction gauge can provide an accurate digital readout of the engine's idle speed.

If desired, the engine RPM can be verified using a DIGITAL INDUCTION TACHOMETER (P/N 529 014 500).

Install the tachometer wire on a spark plug cable.



VERIFYING ENGINE RPM USING A DIGITAL INDUCTION TACHOMETER

The engine RPM may also be verified using the applicable B.U.D.S. software version, refer to *COMMUNICATION TOOLS AND B.U.D.S.* subsection.

In B.U.D.S., select the following:

– **Read Data** button
– **Monitoring** tab
– **ECM** tab.

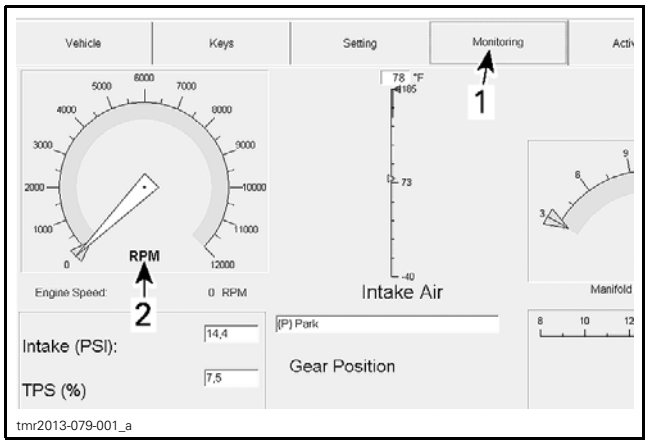

VERIFYING ENGINE RPM USING B.U.D.S.
1. **Monitoring** *tab*
2. *Engine RPM indication*

NOTE: The multifunction gauge and B.U.D.S. use the same signal to provide the engine RPM indication.

TROUBLESHOOTING

DIAGNOSTIC TIPS

Engine problems are not necessarily related to the fuel injection system.

It is important to ensure that the engine and propulsion system, fuel delivery and electrical systems are functioning normally.

For diagnostics purposes, use B.U.D.S. software. See *COMMUNICATION TOOLS AND B.U.D.S.* subsection.

After a problem has been solved, be sure to clear the fault(s) in the ECM using the B.U.D.S. software.

⚠ WARNING

Electrical actuators and electronic modules may be powered up as soon as the ignition switch is set to ON. Always disconnect the battery prior to disconnecting any electrical or electronic parts.

Never use a battery charger to temporarily substitute the battery as it may cause the ECM to function erratically, or not at all.

Check related-circuit fuse solidity and condition with an ohmmeter. A visual inspection could lead to a false diagnosis.

Electrical Related Problems

It is important to check the following in the electrical system:
– Battery voltage
– Fuses
– Ground connections
– Wiring and connectors.

Ensure that all electronic components are genuine OEM. Any modification to the wiring harness may lead to poor system operation or generate fault codes.

Electrical Connections

Pay particular attention to ensure that terminals and pins are not out of their connectors, corroded, or out of shape.

When probing terminals, pay attention not to deform the terminals as this could cause a loose or intermittent connection that would be difficult to troubleshoot.

PROCEDURES

ENGINE CONTROL MODULE (ECM)

NOTE: As a first troubleshooting step, always check for applicable fault codes using B.U.D.S. software.

Quick Test to Validate ECM Operation

Turn ignition key to ON.

NOTE: Setting the ignition switch to ON wakes up the ECM, which then turns on the following.

QUICK INDICATION THAT ECM IS FUNCTIONING (ASSUMING THE OBSERVED COMPONENT IS IN GOOD WORKING ORDER)
Multifunction gauge turns ON.
Fuel pump turns on for approx. 5 seconds.
Rear lights turn on.
Headlamps turn on (ignition key on with lights position).

ECM First Initialization

This procedure performs a reset of the following values in the ECM:
– TAS (Throttle Accelerator Sensor)
– TPS (Throttle Position sensor)
– GBPS (Gearbox Position Sensor).

This reset **must** be carried out whenever the ECM has been replaced.

This reset **may** be carried out whenever any of the following components have been replaced instead of their respective reset procedures:

– Throttle body (for TPS)
– GBPS (Gearbox Position Sensor).

1. Connect vehicle to the applicable B.U.D.S. version, refer to *COMMUNICATION TOOLS AND B.U.D.S.* subsection.
2. In B.U.D.S., select the following:
   – **Read Data** button
   – **Setting** tab
   – **ECM** tab.



*1. **Read Data** button*
*2. **Setting** tab*
*3. **ECM** tab*

3. In the **ECM first initialization** field, click on the **Reset** button.

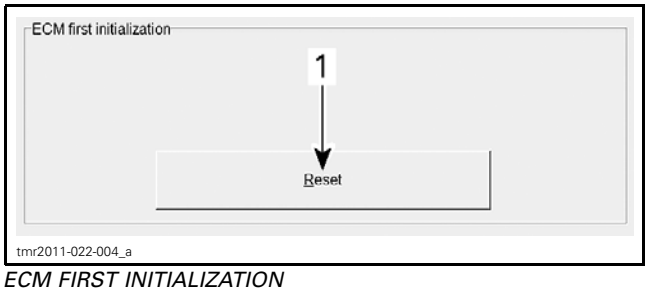

ECM FIRST INITIALIZATION
*1. **Reset** button*

4. Follow the instructions in the message boxes that appear in B.U.D.S.

If the operation is successful, a message will be displayed stating that the reset was successful.

If an error occurred or a component is out of range, a message may be displayed. Follow the instructions in the message and repeat the procedure.

5. Check for fault codes.

If a fault code is generated, carry out the service actions, reset the fault and repeat the reset procedure.

6. Start engine and make sure it operates normally throughout its full engine RPM range.

ECM Access

The ECM is located under the dashboard, driver's side, above the control pedals.

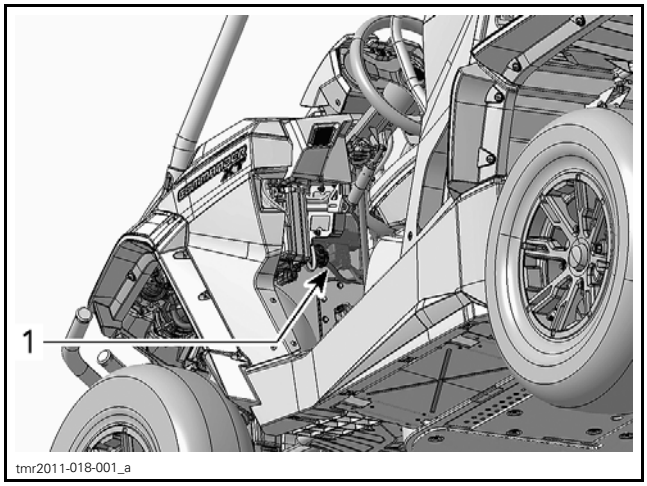

TYPICAL - ECM LOCATION
1. ECM location

ECM Connector Identification

There are 2 connectors connected to the ECM:

– Engine harness connected to ECM-A
– Vehicle system control harness connected to ECM-B.

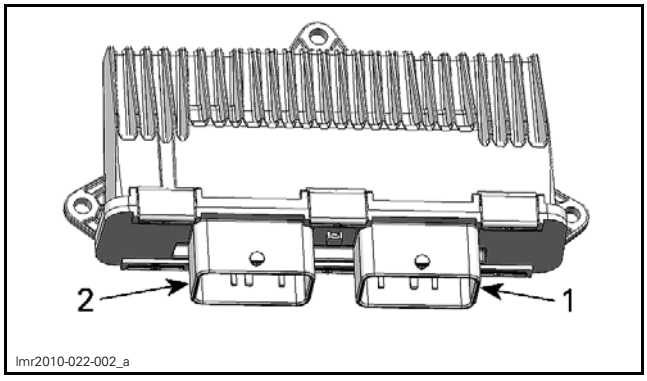

1. Connector A
2. Connector B

The ECM connectors have 48 pins.

NOTE: For connector information, cleaning and probing, refer to *CONNECTOR INFORMATION* subsection.

ECM Adapter Tool

To probe ECM connector terminals, use the ECM ADAPTER TOOL (P/N 529 036 166).



NOTE: This tool will prevent deforming or enlarging terminals which would lead to bad ECM terminal contact creating intermittent or permanent problems.

ECM Power Supply Test

1. Disconnect connector "B" from the ECM.
2. Install ECM connector "B" on the ECM ADAPTER TOOL (P/N 529 036 166).
3. Install a jumper wire between B-H2 and B-M2 on the ECM adapter tool.
4. Turn the ignition switch to ON.
5. Use the FLUKE 115 MULTIMETER (P/N 529 035 868) and select Vdc.
6. Check for voltage as follows.

ECM ADAPTER	BATTERY	VOLTAGE
B-M4	Negative post	Battery voltage

If voltage is not measured, check the following:
- Main relay
- Wiring and connections, refer to the *WIRING DIAGRAM*.

Continuity Test of ECM Ground Circuits

1. Disconnect connector "B" from ECM.
2. Install the ECM ADAPTER TOOL (P/N 529 036 166) on ECM-B connector.
3. Use the FLUKE 115 MULTIMETER (P/N 529 035 868) and select Ω.
4. Probe adapter terminals as per following table.

ECM ADAPTER	BATTERY POST	RESISTANCE
Pins B-L1, B-M2 and B-M3	Ground	Close to 0 Ω (continuity)

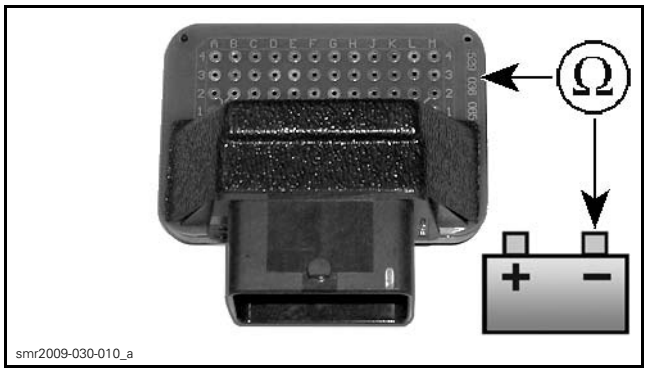

If any measurement is out of specification, check the following:
- Engine ground
- Battery ground
- Frame ground.

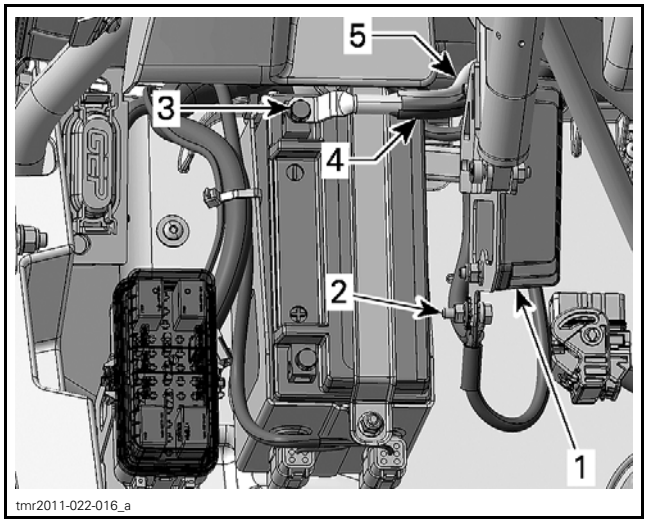

1. Voltage regulator/rectifier
2. Frame ground stud
3. Negative (-) battery post
4. Battery ground wire
5. Engine ground wire

ECM Removal

NOTE: If a new ECM is to be installed, first read the procedures in *ECM REPLACEMENT* in this subsection.

1. Disconnect battery cables.

NOTICE **Always disconnect the BLACK negative (–) battery cable first, then disconnect RED positive (+) cable.**

2. Disconnect both ECM connectors from ECM.

3. Unscrew all retaining screws and remove the ECM from its support.

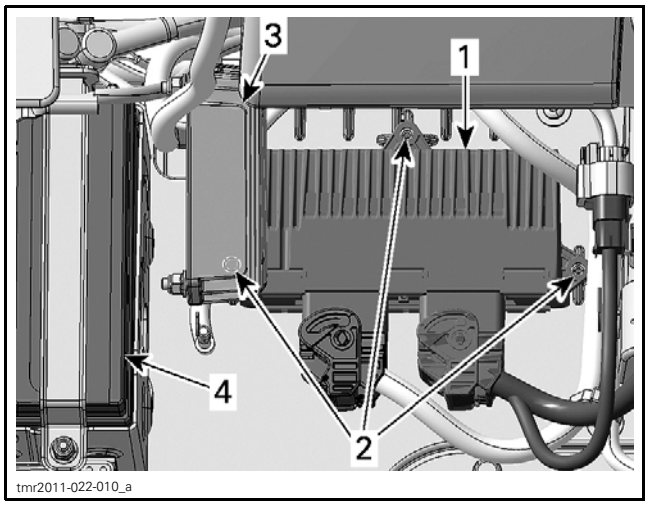

tmr2011-022-010_a

1. ECM
2. Retaining screws
3. Voltage regulator/rectifier
4. Battery

ECM Installation

Reverse removal procedure however, pay attention to the following.

ECM INSTALLATION	
TORQUE	2 N•m ± 0.2 N•m (18 lbf•**in** ± 2 lbf•**in**)

1. Reconnect ECM connectors.
2. Reconnect battery cables.

⚠ WARNING

Always reconnect the RED positive (+) battery cable first, then reconnect BLACK negative (–) cable.

3. If a new ECM is installed, refer to *ECM REPLACEMENT* in this subsection.

ECM Replacement

Prior to replacing an ECM, ensure that all the recommendations in the general introduction of this section have been followed.

NOTE: Proceed with an *ECM FIRST INITIALIZATION* as it may resolve the problem.

If the ECM is replaced, data must be manually entered into the new ECM.

ECM Manual Data Entry

There are 2 possible methods to collect the required information. The 1st being the easiest:

1. Use B.U.D.S. to obtain the data from a saved .mpem file on your PC computer.
2. Collect the information from the vehicle and BOSSWeb.

1st Collecting Method: Obtaining the Data from a Saved .mpem File

1. Use the B.U.D.S.

NOTE: It is not necessary to perform any connection. The PC computer can be used alone.

2. In B.U.D.S., click on the **Open** button.

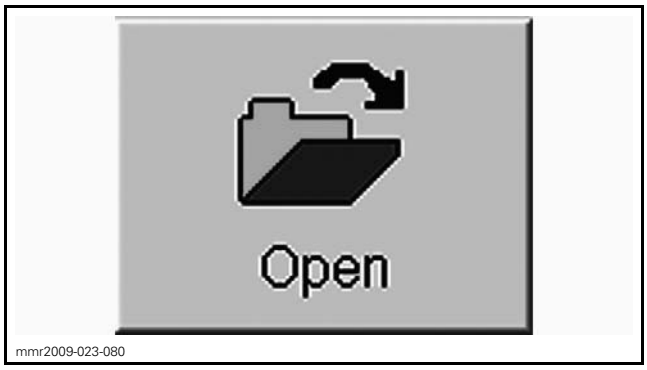

mmr2009-023-080

3. Click once on the **Folder Up** button in the Open box.

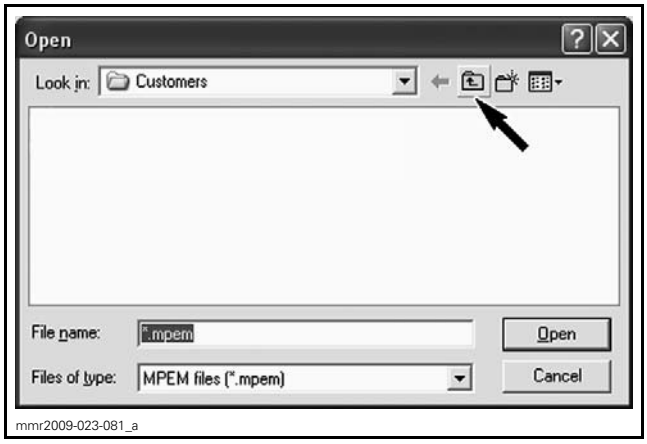

mmr2009-023-081_a

Double click on the **AutoSave** folder.

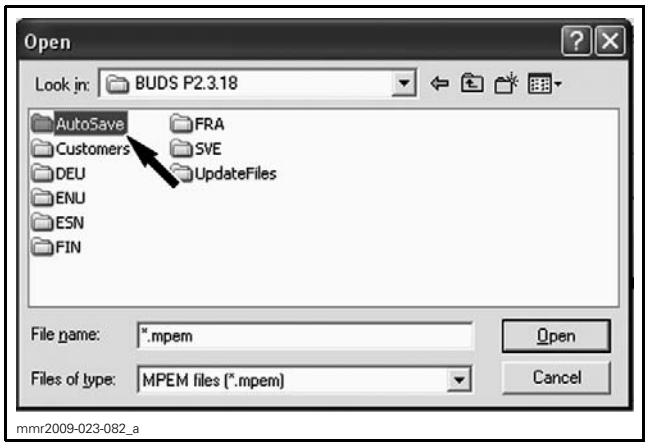

mmr2009-023-082_a

NOTE: You may have to go to another AutoSave folder from a previous version of B.U.D.S.

4. Choose the latest file saved for this specific vehicle.

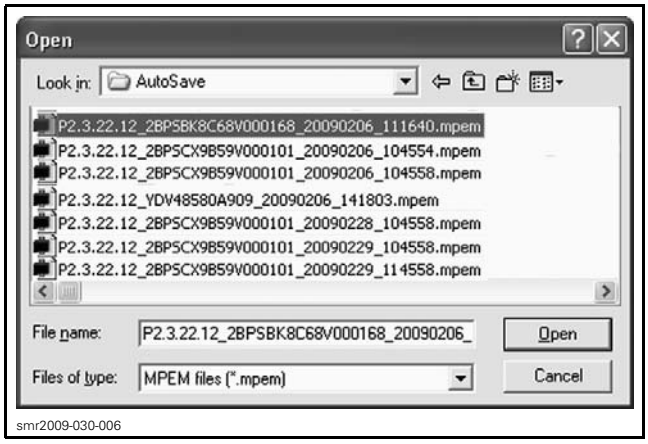

smr2009-030-006

IMPORTANT: Be sure to use the file that specifically matches the vehicle you are servicing.

NOTE: The file name structure is as follows:
B.U.D.S. version_VIN_date read (yyyymmdd)_hour read (hhmmss).mpem
Example: **P2.3.22.12_2BPSBK8C68V000168_20090206_111640.mpem** Therefore: B.U.D.S. version: P2.3.22.12 VIN: 2BPSBK8C68V000168 Date: 2009 02 06 Hour: 11h 16m 40s

5. Select the **Vehicle** tab and record (write down) the following information.
   1. Vehicle serial number
   2. Engine serial number (without the leading "M")
   3. Vehicle model number
   4. Customer name.

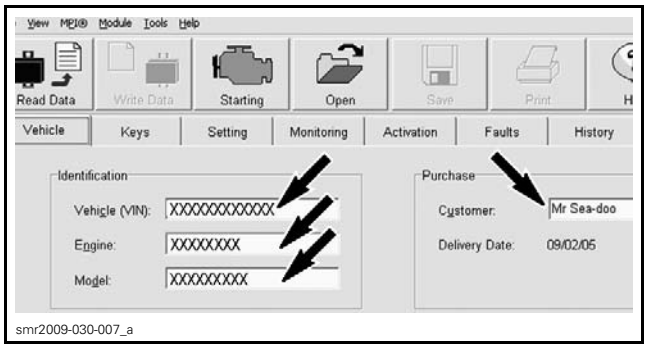

smr2009-030-007_a

VEHICLE TAB

6. Enter recorded data in ECM as detailed in *ENTERING THE COLLECTED INFORMATION INTO THE ECM*.

2nd Collecting Method: Collect the Information from the Vehicle and BOSSWeb

1. Record engine serial number.

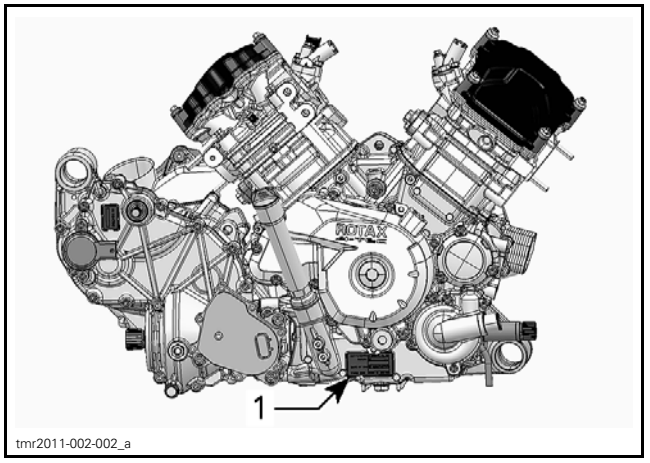

tmr2011-002-002_a

TYPICAL - RH SIDE OF ENGINE
1. Engine serial number

2. Record the following numbers using BOSSWeb. Look in **Sales** menu and choose **Unit History**.
   1. Vehicle serial number
   2. Vehicle model number
   3. Customer name.



SALES, UNIT HISTORY

3. Enter the recorded data in the new ECM as detailed in *ENTERING THE COLLECTED INFORMATION INTO THE ECM*.

Entering the Collected Information Into the ECM

1. Use the applicable B.U.D.S. version. Refer to *COMMUNICATION TOOLS AND B.U.D.S.* subsection.
2. Turn ignition key to ON position.
3. In B.U.D.S., click the **Read Data** button to read the new ECM.

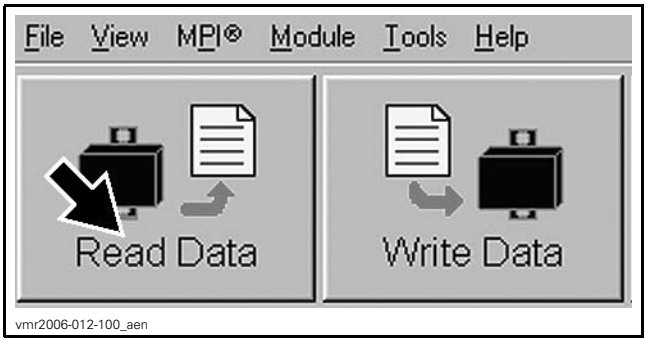

The following screen window will pop up.

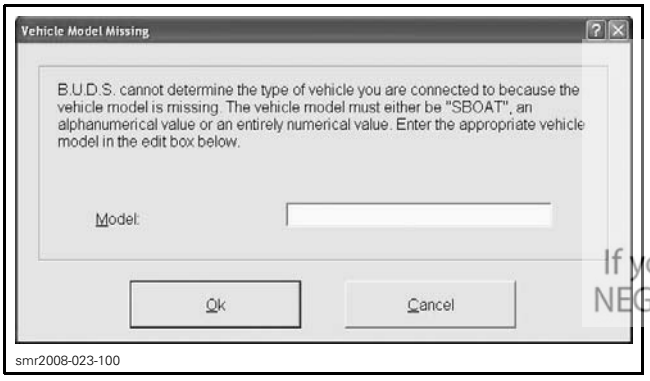

4. Enter the vehicle model number.

NOTICE Enter only the appropriate product model number as obtained when gathering the information.

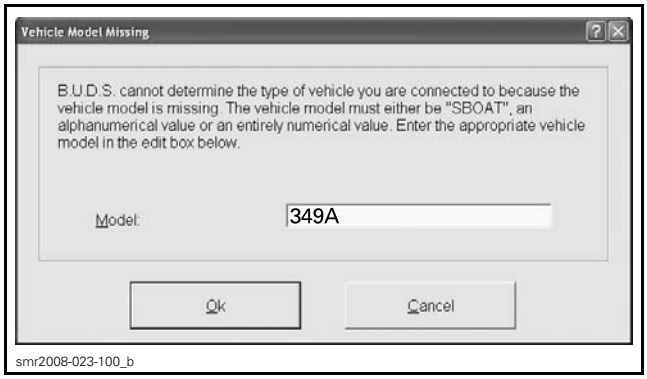

5. Select the **Vehicle** tab and enter the information you recorded previously.
   1. Vehicle serial number
   2. Engine number (do not enter the "M" at the beginning of the engine number)
   3. Customer name.

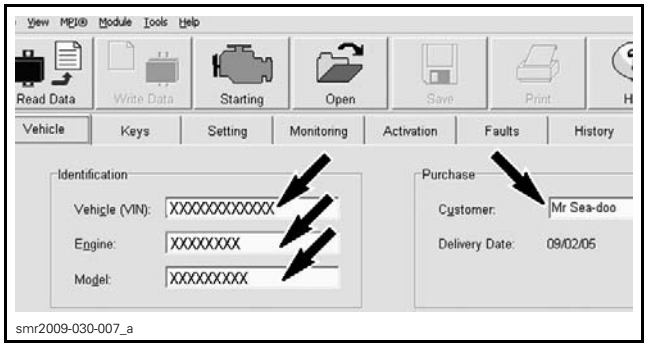

VEHICLE TAB

6. Click on the following tabs:
   - **History**
   - **Part Replacement**
   - **Add Part in History**.
7. Enter the **old** ECM serial number in the **Add Part In History** window.

Midwest Manuals
Green Manuals
Paperless Manuals
For a Better Tomorrow
If you bought this manual from any other seller please leave them NEGATIVE feedback and notify me at bestshopmanuals@gmail.com

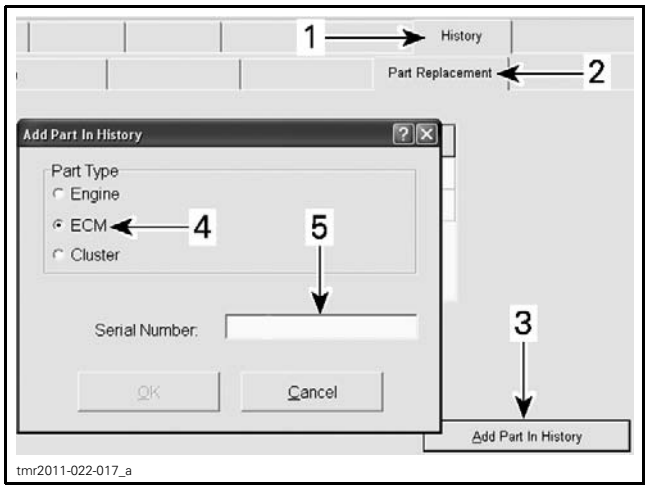

ADDING PART IN HISTORY
1. History *tab*
2. Part Replacement *tab*
3. Add part in history *button*
4. ECM *selection*
5. *Add ECM serial number here*

NOTE: The ECM serial number can be found on the ECM sticker that also identifies the part number.

8. Click on the OK button.
9. Set the proper options in the following pages:
   - ECM
   - Cluster
   - Vehicle configuration.
10. Click on the Write Data button.

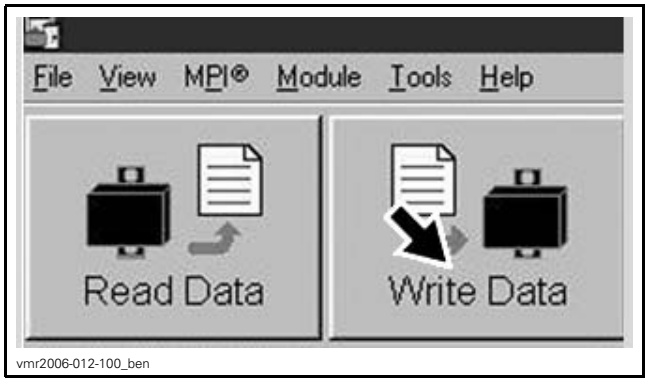

11. Perform the *ECM FIRST INITIALIZATION* reset.
12. Program the vehicle ignition keys into the new ECM, refer to *DIGITAL ENCODED SECURITY SYSTEM (D.E.S.S.)* subsection.
13. Reinstall any remaining removed parts.

FUEL INJECTOR

Fuel Injector Operation Test Using B.U.D.S. (Dynamic)

NOTE: As a first troubleshooting step, always check for applicable fault codes using B.U.D.S.

1. Connect vehicle to the applicable B.U.D.S. version. Refer to *COMMUNICATION TOOLS AND B.U.D.S.* subsection.
2. Start engine.
3. In B.U.D.S., select the following:
   - Read Data button
   - Monitoring tab
   - ECM tab.
4. Using the B.U.D.S., shut down fuel injection to each engine cylinder one at a time by clicking on the button under the applicable cylinder.

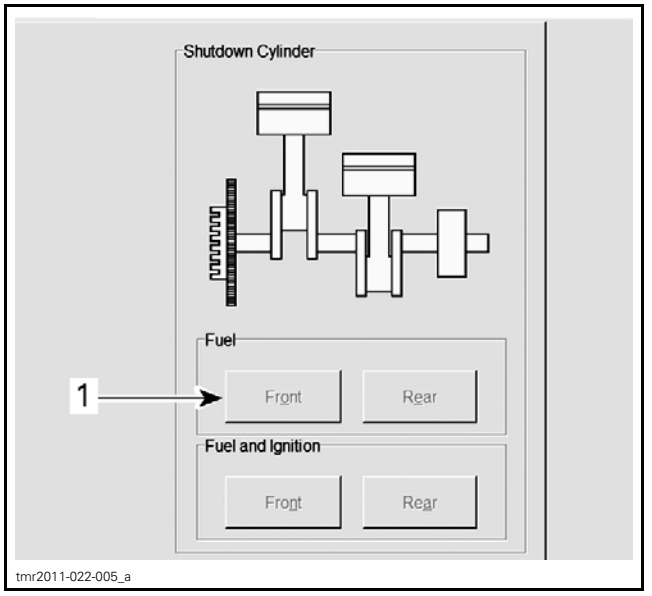

1. *Click on cylinder number to be tested*

If the engine RPM drops momentarily when clicking on a cylinder, the injector on this cylinder is functioning normally.

If the engine RPM does not drop momentarily when clicking on a cylinder, this cylinder is not functioning properly. Check the following:
- Fuel injector operation. Refer to *FUEL INJECTOR BALANCE TEST USING B.U.D.S.*
- Spark plug and ignition coil. Refer to *IGNITION SYSTEM* subsection.
- Engine condition.

Fuel Injector Balance Test Using B.U.D.S.

NOTICE After fuel injector activation using B.U.D.S., always crank engine in drowned mode to ventilate engine and prevent a potential backfire due to fuel accumulation in engine.

1. Install a fuel pressure gauge as described in *FUEL PUMP PRESSURE TEST* of *FUEL TANK AND FUEL PUMP* subsection.
2. Connect vehicle to the applicable B.U.D.S. software version. Refer to *COMMUNICATION TOOLS AND B.U.D.S.* subsection.
3. Turn the ignition key to ON.
4. In B.U.D.S., select the following:
   – **Read Data** button
   – **Activation** tab.
5. In B.U.D.S., click on the **Fuel Pump** button to activate fuel pump.

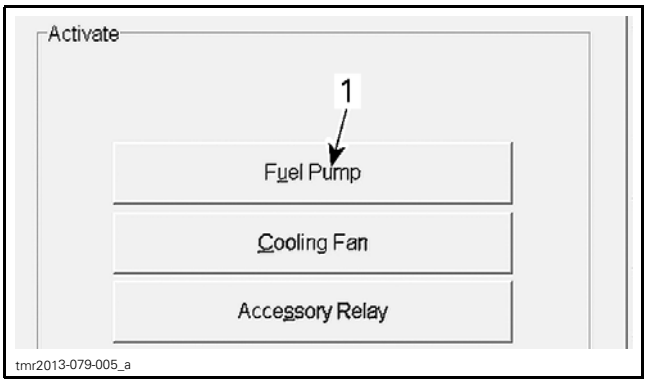

1. Fuel Pump activation button

6. Fuel pressure must be within specification. Refer to *FUEL TANK AND FUEL PUMP* subsection. Re-activate fuel pump as necessary.
7. In B.U.D.S., energize fuel injector **no. 1**.

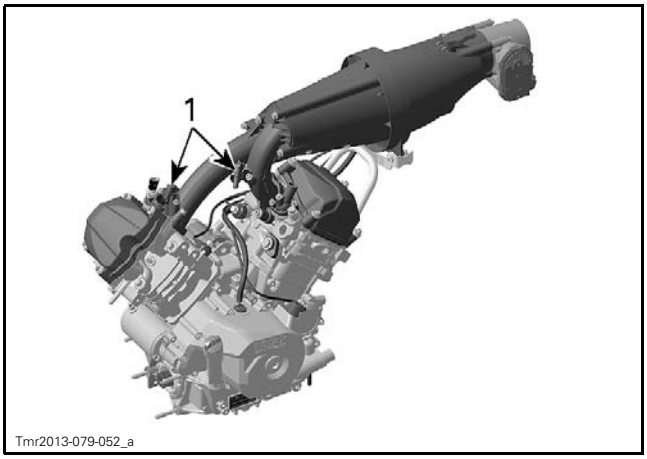

1. Click on injector to activate

8. Record the fuel pressure drop for injector **no. 1**.
9. Click on the Fuel Pump button to activate fuel pump.
10. Repeat the procedure for fuel injector **no. 2** and record the pressure drop for each injector.
11. The maximum fuel pressure drop between injectors should not exceed the following specification:

MAXIMUM FUEL PRESSURE DROP ALLOWED BETWEEN FUEL INJECTORS
10 kPa (1.5 PSI)

If pressure drop of any fuel injector is greater than the specification, replace injector then repeat the test.

12. Using the valve on the fuel pressure gauge, release the pressure in the system (if so equipped).
13. Remove fuel pressure gauge and reinstall removed parts.

Fuel Injector Leak Test

Carry out the *FUEL PUMP PRESSURE TEST* as detailed in the *FUEL TANK AND FUEL PUMP* subsection.

Fuel Injector Activation Test Using B.U.D.S.

Turn ignition key to ON.

On the **Activation** page of B.U.D.S. software, energize the fuel injector to be tested.

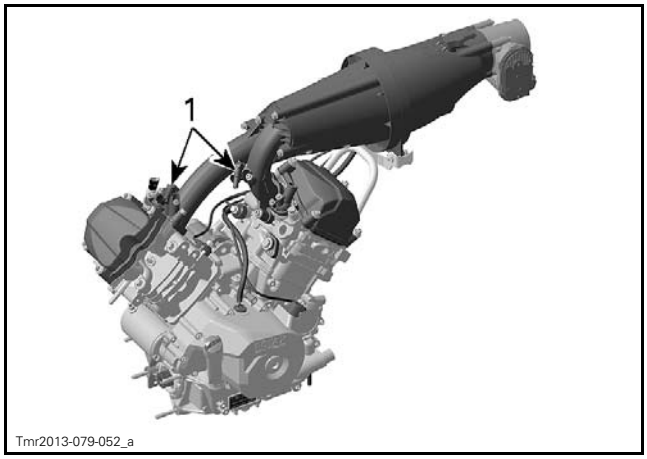

TYPICAL
1. Click on injector to activate

You should hear the injector functioning.

This will validate the injector mechanical and electrical operation.

If the injector does not function, carry out the *FUEL INJECTOR RESISTANCE TEST*.

Fuel Injector Resistance Test

Disconnect connector "A" from the ECM.

Disconnect the engine connector (HIC).

NOTE: The HIC connector is located to the right of the ECM.

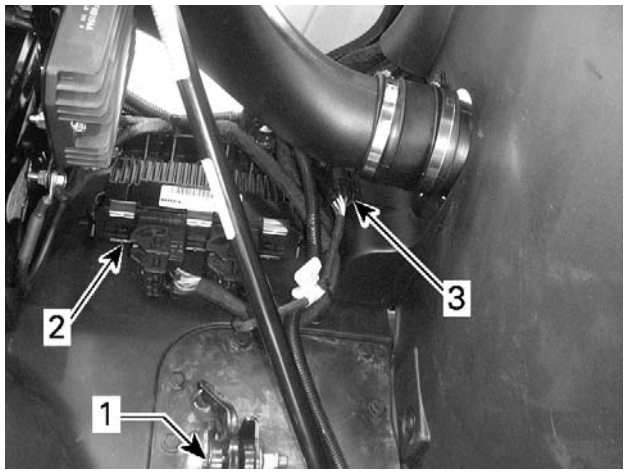

tmr2011-022-018_a

HIC CONNECTOR LOCATION
1. *Accelerator pedal (not visible)*
2. *ECM*
3. *HIC connector*

Using a FLUKE 115 MULTIMETER (P/N 529 035 868), check resistance value between terminals as follows.

FUEL INJECTOR RESISTANCE TEST AT HIC CONNECTOR			
INJECTOR	**HIC CONNECTOR**	**ECM CONNECTOR "A"**	**RESISTANCE @ 20°C (68°F)**
FRONT	D	A-J1	11.4 - 12.6 Ω
REAR		A-K1	

If resistance value obtained is incorrect, remove injector connector and check resistance value between injector pins as follows.

FUEL INJECTOR RESISTANCE TEST AT INJECTOR CONNECTOR			
INJECTOR	**INJECTOR PIN**		**RESISTANCE @ 20°C (68°F)**
FRONT	1	2	11.4 - 12.6 Ω
REAR			

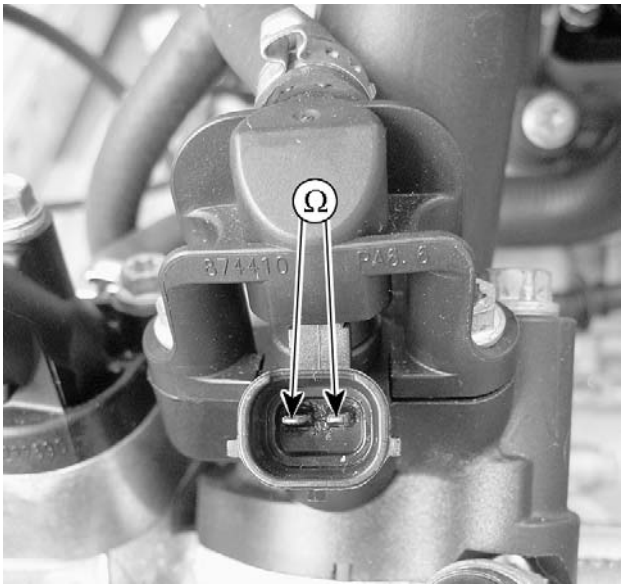

vmr2007-043-006_a

TYPICAL

If readings are out of specifications, replace injector.

If readings are good, carry out a *FUEL INJECTOR INPUT VOLTAGE* test.

Fuel Injector Input Voltage Test

Disconnect the fuel injector connector.

NOTE: If the connector is hard to unlock, gently use a screwdriver to release connector.


vmr2006-014-001_a

TYPICAL

NOTE: It is not necessary to activate the injector since it is continuously powered when the ignition key is set to ON.

Use a multimeter and set it to Vdc. Read voltage.

CYLINDER	INJECTOR CONNECTOR		MEASUREMENT
	WIRE		
FRONT	VIOLET/ BLUE	Battery ground	Battery voltage
REAR			

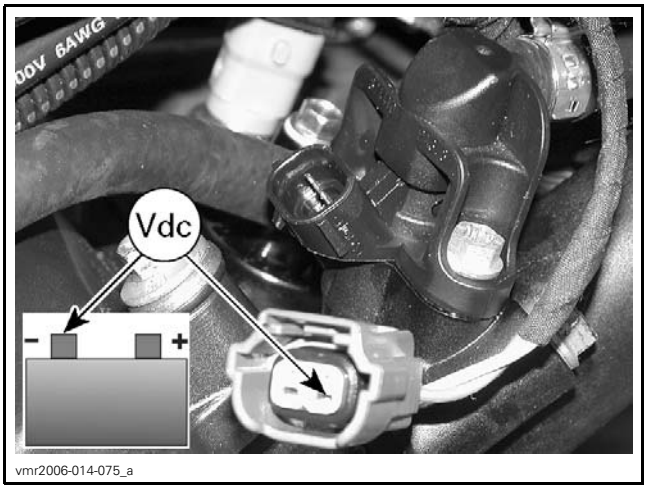

vmr2006-014-075_a

TYPICAL

NOTICE When probing, be careful to avoid enlarging connector pins. For this type of connector, back probes should be used.

If supply voltage is not good, check continuity between fuse F5 and injector (see *WIRING DIAGRAMS*).

NOTE: Probe fuse exactly as shown. This validates fuse at the same time.

Use a multimeter and set it to Ω. Read resistance.

CYLINDER	INJECTOR CIRCUIT		MEASUREMENT
	WIRE		
FRONT	VIOLET/ BLUE	Fuse F5	Close to 0 Ω
REAR			

If continuity is good, check relay and wiring from battery.

If continuity is faulty, check fuse and if OK, repair/replace wiring going to injector.

If supply voltage is good, check ground circuit between injector and ECM (see *WIRING DIAGRAMS*).

– If ground circuit is faulty, repair/replace wiring and connectors.
– If ground circuit is good, refer to *ECM REPLACEMENT*.

Fuel Injector Removal

To remove the injector, first remove the fuel rail refer to *FUEL RAIL* for the procedure.

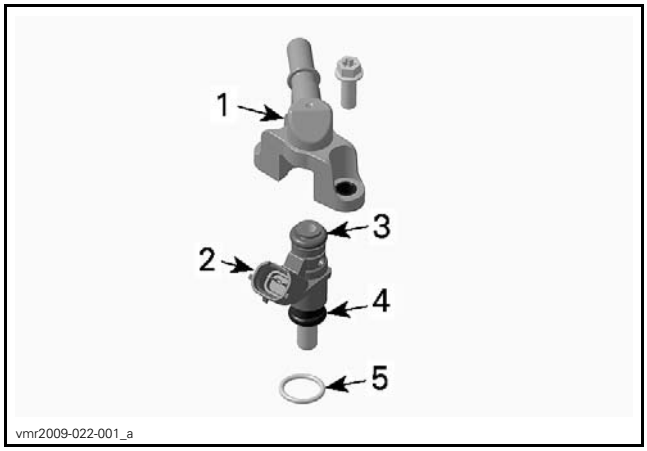

vmr2009-022-001_a

TYPICAL - FUEL RAIL ASS'Y
1. *Fuel rail*
2. *Fuel injector*
3. *Injector top O-ring*
4. *Injector bottom O-ring*
5. *Manifold O-ring*

Then pull fuel injector out of the fuel rail.

Fuel Injector Installation

For the installation, reverse the removal procedure. Pay attention to the following details.

Apply a thin film of engine oil to O-rings to ease insertion in rail.

Install fuel injector with your hand. Do not use any tool.

FUEL INJECTOR INSTALLATION		
O-RINGS	New	Lubricate with engine oil

Position the manifold O-ring on injector as in following illustration.

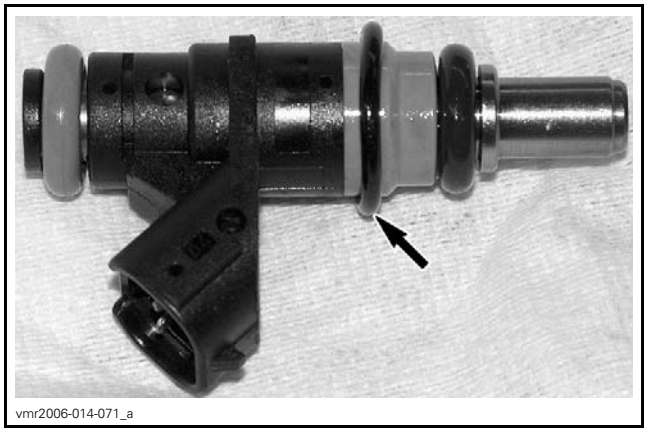
vmr2006-014-071_a

TYPICAL - MANIFOLD O-RING POSITION

Carefully insert injector in manifold paying attention to the manifold O-ring.

NOTICE Gently push O-ring in evenly all around while inserting injector. O-ring must be completely inserted and not visible, before completing the insertion of the injector.

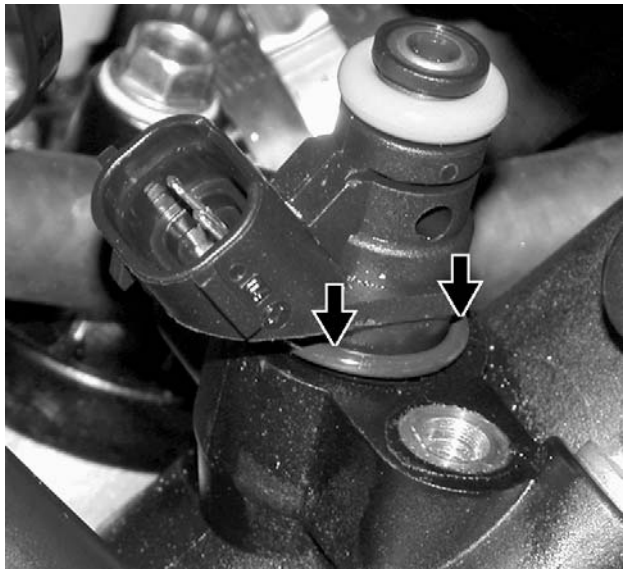
vmr2006-014-072_a

Firmly push injector until it bottoms out.

Reinstall fuel rail.

FUEL RAIL

Fuel Rail Replacement

Fuel Rail Removal

1. Wrap a rag around the inlet hose and release the quick fitting.

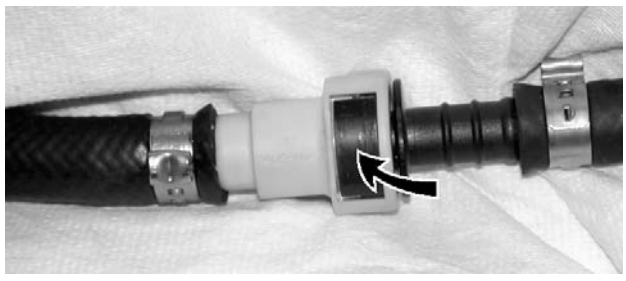
vmr2006-014-070_a

TYPICAL

2. Unscrew rail retaining screws.
3. Gently pull rail off by hand.

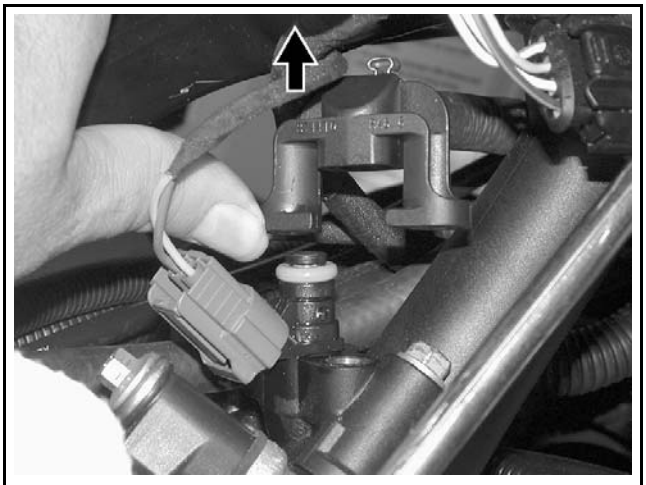
vmr2006-014-073_a

TYPICAL

To disconnect fuel rail from hose, cut clamp on fuel hose using OETIKER PLIERS (P/N 295 000 070). Refer to *FUEL TANK AND FUEL PUMP* for clamp removal/installation procedures.

NOTE: If fuel rail is removed for access to fuel injector, it is not necessary to cut hose clamp. Only to replace fuel rail.

Fuel Rail Installation

For installation, reverse the removal process however, pay attention to the following.

Install new clamps using pliers as per removal (if fuel rail was replaced).

Install fuel rail and evenly tighten screws a little at a time each side.

FUEL RAIL INSTALLATION	
INJECTOR O-RINGS	RETAINING SCREW TORQUE
NEW (Lubricate with engine oil)	10 N•m ± 1 N•m (89 lbf•**in** ± 9 lbf•**in**)

⚠ WARNING

Perform a fuel pressure test and ensure that there is no leak. Refer to *FUEL TANK AND FUEL PUMP*. Run engine and check for leaks.

THROTTLE BODY

Throttle Body Description

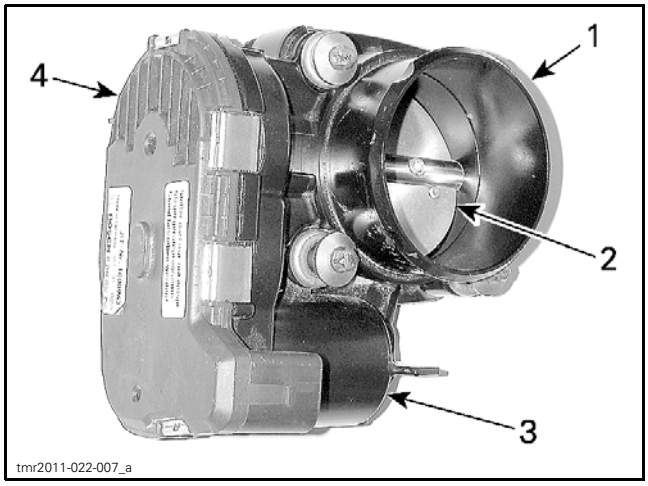

1. Throttle body
2. Throttle plate
3. Electronic throttle actuator (electric motor inside)
4. Throttle position sensor (TPS) (inside)

Throttle Body Access

Refer to *AIR INTAKE SYSTEM* and remove the following parts:

– Air filter housing
– Air intake adapter.

Throttle Body Lubrication

No lubrication is required.

Throttle Body Cleaning

1. Remove air inlet hose from throttle body.
2. Check throttle body cleanliness using a flashlight. Fully open throttle plate and verify:

– Throttle body bore
– Throttle plate edge.

Look for:

– Dirt
– Oily surfaces
– Carbon and salt deposits on throttle plate and the surrounding bore.

3. Clean as necessary.
4. Use a throttle body cleaner such as GUNK INTAKE MEDIC or an equivalent.

NOTICE **Only use an appropriate throttle body cleaner that will not damage O-rings and EFI sensors.**

⚠ **CAUTION** **Use the product in a well ventilated area. Refer to product manufacturer's warnings.**

5. To avoid getting dirt into engine, spray cleaner on a clean rag then rub rag against throttle plate and bore. A toothbrush may also be used.

⚠ **CAUTION** **Ensure ignition key is removed so that nobody can activate the electrical system, otherwise the ECM would turn on and the throttle actuator (ETA) would cycle. This could cause serious finger injury as the throttle plate moves quickly.**

6. Gently open throttle plate and hold fully open to reach all surfaces.
7. To remove residual dirt, spray cleaner on throttle plate and on bore.
8. Reinstall removed parts.

Throttle Body Removal

1. Disconnect air inlet hose from throttle body.
2. Disconnect throttle body connector.

To remove connector from throttle body, simultaneously press the end of both connector locking tabs illustrated.

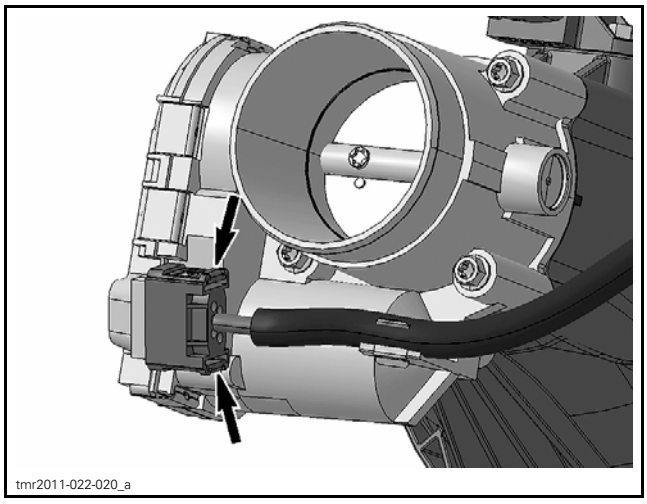

THROTTLE BODY CONNECTOR- PRESS HERE TO UNLOCK

3. Remove screws retaining throttle body to plenum.

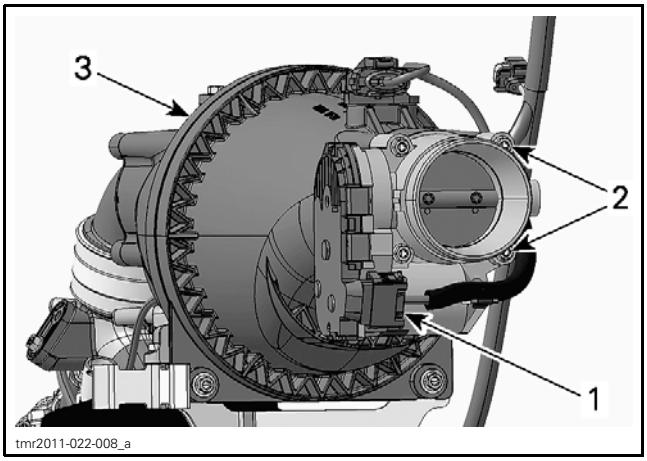

1. *Throttle body connector*
2. *Screws (4)*
3. *Plenum*

4. Pull throttle body off plenum.

Throttle Body Installation

Installation of the throttle body is the reverse of the removal procedure. However, pay attention to the following.

TORQUE FOR THROTTLE BODY RETAINING SCREWS
10 N•m ± 1.2 N•m (89 lbf•**in** ± 11 lbf•**in**)

1. Perform the *THROTTLE POSITION SENSOR INITIALIZATION* reset procedure. Refer to *THROTTLE POSITION SENSOR (TPS)* in this subsection.

THROTTLE POSITION SENSOR (TPS)

TPS Description

NOTE: The TPS is part of the throttle body.

The throttle position sensor (TPS) is a double potentiometer that sends signals to the ECM that are proportional to the throttle plate angle.

NOTE: As a first troubleshooting step, always check for applicable fault codes using B.U.D.S. software.

Throttle Position Sensor Initialization

NOTE: The TPS initialization procedure **must** be carried out whenever the throttle body is replaced, unless an ECM first initialization reset is carried out.

This operation performs a reset of the TPS basic values in the ECM. This reset is very important as the TPS values are part of the basic parameters for all fuel mapping calculations and control of several settings such as for idle speed, LIMP HOME mode and maximum RPM of the engine.

NOTICE **An improperly set TPS may lead to improper idle speed (too low or too high), poor engine performance, poor engine starting and engine stop on deceleration, fault codes and possible engine damage. Emission compliance may also be affected.**

1. Connect vehicle to the applicable B.U.D.S. software version, refer to *COMMUNICATION TOOLS AND B.U.D.S.* subsection.
2. In B.U.D.S., select the following:
   - **Read Data** button
   - **Setting** tab
   - **ECM** tab.

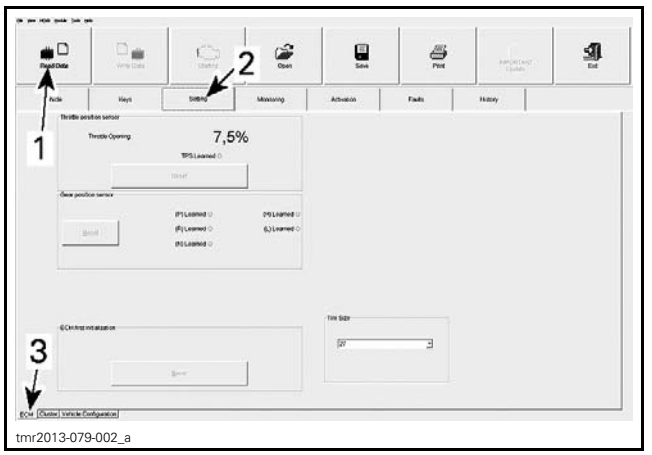

1. **Read Data** *button*
2. **Setting** *tab*
3. **ECM** *tab*

3. Ensure the accelerator pedal is fully released and at the idle position.
4. In the **Throttle position sensor initialization** field, click on the **Throttle Opening Reset** button.

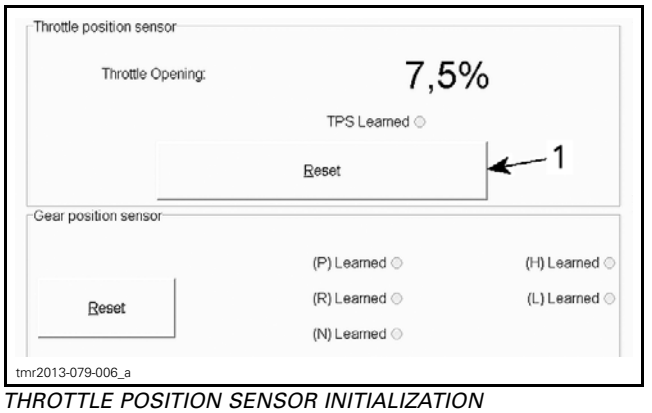

THROTTLE POSITION SENSOR INITIALIZATION
1. **Throttle Opening Reset** *button*

A message will be displayed if the operation is successful.

If an error occurred or the TPS is not within the allowed range while resetting, the ECM will generate a fault code and will not accept the setting.

5. If a fault message is displayed, follow the instructions in the message(s).
6. Check for fault codes.
7. If a fault code is generated,
   – Carry out the service actions.
   – Reset the fault.
   – Repeat the reset procedure.
8. Start engine and make sure it operates normally throughout its full engine RPM range.

TPS Wear Test

1. With the engine turned off, slowly press on the accelerator pedal and pay attention for smooth operation without physical stops.
2. Activate the electrical system to wake up the ECM.
3. Connect vehicle to the applicable B.U.D.S. software version. Refer to *COMMUNICATION TOOLS AND B.U.D.S.* subsection.
4. In B.U.D.S., select the following:
   – **Monitoring** tab
   – **ECM** tab.
5. Slowly and regularly move the accelerator pedal.
6. Observe the Throttle Opening indication movement in B.U.D.S.

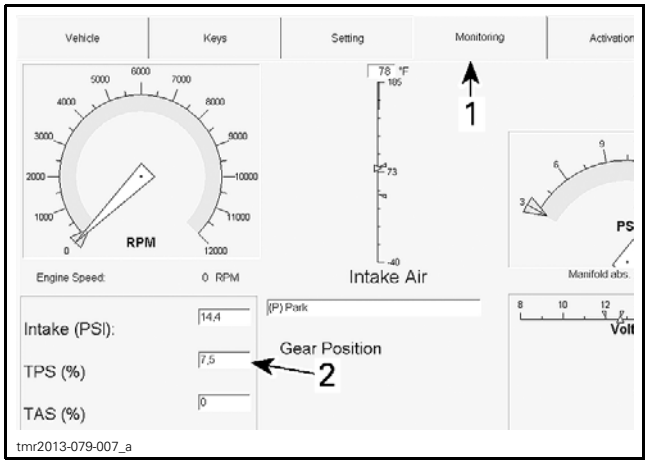

1. Monitoring tab
2. TPS indication

NOTE: The indication should move gradually and regularly as you move the accelerator pedal. If the TPS indication is erratic or suddenly drops off, it may indicate a worn TPS that needs to be replaced. An initial slight delay after the accelerator pedal is moved and before the indication starts to move is normal.

If the indication behavior is not as expected, proceed with the following steps.

7. Manually move the throttle plate in the throttle body using a blunt tool (without sharp tip).

⚠ CAUTION Do not move throttle plate with your fingers. Otherwise, if ECM should turn off, it would quickly close the throttle plate which could cause finger injury.

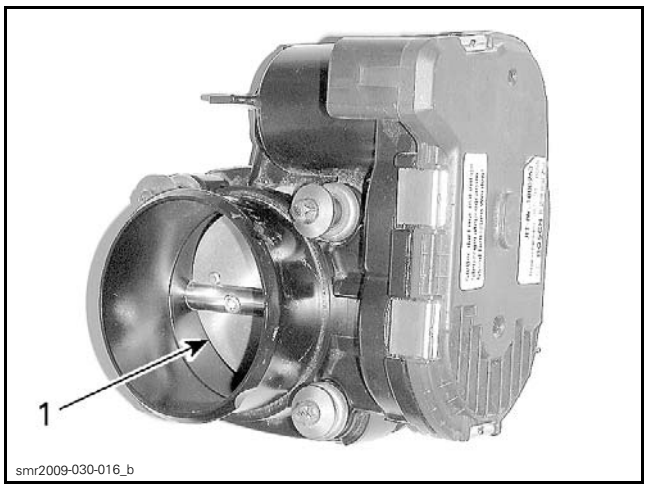

1. Push here

8. Check the indication movement again.

– If the indication moves as expected, check the throttle accelerator sensor (TAS). Refer to *THROTTLE ACCELERATOR SENSOR (TAS)* in this subsection.
– If the indication does not move as expected, perform the *TPS RESISTANCE TEST* in this subsection.

TPS Resistance Test

1. Ensure the throttle body connector is properly connected.
2. Disconnect ECM connector A from the ECM and install it on the ECM ADAPTER TOOL (P/N 529 036 166).
3. Use the FLUKE 115 MULTIMETER (P/N 529 035 868) and select Ω.
4. Probe circuit as per following table while using your hand to manually move throttle plate.

Commentaire rédaction: SVP ne pas laisser cette table se séparer. Sinon c'est la confusion.

ECM ADAPTER		FULLY CLOSED THROTTLE PLATE (1)		FULLY OPEN THROTTLE PLATE	
		RESISTANCE (Ω)			
PIN		MIN.	MAX.	MIN.	MAX.
A-A2	A-K4	875	1625	875	1625
A-A2	A-K3	954	1934	228	585
A-A2	A-F3	254	634	980	1983
A-K3	A-K4	228	585	954	1934
A-K3	A-F3	1385	2315	1385	2315
A-K4	A-F3	980	1983	254	634

(1) To obtain the fully closed position, it is necessary to push against the throttle plate in the throttle body with your hand and hold it in this position for the measurement.

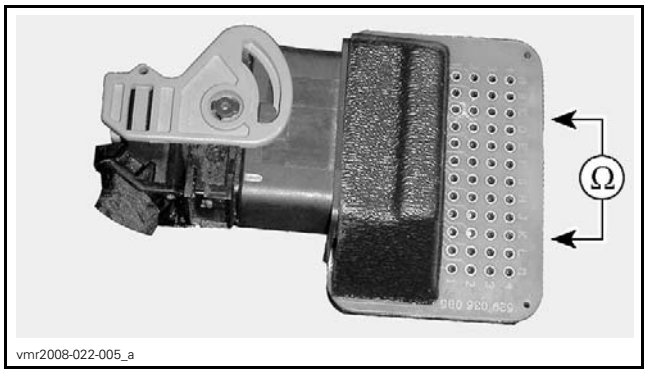

vmr2008-022-005_a

If any resistance value is incorrect, check wire continuity between ECM and throttle body before assuming the TPS is at fault. Refer to *WIRING DIAGRAM* subsection.

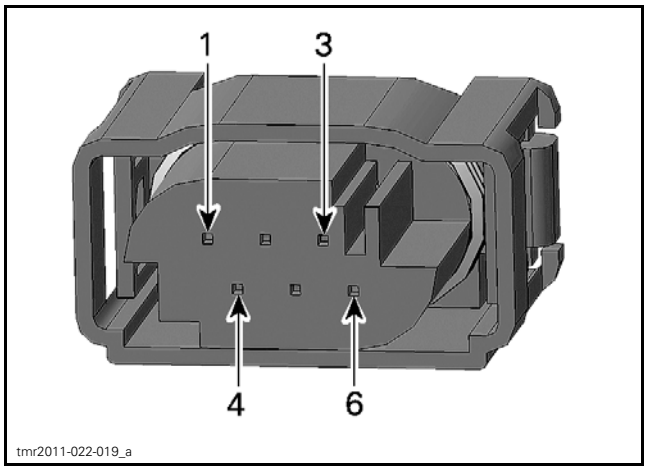

tmr2011-022-019_a

THROTTLE BODY CONNECTOR PIN-OUT

TPS Replacement

Carry out a *THROTTLE POSITION SENSOR INITIALIZATION* procedure as detailed in *THROTTLE BODY* of this subsection.

CRANKSHAFT POSITION SENSOR (CPS)

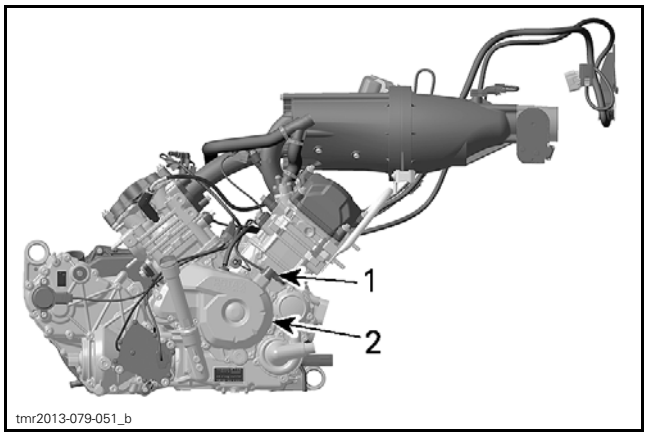

tmr2013-079-051_b

1. CPS
2. Magneto cover

NOTE: Take into account that a CPS fault can be triggered by bent or missing encoder wheel teeth. First check fault codes using B.U.D.S., then check the encoder wheel teeth condition if necessary (refer to *MAGNETO SYSTEM*).

CPS Resistance Test

Disconnect CPS wiring harness connector.

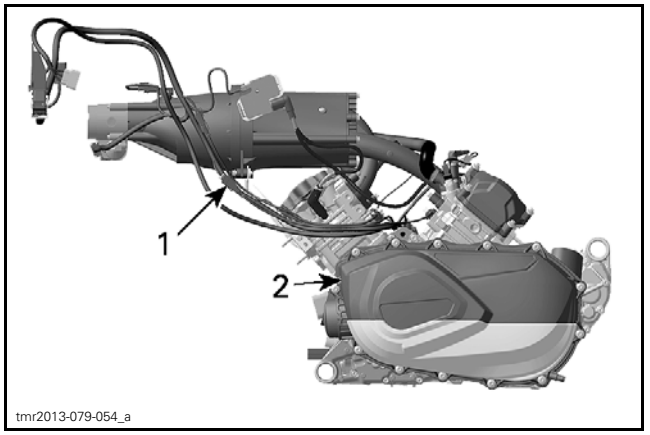

tmr2013-079-054_a

TYPICAL - LH SIDE OF VEHICLE
1. CPS connector location
2. CVT cover

Probe terminals as per following table.

CPS CONNECTOR		MEASUREMENT
PIN		RESISTANCE Ω @ 20°C (68°F)
1	2	700 - 900 Ω

If resistance is not within specifications, replace the CPS.

If resistance tests good, **reconnect** the CPS connector and disconnect the connector "A" on the ECM.

Install ECM-A connector on ECM ADAPTER TOOL (P/N 529 036 166).



Using a multimeter, recheck resistance as per table.

ECM CONNECTOR		MEASUREMENT
PIN		RESISTANCE Ω @ 20°C (68°F)
A-H1	A-K2	700 - 900 Ω

If resistance value is correct, refer to *ECM REPLACEMENT*.

If resistance value is incorrect, repair the connectors or replace the wiring harness between ECM connector and the CPS.

CPS Replacement

Disconnect CPS connector and cut harness locking tie.

Remove CPS retaining screw and pull up on CPS to remove it.

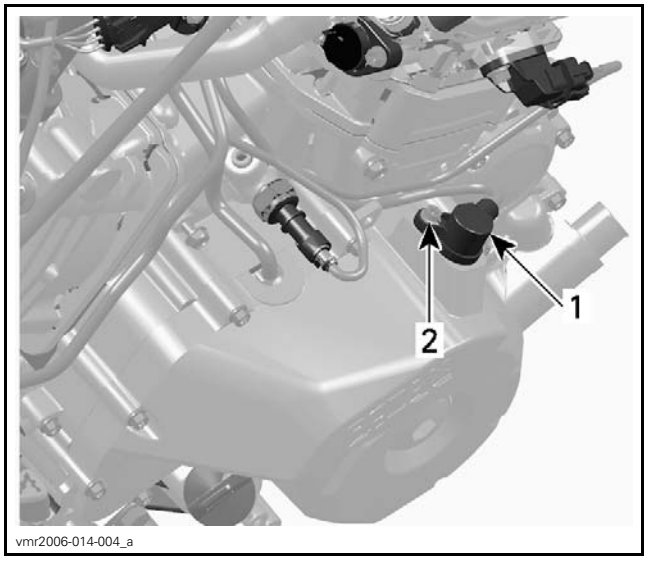

TYPICAL
1. CPS
2. Retaining screw

Install new CPS and secure harness with a new locking tie.

CPS INSTALLATION	
O-RING	PRODUCT
	XPS SYNTHETIC GREASE (P/N 293 550 010)
SENSOR SCREW	TORQUE
	10 N•m ± 1 N•m (89 lbf•**in** ± 9 lbf•**in**)

MANIFOLD AIR PRESSURE AND TEMPERATURE SENSOR (MAPTS)

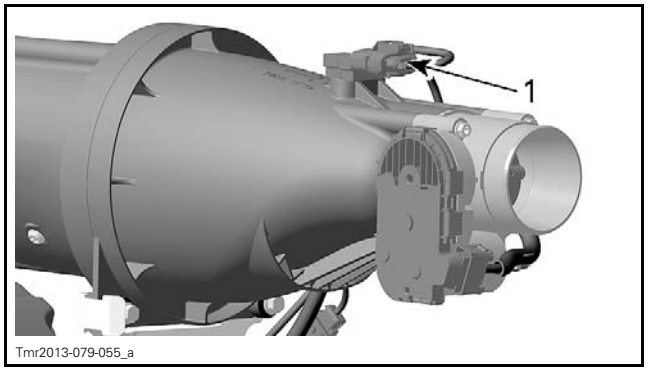

1. Manifold air pressure and temperature sensor (MAPTS)

NOTE: This sensor is a multifunction device.

MAPTS Pressure Function

Before the engine is started, when power is applied to the system, the sensor measures the ambient air atmospheric pressure. The ambient pressure is, at that moment, stored in the ECM. Thereafter, once the engine is started, it measures the air pressure in the inlet end of the plenum at operating RPMs.

The sensor must be correctly installed on plenum. Otherwise, the MAPTS could generate a fault code for an unexpected sensor range at idle when it reads the atmospheric pressure. If this is the case, remove sensor and check for oil or dirt on its end and if problem persists, check throttle plate condition/position and the wiring harness. Perform the following tests.

MAPTS Pressure Function Quick Test

1. Connect vehicle to the applicable B.U.D.S. software version.
2. In B.U.D.S., select the following:
   - Read Data
   - Monitoring tab
   - ECM tab.

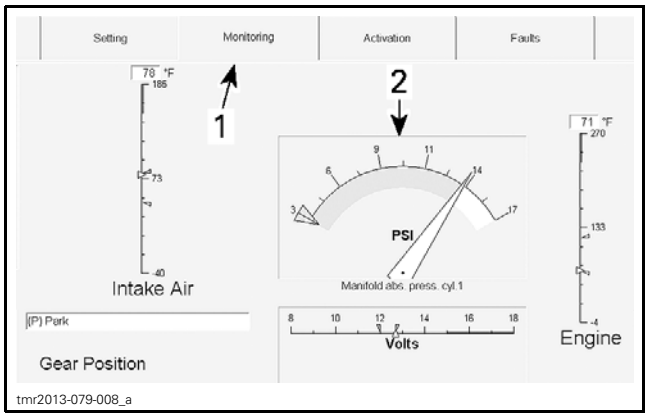

1. Monitoring tab
2. MAPTS pressure reading

3. Look for and take note of the MAPTS pressure reading while the engine is stopped.
4. Perform the same test with a new MAPTS and compare both readings.

Values have to be within ± 3.4 kPa (.5 PSI).

MAPTS PRESSURE FUNCTION QUICK TEST			
RESULT	SERVICE ACTION		
NO READING	Circuit Continuity Test of MAPTS Pressure Function	MAPTS Input Voltage Test	Repair or replace wiring
VALUE IS OUT OF RANGE	Replace MAPTS		

MAPTS Input Voltage Test

Check the voltage output from ECM to the pressure sensor.

1. Turn ignition key ON.
2. Remove electrical connector from MAPTS.
3. Using a FLUKE 115 MULTIMETER (P/N 529 035 868), measure for input voltage as per following table.

MAPTS CONNECTOR		MEASUREMENT
PIN		VOLTAGE
1	3	5 Vdc

If voltage test is good, replace the MAPTS.

If voltage test is not good, carry out the *MAPTS CIRCUIT CONTINUITY TEST (PRESSURE FUNCTION)*.

MAPTS Circuit Continuity Test (Pressure Function)

1. Disconnect the ECM "A" connector.
2. Install ECM-A connector on ECM ADAPTER TOOL (P/N 529 036 166).
3. Using a multimeter, check continuity of the following circuits.

MAPTS CIRCUIT CONTINUITY TEST (PRESSURE FUNCTION)		
ECM-A	MAPTS CONNECTOR	RESISTANCE VALUE
Pin B4	Pin 3	Close to 0 Ω
Pin G4	Pin 4	
Pin H2	Pin 1	

If resistance is not within specification, repair or replace the wiring harness between ECM connector and the MAPTS.

MAPTS Temperature Function

The sensor monitors the temperature in the inlet of the plenum.

MAPTS Quick Test (Temperature Function)

1. Connect vehicle to the applicable B.U.D.S. software version.
2. In B.U.D.S., select the following:
   - Read Data
   - Monitoring tab
   - ECM tab.
3. Look for the Intake Air temperature reading while the engine is stopped.

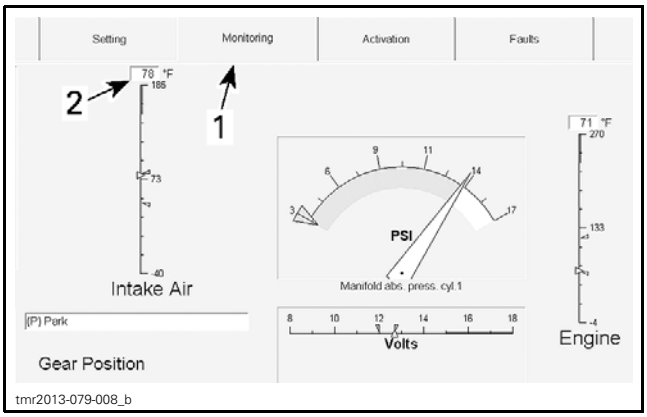

1. Monitoring tab
2. MAPTS temperature reading

4. Perform the same test with a new MAPTS and compare both readings.

If the engine's MAPTS temperature reading is significantly different than the new MAPTS, replace it.

NOTE: Both sensors must measure the same ambient air temperature.

If there is no reading, carry out a *MAPTS RESISTANCE TEST (TEMPERATURE FUNCTION)*.

MAPTS Resistance Test (Temperature Function)

Disconnect the connector from the MAPTS.

Using the FLUKE 115 MULTIMETER (P/N 529 035 868), check the resistance of the sensor itself as shown.

MAPTS		MEASUREMENT
PIN		RESISTANCE Ω @ 20°C (68°F)
1	2	2280 - 2740

If resistance is not within specification, replace the MAPTS.

If resistance tests good, **reconnect** the MAPTS and disconnect the connector "A" from the ECM.

Install ECM-A connector on ECM ADAPTER TOOL (P/N 529 036 166).



Using a multimeter, recheck resistance value as per following table.

ECM CONNECTOR		MEASUREMENT
PIN		RESISTANCE Ω @ 20°C (68°F)
A-H2	A-H3	2280 - 2740

MAPTS TEMPERATURE SENSOR TEST RESULTS			
RESULT	SERVICE ACTION		
NO READING	Circuit Continuity Test of MAPTS Temperature Function	MAPTS Input Voltage Test	Repair or replace wiring
INCORRECT RESISTANCE VALUE	Replace MAPTS		

MAPTS Circuit Continuity Test (Temperature Function)

MAPTS CIRCUIT CONTINUITY TEST (TEMPERATURE FUNCTION)		
ECM-A	MAPTS CONNECTOR	RESISTANCE VALUE
Pin H2	Pin 1	Close to 0 Ω
Pin H3	Pin 2	

MAPTS Replacement

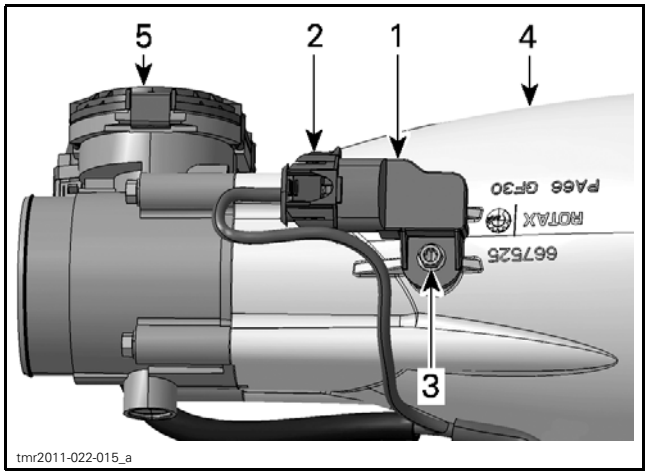

1. MAPTS
2. MAPTS connector
3. Retaining screw
4. Plenum
5. Throttle body

Disconnect MAPTS connector and remove the MAPTS from the plenum.

Install new MAPTS as per following table.

TORQUE	PRODUCT
6 N•m ± 0.7 N•m (53 lbf•**in** ± 6 lbf•**in**)	LOCTITE 243 (BLUE) (P/N 293 800 060)

CTS (COOLANT TEMPERATURE SENSOR)

CTS Access

The CTS is located on the LH of the engine, aft cylinder. To access it, remove the:

– Driver's seat
– LH lateral console panel.

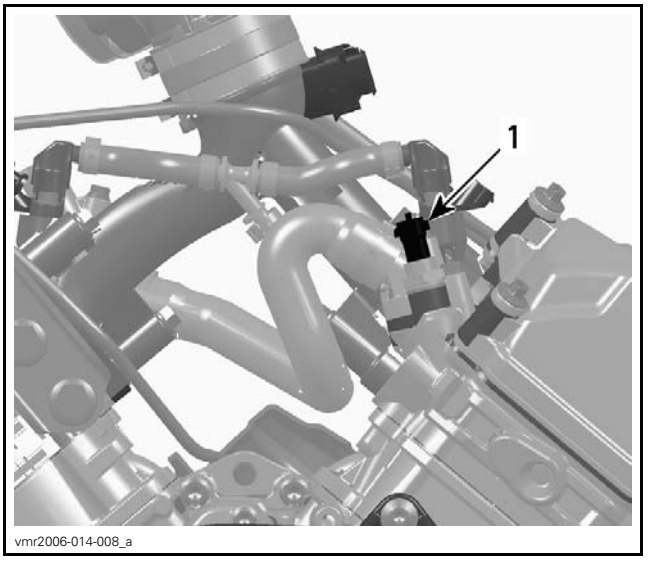

LH SIDE OF THE ENGINE, REAR CYLINDER
1. Coolant temperature sensor (CTS)

CTS Resistance Test

1. Disconnect the plug connector from the CTS and check the resistance of the sensor itself.

CTS SENSOR		MEASUREMENT
PIN		RESISTANCE Ω @ 20°C (68°F)
1	2	2280 - 2740

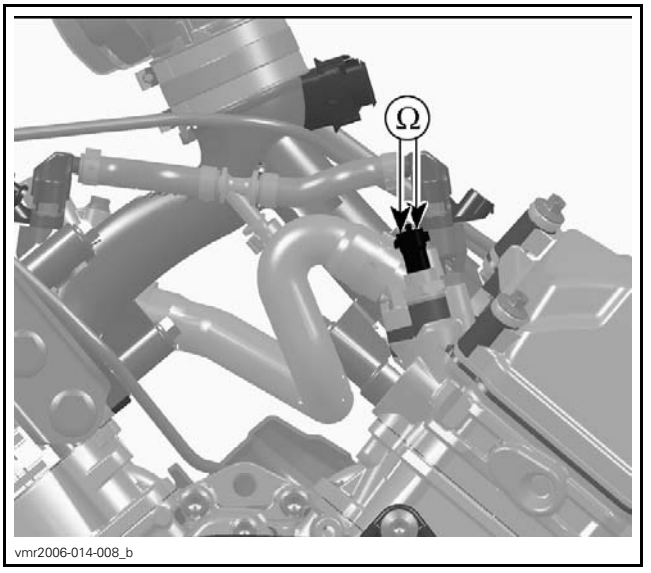

CHECK SENSOR RESISTANCE

If resistance is out of specification, replace the CTS.

If resistance test is good, **reconnect** the CTS and disconnect the ECM connector "A" from the ECM.

2. Install ECM-A connector on ECM ADAPTER TOOL (P/N 529 036 166).



3. Using a multimeter, recheck resistance from the ECM connector as per table.

ECM "A" CONNECTOR		MEASUREMENT
PIN		RESISTANCE Ω @ 20°C (68°F)
A1	J2	2280 - 2740

If resistance value is correct, refer to *ECM REPLACEMENT*.

If resistance value is incorrect, repair the connectors or replace the wiring harness between ECM connector and the CTS.

CTS Replacement

1. Disconnect CTS connector and remove CTS.
2. Install the new CTS and torque as specified.

CTS TORQUE
16 N•m ± 2 N•m (142 lbf•**in** ± 18 lbf•**in**)

3. Reinstall remaining removed parts.
4. Refill and bleed the cooling system, refer to *COOLING SYSTEM* subsection.

HEATED OXYGEN SENSOR (HO_2S)

Oxygen Sensor Location

This vehicle is equipped with 2 heated oxygen sensors (HO_2S): One sensor is located on each exhaust pipe, near the engine cylinders.

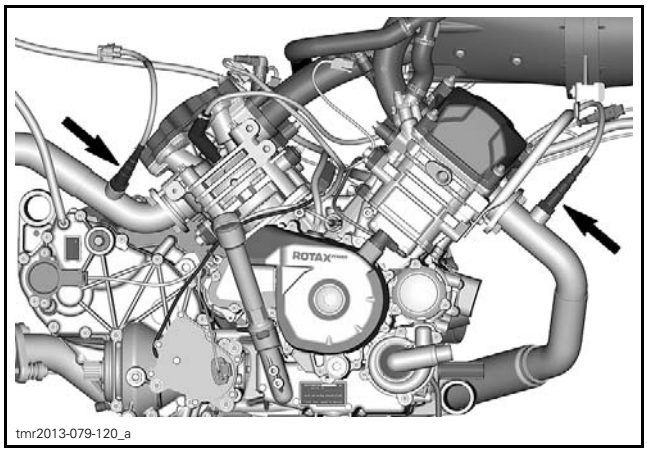

HEATED OXYGEN SENSORS

Oxygen Sensor and Connector Access

The cylinder 1 (front) oxygen sensor and its connector are accessible when removing the right and left lateral console panels.

The cylinder 2 (rear) oxygen sensor and its connector are accessible when removing the central console panel.

Oxygen Sensor General Precautions

Take the following precautions to avoid sensor malfunction:

- Do not use any product on sensor probe.
- Do not expose sensor to water, oil, windshield cleaner, anticorrosion oil, grease, terminal cleaner, etc.
- Do not drop or use an oxygen sensor that has been dropped.
- Do not use any compound on sensor threads unless labeled as compatible with oxygen sensor.
- Do not use impact wrench or conventional socket type wrench to install sensor.
- Do not allow sensor or wire to touch exhaust system or any other hot component.
- Do not route sensor wires to create tension in the wires. This could cause faults or sensor malfunction.

Oxygen Sensor Troubleshooting

Always use B.U.D.S. to check for fault codes. Carry out service actions.

In B.U.D.S., also check oxygen sensor voltage and refer to following table.

OXYGEN SENSOR VOLTAGE IN B.U.D.S.	
VOLTAGE READING	CONDITION
Varies 0.1 to 0.8 Volts	Normal oxygen sensor operation in closed loop

OXYGEN SENSOR VOLTAGE IN B.U.D.S.	
VOLTAGE READING	CONDITION
Constant 0.45 Volts	Oxygen sensor circuit open
Constant low voltage	Indicates fuel mixture too lean, possible oxygen sensor fault, possible fuel system fault, possible air leak
Constant high voltage	Indicates fuel mixture too rich, possible fuel system fault, possible fuel canister problem

Testing the Oxygen Sensor

Testing the Oxygen Sensor Using B.U.D.S.

1. Using the latest applicable B.U.D.S. version, monitor the oxygen sensor.
2. Click on **Monitoring** tab, then on **ECM** tab.
3. Start engine.
4. Observe the O_2 **sensor V** and **Oxygen Sensor Status** indications in B.U.D.S.

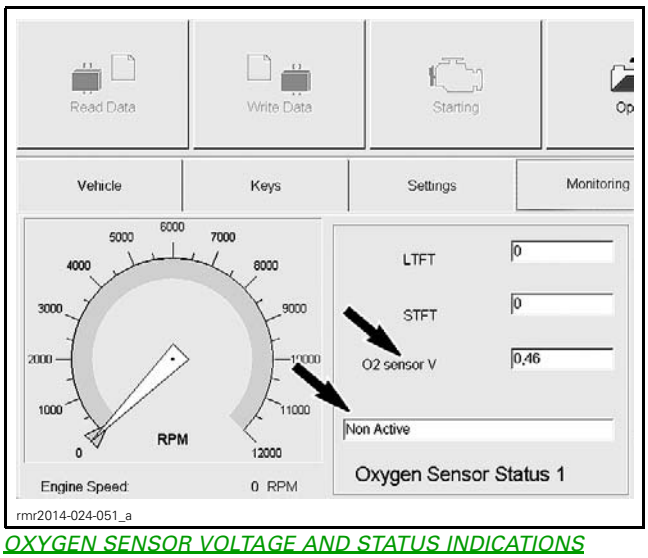

OXYGEN SENSOR VOLTAGE AND STATUS INDICATIONS

If a fault code related to an oxygen sensor is active, the oxygen sensor indicator will **not** turn on. The fault code(s) need(s) to be solved first.

When a properly functioning oxygen sensor circuit is first initiated, the oxygen sensor heats up and the ECM is operating in a closed loop control mode. The status of the oxygen sensor circuit will change from "Init" to "Active" as it progresses through a series of steps. These steps may be viewed on the **ECM Monitoring** page of B.U.D.S. in the **Oxygen Sensor Status** window.

NOTE: The steps listed in the following sensor status table may not all be displayed, and may vary from one time to the next. The steps displayed will depend on the engine operating status and oxygen sensor operating status.

LIST OF OXYGEN SENSOR STATUS INDICATIONS
Init
Heating Active
Control Active
Error

When the oxygen sensor reaches the "Active" state, it becomes operational and its indicator will turn on in B.U.D.S.

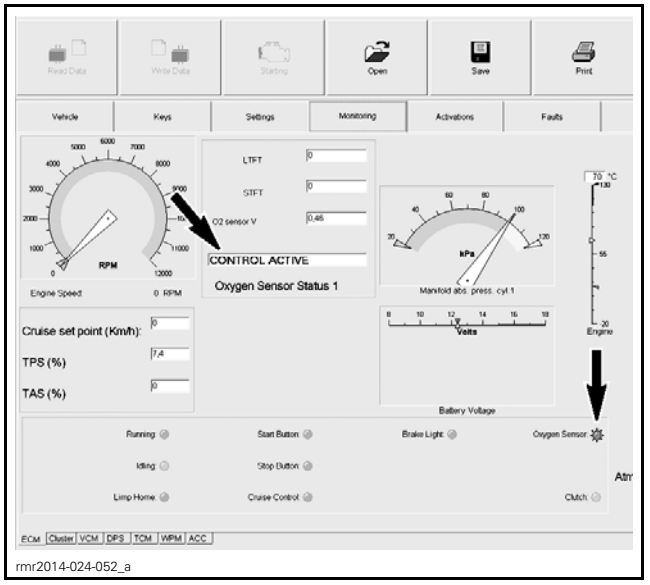

NOTE: At room temperature (approximately 21°C (70°F)), the engine needs to run for approximately 15 seconds before the oxygen sensor becomes **CONTROL ACTIVE** and its indicator light turns on in B.U.D.S.

If a sensor status does not change or does not reach the **CONTROL ACTIVE** state, or the oxygen sensor indicator light does not come on, try a new oxygen sensor.

NOTE: Before replacing a sensor, check wiring, terminals and sensor condition.

Testing for Oxygen Sensor Input Voltage

NOTE: This test validates the heater element circuit.

1. Ensure main power relay (R2) in installed in fuse box 1.
2. Disconnect the oxygen sensor connector.
3. Turn ignition switch ON.
4. Using a multimeter set to Vdc, read the input voltage provided to the sensor heater.

REQUIRED TOOLS	
FLUKE 115 MULTIMETER (P/N 529 035 868)	

OXYGEN SENSOR CONNECTOR (HARNESS SIDE)		MEASUREMENT
PIN		
C	Battery ground	Battery voltage

If Input voltage is good, refer to *TESTING THE RESISTANCE OF THE OXYGEN SENSOR HEATER* and *TESTING FOR OXYGEN SENSOR CIRCUIT CONTINUITY*.

If input voltage is not good, test the continuity of the power circuit from fuse F4 in fuse box 1. Refer to the applicable *WIRING DIAGRAM* for details.

If input voltage wire continuity is at fault, repair or replace wiring or connector.

Testing the Resistance of the Oxygen Sensor Heater

Test the resistance value of the oxygen sensor between the sensor pins as follows.

OXYGEN SENSOR PIN		RESISTANCE @ 20°C (68°F)
C	D	Approximately 7 - 11 Ω

If reading is **not** within specification, replace the oxygen sensor.

Testing for Oxygen Sensor Circuit Continuity

NOTE: This test validates the heater element circuit and the sensor circuits.

1. Remove main power relay (R2) in fuse box 1. Refer to *POWER DISTRIBUTION AND GROUNDS* subsection.
2. Disconnect ECM-B connector and install it on the ECM adapter tool. Refer to *ECM CONNECTOR ACCESS* in *ENGINE CONTROL MODULE (ECM)* in this subsection.
3. Using a multimeter set to "Ω", test for continuity between the oxygen sensor harness connector and the ECM adaptor as per following tables.

REQUIRED TOOLS	
FLUKE 115 MULTIMETER (P/N 529 035 868)	ECM ADAPTER TOOL (P/N 529 036 166)
	

OXYGEN SENSOR CIRCUIT CONTINUITY TEST		
OXYGEN SENSOR PIN	ECM CONNECTOR "B"	RESISTANCE @ 20°C (68°F)
A	J1	Close to 0 Ω
B	D2	
D	L2	

If a resistance value is NOT as specified, repair or replace the wiring and connectors.

Replacing the Oxygen Sensor

1. Remove main power relay (R2) in fuse box 1. Refer to *POWER DISTRIBUTION AND GROUNDS* subsection.

⚠ **CAUTION** Exhaust system and oxygen sensor may be hot. To avoid possible injury, allow exhaust system components time to cool before proceeding.

2. Disconnect oxygen sensor connector.
3. Cut locking tie securing oxygen sensor harness.
4. Unscrew oxygen sensor from exhaust pipe.

NOTICE Handle oxygen sensor with clean hands. Oxygen sensor probe must remain free of oil, grease, antiseize lubricant and any other foreign matter that could affect its operation.

If a new oxygen sensor is installed, its threads are already coated with an anti-seize product. Sensor is ready for installation.

If the same oxygen sensor is installed, apply LOCTITE 767 (ANTISEIZE LUBRICANT) (P/N 293 800 070) on its **first two threads**.

NOTICE Always use a product that is oxygen sensor safe.

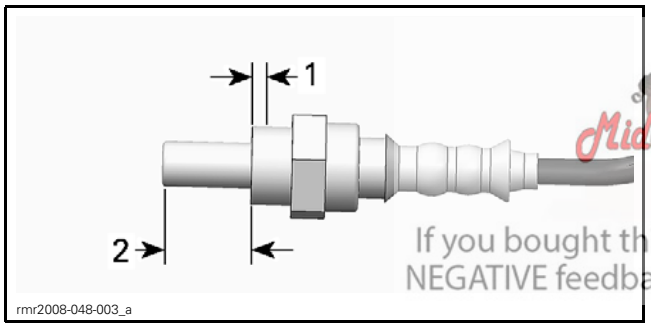

Midwest Manuals
Green Manuals
Paperless Manuals
For a Better Tomorrow
If you bought this manual from any other seller please leave them NEGATIVE feedback and notify me at bestshopmanuals@gmail.com

TYPICAL
1. *Apply antiseize lubricant first two threads*
2. *Must be free of any product*

NOTICE Do not apply any antiseize lubricant to the sensor probe as it could affect its operation.

5. Screw sensor in exhaust pipe.

TIGHTENING TORQUE	
Oxygen sensor	50 N•m ± 10 N•m (37 lbf•ft ± 7 lbf•ft) + LOCTITE 767 (ANTISEIZE LUBRICANT) (P/N 293 800 070)

6. Install all other removed parts.

FUEL TANK AND FUEL PUMP

SERVICE TOOLS

Description	Part Number	Page
ECM ADAPTER TOOL	529 036 166	11
FLUKE 115 MULTIMETER	529 035 868	10
FUEL HOSE ADAPTER	529 036 023	5
OETIKER PLIER	295 000 070	8
PRESSURE GAUGE	529 035 709	5
VACUUM/PRESSURE PUMP	529 021 800	4, 15

SERVICE TOOLS – OTHER SUPPLIER

Description	Part Number	Page
FLUKE RIGID BACK PROBE	TP88	10

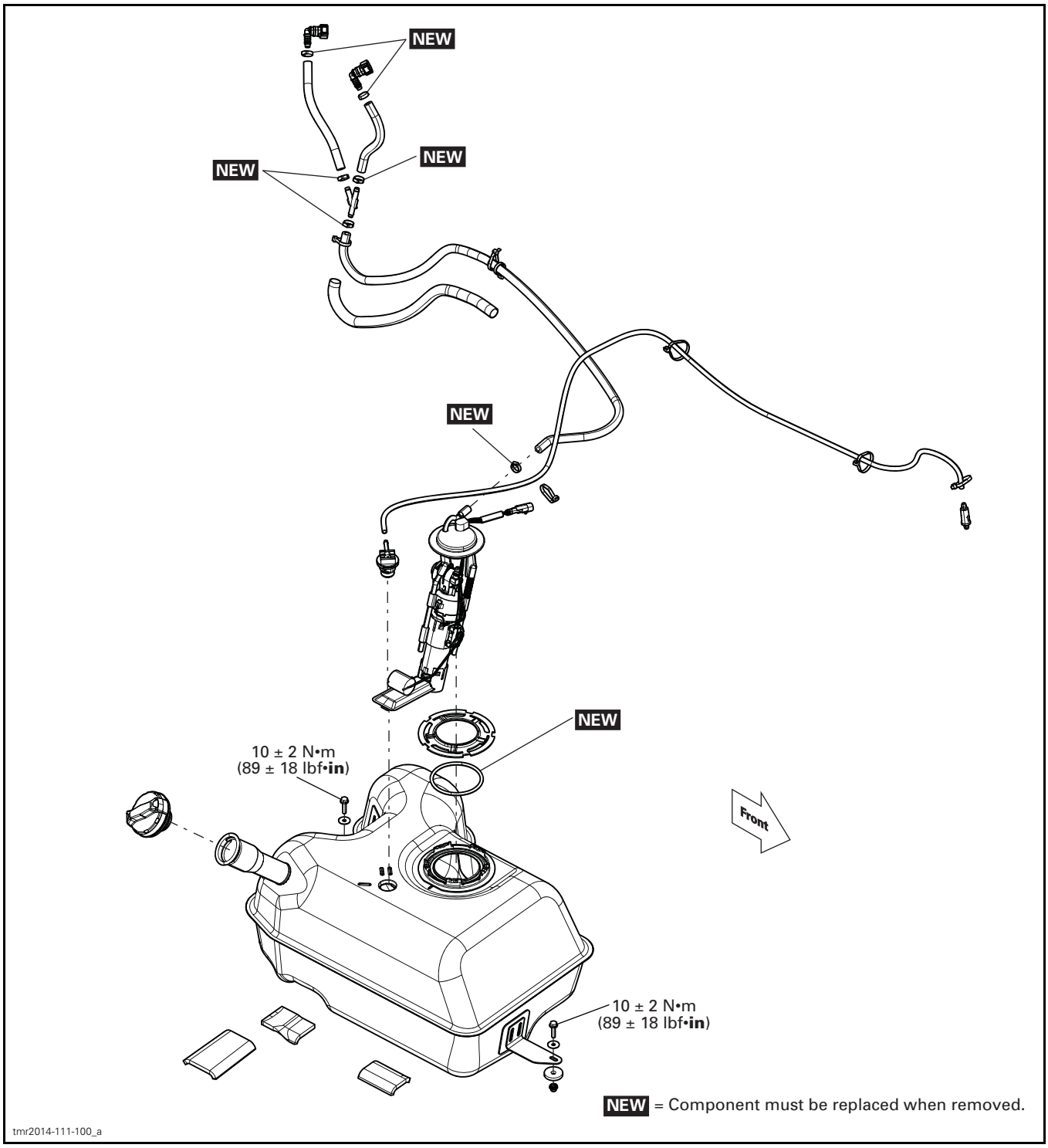
NEW
NEW
NEW
NEW
NEW
10 ± 2 N•m
(89 ± 18 lbf•in)
10 ± 2 N•m
(89 ± 18 lbf•in)
Front
NEW = Component must be replaced when removed.
tmr2014-111-100_a

GENERAL

⚠ WARNING

Fuel is flammable and explosive under certain conditions. Ensure work area is well ventilated. Do not smoke or allow open flames or sparks in the vicinity.

⚠ WARNING

Always disconnect battery prior to working on the fuel system.

⚠ WARNING

Always proceed with care and use appropriate safety equipment when working on pressurized fuel system. Wear safety glasses.

⚠ WARNING

Do not allow fuel to spill on hot engine parts and/or on electrical connectors.

When the repair is completed, ensure that all hoses are connected and secured. Perform the *FUEL PRESSURE TEST* and the *FUEL TANK LEAK TEST* as explained in this subsection.

Fuel lines remain under pressure at all times. Proceed with care when removing/installing high pressure test equipment.

Use the B.U.D.S. software or disconnect the fuel pump electrical connector to disable fuel pump and crank engine to release fuel pressure prior to disconnecting any fuel hose.

Cover the fuel hose connections with an absorbent shop rag and carefully disconnect them to minimize spilling.

SYSTEM DESCRIPTION

Fuel Tank Vent System

The fuel tank is equipped with a vent system that ensures the fuel tank remains at ambient pressure.

Air can enter the fuel tank at all times through the fuel tank vent valve. This prevents negative pressure within the fuel tank which could cause fuel starvation.

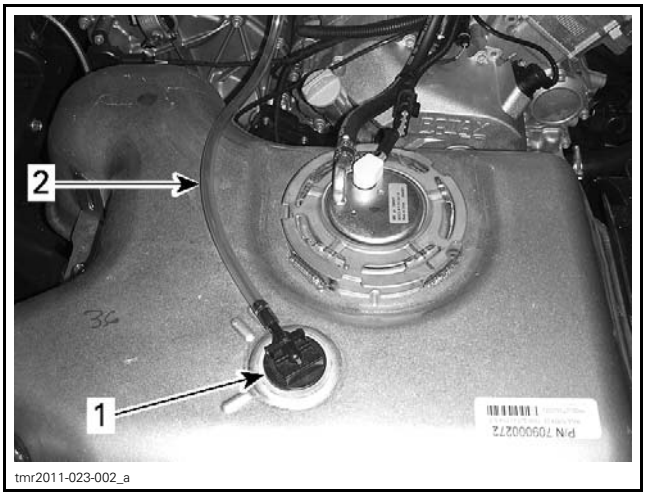

tmr2011-023-002_a

1. Vent valve
2. Air inlet hose

The vent valve also prevents fuel from flowing out through the inlet of the vent system should the vehicle be overturned.

Fuel Tank Vent Breather Filter

The air inlet hose of the vent system is equipped with an in-line breather filter that prevents entry of particles such as dust or small insects. It is located behind the air filter housing next to the coolant reservoir. To access the breather filter, remove the service cover.

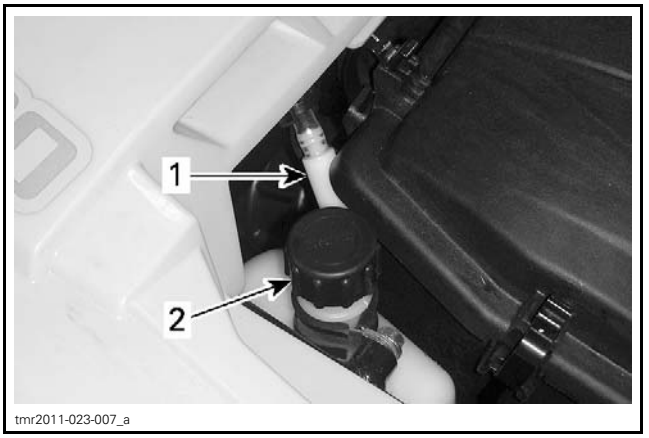

tmr2011-023-007_a

1. Fuel tank vent breather filter
2. Cooling system expansion tank

Fuel Pump Module

The fuel pump module is inserted in the fuel tank. It provides fuel delivery for the EFI system and encompasses the following components:

– Electric fuel pump
– Fuel pre-filter (replaceable)
– Fuel pressure regulator
– Fuel level sender.

Fuel Filters

The system comprises two levels of filtration.

A replaceable prefilter element attached to the bottom of the pump, and a non-replaceable fine filter element that is integral to the fuel pump module.

Fuel Pump Pressure Regulator

The fuel pressure regulator is integral to the fuel pump module. The pressure regulator maintains proper fuel pressure for the EFI system.

INSPECTION

FUEL TANK LEAK TEST

⚠ WARNING

Always carry out a fuel tank leak test whenever the fuel tank shows signs of wear or damage which may cause a leak, or when the fuel pump has been removed or replaced, or if you suspect a leak. If the fuel tank is damaged, the fuel tank should be replaced even if no leak is present. Do not attempt to repair the fuel tank.

1. Refill fuel tank and ensure fuel tank cap is in good condition and properly installed.
2. Refer to *BODY* subsection and remove the following:
   – RH passenger seat
   – RH lateral console panel
   – Fuel tank cover panel.
3. Remove the vent hose from the fuel tank vent valve.
4. Using the VACUUM/PRESSURE PUMP (P/N 529 021 800) and a short piece of hose, pressurize the fuel tank through the vent valve.

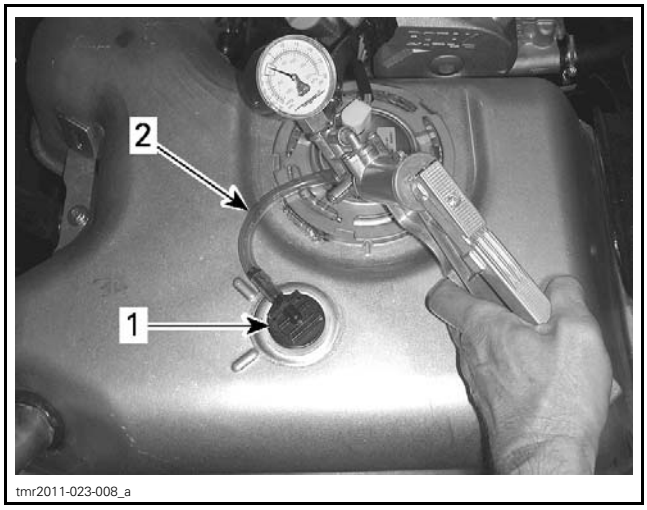

tmr2011-023-008_a

1. Fuel tank vent valve
2. Vent hose to vacuum/pressure pump

PRESSURE	TIME WITHOUT PRESSURE DROP
14 kPa (2 PSI)	3 minutes

If pressure drops, locate fuel leak(s) and repair or replace leaking component(s).

NOTE: In case of fuel tank leak, do not attempt repair. Fuel tank must be replaced.

To locate a leak, check for a fuel smell or leaking fuel.

To ease locating leak(s), spray soapy water on all hose connections and components; bubbles will indicate the leak location(s).

FUEL PUMP PRESSURE TEST

The pressure test will show the available pressure at the fuel pump outlet. It validates the pressure regulator, the fuel pump and tests for leaks in the system.

NOTE: Refer to the *FUEL SYSTEM DIAGNOSTIC FLOW CHART* to help diagnose a fuel system related problem.

1. Ensure there are no leaks from hoses and fittings. Repair any leak.
2. Ensure the fuel level in the tank is sufficient.
3. Before proceeding with the pressure test ensure the battery is fully charged. Battery voltage must be over 12 volts.
4. Connect vehicle to the applicable B.U.D.S. software version and select the following:
   – **Read Data** button
   – **Activation** page tab
   – **ECM** page tab
   – Fuel pump **Disabled**.

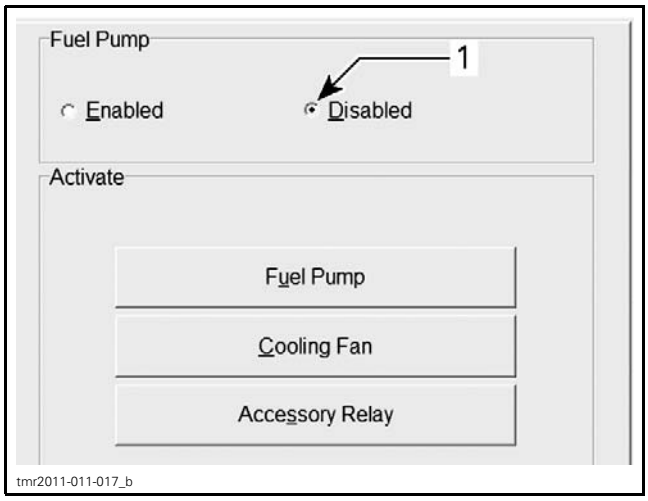

1. Click here to disable the fuel pump

5. Release fuel pressure by running engine until it runs out of gas.
6. Remove the following items, refer to the *BODY* subsection.
   - Passenger seat
   - Fuel tank cover
   - RH lateral console panel.
7. Carefully disconnect the fuel pump outlet hose by pressing on the release tab of the quick disconnect fitting.
8. Install fuel PRESSURE GAUGE (P/N 529 035 709) and FUEL HOSE ADAPTER (P/N 529 036 023) between disconnected hose and fuel rail (in-line installation).



PRESSURE GAUGE

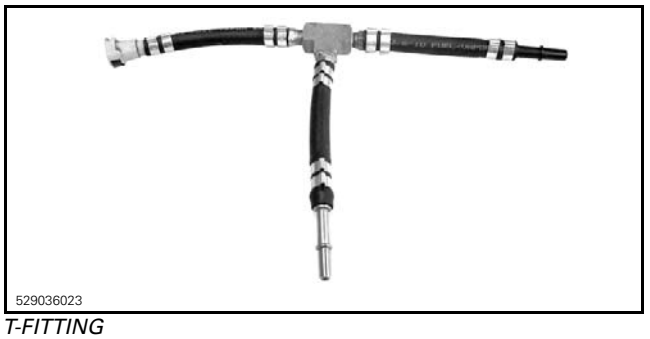

T-FITTING

9. Using B.U.D.S., reactivate fuel pump by selecting **Enabled**.

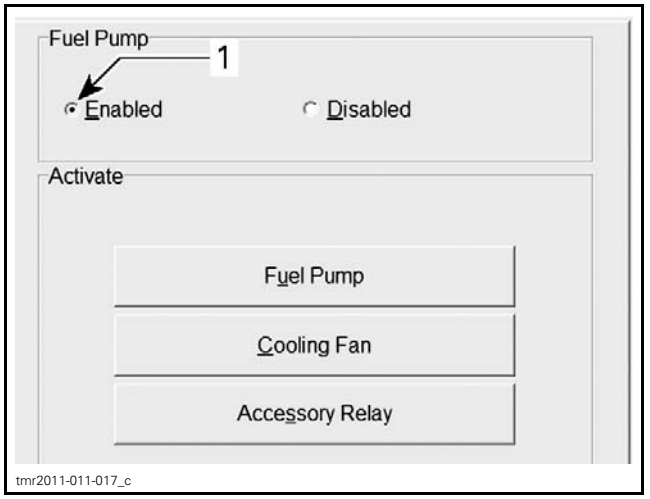

1. Click here to disable the fuel pump

10. Turn ignition key ON and observe fuel pressure.

FUEL PRESSURE	350 kPa ± 10 kPa (51 PSI ± 1 PSI)

NOTE: Valid at 12 V ± 0.1 V.

11. Start engine and observe fuel pressure.
12. Stop engine.
13. In B.U.D.S., select the fuel pump **Disabled** function.
14. Release fuel pressure by running engine until it runs out of gas.
15. Remove tool and connect hose on fuel rail.

Test Conclusion

The fuel pressure should be within specification in static or dynamic tests.

A rapid pressure drop after the engine is stopped indicates leakage either from a fuel hose, fuel rail, or from the fuel pump check valve.

- Check fuel hoses, fuel rail and fittings for leaks. If not leaking, replace fuel pump.

A slow pressure drop after the engine is stopped indicates leakage either from a fuel injector or from the fuel pressure regulator.

– Check fuel injectors for leaks. If not leaking, replace fuel pump.

TROUBLESHOOTING

FUEL SYSTEM DIAGNOSTIC FLOW CHART

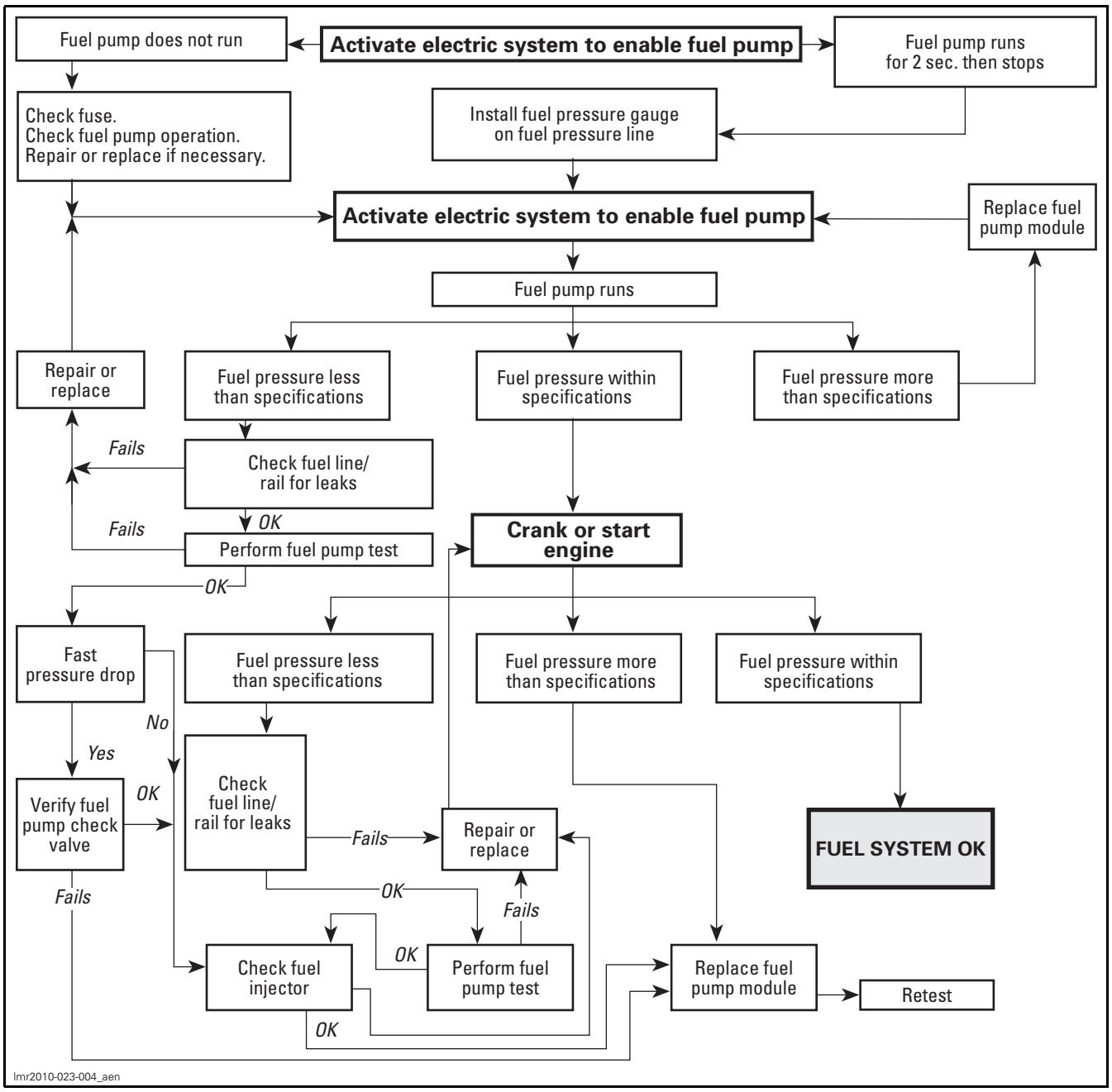

PROCEDURES

FUEL HOSE AND OETIKER CLAMPS

Fuel Hose Replacement

When replacing fuel hoses, be sure to use hoses and clamps as available from BRP parts department. This will ensure continued proper and safe operation.

⚠ WARNING

Use of fuel lines other than those recommended by BRP may compromise fuel system integrity.

⚠ WARNING

Whenever removing a hose in the fuel system, always use new Oetiker clamps at assembly. Then validate fuel system tightness by performing a fuel pressure test.

Oetiker Clamp Replacement

To secure or cut Oetiker clamps on fuel lines, use OETIKER PLIER (P/N 295 000 070).

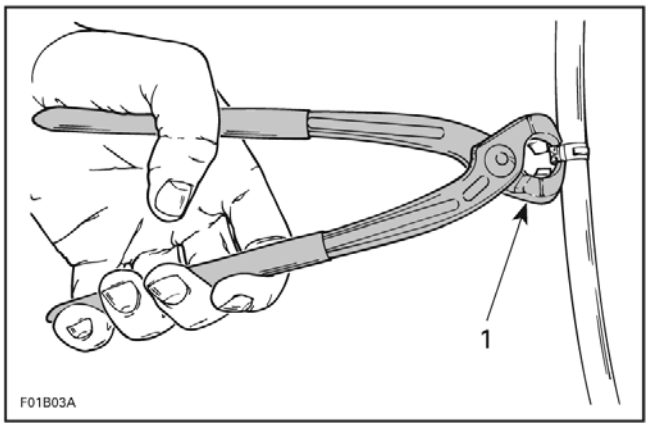

1. Cutting clamp

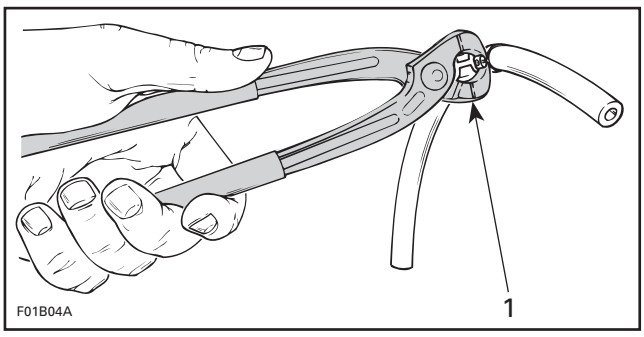

1. Securing clamp

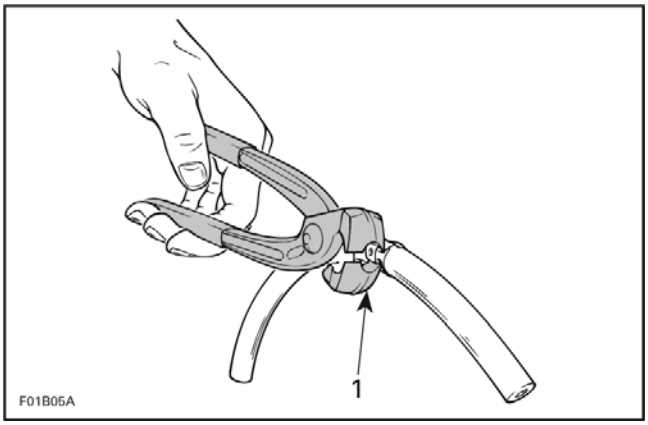

1. Securing clamp in limited access

FUEL TANK

Fuel Tank Draining

Remove fuel tank cap and siphon gas into an approved fuel container.

Fuel Tank Removal

1. Drain fuel tank. Refer to *FUEL TANK DRAINING* above in this subsection.
2. Connect the vehicle to the applicable B.U.D.S. software version.
3. In B.U.D.S., select the following to disable the fuel pump:
   - **Read Data** button
   - **Activation** page tab
   - **ECM** page tab
   - Fuel pump **Disabled**.

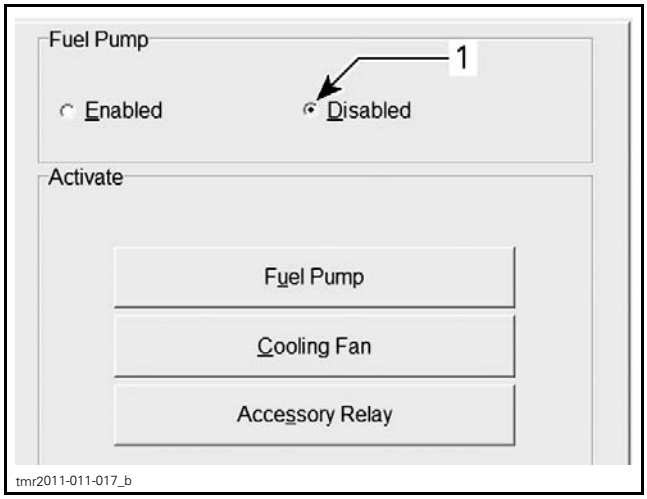

1. Click here to disable the fuel pump

4. Release fuel pressure by running engine until it runs out of gas.
5. Disconnect battery, refer to *CHARGING SYSTEM* subsection.

6. Remove RH passenger seat, refer to the *BODY* subsection.
7. Refer to *BODY* subsection and remove the body parts indicated in the following illustration.

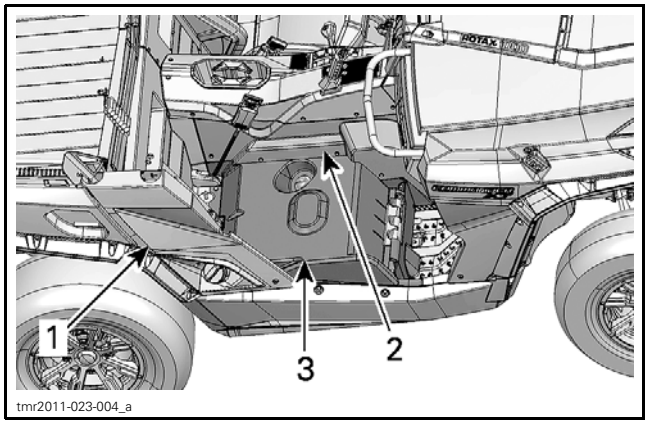

tmr2011-023-004_a

TYPICAL
1. *RH Lateral body panel*
2. *RH side panel on the console*
3. *Fuel tank cover panel*

8. Disconnect the fuel pump connector.
9. Remove the vent hose from the fuel tank valve.
10. Disconnect the high pressure fuel hose at the fuel injectors.

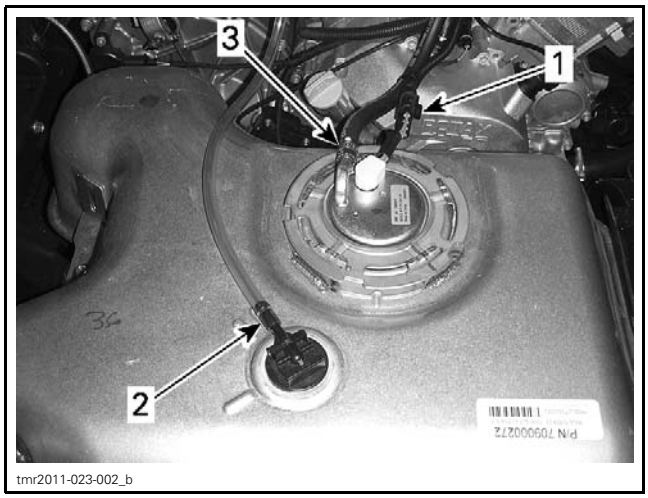

tmr2011-023-002_b

1. *Fuel pump connector*
2. *Vent hose*
3. *High pressure fuel hose*

11. Remove fuel tank retaining screws (2).

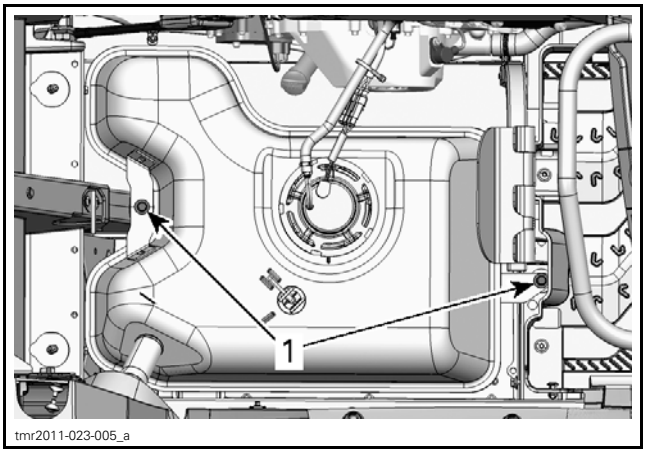

tmr2011-023-005_a

1. *Fuel tank mounting screws (2)*

12. Pull fuel tank out from the RH side of vehicle.

Fuel Tank Inspection

Inspect fuel tank for any damages or cracks which may result in fuel leaks.

Inspect tank and protector attachment points for damages.

Inspect protector for damages.

If cracks, gouges or other damages which may lead to a fuel leak, or damages to attachment points that could prevent the tank from being secure are found, replace fuel tank.

Fuel Tank Installation

The installation is the reverse of the removal procedure. However, pay attention to the following.

Be sure to reinstall the 2 rubber washers between the fuel tank and the frame.

NOTE: Verify the 3 rubber pads located under the fuel tank are properly fixed to the fuel tank. If pad is missing, install a new one.

Be sure to properly connect and route:
- Fuel tank vent tube
- Fuel pump pressure hose
- Electrical connector.

Using B.U.D.S., reactivate fuel pump by selecting **Enabled**.

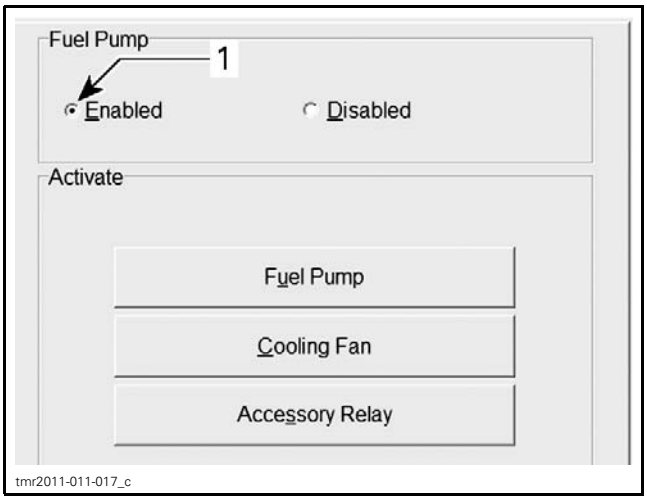

1. Click here to enable fuel pump

Refuel tank and ensure there are no leaks by performing a *FUEL TANK LEAK TEST* and a *FUEL PRESSURE TEST* as described in this subsection.

FUEL PUMP

Fuel Pump Pressure Test

Refer to *INSPECTION* in this subsection.

Fuel Pump Quick Test

1. Turn ignition key to ON.
2. Listen for fuel pump operation.
3. Fuel pump should come ON for a few seconds, then stop.

If fuel pump does operate as in previous steps, carry out the following:

– Check fuel pump fuse.
– Check in B.U.D.S. for applicable fault codes. Refer to *COMMUNICATION TOOLS AND B.U.D.S.* subsection.
– Carry out a fuel pump input voltage test.

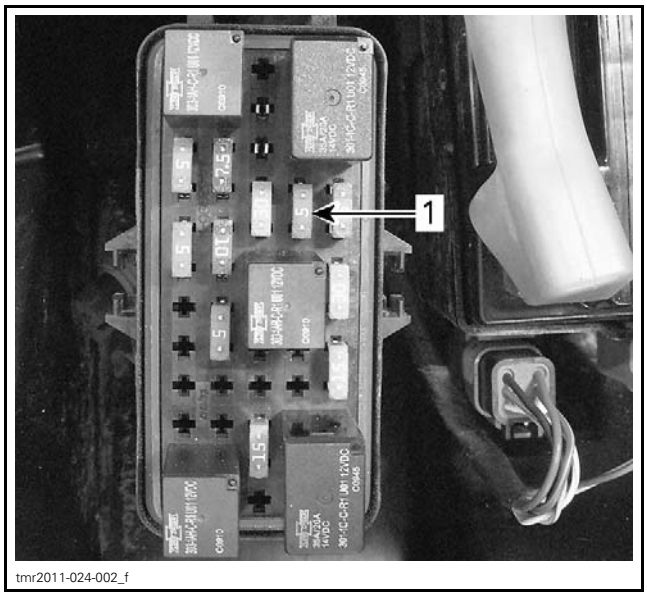

1. Fuel pump fuse

Fuel Pump Input Voltage Test

1. Remove RH passenger seat and fuel tank cover, refer to *BODY* subsection.

Disconnect the fuel pump connector.

2. Use the FLUKE 115 MULTIMETER (P/N 529 035 868) with the FLUKE RIGID BACK PROBE (P/N TP88).

Set multimeter to Vdc.



FLUKE 115 MULTIMETER

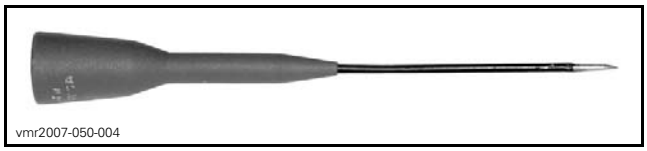

FLUKE RIGID BACK PROBE

3. Set multimeter to Vdc.
4. Turn ignition key ON.
5. Read voltage as follows.

FUEL PUMP INPUT VOLTAGE TEST		
TEST PROBES		VOLTAGE READING
Fuel pump connector Pin 3	Fuel pump connector Pin 4	Battery voltage

If battery voltage is read, carry out a fuel pump resistance test.

If battery voltage is not read, test fuel pump power input as follows.

FUEL PUMP POWER WIRE TEST		
TEST PROBES		VOLTAGE READING
Fuel pump connector Pin 3	Battery ground	Battery voltage

If battery voltage is now read, check fuel pump ground circuit between fuel pump connector 5-FP-4 and ECM connector 3-B-M1.

If battery voltage is still not read, check fuel pump:
- Fuse (F15)
- Power circuit
- Wiring and connectors.

Fuel Pump Resistance Test

1. Remove the fuel pump fuse.
2. Remove connector B from the ECM and connect it to the ECM ADAPTER TOOL (P/N 529 036 166).



3. Set multimeter to Ω.
4. Measure fuel pump resistance as follows.

FUEL PUMP RESISTANCE TEST (AT ECM AND FUSE)		
TEST PROBES		RESISTANCE Ω @ 20°C (68°F)
Fuse box contact 5D	ECM B-M1	Approximately 2 Ω

If resistance test failed, disconnect fuel pump connector and measure resistance at fuel pump connector.

FUEL PUMP RESISTANCE TEST (AT FUEL PUMP CONNECTOR)	
Pins 1 and 2	Approximately 2 Ω

If test failed at pump connector, replace fuel pump.

If test succeeded at pump connector, check wiring and connectors from fuse box to ECM connector. Repair or replace as necessary.

Fuel Pump Removal

1. Using B.U.D.S., select the following to disable the fuel pump:
   - **Read Data** button
   - **Activation** page tab
   - **ECM** page tab
   - Fuel pump **Disabled**.

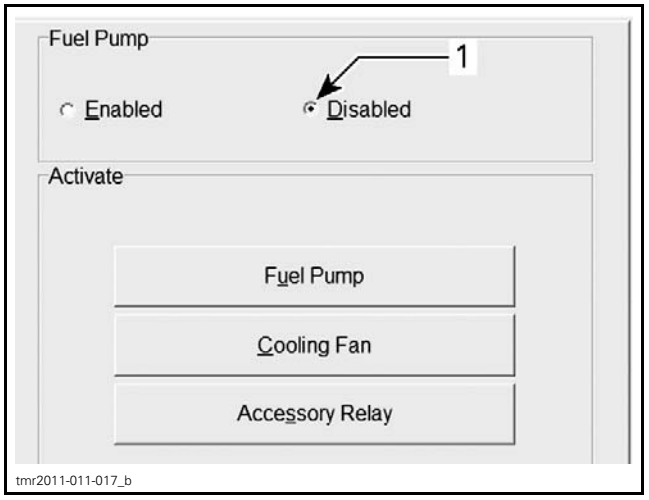

1. Click here to disable the fuel pump

2. Release fuel pressure by running engine until it runs out of gas.
3. Refer to *BODY* subsection and remove the body parts indicated in the following illustration.

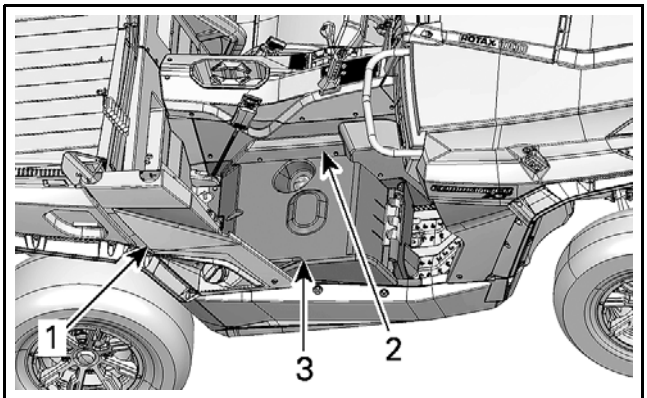

tmr2011-023-004_a

TYPICAL
1. *RH Lateral body panel*
2. *RH side panel on the console*
3. *Fuel tank cover panel*

4. Disconnect fuel pump electric connector.

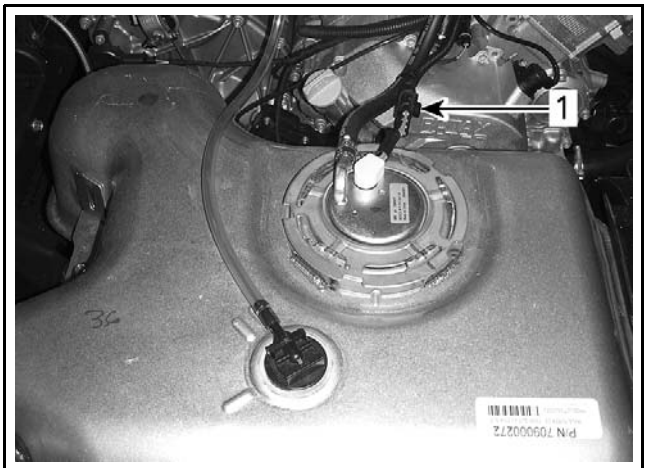

tmr2011-023-002_c

1. *Fuel pump connector*

5. Disconnect high pressure fuel hose at fuel rails (2 disconnects).

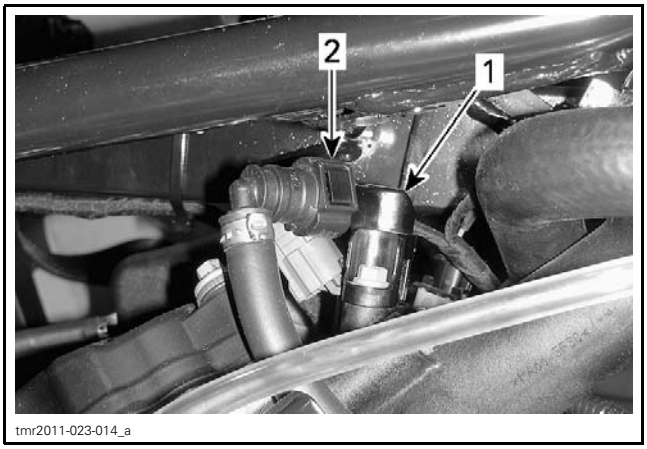

tmr2011-023-014_a

1. *Fuel rail (1 each cylinder)*
2. *High pressure fuel hose disconnect ((1 each cylinder)*

6. Using a soft face hammer and a brass drift in the notched portion of the locking ring, remove fuel pump locking ring.

⚠ WARNING

Fuel vapors are flammable and explosive under certain conditions. Use only non-sparking tools.

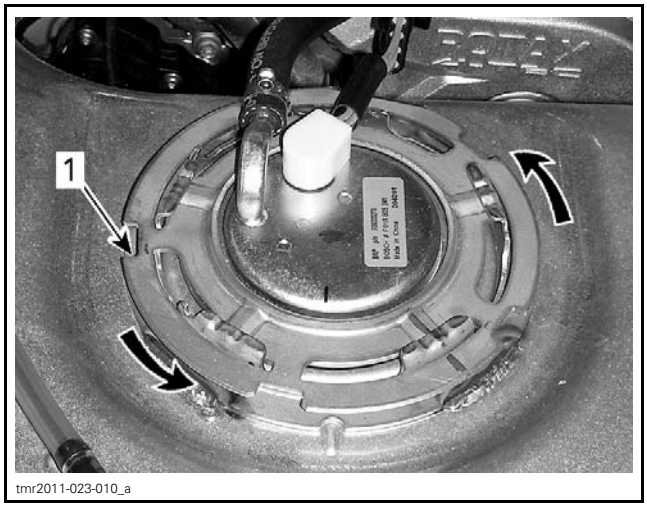

tmr2011-023-010_a

FUEL PUMP LOCKING RING REMOVAL
1. *Notch in fuel pump locking ring*

7. Carefully pull out fuel pump.

⚠ CAUTION **While pulling out the fuel pump, pay attention to fuel sender float arm. Float arm can get stuck and bend reducing fuel sender accuracy.**

8. Discard gasket ring.

Fuel Pump Installation

For installation, reverse the removal procedure. However, pay attention to the following.

⚠ CAUTION **Manipulate fuel pump with care.**

1. Install a NEW gasket ring.
2. Place gasket so that it is located between pump and tank mounting surface.

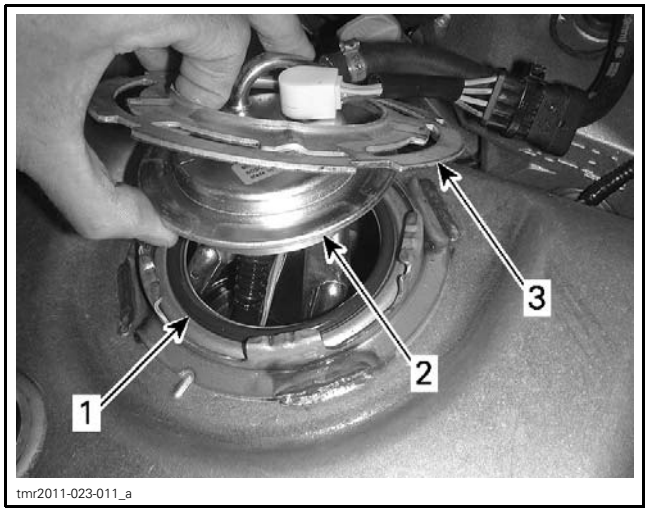

tmr2011-023-011_a

1. *Gasket ring here*
2. *Fuel pump flange*
3. *Pump locking ring*

3. Pay attention to pump orientation as in following illustration.

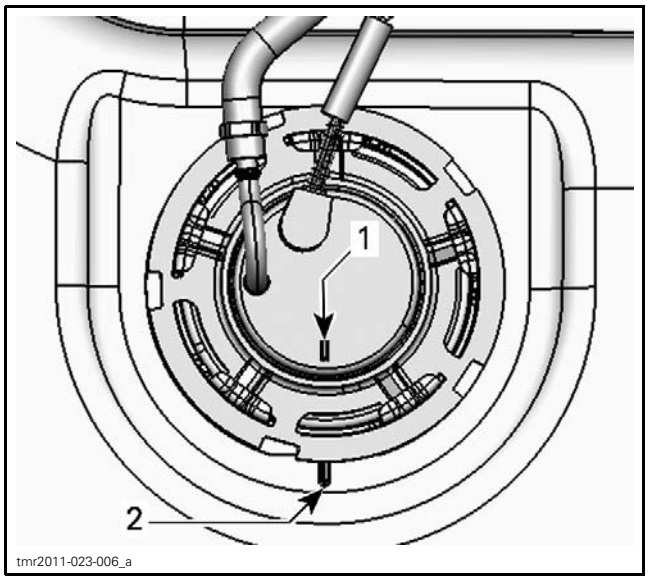

tmr2011-023-006_a

1. *Fuel pump index*
2. *Fuel tank pump index*

4. Insert fuel pump locking ring over the fuel pressure hose and electrical wiring connector.
5. While firmly holding pump against tank, engage fuel pump locking ring on fuel tank flange.
6. Using a soft face hammer and a brass drift in the notched portion of the locking ring, turn locking ring until it is fully engaged.

⚠ WARNING

Fuel vapors are flammable and explosive under certain conditions. Use only non-sparking tools. Ensure pump locking ring is fully engaged.

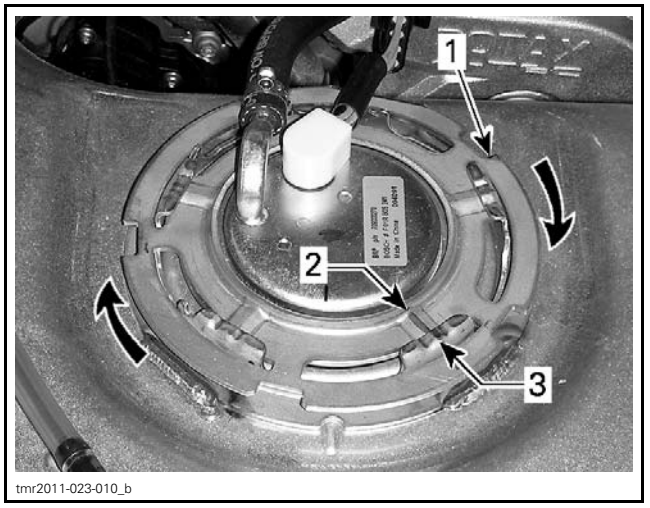

tmr2011-023-010_b

FUEL PUMP LOCKING RING INSTALLATION

1. *Notch in locking ring*
2. *Raised portion in locking ring (5 places)*
3. *Lock position on tank flange (5 places)*

7. Using B.U.D.S., enable the fuel pump.

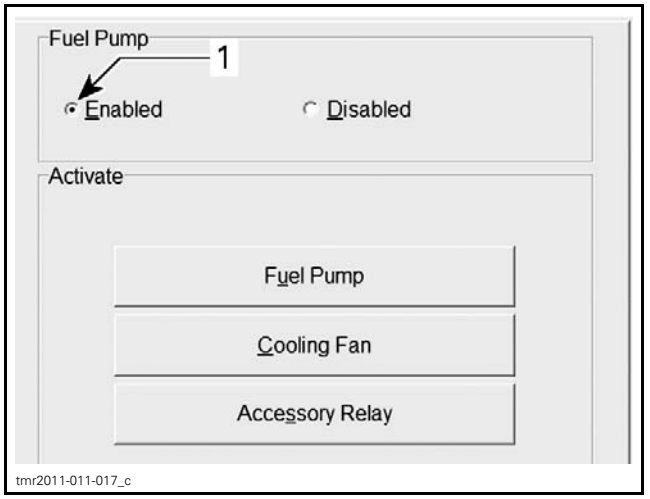

tmr2011-011-017_c

1. *Click here to enable the fuel pump*

8. Refuel tank and ensure there are no leaks by performing a *FUEL TANK LEAK TEST* and a *FUEL PRESSURE TEST* as described in this subsection.
9. Check fuel level sender operation.

Fuel Pump Strainer Replacement

1. Remove *FUEL PUMP*, see *FUEL PUMP REMOVAL* procedure in this subsection.
2. Unlock 3 tabs on plastic ring.

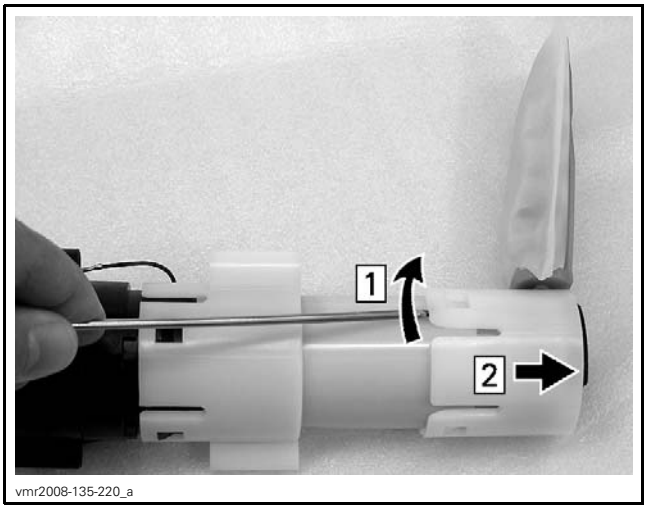

Step 1: Lift these tabs to unlock ring
Step 2: Pull ring off pump inlet

3. Remove rubber pad.

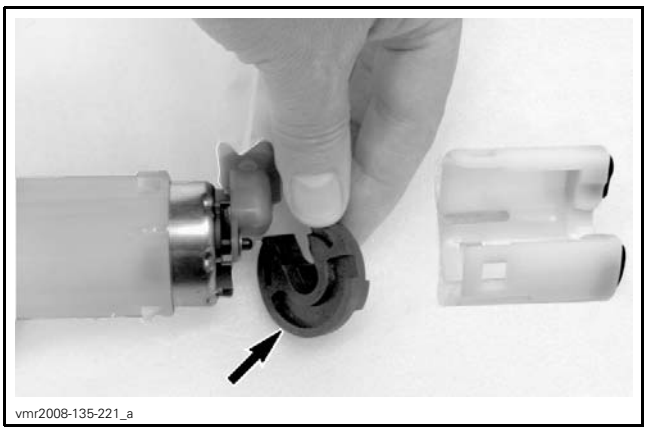

4. Remove push nut securing strainer to fuel pump. Be careful not to break the plastic pin.

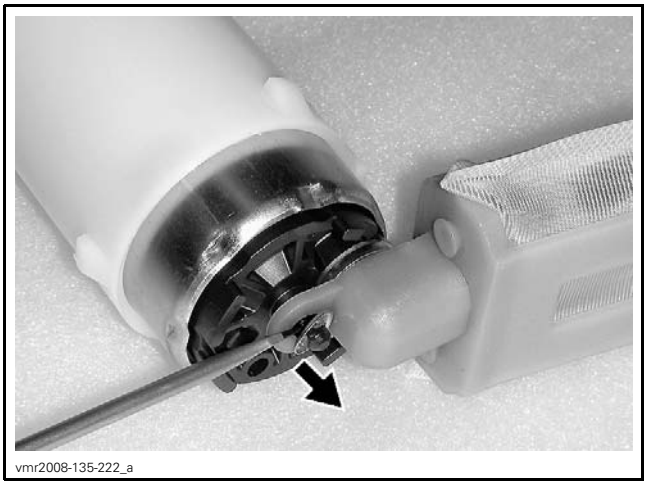

5. Pull strainer off fuel pump.

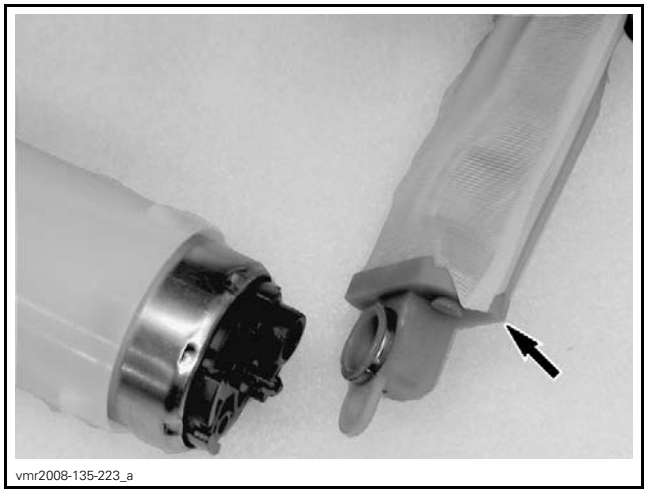

NOTE: A non serviceable filter is located in fuel pump. If it is clogged, replace fuel pump.

6. Insert the new strainer on fuel pump making sure to press it in tightly against pump face.
7. Press in a NEW push nut to secure strainer.
8. Reinstall remaining removed parts.

FUEL LEVEL SENDER

The fuel level sender is a float actuated variable resistance type that is part of the fuel pump.

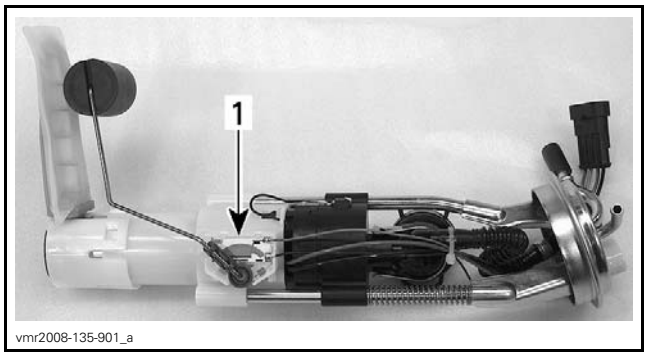

TYPICAL - FUEL PUMP
1. Fuel level sender

Fuel Level Sender Resistance Test

1. Remove and disconnect multifunction gauge, refer to the *LIGHTS/GAUGE/ACCESSORIES* subsection.
2. Use a multimeter and select Ω.
3. Measure the resistance of the sender as follows.

FUEL LEVEL SENDER RESISTANCE TEST		
FUEL LEVEL	GAUGE CONNECTOR	RESISTANCE Ω @ 20°C (68°F)
Full	Pins 4 and 21	5 Ω ± 1
Empty		100 Ω ± 5

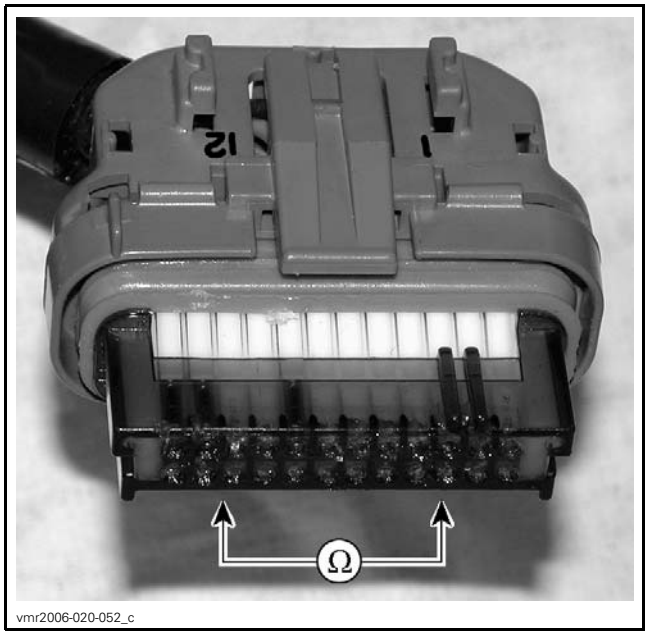

vmr2006-020-052_c

If readings are out of specification, repeat test at fuel pump connector. If resistance test at fuel pump connector is not good, replace fuel level sender.

If readings are as specified, carry out a *FUEL LEVEL SENDER INPUT VOLTAGE TEST*.

Fuel Level Sender Input Voltage Test

1. Set ignition switch to ON.
2. Disconnect fuel pump connector.
3. Use a multimeter and select Vdc.
4. Measure the input voltage as follows.

FUEL LEVEL SENDER INPUT VOLTAGE TEST		
FUEL PUMP CONNECTOR	BATTERY	VOLTAGE
Pin 1	Negative terminal	Battery voltage

If battery voltage is not read, test wiring continuity between sender and multifunction gauge.

If wiring continuity is good, replace multifunction gauge.

If continuity is not obtained, repair or replace wiring.

Fuel Level Sender Replacement

Replace fuel pump. See fuel pump removal and installation procedures in this subsection.

FUEL TANK VENT VALVE

Fuel Tank Vent Valve Test

Test for Normal Operation

1. Disconnect vent hose from fuel tank vent valve.
2. Connect the VACUUM/PRESSURE PUMP (P/N 529 021 800) and a short piece of hose to the fuel tank vent valve.

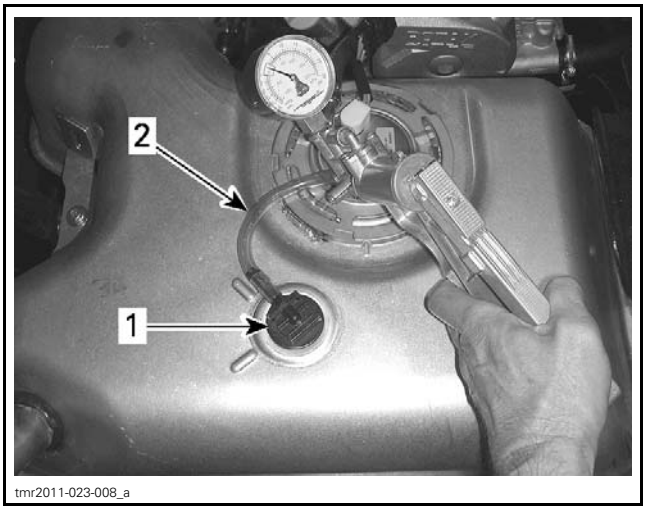

tmr2011-023-008_a

1. Fuel tank vent valve
2. Vent hose to vacuum/pressure pump

3. Remove fuel tank cap.
4. Set vacuum/pressure pump to **PRESSURE** and activate pump. The gauge on the pump **should not change in reading**; air should flow through the vent valve and fuel tank freely.

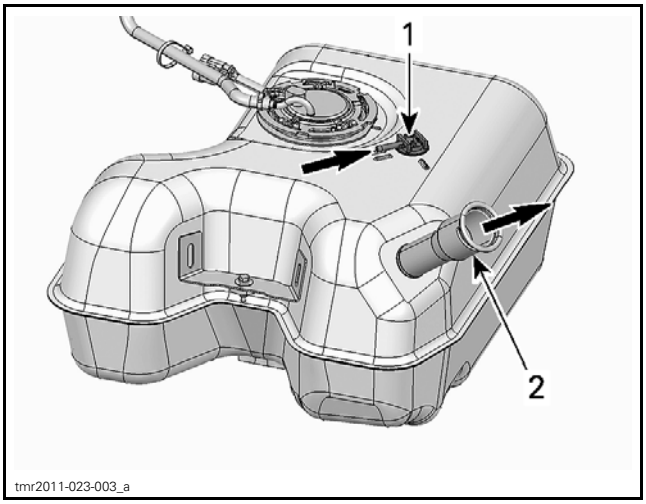

tmr2011-023-003_a

1. Air flows freely in through vent valve
2. Air flows out of fuel tank

5. Set vacuum/pressure pump to **VACUUM** and activate pump. The **gauge should not change in reading**; air should flow through the vent valve and fuel tank freely.

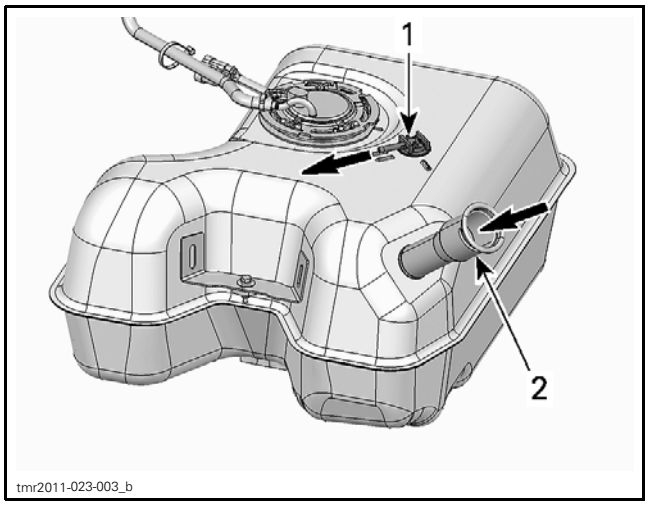

1. Air is drawn out freely through vent valve
2. Air flows in fuel tank

Test for Rollover Protection

1. Remove the fuel tank valve, refer to *FUEL TANK VALVE REMOVAL AND INSTALLATION* in this subsection.
2. Turn the valve upside down.
3. Set vacuum/pressure pump to **VACUUM** and activate pump. The vacuum **gauge reading should increase**; air should **not flow through** the valve.

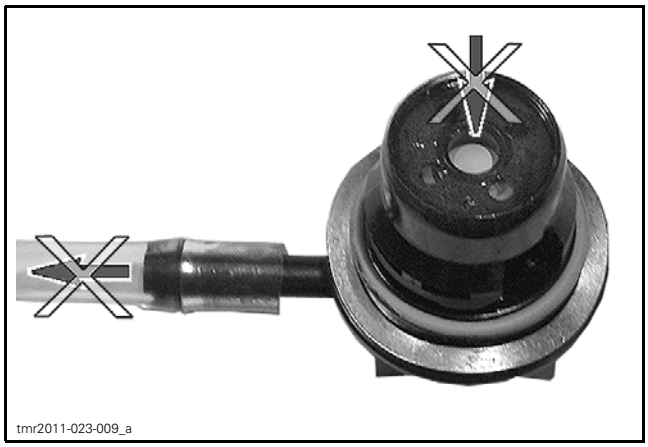

VALVE DOES NOT LET AIR PASS OUT UPSIDE DOWN

The fuel tank vent valve is defective if air flows freely through the valve when upside down and the vacuum indication does not increase on the pump gauge.

Fuel Tank Vent Valve Removal and Installation

1. When removing or installing the fuel tank vent valve, pay attention to the following:
   – Valve lock position index (dual)
   – Valve unlock position index.

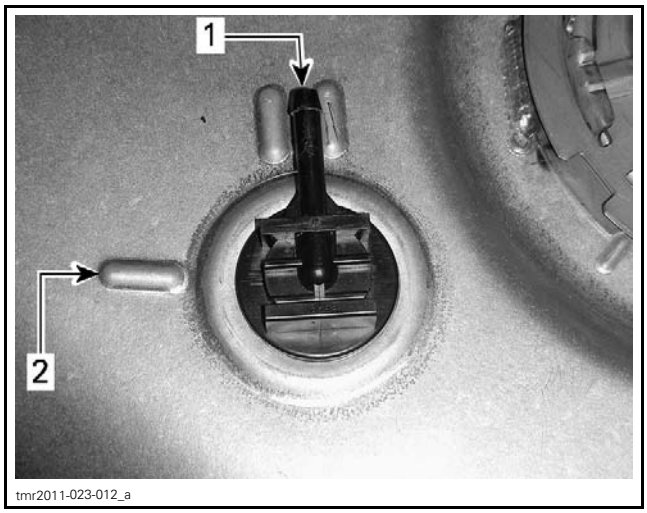

1. Lock position index (dual)
2. Unlock position index

2. Remove the vent hose from the valve.
3. Use an open end wrench of the appropriate size on the rectangular portion of the valve to rotate it to the unlock position for removal.
4. Ensure the wave spring and O-ring seal on the valve to be installed are in good condition.

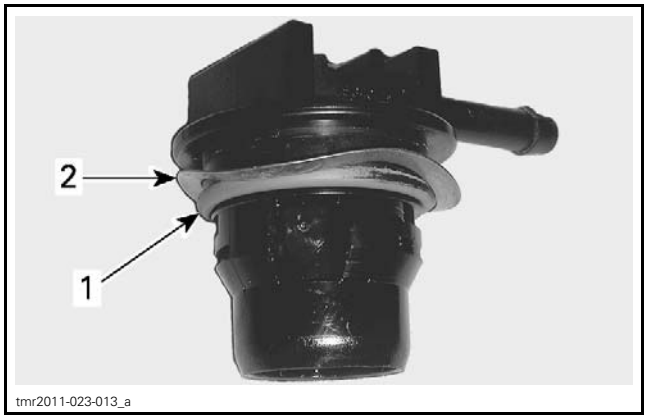

1. O-ring seal
2. Wave spring

5. Insert the valve in the tank.
6. Press down on the valve and rotate it so that its stem rests between the dual valve locking position index (see first illustration).
7. Reconnect the vent hose to the valve stem.

POWER DISTRIBUTION AND GROUNDS

GENERAL

POWER DISTRIBUTION DIAGRAM

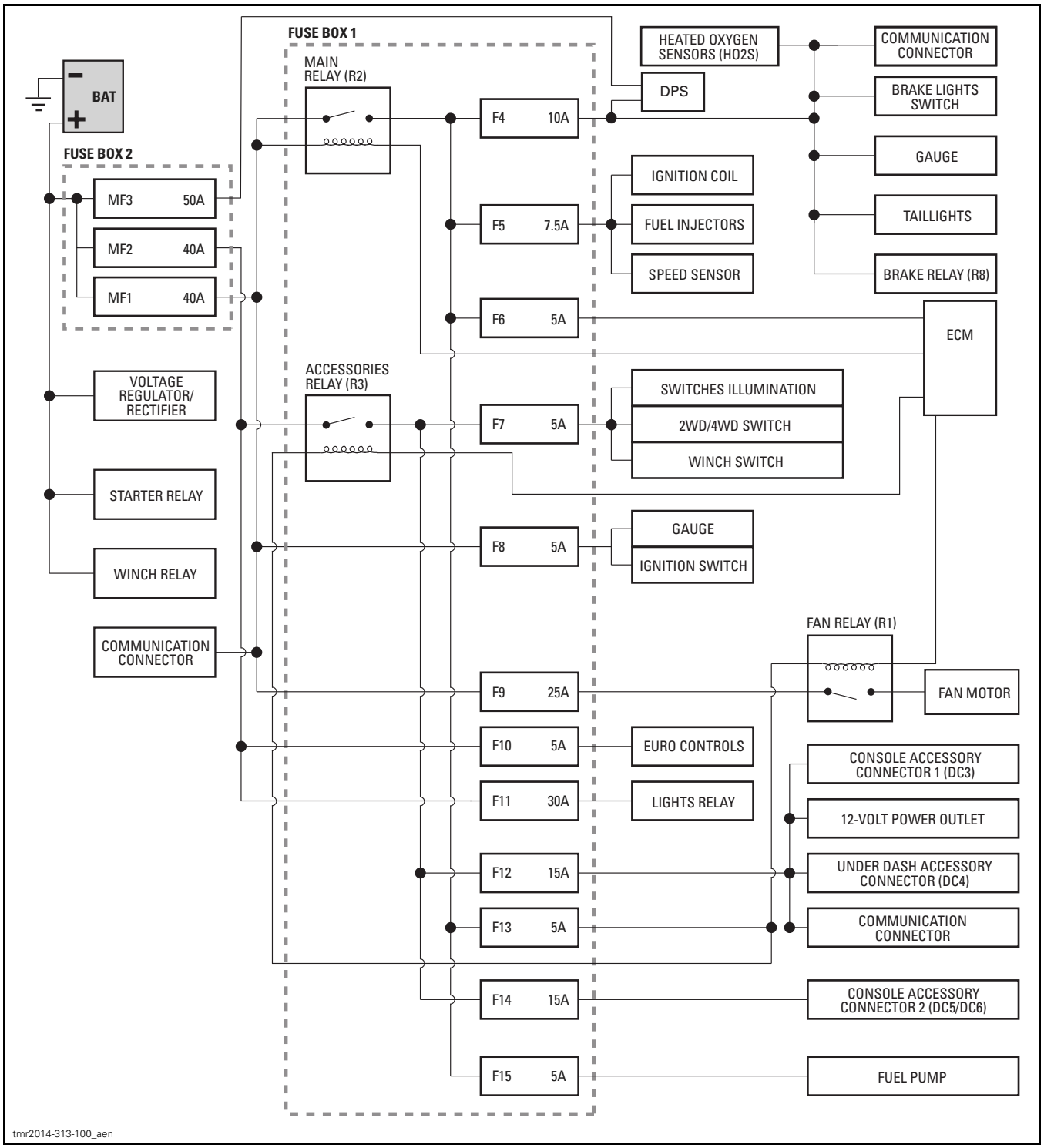

FUSE BOX 2

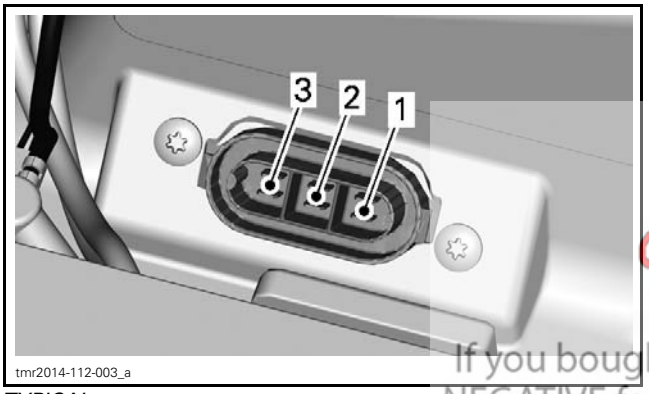

TYPICAL

Midwest Manuals
Green Manuals
Paperless Manuals
For a Better Tomorrow
If you bought this manual from any other seller please leave them NEGATIVE feedback and notify me at bestshopmanuals@gmail.com

FUSE IDENTIFICATION			
Fuse	1	Main	40 A
	2	Accessories	40 A
	3	DPS	50 A

GROUND

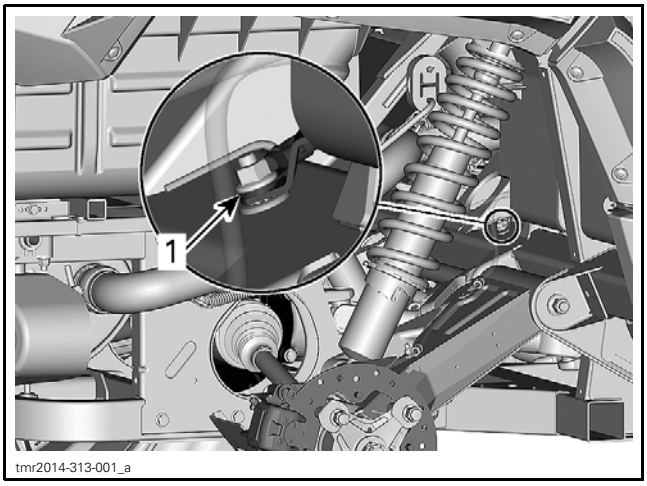

GROUND LOCATION - PARTS REMOVED FOR CLARITY
1. Vehicle ground

WIRING HARNESSES AND CONNECTORS

SERVICE TOOLS

Description	Part Number	Page
CRIMPING TOOL (HEAVY GAUGE WIRE)	529 035 730	293
ECM ADAPTER TOOL	529 036 166	291
ECM TERMINAL REMOVER 2.25	529 036 175	291
ECM TERMINAL REMOVER 3.36	529 036 174	291

SERVICE TOOLS – OTHER SUPPLIER

Description	Part Number	Page
GM TERMINAL EXTRACTOR	12094430	292
SNAP-ON TERMINAL REMOVER TOOL	TT600-4	288

GENERAL

WIRING HARNESS AND SPLICE LOCATION

The wiring harnesses and splice location illustrations are typical. Several variants of the connector types, such as different number of pin cavities, are used on the vehicle. The wiring harnesses and splice location illustrations are stored in the back cover pocket.

PROCEDURES

DEUTSCH CONNECTORS

Deutsch Connector Application

A variety of Deutsch connectors are used on various systems:

– Engine connector
– Magneto connector.

The following procedures may be used on each as they are similar in construction.

Deutsch Connector Removal from its Support

1. Insert a small flat screwdriver between the support and the Deutsch connector.
2. Pry the connector away from the support slightly while sliding it out in the direction shown.

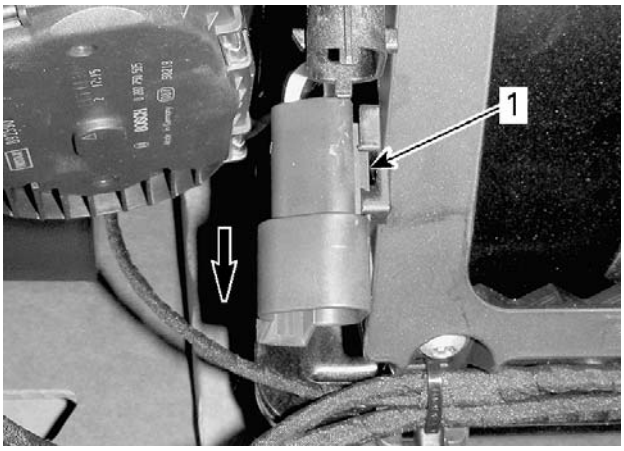

TYPICAL - MALE CONNECTOR REMOVED FOR CLARITY
1. Insert screwdriver here

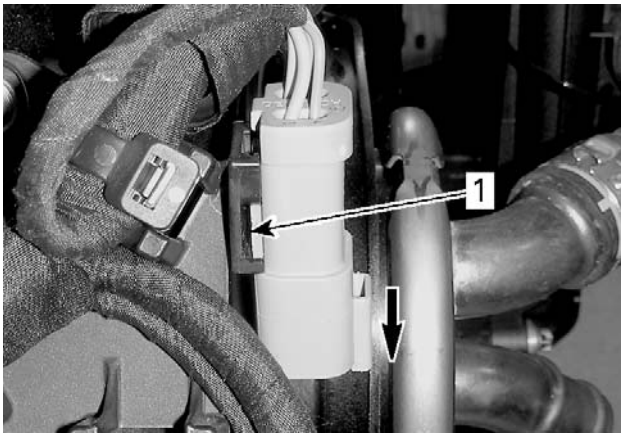

TYPICAL - MALE CONNECTOR REMOVED FOR CLARITY
1. Insert screwdriver here

Deutsch Connector Disconnect

1. To disconnect a Deutsch connector, press the release tab and twist a small flat screwdriver between the male and female housing to disengage and disconnect them.

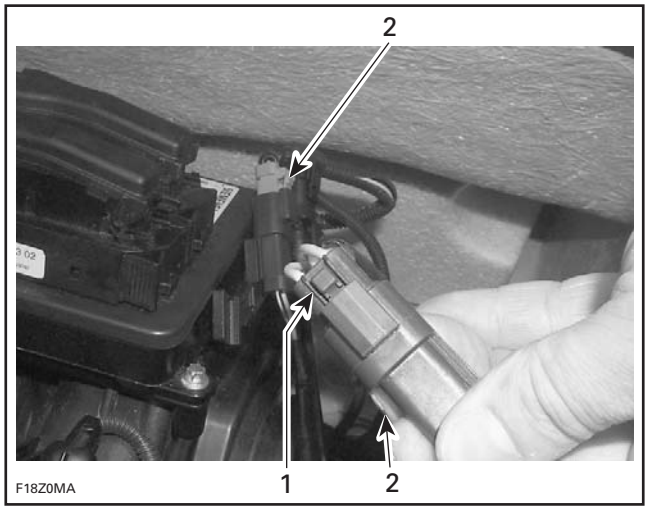

TYPICAL
1. Release tab
2. Deutsch connector

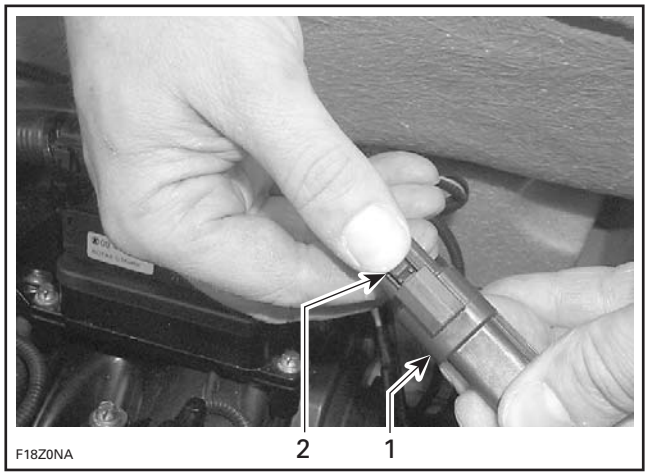

TYPICAL
1. Deutsch connector
2. Press release button

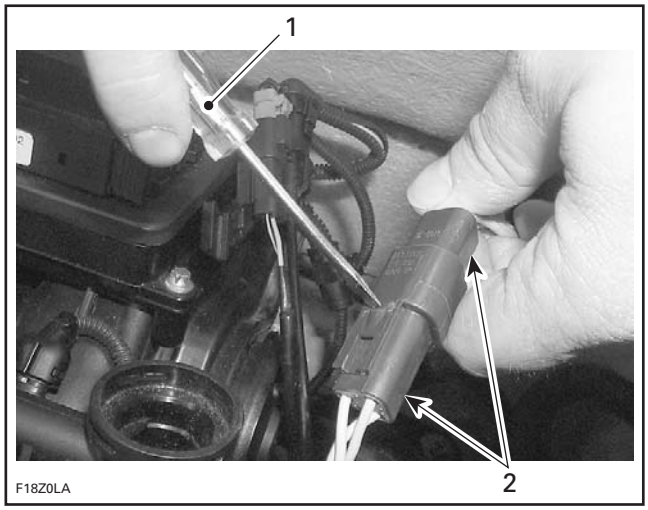

TYPICAL
1. Flat screwdriver
2. Deutsch connector

Deutsch Connector Disassembly and Reassembly

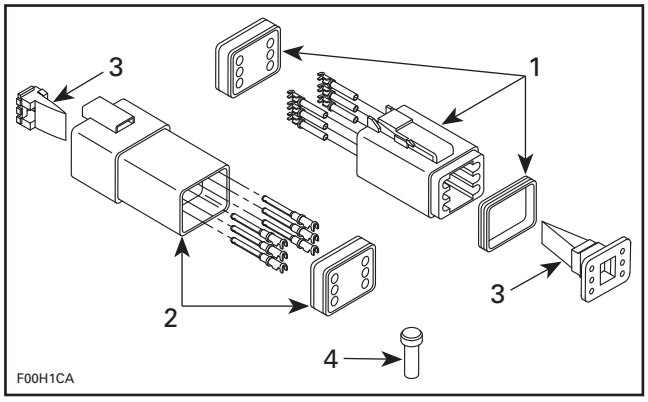

TYPICAL - DEUTSCH CONNECTOR
1. Male connector
2. Female connector
3. Secondary lock
4. Sealing cap

NOTICE Do not apply dielectric grease on terminal inside connector.

Terminal Removal

To remove terminals from connector, proceed as follows:

1. Using long nose pliers, pull out the secondary plastic lock from between the terminals.

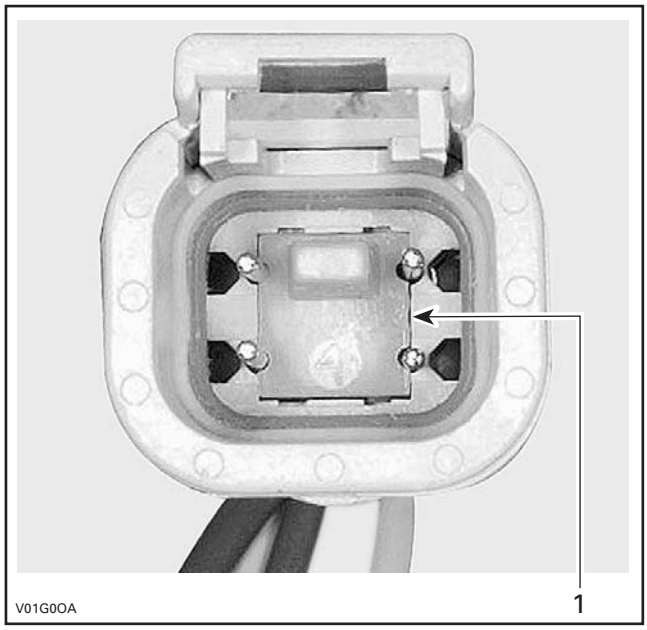

FEMALE CONNECTOR
1. Female lock

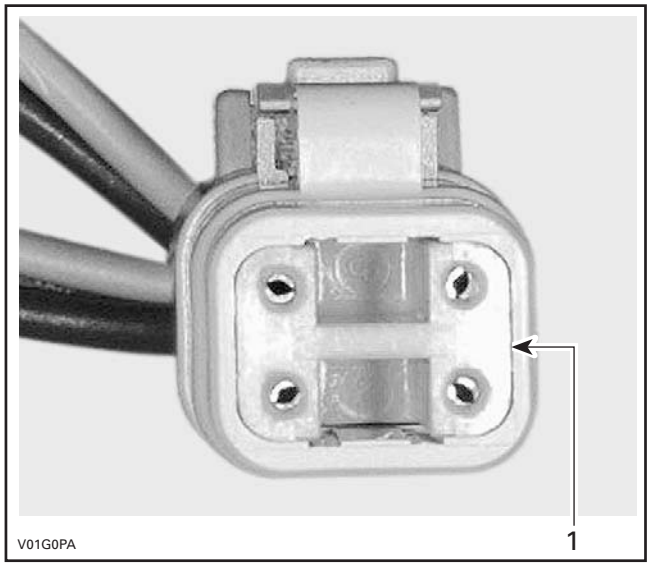

MALE CONNECTOR
1. Male lock

NOTE: Before pin extraction, push wire forward to relieve pressure on retaining tab.

2. Insert a 4.8 mm (.189 in) wide screwdriver blade inside the front of the terminal cavity.
3. Pry the retaining tab away from the terminal while gently pulling the wire and terminal out of the back of the connector.

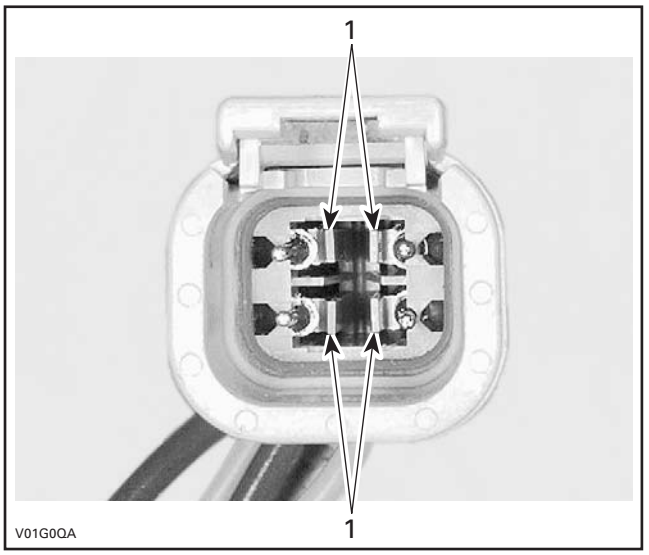

FEMALE CONNECTOR
1. Retaining tab

Terminal Insertion

1. For insertion of a terminal, ensure the secondary plastic lock is removed.
2. Insert terminal through the back of the connector in the appropriate position, and push it in as far as it will go. You should feel or hear the terminal lock engage.
3. Pull back on the terminal wire to be sure the retention fingers are holding the terminal.
4. After all required terminals have been inserted, the lock must be installed.

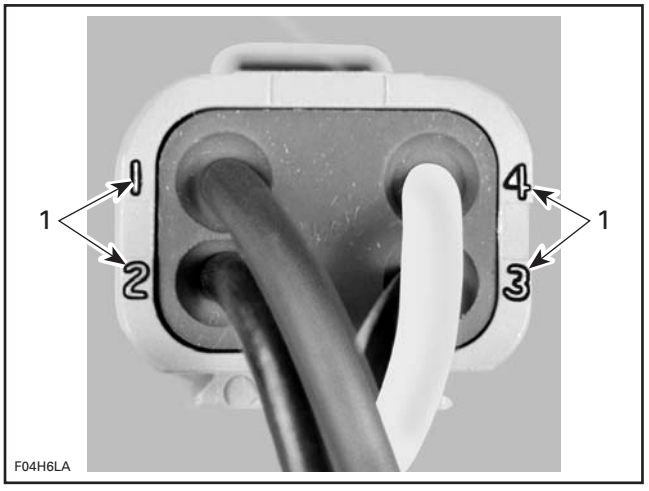

CONNECTOR PIN-OUT
1. Terminal position identification numbers

PACKARD CONNECTORS

Packard Connector Application

Packard connectors are used to connect:

– Electrical harnesses

– Gauges
– VCM
– EFB.

3-Pin Packard Connector

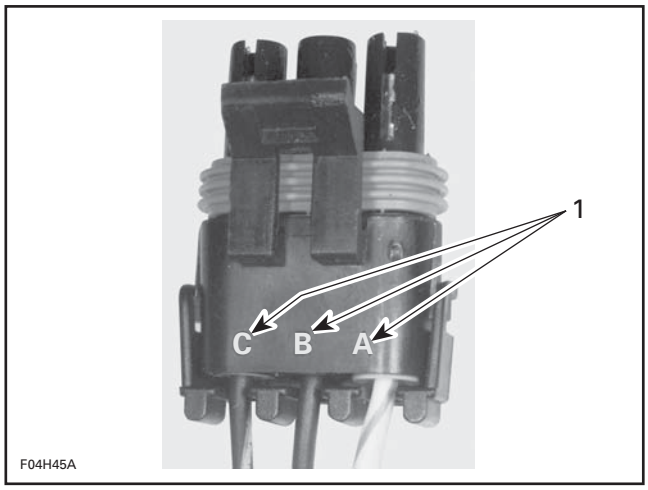

VIEW OF A 3-PIN PACKARD CONNECTOR
1. Identification letters

NOTE: This type of connector also comes in other pin configurations.

To remove a terminal from a 3-pin Packard connector, use the SNAP-ON TERMINAL REMOVER TOOL (P/N TT600-4).

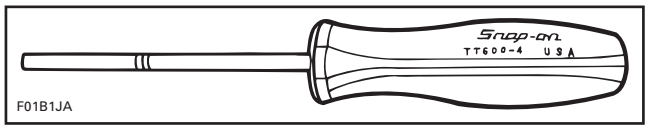

⚠ WARNING

Ensure all terminals are properly crimped on wires and connectors are properly fastened.

PACKARD CONNECTOR (MULTIFUNCTION GAUGE)

Firmly push down tab and hold to unlock connector while pulling it out.

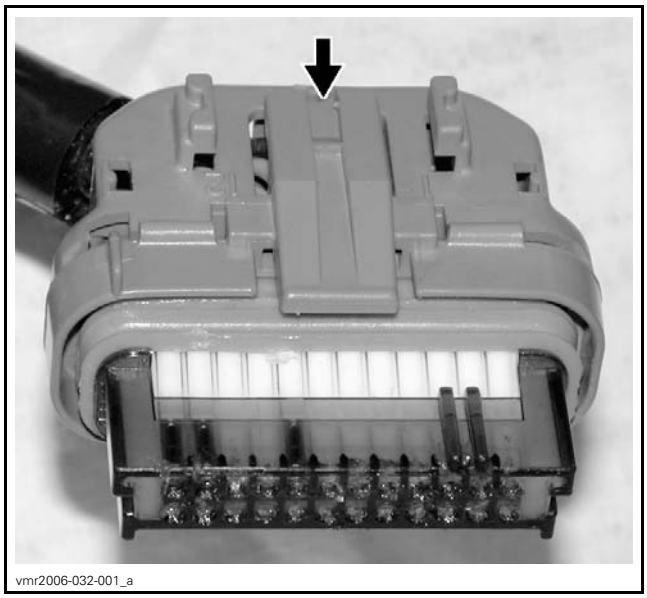

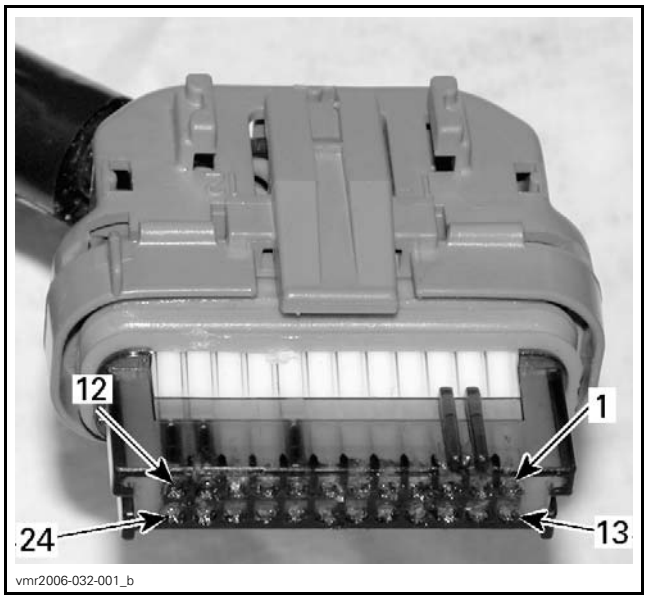

CONNECTOR PINOUT

Push on both tabs to remove retainer.

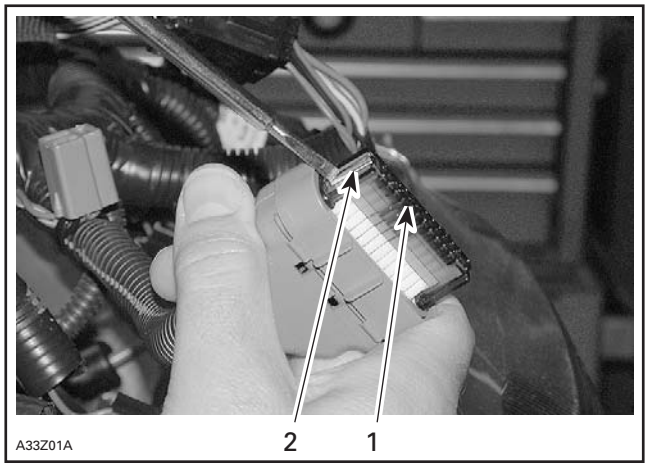

TYPICAL
1. Retainer
2. Tab (one on each side)

Open housing by lifting 4 tabs.

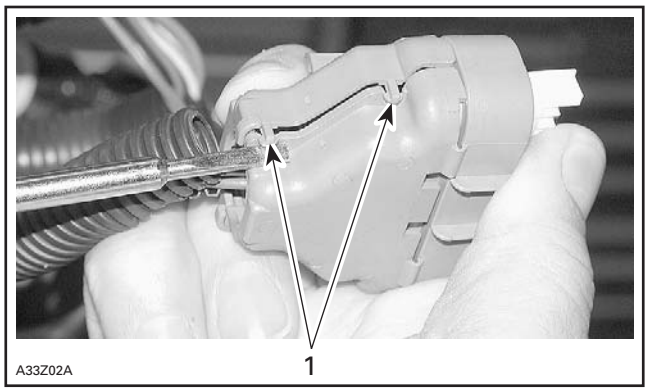

TYPICAL
1. Tabs (2 on each side)

Lift the top plastic lock of the female terminal to be removed and hold in position. Lift the female terminal to unlock from the housing and push out of housing.

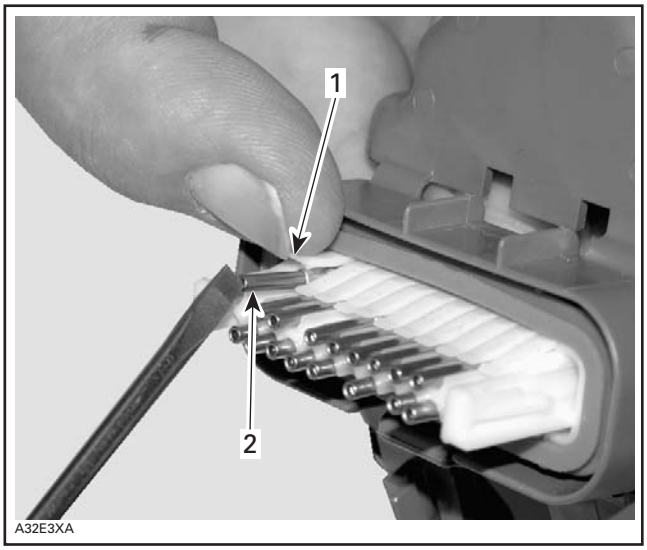

TYPICAL
1. Lift and hold plastic lock
2. Lift to unlock and push out

MOLEX CONNECTOR

Molex Connector Application

The Molex connector is used on the ECM.

There are 2 MOLEX connectors on the ECM.

The engine wiring harness connector is connected to ECM connector "A". The vehicle wiring harness connector is connected to ECM connector "B".

Each ECM connector has 48 pins.

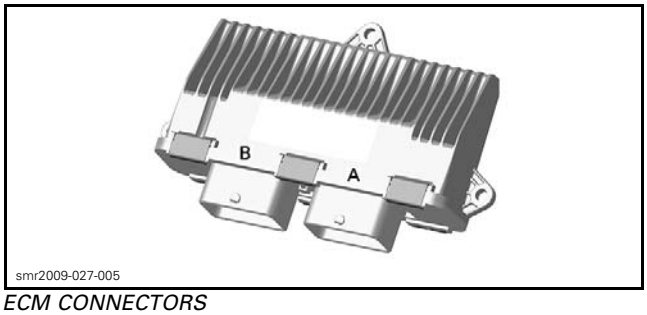

ECM CONNECTORS

Do not apply any product to the pins in the ECM connector.

Connector Removal

1. To access the ECM, refer to *ELECTRONIC FUEL INJECTION* subsection.
2. Press and hold the locking tab on the connector to be disconnected.

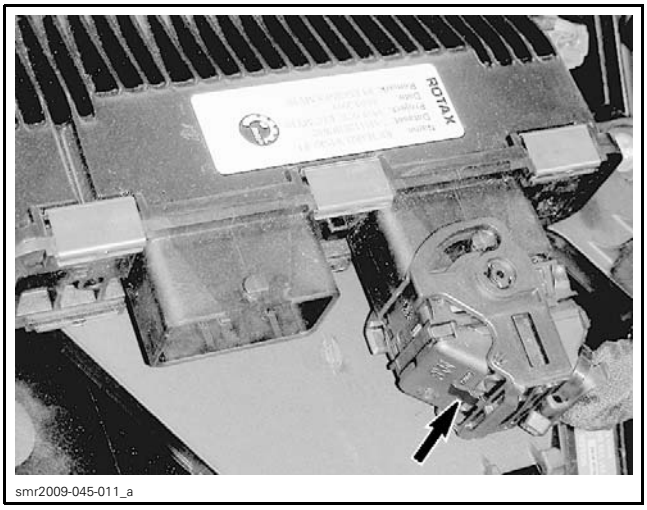

smr2009-045-011_a

LOCKING TAB TO PRESS AND HOLD

3. As you hold the locking tab, rotate the connector locking cam until it stops.

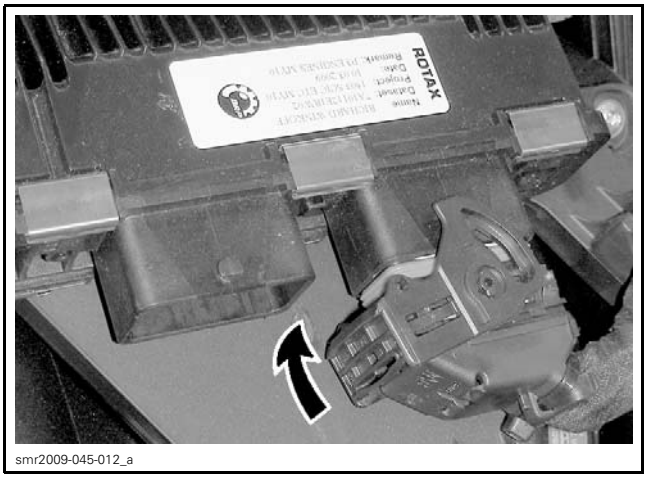

smr2009-045-012_a

CONNECTOR LOCKING CAM ROTATION TO RELEASE

4. Pull connector off ECM.

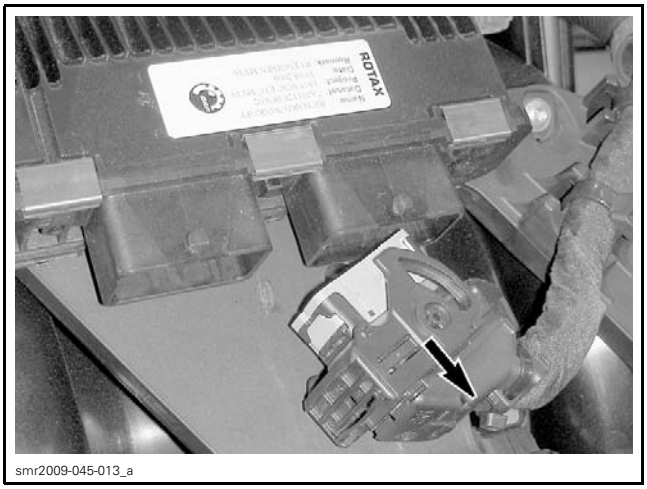

smr2009-045-013_a

Connector Installation

1. Fully open connector locking cam.

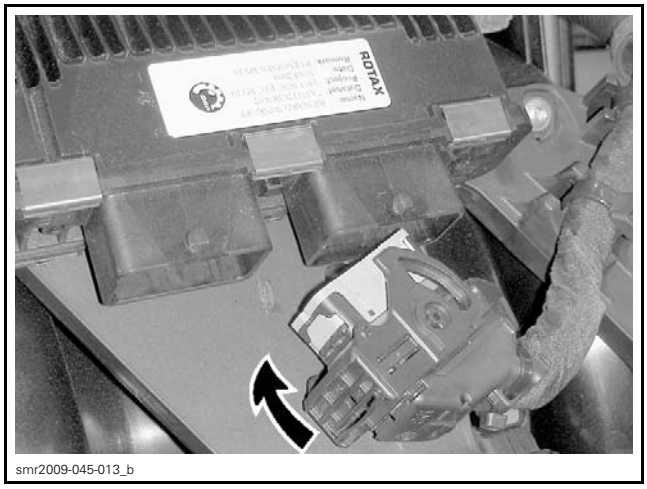

smr2009-045-013_b

CONNECTOR LOCKING CAM IN RELEASE POSITION

2. Insert connector on ECM.
3. As you push the connector onto the ECM, rotate the connector locking cam until it snaps locked.

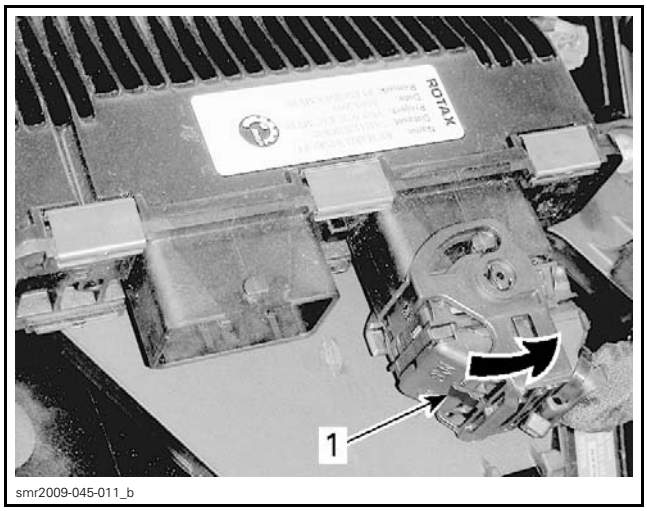

smr2009-045-011_b

1. Locked here

4. Ensure the locking tab is fully out.

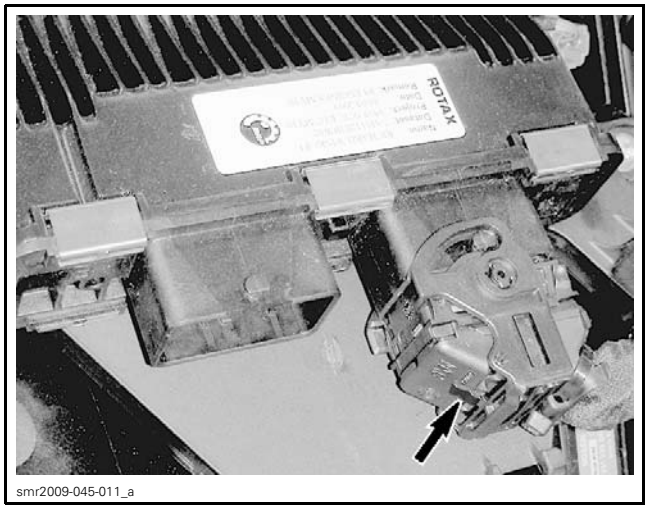

LOCKING TAB FULLY OUT

Connector Inspection

Before replacing an ECM, always check electrical connections.

1. Ensure connector locking mechanism is functioning properly.
2. Ensure all wire terminals (pins) are properly locked in the connector.
3. Ensure they are very tight, make good contact with the pins in the ECM.
4. Ensure the pins in the harness connector and the ECM connector are clean, shiny and corrosion-free.
5. Check wiring harness for signs of scoring.

NOTE: A "defective ECM module" could possibly be repaired simply by disconnecting and reconnecting it.

NOTICE **Do not apply any lubricant product to the pins of the ECM connector.**

Connector Probing

The most recommended and safest method to probe the MOLEX (ECM) connector terminals is to use the ECM ADAPTER TOOL (P/N 529 036 166). This tool will prevent deforming or enlarging of the terminals, which would lead to bad ECM terminal contact creating intermittent or permanent problems.



1. Disconnect the ECM connector to be probed, and reconnect it on the ECM adapter.
2. Probe wire terminals of the circuit to be tested directly in the adapter holes.

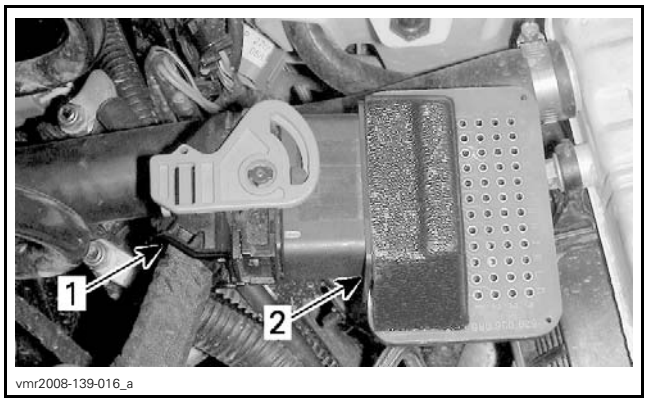

TYPICAL
1. ECM connector
2. ECM adapter

NOTICE **Never probe directly on the ECM harness connector. This could change the shape or enlarge the terminals and create intermittent or permanent contact problems.**

Connector Terminal Removal (Harness Connector)

To remove a signal terminal from the ECM harness connector, use the ECM TERMINAL REMOVER 2.25 (P/N 529 036 175).

To remove a power terminal, use the ECM TERMINAL REMOVER 3.36 (P/N 529 036 174).

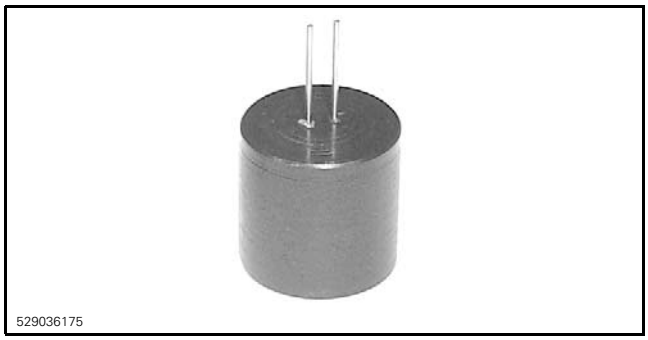
529036175

1. Remove rear protector from connector.
2. Pull out the connector lock.

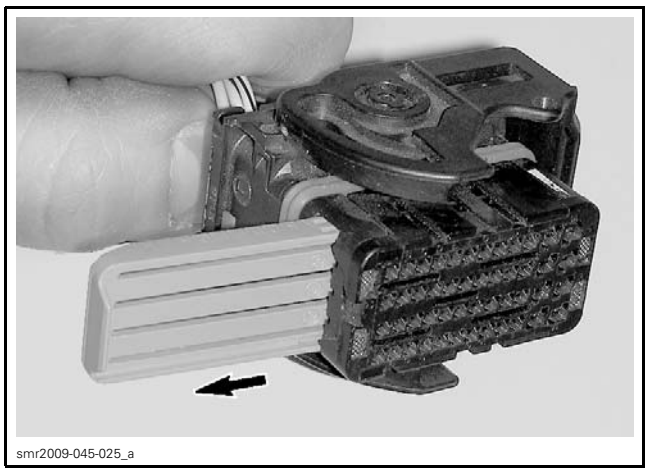
smr2009-045-025_a

3. Insert tool to unlock terminal.

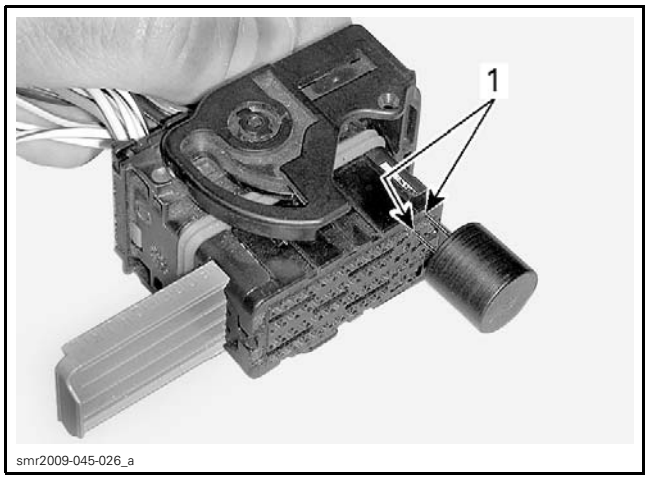

smr2009-045-026_a

1. Unlock here

4. Gently pull on the wire to extract the terminal out the back of the connector.

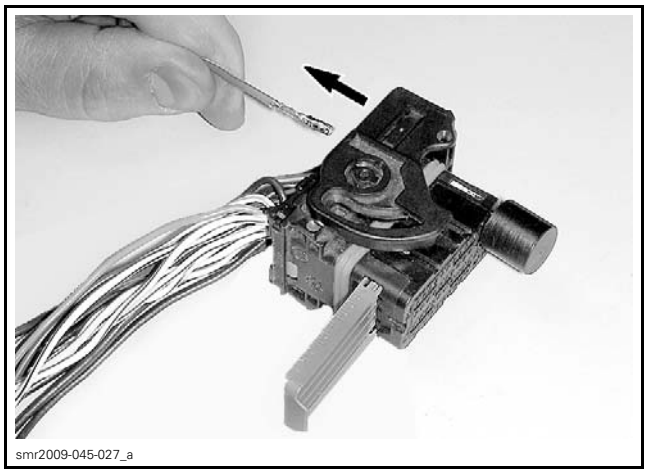
smr2009-045-027_a

NOTICE Before installing wire terminals in the connector, ensure all terminals are properly crimped on wires. After installation of wire terminals in the connectors, ensure they are properly locked by gently pulling on them as if to extract them.

FURUKAWA CONNECTOR

Furukawa Connector Application

Voltage regulator/rectifier.

Terminal Removal

1. Remove the secondary lock (plastic insert).

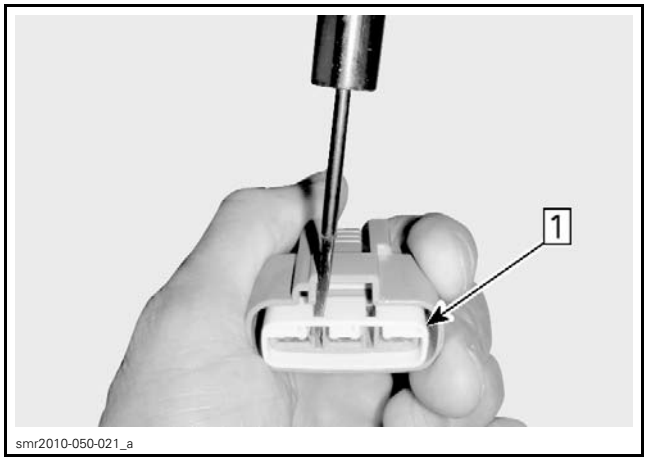

smr2010-050-021_a

Step 1: Remove the secondary lock

2. Carefully insert the GM TERMINAL EXTRACTOR (P/N 12094430) between the lock and the pin to release the pin.



smr2010-052-003

GM TERMINAL EXTRACTOR (P/N 12094430)

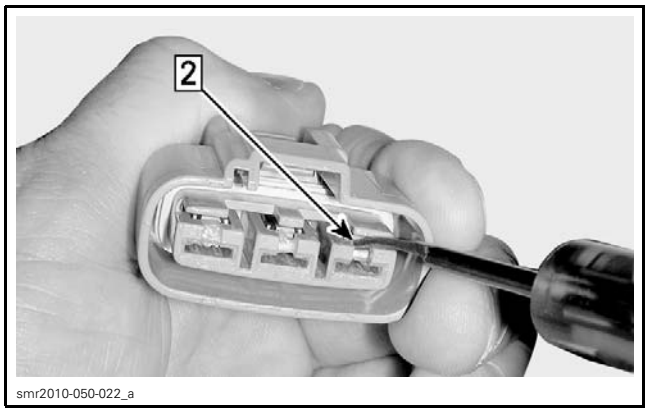

Step 2: Insert GM extractor tool (P/N 12094430)

3. Gently pull on the wire to extract the pin out the back of the connector.

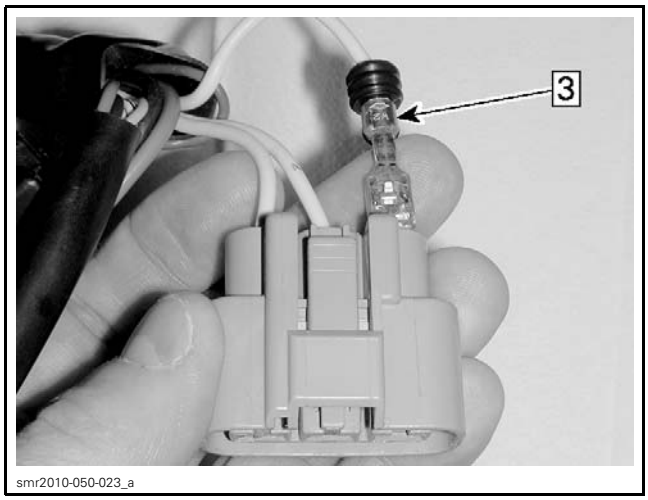

Step 3: Pull wire to extract pin

NOTICE **Before installing terminals in the connectors, ensure all terminals are properly crimped on the wires. After installation of the wire terminals in the connectors, ensure they are properly locked by gently pushing on them as if to extract them.**

BATTERY AND STARTER CABLE TERMINALS

Cable Crimping

Carefully strip the wire approximately to 10 mm (3/8 in) in length, using a wire stripping tool or sharp blade/knife.

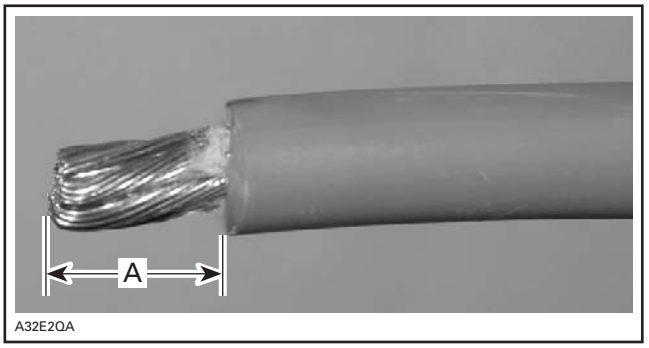

A. 10 mm (3/8 in)

NOTE: Make sure not to cut wire strands while stripping the wire.

Install the appropriate terminal on the wire according to the requirement. Refer to appropriate *PARTS CATALOG*.

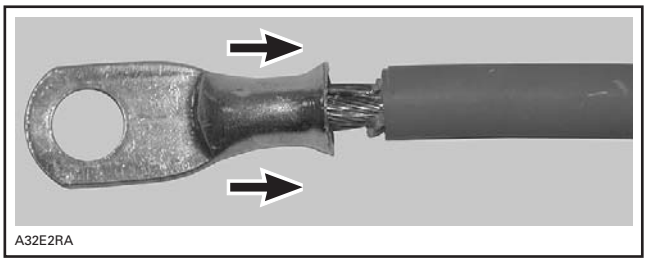

INSTALLATION OF TERMINAL

Follow the instructions provided with the CRIMPING TOOL (HEAVY GAUGE WIRE) (P/N 529 035 730) to select the proper position of the tool.

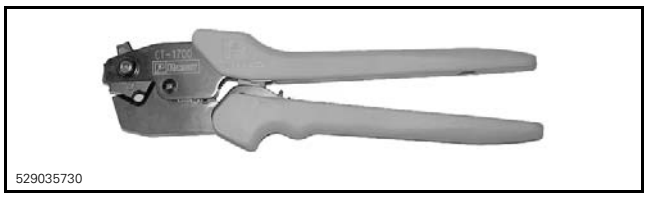

NOTE: Different wires require different crimping pliers settings.

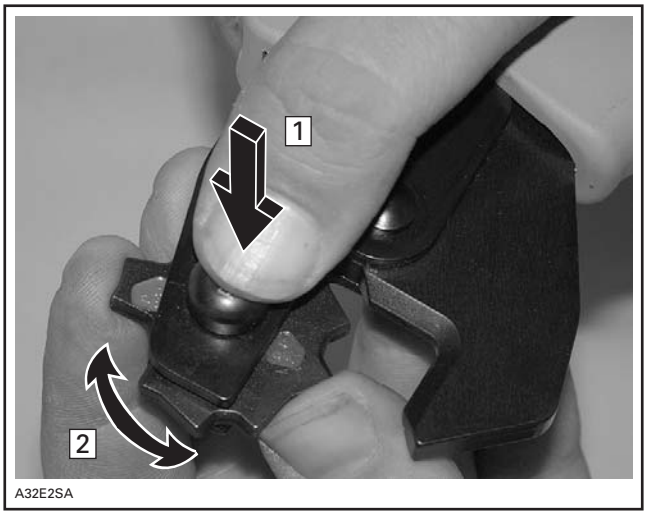

POSITIONING THE CRIMPING PLIERS
Step 1: Press
Step 2: Rotate

After positioning the crimping pliers, crimp the terminal already installed on wire.

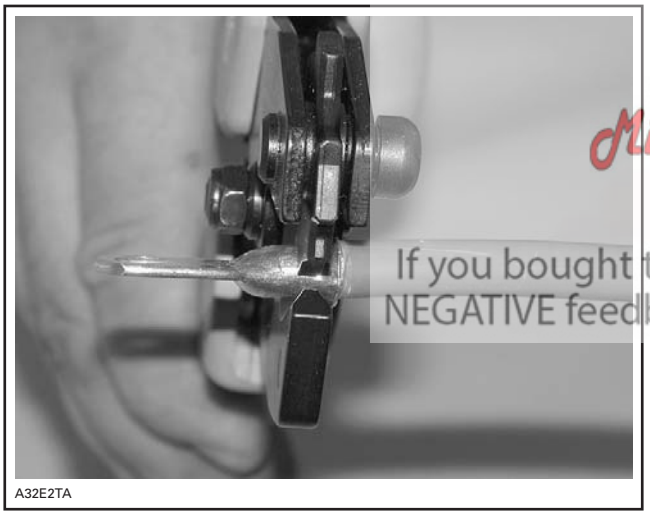

CRIMPING OF WIRE

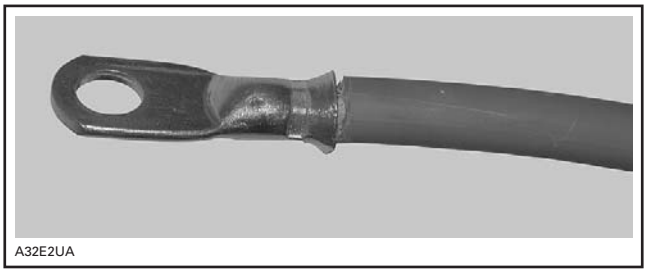

PROPERLY CRIMPED WIRE

To verify, if the wire is properly crimped, apply some pulling force on wire and the terminal at the same time from both directions.

NOTICE Never weld the wire to the terminal. Welding can change the property of the wire and it can become brittle and break.

Install the protective heat shrink rubber tube on the terminal. Heat the heat shrink rubber tube using the heat gun so that it grasps the wire and the terminal.

NOTICE Make sure that the protective heat shrink rubber tube has been properly installed and no part of wire is exposed.

Midwest Manuals
Green Manuals
Paperless Manuals
For a Better Tomorrow
If you bought this manual from any other seller please leave them NEGATIVE feedback and notify me at bestshopmanuals@gmail.com

IGNITION SYSTEM

SERVICE TOOLS

Description	Part Number	Page
ECM ADAPTER TOOL	529 036 166	297
FLUKE 115 MULTIMETER	529 035 868	296

GENERAL

SYSTEM DESCRIPTION

The battery supplies the primary side of ignition coil through the main relay (R2) while the ECM completes the circuit for each cylinder by switching it to the ground at the right moment. The ECM can detect open and short circuit in the primary winding but it does not check the secondary winding.

The EMS controls the ignition system. For more information, refer to *ENGINE MANAGEMENT* section.

Ignition Timing

Ignition timing is not adjustable.

TROUBLESHOOTING

It is good practice to check for fault codes using the B.U.D.S. software as a first troubleshooting step. Refer to *DIAGNOSTIC SYSTEM AND FAULT CODES* subsection.

Always refer to the *WIRING DIAGRAM* when troubleshooting an electrical circuit.

Refer to *POWER DISTRIBUTION* for fuse and relay information.

DIAGNOSTIC GUIDELINES

The following is provided to help in diagnosing the probable cause of a problem. It is a guideline and should not be assumed to list all possible causes.

ENGINE WILL NOT START (ENGINE TURNS OVER)

1. Fouled or defective spark plug
   - *Replace.*
2. Defective CPS
   - *Check operation of CPS and replace if necessary. Refer to ELECTRONIC FUEL INJECTION section.*
3. Defective trigger wheel
   - *Check. Refer to PTO HOUSING/MAGNETO.*
4. Defective ignition circuit
   - *Check fuse 5 of fuse box 1, ignition coil and wiring condition.*
5. Defective fuel pump
   - *Check fuel pump, refer to FUEL SYSTEM.*
6. Defective fuel injectors or circuit
   - *Check fuel injectors, refer to ENGINE MANAGEMENT.*

ENGINE HARD TO START

1. Spark plug faulty, fouled or worn out
   - *Check spark plug condition. Replace if necessary.*
2. Low fuel pressure
   - *Test fuel pressure, refer to FUEL SYSTEM.*

ENGINE MISFIRES, RUNS IRREGULARLY

1. Fouled, defective, worn spark plugs
   - *Check/verify heat range/gap/replace.*
2. Damaged trigger wheel/loose CPS
   - *Check. Refer to PTO HOUSING/MAGNETO.*
3. Defective ignition circuit
   - *Check ignition coil, fuse 5, and wiring condition.*
4. Poor engine grounds
   - *Check/clean/repair.*

ENGINE CONTINUALLY BACKFIRES

1. Fouled, defective spark plugs
   - *Clean/replace.*
2. Damaged trigger wheel/defective or loose CPS
   - *Check, refer to ELECTRONIC FUEL INJECTION.*

PROCEDURES

IGNITION SWITCH

Ignition Switch Quick Test

Turn ignition switch to ON position.

If multifunction gauge turns on (assuming it works), the ignition switch is good.

If multifunction gauge does not turn on, check the following in this order:
- Battery
- Fuses 1 and 2 of fuse box 2
- Fuse 4 and 8 of fuse box 1
- ECM is properly powered (refer to *ENGINE MANAGEMENT*)
- Ignition switch.

Ignition Switch Access

Refer to *BODY* and remove upper console.

Ignition Switch Wire Identification

FUNCTION	PIN	WIRE COLOR
12 Vdc output (lights)	A	YELLOW/BLUE
12 Vdc input	B	BEIGE/WHITE
Ground (through ECM)	C	ORANGE/VIOLET
Ground signal to ECM in OFF position	D	YELLOW/ORANGE
D.E.S.S. signal	E	ORANGE/RED
12 Vdc output (ECM, starter solenoid and start switch)	F	BLACK/YELLOW

IGNITION COIL


vmr2006-018-100

Ignition Coil Access

Refer to *BODY* and remove upper console.

Ignition Coil Installation

Install a new elastic nut and tighten to the specified torque.

IGNITION COIL RETAINING BOLT TIGHTENING TORQUE
8 N•m ± 1 N•m (71 lbf•**in** ± 9 lbf•**in**)

Quick Test with B.U.D.S.

Connect to the latest applicable B.U.D.S. software. Refer to *COMMUNICATION TOOLS AND B.U.D.S.* section.

In B.U.D.S., select the **Activation** tab and the **ECM** tab.

You should hear the spark occurring. In doubt, use an inductive spark tester. If there is no spark, perform the following checks.

NOTE: Keep in mind that even if there is a spark during this static test, voltage requirement is higher to produce a spark in the combustion chamber when engine is running. Ignition coil could be not working in real operation. Replacing ignition coil may be necessary as a test.

NOTE: Ensure spark plug cable is on the appropriate cylinder.

Ignition Coil Input Voltage Test

Disconnect the 3-pin connector from the ignition coil.

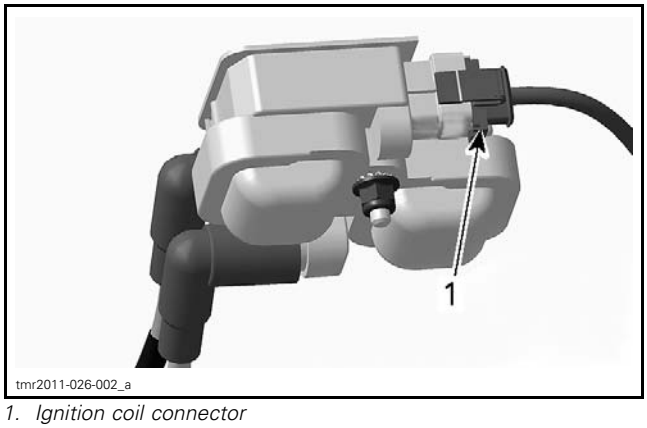

tmr2011-026-002_a

1. Ignition coil connector

Turn ignition switch to ON.

Using a the FLUKE 115 MULTIMETER (P/N 529 035 868), read voltage.



IGNITION COIL CONNECTOR	VOLTAGE
Pin 2 with battery ground	Battery voltage

Battery voltage should be read.

If Battery voltage is NOT read, check continuity of ignition coil supply circuit.

Ignition Coil Ground Circuit Continuity Test

Disconnect the ECM connector "A" and connect it to the ECM ADAPTER TOOL (P/N 529 036 166).



Check wiring continuity as per following table.

COMPONENT	PIN (IGNITION COIL CONNECTOR)	PIN (ECM CONNECTOR)
Cylinder 1 (front)	1	A-M1
Cylinder 2 (rear)	3	A-M2

Ignition Coil Resistance Test

An ignition coil with good resistance measurement can still be faulty. Voltage leak can occur at high voltage level which is not detectable with an ohmmeter. Replacing the ignition coil may be necessary as a test.

Disconnect ignition cables from spark plugs.

Primary Windings

Disconnect ECM "A" connector and connect it to the ECM ADAPTER TOOL (P/N 529 036 166).

Using a multimeter, check resistance in primary windings as follows.

PRIMARY CIRCUIT	ENGINE CONNECTOR (HIC)	ECM CONNECTOR "A"	RESISTANCE @ 20°C (68°F)
Cylinder 1 (front)	Pin E	A-M1	.3 - .6 Ω
Cylinder 2 (rear)		A-M2	

If any resistance is not good, measure resistance directly on coil. If second test is ok, check wiring.

Secondary Windings

Due to the integrated diode, it is not possible to take any resistance measurement of the secondary winding.

SPARK PLUG

For spark plug replacement procedure, refer to *PERIODIC MAINTENANCE PROCEDURE* subsection.

Troubleshooting Fouled Spark Plug

Fouling of the spark plug is indicated by irregular running of the engine, decreased engine speed due to misfiring, reduced performance, and increased fuel consumption. This is due to a loss of compression. Other possible causes are: prolonged idling or low-speed riding, a clogged air filter, incorrect fuel, defective ignition system, incorrect spark plug gap, lubricating oil entering the combustion chamber, or too cold spark plug. The plug face of a fouled spark plug has either a wet black deposit or a black carbon fouling. Such coatings form a conductive connection between the center electrode and ground.

Spark Plug Analysis

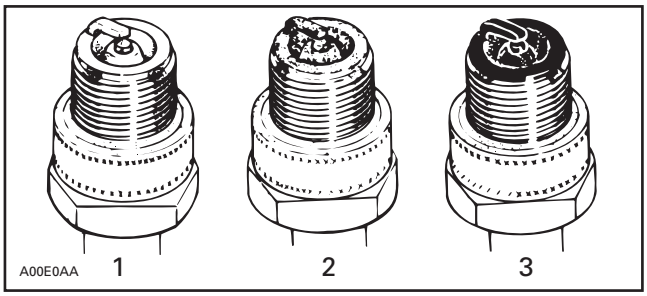

TYPICAL
1. Overheated (light grey, white)
2. Normal (light brown, brown)
3. Fouled (black, wet or dry, dark deposits, grey, melted coating)

The plug face reveals the condition of the engine, operating condition, method of driving and fuel mixture. For this reason it is advisable to inspect the spark plug at regular intervals, examining the plug face (i.e. the part of the plug projecting into the combustion chamber).

CHARGING SYSTEM

SERVICE TOOLS – OTHER SUPPLIER

Description	Part Number	Page
NAPA ULTRA PRO BATTERY LOAD TESTER	95260	3

SERVICE PRODUCTS

Description	Part Number	Page
DIELECTRIC GREASE	293 550 004	4

GENERAL

SYSTEM DESCRIPTION

The purpose of the charging system is to keep the battery at a full state of charge and to provide the electrical system with the required electrical power for normal vehicle operation.

Magneto

The magneto is the primary source of electrical energy. It transforms magnetic field into electric current (AC).

The magneto has a 3 phase series stator.

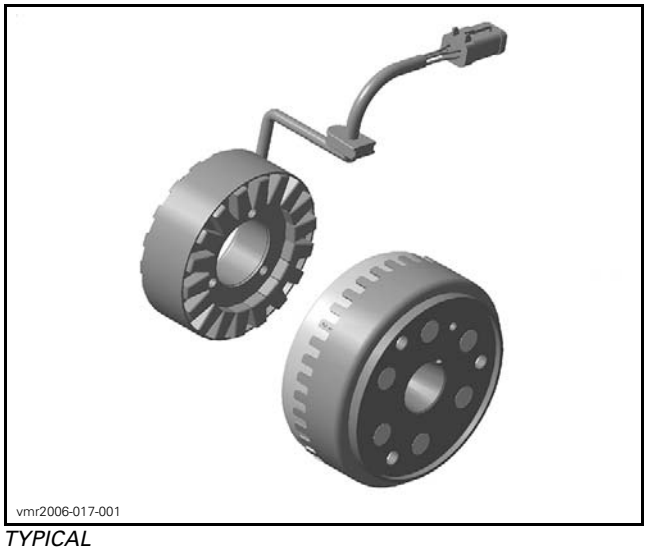

TYPICAL

Voltage Regulator/Rectifier

The rectifier receives AC current from the magneto and transforms it into direct current (DC).

The voltage regulator, included in the same unit, limits voltage to prevent any damage to electrical components.

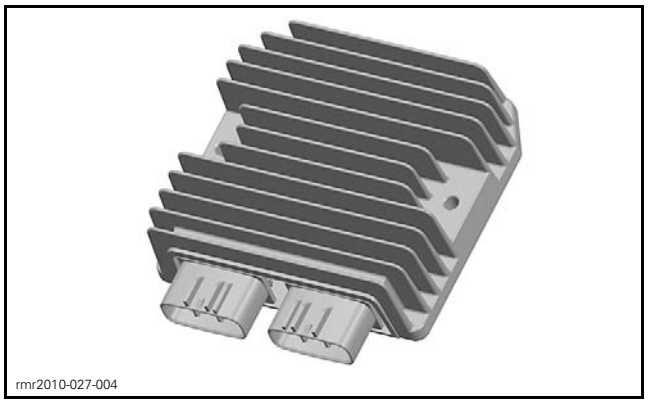

TYPICAL – VOLTAGE REGULATOR/RECTIFIER

Battery

The battery supplies DC power to the electric starter for cranking the engine. During engine starting, it also supplies DC power to the entire electrical system.

At low engine RPM operation and high current load conditions, it supplements the magneto output and helps to maintain a steady system voltage.

INSPECTION

CHARGING SYSTEM OUTPUT

First ensure that battery is in good condition prior to performing the following tests.

Output Voltage Test Using B.U.D.S.

1. Connect to the latest applicable B.U.D.S. software. Refer to *COMMUNICATION TOOLS AND B.U.D.S.* subsection.
2. In B.U.D.S., select the **Monitoring** tab then the **ECM** tab.
3. Start engine.

4. Increase engine RPM as specified in the following table and read voltage in the **ECM Input Voltage** box.

OUTPUT VOLTAGE TEST USING B.U.D.S.	
ENGINE SPEED	VOLTAGE (DC)
4000 RPM	14.8 ± .4 Vdc

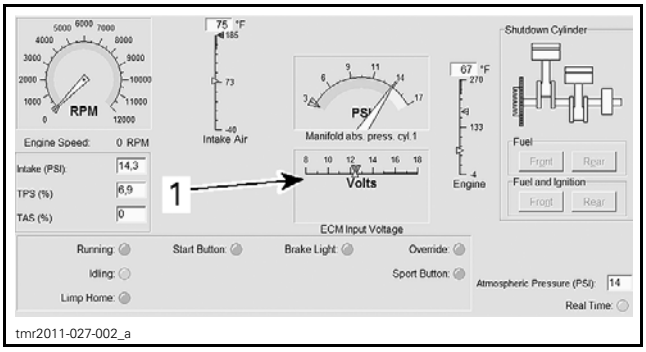

1. ECM Input Voltage box

If voltage is above specification, replace voltage regulator/rectifier.

If voltage is below specification, check stator output and wiring harness prior to concluding that voltage regulator/rectifier is defective. Refer to *MAGNETO SYSTEM* subsection.

Output Voltage Test Using a Multimeter

1. Set multimeter to Vdc.
2. Connect multimeter to battery posts.
3. Start engine.
4. Increase engine RPM as specified in the following table and read voltage with the multimeter.

OUTPUT VOLTAGE TEST USING A MULTIMETER	
TEST ENGINE SPEED	VOLTAGE (DC)
4000 RPM	14.8 ± .4 Vdc

If voltage is above specification, replace voltage regulator/rectifier.

If voltage is below specification, check stator and wiring harness prior to concluding that voltage regulator/rectifier is defective. Refer to *MAGNETO SYSTEM* subsection.

TROUBLESHOOTING

It is good practice to check for fault codes using the B.U.D.S. software as a first troubleshooting step. Refer to *DIAGNOSTIC SYSTEM AND FAULT CODES* subsection.

BATTERY REGULARLY DISCHARGED OR WEAK

1. Loose or corroded battery cables connections.
   - Tighten or repair battery cables connections.
2. Worn or defective battery.
   - Charge and test battery.
3. Defective magneto stator.
   - Test stator.
4. Defective regulator/rectifier.
   - Test system voltage.
5. Damaged magneto rotor or Woodruff key.
   - Replace magneto rotor or Woodruff key.

PROCEDURES

VOLTAGE REGULATOR/ RECTIFIER

Voltage Regulator/Rectifier Static Test

Due to internal circuitry, there is no static test available.

Voltage Regulator/Rectifier Access

2-UP Models

The voltage regulator/rectifier is located on the LH side, underneath dashboard, on the RH side of the battery rack.

MAX Models

The voltage regulator/rectifier is located on the RH side of vehicle, underneath rear passenger seat, on the LH side of the battery rack.

Voltage Regulator/Rectifier Wire Identification

FUNCTION	PIN	COLOR
12 Vdc output	RD1-1	RED
12 Vdc ground	RD1-3	BLACK
12 Vac input	RD2-1	YELLOW
12 Vac input	RD2-2	YELLOW
12 Vac input	RD2-3	YELLOW

BATTERY

Battery Location

2-UP Models

The battery is located on the LH side, underneath dashboard.

MAX Models

The battery is located on the RH side of vehicle, underneath rear passenger seat.

Battery Information

These vehicles are equipped with a VRLA battery (Valve Regulated Lead Acid). **It is a maintenance-free type battery.**

Refer to battery manufacturer's instructions for proper filling, activation and routine charging procedures.

Battery Voltage Test (No Load Applied)

NOTE: A voltage test is carried out on a battery without discharging current. It is the simplest and most commonly used. However, be aware that the voltage test can be good, while the battery does not have enough power to crank the engine. A load test gives a more accurate condition of the battery.

A voltage reading provides an instant indication of the state of charge of the battery, not of it's current output capacity. A load test gives a more accurate indication of the battery's condition.

If the battery has just received a charge, allow it to rest for 1 - 2 hours before taking a voltage reading.

Set multimeter to Vdc and connect to battery terminals. Always respect polarity.

FULLY CHARGED BATTERY VOLTAGE
12.6 Vdc minimum

NOTE: A battery that shows a voltage of 12.0 Vdc is considered completely discharged and need to be recharged.

Battery Load Test

This is the best test to indicate a battery condition. Use a load testing device such as the NAPA ULTRA PRO BATTERY LOAD TESTER (P/N 95260). It has a 500 Amp adjustable load.

Apply a load of 3 times the ampere-hour rating of the battery. At 14 seconds into the test, check battery voltage.

TIME TO MEASURE INTO TEST	VOLTAGE
14 seconds	Min. 10.5 Vdc @ 20°C (68°F)

Battery Removal

MAX Models

1. Remove RH side rear passenger seat.
2. Remove battery cover.

All Models

3. Disconnect BLACK (-) cable first, then the RED (+) cable.

NOTICE **Always respect this order for removal; disconnect BLACK (-) cable first.**

4. Remove battery strap retaining nut.

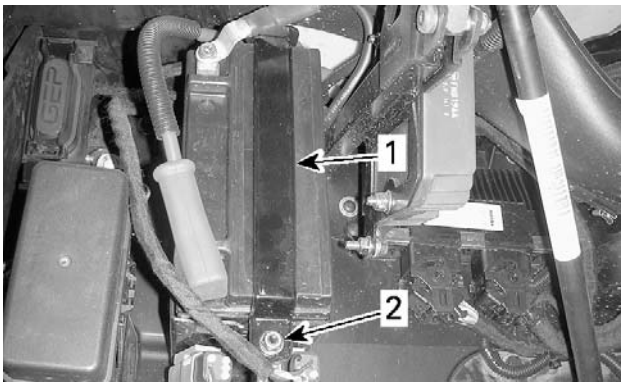

tmr2011-027-003_a

2-UP MODELS
1. Battery strap
2. Battery strap retaining nut

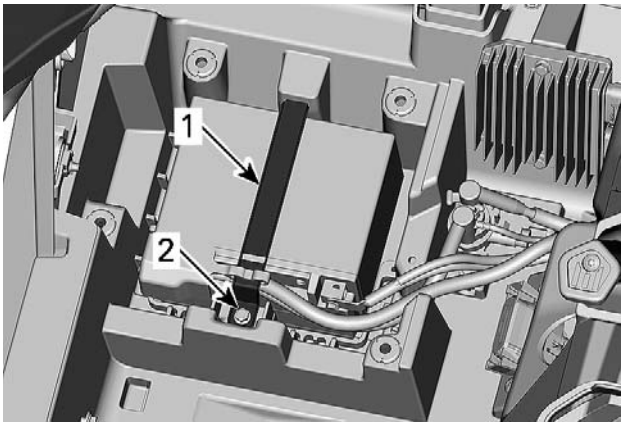

tmr2014-314-001_a

MAX MODELS
1. Battery strap
2. Battery strap retaining nut

5. Unhook the top of battery strap.
6. Remove battery.

Battery Cleaning

Clean the battery rack, cables and battery posts using a solution of baking soda and water.

Remove corrosion (if so) from battery cable terminals and battery posts using a firm wire brush. Rinse with clear water and dry well.

Battery Storage

If the battery is in storage or used infrequently, disconnect the battery cables to eliminate drain from electrical equipment.

For extended storage, remove the battery from vehicle.

Clean battery terminals and cable connections using a wire brush. Apply a light coat of DIELECTRIC GREASE (P/N 293 550 004) on terminals.

Clean battery casing using a solution of baking soda and water. Rinse battery with clear water and dry well using a clean cloth.

Regularly charge battery as per manufacturer's recommendations.

For other recommendations during storage, refer to battery manufacturer's instructions.

⚠ WARNING

Ensure to store battery in a safe place, out of reach for children.

Battery Installation

NOTICE **Always connect RED (+) cable first then BLACK (-) cable.**

Installation is the reverse of removal procedure, however pay attention to the following:

– For 2-UP models, install the battery with the positive post down.
– For MAX models, install the battery with the positive post towards RH side and front of vehicle
– Tighten battery strap retaining nut to the specified torque.

BATTERY STRAP RETAINING NUT TIGHTENING TORQUE
3.4 N•m ± 0.3 N•m (30 lbf•**in** ± 3 lbf•**in**)

STARTING SYSTEM

SERVICE TOOLS

Description	Part Number	Page
ECM ADAPTER TOOL	529 036 166	304
FLUKE 115 MULTIMETER	529 035 868	305

SERVICE PRODUCTS

Description	Part Number	Page
DIELECTRIC GREASE	293 550 004	307

GENERAL

SYSTEM DESCRIPTION

The starting system is composed of an electric starter supplied in current by the battery through a solenoid.

The starter solenoid receives a 12 volt input from the ignition switch and the ground signal is provided by the ECM when the following engine cranking conditions are met.

– Ignition switch ON.
– Transmission in Park or Neutral position and/or brake pedal held.
– Start button held.

NOTE: If the ignition switch is left ON for more than 15 minutes, engine will not start unless ignition switch is turned OFF, then ON again.

TROUBLESHOOTING

It is good practice to check for fault codes using the B.U.D.S. software as a first troubleshooting step. Refer to *DIAGNOSTIC SYSTEM AND FAULT CODES* subsection.

NOTE: Clear any fault code after solving a problem.

Always refer to the *WIRING DIAGRAM* when troubleshooting an electrical circuit.

Refer to *POWER DISTRIBUTION* for fuse and relay information.

Check all connections, cables and wires. Tighten any loose connections. Replace any chafed or corroded wires/cables.

DIAGNOSTIC GUIDELINES

FUSE 8 INFUSE BOX 1 BURNS WHILE ATTEMPTING TO CRANK ENGINE

1. Defective D2 Diode
   - *Test diode, see procedure in this subsection.*
2. Defective starter solenoid
   - *Test starter solenoid, see procedure in this subsection.*
3. Wiring short to ground
   - *Check wiring.*

ENGINE DOES NOT CRANK AND GAUGE DOES NOT TURN ON

1. Burnt main fuse (F1) in fuse box 2
   - *Check fuse.*
2. Burnt fuse F8 in fuse box 1
   - *Check fuse.*
3. Defective or discharged battery
   - *Test battery, refer to CHARGING SYSTEM.*
4. Defective ignition switch or circuit
   - *Check ignition switch, refer to IGNITION SYSTEM.*

ENGINE DOES NOT CRANK BUT GAUGE TURNS ON

1. Defective brake switch
   - *Check brake switch, refer to BRAKES section.*
2. Defective gearbox position sensor (GPBS)
   - *Check GPBS, refer to GEARBOX AND 4X4 COUPLING UNIT subsection.*
3. Defective start button or circuit
   - *Test start button, see procedure in this subsection.*

4. Defective starter solenoid or circuit
   - *Test starter solenoid, see procedure in this subsection.*
5. Defective starter motor
   - *Check starter motor, see procedure in this subsection.*

PROCEDURES

D2 DIODE (STARTER SOLENOID)

Diode Location

The diode is located in the main harness, near starter solenoid.

Diode Test

1. Make sure ignition switch is OFF.
2. Disconnect pins SS1 and SS2 from starter solenoid.
3. Disconnect ECM connector B.
4. Connect ECM ADAPTER TOOL (P/N 529 036 166) to the ECM connector B.



5. Set multimeter to "diode check".

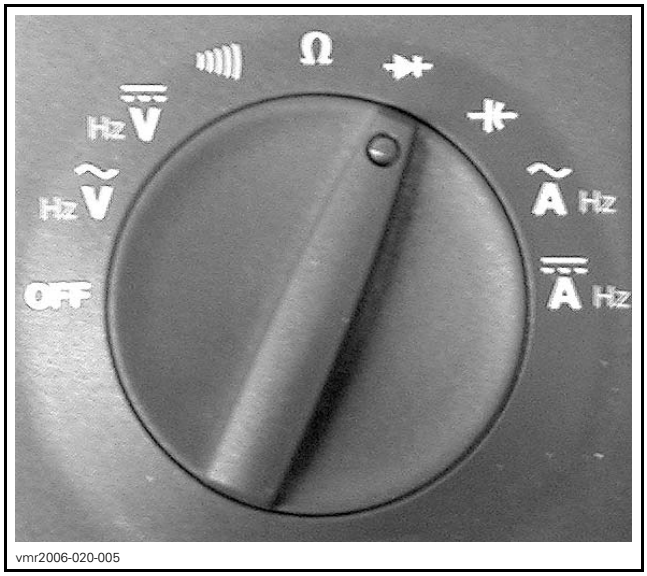

6. Test diode as per following table.

D2 DIODE TEST		
MULTIMETER POSITIVE PROBE	MULTIMETER NEGATIVE PROBE	RESULT
ECM-B pin A2	ECM-B pin L4	Overload (open)
ECM-B pin L4	ECM-B pin A2	Approximately 0.5 volts

If diode fail any test, replace it.

START BUTTON

Start Button Access

Remove upper console.

Start Button Wire Identification

FUNCTION	PIN	COLOR
12 volt input from ignition switch	1	BLACK/YELLOW
12 volt output to ECM-B pin D1	2	YELLOW/RED

Start Button Test with B.U.D.S.

Connect to the latest applicable B.U.D.S. software. Refer to *COMMUNICATION TOOLS AND B.U.D.S.* section.

In B.U.D.S., select the **Monitoring** and **ECM** tabs.

Press the vehicle's start button and look at the **Start Button** LED.

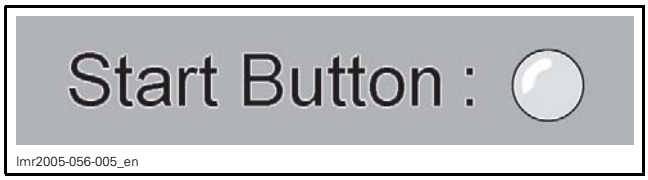

It should turn on, indicating the start signal reaches the ECM.

If it does not turn on, check the start button and wiring.

Start Button Resistance Test

Disconnect start button connector.

Using the FLUKE 115 MULTIMETER (P/N 529 035 868), measure resistance as per the following table.

POSITION	START BUTTON CONNECTOR PIN		RESISTANCE
Switch released	1	2	Infinite (OL)
Switch depressed and held			0.6 Ω max.

Replace start button if defective.

STARTER SOLENOID

Starter Solenoid Access

The starter solenoid is located on the LH side, underneath dashboard, on top of battery rack.

To access starter solenoid, remove the CVT vent inlet tube.

Starter Solenoid Wire Identification

FUNCTION	PIN	WIRE COLOR
12 volt input from ignition switch	SS1	BLACK/ YELLOW
Ground from ECM-B pin L4	SS2	ORANGE/ BROWN

Starter Solenoid Operational Test

1. Disconnect both terminals (SS1 and SS2) from the starter solenoid.
2. Connect SS1 to the positive battery terminal.
3. Momentarily connect SS2 to the chassis ground.

If starter runs, carry out the *STARTER SOLENOID INPUT VOLTAGE TEST*.

If starter does not run, carry out the *STARTER SOLENOID WINDING RESISTANCE TEST*.

Starter Solenoid Input Voltage Test

1. Disconnect connector with BLACK/YELLOW wire.
2. Turn ignition switch ON.
3. Measure voltage as per following table.

STARTER SOLENOID INPUT VOLTAGE TEST		
TEST PROBES		RESULT (START BUTTON RELEASED)
BLACK/ YELLOW wire	Battery ground	Battery voltage

Starter Solenoid Ground Signal Test

1. Disconnect SS2 (ORANGE/BROWN) from solenoid.
2. Turn ignition switch ON.
3. Measure voltage as per following table.

STARTER SOLENOID GROUND SIGNAL TEST		
TEST PROBES		RESULT (START BUTTON DEPRESSED)
ORANGE/ BROWN wire	Battery positive post	Battery voltage

Starter Solenoid Winding Resistance Test

Disconnect terminals from solenoid.

With a multimeter, check primary winding resistance as follows.

STARTER SOLENOID WINDING RESISTANCE TEST		
TEST PROBES		RESULT @ 20°C (68°F)
Starter solenoid SS1 pin	Starter solenoid SS2 pin	Approximately 5 Ω

If measurement is out of specification, replace solenoid.

Starter Solenoid Voltage Drop Test

Turn ignition key ON.

Measure voltage as per following table while cranking engine in **drowned mode** (to prevent engine starting).

NOTE: For drowned mode, refer to *ENGINE MANAGEMENT* subsection.

STARTER SOLENOID VOLTAGE DROP TEST		
TEST PROBES		RESULT (WHILE CRANKING)
Post coming from battery	Post going to starter	0.2 Vdc max.

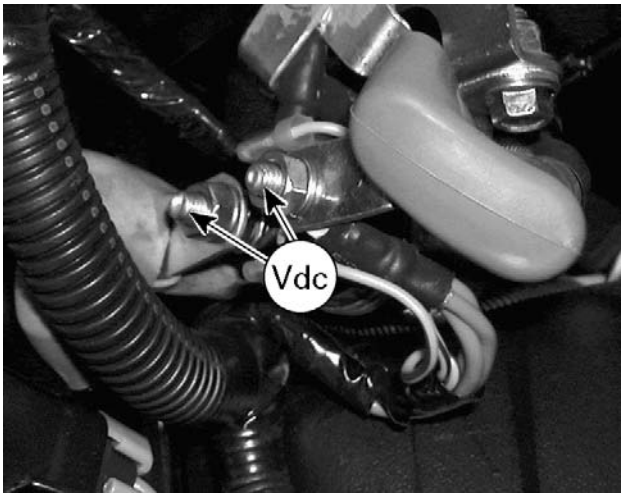

vmr2006-019-009_a

If voltage is out of specification, replace solenoid.

ELECTRIC STARTER

Starter Access

To access starter electrical terminal, refer to *BODY* and remove LH seat and LH lateral console panel.

1000 Models

To access starter for removal, remove drive pulley, driven pulley and CVT back cover, refer to *CONTINUOUSLY VARIABLE TRANSMISSION (CVT)* subsection.

Starter Operation Test

Using booster cables, carefully supply current from a 12 volt battery directly to the starter. Connect the BLACK (-) cable first. Then connect the remaining jumper cable from the battery then to the starter.

If starter turns, test other starting system components.

Starter Removal

Turn OFF ignition switch.

Disconnect BLACK (-) cable from battery.

⚠ WARNING

Always disconnect BLACK (-) cable first and reconnect last.

Disconnect RED (+) cable from starter.

Clean starter area.

Remove starter retaining screw.

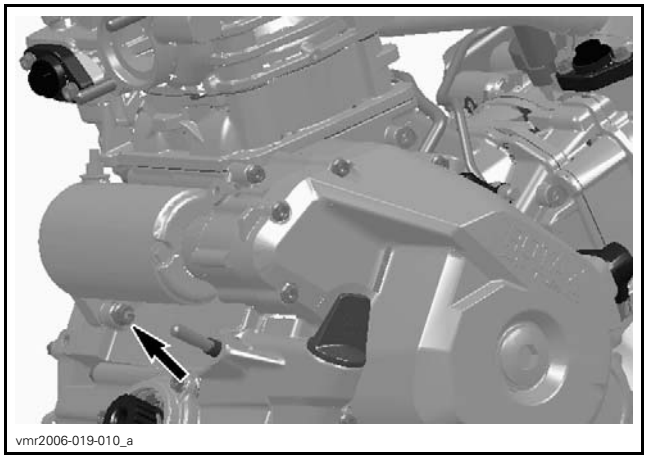
vmr2006-019-010_a

TYPICAL - SOME PARTS REMOVED FOR CLARITY PURPOSE ONLY

Carefully pry starter out of the engine crankcase.

Starter Installation

Installation is the reverse of removal procedure. However, pay particular attention to the following.

Make sure that starter and engine mating surfaces are free of debris. Serious problem may arise if the starter is not properly aligned.

Bring starter close to its location. Rotate it so that its mounting ear allows installation in engine crankcase.

Push starter in place and align mounting ear to install screw. Tighten to the specified torque.

STARTER MOUNTING SCREW TIGHTENING TORQUE	
Starter mounting screw	25 N•m (18 lbf•ft)

Connect the RED (+) cable to the starter and tighten nut and apply specified product.

⚠ CAUTION When connecting the RED (+) cable to the starter motor, make sure the battery cables are disconnected.

STARTER CABLE NUT	
TIGHTENING TORQUE	PRODUCT
6 N•m (53 lbf•**in**)	DIELECTRIC GREASE (P/N 293 550 004)

First connect RED (+) cable to battery then connect the BLACK (-) cable.

Connect battery cables.

⚠ WARNING

Always connect RED (+) cable first then BLACK (-) cable last.

Test starter operation.

DIGITALLY ENCODED SECURITY SYSTEM (D.E.S.S.)

GENERAL

SYSTEM DESCRIPTION

The ignition key contains a ROM chip with a unique digital code that is the equivalent of a unique teeth pattern on a conventional key.

When the ignition key is turned ON, the ECM reads the ignition key and, if it is not recognized, no engine starting will be possible.

NOTE: When a key is not recognized by the ECM, INVALID KEY will be displayed in the multifunction speedometer.

NOTE: All ignition keys have the same teeth pattern. Therefore, they can be used and turned in the switch of any D.E.S.S.-equipped vehicle. However, unless the D.E.S.S. system recognizes (in the ECM) a valid programmed key, the engine starting will not be allowed.

NOTE: Actually, it is the memory of the ECM that is programmed to recognize the digital code of the ignition key.

Up to 10 ignition keys may be programmed in the memory of the ECM. They can also be erased individually or all at once.

Note that the D.E.S.S. circuitry is already activated on all new ECM.

TROUBLESHOOTING

DIAGNOSTIC TIPS

NOTE: It is a good practice to check for fault codes using B.U.D.S. software as a first troubleshooting step.

If D.E.S.S. key is not recognized by the ECM, key is defective or there is a wiring problem, CHECK ENGINE light will turn on and a message will be displayed in the multifunction speedometer.

PROCEDURES

KEY PROGRAMMING

Use the appropriate B.U.D.S. software version available from BOSSWeb. Refer to *COMMUNICATION TOOLS AND B.U.D.S. SOFTWARE* subsection for proper connection instructions.

The B.U.D.S. software is designed to allow, among other things, the programming of ignition key(s) and entering customer information.

For more information pertaining to the use of the software B.U.D.S., use its help which contains detailed information on its functions.

⚠ WARNING

If the computer you are using is connected to the 110 Vac power outlet, there is a potential risk of electrocution when working in contact with water. Be careful not to touch water while working with the VCK.

1. Turn ignition switch to ON using any of the key provided with the vehicle. DO NOT start the engine.
2. Start B.U.D.S. and logon.
3. Wait during detection setup.
4. Ensure the status bar shows the Kw2000 protocol and the appropriate number of modules to its right according to the vehicle model.

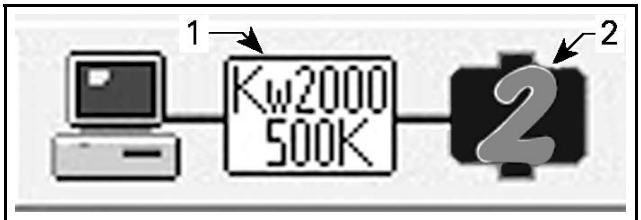

TYPICAL - SUCCESSFUL CONNECTION
1. Connection protocol
2. Number of modules

5. Click the **Read Data** button.

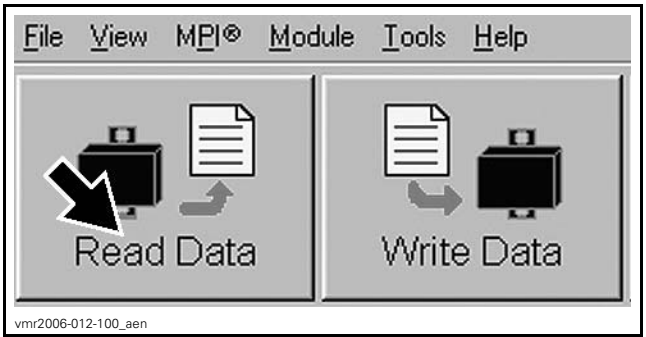

6. Click on **Keys** tab.

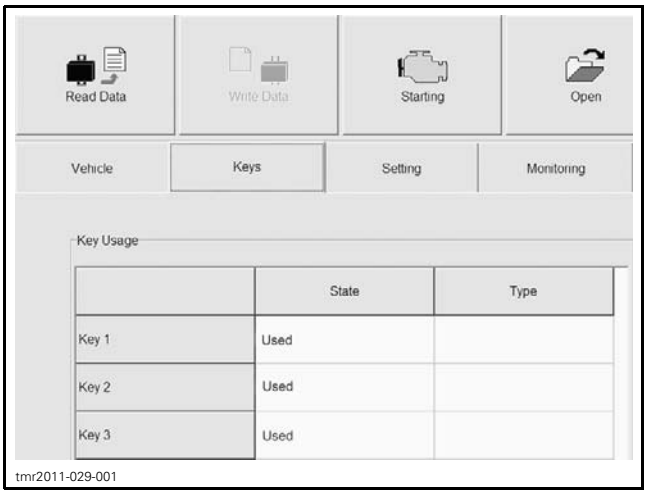

KEYS TAB

7. Click on **Erase All Keys** button.

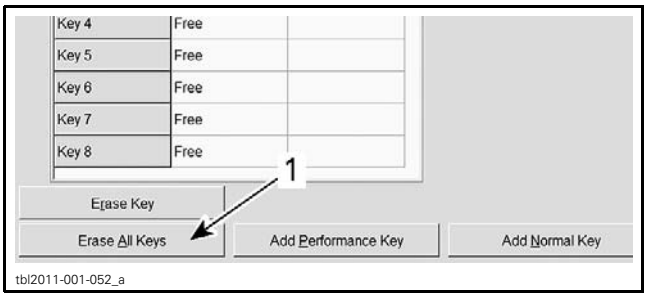

1. Click here to erase all keys

8. Click "YES" to confirm the action.
9. Confirm key color in ignition switch.
10. Program the key by selecting the right type according to chart.

KEY	KEY TYPE
BLACK key	Performance key
GRAY key	Normal key

NOTE: The work key (ORANGE key) is optional.

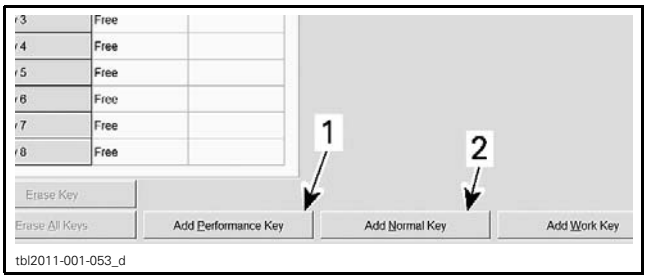

1. Add Performance Key button
2. Add Normal Key button

11. Turn ignition switch to OFF. Remove the key.
12. Install the other key.
13. Turn ignition key to ON position.
14. Program the other key by selecting the right type according to above chart.
15. Repeat previous steps to program other keys.
16. Click on **Write Data** button to transfer new settings and information to the ECM.

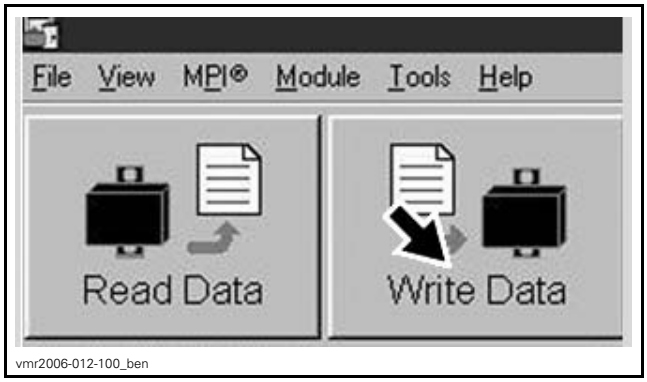

WRITE DATA BUTTON

17. Click on EXIT button to end session.
18. Disconnect all cables and hardware from vehicle.
19. Ensure to reinstall the connector into its housing.

LIGHTS

SERVICE PRODUCTS

Description	Part Number	Page
DIELECTRIC GREASE	293 550 004	1

GENERAL

NOTICE It is recommended to always disconnect the battery when replacing any electric or electronic parts. Always disconnect battery exactly in the specified order, BLACK (-) cable first.

TROUBLESHOOTING

DIAGNOSTIC TIPS

NOTE: It is a good practice to check for fault codes using B.U.D.S. software as a first troubleshooting step. Refer to *COMMUNICATION TOOLS AND B.U.D.S.* subsection.

IMPORTANT: When troubleshooting an electrical system fault, check battery condition, cables and connections first.

Testing a Circuit

Check the related-circuit fuse condition with a fuse tester or test lamp (a visual inspection could lead to a wrong conclusion).

NOTE: If the ignition switch is left ON for more than 30 minutes, the accessory relay will shut down.

Inspecting an Electrical Connection

When replacing an electric or electronic component, always check electrical connections. Make sure they are tight, make good contact, and are corrosion-free. Dirty, loose or corroded contacts are poor conductors and are often the source of a system or component malfunction.

Pay particular attention to ensure that pins are not bent or pushed out of their connectors.

Ensure all wire terminals are properly crimped on wires, and connector housings are properly fastened.

Check for signs of moisture, corrosion or dullness. Clean pins properly and coat them with DIELECTRIC GREASE (P/N 293 550 004) or other appropriate lubricant when reassembling them, except if otherwise specified such as for the ECM connectors.

Pay attention to ground wires.

PROCEDURES

CONSOLE SWITCHES

Switches Access

Refer to *BODY* and remove upper and lower consoles.

Removing and Installing the Switches

Disconnect electrical connector.

Release retaining clips, then push switch out of the console.



tmr2011-030-012_a

1. Retaining clips

For installation, reverse removal procedure.

Switches Illumination Wire Identification

FUNCTION	PIN	COLOR
12 volt input from fuse F7	See note	RD/BK

NOTE: The illumination circuit of all console switches is supplied by the RD/BK wire (except hazard switch if equipped) but the pin location differ from one to another.

Switches Illumination Circuit Protection

CONDITION	CIRCUIT PROTECTION
Supplied with accessories relay activated	Fuse 7 of fuse block 1 (from accessories relay R3)

HEADLIGHTS

Headlight Wire Identification

HEADLIGHTS RELAY (R4)		
FUNCTION	PIN	COLOR
12 volt input from fuse F11 (headlights power)	7D	YL/BK
12 volt input from ignition switch pin A (relay winding input)	6D	YL/BU
12 volt output to headlights low beam and low/high beam switch	6C	GN
Relay winding ground (from ECM-B G1)	7C	OR/BK

HEADLIGHT LOW/HIGH BEAM SWITCH (EXCEPT EUROPE)		
FUNCTION	PIN	COLOR
12 volt input from headlights relay	2	GN
12 volt output to high beam headlights	3	BU

HEADLIGHT LOW/HIGH BEAM SWITCH (EUROPE - IN MULTIFUNCTION SWITCH)		
FUNCTION	PIN	COLOR
12 volt input from headlights relay	MGC-4	GN
12 volt output to high beam headlights (HI position)	MGC-5	BU
12 volt output to high beam headlights (PASS position)	MGC-2	BU

Headlights Circuit Protection

CONDITION	CIRCUIT PROTECTION
Supplied at all times	Fuse 11 of fuse block 1 (from fuse 2 of fuse block 2)

Testing the Headlight

Disconnect headlight connector. Refer to *BULB REPLACEMENT*.

Using a multimeter, measure the voltage on headlight connector as follows.

SWITCH POSITION	WIRE COLOR		VOLTAGE
LO beam/ HI beam	GN (Low beam bulb)	BK	Battery voltage
HI beam	BU (Hi beam bulb)	BK	

Replacing a Headlight Bulb

NOTICE **Never touch glass portion of an halogen bulb with bare fingers, it shortens its operating life. If glass is touched, clean it with isopropyl alcohol which will not leave a film on the bulb.**

NOTE: The same bulb type is used for LO and HI beams on both sides of vehicle.

Unplug connector from bulb.

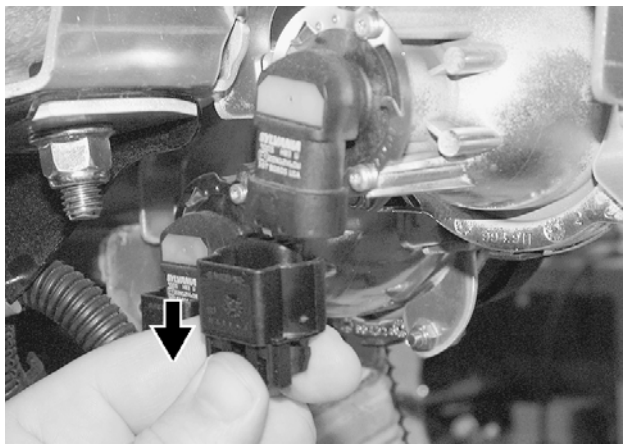

vmr2007-050-006_a

Rotate bulb.

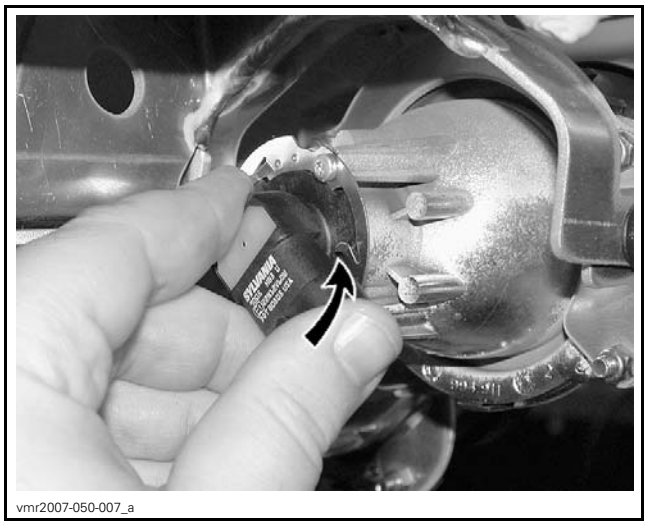
vmr2007-050-007_a

Pull bulb out.

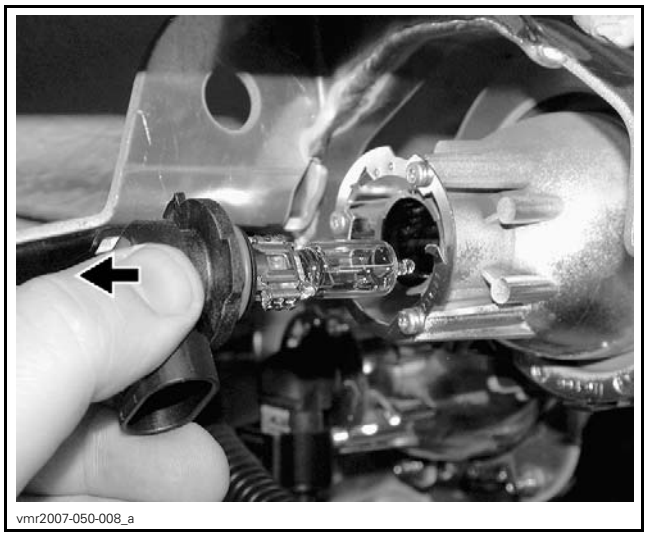
vmr2007-050-008_a

Properly reinstall removed parts in the reverse order of their removal.

Validate headlight operation.

Headlamp Beam Aiming

Select high beam.

Beam aiming is correct when center of high beam is 130 mm (5 in) below the headlight horizontal center line, scribed on a test surface, 5 m (16 ft) away.

NOTE: Load vehicle as per normal use.

Measure headlight center distance from the ground. Scribe a line at this height on test surface (wall or screen). Light beam center should be 130 mm (5 in) below scribed line.

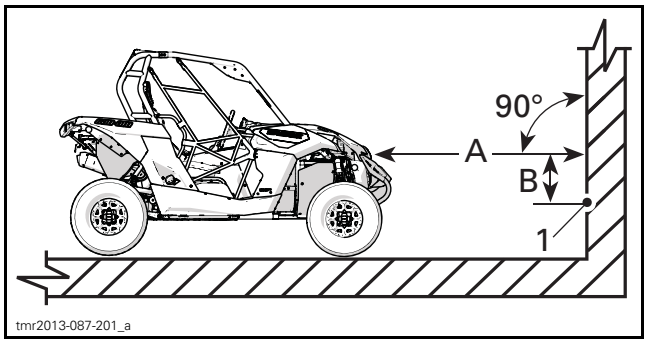

tmr2013-087-201_a

1. Light beam center

A. 5 m (17 ft)
B. 131 mm (5 in)

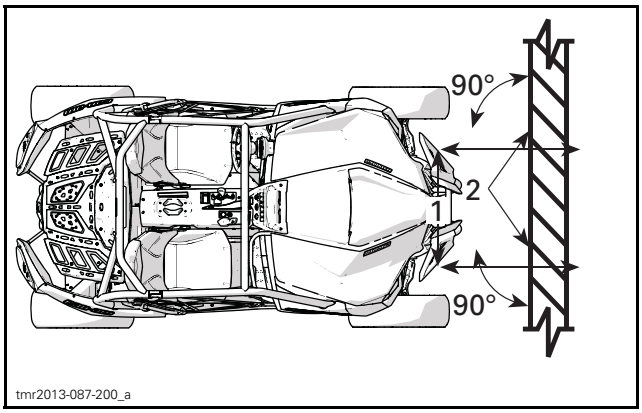

tmr2013-087-200_a

1. Headlight center lines
2. Light beam center

Adjusting Beam Aiming

Turn adjustment screws to adjust beam height and side orientation as described below. Adjust both headlight evenly.

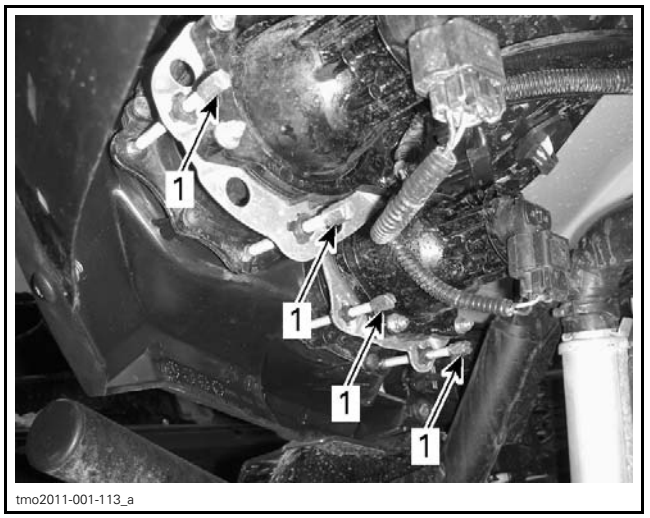

tmo2011-001-113_a

1. Adjustment screws

TAILLIGHTS/BRAKE LIGHTS

Taillight/Brake Light Wire Identification

BRAKE LIGHT RELAY (R8)		
FUNCTION	PIN	COLOR
12 volt input from fuse F4 (LH brake light power)	12B	OR/GN
12 volt input from brake light switch (relay winding input)	11B	RD/OR
12 volt output to LH brake light	11A	WH/OR
Relay winding ground (to ground terminal BK2)	12A	BK

BRAKE LIGHT SWITCH		
FUNCTION	PIN	COLOR
12 volt input from fuse F4	2	OR/GN
12 volt output to RH brake light and R8 relay winding	1	RD/OR

Taillight/Brake Light Circuit Protection

CONDITION	CIRCUIT PROTECTION
Supplied with main relay activated	Fuse 4 of fuse block 1 (from main relay R2)

Replacing a Taillight/Brake Light Bulb (Commander Models)

Open the upper tail gate.

Remove both taillight retaining screws.

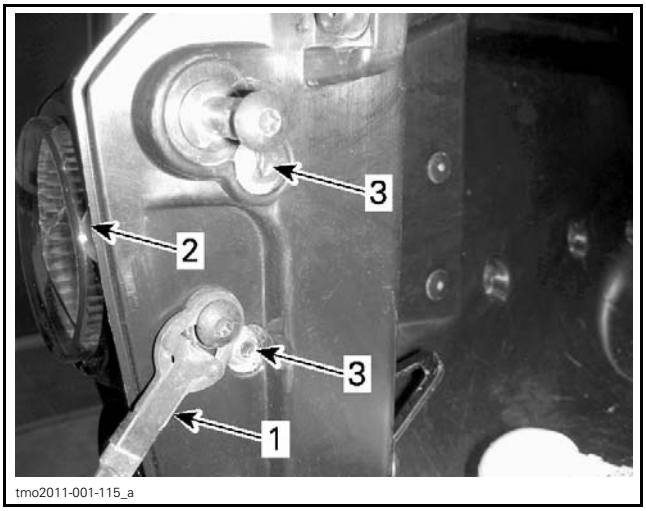

tmo2011-001-115_a

1. Tail gate cable
2. Taillight
3. Retaining screws

Pull taillight out of its location.

Remove bulb socket from taillight.

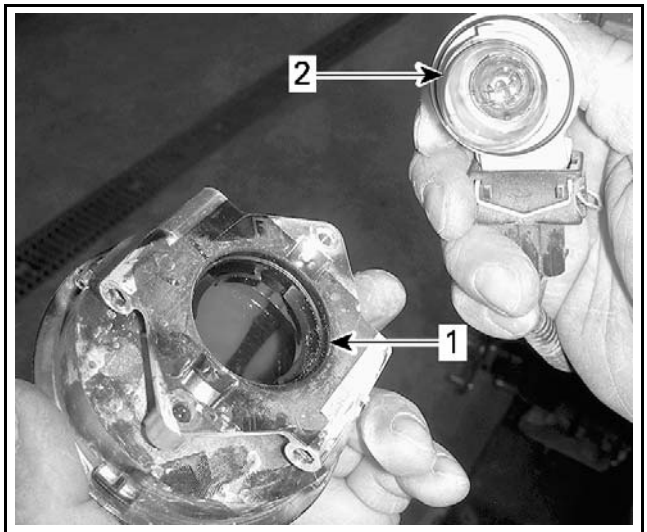

tmo2011-001-116_a

1. Taillight
2. Light bulb and socket

Push the bulb in and hold while turning counterclockwise to release.

Installation is the reverse of the removal procedure.

Replacing a Taillight/Brake Light Bulb (Maverick Models)

Disconnect connector.

Push the bulb in and turn counterclockwise to remove socket and bulb.

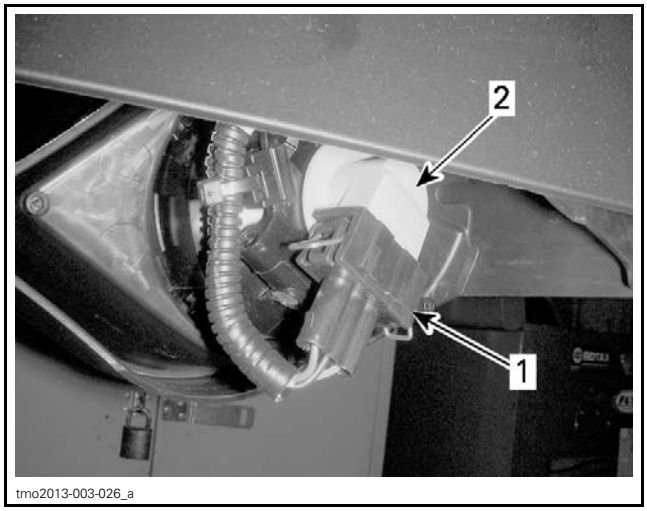

tmo2013-003-026_a

TYPICAL
1. Connector
2. Socket and bulb

Pull tail light out of its location.

Remove bulb socket from taillight.

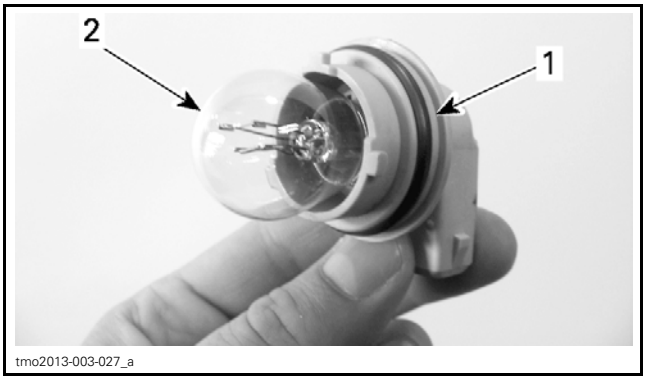

1. Socket
2. Bulb

Installation is the reverse of the removal procedure.

TURN SIGNALS/HAZARD (EUROPEAN MODELS ONLY)

Turn Signal Wire Identification

FLASHER MODULE		
FUNCTION	PIN	COLOR
12 volt input from fuse F10	MC2-1	RD/WH
12 volt input from fuse F4	MC1-5	OR/GN
RH turn 12 volt input from turn signal switch	MC1-1	BE/OR
LH turn 12 volt input from turn signal switch	MC1-2	BE/GY
Output to RH turn signal lights	MC2-2	BR
Output to LH turn signal lights	MC2-3	GY
Output to multifunction gauge (turn signal indicator)	MC2-4	OR
Ground	MC1-4	BK
Hazard 12 volt input from hazard switch	MC1-6	GN/OR

TURN SIGNAL SWITCH (IN MULTIFUNCTION SWITCH)		
FUNCTION	PIN	COLOR
12 volt input from fuse F4	MGB-3	OR/GN
RH turn 12 volt output to flasher module	MGB-4	BE/OR
LH turn 12 volt output to flasher module	MGB-2	BE/GY

HAZARD SWITCH		
FUNCTION	PIN	COLOR
12 volt input from fuse F10	2	RD/WH
12 volt output to flasher module	3	GN/OR
Hazard indicator 12 volt input from fuse F4	8	GN/OR
Hazard indicator ground (through bulbs)	7	BK/OR

Turn Signal/Hazard Circuit Protection

CONDITION	CIRCUIT PROTECTION
Supplied with main relay (R2) activated	Fuse 4 of fuse block 1 (from main relay R2)
Supplied at all times	Fuse 10 of fuse block 1 (from fuse 2 of fuse box 2)

GAUGE

SERVICE PRODUCTS

Description	Part Number	Page
DIELECTRIC GREASE	293 550 004	1

GENERAL

NOTICE It is recommended to always disconnect the battery when replacing any electric or electronic parts. Always disconnect battery exactly in the specified order, BLACK (-) cable first.

TROUBLESHOOTING

DIAGNOSTIC TIPS

NOTE: It is a good practice to check for fault codes using the appropriate diagnostic software as a first troubleshooting step. Refer to *COMMUNICATION TOOLS AND B.U.D.S.* subsection.

IMPORTANT: When troubleshooting an electrical system fault, check battery condition, cables and connections first.

Testing a Circuit

Check the related-circuit fuse condition with a fuse tester or test lamp (a visual inspection could lead to a wrong conclusion).

NOTE: If the ignition switch is left ON for more than 30 minutes, the accessory relay will shut down.

Inspecting an Electrical Connection

When replacing an electric or electronic component, always check electrical connections. Make sure they are tight, make good contact, and are corrosion-free. Dirty, loose or corroded contacts are poor conductors and are often the source of a system or component malfunction.

Pay particular attention to ensure that pins are not bent or pushed out of their connectors.

Ensure all wire terminals are properly crimped on wires, and connector housings are properly fastened.

Check for signs of moisture, corrosion or dullness. Clean pins properly and coat them with DIELECTRIC GREASE (P/N 293 550 004) or other appropriate lubricant when reassembling them, except if otherwise specified such as for the ECM connectors.

Pay attention to ground wires.

PROCEDURES

MULTIFUNCTION GAUGE

Wiring Identification

FUNCTION	PIN	COLOR
12 volt input from fuse F4	17	OR/GN
12 volt input from fuse F8	16	BE/WH
Ground	20	BK
CAN LO	18	WH/BK
CAN HI	19	WH/BE
Fuel level gauge supply	4	BR/PK
Fuel level gauge ground	21	VI/PK
2WD/4WD switch signal (-)	7	BK/BE
HI beam signal (+)	5	BU

Circuit Protection

CONDITION	CIRCUIT PROTECTION
Supplied at all times	Fuse 8 of fusible link 1
Supplied with main relay activated	Fuse 4 of fusible link 1 (through main relay R2)

Removing the Gauge

1. Remove gauge cover.
2. Disconnect gauge connector.
3. Release retaining clips at the top of gauge.

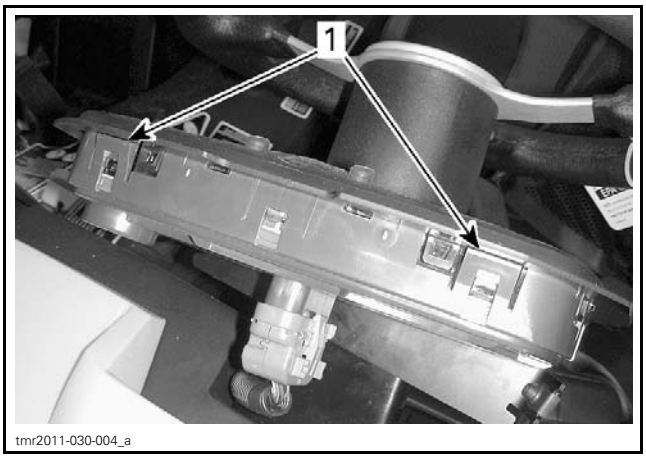

1. Retaining clips

4. Tilt top of gauge rearward, then pull it up to remove it from its support.

Installing the Gauge

The installation is the reverse of the removal procedure. However, pay attention to the following.

Align gauge support top in the gauge cover slots on each side.

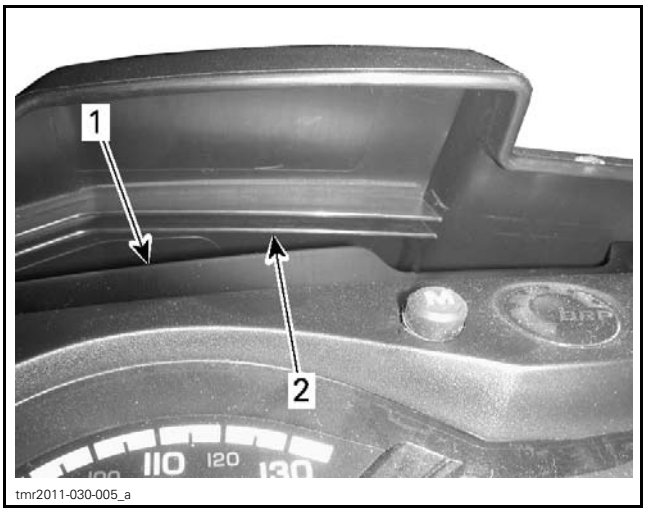

1. Gauge support top
2. Gauge cover slot

"Maintenance Required" Message

Resetting the Maintenance Required Message Manually

1. Select PARK.
2. Turn ignition switch to ON. Do NOT start engine.

NOTE: The steps 3 through 9 must be completed within **5 seconds**.

3. Press override button and HOLD.
4. Press and release brake pedal.
5. Release override button.
6. Press and release brake pedal.
7. Press override button and HOLD.
8. Press and release brake pedal.
9. Release override button.
10. Turn ignition switch to OFF.

NOTE: Do not turn ignition switch to ON before the multifunction gauge turns off.

Resetting the "Maintenance Required" Message Using the Diagnostic Software

Connect to the applicable diagnostic software. Refer to *COMMUNICATION TOOLS AND B.U.D.S.* subsection.

Select:
– **Summary** page.
– **Vehicle** button.

Click on the **Reset Service** button.

Multifunction Gauge Set-Up Using the Diagnostic Software

Connect to the applicable diagnostic software. Refer to *COMMUNICATION TOOLS AND B.U.D.S.* subsection.

Changing Language and Units of Measurement

Select:
– **Settings** page.
– **Vehicle** or **Cluster** button.
– **Configuration** tab.

Select the parameter to be changed.

Changing Tire Size

Select:
– **Settings** page.
– **Vehicle** or **ECM** button.
– **Configuration** tab.

Select **Change Tire Size**.

New Multifunction Gauge Registration (coding)

Whenever multifunction gauge is replaced, it is required to use the diagnostic software to register it in the ECM.

IMPORTANT: If a multifunction gauge from another vehicle is installed and is not registered in ECM through the diagnostic software, **engine starting will not be allowed until gauge is registered with proper coding**.

Select:
– Summary page.
– Vehicle or Cluster button.
– Health tab.

Click on "Handle Security Coding Mismatch".

Click "Yes".

Multifunction Gauge Test Using the Diagnostic Software

Connect to the applicable diagnostic software. Refer to *COMMUNICATION TOOLS AND B.U.D.S.* subsection.

Wow Test

This function is used to check if the indicator lights, display and analog indicators (if applicable) are functional.

NOTE: This function does not test the signals or external circuits.

Select:
– Functions page.
– Cluster button.
– Routines tab.

Select Execute Cluster WOW Test.

Monitoring Measurement Values

Select:
– Measurements page.
– Cluster button.
– Preset or Custom tab.

In Preset tab, select desired preset values (for example: Cluster Basic).

In Custom tab, a large list of measurements is displayed. It is possible to choose several values by clicking "Please Select".

ACCESSORIES

SERVICE PRODUCTS

Description	Part Number	Page
DIELECTRIC GREASE	293 550 004	1

GENERAL

NOTICE It is recommended to always disconnect the battery when replacing any electric or electronic parts. Always disconnect battery exactly in the specified order, BLACK (-) cable first.

TROUBLESHOOTING

DIAGNOSTIC TIPS

IMPORTANT: When troubleshooting an electrical system fault, check battery condition, cables and connections first.

Circuit Testing

Check the related-circuit fuse condition with a fuse tester or test lamp (a visual inspection could lead to a wrong conclusion).

NOTE: If the ignition switch is left ON for more than 30 minutes, the accessory relay will shut down.

Electrical Connection Inspection

When replacing an electric or electronic component, always check electrical connections. Make sure they are tight, make good contact, and are corrosion-free. Dirty, loose or corroded contacts are poor conductors and are often the source of a system or component malfunction.

Pay particular attention to ensure that pins are not bent or pushed out of their connectors.

Ensure all wire terminals are properly crimped on wires, and connector housings are properly fastened.

Check for signs of moisture, corrosion or dullness. Clean pins properly and coat them with DIELECTRIC GREASE (P/N 293 550 004) or other appropriate lubricant when reassembling them, except if otherwise specified such as for the ECM connectors.

Pay attention to ground wires.

PROCEDURES

CONSOLE SWITCHES

Switches Access

Refer to *BODY* and remove upper and lower consoles.

Removing and Installing the Switches

Disconnect electrical connector.

Release retaining clips, then push switch out of the console.

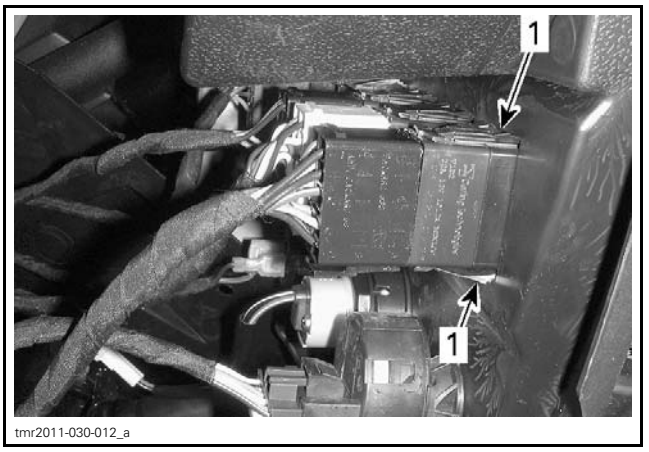

tmr2011-030-012_a

1. Retaining clips

For installation, reverse removal procedure.

12 VOLT POWER OUTLET

Removing and Installing the 12 Volt Power Outlet

Refer to *BODY* and remove upper console.

Unplug the connectors of the power outlet.

Unscrew the retaining nut.

Reverse procedure for installation.

12 Volt Power Outlet Wire Identification

FUNCTION	PIN	COLOR
12 volt input from fuse F12	2	RD/BR
Ground (to ground terminal BK3)	1	BK

12 Volt Power Outlet Circuit Protection

CONDITION	CIRCUIT PROTECTION
Supplied with accessories relay activated	Fuse 12 of fuse block 1 (from accessories relay R3)

WINCH

Winch Wire Identification

WINCH RELAY		
FUNCTION	PIN	COLOR
12 volt input from battery (winch power)	BP4 (Stud - red mark)	RD
Ground (Wire)	SW4 (Stud - black mark)	BK
Ground (Cable)	BN4 (Stud - black mark or mounting screw)	BK
12 volt input from switch ("IN")	SW1 (Terminal - green dot)	GN/BU
12 volt input from switch ("OUT")	SW2 (Terminal - blue dot)	LT BU
Motor power (switches polarity depending on rotation direction)	SW3 (Stud - blue mark)	RD (with blue sleeve)
Motor power (switches polarity depending on rotation direction)	SW5 (Stud - yellow mark)	RD (with Yellow sleeve)

NOTE: The small black wire at terminal SW4 is connected to the diodes used to prevent electric arcs in the switch. It can also be connected to BN4.

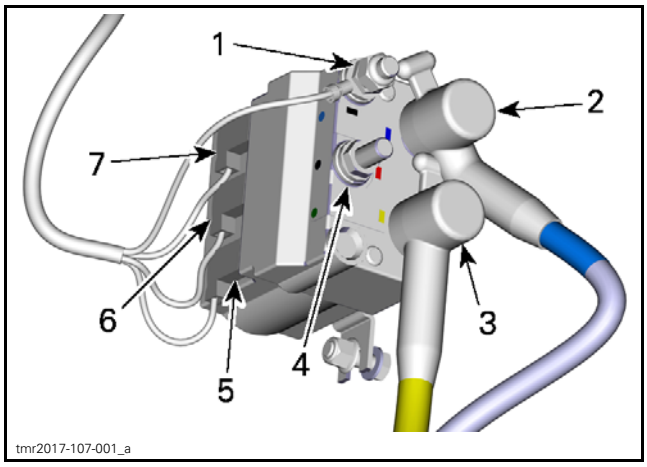

1. To Battery ground (black mark)
2. Winch motor cable with BLUE sleeve (blue mark)
3. Winch motor cable with YELLOW sleeve (yellow mark)
4. To RED positive battery cable (red mark)
5. GN/BU wire (green dot)
6. BLACK wire (black dot)
7. LT BU wire (blue dot)

WINCH SWITCH		
FUNCTION	PIN	COLOR
12 volt input from fuse 7	2	RD/BK
12 volt output to relay winding ("IN")	1	GN/BU
12 volt output to relay winding ("OUT")	3	LT BU

⚠ WARNING

Before testing, make sure the winch is in FREESPOOL mode (Freespool clutch disengaged).

Winch Switch Circuit Protection

CONDITION	CIRCUIT PROTECTION
Supplied with accessories relay activated	Fuse 7 of fuse block 1 (from accessories relay R3)

Removing the Winch

1. Disconnect, the battery BLACK (-) cable first, then the RED (+) cable.

⚠ WARNING

Always respect this order for disassembly; disconnect BLACK (-) cable first. Electrolyte or fuel vapors can be present in engine compartment and a spark may ignite them and possibly cause personal injuries.

2. Remove the hook.
   2.1 Remove and discard the cotter pin.

2.2 Remove the hook pin.

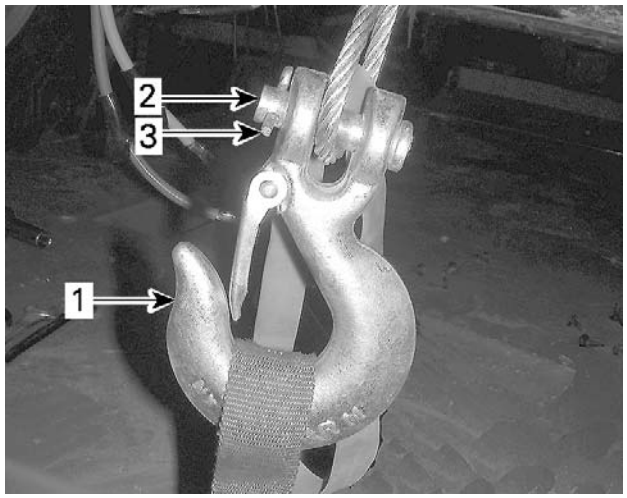

tsi2011-004-009_a

1. Hook
2. Hook pin
3. Cotter pin

3. Remove the four retaining screws from underneath the winch motor.
4. Disconnect both winch power cables.

NOTE: Note the position of the power cables for reinstallation.

5. Protect radiator using strong cardboard.
6. Pass the cable through the roller fairlead.
7. Remove winch.

NOTICE **Be careful not to lean on the radiator while removing winch.**

Installing the Winch

For the installation, reverse the removal procedure, however pay attention to the following.

Connect winch power cables as noted at removal.

TIGHTENING TORQUE	
WINCH RETAINING SCREWS	24.5 N•m ± 3.5 N•m (18 lbf•ft ± 3 lbf•ft)
WINCH POWER CABLES	7 N•m ± .5 N•m (62 lbf•**in** ± 4 lbf•**in**)

Install a NEW cotter pin on the hook pin.

HORN (EUROPEAN MODELS ONLY)

Horn Wire Identification

HORN SWITCH (IN MULTIFUNCTION SWITCH)		
FUNCTION	PIN	COLOR
12 volt input from fuse F10	MGB-1	OR/GN
12 volt output to horn	MGB-6	BE/BU

HORN		
FUNCTION	PIN	COLOR
12 volt input from horn switch	2	BE/BU
Ground	1	BK

Horn Circuit Protection

CONDITION	CIRCUIT PROTECTION
Supplied with main relay (R2) activated	Fuse 4 of fuse block 1 (from main relay R2)

FRONT DRIVE

SERVICE TOOLS

Description	Part Number	Page
BACKLASH MEASUREMENT TOOL	529 035 665	10
CV BOOT CLAMP PLIER	529 036 120	6
CV JOINT EXTRACTOR	529 036 005	6
SPANNER SOCKET	529 035 649	12

SERVICE PRODUCTS

Description	Part Number	Page
LOCTITE 277	293 800 073	14
LOCTITE 648 (GREEN)	413 711 400	7
XPS SYNTHETIC GREASE	293 550 010	6–7, 14

2-UP MODELS - FRONT DRIVE SHAFTS AND FRONT PROPELLER SHAFT

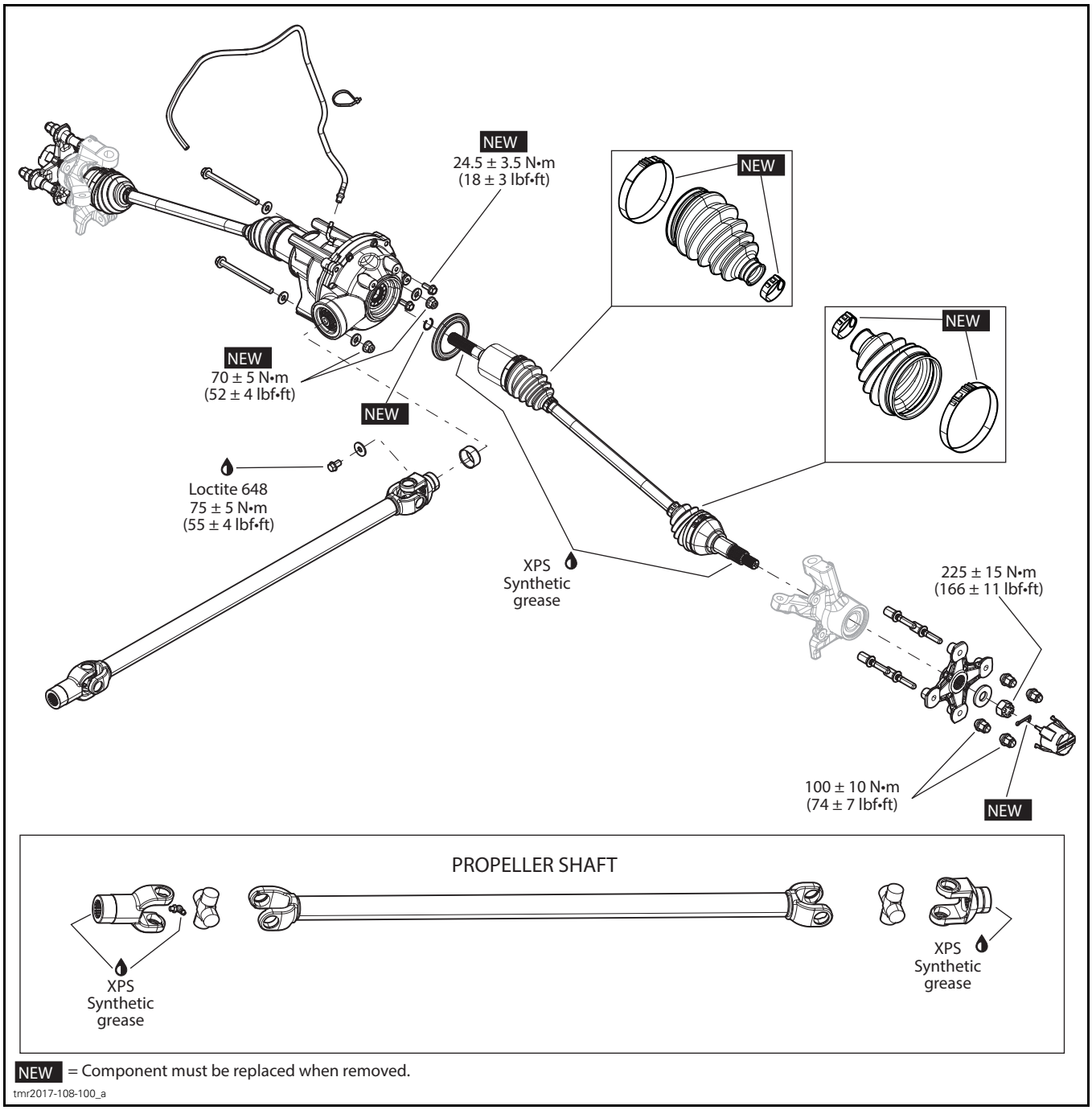

NEW = Component must be replaced when removed.

tmr2017-108-100_a

MAX MODELS - FRONT DRIVE SHAFTS AND FRONT PROPELLER SHAFT

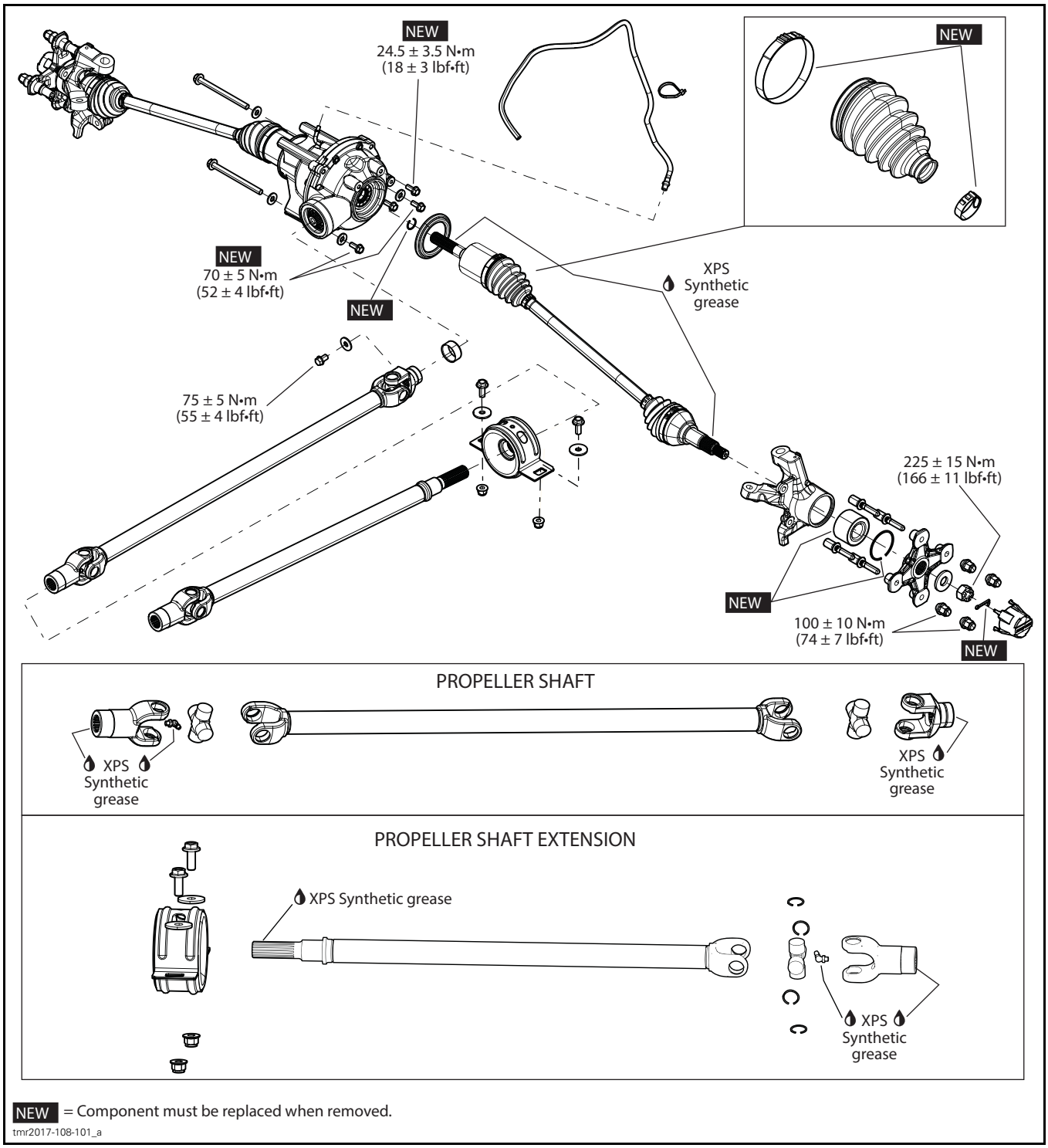

NEW = Component must be replaced when removed.

tmr2017-108-101_a

FRONT DIFFERENTIAL

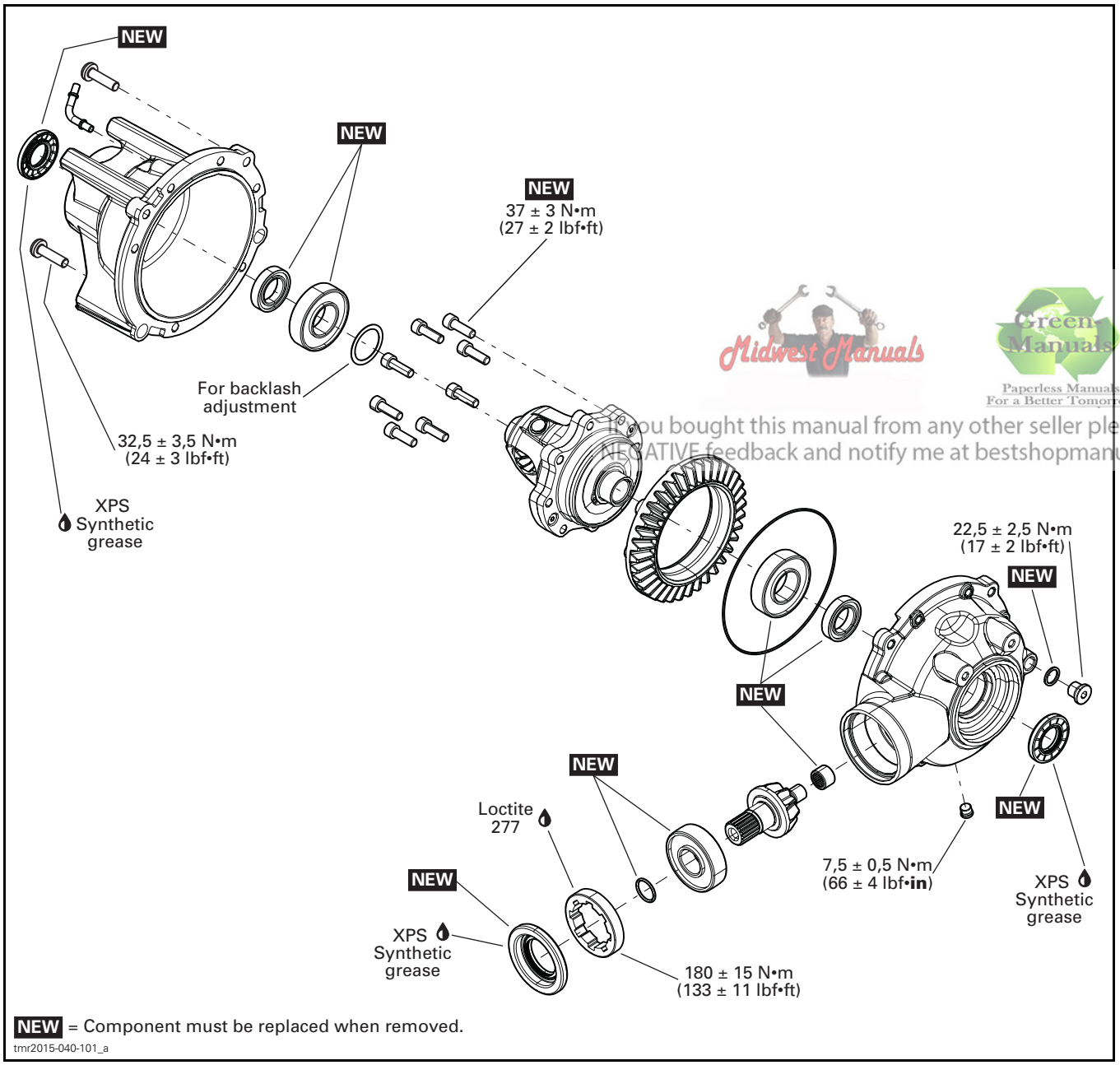

NEW = Component must be replaced when removed.

tmr2015-040-101_a

Midwest Manuals
Green Manuals
Paperless Manuals
For a Better Tomorrow
If you bought this manual from any other seller please leave them
NEGATIVE feedback and notify me at bestshopmanuals@gmail.com

GENERAL

The procedure explained below is the same for the RH and LH sides unless otherwise instructed.

SYSTEM DESCRIPTION

When one wheel is spinning above a certain rate faster than the other wheel, the Visco-Lok® system progressively locks the wheels through its multi-plate clutch.

In the event of a failure, the entire Visco-Lok pump and its carrier will have to be replaced. The Visco-Lok pump itself is a non-serviceable item.

NOTE: If the pump was disassembled, its viscous fluid would be lost and it could not be replaced.

PROCEDURES

WHEEL HUB

Removing the Wheel Hub

Lift and support vehicle. Refer to *INTRODUCTION* section for proper procedure.

Select the 4WD position and place the transmission lever on "P".

Remove caliper from knuckle. Refer to *BRAKES* subsection.

Remove the following parts:
- Wheel
- Cotter pin
- Castellated nut
- Belleville washer.

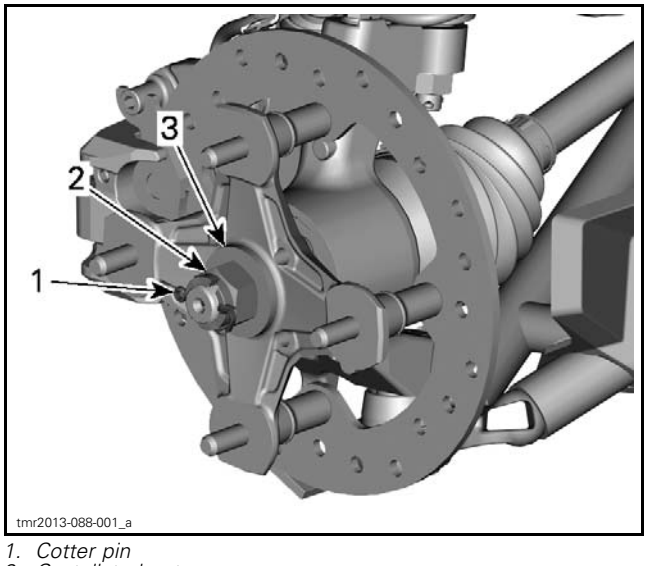

1. Cotter pin
2. Castellated nut
3. Belleville washer

Remove wheel hub.

Inspecting the Wheel Hub

Check wheel hub for cracks or other damages.

Check inner splines for wear or other damages.

If any damage is detected on wheel hub, replace it with a new one.

Installing the Wheel Hub

The installation is the reverse of removal procedure. However, pay attention to the following.

Install Belleville washer with its domed side outwards.

TIGHTENING TORQUE	
Castellated nut	225 N•m ± 15 N•m (166 lbf•ft ± 11 lbf•ft)

NOTE: Tighten castellated nut further if required to align grooves with drive shaft hole.

Install a NEW cotter pin, bend as shown.

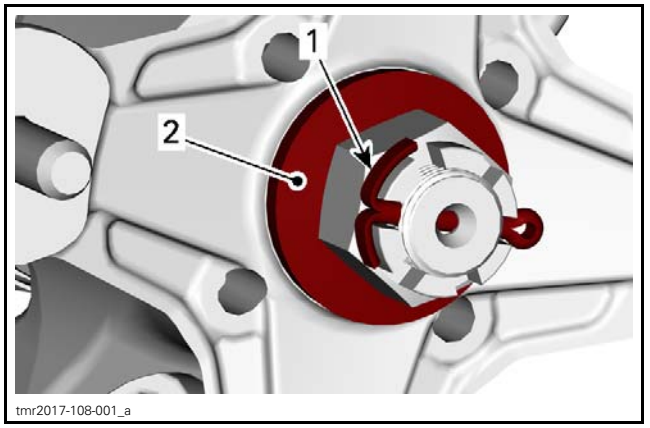

1. Cotter pin correctly bent
2. Domed (convex) side here

FRONT DRIVE SHAFT

Removing the Front Drive Shaft

Lift and support vehicle. Refer to *INTRODUCTION* section for proper procedure.

Remove the wheel hub, see procedure in this subsection.

Remove the knuckle. Refer to *STEERING SYSTEM* subsection.

Strongly pull drive shaft out of differential.

Discard the stop ring at the end of the shaft.

Inspecting the Front Drive Shaft

Inspect the condition of boots. If there is any damage or evidence of leaking lubricant, replace them. Refer to *DRIVE SHAFT BOOT*.

Check splines for excessive wear. Replace if necessary.

NOTE: If the splines on plunging joint are worn, a check of differential inner splines should be done.

Installing the Front Drive Shaft

The installation is the reverse of the removal procedure. However, pay attention to the following.

Install a NEW stop ring.

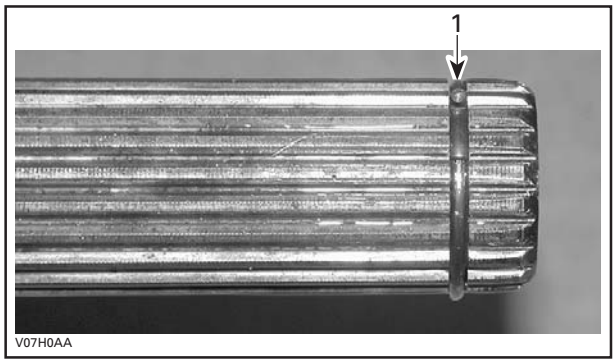

1. Stop ring

Apply XPS SYNTHETIC GREASE (P/N 293 550 010) to the splines.

Reinstall all removed parts.

DRIVE SHAFT BOOT

Removing the Drive Shaft Boot

Remove the drive shaft from the vehicle.

Remove drive shaft boot clamps using the following tools:

TOOL	
CV BOOT CLAMP PLIER (P/N 529 036 120)	

Dislodge the large boot end.

Separate the joint from the shaft. Two procedures can be done.

Without the Special Tool

Clamp joint housing in a vise.

Align shaft with joint.

Pull hard on shaft to remove from joint.

Remove boot from drive shaft.

Remove and discard the circlip. A new one is included in the boot kit.

With the Special Tool

Place drive shaft in vice with the joint downward.

Install the CV JOINT EXTRACTOR (P/N 529 036 005) on bearing.

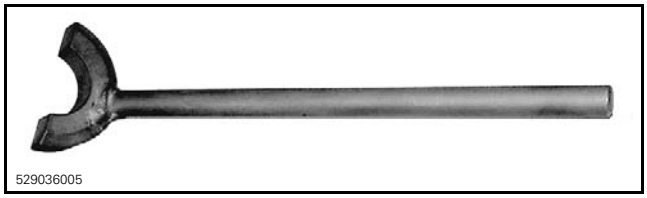

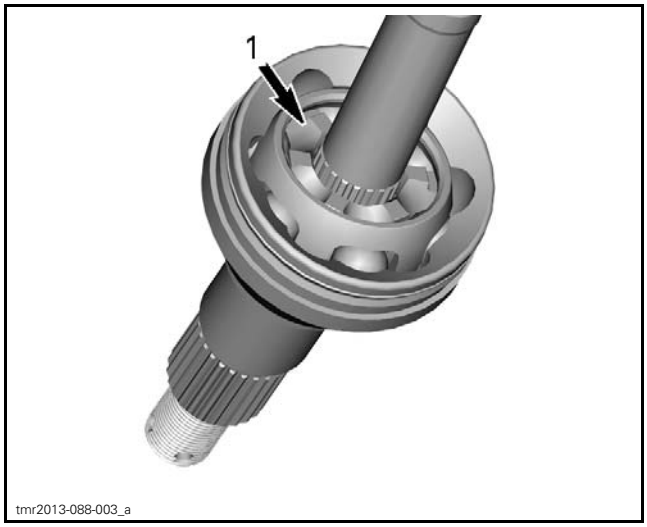

TYPICAL - CV JOINT SHOWN
1. Position joint extractor tool here

With a hammer, hit on the tool to separate joint from shaft.

When joint and shaft are separated, remove boot from drive shaft.

Remove and discard the circlip. A new one is included in the boot kit.

Installing the Drive Shaft Boot

The installation is the reverse of the removal procedure. However, pay attention to the following.

Install the NEW circlip.

Pack bearing area with grease (included with the new boot kit).

NOTE: Do not use or add other grease.

2UP MODELS - FRONT PROPELLER SHAFT

Removing the Front Propeller Shaft

Remove the RH lateral console panel.

Remove propeller shaft screw on differential.

NOTE: Heat screw to break the threadlocker bond prior to removal.

Remove lower and upper differential bolts.

Move the differential forwards.

Dislodge the propeller shaft from the engine and differential.

Remove front propeller shaft.

Inspecting the Front Propeller Shaft

Inspect if propeller shaft is not bent or twisted.

Check propeller shaft splines for wear or damage.

Installing the Front Propeller Shaft

The nstallation is the reverse of the removal procedure. However, pay attention to the following.

Apply XPS SYNTHETIC GREASE (P/N 293 550 010) to splines on engine side.

TIGHTENING TORQUE	
Propeller shaft screw (differential side)	75 N•m ± 15 N•m (55 lbf•ft ± 11 lbf•ft) + LOCTITE 648 (GREEN) (P/N 413 711 400)

MAX MODELS - FRONT PROPELLER SHAFT

Removing the Front Propeller Shaft

Refer to *BODY* and remove the following:

– RH front lateral console panel

– Front grille

Remove propeller shaft screw on differential.

NOTE: Heat screw to break the threadlocker bond prior to removal.

Remove both retaining bolts and nuts securing bearing flange.

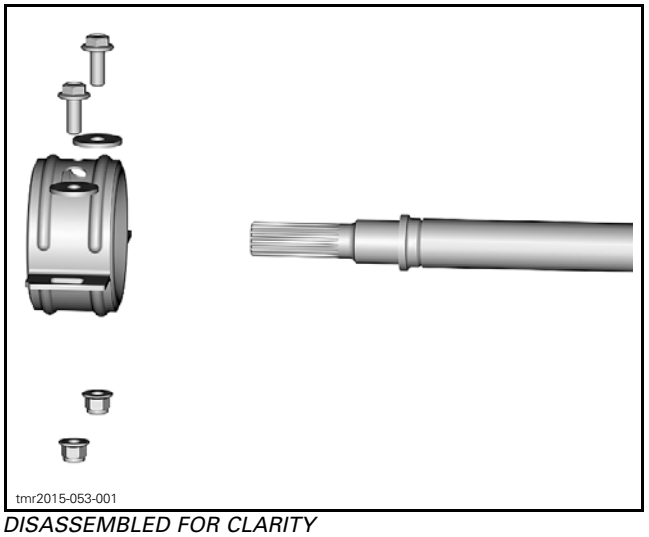

DISASSEMBLED FOR CLARITY

Pull up bearing flange to disengage both propeller shaft and propeller shaft extension.

Dislodge the propeller shaft from the differential.

Remove front propeller shaft.

Inspecting the Front Propeller Shaft

Inspect if propeller shaft is not bent or twisted.

Check propeller shaft splines for wear or damage.

Installing the Front Propeller Shaft

The installation is the reverse of the removal procedure. However, pay attention to the following.

Apply XPS SYNTHETIC GREASE (P/N 293 550 010) to splines on engine side.

Tighten propeller shaft screw to specification.

TIGHTENING TORQUE	
Propeller shaft screw (differential side)	75 N•m ± 15 N•m (55 lbf•ft ± 11 lbf•ft)
Bearing flange retaining screws	48 N•m ± 6 N•m (35 lbf•ft ± 4 lbf•ft)

PROPELLER SHAFT U-JOINTS

Removing the Propeller Shaft U-Joint

Remove internal snap ring from bearing caps.

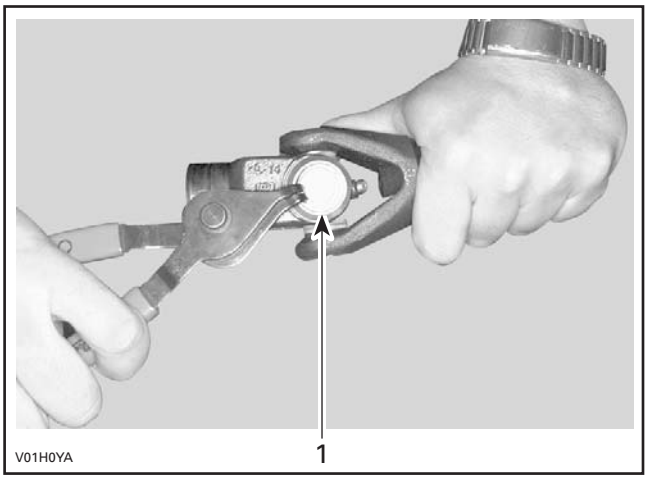

V01H0YA

1. Snap ring

Support inner yoke in vice and drive other yoke down with a soft hammer.

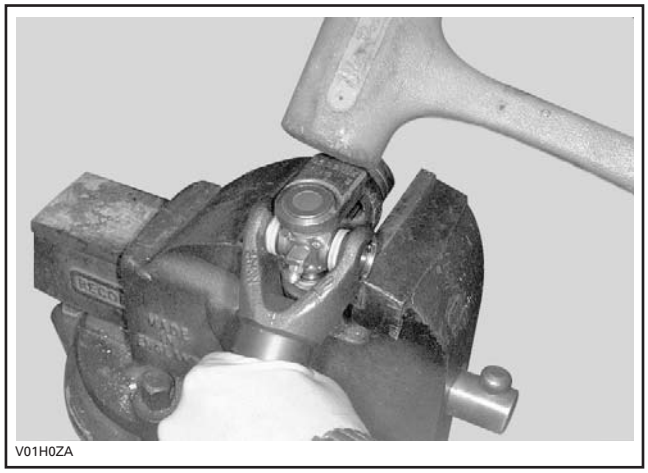

V01H0ZA

Support U-joint in vice and drive inner yoke down to remove remaining bearing caps.

Remove U-joint cross.

Installing the Propeller Shaft U-Joint

Install new U-joint in inner yoke.

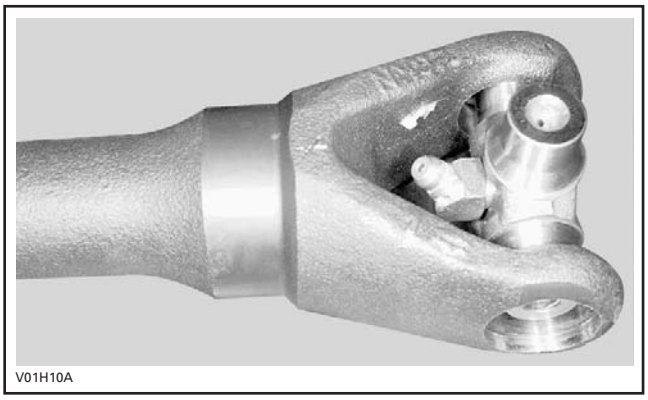

V01H10A

TYPICAL

Install bearing caps. Use a vise to insert bearing caps.

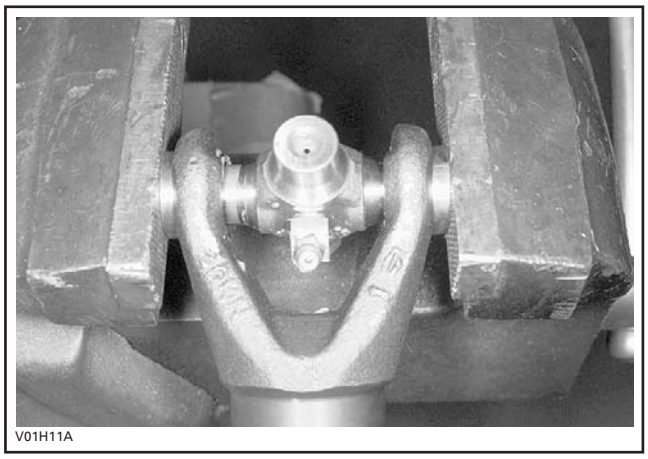

V01H11A

TYPICAL

Using a suitable pusher, fully seat bearing cap on one side.

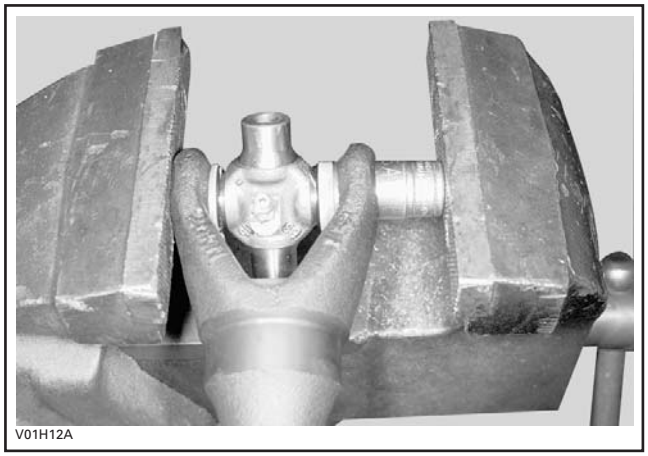

V01H12A

TYPICAL

Install snap ring.

FRONT DIFFERENTIAL

Removing the Front Differential (Commander Series)

Drain the differential. Refer to *PERIODIC MAINTENANCE PROCEDURES* subsection.

Remove both drive shafts. See procedure in this subsection.

Remove heavy duty front bumper (**XT-P, XT and Limited models**) with front fascia.

Remove the radiator. Refer to *COOLING SYSTEM* subsection.

Remove bolts that attach winch bracket to the frame (**XT models**).

Remove front screw and rear nut securing the LH lower differential support.

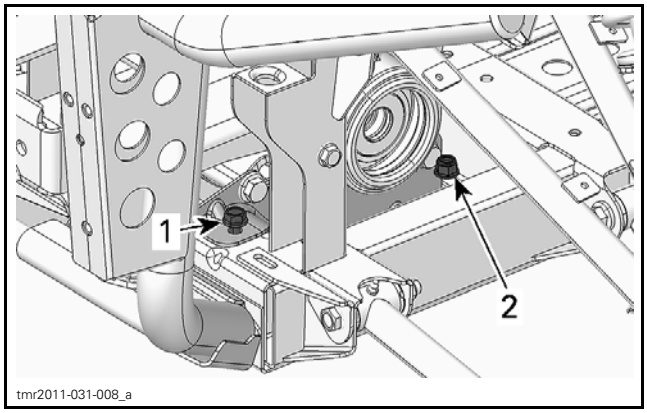

FROM THE LEFT SIDE OF VEHICLE
1. *Front retaining screw*
2. *Rear retaining nuts*

Remove the upper differential bolts.

Remove nuts securing the lower bolts. Pull bolts to free the left support.

NOTE: Differential removal is required to remove lower bolts and LH lower differential support.

Remove the large clamp from the propeller shaft rubber boot.

Remove the differential from the front of vehicle.

Remove yoke if required.

Removing the Front Differential (Maverick Series)

Drain the differential. Refer to *PERIODIC MAINTENANCE PROCEDURES* subsection.

Remove both drive shafts. See procedure in this subsection.

Remove front bumper. Refer to *FRAME*.

Remove skid plate. Refer to *BODY*.

Remove the 4 lower retaining screws (2 on each side) securing the lower differential support to frame.

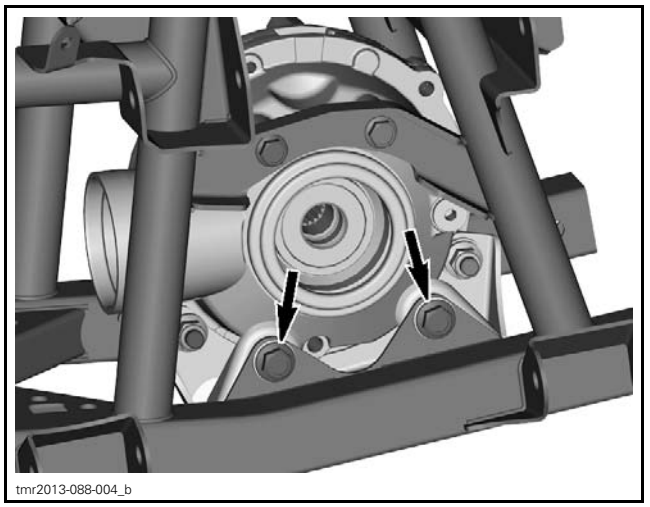

RH SIDE LOWER RETAINING SCREWS

Remove both upper retaining screws (RH side) securing upper differential to upper differential support.

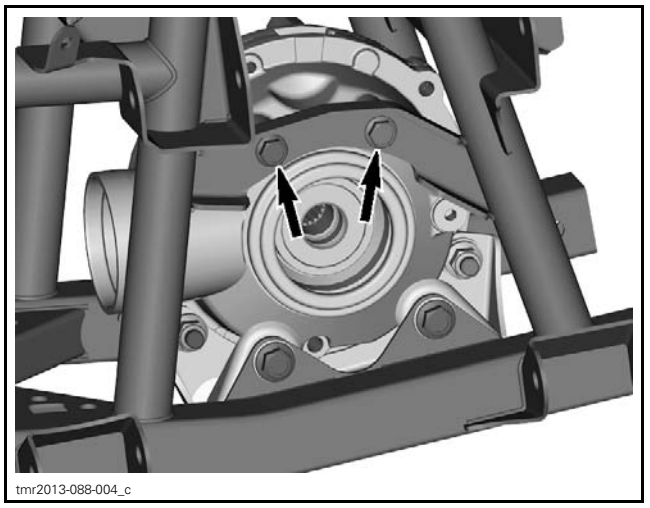

TYPICAL - RH SIDE UPPER RETAINING SCREWS

Remove the differential from the front of vehicle.

Remove yoke if required.

Remove front propeller if required.

Inspecting the Front Differential (Assembled)

Check if oil seals are brittle, hard or damaged. Replace if necessary.

Measuring the Backlash

When measuring backlash, the differential cover should be upside down to pull the ring gear out of mesh.

Using a dial indicator and the BACKLASH MEASUREMENT TOOL (P/N 529 035 665), measure the backlash.

Place the backlash measurement tool at the end of pinion gear.

From center of bolt, measure 25.4 mm (1 in) and scribe a mark on the tab.

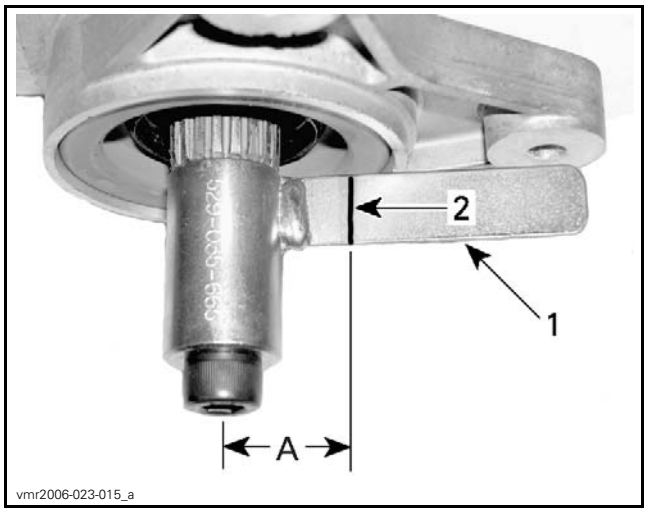

1. Tab of backlash measurement tool
2. Mark on tab
A. 25.4 mm (1 in)

Position the dial indicator tip against the tab at a 90° angle and right on the previously scribed mark.

Gently, move the tab back and forth. Note the result.

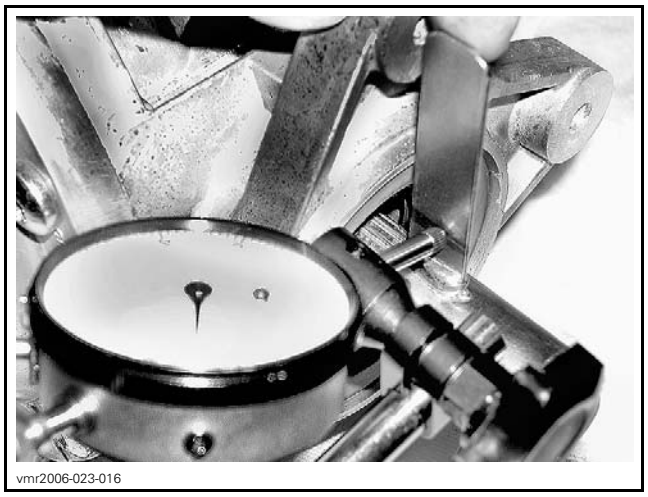

Rotate pinion gear 1/2 turn and check backlash again. Note the result.

Rotate pinion gear 1 turn and check backlash again.

BACKLASH SPECIFICATION
0.1 mm (.004 in) to 0.25 mm (.01 in)

If backlash is out of specification, split front differential housing and adjust shim thickness as per following guideline.

BACKLASH ADJUSTMENT GUIDELINE	
BACKLASH MEASUREMENT	WHAT TO DO
Below 0.1 mm (.004 in)	Add shim(s) and recheck backlash
Above 0.25 mm (.01 in)	Remove shim(s) and recheck backlash

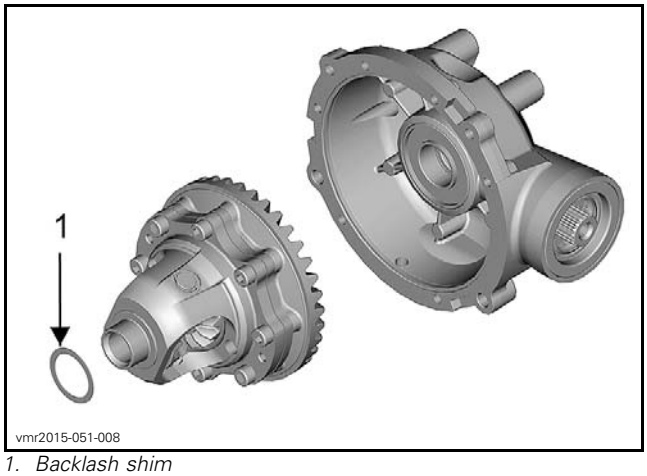

1. Backlash shim

Measuring the Preload

Screw the propeller shaft adaptor bolt in pinion gear.

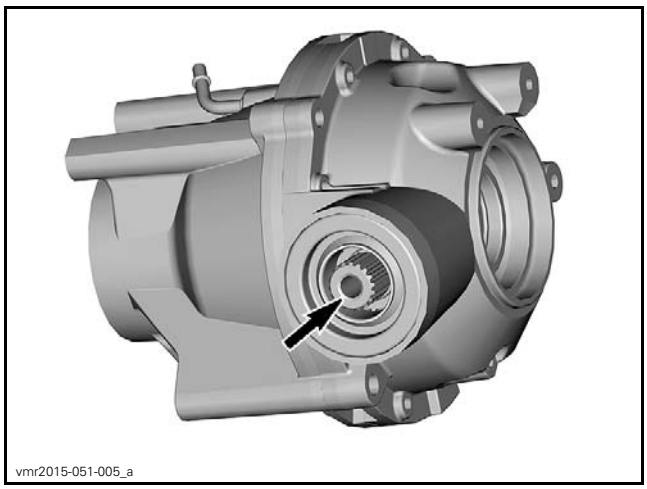

Using a needle torque wrench, measure the drag torque.

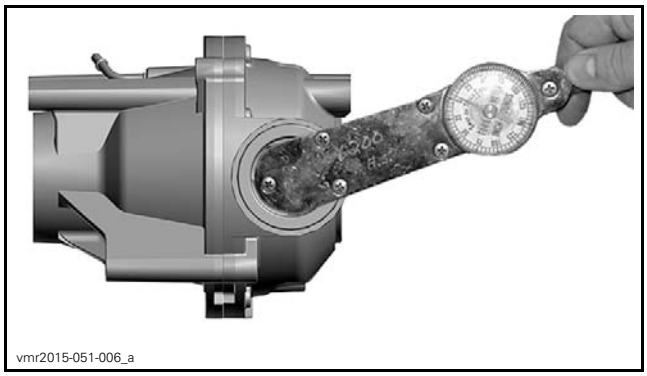
vmr2015-051-006_a

PRELOAD SPECIFICATION
Maximum 0.50 N•m (4 lbf•**in**)

If preload is out of specification, split front differential housing and check all bearings conditions.

Disassembling the Front Differential

Differential Housing

Remove the lower support if necessary.

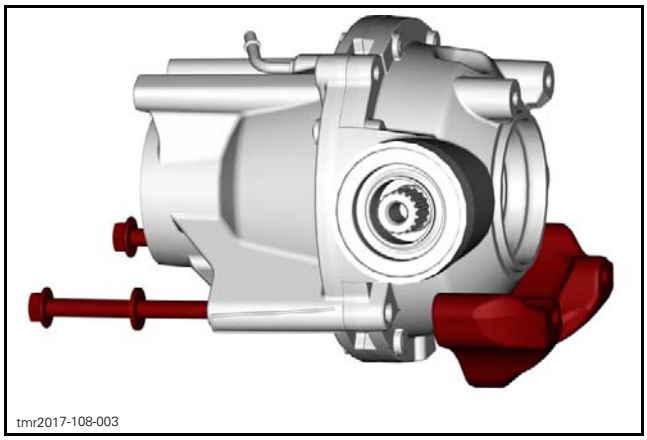
tmr2017-108-003

MAVERICK LOWER SUPPORT

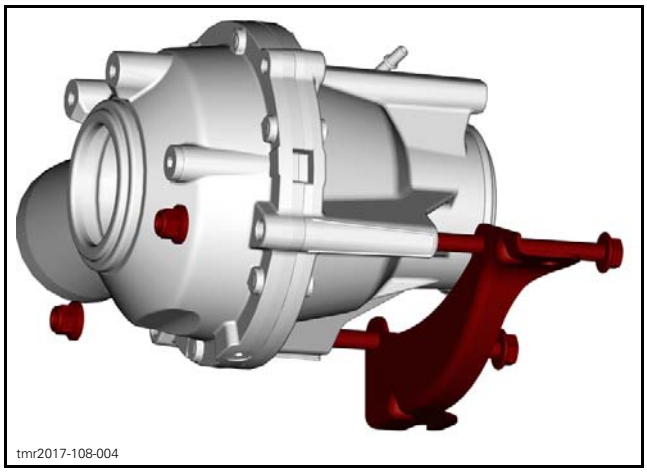
tmr2017-108-004

COMMANDER LOWER SUPPORT

Remove front differential housing screws.

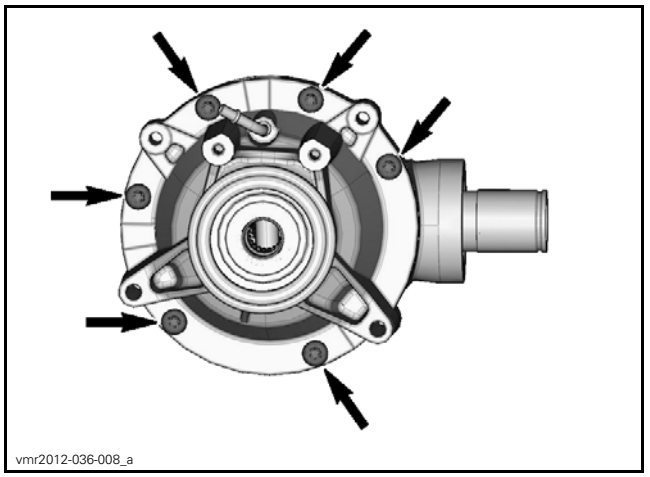
vmr2012-036-008_a

Separate half housings.

Remove oil seals.

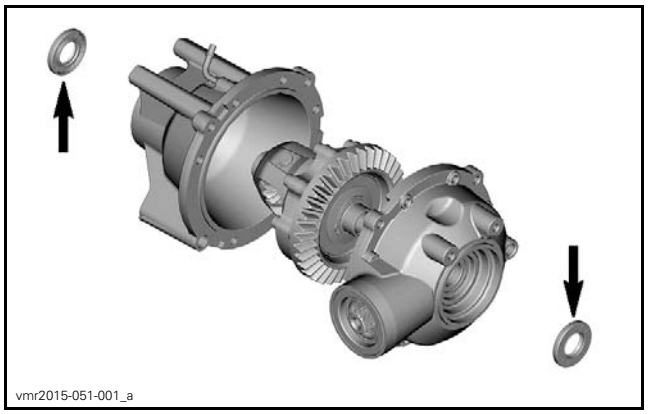
vmr2015-051-001_a

Visco-Lok Carrier/Ring Gear

Remove Visco-Lok carrier/ring gear out of half housing.

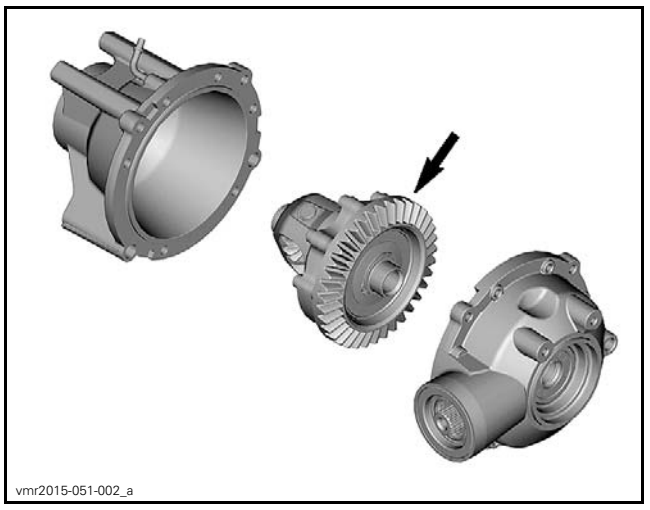
vmr2015-051-002_a

Remove screws securing ring gear to Visco-Lok unit.

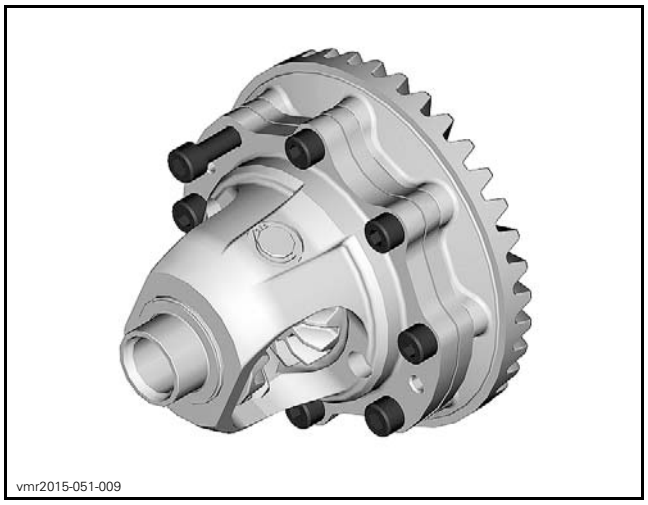
vmr2015-051-009

Separate ring gear from Visco-Lok unit.

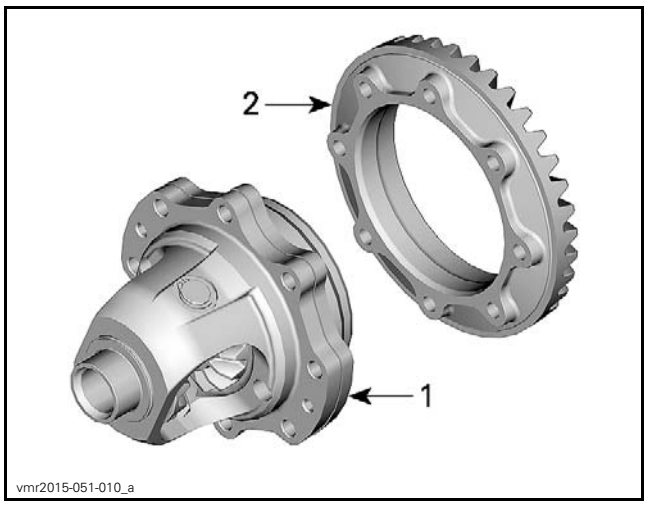

vmr2015-051-010_a

1. Visco-Lok unit
2. Ring gear

Pinion Gear

Remove screw retaining front propeller shaft adapter.

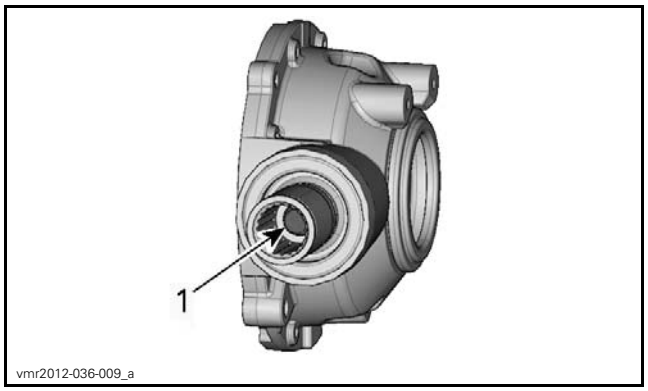

vmr2012-036-009_a

1. Retaining screw

Remove and discard oil seal.

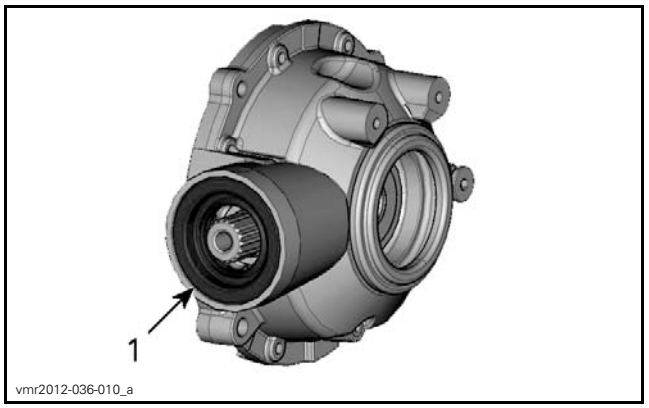

vmr2012-036-010_a

1. Oil seal

Unscrew the pinion nut.

REQUIRED TOOL
SPANNER SOCKET (P/N 529 035 649)


529035649

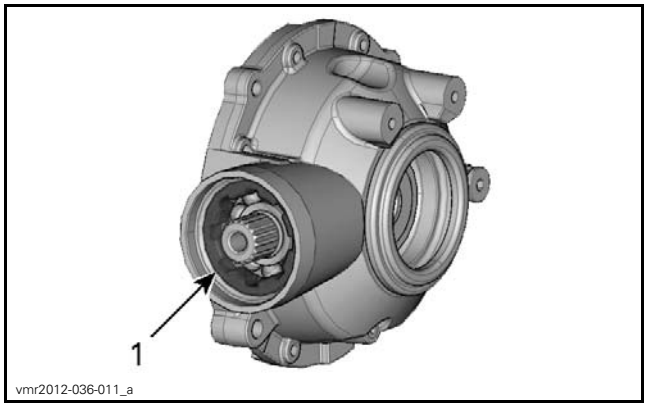

vmr2012-036-011_a

1. Pinion nut

Remove bearing and pinion gear together.

RECOMMENDED TOOLS	QTY
Pipe: 78 mm (3-1/16 in) diameter x 127 mm (5 in) in length	1
Threaded rod: M10 x 1.25, 178 mm (7 in) length	1
M10 x 1.25 nut	3
Flat bar	1

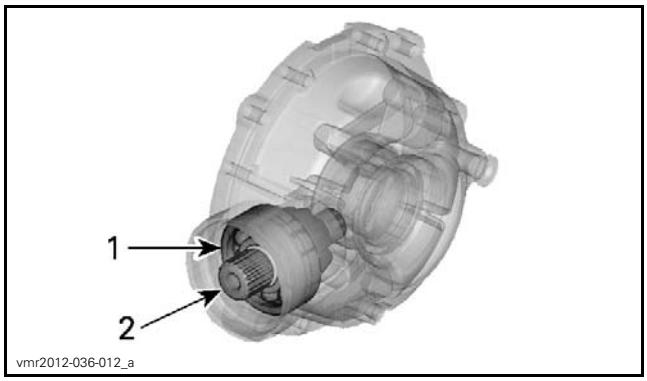

1. Bearing
2. Pinion gear

Remove and discard O-ring.

Remove bearing from pinion gear.

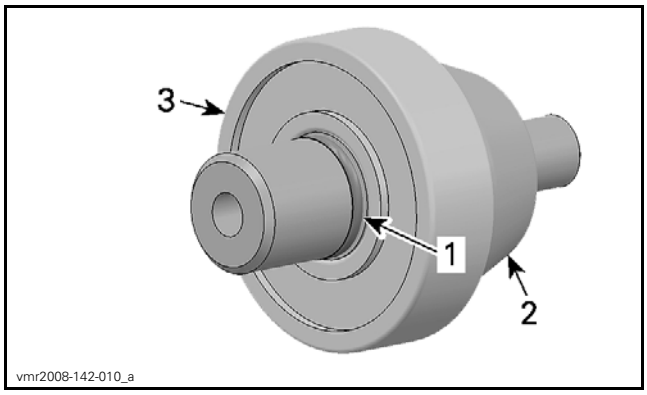

1. O-ring
2. Pinion gear
3. Bearing

Remove and discard the needle bearing.

Assembling the Front Differential

Adjustment is required when any of the following part is changed.

– Pinion gear
– Ring gear
– Viscolok unit
– Housing.

As a preliminary setup, install shim according to the following table.

RECOMMENDED SHIM THICKNESS	
BACKLASH	0.5 mm (.02 in) (as a preliminary adjustment)

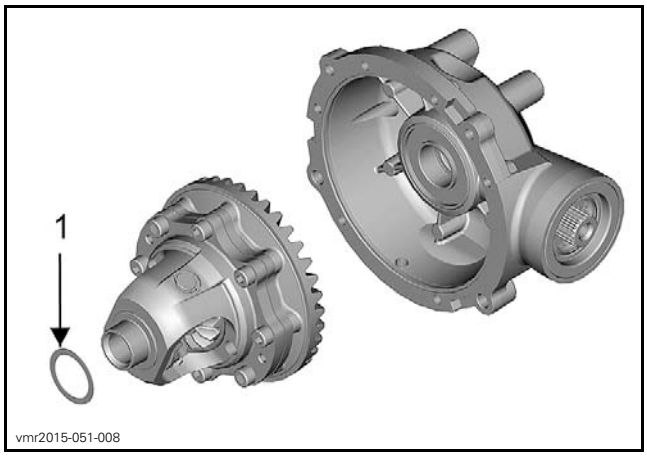

1. Backlash shim

Prior to finalizing assembly, proceed in this order:

– Temporarily assemble final drive using recommended torques.
– Do not apply thread locker product.
– Do not install a new pinion nut.
– Check backlash.
– Check preload.

Visco-Lok Carrier/Ring Gear

The installation is the reverse of the removal procedure. However, pay attention to the following.

Tighten Visco-Lok / ring gear screws to specification.

TIGHTENING TORQUE	
Visco-Lok / ring gear screws	37 N•m ± 3 N•m (27 lbf•ft ± 2 lbf•ft)

Check condition of seal. Replace if damaged.

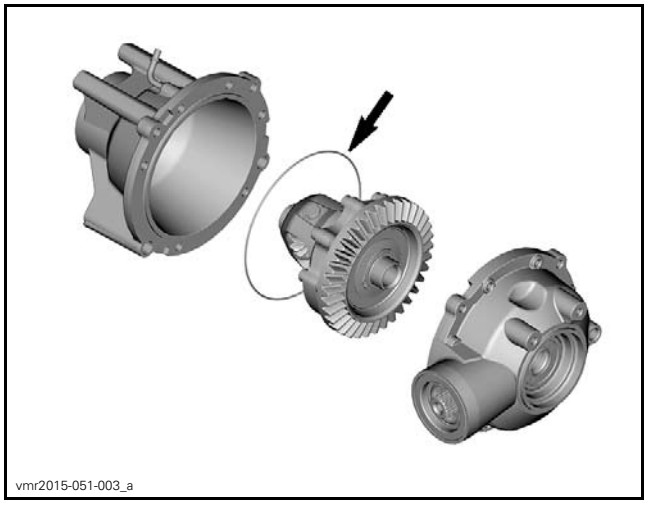

Check bearings. Replace with NEW bearings if necessary.

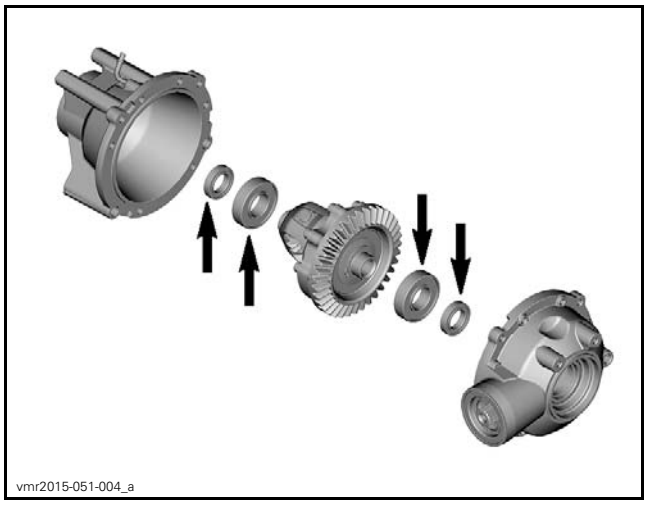

Apply XPS SYNTHETIC GREASE (P/N 293 550 010) on NEW oil seals and install.

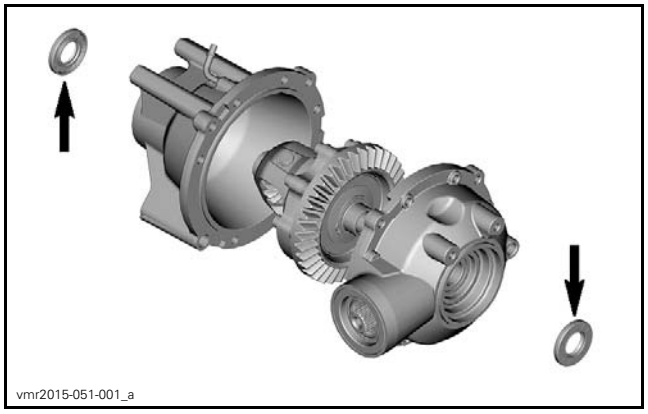

Tighten differential housing screws to specification.

TIGHTENING TORQUE	
Differential housing screws	23.5 N•m ± 3.5 N•m (17 lbf•ft ± 3 lbf•ft)

Pinion Gear

Install a NEW ball bearing.

Install a NEW O-ring.

Install a NEW needle bearing.

Apply LOCTITE 277 (P/N 293 800 073) to pinion nut.

Install and tighten the pinion nut to specification.

TIGHTENING TORQUE	
Pinion nut	180 N•m ± 15 N•m (133 lbf•ft ± 11 lbf•ft) + LOCTITE 277 (P/N 293 800 073)

Apply XPS SYNTHETIC GREASE (P/N 293 550 010) on NEW oil seal and install.

Installing the Front Differential (Commander Series)

The installation is the reverse of the removal procedure. However, pay attention to the following.

When inserting the small portion of propeller shaft into propeller shaft boot, make sure both parts of propeller shaft are well indexed.

Tighten front differential nuts as per following sequence.

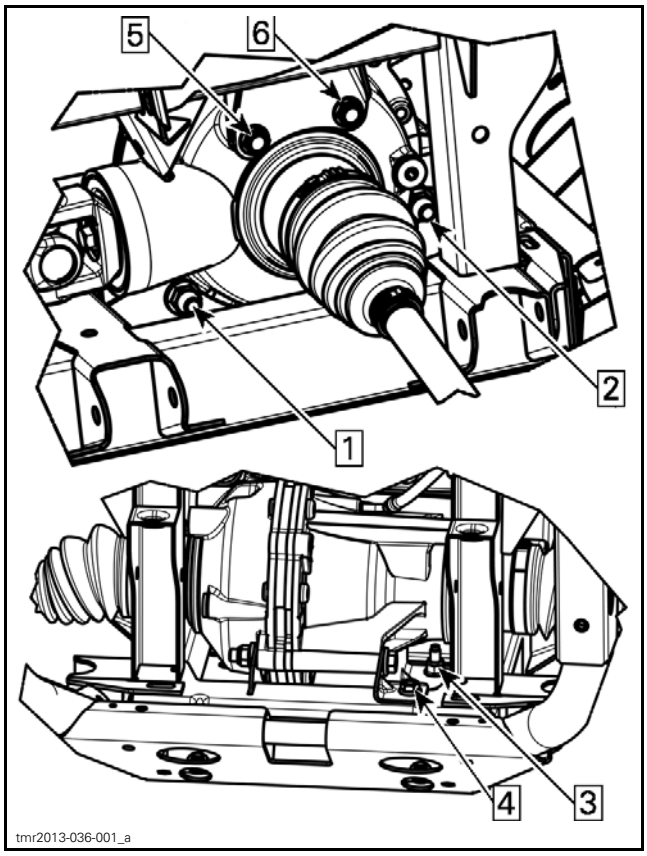

TOP ILLUSTRATION: RH SIDE VIEW
BOTTOM ILLUSTRATION: FRONT VIEW

PARTS	TORQUE
Differential retaining nuts	70 N•m ± 5 N•m (52 lbf•ft ± 4 lbf•ft)
Differential upper bolts	24.5 N•m ± 3.5 N•m (18 lbf•ft ± 3 lbf•ft)
Differential support nut	24.5 N•m ± 3.5 N•m (18 lbf•ft ± 3 lbf•ft)
Differential support bolt	24.5 N•m ± 3.5 N•m (18 lbf•ft ± 3 lbf•ft)

Refill the front differential with recommended oil. Refer to *PERIODIC MAINTENANCE PROCEDURES* subsection.

Installing the Front Differential (Maverick Series)

The installation is the reverse of the removal procedure. However, pay attention to the following.

After bumper installation, check all differential bolts to make sure torque is according to specification.

TIGHTENING TORQUE	
Differential retaining nuts	70 N•m ± 5 N•m (52 lbf•ft ± 4 lbf•ft)
Differential support bolts	33 N•m ± 3 N•m (24 lbf•ft ± 2 lbf•ft)

Refill the front differential with recommended oil. Refer to *PERIODIC MAINTENANCE PROCEDURES* subsection.

REAR DRIVE

SERVICE TOOLS

Description	Part Number	Page
BACKLASH MEASUREMENT TOOL	529 035 665	8
CV BOOT CLAMP PLIER	529 036 120	5
CV JOINT EXTRACTOR	529 036 005	5
PINION NUT SOCKET	529 036 274	10

SERVICE PRODUCTS

Description	Part Number	Page
LOCTITE 271 (RED)	293 800 005	6
LOCTITE 277	293 800 073	11
PROPELLER SHAFT GREASE	293 550 063	6–7
XPS SYNTHETIC GREASE	293 550 010	4, 6

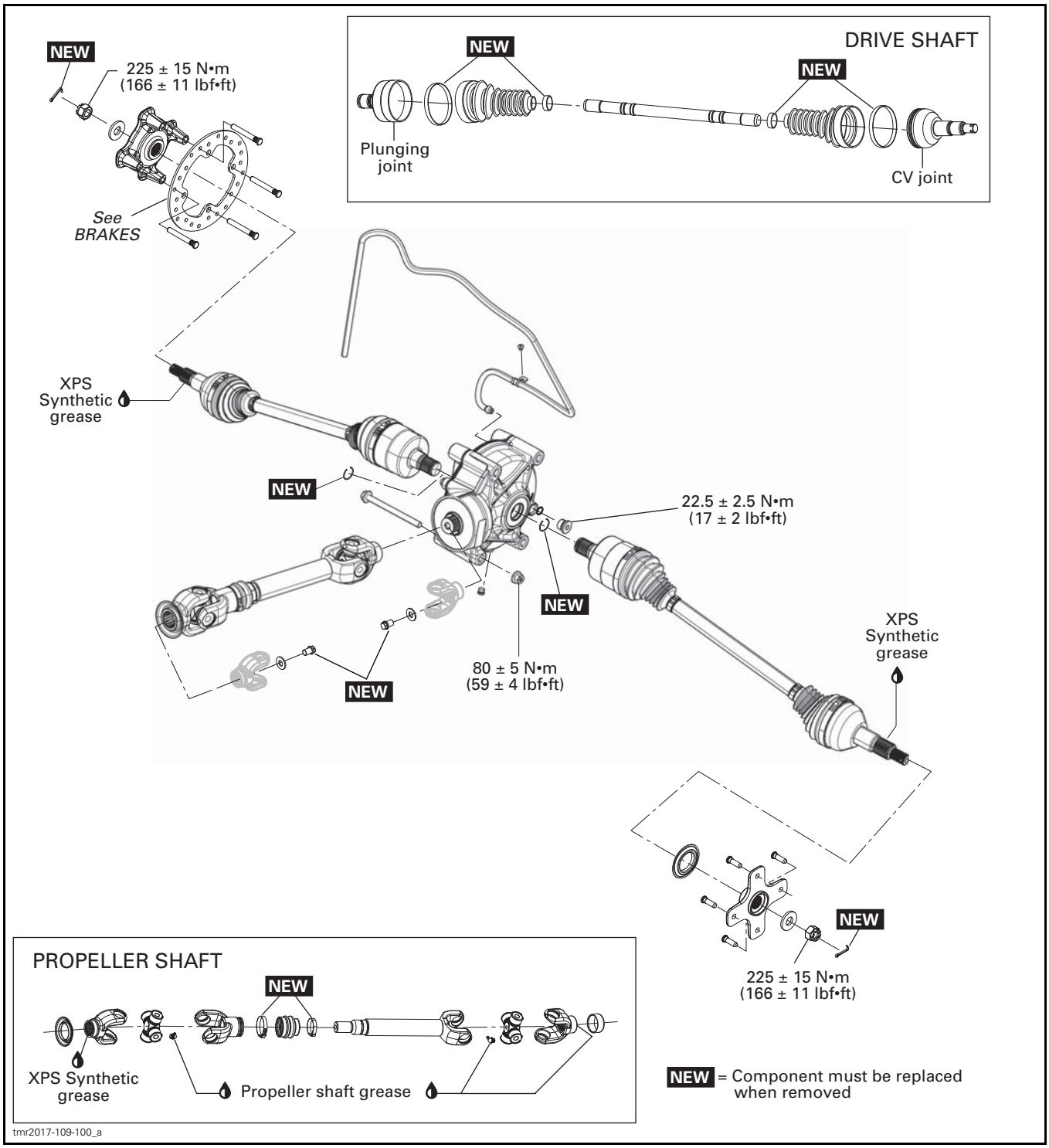
NEW
225 ± 15 N•m
(166 ± 11 lbf•ft)
See
BRAKES
DRIVE SHAFT
NEW
NEW
Plunging
joint
CV joint
XPS
Synthetic
grease
NEW
22.5 ± 2.5 N•m
(17 ± 2 lbf•ft)
NEW
80 ± 5 N•m
(59 ± 4 lbf•ft)
NEW
XPS
Synthetic
grease
NEW
225 ± 15 N•m
(166 ± 11 lbf•ft)
PROPELLER SHAFT
NEW
XPS Synthetic
grease
Propeller shaft grease
NEW = Component must be replaced
when removed
tmr2017-109-100_a

REAR DRIVE ASSEMBLY

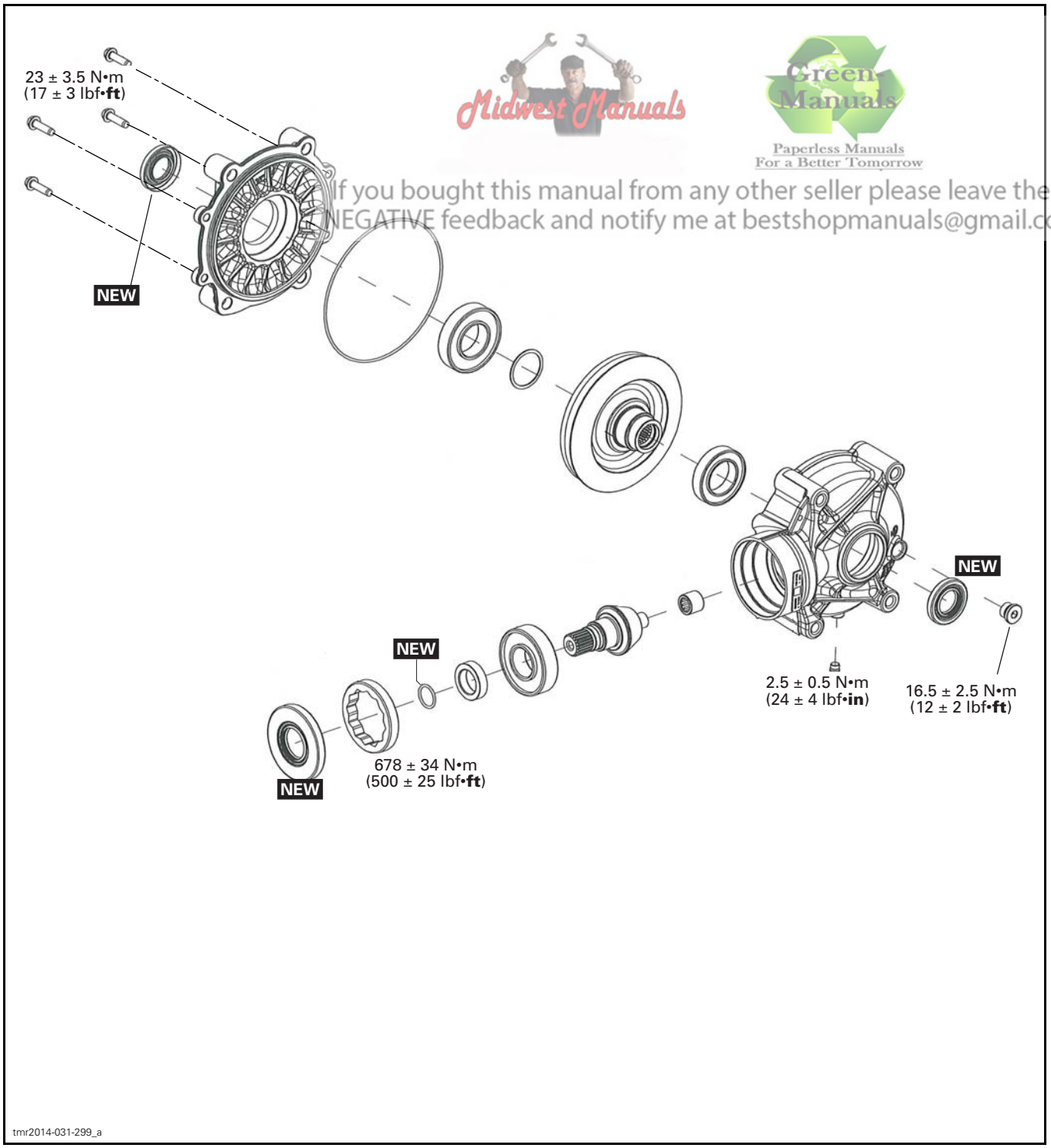

Midwest Manuals
Green Manuals
Paperless Manuals
For a Better Tomorrow
If you bought this manual from any other seller please leave them
NEGATIVE feedback and notify me at bestshopmanuals@gmail.com

PROCEDURES

WHEEL HUB

Removing the Wheel Hub Removal

Lift and support vehicle. Refer to *INTRODUCTION* section for proper procedure.

Remove the wheel.

Remove the following parts:
– Cotter pin
– Wheel hub nut
– Belleville washer.

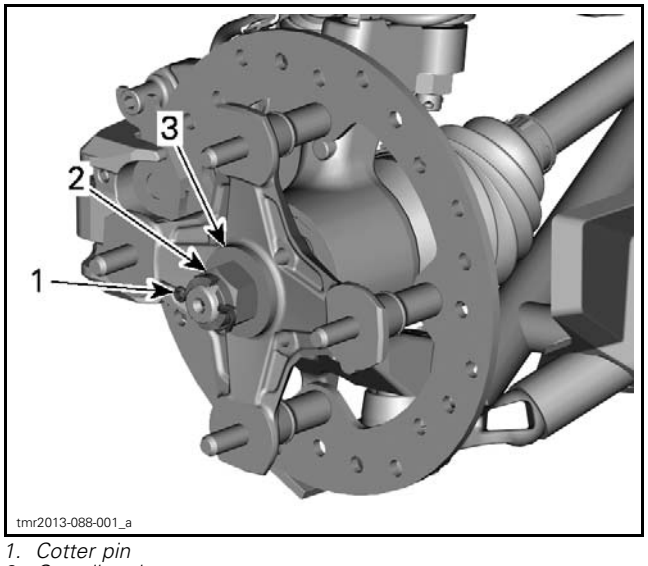

1. Cotter pin
2. Castellated nut
3. Belleville washer

NOTE: On RH side, remove also the brake caliper.

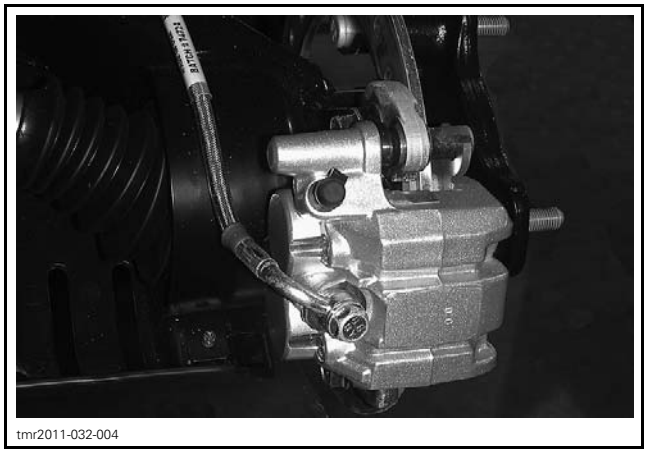

Remove wheel hub.

Inspecting the Wheel Hub

Check wheel hub for cracks or other damages.

Check inner splines for wear or other damages.

If any damage is detected on wheel hub, replace it with a new one.

Check wear ring. If it is loose on hub or deformed, replace the wear ring.

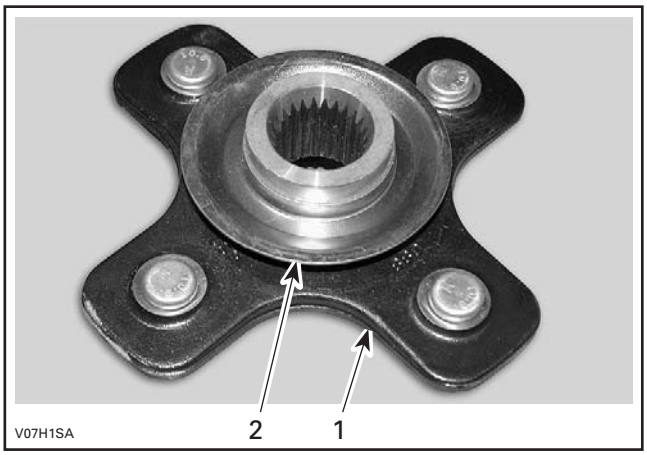

TYPICAL – LH WHEEL HUB SHOWN
1. Wheel hub
2. Wear ring

Installing the Wheel Hub

The installation is the reverse of removal procedure. Pay attention to the following.

Apply XPS SYNTHETIC GREASE (P/N 293 550 010) on drive shaft splines.

Install Belleville washer with its domed side outwards.

PART	TORQUE
Wheel hub nut	225 N•m ± 15 N•m (166 lbf•ft ± 11 lbf•ft)

NOTE: Tighten the castellated nut further if required to align grooves with drive shaft hole.

Install a NEW cotter pin, bend as shown.

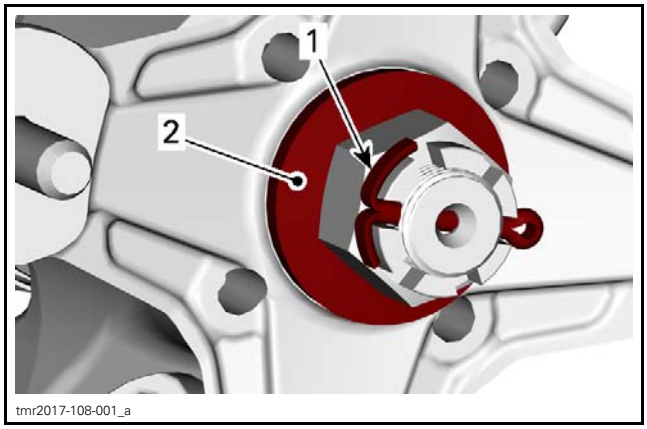

1. Cotter pin correctly bent
2. Domed (convex) side here

DRIVE SHAFT

Removing the Drive Shaft

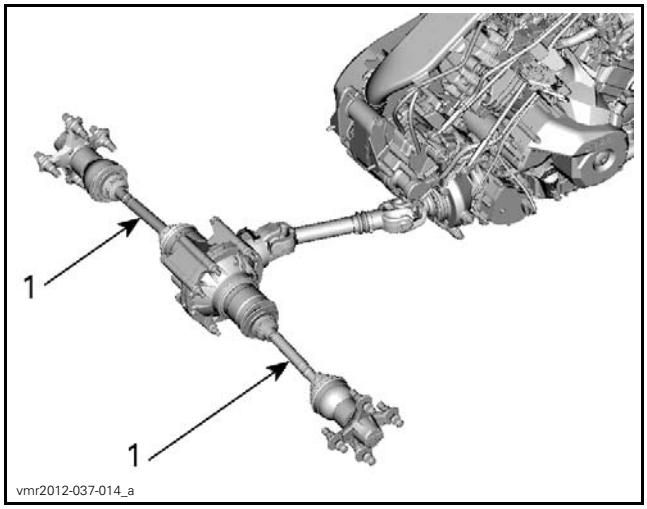

TYPICAL
1. Drive shafts

Lift and support vehicle. Refer to *INTRODUCTION* section for proper procedure.

Remove the wheel hub. See procedure in this subsection.

Remove trailing arm. Refer to *REAR SUSPENSION*.

Strongly pull drive shaft out of final drive.

Inspecting the Drive Shaft

Inspect the condition of boots. If there is any damage or evidence of leaking lubricant, replace them. Refer to *DRIVE SHAFT BOOT*.

Check shaft splines. Replace drive shaft if necessary.

Check dust shield on drive shaft end. Replace if necessary.

Installing the Drive Shaft

The installation is the reverse of the removal procedure. However, pay attention to the following.

Install a NEW stop ring.

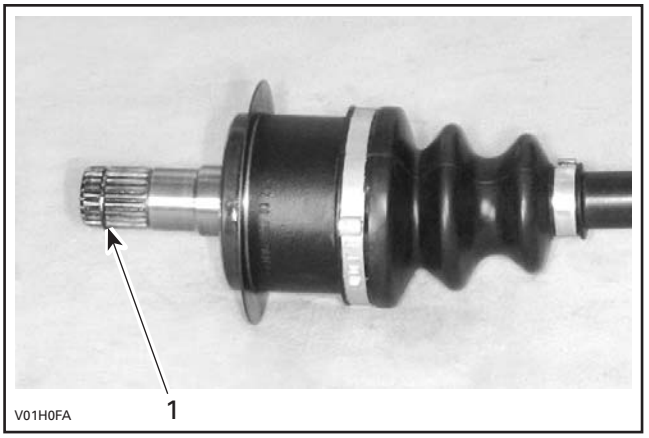

1. Stop ring

After drive shaft insertion in rear final drive, validate if properly locked.

DRIVE SHAFT BOOT

Removing the Drive Shaft Boot

Remove the drive shaft from vehicle. See procedure in this subsection.

Remove drive shaft boot clamps using the following tools:

TOOL	
CV BOOT CLAMP PLIER (P/N 529 036 120)	

Dislodge the large boot end.

Separate the joint from the shaft. Two procedures can be done.

Without the Special Tool

Clamp joint housing in a vise.

Align shaft with joint.

Pull hard on shaft to remove from joint.

Remove boot from drive shaft.

Remove and discard the circlip. A new one is included in the boot kit.

With the Special Tool

Place drive shaft in vice with the joint downward.

Install the CV JOINT EXTRACTOR (P/N 529 036 005) on bearing.

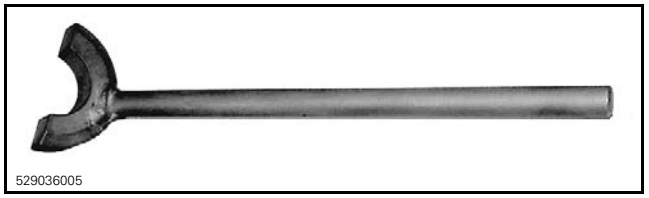

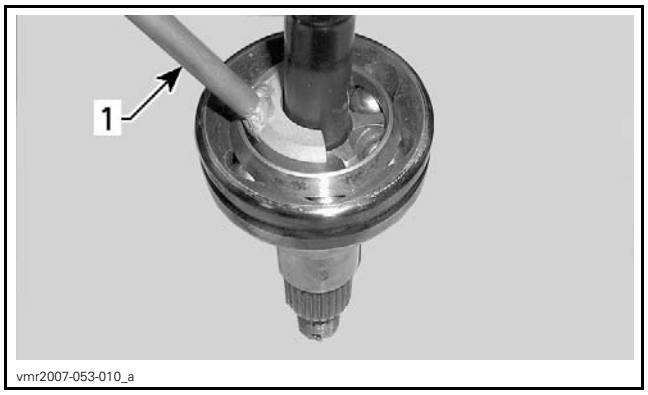

TYPICAL — CV JOINT SHOWN
1. Joint extractor tool

With an hammer, hit on the tool to separate joint from shaft.

When joint and shaft are separated, remove boot from drive shaft.

Remove and discard the circlip. A new one is included in the boot kit.

Remove drive shaft boot.

Installing the Drive Shaft Boot

For installation, reverse the removal procedure. Pay attention to the following.

Pack bearing area with grease (included with the new boot kit).

NOTE: Do not use any other grease.

PROPELLER SHAFT

Removing the Propeller Shaft

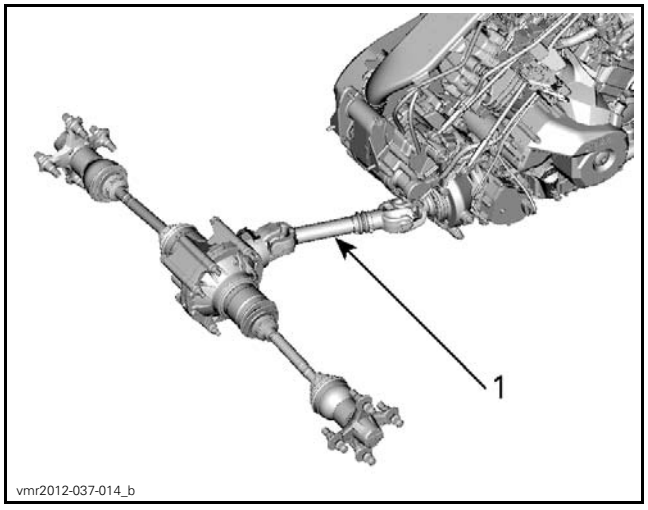

TYPICAL
1. Propeller shaft

1. Remove the fuel tank. Refer to *FUEL TANK* subsection.
2. Remove propeller shaft screw from gearbox output shaft.
3. Lift and support vehicle. Refer to *INTRODUCTION* section for proper procedure.
4. Remove propeller shaft screw from rear final drive yoke.
5. Remove rear final drive bolts. Refer to *REAR FINAL DRIVE* in this subsection.
6. Move the rear final drive rearward to dislodge the propeller shaft.
7. Dislodge the propeller shaft from the engine.
8. Remove the propeller shaft.

Inspecting the Propeller Shaft

Inspect if propeller shaft is not bent or twisted.

Check propeller shaft splines for wear or damage.

Check if propeller shaft bellows is pierced or brittle.

Installing the Propeller Shaft

Installation is essentially the reverse of removal procedure. Pay attention to the following details.

Engine side: apply XPS SYNTHETIC GREASE (P/N 293 550 010) to splines.

Drive side: apply PROPELLER SHAFT GREASE (P/N 293 550 063) to splines.

If new bolts are used, scotch grip is already applied to threads. When re-using bolts, apply LOCTITE 271 (RED) (P/N 293 800 005).

On the engine side, Install the Belleville with the notches towards the screw head.

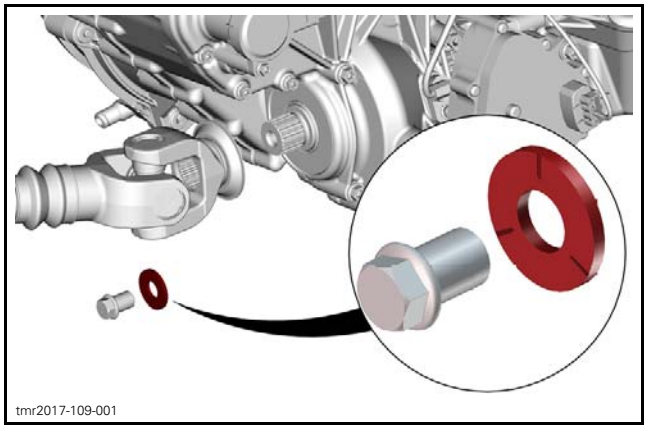

PARTS	TORQUE
Propeller shaft screw (final drive side)	75 N•m ± 5 N•m (55 lbf•ft ± 4 lbf•ft)
Propeller shaft screw (engine side)	75 N•m ± 5 N•m (55 lbf•ft ± 4 lbf•ft)

PROPELLER SHAFT U-JOINTS

Removing the Propeller Shaft U-Joint

Remove internal snap ring from bearing caps.

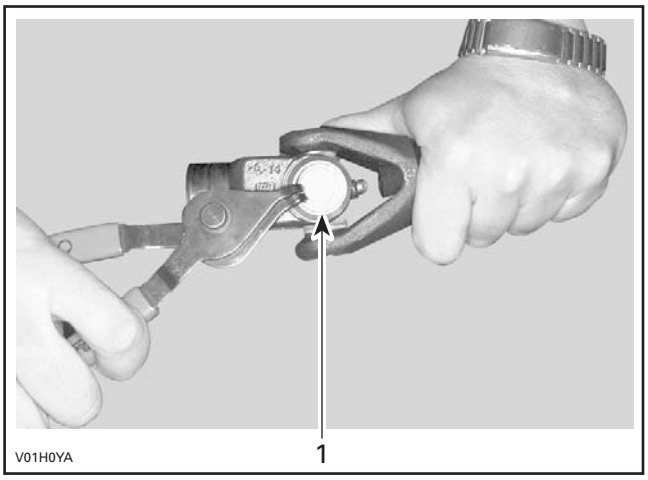

1. Snap ring

Support inner yoke in vice and drive other yoke down with a soft hammer.

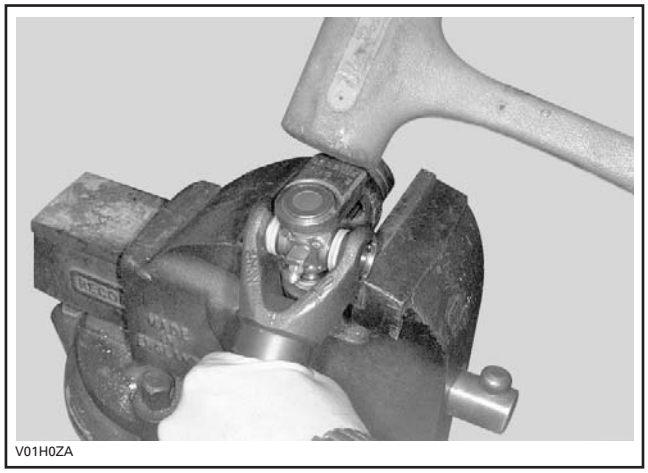

Support U-joint in vice and drive inner yoke down to remove remaining bearing caps.

Remove U-joint cross.

Installing the Propeller Shaft U-Joint

Install new U-joint in inner yoke.

NOTE: Position propeller shaft U-joint as shown for proper grease fitting location.

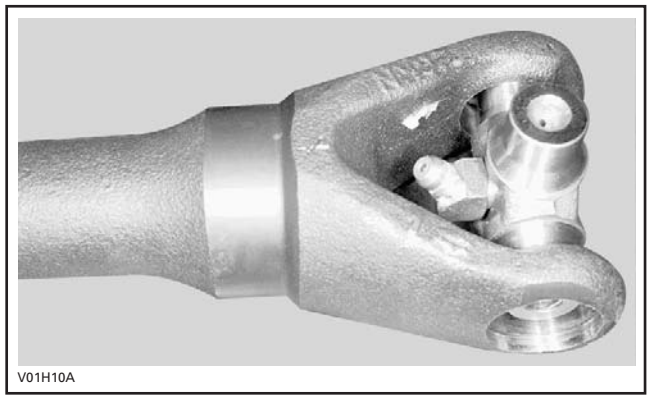

Install bearing caps. Use a vise to push bearing caps.

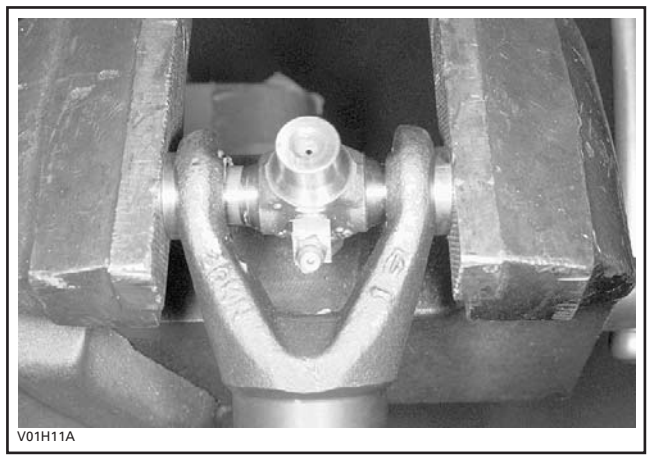

Using a suitable pusher, fully seat bearing cap on one side.

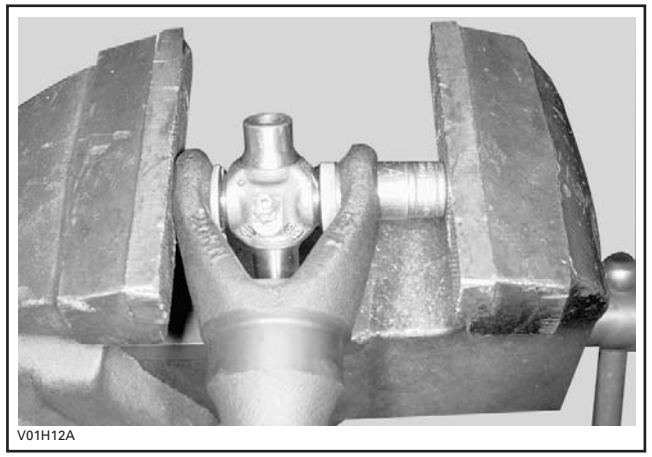

Install snap ring.

Complete installation for the other bearing caps.

Grease U-joint. PROPELLER SHAFT GREASE (P/N 293 550 063).

REAR FINAL DRIVE

Removing the Rear Final Drive

Drain oil. Refer to *PERIODIC MAINTENANCE PROCEDURES* subsection.

Remove drive shafts. See procedure in this subsection.

Remove the rear skid plate.

Remove the propeller shaft screw from the rear final drive yoke.

Remove final drive lower bolts.

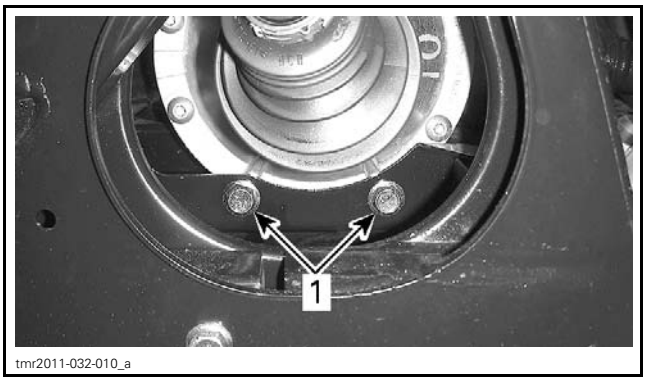

tmr2011-032-010_a

1. Lower final drive bolts

Remove final drive upper bolts and the front bolts of the final drive support.

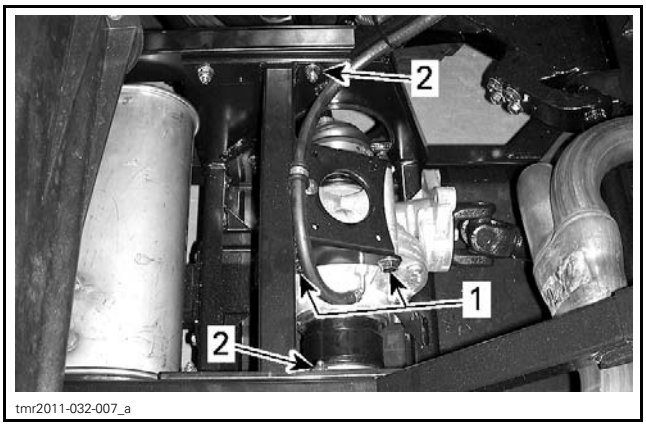

tmr2011-032-007_a

1. Upper final drive bolts
2. Final drive support front bolts

Unplug the vent hose from final drive.

Loosen rear bolts of the final drive support and tilt the support rearward to make room.

Remove the final drive.

Inspecting the Rear Final Drive (Assembled)

Turn rear final drive gear with a finger; it should turn smoothly. Replace if necessary.

Check if oil seals are brittle, hard or damaged. Replace if necessary.

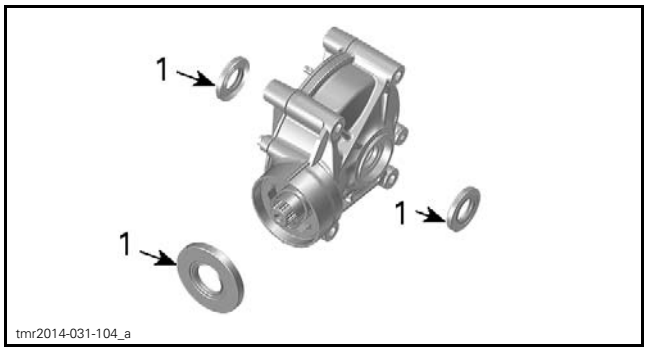

tmr2014-031-104_a

FINAL DRIVE
1. Oil seals

Measuring the Backlash

Using a dial indicator and the BACKLASH MEASUREMENT TOOL (P/N 529 035 665), measure the backlash.

Place the backlash measurement tool at the end of pinion gear.

Tighten a M10 X 1.25 bolt so that tool does not move on pinion.

From center of bolt, measure 23 mm (.9 in) and scribe a mark on the tab.

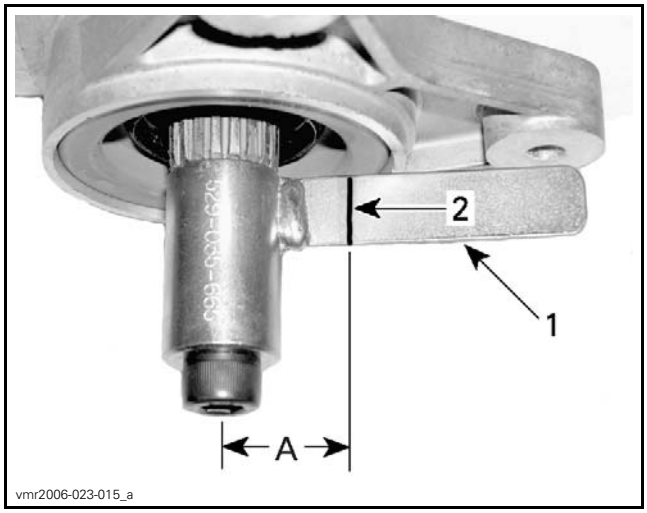

vmr2006-023-015_a

1. Tab of backlash measurement tool
2. Mark on tab
A. 23 mm (.9 in)

Position the dial indicator tip against the tab at a 90° angle and right on the previously scribed mark.

NOTICE **During backlash readings, the ring gear should be pushed out of mesh (into cover) and the pinion shall be pushed out of mesh (towards nut) to remove any endplay.**

Gently, move the tab back and forth. Note the result.


vmr2006-023-016

Rotate pinion gear 1/2 turn and check backlash again. Note the result.

Rotate pinion gear 1 turn and check backlash again.

BACKLASH SPECIFICATION
0.2035 mm ± 0.1015 mm (.008 in ± .004 in)

If backlash is out of specification, split final drive housing and adjust shim thickness as per following guideline.

BACKLASH ADJUSTMENT GUIDELINE	
BACKLASH MEASUREMENT	WHAT TO DO
Below 0.102 mm (.004 in)	Remove shim(s) and recheck backlash
Above 0.305 mm (.012 in)	Add shim(s) and recheck backlash

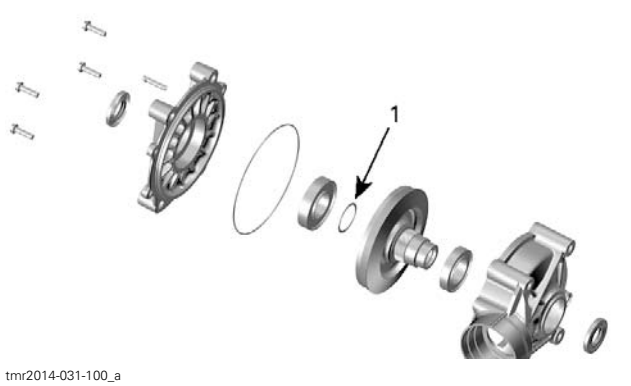

tmr2014-031-100_a

1. Backlash shim

Verify that there is no "tight mesh" conditions as the ring gear rotates through 360 degrees of travel.

Measuring the Preload

Screw the propeller shaft adaptor bolt in pinion gear.

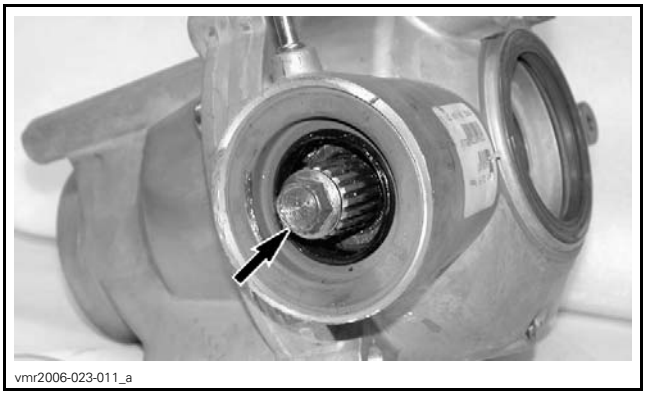
vmr2006-023-011_a

TYPICAL — FRONT DIFFERENTIAL SHOWN

Using a needle torque wrench, measure the drag torque.

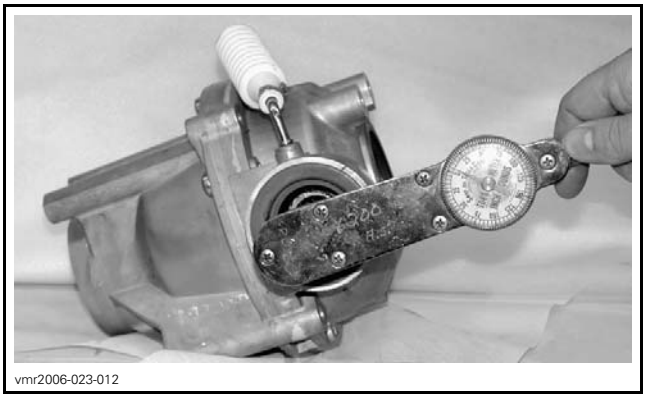
vmr2006-023-012

TYPICAL — FRONT DIFFERENTIAL SHOWN

PRELOAD SPECIFICATION
0 N•m - 1.5 N•m (0 lbf•**in** - 13 lbf•**in**)

There is no preload adjustment on this differential.

If the preload is out of specification:

1. Check if all bearings are in their proper places and well inserted.
2. Check if all bearings can rotate easily on 360 degrees of travel.

Disassembling the Rear Final Drive

Ring Gear

Unscrew the final drive housing screws.

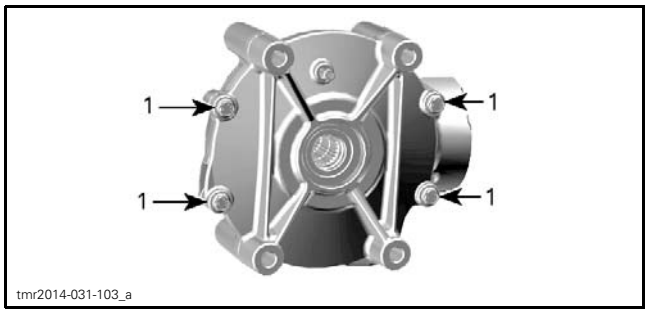

1. Housing screws

Split final drive housings.

NOTE: Be careful to keep track of backlash shim on ring gear.

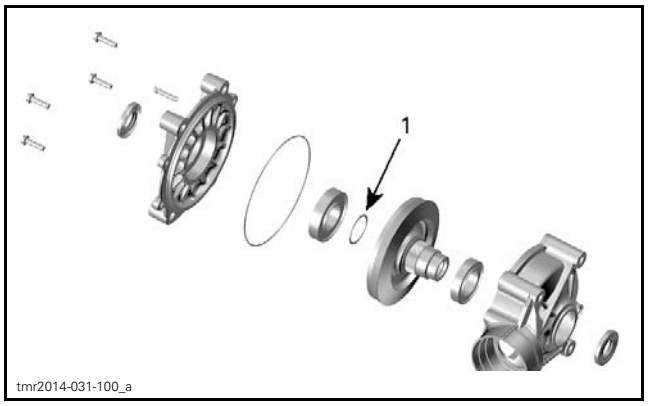

1. Backlash shim

Extract ring gear out of half housing.

Pinion Gear

Remove and discard pinion oil seal.

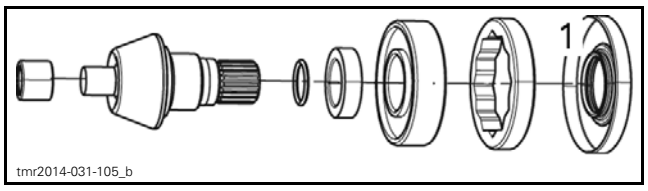

1. Pinion seal

Unscrew the pinion nut. Use the PINION NUT SOCKET (P/N 529 036 274).



NOTE: The pinion nut is LH threaded. Unscrew by turning clockwise.

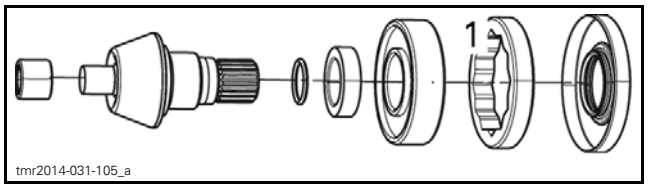

1. Pinion nut

Remove the pinion bearing at the same time as the pinion gear. Discard bearing.

Use a press and bearing clamp to separate pinion and bearing.

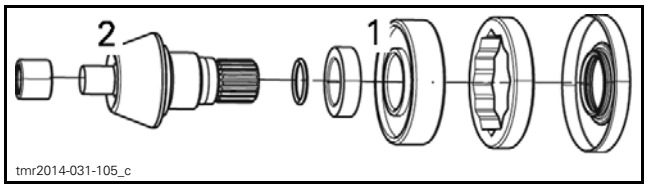

1. Pinion bearing
2. Pinion gear

Remove and discard the needle bearing.

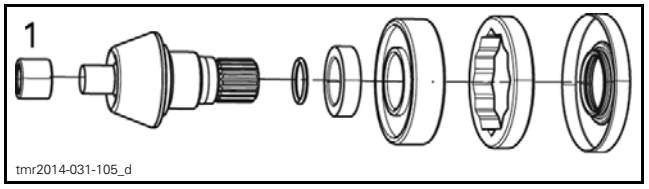

1. Needle bearing

Assembling the Rear Final Drive

Adjustment is required when any of the following part is changed.

– Pinion gear
– Ring gear
– Housing.

As a preliminary setup, install shims according to the following table.

RECOMMENDED SHIM THICKNESS	
BACKLASH	1.27 mm (.05 in) (as a preliminary adjustment)

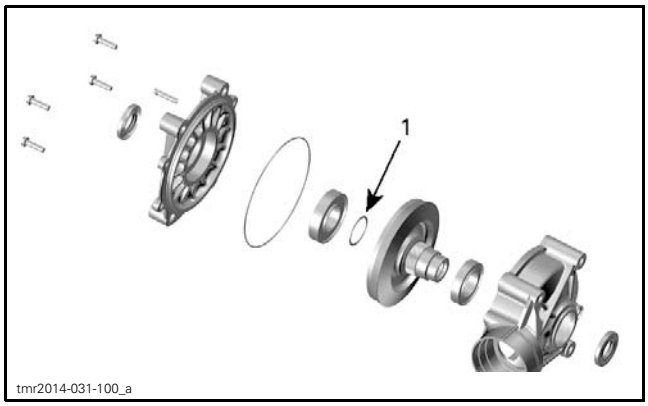

1. Backlash shim

Prior to finalizing assembly, proceed in this order:
- Temporarily assemble final drive using recommended torques.
- Do not apply thread locker product.
- Do not install a new pinion nut.
- Check backlash.
- Check preload.

Ring Gear

To assemble, reverse the removal procedure. Pay attention to the following.

Check condition of seal **no. 1**. Replace if damaged.

Install new bearings . **no. 2**

Tighten final drive housing screws **no. 3**.

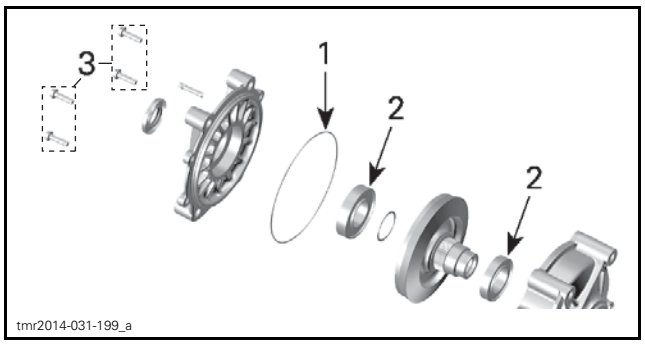

PART	TORQUE
Final drive housing screws	23.5 N•m ± 3.5 N•m (17 lbf•ft ± 3 lbf•ft)

Pinion Gear

To install, reverse the removal procedure. Pay attention to the following.

Replace the O-ring **no. 1**.

Install the ball bearing **no. 2**.

Install a new needle bearing **no. 3**.

NOTE: If a new pinion nut is used, a self-locking product is already applied, do not use Loctite 277.

Apply LOCTITE 277 (P/N 293 800 073) to pinion nut **no. 4**.

Install and tighten the pinion nut.

Lubricate oil seal **no. 5**.

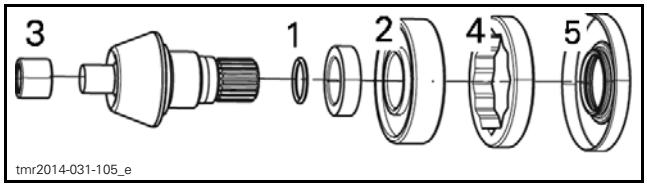

PART	TORQUE
Pinion nut (LH THREADS)	678 N•m ± 34 N•m (500 lbf•ft ± 25 lbf•ft)

Installing the Rear Final Drive

The installation is the reverse of the removal procedure.

PART	TORQUE
Final drive retaining nuts	80 N•m ± 5 N•m (59 lbf•ft ± 4 lbf•ft)

Refill the final drive with recommended oil. Refer to *PERIODIC MAINTENANCE PROCEDURES* subsection.

WHEELS AND TIRES

SERVICE PRODUCTS

Description	Part Number	Page
LOCTITE 767 (ANTISEIZE LUBRICANT)	293 800 070	3, 5

PROCEDURES

TIRES

⚠ WARNING

Do not rotate tires. The front and rear tires have a different size. Respect direction of rotation when applicable.

Tire Pressure

⚠ WARNING

Tire pressure greatly affects vehicle handling and stability. Insufficient pressure may cause tire to deflate and rotate on wheel. Excessive pressure may burst the tire. Always follow recommended pressure.

Check pressure when tires are **cold** before using the vehicle. Tire pressure changes with temperature and altitude. Recheck pressure if one of these conditions has changed.

Commander Series Except Mossy Oak and Limited

TIRE PRESSURE		
	FRONT	REAR
MIN.	69 kPa (10 PSI)	83 kPa (12 PSI)
MAX. (Use when total load is greater than 180 kg (400 lb))	83 kPa (12 PSI)	152 kPa (22 PSI)

Commander Series Mossy Oak and Limited

TIRE PRESSURE		
	FRONT	REAR
MIN.	83 kPa (12 PSI)	83 kPa (12 PSI)
MAX. (Use when total load is greater than 180 kg (400 lb))	83 kPa (12 PSI)	152 kPa (22 PSI)

Commander MAX Except Limited

TIRE PRESSURE		
	FRONT	REAR
MIN.	103 kPa (15 PSI)	103 kPa (15 PSI)
MAX. (Use when total load is greater than 195 kg (430 lb))	110 kPa (16 PSI)	179 kPa (26 PSI)

Commander MAX Limited

TIRE PRESSURE		
	FRONT	REAR
MIN.	103 kPa (15 PSI)	103 kPa (15 PSI)
MAX. (Use when total load is greater than 195 kg (430 lb))	124 kPa (18 PSI)	179 kPa (26 PSI)

Maverick Series

TIRE PRESSURE		
	FRONT	REAR
MIN.	90 kPa (13 PSI)	110 kPa (16 PSI)
MAX. (Use when total load is greater than 195 kg (430 lb))	103 kPa (15 PSI)	145 kPa (21 PSI)

Maverick Turbo

TIRE PRESSURE		
	FRONT	REAR
MIN.	110 kPa (16 PSI)	117 kPa (17 PSI)
MAX. (Use when total load is greater than 195 kg (430 lb))	117 kPa (17 PSI)	165 kPa (24 PSI)

Maverick MAX Turbo, MAX XDS Turbo, MAX XDS XRS

TIRE PRESSURE		
	FRONT	REAR
MIN.	145 kPa (21 PSI)	145 kPa (21 PSI)
MAX. (Use when total load is greater than 195 kg (430 lb))	165 kPa (24 PSI)	220 kPa (32 PSI)

Maverick X mr

TIRE PRESSURE		
	FRONT	REAR
MIN.	90 kPa (13 PSI)	110 kPa (16 PSI)
MAX. (Use when total load is greater than 195 kg (430 lb))	103 kPa (15 PSI)	145 kPa (21 PSI)

Maverick MAX and Maverick MAX X mr

TIRE PRESSURE		
	FRONT	REAR
MIN.	124 kPa (18 PSI)	124 kPa (18 PSI)
MAX. (Use when total load is greater than 195 kg (430 lb))	138 kPa (20 PSI)	179 kPa (26 PSI)

Tire Inspection

Check tire for presence of slits, bulges, wear or other damage. Replace if necessary.

Tire Replacement

Use an automotive tire changer to replace tires.

⚠ WARNING

– Replace tires only with the same type and size as original tires.

Check for proper tire size

Tire Mounting on Beadlock Wheels

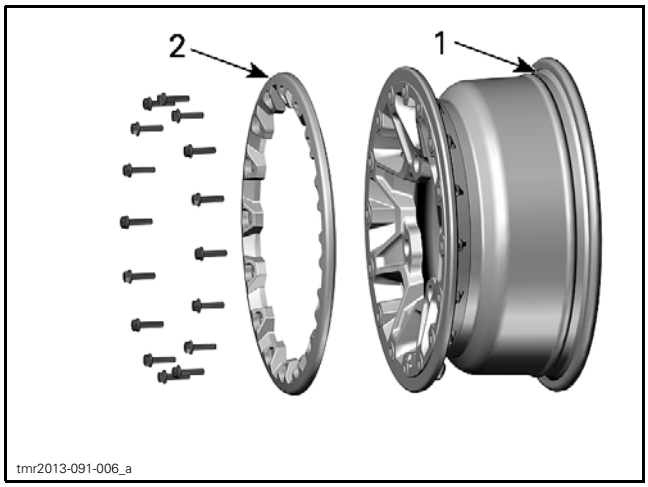

TYPICAL
1. *Inner tire bead seat*
2. *Outer tire bead lock*

NOTE: Tires should be mounted, by an experienced person, in accordance to good tire mounting practices using acceptable tire mounting equipment designed for the tire industry.

1. Mount the tire on wheel.
   1.1 On the opposite side of beadlock, apply the tire mounting lube on inner bead of tire and wheel to ensure proper seating when inflating.
   1.2 Mount the inner bead over the wheel.

NOTICE Mount tire from beadlock side only.

   1.3 Seat the tire outer bead in the shoulder of the beadlock inner ring and center the tire.



TYPICAL
1. *Tire outer bead*
2. *Beadlock inner ring shoulder*

2. Lubricate all beadlock screws with LOCTITE 767 (ANTISEIZE LUBRICANT) (P/N 293 800 070) or an equivalent product to prevent screw sticking.
3. Install all beadlock screws. To avoid cross threading, start all screws by hand.

NOTICE Do not use an impact wrench for installing beadlock screws. The risk of screw breaking or screw stripping is high when using an impact wrench.

4. Tighten beadlock screws as per following specification and sequence.

NOTE: To ensure even pressure on the beadlock clamp ring, tighten screws **a few turns at a time**.

TIGHTENING TORQUE	
Beadlock screws (FIRST TORQUE)	3 N•m ± 1 N•m (27 lbf•**in** ± 9 lbf•**in**)

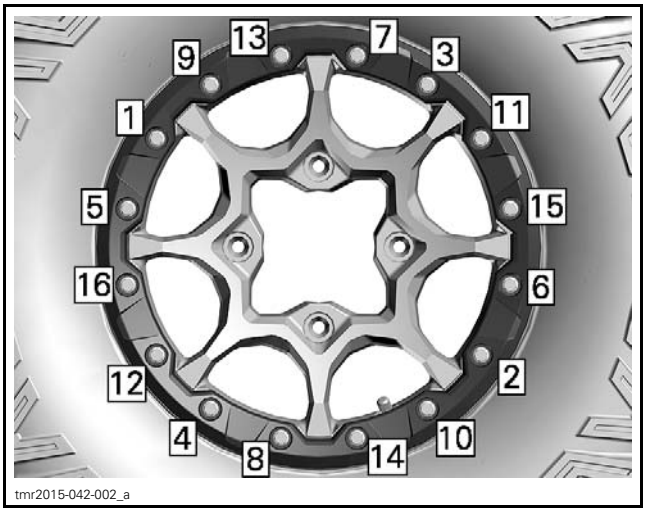

TYPICAL - FIRST TIGHTENING SEQUENCE

5. At this time check if the tire is still centered on wheel. Reposition it if necessary.
6. Tighten beadlock screws as per the **second** torque using the same sequence.

TIGHTENING TORQUE	
Beadlock screws (SECOND TORQUE)	8 N•m ± 1 N•m (71 lbf•**in** ± 9 lbf•**in**)

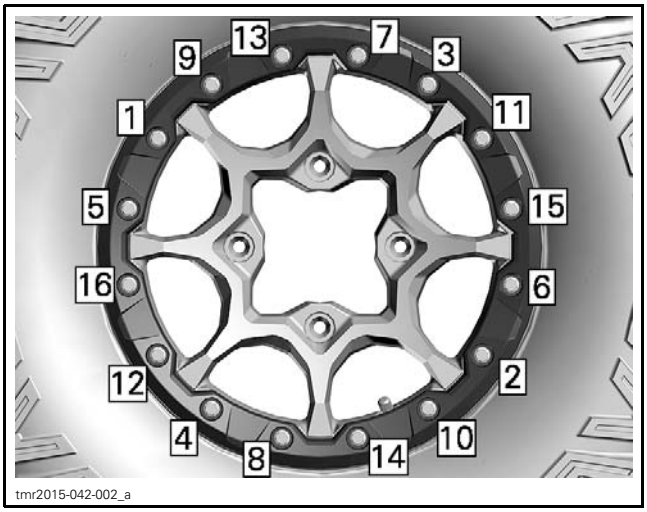

tmr2015-042-002_a

TYPICAL - SECOND TIGHTENING SEQUENCE

NOTE: The beadlock clamp ring should be in contact with the beadlock inner ring. The beadlock clamp ring can flex slightly to match the tire bead. IT IS NORMAL.

7. Verify the gap between tire and beadlock clamp ring, it should be practically equal all around the ring.

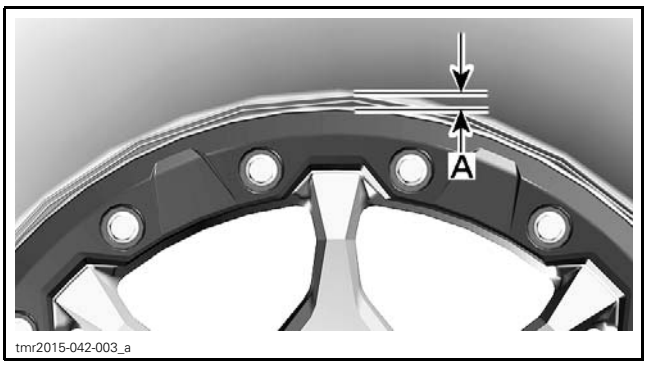

tmr2015-042-003_a

TYPICAL
A. Gap equal all around beadlock clamp ring

If the gap is not acceptable:
- Loosen all screws.
- Check tire position on wheel and reposition it if necessary.
- Restart the tightening sequence as detailed.

8. Tighten beadlock screws a **final** time as per following specification and sequence.

TIGHTENING TORQUE	
Beadlock screws (FINAL TORQUE)	11 N•m ± 1 N•m (97 lbf•**in** ± 9 lbf•**in**)

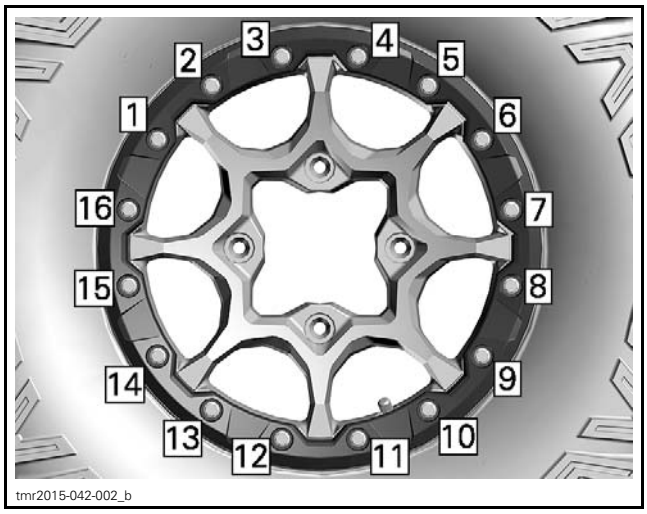

tmr2015-042-002_b

TYPICAL - FINAL TIGHTENING SEQUENCE

9. Inflate tire to seat the inner bead on wheel. Always use safe practices, such as a tire safety cage.

⚠ WARNING

Never exceed tire recommended maximum pressure for seating beads.

WHEELS

Wheel Removal

Loosen nuts just enough to be able to unscrew them once the vehicle will be off the ground.

Lift and support the vehicle. Refer to *INTRODUCTION* subsection.

Remove nuts, then remove wheel.

Wheel Inspection

Inspect wheel for wear or damage especially at the mounting holes.

Wheel Installation

At installation it is recommended to apply anti-seize lubricant on threads.

Tighten wheel lug nuts to the specified torque using the illustrated sequence.

TIGHTENING TORQUE	
Wheel lug nuts	100 N•m ± 10 N•m (74 lbf•ft ± 7 lbf•ft) + LOCTITE 767 (ANTISEIZE LUBRICANT) (P/N 293 800 070) or equivalent

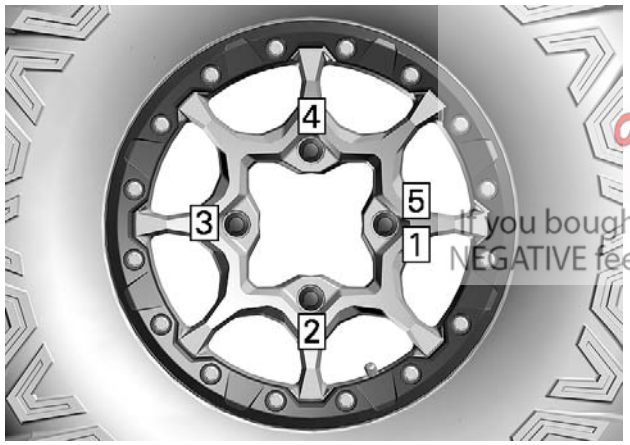

TYPICAL - TIGHTENING SEQUENCE

NOTICE Always use the recommended wheel nuts for the type of wheel. Using a different nut could cause damages to the rim or studs.

Midwest Manuals
Green Manuals
Paperless Manuals
For a Better Tomorrow
If you bought this manual from any other seller please leave them NEGATIVE feedback and notify me at bestshopmanuals@gmail.com

STEERING SYSTEM (WITHOUT DPS)

SERVICE TOOLS

Description	Part Number	Page
STEERING ALIGNMENT TOOL	529 036 059	3

SERVICE PRODUCTS

Description	Part Number	Page
XPS SYNTHETIC GREASE	293 550 010	6

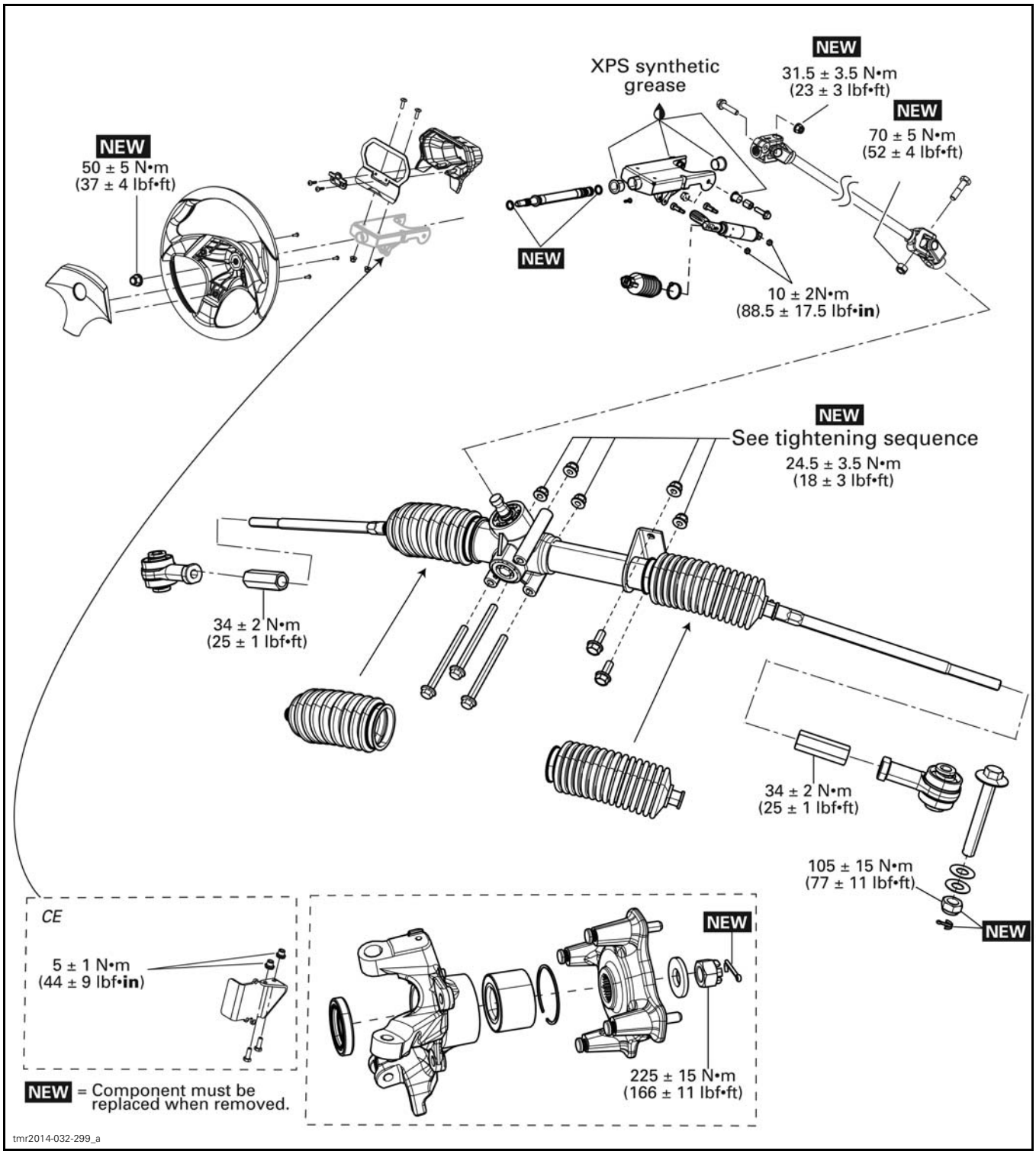
NEW
50 ± 5 N•m
(37 ± 4 lbf•ft)
XPS synthetic grease
NEW
31.5 ± 3.5 N•m
(23 ± 3 lbf•ft)
NEW
70 ± 5 N•m
(52 ± 4 lbf•ft)
NEW
10 ± 2N•m
(88.5 ± 17.5 lbf•in)
NEW
See tightening sequence
24.5 ± 3.5 N•m
(18 ± 3 lbf•ft)
34 ± 2 N•m
(25 ± 1 lbf•ft)
34 ± 2 N•m
(25 ± 1 lbf•ft)
105 ± 15 N•m
(77 ± 11 lbf•ft)
NEW
CE
5 ± 1 N•m
(44 ± 9 lbf•in)
NEW
225 ± 15 N•m
(166 ± 11 lbf•ft)
NEW = Component must be replaced when removed.
tmr2014-032-299_a

GENERAL

The procedures described below are the same for the RH and LH sides, unless otherwise instructed.

If the vehicle has dynamic power steering (DPS) refer to *STEERING SYSTEM (WITH DPS)* section of this supplement.

ADJUSTMENT

STEERING ALIGNMENT

1. Place vehicle on a level surface.
2. Inflate tires to recommended pressure.
3. Find rack and pinion center to center as follows:
   - 3.1 Calculate the total steering wheel rotations from side to side.
   - 3.2 Position the steering wheel at **half** the total rotations.
4. Check steering wheel position:
   - 4.1 If steering angle is within ± 3°, go to **step 6**.
   - 4.2 If steering angle is outside of ± 3°, go to **step 5**.

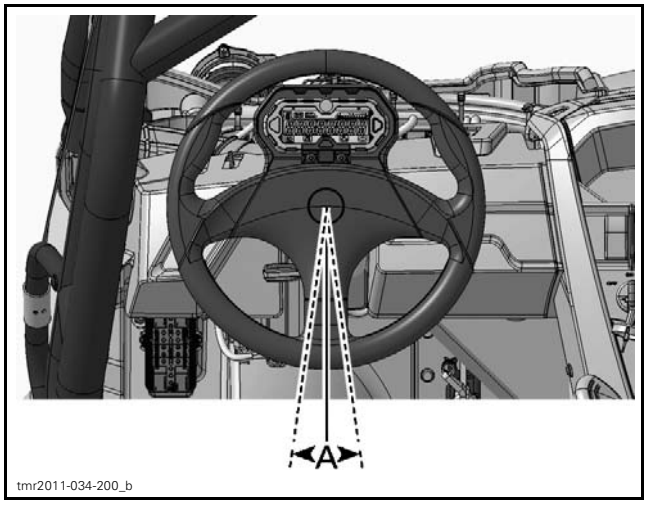

A. Steering wheel angle ± 3°

5. Reposition steering wheel onto steering shaft as follows:

   NOTICE **Make sure rack and pinion does not move during steering wheel repositioning.**

   - 5.1 Remove steering wheel, refer to *STEERING WHEEL REMOVAL*.
   - 5.2 Reinstall steering wheel to the closest centered position (nearest spline).
6. Center steering wheel.

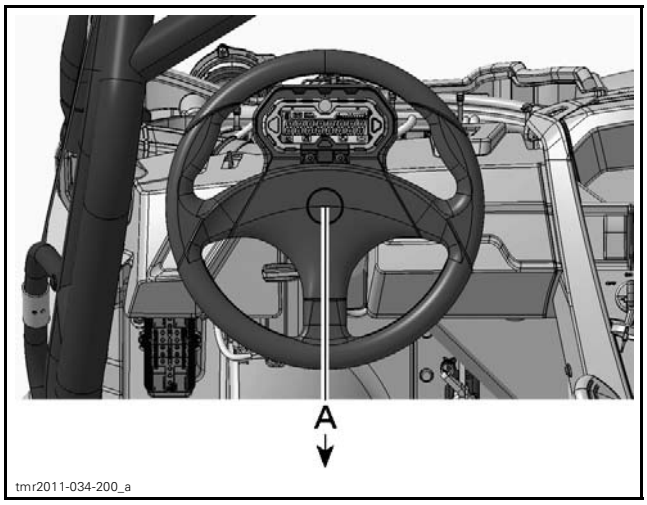

A. Steering wheel centered

7. Remove two wheel lug nuts from a rear wheel.
8. Install STEERING ALIGNMENT TOOL (P/N 529 036 059) using proper spacers.

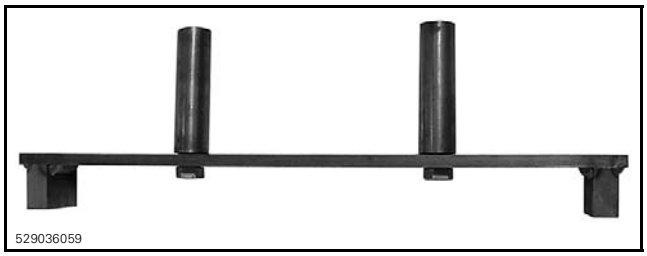

9. Move vehicle to place the tool level with the ground.

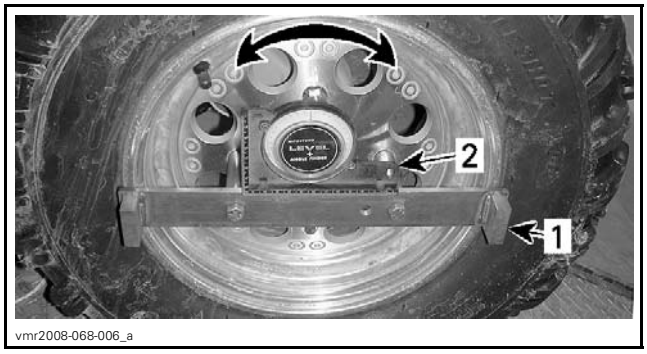

REAR WHEEL
1. Steering adjustment tool
2. Angle gauge or level

10. Place a rope around vehicle tires.
11. Using an elastic, link both ends together.
12. Adjust rope at the center of the wheels.
13. From the front of vehicle, near the front of rim, move rope so that it does not touch the first spacer of tool.

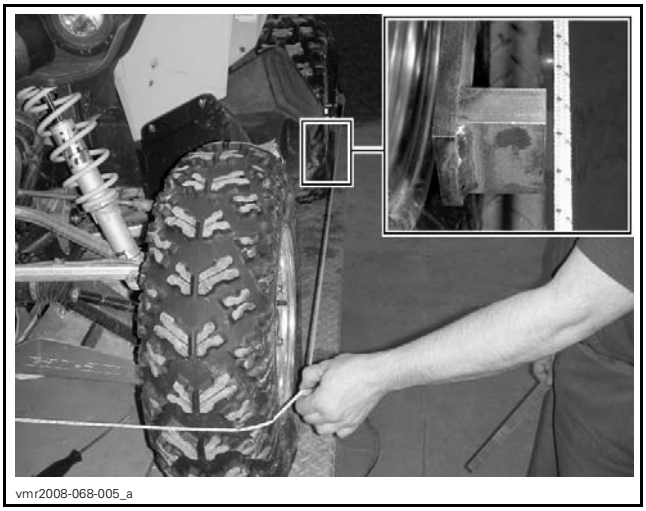
vmr2008-068-005_a

TYPICAL

14. Slowly move rope back until it makes contact with spacer.


vmr2008-068-007

TYPICAL

15. Keep rope in this position.
16. Measure distance of the front wheel between rope and rim as follows:
    - At the front of rim
    - At the rear of rim.

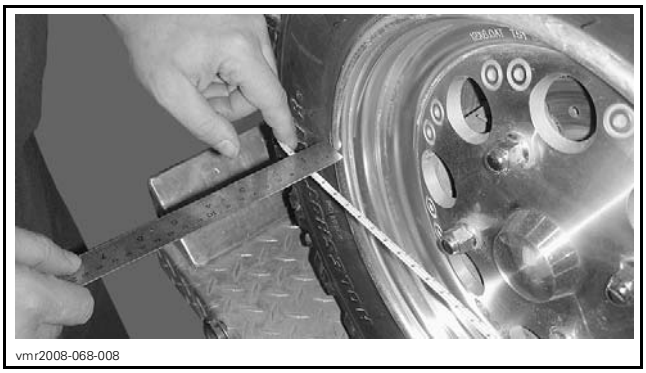
vmr2008-068-008

TYPICAL — AT THE FRONT OF RIM


vmr2008-068-009

TYPICAL — AT THE REAR OF RIM

17. Calculate the difference between the rear and the front measurement.
18. The difference must be as per the following specification:

WHEEL TOE
0 mm ± 4 mm (0 in ± .157 in)

19. If the wheel toe measurement is out of specification:

    19.1 Adjust tie-rod end.

⚠ WARNING

The minimum tie-rod end length engagement in the tie rod must be 25 mm (1 in).

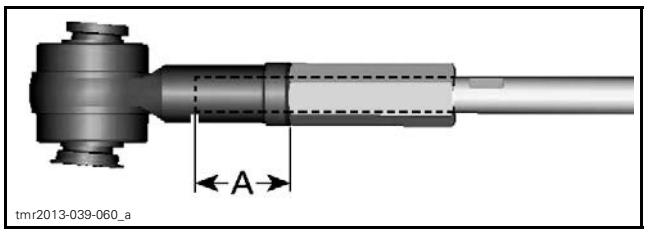

tmr2013-039-060_a

A. Minimum tie-rod end length engagement

    19.2 Tighten tie-rod end locking nut to specification.

TIE-ROD END LOCKING NUT TORQUE
34 N•m ± 2 N•m (25 lbf•ft ± 1 lbf•ft)

20. Repeat procedure for the other wheel.

TROUBLESHOOTING

DIAGNOSTIC TIPS

Turning Radius Unequal

If vehicle turns more on one side than the other, check rack and pinion center to center. Refer to *STEERING ALIGNMENT* in this subsection.

PROCEDURES

STEERING WHEEL

Steering Wheel Removal

Follow order in illustration below.

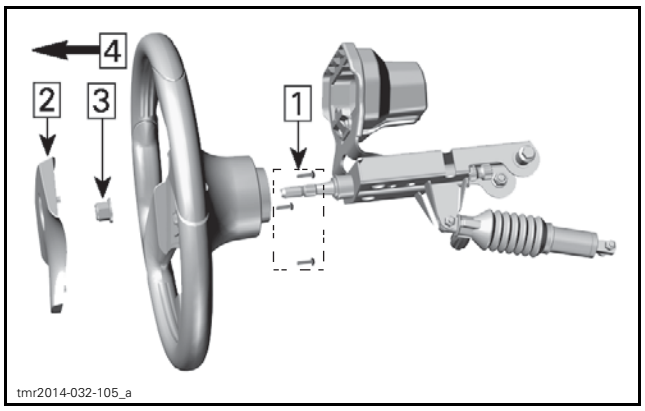

Steering Wheel Installation

The installation is the reverse of the removal procedure. However, pay attention to the following.

Prior to installing the steering wheel, place front wheels parallel with longitudinal plane of vehicle.

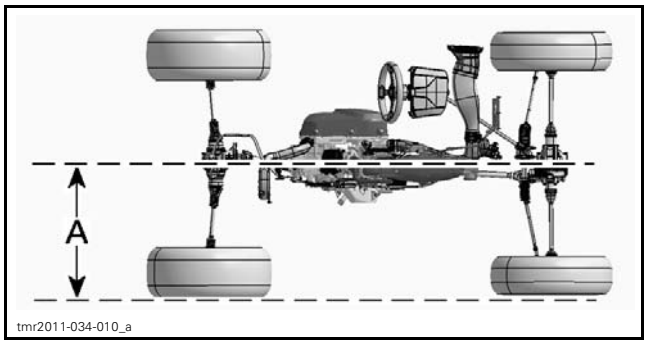

A. Front wheels parallel

Tighten steering wheel retaining nut to specification.

STEERING WHEEL RETAINING NUT TORQUE
50 N•m ± 5 N•m (37 lbf•ft ± 4 lbf•ft)

Check front wheel alignment. Refer to *STEERING ALIGNMENT* in this subsection.

STEERING COLUMN

Steering Column Removal

1. Center steering wheel.
2. Remove bolt and nut securing upper universal joint to steering shaft. Discard the nut.

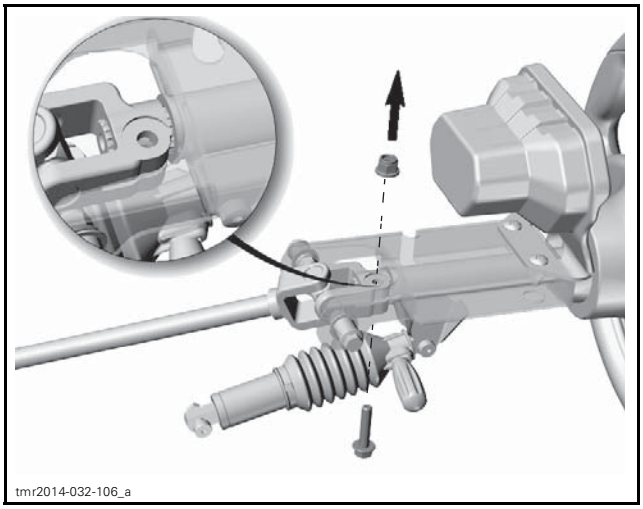

3. Remove steering wheel and steering shaft as an assembly.

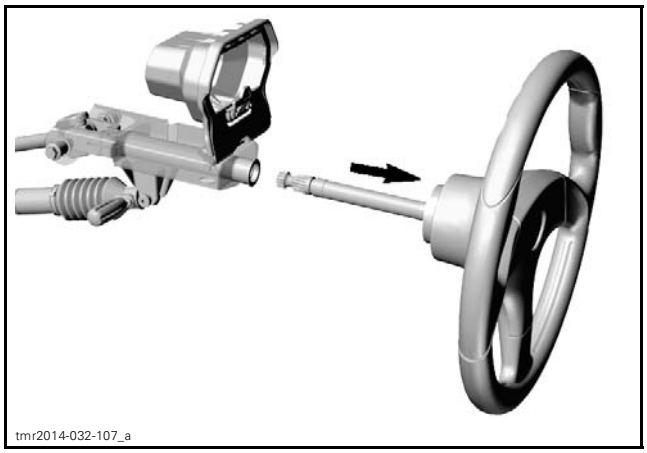

4. Remove bolt and nut securing lower universal joint to rack and pinion. Discard the nut.

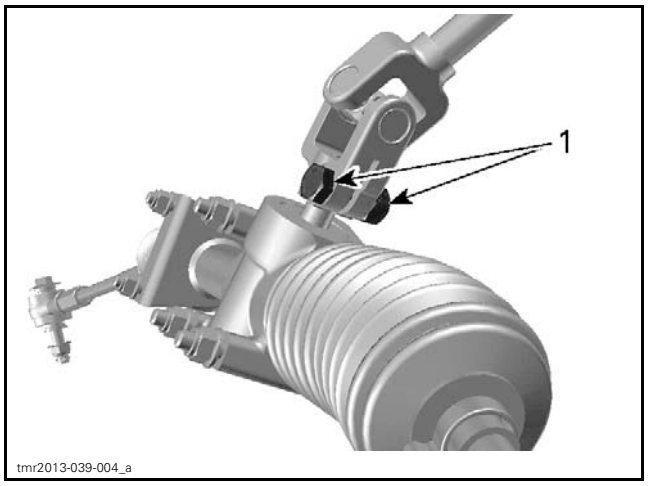

1. Bolt and nut

5. Pull steering column upwards to detach it from rack and pinion.

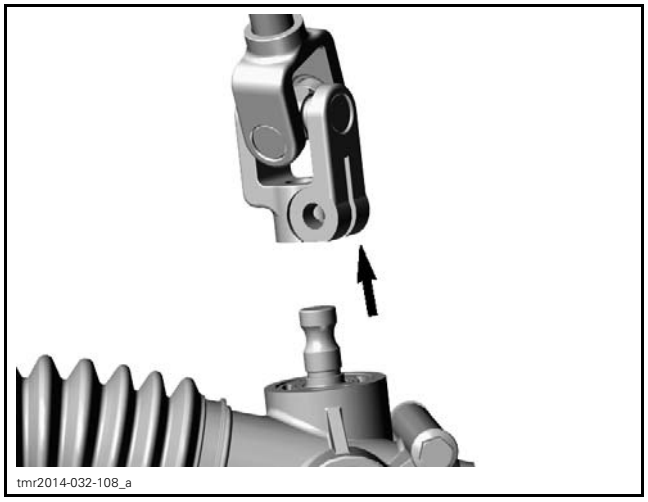

6. Carefully push steering column downwards to release it from steering support.

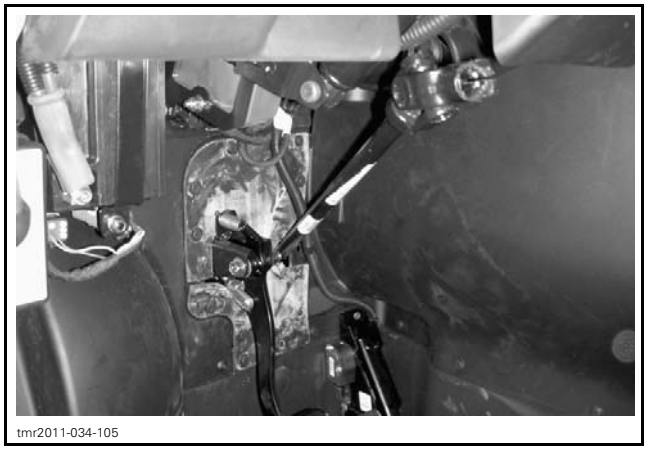

7. Remove steering column from vehicle.

Steering Column Inspection

Check steering column for wear, cracks or bending.

Check steering shaft for wear, cracks or bending.

Check if universal joints move freely.

Check if steering shaft O-rings are brittle, hard or otherwise damaged.

Replace if necessary.

Steering Column Installation

The installation is the reverse of the removal procedure. However, pay attention to the following.

Prior to installing the steering column, place front wheels parallel with longitudinal plane of vehicle.

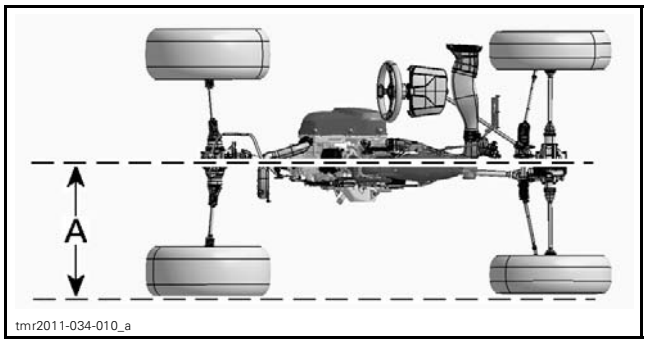

A. Front wheels parallel

Lubricate steering shaft.

STEERING SHAFT LUBRICATION
XPS SYNTHETIC GREASE (P/N 293 550 010)

NOTE: If upper yoke opening is not horizontal when the steering shaft is installed, the steering wheel will appear crooked if the height is adjusted.

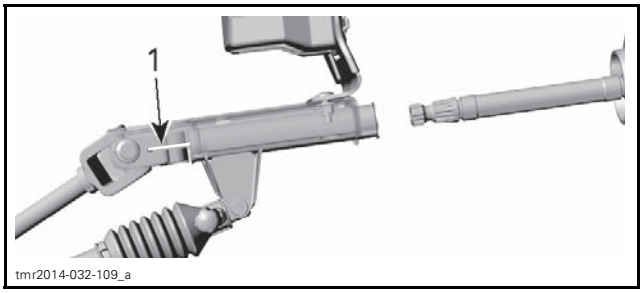

1. Horizontal yoke opening

Install steering wheel and steering shaft. Make sure steering wheel is properly centered.

Fully engage the yoke onto pinion shaft.

Tighten steering column U-joints to specification. Use NEW nuts.

UPPER U-JOINT NUT TORQUE
31 N•m ± 3 N•m (23 lbf•ft ± 2 lbf•ft)

LOWER U-JOINT NUT TORQUE
70 N•m ± 5 N•m (52 lbf•ft ± 4 lbf•ft)

Check front wheels alignment. Refer to *STEERING ALIGNMENT* in this subsection.

RACK AND PINION

Rack and Pinion Servicing

Rack and pinion is not serviceable except for boots and tie rod ends replacement.

Rack and Pinion Removal

1. Safely lift and support the front of vehicle. Refer to *INTRODUCTION* subsection.
2. Remove both front wheels.
3. Remove steering column. Refer to *STEERING COLUMN REMOVAL* in this subsection.
4. Detach tie-rod ends from knuckles. Refer to *TIE ROD END REPLACEMENT* in this subsection.
5. Remove bolts and nuts securing rack and pinion to frame.

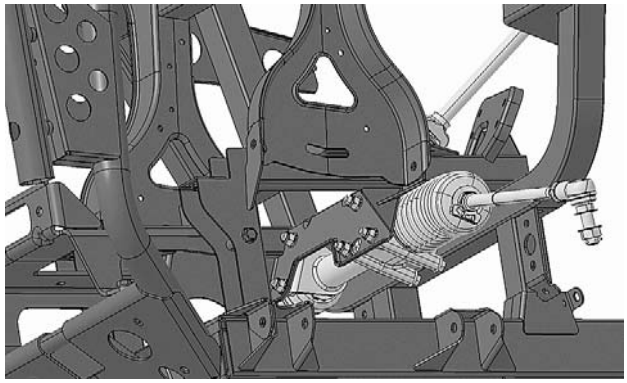

LH SIDE VIEW

6. From the LH side, remove rack and pinion from vehicle.

Rack and Pinion Installation

The installation is the reverse of the removal procedure. However, pay attention to the following.

Find rack and pinion center as follows:

– Calculate the total pinion shaft rotations from side to side.
– Position the pinion shaft at **half** the total rotations.

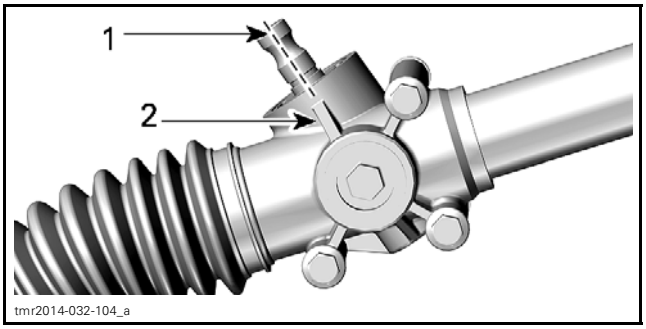

1. Mark center
2. Rack and pinion casing

Loosely install retaining bolts and nuts of rack and pinion.

Torque retaining nuts of rack and pinion according to specification using the following sequence.

RACK AND PINION RETAINING NUTS TORQUE
24.5 N•m ± 3.5 N•m (18 lbf•ft ± 3 lbf•ft)

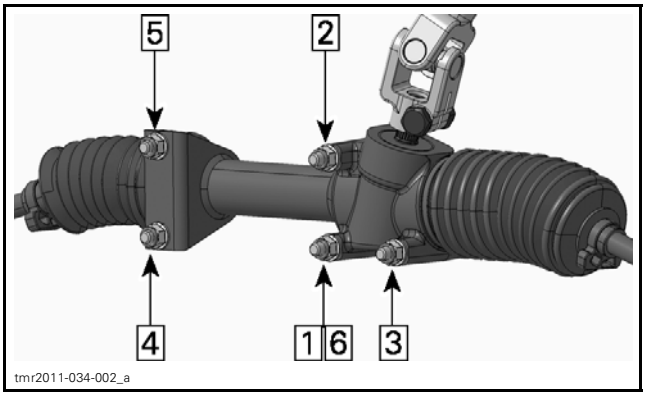

TIGHTENING SEQUENCE

Install steering column.

Check the steering alignment. Refer to *STEERING ALIGNMENT* in this subsection.

TIE-ROD ENDS

Tie-Rod End Replacement

1. Safely lift and support the front of vehicle. Refer to *INTRODUCTION* subsection.
2. Remove front wheel.
3. Detach tie-rod end by removing:
   – Cotter pin
   – Tie-rod end retaining nut
   – Hardened washers
   – Tie-rod end bolt.

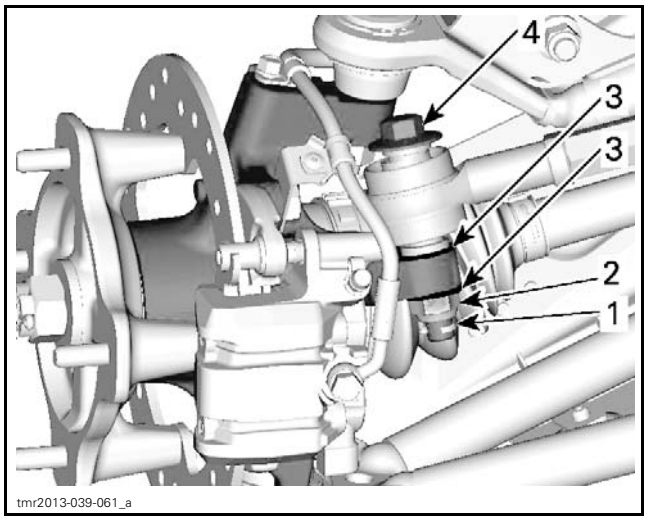

1. Cotter pin
2. Tie-rod end retaining nut
3. Hardened washers
4. Tie-rod end bolt

4. Discard cotter pin and nut.
5. Replace tie-rod end.
6. Adjust tie-rod end to the nominal engagement length.

TIE-ROD END NOMINAL ENGAGEMENT LENGTH
25 turns or 31 mm (1.22 in)

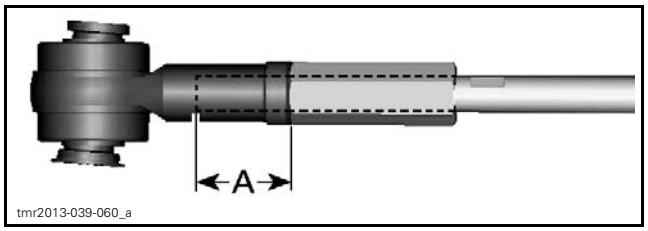

A. Nominal length

⚠ WARNING

The minimum tie-rod end length engagement in the tie rod must be 25 mm (1 in).

7. Torque tie-rod end **locking** nut to specification.

TIE-ROD END **LOCKING** NUT TORQUE
34 N•m ± 2 N•m (25 lbf•ft ± 1 lbf•ft)

8. Attach tie-rod end on knuckle as the reverse of removal.

NOTE: When tightening, make sure tie-rod end casing is parallel with knuckle mounting face to avoid damaging the casing.

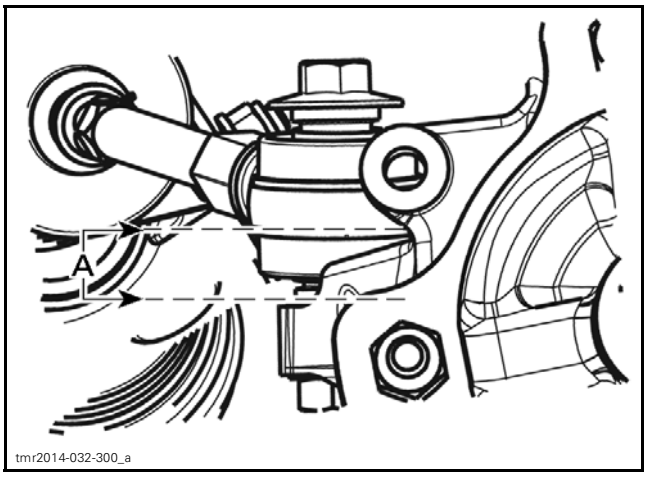

TIE ROD END ASSEMBLY
A. Parallel planes

9. Install a NEW tie-rod end **retaining** nut and torque to specification.

TIE-ROD END **RETAINING** NUT TORQUE
105 N•m ± 15 N•m (77 lbf•ft ± 11 lbf•ft)

10. Install a NEW cotter pin. Both ends of cotter pins must be folded.
11. Install front wheel.
12. Check the steering alignment, refer to *STEERING ALIGNMENT* in this subsection.

KNUCKLES

Knuckle Removal

1. Safely lift and support the front of vehicle. Refer to *INTRODUCTION* subsection.
2. Remove front wheel.
3. Detach tie-rod end from knuckle, refer to *TIE-ROD END* in this subsection.
4. Remove caliper, refer to *BRAKES* subsection.

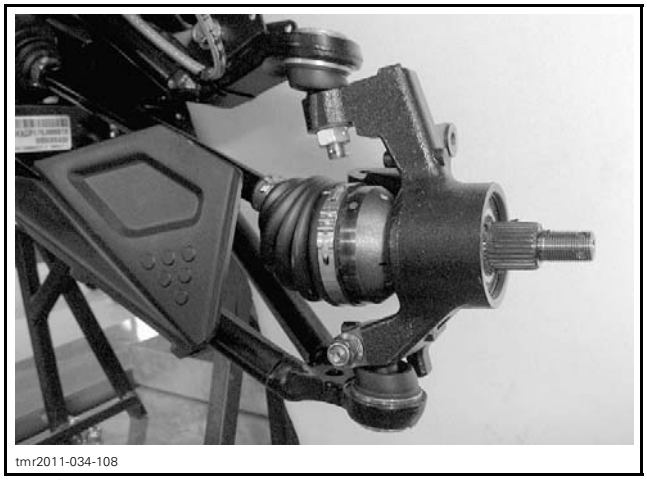

TYPICAL

5. Remove wheel hub, refer to *FRONT DRIVE* subsection.
6. Detach upper suspension arm from knuckle, refer to *FRONT SUSPENSION*.
7. Detach lower suspension arm from knuckle, refer to *FRONT SUSPENSION*.
8. Remove knuckle from vehicle.

Knuckle Inspection

Check knuckle for cracks or other damages.

Replace if necessary.

Knuckle Installation

The installation is the reverse of the removal procedure.

WHEEL BEARINGS

Wheel Bearing Inspection (Maintenance)

Refer to *PERIODIC MAINTENANCE PROCEDURES* subsection.

Wheel Bearing Inspection (During Component Removal)

Whenever the drive axle or knuckle is removed, check wheel bearing as follows:

– Check if wheel bearing turns freely and smoothly.
– Check seal condition.

Replace if necessary.

Wheel Bearing Removal

1. Remove knuckle from vehicle, refer to *KNUCKLE REMOVAL* in this subsection.
2. Remove and discard knuckle seal.
3. Remove circlip.

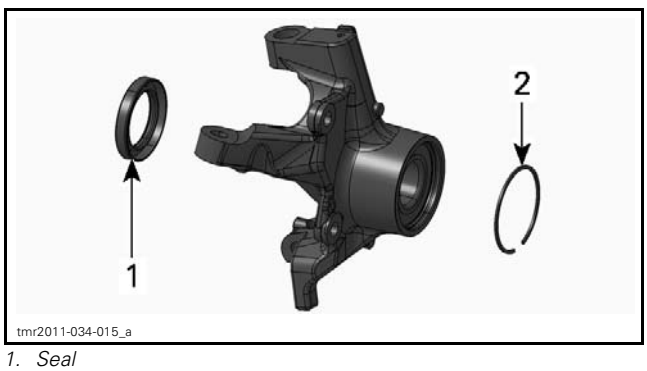

1. Seal
2. Circlip

4. Install knuckle on a press.
5. Use an appropriate bearing remover.
6. Remove bearing from knuckle.

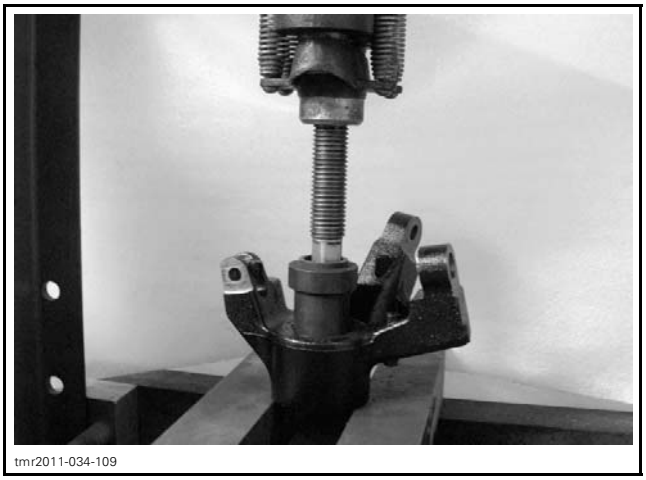

NOTE: It may be necessary to heat the knuckle to remove bearing.

⚠ WARNING

Clean all grease, outside and inside, from knuckle before heating it.

Wheel Bearing Installation

The installation is the reverse of the removal procedure. However, pay attention to the following.

To ease wheel bearing installation:

– Place bearing in a freezer for 10 minutes.
– Place knuckle in oven to 100°C (212°F) for 30 minutes maximum.

When knuckle is cooled down, install NEW circlip and NEW seal.

STEERING SYSTEM

SERVICE TOOLS

Description	Part Number	Page
FLUKE 115 MULTIMETER	529 035 868	17, 19

SERVICE PRODUCTS

Description	Part Number	Page
LOCTITE 767 (ANTISEIZE LUBRICANT)	293 800 070	14, 22, 24
XPS SYNTHETIC GREASE	293 550 010	15–16

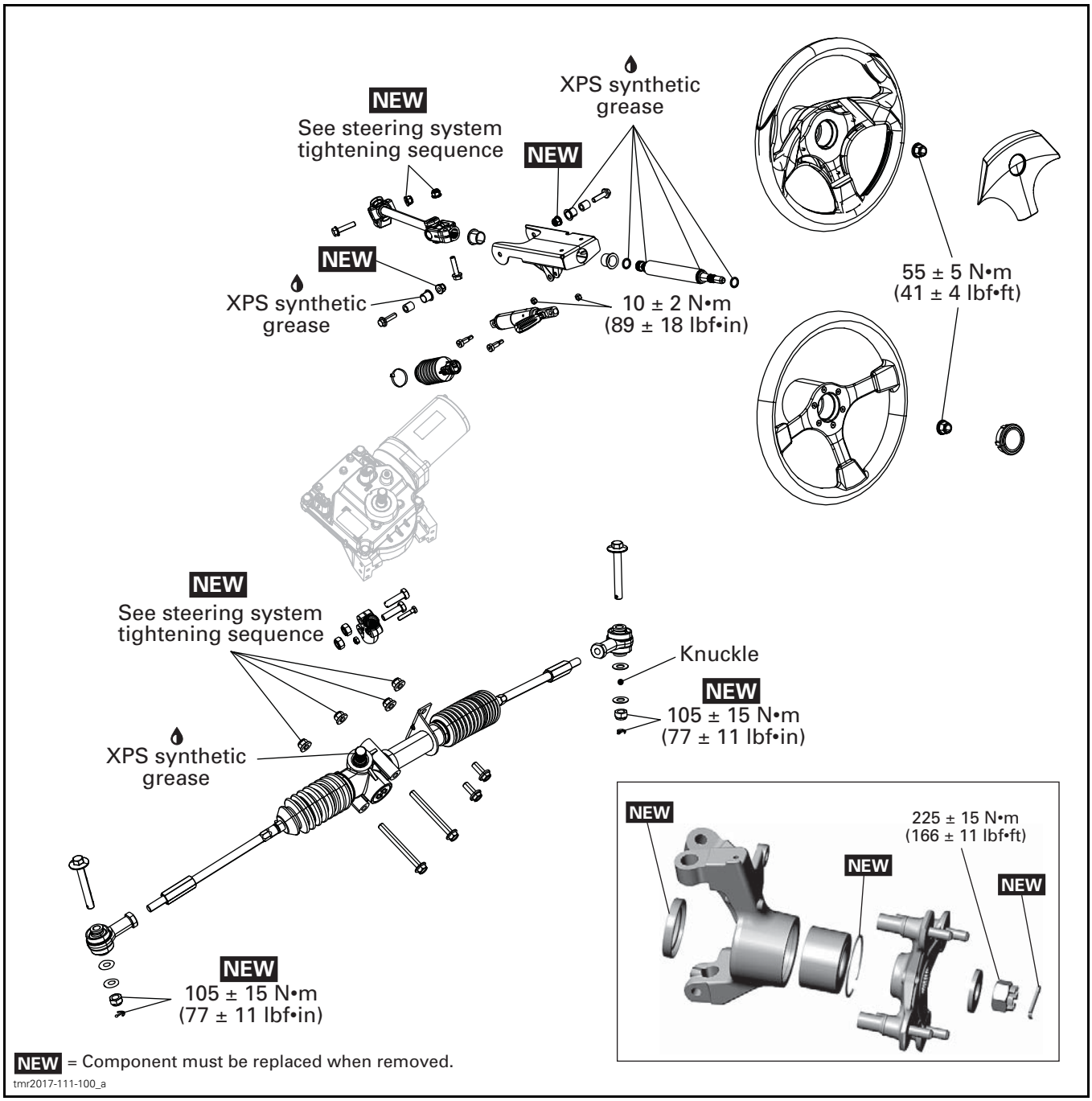
NEW
See steering system tightening sequence
XPS synthetic grease
NEW
NEW
XPS synthetic grease
10 ± 2 N•m
(89 ± 18 lbf•in)
55 ± 5 N•m
(41 ± 4 lbf•ft)
NEW
See steering system tightening sequence
Knuckle
NEW
105 ± 15 N•m
(77 ± 11 lbf•in)
XPS synthetic grease
NEW
105 ± 15 N•m
(77 ± 11 lbf•in)
NEW
225 ± 15 N•m
(166 ± 11 lbf•ft)
NEW
NEW
NEW = Component must be replaced when removed.
tmr2017-111-100_a

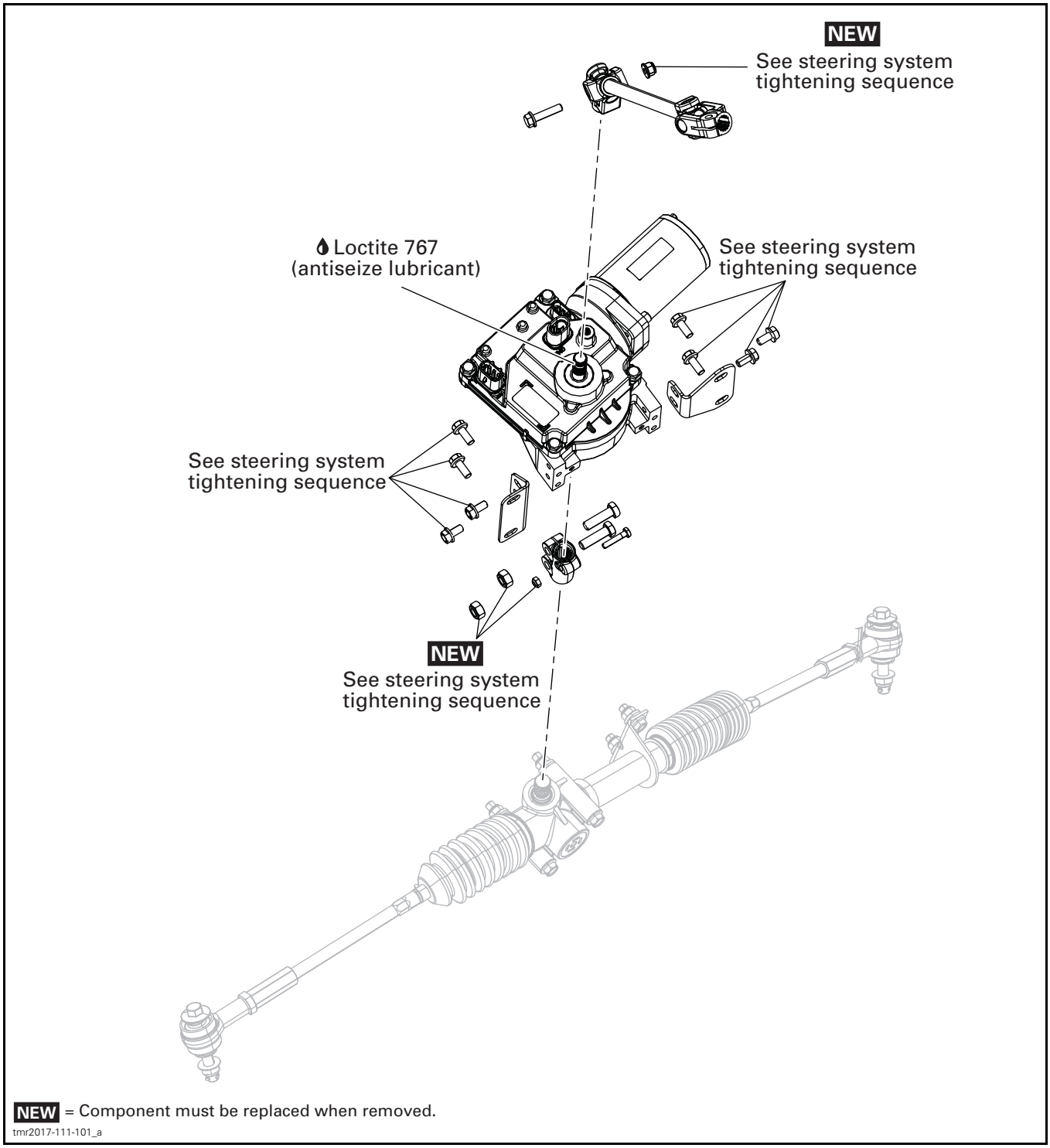

NEW = Component must be replaced when removed.

tmr2017-111-101_a

GENERAL

NOTICE Never perform arc welding in the DPS area. Otherwise, poor DPS operation might occur.

DPS SYSTEM DESCRIPTION (FEATURES)

The Dynamic Power Steering (DPS) provides a computer controlled, variable power assist, achieved by an electric motor to optimize the amount of steering input required by the rider.

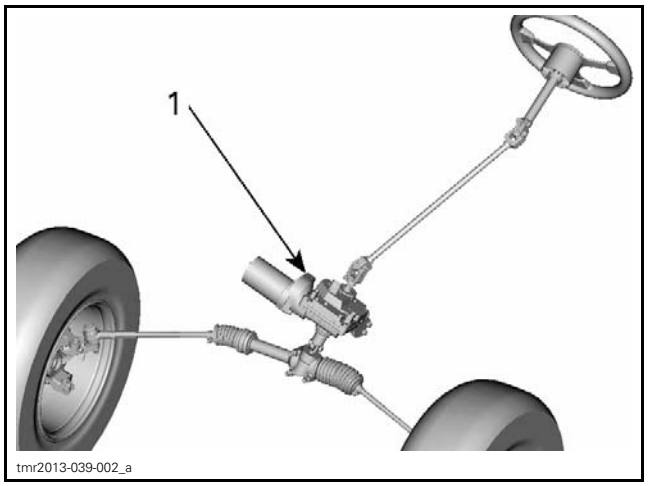

1. Dynamic power steering unit (DPS)

The DPS system uses the following parameters to determine how much steering assist it provides:
- DPS mode
- Engine RPM
- Battery/electrical system voltage
- Vehicle speed
- DPS shaft torque sensor input
- DPS internal temperature.

The amount of steering assist provided is dependent on the steering wheel effort (steering torque), electrical power available, vehicle speed and the DPS assist mode selected.

The greater the steering wheel effort (torque), the greater the assist will be.

The slower the vehicle speed, the greater the assist will be.

If the electrical system is activated but the engine is **not** running, DPS assist will be provided for approximately 30 seconds. DPS assist will resume once the engine is started.

Steering torque may also come from the wheels due to rough terrain. This will produce steering kickback that is reduced by the DPS module, while providing feedback to the driver.

The greater the power steering assist, the greater the load on the electrical system.

When the electrical system is under high load (battery not at full charge, operating the vehicle for prolonged periods at slow speed and low RPM which, requires higher power steering assist), the battery power reserve will gradually decrease. This further increases the load on the charging system and the electrical system voltage will drop. When system voltage has dropped to a low threshold voltage, so does power steering assist.

NOTE: It is important to maintain the battery at a full state of charge to ensure proper DPS operation.

DPS Assist Mode

The DPS system provides three rider selectable modes of operation.

NOTE: The system automatically adjusts to the speed of the vehicle and driving conditions. the modes are designed to meet the preference of the driver.

The following DPS modes are preset in the vehicle.

DPS MODE	
DPS MAX.	Maximum steering assist
DPS MED.	Medium steering assist
DPS MIN.	Minimum steering assist

DPS SYSTEM DESCRIPTION (COMPONENTS)

DPS Unit

The DPS unit is a self contained unit that includes the steering gear, the DPS module, the DPS motor, and the torque sensor.

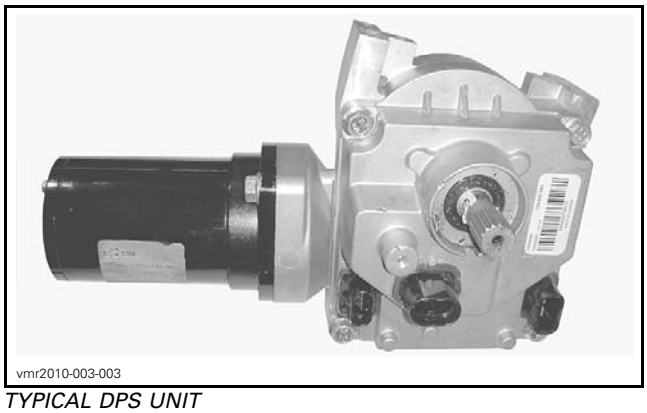

TYPICAL DPS UNIT

The DPS module provides DC power to the motor. The amount and duration of that DC power is determined by the inputs to the DPS module. The direction in which the motor turns is changed by reversing the polarity of the circuit current.

The DPS motor does not "spin", but rather turns in very small increments based on the amount, duration, and direction of DC power delivered by the DPS module.

NOTE: Should the DPS unit fail, vehicle steering is still available with moderate increase in steering effort.

DPS Unit Protection

An internal protection system is integrated in the DPS electronic module.

This system protects the electronic components when the DPS works too hard and the internal temperature reaches a critical level, or when the battery voltage becomes too low.

The internal protection system decreases the assistance level available to protect its electronic board. The normal assistance level will return when riding conditions are back to normal and the internal temperature decreases, and/or when the battery voltage increases above a threshold voltage.

NOTE: This reaction is a normal protective behavior of the unit and does not necessarily raise a fault.

Steering Torque Sensor

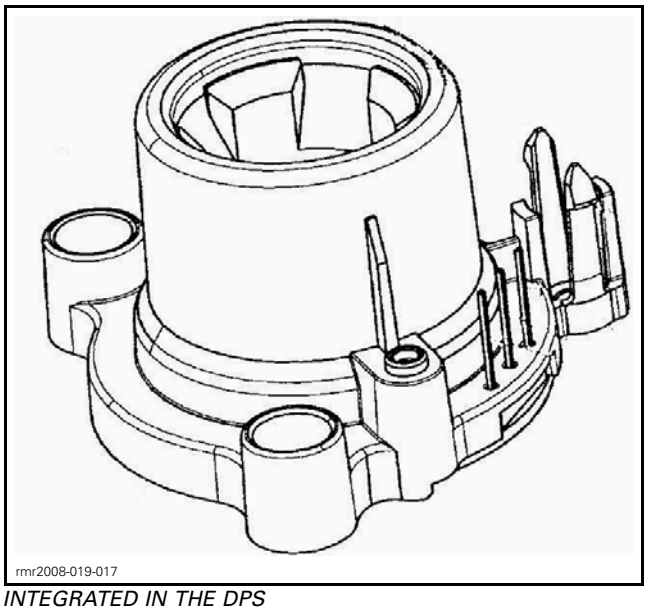

INTEGRATED IN THE DPS

The steering column is connected to the top of of the DPS shaft. A small area of the DPS shaft is magnetized. Inside the DPS unit, a torque sensor surrounds the magnetized area of the DPS shaft.

When the steering wheel is turned, torque is applied to the shaft which tends to twist the shaft slightly, deforming the magnetic field in the shaft. The sensor detects the torque by measuring the deviation of the magnetic field.

The torque sensor is very sensitive and can detect very small changes in the magnetic field. The harder the steering wheel is turned, the greater the magnetic deviation, the greater the power steering assist.

NOTICE **The internal torque sensor is very sensitive to external magnetic source. All components touching the DPS unit must be kept in a non-magnetic area and avoid any contact with magnetized components. When DPS shaft (or touching components) is in contact with a magnetized part or source, this will affect the torque reading values and inadvertently affect the behavior of the DPS unit.**

DPS Switch

The DPS switch is used to change the DPS (Dynamic Power Steering) mode.

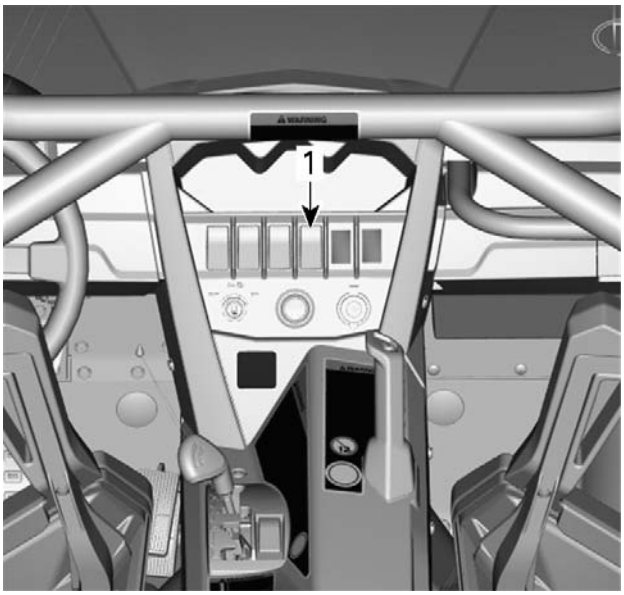

tmo2014-005-002_g

TYPICAL
1. DPS switch

It provides a "voltage ground" to the multifunction gauge that tells the gauge the operator wants to change DPS operating mode.

When the button is held for 2 seconds, the gauge signals the DPS (through CAN bus) to switch to the following DPS mode.

Repeatedly pressing the DPS switch toggles the DPS through its operating modes. The DPS mode selection message will be seen scrolling in the multifunction gauge.



tmr2014-022-013

ADJUSTMENT

ALIGNING THE STEERING COMPONENTS (DPS MODELS)

IMPORTANT: This procedure may solve most of the DPS steering issues and must be carried out before a torque offset reset procedure.

NOTE: The steering components alignment procedure will ensure that no axial or radial loads are applied to the DPS shaft which would result in poor DPS operation. All steering components must be aligned with the rack and pinion, and torqued starting from the rack and pinion, then upwards sequentially to each component from there.

1. Ensure the rack and pinion is centered. Refer to *ALIGNING THE WHEELS*.
2. Ensure steering wheel is within 8° of horizontal position.
3. Loosen the fasteners retaining the following steering components sufficiently to provide free movement of the component:
   – Pinch bolts on upper and lower steering column U-joints
   – All fasteners on the DPS side brackets
   – The DPS **coupler** pinch bolts.
4. Re-torque the fasteners to specification using the specified sequence. Refer to *STEERING SYSTEM TIGHTENING SEQUENCE* in this subsection.
5. Perform the *STEERING SYSTEM SELF TEST (DPS MODELS)* procedure in this subsection.

NOTICE The steering system tightening sequence **must be strictly followed**. Failure to do so may result in a steering component misalignment, poor DPS operation due to an induced erroneous torque on DPS shaft, or the impossibility to perform a torque sensor reset. A magnetized component in contact with DPS shaft might also affect the ability to reset the torque sensor.

NOTICE When tightening all screws on the DPS side brackets, be sure to hold the brackets snugly against the frame and DPS unit to remove any gaps. The side brackets must NOT apply any force on the DPS unit in any direction. This would create an induced erroneous torque to the DPS shaft.

IMPORTANT: Make sure the pinch bolt is engaged in the shaft groove where applicable.

6. Carry out a steering alignment, refer to *ALIGNING THE WHEELS* if needed.

ALIGNING THE WHEELS

1. Place vehicle on a level surface.
2. Inflate tires to recommended pressure.
3. Find rack and pinion center to center as follows:
   - 3.1 Calculate the total steering wheel rotations from side to side.
   - 3.2 Position the steering wheel at **half** the total rotations.
4. Check steering wheel position:
   - 4.1 If steering wheel is centered (within ± 3°), go to **step 6**.
   - 4.2 If steering wheel is off center of more than 3°, go to **step 5**.

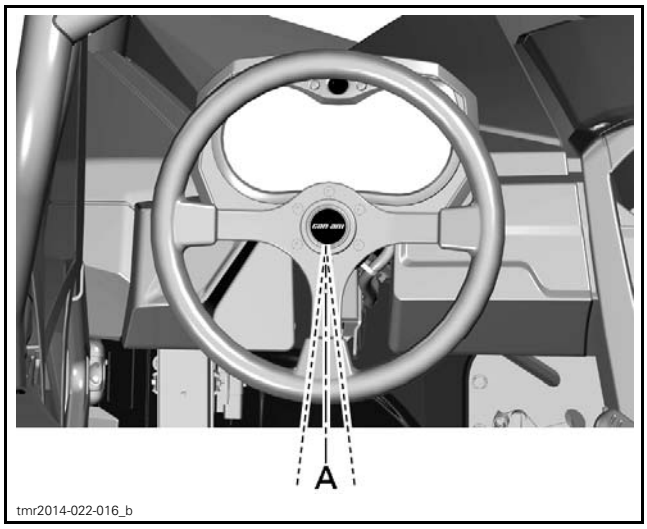

A. Steering wheel angle ± 3°

5. Reposition steering wheel on steering shaft as follows:

   NOTICE **Make sure rack and pinion does not move during steering wheel repositioning.**

   - 5.1 Remove steering wheel, refer to *REMOVING THE STEERING WHEEL*.
   - 5.2 Reinstall steering wheel to the closest centered position (nearest spline).
6. Center steering wheel.

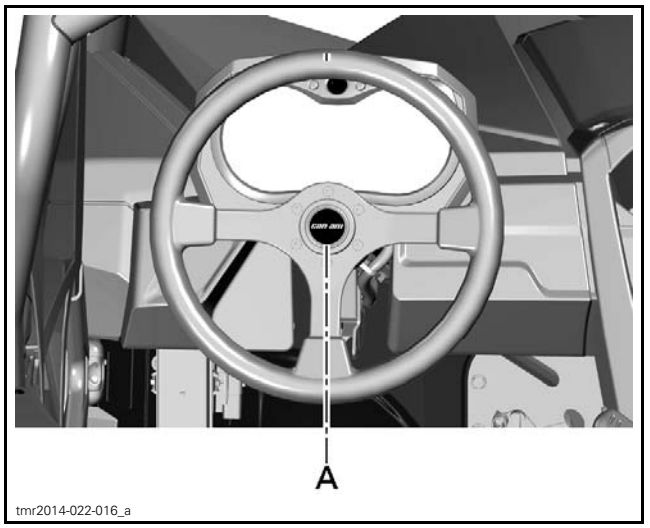

A. Steering wheel centered

Maverick Models

NOTE: The following procedure is the same for front and rear wheels. The order in which the wheels are aligned is not important but do not perform both front and rear wheel alignment simultaneously as the wheels are different sizes. Front wheel measurements are shown for reference.

All Models

7. Place one mark on each (LH & RH) tire with a chalk.

NOTE: The marks must be at the same height (measured) on each front tire.

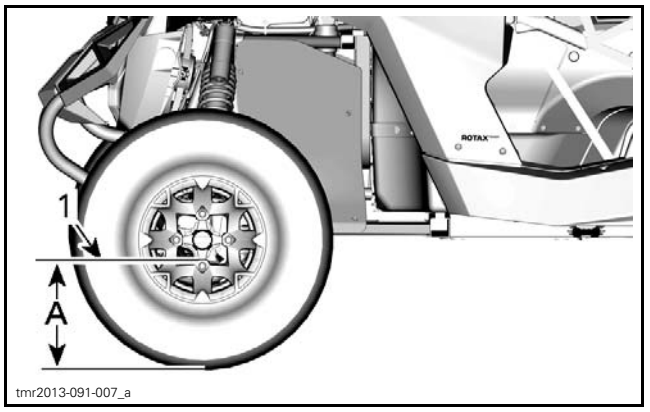

FRONT LH VIEW
1. Mark tire
A. Distance from ground to mark

8. Measure and note the distance between the center of the wheels, level with the marks on the tires.

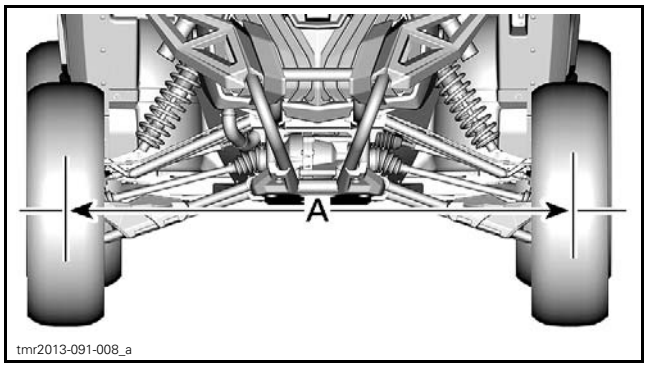

FRONT VIEW
A. Measure distance

9. Roll vehicle forward so that the tires make a complete a 180⁰ rotation.

NOTE: Distance from ground **no. B** to mark on tire must equal distance from ground **no. A** in step 7 for a proper measurement.

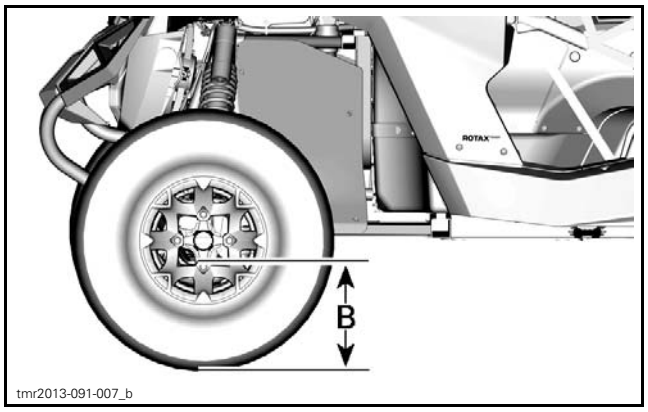

FRONT LH VIEW AFTER ROTATION

10. Measure and note the distance between the same two marks as step 8.
11. Calculate the difference between the front and the rear measurements.
12. The difference must be as per the following specification:

MAXIMUM TOE	
FRONT TOE	REAR TOE (APPLICABLE MODELS)
0 mm ± 9.6 mm (0 in ± .38 in)	0 mm ± 4.8 mm (0 in ± .19 in)

Adjusting Toe at Front (All Models)

1. If the front wheel toe measurement is out of specification lock steering wheel at center.
2. Measure the distance between vehicle center and each wheel.

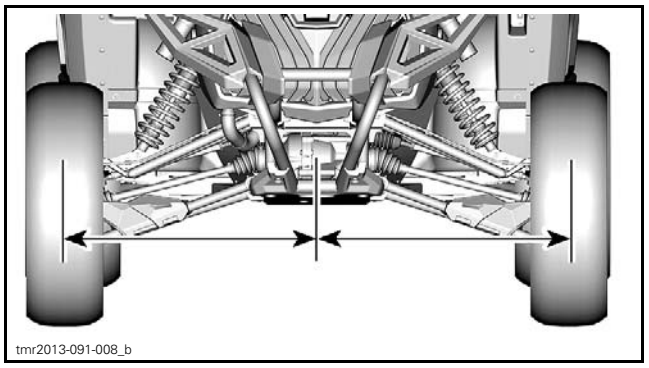

DISTANCE BETWEEN VEHICLE CENTER AND WHEEL

3. Loosen tie-rod end locking nut.
4. Turn tie-rod adjustment sleeve until distance measured in step 2 is equal for each wheel.

NOTE: Adjustment sleeve and inner tie rod will turn together.

⚠ WARNING

The minimum inner tie-rod and tie rod end engagement in adjustment sleeve must be 25 mm (1 in).

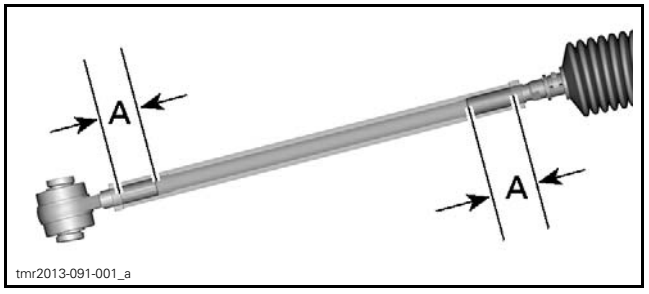

TYPICAL - TIE ROD ASSEMBLY (MAVERICK XDS)
A. Minimum engagement length

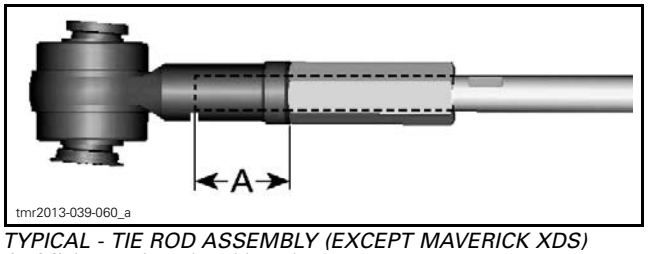

TYPICAL - TIE ROD ASSEMBLY (EXCEPT MAVERICK XDS)
A. Minimum tie-rod end length engagement

5. Tighten tie-rod adjustment sleeve locking nuts to specification.

TIGHTENING TORQUE	
Tie-rod end locking nut	34 N•m ± 2 N•m (25 lbf•ft ± 1 lbf•ft)

6. Recheck that vehicle toe is within limits by repeating procedure.

Adjusting Toe at Rear (Maverick Models)

Rear LH shown.

1. Measure the distance between vehicle center and each wheel.

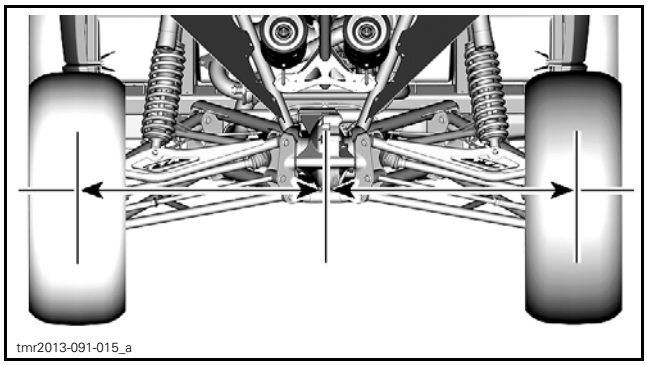
tmr2013-091-015_a

2. Loosen rear toe link adjustment sleeve locking nuts.

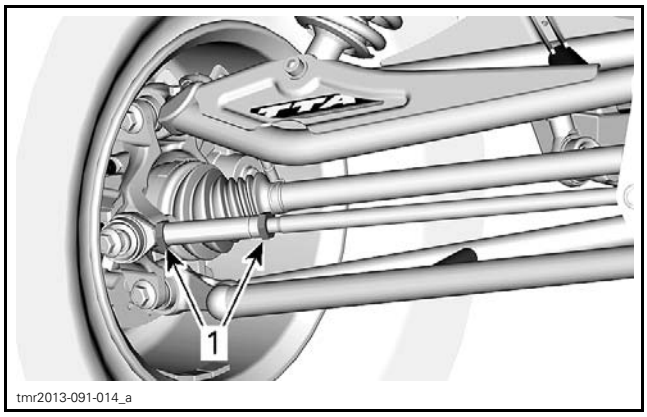

tmr2013-091-014_a

1. Rear toe link adjustment sleeve locking nuts

3. Adjust rear toe link sleeve until distance measured in step 1 is equal for each wheel.

⚠ WARNING

The minimum rear toe link engagement in adjustment sleeve must be 25 mm (1 in).

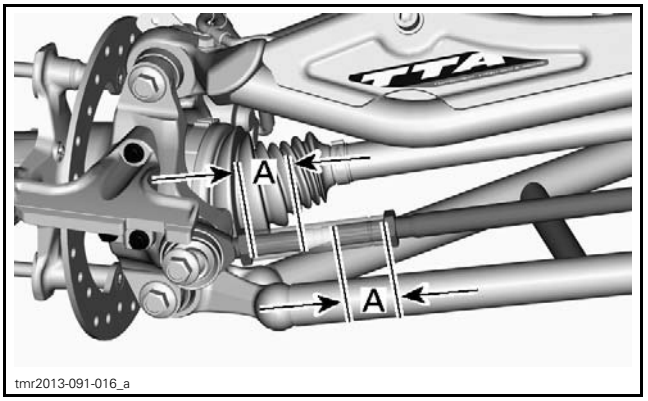

tmr2013-091-016_a

A. Minimum engagement length

4. Tighten rear toe link locking nuts to specification.

TIGHTENING TORQUE	
Rear toe link locking nut	34 N•m ± 2 N•m (25 lbf•ft ± 1 lbf•ft)

5. Recheck that vehicle toe is within limits by repeating verification procedure.

TROUBLESHOOTING

CUSTOMER COMPLAINT ABOUT THE STEERING SYSTEM

1. DPS or mechanical failure.
   - *Perform the STEERING SYSTEM SELF TEST (DPS MODELS) procedure in this subsection.*

UNEQUAL TURNING RADIUS

1. Rack and pinion not centered during steering system parts installation.
   - *Refer to ALIGNING THE WHEELS in this subsection.*

NO POWER STEERING ASSIST

1. DPS malfunction.
   - *If the CHECK ENGINE light is on and a CHECK DPS message is visible in the multifunction gauge, check for fault codes and carry out service action.*
2. No power to DPS unit.
   - *Carry out a TESTING THE DPS FUSE as detailed in this subsection. Replace as required.*
   - *Carry out a TESTING THE DPS INPUT VOLTAGE as detailed in this subsection. Repair or replace wiring/connectors as required.*
   - *Carry out a TESTING THE DPS IGNITION SIGNAL VOLTAGE as detailed in this subsection. Repair or replace wiring/connectors as required.*
3. No ground to DPS unit.
   - *Carry out a TESTING THE DPS GROUND CIRCUIT as detailed in this subsection. Repair or replace wiring/connectors as required.*
4. No engine RPM signal from ECM.
   - *If engine RPM can be displayed in the multifunction gauge when the engine is running, carry out a TESTING THE DPS UNIT COMMUNICATION LINK (CAN) CONTINUITY as detailed in this subsection. Repair or replace wiring/connector as required.*
   - *If engine RPM cannot be displayed in the multifunction gauge, check for fault codes. Carry out service actions.*
5. No DPS mode signal from multifunction gauge.
   - *Ensure DPS switch circuit is functioning correctly (continuity to ground).*
   - *Check for multifunction gauge (CLUSTER) or communication fault codes.*
   - *Check if a software update is required for the multifunction gauge.*
   - *Ensure continuity of CAN bus from multifunction gauge to DPS unit as detailed in this subsection. Repair or replace wiring/connector as required.*
   - *Replace multifunction gauge.*

LOW POWER STEERING ASSIST

1. DPS mode selection.
   - *If DPS is selected to DPS MIN mode, switch to a higher assist mode and ensure DPS assist has increased.*
2. Low battery voltage.
   - *Check battery terminals. Clean, repair, replace or tighten as required.*
   - *Test battery. Recharge or replace battery as required.*
   - *Carry out a TESTING THE DPS SYSTEM LOAD as detailed in this subsection.*
3. Low input voltage to DPS unit.
   - *Carry out a TESTING THE DPS INPUT VOLTAGE as detailed in this subsection. Ensure power connector pin (DPS2-A) is clean, corrosion free, tight, and make good contact. Repair or replace wiring/connectors as required.*
4. Faulty DPS ground circuit.
   - *Carry out a TESTING THE DPS GROUND CIRCUIT. Ensure DPS ground connector pin (DPS2-B) and frame ground post are clean, corrosion free, tight, and make good contact. Repair or replace wiring/connector as required.*

ASYMMETRICAL POWER STEERING ASSIST (SIDE TO SIDE)

1. Unequal tire pressure.
   - *Adjust tire pressure as per tire decal or TECHNICAL SPECIFICATIONS.*
2. Vehicle alignment.
   - *Ensure all steering components are undamaged and in good working order. Repair or replace as required.*
   - *Carry out a steering alignment , refer to ALIGNING THE WHEELS in this subsection.*
3. Steering system components misaligned.
   - *Carry out the ALIGNING THE STEERING COMPONENTS (DPS MODELS) procedure as detailed in this subsection.*
4. DPS malfunction.
   - *Carry out a TESTING THE DPS CURRENT as detailed in this subsection.*
5. Torque sensor not reset to zero.
   - *When all other possibilities have been eliminated, carry out the RESETTING THE TORQUE OFFSET procedure detailed in this subsection.*

DPS ASSIST MODE CANNOT BE CHANGED

1. Communication problem, faulty gauge, faulty DPS, faulty wiring or connections.
   - *Carry out STEERING SYSTEM SELF TEST (DPS MODELS). If test fails, the diagnostic software will provide a diagnostic guideline.*
   - *CCheck for fault codes.*
   - *Carry out service actions.*
2. No DPS switch signal to multifunction gauge.
   - *Disconnect multifunction gauge and check continuity of DPS switch circuit to ground.*
3. No DPS mode signal from multifunction gauge to DPS unit.
   - *Check continuity of CAN bus from multifunction gauge to DPS unit.*
   - *If the CAN bus circuit and mode switch circuit test good, replace gauge.*
4. DPS unit not responding to mode change signal from multifunction gauge.
   - *Ensure DPS unit is properly connected and that connector contacts are clean and in good condition.*
   - *Ensure DPS unit has a good ground.*
   - *Ensure DPS unit receives proper input voltages.*

TORQUE SENSOR CANNOT BE RESET

1. Mechanical problem or DPS parts.
   - *Refer to RESETTING THE TORQUE OFFSET in this subsection.*
2. Torque offset too great.
   - *Refer to RESETTING THE TORQUE OFFSET in this subsection.*

PROCEDURES

STEERING SYSTEM SELF TEST (DPS MODELS)

This test verifies the DPS torque reading on the entire steering angle range.

It is made to detect:

– Steering component misalignment
– Magnetized component in contact with DPS main shaft.

NOTE: *STEERING SYSTEM SELF TEST (DPS MODELS)* will not test any internal function or any performance of the DPS itself and it will not verify the accuracy of the vehicle wheel alignment.

If the test fails, the diagnostic software will provide a description of the failure and suggest a corrective action.

To initiate the test:

1. Connect vehicle to the applicable diagnostic software. Refer to *COMMUNICATION TOOLS AND B.U.D.S.* subsection.
2. Select:
   – **Functions** page.
   – **DPS** button.
   – **Routines** tab.
3. Follow the instructions on the screen.
4. Click on **Validate Steering Assembly**.

The test will run by itself, then the result will be displayed.

NOTICE **Ensure to perform corrective action as per the procedures outlined in this subsection.**

STEERING SYSTEM TIGHTENING SEQUENCE (DPS MODELS)

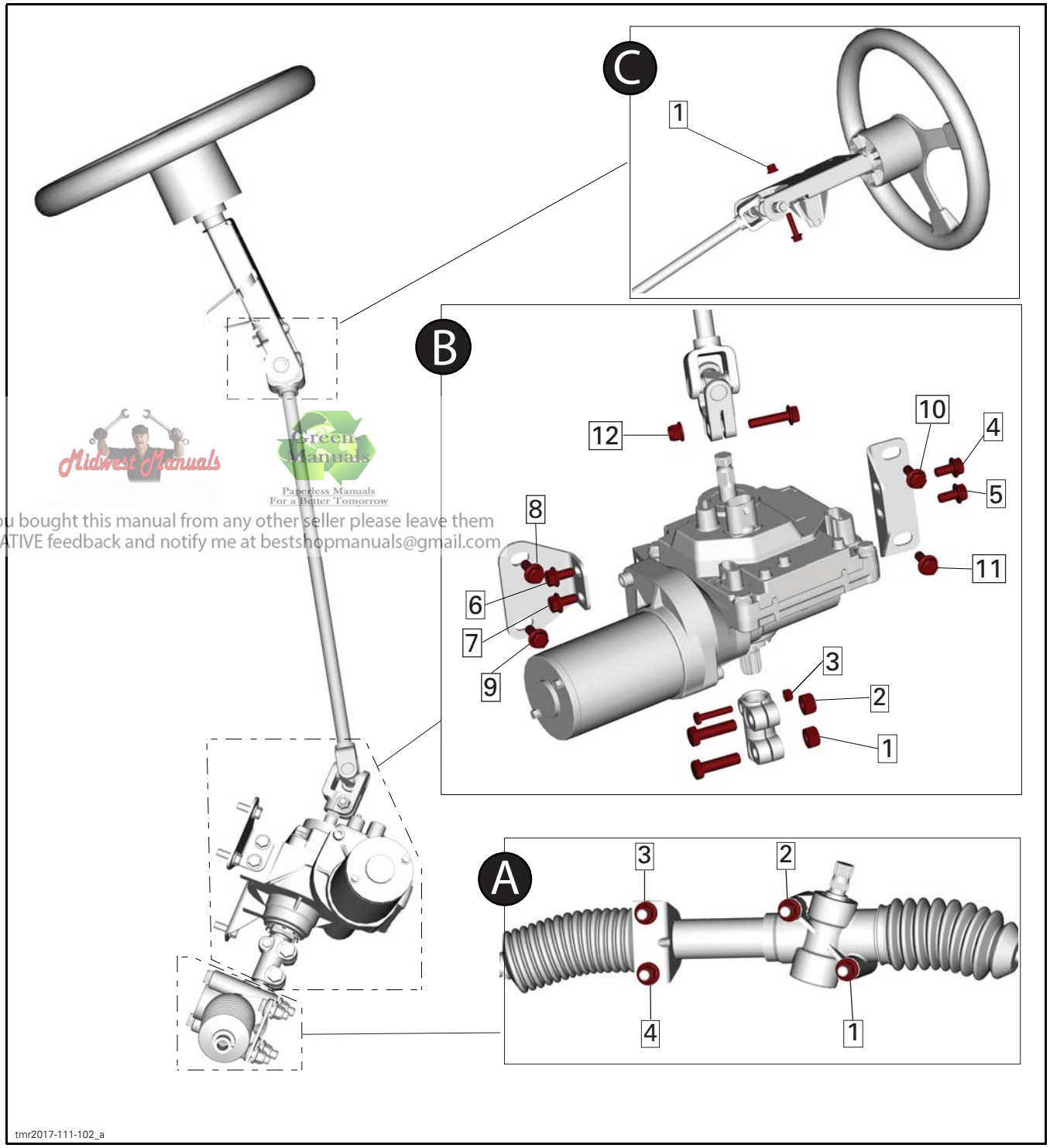

Midwest Manuals
Green Manuals
Paperless Manuals
For a Better Tomorrow
If you bought this manual from any other seller please leave them
NEGATIVE feedback and notify me at bestshopmanuals@gmail.com

TIGHTENING TORQUE		
Level A	no. 1 - 4	48 N•m ± 6 N•m (35 lbf•ft ± 4 lbf•ft)
Level B	no. 1 - 2	70 N•m ± 5 N•m (52 lbf•ft ± 4 lbf•ft)
	no. 3	10 N•m ± 2 N•m (89 lbf•**in** ± 18 lbf•**in**)
	no. 4 - 7	24.5 N•m ± 3.5 N•m (18 lbf•ft ± 3 lbf•ft)
	no. 8 - 11	24.5 N•m ± 3.5 N•m (18 lbf•ft ± 3 lbf•ft)
	no. 12	31.5 N•m ± 3.5 N•m (23 lbf•ft ± 3 lbf•ft)
Level C	no. 1	31.5 N•m ± 3.5 N•m (23 lbf•ft ± 3 lbf•ft)

RESETTING THE TORQUE OFFSET

NOTE: Before resetting the torque offset:

– Carry out *ALIGNING THE STEERING COMPONENTS (DPS MODELS)*, see procedure in this subsection.
– The vehicle must be properly aligned and the steering centered.

The torque offset resetting procedure can only then be carried out as a last resort if one of the following conditions exist:

– Left and right steering imbalance (steering effort)
– Unequal self centering
– The torque offset is within ±10Nm.

1. Position the steering wheel at the center position.
2. Connect vehicle to the applicable diagnostic software. Refer to *COMMUNICATION TOOLS AND B.U.D.S.* subsection.
3. Check if a software update is available and warranted for the DPS. Select:
   – **Flash** page.
   – **DPS** or **Vehicle** button.
   – **Flash** tab.

If an update is available, install it before resetting the torque offset.

REQUIRED CONDITIONS TO ALLOW THE RESET PROCEDURE
DPS unit temperature above freezing point.
Steering wheel should be free and centered. There MUST NOT be any effort applied to the steering column.
Torque sensor value must be within offset threshold value of ± 10Nm.
Engine not running.

4. To reset the torque offset, select:
   – **Settings** page.
   – **DPS** or **Vehicle** button.
   – **Initialization** tab.
5. Select **Torque Sensor Offset**.

NOTE: Torque reading must be stable and not exceeding 2Nm during procedure. Torque sensor reset may not be possible if the torque value is over the 10Nm above the original setting.

With the steering wheel centered and no effort is applied, if the indicated **Torque Sensor** value is over the threshold value of 1Nm, a steering imbalance may be noticeable.

If all steering components are undamaged, in good working order, and the steering components were correctly aligned, repeated torque offset reset procedures will not solve the problem if the torque offset is greater than ±10Nm. DPS unit replacement may be required.

STEERING COLUMN (WITH DPS)

Removing the Steering Column

1. Center steering wheel.
2. Remove the bolt securing the upper universal joint to the steering shaft. Discard the nut.



tmr2011-034-101_a

3. Remove steering wheel and steering shaft as an assembly.


tmr2011-034-102_a

4. Remove the securing the lower universal joint to the DPS unit. Discard the nut.

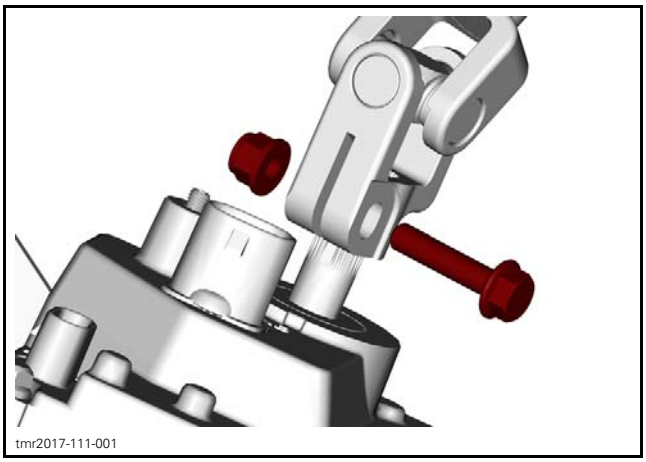
tmr2017-111-001

5. Pull steering column upwards to detach it from DPS.
6. Carefully push steering column downwards to release it from steering support.

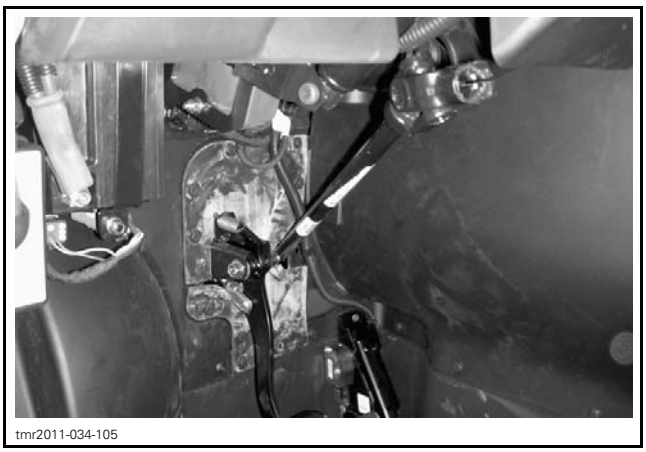
tmr2011-034-105

7. Remove steering column from vehicle.

Inspecting the Steering Column

Check steering column for wear, cracks or bending.

Check steering shaft for wear, cracks or bending.

Ensure universal joints are not worn and move freely.

Ensure steering shaft O-rings are not worn, brittle, hard or otherwise damaged.

Replace if necessary.

Installing the Steering Column

The installation is the reverse of the removal procedure. However, pay attention to the following.

Prior to installing the steering column, position front wheels parallel with longitudinal axis of the vehicle.

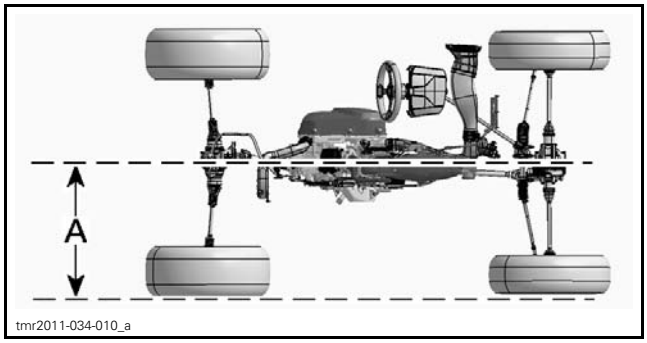

tmr2011-034-010_a

A. Front wheels parallel

Apply LOCTITE 767 (ANTISEIZE LUBRICANT) (P/N 293 800 070) to DPS shaft splines.

Position steering column in vehicle and insert lower U-joint on DPS input shaft.

NOTE: Be sure to align the opening in the steering column U-joint with the indexation spline on the DPS shaft.

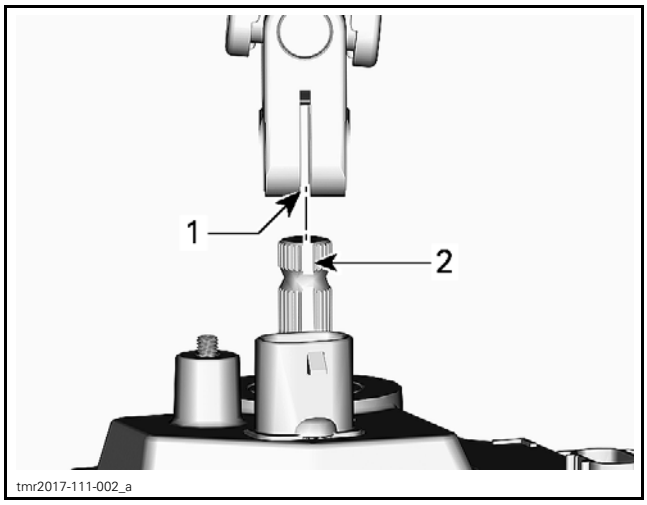

STEERING COLUMN INDEXED TO DPS SHAFT
1. *Opening in steering column U-joint*
2. *Indexation spline on DPS input shaft*

Lubricate O-rings on steering shaft, and all around steering shaft on both side of O-rings.

STEERING SHAFT LUBRICATION
XPS SYNTHETIC GREASE (P/N 293 550 010)

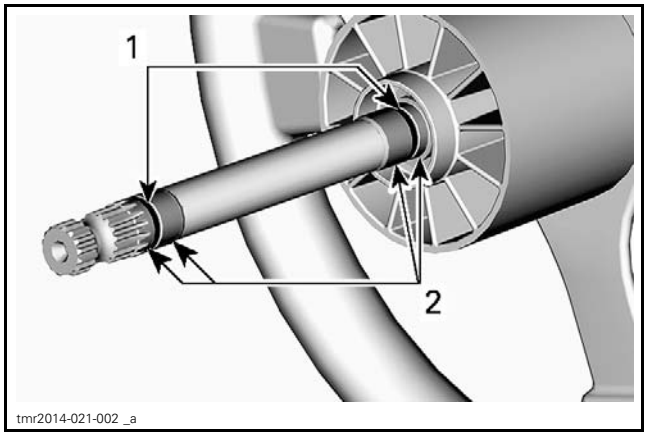

1. *O-rings to lubricate*
2. *Shaft areas to lubricate*

Install steering wheel and steering shaft.

NOTE: Make sure to align the indexation splines on both parts.

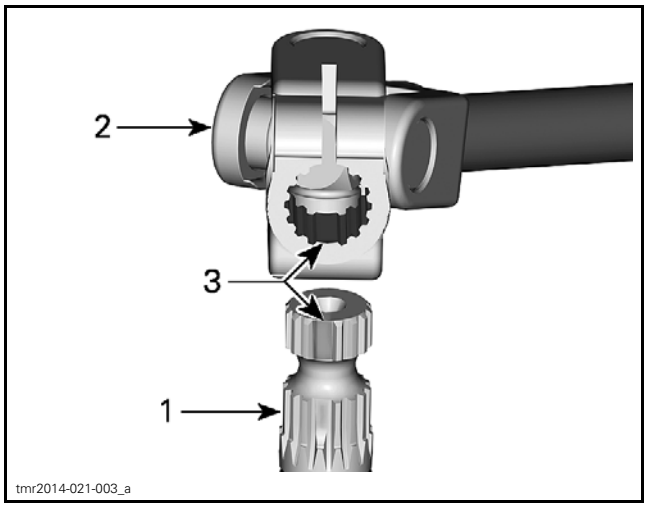

1. *Steering shaft*
2. *Upper steering column U-joint*
3. *Indexation splines (alignment keys)*

IMPORTANT: Before tightening lower U-joint bolt on steering column, ensure the pinch bolt is inserted in the shaft grove.

Tighten steering column U-joints to specification (lower U-joint first). Use NEW nuts.

NOTE: If the steering shaft or steering column were replaced, loosen the 8 bolts on the DPS side brackets before tightening steering column pinch bolts, then retighten all fasteners to specified torque using the specified sequence. Refer to *STEERING SYSTEM TIGHTENING SEQUENCE* and *STEERING SYSTEM TORQUE SPECIFICATIONS* table. Start from level "B".

NOTICE **The steering system tightening sequence must be strictly followed. Failure to do so may result in a steering component misalignment, poor DPS operation due to an induced erroneous torque on DPS shaft, or the impossibility to perform a torque sensor reset.**

NOTICE **When tightening all screws on the DPS side brackets, be sure to hold the brackets snugly against the frame and DPS unit to remove any gap. The side brackets must NOT apply any force on the DPS unit in any direction. This would create an induced erroneous torque to the DPS shaft.**

IMPORTANT: Before tightening lower U-joint bolt on steering column, ensure the following measurements for the steering column engagement depth.

Check front wheel alignment. Refer to *ALIGNING THE WHEELS* in this subsection.

STEERING COLUMN (WITHOUT DPS)

Removing the Steering Column

1. Center steering wheel.
2. Remove the bolt securing the upper universal joint to the steering shaft. Discard the nut.



tmr2011-034-101_a

3. Remove steering wheel and steering shaft as an assembly.

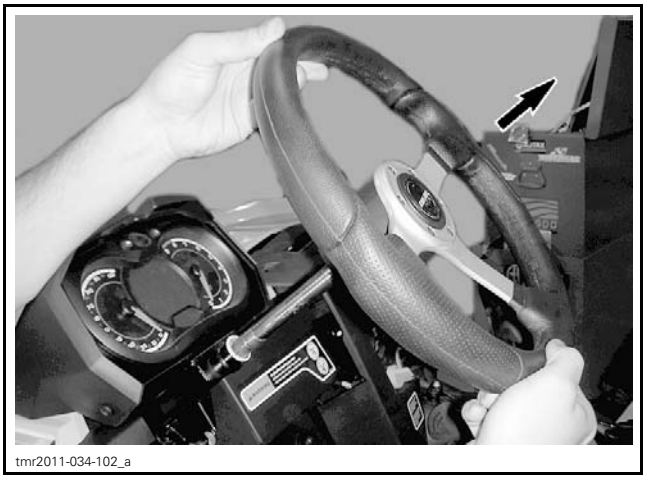
tmr2011-034-102_a

4. Remove the bolt securing the lower universal joint to the rack and pinion. Discard the nut.

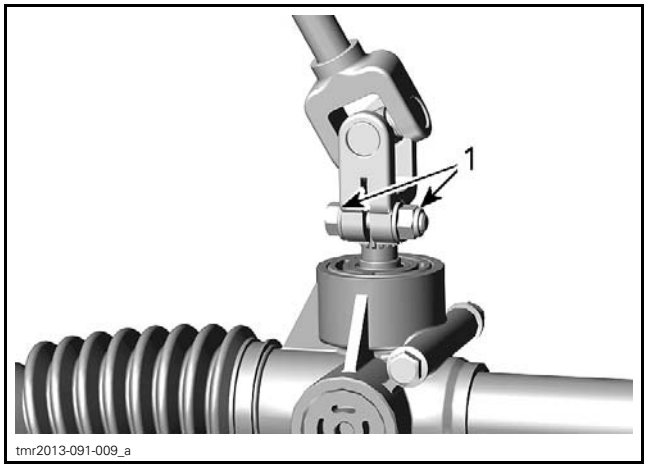

tmr2013-091-009_a

1. Bolt and nut

5. Pull steering column upwards to detach it from rack and pinion.
6. Carefully push steering column downwards to release it from steering support.
7. Remove steering column from vehicle.

Inspecting the Steering Column

Check steering column for wear, cracks or bending.

Check steering shaft for wear, cracks or bending.

Check if universal joints move freely.

Check if steering shaft O-rings are brittle, hard or otherwise damaged.

Replace if necessary.

Installing the Steering Column

The installation is the reverse of the removal procedure. However, pay attention to the following.

Prior to installing the steering column, place front wheels parallel with longitudinal plane of vehicle.

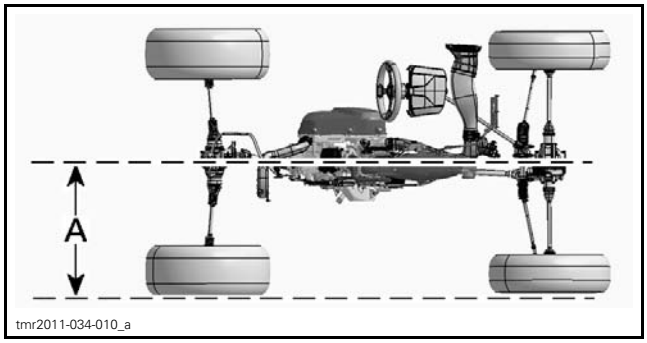

tmr2011-034-010_a

A. Front wheels parallel

Lubricate steering shaft.

STEERING SHAFT LUBRICATION
XPS SYNTHETIC GREASE (P/N 293 550 010)

Install steering wheel and steering shaft. Make sure steering wheel is properly centered.

When installing steering column to pinion shaft, align yoke opening opposite to indexation spline of pinion shaft.

⚠ CAUTION Indexing of yoke is required for proper locking on shaft.

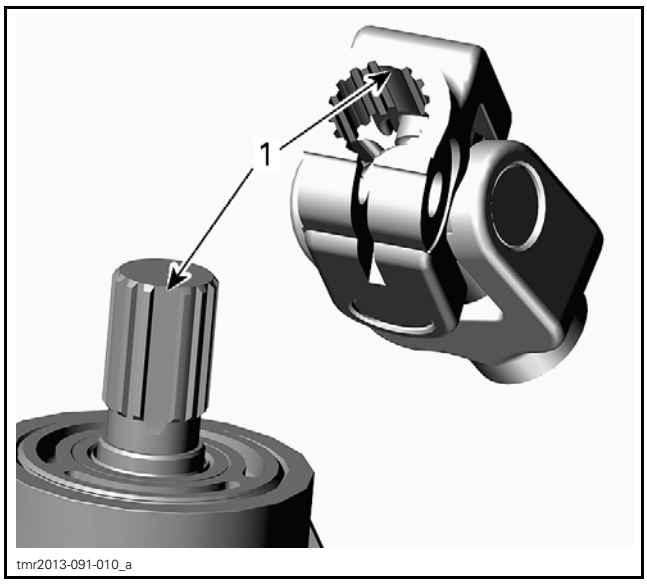

1. Indexation splines

Fully engage the yoke onto pinion shaft.

Tighten steering column U-joints to specification. Use NEW nuts.

TIGHTENING TORQUE	
Upper and lower U-joint nut	31 N•m ± 3 N•m (23 lbf•ft ± 2 lbf•ft)

Check front wheels alignment. Refer to *ALIGNING THE WHEELS* in this subsection.

DPS UNIT

NOTICE Never perform arc welding in the DPS area. Otherwise, poor DPS operation might occur.

Testing the DPS Fuse

A 40 A DPS fuse located in fuse box **no. 3** (PF3 - F1) provides power for the DPS motor.

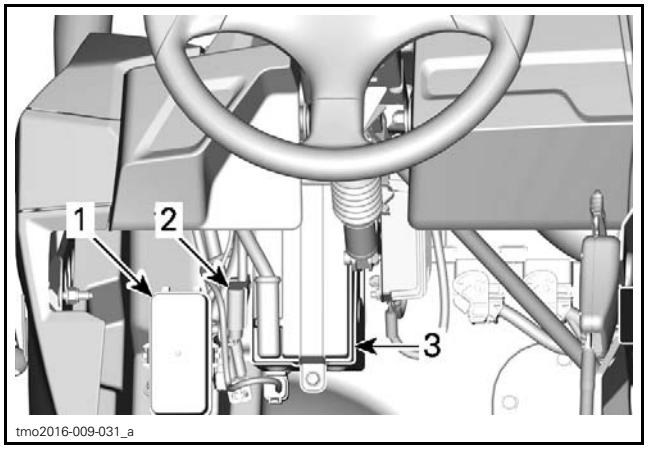

DPS FUSE LOCATION
1. Fuse box
2. DPS fuse
3. Battery

1. Remove the DPS fuse cap to expose the fuse contacts.
2. Using a FLUKE 115 MULTIMETER (P/N 529 035 868) set to VDC, test for a voltage drop across the DPS fuse while the DPS is in operation.



3. If a voltage is measured, turn power off and remove fuse.
4. Check fuse continuity, fuse contacts and fuse box contact condition. Replace fuse as required.

Testing the DPS Input Voltage

1. Disconnect the DPS PWR (power) connector.

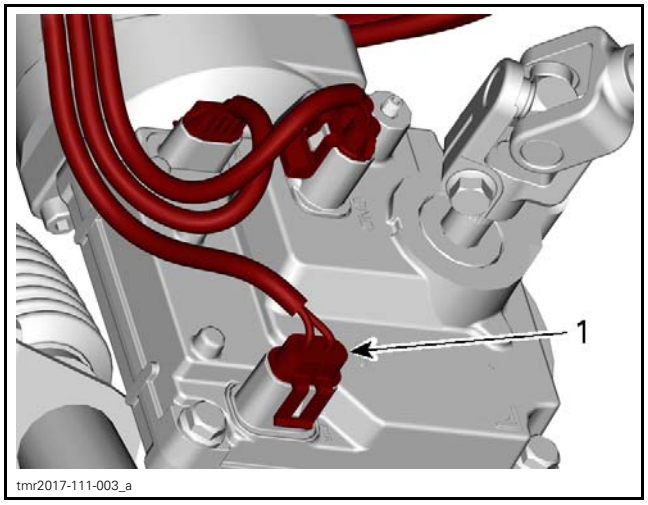

1. DPS PWR connector

2. Test for 12 Vdc DPS motor power at DPS2 harness connector as per following table.

MULTIMETER PROBE POSITIONS		VOLTAGE
DPS power connector pin A and B	Battery ground	Battery voltage
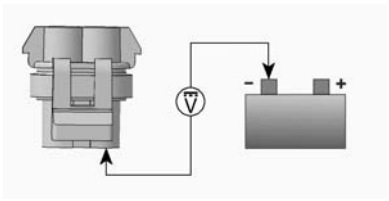		

If NO voltage is measured, test the DPS fuse. If good, check wires and connector pins. Replace or repair defective parts and reset fault codes.

If battery voltage is measured, carry out the following *TESTING THE DPS IGNITION SIGNAL VOLTAGE*.

NOTE: This test may also be carried out by connecting a 12 Vdc test light between the DPS PWR harness connector (pin A), and the battery (-) negative terminal. The test light must come on bright.

Testing the DPS Ignition Signal Voltage

1. Disconnect DPS CONTROL connector.

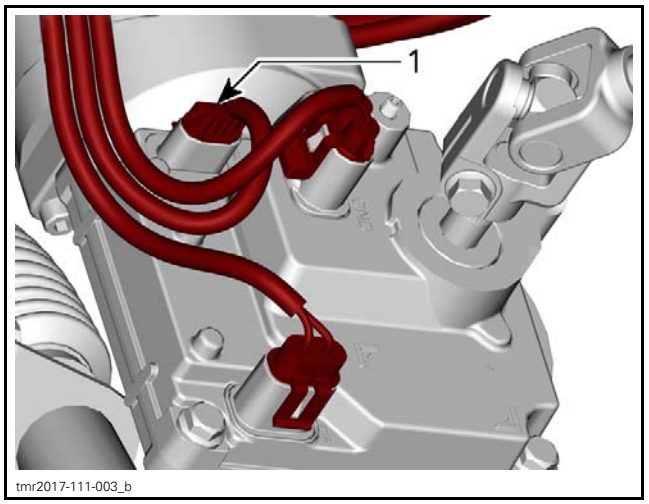

1. Control connector

2. Set the ignition switch to ON.
3. Test for 12 Vdc power to the DPS module at DPS1 harness connector as per following table.

MULTIMETER PROBE POSITIONS	VOLTAGE
DPS control connector pin A and battery ground	Battery voltage
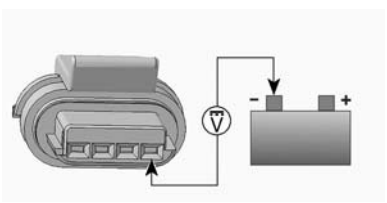	

If NO voltage is measured, test fuse F4 in fuse box **no. 1** (PF1).

If fuse F4 is good, check wires and connector pin from DPS unit to main relay 2 in fuse box **no. 1** (PF1). Replace or repair defective parts and reset fault codes.

If battery voltage is measured, carry out the following *TESTING THE DPS GROUND CIRCUIT*.

NOTE: This test may also be carried out by connecting a 12 Vdc test light between the DPS control harness connector (pin A), and the battery (-) negative terminal. The test light must come on bright.

Testing the DPS Ground Circuit

1. Disconnect the DPS GROUND connector (DPS3).

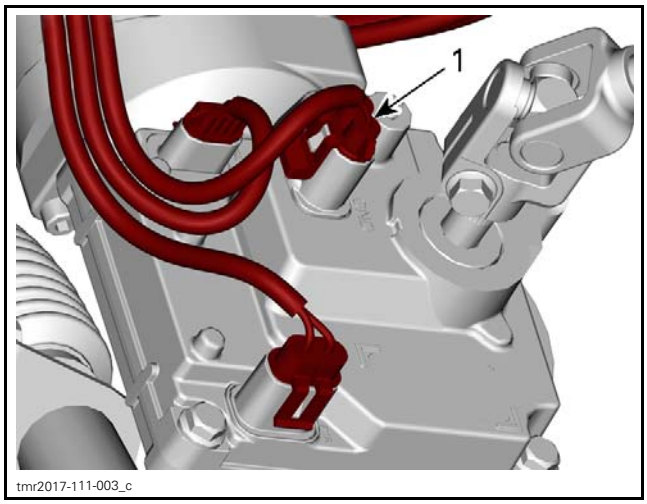

1. DPS ground connector

2. Test for continuity between DPS3- to battery ground.

MULTIMETER PROBE POSITIONS		READING
DPS POWER connector pin A and B	Battery ground	Continuity (close to 0 Ω)

If there is NO continuity or a high resistance is measured, check wires and connector pins from DPS unit to chassis ground post. Replace or repair defective parts and reset fault codes.

If there is good continuity, carry out the following *TESTING THE DPS UNIT COMMUNICATION LINK (CAN) CONTINUITY*.

NOTE: This test may also be carried out by connecting a 12 Vdc test light between the GROUND connector pin A and B and the battery (+) positive terminal. The test light must come on bright.

Testing the DPS Unit Communication Link (CAN) Continuity

NOTE: DPS unit must receive a "MODE" signal from the multifunction gauge and an RPM signal to provide power steering assist. If the DPS mode changes when the DPS mode switch is activated for 2 seconds, then the system is functioning correctly. If the DPS does not respond, check for applicable faults using the diagnostic software before carrying out this test.

Disconnect the DPS CONTROL connector and the diagnostic connector.

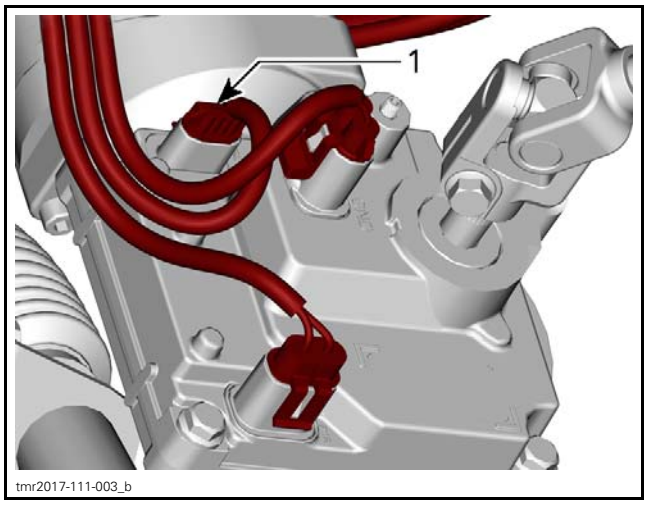

1. Control connector

Test continuity of CAN Bus Wires as per following table.

MULTIMETER PROBE POSITIONS		RESISTANCE @ 20°C (68°F)
DPS SENSOR CONNECTOR (DPS1)	DIAGNOSTIC CONNECTOR	
Pin C	Pin 1	Less than 1 Ω
Pin D	Pin 2	

If resistance measured is out of specification, check wires and connector pins. Carry out repairs as required and reset fault codes.

If resistance measured is good, replace the DPS unit and reset fault codes.

Testing the DPS System Load

If the charging system cannot sustain normal voltage when the DPS is operating, DPS ASSIST may be reduced or nonexistent. Carry out the following steps.

1. Use the FLUKE 115 MULTIMETER (P/N 529 035 868) and select Vdc.
2. Connect the RED multimeter lead to the positive battery terminal.
3. Connect the BLACK multimeter lead to the battery ground.
4. Measure the battery voltage.

NOTE: If battery voltage is low, recharge battery.

5. Ensure the vehicle transmission is set to PARK.
6. Start the engine.
7. Note the voltage on the multimeter with the engine running (charging system voltage).

8. Press the RANGE button repeatedly to select Manual Range 6 0.

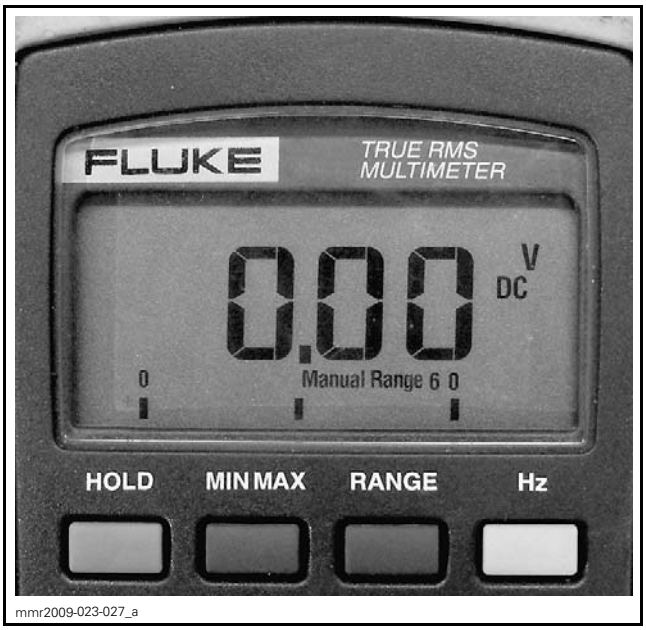

VDC SELECTED TO MANUAL RANGE 6 0

9. Press the MIN MAX button on the multimeter to engage the MIN function.

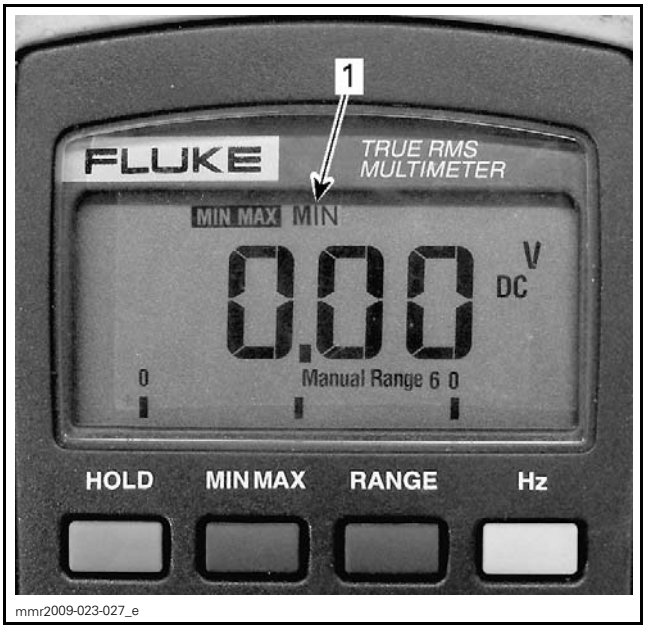

1. MIN function selected

10. Turn the steering wheel **momentarily** against the steering hard stops to each side.

NOTE: Do not hold steering against steering hard stops for and extended period of time.

11. Read the MIN charging system voltage recorded while the steering wheel was turned against each stop.

DPS SYSTEM LOAD TEST			
PROBE POSITIONS		STEERING POSITION	VOLTAGE READING
Battery (-) terminal	Battery (+) terminal	LH stop	At least 12 Vdc
		RH stop	

NOTE: Turning the steering wheel momentarily against the steering hard stops generates maximum DPS load (maximum current draw on electrical system). Electrical system must sustain at least 12 Vdc for proper DPS operation.

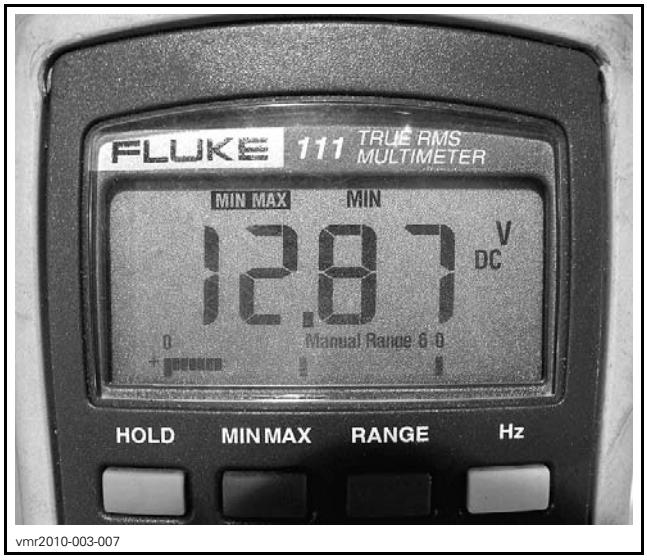

If the electrical system cannot sustain at least 12 Vdc, check the following:

- Battery
- Battery connections
- DPS unit power and ground connections
- Charging system
- Frame and engine ground studs.

If the previously listed items, carry out the following *TESTING THE DPS UNIT CURRENT*.

Testing the DPS Unit Current

1. Connect vehicle to the applicable diagnostic software.
2. Select:
   - **Measurements** page.
   - **DPS** button.
   - **Custom** tab.
3. With the vehicle engine running in PARK and without any steering effort, the reading should be as per following table.

TORQUE SENSOR	DPS CURRENT
0 N•m ± 1 N•m (0 lbf•**in** ± 9 lbf•**in**)	0 Amp

4. Turn the steering wheel side to side, momentarily against each steering hard stop and observe the DPS **Torque Sensor** value. The torque value should increase with steering effort applied to the steering wheel.

The **DPS Current** value should increase proportionately to the torque applied, and decrease with the torque as steering assist is provided.

NOTE: The increase and decrease in torque and current readings is very brief as steering assist is quickly provided. Current draw should remain within green scale but may momentarily peak to or exceed 60 amps, then drop off close to 0 amps as torque applied is nulled out by steering assist. If steering is held against hard stops the torque and current readings will remain high.

If current draw tends to remain high, carry out the following:

– *ALIGNING THE STEERING COMPONENTS (DPS MODELS)*
– *RESETTING THE TORQUE OFFSET* (only if steering components alignment did not solve the problem)
– DPS unit replacement.

NOTE: The *ALIGNING THE STEERING COMPONENTS (DPS MODELS)* procedure must always be carried out before even considering a torque offset reset.

5. Turn steering to LH stop and hold at least 8 Nm. Note DPS current value.
6. Turn steering to RH stop and hold at least 8 Nm. Note DPS current value.
7. Repeat previous two steps while holding at (+ or -) 5 Nm. Note DPS current value.

LH and RH DPS current readings should be the same for the same applied torque.

If the *ALIGNING THE STEERING COMPONENTS (DPS MODELS)* and *RESETTING THE TORQUE OFFSET* procedures have been carried out, and the current or steering imbalance is too great, the DPS unit will require replacement to resolve the problem.

Removing the DPS Unit

NOTICE **Before proceeding with the DPS removal, remove the DPS fuse, see *TESTING THE DPS FUSE* for location. Handle the DPS unit with extreme care as it is very sensitive to physical chock. Store unit in a secure area. If the DPS unit is dropped, it must be replaced even if only minimal damage is apparent.**

1. Remove both front wheels.
2. Disconnect the electrical connectors from the DPS unit.

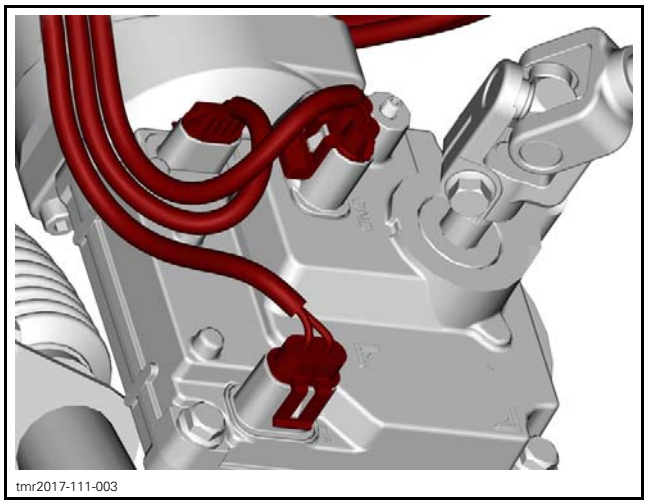
tmr2017-111-003

3. Remove steering column. Refer to *REMOVING THE STEERING COLUMN* in this subsection.
4. Remove the DPS coupler pinch bolts. Discard the nuts.

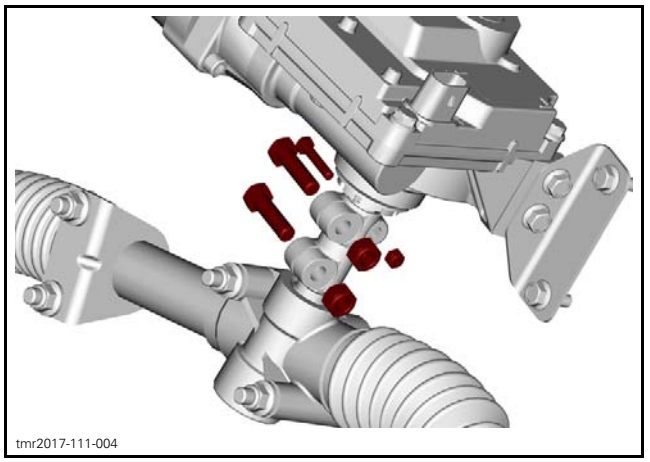
tmr2017-111-004

5. Remove all DPS unit and supports retaining screws.

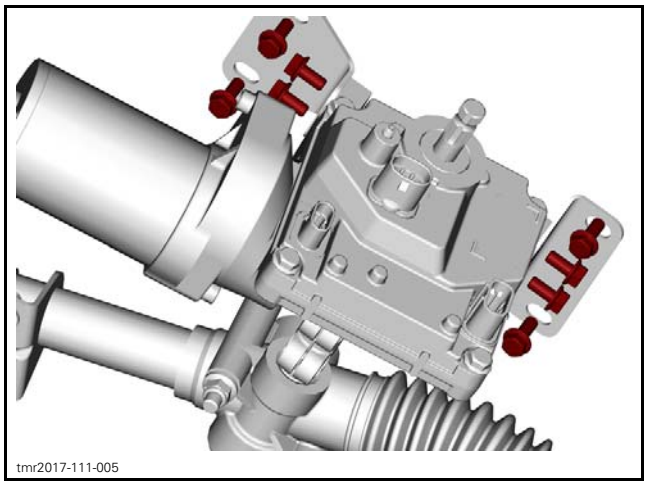
tmr2017-111-005

6. Pull up on DPS unit to disengage from the rack and pinion shaft and remove it from the vehicle.

NOTE: If replacing DPS unit, remove the coupler from the DPS unit.

Inspecting the DPS Unit

Inspect DPS shaft seals. If damaged, replace DPS unit.

Inspect DPS shaft splines. If damaged, replace DPS unit.

Inspect DPS coupler splines. If damaged, replace coupler.

Inspect and clean terminal contacts.

Installing the DPS Unit

NOTICE **The following installation sequence MUST be strictly followed (see procedure details in upcoming paragraphs). Failure to do so may result in DPS misalignment and poor DPS operation due to an induced erroneous torque on DPS shaft or the impossibility to perform a torque sensor reset.**

If Replacing DPS Unit

Apply LOCTITE 767 (ANTISEIZE LUBRICANT) (P/N 293 800 070) on the DPS output splines.

Insert DPS coupler on DPS output shaft. Ensure DPS coupler opening is aligned with indexation spline on DPS output shaft.

Loosely install DPS coupler locking bolt (M6).

Loosely install one DPS coupler pinch bolt (M10) (closest to the DPS unit).

Continue with *IF INSTALLING SAME DPS UNIT*.

If Installing the Same DPS Unit

Align front wheels parallel to rear wheels.

Apply LOCTITE 767 (ANTISEIZE LUBRICANT) (P/N 293 800 070) on the rack and pinion shaft splines.

Engage the DPS coupler on rack and pinion shaft. Ensure rack and pinion input shaft is and remains centered when installing DPS on pinion.

Loosely install the remaining M10 pinch bolt on the DPS coupler (closest to the rack and pinion).

Loosely install the supports on the DPS unit (DO NOT tighten screws yet).

Loosely install DPS unit on the chassis (DO NOT tighten screws yet)

Apply LOCTITE 767 (ANTISEIZE LUBRICANT) (P/N 293 800 070) to DPS input shaft.

Engage steering column on the DPS input shaft. Ensure opening in steering column U-joint is aligned with indexation spline on DPS input shaft.

Engage steering column and steering shaft. Ensure alignment key in steering column U-joint is aligned with indexation spline on steering shaft.

Loosely install pinch bolts on both ends of steering column.

Tighten all fasteners as outlined in *STEERING SYSTEM TIGHTENING SEQUENCE (DPS MODELS)*.

NOTICE **When tightening all screws on the DPS side brackets, be sure to hold the brackets snugly against the frame and DPS unit to remove any gap. The side brackets must NOT apply any force on the DPS unit in any direction. This would create an induced erroneous torque to the DPS shaft.**

If replacing DPS unit, refer to *NEW DPS UNIT* for software installation

NOTICE **The steering system tightening sequence must be strictly followed. Failure to do so may result in a steering component misalignment, poor DPS operation due to an induced erroneous torque on DPS shaft, or the impossibility to perform a torque sensor reset.**

DPS System Final Verification

With the front wheels off the ground:

1. Enable DPS unit (turn ignition switch ON or start engine).

NOTE: Steering assist will be provided for 30 seconds with the ignition switch ON and engine not running.

2. Slowly turn steering wheel from one side to the other 3 times.

Make sure:
– Assistance and travel are equal when turning right or left
– Steering system operates smoothly through all its range.

3. Lower vehicle on the ground.
4. Repeat step 2.

RESULT	ACTION
Uneven/incorrect steering behavior	Troubleshoot steering problem

NOTE: A verification carried out with the engine not running and a weak battery may result in unsatisfactory DPS performance. In doubt, retest with the engine running.

5. Perform the *STEERING SYSTEM SELF TEST (DPS MODELS)* procedure in this subsection.
6. Carry out a test ride of the vehicle to ensure proper operation of the DPS unit.

New DPS Unit

New DPS units **do not** come with the required software programmed into the unit. A DPS unit fault will be generated when the vehicle is powered up. The check engine light will come on and a CHECK DPS message will appear in the multifunction gauge.

The new DPS unit will require 2 mandatory updates. The first update is required for the DPS to recognize what type of vehicle it is installed in, the second to upload the software required for proper operation on that vehicle.

When DPS unit installation is complete, carry out the following steps.

1. Connect the vehicle to the applicable diagnostic software. Refer to *COMMUNICATION TOOLS AND BUDS*.
2. Select the **Flash** page.
3. A message window will appear asking you if you would like to update the DPS module; select **YES** and follow the instructions. When a second window appears asking you the same question, select **YES** again.
4. Once the correct DPS software file is installed, go to the **Faults** page and clear the fault codes.
5. Carry out: *RESETTING THE TORQUE OFFSET* (if required) as described in this subsection.
6. Test drive the vehicle to ensure proper DPS operation.

RACK AND PINION (WITH DPS)

Servicing the Rack and Pinion

The rack and pinion cannot be serviced except for replacement of the boots and tie rods.

Removing the Rack and Pinion

1. Safely lift and support the front of vehicle. Refer to *INTRODUCTION* subsection.
2. Remove both front wheels.
3. Detach tie-rod ends from knuckles. Refer to *REPLACING THE TIE ROD END* in this subsection.
4. Loosen the upper coupler pinch bolt and the M6 bolt.
5. Remove the lower coupler pinch bolt. Discard the nut.

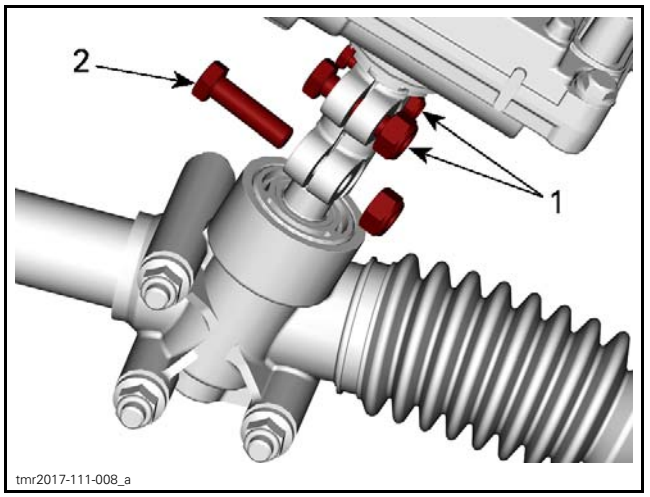

1. Loosen
2. Remove

6. Loosen all DPS unit retaining screws.

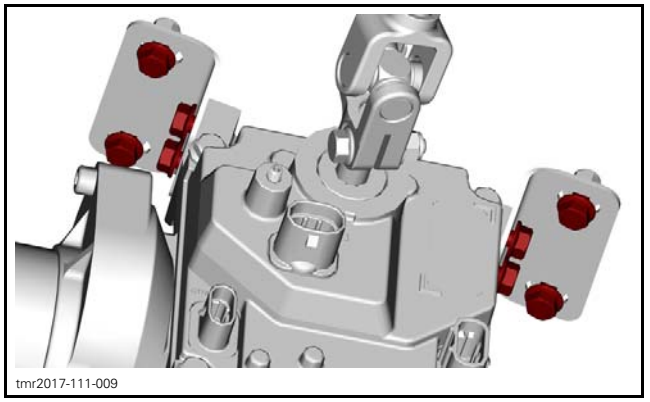

7. Loosen steering column pinch bolts (both upper and lower U-joints).

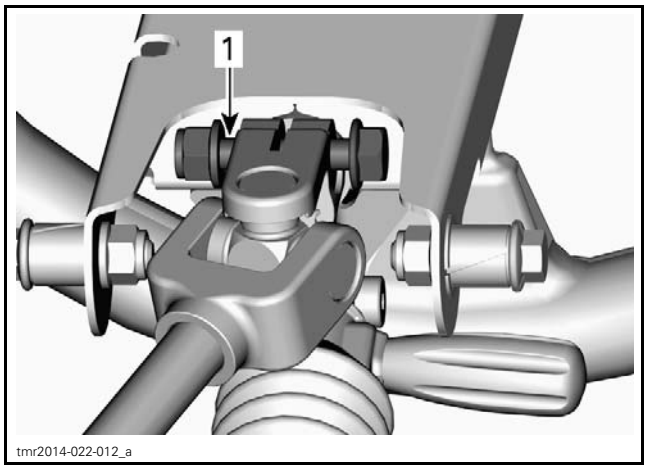

UPPER U-JOINT ON STEERING COLUMN
1. Pinch bolt loosened

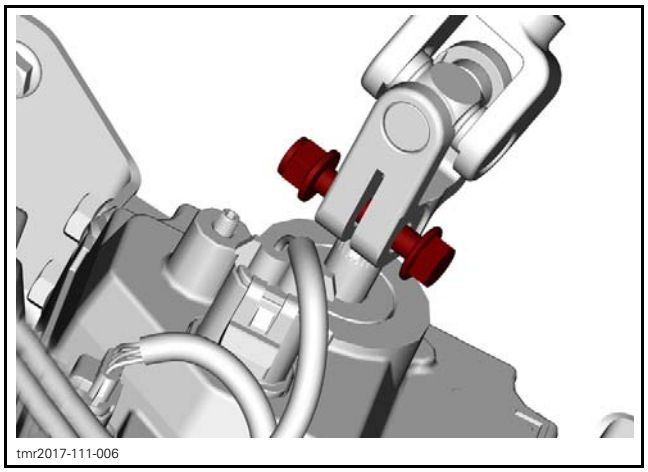

LOWER U-JOINT ON STEERING COLUMN

8. Remove the 4 bolts securing rack and pinion to frame.

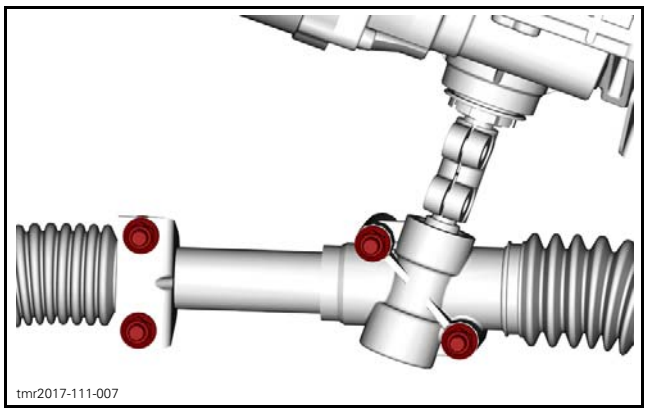

9. Free the rack and pinion form the DPS coupler.
10. Remove rack and pinion from vehicle.

Installing the Rack and Pinion

The installation is the reverse of the removal procedure. However, pay attention to the following.

Find rack and pinion center as follows:

– Calculate the total pinion shaft rotations from side to side.
– Position the pinion shaft at **half** the total rotations.
– Using a paint marker, make an alignment mark on pinion and on the rack housing.

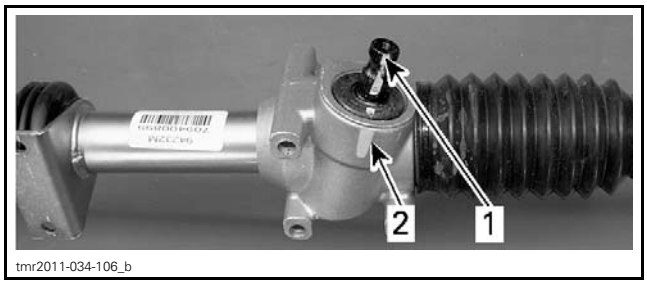

TYPICAL
1. Alignment mark on pinion
2. Alignment mark on rack housing

Ensure steering wheel is centered (horizontal).

Apply LOCTITE 767 (ANTISEIZE LUBRICANT) (P/N 293 800 070) on the rack and pinion shaft splines.

Position rack and pinion in frame and engage the pinion shaft in the DPS coupler. Make sure steering wheel remains centered.

Loosely install rack and pinion retaining bolts.

Loosely install DPS coupler pinch bolts.

Tighten all fasteners as outlined in *STEERING SYSTEM TIGHTENING SEQUENCE (DPS MODELS)*.

NOTICE The steering system tightening sequence **must be strictly followed**. Failure to do so may result in a steering component misalignment, poor DPS operation due to an induced erroneous torque on DPS shaft or the impossibility to perform a torque sensor reset.

NOTICE When tightening all screws on the DPS side brackets, be sure to hold the brackets snugly against the frame and DPS unit to remove any gap. The side brackets must NOT apply any force on the DPS unit in any direction. This would create an induced erroneous torque to the DPS shaft

Check steering alignment. Refer to *ALIGNING THE WHEELS* in this subsection.

RACK AND PINION (WITHOUT DPS)

Servicing the Rack and Pinion

Rack and pinion is not serviceable except for boots and tie rod ends replacement.

Removing the Rack and Pinion

1. Safely lift and support the front of vehicle. Refer to *INTRODUCTION* subsection.
2. Remove both front wheels.
3. Remove steering column. Refer to *REMOVING THE STEERING COLUMN* in this subsection.
4. Detach tie-rod ends from knuckles. Refer to *REPLACING THE TIE ROD END* in this subsection.
5. Remove bolts and nuts securing rack and pinion to the chassis.
6. Remove rack and pinion from the vehicle.

Installing the Rack and Pinion

The installation is the reverse of the removal procedure. However, pay attention to the following.

Find rack and pinion center as follows:

– Calculate the total pinion shaft rotations from side to side.
– Position the pinion shaft at **half** the total rotations. Use the shaft indexation spline as reference.

Loosely install rack and pinion retaining bolts.

Tighten bolts to the specified torque, in a crosswise pattern.

TIGHTENING TORQUE	
Rack and pinion retaining nuts	24.5 N•m ± 3.5 N•m (18 lbf•ft ± 3 lbf•ft)

Install steering column.

Check the steering alignment. Refer to *ALIGNING THE WHEELS* in this subsection.

TIE ROD ADJUSTMENT SLEEVE (MAVERICK XDS)

Inspecting the Adjustment Sleeve

Before removing any components:

1. Raise front wheels off the ground.
2. Turn steering wheel from stop to stop.
3. Ensure steering wheel turns smoothly.

Before replacing the tie rod adjustment sleeve, inspect the following:

– Knuckle must not be cracked
– Tie rod end bolt must not be bent

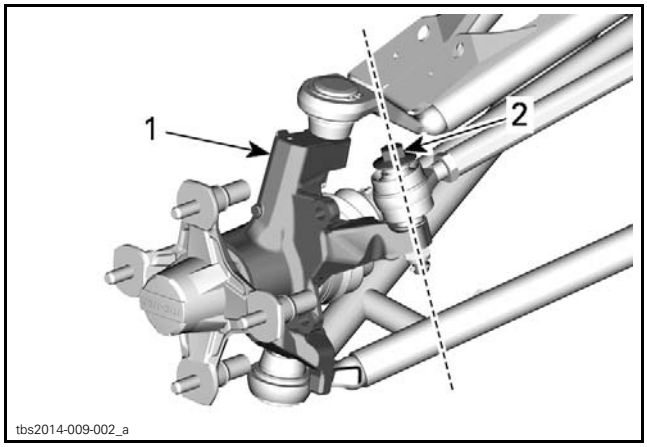

TYPICAL
1. Knuckle
2. Tie rod end bolt

– Rack and pinion shaft must not be loose
– Frame welds must be intact
– Rack and pinion support and mounting holes must not be cracked or deformed

Removing the Adjustment Sleeve

1. Loosen both tie rod adjustment sleeve jam nuts.

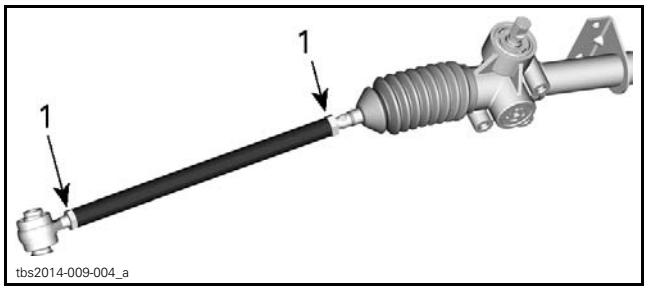

1. Tie rod adjustment sleeve jam nut

2. Remove tie rod end bolt.

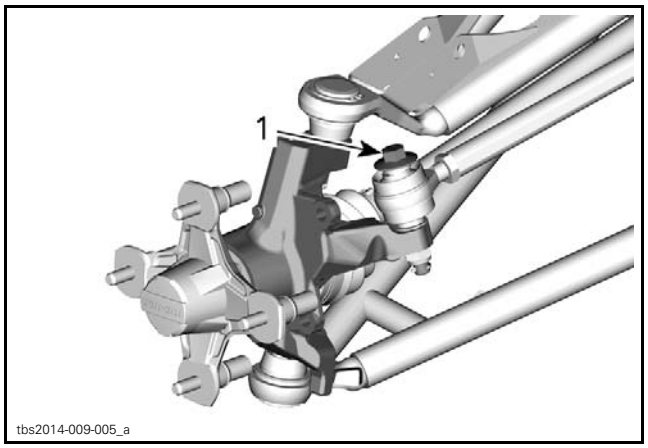

1. Tie rod end bolt

3. Remove tie rod end.

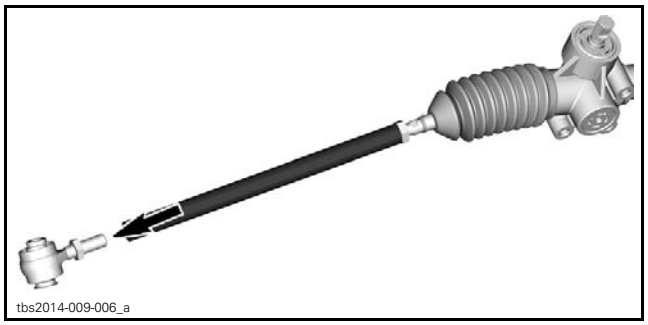

4. Hold inner tie rod and unscrew tie rod adjustment sleeve.

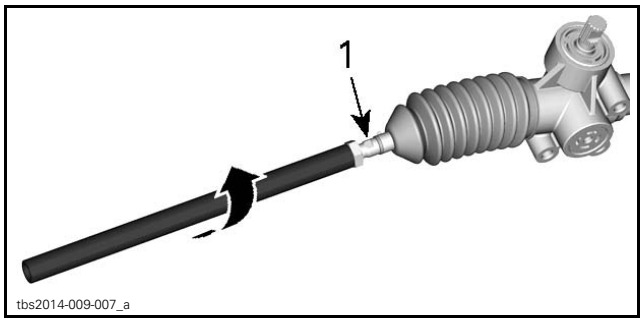

1. Inner tie rod

Installing the Adjustment Sleeve

Reverse removal procedure, pay attention to the following:

1. Adjust inner and outer tie rods to the nominal engagement length.

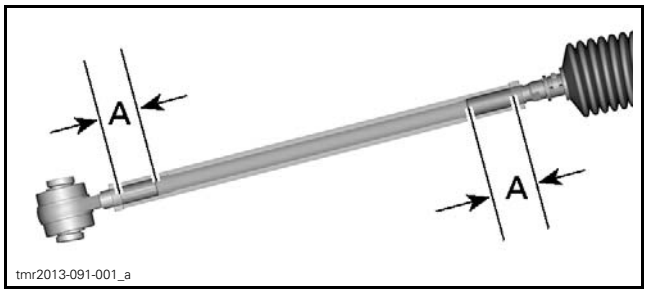

A. Tie rod engagement length

TIE ROD ENGAGEMENT LENGTH	
Nominal	31 mm (1-1/4 in)
Minimum	25 mm (1 in)

2. Lock inner jam nut.
3. Carry out a steering alignment, refer to *ALIGNING THE WHEELS* in this subsection.

TIE-ROD ENDS

Replacing the Tie-Rod End

1. Safely lift and support the front of vehicle. Refer to *INTRODUCTION* subsection.
2. Remove front wheel.
3. Detach tie-rod end by removing:
   - Cotter pin
   - Tie-rod end retaining nut
   - Hardened washers
   - Tie-rod end bolt.

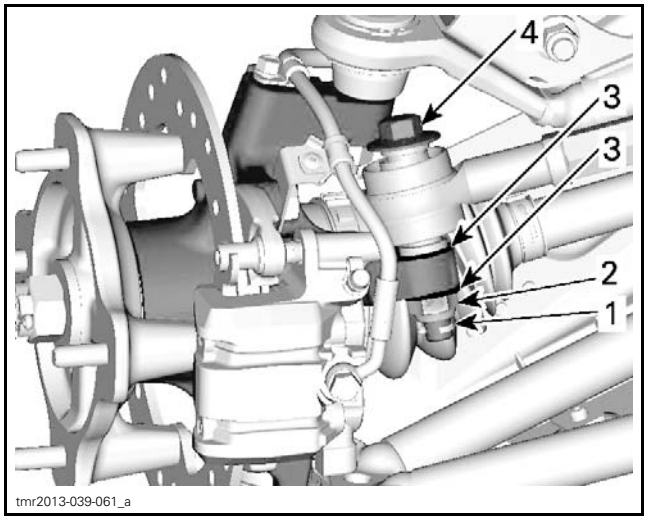

TYPICAL
1. Cotter pin
2. Tie-rod end retaining nut
3. Hardened washers
4. Tie-rod end bolt

4. Discard cotter pin and nut.
5. Install new tie-rod end.

6. Adjust tie-rod end to the nominal engagement length.

Maverick XDS Models

TIE-ROD END NOMINAL ENGAGEMENT LENGTH
31 mm (1.22 in)

NOTE: The tie rod must be engaged the same amount at both ends for the tie-rod adjustment to be centered.

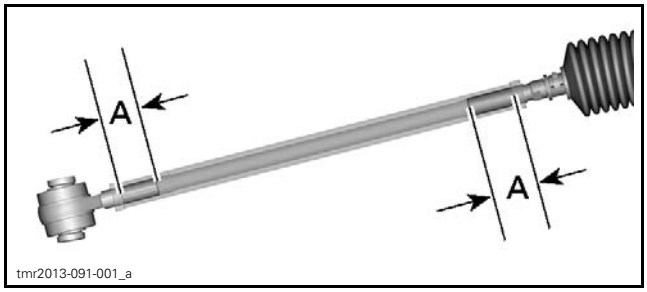

RH TIE ROD ASSEMBLY SHOWN
A. Nominal engagement length

All Models Except Maverick XDS

TIE-ROD END NOMINAL ENGAGEMENT LENGTH
25 turns or 31 mm (1.22 in)

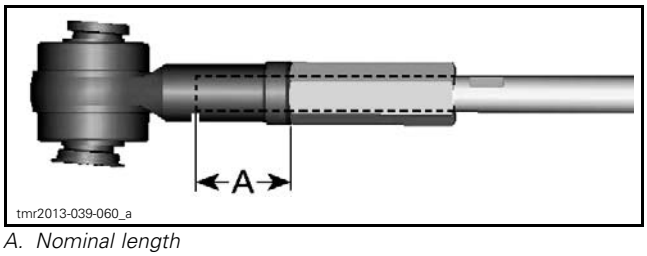

A. Nominal length

All Models

⚠ WARNING

The minimum tie-rod engagement length at both ends must be 25 mm (1 in).

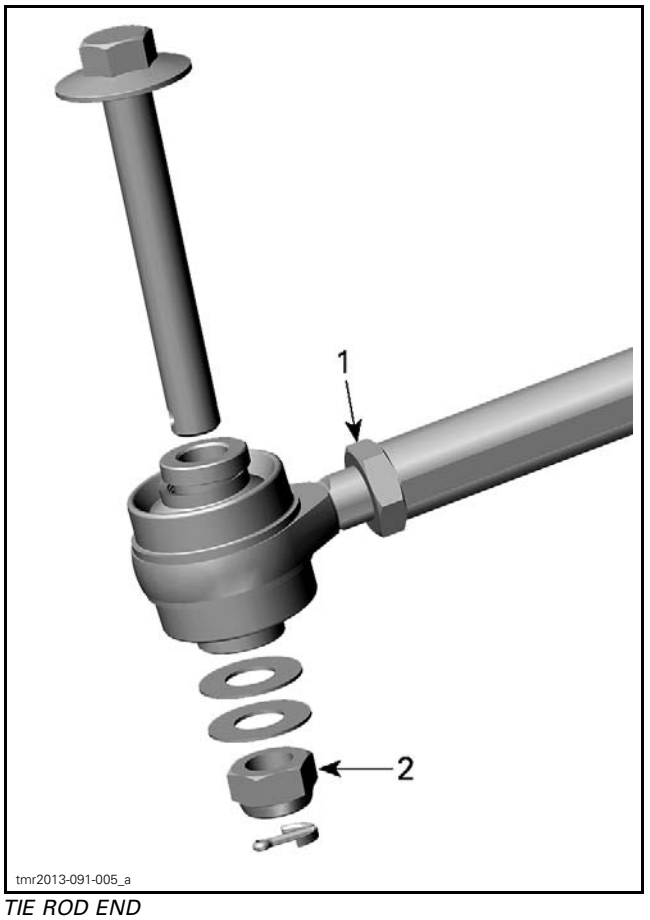

TIE ROD END
1. Locking nut
2. Retaining nut

7. Tighten **locking** nut(s) to specification.

TIGHTENING TORQUE	
Tie-rod end locking nut	34 N•m ± 2 N•m (25 lbf•ft ± 1 lbf•ft)

8. Attach tie-rod end to steering knuckle.
9. Install a **NEW** tie-rod end **retaining** nut and tighten to specification.

TIGHTENING TORQUE	
Tie-rod end retaining nut	105 N•m ± 15 N•m (77 lbf•ft ± 11 lbf•ft)

10. Install a **NEW** cotter pin. Both ends of cotter pins must be folded.
11. Install front wheel.
12. Check steering alignment, refer to *ALIGNING THE WHEELS* in this subsection.

KNUCKLES

Removing the Knuckle

Safely lift and support the front of vehicle. Refer to *INTRODUCTION* subsection.

Remove front wheel.

Detach brake hose from the knuckle.

1. Detach tie-rod end from knuckle, refer to *TIE-ROD ENDS* in this subsection.
2. Remove caliper, refer to *BRAKES* subsection.

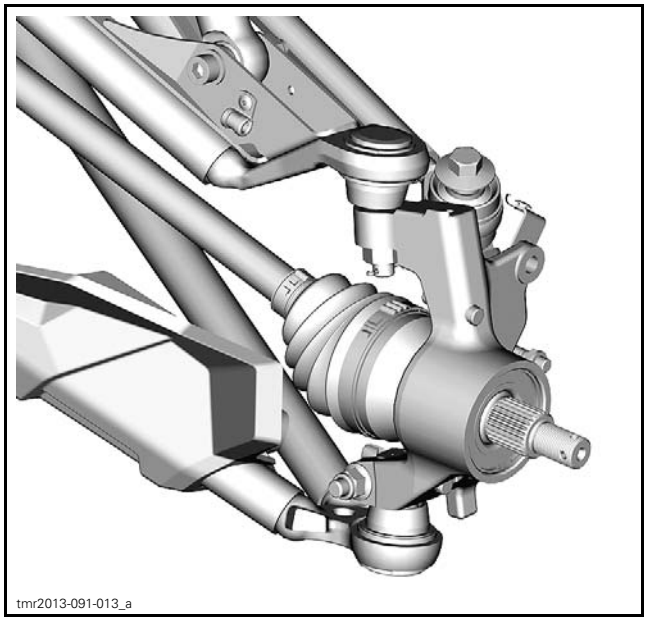

TYPICAL

3. Remove wheel hub, refer to *FRONT DRIVE* subsection.
4. Detach upper suspension arm from knuckle, refer to *FRONT SUSPENSION*.
5. Detach lower suspension arm from knuckle, refer to *FRONT SUSPENSION*.
6. Remove knuckle from vehicle.

Inspecting the Knuckle

Check knuckle for cracks or other damages.

Replace if necessary.

Installing the Knuckle

The installation is the reverse of the removal procedure.

WHEEL BEARINGS

Inspecting the Wheel Bearing (Maintenance)

Refer to *PERIODIC MAINTENANCE PROCEDURES* subsection.

Inspecting the Wheel Bearing (During Component Removal)

Whenever the drive axle or knuckle is removed, check wheel bearing as follows:

– Check if wheel bearing turns freely and smoothly.
– Check seal condition.

Replace if necessary.

Removing the Wheel Bearing

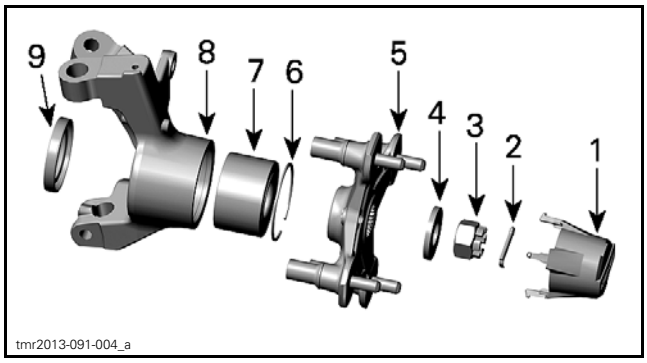

TYPICAL FRONT KNUCKLE ASSEMBLY
1. Wheel cap
2. Cotter pin
3. Axle nut
4. Spring washer
5. Wheel hub
6. Circlip
7. Bearing
8. Knuckle
9. Seal

1. Remove knuckle from vehicle, refer to *REMOVING THE KNUCKLE* in this subsection.
2. Remove and discard knuckle seal .
3. Remove and discard circlip .
4. Install knuckle on a press.
5. Use an appropriate bearing remover.
6. Remove bearing from knuckle.

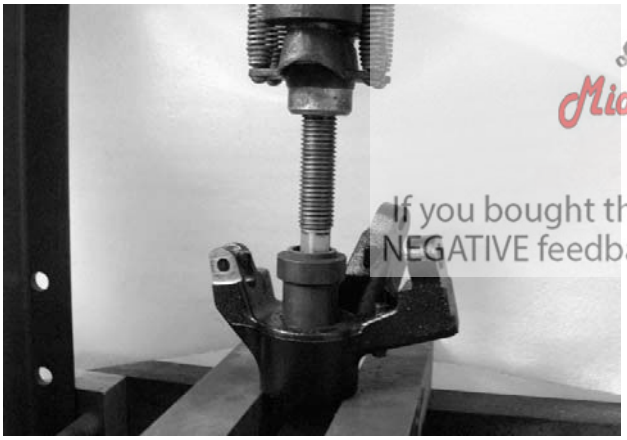

tmr2011-034-109

Midwest Manuals
Green Manuals
Paperless Manuals
For a Better Tomorrow
If you bought this manual from any other seller please leave them NEGATIVE feedback and notify me at bestshopmanuals@gmail.com

NOTE: It may be necessary to heat the knuckle to remove bearing.

⚠ WARNING

Clean all grease, outside and inside, from knuckle before heating it.

Installing the Wheel Bearing

The installation is the reverse of the removal procedure. However, pay attention to the following.

To ease wheel bearing installation:

– Place bearing in a freezer for 10 minutes.
– Place knuckle in oven to 100°C (212°F) for 30 minutes maximum.

When knuckle is cooled down, install **NEW** circlip and **NEW** seal.

FRONT SUSPENSION

LOWER ARM (COMMANDER)

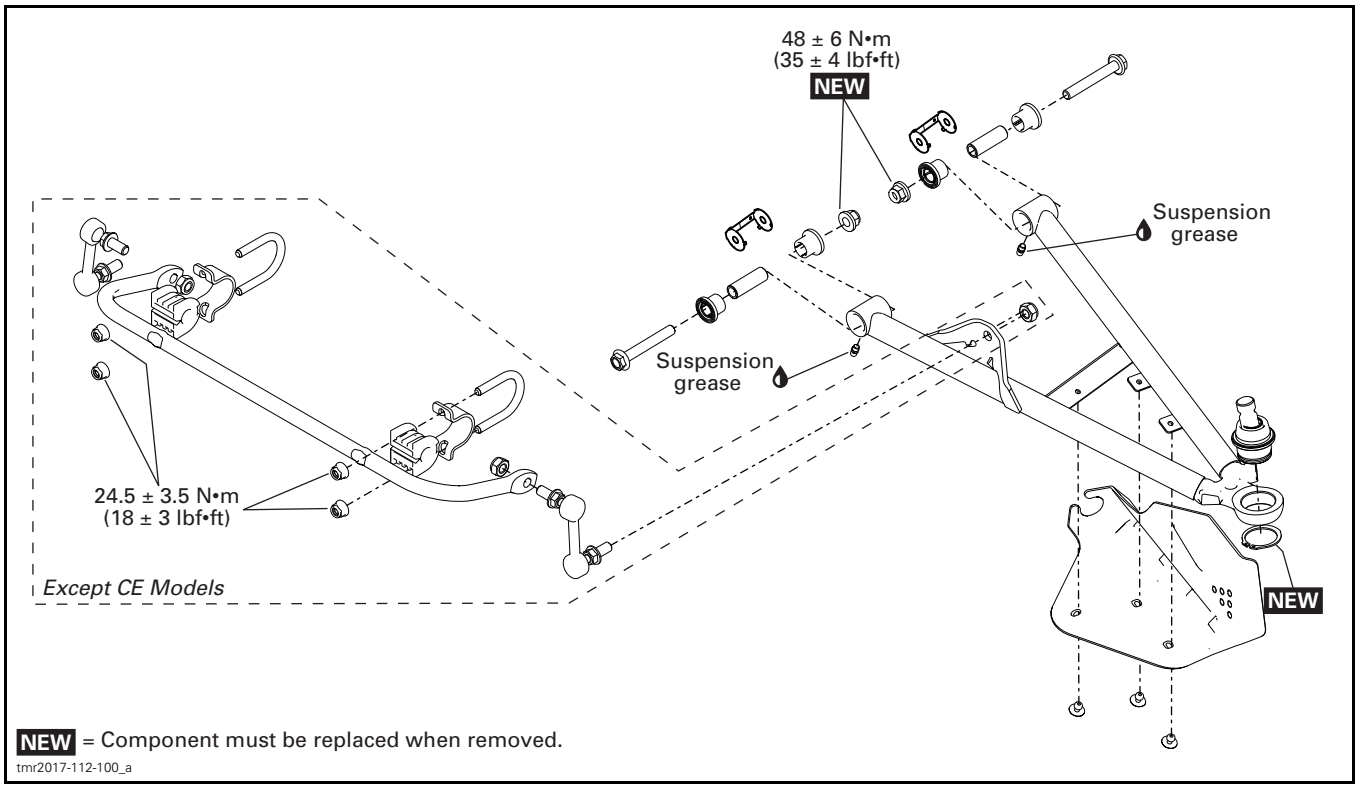

LOWER ARM (MAVERICK)

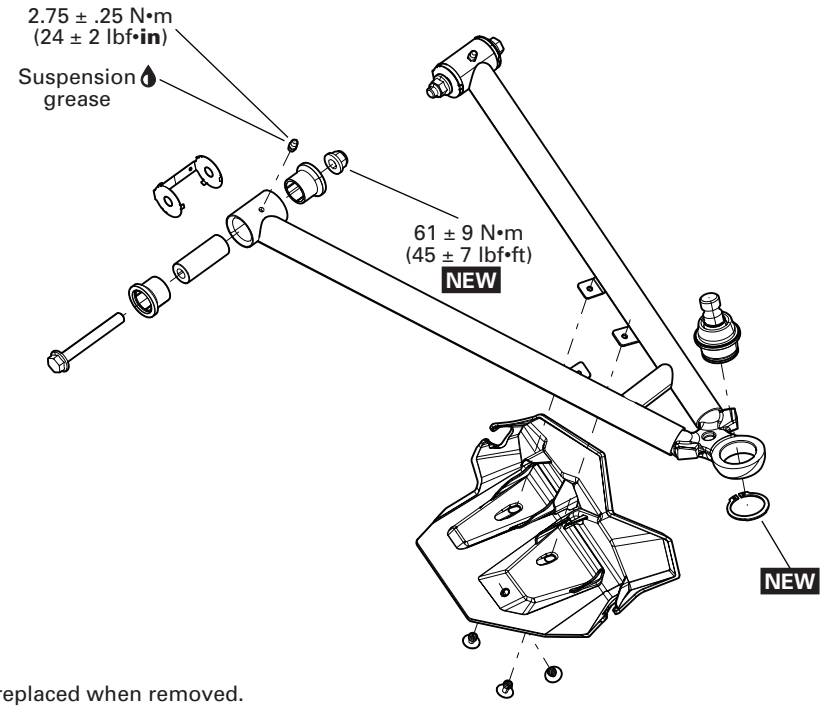

NEW = Component must be replaced when removed.

tmr2017-112-101_a

UPPER ARM (COMMANDER)

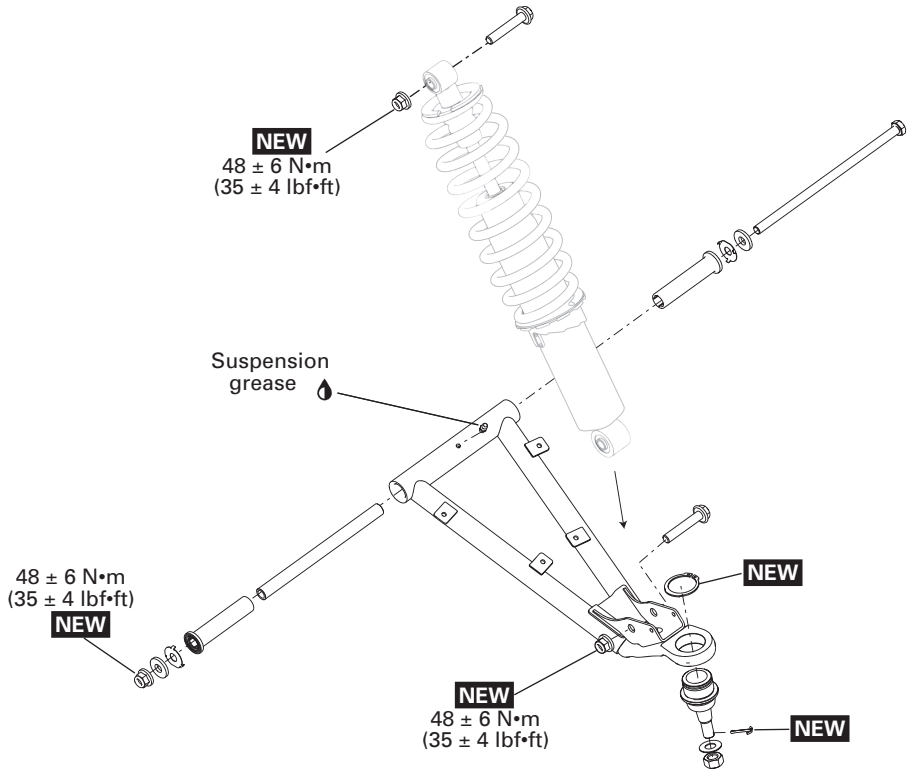

NEW = Component must be replaced when removed.

tmr2017-112-102_a

UPPER ARM (MAVERICK - EXCEPT X DS AND MAVERICK TURBO)

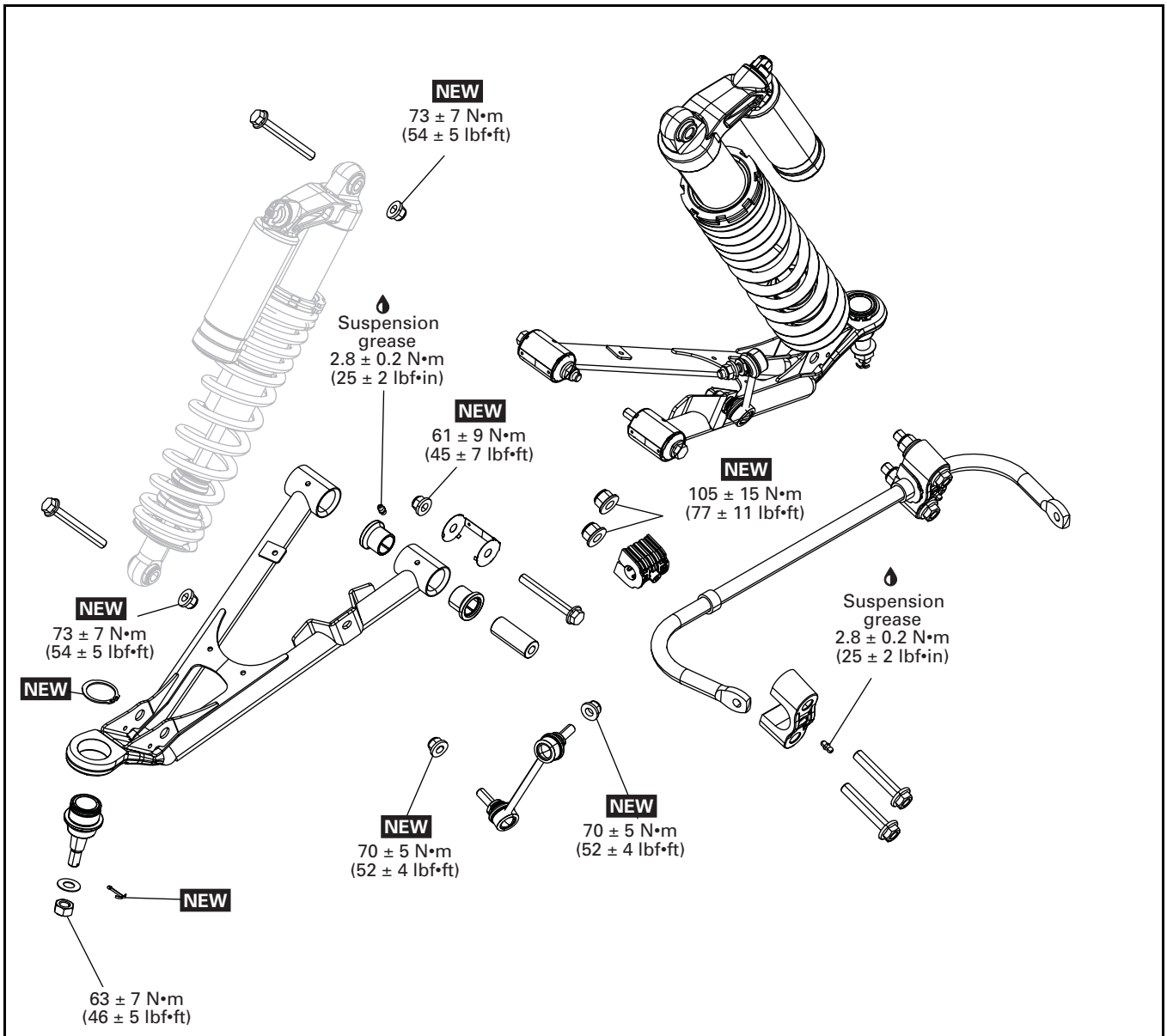

NEW = Component must be replaced when removed.

tmr2017-112-103_a

UPPER ARM (MAVERICK X DS AND MAVERICK TURBO)

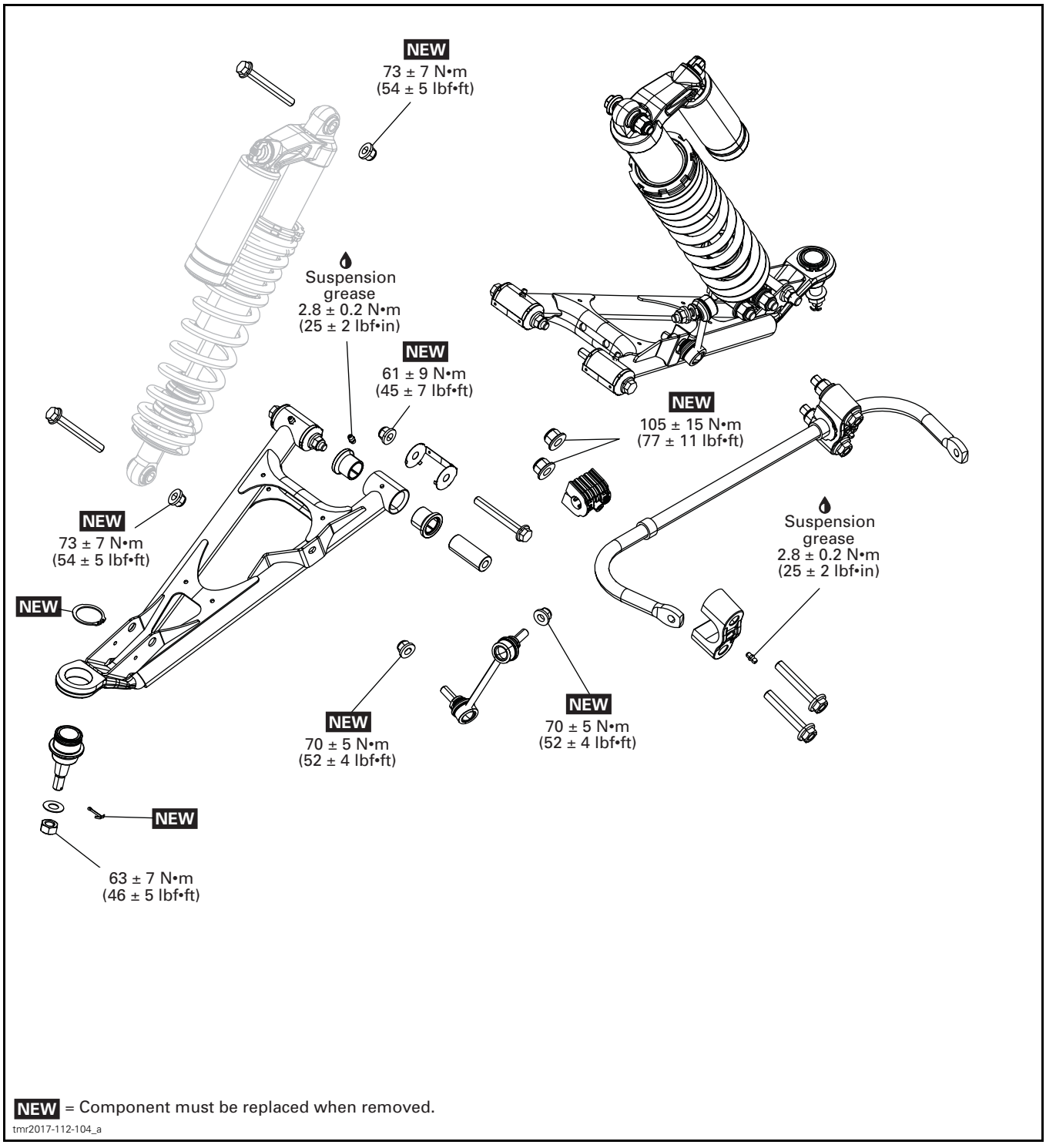

NEW = Component must be replaced when removed.

tmr2017-112-104_a

GENERAL

The procedure explained below is the same for the RH and LH sides unless otherwise noted.

On vehicles equipped with air controlled suspension (ACS), refer to *AIR CONTROLLED SUSPENSION (ACS)* subsection.

ADJUSTMENT

For adjustment procedures, refer to *REAR SUSPENSION* subsection.

COMMANDER FACTORY SETTINGS

REAR SUSPENSION FACTORY SETTINGS		
ADJUSTMENT	MODEL	FACTORY SETTING
Spring preload	Commander XT-P	96.3 mm (3.79 in)
	Commander MAX LTD	50.8 mm (2 in)
	Commander LTD	ACS 1
	Other models	Cam position 1 (soft)
Compression damping	Commander XT-P and Commander MAX LTD	Position 2
	Commander LTD	Position 10

MAVERICK FACTORY SETTINGS

REAR SUSPENSION FACTORY SETTINGS			
ADJUSTMENT		MODEL	FACTORY SETTING
Spring preload		Maverick DPS	87.4 mm (3.44 in)
		Maverick X mr	110 mm (4.33 in)
		Maverick Turbo (All)	64.1 mm (2.52 in)
		Maverick MAX	78.3 mm (3.08 in)
		Maverick MAX Turbo (All)	36.1 mm (1.42 in)
		Other models	69.7 mm (2.74 in)
Compression damping Single setting		DPS X mr Turbo (Except CE) MAX Turbo	Position 2
		Other models	Position 12
Compression damping	High speed	All applicable models	Position 12
	Low speed	All applicable models	Position 12
Rebound damping		All applicable models	Position 12

PROCEDURES

SHOCK ABSORBER

Removing the Shock Absorber

1. Safely lift and support the vehicle of the ground. Refer to *INTRODUCTION* subsection.
2. Remove bolts and nuts retaining shock absorber.
3. Remove shock absorber.

Inspecting Shock Absorber

Remove spring from shock absorber. Refer to *SPRINGS* in this subsection.

Secure the end of shock body in a vise with its rod upward.

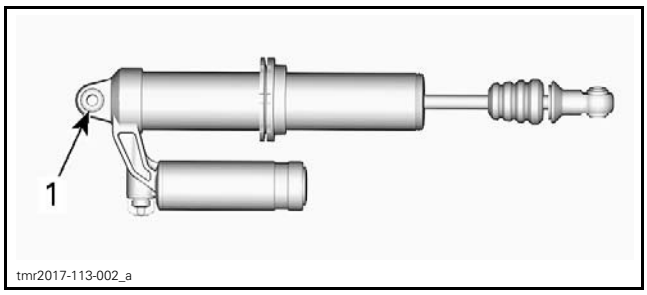

TYPICAL
1. Clamp here

NOTICE **Do not clamp directly on shock body.**

Extend and compress the piston several times over its entire stroke. Check that it moves smoothly and with uniform resistance with its rod upward.

Check the following conditions that will denote a defective shock:

– A skip or a hang back when reversing stroke at mid travel.
– Seizing or binding condition except at extreme end of either stroke.
– Oil leakage.
– A gurgling noise, after completing one full compression and extension stroke.
– Check for dents on the rod.

Replace if any faults are present.

Shock Absorber Spherical Bearing

For shock absorber spherical bearings inspection, cleaning and replacement, refer to *SUSPENSION* in *PERIODIC MAINTENANCE PROCEDURE* subsection.

Shock Absorber Bushings

Refer to *SHOCK ABSORBER BUSHINGS* in *REAR SUSPENSION* subsection for complete procedures.

Installing the Shock Absorber

The installation is the reverse of the removal procedure. However, pay attention to the following.

Make sure to install the proper type of shock absorber. The P/N is located:

– On the shock body, near the cap, for oil shocks.
– On the lower cap for HPG shocks.

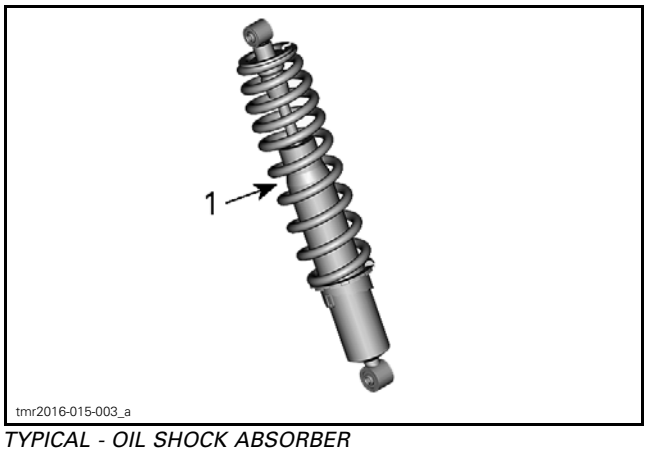

TYPICAL - OIL SHOCK ABSORBER
1. Shock P/N

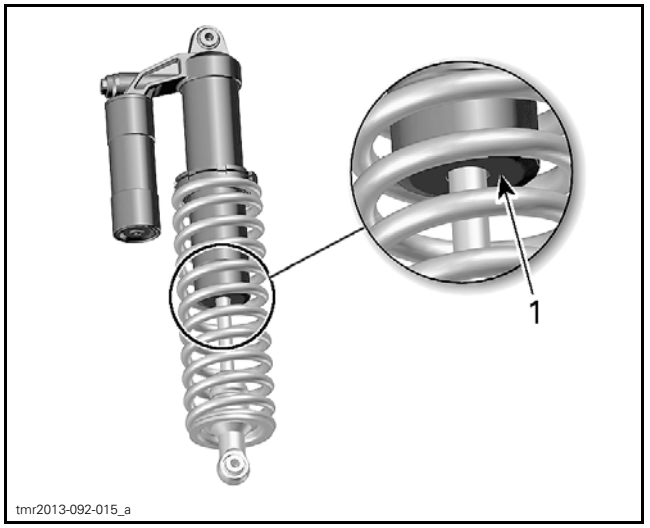

TYPICAL - HPG SHOCK ABSORBER
1. Shock P/N

If applicable, install the shock with the reservoir outwards.

If applicable, install the shock with the rebound adjuster towards rear. Rotate the bottom if necessary.

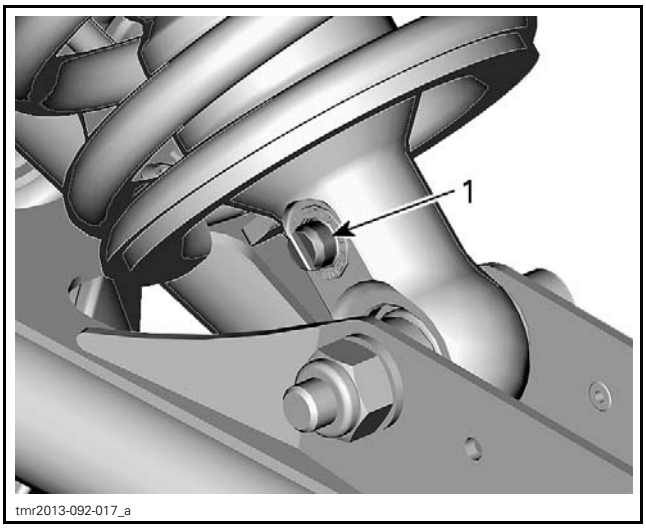

1. Rebound adjuster

Refer to the appropriate exploded view for tightening torque.

SPRINGS

Refer to *SPRINGS* in *REAR SUSPENSION* subsection for complete procedures.

STABILIZER BAR

Removing the Stabilizer Bar

1. Remove upper link nuts.
2. Remove the fasteners retaining the stabilizer bar to the chassis.
3. Remove stabilizer bar from vehicle.

Inspecting the Stabilizer Bar

Check stabilizer bar for cracks, bending or other damages.

Replace if necessary.

Installing the Stabilizer Bar

The installation is the reverse of the removal procedure.

Refer to the appropriate exploded view for tightening torque.

Maverick Models

Lubricate the stabilizer bar bushings.

LOWER SUSPENSION ARM

Removing the Lower Suspension Arm

1. Safely lift and support the vehicle off the ground. Refer to *INTRODUCTION* subsection.
2. Remove wheel, refer to *WHEELS AND TIRES* subsection.

Commander Models

3. Disconnect stabilizer bar from suspension arm.

All Models

4. Remove lower ball joint to knuckle bolt.

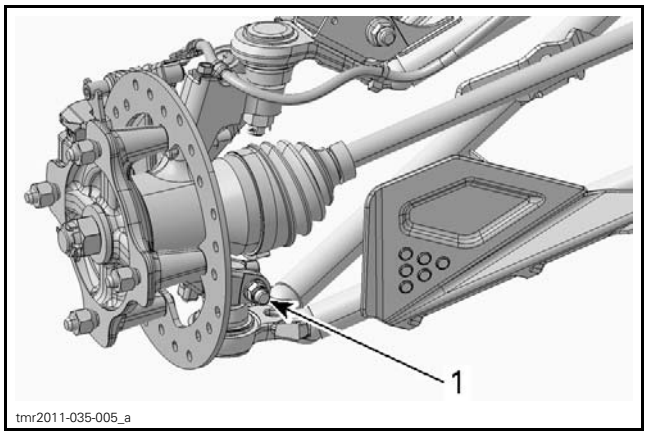

TYPICAL
1. Ball joint nut

5. Remove the lower arm retaining bolts.

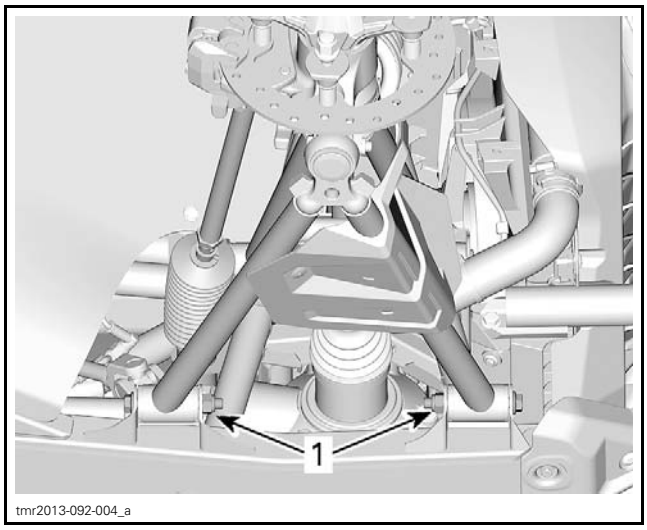

TYPICAL
1. Lower arm bolts

6. Remove suspension arm.

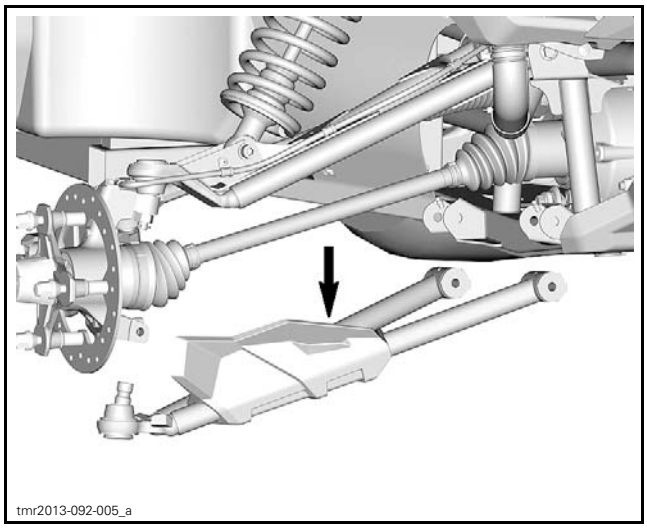

TYPICAL

Installing the Lower Suspension Arm

The installation is the reverse of the removal procedure. However, pay attention to the following.

Refer to the appropriate exploded view for tightening torque.

Lubricate suspension arm. Refer to *PERIODIC MAINTENANCE PROCEDURES* subsection.

UPPER SUSPENSION ARM

Removing the Upper Suspension Arm

1. Safely lift and support the vehicle off the ground. Refer to *INTRODUCTION* subsection.
2. Remove wheel, refer to *WHEELS AND TIRES* subsection.
3. Remove fasteners retaining brake hose to the upper arm.

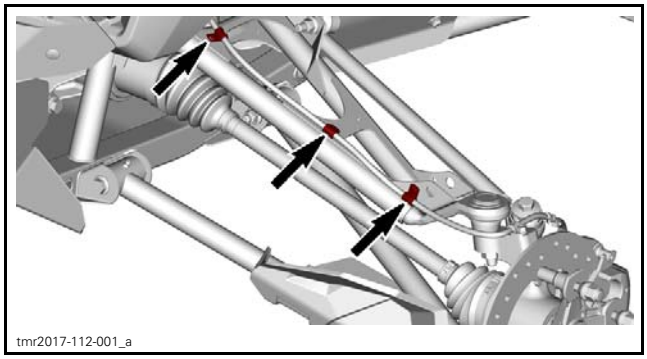

TYPICAL - MAVERICK

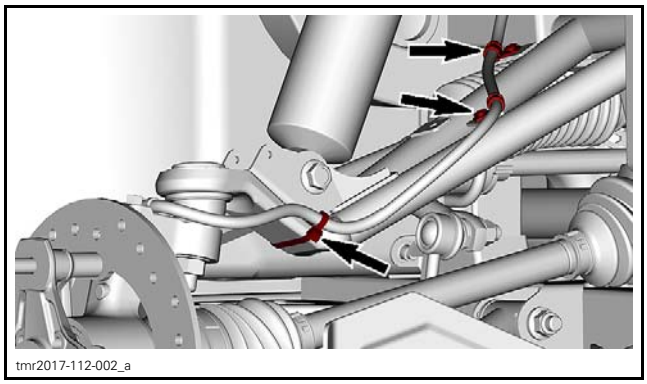

TYPICAL - COMMANDER

Maverick Models

4. Remove stabilizer bar.

All Models

5. Remove and discard cotter pin retaining ball joint.

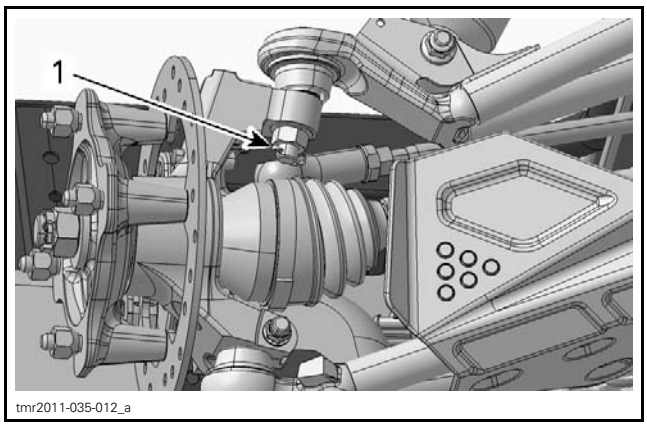

TYPICAL
1. Ball joint cotter pin

6. Remove ball joint nut and washer.

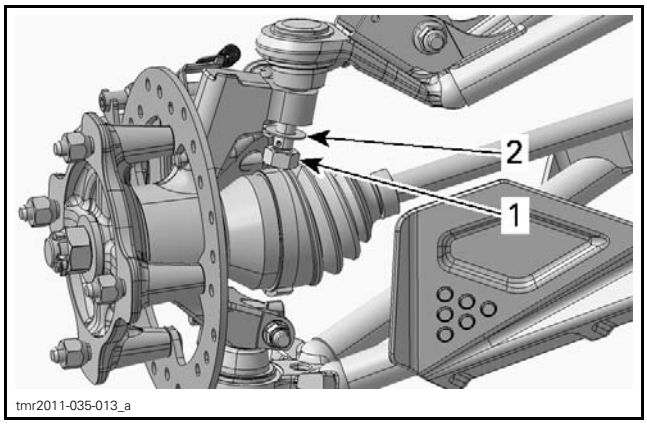

TYPICAL
1. Ball joint nut
2. Ball joint hardened washer

7. Carefully move brake hose aside.
8. Using a rubber mallet, carefully hit on the knuckle side to separate ball joint from knuckle.

NOTE: A ball joint remover can be used if the ball joint is jammed into knuckle.

NOTICE Never hit on suspension arm to avoid to damage it permanently.


tmr2011-035-020

CAREFULLY HIT ON KNUCKLE SIDE

9. Remove the shock absorber lower bolt.

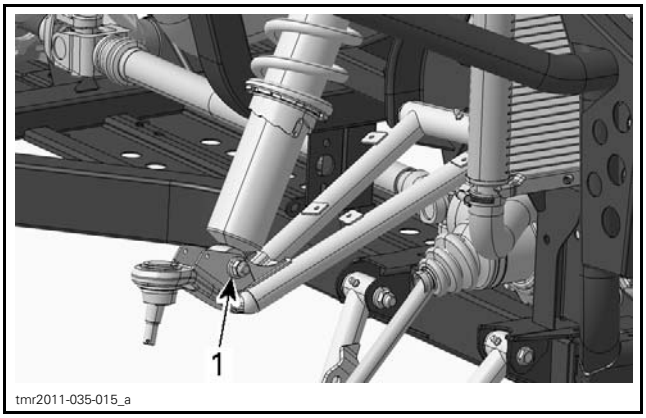

tmr2011-035-015_a

TYPICAL
1. Shock absorber nut

Commander Models

10. Remove radiator from vehicle. Refer to *RADIATOR* in *COOLING SYSTEM* subsection.

All Models

11. Remove fasteners securing suspension arm to frame.

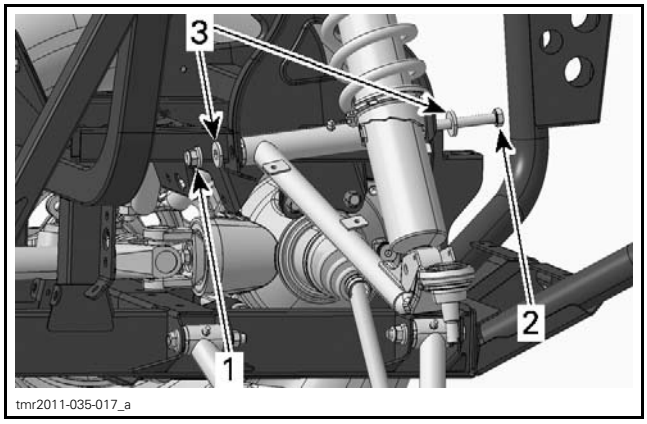

tmr2011-035-017_a

TYPICAL - COMMANDER
1. Suspension arm pivot nut
2. Suspension arm pivot bolt
3. Suspension arm pivot washers

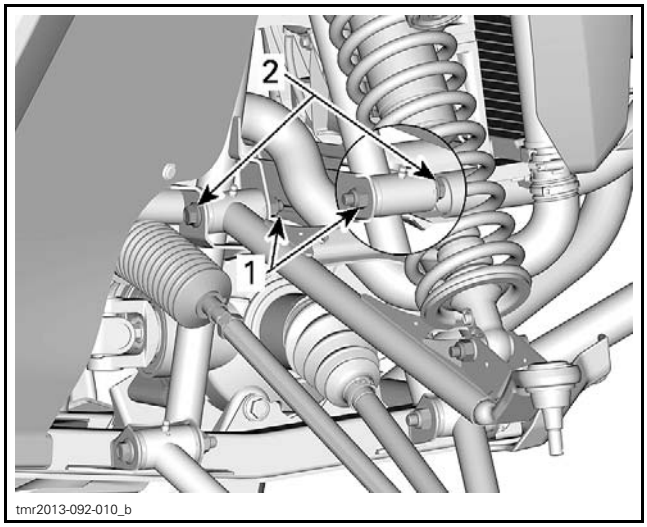

tmr2013-092-010_b

TYPICAL - MAVERICK
1. Suspension arm pivot nuts
2. Suspension arm pivot bolts

12. Remove suspension arm.

Installing the Upper Suspension Arm

The installation is the reverse of the removal procedure. However, pay attention to the following.

Commander Models

Refer to *COOLING SYSTEM* subsection for radiator installation.

NOTICE Properly bleed cooling system. Refer to *COOLING SYSTEM* subsection.

All Models

Refer to the appropriate exploded view for tightening torque.

Lubricate suspension arm. Refer to *PERIODIC MAINTENANCE PROCEDURES* subsection.

Install a new cotter pin to secure ball joint nut. Both end of cotter pin must be folded.

SUSPENSION ARM BUSHINGS

Removing the Suspension Arm Bushings

1. Remove wear plates, bushings and inner sleeve from suspension arm.

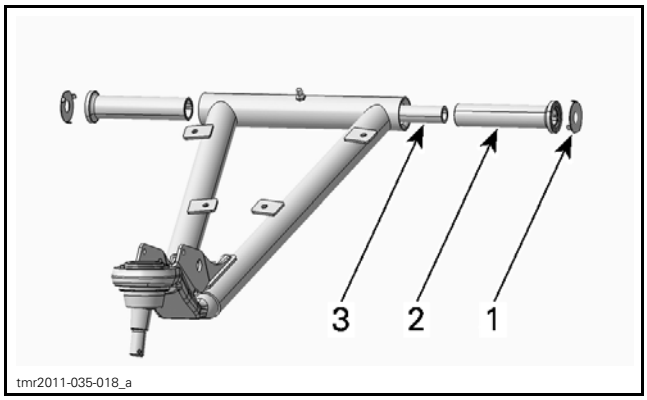

TYPICAL - COMMANDER UPPER ARM
1. *Wear plate*
2. *Bushing*
3. *Inner sleeve*

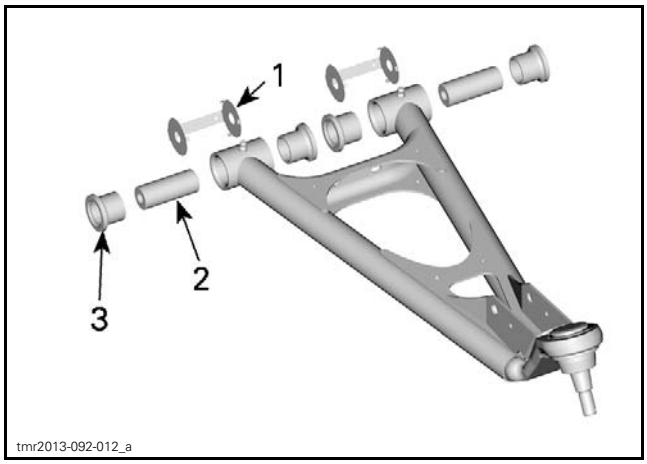

TYPICAL - MAVERICK UPPER ARM
1. *Wear plate*
2. *Inner sleeve*
3. *Bushing*

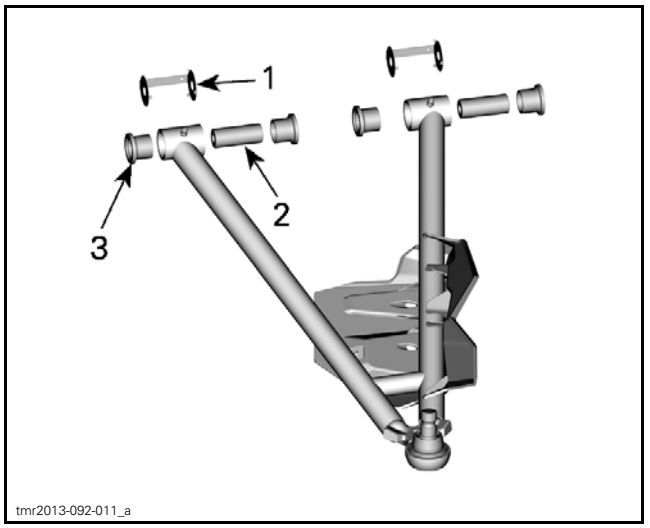

TYPICAL - LOWER ARM (ALL MODELS)
1. *Wear plate*
2. *Inner sleeve*
3. *Bushing*

Installing the Suspension Arm Bushings

The installation is the reverse of the removal procedure. However, pay attention to the following.

Refer to the appropriate exploded view for tightening torque.

Lubricate suspension arm. Refer to *PERIODIC MAINTENANCE PROCEDURES* subsection.

BALL JOINTS

Removing the Ball Joint

1. Remove suspension arm from vehicle. Refer to *SUSPENSION ARM REMOVAL* in this subsection.
2. Remove circlip from ball joint.

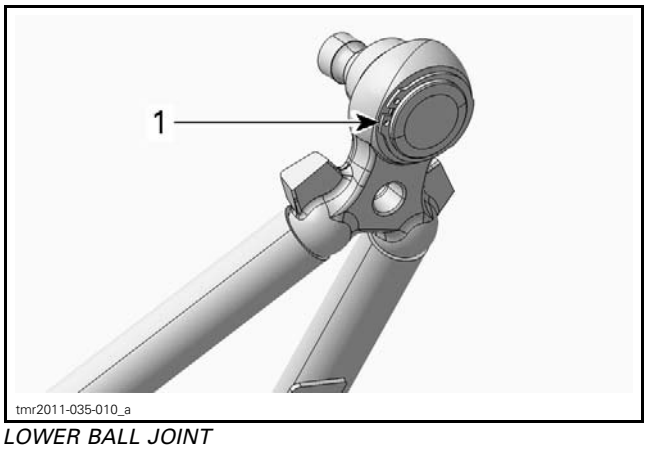

LOWER BALL JOINT
1. *Circlip*

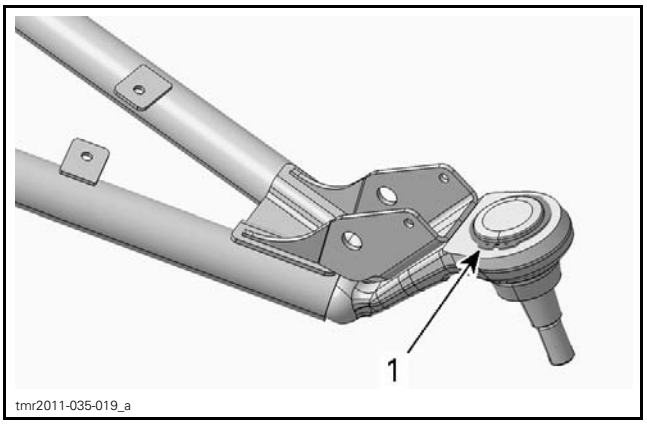

TYPICAL - UPPER BALL JOINT
1. Circlip

3. Install suspension arm on a press.
4. Use an appropriate ball joint remover.

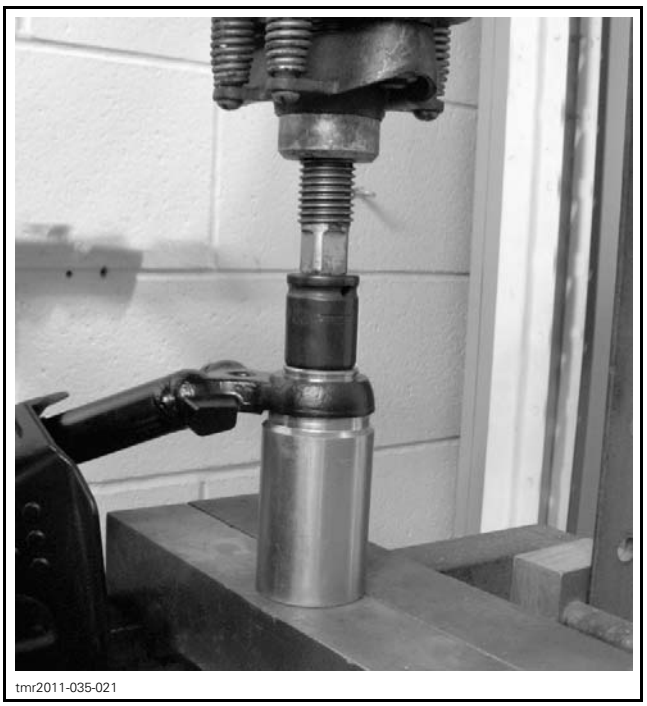

5. Remove ball joint from suspension arm.

NOTICE **Make sure that suspension arm is properly supported on the press during ball joint removal.**

Installing the Ball Joint

The installation is the reverse of the removal procedure. However, pay attention to the following.

Install a **NEW** circlip to secure ball joint.

REAR SUSPENSION

SERVICE TOOLS

Description	Part Number	Page
SPRING COMPRESSOR	529 036 184	5

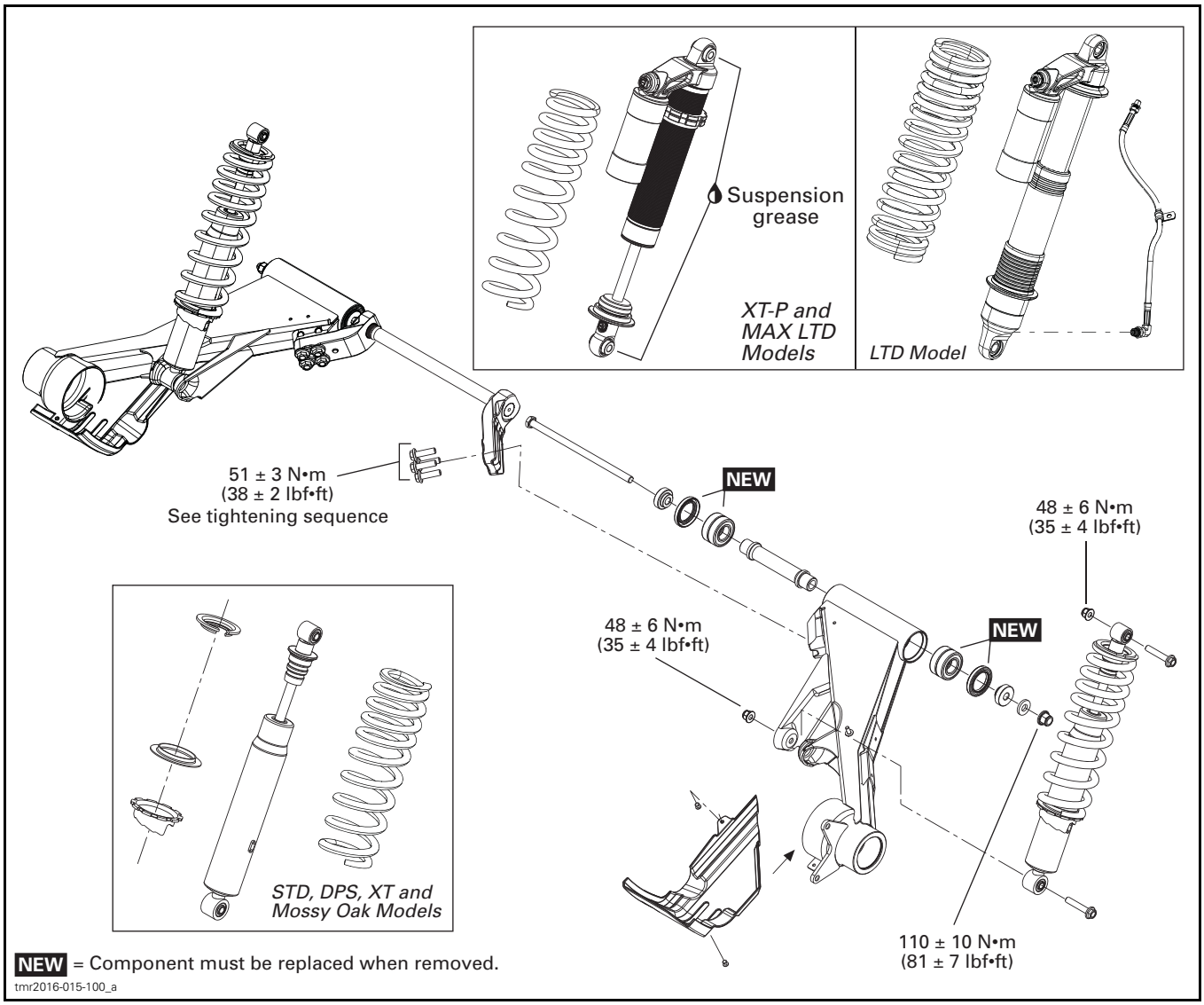

NEW = Component must be replaced when removed.

tmr2016-015-100_a

GENERAL

The procedure described below is the same for the RH and LH sides, unless otherwise instructed.

On vehicles equipped with air controlled suspension (ACS), refer to *AIR CONTROLLED SUSPENSION (ACS)* section.

ADJUSTMENT

Choice of suspension adjustments vary with vehicle load, personal preference, riding speed and terrain condition.

The best way to set up the suspension, is to start from factory settings, then customize each adjustment one at a time.

Front and rear adjustments are interrelated. It may be necessary to readjust the rear shock absorbers after adjusting front shock absorbers for instance.

Test run the vehicle under the same conditions; trail, speed, load, etc. Change one adjustment and retest. Proceed methodically until you are satisfied.

Following are guidelines to fine-tune suspension.

ADJUSTMENT LOCATION

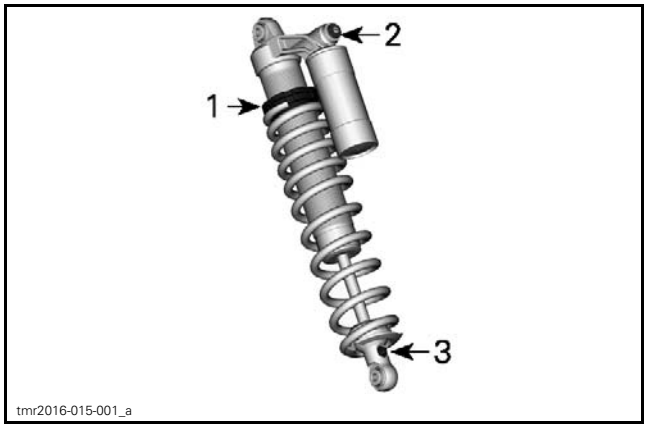

XT-P AND MAX LTD MODELS
1. *Preload adjustment*
2. *Low speed and high speed compression damping adjuster*
3. *Rebound adjuster*

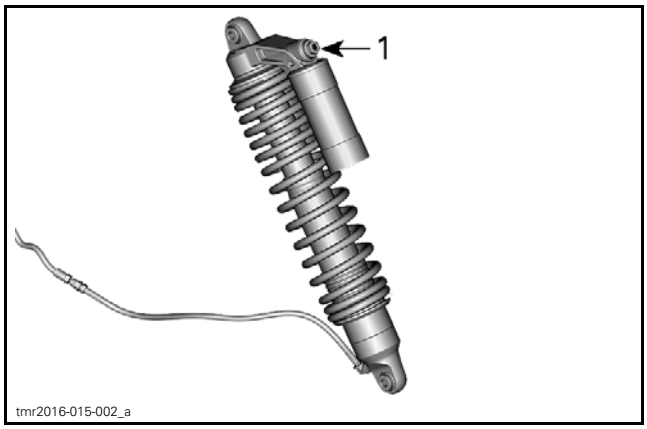

LTD MODEL
1. *Low speed compression damping adjuster*

SUSPENSION FACTORY SETTINGS

For adjustment procedures, refer to *SPRING PRELOAD ADJUSTMENT* and *SHOCK DAMPING ADJUSTMENTS* in this section.

REAR SUSPENSION FACTORY SETTINGS		
ADJUSTMENT	MODEL	FACTORY SETTING
Spring preload	Commander XT-P	45.8 mm (1.8 in)
	Commander MAX LTD	42.9 mm (1.69 in)
	Commander LTD	N/A
Compression damping (low speed)	Commander XT-P and Commander MAX LTD	12 ± 1 clicks counterclockwise from full stop
	Commander LTD	10 ± 1 clicks counterclockwise from full stop
Compression damping (high speed)	Commander XT-P and Commander MAX LTD	12 ± 1 clicks counterclockwise from full stop
Rebound damping	Commander XT-P and Commander MAX LTD	12 ± 1 clicks counterclockwise from full stop

SUSPENSION ADJUSTMENTS

Spring Preload Adjustment

Shorten the spring for a firmer ride and rough riding condition or when pulling a trailer (if equipped with hitch).

Lengthen the spring for a softer ride and smooth riding condition.

⚠ WARNING

The left and right shock adjustment on front or rear suspension must always be set to the same position. Never adjust one shock only. Uneven adjustment can cause poor handling and loss of stability, which could lead to an accident.

Lift the vehicle. Spring length should be measured without load on the wheels.

Spring length should be equal on both sides.

Adjust by loosening lock ring and turning adjuster ring as desired.

NOTE: Do not increase the spring preload by more than 15 mm (.59 in)over the factory setting.

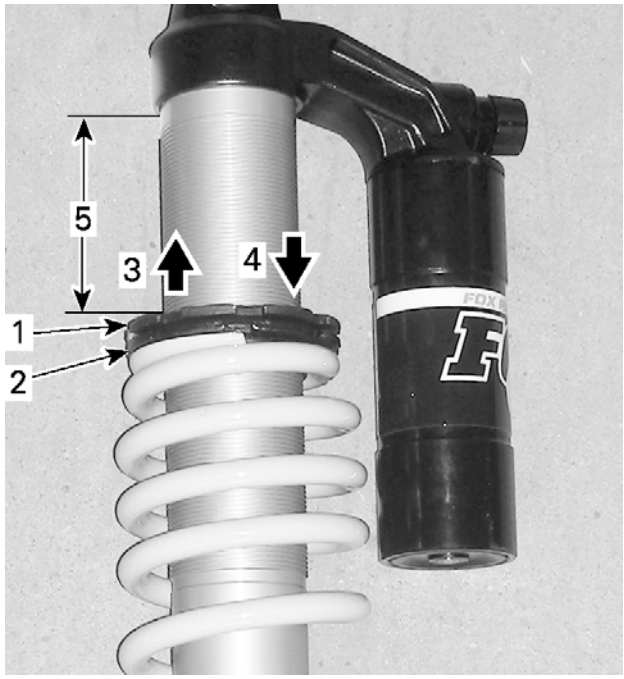

TYPICAL
1. *Loosen top lock ring*
2. *Turn adjuster ring as necessary*
3. *To soften preload*
4. *To stiffen preload*
5. *Dimensions to measure*

Shock Damping Adjustments

Perform adjustments **one** position (click) at a time. Test run the vehicle under the same conditions. Proceed methodically until you are satisfied.

Low Speed Compression Damping

Low speed compression damping controls how the shock absorber reacts to a low suspension velocity (slow compression strokes, in most cases when riding at lower speeds).

ACTION	RESULT ON BIG BUMPS
Increasing low speed compression damping force	Firmer compression damping (slow compression)
Decreasing low speed compression damping force	Softer compression damping (slow compression)

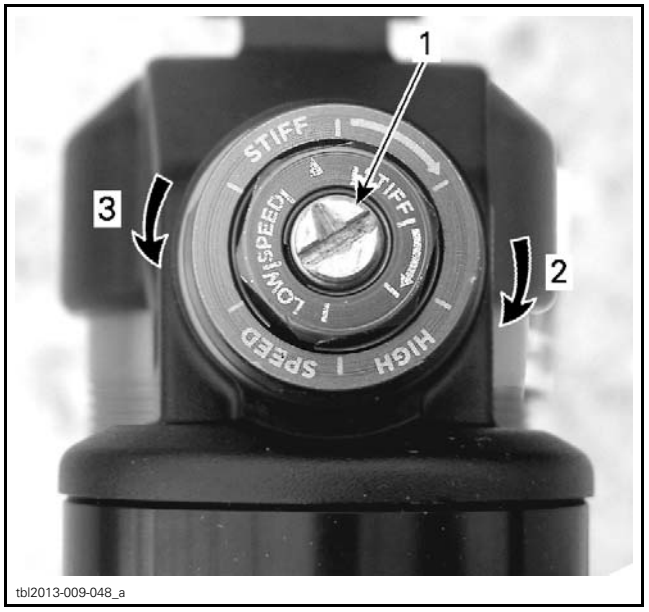

LOW SPEED COMPRESSION DAMPING
1. *Adjustment screw*
2. **Increases** *damping (stiffer)*
3. **Decreases** *damping (softer)*

High Speed Compression Damping

High speed compression damping controls how the shock absorber reacts to a high suspension velocity (quick compression strokes, in most cases when riding at higher speeds).

ACTION	RESULT ON SMALL BUMPS
Increasing high speed compression damping force	Firmer compression damping (fast compression)
Decreasing high speed compression damping force	Softer compression damping (fast compression)

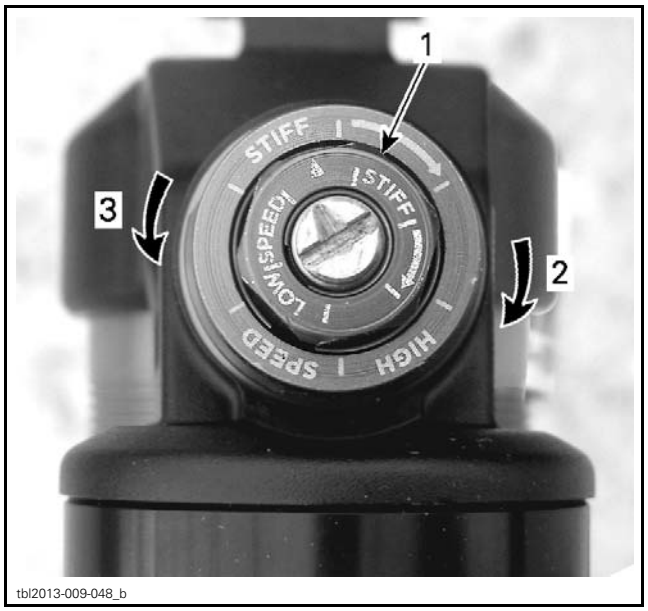

HIGH SPEED COMPRESSION DAMPING (USE A 17 MM WRENCH)
1. *Adjustment screw*
2. **Increases** *damping (stiffer)*
3. **Decreases** *damping (softer)*

Rebound Damping

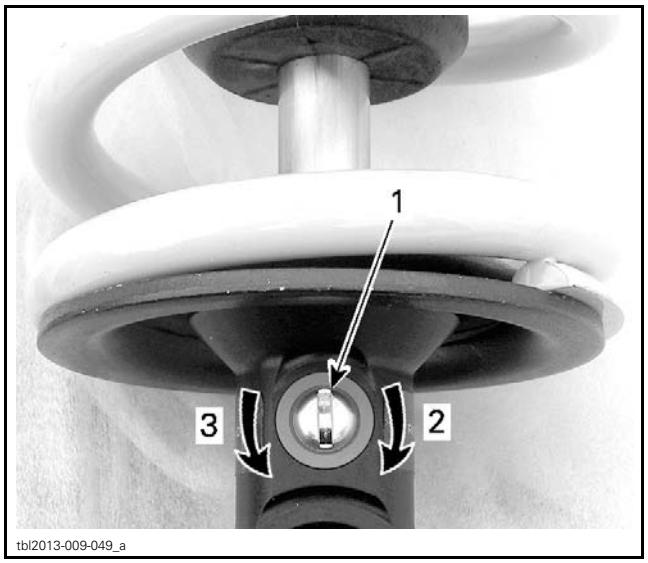

1. *Rebound adjuster*
2. **Increases** *rebound (stiffer)*
3. **Decreases** *rebound (softer)*

PROCEDURES

SHOCK ABSORBERS

Shock Absorber Removal

1. Safely lift and support the vehicle off the ground. Refer to *INTRODUCTION* subsection.
2. Open cargo box.
3. Remove bolts and nuts retaining shock absorber.
4. Remove shock absorber.

Shock Absorber Inspection

Remove spring from shock absorber. Refer to *SPRINGS* in this subsection.

Secure the end of shock body in a vise with its rod upward.

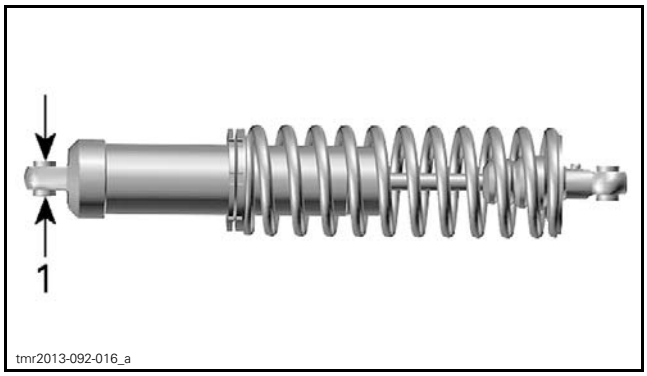

TYPICAL
1. *Clamp here*

NOTICE **Do not clamp directly on shock body.**

Extend and compress the piston several times over its entire stroke. Check that it moves smoothly and with uniform resistance with its rod upward.

Check the following conditions that will denote a defective shock:
- A skip or a hang back when reversing stroke at mid travel.
- Seizing or binding condition except at extreme end of either stroke.
- Oil leakage.
- A gurgling noise, after completing one full compression and extension stroke.

Replace if any faults are present.

Shock Absorber Spherical Bearing

For shock absorber spherical bearings inspection, cleaning and replacement, see *SUSPENSION* in *PERIODIC MAINTENANCE PROCEDURE* subsection.

Shock Absorber Installation

The installation is the reverse of the removal procedure. However, pay attention to the following.

Make sure to install the proper type of shock absorber. The P/N is located:
- On the shock body, near the cap, for oil shocks.
- On the lower cap for HPG shocks.

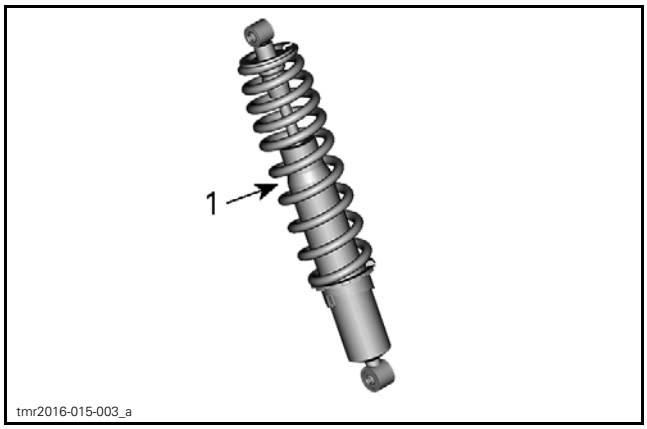

TYPICAL - OIL SHOCK ABSORBER
1. Shock P/N

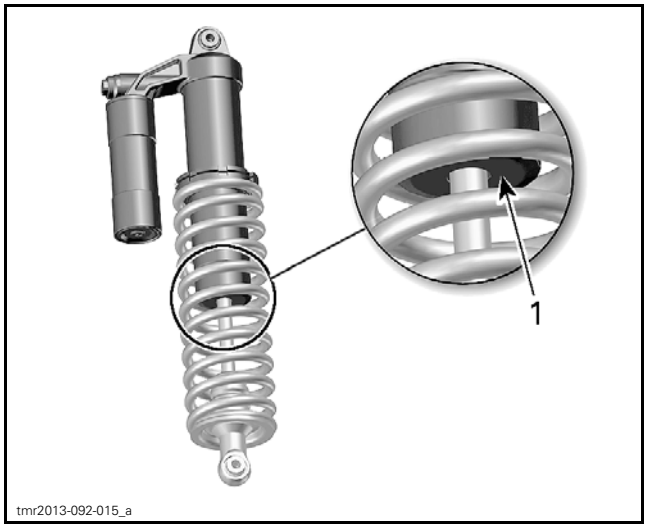

TYPICAL - HPG SHOCK ABSORBER
1. Shock P/N

Install the shock with the rebound adjuster towards rear.

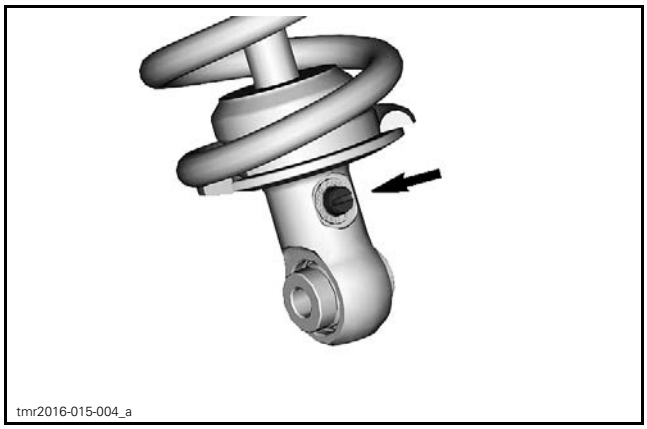

TIGHTENING TORQUE	
Shock absorber nut	48 N•m ± 6 N•m (35 lbf•ft ± 4 lbf•ft)

SHOCK ABSORBER BUSHINGS

Shock Absorber Bushing Replacement

All Shock Absorbers Except HPG with Remote Reservoir

1. Remove shock absorber from vehicle. Refer to *SHOCK ABSORBERS* in this subsection.
2. Install shock absorber on a press.
3. Use an appropriate socket to push bushing.

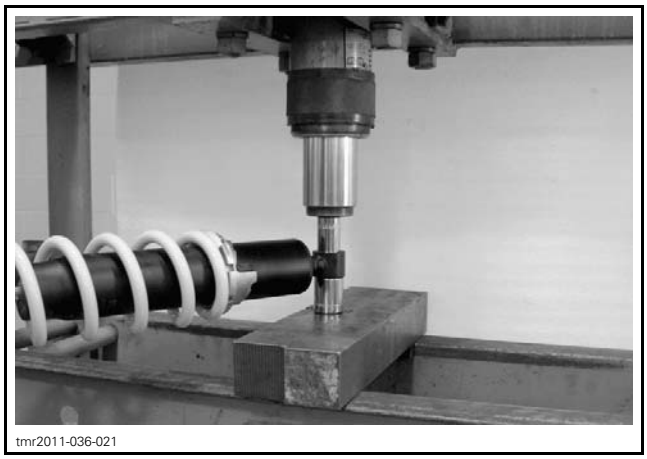

TYPICAL

4. Remove bushing from shock absorber.

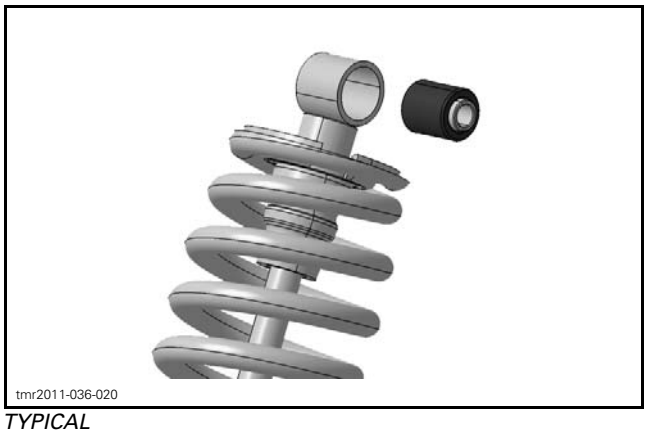

TYPICAL

5. Install a new bushing as the reverse of removal.
6. Install shock absorber on vehicle.

SPRINGS

Spring Removal

1. Remove shock absorber from vehicle. Refer to *SHOCK ABSORBERS* in this subsection.
2. Use SPRING COMPRESSOR (P/N 529 036 184).

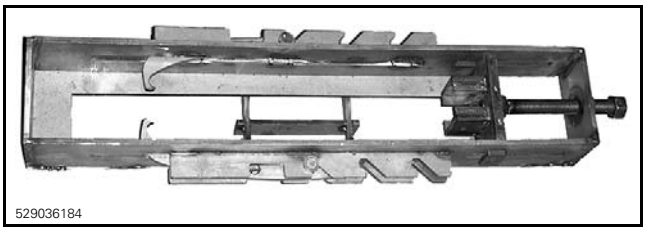
529036184

3. Place the tool in a vise.
4. Position the shock absorber in the tool.
5. Install the spring compressor pins.
6. Tighten spring remover screw until the spring is sufficiently compressed to remove spring cap.
7. Remove spring cap from shock absorber.
8. Release spring remover screw.
9. Remove spring from shock absorber.

Spring Inspection

Inspect the spring for damage.

Replace if necessary.

Spring Installation

The installation is the reverse of the removal procedure. However, pay attention to the following.

Install spring cap opening at 180° from spring stopper opening.

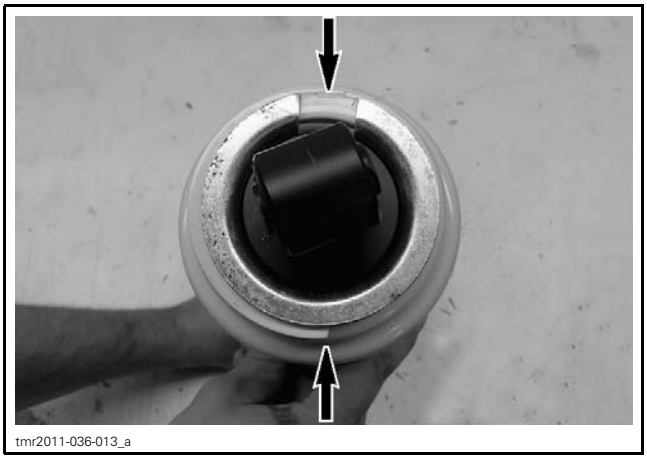
tmr2011-036-013_a

CAP OPENING AT 180°

STABILIZER BAR

Stabilizer Bar Removal

1. Safely lift and support the vehicle off the ground. Refer to *INTRODUCTION* subsection.
2. Open cargo box.
3. Remove stabilizer bar retaining screws (4 on each side).

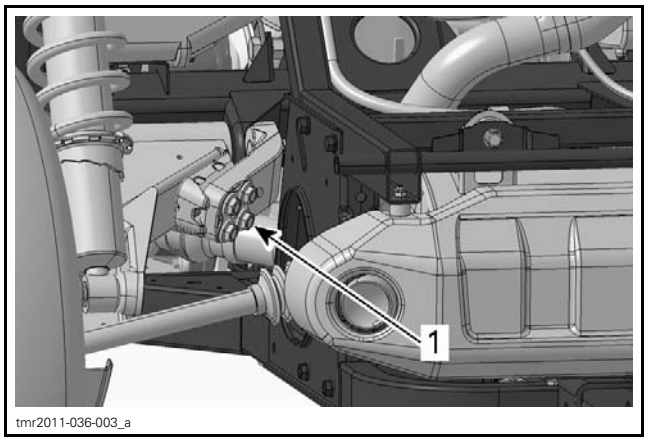

tmr2011-036-003_a

1. Stabilizer bar retaining screw

4. Remove Stabilizer bar.

Stabilizer Bar Inspection

Check stabilizer bar for cracks, bending or other damages.

Replace if necessary.

Stabilizer Bar Installation

The installation is the reverse of the removal procedure. However, pay attention to the following.

Install all retaining screws of Stabilizer bar loosely first.

Torque retaining screws of Stabilizer bar according to the following sequence.

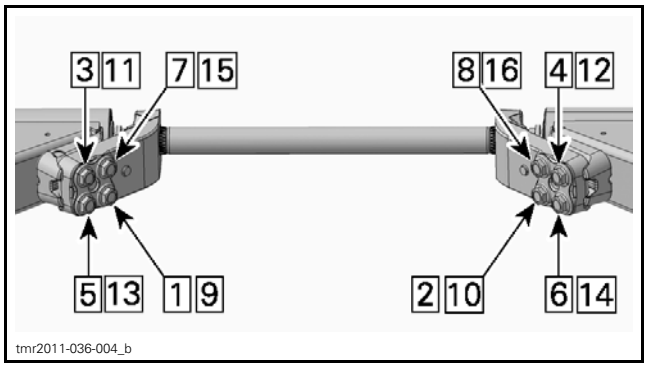

tmr2011-036-004_b

STABILIZER BAR TIGHTENING SEQUENCE

TIGHTENING TORQUE	
Stabilizer bar screws	85 N•m ± 10 N•m (63 lbf•ft ± 7 lbf•ft)

TRAILING ARM

Trailing Arm Removal

1. Safely lift and support the vehicle off the ground. Refer to *INTRODUCTION* subsection.
2. Remove wheel, refer to *WHEELS AND TIRES* subsection.

3. Open cargo box.
4. Remove stabilizer bar, refer to *STABILIZER BAR REMOVAL* in this subsection.
5. Remove wheel hub, refer to *REAR DRIVE* subsection.
6. Remove protective plate from trailing arm.

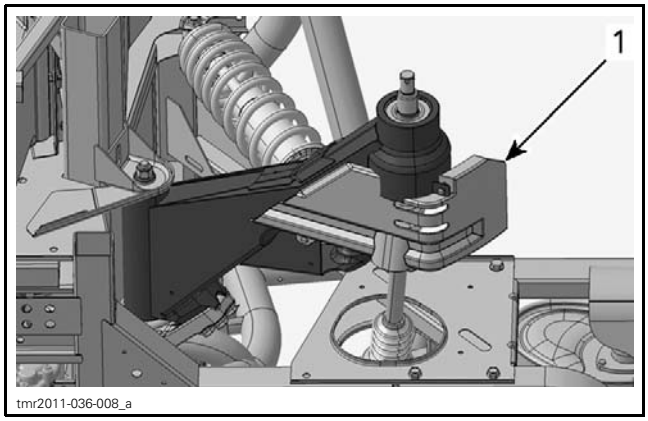

1. Protective plate

NOTE: If applicable, remove fasteners retaining brake hose to vehicle.

7. Remove nut and washer securing trailing arm pivot.

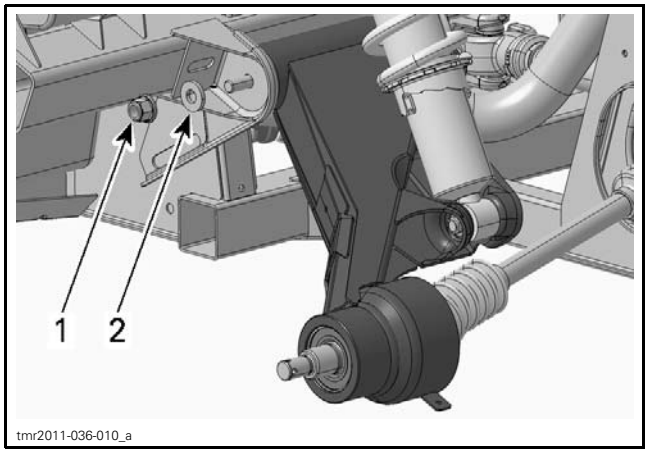

1. Pivot nut
2. Pivot washer

8. Remove lower nut retaining shock absorber.

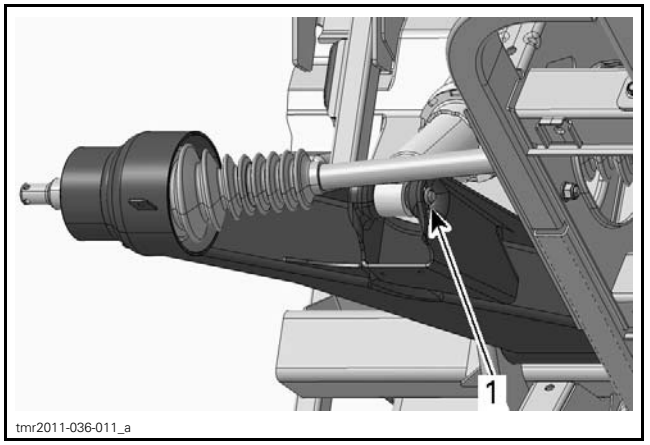

1. Lower nut

9. Firmly hold trailing arm then remove:
   – Shock absorber lower bolt
   – Trailing arm pivot bolt and washer.

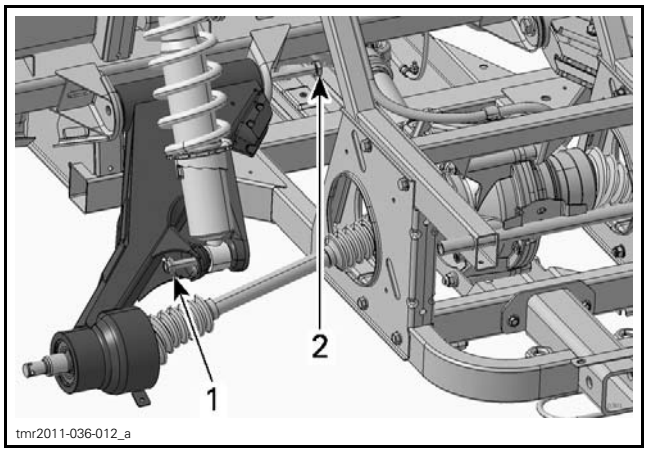

1. Shock absorber lower bolt
2. Trailing arm pivot bolt

10. Remove trailing arm from vehicle.

Trailing Arm Disassembly

Drive Shaft Bearing Removal

1. Remove circlip securing bearing into trailing arm.

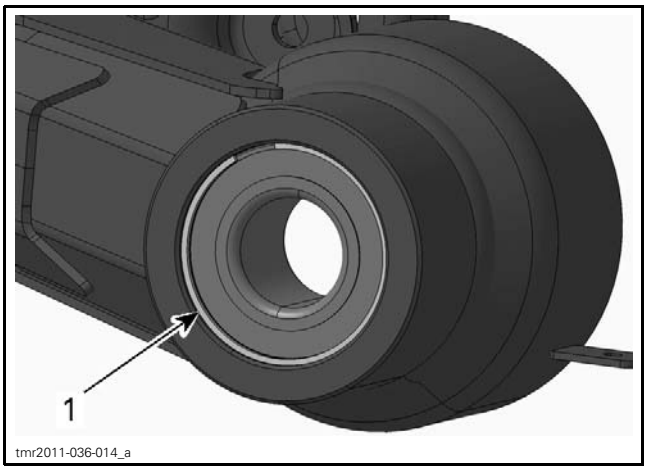

1. Circlip

2. Install trailing arm on a press.
3. Use an appropriate bearing remover.
4. Remove drive shaft bearing from trailing arm.

Trailing Arm Pivot Bearing Removal

1. Remove both spacers and seals from trailing arm pivot.

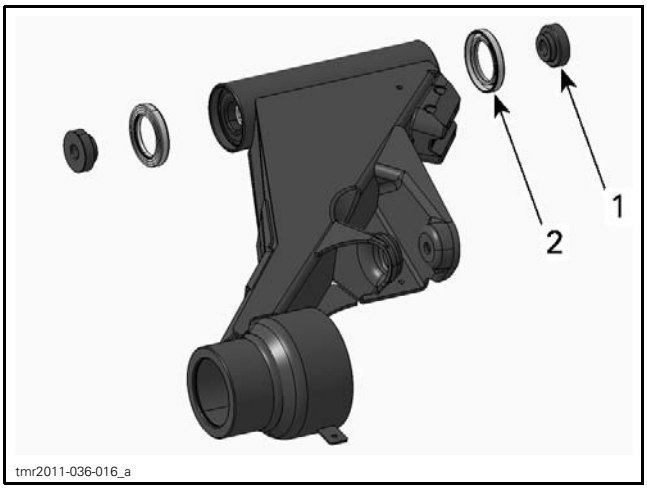

1. Spacer
2. Seal

2. Install trailing arm on a press.
3. Use an appropriate bearing remover.
4. Remove pivot bearings and bushing from trailing arm.

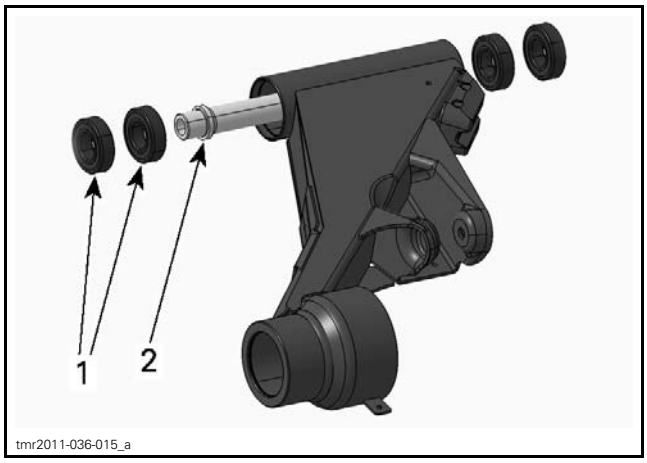

1. Pivot bearings
2. Pivot bushing

Trailing Arm Inspection

Check trailing arms for:
– Cracks
– Bending.

Check seals condition.

Check inner race of each pivot bearing with your finger:
– Bearings should turn smoothly and quietly.

Replace all damaged parts.

Trailing Arm Assembly and Installation

The installation is the reverse of the removal procedure. However, pay attention to the following.

Install the following new parts:
– Pivot bearings
– Seals
– Circlip.

TIGHTENING TORQUE	
Trailing arm pivot nut	110 N•m ± 10 N•m (81 lbf•ft ± 7 lbf•ft)

AIR CONTROLLED SUSPENSION (ACS)

SERVICE TOOLS

Description	Part Number	Page
FLUKE 115 MULTIMETER	529 035 868	400–404, 406–408

ACS FRONT SUSPENSION

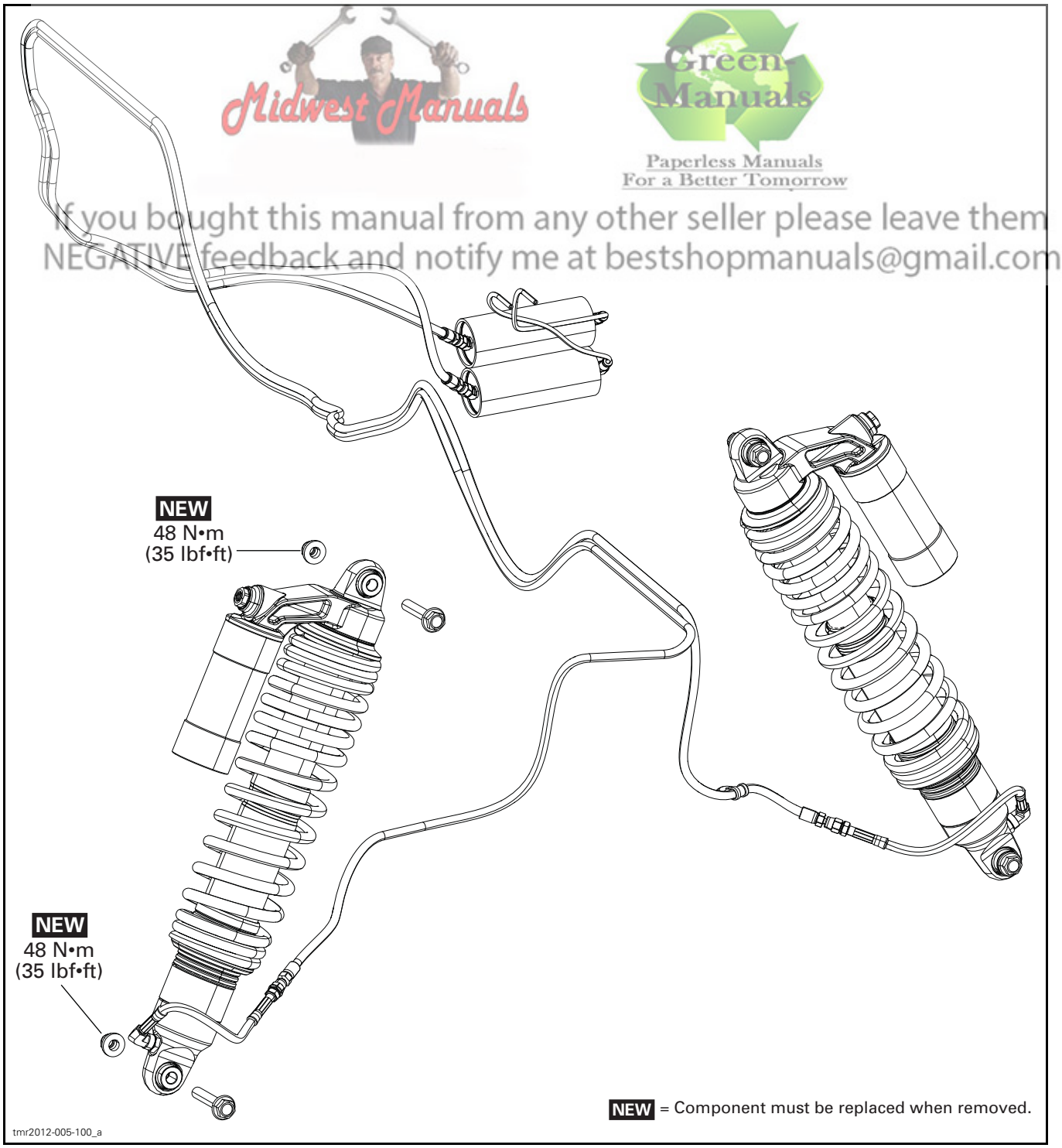

Midwest Manuals
Green-Manuals
Paperless Manuals
For a Better Tomorrow
If you bought this manual from any other seller please leave them NEGATIVE feedback and notify me at bestshopmanuals@gmail.com

ACS REAR SUSPENSION

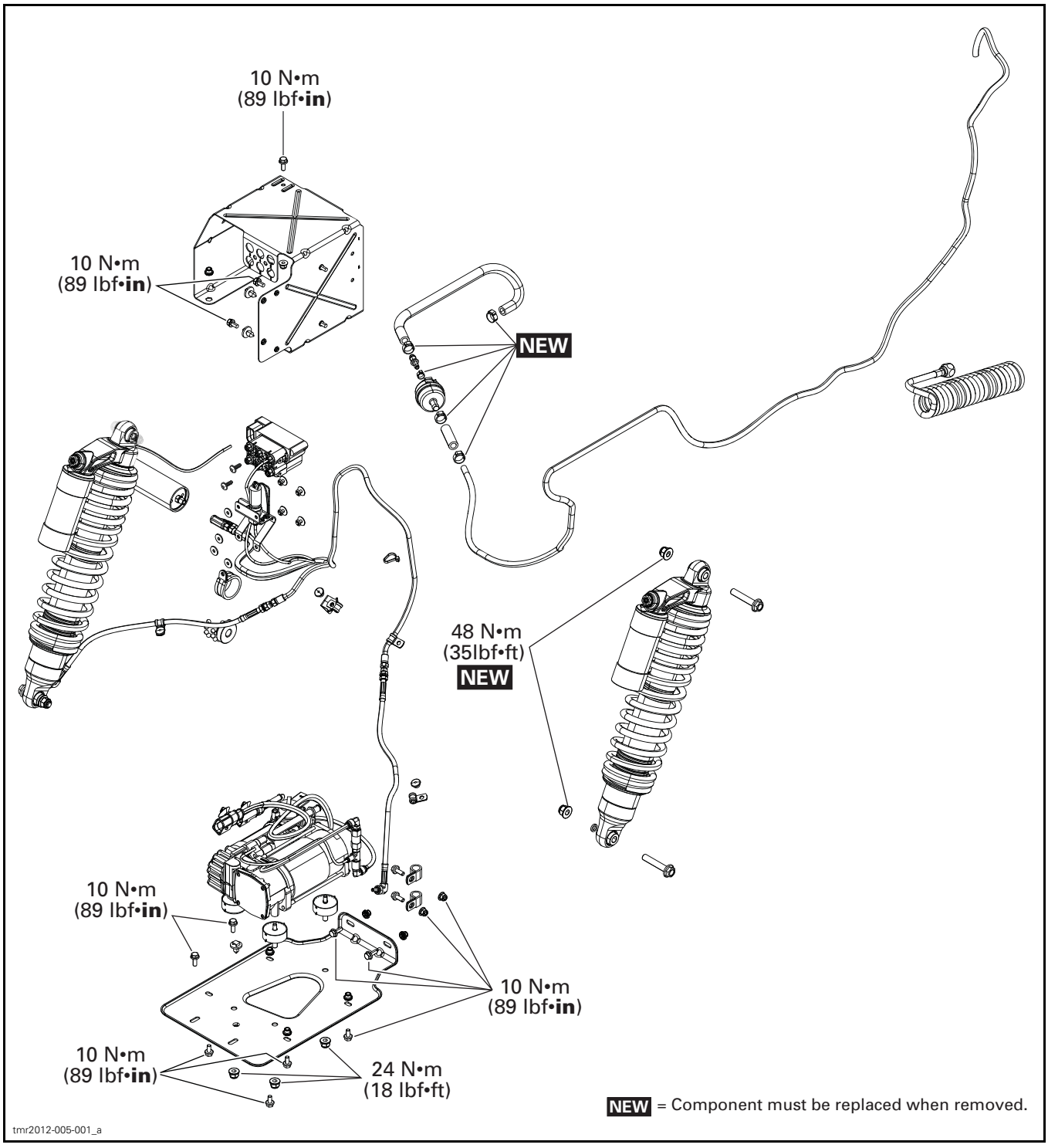

GENERAL

Be careful while manipulating nylon hoses, they must not be kinked.

Vehicle must be running to adjust ACS suspension or perform certain tests.

⚠ **CAUTION** Always wear safety goggles when working with pressurized air system.

⚠ **CAUTION** The ACS suspension system may be under high pressure (over 900 kPa (130 PSI)). Release air pressure prior to working on the system. Refer to *AIR PRESSURE RELEASE FOR SERVICING*.

SYSTEM DESCRIPTION (OPERATION)

The Commander LTD comes equipped with front and rear air-controlled suspension and HPG shocks with remote reservoir (piggyback).

By changing the ACS setting, air pressure in the front and rear shocks absorbers will change to provide a multitude of different suspension adjustments.

The ACS adjusts the front and rear shocks to 6 rider selectable levels depending on trail conditions or riders preference.

The front shocks pressure is lower than the rear shocks. The pressure are determined by the setting position.

This system allows the operator to adjust the front and rear suspension by pressing the suspension button.

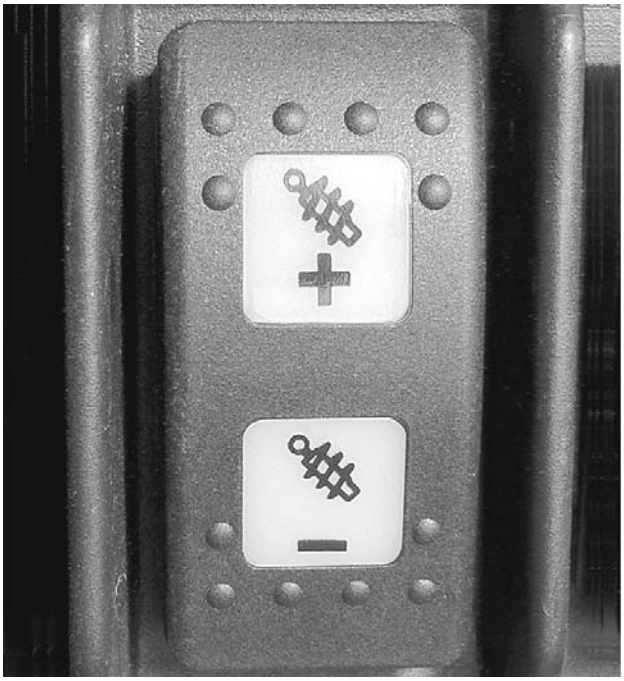
vdd2012-001-712

⚠ WARNING

Always adjust the ACS suspension setting according to load, riding condition, and speed.

NOTE: The ACS suspension will NOT self-adjust unless the engine is running, even when key switch is set to on.

The ACS has 2 modes for suspension adjustment:
– ACS auto mode
– ACS manual mode.

NOTE: The DPS is prioritized and as a result, when the DPS is heavily used, the ACS commands will be queued and executed when the DPS amp usage drops below a certain level.

ACS AUTO Mode

The automatic mode allows for simultaneous adjustments on the front and rear suspensions.

In auto mode, the suspension will automatically be adjusted to the preselected riding comfort position.

ACS SUSPENSION SETTINGS		
SETTING	RIDING COMFORT	RECOMMENDED LOAD
ACS 1	Softest	Operator only
ACS 2	Soft	
ACS 3	Semi-soft	Transporting a passenger **OR** a cargo
ACS 4	Semi-firm	
ACS 5	Firm with high ground clearance	Transporting a passenger **AND** a cargo
ACS 6	Firmest and highest ground clearance	



vdd2012-001-714

ACS AUTO MODE

Use ACS 1 to ACS 4 for trail riding.

Use the ACS 5 or ACS 6 settings to maximize ground clearance and increase performance while riding in the following environments:

– Muddy
– Watery
– Obstacles.

Use the ACS 6 setting is to maximize ground clearance and increase performance while carrying heavy loads:

⚠ WARNING

Always adjust the ACS suspension setting according to load, riding condition, and speed.

To Enter ACS Automatic Mode:

Press the MODE button until either ACS AUTO or ACS MAN is displayed.

Press SET button to have current ACS mode blink on screen.

Press SET button to select ACS AUTO mode.

NOTE: Selected ACS Setting from ACS1 to ACS6 displayed through gearbox position indicator.

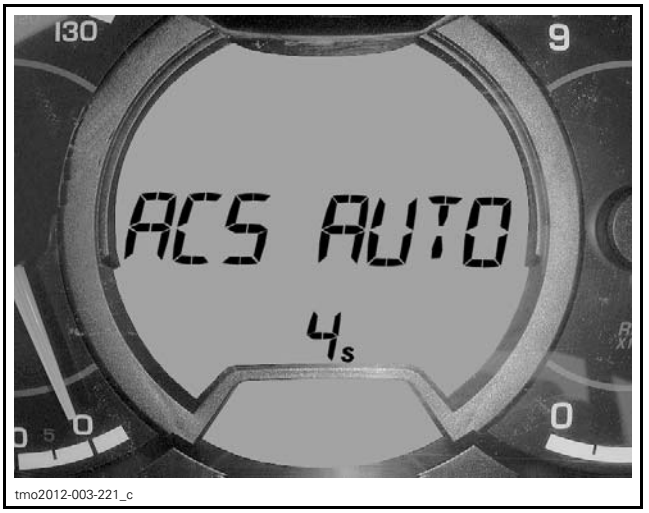

tmo2012-003-221_c

Press and hold SET button to confirm selection.

ACS MANUAL Mode

In manual mode the front and rear shock pressures can be adjusted independently. The fuel and temperature indicators will respectively become front and rear ACS pressure setting indicators.

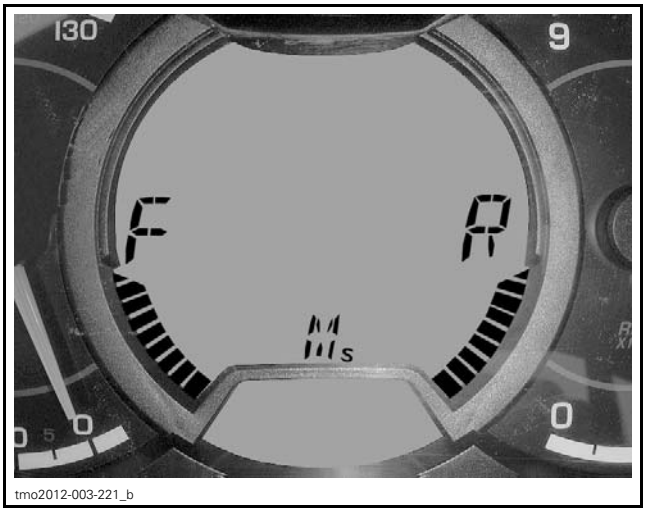

tmo2012-003-221_b

ACS MANUAL MODE

To Enter ACS Manual Mode:

Press the MODE button until either ACS AUTO or ACS MAN is displayed.

Press SET button to have current ACS mode blink on screen.

Press SET button to select ACS MAN mode.

NOTE: ACS set points and actual settings displayed through fuel, temp and gearbox position indicators.

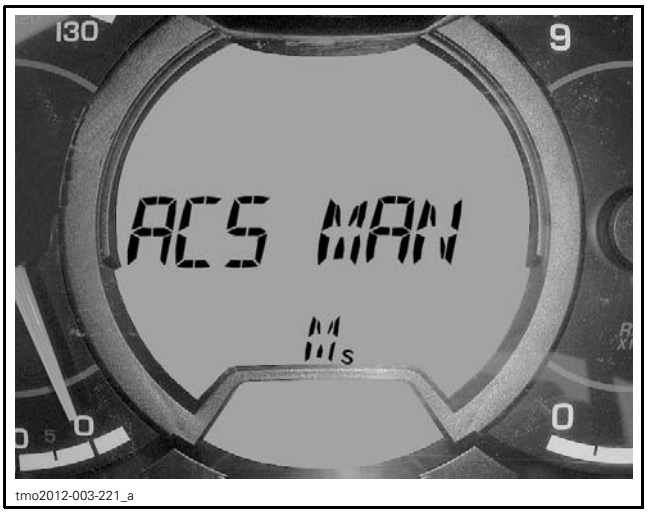

tmo2012-003-221_a

Press and hold SET button to confirm selection.

To Adjust Front Suspension:

Press on the OVERRIDE button until front (F) is blinking to select front (F) suspension setting.

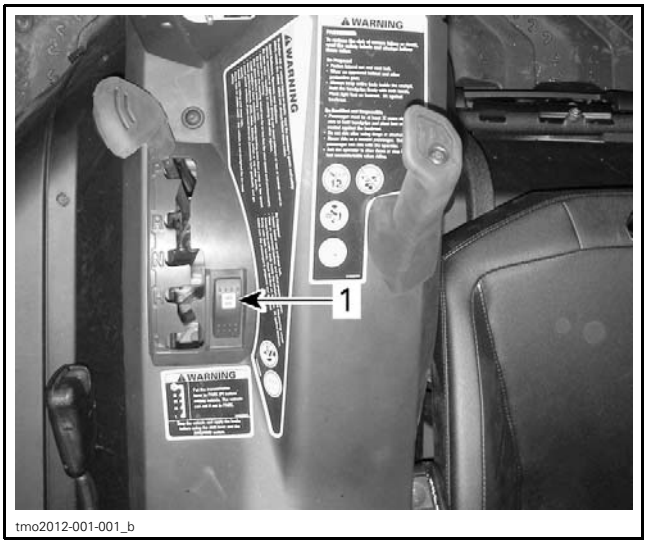

tmo2012-001-001_b

1. Override switch

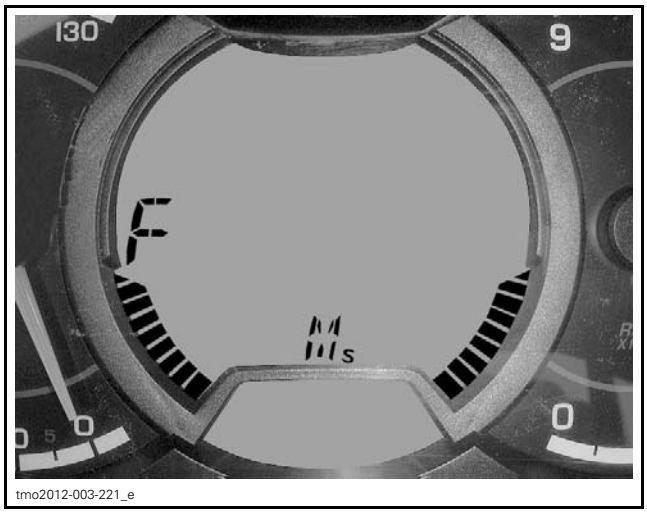

tmo2012-003-221_e

Press and hold ACS button to lower or raise the front suspension until desired setting is achieved.

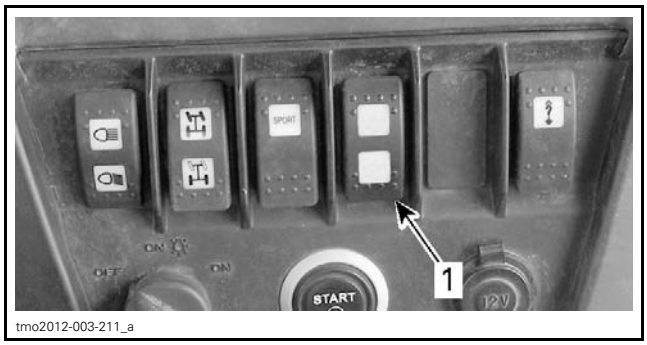

tmo2012-003-211_a

1. ACS button

To Adjust Rear Suspension:

Press on the OVERRIDE button until rear (R) is blinking to select rear (R) suspension setting.



tmo2012-001-001_b

1. Override switch

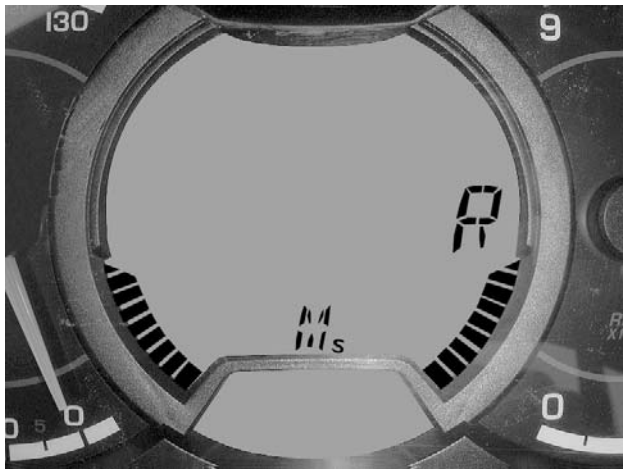

tmo2012-003-221_d

Use the ACS button to lower or raise the rear suspension.

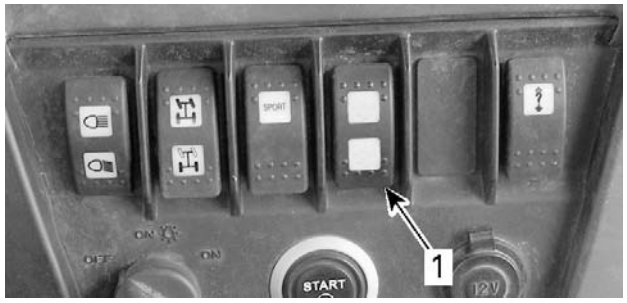

tmo2012-003-211_a

1. ACS button

NOTE: Fuel and temperature indicators will respectively become front and rear ACS setting indicators.

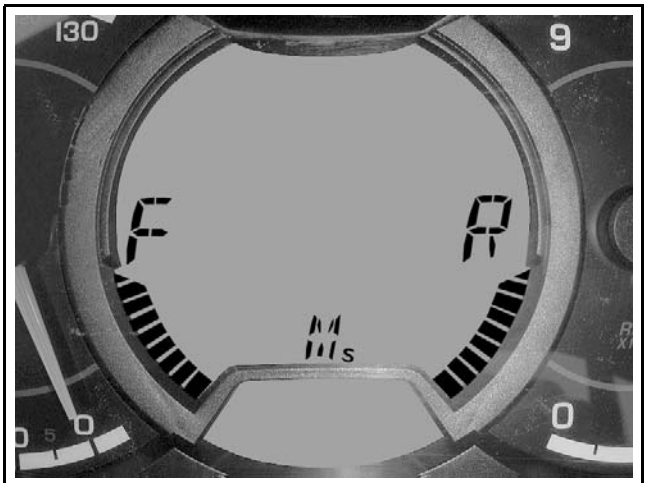

tmo2012-003-221_b

Quick Mode Selection

The last setting utilized in each mode is stored in the system. This allows for quick selections between the stored automatic mode setting and the stored manual mode setting.

To Enter Quick Mode Selection:

Press the MODE button until either ACS AUTO or ACS MAN is displayed.

Press SET button to have current ACS mode blink on screen.

Press SET button to select desired mode.



tmo2012-003-221_a

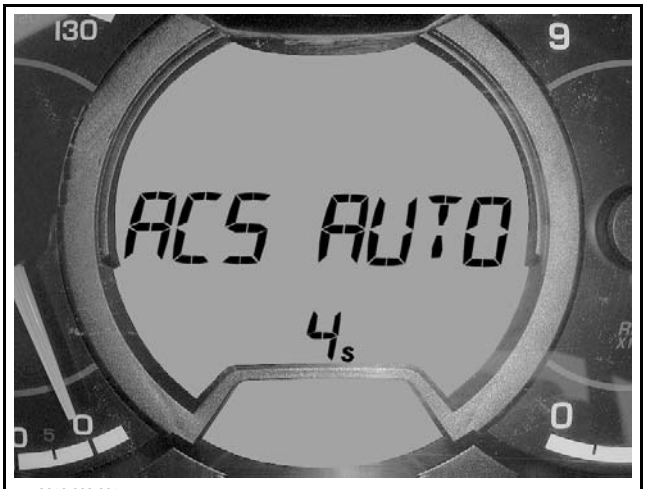

tmo2012-003-221_c

Press and hold SET button to confirm selection.

ACS system will adjust to the last settings.

SYSTEM DESCRIPTION (FEATURES)

Tire Inflation Using the ACS Compressor

The ACS compressor also comes with an auxiliary hose that can be used to inflate tires out on the trail.

The air outlet fitting is located behind the driver's seat.

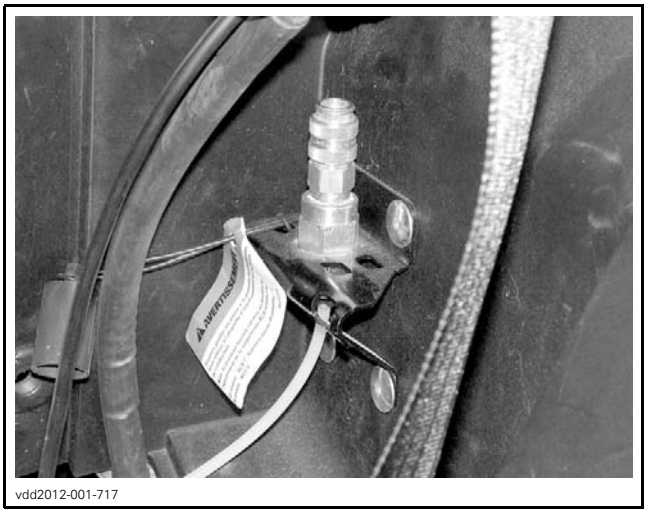

vdd2012-001-717

Air Pressure Release for Servicing

It is recommended to release air pressure in the system before servicing any components.

1. Connect vehicle to the latest appropriate version of B.U.D.S. Refer to *COMMUNICATION TOOLS AND B.U.D.S. SOFTWARE* subsection.
2. Select **Activation** page.
3. Select **ACS** folder.
4. Press the **System Pressure relief** button to proceed.

⚠ CAUTION Vehicle height will change during test. Keep away from wheelwell and suspension.

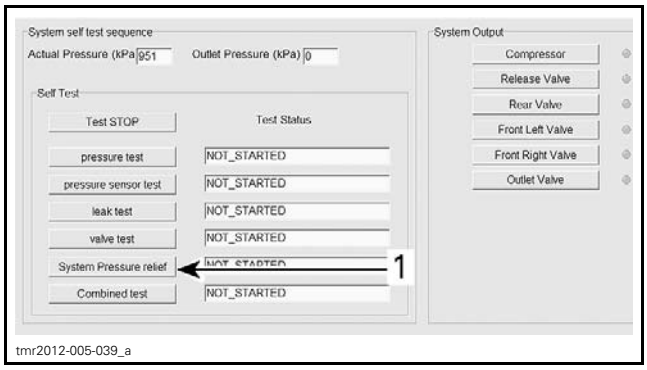

tmr2012-005-039_a

1. **System Pressure relief** *button*

NOTE: After activating the **System Pressure relief** button the system is not completely empty. The compressor setting does not allow to drop pressure under 207 kPa (30 PSI).

SYSTEM DESCRIPTION (COMPONENTS)

Fuse and Relay

ACS Fuse

The ACS system is protected by the fuse F3 (50 A) located in the fuse block no. 2. This fuse powers the ACS compressor through the ACS relay (R5).

NOTE: The ACS and DPS systems share the same fuse.

F12 powers the valve and the ACS relay.

F4 powers the electronic components.

ACS Compressor Relay (R5)

ACS compressor relay (R5) is located near ACS compressor, under driver's seat.

ACS Main Components

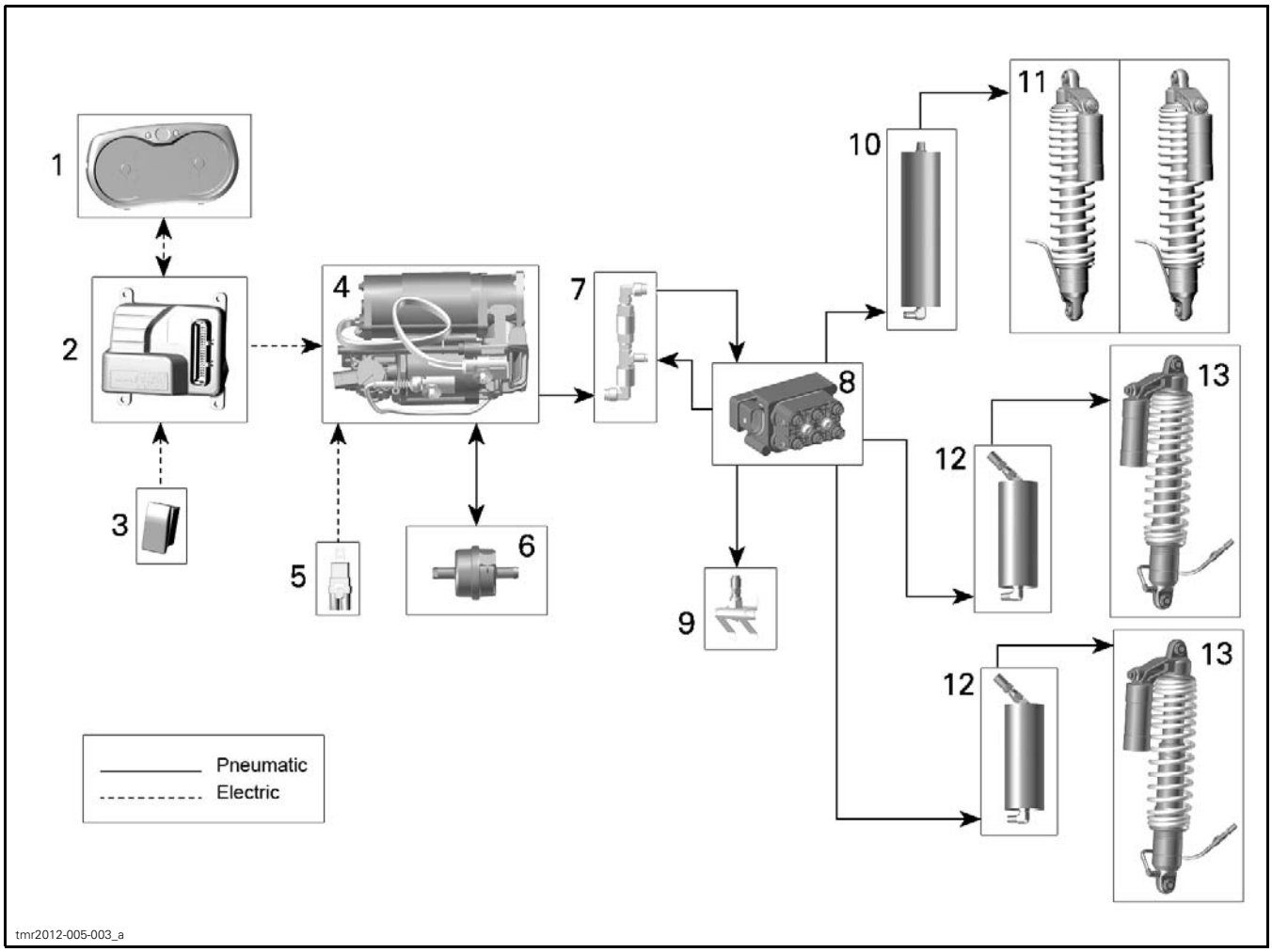

Pneumatic
Electric

1. *Multifunction gauge*
2. *Suspension control module (SCM)*
3. *ACS button*
4. *ACS compressor (including temperature sensor)*
5. *ACS relay (R5)*
6. *Air filter*
7. *Pressure distributor*
8. *ACS solenoid valve (including pressure sensor)*
9. *Outlet fitting*
10. *Rear air reservoir*
11. *Rear shock absorbers*
12. *Front air reservoirs*
13. *Front shock absorbers*

TROUBLESHOOTING

DIAGNOSTIC TIPS

Error Message Displayed in Multifunction Gauge

Two error messages can appear in the multifunction gauge and they are not necessarily related to a failure of the ACS system.

AIR FAULT

If this message appears, it indicates a disparity between the requested and the actual suspension settings. The system should react to correct this situation and the message will disappear.

If the message remains active for a long period, it may indicate one of the fuses (F3, F4 or F12) is burned or a major leak in the system. In this case, the suspension control module (SCM) will automatically shut down the compressor to prevent it from overheating. The shut down procedure of the compressor will stay active until the next restart of the vehicle (key OFF, key ON).

If there is a major leak in the system, check the system for leakage, refer to *ACS SYSTEM LEAK TEST*.

If there is no leak, the problem can be electrical or mechanical. In this case, an electrical failure of the compressor or the solenoid valve will result in the impossibility to change the actual suspension setting; a mechanical failure of the solenoid valve will create the same situation.

After multiple attempts to change suspension setting, the suspension control module (SCM) will activate error message AIR FAULT. Refer to *TROUBLESHOOTING GUIDELINES* for further troubleshooting procedure.

COMPRESSOR TEMPERATURE OVERHEAT

This message appears when the compressor temperature is over the calibrated value.

This situation can occur if the compressor or the solenoid valves are used during a long period of time (continually or with brief halts).

Let the compressor cool down before using it again.

TROUBLESHOOTING GUIDELINES

In AUTO Mode

GAUGE DISPLAY SETTING (S1 TO S6) CHANGED BUT SUSPENSION DOES NOT WORKED

1. Burn fuse F3 (50 A).
   - *Replace.*
2. Faulty compressor.
   - *Carry out a compressor operation test. Refer to ACS COMPRESSOR OPERATION TEST.*
3. Faulty solenoid valve.
   - *Carry out a solenoid valve operation test. Refer to ACS SOLENOID VALVE OPERATION TEST.*
4. Faulty suspension control module (SCM).
   - *Check the SCM. Refer to SUSPENSION CONTROL MODULE (SCM).*

GAUGE DISPLAY SETTING (S1 TO S6) DOES NOT CHANGED BUT SUSPENSION WORKED

1. Burned fuse.
   - *Replace.*
2. Faulty suspension control module (SCM).
   - *Check the SCM. Refer to SUSPENSION CONTROL MODULE (SCM).*
3. Faulty multifunction gauge.
   - *Check the multifunction gauge.*

GAUGE DISPLAY DOES NOT CHANGE AND SUSPENSION DOES NOT WORKED

1. Make sure engine is running.
   - *Start engine.*
2. Burn fuse F3 (50 A).
   - *Replace.*
3. Faulty suspension control module (SCM).
   - *Check the SCM. Refer to SUSPENSION CONTROL MODULE (SCM).*
4. Faulty ACS button or wiring.
   - *Check ACS button continuity.*
   - *Check ACS button control circuit.*

In Manual Mode

GAUGE DISPLAY SETTING (F OR R) DOES NOT CHANGED

1. Faulty Override button.
   - *Check the Override button.*

2. Faulty multifunction gauge.
   - *Check the multifunction gauge.*

AUTO and MANUAL Mode

SUSPENSION PRESSURE CAN BE INCREASED ONLY

1. Faulty solenoid valve.
   - *Carry out a release valve operation test. Refer to ACS RELEASE VALVE OPERATION TEST.*
2. Faulty ACS release valve.
   - *Carry out a solenoid valve operation test. Refer to ACS SOLENOID VALVE OPERATION TEST.*
3. Faulty ACS button or wiring.
   - *Check ACS button continuity. Refer to ACS BUTTON.*
   - *Check ACS button control circuit. Refer to ACS BUTTON.*
4. Faulty suspension control module (SCM).
   - *Check the SCM. Refer to SUSPENSION CONTROL MODULE (SCM).*

SUSPENSION PRESSURE CAN BE DECREASED ONLY

1. Faulty relay (R5).
   - *Check the ACS relay. Refer to ACS RELAY.*
2. Faulty compressor.
   - *Carry out a compressor operation test. Refer to ACS COMPRESSOR OPERATION TEST.*
3. Faulty solenoid valve.
   - *Carry out a solenoid valve operation test. Refer to ACS SOLENOID VALVE OPERATION TEST.*
4. Faulty ACS button or wiring.
   - *Check ACS button continuity. Refer to ACS BUTTON.*
   - *Check ACS button control circuit. Refer to ACS BUTTON.*
5. Faulty suspension control module (SCM).
   - *Check the SCM. Refer to SUSPENSION CONTROL MODULE (SCM).*

SUSPENSION PRESSURE CANNOT BE CHANGED

1. Make sure engine is running.
   - *Start engine.*
2. Burn fuse F3 (50 A).
   - *Replace.*
3. Battery voltage too low.
   - *Check battery voltage with engine running. It must be over 13 V.*
4. Faulty charging system.
   - *Check the charging system. Refer to CHARGING SYSTEM subsection.*
5. Faulty relay (R5).
   - *Check the ACS relay. Refer to ACS RELAY.*
6. Faulty compressor.
   - *Carry out a compressor operation test. Refer to ACS COMPRESSOR OPERATION TEST.*
7. Faulty solenoid valve.
   - *Carry out a solenoid valve operation test. Refer to ACS SOLENOID VALVE OPERATION TEST.*
8. Faulty ACS button or wiring.
   - *Check ACS button continuity. Refer to ACS BUTTON.*
   - *Check ACS button control circuit. Refer to ACS BUTTON.*
9. Faulty suspension control module (SCM).
   - *Check the SCM. Refer to SUSPENSION CONTROL MODULE (SCM).*

AIR OUTLET FITTING DOES NOT WORKS

1. Make sure engine is running.
   - *Start engine.*
2. Faulty solenoid valve.
   - *Carry out a solenoid valve operation test. Refer to ACS SOLENOID VALVE OPERATION TEST.*

TROUBLESHOOTING WITH B.U.D.S.

Check battery voltage before performing any B.U.D.S. test. Battery must be fully charged or use a power pack to ensure adequate power for all required tests.

ACS System Leak Test

1. Connect vehicle to the latest appropriate version of B.U.D.S. Refer to *COMMUNICATION TOOLS AND B.U.D.S. SOFTWARE* subsection.
2. Select **Activation** page.
3. Select **ACS** folder.
4. In **Self Test** region, press the **leak test** button to proceed.

⚠ CAUTION Vehicle height will change during test. Keep away from wheelwell and suspension.

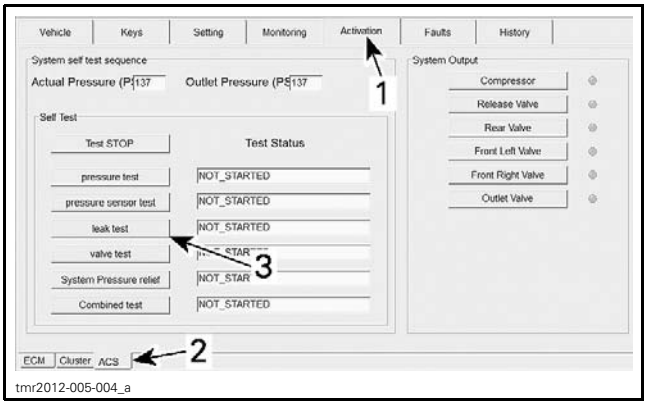

tmr2012-005-004_a

1. *Activation page*
2. *ACS folder*
3. *Leak test button*

The result will be indicated in the TEST STATUS box beside the **leak test** button.

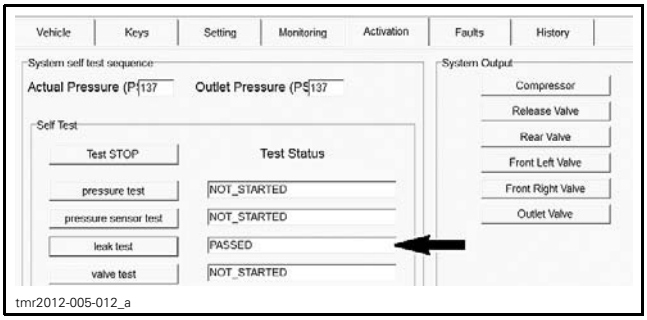

tmr2012-005-012_a

If a leak is detected, pressurize the system again and inspect hoses and fittings with soapy water to locate the faulty component.

ACS Air Pressure Monitoring

To monitor air pressure in the system during troubleshooting operation, proceed as follows:

1. Connect vehicle to the latest appropriate version of B.U.D.S. Refer to *COMMUNICATION TOOLS AND B.U.D.S. SOFTWARE* subsection.
2. Select **Monitoring** page.
3. Select **ACS** folder.

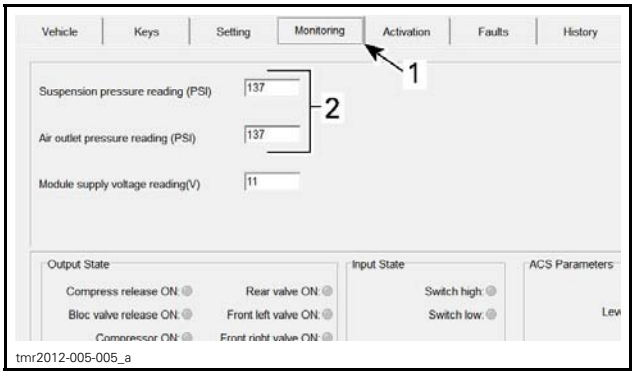

tmr2012-005-005_a

1. *Monitoring page*
2. *Suspension pressure*

PROCEDURES

PNEUMATIC HOSE

NOTICE **Do not attempt to disconnect pneumatic hoses from ACS manifold or ACS exhaust compressor valve.**

Pneumatic Hose Removal

Release air pressure from the ACS system. Refer to *AIR PRESSURE RELEASE FOR SERVICING* in this subsection.

Pneumatic hoses may be disconnected by pushing inwards on the air fitting ring (towards the air fitting) while pulling outwards on the hose.

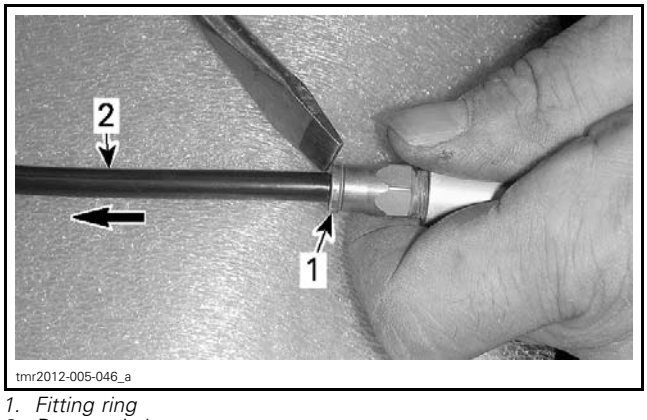

tmr2012-005-046_a

1. *Fitting ring*
2. *Pneumatic hose*

NOTE: Pull the hose slightly and wait during the release of the remaining air. When all air is released, remove pneumatic hose from its fitting.

Pneumatic hose Installation

Before installing the hose, verify the end of the pneumatic hose.

If deep nicks are found, cut a small portion of the hose end.

HOSE END LENGTH TO BE CUT
3.18 mm to 6.35 mm (1/8 in to 1/4 in)

Push the hose inwards then pull the air fitting ring outwards to reestablish a good seal and lock the hose in place.

ACS RELEASE VALVE

ACS Release Valve Access

To access to ACS release valve, remove the following:

– Driver's seat
– LH lateral console panel
– Floor panel.

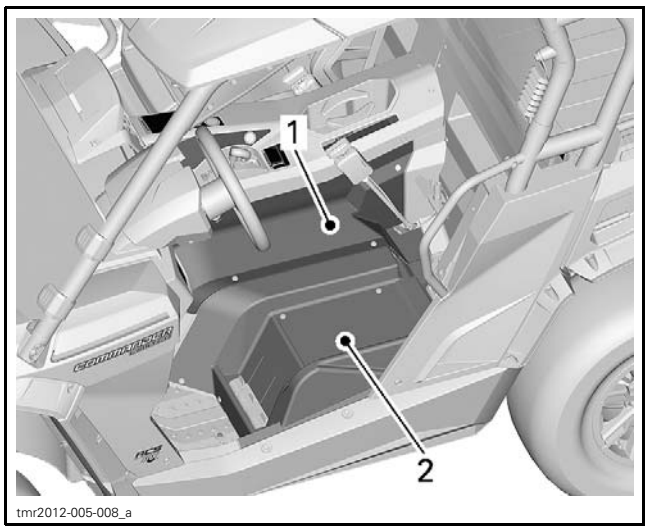

SIDE NET REMOVED FOR CLARITY
1. LH lateral console panel
2. Floor panel

The ACS release valve is a component of the ACS compressor. The release valve is located at the left of compressor.

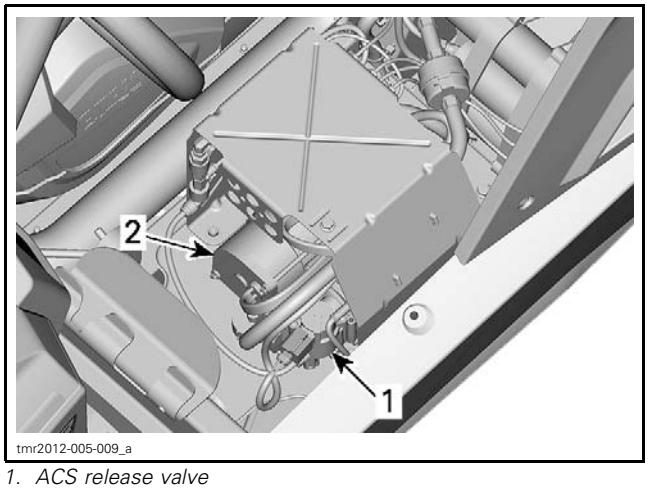

1. ACS release valve
2. ACS compressor

ACS Release Valve Operation Test

1. Connect vehicle to the latest appropriate version of B.U.D.S. Refer to *COMMUNICATION TOOLS AND B.U.D.S. SOFTWARE* subsection.
2. Select **Activation** page.
3. Select **ACS** folder.
4. Press the **Release Valve** button to proceed.

⚠ CAUTION Vehicle height will change during test. Keep away from wheelwell and suspension.

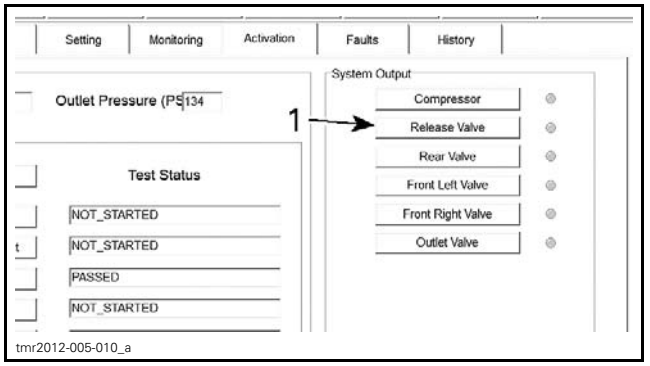

1. Release valve button

5. Listen for air exits from underneath dash and around valve to confirm proper operation.

ACS Release Valve Input Voltage Test

1. Unplug the ACS release valve connector.

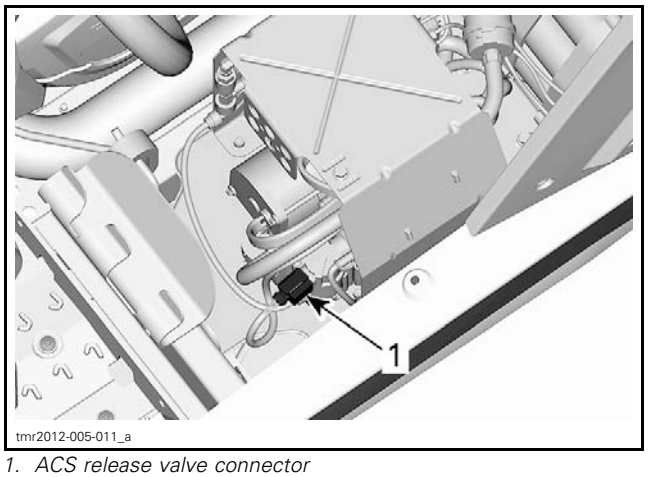

1. ACS release valve connector

2. Start engine.
3. Measure voltage as per the following table.

REQUIRED TOOL
FLUKE 115 MULTIMETER (P/N 529 035 868) 

TEST PROBES		VOLTAGE
Pin 1 (release valve connector)	Battery negative (–) post	Battery voltage

ACS Release Valve Ground Test

1. With ACS release valve connector unplugged and engine running, measure voltage as per the following table.

REQUIRED TOOL
FLUKE 115 MULTIMETER (P/N 529 035 868) 

TEST PROBES		VOLTAGE
Pin 2 (release valve connector)	Battery negative (+) post	Battery voltage

ACS Release Valve Replacement

The ACS release valve is not available separately.

Replace the ACS compressor. Refer to *ACS COMPRESSOR* for complete procedure.

ACS SOLENOID VALVE

ACS Solenoid Valve Access

To access to ACS solenoid valve, remove the following:

– Driver's seat
– LH lateral console panel
– Floor panel.

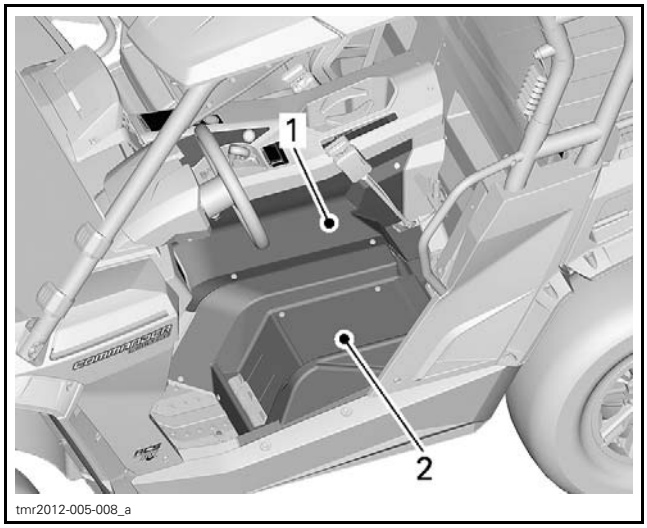

tmr2012-005-008_a

SIDE NET REMOVED FOR CLARITY
1. LH lateral console panel
2. Floor panel

The ACS solenoid valve is mounted on the rear side of the ACS compressor protector.

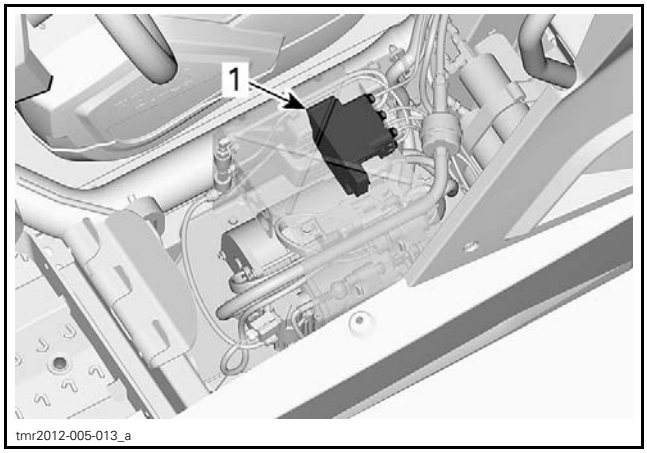

tmr2012-005-013_a

1. ACS solenoid valve

ACS Solenoid Valve Operation Test

1. Connect vehicle to the latest appropriate version of B.U.D.S. Refer to *COMMUNICATION TOOLS AND B.U.D.S. SOFTWARE* subsection.
2. Select **Activation** page.
3. Select **ACS** folder.
4. Press the **valve test** button to proceed.

⚠ CAUTION **Vehicle height will change during test. Keep away from wheelwell and suspension.**

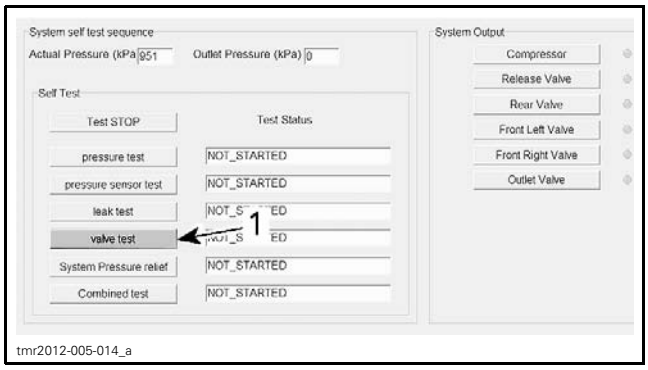

1. Valve test button

The result will be indicated in the TEST STATUS box beside the **valve test** button.

If test fails, carry out the *ACS SOLENOID VALVE INPUT VOLTAGE TEST*.

If the ACS solenoid valve passed the test, check the ACS button.

ACS Solenoid Valve Input Voltage Test

1. Unplug the ACS solenoid valve connector.

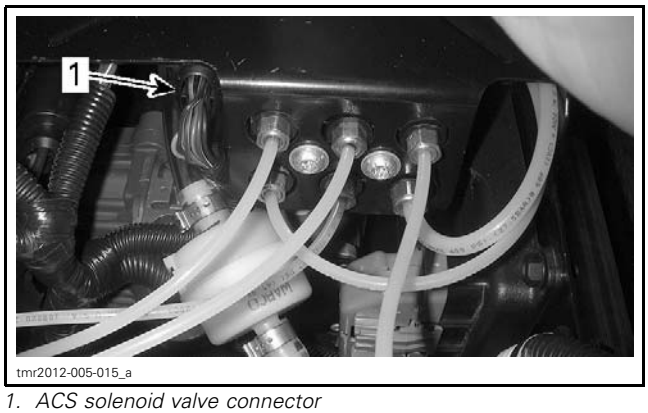

1. ACS solenoid valve connector

2. Start engine.
3. Measure voltage as per the following table.

REQUIRED TOOL
FLUKE 115 MULTIMETER (P/N 529 035 868)

TEST PROBES		VOLTAGE
Pin 5 (solenoid valve connector)	Battery negative (–) post	Battery voltage
Pin 6 (solenoid valve connector)		

If the test fails, carry out an *ACS SOLENOID VALVE POWER WIRE CONTINUITY TEST*.

If result is within specification, continue the test with the *ACS SOLENOID VALVE GROUND TEST*.

ACS Solenoid Valve Ground Test

With ACS solenoid valve connector unplugged and engine running, measure voltage as per the following table.

REQUIRED TOOL
FLUKE 115 MULTIMETER (P/N 529 035 868)

TEST PROBES		VOLTAGE
Pin 7 (solenoid valve connector)	Battery negative (+) post	Battery voltage

If the test fails, carry out an *ACS SOLENOID VALVE GROUND WIRE CONTINUITY TEST*.

If result is within specification, check the ACS button.

ACS Solenoid Valve Power Wire Continuity Test

1. Unplug the relay R5.
2. Check the continuity between ACS solenoid valve connector and relay R5 holder as per the following table.

REQUIRED TOOL
FLUKE 115 MULTIMETER (P/N 529 035 868)

TEST PROBES		RESISTANCE
Pin 5 (solenoid valve connector)	Position 85	Close to 0 Ω
Pin 6 (solenoid valve connector)		

ACS Solenoid Valve Ground Wire Continuity Test

1. Unplug the suspension control module (SCM) connector.
2. Check the continuity between ACS solenoid valve connector and SCM connector as per the following table.

REQUIRED TOOL	
FLUKE 115 MULTIMETER (P/N 529 035 868)	

TEST PROBES		RESISTANCE
Pin 7 (solenoid valve connector)	Pin 14 (SCM)	Close to 0 Ω

ACS Solenoid Valve Removal

1. Remove bolts retaining the air pressure distributor.

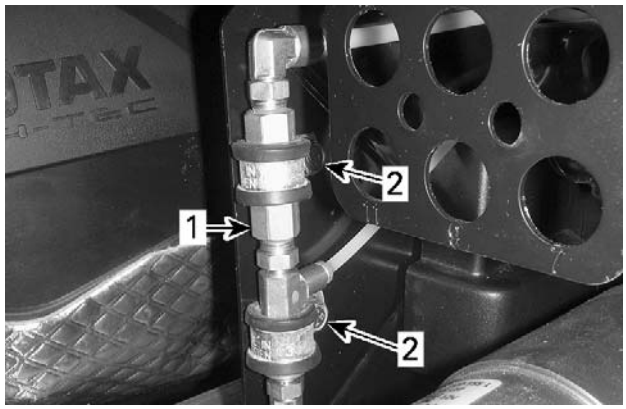

tmr2012-005-017_a

1. Air pressure distributor
2. Retaining bolts

2. Disconnect pneumatic hoses from:
   – Air outlet fitting
   – Air reservoirs
   – Pressure distributor (except the lower one).
3. Unplug ACS solenoid valve connector.
4. Remove screws securing the ACS solenoid valve to compressor protector.
5. Remove the ACS solenoid valve from the vehicle.

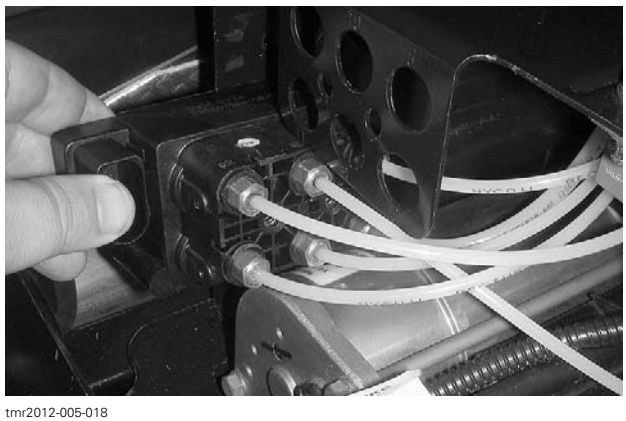
tmr2012-005-018

ACS Solenoid Valve Installation

The installation procedure is the reverse of removal procedure, however pay attention to the following.

Position the ACS solenoid valve on the compressor and route all pneumatic hoses through corresponding support holes.

Secure the ACS solenoid valve to its support.

Connect pneumatic hoses as per the following illustration.

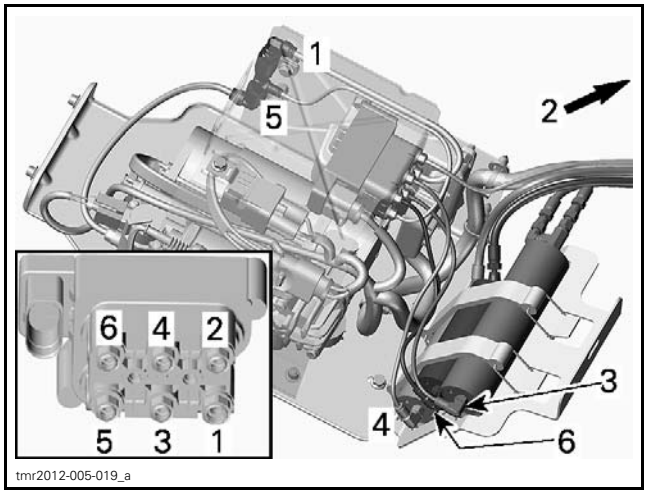

tmr2012-005-019_a

1. Air pressure distributor
2. Air outlet fitting
3. Rear air reservoir
4. Front RH air reservoir
5. Air pressure distributor
6. Front LH air reservoir

SUSPENSION CONTROL MODULE (SCM)

SCM Access

To access the SCM, remove the following:
– Driver's seat
– LH lateral console panel
– Floor panel.

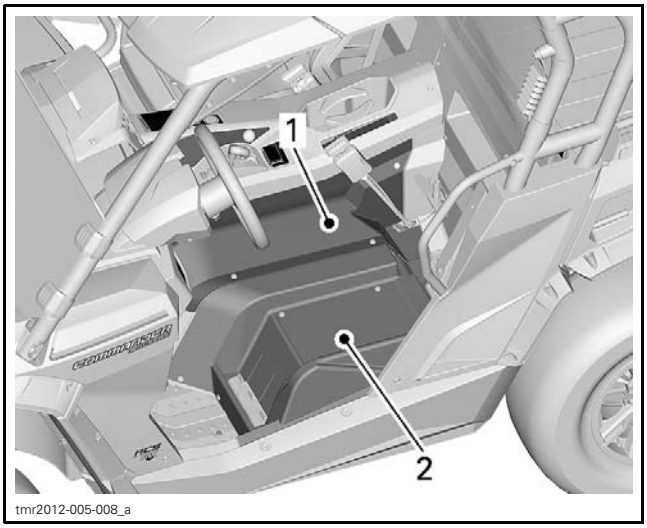

SIDE NET REMOVED FOR CLARITY
1. *LH lateral console panel*
2. *Floor panel*

The suspension control module (SCM) is mounted on the wall of the ACS compressor protector.

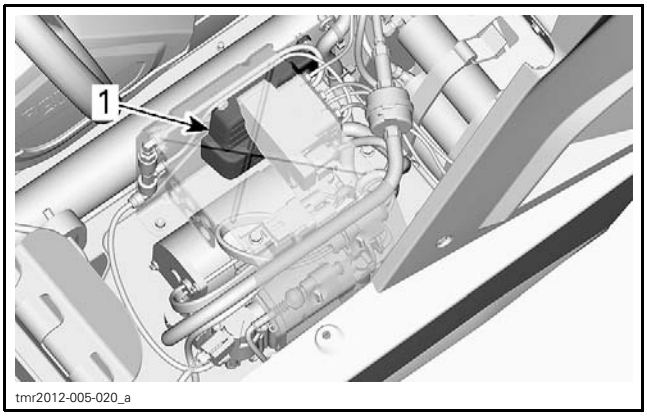

1. *SCM*

SCM Signal Circuit Continuity Test

1. Unplug multifunction gauge connector. Refer to *LIGHTS, GAUGE AND ACCESSORIES* subsection.
2. Unplug SCM connector.

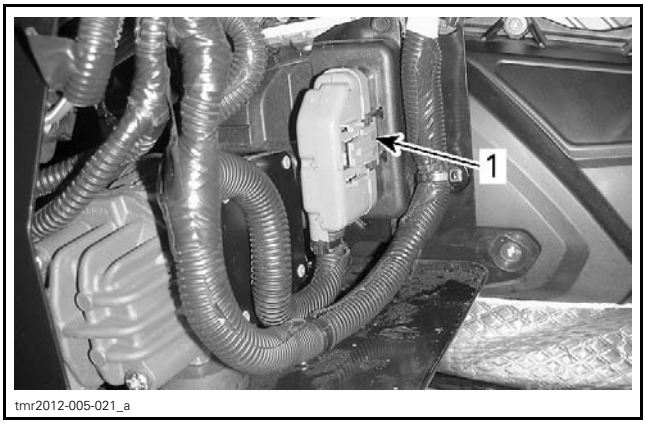

1. *SCM connector*

3. Measure resistance as per the following tables.

REQUIRED TOOL	
FLUKE 115 MULTIMETER (P/N 529 035 868)	

SCM CONNECTOR	GAUGE CONNECTOR	RESISTANCE
Pin 1	Pin 19	Close to 0 Ω
Pin 2	Pin 18	

If the test fails, repair or replace wires and connectors.

If result is within specification, continue the test with the *SCM INPUT VOLTAGE TEST*.

SCM Input Voltage Test

1. Turn ignition switch to ON position.
2. Measure voltage as per the following table.

REQUIRED TOOL	
FLUKE 115 MULTIMETER (P/N 529 035 868)	

TEST PROBES		VOLTAGE
Pin 17 (SCM connector)	Battery negative (–) post	Battery voltage
Pin 18 (SCM connector)		
Pin 35 (SCM connector)		
Pin 36 (SCM connector)		

If the test fails, repair or replace wires and connectors.

If result is within specification, continue the test with the *SCM GROUND TEST*.

SCM Ground Test

1. Turn ignition switch to ON position.
2. Measure voltage as per the following table.

REQUIRED TOOL	
FLUKE 115 MULTIMETER (P/N 529 035 868)	

TEST PROBES		VOLTAGE
Pin 31 (SCM connector)	Battery positive (+) post	Battery voltage
Pin 32 (SCM connector)		
Pin 33 (SCM connector)		

SCM Removal

1. Remove screws retaining the air reservoir support and the compressor support.

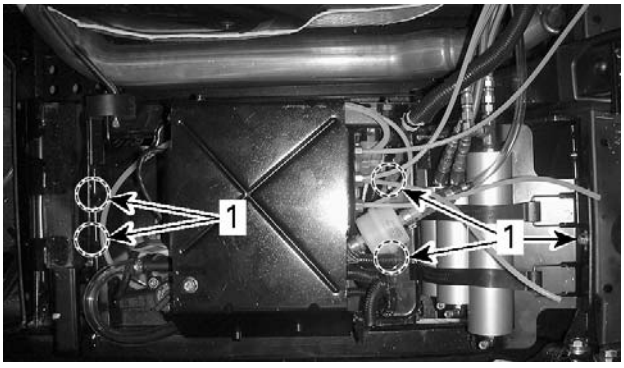

tmr2012-005-022_a

1. Screws to be removed

2. Disconnect pneumatic hoses from air reservoirs and air outlet fitting.
3. Place the air reservoir support aside to make room.

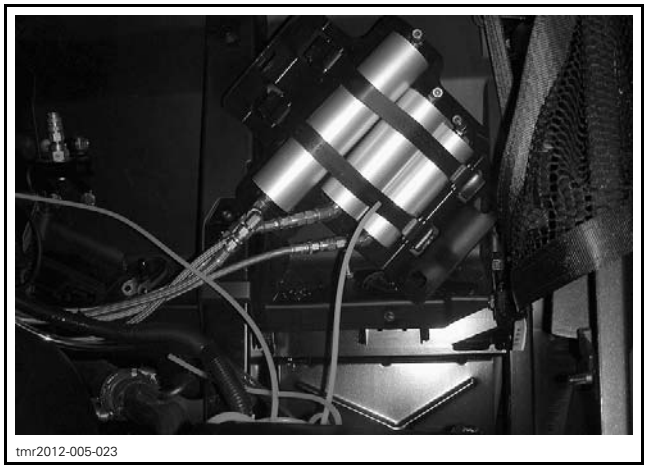
tmr2012-005-023

4. Unplug the SCM connector.

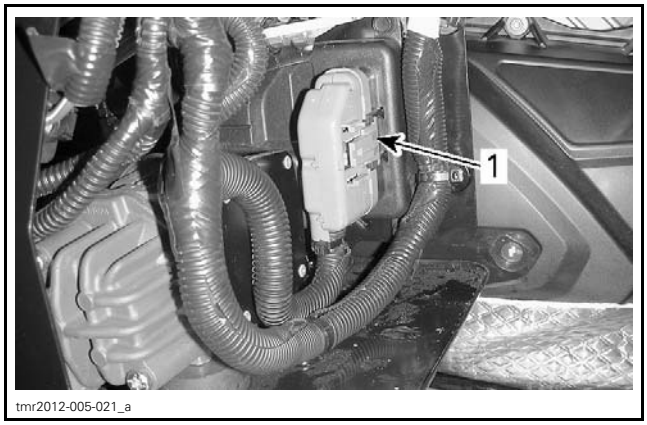

tmr2012-005-021_a

1. SCM connector

5. Cut locking ties securing the wiring harness.

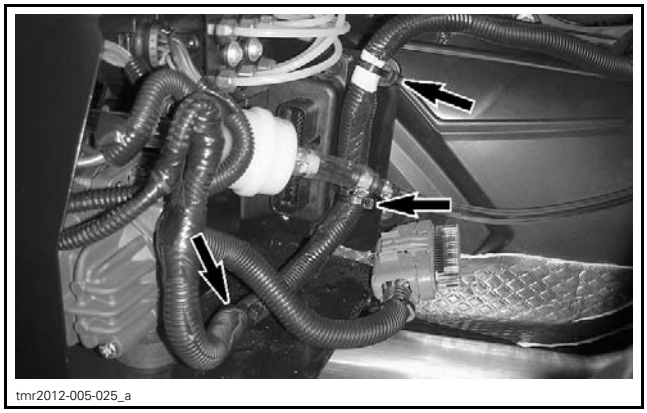
tmr2012-005-025_a

6. Using a small screwdriver, detach both connector housings from the compressor protector wall.

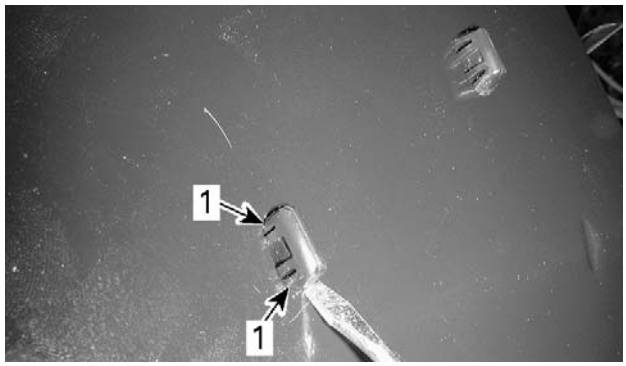

tmr2012-005-026_a

1. Press these tabs inside

7. Unplug the following connectors:
   – Compressor connector
   – Release valve connector
   – Pressure sensor connector.

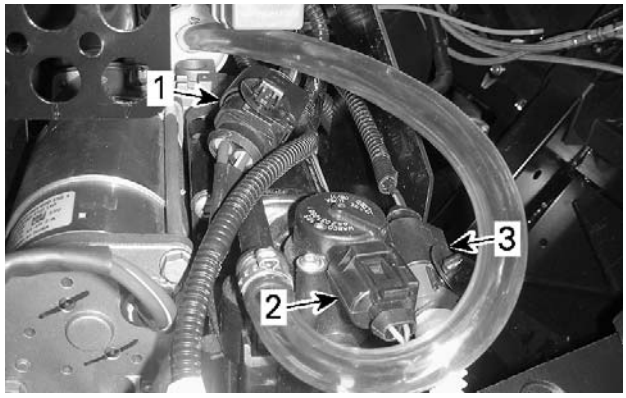

tmr2012-005-028_a

1. Compressor connector
2. Release valve connector
3. Pressure sensor connector.

8. Disconnect the lower pneumatic hose from the pressure distributor.

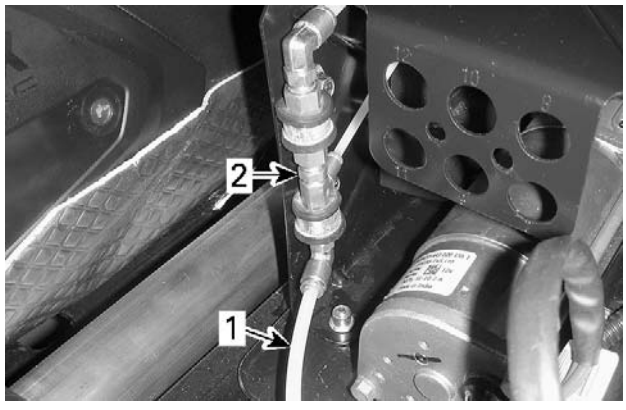

tmr2012-005-024_a

1. Disconnect this hose
2. Pressure distributor

9. Turn the compressor support on the side to remove screws retaining the compressor protector.

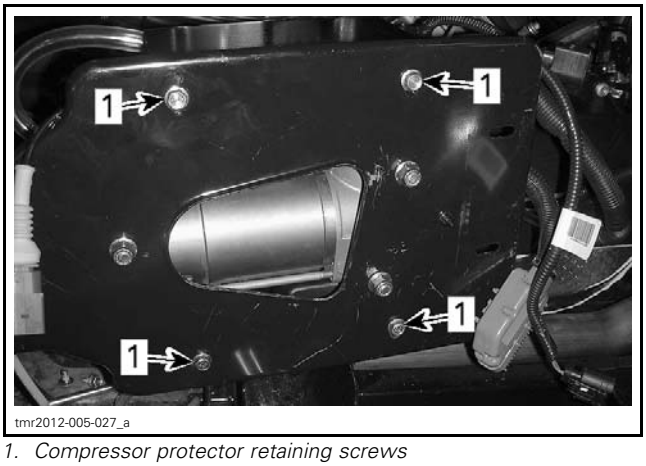

tmr2012-005-027_a

1. Compressor protector retaining screws

10. Separate compressor protector from the compressor support.
11. Remove screws securing the SCM on the wall of the compressor protector.

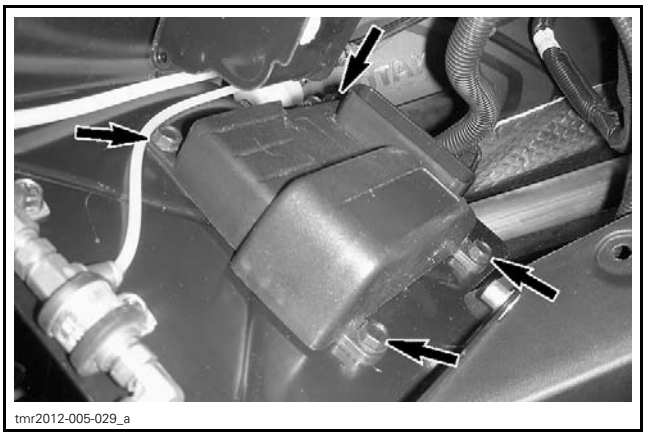
tmr2012-005-029_a

SCM Installation

The installation procedure is the reverse of removal procedure.

ACS RELAY (R5)

ACS Relay (R5) Access

To access to ACS relay, remove the following:
– Driver's seat
– LH lateral console panel
– Floor panel.

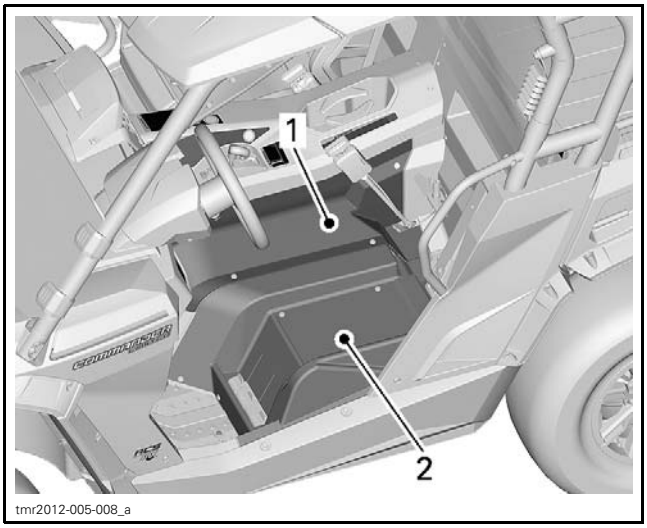

SIDE NET REMOVED FOR CLARITY
1. *LH lateral console panel*
2. *Floor panel*

The ACS relay is mounted under the top of the ACS compressor protector.

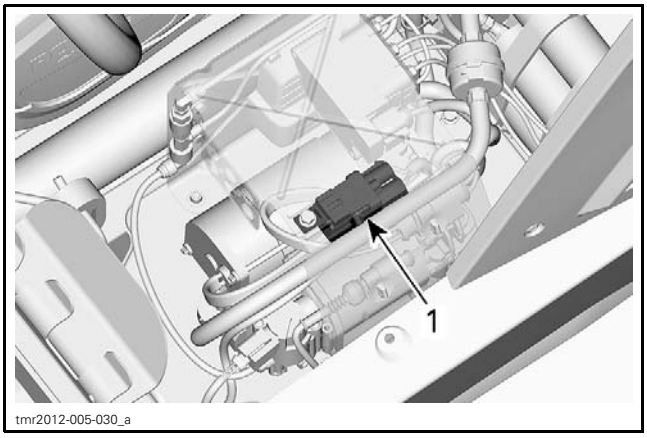

1. *ACS relay (R5)*

ACS Relay Continuity Test

1. Remove relay (R5).
   1.1 Remove bolt and nut retaining the relay holder on the top of the compressor protector.

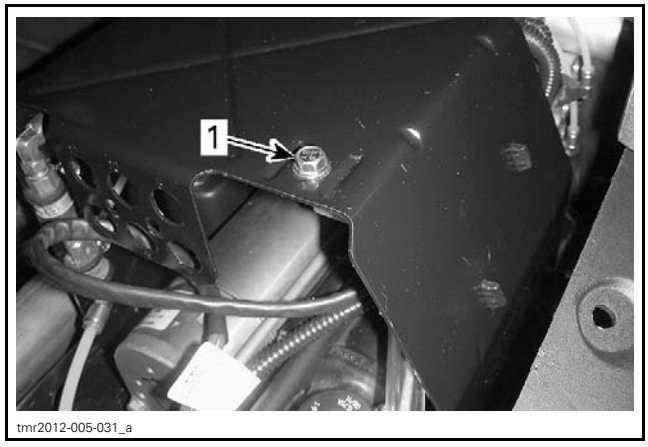

1. *Relay retaining bolt*

   1.2 From the rear, pull relay out from underneath of compressor protector.
   1.3 Remove the relay from its holder.

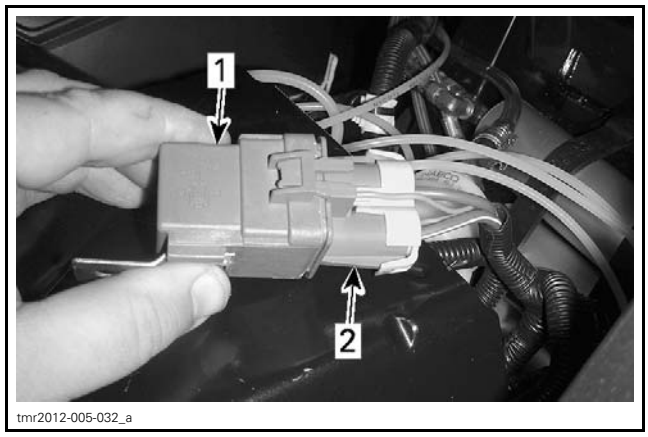

1. *Relay*
2. *Relay holder*

2. Measure resistance as per the following table.

REQUIRED TOOL	
FLUKE 115 MULTIMETER (P/N 529 035 868)	

TEST PROBES		RESISTANCE
Terminal 30 (relay holder)	Terminal 87 (relay holder)	Open (OL)

3. Apply 12 volts on terminals 86 and 85 and measure resistance again as per the following table.

TEST PROBES		RESISTANCE
Terminal 30 (relay holder)	Terminal 87 (relay holder)	Close to 0 Ω

If results are not as per the above tables, replace relay.

ACS Relay Input Voltage Test

1. Measure voltage as per the following table.

REQUIRED TOOL
FLUKE 115 MULTIMETER (P/N 529 035 868) 

TEST PROBES		VOLTAGE
Pin 87 (relay holder)	Battery negative (–) post	Battery voltage

If voltage is not as specified, check wiring, connector and terminal condition.

ACS Relay Ground Wire Continuity Test

1. Unplug suspension control module (SCM) connector.

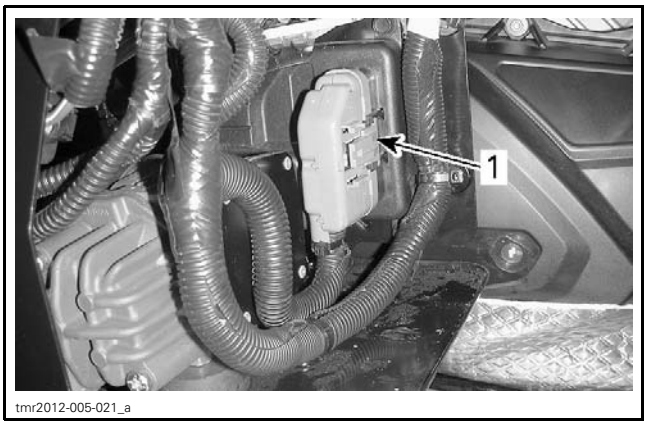

1. SCM connector

2. Measure resistance as per the following table.

REQUIRED TOOL
FLUKE 115 MULTIMETER (P/N 529 035 868) 

TEST PROBES		RESISTANCE
Pin 86 (relay holder)	Pin 28 (SCM connector)	Close to 0 Ω

ACS COMPRESSOR

ACS Compressor Access

To access to ACS compressor, remove the following:

– Driver's seat
– LH lateral console panel
– Floor panel.

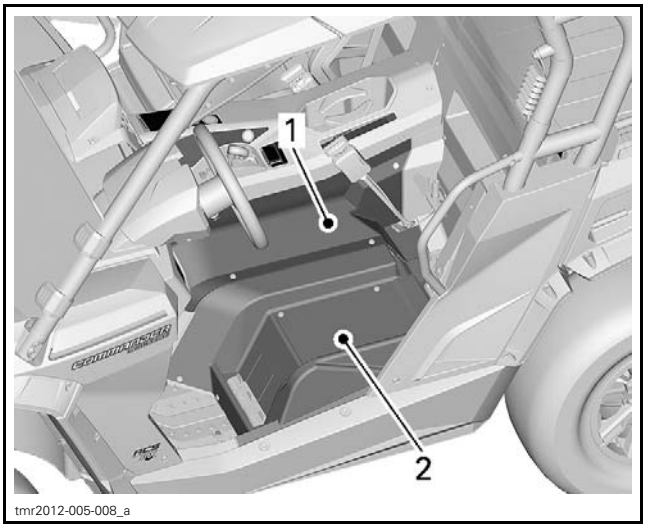

SIDE NET REMOVED FOR CLARITY
1. LH lateral console panel
2. Floor panel

The ACS compressor is mounted on the ACS compressor support.

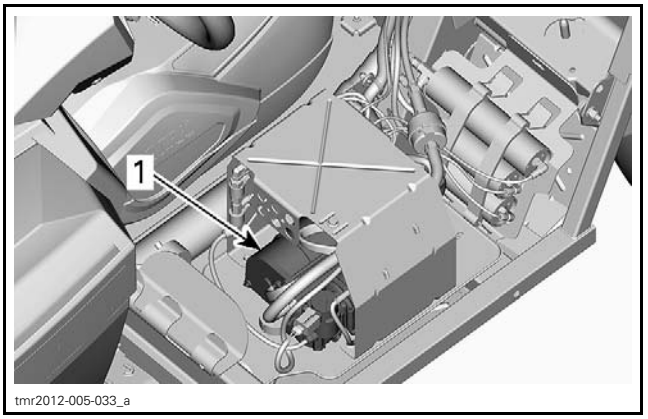

1. ACS compressor

ACS Compressor Operation Test

1. Connect vehicle to the latest appropriate version of B.U.D.S. Refer to *COMMUNICATION TOOLS AND B.U.D.S. SOFTWARE* subsection.
2. Select **Activation** page.
3. Select **ACS** folder.
4. Press **Compressor** button to proceed.

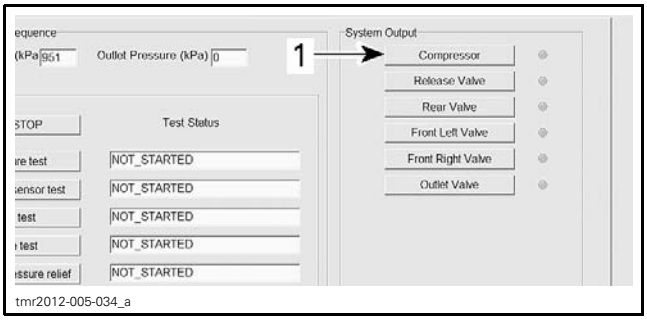

1. Compressor operation test button

5. Verify if compressor works properly.

ACS Compressor Input Voltage Test

1. Using a small screwdriver, detach the ACS compressor connector housings from the compressor protector wall.

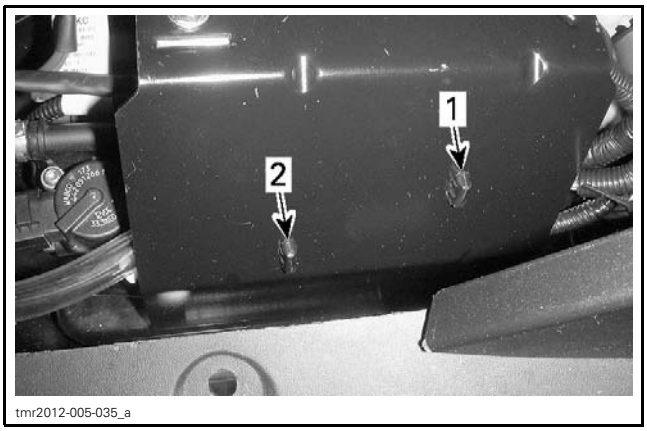

1. ACS compressor connector
2. ACS compressor pressure sensor

2. Unplug ACS compressor connector.
3. Place ignition switch to ON position.
4. Measure voltage as per the following table.

REQUIRED TOOL
FLUKE 115 MULTIMETER (P/N 529 035 868)

TEST PROBES		VOLTAGE
Pin 1 (ACS compressor connector)	Battery negative (–) post	Battery voltage

ACS Compressor Ground Test

1. Place ignition switch to ON position.
2. Measure voltage as per the following table.

REQUIRED TOOL
FLUKE 115 MULTIMETER (P/N 529 035 868)

TEST PROBES		VOLTAGE
Pin 2 (ACS compressor connector)	Battery positive (+) post	Battery voltage

ACS Compressor Power Wire Continuity Test (from Relay)

1. Remove relay (R5).
2. Measure resistance as per the following table.

REQUIRED TOOL
FLUKE 115 MULTIMETER (P/N 529 035 868)

TEST PROBES		RESISTANCE
Pin 30 (relay holder)	Pin 1 (ACS compressor connector)	Close to 1 Ω

ACS Compressor Ground Wire Continuity Test

1. Reconnect the relay (R5).
2. Check the continuity as per the following table.

REQUIRED TOOL
FLUKE 115 MULTIMETER (P/N 529 035 868)

TEST PROBES		RESISTANCE
Pin 2 (ACS compressor connector)	Battery negative (–) post	Close to 1 Ω

ACS Compressor Removal

1. Remove screws retaining the air reservoir support and the compressor support.

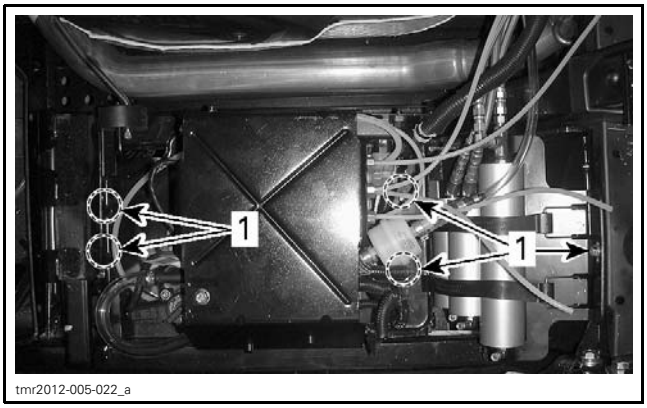

tmr2012-005-022_a

1. Screws to be removed

2. Disconnect pneumatic hoses from air reservoirs and air outlet fitting.
3. Place the air reservoir support aside to make room.

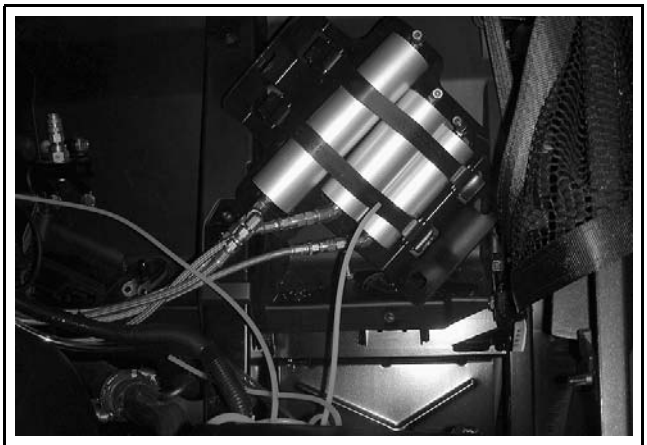
tmr2012-005-023

4. Using a small screwdriver, detach both connector housings from the compressor protector wall.

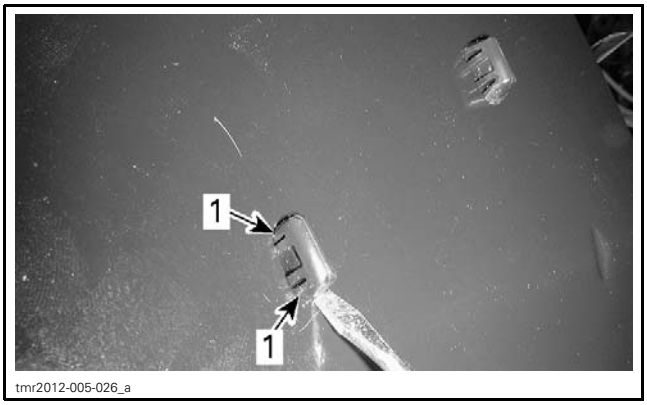

tmr2012-005-026_a

1. Press these tabs inside

5. Unplug the following connectors:
   – Compressor connector
   – Release valve connector
   – Pressure sensor connector.

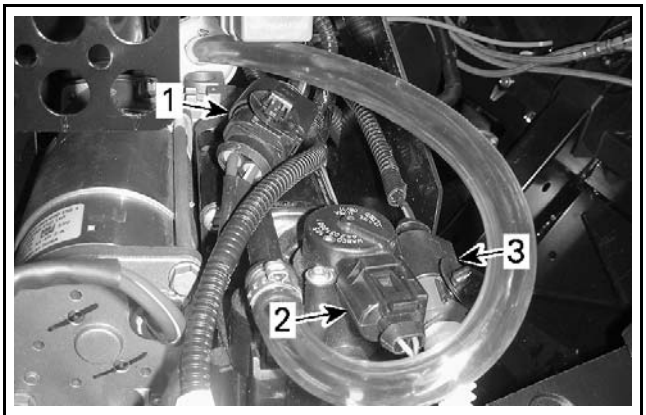

tmr2012-005-028_a

1. Compressor connector
2. Release valve connector
3. Pressure sensor connector.

6. Detach the filter hose from the compressor intake/outlet fitting.

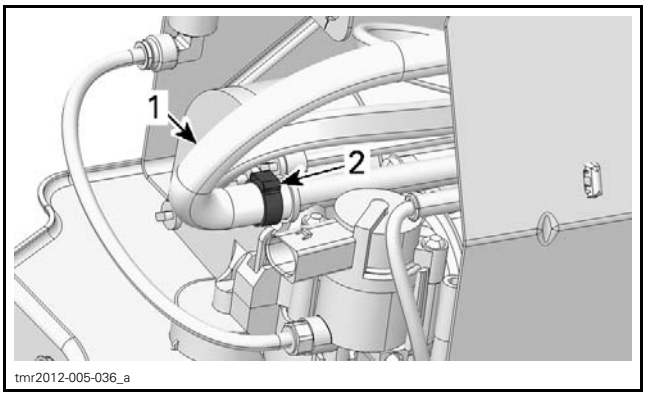

tmr2012-005-036_a

1. Air filter hose
2. Clamp to be removed

7. Disconnect the lower pneumatic hose from the pressure distributor.

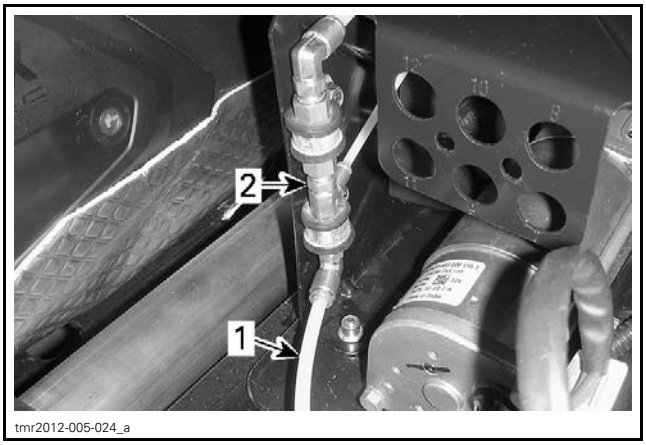

tmr2012-005-024_a

1. Disconnect this hose
2. Pressure distributor

8. Turn the compressor support on the side to remove screws retaining the compressor.

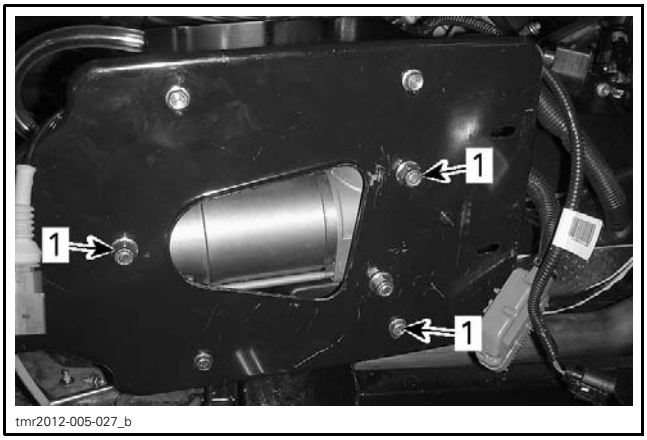

tmr2012-005-027_b

1. Compressor retaining screws

9. Remove the ACS compressor.

ACS Compressor Installation

The installation is the reverse of removal procedure.

ACS AIR FILTER

Refer to *PERIODIC MAINTENANCE PROCEDURES* subsection.

SHOCK ABSORBERS

Shock Absorbers Identification

When installing shock absorbers, make sure not to mix front and rear shock absorbers.

Front and rear shock absorbers can be easily identified by comparing the length of air hoses.

FRONT SHOCK ABSORBER	
Shock absorber with a short air hose on reservoir side	

REAR SHOCK ABSORBER	
Shock absorber with a long air hose on the opposite side of reservoir	

Rear Shock Absorber Removal

1. Block front wheels.
2. Loosen wheel lug nuts.
3. Open cargo box.
4. Place the jack under the hitch and lift the rear of vehicle.
5. Install jack stands to support the vehicle.
6. Remove wheel.
7. Disconnect shock absorber hose from vehicle air supply hose.

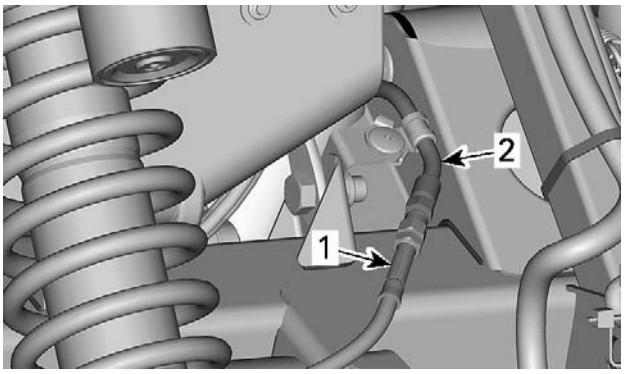

tmr2012-005-042_a

1. Shock absorber hose
2. Vehicle air supply hose

8. Drill the rivet securing the shock absorber hose to trailing arm.

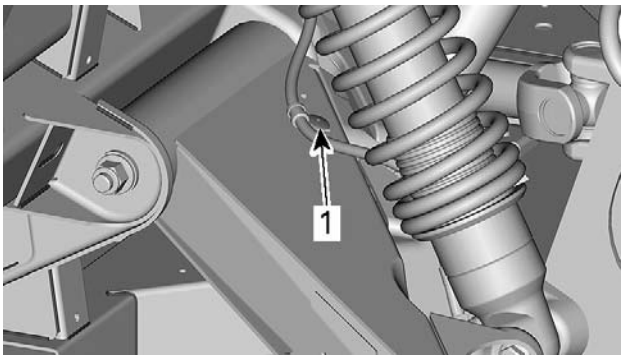

tmr2012-005-040_a

REAR LH SIDE OF VEHICLE SHOWN
1. Rivet to be drilled

9. Remove upper and lower bolts retaining the shock absorber. Discard nuts.

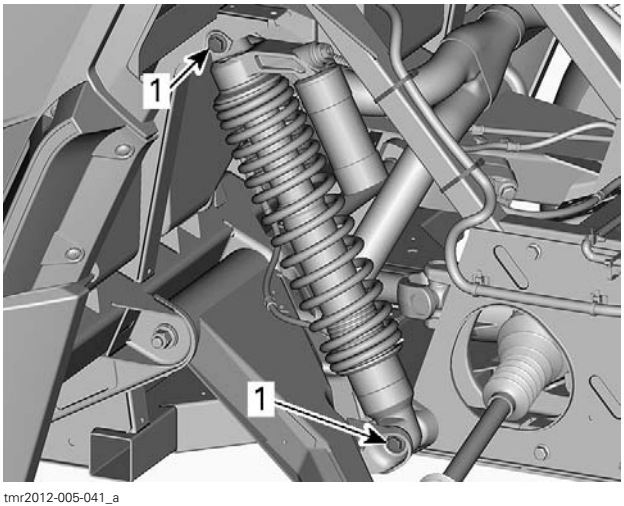

tmr2012-005-041_a

1. Shock absorber retaining bolts

Rear Shock Absorber Installation

Install shock absorbers with the reservoir rearwards.

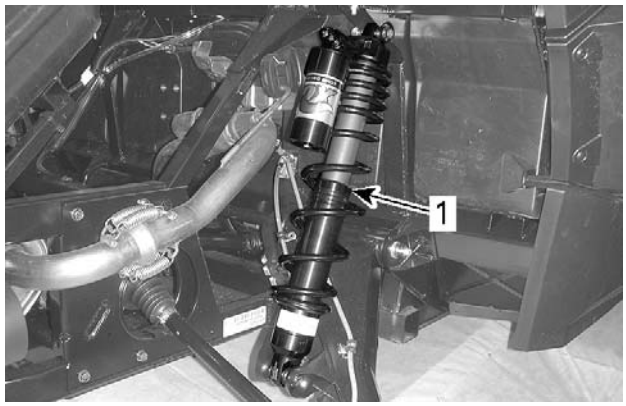

TYPICAL
1. RH rear shock absorber

Secure with new nuts.

TIGHTENING TORQUE	
Shock absorber nuts	48 N•m (35 lbf•ft)

Connect shock absorber hoses to vehicle air supply hoses.

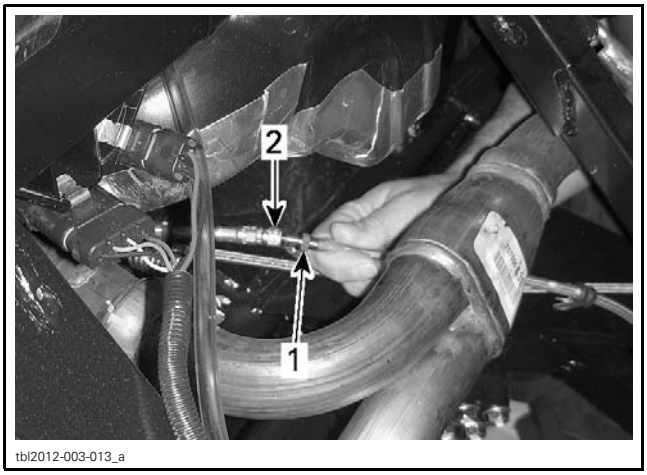

TYPICAL
1. RH shock absorber hose
2. Vehicle air supply hose

TIGHTENING TORQUE	
Air supply hose	6 N•m ± 0.5 N•m (53 lbf•**in** ± 4 lbf•**in**)

Secure shock absorber hoses to trailing arms. Ensure to position hose clamp between YELLOW dots.



RH SIDE OF VEHICLE
1. YELLOW dots
2. Rivet

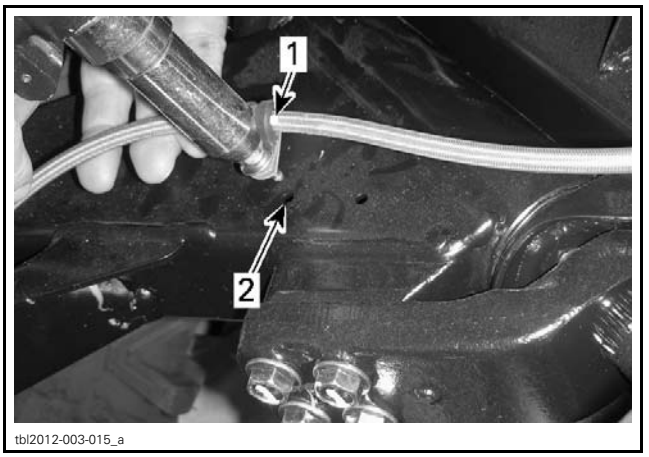

LH SIDE OF VEHICLE
1. YELLOW dot
2. Install the rivet in this hole

Front Shock Absorber Removal

1. Block rear wheels.
2. Loosen wheel lug nuts.
3. Lift the front of vehicle and support it securely.
   - 3.1 Insert the jack under the vehicle by the side, behind front wheels.
   - 3.2 Place the jack under the central beam.
   - 3.3 Lift the front of vehicle.
4. Remove front wheels.
5. Cut locking ties securing shock absorber hose to suspension arm.
6. Disconnect shock absorber hose from vehicle air supply hose.

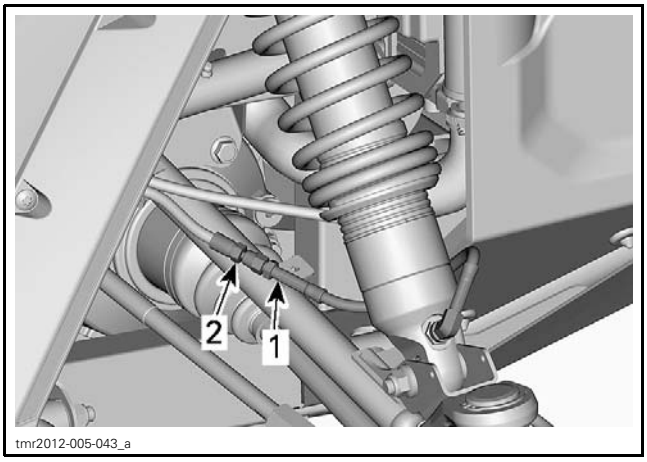

TYPICAL
1. *RH shock absorber hose*
2. *Vehicle air supply hose*

7. Remove upper and lower bolts retaining the shock absorber. Discard nuts.

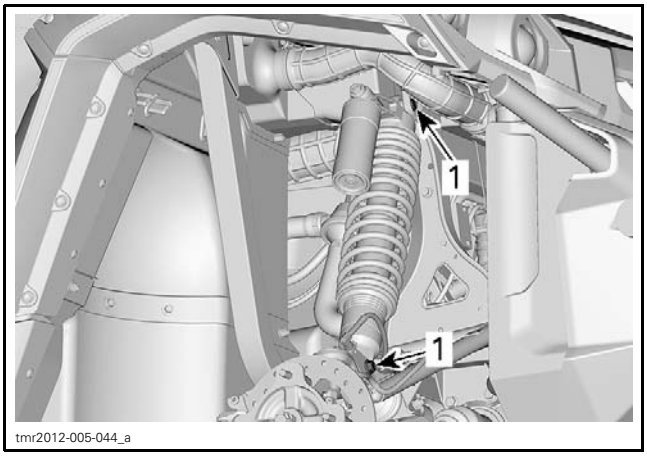

1. *Shock absorber retaining bolts*

8. Remove shock absorber from vehicle.

Front Shock Absorber Installation

Install shock absorbers with the reservoir outwards.

Secure it using previously removed bolts and new nuts. Tighten nuts to specification.

TIGHTENING TORQUE	
Shock absorber nuts	48 N•m (35 lbf•ft)

Route the hose in front of the shock absorber.

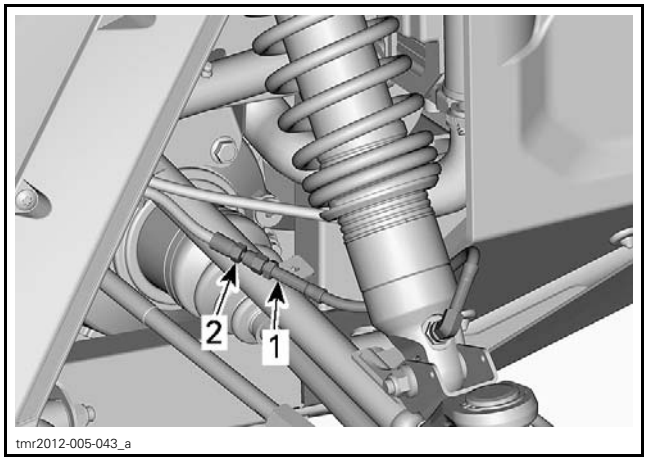

TYPICAL
1. *RH shock absorber hose*
2. *Vehicle air supply hose*

TIGHTENING TORQUE	
Air supply hose	6 N•m ± 0.5 N•m (53 lbf•**in** ± 4 lbf•**in**)

Secure the shock absorber hose to brake hose. Install a locking tie each side of the brake hose retaining clamp.

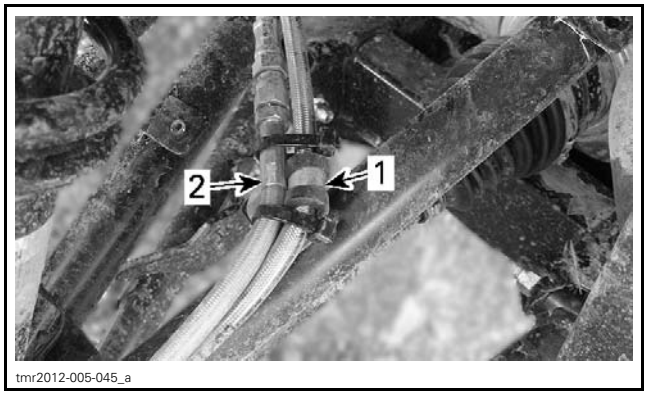

1. *Brake hose retaining clamp*
2. *Shock absorber hose*

BRAKES

SERVICE TOOLS

Description	Part Number	Page
ECM ADAPTER TOOL	529 036 166	6

SERVICE PRODUCTS

Description	Part Number	Page
LOCTITE 243 (BLUE)	293 800 060	9
XPS BRAKES AND PARTS CLEANER (USA)	219 701 705	9

2-UP Models

G1	Brake Caliper Synthetic Grease
G2	Cosmo Rubber Grease
G3	XPS Synthetic Grease

T1	5.0 ± 1 N•m (44 ± 9 lbf•**in**)
T2	5.5 ± 1.5 N•m (49 ± 13 lbf•**in**)
T3	11 ± 1 N•m (97 ± 9 lbf•**in**)
T4	28.5 ± 1.5 N•m (21 ± 1 lbf•ft)
T5	25 ± 5 N•m (18 ± 4 lbf•ft)
T6	48 ± 6 N•m (35 ± 4 lbf•ft)

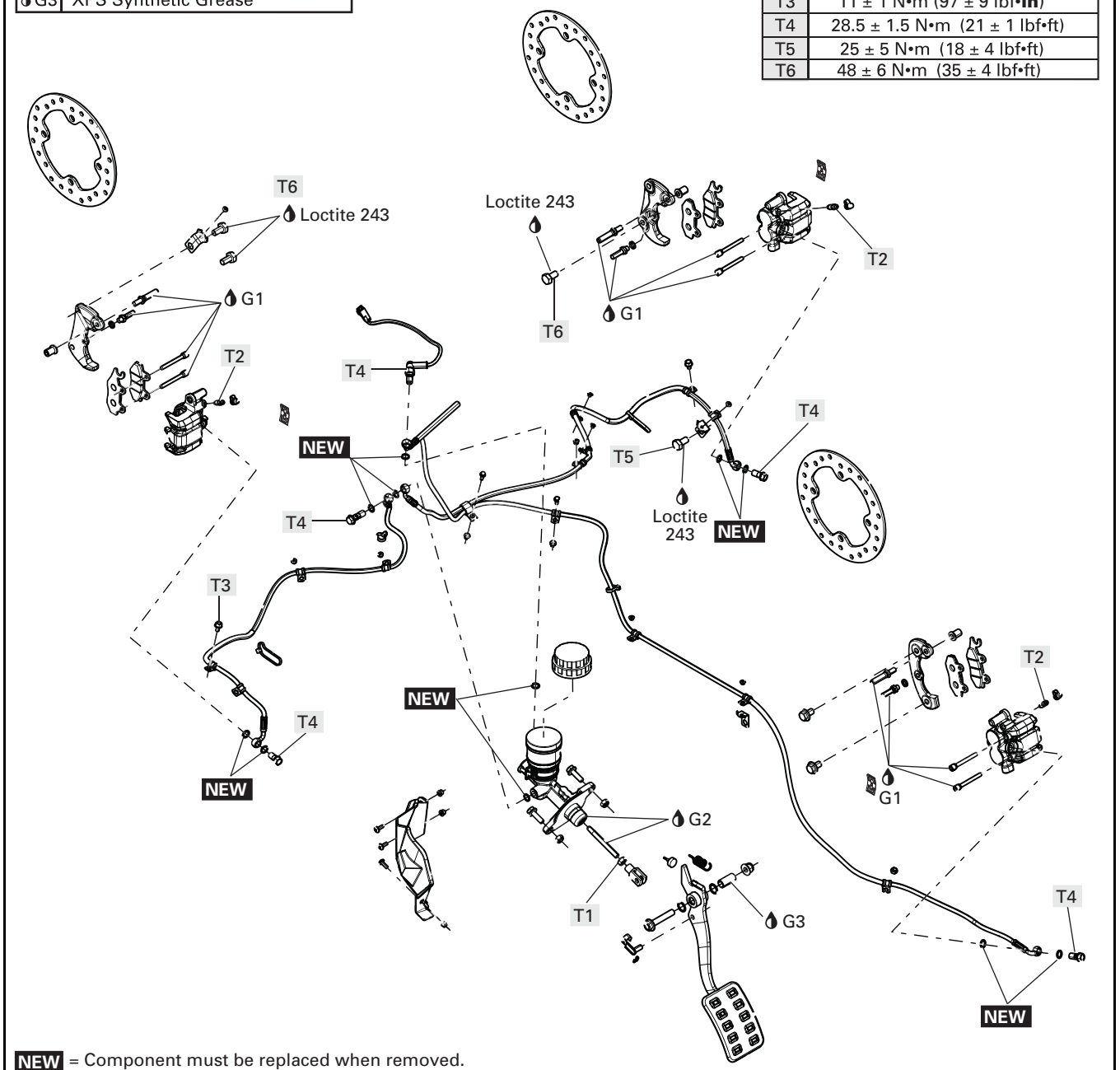

NEW = Component must be replaced when removed.

tmr2013-044-101

FRONT BRAKE SYSTEM

MAX Models

G1	Brake Caliper Synthetic Grease
G2	Cosmo Rubber Grease
G3	XPS Synthetic Grease

T1	5 ± 0.5 N•m (44 ± 4 lbf•**in**)
T2	5.5 ± 1.5 N•m (49 ± 13 lbf•**in**)
T3	10 ± 2 N•m (89 ± 18 lbf•**in**)
T4	11 ± 1 N•m (97 ± 9 lbf•**in**)
T5	17.5 ± 2.5 N•m (155 ± 22 lbf•**in**)
T6	28.5 ± 1.5 N•m (21 ± 1 lbf•ft)
T7	33.5 ± 3.5 N•m (25 ± 3 lbf•ft)
T8	48 ± 6 N•m (35 ± 4 lbf•ft)

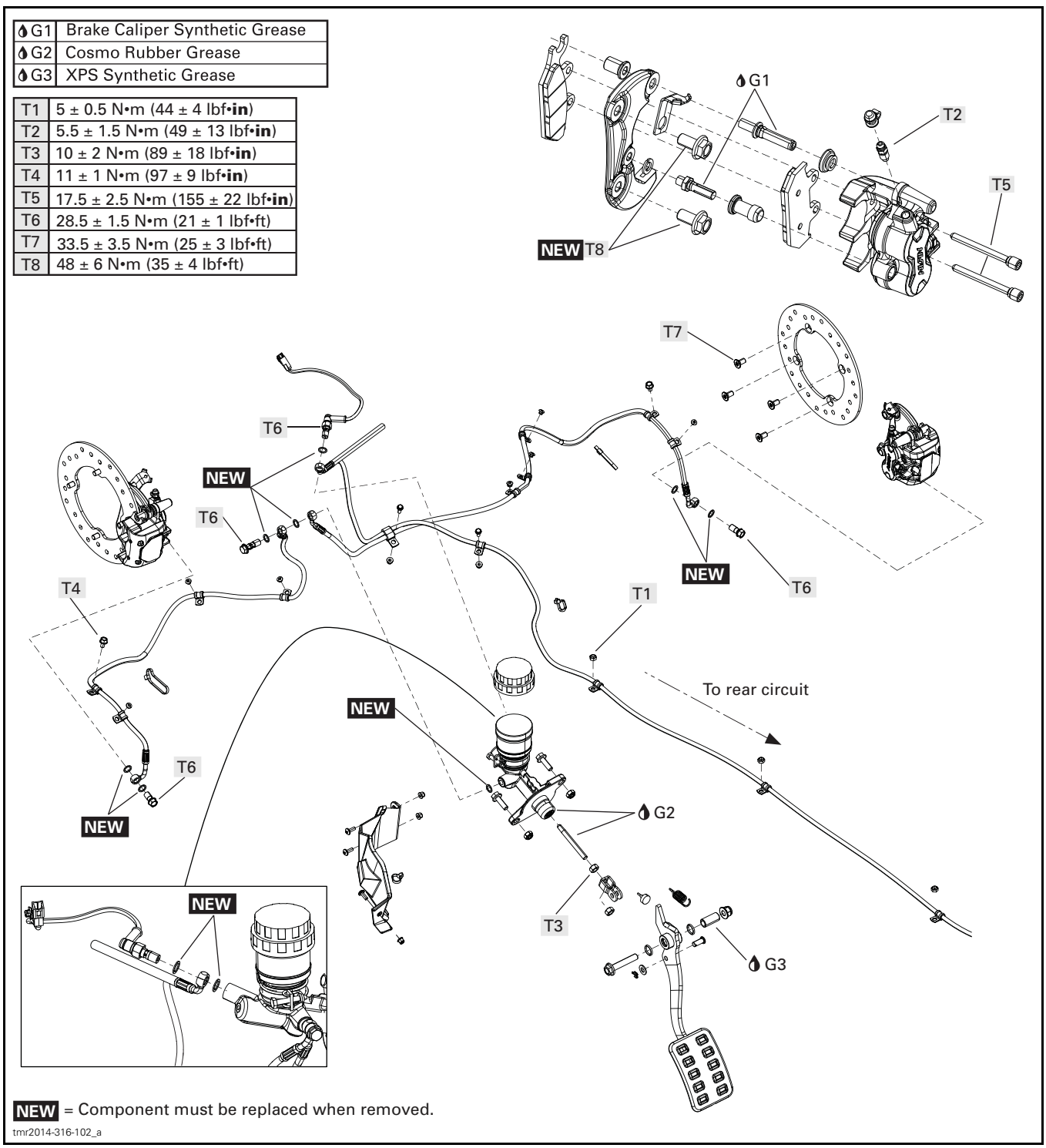

NEW = Component must be replaced when removed.

tmr2014-316-102_a

REAR BRAKE SYSTEM

MAX Models

G1	Brake Caliper Synthetic Grease
G2	Cosmo Rubber Grease
G3	XPS Synthetic Grease

T1	5 ± 0.5 N•m (44 ± 4 lbf•**in**)
T2	5.5 ± 1.5 N•m (49 ± 13 lbf•**in**)
T3	10 ± 2 N•m (89 ± 18 lbf•**in**)
T4	11 ± 1 N•m (97 ± 9 lbf•**in**)
T5	17.5 ± 2.5 N•m (155 ± 22 lbf•**in**)
T6	28.5 ± 1.5 N•m (21 ± 1 lbf•ft)
T7	33.5 ± 3.5 N•m (25 ± 3 lbf•ft)
T8	48 ± 6 N•m (35 ± 4 lbf•ft)

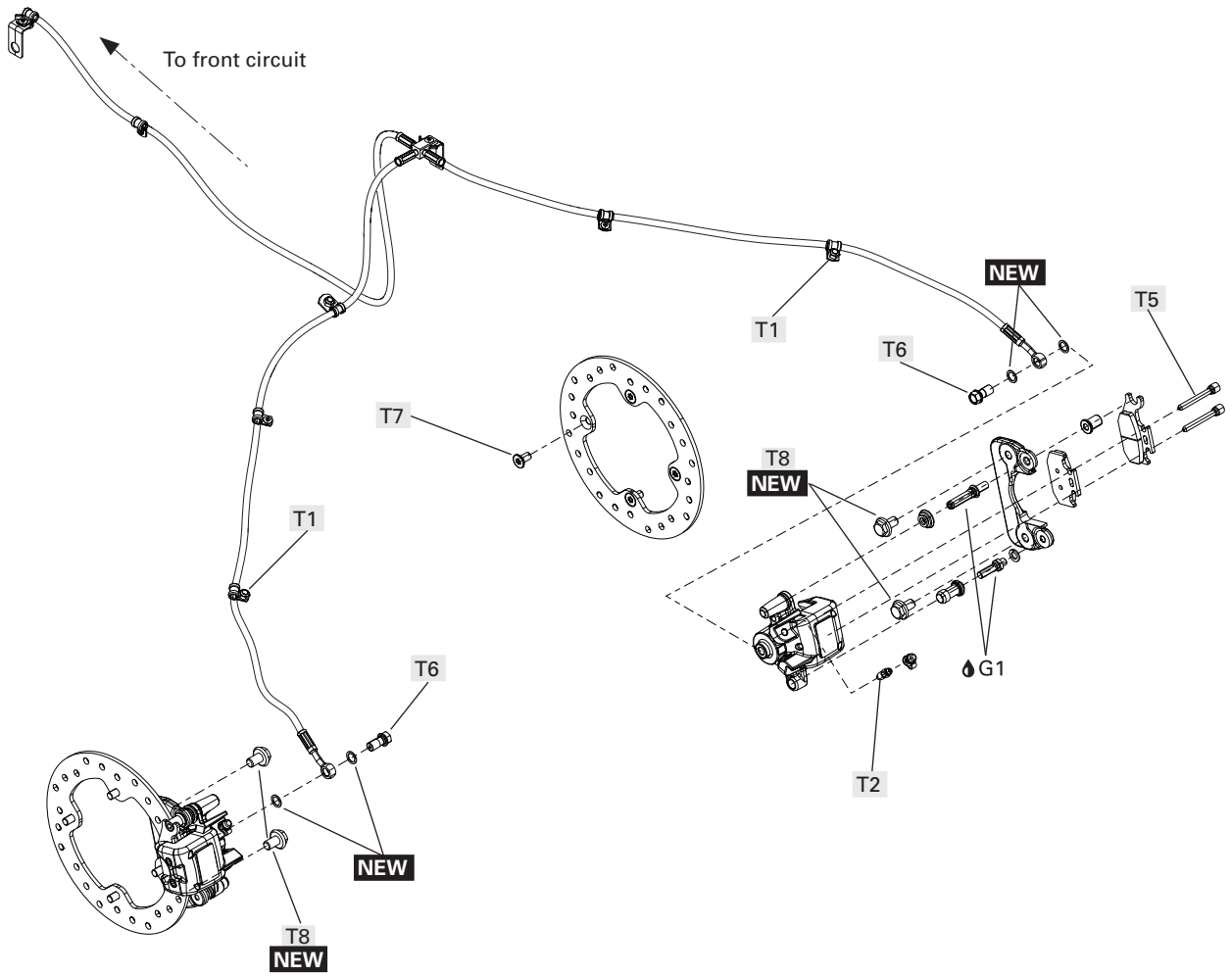

NEW = Component must be replaced when removed.

tmr2014-316-002_a

GENERAL

⚠ WARNING

Always check brake system operation after removing or servicing a brake component. If brake pedal feels spongy, make sure all components are properly installed and system is properly bled.

NOTICE Avoid spilling brake fluid on plastic, rubber or painted parts. Protect these parts with a rag when servicing brake system.

NOTE: Sealing washers must be discarded and replaced with new ones every time a Banjo fitting is unscrewed.

NOTE: Always clean the area around a brake component before servicing.

INSPECTION

BRAKE SYSTEM PRESSURE VALIDATION

NOTICE Do not pump up the brake pedal repeatedly before doing the validation.

1. Use an appropriate compression force gauge such as *MARK-10 EG-200* and a ruler.

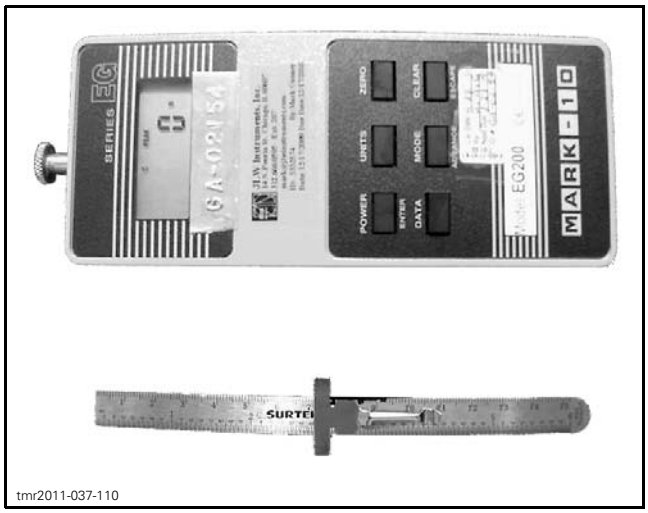

tmr2011-037-110

TYPICAL

2. Position force gauge on brake pedal at 64 mm ± 5 mm (2.5 in ± .2 in) from lower edge.
3. Position a ruler perpendicularly to brake pedal.

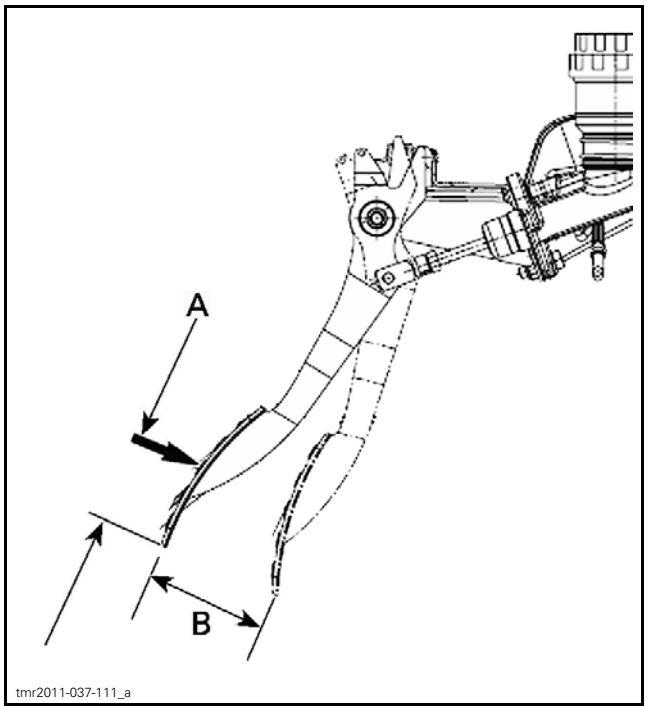

tmr2011-037-111_a

A. 64 mm ± 5 mm (2.5 in ± .2 in)

4. Push brake pedal from 70 mm (2-3/4 in) using force gauge.



tmr2011-037-112

TYPICAL

5. Read the maximum load recorded by the force gauge.
6. Load reading must be as per the following table.

BRAKE PEDAL LOAD AT 70 MM
Minimum 250 N (56 lbf)

7. If load reading is not in accordance with the specification:
   - 7.1 Perform a brake system inspection and cleaning.
   - 7.2 Bleed brake system.

NOTE: Refer to *PERIODIC MAINTENANCE PROCEDURES* subsection.

PROCEDURES

BRAKE LIGHT SWITCH

Brake Light Switch Location

Brake light switch is located underneath LH front fender on master cylinder.



1. Brake light switch

Brake Light Switch Resistance Test

1. Disconnect brake light switch connector.
2. Check switch operation as follows.

BRAKE LIGHT SWITCH POSITION	PIN		RESISTANCE
Firmly pushed	1	2	Close to 0 Ω
Released			Infinite (OL)

If switch is defective, replace with a new one.

If the switch tests good, verify wire continuity between harness connector and ECM-B connector.

NOTE: Use the ECM ADAPTER TOOL (P/N 529 036 166).



ECM-B CONNECTOR PIN	HARNESS CONNECTOR WIRES	RESISTANCE
C-3	RED/ORANGE	Close to 0 Ω

NOTE: If only the LH taillight does not work, check brake relay (R8) in fuse box 1.

Brake Light Switch Replacement

1. Disconnect brake light switch connector.
2. Drain rear brake line.
3. Remove brake light switch from master cylinder.

NOTE: Use shop rags to catch any spilled brake fluid.

4. Install NEW sealing washers.
5. Install brake light switch on master cylinder.

BRAKE LIGHT SWITCH NUT TORQUE
28.5 N•m ± 1.5 N•m (21 lbf•ft ± 1 lbf•ft)

6. Connect brake light switch connector.
7. Refill and bleed brake system, refer to *PERIODIC MAINTENANCE PROCEDURES* subsection.

MASTER CYLINDER

Master Cylinder Removal

1. Drain brake system, refer to *PERIODIC MAINTENANCE PROCEDURES* subsection.
2. Remove master cylinder protective cover.

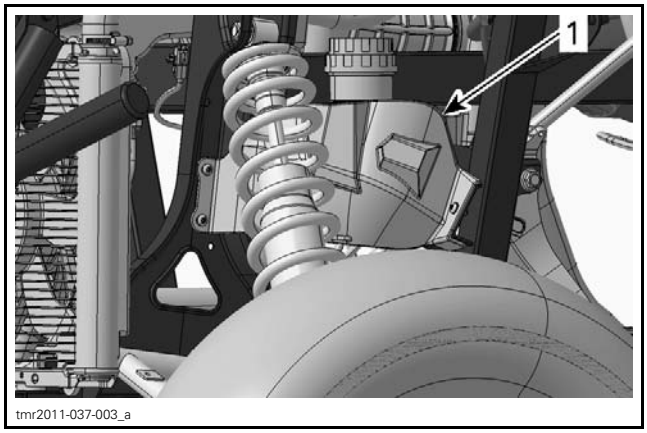

1. Master cylinder protective cover

3. Remove brake light switch retaining rear brake hose.

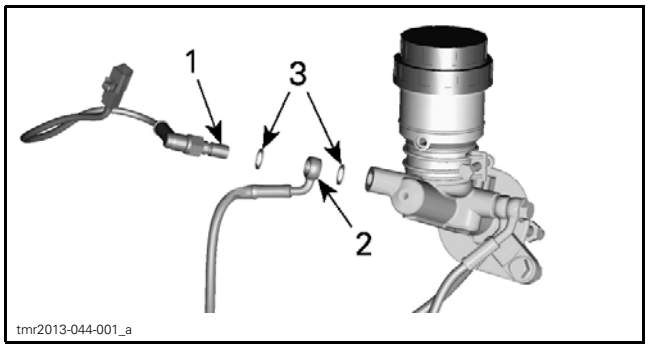

SOME PARTS REMOVED FOR CLARITY PURPOSE
1. *Brake light switch*
2. *Rear brake hose*
3. *Sealing washers*

4. Unscrew front brake hoses from master cylinder.

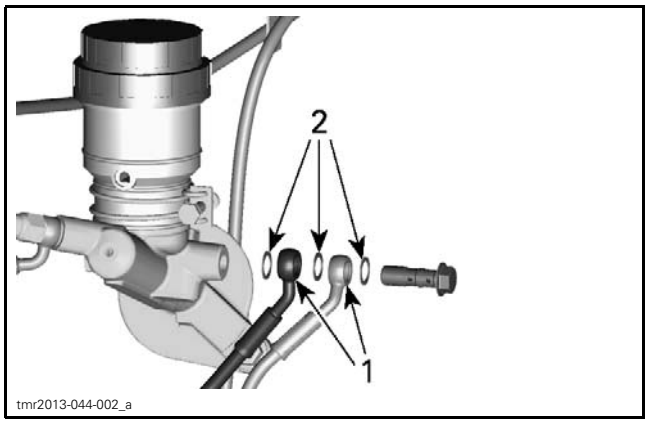

SOME PARTS REMOVED FOR CLARITY PURPOSE
1. *Front brake hoses*
2. *Sealing washers*

5. Remove protective rubber from underneath dashboard.

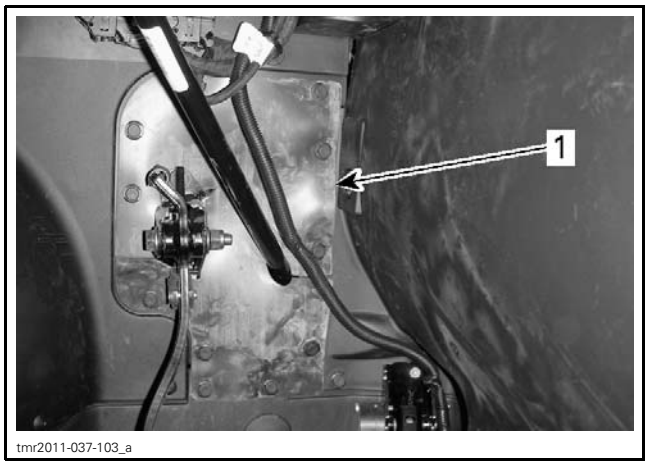

UNDERNEATH DASHBOARD
1. *Protective rubber*

6. Remove cotter pin.
7. Disconnect brake pedal clip.
8. Disconnect master cylinder rod from brake pedal.

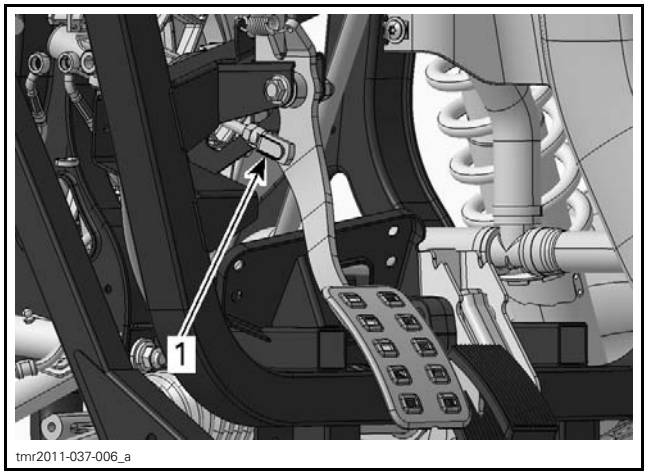

1. *Master cylinder rod*

9. Remove master cylinder rod from master cylinder.

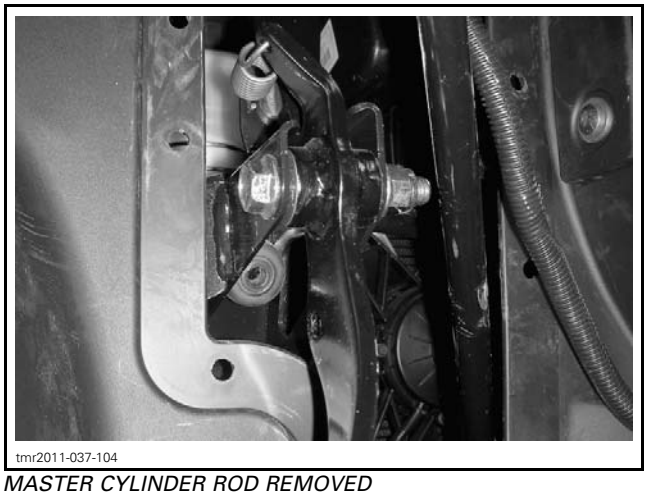

MASTER CYLINDER ROD REMOVED

10. Remove master cylinder retaining bolts and nuts.

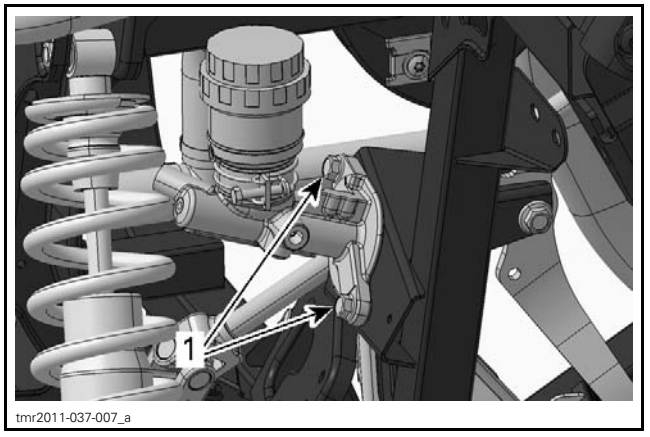

1. *Master cylinder retaining bolts*

11. Remove master cylinder from vehicle.

Master Cylinder Inspection

Check boot for crack.

Check rod for wear and scratch.

Check master cylinder housing and reservoir for leaks or damage.

Master Cylinder Installation

The installation is the reverse of the removal procedure. However, pay attention to the following.

Tighten brake light switch and front brake hoses to specification.

FRONT BRAKE HOSES SCREW TORQUE
28.5 N•m ± 1.5 N•m (21 lbf•ft ± 1 lbf•ft)

BRAKE LIGHT SWITCH NUT TORQUE
28.5 N•m ± 1.5 N•m (21 lbf•ft ± 1 lbf•ft)

Lubricate push rod end and inside master cylinder boot.

PUSH ROD END LUBRICATION
(P/N 293 550 055)

MASTER CYLINDER BOOT LUBRICATION
(P/N 293 550 055)

Install **NEW** sealing washers.

Refill and bleed brake system, refer to *PERIODIC MAINTENANCE PROCEDURES* subsection.

Adjust master cylinder rod, refer to *MASTER CYLINDER ROD ADJUSTMENT* in this subsection.

Master Cylinder Rod Adjustment

1. Loosen locking nut of master cylinder rod.
2. Move brake pedal up and down to check if there is a free play.

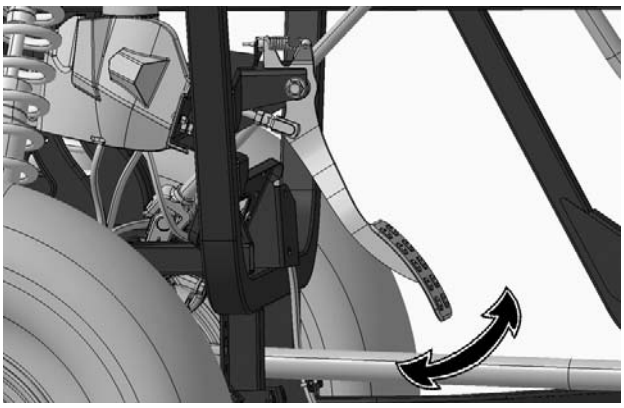

tmr2011-037-002_a

3. Rotate master cylinder rod to generate a free play according to specification.

BRAKE PEDAL FREE PLAY
3.5 mm ± 1.5 mm (1/8 in ± 1/16 in)

4. Tighten locking nut of master cylinder rod to specification.

ROD LOCKING NUT TORQUE
5 N•m ± 1 N•m (44 lbf•**in** ± 9 lbf•**in**)

CALIPER

Caliper Removal

1. Safely lift and support the vehicle. Refer to *INTRODUCTION* subsection.
2. Remove wheel, refer to *WHEELS AND TIRES* subsection.
3. If caliper is removed from vehicle for replacement:
   - 3.1 Drain brake system, refer to *PERIODIC MAINTENANCE PROCEDURES* subsection.
   - 3.2 Unscrew brake hose from caliper.

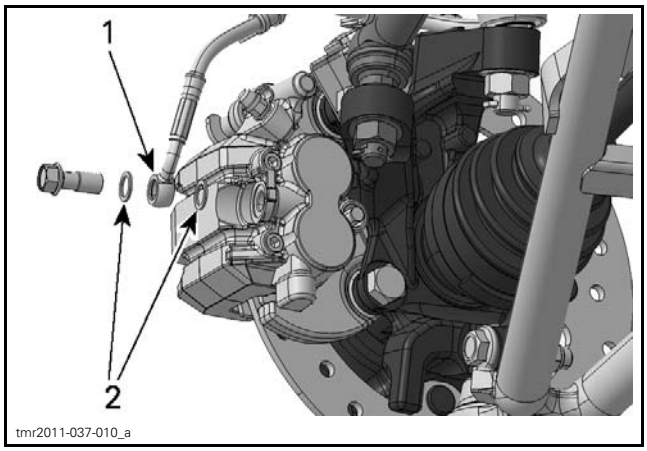

tmr2011-037-010_a

TYPICAL - FRONT CALIPER SHOWN
1. Brake hose
2. Sealing washers

4. Remove fasteners retaining brake hose to knuckle.
5. Remove screws securing caliper support to knuckle.

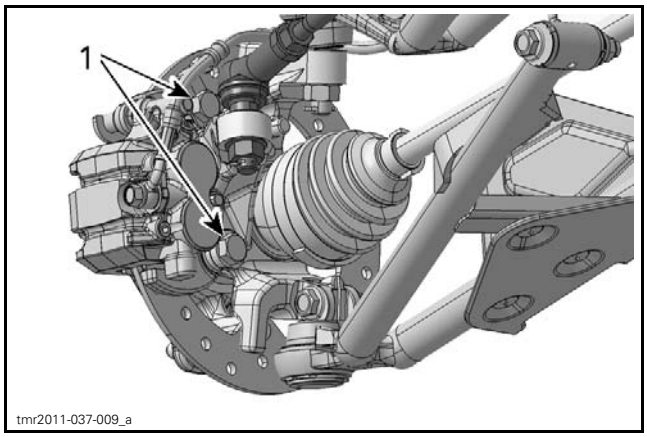

TYPICAL - FRONT CALIPER SHOWN
1. Caliper screws

6. Place caliper assembly onto a support.

NOTICE **Do not let caliper hangs by the hose and do not stretch or twist hose.**

Caliper Installation

The installation is the reverse of the removal procedure. However, pay attention to the following.

If caliper was removed for replacement:

– Refill and bleed brake system, refer to *PERIODIC MAINTENANCE PROCEDURES* subsection.
– Install NEW sealing washers.

Apply threadlocker on caliper retaining screws.

CALIPER RETAINING SCREWS THREADLOCKER
LOCTITE 243 (BLUE) (P/N 293 800 060)

Tighten caliper retaining screws to specification.

CALIPER RETAINING SCREWS TORQUE
48 N•m ± 6 N•m (35 lbf•ft ± 4 lbf•ft)

BRAKE PADS

Brake Pads Replacement

1. Remove caliper from knuckle, refer to *CALIPER REMOVAL* in this subsection.
2. Remove brake pad pins from caliper.

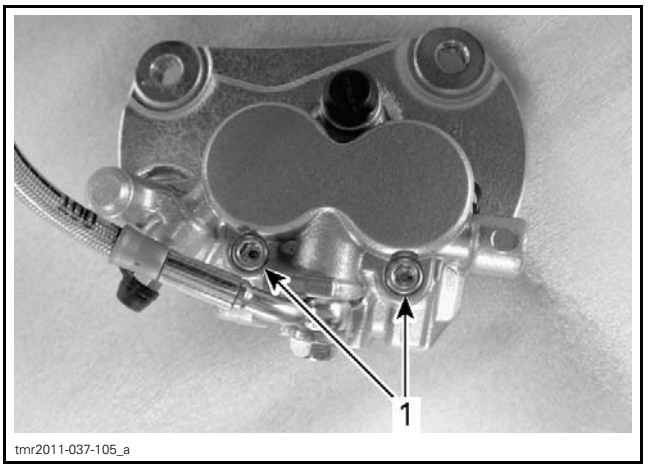

1. Brake pad pins

3. Remove brake pads.
4. Clean pistons end using XPS BRAKES AND PARTS CLEANER (USA) (P/N 219 701 705).
5. Push caliper pistons inward.

NOTE: To avoid damaging pistons, use an old pad to push it into the caliper using a C-clamp.

6. Ensure brake pad spring is properly positioned onto caliper.

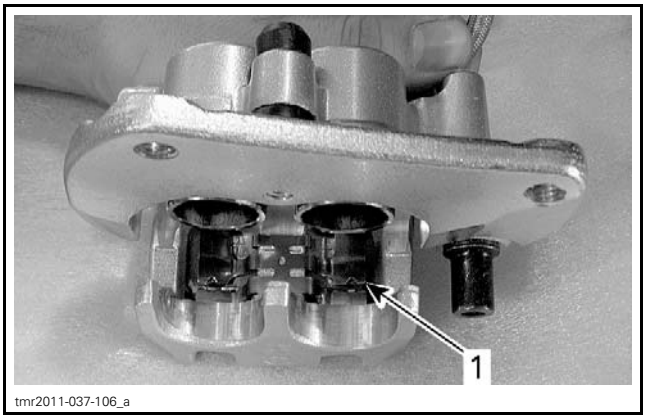

1. Brake pad spring

7. Install NEW brake pads.
8. Clean brake pad pins using XPS BRAKES AND PARTS CLEANER (USA) (P/N 219 701 705).
9. Install brake pad pins on caliper and torque to specification.

BRAKE PAD PINS
17.5 N•m ± 2.5 N•m (155 lbf•**in** ± 22 lbf•**in**)

10. Install caliper on knuckle, refer to *CALIPER INSTALLATION* in this subsection.

BRAKE DISC

Brake Disc Inspection

1. Check disc surfaces for scratches or grooves on both sides.
2. Measure thickness of the disc.

DISC MINIMUM THICKNESS	
FRONT	4 mm (.157 in)
REAR	4 mm (.157 in)

NOTICE Brake discs must never be machined.

3. Check warpage of the disc.

MAXIMUM DISC WARPAGE	
FRONT	0.2 mm (.01 in)
REAR	

Brake Disc Replacement

1. Remove caliper from knuckle, refer to *CALIPER REMOVAL* in this subsection.
2. Remove wheel hub, refer to *FRONT DRIVE* or *REAR DRIVE* subsection.
3. Remove wheel studs using a press.



tmr2011-037-107

Midwest Manuals
Green Manuals
Paperless Manuals
For a Better Tomorrow
If you bought this manual from any other seller please leave them NEGATIVE feedback and notify me at bestshopmanuals@gmail.com

4. Replace brake disc.
5. Align wheel stud knurling into hub grooves.
6. Install wheel studs using a press.

NOTE: If wheel studs are damaged, replace them.

7. Install wheel hub then caliper.
8. Install NEW cotter pin to secure wheel hub nut.

BODY (2-UP)

SERVICE TOOLS

Description	Part Number	Page
OETIKER PLIER	295 000 070	14

BODY (Parts Nomenclature)

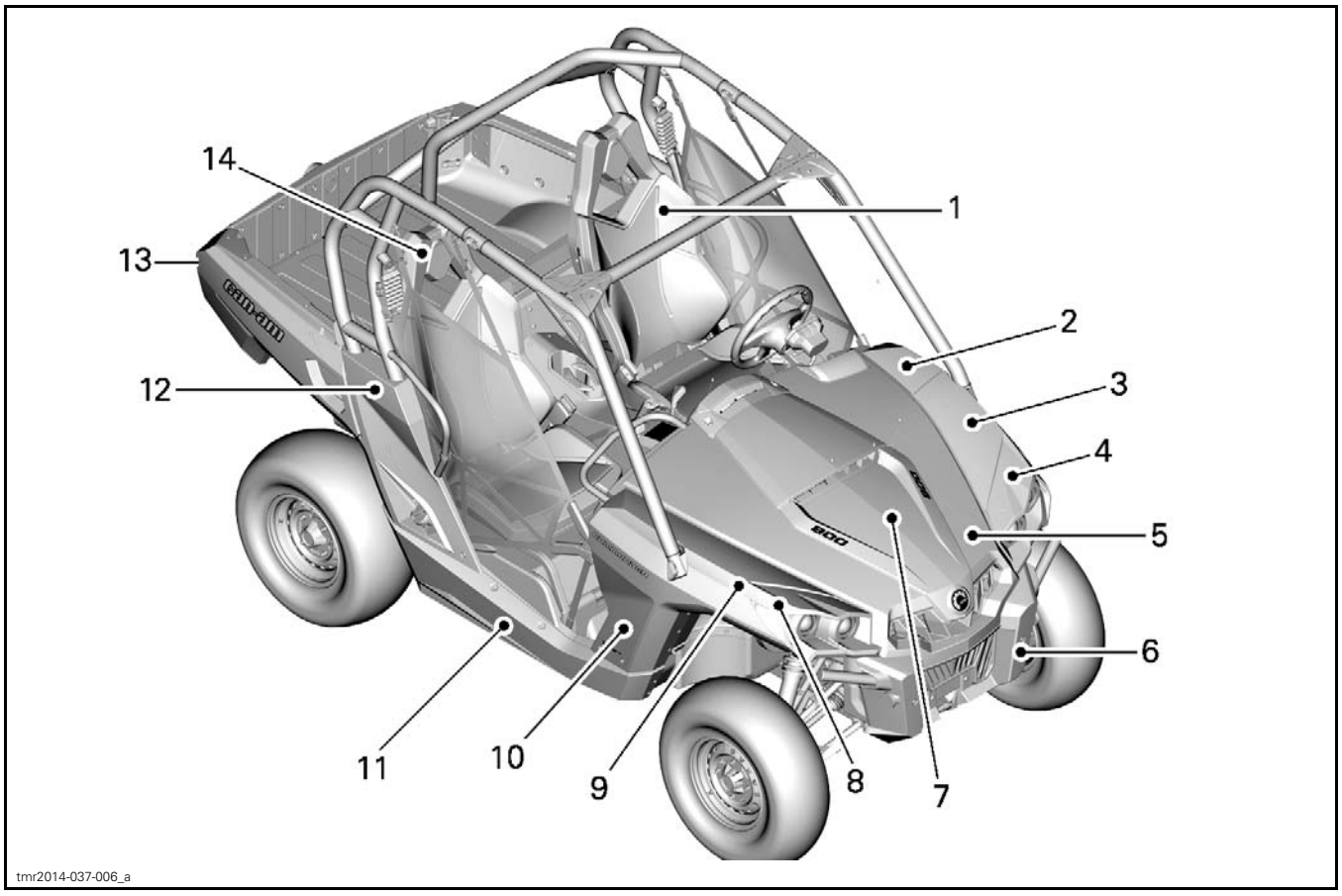

1. *Driver seat*
2. *CVT air inlet cover*
3. *LH front fender*
4. *LH headlight trim*
5. *Hood*
6. *Front fascia*
7. *Service cover*
8. *RH headlight trim*
9. *RH front fender*
10. *Front lateral panel*
11. *Central lateral panel*
12. *Rear lateral panel*
13. *Cargo box*
14. *Passenger seat*

COCKPIT – PASSENGER SIDE (Parts Nomenclature)

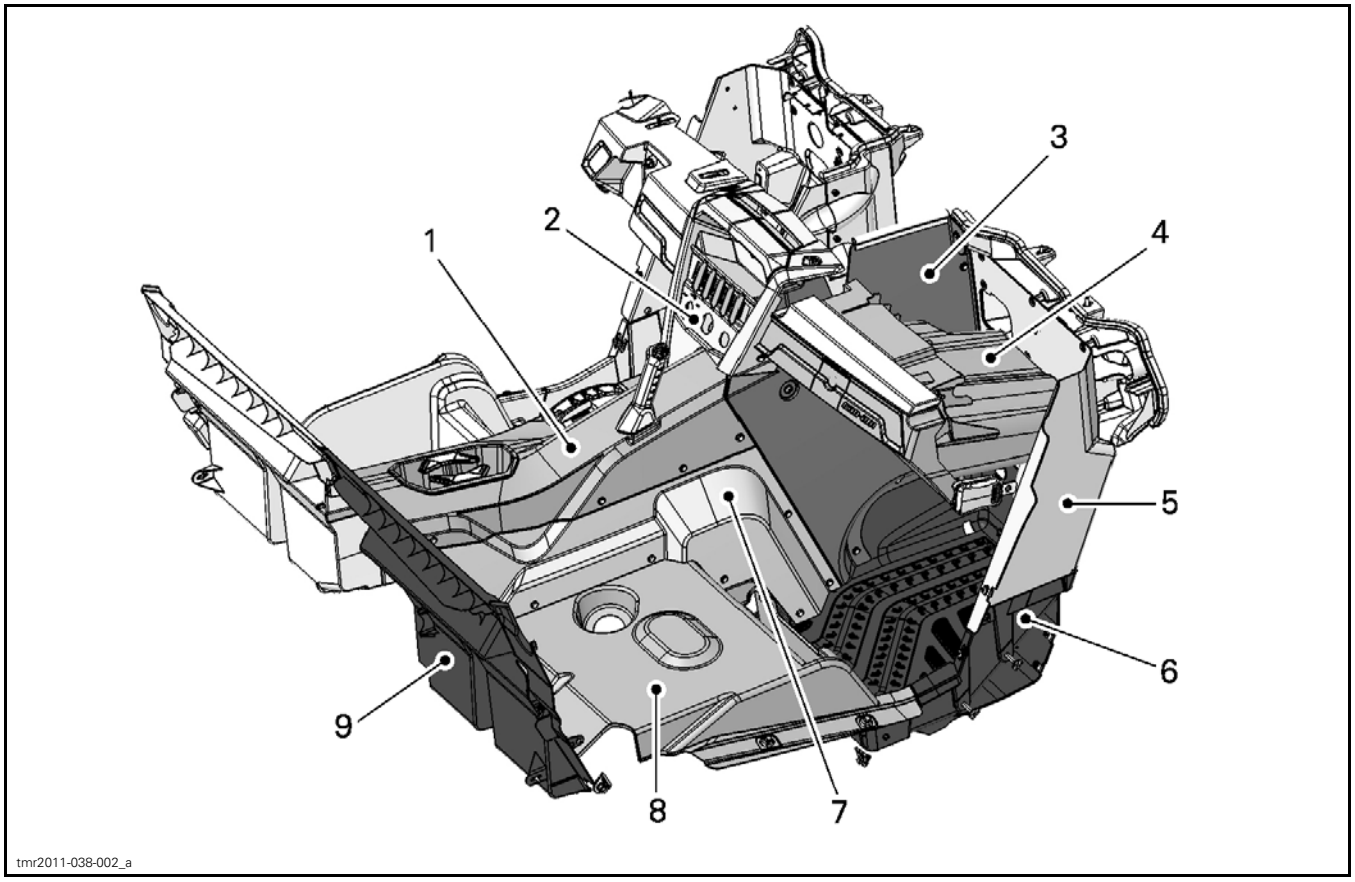

1. *Lower console*
2. *Upper console*
3. *RH inner kick panel*
4. *Glove box*
5. *Right front bulkhead*
6. *Right floor panel*
7. *Right lateral console panel*
8. *Fuel tank cowl*
9. *Right rear bulkhead*

COCKPIT – DRIVER SIDE (Parts Nomenclature)

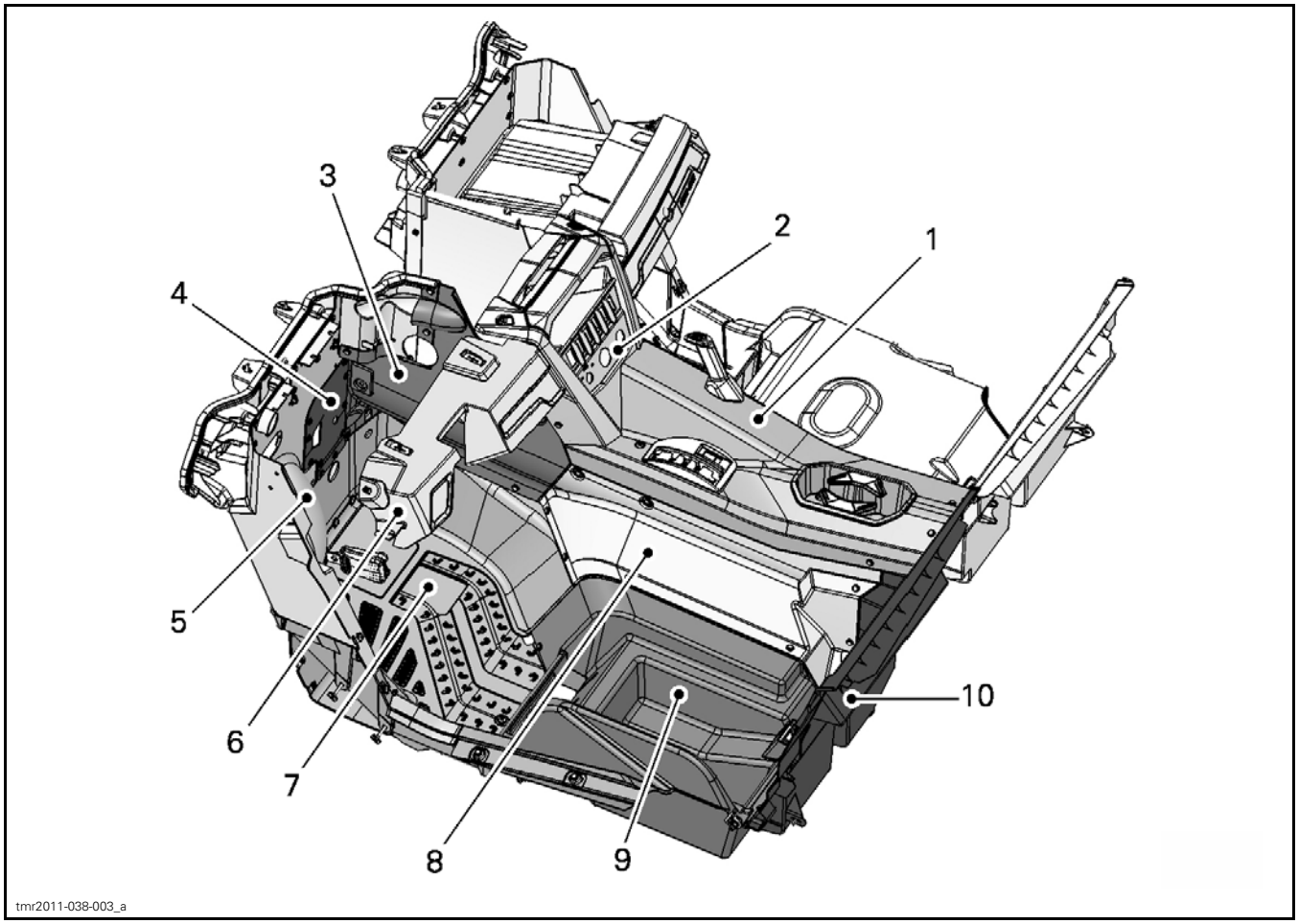

1. *Lower console*
2. *Upper console*
3. *LH inner kick panel*
4. *Bulkhead access panel*
5. *Left front bulkhead*
6. *Dash*
7. *Left floor panel*
8. *Left lateral console panel*
9. *Under seat storage compartment*
10. *Left rear bulkhead*

FRONT BODY PARTS (Torques and Service Products)

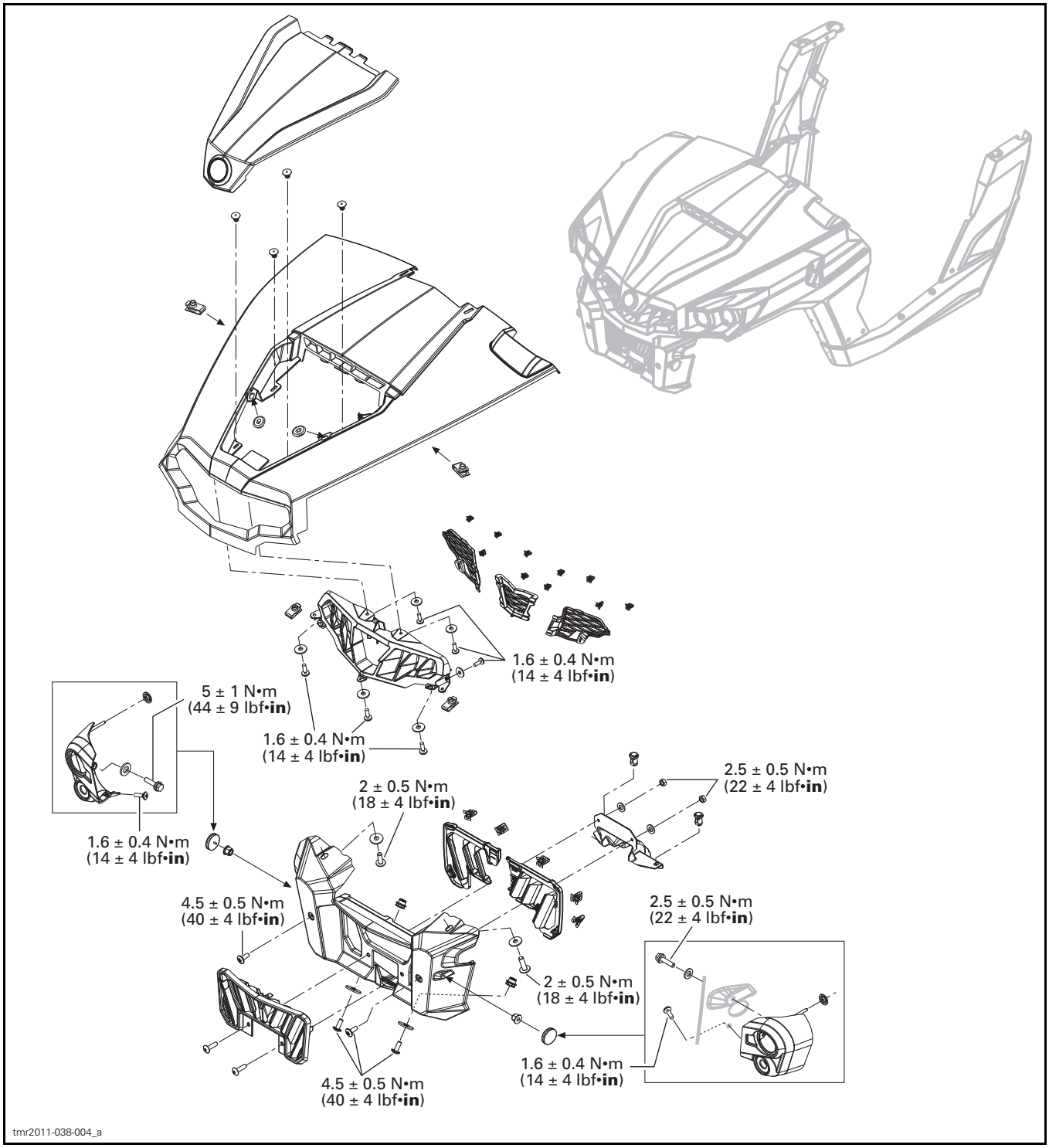

SIDE BODY PARTS (Torques and Service Products)

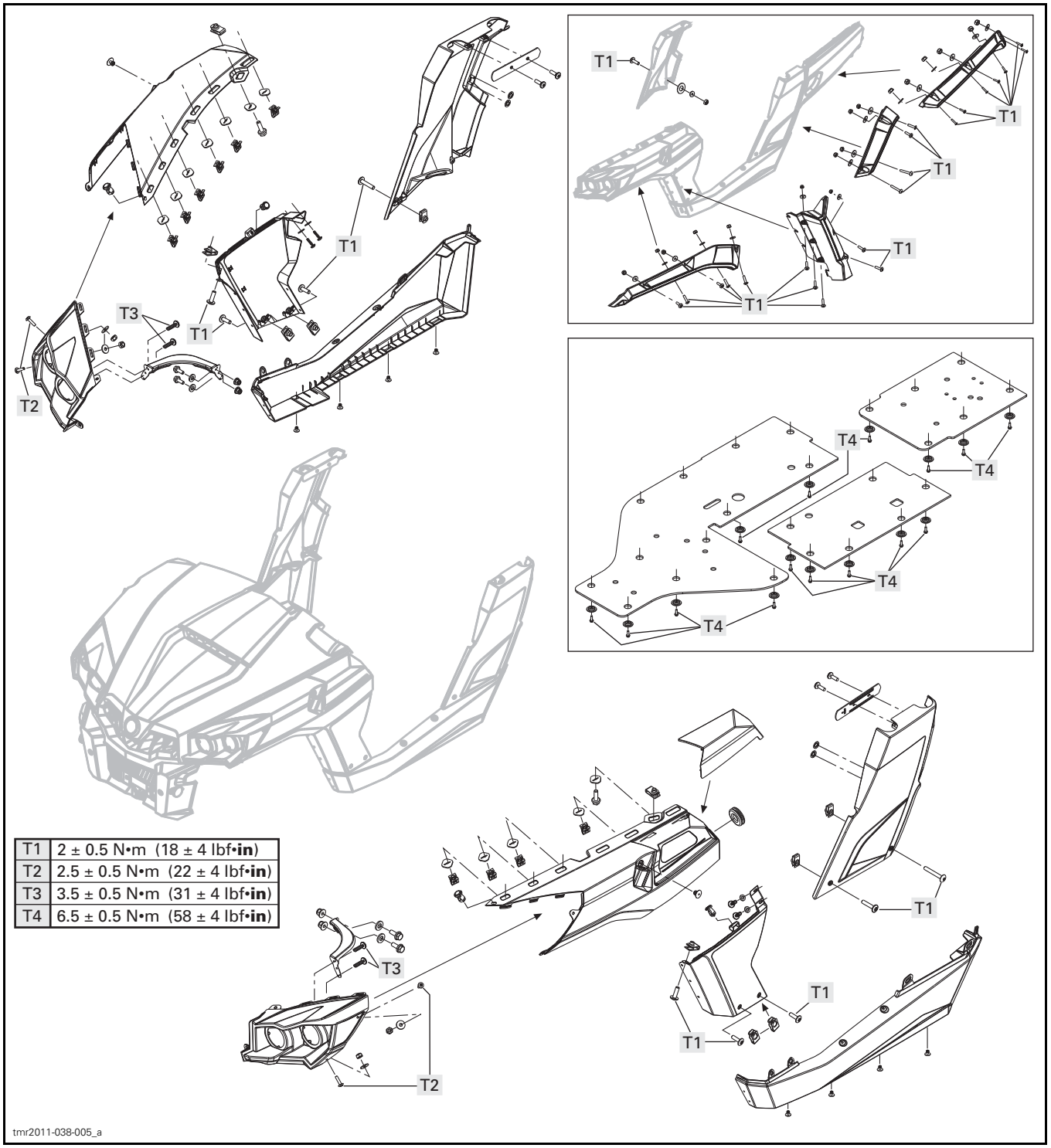

T1	2 ± 0.5 N•m (18 ± 4 lbf•**in**)
T2	2.5 ± 0.5 N•m (22 ± 4 lbf•**in**)
T3	3.5 ± 0.5 N•m (31 ± 4 lbf•**in**)
T4	6.5 ± 0.5 N•m (58 ± 4 lbf•**in**)

COCKPIT TRIMS – DRIVER SIDE (Torques and Service Products)

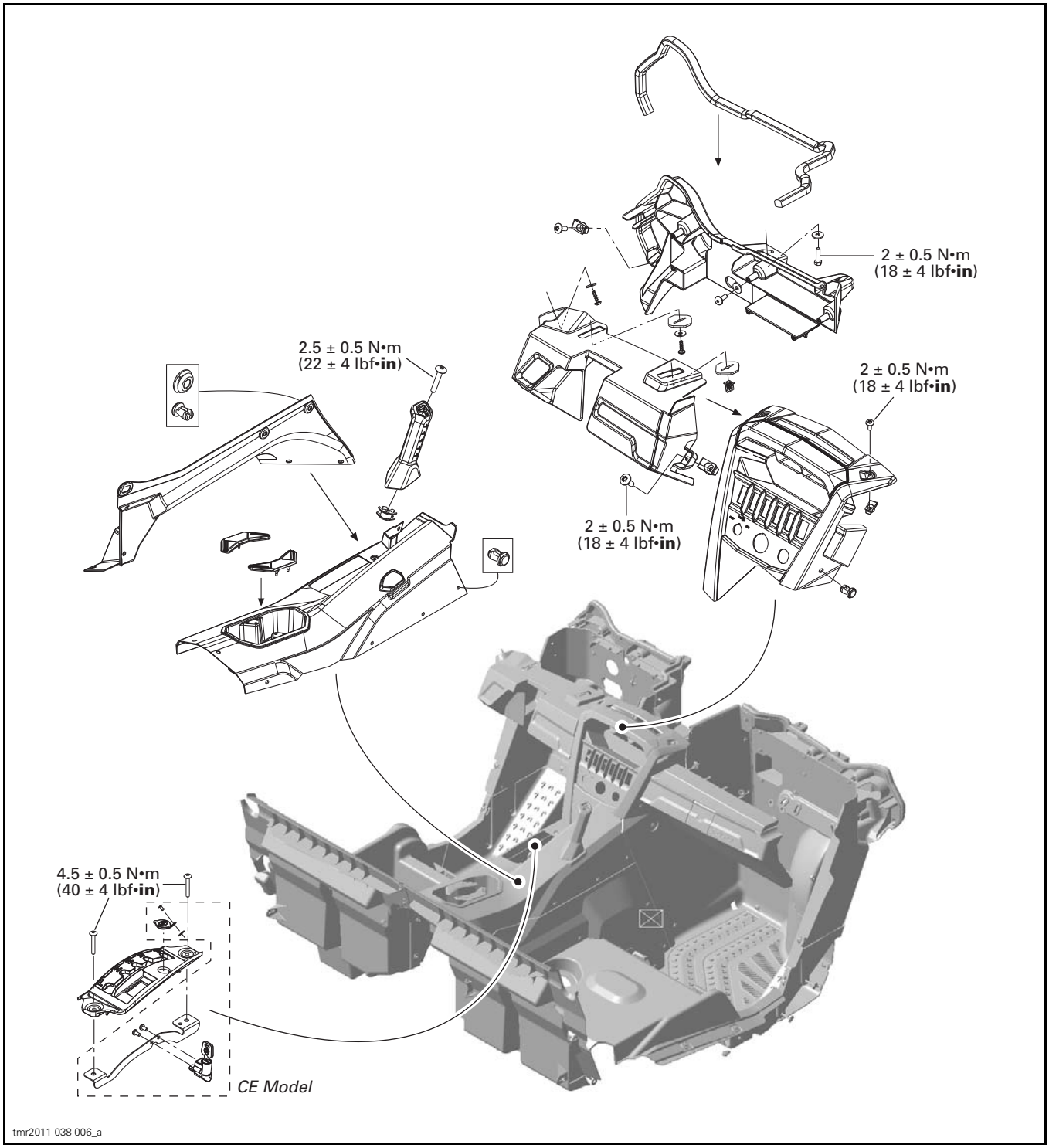

COCKPIT TRIMS – PASSENGER SIDE (Torques and Service Products)

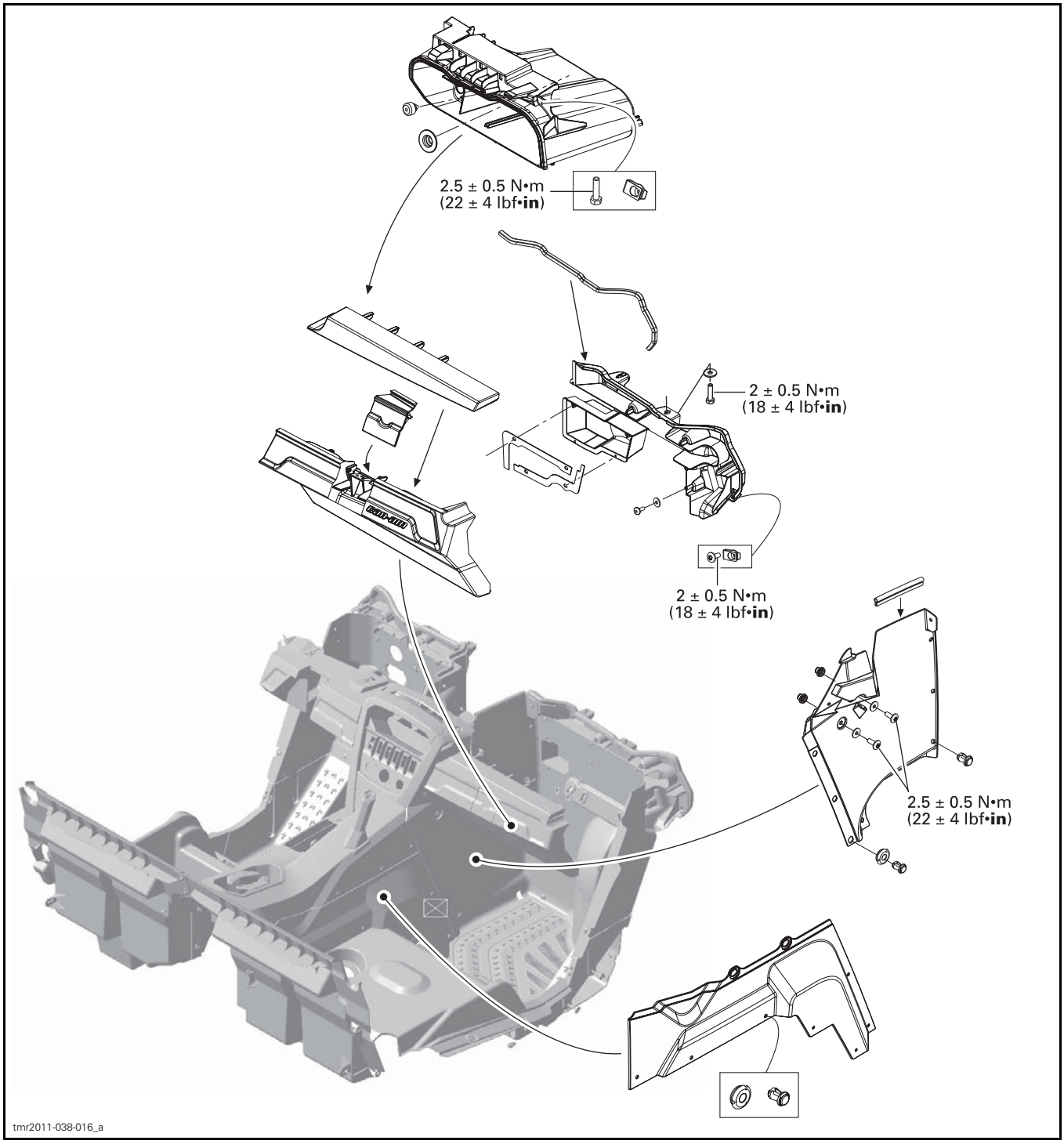

COCKPIT STRUCTURE PANELS – PASSENGER SIDE (Torques and Service Products)

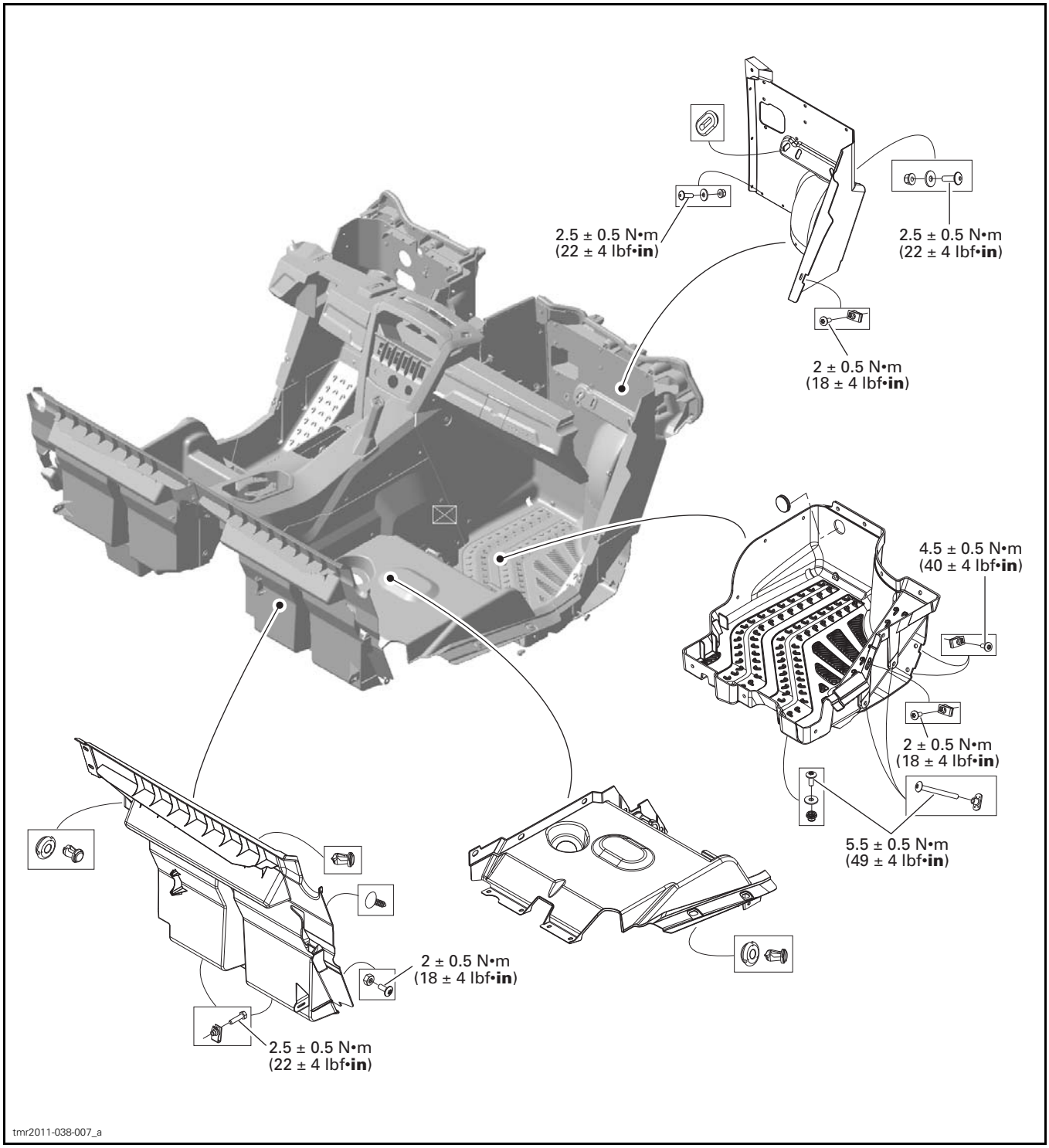

COCKPIT STRUCTURE PANELS – DRIVER SIDE (Torques and Service Products)

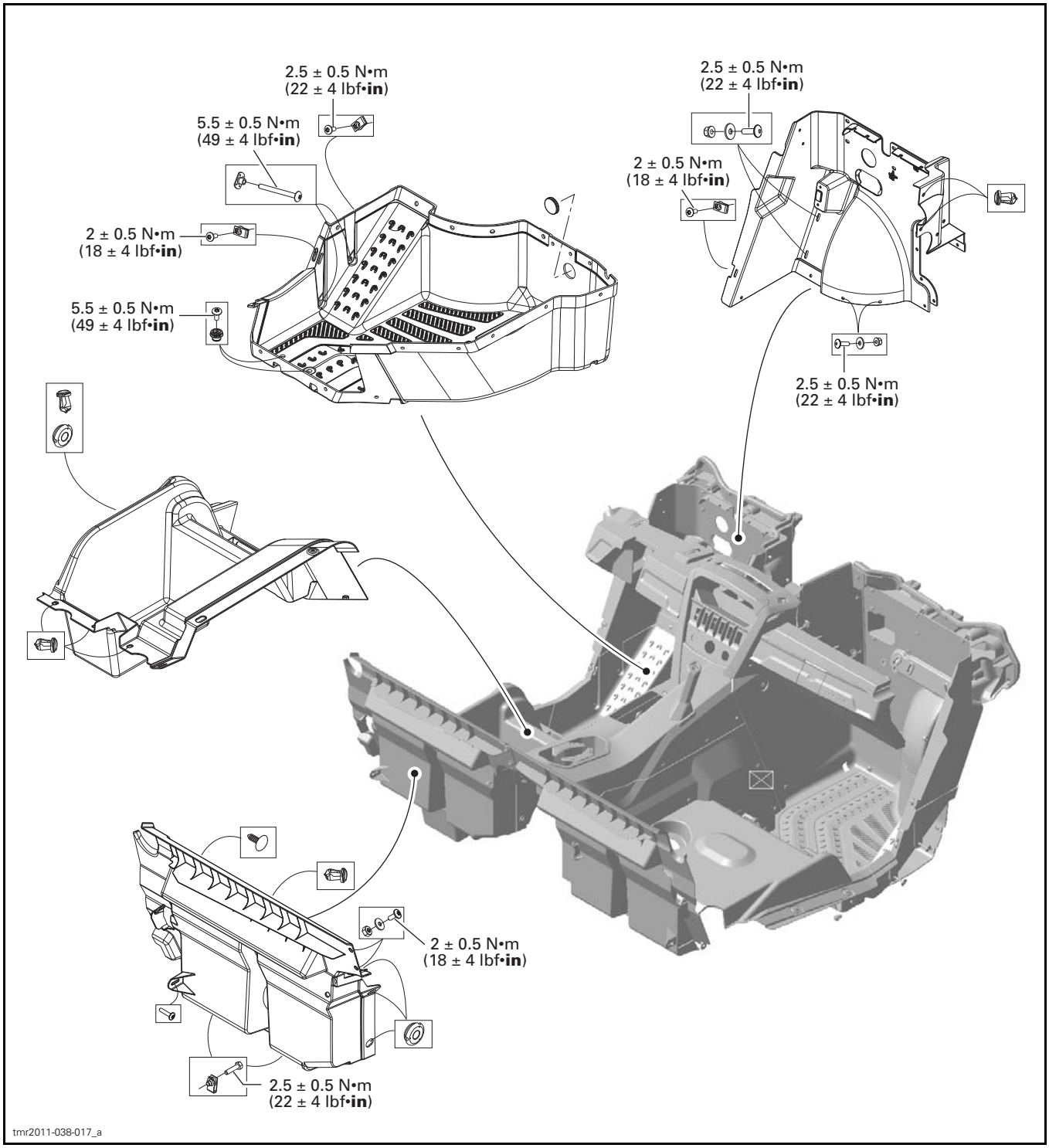

SEATS

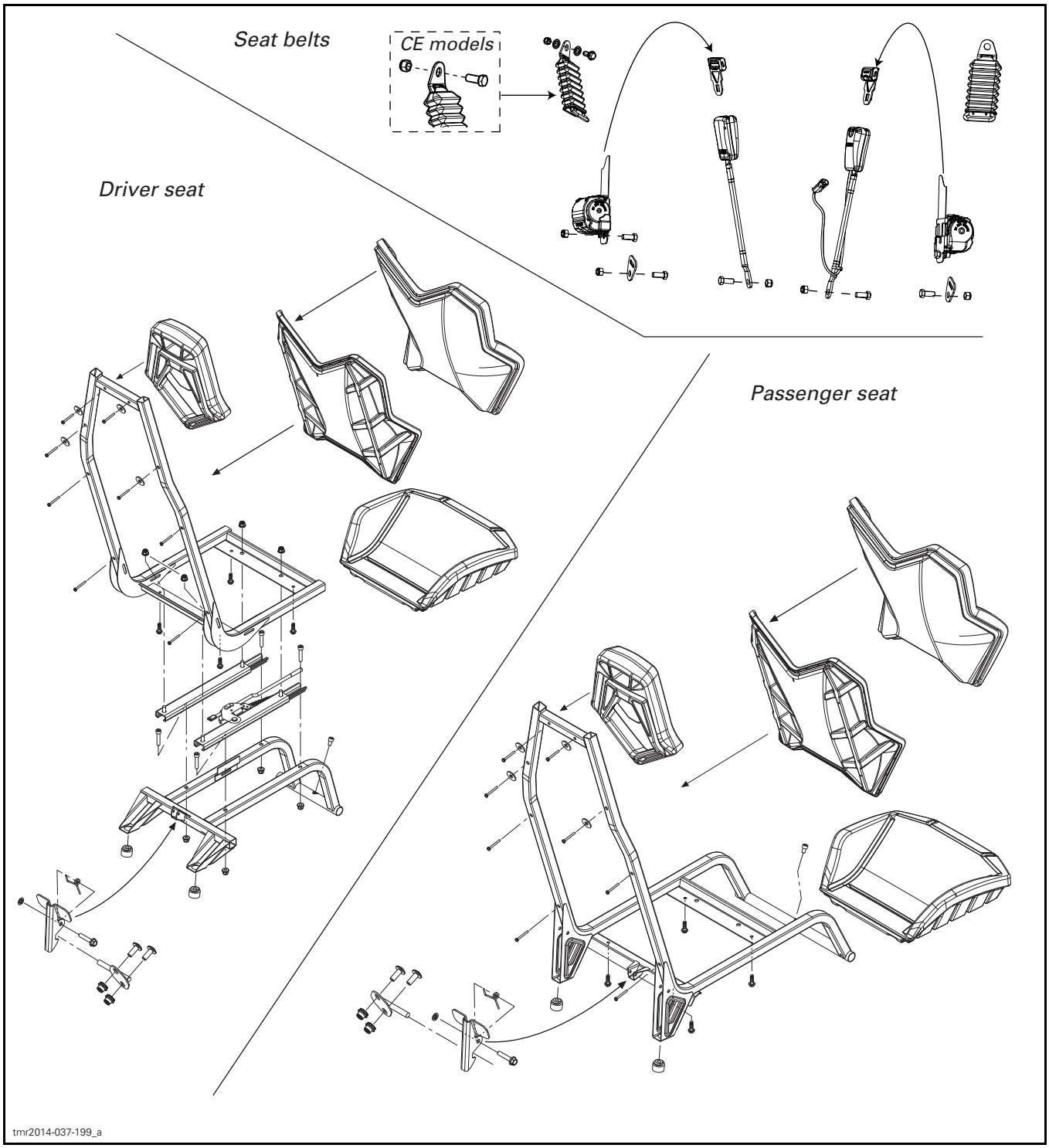
Seat belts
CE models
Driver seat
Passenger seat
tmr2014-037-199_a

Hunting Edition - Front Bumper

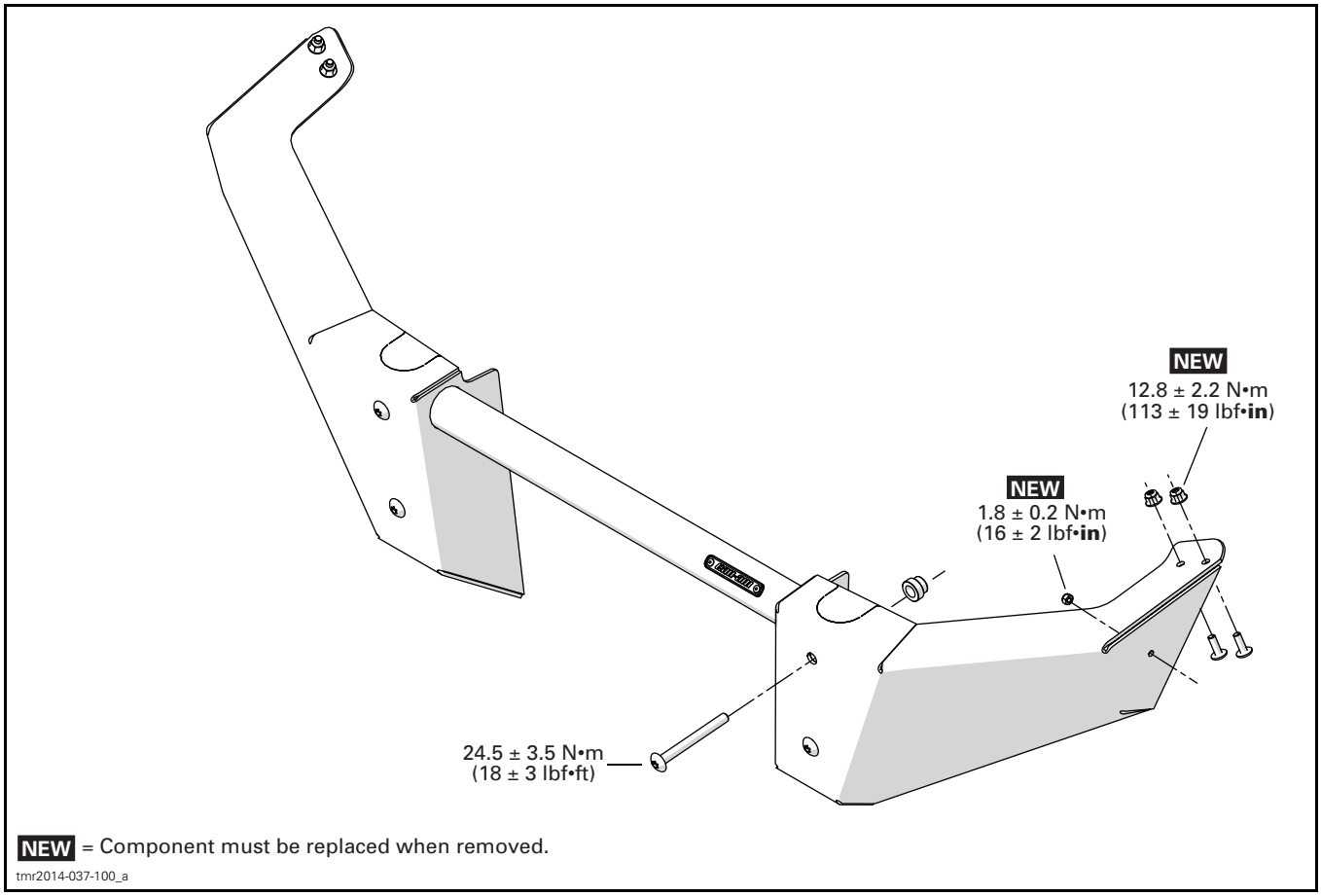

NEW = Component must be replaced when removed.

tmr2014-037-100_a

Hunting Edition - Skid Plates

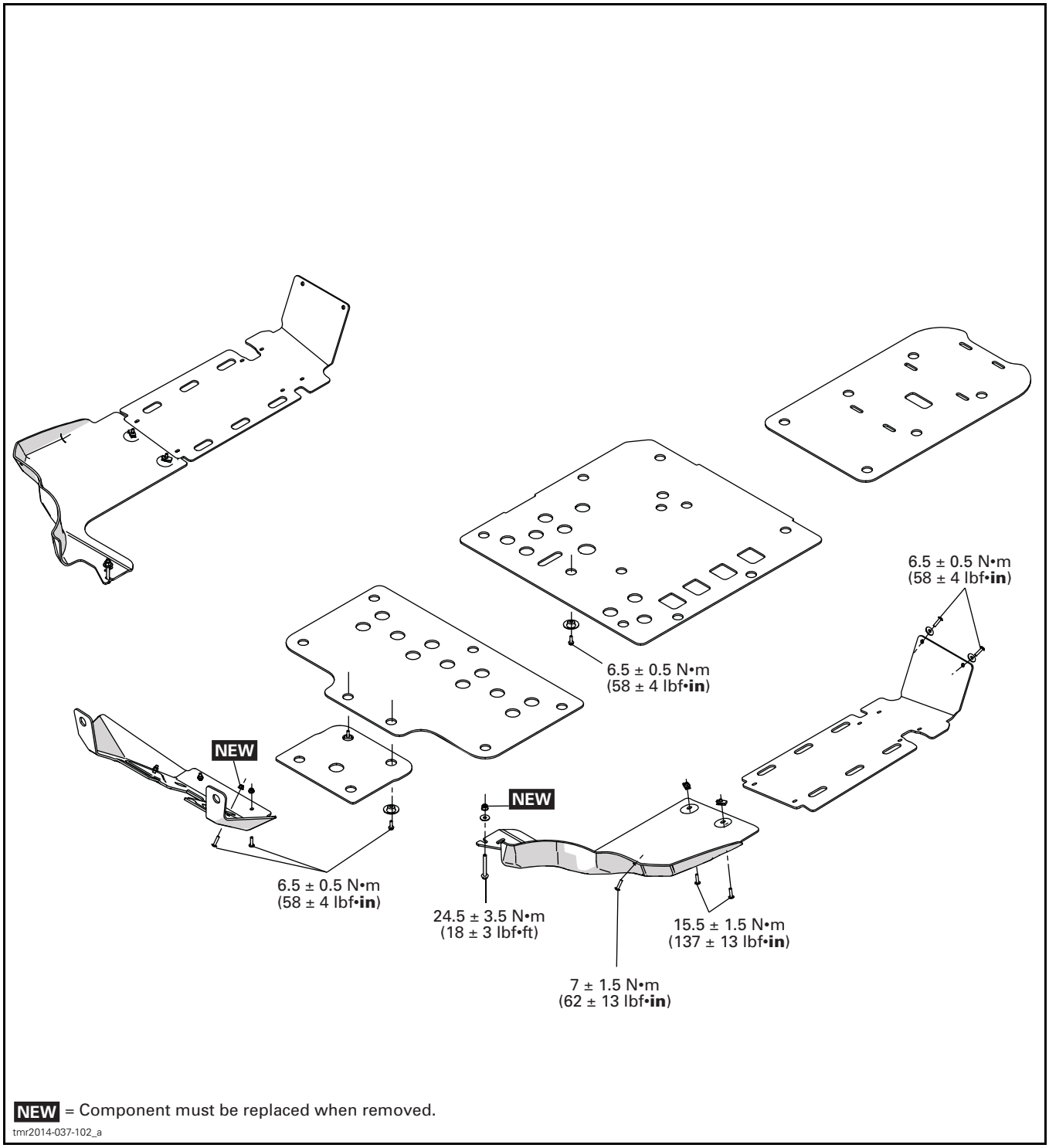

NEW = Component must be replaced when removed.

tmr2014-037-102_a

Hunting Edition - Gear Rail and Gun Boots

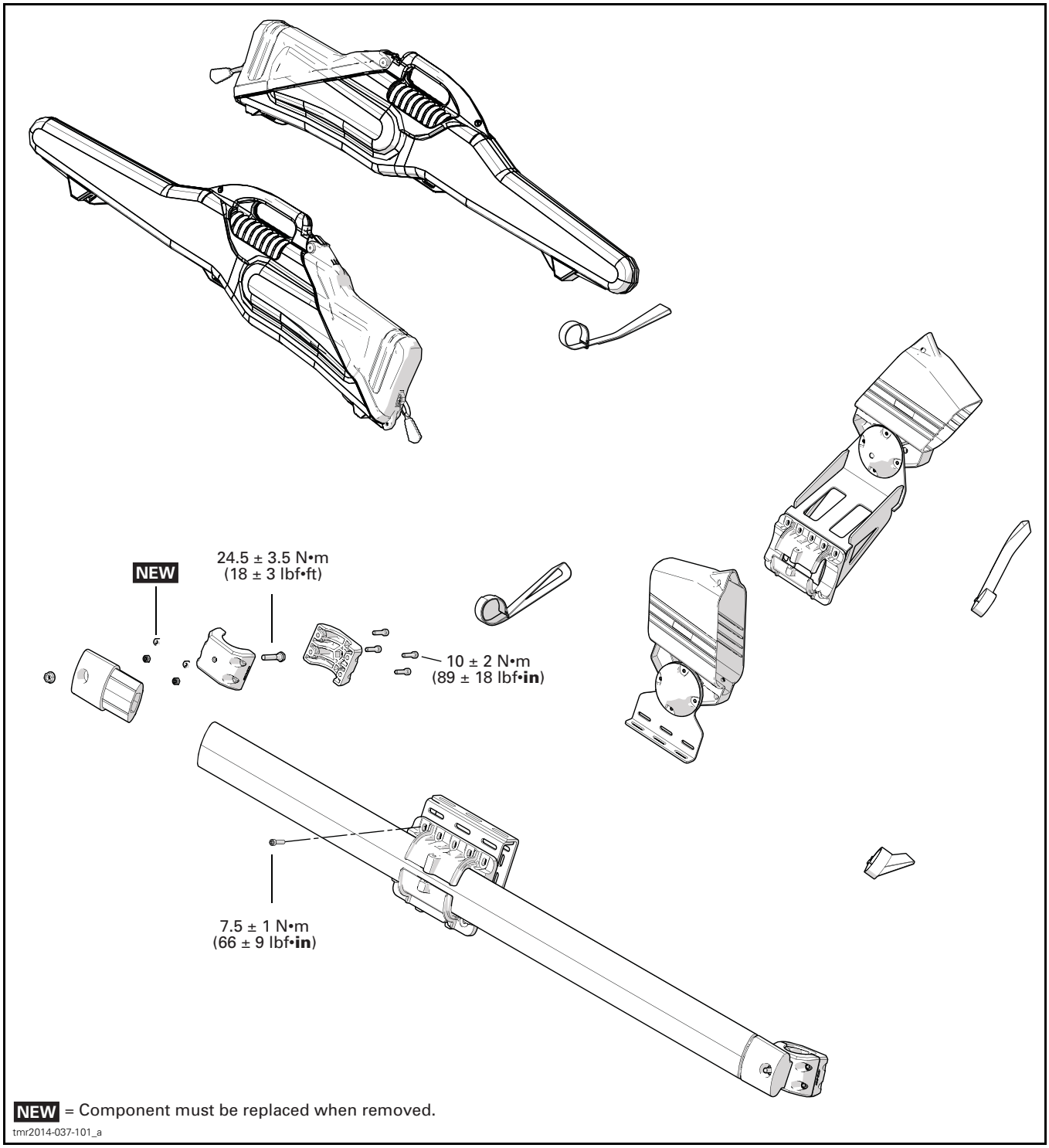

NEW = Component must be replaced when removed.

tmr2014-037-101_a

PROCEDURES

PLASTIC RIVET

Plastic rivets are used in the riveting of the various body parts. Plastic rivets can be reused many times. Use the OETIKER PLIER (P/N 295 000 070) to remove them.

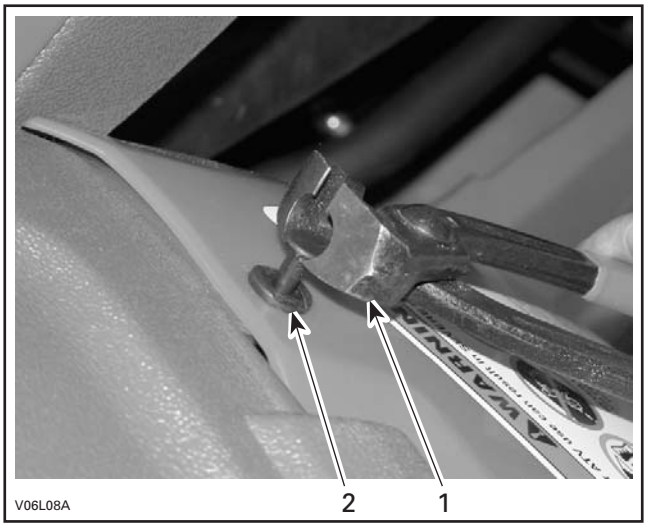

TYPICAL
1. *Pliers*
2. *Plastic rivet*

DECALS

Decal Removal

Using a heat gun warm up one end of decal for a few seconds until decal can roll off when rubbing with your finger.

Pull decal slowly and when necessary apply more heat to ease removal on the area that has to be peeled off.

If decal tears while pulling off, it has to be heated for a few seconds longer. If decal tends to stretch while pulling off, stop heating and wait a few seconds to let it cool, then peel it off.

Decal Installation

Using isopropyl alcohol, clean the surface and dry thoroughly.

Apply liquid soap to new decal and carefully position it. Using a sponge or a squeegee, remove the air bubbles and surplus water working from the center toward the edges. Allow to air dry.

NOTICE **Do not apply isopropyl alcohol or solvent directly on decals. Use these products in a well ventilated area.**

UPPER CONSOLE

Upper Console Removal and Installation

1. Remove:
   – Screws
   – Plastic rivets.

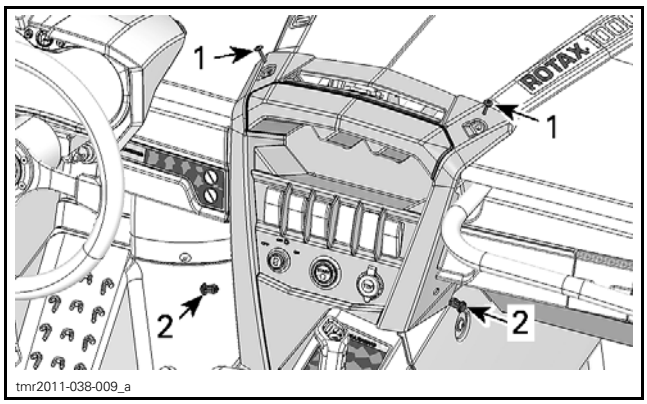

1. *Top screws*
2. *Plastic rivets*

2. Pull out the upper console and disconnect electrical connectors.
3. Remove the upper console.

The installation is the reverse of the removal procedure.

LOWER CONSOLE

Lower Console Removal and Installation

1. Remove both seats.
2. Remove screws and plastic rivets securing the upper console and place it on the hood.
3. Remove the LH passenger handhold screw.

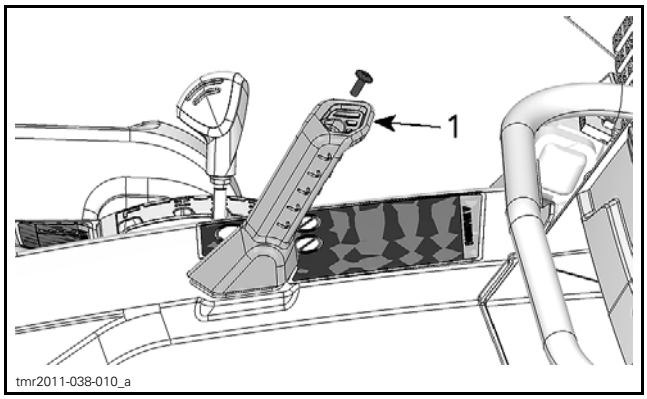

1. *LH passenger handhold*

4. Remove the front screw of the shift lever indicator.

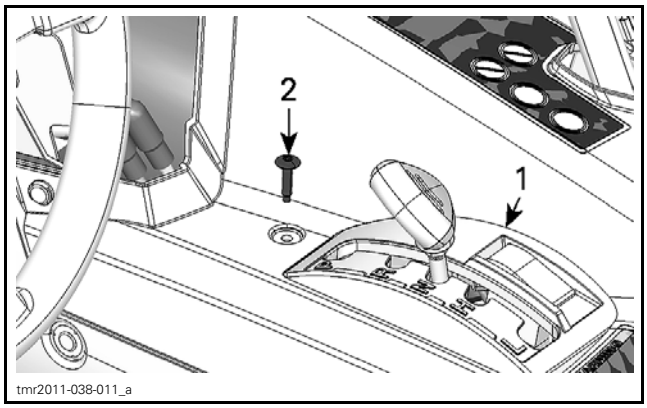

1. Shift lever indicator
2. Front retaining screw

5. Remove all plastic rivets securing the lower console.

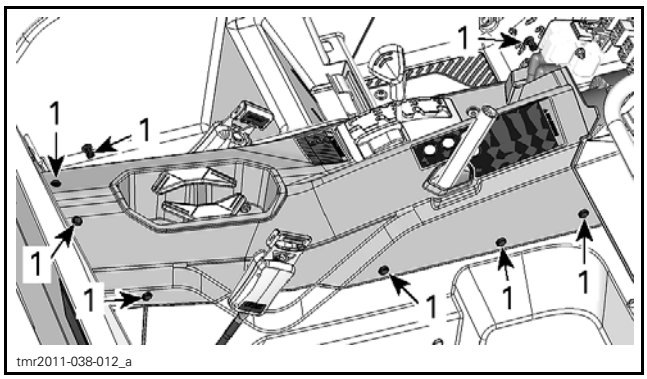

1. Plastic rivets

6. Remove the lower console.

The installation is the reverse of the removal procedure.

LATERAL CONSOLE PANELS

Lateral Console Panels Removal and Installation

1. Remove seat.
2. Remove plastic rivets securing the lateral console panel.
3. Remove the lateral console panel.

NOTE: On following illustrations, the cage and the side net are removed for clarity purpose.

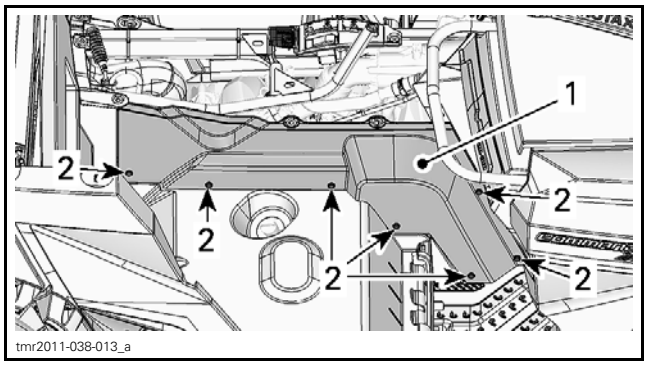

1. RH lateral console panel
2. Plastic rivets

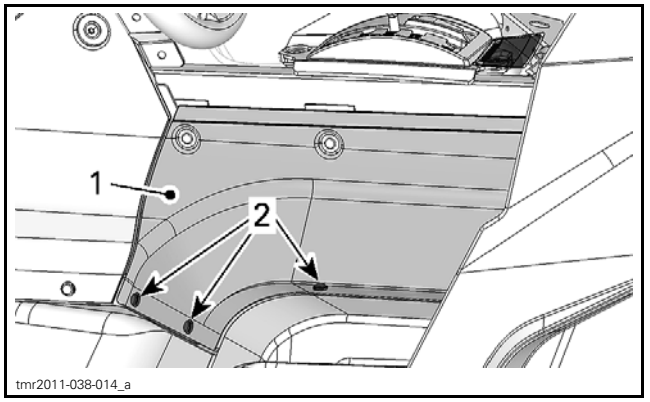

FRONT PORTION OF THE LH LATERAL CONSOLE PANEL
1. LH lateral console panel
2. Plastic rivets

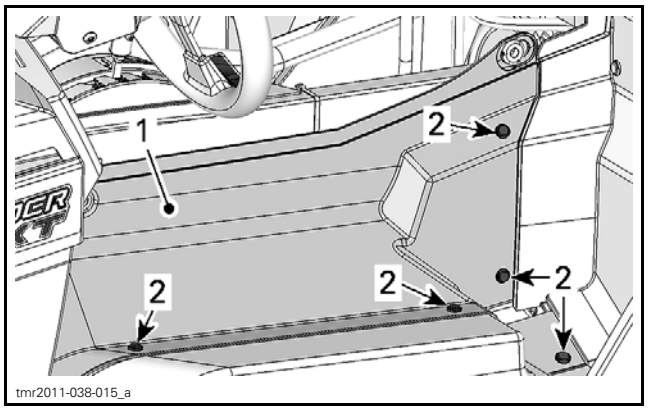

REAR PORTION OF THE LH LATERAL CONSOLE PANEL
1. LH lateral console panel
2. Plastic rivets

The installation of the lateral console panels is the reverse of the removal procedure.

GLOVE BOX REMOVAL AND INSTALLATION

1. Remove the glove box trim.

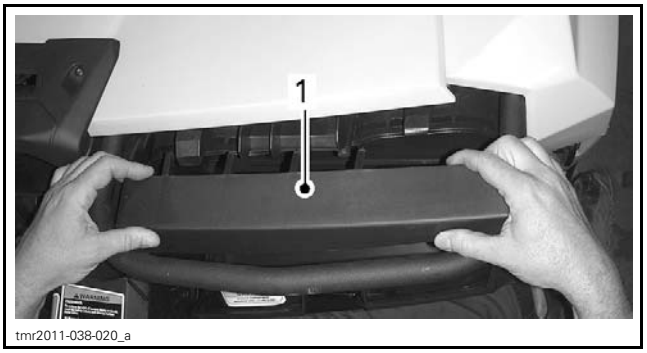

1. Glove box trim

2. Remove glove box retaining screws.

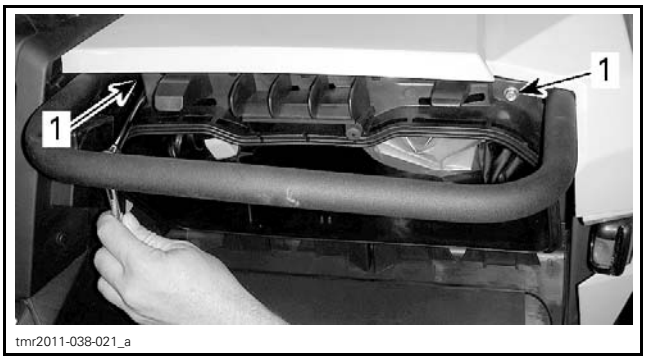

1. Glove box retaining screws

3. Pull glove box to remove it.

The installation of the glove box is the reverse of the removal procedure.

FUEL TANK COWL

Fuel Tank Cowl Removal and Installation

Remove rivets securing fuel tank cowl.

Remove fuel tank cowl.

The installation of the fuel tank cowl is the reverse of the removal.

SEAT COVER

Seat Cover Removal

Remove plastic clips securing seat cover to seat.

Remove seat cover from seat.

Seat Cover Installation

Install seat cover onto seat.

Apply pressure to padded areas for a close fit.

Insert plastic clips to secure seat cover onto seat.

SEAT BELTS

Seat Belt Operation

All models except CE models are now equipped with a slide locking tab on the seat belt.



SEAT BELT ENGAGED
1. Slide locking tab

1. To lock: adjust the seat belt tightly against your body and raise or move the lap belt upward.



2. To unlock: place seat belt as shown and push down on the lap belt where indicated.

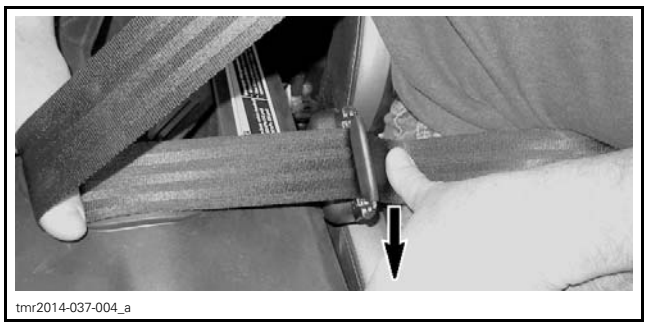

Seat Belt Cleaning

To clean dirt and debris from the seat belts, sponge the straps with mild soap and water. Do not use bleach, dye, or household detergents.

⚠ WARNING

Do not use pressure washer to clean seat belt components. Use of pressure washer can permanently damage seat belt components.

Seat Belt Replacement

Follow standard torque specifications and pay attention to mounting hardware.

When installing seat belt retractor, the hardware must be assembled as illustrated below.

Align locating tab with hole in frame bracket.

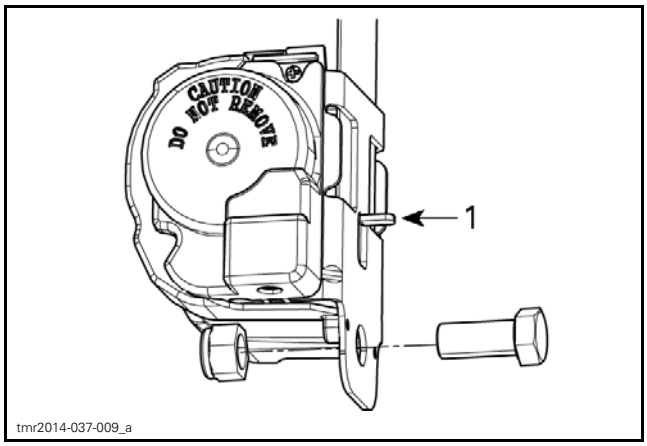

SEAT BELT RETRACTOR
1. Locating tab

TIGHTENING TORQUE	
7/16-20 x 1 hexagonal flange bolt	60 N•m (44 lbf•ft)

Except CE models.

NOTICE **Make sure belt is not twisted.**

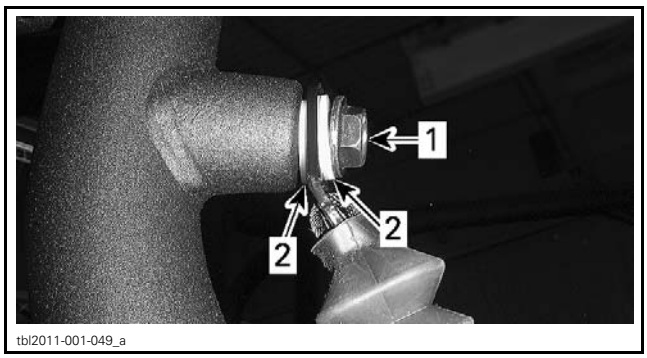

1. Shoulder bolt
2. Nylon flat washer

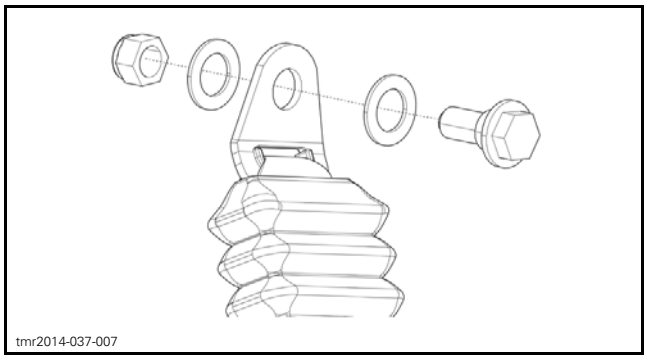

TIGHTENING TORQUE	
7/16-20 x 1 shoulder bolt	60 N•m (44 lbf•ft)

CE models.

NOTICE **Make sure belt is not twisted.**

Position seat belt bracket as per the following illustration. No nylon flat washers are necessary.

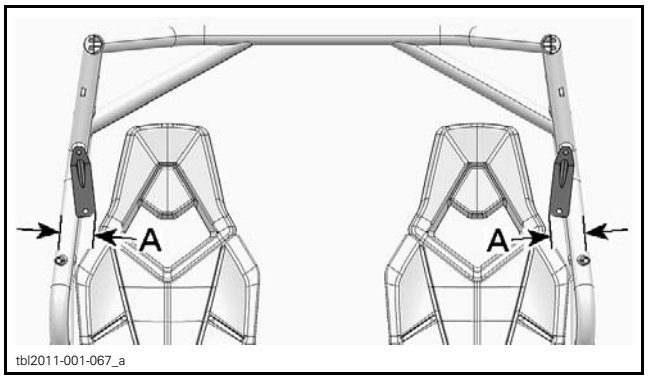

A. Approximately 90 mm (3-17/32 in)

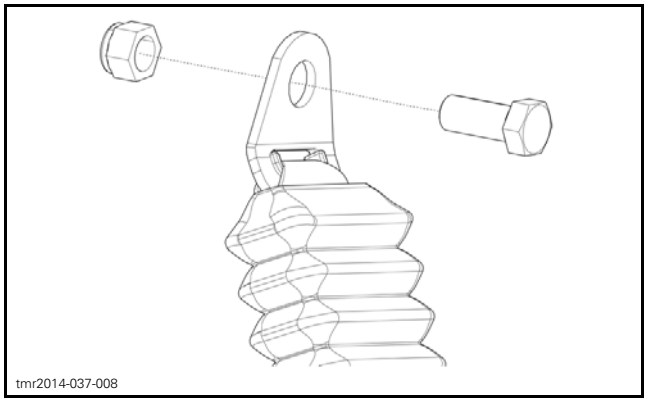

TIGHTENING TORQUE	
7/16-20 x 1 hexagonal flange bolt	60 N•m (44 lbf•ft)

BODY

SERVICE TOOLS

Description	Part Number	Page
OETIKER PLIERS	295 000 070	16

BODY (Parts Nomenclature)

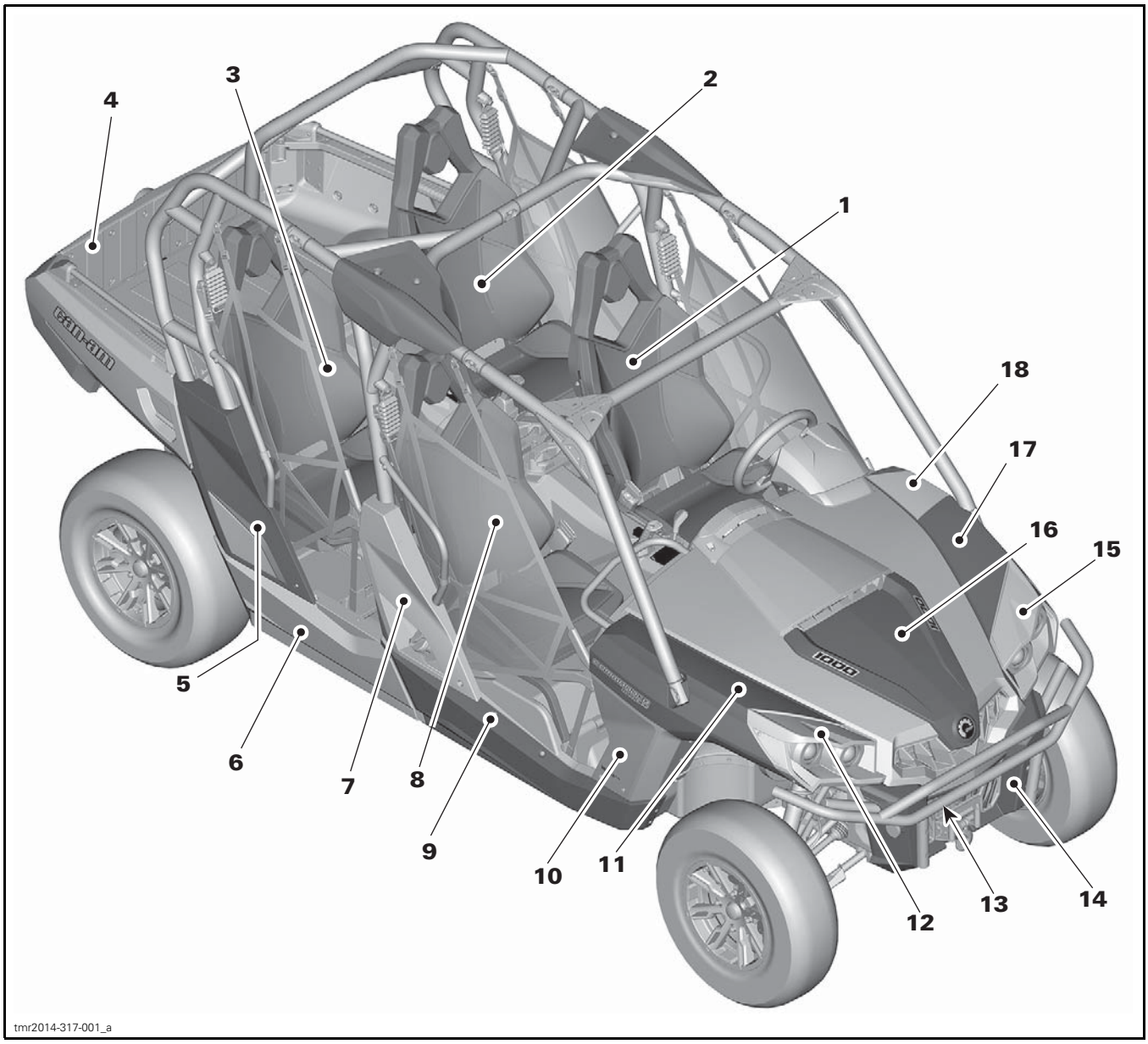

1. *Driver seat*
2. *Rear passenger seat*
3. *Rear Passenger seat*
4. *Cargo box*
5. *Rear lateral panel*
6. *Rear central lateral panel*
7. *Central lateral panel*
8. *Front passenger seat*
9. *Front central lateral panel*
10. *Front lateral panel*
11. *RH front fender*
12. *RH headlight trim*
13. *Bumper*
14. *Bumper cover*
15. *LH headlight trim*
16. *Service cover*
17. *Hood*
18. *CVT air inlet cover*

COCKPIT – PASSENGER SIDE (Parts Nomenclature)

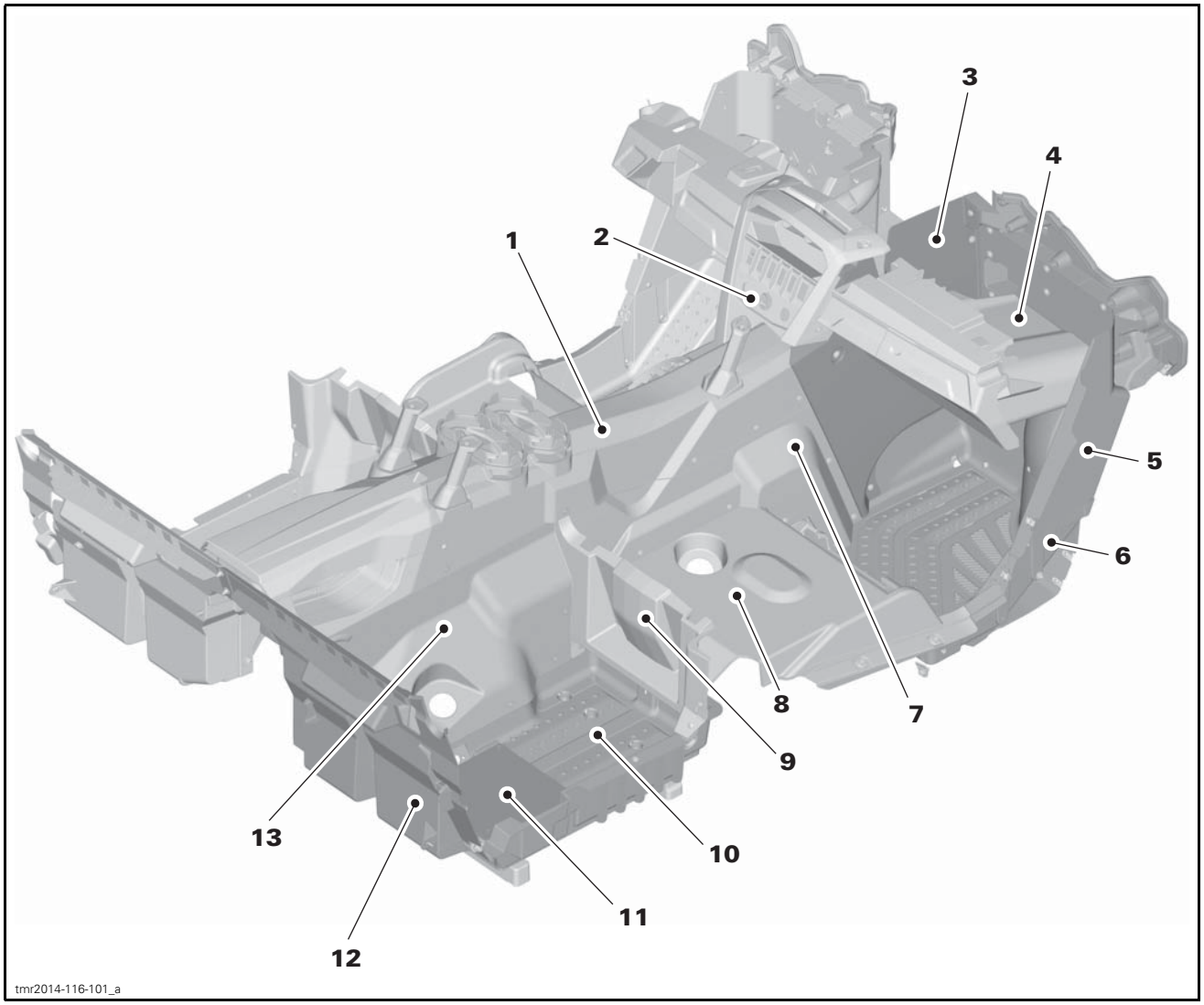

1. *Lower console*
2. *Upper console*
3. *RH inner kick panel*
4. *Glove box*
5. *Right front bulkhead*
6. *Right front floor panel*
7. *Right front lateral console panel*
8. *Fuel tank cowl*
9. *Right seat panel*
10. *Right rear floor panel*
11. *Battery cover*
12. *Right rear bulkhead*
13. *Right rear lateral console panel*

COCKPIT – DRIVER SIDE (Parts Nomenclature)

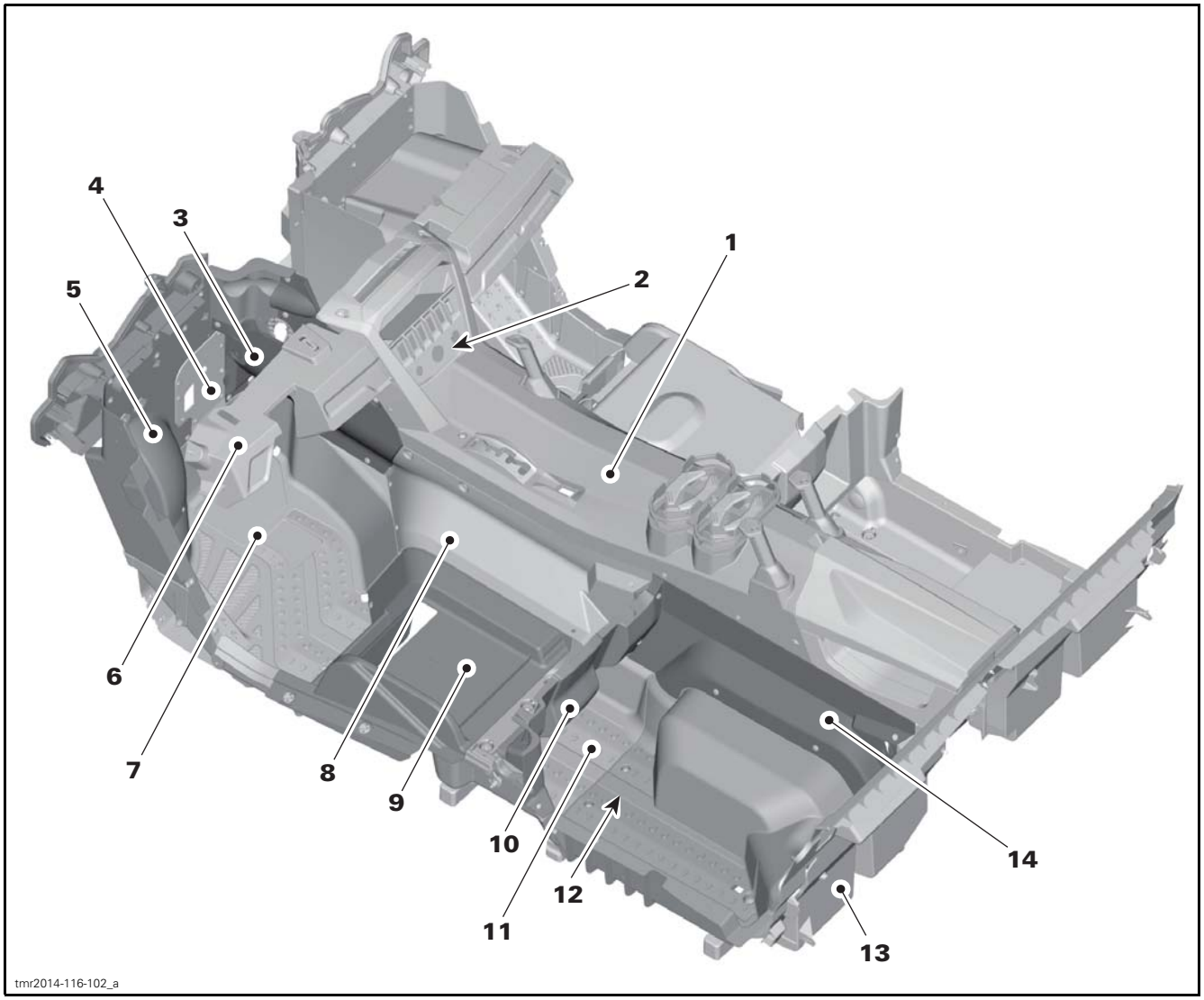

1. *Lower console*
2. *Upper console*
3. *LH inner kick panel*
4. *Bulkhead access panel*
5. *Left front bulkhead*
6. *Dash*
7. *Left floor panel*
8. *Left lateral console panel*
9. *Under seat panel*
10. *Left seat panel*
11. *Left rear floor panel - front section*
12. *Left rear floor panel - rear section*
13. *Left rear bulkhead*
14. *Left rear lateral console panel*

SERVICE COVER, HOOD ASSEMBLY AND BUMPER COVER ASSEMBLY

Please note that unless indicated, the procedure is the same for both sides.

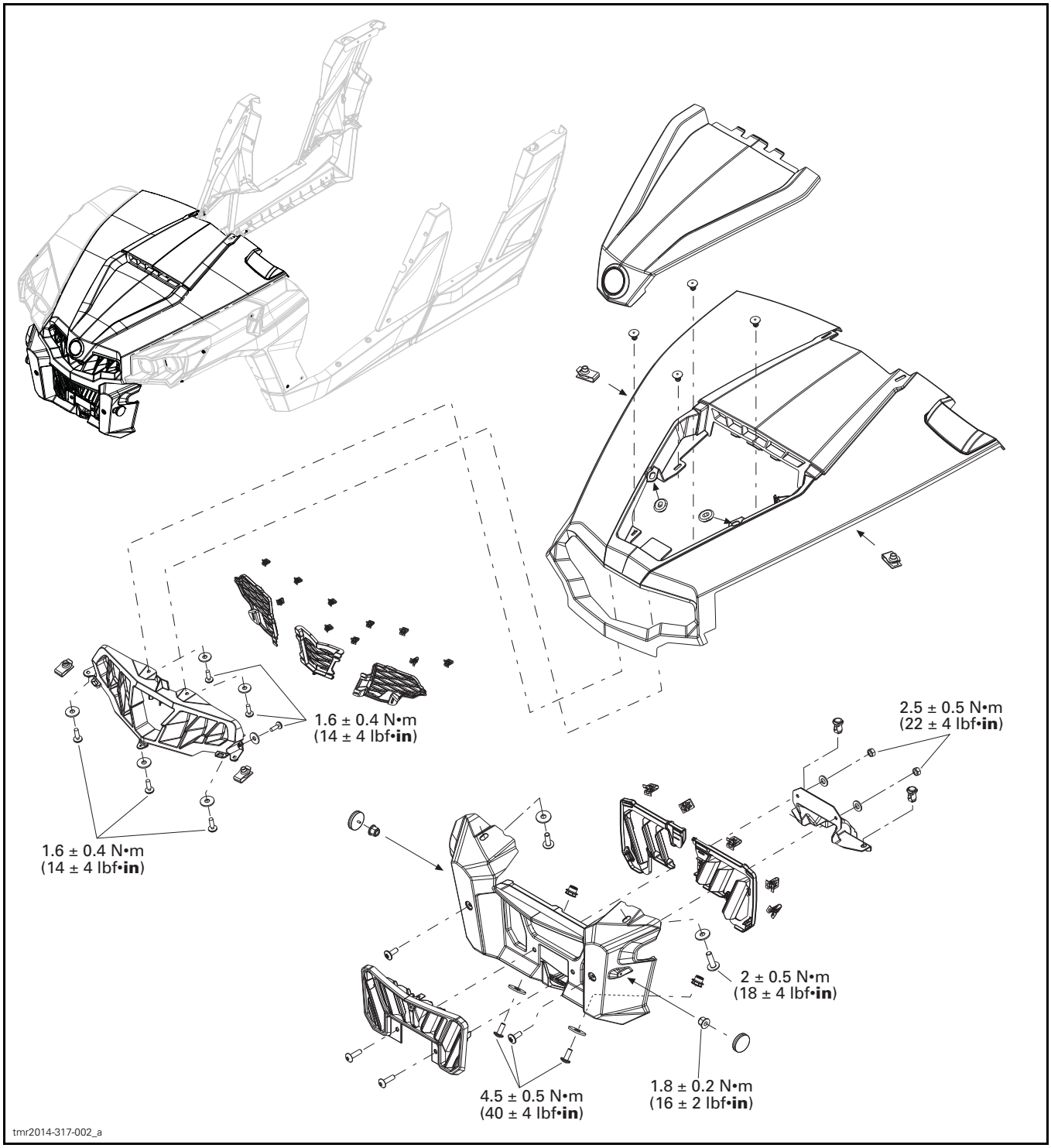

FRONT FENDER AND LATERAL PANELS

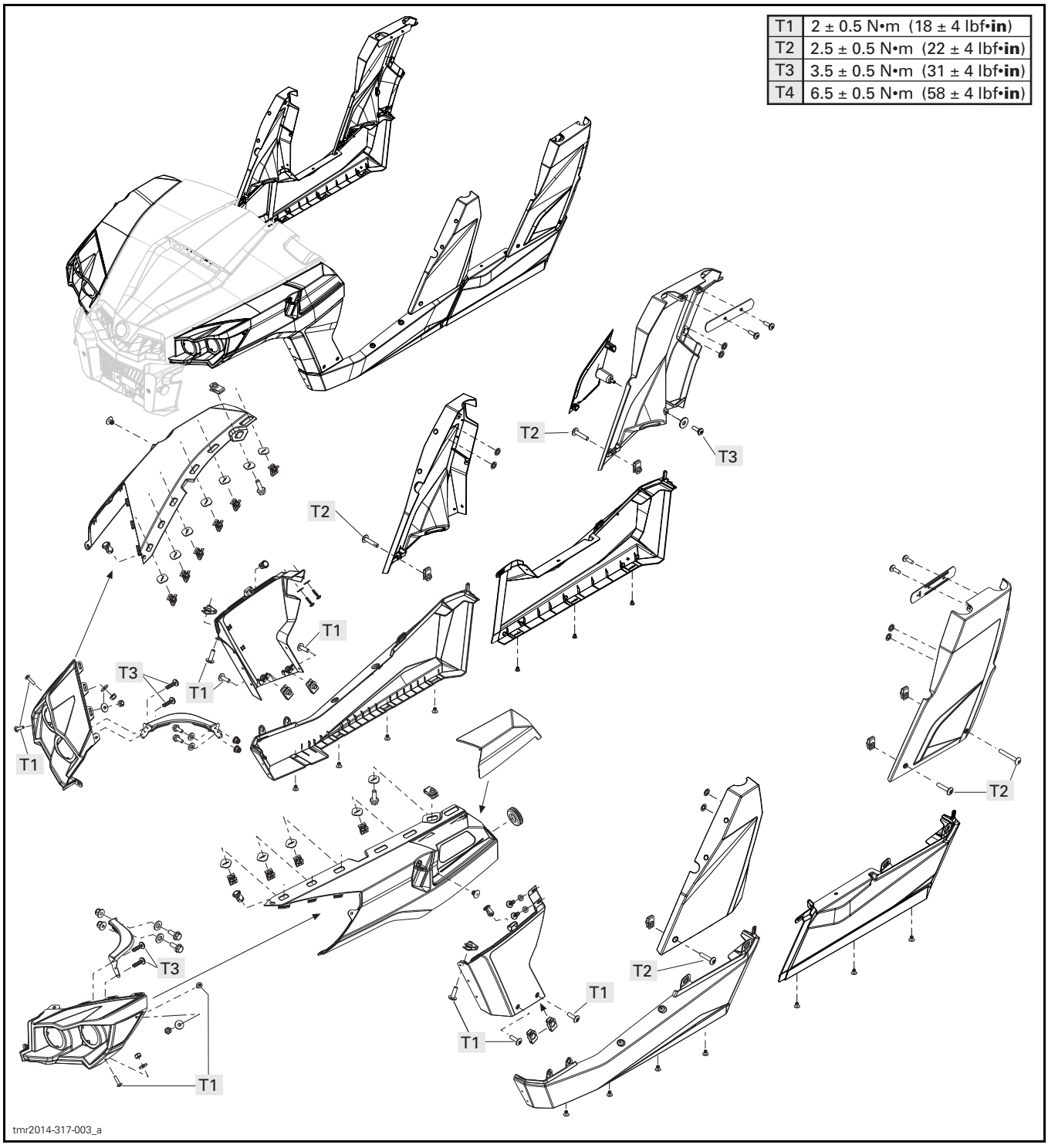

SKID PLATES AND MUD GUARDS

T1	2 ± 0.5 N•m (18 ± 4 lbf•**in**)
T2	2.5 ± 0.5 N•m (22 ± 4 lbf•**in**)
T3	3.5 ± 0.5 N•m (31 ± 4 lbf•**in**)
T4	6.5 ± 0.5 N•m (58 ± 4 lbf•**in**)

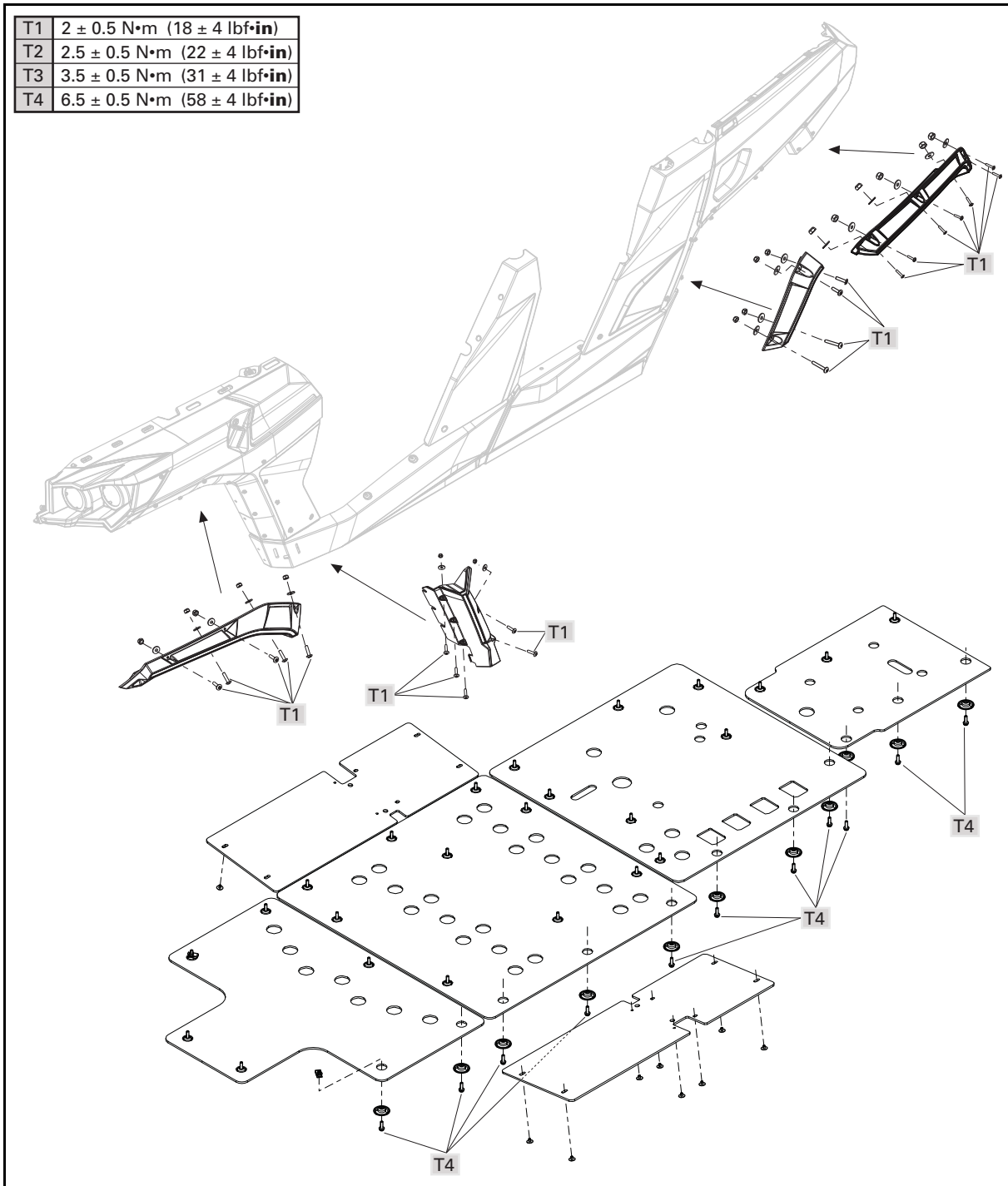

tmr2014-317-004_a

COCKPIT TRIMS – DRIVER SIDE

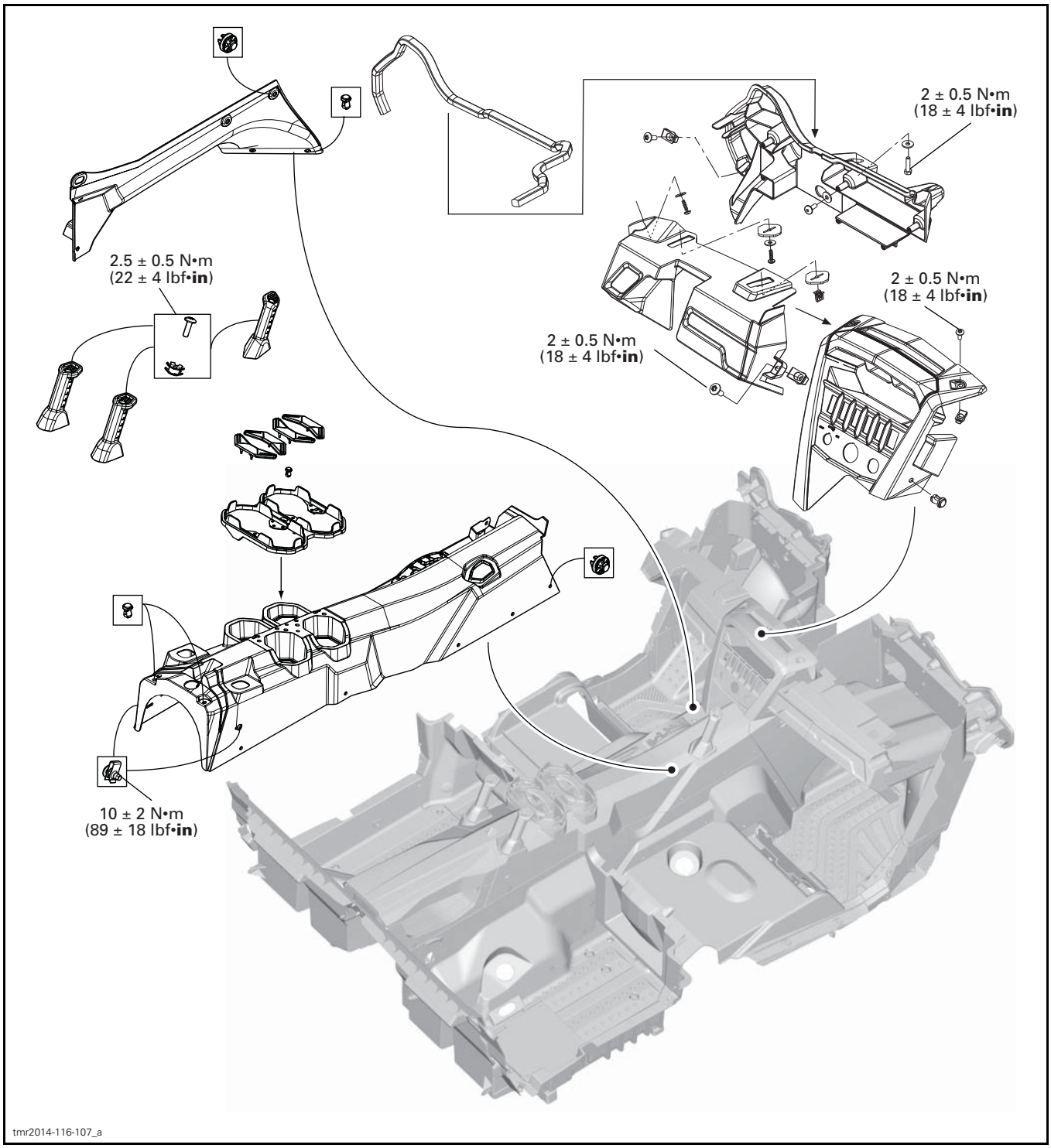

REAR COCKPIT TRIMS – DRIVER SIDE

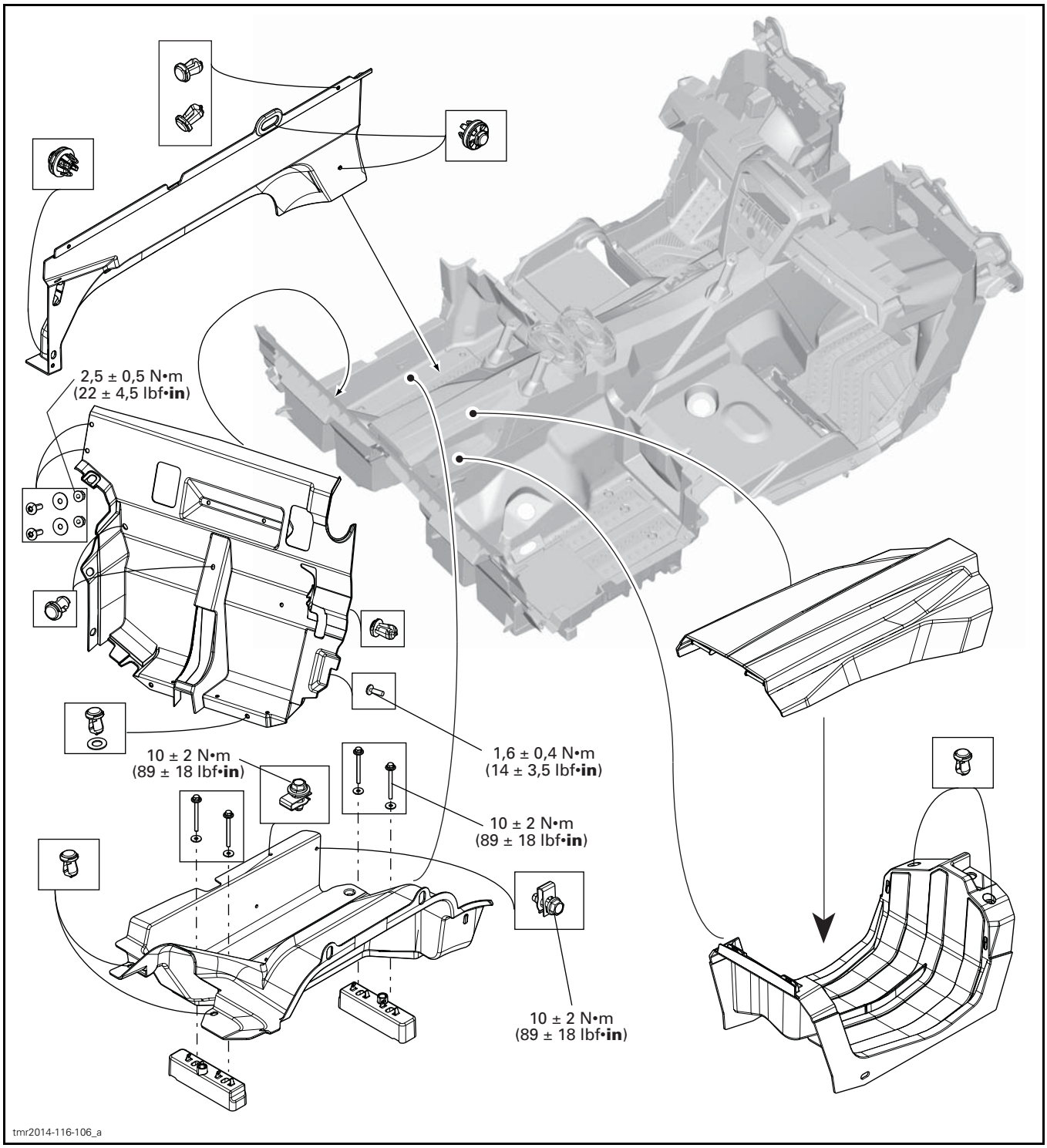

COCKPIT TRIMS – PASSENGER SIDE

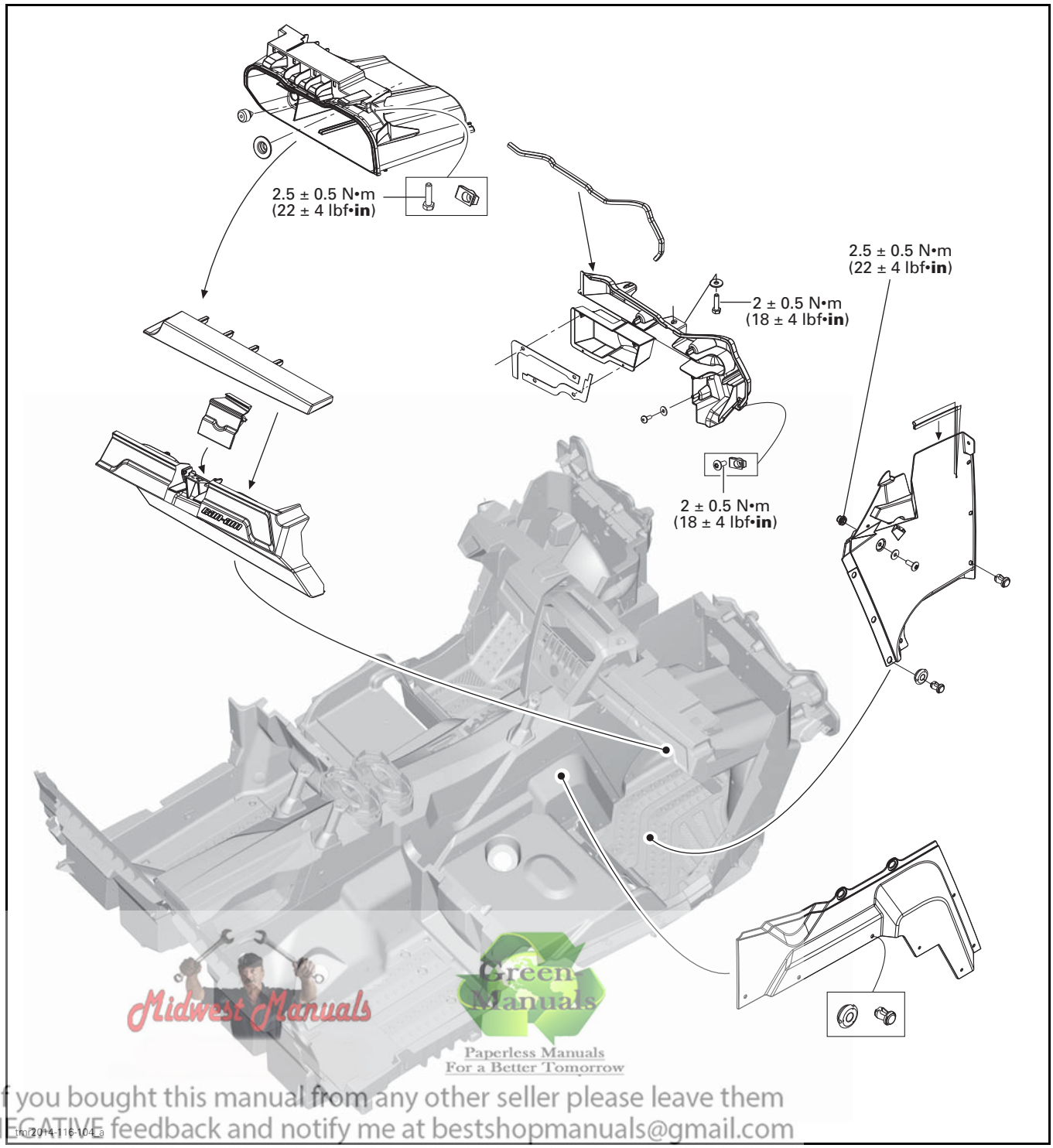

Midwest Manuals
Green Manuals
Paperless Manuals
For a Better Tomorrow
If you bought this manual from any other seller please leave them NEGATIVE feedback and notify me at bestshopmanuals@gmail.com

REAR COCKPIT TRIMS – PASSENGER SIDE

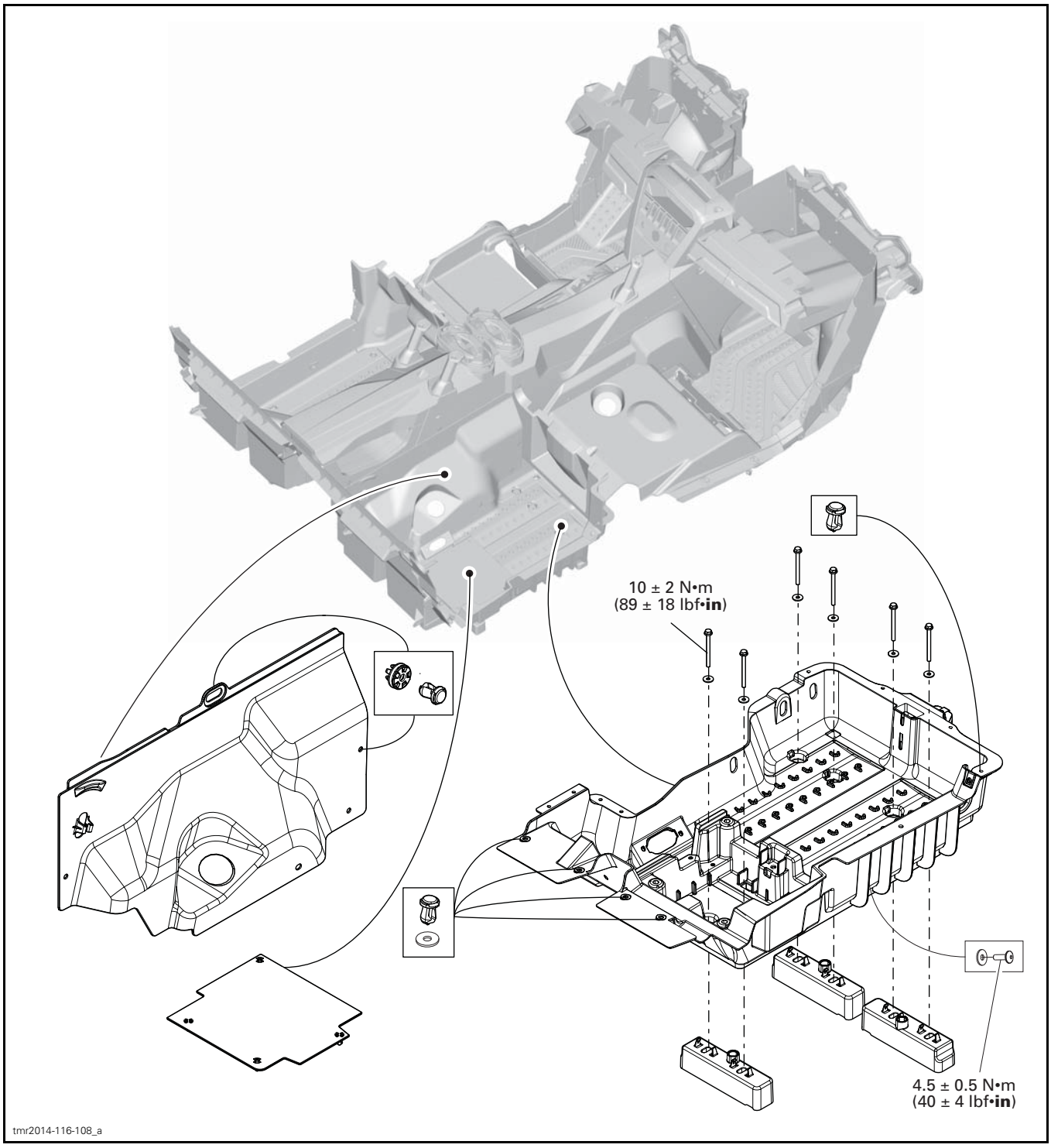

COCKPIT STRUCTURE PANELS – PASSENGER SIDE

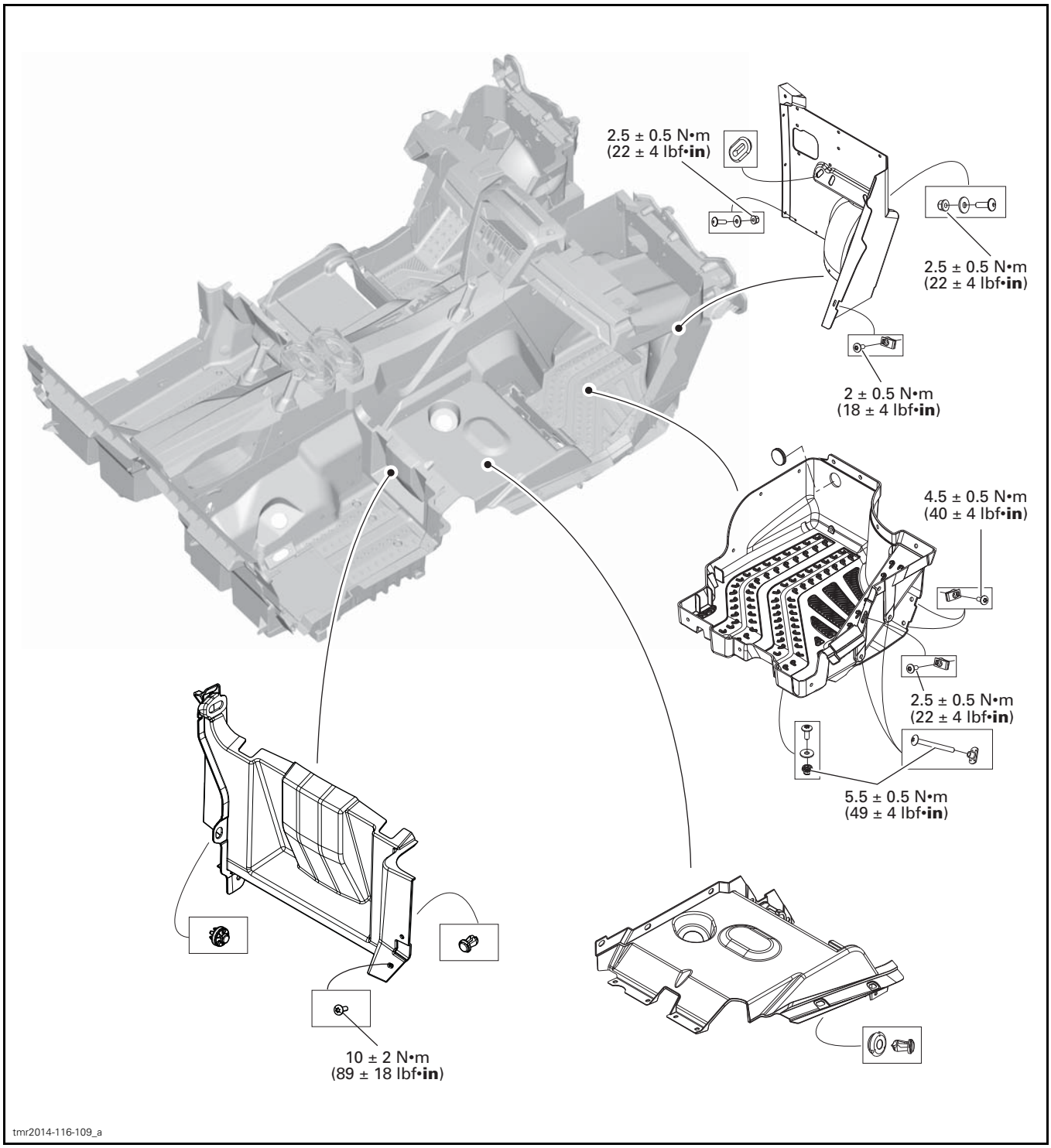

COCKPIT STRUCTURE PANELS – DRIVER SIDE

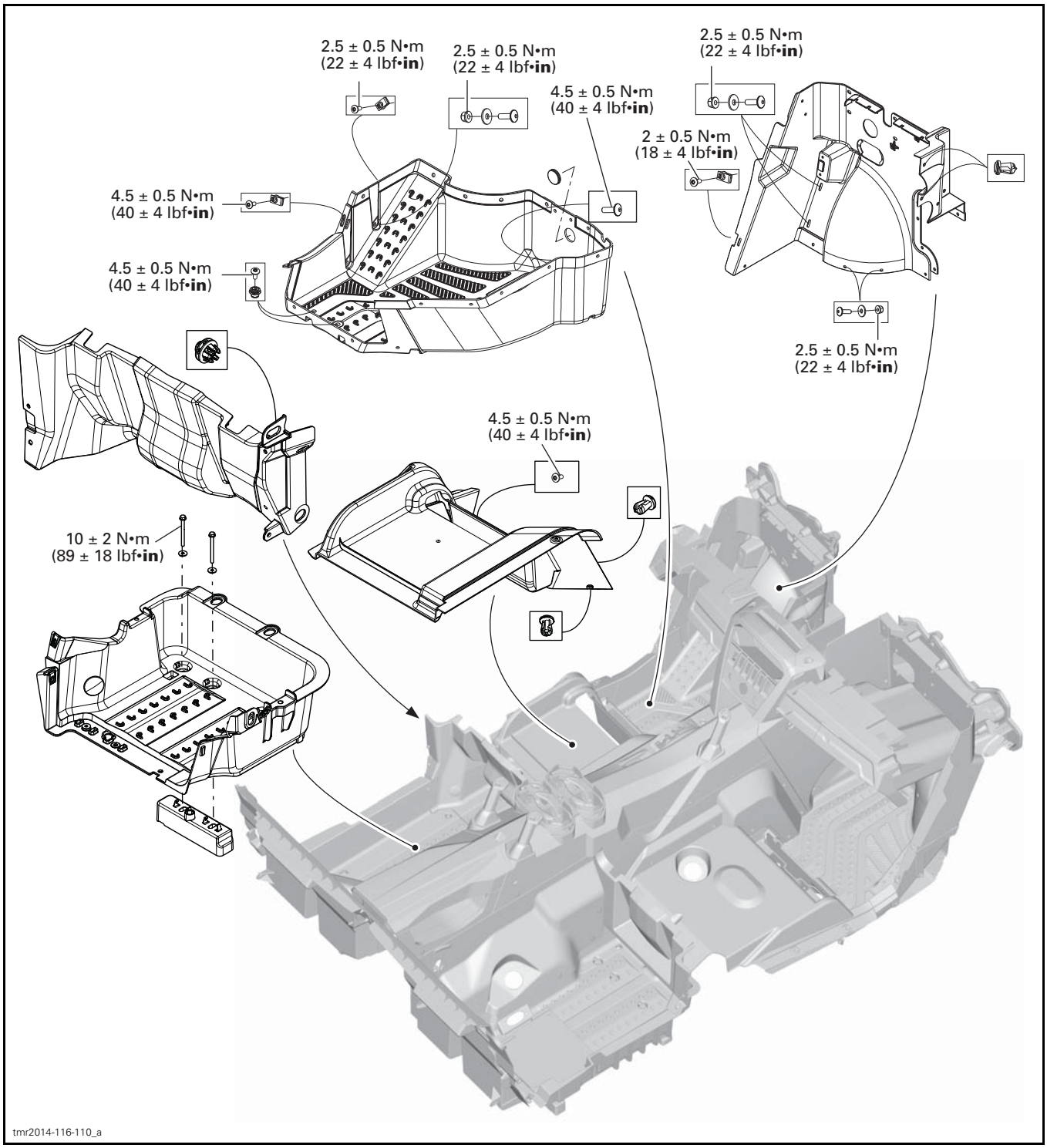

REAR SEATS

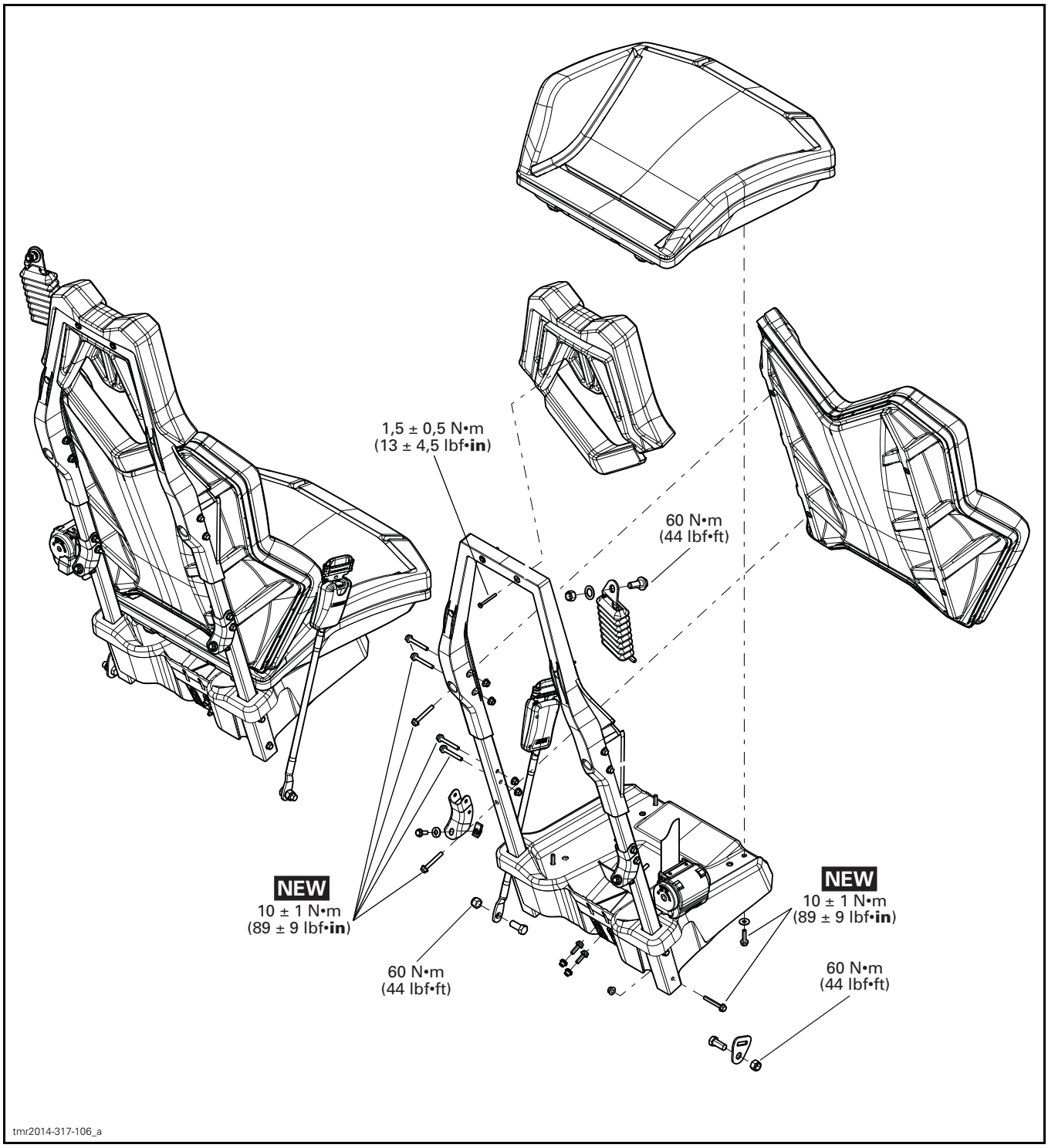
1,5 ± 0,5 N•m
(13 ± 4,5 lbf•**in**)
60 N•m
(44 lbf•ft)
NEW
10 ± 1 N•m
(89 ± 9 lbf•**in**)
60 N•m
(44 lbf•ft)
NEW
10 ± 1 N•m
(89 ± 9 lbf•**in**)
60 N•m
(44 lbf•ft)
tmr2014-317-106_a

FRONT SEATS

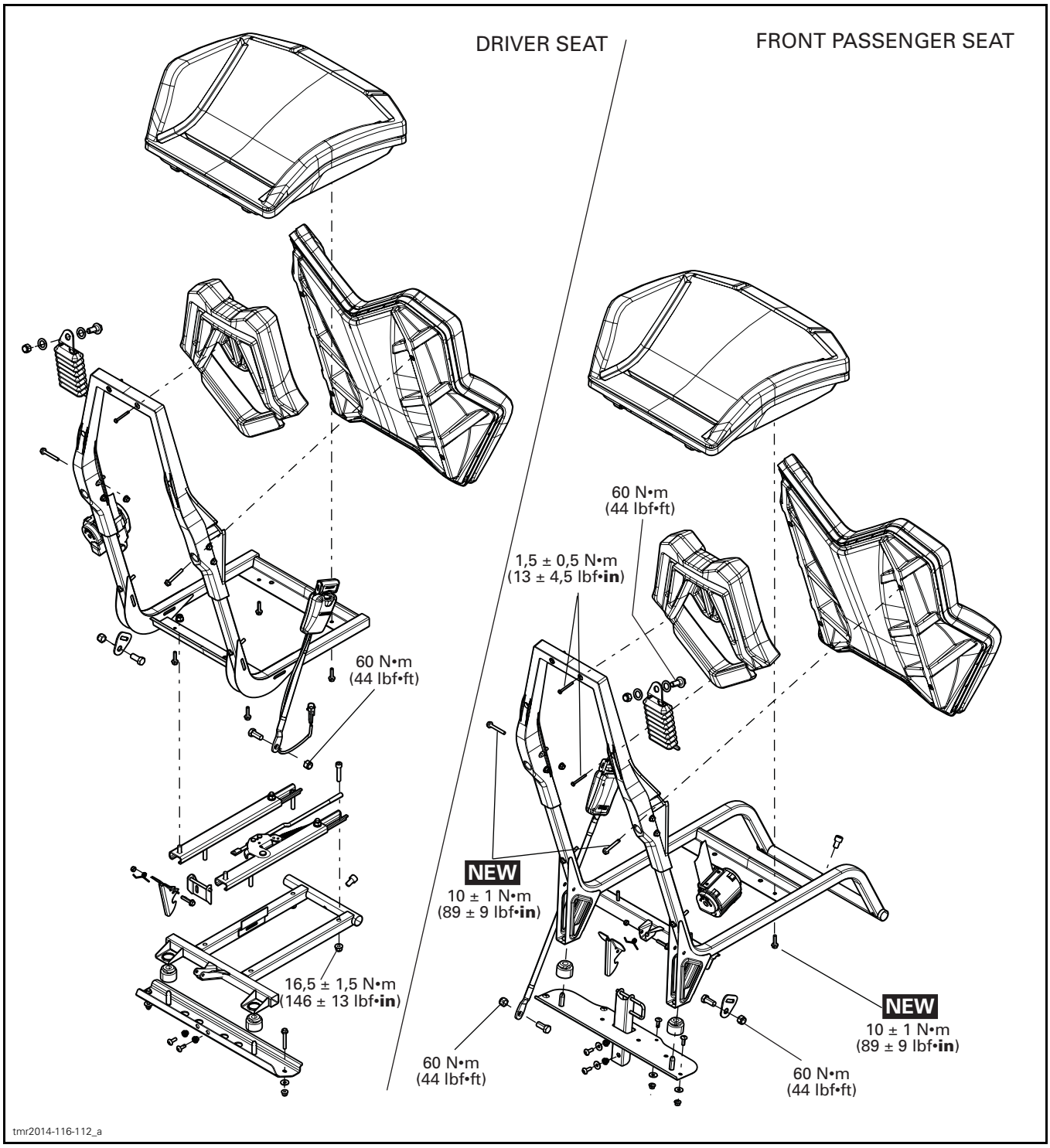
DRIVER SEAT
FRONT PASSENGER SEAT
60 N•m
(44 lbf•ft)
16,5 ± 1,5 N•m
(146 ± 13 lbf•in)
60 N•m
(44 lbf•ft)
1,5 ± 0,5 N•m
(13 ± 4,5 lbf•in)
NEW
10 ± 1 N•m
(89 ± 9 lbf•in)
60 N•m
(44 lbf•ft)
NEW
10 ± 1 N•m
(89 ± 9 lbf•in)
60 N•m
(44 lbf•ft)
tmr2014-116-112_a

PROCEDURES

PLASTIC RIVET

Plastic rivets are used in the riveting of the various body parts. Plastic rivets can be reused many times. Use the OETIKER PLIERS (P/N 295 000 070) to remove them.

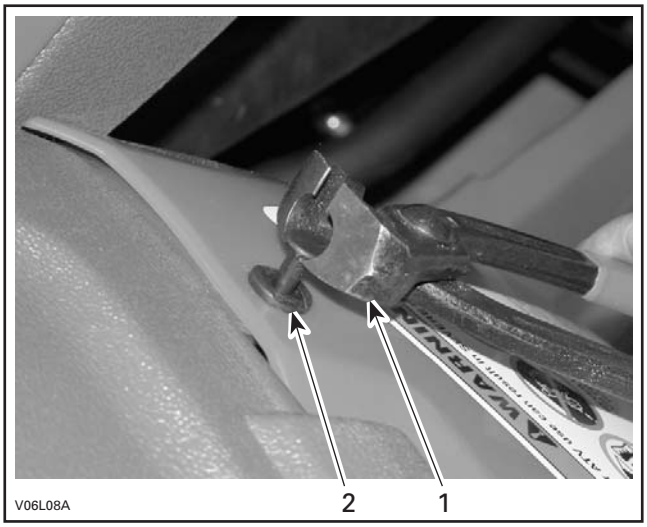

TYPICAL
1. *Pliers*
2. *Plastic rivet*

DECALS

Decal Removal

Using a heat gun warm up one end of decal for a few seconds until decal can roll off when rubbing with your finger.

Pull decal slowly and when necessary apply more heat to ease removal on the area that has to be peeled off.

If decal tears while pulling off, it has to be heated for a few seconds longer. If decal tends to stretch while pulling off, stop heating and wait a few seconds to let it cool, then peel it off.

Decal Installation

Using isopropyl alcohol, clean the surface and dry thoroughly.

Apply liquid soap to new decal and carefully position it. Using a sponge or a squeegee, remove the air bubbles and surplus water working from the center toward the edges. Allow to air dry.

NOTICE **Do not apply isopropyl alcohol or solvent directly on decals. Use these products in a well ventilated area.**

REAR PASSENGER SEATS

Rear Passenger Seat Removal

NOTE: Removal procedure is the same for both LH and RH seat. However front retaining screw locations are different depending on side of installation.

Remove rear retaining screws.

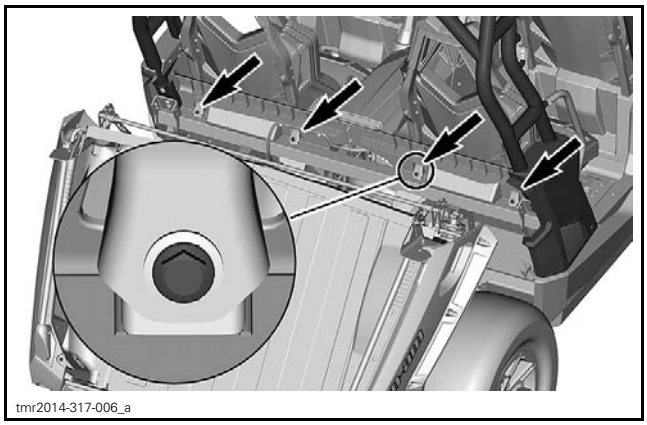

Remove front retaining screws.

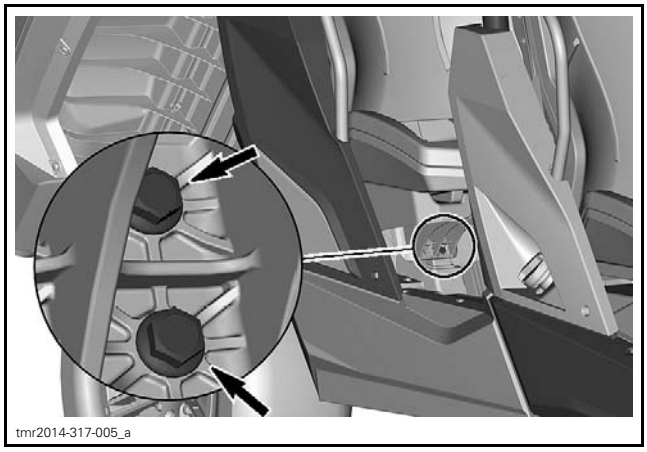

Remove rear passenger seat.

Rear Passenger Seat Installation

Installation is the reverse of the removal procedure.

UPPER CONSOLE

Upper Console Removal and Installation

1. Remove:
   - Screws
   - Plastic rivets.

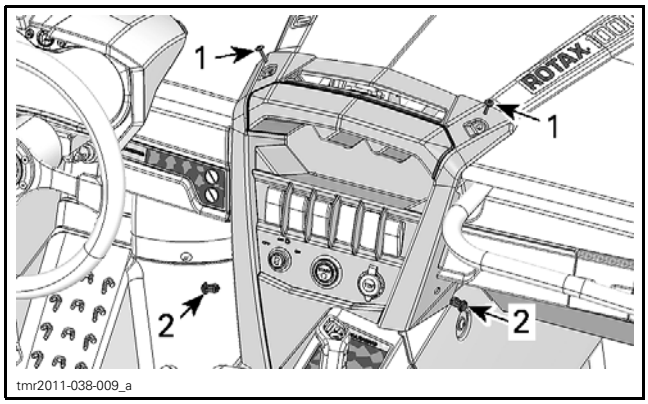

1. Top screws
2. Plastic rivets

2. Pull out the upper console and disconnect electrical connectors.
3. Remove the upper console.

The installation is the reverse of the removal procedure.

LOWER CONSOLE

Lower Console Removal and Installation

1. Remove seats.
2. Remove screws and plastic rivets securing the upper console and place it on the hood.
3. Remove LH and rear passenger handhold screw.

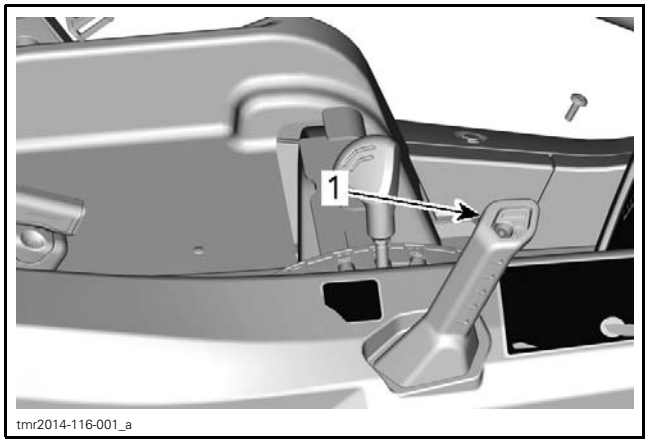

1. LH passenger handhold

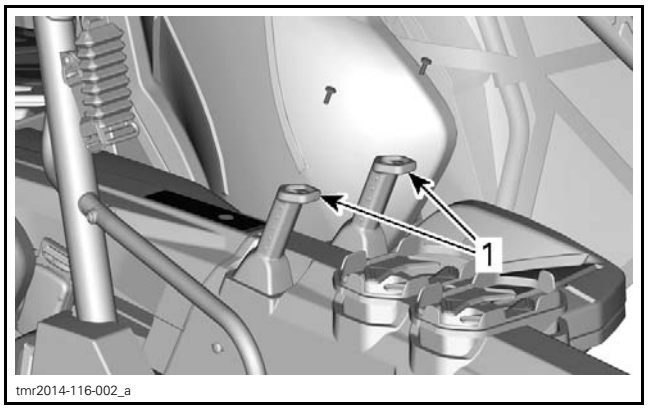

1. Rear passenger hand holds

4. Remove the front screw of the shift lever indicator.

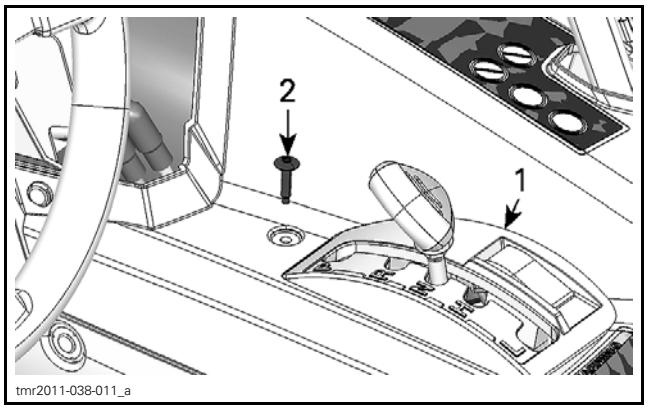

1. Shift lever indicator
2. Front retaining screw

5. Unlatch rear lower console cover
6. Remove rivets securing rear lower console.

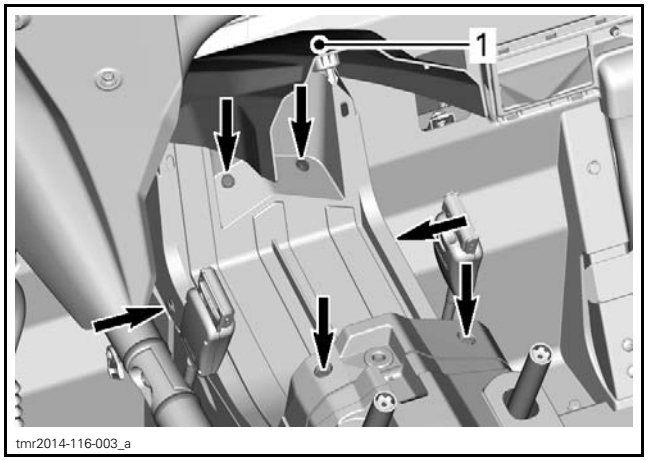

RIVETS TO REMOVE
1. Rear lower console cover

7. Remove all plastic rivets and retaining screws securing the lower console.

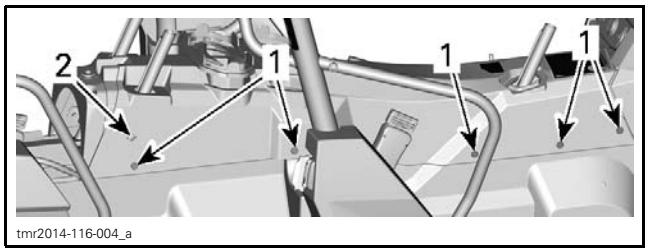

RH SIDE
1. *Plastic rivets*
2. *Retaining screw*

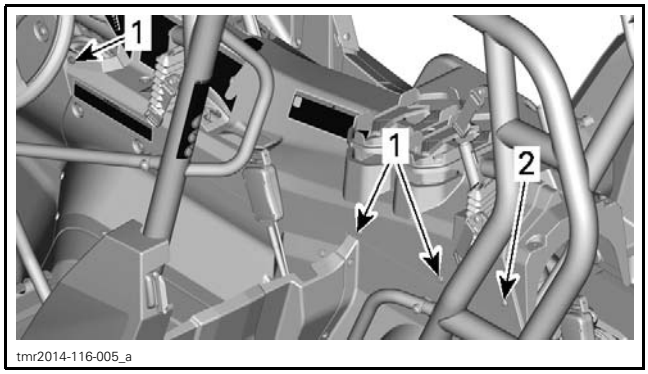

LH SIDE
1. *Plastic rivets*
2. *Retaining screw*

8. Remove the lower console.

The installation is the reverse of the removal procedure.

LATERAL CONSOLE PANELS

Front Lateral Console Panels Removal and Installation

1. Remove seat.
2. Remove plastic rivets securing the lateral console panel.
3. Remove the lateral console panel.

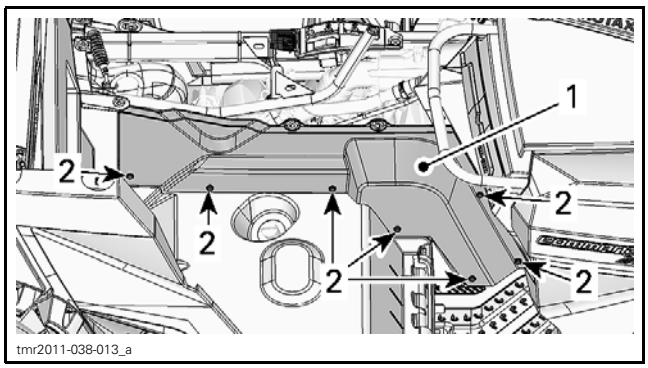

TYPICAL
1. *RH lateral console panel*
2. *Plastic rivets*

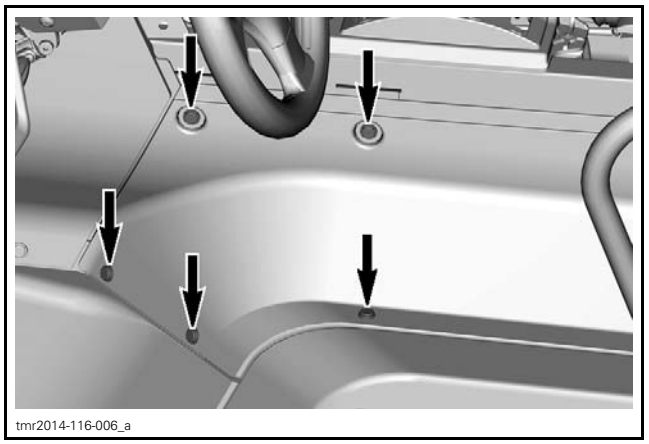

RIVETS AT THE FRONT OF LH LATERAL PANEL - TO REMOVE

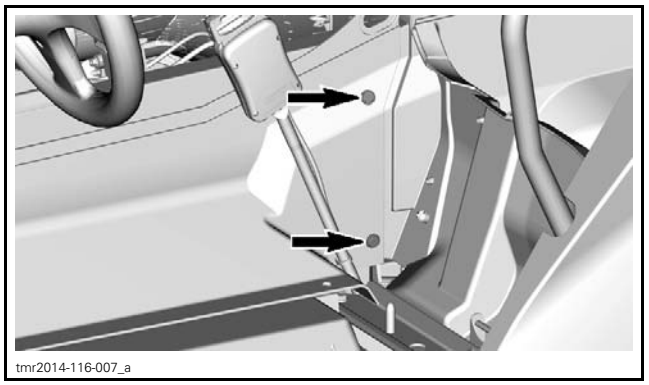

RIVETS AT THE REAR OF LH LATERAL PANEL - TO REMOVE

The installation of the lateral console panels is the reverse of the removal procedure.

Rear Lateral Console Panels Removal and Installation

1. Remove seat.
2. Remove plastic rivets securing the lateral console panel.
3. Remove the lateral console panel.

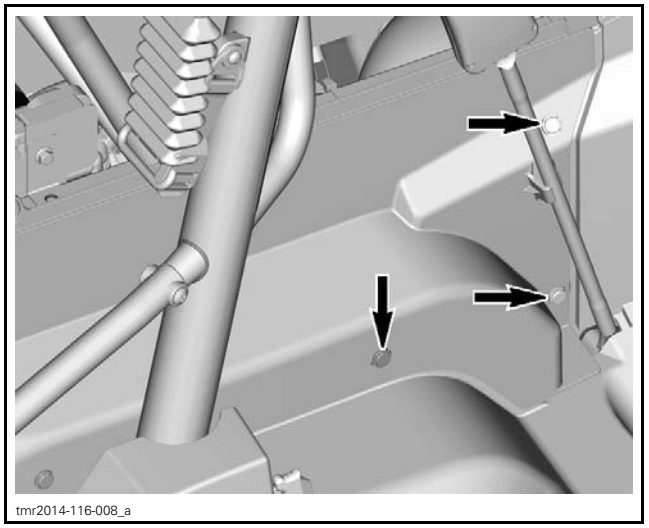

REAR LH SIDE - RIVETS TO REMOVE

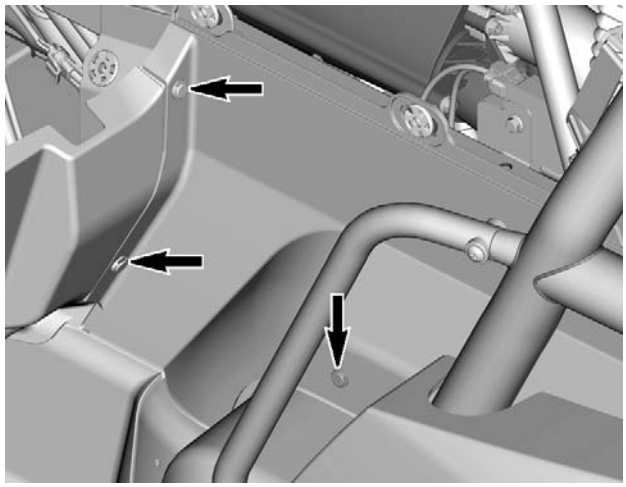
tmr2014-116-009_a

FRONT LH SIDE - RIVETS TO REMOVE

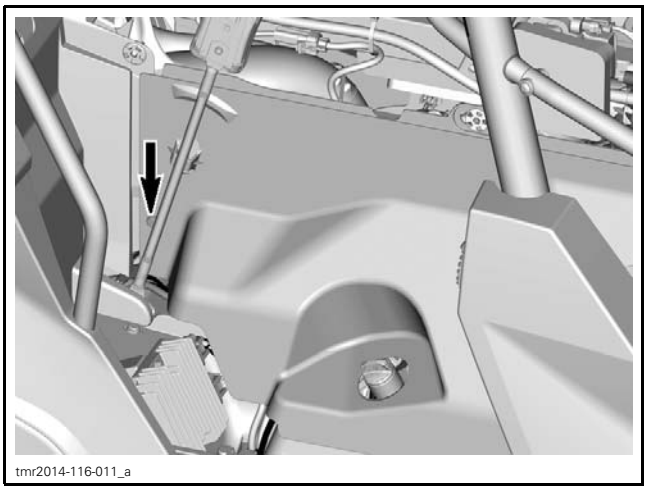
tmr2014-116-011_a

REAR RH SIDE - RIVETS TO REMOVE

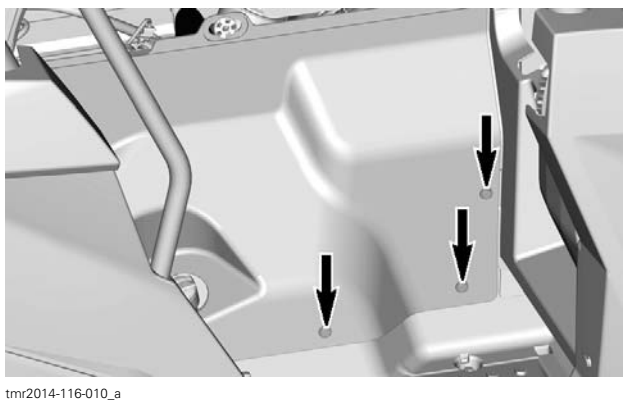
tmr2014-116-010_a

FRONT RH SIDE - RIVETS TO REMOVE

The installation of the lateral console panels is the reverse of the removal procedure.

GLOVE BOX

1. Remove the glove box trim.

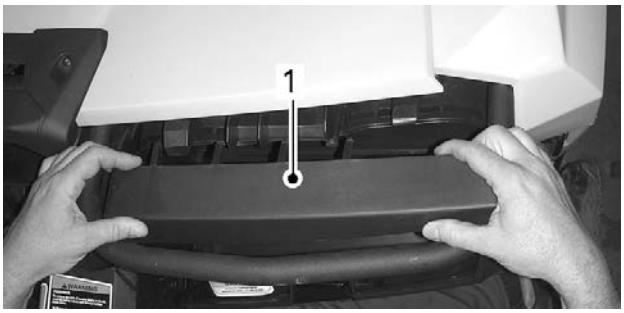

tmr2011-038-020_a

1. Glove box trim

2. Remove glove box retaining screws.



tmr2011-038-021_a

1. Glove box retaining screws

3. Pull glove box to remove it.

The installation of the glove box is the reverse of the removal procedure.

FUEL TANK COWL

Fuel Tank Cowl Removal and Installation

Remove RH lateral console panel.

Remove rivets securing fuel tank cowl.

Remove fuel tank cowl.

The installation of the fuel tank cowl is the reverse of the removal.

SEAT COVER

Seat Cover Removal

Remove plastic clips securing seat cover to seat.

Remove seat cover from seat.

Seat Cover Installation

Install seat cover onto seat.

Apply pressure to padded areas for a close fit.

Insert plastic clips to secure seat cover onto seat.

CARGO BOX

CARGO BOX TRIMS

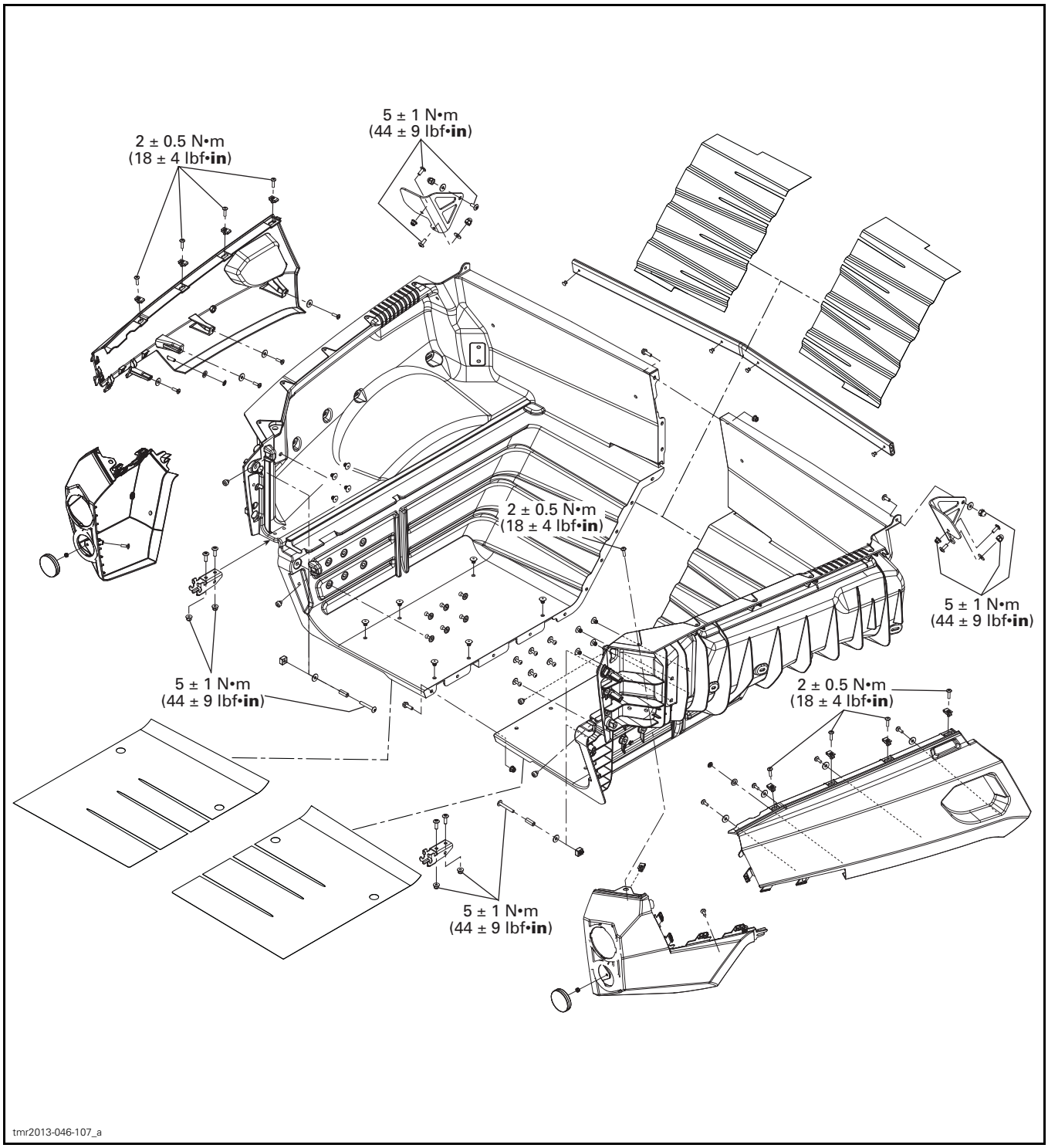

CARGO BOX TILT RELEASE MECHANISM

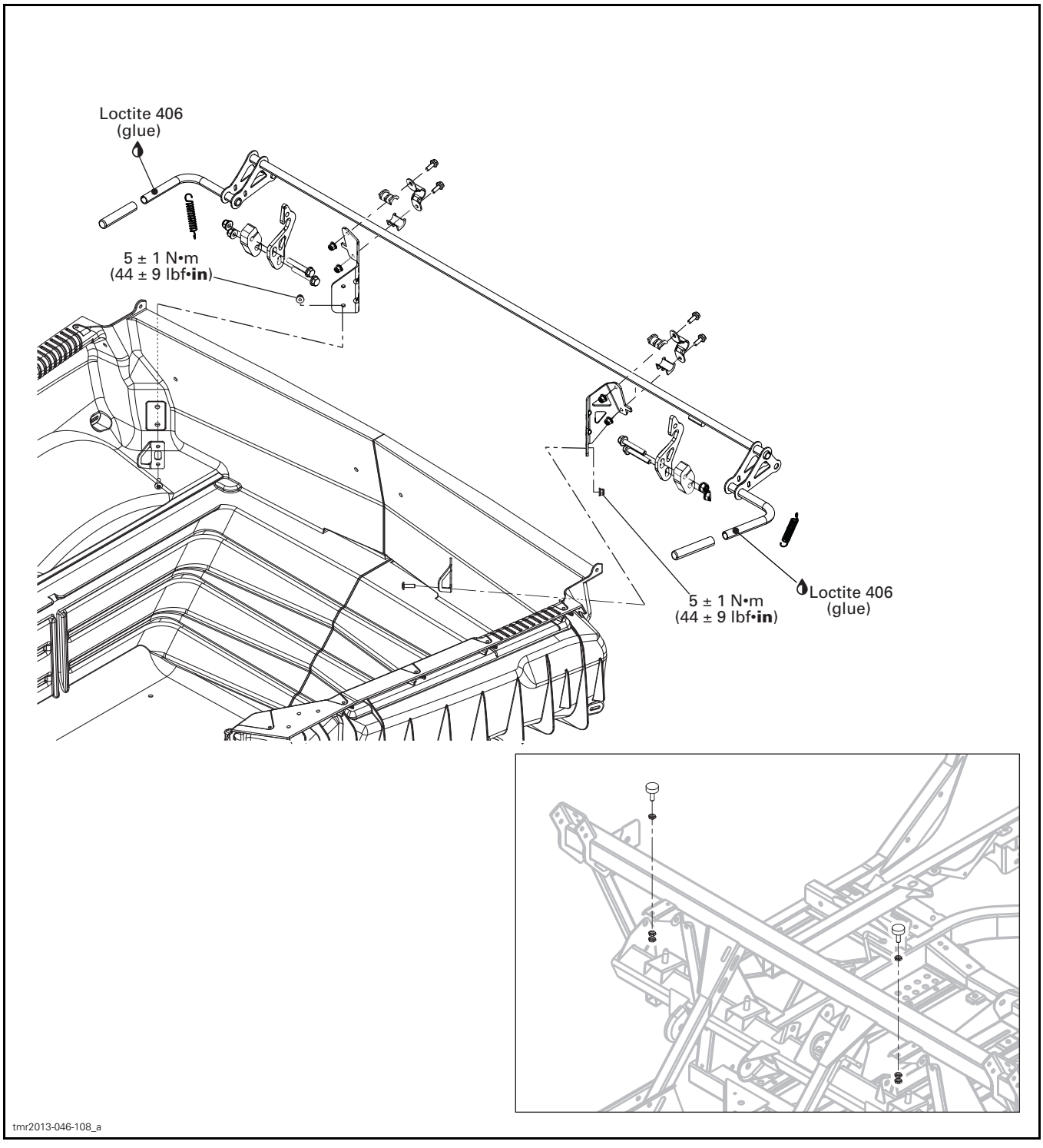

CARGO BOX SUPPORT

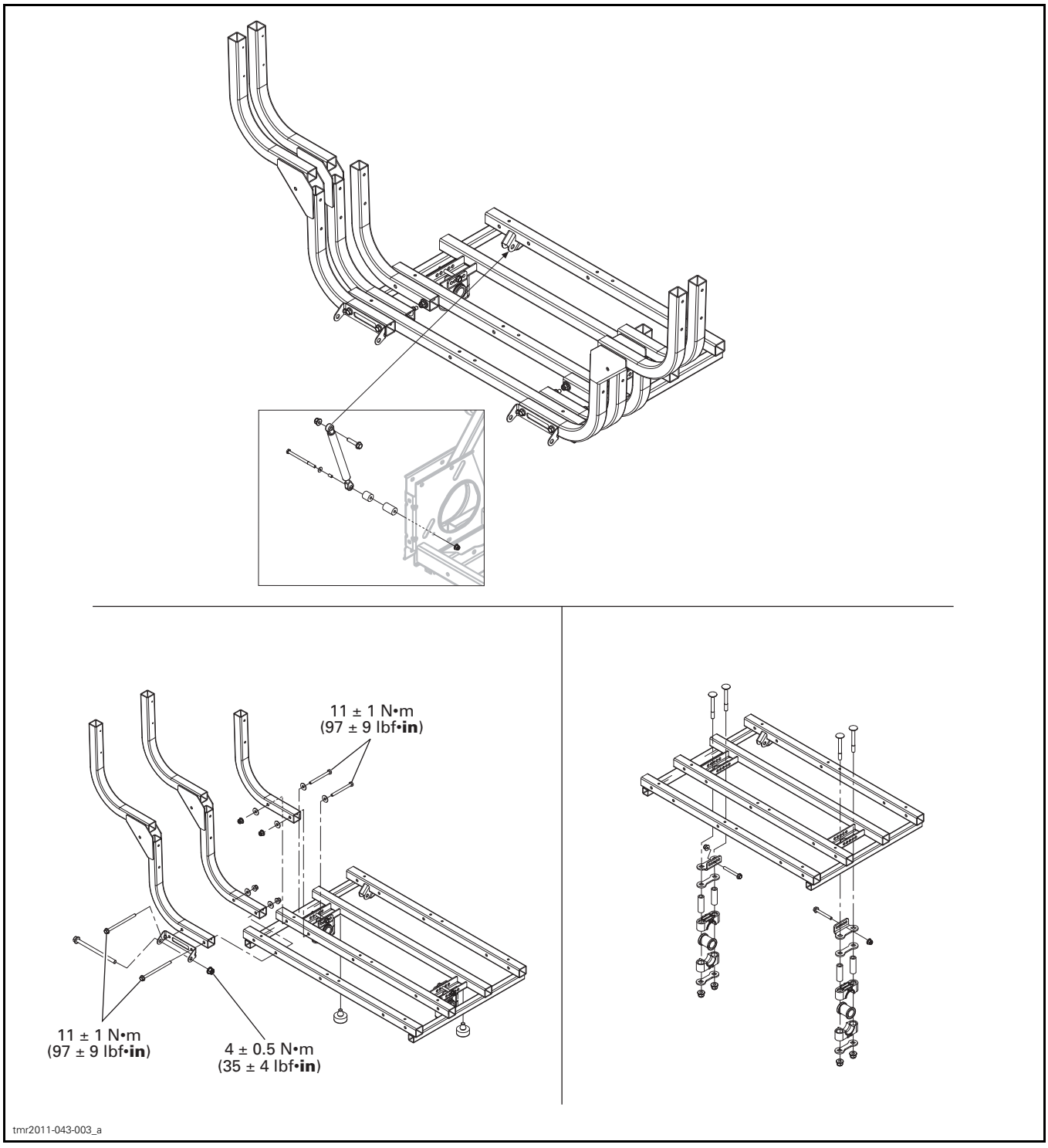

UPPER TAIL GATE

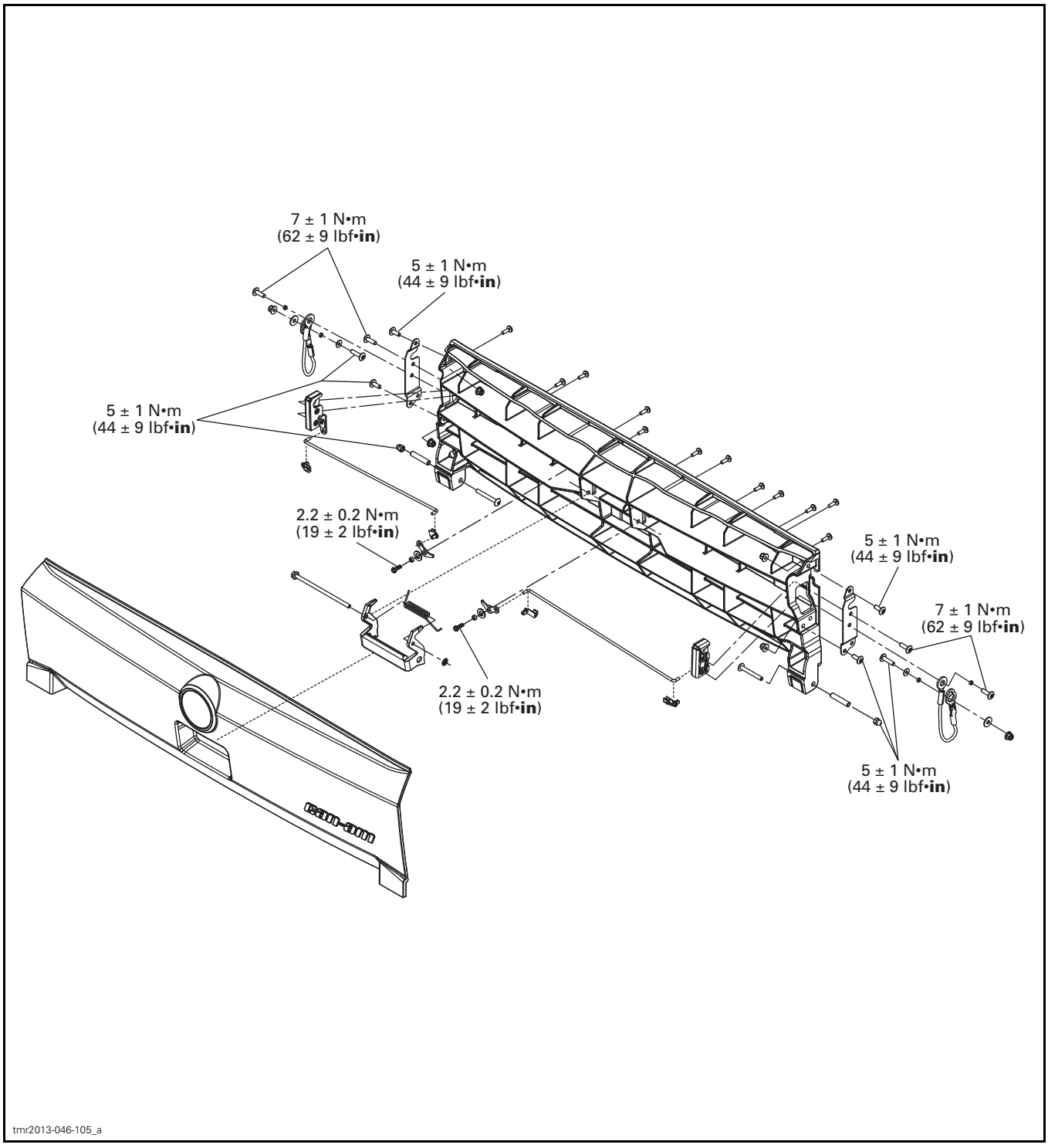

LOWER TAIL GATE

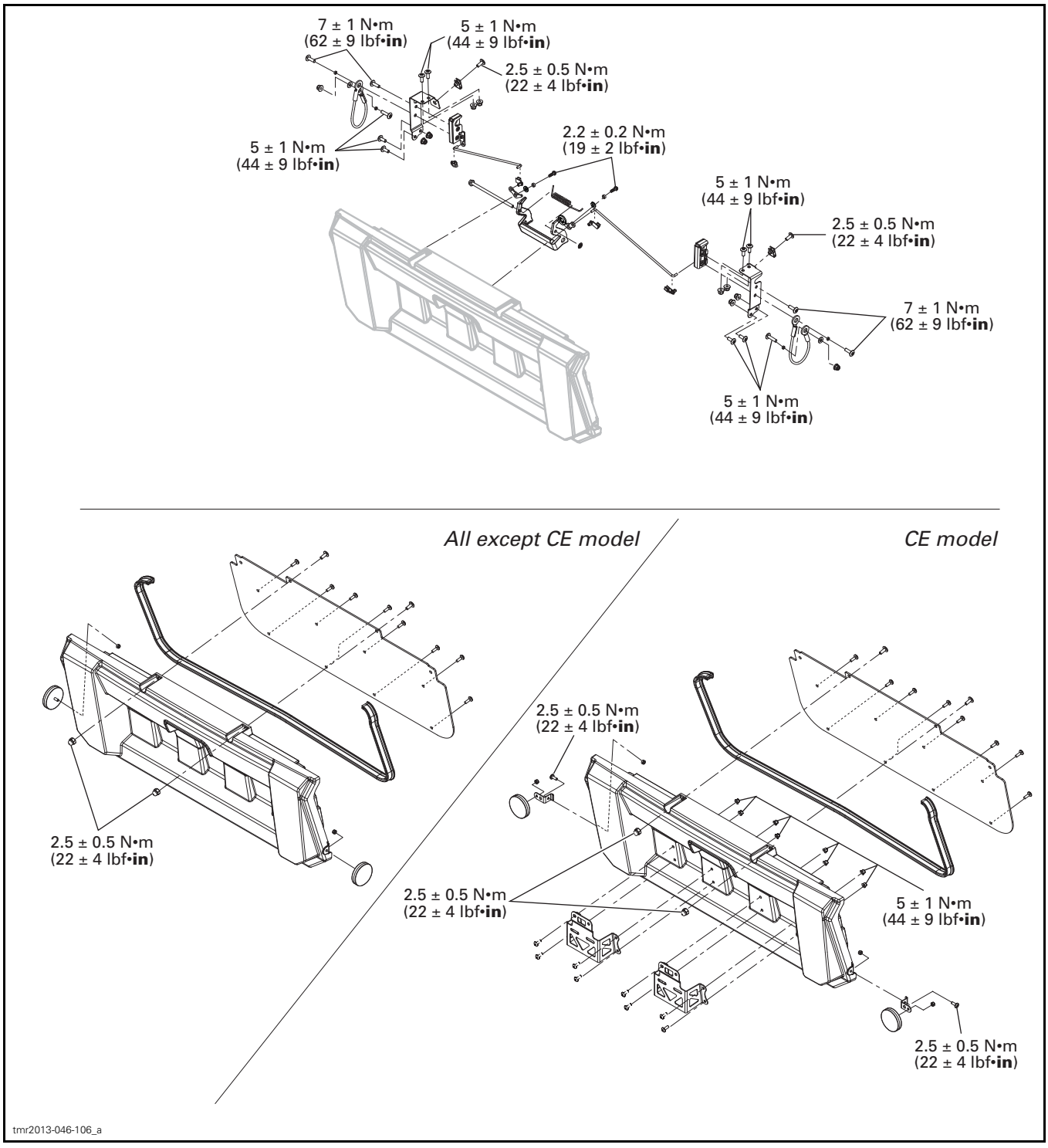

CARGO BOX ACCESSORIES

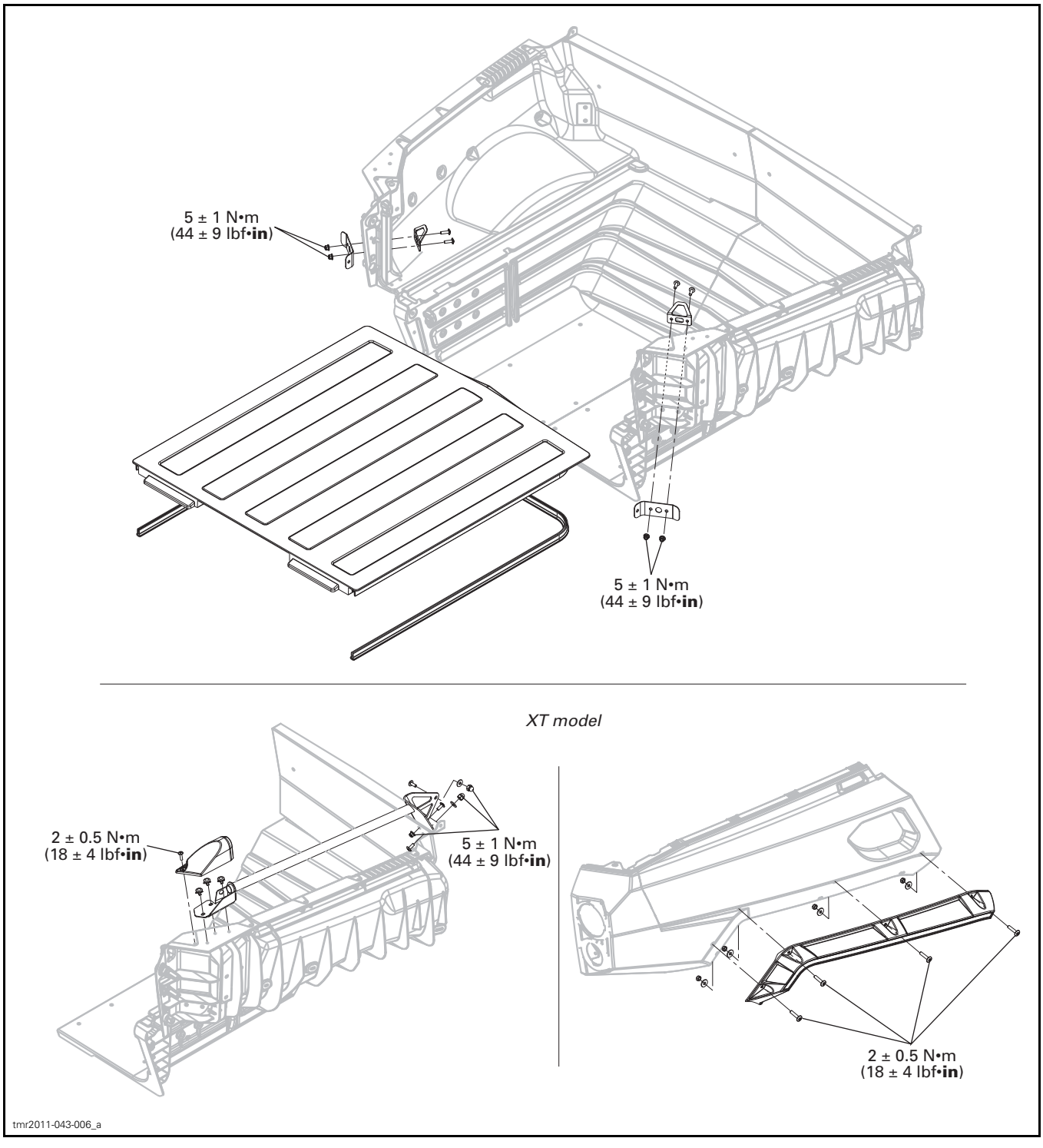

ADJUSTMENT

CARGO BOX ADJUSTMENTS

Cargo Box Alignment

The cargo box is properly aligned when:

– The gap between the cargo box and rear lateral panel is equalled on each side (± 19 mm (3/4 in)).

– Cargo box side and rear lateral panel are flushed. The top of cargo box side may be raised for a maximum of 6 mm (15/64 in) over the top of rear lateral panel.

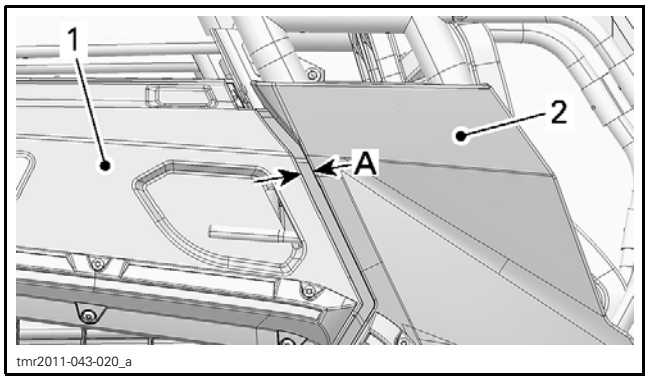

GAP BETWEEN CARGO BOX AND REAR LATERAL PANEL
1. *Cargo box side*
2. *Rear lateral panel*

A. Approximately 19 mm (3/4 in)

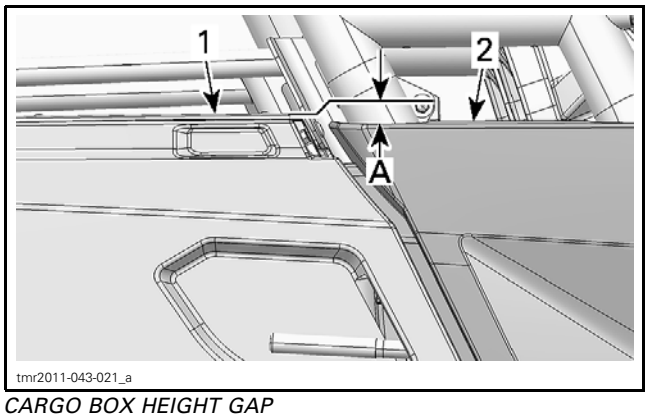

CARGO BOX HEIGHT GAP
1. *Top of cargo box side*
2. *Top of rear lateral panel*

A. Maximum of 6 mm (15/64 in)

If an adjustment is required, proceed as follows:

1. Loosen cargo box pivot point nuts.
2. Remove adjuster bolts securing the cargo box to cargo box support adjuster.

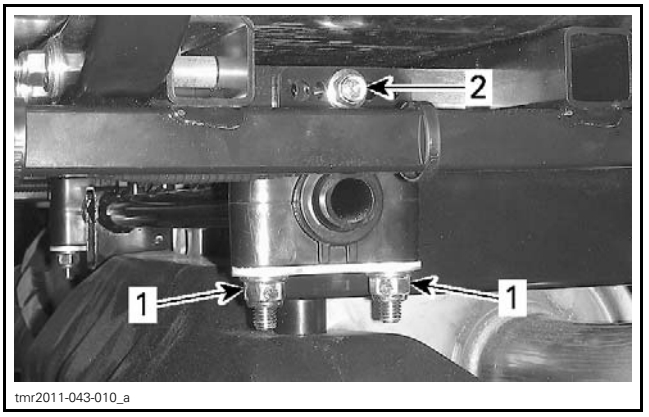

TYPICAL – RH SIDE SHOWN
1. *Cargo box pivot point nuts*
2. *Adjuster bolt*

3. Position cargo box to align it as described above.
4. Reinstall adjuster bolts in corresponding holes.

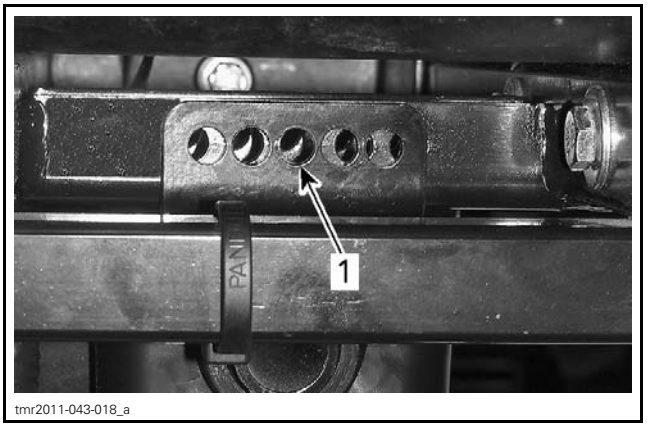

1. *Corresponding holes*

5. Tighten nuts and bolts.

TIGHTENING TORQUE	
Adjuster bolts	10 N•m ± 2 N•m (89 lbf•**in** ± 18 lbf•**in**)
Cargo box pivot point nuts	24.5 N•m ± 3.5 N•m (18 lbf•ft ± 3 lbf•ft)

6. Verify the cargo box retainer height.

Cargo Box Retainer Height Adjustment

1. Open cargo box.
2. Loosen rubber bumpers.

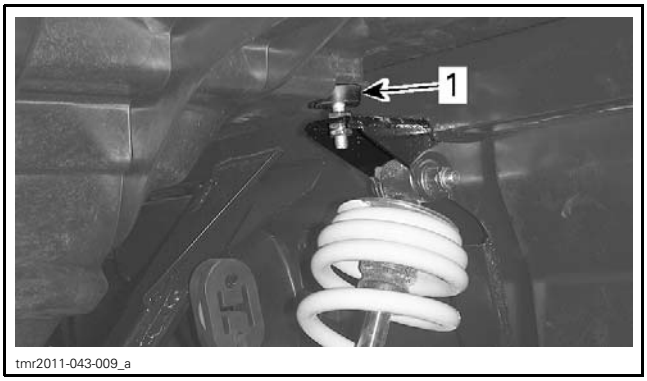

RH SIDE SHOWN
1. *Rubber bumper*

3. Close the cargo box and check the gap between cargo box retainer and the end of the latch lever.
   3.1 Break torque from cargo box retainer bolts.

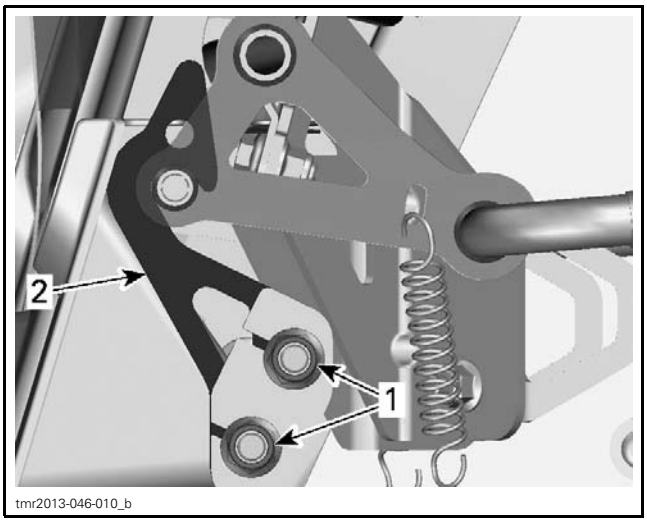

TYPICAL – RH SIDE SHOWN
1. *Cargo box retainer nuts*
2. *Cargo box retainer*

   3.2 Using a small hammer, reposition the cargo box retainer. Temporarily retighten bolts.
   3.3 Close the cargo box and check the cargo box retainer gap.

NOTE: No vertical gap is permitted between cargo box retainer and the end of the latch lever.

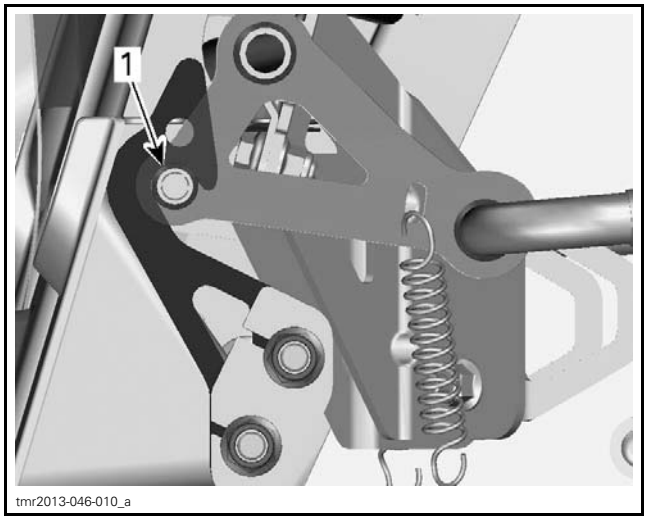

1. *No gap here*

4. Check the tilt release handle stroke.
   4.1 Determine a reference point on the body.
   4.2 With the cargo box unlatch, measure the distance between the handle and your reference point.
   4.3 Latch the cargo box and repeat the measurement using same reference points (handle and body).
   4.4 The difference between measurements should be approximately 2 mm (.079 in).

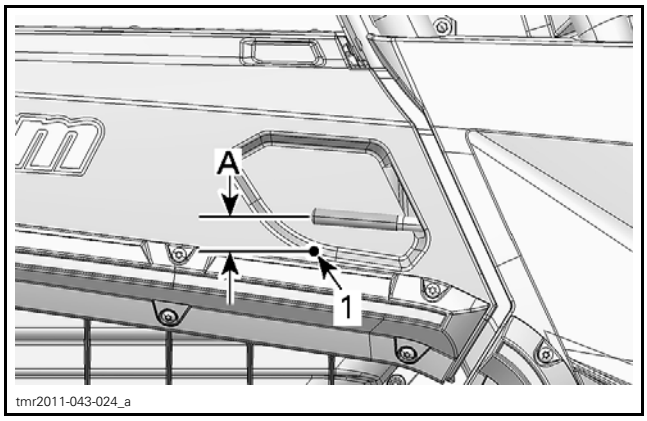

1. *Reference point*

A. *Difference: approximately 2 mm (.079 in)*

5. Repeat steps 3 and 4 until cargo box is properly adjusted.
6. Retighten all cargo box retainer bolts.

TIGHTENING TORQUE	
Cargo box retainer bolts	24.5 N•m ± 3.5 N•m (18 lbf•ft ± 3 lbf•ft)

7. Reposition the rubber bumper against the cargo box without any pressure.

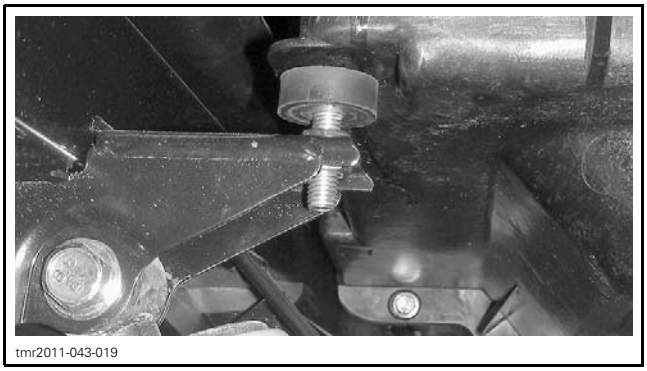
tmr2011-043-019

PROCEDURES

CARGO BOX GAS SHOCK

Cargo Box Gas Shock Replacement

1. Unlock and raise the cargo box.
2. Secure the cargo box with wooden blocks (or an equivalent).
3. Remove the upper and lower gas shock bolts.
4. Remove gas shock from vehicle and install the new one.
5. Remove supports and lower the cargo box.

CARGO BOX

Cargo Box Removal

1. Unlock and raise the cargo box.
2. Unplug the cargo box harness connector.

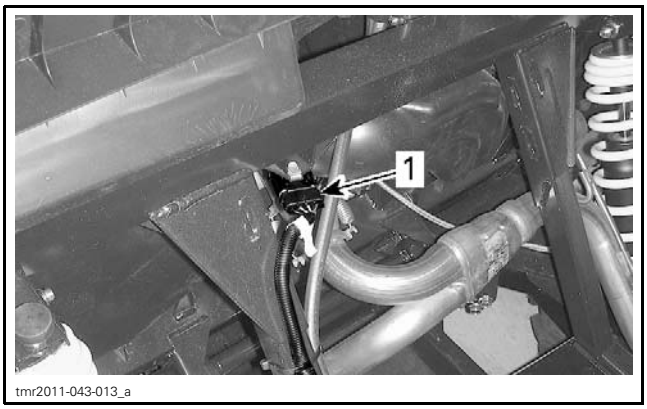

tmr2011-043-013_a

1. Cargo box harness connector

3. From the LH of vehicle, cut all locking ties securing harness to frame.
4. Secure the cargo box with wooden blocks (or an equivalent) and remove the upper gas shock bolt.
5. Remove supports and lower the cargo box.
6. From underneath of cargo box, remove nuts, support plates and halve housings.

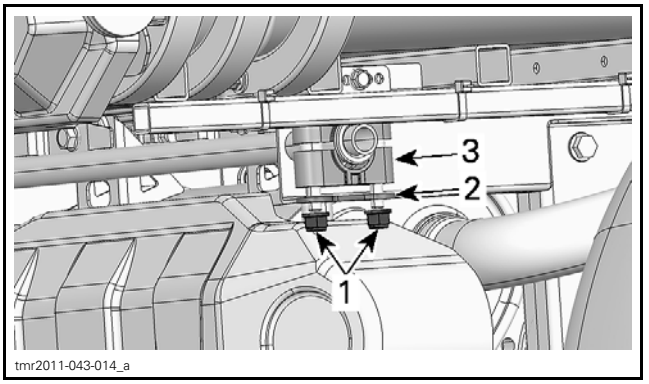

tmr2011-043-014_a

RH SIDE SHOWN
1. Nuts
2. Support plate
3. Half housing

7. Unlock the cargo box.
8. Using a hoist or with the help of another person, remove the cargo box.

⚠ CAUTION To avoid injury or vehicle damages, never handle the cargo box alone.

Cargo Box Installation

The installation is the reverse of the removal procedure. However, pay attention to the following.

If any parts of the locking mechanism have been replaced or loosen, check cargo box adjustments. Refer to *CARGO BOX ADJUSTMENTS*.

FRAME (2UP)

SERVICE TOOLS – OTHER SUPPLIER

Description	Part Number	Page
BLIND THREADED INSERT INSTALLER	model 9600	5

SERVICE PRODUCTS

Description	Part Number	Page
LOCTITE 243 (BLUE)	293 800 060	4

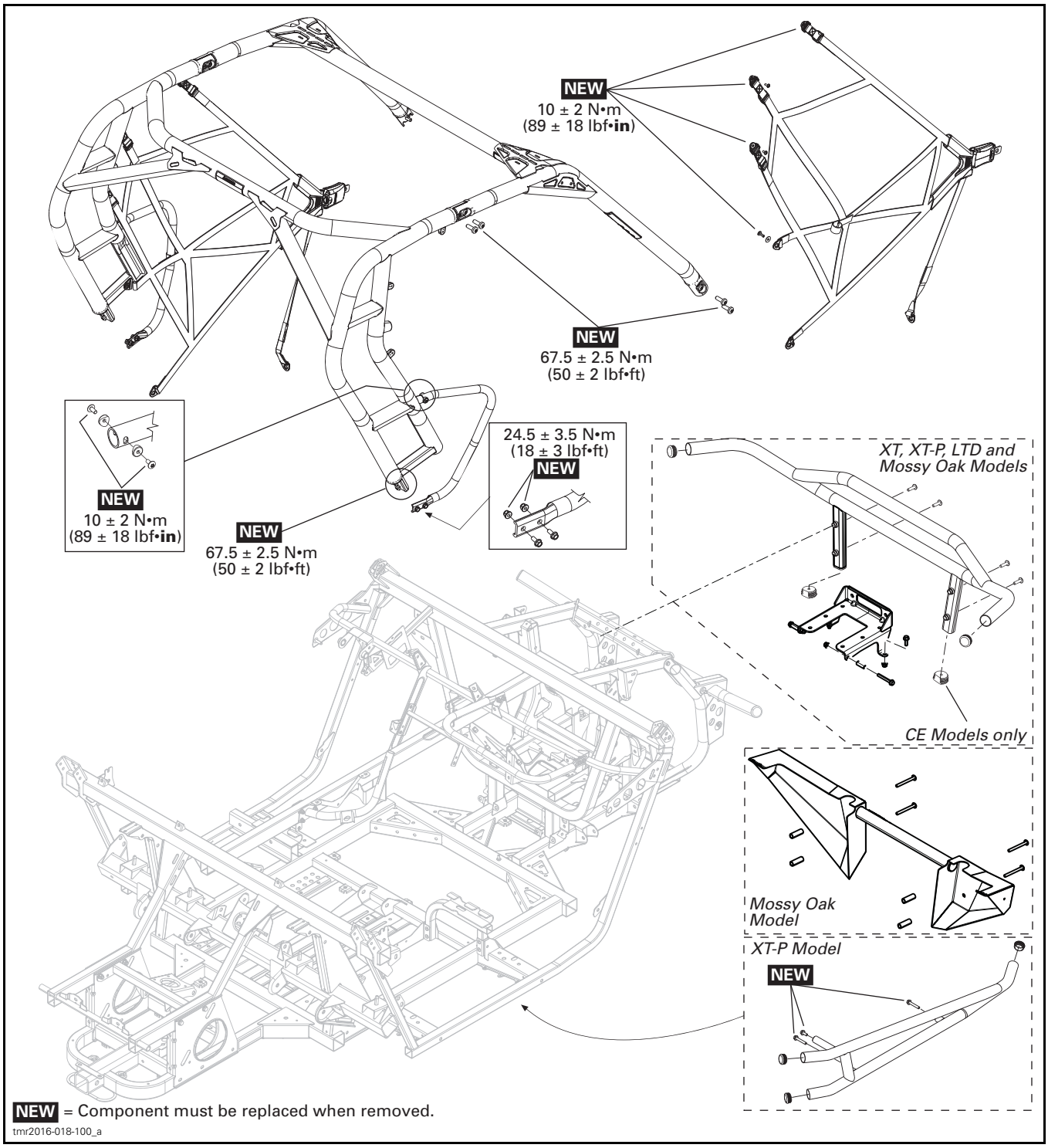
NEW
10 ± 2 N•m
(89 ± 18 lbf•in)
NEW
67.5 ± 2.5 N•m
(50 ± 2 lbf•ft)
NEW
10 ± 2 N•m
(89 ± 18 lbf•in)
NEW
67.5 ± 2.5 N•m
(50 ± 2 lbf•ft)
24.5 ± 3.5 N•m
(18 ± 3 lbf•ft)
NEW
XT, XT-P, LTD and
Mossy Oak Models
CE Models only
Mossy Oak
Model
XT-P Model
NEW
NEW = Component must be replaced when removed.
tmr2016-018-100_a

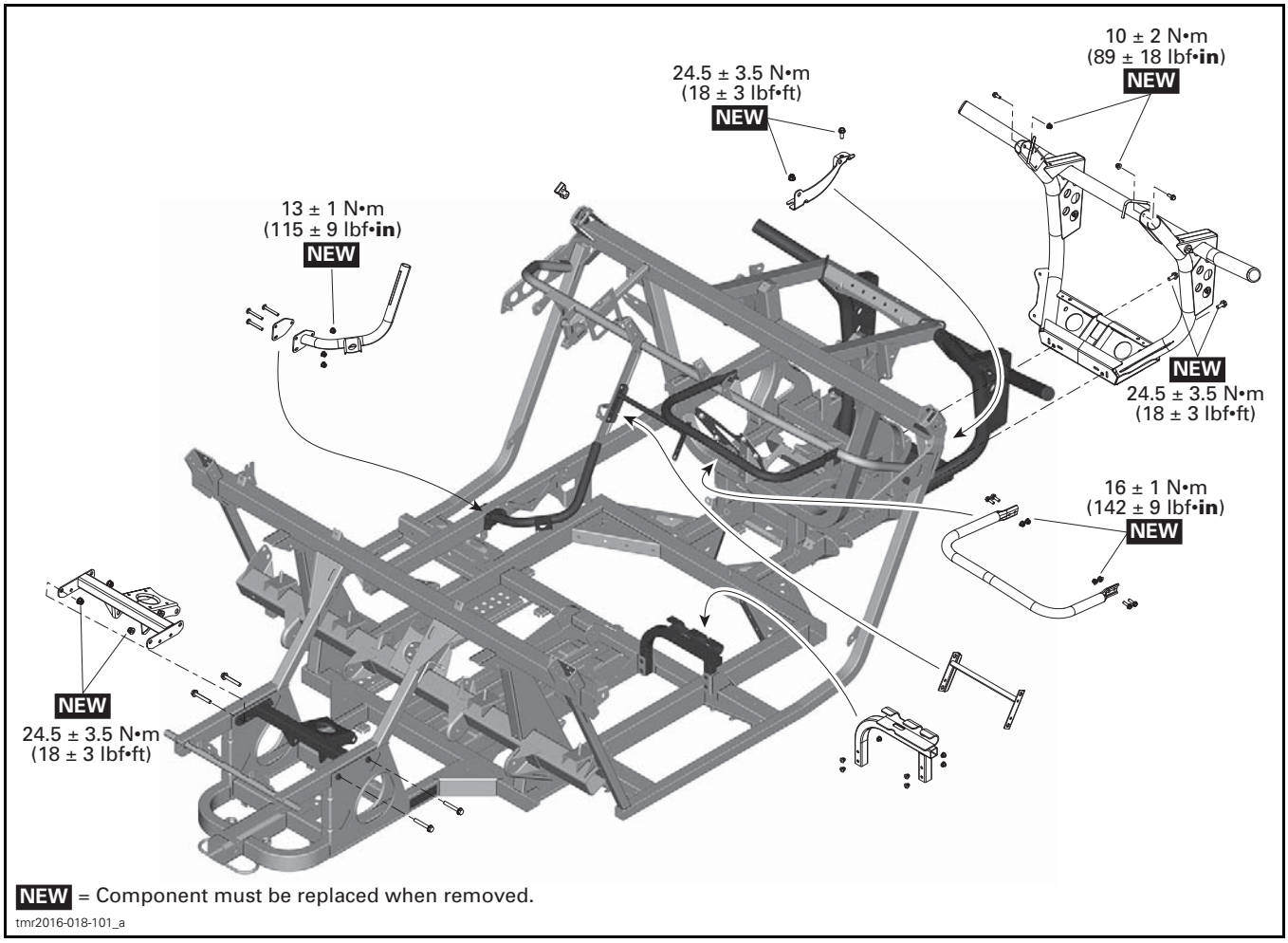

NEW = Component must be replaced when removed.

tmr2016-018-101_a

PROCEDURES

CAGE

⚠ WARNING

Never modify the mounting points of the shoulder nets and the seat belts. If they are found modified or damaged, contact a BRP service representative.

⚠ WARNING

Never drill holes, weld or modify the cage. Since this is an important protection component, any modification might compromise passenger safety.

Cage Removal

1. Tilt rear cargo box.
2. Remove protective net screws from the cage
3. Remove lateral panels.
4. Remove screws at each corner of the cage.
5. Remove cage from the vehicle.
6. Disassemble if required.

Cage Inspection

Check cage for bending, cracks, weld damages or any other damage.

⚠ WARNING

Any damaged cage components must be replaced.

Cage Installation

⚠ WARNING

When the cage mounting bolts are removed, they must be replaced with new ones or have their threads cleaned then have LOCTITE 243 (BLUE) (P/N 293 800 060) applied. Ensure to use only 10.9 grade fasteners.

1. Loosely assemble the cage.

NOTE: DO NOT TIGHTEN screws until installation is completed.

2. Using a hoist, lift the cage assembly over the vehicle and carefully position it on vehicle. Insert the rear of cage first.

NOTE: As an alternate method, one person at each attachment point can position the cage on the vehicle.

⚠ CAUTION To avoid injury or vehicle damages, never handle the cage alone.

3. Loosely install the cage to vehicle.

NOTE: Insert a Phillips screwdriver into cage hole and align with the frame hole, then loosely install the top screw. Thereafter, remove screwdriver and install the 2nd screw.

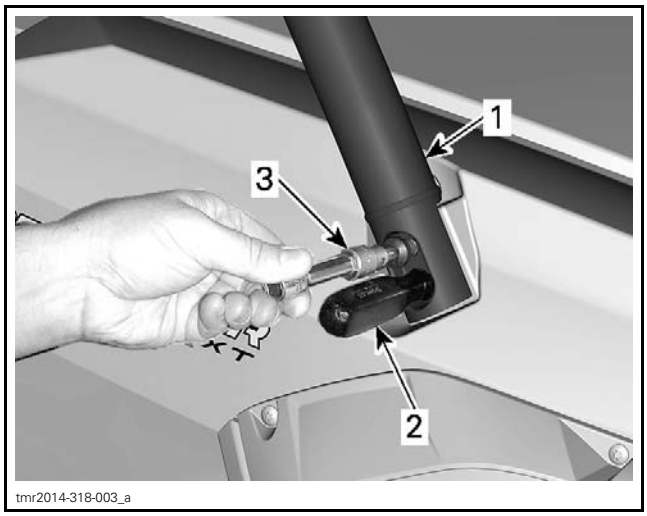

RH FRONT CAGE ATTACHMENT POINT
1. *Front tube*
2. *Screwdriver to align holes*
3. *Installing screw*

NOTE: Install rear cage screws from the rear of vehicle, besides top of shock absorbers.

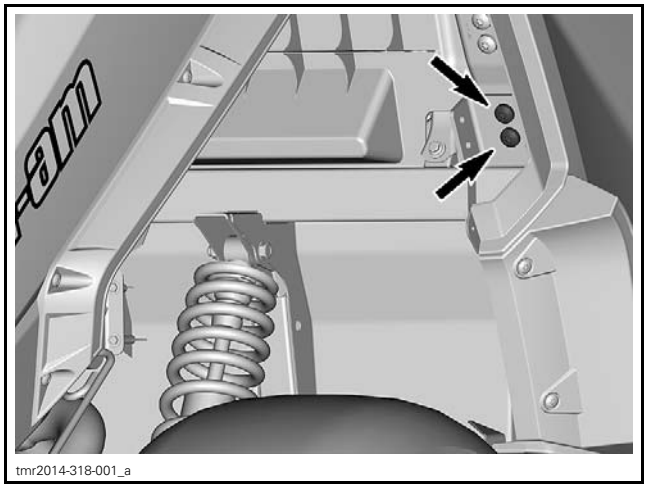

RH REAR CAGE ATTACHMENT POINT

4. Tighten all cage screws in the order illustrated.

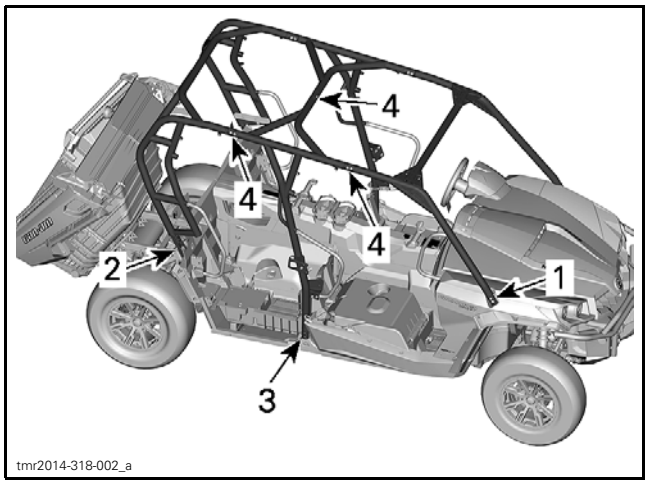

TIGHTENING SEQUENCE - MAX MODEL SHOWN

TIGHTENING TORQUE	
M10 x 30 Torx screws	67.5 N•m ± 2.5 N•m (50 lbf•ft ± 2 lbf•ft)

5. Reinstall previously removed parts.

FRAME

Frame Inspection

Check frame for bending, cracks, weld damages or any other damage. Replace frame as necessary.

Frame Welding

No welding should be done on frame except if mentioned or required on an approved BRP Bulletin.

Frame Insert Replacement

To install a new blind threaded insert, use the following tool: BLIND THREADED INSERT INSTALLER (P/N MODEL 9600) from Textron. See their web site at: www.textronfasteningsystems.com.



After insert installation, ensure insert can hold the torque applied to the screw it retains. Otherwise, install a new insert.

Frame Replacement

NOTE: Blind threaded inserts are not installed on replacement frames. Make sure to order 14 inserts when replacing frame.

FRAME (MAX)

SERVICE TOOLS – OTHER SUPPLIER

Description	Part Number	Page
BLIND THREADED INSERT INSTALLER	model 9600	6

SERVICE PRODUCTS

Description	Part Number	Page
LOCTITE 243 (BLUE)	293 800 060	4

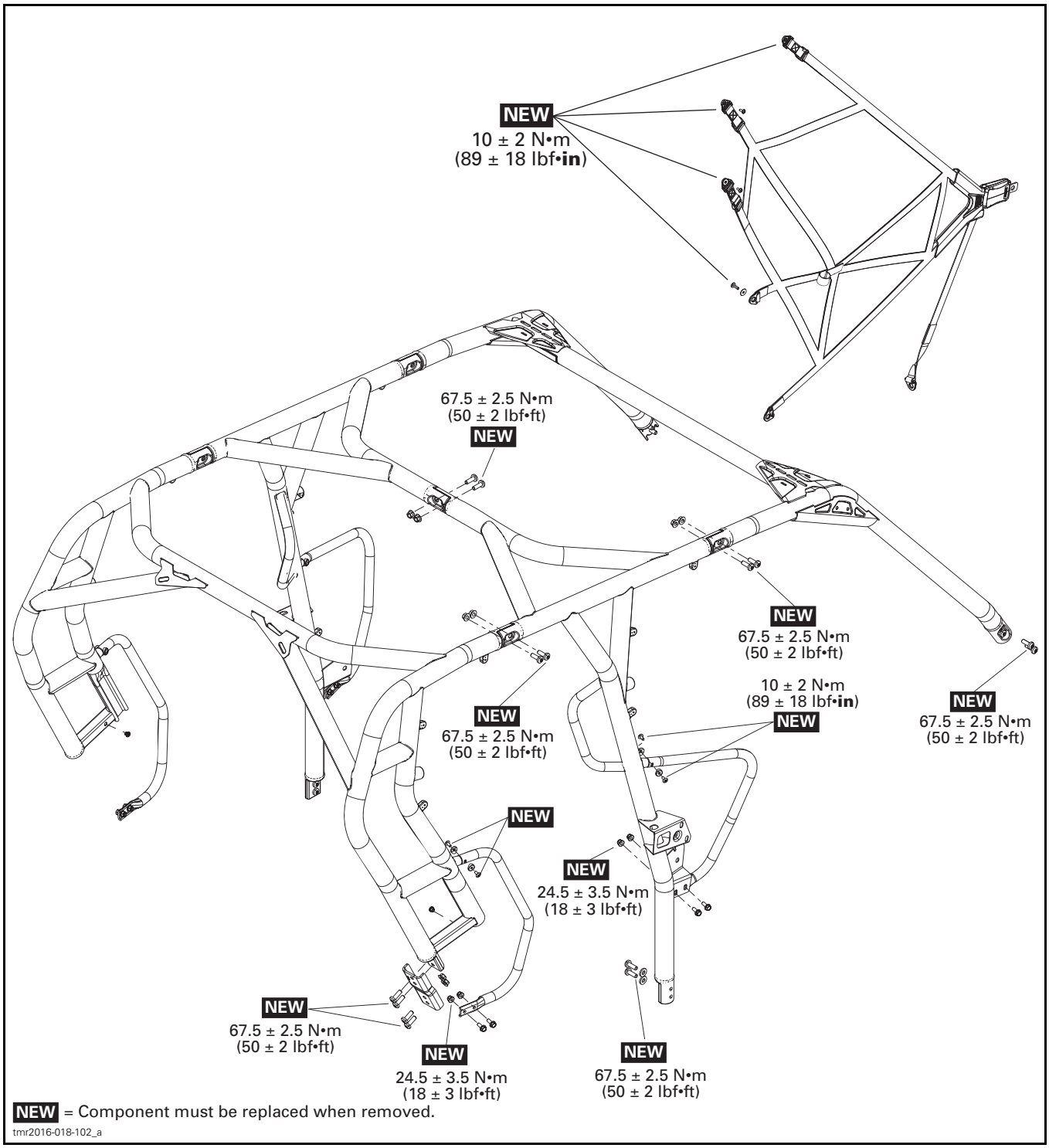
NEW
10 ± 2 N•m
(89 ± 18 lbf•in)
67.5 ± 2.5 N•m
(50 ± 2 lbf•ft)
NEW
NEW
67.5 ± 2.5 N•m
(50 ± 2 lbf•ft)
10 ± 2 N•m
(89 ± 18 lbf•in)
NEW
NEW
67.5 ± 2.5 N•m
(50 ± 2 lbf•ft)
NEW
67.5 ± 2.5 N•m
(50 ± 2 lbf•ft)
NEW
NEW
24.5 ± 3.5 N•m
(18 ± 3 lbf•ft)
NEW
67.5 ± 2.5 N•m
(50 ± 2 lbf•ft)
NEW
24.5 ± 3.5 N•m
(18 ± 3 lbf•ft)
NEW
67.5 ± 2.5 N•m
(50 ± 2 lbf•ft)
NEW = Component must be replaced when removed.
tmr2016-018-102_a

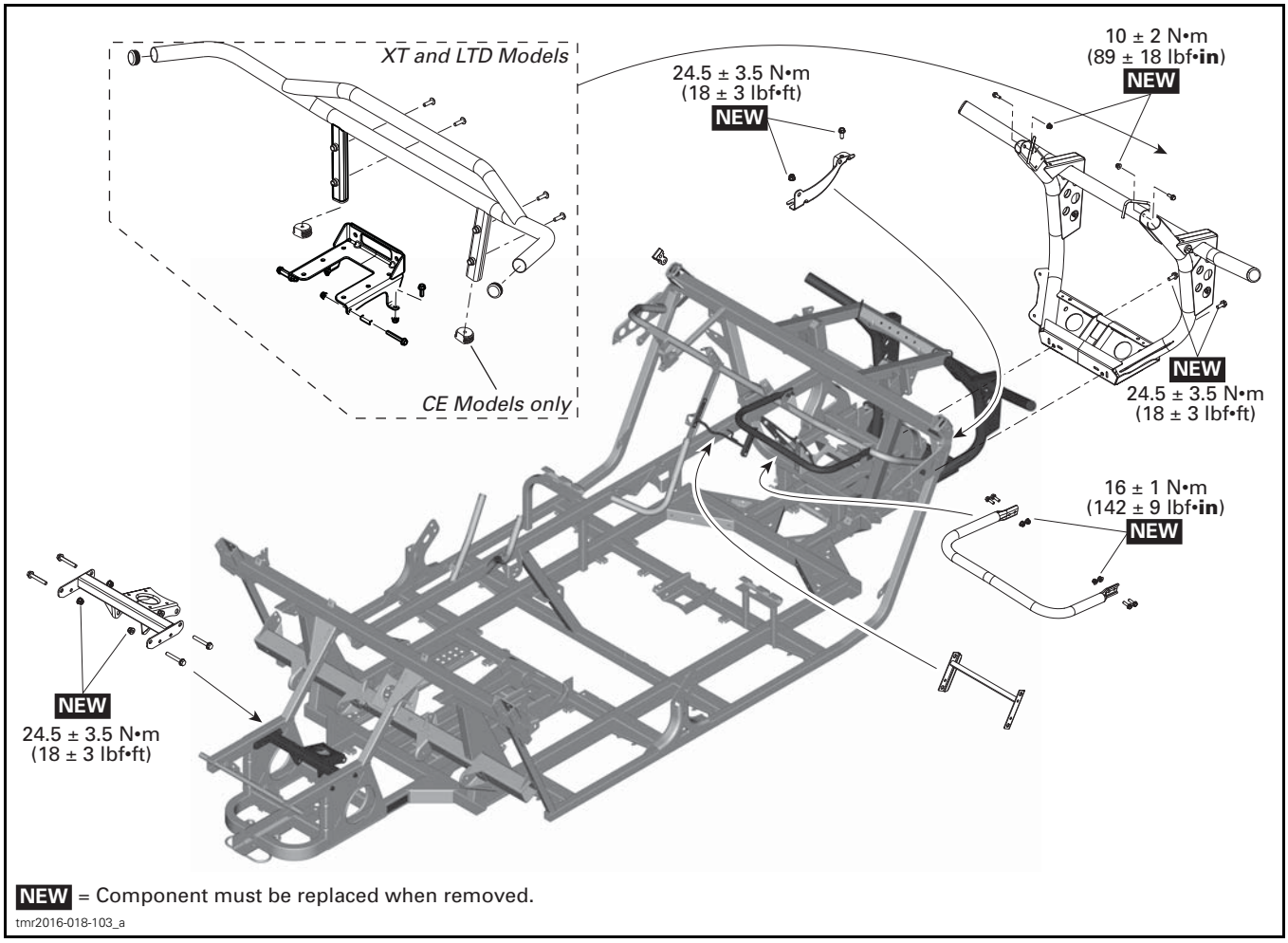

NEW = Component must be replaced when removed.

tmr2016-018-103_a

PROCEDURES

CAGE

⚠ WARNING

Never modify the mounting points of the shoulder nets and the seat belts. If they are found modified or damaged, contact a BRP service representative.

⚠ WARNING

Never drill holes, weld or modify the cage. Since this is an important protection component, any modification might compromise passenger safety.

Cage Removal

1. Tilt rear cargo box.
2. Remove protective net screws from the cage
3. Remove lateral panels.
4. Remove plastic cap located just behind front passenger seat and remove screws and washers at the center of vehicle.

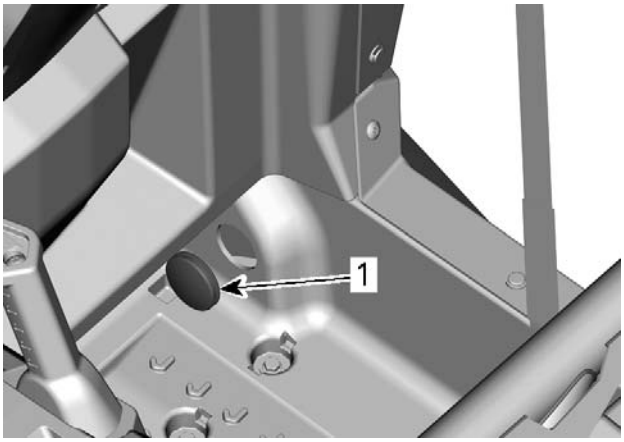

1. Plasic cap

5. Remove screws at each corner of the cage.
6. Remove cage from the vehicle.
7. Disassemble if required.

Cage Inspection

Check cage for bending, cracks, weld damages or any other damage.

⚠ WARNING

Any damaged cage components must be replaced.

Cage Installation

⚠ WARNING

When the cage mounting bolts are removed, they must be replaced with new ones or have their threads cleaned then have LOCTITE 243 (BLUE) (P/N 293 800 060) applied. Ensure to use only 10.9 grade fasteners.

1. Loosely assemble the cage.

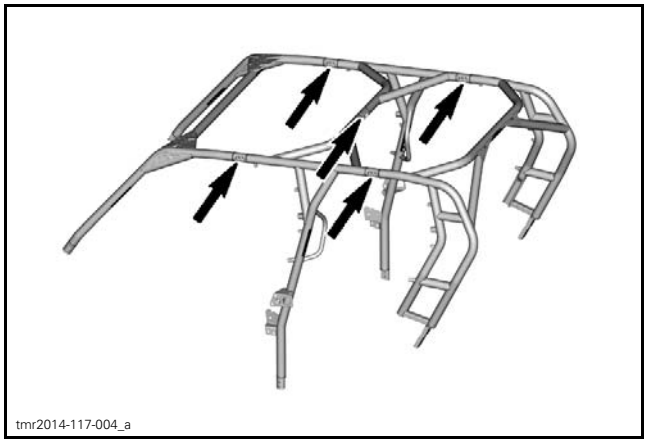

COMMANDER MAX SHOWN

NOTE: DO NOT TIGHTEN screws until installation is completed.

2. Install junctions on the rear of frame if previously removed, and torque to specification.

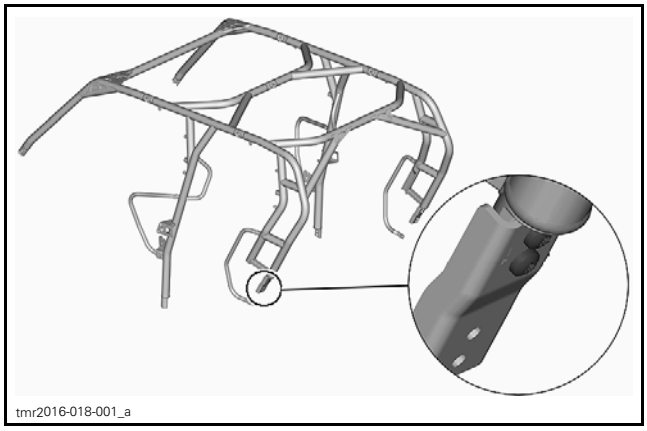

TIGHTENING TORQUE	
Upper junction screws	67.5 N•m ± 2.5 N•m (50 lbf•ft ± 2 lbf•ft)

3. Using a hoist, lift the cage assembly over the vehicle and carefully position it on vehicle. Insert the rear of cage first.

NOTE: As an alternate method, one person at each attachment point can position the cage on the vehicle.

⚠ CAUTION To avoid injury or vehicle damages, never handle the cage alone.

4. Loosely install the cage to vehicle.

NOTE: Insert a Phillips screwdriver into cage hole and align with the frame hole, then loosely install the top screw. Thereafter, remove screwdriver and install the 2nd screw.

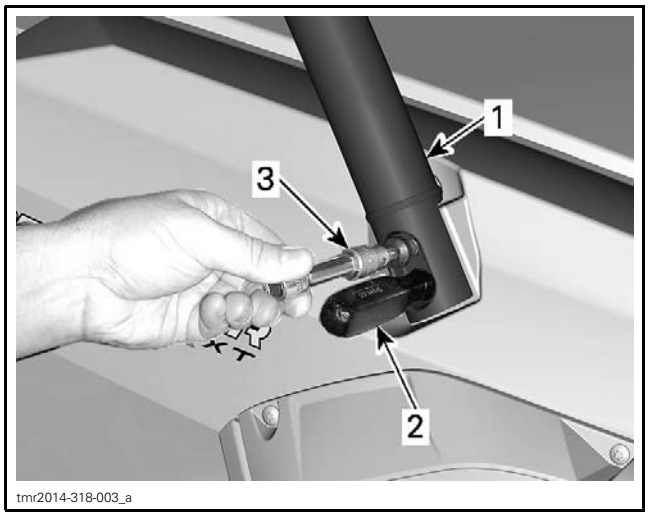

RH FRONT CAGE ATTACHMENT POINT
1. *Front tube*
2. *Screwdriver to align holes*
3. *Installing screw*

5. Install screws and washers at the center of vehicle and reinstall plastic caps.

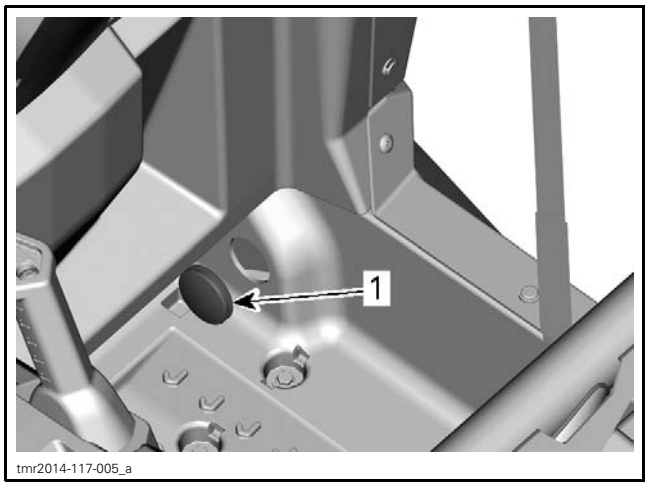

1. *Plasic cap*

NOTE: Install rear cage screws from the rear of vehicle, besides top of shock absorbers.

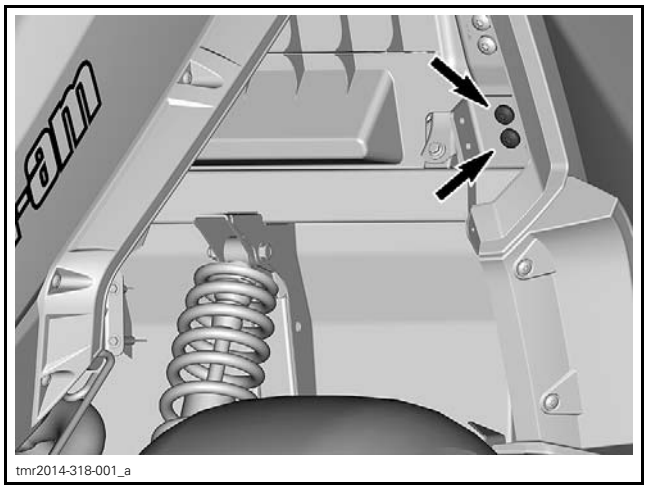

RH REAR CAGE ATTACHMENT POINT

6. Tighten all cage screws in the order illustrated.

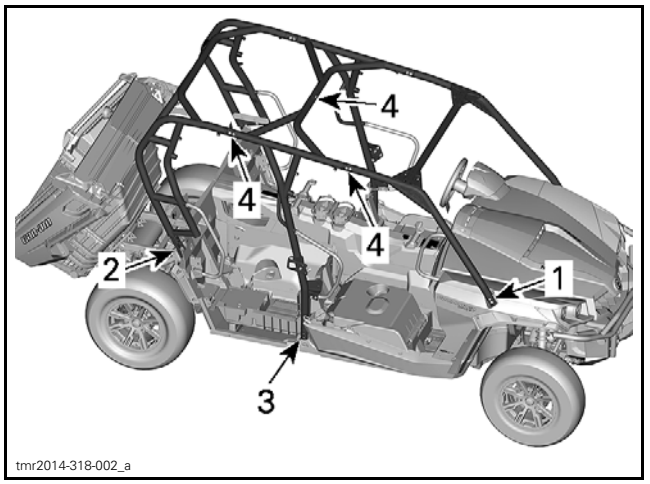

TIGHTENING SEQUENCE - MAX MODEL SHOWN

TIGHTENING TORQUE	
M10 x 30 Torx screws	67.5 N•m ± 2.5 N•m (50 lbf•ft ± 2 lbf•ft)

7. Reinstall previously removed parts.

FRAME

Frame Inspection

Check frame for bending, cracks, weld damages or any other damage. Replace frame as necessary.

Frame Welding

No welding should be done on frame except if mentioned or required on an approved BRP Bulletin.

Frame Insert Replacement

To install a new blind threaded insert, use the following tool: BLIND THREADED INSERT INSTALLER (P/N MODEL 9600) from Textron. See their web site at: www.textronfasteningsystems.com.

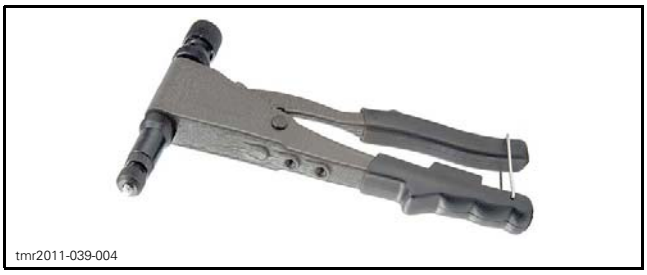
tmr2011-039-004

After insert installation, ensure insert can hold the torque applied to the screw it retains. Otherwise, install a new insert.

Frame Replacement

NOTE: Blind threaded inserts are not installed on replacement frames. Make sure to order 14 inserts when replacing frame.

COMMANDER SERIES

ELECTRICAL SYSTEM			
Battery		Type	Maintenance free
		Voltage	12 volts
		Nominal rating	18 A•h
		Power starter output	0.7 KW
Headlight		High	2 x 60 W
		Low	2 x 60 W
Taillight			2 x 5/21 W
Fuses	Main	FL1	16 awg
	Main accessories	FL2	14 awg
	ACS Add-on power	FL3	16 awg
	DPS	F1 (in PF3)	40 A
	Gauge Taillights	F4	10 A
	Ignition coils Fuel injectors Speed sensor	F5	7.5 A
	Engine controls module (ECM)	F6	5 A
	Winch 4WD actuator	F7	5 A
	Ignition switch Clock Starter solenoid	F8	5 A
	Fan motor	F9	25 A
	European component	F10	5 A
	Lights relay	F11	30 A
	DC Outlet	F12	15 A

ELECTRICAL SYSTEM			
Fuses	Relays coils (R1 and R3)	F13	5 A
	Accessories (DC5 and DC6)	F14	15 A
	Fuel pump	F15	5 A

FUEL SYSTEM		
Fuel delivery	Type	Electronic Fuel Injection (EFI), iTC throttle body (Intelligent Throttle Control), 1 injector per cylinder
Fuel pump	Type	Electrical (in fuel tank)
	Operating pressure	350 kPa (51 PSI)
Idle speed		1250 RPM ± 100 (not adjustable)
Fuel	Type	Regular unleaded gasoline
	Minimum Octane rating	87 Pump Posted AKI (92 RON)
Fuel tank capacity		37.8 L (10 U.S. gal.)
Fuel remaining when low fuel light turns ON		± 12 L (3.2 U.S. gal.)

DRIVE SYSTEM		
Front drive	Base model	Visco-Lok† auto-locking front differential
	All others	Visco-Lok† QE auto-locking front differential
Front drive ratio		3.6:1
Rear drive		Spiral bevel gear/final drive
Rear drive ratio		3.6:1
Front differential oil	Capacity	500 ml (17 U.S. oz)
	Recommended	XPS synthetic gear oil (P/N 293 600 043) or synthetic gear oil 75W90 API GL-5
Rear final drive oil	Capacity	280 ml (9.5 U.S. oz)
	Recommended	XPS Synthetic gear oil (P/N 293 600 140) or a 75W 140 API GL-5 synthetic gear oil
CV joint grease		CV GREASE (P/N 293 550 062)
Propeller shaft grease		PROPELLER SHAFT GREASE (P/N 293 550 063)

STEERING			
Type			Rack and pinion
Steering wheel			Adjustable tilt steering
Turning radius		2UP	244 cm (96 in)
		MAX	349 cm (137.4 in)
Total toe (vehicle on ground)			0° ± 0.2°
Camber angle (vehicle on ground)			0.7° positive
Tie-rod maximum length unengaged threads			N/A

FRONT SUSPENSION			
Suspension type		Base DPS XT XT-P (except CE Models)	Double suspension-arm with dive-control geometry and stabilizer bar
		CE Models	Double suspension-arm with dive-control geometry
		LTD	Double suspension-arm with dive-control geometry with ACS and stabilizer bar
Suspension travel			254 mm (10 in)
Shock absorber	Qty		2
	Type	Base DPS XT	Oil
		XT-P	HPG shocks with piggyback reservoir. QS3† compression and preload adjustments
		LTD	HPG shock with piggyback reservoir. Compression damping (low speed) and air pressure adjustments
Spring free length	2UP	Base	355.6 mm (14 in)
		DPS XT Mossy Oak	363 mm (14.29 in)
		LTD	358.65 mm (14.12 in)
		XT-P	350 mm (13.78 in)
	MAX	LTD	341.2 mm (13.43 in)
		All others	365 mm (14.37 in)
Preload adjustment type		Except LTD	5 position preload settings
		LTD	No preload adjustment

REAR SUSPENSION			
Suspension type		Except LTD	Torsional Trailing A-arm Independant (TTA) with external stabilizer bar
		LTD	Torsional Trailing A-arm Independant (TTA) with external stabilizer bar and ACS
Suspension travel			254 mm (10 in)
Shock absorber	Qty		2
	Type	Base DPS XT	Oil
		XT-P	HPG shocks with piggyback reservoir. QS3† compression and preload adjustments
		LTD	HPG shock with piggyback reservoir. Compression damping (low speed) and air pressure adjustments
Spring free length	2UP	Base DPS XT Mossy Oak	358 mm (14.09 in)
		LTD	355.6 mm (14 in)
		XT-P	373 mm (14.69 in)
	MAX	LTD	366 mm (14.41 in)
		All others	345 mm (13.58 in)
Preload adjustment type		LTD	No preload adjustment
		All others	5 position preload settings

† QS3 is a trademark of Fox Factory, Inc.

BRAKES			
Front brake	Qty		2
	Type	2UP	214 mm ventilated disc brakes with hydraulic twin-pistons calipers
		MAX	220 mm ventilated disc brakes with hydraulic twin-piston calipers
Rear brake	Qty	2UP	1
		MAX	2
	Type		214 mm ventilated disc brakes with hydraulic twin-piston calipers

BRAKES				
Brake fluid		Capacity	2UP	250 ml (8.5 U.S. oz)
			MAX	260 ml (8.8 U.S. oz)
		Type		DOT 4
Caliper				Floating
Brake pad material				Metallic
Minimum brake pad thickness				1 mm (.04 in)
Minimum brake disc thickness				4 mm (.157 in)
Maximum brake disc warpage				0.2 mm (.01 in)

TIRES				
Pressure	2UP	Front	LTD Mossy Oak	Minimum: 83 kPa (12 PSI) Maximum: 83 kPa (12 PSI)
			All others	Minimum: 69 kPa (10 PSI) Maximum: 83 kPa (12 PSI)
		Rear		Minimum: 83 kPa (12 PSI) Maximum: 152 kPa (22 PSI)
	MAX	Front	LTD	Minimum: 103 kPa (15 PSI) Maximum: 124 kPa (18 PSI)
			All others	Minimum: 103 kPa (15 PSI) Maximum: 110 kPa (16 PSI)
		Rear		Minimum: 103 kPa (15 PSI) Maximum: 179 kPa (26 PSI)
Minimum tire thread depth				3 mm (0.11 in)
Size	2UP	Front	Base XT-P	27 x 9 x 12 (in) NHS
			DPS/XT	27 x 9 x 14 (in) NHS
		Rear	Base XT-P	27 x 11 x 12 (in) NHS
			DPS/XT	27 x 11 x 14 (in) NHS
	MAX		Front	27 x 9 x 14 (in) NHS
			Rear	27 x 11 x 14 (in) NHS

WHEELS		
Type	Base	Steel
	XT-P	Aluminum beadlock wheels
	DPS XT LTD	Cast Aluminum

WHEELS			
Size	Front	Base XT-P	12 x 6 (in)
		DPS XT LTD	14 x 7(in)
	Rear	Base	12 x 8 (in)
		XT-P	12 x 7.5 (in)
		DPS XT LTD	14 x 8.5 (in)
Wheel nuts torque			100 N•m ± 10 N•m (74 lbf•ft ± 7 lbf•ft)

CHASSIS	
Cage type	50 mm (2 in) diameter, high strength steel, ROPS-approved cage

DIMENSION			
Overall length	2UP	Base DPS	302.3 cm (119 in)
		XT XT-P LTD	305.4 cm (120.2 in)
	MAX	DPS	377.3 cm (148.5 in)
		XT LTD	380.2 cm (149.7 in)
Overall width	2UP	Base DPS	148.9 cm (58.6 in)
		XT XT-P LTD	158.7 cm (62.5 in)
	MAX	DPS	148.9 cm (58.6 in)
		XT LTD	158.7 cm (62.5 in)
Overall height	2UP		182.9 cm (72 in)
	MAX	DPS XT	193 cm (76 in)
		LTD	191.8 cm (75.5 in)
Wheel base		2UP	192.4 cm (75.7 in)
		MAX	269.4 cm (106.1 in)

DIMENSION			
Wheel track		Front	125.7 cm (49.5 in)
		Rear	121.9 cm (48 in)
Ground clearance		MAX LTD Mossy Oak	25.4 cm (10 in)
		All others	27.9 cm (11 in)

WEIGHT AND LOADING CAPACITY			
Dry weight		MAX	710 kg (1,566.4 lb)
		All others	586 kg (1,291.9 lb)
Weight distribution	Front/ rear	MAX	44/56
		All others	45/55
Cargo box capacity		Total	272 kg (600 lb)
		Upper	181 kg (400 lb)
		Lower	272 kg (600 lb)
Total vehicle load allowed (including driver, passenger, all other loads and added accessories)	2UP	LTD	340 kg (750 lb)
		Mossy Oak	321 kg (707 lb)
		All others	363 kg (800 lb)
	MAX	DPS XT	526 kg (1,160 lb)
		LTD	503 kg (1,110 lb)
Gross vehicle weight rating	2UP	Base	994 kg (2,191 lb)
		DPS	1 004 kg (2,213 lb)
		XT	1 046 kg (2,306 lb)
		XT-P	1 047 kg (2,308 lb)
		LTD	1 063 kg (2,344 lb)
		Mossy Oak Hunting Edition	1 063 kg (2,344 lb)
	MAX	DPS	1 297 kg (2,859.4 lb)
		XT	1 316 kg (2,901.3 lb)
		LTD	1 330 kg (2,932.1 lb)
Towing capacity		CE	270 kg (600 lb)
		All except CE	680 kg (1,500 lb)
Hitch support			50.8 mm (2 in) x 50.8 mm (2 in)

WIRING DIAGRAM INFORMATION

GENERAL

WIRING DIAGRAM LOCATION

The wiring diagrams are stored in the back cover pocket.

WIRING DIAGRAM CODES

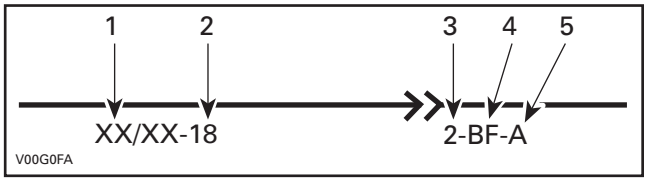

1. *Wire colors*
2. *Wire gauge*
3. *Connector housing area*
4. *Connector identification*
5. *Wire location in connector*

Wire Colors

It identifies the color of a wire. When a 2-color scheme is used, the first color is the main color while the second color is the tracer color.

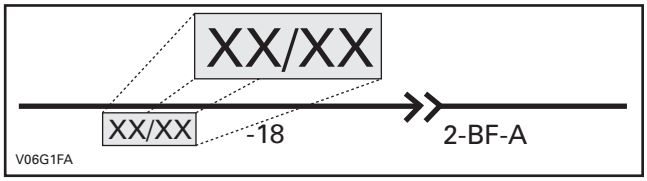

THE SHADED PART INDICATES THE WIRE COLOR

Example: YL/BK is a YELLOW wire with a BLACK stripe.

Wire Gauge

The number after wire color indicates the gauge of a wire.

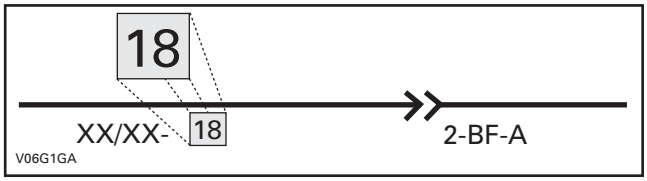

THE SHADED PART INDICATES THE WIRE GAUGE

Example: The number that follows the wire color indicates the wire size used, in this case 18 gauge wire.

Connector Housing Area

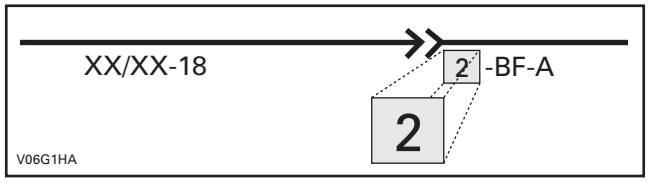

The first number in the connector/pin contact number represents the area in the vehicle where the connector is located.

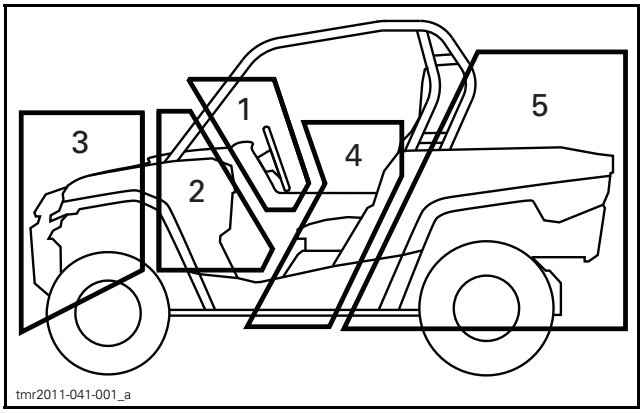

AREA	LOCATION
1	Steering, dashboard and upper console area
2	Under dashboard and front bulkhead area
3	Front of vehicle
4	Engine, seat and lower console area
5	Rear of vehicle

Connector Identification

The letters in the middle of the connector/pin contact number Indicates the connector's function. If there are many connectors in the same area, this helps to identify which wire is in which connector.

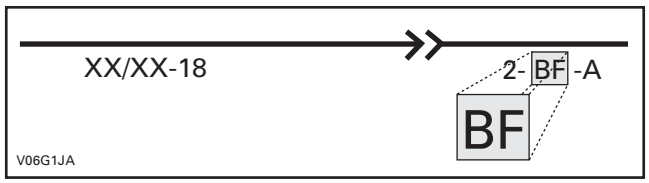

THE SHADED PART INDICATES A CONNECTOR

Wire Location in Connector

This is the wire position in the connector. The number or letter given refers to the physical identification stamped or molded on the connector.

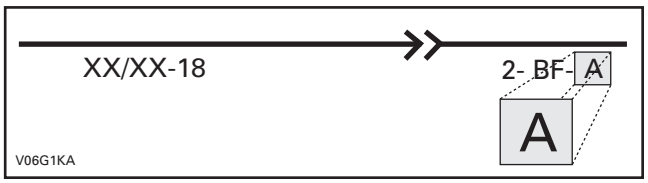

THE SHADED PART INDICATES THE CONNECTOR LOCATION IN HOUSING

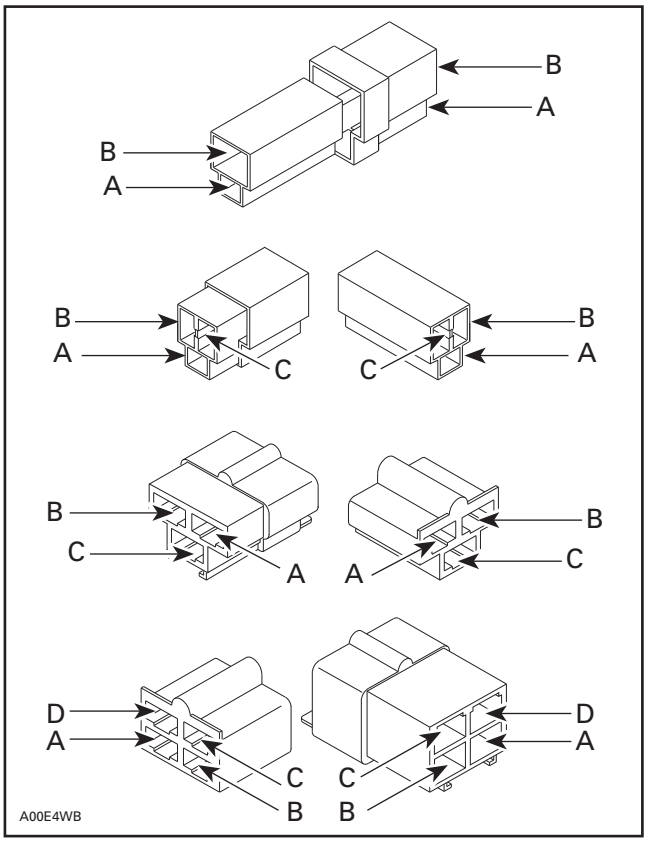

TYPICAL

COMMANDER 2017

GENERAL SYSTEM

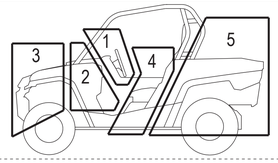

STANDARD USAGE OF ACCESSORY CONNECTORS

DC3 GPS
DC5 TRUNK BOX
DC6 RADIO
DPS2 SEE DPS SYSTEM DIAGRAM
HIC8 SEE ACS SYSTEM DIAGRAM

TERMINAL IDENTIFICATION						
	NAME	ZONE-	CONNECTOR NAME-	TERMINAL #/A		
EX:	CI	1 -	CI	-	15	
EX:	CV	4 -	CV	-	A	
EX:	ME	2 -	ME			

ZONE #	ZONE DESCRIPTION
1	STEERING AREA
2	MODULE AREA
3	FRONT OF VEHICLE
4	ENGINE AREA
5	REAR OF VEHICLE

•	WELDED JOINT
	SHRINKED JOINT
	CROSSED WIRE
	WIRE BUS
	SIMPLE CONDUCTOR WIRE
	FEMALE TERMINAL
	MALE TERMINAL
	STEEL LINK (FRAME)
	TERMINAL

COLOR CODE	
BE	BEIGE
BK	BLACK
BU	BLUE
BR	BROWN
GN	GREEN
GY	GREY
OR	ORANGE
RD	RED
VI	VIOLET
WH	WHITE
YL	YELLOW
PK	PINK
LT BU	LIGHT BLUE

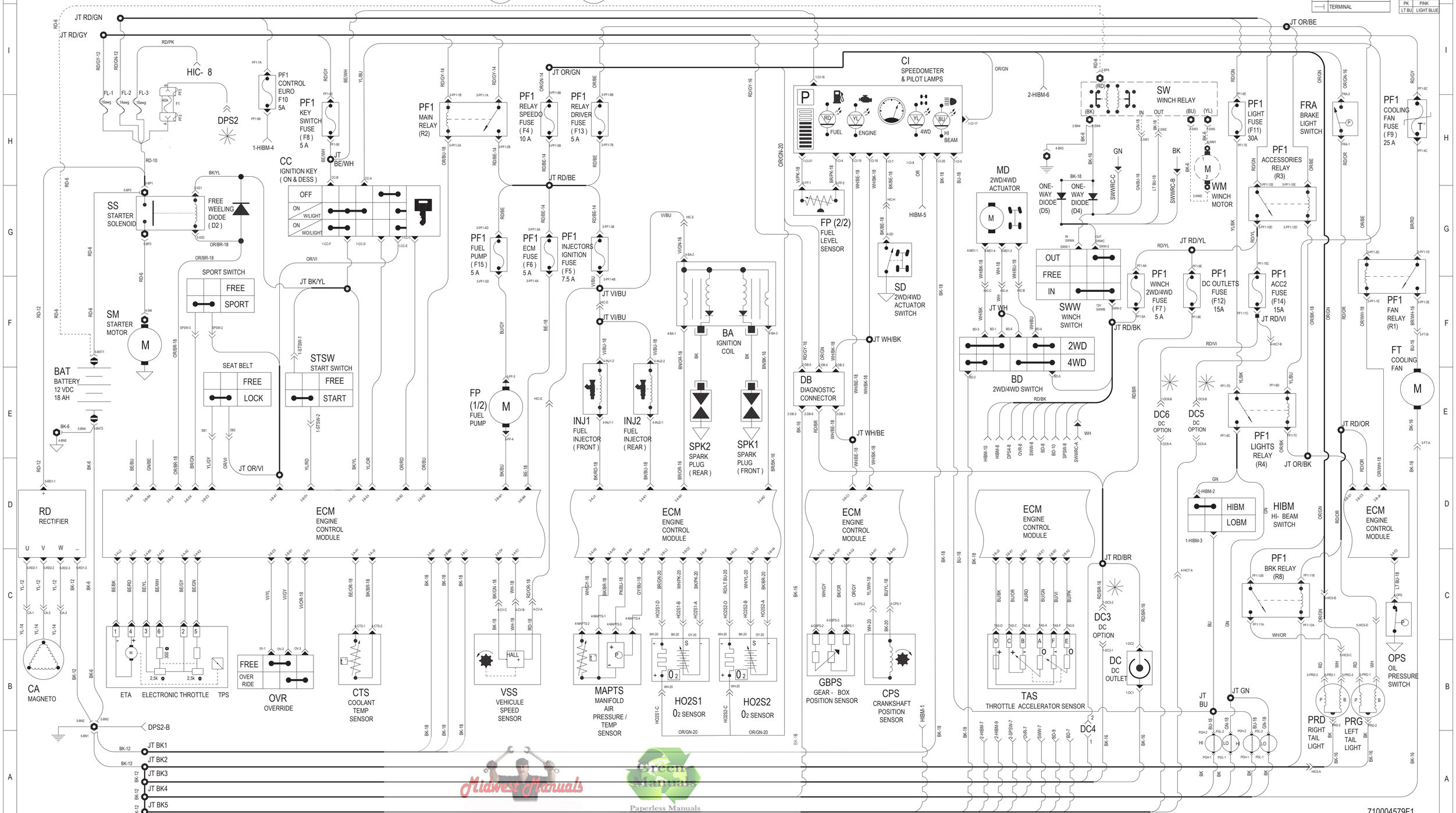

219100866-001

13 MAR. 2016

710004579F1

Midwest Manuals
Green Manuals
Paperless Manuals For a Better Tomorrow
If you bought this manual from any other seller please leave them NEGATIVE feedback and notify me at bestshopmanuals@gmail.com

Specific Shematic

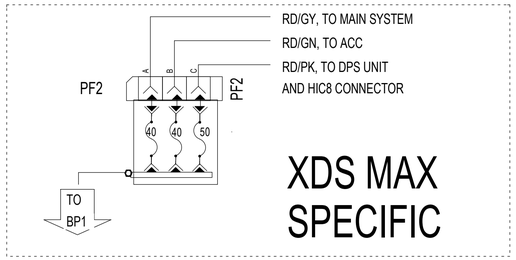

XDS MAX SPECIFIC

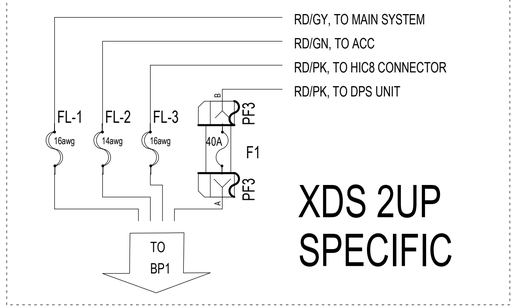

XDS 2UP SPECIFIC

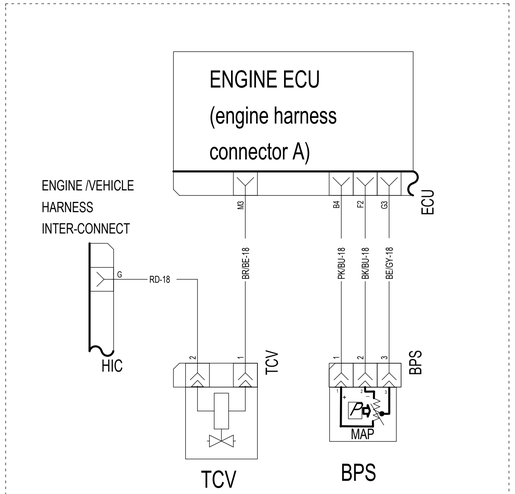

XDS TURBO SPECIFIC

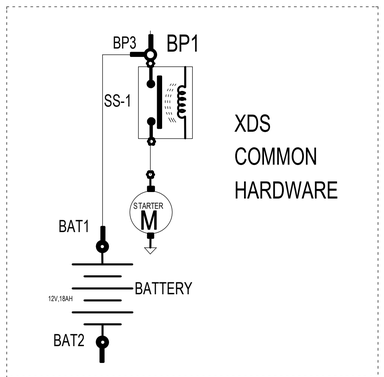

XDS COMMON HARDWARE

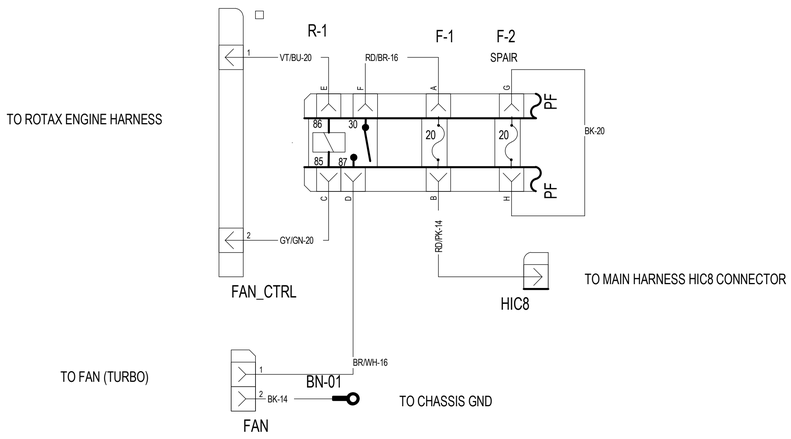

XDS TURBO FAN CONTROL

DPS System

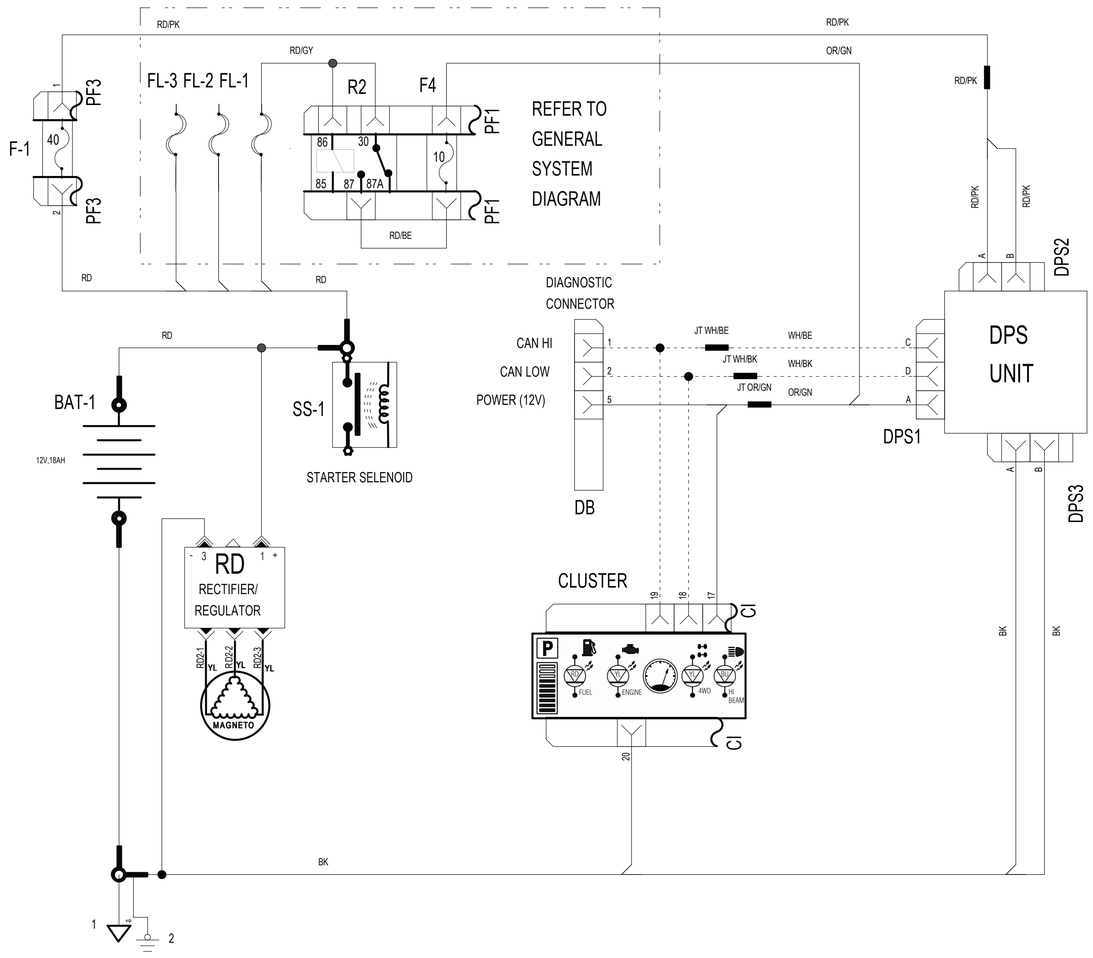

Midwest Manuals
Green Manuals
Paperless Manuals
For a Better Tomorrow
If you bought this manual from any other seller please leave them
NEGATIVE feedback and notify me at bestshopmanuals@gmail.com

Flat rate times are what the manufacturer pays the authorized dealer for warranty work, the times listed are usually unrealistic for even the most experienced mechanic and will take longer to actually complete.

Because of this dealers will usually charge more than the times posted.

I cannot be held responsible for any errors BRP has made in these service flat rate or parts manuals.

If you bought this manual from any other seller, they could be reselling my work.

Please leave them negative feedback & email me at bestshopmanuals@gmail.com .

Our goal is to be one of the BEST sellers on the internet by providing you with the BEST customer service and the BEST manuals on the market.

Thank you for choosing us.





INTRODUCTION

This publication governs all warranty labor allowances for BRP SSV

1. HOW DOES IT WORK

We follow the procedures detailed in the BRP *SSV Shop Manual*. The flat rate time is the maximum time allowed for a repair involving any given part. FLAT RATE TIME IS NOT CUMULATIVE. You must use the flat rate time given for the longest lasting operation.

NOTE: The *Flat Rate Time Schedule* was prepared by skilled mechanics using the hand tool usually found in workshops and all the special tools mentioned in the *Shop Manual*.

2. COMPILATION

The *Flat Rate Time Schedule* is compiled as follows:

The actual required time to perform the repair plus (+) 30% correction factor up to 3.0 hours or (+) 15% over 3.0 hours time to take into account, among others:

- Vehicle handling
- Obtaining the parts
- Diagnosis
- Cleaning
- Special compensation (rusted bolts).

3. HOW TO USE IT

Refer to the system you need, locate part of series of parts replaced. List JOB CODE in the appropriate column on claim.

SYSTEM		PAGE
01	ENGINE	04
02	CARBURETOR AND FUEL SYSTEM	18
03	IGNITION SYSTEM	22
04	STARTER	24
05	TRANSMISSION SYSTEM	25
06	BRAKE SYSTEM	31
07	STEERING SYSTEM AND FRONT SUSPENSION	33
08	REAR SUSPENSION SYSTEM AND TRACK	40
09	BODY	45
10	ELECTRICAL SYSTEM	62

NOTE: Unless otherwise specified, dismantling order is: top to bottom, exterior to interior, front to rear.

All fractions of hours are in tenths:

0.1 = 6 minutes
0.2 = 12 minutes, and so on

LEGEND:

* REQUIRES PRIOR AUTHORIZATION BY DISTRIBUTOR.
** INDICATE LABOUR TIME ON LINE “LABOUR ONLY“ OF CLAIM.
*** INDICATE $$$ AMOUNT ON “SUB-CONTRACTED LABOUR“ OF CLAIM.

IMPORTANT: Always use the longest flat rate time applicable to the repair performed.

4. JOB REQUIREMENTS

All the flat rate times mentioned in the following pages include the required operations such as: engine timing (rotary valve and ignition), connecting rod(s) alignment, cylinder head(s) torque or use of parallel bar, use of ignition tester, piston clearance/ring end gap measurement, crankshaft to crankcase measurement, cylinder honing, engine leak test.

5. ILLUSTRATIONS

The illustrations contained in this manual do not necessarily show every components of a given system as *Parts Catalog* do. Their purpose is to facilitate recognition of parts related to a flat rate time. Item numbers on illustrations correspond to the four digit Job Code.

6. FLAT RATE TIME SUGGESTION

SEND A WARRANTY CASE ON BOSSWeb INFO CENTER

In the case, you must provide the following information:

Section *Subject*:

- Flat rate time suggestion

Section *Your Question*:

- Model year;
- Model description;
- Description job code;
- Job code;
- Present flat rate;
- Suggested flat rate;
- Detailed repair procedure;

To ensure that your case will be promptly and efficiently processed please indicate the step by step repair procedure you performed.

INTRODUCTION

Cette publication détermine le temps de main-d'oeuvre couvert par la garantie pour les VCC BRP 2016.

1. UTILISATION DU MANUEL

En procédant de la façon indiquée dans le *Manuel de réparation VCC* BRP, chaque temps donné représente le maximum permis pour une réparation portant sur cette pièce. LES TEMPS NE SONT PAS CUMULATIFS. On doit inscrire le temps donné pour l'opération qui prend le plus de temps.

REMARQUE: Le *Barème de temps à taux fixe* a été préparé par des mécaniciens compétents utilisant les outils que l'on retrouve normalement dans les ateliers de réparation, en plus de tous les outils spéciaux mentionnés dans le *Manuel de réparation*.

2. COMPILATION

Le *Barème de temps à taux fixe* a été établi en compilant le temps nécessaire pour faire la réparation plus (+) un facteur de correction de 30% lorsqu'un travail dure 3.0 heures et moins, ou (+) 15% lorsqu'un travail dure plus de 3.0 heures. Cette compilation comprend, entre autres, les étapes suivantes:

- Manutention du véhicule
- Nettoyage
- Aller chercher les pièces, essais physiques
- Compensation spéciale (boulons rouillés)
- Diagnostic.

3. UTILISATION DU BARÈME

Se reporter à la section désirée, repérer la pièce ou l'ensemble de pièces remplacées et inscrire le CODE DE TRAVAIL dans la colonne appropriée sur la formule de réclamation.

SYSTÈME		PAGE
01	MOTEUR	4
02	CARBURATEUR ET SYSTÈME D'ALIMENTATION D'ESSENCE	18
03	SYSTÈME D'ALLUMAGE	22
04	DÉMARREUR	24
05	SYSTÈME DE TRANSMISSION	25
06	SYSTÈME DE FREIN	31
07	SYSTÈME DE DIRECTION ET SUSPENSION AVANT	33
08	SYSTÈME DE SUSPENSION ARRIÈRE ET CHENILLE	40
09	CARROSSERIE	45
10	SYSTÈME ÉLECTRIQUE	62

REMARQUE: Sauf indication contraire, le démontage doit s'effectuer de haut en bas, de l'extérieur vers l'intérieur, de l'avant vers l'arrière.

Toutes les fractions d'heures sont exprimées en dixièmes:

0.1 = 6 minutes
0.2 = 12 minutes, et ainsi de suite

LÉGENDE:

* AUTORISATION REQUISE AVANT LE REMPLACEMENT.
** INSCRIRE LE TEMPS À LA LIGNE «MAIN-D'OEUVRE SEULEMENT».
*** INSCRIRE LE MONTANT $$$ À LA LIGNE «OUVRAGE SOUS-CONTRACTÉ».

IMPORTANT: Toujours utiliser le temps donné à l'opération qui nécessite le plus de temps.

4. TRAVAUX REQUIS

Tous les temps mentionnés dans les pages suivantes incluent les opérations telles que: réglage du moteur (valve rotative et allumage), alignement de la ou des bielles, couple de serrage de la ou des culasses ou l'utilisation de barres parallèles, utilisation du vérificateur d'allumage, mesure du jet des pistons/jeu en bout des segments, mesure de l'écart entre le vilebrequin et le carter, rectification du cylindre, vérification de fuite du moteur.

5. ILLUSTRATIONS

Contrairement aux *Catalogues de pièces*, les illustrations de ce manuel ne montrent pas nécessairement chacune des pièces qu'elles représentent, leur raison d'être étant plutôt de faciliter la reconnaissance des pièces reliées à un barème de temps à taux fixe. **Les numéros d'items sur les illustrations correspondent aux quatre derniers chiffres du code de travail.**

6. SUGGESTION DE BARÈME DE TEMPS À TAUX FIXE

ENVOYEZ UNE REQUÊTE GARANTIE BOSSWeb DEPUIS LA SECTION INFO CENTRE

Dans cette requête, vous devez fournir les informations suivantes:

Section *Objet*:

- Suggestion de barème de temps à taux fixe

Section *Votre Question*:

- L'année modèle;
- Description du modèle;
- Description du code de travail;
- Code de travail;
- Temps actuel;
- Temps suggéré;
- Détails de la marche à suivre;

Pour s'assurer que votre demande sera traitée dans les plus brefs délais et efficacement, s.v.p. nous fournir toutes les étapes de réparation dans les détails de la marche à suivre.

2016-2017

SSV/ VCC

TABLE	DESCRIPTION	MODEL/MODÈLE	ENGINE TYPE/ TYPE DE MOTEUR
1	COMMANDER 800	6CGA/6CGB	800 CVT
	COMMANDER DPS 800	6TGA/6TGB 6TGC/6TGD	
	COMMANDER XT 800	6DGA/6DGB 6DGC/6DGD	
2	COMMANDER DPS 1000	6PGA/6PGB	1000 CVT
	COMMANDER MOSSY OAK HUNTING EDITION 1000	6YGA	
	COMMANDER XT 1000	6BGA/6BGB 6BGD/6BGE 6BGF/6BGG 6BGH/6BGJ 6BGK/6BGL 6BGM	
	COMMANDER XTP 1000	6EGA/6EGC	
3	COMMANDER LTD 1000	6GGA/6GGB 6GGC/6GGD	1000 CVT
4	COMMANDER MAX DPS	6HGA/6HGB	1000 CVT
	COMMANDER MAX XT	6JGA/6JGB 6JGC/6JGD 6JGE/6JGF 6JGG	
5	COMMANDER MAX LTD 1000	6KGA/6KGB 6KGC	1000 CVT

01 ENGINE SYSTEM
SYSTÈME MOTEUR

SYSTEM/SYSTÈME

SYSTEM SYSTÈME	CODE	DESCRIPTION	COMMANDER 800	COMMANDER 1000	COMMANDER LTD 1000	COMMANDER MAX	COMMANDER MAX LTD
			1	2	3	4	5
01	**00**	**NO LABOR INVOLVED AUCUNE MAIN D'OEUVRE**	**0**	**0**	**0**	**0**	**0**
01 *	01	REMOVE AND REPLACE ENGINE (ASS'Y) REMPLACEMENT DU MOTEUR (COMPLET)	5.5	5.5	5.5	6.1	6.1
01	03	OIL PRESSURE SWITCH INTERRUPTEUR DE PRESSION D'HUILE	0.4	0.4	0.4	0.4	0.4
01	08	FAN AND/OR FAN SUPPORT VENTILATEUR ET/OU SUPPORT DE VENTILATEUR	1.1	1.1	1.1	1.1	1.1
01	18	SENDER TEMPERATURE (ENGINE) CAPTEUR DE TEMPÉRATURE (MOTEUR)	0.4	0.4	0.4	0.4	0.4
01	19	THERMOSTAT THERMOSTAT	1.0	1.0	1.0	1.0	1.0
01	21	COOLANT HOSE T-FITTING (ONE OR TWO) BOYAU DE LIQUIDE DE REFROIDISSEMENT RACCORD EN T (1 OU 2)	1.0	1.0	1.0	1.0	1.0
01	37	RADIATOR INLET HOSE BOYAU D'ENTRÉE DU RADIATEUR	0.6	0.6	0.6	0.6	0.6
01	38	WATER PUMP SHAFT (ALL PARTS) ARBRE DE POMPE À L'EAU (TOUTES LES PIÈCES)	6.4	6.4	6.4	7.0	7.0
01	45	ENGINE DAMPERS (1 OR ALL) TAMPONS ANTI-VIBRATION (1 OU TOUS)	5.6	5.6	5.6	5.6	5.6
01	46	RADIATOR AND/OR GROMMMET RADIATEUR ET/OU PASSE-FILS	1.1	1.1	1.1	1.1	1.1
01	50	CRANKSHAFT AND/OR BEARINGS (FRONT/REAR) VILEBREQUIN ET/OU ROULEMENTS (AVANT/ARRIÈRE)	7.5	7.5	7.5	8.1	8.1
01	56	CRANKCASE COVER GASKET JOINT DE COUVERCLE DE CARTER	2.0	2.0	2.0	2.2	2.2
01	57	PTO CRANKCASE COVER COUVERCLE DE CARTER PDM	2.0	2.0	2.0	2.2	2.2
01	58	INTAKE OR EXHAUST VALVE GUIDE (1) GUIDE DE SOUPAPE D'ADMISSION OU D'ÉCHAPPEMENT (1)	3.1	3.1	3.1	3.3	3.3
01	59	INTAKE OR EXHAUST VALVE GUIDE (2) GUIDE DE SOUPAPE D'ADMISSION OU D'ÉCHAPPEMENT (2)	3.2	3.2	3.2	3.4	3.4
01	70	MUFFLER AND/OR EXHAUST GASKET AND/OR CLAMP SILENCIEUX D'ÉCHAPPEMENT ET/OU JOINT D'ÉCHAPPEMENT ET/OU BRIDE DE SERRAGE	0.3	0.3	0.3	0.3	0.3
01	71	EXHAUST MANIFOLD COLLECTEUR D'ÉCHAPPEMENT	0.8	0.8	0.8	0.8	0.8
01	73	EXHAUST MANIFOLD (REAR) CONNECTEUR D'ÉCHAPPEMENT (ARRIÈRE)	0.6	0.6	0.6	0.6	0.6
01	77	RUBBER ISOLATOR ISOLATEUR DE CAOUTCHOUC	0.5	0.5	0.5	0.5	0.5

SYSTEM SYSTÈME	CODE	DESCRIPTION	COMMANDER 800	COMMANDER 1000	COMMANDER LTD 1000	COMMANDER MAX	COMMANDER MAX LTD
			1	2	3	4	5
01	79	COOLANT HOSE (RADIATOR TO TANK) BOYAU DU SYSTÈME DE REFROIDISSEMENT (RÉSERVOIR AU RADIATEUR)	0.3	0.3	0.3	0.3	0.3
01	83	EXHAUST MANIFOLD (FRONT) CONNECTEUR D'ÉCHAPPEMENT (AVANT)	0.7	0.7	0.7	0.7	0.7
01	88	RUBBER MOUNT (MUFFLER) TAMPON D'ANCRAGE (SILENCIEUX)	0.3	0.3	0.3	0.3	0.3
01	90	ENGINE OIL FILTER FILTRE À HUILE DU MOTEUR	0.4	0.4	0.4	0.8	0.8
01	96	OIL SIEVE AND/OR O-RING AND/OR COLLECTOR AND/OR RUBBER RING AND/OR COVER CRIBLE D'HUILE ET/OU JOINT TORIQUE ET/OU COLLECTEUR ET/OU ANNEAU DE CAOUTCHOUC ET/OU COUVERCLE	7.5	7.5	7.5	8.1	8.1
01	98	COOLING RESERVOIR RÉSERVOIR D'ANTIGEL	0.4	0.4	0.4	0.4	0.4
01	100	RADIATOR OUTLET HOSE BOYAU DE SORTIE DU RADIATEUR	0.6	0.6	0.6	0.6	0.6
01	101	PISTON, PIN, CIRCLIP, RINGS (1) PISTON, GOUPILLE, CIRCLIP, SEGMENTS (1)	3.1	3.1	3.1	3.5	3.5
01	102	PISTONS, PINS, CIRCLIPS, RINGS (2) PISTONS, GOUPILLES, CIRCLIPS, SEGMENTS (2)	4.9	4.9	4.9	5.4	5.4
01	109	VALVE COVER AND/OR GASKET COUVERCLE DE SOUPAPE ET/OU JOINT D'ÉTANCHÉITÉ	0.4	0.4	0.4	0.4	0.4
01	111	TIMING GEAR PIGNON DE DISTRIBUTION	1.6	1.6	1.6	1.6	1.6
01	113	ROCKER ARM AND/OR PUSH ROD AND/OR ROCKER ARM SHAFT CULBUTEUR ET/OU TIGE POUSSOIR ET/OU ARBRE DE CULBUTEUR	1.7	1.7	1.7	1.7	1.7
01	114	CYLINDER HEAD AND/OR GASKET CULASSE ET/OU JOINT D'ÉTANCHÉITÉ	3.8	3.8	3.8	4.2	4.2
01	116	EXHAUST AND/OR INLET VALVE AND/OR SPRING AND/OR SEAL VALVE ADMISSION ET/OU ÉCHAPPEMENT ET/OU RESSORT ET/OU ANNEAU D'ÉTANCHÉITÉ	3.0	3.0	3.0	3.4	3.4
01	117	CYLINDER AND/OR GASKET CYLINDRE ET/OU JOINT D'ÉTANCHÉITÉ	3.0	3.0	3.0	3.4	3.4
01	119	WATER PUMP HOUSING AND/OR IMPELLER CARTER DE LA POMPE À EAU ET/OU ROUE À AILETTES	0.7	0.7	0.7	0.7	0.7
01	132	OIL PUMP GEAR ENGRENAGE DE LA POMPE À HUILE	2.1	2.1	2.1	2.3	2.3
01	133	OIL PIPE TUYAU À L'HUILE	0.4	0.4	0.4	0.4	0.4
01	134	CAMSHAFT ARBRE À CAME	2.6	2.6	2.6	3.0	3.0

SYSTEM SYSTÈME	CODE	DESCRIPTION	COMMANDER 800	COMMANDER 1000	COMMANDER LTD 1000	COMMANDER MAX	COMMANDER MAX LTD
			1	2	3	4	5
01	137	OIL PUMP COVER AND/OR SHAFT AND/OR ROTOR COUVERCLE DE LA POMPE À HUILE ET/OU ARBRE ET/OU ROTOR	2.1	2.1	2.1	2.3	2.3
01	138	CRANKCASE RESEAL OR GASKET RECELLEMENT DU CARTER ET/OU JOINT D'ÉTANCHÉITÉ	7.5	7.5	7.5	8.1	8.1
01	139	CRANKCASE REPLACEMENT REMPLACEMENT DU CARTER	8.0	8.0	8.0	8.6	8.6
01	152	DRIVE SHAFT AND/OR BEARINGS AND/OR SEALS ARBRE D'ENTRAÎNEMENT ET/OU ROULEMENT À BILLES ET/OU ANNEAUX D'ÉTANCHÉITÉ	6.5	6.5	6.5	7.1	7.1
01	154	TIMING CHAIN CHAÎNE D'ENGRENAGE	3.4	3.4	3.4	3.8	3.8
01	179	CHAIN GUIDE GUIDE DE CHAÎNE	1.4	1.4	1.4	1.6	1.6
01	182	OIL RADIATOR AND/OR O-RING RADIATEUR D'HUILE ET/OU JOINT D'ÉTANCHÉITÉ		2.0	2.0	2.1	2.1
01	191	CHAIN TENSION GUIDE GUIDE DE TENSION DE CHAÎNE	3.4	3.4	3.4	3.6	3.6
01	192	CHAIN TENSIONER (ASS'Y) TENDEUR DE CHAÎNE (COMPLET)	0.4	0.4	0.4	0.4	0.4
01	200	WATER PUMP GEAR ENGRENAGE DE LA POMPE À EAU	2.1	2.1	2.1	2.5	2.5
01	201	PLUG, COMPRESSION SPRING, PRESSURE RETAINER AND BALL VIS, RESSORT DE COMPRESSION, SOUPAPE DE RETENUE ET BILLE	2.0	2.0	2.0	2.4	2.4
01	205	REAR OUTPUT SHAFT SEAL ANNEAU D'ÉTANCHÉITÉ DE L'ARBRE DE SORTIE ARRIÈRE	6.0	6.0	6.0	6.6	6.6
01	215	OIL DIPSTICK JAUGE À HUILE	0.3	0.3	0.3	0.3	0.3
01	216	PRESSURE CAP BOUCHON À PRESSION	0.3	0.3	0.3	0.3	0.3
01	217	ENGINE BRACKET AND/OR RUBBER MOUNT ATTACHE MOTEUR ET/OU TAMPON D'ANCRAGE	0.4	0.4	0.4	0.4	0.4
01	220	MAIN DRIVE GEAR AND/OR PIN ROUAGE D'ENTRAÎNEMENT PRINCIPALE ET/OU GOUPILLE	2.1	2.1	2.1	2.5	2.5
01	221	INTERMEDIATE GEAR AND/OR PIN AND/OR THRUST WASHER ROUAGE INTERMEDIAIRE ET/OU GOUPILLE ET/OU RONDELLE D'APPUI	2.1	2.1	2.1	2.5	2.5
01	223	FRONT OUTPUT SHAFT SEAL ANNEAU ÉTANCHÉITÉ ARBRE SORTIE AVANT	4.0	4.0	4.0	4.4	4.4
01	245	OUTPUT CRANKSHAFT SEAL (PTO SIDE) ANNEAU ÉTANCHÉITÉ SORTIE VILEBREQUIN (CÔTÉ PDM)	1.3	1.3	1.3	1.3	1.3
01	246	WATER PUMP GEAR AND/OR SEAL ARBRE POMPE À EAU ET/OU JOINT ÉTANCHÉITÉ	6.4	6.4	6.4	7.0	7.0

SYSTEM SYSTÈME	CODE	DESCRIPTION	COMMANDER 800	COMMANDER 1000	COMMANDER LTD 1000	COMMANDER MAX	COMMANDER MAX LTD
			1	2	3	4	5
01	247	REED VALVE AND/OR STOPPER SOUPAPE À CLAPET ET/OU BUTOIR	2.1	2.1	2.1	2.3	2.3
01	248	BREATHER GEAR AND/OR V-RING RENIFLARD ET/OU ANNEAU ÉTANCHÉITÉ EN «V»	2.1	2.1	2.1	2.3	2.3
01	255	EXHAUST AND/OR INLET VALVES AND/OR SPRINGS AND/OR SEALS (4) ÉCHAPPEMENT ET/OU VALVES ADMISSION ET/OU RESSORTS ET/OU ANNEAUX D'ÉTANCHÉITÉ (4)	3.6	3.6	3.6	4.0	4.0
01	256	EXHAUST AND/OR INLET VALVES AND/OR SPRINGS AND/OR SEALS (8) ÉCHAPPEMENT ET/OU VALVES ADMISSION ET/OU RESSORTS ET/OU ANNEAUX D'ÉTANCHÉITÉ (8)	6.2	6.2	6.2	6.8	6.8
01	261	TIMING CHAIN (MAG SIDE) CHAÎNE D'ENGRENAGE (CÔTÉ MAG)	3.2	3.2	3.2	3.6	3.6
01	264	LONG BLOCK ENSEMBLE CARTER - CYLINDRE - CULASSE	7.4	7.4	7.4	8.0	8.0
01	301	WATER PUMP DYNAMIC SEAL AND/OR OIL SEAL ANNEAU D'ÉTANCHÉITÉ DYNAMIQUE DE LA POMPE À EAU	2.5	2.5	2.5	2.9	2.9
01	303	TIMING CHAINS (ALL) CHAÎNES D'ENGRENAGE (TOUTES)	5.5	5.5	5.5	6.0	6.0
01	304	CHAINS TENSION GUIDE (ALL) GUIDE DE TENSION DE CHAÎNES (TOUS)	5.5	5.5	5.5	6.0	6.0
01	305	CHAINS GUIDE (ALL) GUIDE DE CHAÎNES (TOUS)	2.1	2.1	2.1	2.5	2.5
01	307	VALVE COVERS AND/OR GASKETS (2) COUVERCLES SOUPAPE ET/OU JOINTS D'ÉTANCHÉITÉ (2)	0.7	0.7	0.7	0.9	0.9
01	308	CYLINDER HEAD GASKET (1) JOINT D'ÉTANCHÉITÉ DE LA CULASSE (1)	2.0	2.0	2.0	2.2	2.2
01	309	CYLINDER HEAD GASKETS (2) JOINTS D'ÉTANCHÉITÉ DE LA CULASSE (2)	2.7	2.7	2.7	3.1	3.1
01	319	MUFFLER COVER COUVRE SILENCIEUX	0.3	0.3	0.3	0.3	0.3
01	320	THROTTLE PEDAL PÉDALE D'ACCÉLÉRATEUR	0.4	0.4	0.4	0.4	0.4
01	334	FILLER NECK AND/OR HOSE GOULOT DE REMPLISSAGE ET/OU BOYAU	0.8	0.8	0.8	0.8	0.8
01	335	COOLANT HOSE (WATER PUMP) BOYAU DE REFROIDISSEMENT (POMPE À EAU)		1.5	1.5	1.9	1.9
01	336	COOLANT HOSE (ENGINE INLET) BOYAU DE REFROIDISSEMENT (ENTRÉE DU MOTEUR)		1.5	1.5	1.9	1.9
01	337	RECIRCULATION HOSE BOYAU DE RECIRCULATION		0.7	0.7	0.9	0.9
01	338	INTERMEDIATE HOSE BOYAU INTERMÉDIAIRE		0.7	0.7	0.9	0.9

ENGINE SYSTEM
SYSTÈME MOTEUR

SYSTEM SYSTÈME	CODE	DESCRIPTION	COMMANDER 800	COMMANDER 1000	COMMANDER LTD 1000	COMMANDER MAX	COMMANDER MAX LTD
			1	2	3	4	5
01	340	PLUG SCREW BOUCHON FILETÉ	0.7	0.7	0.7	0.9	0.9
01	352	OXYGEN SENSOR CAPTEUR D'OXYGEN	0.4	0.4	0.4	0.4	0.4
01	353	INSECTORS (ALL) INSECTEURS (TOUS)	1.0	1.0	1.0	1.2	1.2

800/1000

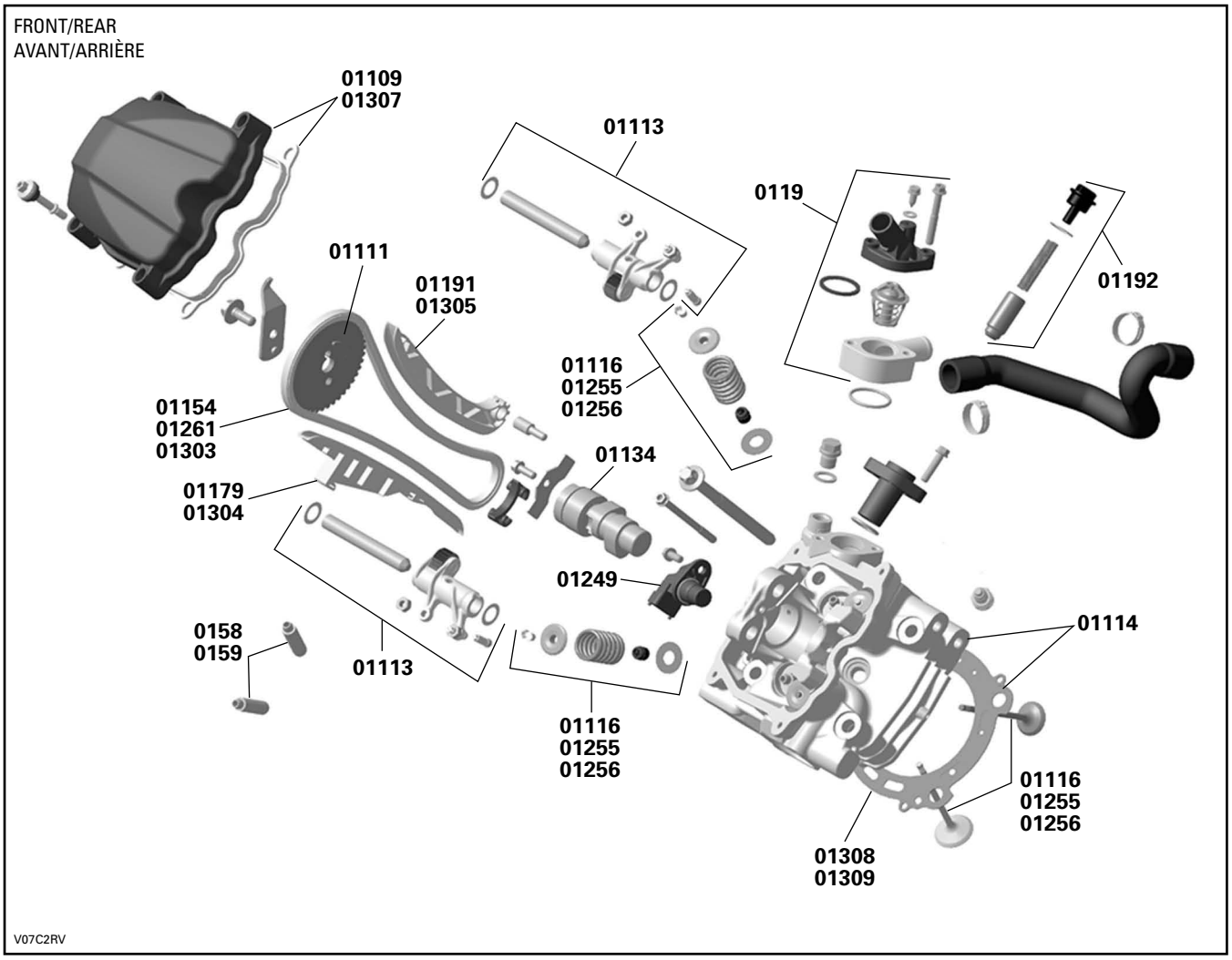
FRONT/REAR
AVANT/ARRIÈRE
01109
01307
01113
0119
01111
01191
01305
01192
01116
01255
01256
01154
01261
01303
01134
01179
01304
01249
01114
0158
0159
01113
01116
01255
01256
01116
01255
01256
01308
01309
V07C2RV

800/1000

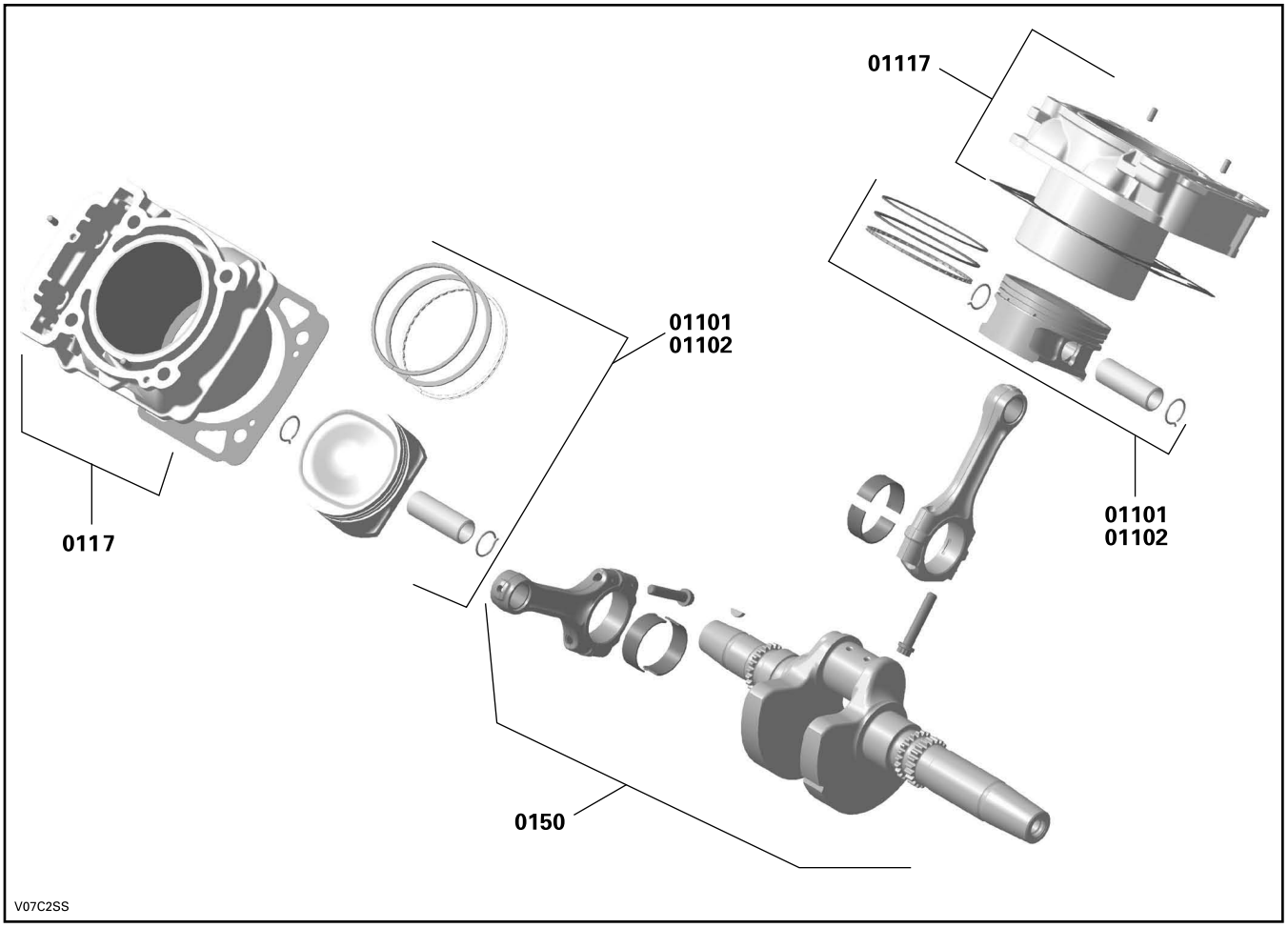

800/1000

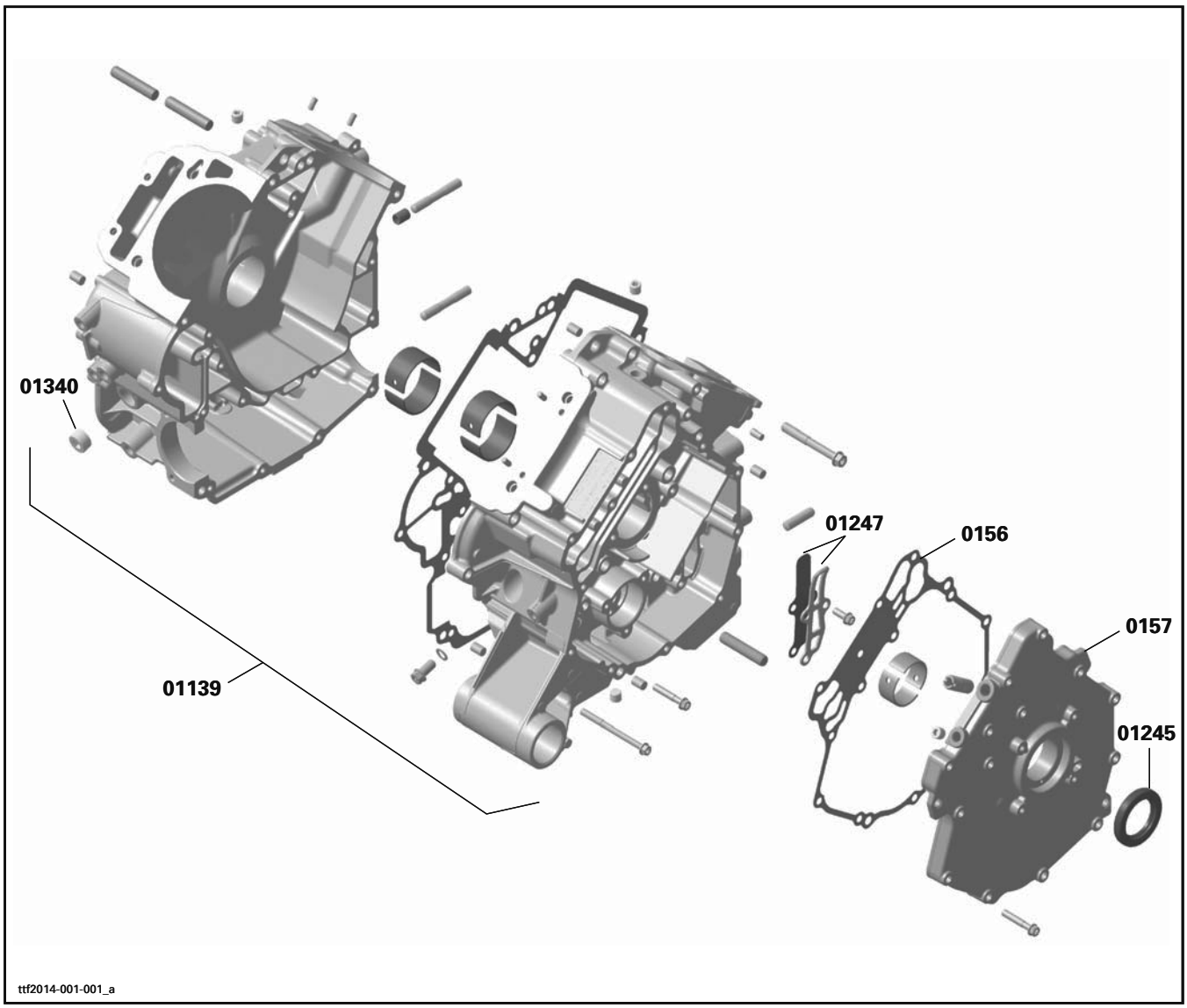

800

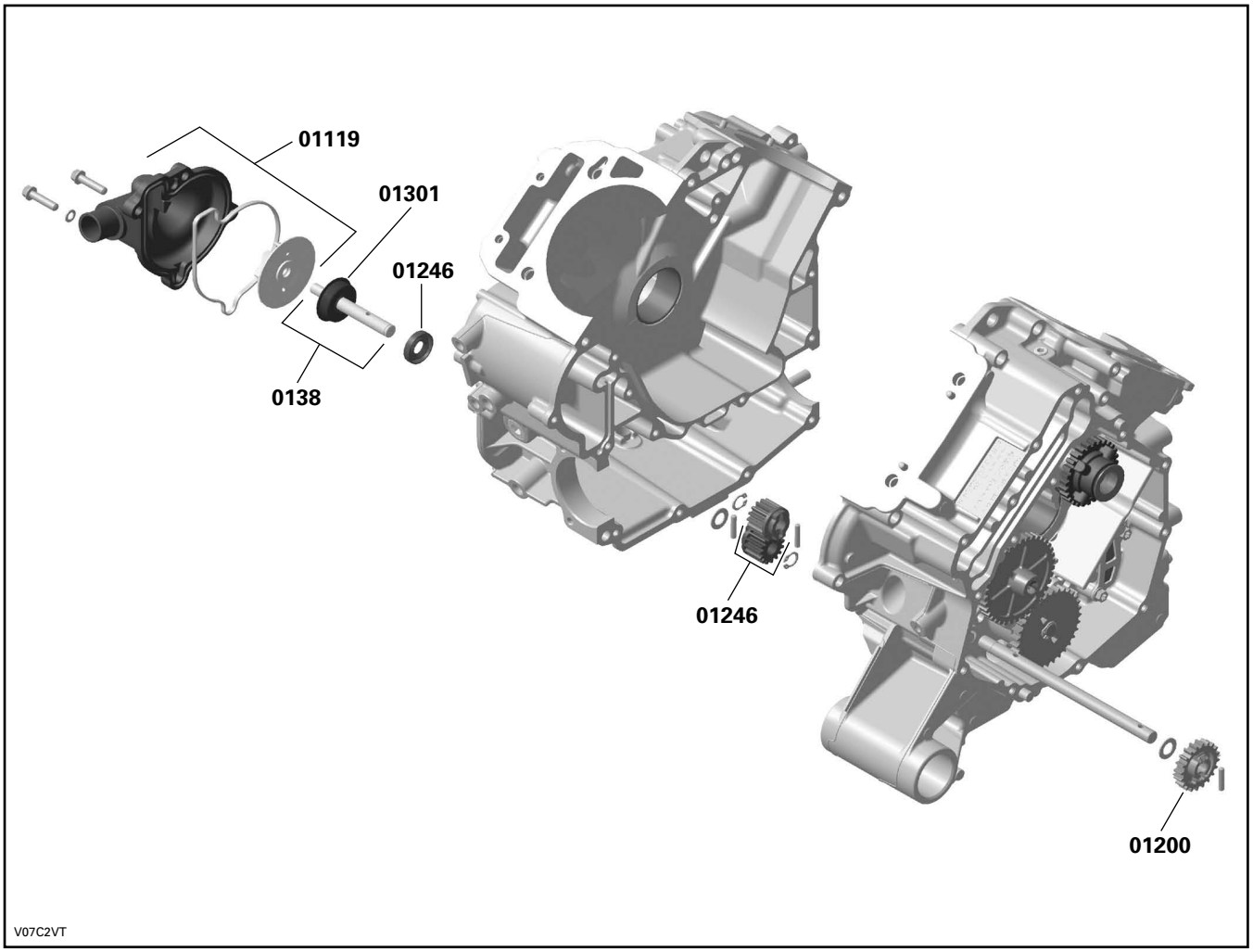

1000

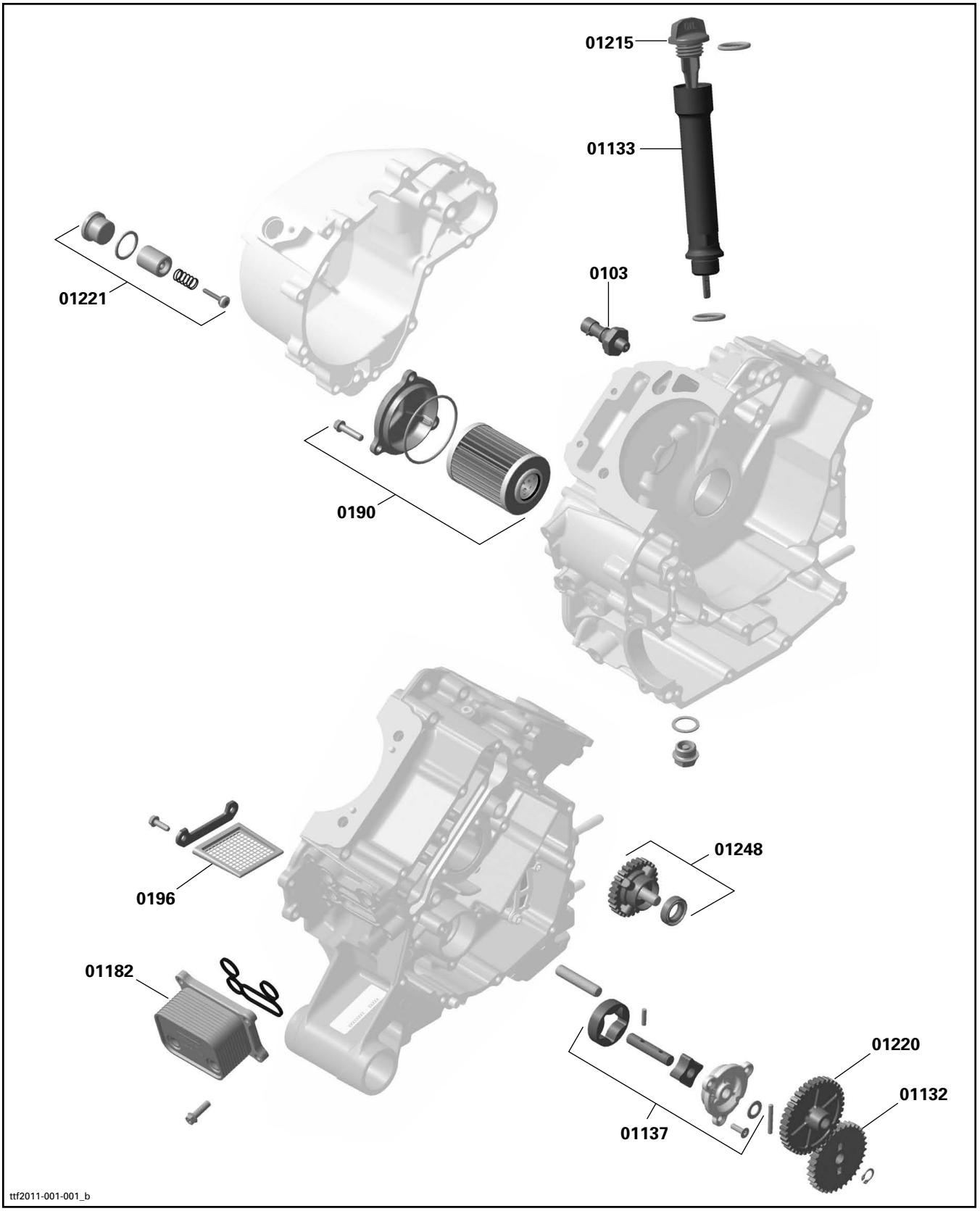
01215
01133
0103
01221
0190
0196
01248
01182
01220
01132
01137
ttf2011-001-001_b

1000

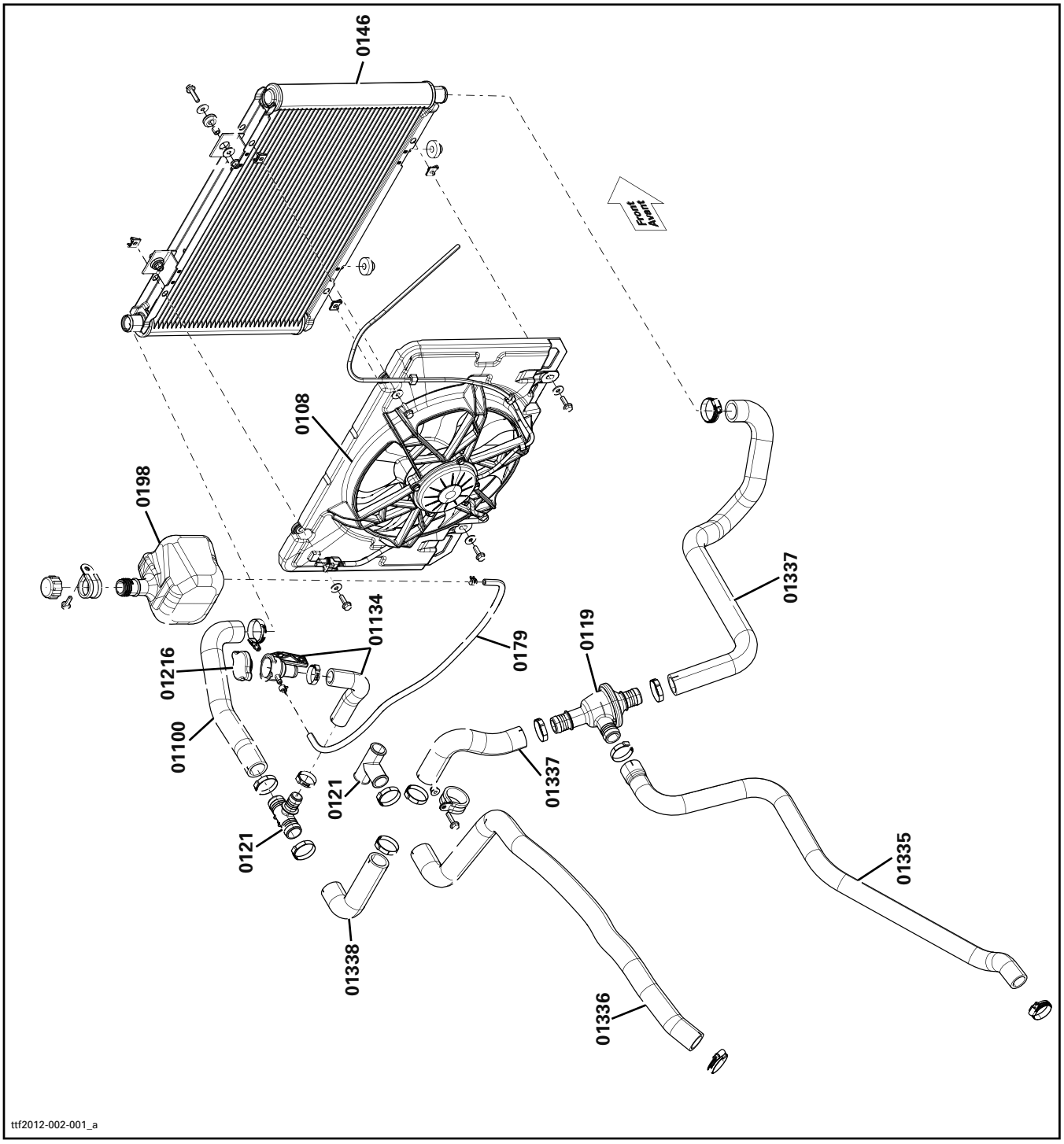
0146
FRONT
AVANT
0108
0198
01337
01134
0179
0119
01216
01100
01337
0121
0121
01335
01338
01336
ttf2012-002-001_a

800

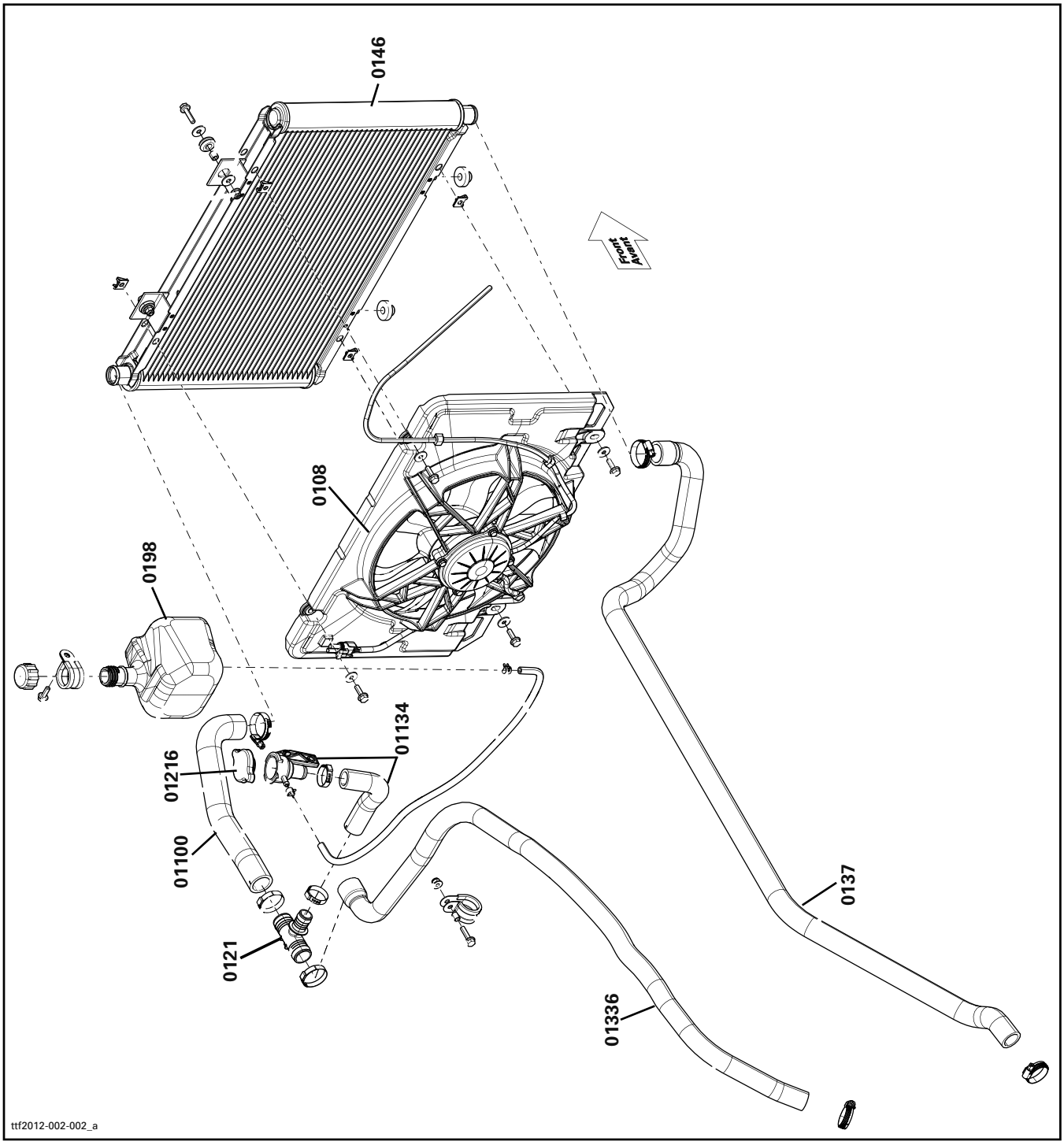
0146
Front
Avant
0108
0198
01134
01216
01100
0121
0137
01336
ttf2012-002-002_a

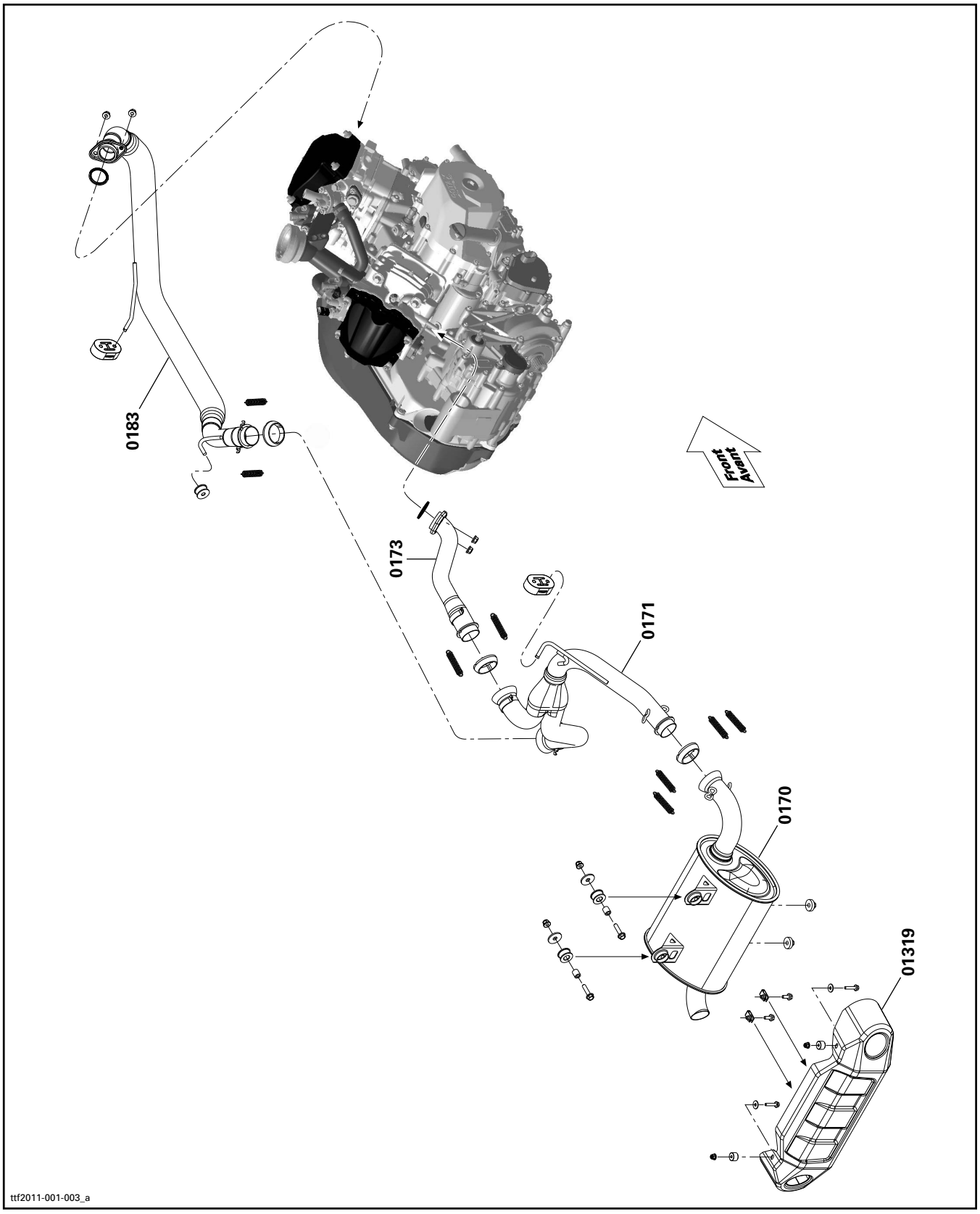
0183
0173
0171
0170
01319
Front
Avant
ttf2011-001-003_a

800/1000

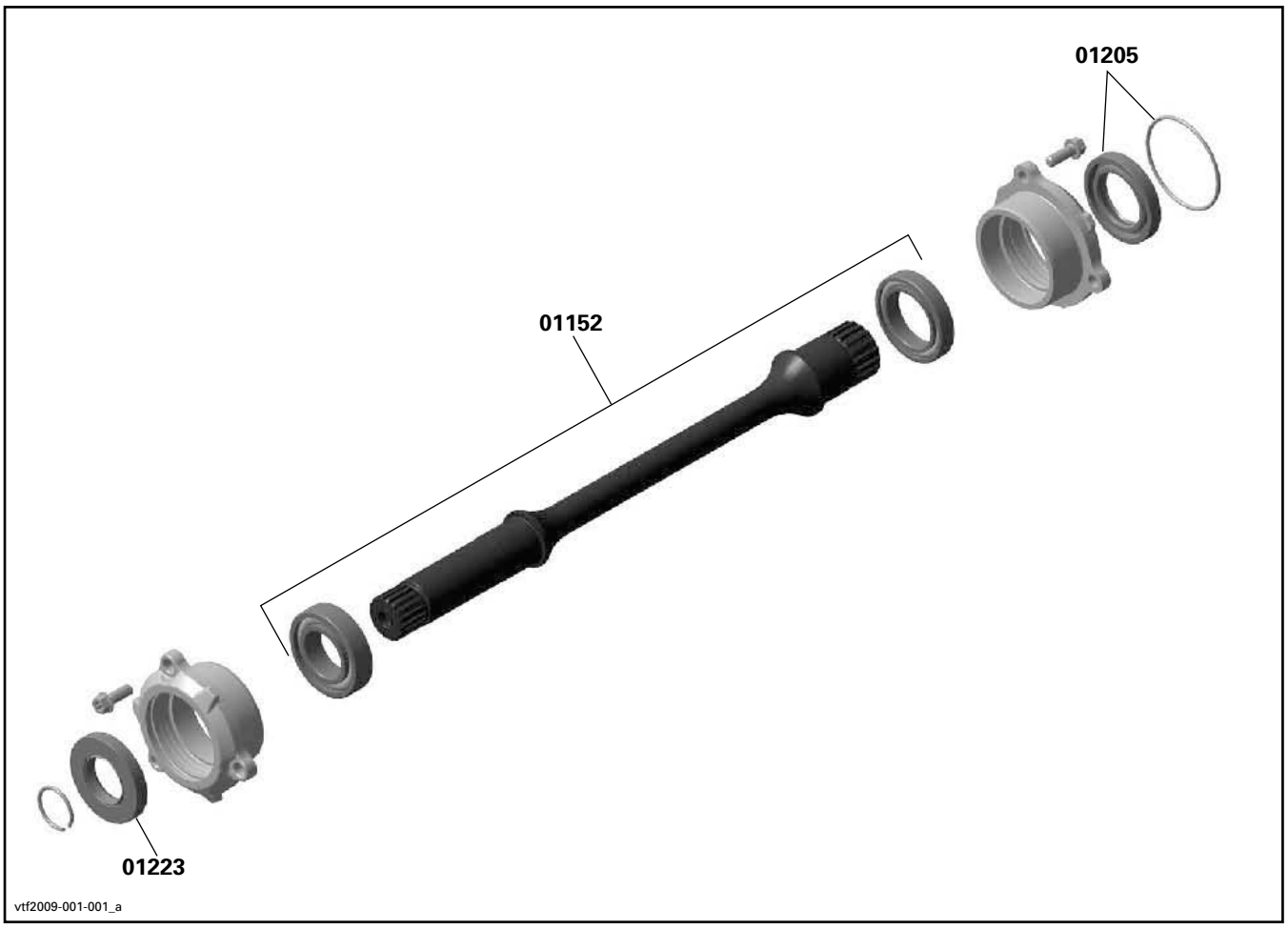

INTAKE AND FUEL SYSTEM
ADMISSION ET SYSTÈME D'ALIMENTATION D'ESSENCE

SYSTEM SYSTÈME	CODE	DESCRIPTION	COMMANDER 800	COMMANDER 1000	COMMANDER LTD 1000	COMMANDER MAX	COMMANDER MAX LTD
			1	2	3	4	5
02	**00**	**NO LABOR INVOLVED AUCUNE MAIN D'OEUVRE**	**0**	**0**	**0**	**0**	**0**
02	01	AIR INTAKE SILENCER (ASS'Y) SILENCIEUX D'ADMISSION D'AIR (COMPLET)	1.1	1.1	1.1	1.1	1.1
02	16	INTAKE ADAPTOR ADAPTATEUR D'ADMISSION	0.7	0.7	0.7	0.7	0.7
02	19	AIR INTAKE TUBE TUYAU D'ADMISSION D'AIR	0.4	0.4	0.4	0.4	0.4
02	23	REAR AIR INTAKE TUBE AND/OR SLEEVE TUYAU D'ADMISSION D'AIR ARRIÈRE ET/OU DOUILLE	0.7	0.7	0.7	0.7	0.7
02	46	AIR TEMPERATURE SENSOR CAPTEUR DE TEMPÉRATURE D'AIR	0.6	0.6	0.6	0.6	0.6
02	57	FUEL FILTER FILTRE À ESSENCE	0.9	0.9	0.9	0.9	0.9
02	58	FUEL TANK RÉSERVOIR D'ESSENCE	1.1	1.1	1.1	1.1	1.1
02	59	INTAKE COVER AND/OR SEAL COUVERCLE D'ADMISSION ET/OU JOINT D'ÉTANCHÉITÉ	0.3	0.3	0.3	0.3	0.3
02	60	FUEL CAP BOUCHON DU RÉSERVOIR À ESSENCE	0.3	0.3	0.3	0.3	0.3
02	69	AIR FILTER FILTRE À AIR	0.3	0.3	0.3	0.3	0.3
02	72	INTAKE MANIFOLD CONNECTEUR D'ADMISSION	1.1	1.1	1.1	1.1	1.1
02	79	FUEL RAIL (1 OR 2) RAMPE D'ESSENCE (1 OU 2)	1.0	1.0	1.0	1.2	1.2
02	81	THROTTLE BODY (ASS'Y) CARTER ACCÉLÉRATEUR (COMPLET)	1.1	1.1	1.1	1.3	1.3
02	89	FUEL PUMP MODULE MODULE POMPE À ESSENCE	0.9	0.9	0.9	0.9	0.9
02	94	FEMALE QUICK FITTING CONNECTEUR RAPIDE FEMELLE	0.4	0.4	0.4	0.4	0.4
02	99	FUEL INJECTION HOSE (ASS'Y) BOYAU À INJECTION D'ESSENCE (COMPLET)	0.8	0.8	0.8	1.0	1.0
02	112	AIR SILENCER SUPPORT SUPPORT DU SILENCIEUX D'ADMISSION	0.7	0.7	0.7	0.7	0.7
02	115	PLENUM CHAMBRE D'AIR	1.1	1.1	1.1	1.3	1.3
02	119	CHECK VALVE SOUPAPE DE RETENUE	0.3	0.3	0.3	0.3	0.3

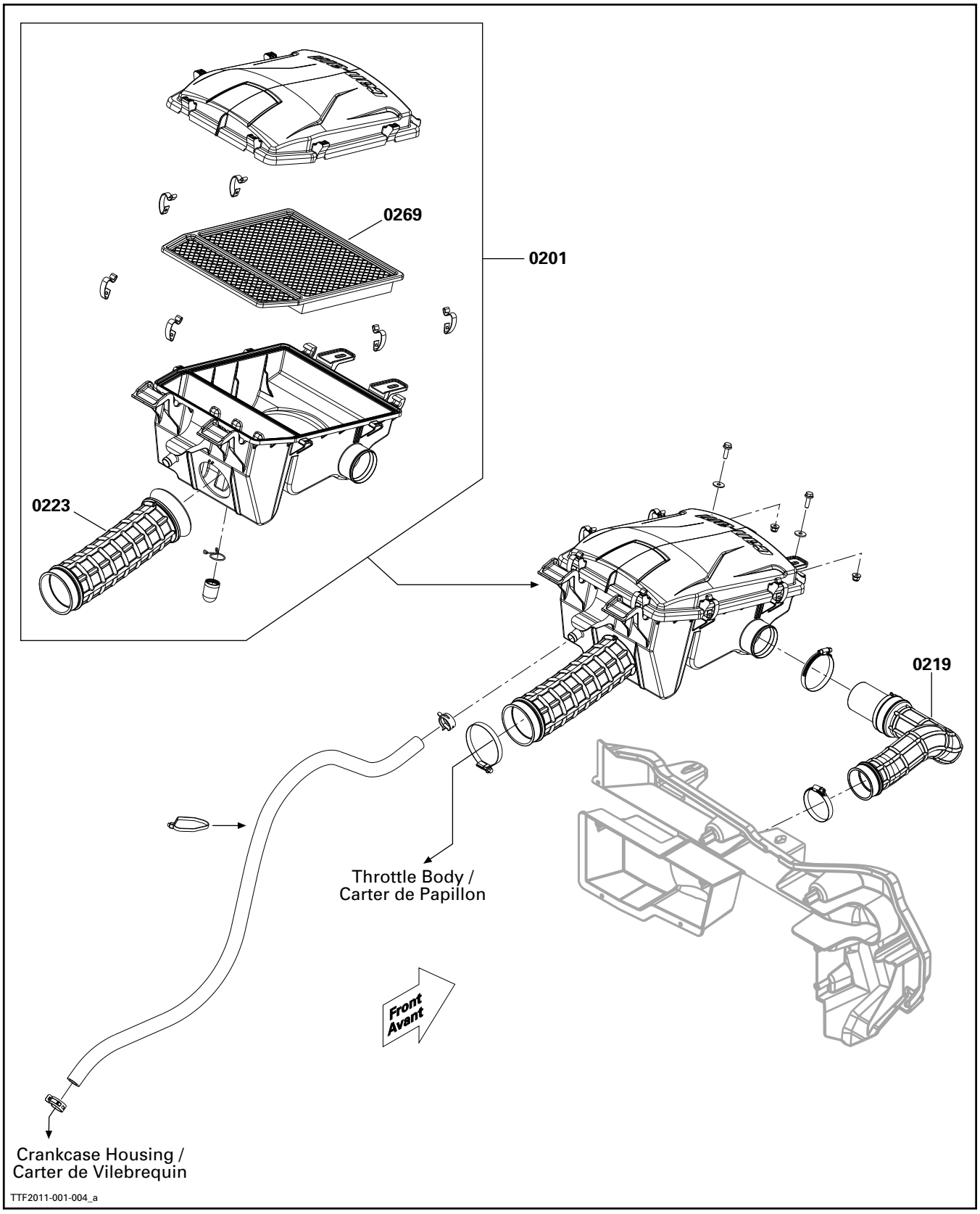
0269
0201
0223
0219
Throttle Body /
Carter de Papillon
Front
Avant
Crankcase Housing /
Carter de Vilebrequin
TTF2011-001-004_a

INTAKE AND FUEL SYSTEM
ADMISSION ET SYSTÈME D'ALIMENTATION D'ESSENCE

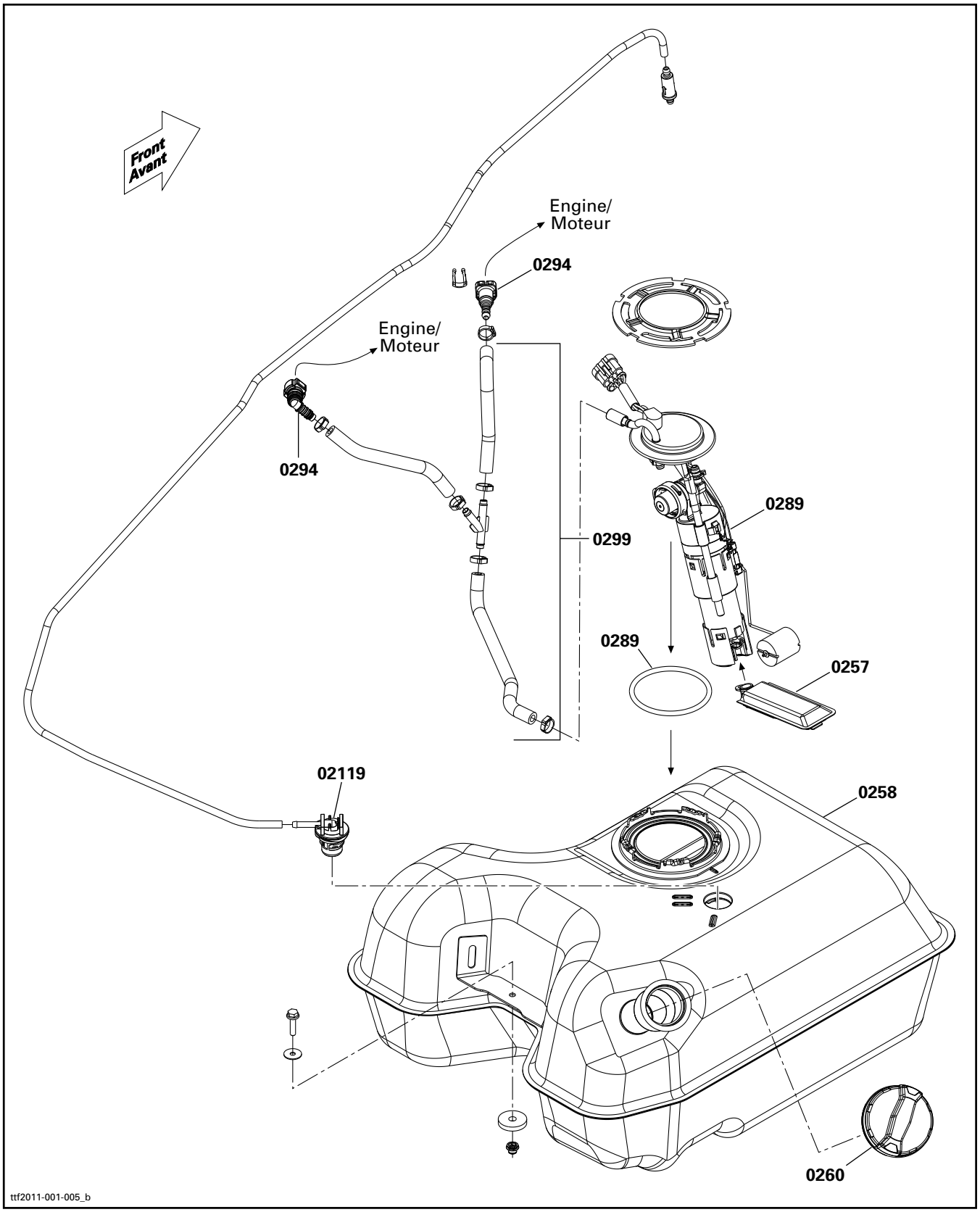

1000

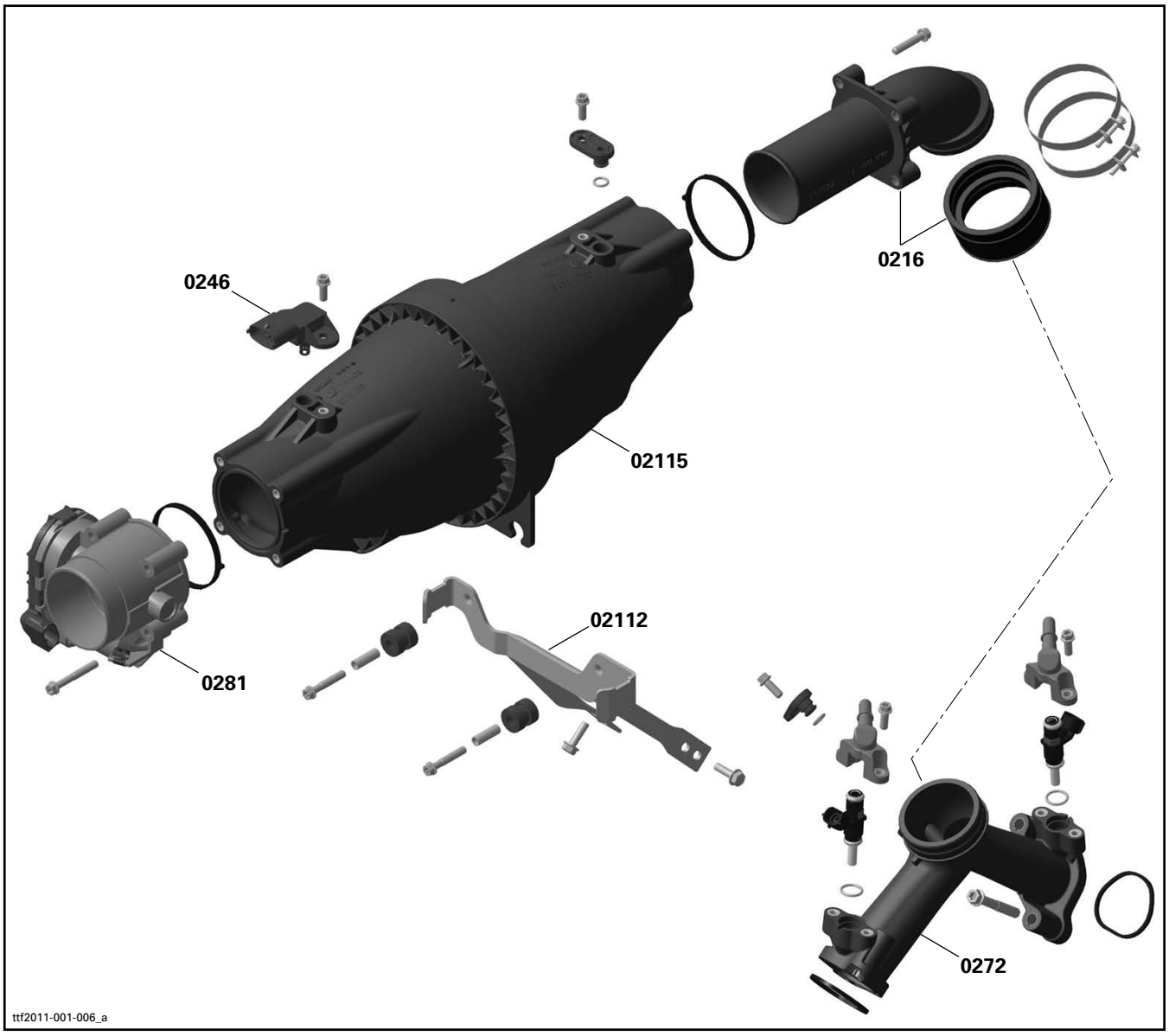

SYSTEM SYSTÈME	CODE	DESCRIPTION	COMMANDER 800	COMMANDER 1000	COMMANDER LTD 1000	COMMANDER MAX	COMMANDER MAX LTD
			1	2	3	4	5
03	**00**	**NO LABOR INVOLVED AUCUNE MAIN D'OEUVRE**	**0**	**0**	**0**	**0**	**0**
03	02	MAGNETO (ASS'Y) MAGNÉTO (COMPLET)	2.3	2.3	2.3	2.7	2.7
03	08	IGNITION COIL (EACH) BOBINE D'ALLUMAGE (CHAQUE)	0.5	0.5	0.5	0.5	0.5
03	10	IGNITION CABLE CÂBLE D'ALLUMAGE	0.4	0.4	0.4	0.4	0.4
03	27	STATOR (ASS'Y) STATOR (COMPLET)	2.1	2.1	2.1	2.5	2.5
03	32	MAGNETO COVER COUVERCLE DE MAGNETO	2.1	2.1	2.1	2.5	2.5
03	33	MAGNETO GASKET COVER JOINT D'ÉTANCHÉITÉ DU COUVERCLE DE MAGNETO	2.0	2.0	2.0	2.4	2.4

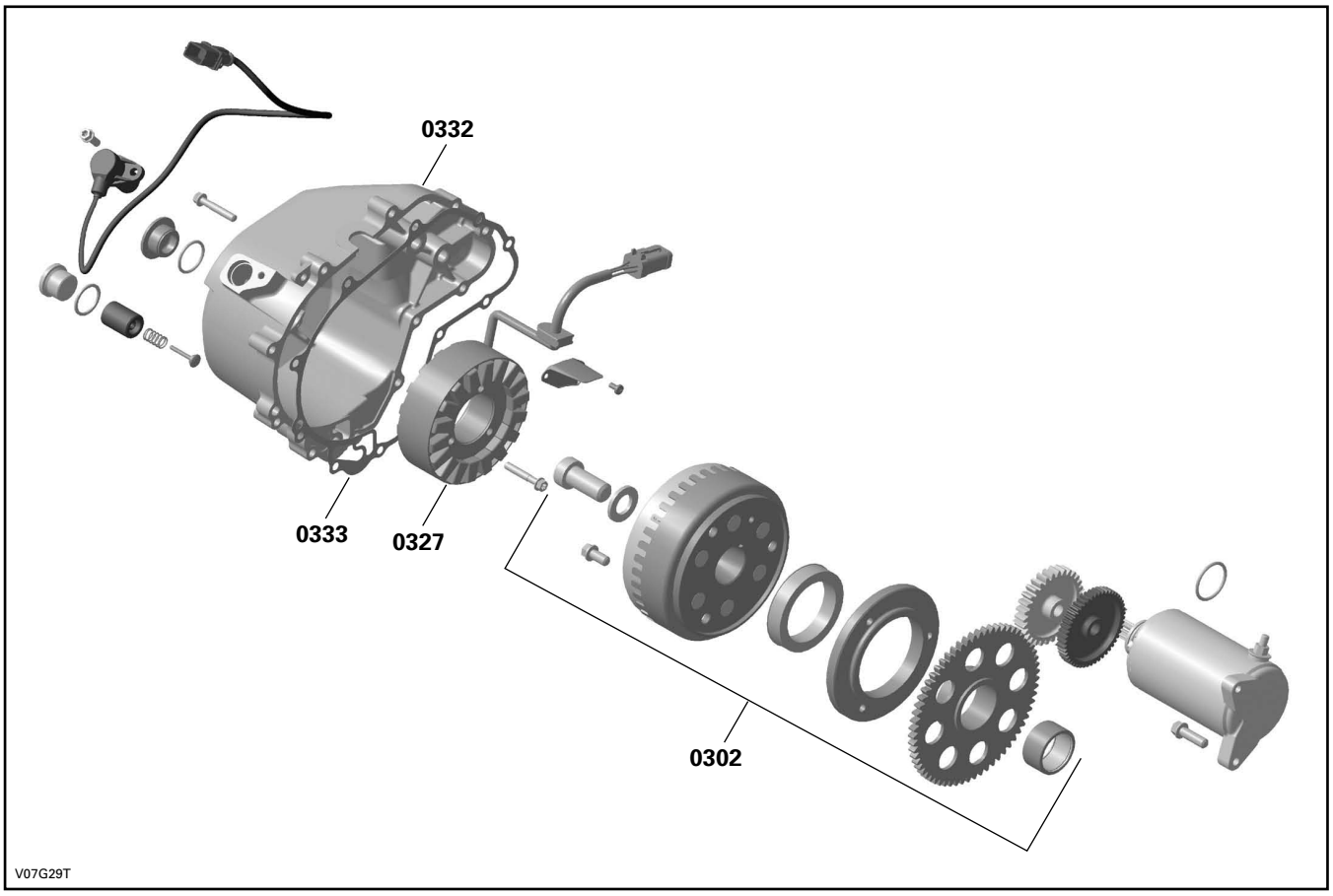
0332
0333
0327
0302
V07G29T

STARTER SYSTEM
SYSTÈME DE DÉMARREUR

SYSTEM SYSTÈME	CODE	DESCRIPTION	COMMANDER 800	COMMANDER 1000	COMMANDER LTD 1000	COMMANDER MAX	COMMANDER MAX LTD
			1	2	3	4	5
04	**00**	**NO LABOUR INVOLVED AUCUNE MAIN-D'OEUVRE**	**0**	**0**	**0**	**0**	**0**
04	02	ELECTRIC STARTER (ASS'Y) DÉMARREUR (COMPLET)	0.6	2.0	2.0	2.4	2.4
04	03	STARTER RELAY SOLÉNOÏDE DE DÉMARRAGE	0.3	0.3	0.3	0.3	0.3
04	19	STARTER DRIVE LANCEUR DÉMARREUR	2.3	2.3	2.3	2.7	2.7

SYSTEM SYSTÈME	CODE	DESCRIPTION	COMMANDER 800	COMMANDER 1000	COMMANDER LTD 1000	COMMANDER MAX	COMMANDER MAX LTD
			1	2	3	4	5
05	**00**	**NO LABOR INVOLVED AUCUNE MAIN-D'OEUVRE IMPLIQUÉE**	**0**	**0**	**0**	**0**	**0**
05	12	DRIVEN PULLEY SLIDING HALF DEMI-POULIE MENÉE COULISSANTE	1.3	1.3	1.3	1.5	1.5
05	19	BELT COURROIE	1.2	1.2	1.2	1.4	1.4
05	55	LEVER BUTTON BOUTON DE LEVIER	0.3	0.3	0.3	0.3	0.3
05	56	LEVER (ASS'Y) AND/OR LEVER SPRING LEVIER (COMPLET) ET/OU RESSORT DE LEVIER	0.6	0.6	0.6	0.6	0.6
05	59	SPEED SENSOR CAPTEUR DE VITESSE	0.6	0.6	0.6	1.0	1.0
05	66	GEARSHIFT LEVER LEVIER D'EMBRAYAGE	0.5	0.5	0.5	0.5	0.5
05	78	CVT COVER COUVERCLE CVC	1.1	1.1	1.1	1.3	1.3
05	79	GASKET JOINT D'ÉTANCHÉITÉ	1.1	1.1	1.1	1.3	1.3
05	80	GOVERNOR CUP COUPOLE RÉGULATEUR	1.4	1.4	1.4	1.6	1.6
05	81	ONE WAY CLUTCH, FLANGE, RING, SPRING EMBRAYAGE À ROUE LIBRE, FLASQUE, ANNEAU, RESSORT	1.4	1.4	1.4	1.6	1.6
05	82	DRIVE PULLEY (ASS'Y) POULIE MOTRICE (COMPLET)	1.5	1.5	1.5	1.7	1.7
05	83	DRIVE PULLEY FIXED HALF POULIE MOTRICE FIXE	1.5	1.5	1.5	1.7	1.7
05	84	DRIVEN PULLEY OUTER CAM AND/OR SPRING CAME DE POULIE MENÉE EXTERNE ET/OU RESSORT	1.3	1.3	1.3	1.5	
05	85	CENTRIFUGAL LEVER LEVIER CENTRIFUGE	1.6	1.6	1.6	1.8	
05	86	SLIDER SHOES GLISSIÈRES	1.4	1.4	1.4	1.6	
05	89	REMOVE AND REPLACE TRANSMISSION ASS'Y REMPLACEMENT DE LA TRANSMISSION (COMPLET)	5.9	5.9	5.9	6.5	
05	91	MAIN SHAFT (ASS'Y) ARBRE DE RENVOI (COMPLET)	6.5	6.5	6.5	7.1	
05	95	AIR INTAKE (CVT) ENTRÉE D'AIR (CVC)	0.5	0.5	0.5	0.7	
05	96	AIR OUTLET (CVT) SORTIE D'AIR (CVC)	0.5	0.5	0.5	0.7	
05	97	FLEXIBLE ADAPTOR ADAPTATEUR FLEXIBLE	0.5	0.5	0.5	0.7	

TRANSMISSION AND LINKAGE SYSTEM
SYSTÈME DE TRANSMISSION ET DE TRINGLERIE

SYSTEM SYSTÈME	CODE	DESCRIPTION	COMMANDER 800	COMMANDER 1000	COMMANDER LTD 1000	COMMANDER MAX	COMMANDER MAX LTD
			1	2	3	4	5
05	98	CAM, PLATE, DRIVEN SHAFT, SPRING CAME, PLAQUE, ARBRE POULIE MENÉE, RESSORT	1.3	1.3	1.3	1.5	1.5
05	99	OUTPUT SHAFT ARBRE DE SORTIE	6.4	6.4	6.4	7.0	7.0
05	100	REAR OUTPUT SHAFT SEALS ANNEAUX ÉTANCHÉITÉ DE L'ARBRE DE SORTIE ARRIÈRE	2.3	2.3	2.3	2.9	2.9
05	101	GEARS BOX (ASS'Y)/MAIN SHAFT BOÎTE D'ENGRENAGE (COMPLET)/ARBRE PRINCIPAL	6.7	6.7	6.7	7.3	7.3
05	102	SHIFT SHAFT (ASS'Y) ARBRE D'EMBRAYAGE (COMPLET)	6.7	6.7	6.7	7.3	7.3
05	104	INDEX LEVER (ASS'Y) LEVIER D'INDEXATION (COMPLET)	6.7	6.7	6.7	7.3	7.3
05	105	MAIN SHAFT SEAL JOINT D'ÉTANCHÉITÉ DE L'ARBRE PRINCIPAL	1.9	1.9	1.9	2.4	2.4
05	107	SPACER AND/OR O-RING ENTRETOISE ET/OU JOINT TORIQUE	1.9	1.9	1.9	2.4	2.4
05	108	ACTUATOR AND/OR FORK AND/OR SEAL ACTUATEUR ET/OU FOURCHETTE ET/OU JOINT D'ÉTANCHÉITÉ	0.8	0.8	0.8	1.2	1.2
05	109	FORK AND/OR PIN FOURCHETTE ET/OU GOUPILLE	1.2	1.2	1.2	1.8	1.8
05	110	CENTER HOUSING GEAR AND/OR BEARING LOGEMENT DE TRANSMISSION CENTRE ET/OU ROULEMENT	6.7	6.7	6.7	7.3	7.3
05	111	RH HOUSING GEAR AND/OR BEARING LOGEMENT DE TRANSMISSION DROIT ET/OU ROULEMENT	6.6	6.6	6.6	7.2	7.2
05	113	SHIFTING SWITCH INTERRUPTEUR D'EMBRAYAGE	0.6	0.6	0.6	1.0	1.0
05	115	CVT AIR GUIDE AND/OR O-RINGS GUIDE D'AÉRATION ET/OU JOINT D'ÉTANCHÉITÉ	1.6	1.6	1.6	1.8	1.8
05	120	GEARBOX POSITION SENSOR CAPTEUR DE POSITION D'ENGRENAGE	0.4	0.4	0.4	1.0	1.0
05	159	PRIMARY INLET AND/OR ADAPTER ENTRÉE PRIMAIRE ET/OU ADAPTATEUR	0.3	0.3	0.3	0.3	0.3
05	160	FILTER FILTRE	0.3	0.3	0.3	0.3	0.3
05	161	SHIFTING CABLE CÂBLE D'EMBRAYAGE	1.1	1.1	1.1	1.3	1.3
05	165	DRAIN PLUG (CVT) BOUCHON DE VIDANGE (CVC)	0.4	0.4	0.4	0.4	0.4

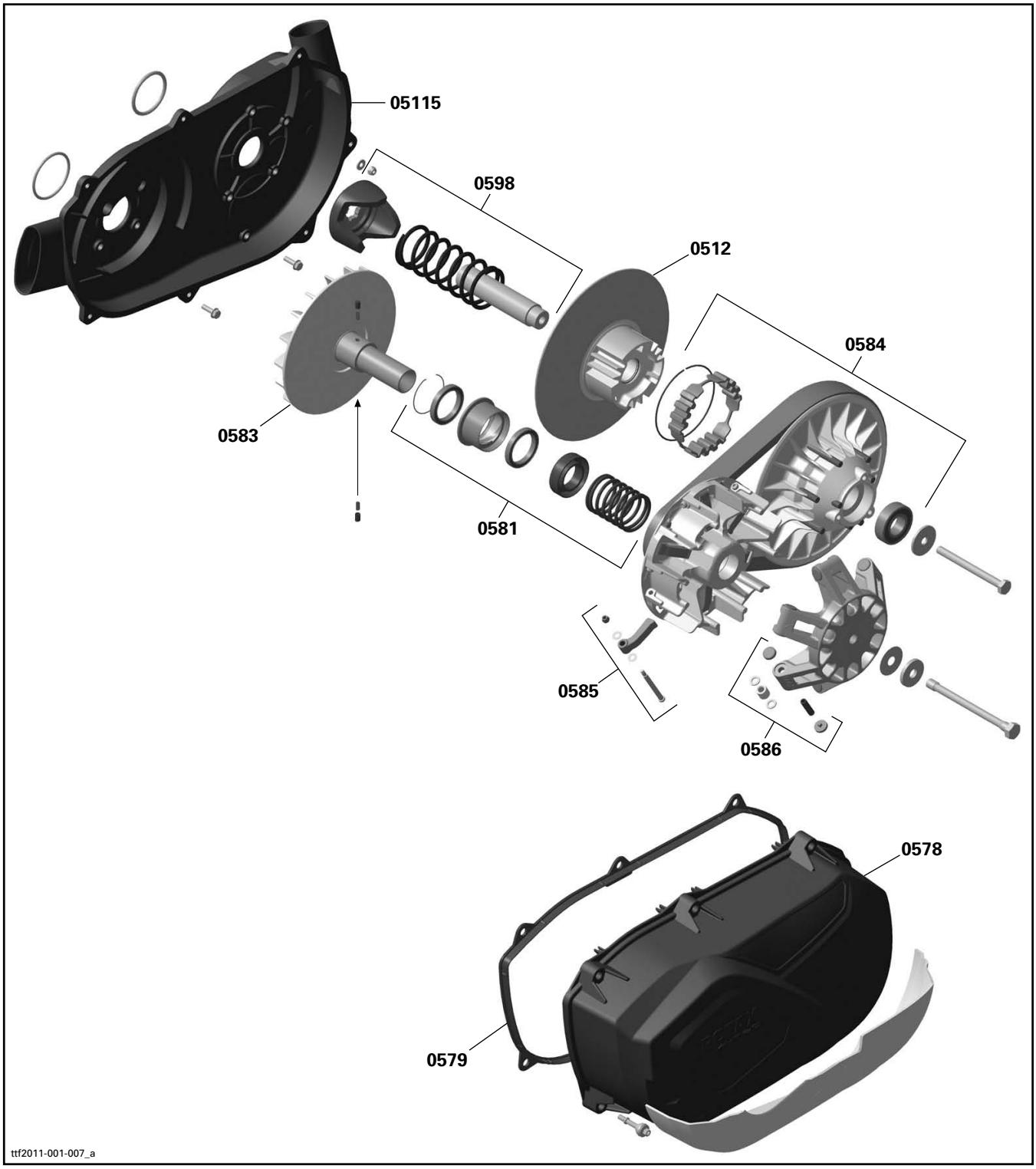
05115
0598
0512
0584
0583
0581
0585
0586
0578
0579
ttf2011-001-007_a

TRANSMISSION AND LINKAGE SYSTEM
SYSTÈME DE TRANSMISSION ET DE TRINGLERIE

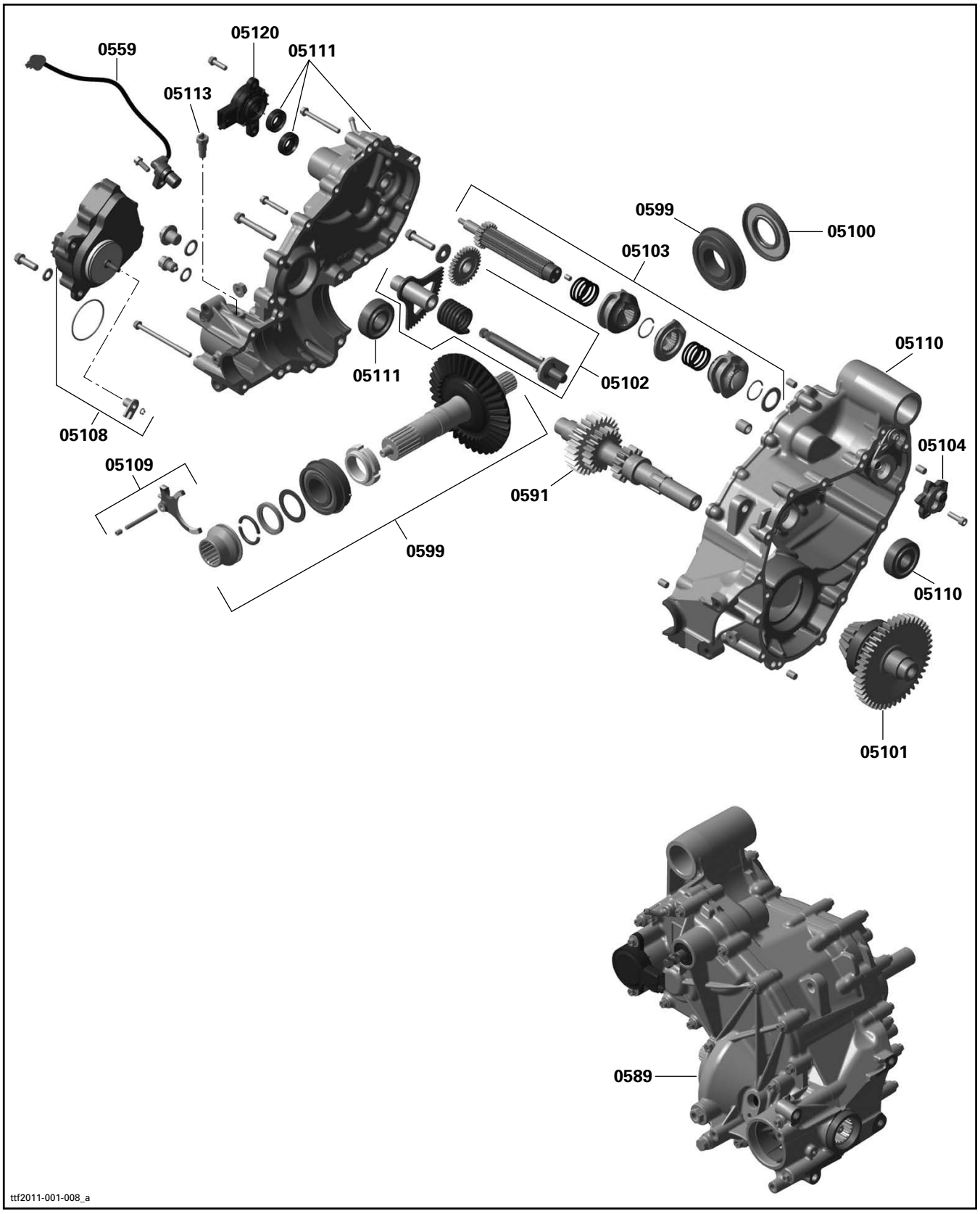

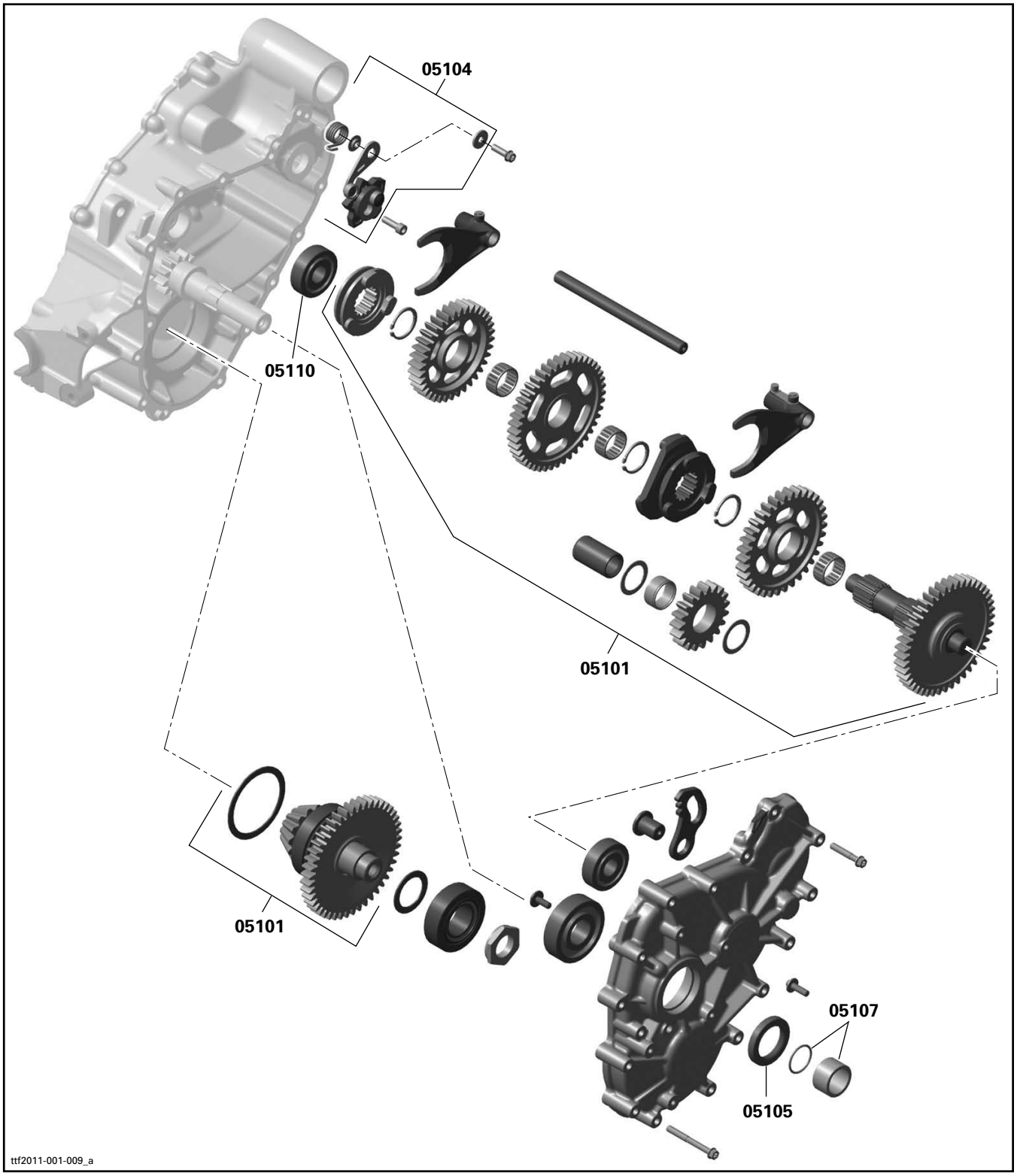
05104
05110
05101
05101
05107
05105
ttf2011-001-009_a

TRANSMISSION AND LINKAGE SYSTEM
SYSTÈME DE TRANSMISSION ET DE TRINGLERIE

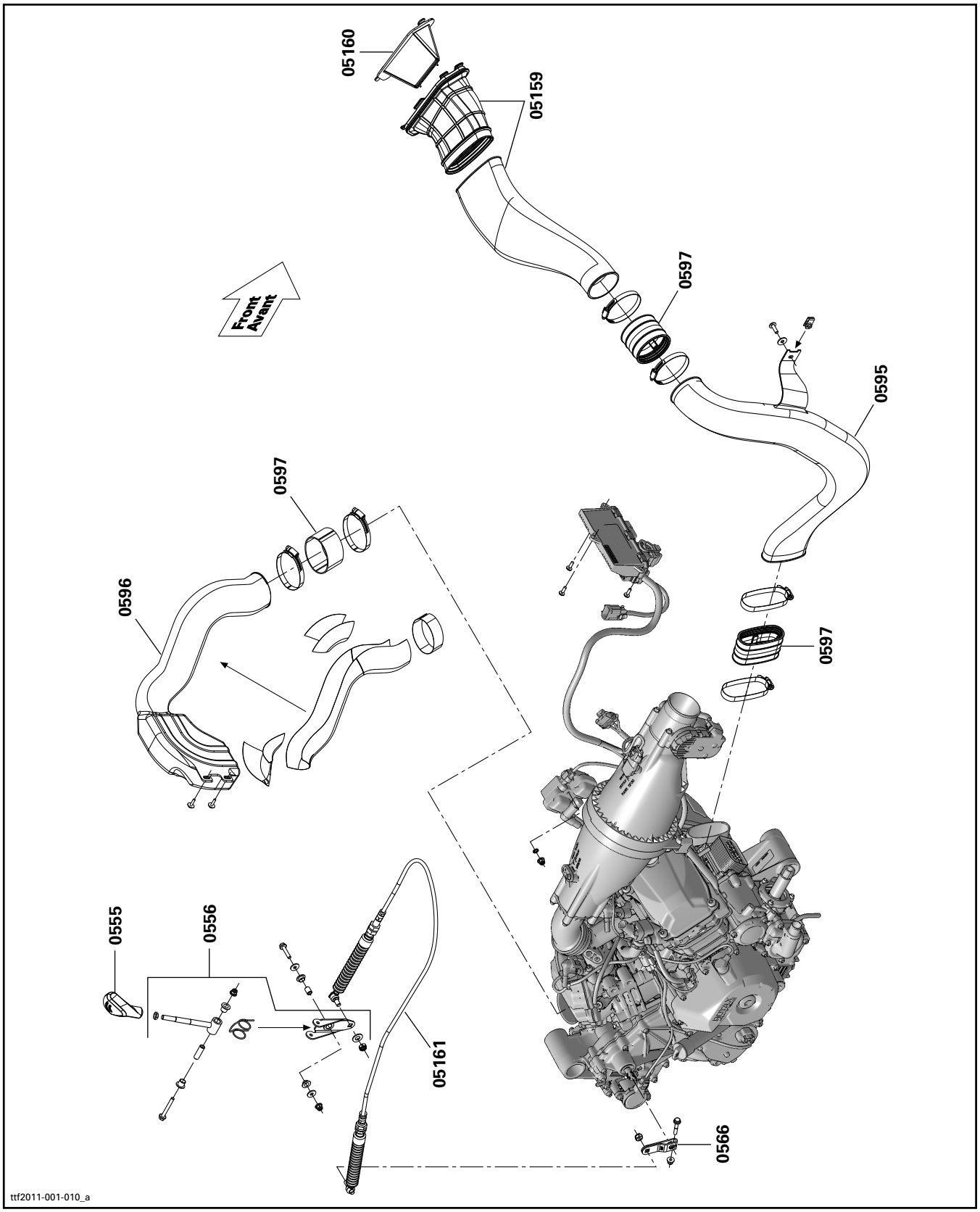

SYSTEM SYSTÈME	CODE	DESCRIPTION	COMMANDER 800	COMMANDER 1000	COMMANDER LTD 1000	COMMANDER MAX	COMMANDER MAX LTD
			1	2	3	4	5
06	**00**	**NO LABOR INVOLVED AUCUNE MAIN-D'OEUVRE**	**0**	**0**	**0**	**0**	**0**
06	06	MASTER CYLINDER MAÎTRE-CYLINDRE	1.0	1.0	1.0	1.0	1.0
06	09	FRONT CALIPER (RH OR LH) ÉTRIER AVANT (DROIT OU GAUCHE)	0.5	0.5	0.5	0.5	0.5
06	10	FRONT BRAKE PAD (RH OR LH) PLAQUETTE DE FREIN AVANT (DROIT OU GAUCHE)	0.3	0.3	0.3	0.3	0.3
06	11	FRONT BRAKE DISC (RH OR LH) DISQUE DE FREIN AVANT (DROIT OU GAUCHE)	0.7	0.7	0.7	0.7	0.7
06	12	FRONT FLEXIBLE BRAKE HOSE BOYAU FLEXIBLE DE FREIN AVANT	0.8	0.8	0.8	0.8	0.8
06	19	BRAKE SWITCH INTERRUPTEUR DE FREIN	0.3	0.3	0.3	0.3	0.3
06	25	REAR BRAKE HOSE BOYAU DE FREIN ARRIÈRE	1.3	1.3	1.3	1.7	1.7
06	26	REAR CALIPER ÉTRIER ARRIÈRE	0.5	0.5	0.5	0.5	0.5
06	27	REAR BRAKE PAD PLAQUETTE DE FREIN ARRIÈRE	0.3	0.3	0.3	0.3	0.3
06	28	REAR BRAKE DISC DISQUE DE FREIN ARRIÈRE	0.7	0.7	0.7	0.7	0.7
06	34	MASTER CYLINDER RESERVOIR RÉSERVOIR DU MAÎTRE-CYLINDRE	0.5	0.5	0.5	0.5	0.5
06	35	BRAKE PEDAL PÉDALE DE FREIN	0.5	0.5	0.5	0.5	0.5
06	44	MASTER CYLINDER ROD TIGE DU MAÎTRE-CYLINDRE	0.4	0.4	0.4	0.4	0.4

BRAKE SYSTEM
SYSTÈME DE FREIN

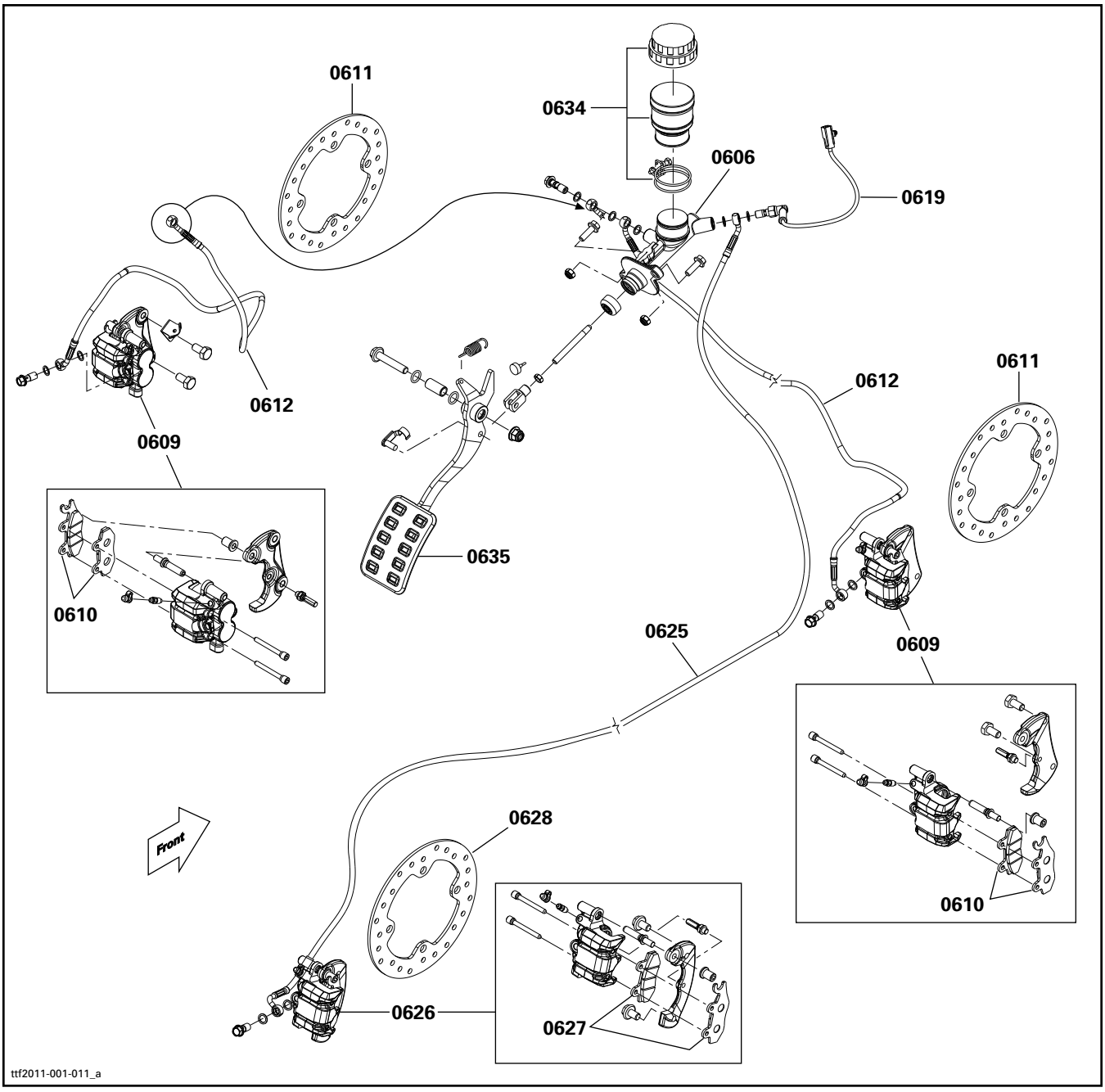

SYSTEM SYSTÈME	CODE	DESCRIPTION	COMMANDER 800	COMMANDER 1000	COMMANDER LTD 1000	COMMANDER MAX	COMMANDER MAX LTD
			1	2	3	4	5
07	**00**	**NO LABOR INVOLVED AUCUNE MAIN-D'OEUVRE**	**0**	**0**	**0**	**0**	**0**
07	04	ARM PROTECTOR (RH OR LH) PROTECTEUR DE BRAS (DROIT OU GAUCHE)	0.3	0.3	0.3	0.3	0.3
07	13	EXTERNAL BALL JOINT (RH OR LH) JOINT À ROTULE EXTERNE (DROIT OU GAUCHE)	0.8	0.8	0.8	0.8	0.8
07	24	MAIN TUBE TUBE PRINCIPAL	1.1	1.1	1.1	1.1	1.1
07	27	STEERING COVER COUVRE-GUIDON	0.3	0.3	0.3	0.3	0.3
07	32	LOWER ARM AND/OR BALL JOINT (RH OR LH) BRAS INFÉRIEUR ET/OU JOINT À ROTULE (DROIT OU GAUCHE)	0.7	0.7	0.7	0.7	0.7
07	33	UPPER ARM (RH OR LH) BRAS DE SUSPENSION SUPÉRIEUR (DROIT OU GAUCHE)	0.7	0.7	0.7	0.7	0.7
07	37	FRONT SHOCK AND/OR SPRING AND/OR STOPPER AND/OR PROTECTOR AND/OR SEAT (RH OR LH) AMORTISSEUR AVANT ET/OU RESSORT ET/OU BUTÉE ET/OU SIÈGE ET/OU PROTECTEUR (DROIT OU GAUCHE)	0.4	0.4	0.4	0.4	0.4
07	39	STABILIZER BAR BARRE STABILISATRICE		0.4			
07	40	FRONT DIFFERENTIEL (ASS'Y) DIFFÉRENTIEL AVANT (COMPLET)	2.8	2.8	2.8	2.8	2.8
07	42	FRONT PROPELLER SHAFT (ASS'Y) ARBRE DE PROPULSION AVANT (COMPLET)	2.0	2.0	2.0	2.2	2.2
07	45	CV JOINT (RH OR LH) JOINT HOMOCINÉTIQUE (DROIT OU GAUCHE)	0.7	0.7	0.7	2.7	2.7
07	46	FRONT WHEEL HUB (SEAL AND/OR BEARING) (RH OR LH) MOYEU DE ROUE AVANT (JOINT ET/OU ROULEMENT) (DROIT OU GAUCHE)	0.3	0.3	0.3	0.3	0.3
07	47	KNUCKLE (RH OR LH) PORTE-FUSÉE (DROIT OU GAUCHE)	0.7	0.7	0.7	0.7	0.7
07	50	FRONT RIM AND/OR TIRE JANTE AVANT ET/OU PNEU	0.4	0.4	0.4	0.4	0.4
07	64	DOUBLE BALL JOINT JOINT À ROTULE DOUBLE		0.3	0.3	0.3	0.3
07	72	INTERNAL BUSHING AND/OR CUSHION (LOWER AND/OR UPPER ARM) (RH OR LH) DOUILLE INTERNE ET/OU COUSSIN (BRAS INFÉRIEUR ET/OU SUPÉRIEUR) (DROIT OU GAUCHE)	0.4	0.4	0.4	0.4	0.4
07	80	FRONT RIM JANTE AVANT	0.4	0.4	0.4	0.4	0.4
07	82	BALL BEARING ROULEMENT À BILLE				1.7	1.7

STEERING - FRONT DRIVE SYSTEM AND SUSPENSION
DIRECTION - SYSTÈME D'ENTRAÎNEMENT AVANT ET SUSPENSION

SYSTEM SYSTÈME	CODE	DESCRIPTION	COMMANDER 800	COMMANDER 1000	COMMANDER LTD 1000	COMMANDER MAX	COMMANDER MAX LTD
			1	2	3	4	5
07	85	RING GEAR AND/OR CARRIER AND/OR SHIM COURONNE DE LANCEMENT ET/OU SUPPORT ET/OU CALE	3.3	3.3	3.3	3.3	3.3
07	88	RING GEAR DRIVE GEAR AND/OR BEARING AND/OR SHIM PIGNON DE COMMANDE DE LA COURONNE ET/OU ROULEMENT À BILLE ET/OU CALE	3.3	3.3	3.3	3.3	3.3
07	89	COVER AND/OR PINION COVER AND/OR SEAL AND/OR BEARING COUVERCLE ET/OU COUVERCLE DE PIGNON ET/OU JOINT D'ÉTANCHÉITÉ ET/OU ROULEMENT À BILLE	3.6	3.6	3.6	4.6	4.6
07	90	BOOT WHEEL KIT AND/OR CV JOINT (RH OR LH) ENSEMBLE DE SOUFFLET DE ROUE ET/OU JOINT CV (DROIT OU GAUCHE)	0.8	0.8	0.8	0.8	0.8
07	91	BOOT DIFFERENTIAL KIT AND/OR PLUNGING JOINT (RH OR LH) ENSEMBLE DE SOUFFLET DE DIFFÉRENTIEL ET/OU JOINT PLONGEANT (DROIT OU GAUCHE)	0.8	0.8	0.8	0.8	0.8
07	92	SLEEVE AND/OR WEARRING MANCHON ET/OU BAGUE D'USURE	3.1	3.1	3.1	3.1	3.1
07	94	UNIT PACK KIT ENSSEMBLE JOINT CARDAN	2.3	2.3	2.3	2.5	2.5
07	95	UNIT PACKS KIT (2) ENSSEMBLE JOINTS CARDANS (2)	2.5	2.5	2.5	2.7	2.7
07	99	POWER STEERING (DPS) SERVODIRECTION (DPS)	1.8	1.8	1.8	1.8	1.8
07	103	DIFFERENTIAL SEAL (1) JOINT D'ÉTANCHÉITÉ DU DIFFÉRENTIEL (1)	0.7	0.7	0.7	0.7	0.7
07	104	DIFFERENTIAL SEALS (2) JOINTS D'ÉTANCHÉITÉ DU DIFFÉRENTIEL (2)	1.4	1.4	1.4	1.4	1.4
07	106	STEERING COLUMN SUPPORT AND/OR BUSHINGS SUPPORT DE COLONNE DE DIRECTION ET/OU COUSSINETS	0.8	0.8	0.8	0.8	0.8
07	115	RACK AND PINION STEERING DIRECTION À CRÉMAILLÈRE	2.0	2.0	2.0	2.0	2.0
07	116	STEERING SHAFT ARBRE DU VOLANT	0.9	0.9	0.9	0.9	0.9
07	117	ADJUSTMENT CYLINDER CYLINDRE D'AJUSTEMENT	0.3	0.3	0.3	0.3	0.3
07	118	STEERING WHEEL VOLANT	0.3	0.3	0.3	0.3	0.3
07	120	DIFFERENTIAL OIL SEAL ANNEAU D'ÉTANCHÉITÉ DU DIFFÉRENTIEL	3.0	3.0	3.0	3.0	3.0
07	121	COUPLING MANCHON	1.8	1.8	1.8	1.8	1.8
07	122	HOSE (DIFFERENTIAL HOSE) BOYAU (BOYAU DU DIFFÉRENTIEL)	0.3	0.3	0.3	0.3	0.3
07	125	FRONT PNEUMATIC HOSE (RIGHT OR LEFT) BOYAU PNEUMATIQUE AVANT (DROIT OU GAUCHE)			1.5		

SYSTEM SYSTÈME	CODE	DESCRIPTION	COMMANDER 800	COMMANDER 1000	COMMANDER LTD 1000	COMMANDER MAX	COMMANDER MAX LTD
			1	2	3	4	5
07	126	FRONT PNEUMATIC HOSES (ALL) BOYAUX PNEUMATIQUE AVANT (TOUS)			1.8		
07	130	PROPELER SHAFT EXTENTION EXTENTION D'ABRRE DE PROPULSION				1.9	1.9

STEERING - FRONT DRIVE SYSTEM AND SUSPENSION
DIRECTION - SYSTÈME D'ENTRAÎNEMENT AVANT ET SUSPENSION

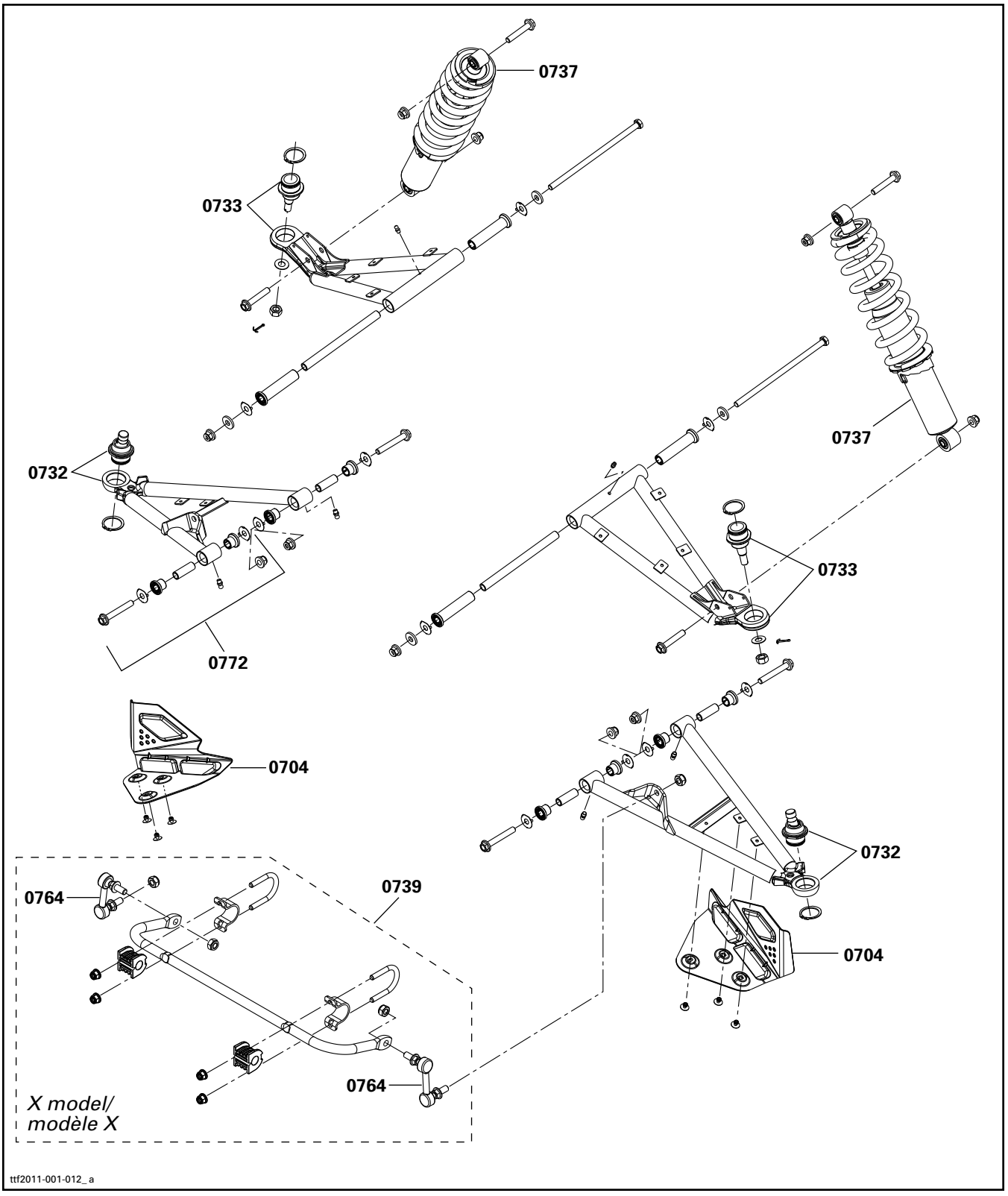

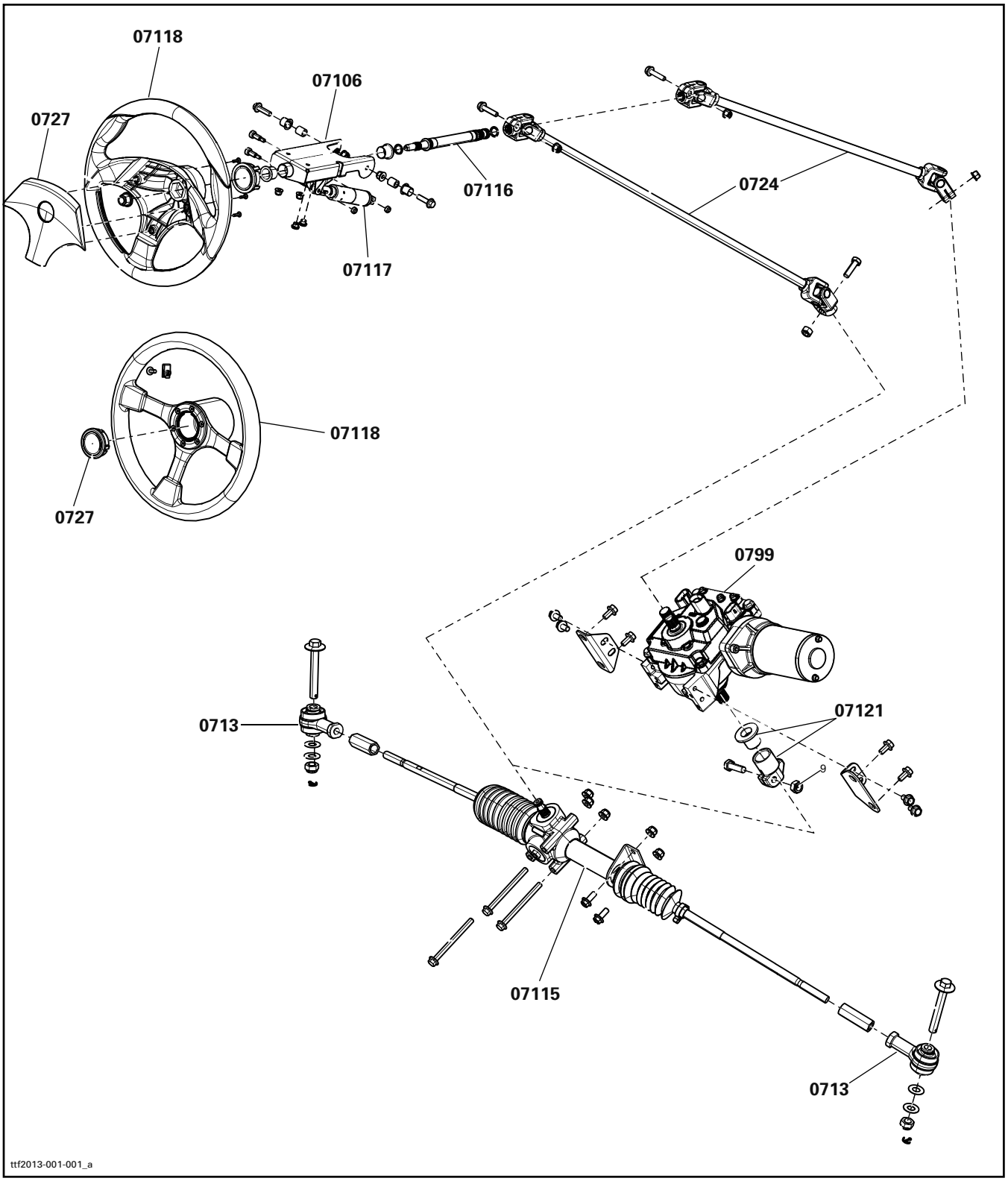
07118
07106
0727
07116
0724
07117
07118
0727
0799
07121
0713
07115
0713
ttf2013-001-001_a

STEERING - FRONT DRIVE SYSTEM AND SUSPENSION
DIRECTION - SYSTÈME D'ENTRAÎNEMENT AVANT ET SUSPENSION

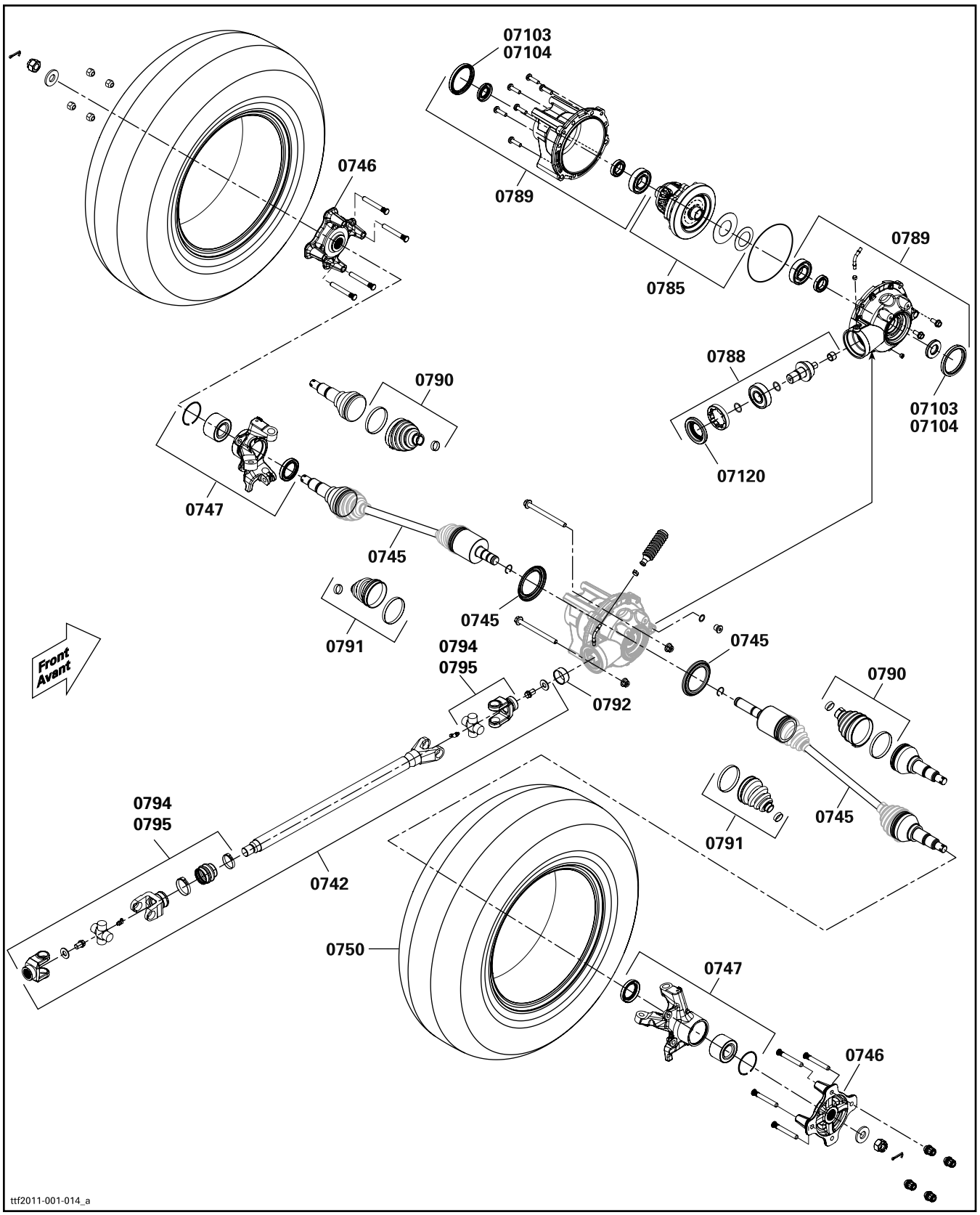

LTD

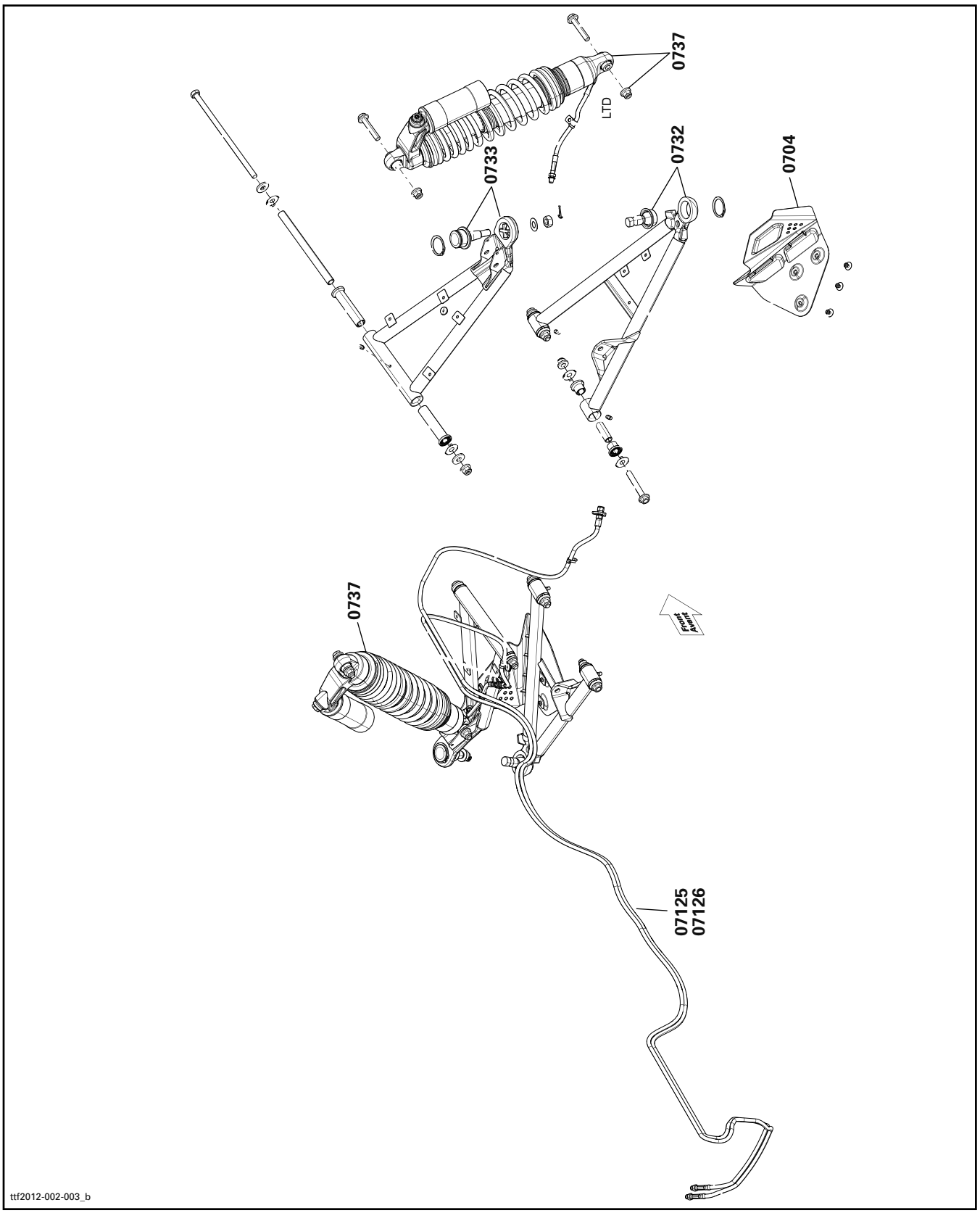
0737
LTD
0733
0732
0704
0737
Front
Avant
07125
07126
ttf2012-002-003_b

REAR DRIVE SYSTEM AND SUSPENSION
SYSTÈME D'ENTRAÎNEMENT ARRIÈRE ET SUSPENSION

SYSTEM SYSTÈME	CODE	DESCRIPTION	COMMANDER 800	COMMANDER 1000	COMMANDER LTD 1000	COMMANDER MAX	COMMANDER MAX LTD
			1	2	3	4	5
08	**00**	**NO LABOR INVOLVED AUCUNE MAIN D'OEUVRE**	**0**	**0**	**0**	**0**	**0**
08	05	REAR WHEEL HUB (RH) MOYEU DE ROUE ARRIÈRE (DROIT)	0.3	0.3	0.3	0.3	0.3
08	07	REAR DIFFERENTIAL (ASS'Y) DIFFÉRENTIEL ARRIÈRE (COMPLET)	1.6	1.6	1.6	1.6	1.6
08	21	COMPRESSOR COMPRESSEUR			0.8		
09	24	PNEUMATIC HOSE BOYAU PNEUMATIQUE			0.5		
08	26	REAR PROPELLER SHAFT (ASS'Y) ARBRE DE PROPULSION ARRIÈRE (COMPLET)	1.8	1.8	1.8	1.8	1.8
08	62	SWING ARM BRAS OSCILLANT	1.2	1.2	1.2	1.2	1.2
08	101	LH PROTECTOR PROTECTEUR GAUCHE	0.3	0.3	0.3	0.3	0.3
08	102	RH PROTECTOR PROTECTEUR DROIT	0.3	0.3	0.3	0.3	0.3
08	109	REAR WHEEL HUB (LH) MOYEU DE ROUE ARRIÈRE (GAUCHE)	0.3	0.3	0.3	0.3	0.3
08	111	REAR SHOCK (RH OR LH) AMORTISSEUR ARRIÈRE (DROIT OU GAUCHE)	0.3	0.3	0.3	0.3	0.3
08	114	REAR RIM AND/OR TIRE JANTE ARRIÈRE ET/OU PNEU	0.4	0.4	0.4	0.4	0.4
08	120	CV JOINT (RH OR LH) JOINT HOMOCINÉTIQUE (DROIT OU GAUCHE)	0.7	0.7	0.7	0.7	0.7
08	121	STABILIZER BAR BARRE STABILISATRICE	0.4	0.4	0.4	0.4	0.4
08	122	RING GEAR AND/OR SHIM COURONNE DE LANCEMENT ET/OU CALE	2.8	2.8	2.8	2.8	2.8
08	123	RING GEAR DRIVE GEAR AND/OR BEARING AND/OR SHIM PIGNON DE COMMANDE DE LA COURONNE ET/OU ROULEMENT À BILLE ET/OU CALE	2.8	2.8	2.8	2.8	2.8
08	124	COVER AND/OR PINION COVER AND/OR SEAL AND/OR BEARING COUVERCLE ET/OU COUVERCLE DE PIGNON ET/OU JOINT D'ÉTANCHÉITÉ ET/OU ROULEMENT À BILLE	2.9	2.9	2.9	2.9	2.9
08	125	BOOT WHEEL KIT AND/OR CV JOINT (RH OR LH) ENSEMBLE DE SOUFFLET DE ROUE ET/OU JOINT CV (DROIT OU GAUCHE)	0.8	0.8	0.8	0.8	0.8
08	126	BOOT DIFFERENTIAL KIT AND/OR PLUNGING JOINT (RH OR LH) ENSEMBLE DE SOUFFLET DE DIFFÉRENTIEL ET/OU JOINT PLONGENT (DROIT OU GAUCHE)	0.8	0.8	0.8	0.8	0.8
08	127	RADIAL BALL BEARINGS ROULEMENTS À BILLE RADIALES	0.9	0.9	0.9	0.9	0.9

SYSTEM SYSTÈME	CODE	DESCRIPTION	COMMANDER 800	COMMANDER 1000	COMMANDER LTD 1000	COMMANDER MAX	COMMANDER MAX LTD
			1	2	3	4	5
08	128	UNIT PACK KIT ENSSEMBLE JOINT CARDAN	1.8	1.8	1.8	1.8	1.8
08	129	UNIT PACKS KIT (2) ENSSEMBLE JOINTS CARDANS (2)	2.0	2.0	2.0	2.0	2.0
08	134	DIFFERENTIAL SEAL (1) JOINT D'ÉTANCHÉITÉ DU DIFFÉRENTIEL (1)	0.8	0.8	0.8	0.8	0.8
08	135	DIFFERENTIAL SEALS (2) JOINTS D'ÉTANCHÉITÉ DU DIFFÉRENTIEL (2)	1.4	1.4	1.4	1.4	1.4
08	137	PRESSURE COLLECTOR (ASS'Y) COLLECTEUR DE PRESSION (COMPLET)			0.7		0.7
08	140	AUXILIARY FITTING AND SUPPORT RACCORD AUXILIAIRE ET SUPPORT			0.6		0.6
08	146	PIVOTS BUSHINGS, SEALS AND BEARINGS DOUILLES DE PIVOTS, JOINTS D'ÉTANCHÉITÉ ET ROULEMENTS À BILLE	0.9	0.9	0.9	0.9	0.9
08	148	DIFFERENTIAL OIL SEAL ANNEAU D'ÉTANCHÉITÉ DU DIFFÉRENTIEL	2.5	2.5	2.5	2.5	2.5
08	150	UPPER SUPPORT SUPPORT SUPÉRIEUR			0.6		0.6
08	151	LOWER SUPPORT SUPPORT INFÉRIEUR			0.6		0.6
08	152	TANK AND/OR STRAPS RÉSERVOIR ET/OU SANGLES			0.5		0.5
08	158	HOSE (DIFFERENTIAL VENT) BOYAU (VENTILATION DU DIFFÉRENTIEL)	0.3	0.3	0.3	0.3	0.3

REAR DRIVE SYSTEM AND SUSPENSION
SYSTÈME D'ENTRAÎNEMENT ARRIÈRE ET SUSPENSION

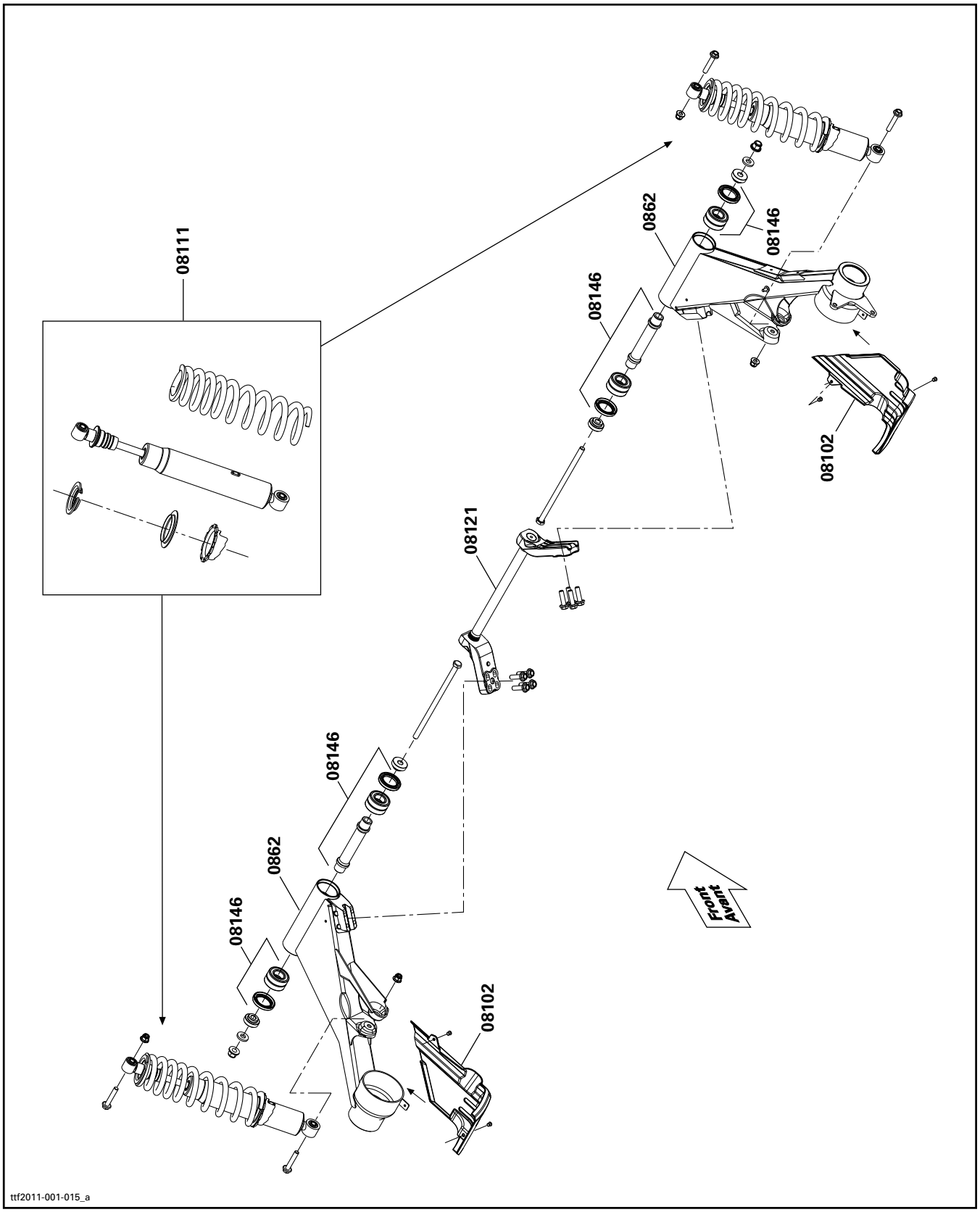

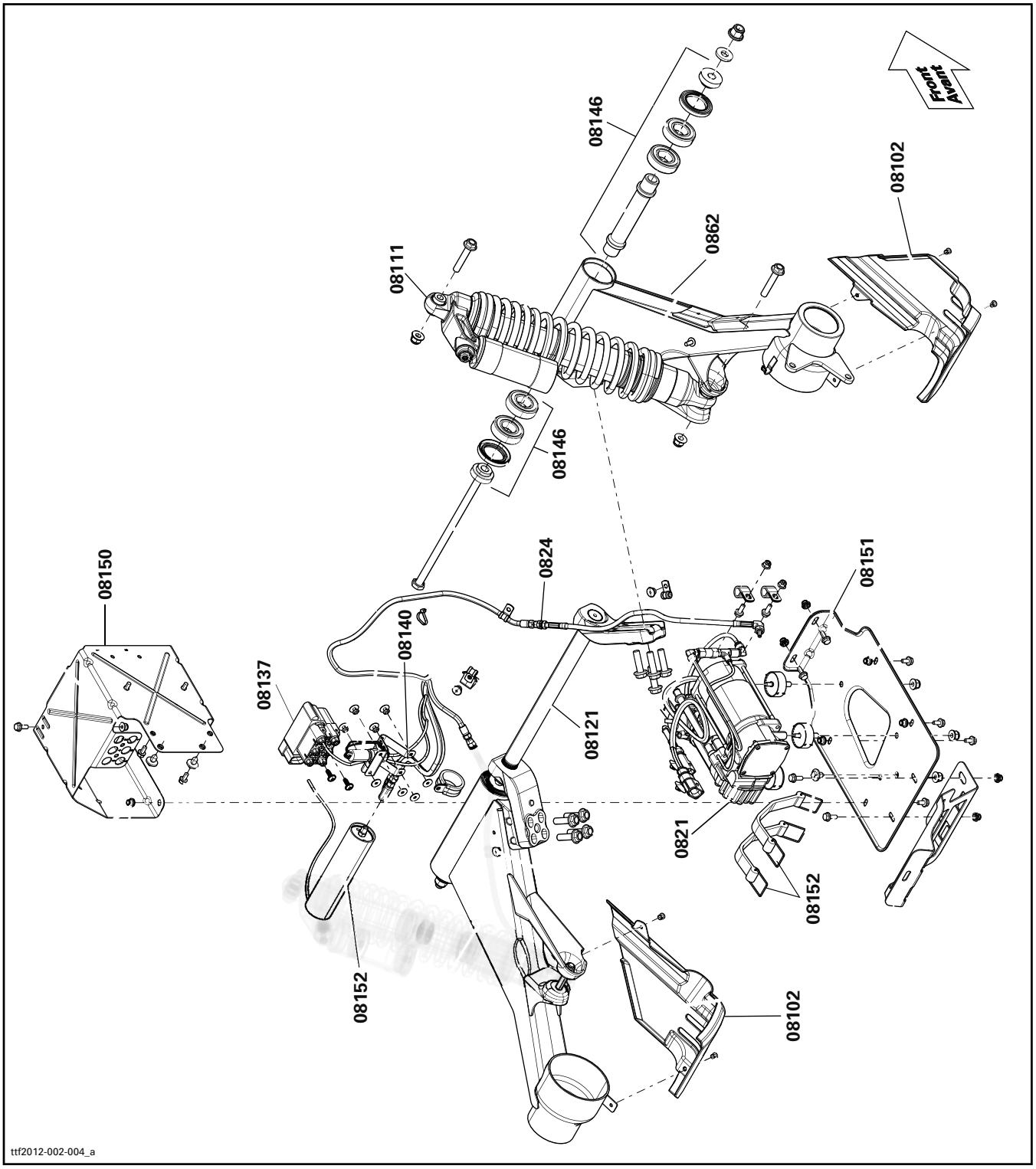
Front
Avant
08146
08102
0862
08111
08146
08150
0824
08151
08140
08137
08121
0821
08152
08152
08102
ttf2012-002-004_a

REAR DRIVE SYSTEM AND SUSPENSION
SYSTÈME D'ENTRAÎNEMENT ARRIÈRE ET SUSPENSION

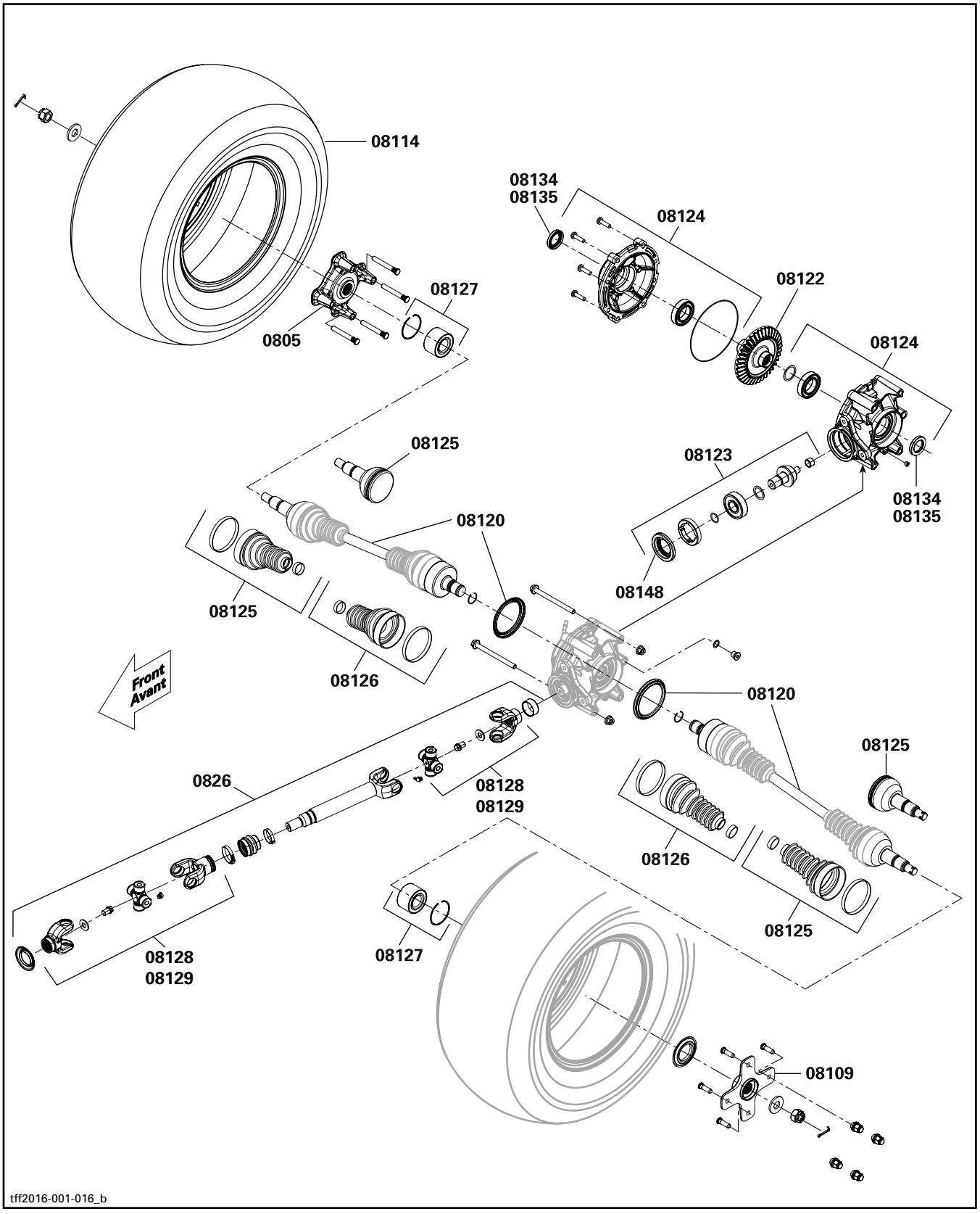

SYSTEM SYSTÈME	CODE	DESCRIPTION	COMMANDER 800	COMMANDER 1000	COMMANDER LTD 1000	COMMANDER MAX	COMMANDER MAX LTD
			1	2	3	4	5
09	**00**	**NO LABOR INVOLVED AUCUNE MAIN D'OEUVRE IMPLIQUÉE**	**0**	**0**	**0**	**0**	**0**
09	01	HOOD CAPOT	3.0	3.0	3.0	3.0	3.0
09	09	WINDSHIELD PARE-BRISE		0.3	0.3		0.3
09	25	LATCH BASE AND/OR LEVER AND/OR SPRING BASE DE LOQUET ET/OU LEVIER ET/OU RESSORT	0.3	0.3	0.3	0.3	0.3
09	26	FRONT BUMPER PARE-CHOCS AVANT	0.6	0.6	0.6	0.6	0.6
09	27	WINCH LATCH ATTACHE DE TREUIL	0.3	0.3	0.3	0.3	0.3
09	28	FRONT FASCIA FASCIA AVANT	0.5	0.5	0.5	0.5	0.5
09	35	HITCH SUPPORT SUPPORT D'ATTELAGE	0.4	0.4	0.4	0.4	0.4
09	39	FRONT OR REAR MUDGUARD KIT (RH OR LH) ENSEMBLE DE GARDE-BOUE AVANT OU ARRIÈRE (DROIT OU GAUCHE)	0.7	0.7	0.7	0.7	0.7
09	49	FRAME CHASSIS	18.0	18.0	19.3	20.4	21.8
09	57	FRONT FENDER AND/OR SUPPORT (RH OR LH) AILE AVANT ET/OU SUPPORT (DROIT OU GAUCHE)	1.5	1.5	1.5	1.5	1.5
09	71	FUEL TANK COVER COUVRE RÉSERVOIR D'ESSENCE	0.5	0.5	0.5	0.5	0.5
09	80	FRONT GRILLS GRILLES AVANT	0.3	0.3	0.3	0.3	0.3
09	81	SIDE GRILL (RIGHT AND/OR LEFT) GRILLE LATÉRALE (DROITE ET/OU GAUCHE)	0.3	0.3	0.3	0.3	0.3
09	82	CABLE RETAINER CÂBLE DE RETENUE	0.3	0.3	0.3	0.3	0.3
09	93	PROTECTION PLATE PLAQUE DE PROTECTION	0.4	0.4	0.4	0.4	0.4
09	95	EACH DECAL (1) CHAQUE AUTOCOLLANT (1)	0.3	0.3	0.3	0.3	0.3
09	97	SHOCK GAZ (REAR CARGO BOX) AMORTISSEUR (BOÎTE DE RANGEMENT)	0.3	0.3	0.3	0.3	0.3
09	102	PIVOT SUPPORT SUPPORT DE PIVOT	0.3	0.3	0.3	0.3	0.3
09	107	WINDSCREEN LATCH LOQUET DU PARE-BRISE		0.3	0.3		0.3
09	110	SEAT AND/OR BACKREST (DRIVER OR CO-PILOT) SIÈGE ET/OU DOSSIER (CONDUCTEUR OU COPILOTE)	0.3	0.3	0.3	0.3	0.3

SYSTEM SYSTÈME	CODE	DESCRIPTION	COMMANDER 800	COMMANDER 1000	COMMANDER LTD 1000	COMMANDER MAX	COMMANDER MAX LTD
			1	2	3	4	5
09	111	SEAT BASE ASS'Y (DRIVER OR CO-PILOT) BASE DE SIÈGE COMPLET (CONDUCTEUR OU COPILOTE)	0.3	0.3	0.3	0.3	0.3
09	120	FRONT LIGHT FASCIA FASCIA DE LUMIÈRE AVANT	0.4	0.4	0.4	0.4	0.4
09	134	CARGO BOX LEVER AND/OR RINGS AND/OR CLAMP LEVIER BENNE ET/OU BAGUES ET/OU BRIDE	0.6	0.6	0.6	0.6	0.6
09	155	CONSOLE COVER COUVERCLE DE CONSOLE				0.3	0.3
09	157	UPPER CONSOLE CONSOLE SUPÉRIEURE	0.5	0.5	0.5	0.5	0.5
09	162	FRONT BUMPER (XT) PARE-CHOC AVANT (XT)	0.3	0.3	0.3	0.3	0.3
09	168	FRONT GRILL GRILLE FRONTALE	0.3	0.3	0.3	0.3	0.3
09	219	DOOR LATCH LOQUET DE PORTE	0.3	0.3	0.3	0.3	0.3
09	226	LOWER CONSOLE CONSOLE INFÉRIEURE	0.4	0.4	0.4	0.4	0.4
09	227	SERVICE COVER COUVERCLE DE SERVICE	0.3	0.3	0.3	0.3	0.3
09	231	REAR PANEL (LEFT OR RIGHT) PANNEAU ARRIÈRE (GAUCHE OU DROIT)	0.9	0.9	0.9	0.9	0.9
09	237	BOTTOM TAIL COVER PANNEAUX ARRIERE INFERIEUR				0.5	0.5
09	239	MIDDLE SIDE PANEL (LEFT OR RIGHT) PANNEAU LATÉRAL CENTRAL (GAUCHE OU DROIT)	0.6	0.6	0.6	0.6	0.6
09	282	LATCH AND/OR BASE (RIGHT OR LEFT) LOQUET ET/OU BASE (DROIT OU GAUCHE)	0.3	0.3	0.3	0.3	0.3
09	284	BOX DOOR PORTE DE COFFRE	0.3	0.3	0.3	0.3	0.3
09	289	GLOVES BOX BOÎTE À GANTS	0.3	0.3	0.3	0.3	0.3
09	290	DASHBOARD TABLEAU DE BORD	0.4	0.4	0.4	0.4	0.4
09	294	SIDE STORAGE COMPARTMENT (RIGHT OR LEFT) COMPARTIMENT DE RANGEMENT LATÉRAL (DROIT OU GAUCHE)	0.5	0.5	0.5	0.5	0.5
09	304	REAR SUPPORT SUPPORT ARRIÈRE	0.8	0.8	0.8	0.8	0.8
09	306	REAR SIDE PANEL (RIGHT OR LEFT) PANNEAU LATÉRAL ARRIÈRE (DROIT OU GAUCHE)	0.3	0.3	0.3	0.3	0.3
09	308	BOTTOM FRONT SIDE PANEL (RH OR LH) PANNEAU LATÉRAL AVANT BAS (DROIT OU GAUCHE)	0.6	0.6	0.6	0.6	0.6

SYSTEM SYSTÈME	CODE	DESCRIPTION	COMMANDER 800	COMMANDER 1000	COMMANDER LTD 1000	COMMANDER MAX	COMMANDER MAX LTD
			1	2	3	4	5
09	334	UPPER FASCIA FASCIA SUPÉRIEUR	0.3	0.3	0.3	0.3	0.3
09	335	FLASHER COVER (RIGHT OR LEFT) COUVRE CLIGNOTANT (DROIT OU GAUCHE)	0.3	0.3	0.3	0.3	0.3
09	336	CENTRAL SKID PLATE PLAQUE DE PROTECTION CENTRALE	0.3	0.3	0.3	0.3	0.3
09	337	REAR SKID PLATE PLAQUE DE PROTECTION ARRIÈRE	0.3	0.3	0.3	0.3	0.3
09	338	AIR INLET COVER COUVERCLE D'ADMISSION D'AIR	0.3	0.3	0.3	0.3	0.3
09	339	FLOOR PANEL (LEFT) PANNEAU DE PLANCHER (GAUCHE)	3.0	3.0	3.0	3.0	3.0
09	340	FLOOR PANEL (RIGHT) PANNEAU DE PLANCHER (DROIT)	2.1	2.1	2.1	2.1	2.1
09	341	FRONT BULKHEAD (LEFT) CLOISON AVANT (GAUCHE)	2.6	2.6	2.6	2.6	2.6
09	342	FRONT BULKHEAD (RIGHT) CLOISON AVANT (DROITE)	2.0	2.0	2.0	2.0	2.0
09	343	REAR BULKHEAD (LEFT) CLOISON ARRIÈRE (GAUCHE)	1.3	1.3	1.3	1.3	1.3
09	344	REAR BULKHEAD (RIGHT) CLOISON ARRIÈRE (DROITE)	1.3	1.3	1.3	1.3	1.3
09	345	LATERAL CONSOLE PANEL (LEFT) PANNEAU LATÉRAL DE CONSOLE (GAUCHE)	0.3	0.3	0.3	0.3	0.3
09	346	LATERAL CONSOLE PANEL (RIGHT) PANNEAU LATÉRAL DE CONSOLE (DROIT)	0.3	0.3	0.3	0.3	0.3
09	347	FIXE CONSOLE PANEL (LEFT) PANNEAU FIXE DE CONSOLE (GAUCHE)	0.8	0.8	0.8	0.8	0.8
09	348	FIXE CONSOLE PANEL (RIGHT) PANNEAU FIXE DE CONSOLE (DROIT)	0.8	0.8	0.8	0.8	0.8
09	349	LEVER INDICATOR INDICATEUR DE VITESSE	0.5	0.5	0.5	0.5	0.5
09	350	CARGO BOX (LEFT AND RIGHT) BENNE (GAUCHE ET DROITE)	4.6	4.6	4.6	4.6	4.6
09	351	CARGO BOX (LEFT) BENNE (GAUCHE)	3.7	3.7	3.7	3.7	3.7
09	352	CARGO BOX (RIGHT) BENNE (DROITE)	3.7	3.7	3.7	3.7	3.7
09	353	REMOVABLE FLOOR PLATEAU AMOVIBLE	0.3	0.3	0.3	0.3	0.3
09	354	FRONT REINFORCEMENT RENFORT AVANT	0.3	0.3	0.3	0.3	0.3

SYSTEM SYSTÈME	CODE	DESCRIPTION	COMMANDER 800	COMMANDER 1000	COMMANDER LTD 1000	COMMANDER MAX	COMMANDER MAX LTD
			1	2	3	4	5
09	355	TAILLIGHT TRIM (LEFT OR RIGHT) ENJOLIVEUR DE FEU ARRIÈRE (GAUCHE OU DROIT)	0.3	0.3	0.3	0.3	0.3
09	356	CARGO BOX RAIL AND/OR COVER RAIL DE BENNE ET/OU COUVERCLE	0.3	0.3	0.3	0.3	0.3
09	357	CARGO BOX RETAINER AND/OR SPRING (LEFT OR RIGHT) ANCRAGE DE BENNE ET/OU RESSORT (GAUCHE OU DROIT)	0.5	0.5	0.5	0.5	0.5
09	358	CARGO BOX FRAME CHÂSSIS DE LA BENNE	1.6	1.6	1.6	1.6	1.6
09	359	CARGO BOX PIVOTS (ALL PARTS) PIVOTS DE LA BENNE (TOUTES LES PIÈCES)	0.7	0.7	0.7	0.7	0.7
09	360	UPPER TAIL GATE PANEL PANNEAU DU HAYON SUPÉRIEUR	0.3	0.3	0.3	0.3	0.3
09	361	LOWER TAIL GATE PANEL PANNEAU DU HAYON INFÉRIEUR	0.3	0.3	0.3	0.3	0.3
09	362	UPPER TAIL GATE HAYON SUPÉRIEUR	0.4	0.4	0.4	0.4	0.4
09	363	LOWER TAIL GATE HAYON INFÉRIEUR	0.6	0.6	0.6	0.6	0.6
09	364	HEAD REST APPUI-TÊTE	0.3	0.3	0.3	0.3	0.3
09	365	SAFETY BELT CEINTURE DE SÉCURITÉ	0.3	0.3	0.3	0.3	0.3
09	366	BUCKLE BELT VERROU CEINTURE	0.3	0.3	0.3	0.3	0.3
09	367	LOCK VERROU	0.3	0.3	0.3	0.3	0.3
09	368	HANDHOLD (LEFT) POIGNÉE DE MAINTIEN (GAUCHE)	0.3	0.3	0.3	0.3	0.3
09	371	ROCK SLIDER (LEFT OR RIGHT) GLISSIÈRE DE PROTECTION (GAUCHE OU DROITE)		0.5	0.5	0.5	0.5
09	372	SHOULDER GUARD (LEFT AND/OR RIGHT) PROTECTEUR D'ÉPAULE (GAUCHE ET/OU DROIT)	0.3	0.3	0.3	0.3	0.3
09	373	HANDHOLD (FRONT) POIGNÉE DE MAINTIEN (AVANT)	0.3	0.3	0.3	0.3	0.3
09	374	LATERAL NET (LEFT OR RIGHT) FILET LATÉRAL (GAUCHE OU DROIT)	0.5	0.5	0.5	0.5	0.5
09	375	HANDHOLD BAR (LEFT) BARRE DE POIGNÉE DE MAINTIEN (GAUCHE)	0.4	0.4	0.4	0.4	0.4
09	385	CAGE KIT ENSEMBLE DE CAGE	1.4	1.4	1.4	1.4	1.4
09	386	ROOF VISOR TOIT VISIÈRE		0.5	0.5		0.5

SYSTEM SYSTÈME	CODE	DESCRIPTION	COMMANDER 800	COMMANDER 1000	COMMANDER LTD 1000	COMMANDER MAX	COMMANDER MAX LTD
			1	2	3	4	5
09	387	MIDDLE ROOF TOIT CENTRAL			0.3		
09	388	REAR NET FILET ARRIÈRE				0.5	0.5
09	426	SEAT COVER COUVERCLE DE SIEGE				0.3	0.3
09	427	BATTERY COVER COUVERCLE DE BATTERIE				0.3	0.3
09	428	REAR FLOOR (RIGHT) PLANCHER ARRIERE (DROIT)				0.6	0.6
09	429	REAR FLOOR (LEFT) PLANCHER ARRIERE (GAUCHE)				0.5	0.5
09	430	REAR BOTTOM PAN COQUE DE FOND				0.3	0.3
09	431	REAR LATERAL CONSOLE PANEL (LEFT) PANNEAU LATERAL DE CONSOLE ARRIERE (GAUCHE)				0.3	0.3
09	432	REAR LATERAL CONSOLE PANEL (RIGHT) PANNEAU LATERAL DE CONSOLE ARRIERE (DROIT)				0.3	0.3
09	433	REAR CENTRAL CONSOLE CONSOLE ARRIERE CENTRALE				0.3	0.3
09	434	CENTER CAGE KIT ENSSEMBLE DE CAGE CENTRAL				0.8	0.8
09	436	TOP CENTER CAGE COVER COUVERCLE CENTRAL DE CAGE DE TOIT				0.3	0.3
09	470	REAR ROOF TOIT ARRIÈRE					0.5
09	471	CLEAR SKYLIGHT PANEL PANNEAU PUIT DE LUMIÈRE					0.5
09	473	GUN BOOT RACK SUPPORT D'ÉTUI D'ARME		0.3			
09	474	GUN BOOT ÉTUI D'ARME		0.3			

BODY AND ACCESSORIES
CARROSSERIE ET ACCESSOIRES

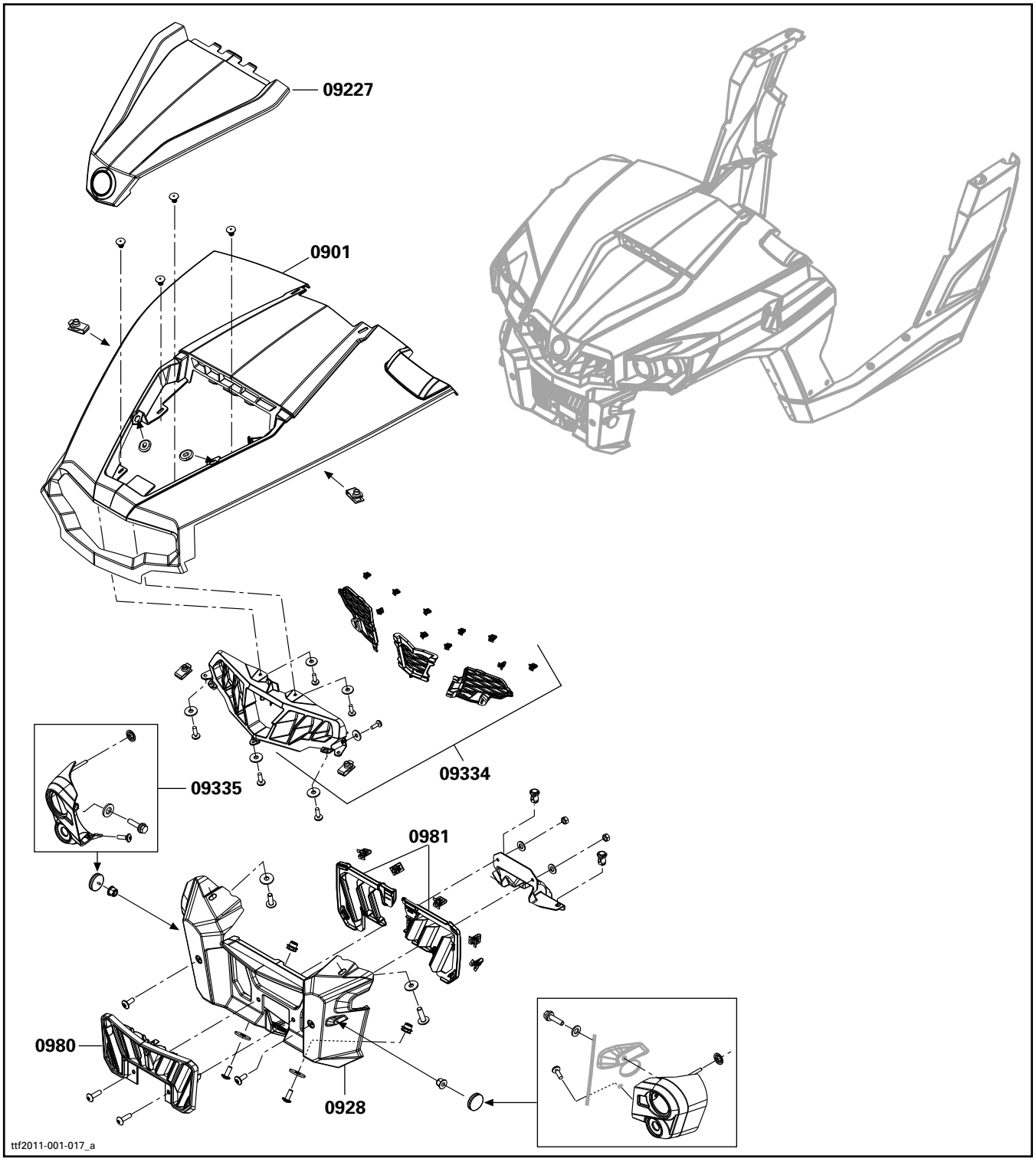

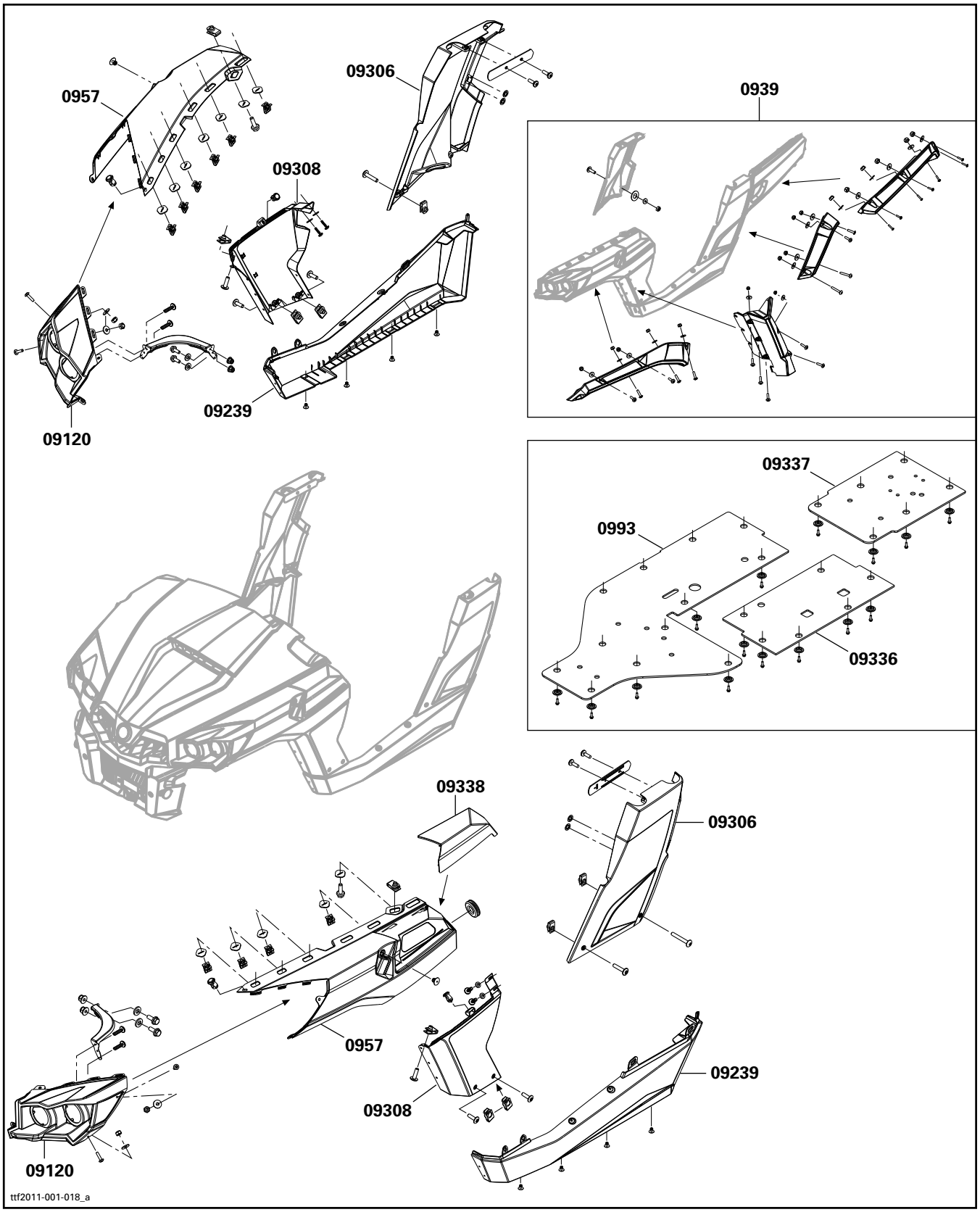
0957
09306
09308
09239
09120
0939
09337
0993
09336
09338
09306
0957
09308
09239
09120
ttf2011-001-018_a

BODY AND ACCESSORIES
CAROSSERIE ET ACCESSOIRES

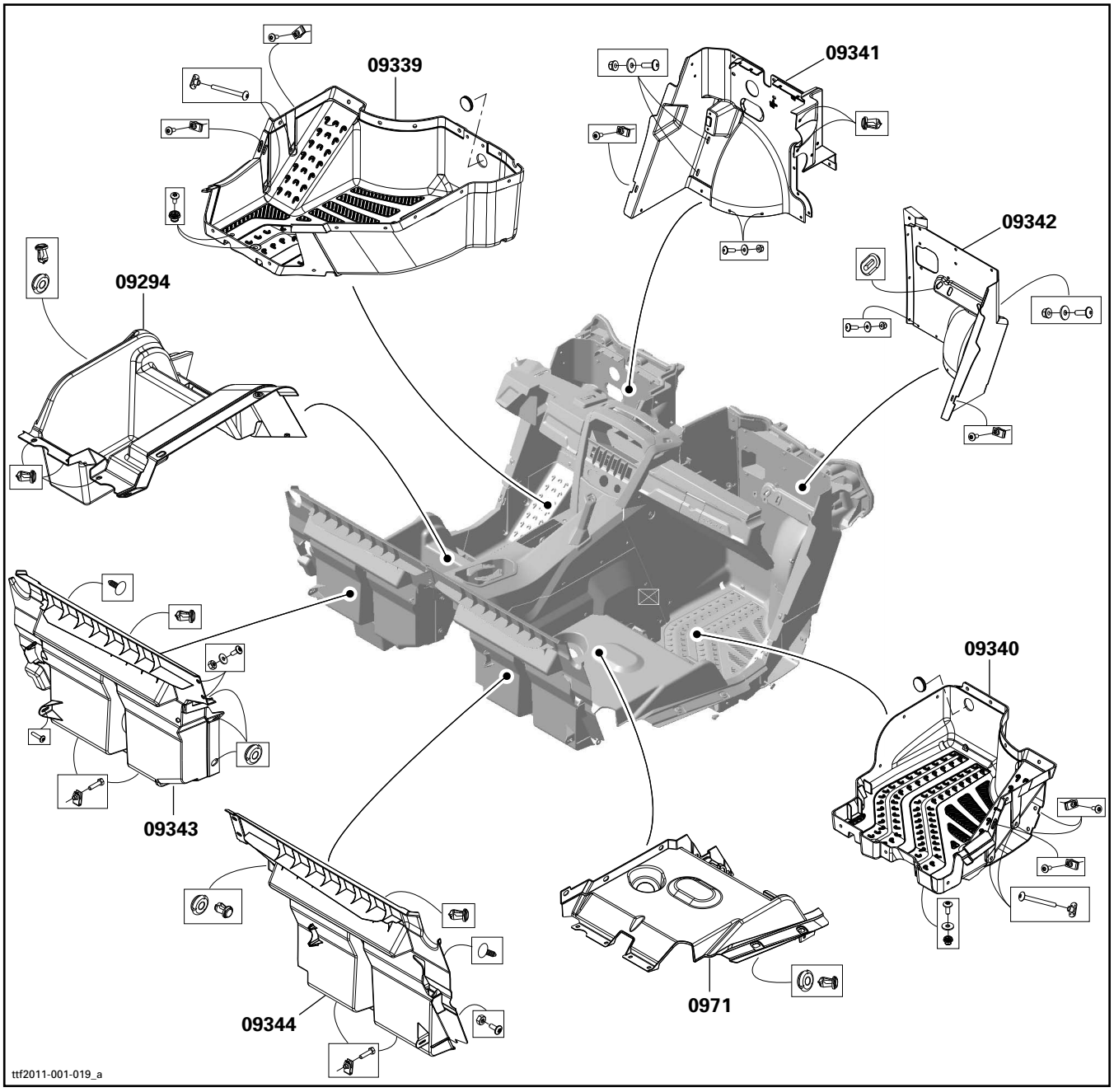

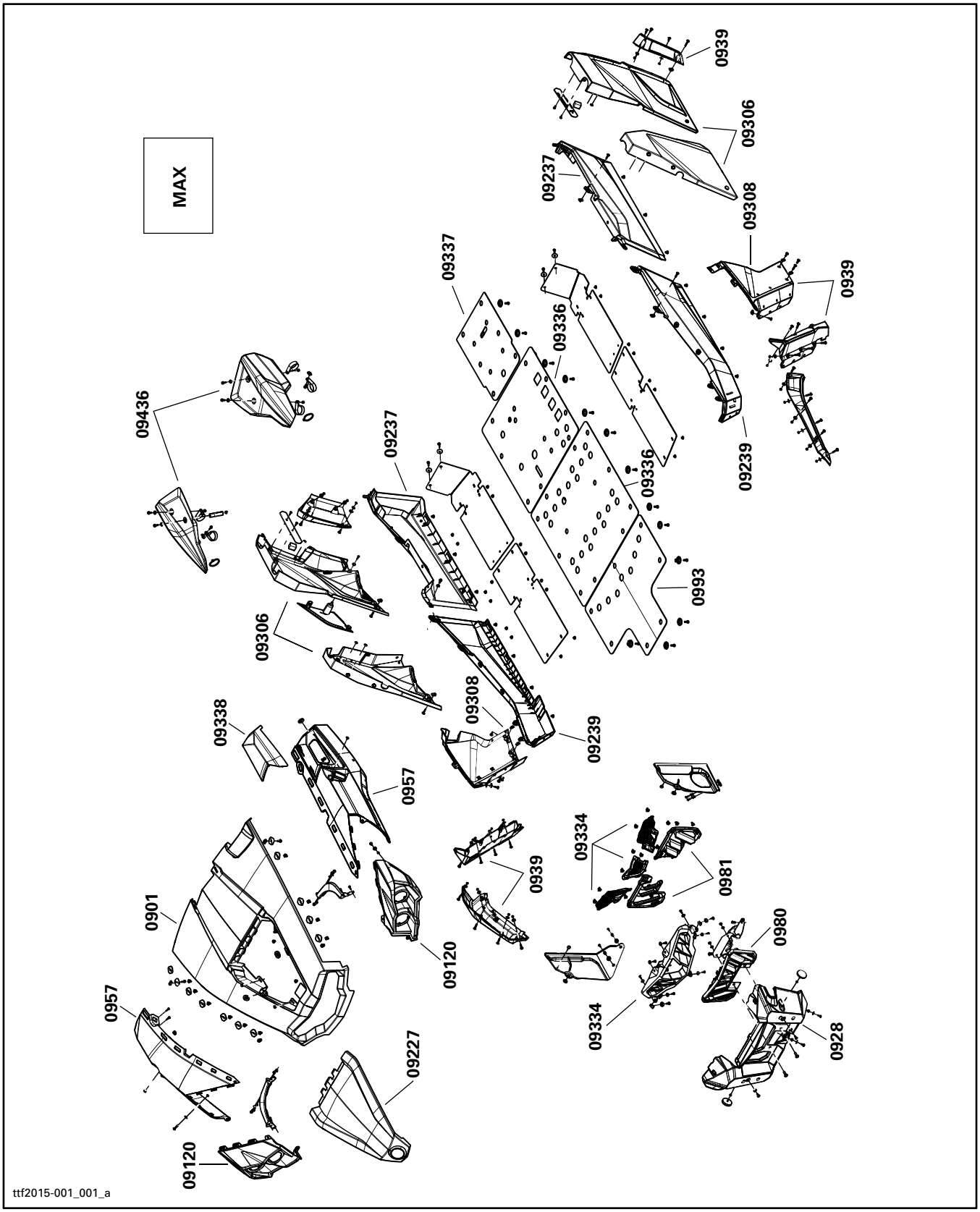
MAX
0939
09306
09237
09308
09337
09336
0939
09436
09237
09239
09336
0993
09306
09308
09239
09338
0957
09334
0939
0981
0901
09120
0980
0957
09334
0928
09227
09120
ttf2015-001_001_a

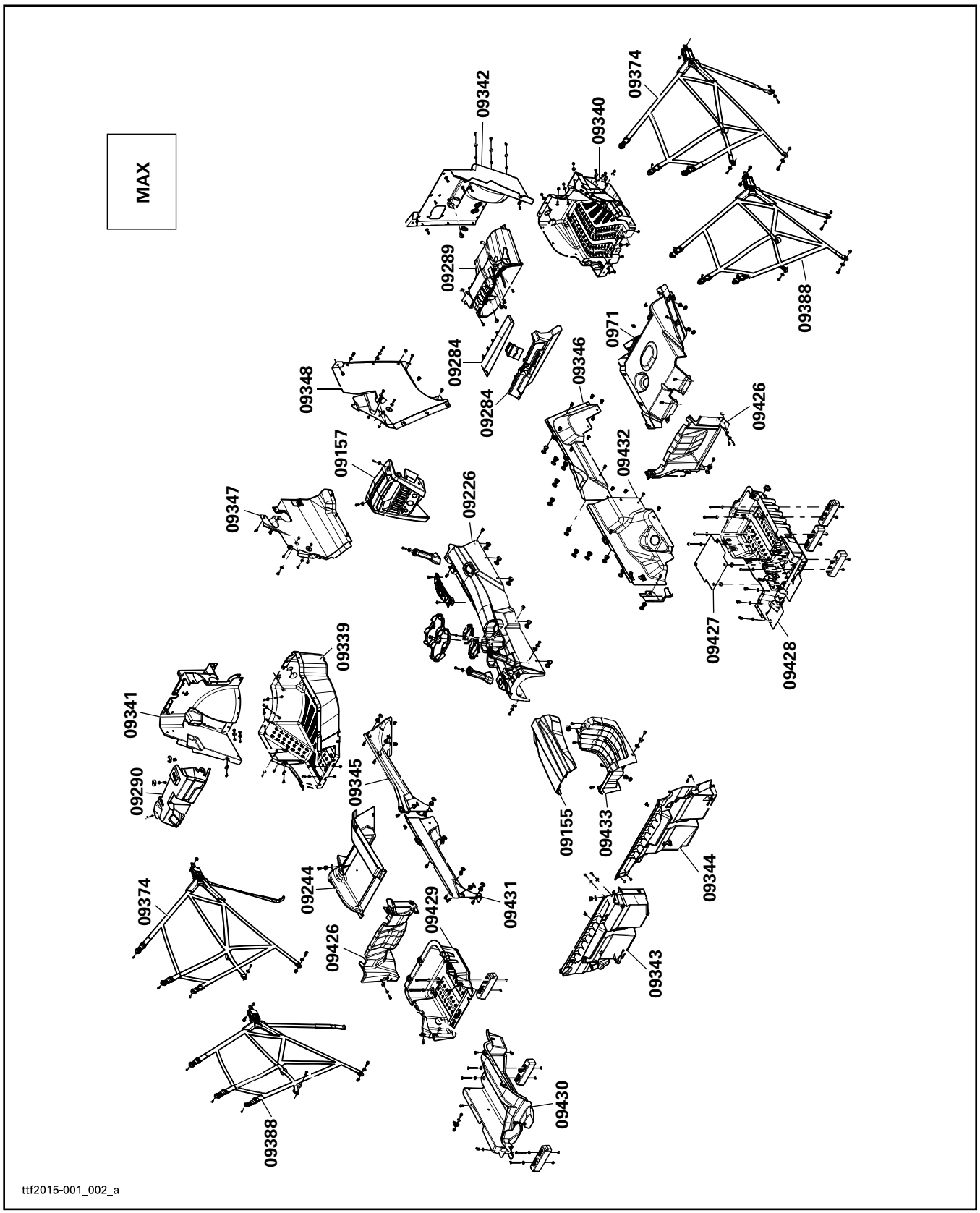
MAX
09342
09340
09374
09289
09388
09971
09284
09346
09348
09284
09426
09157
09432
09347
09226
09427
09428
09339
09341
09290
09345
09155
09433
09344
09374
09244
09431
09429
09426
09343
09388
09430
ttf2015-001_002_a

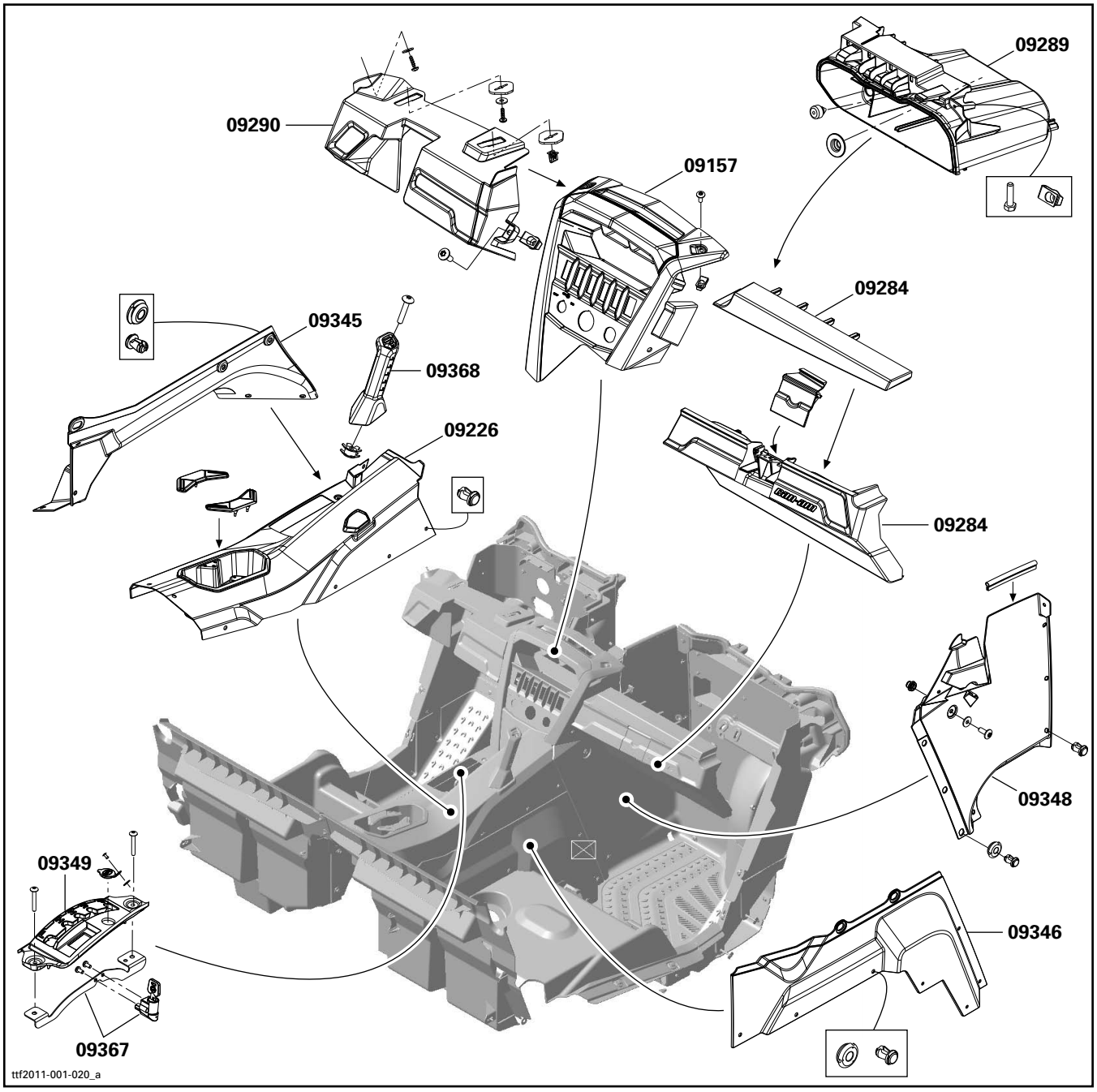
09289
09290
09157
09284
09345
09368
09226
09284
09348
09349
09346
09367
ttf2011-001-020_a

BODY AND ACCESSORIES
CARROSSERIE ET ACCESSOIRES

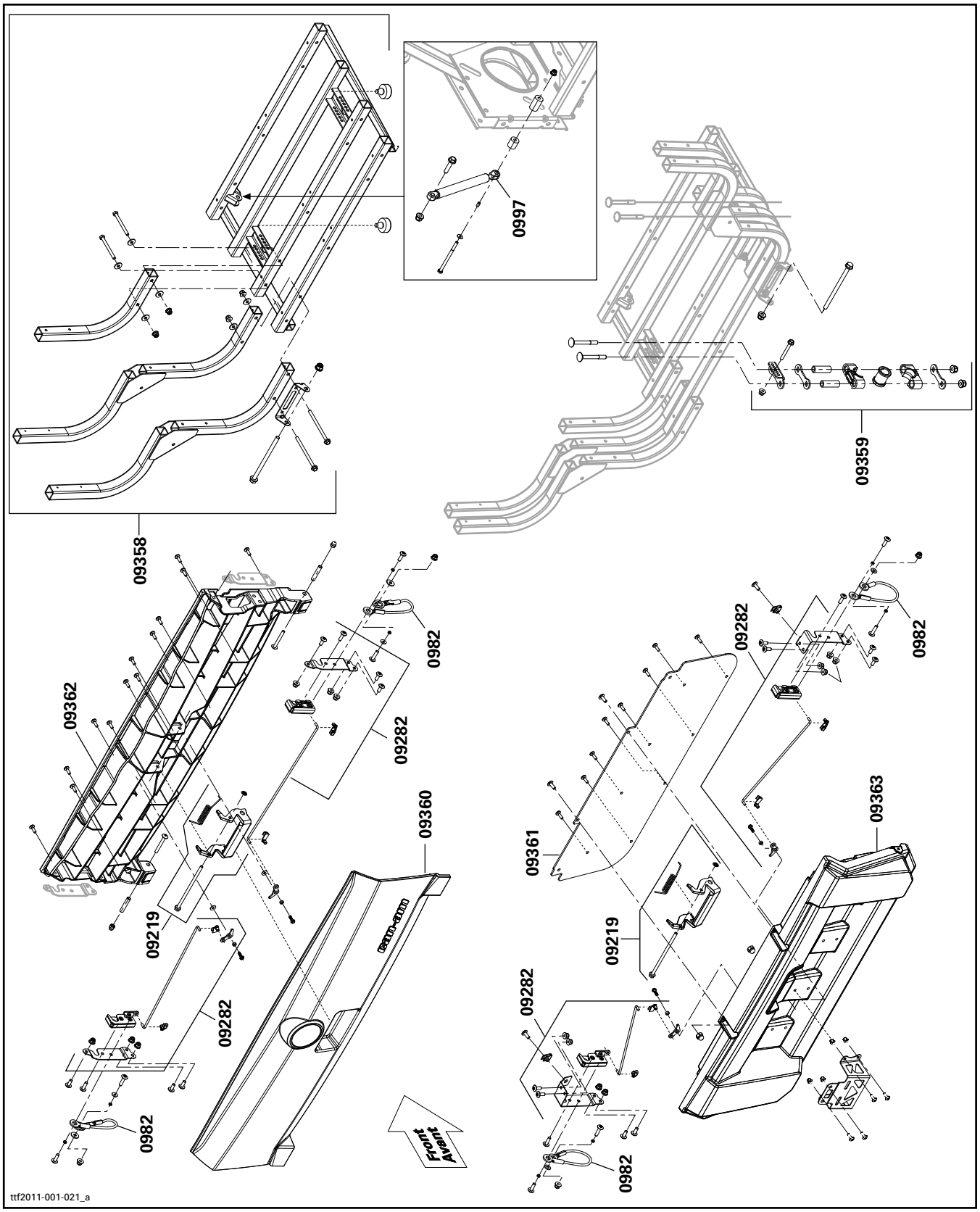

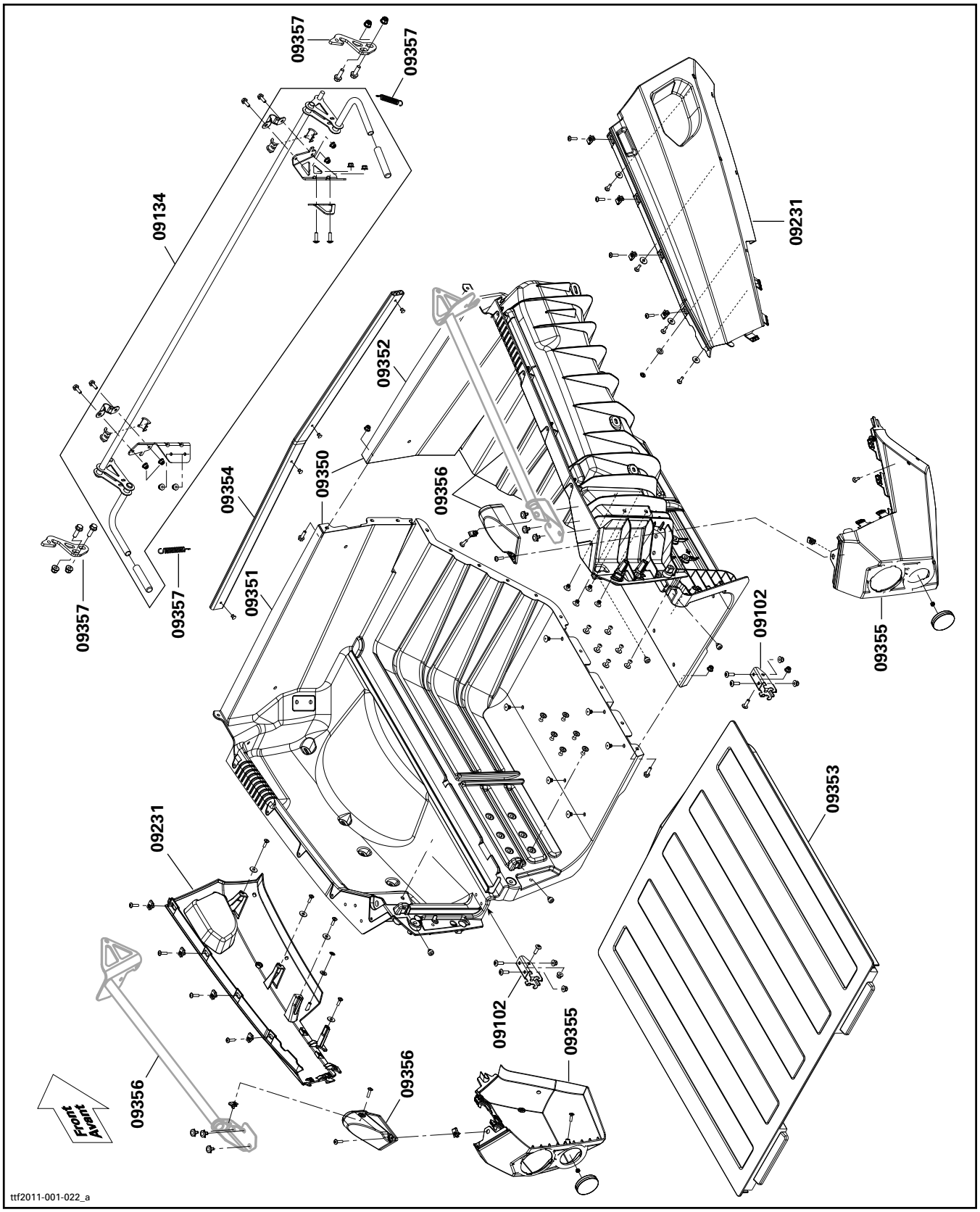
09357
09357
09134
09231
09352
09354
09350
09356
09357
09357
09351
09102
09355
09353
09231
09102
09355
09356
09356
Front
Avant
ttf2011-001-022_a

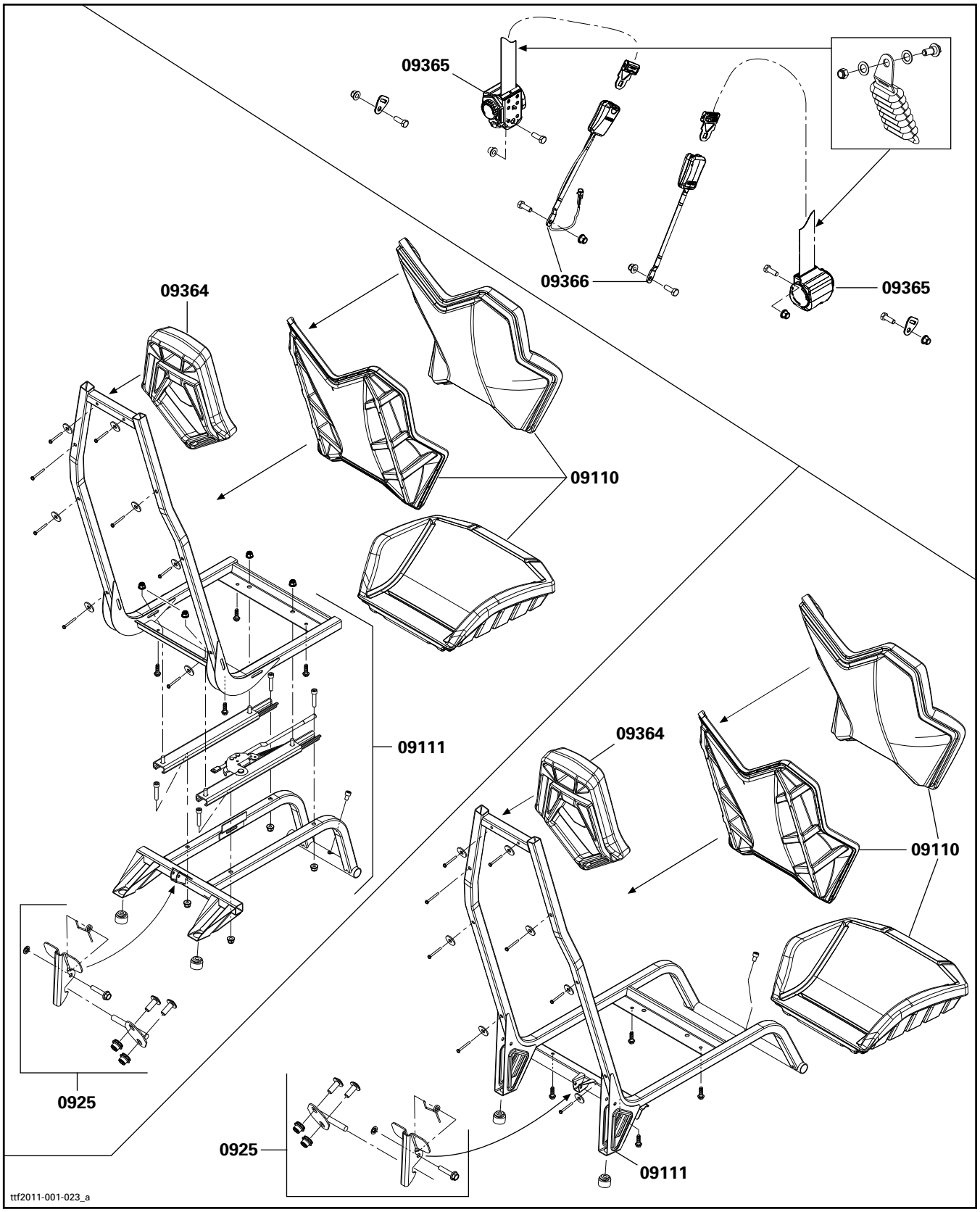
09365
09366
09365
09364
09110
09111
09364
09110
0925
0925
09111
ttf2011-001-023_a

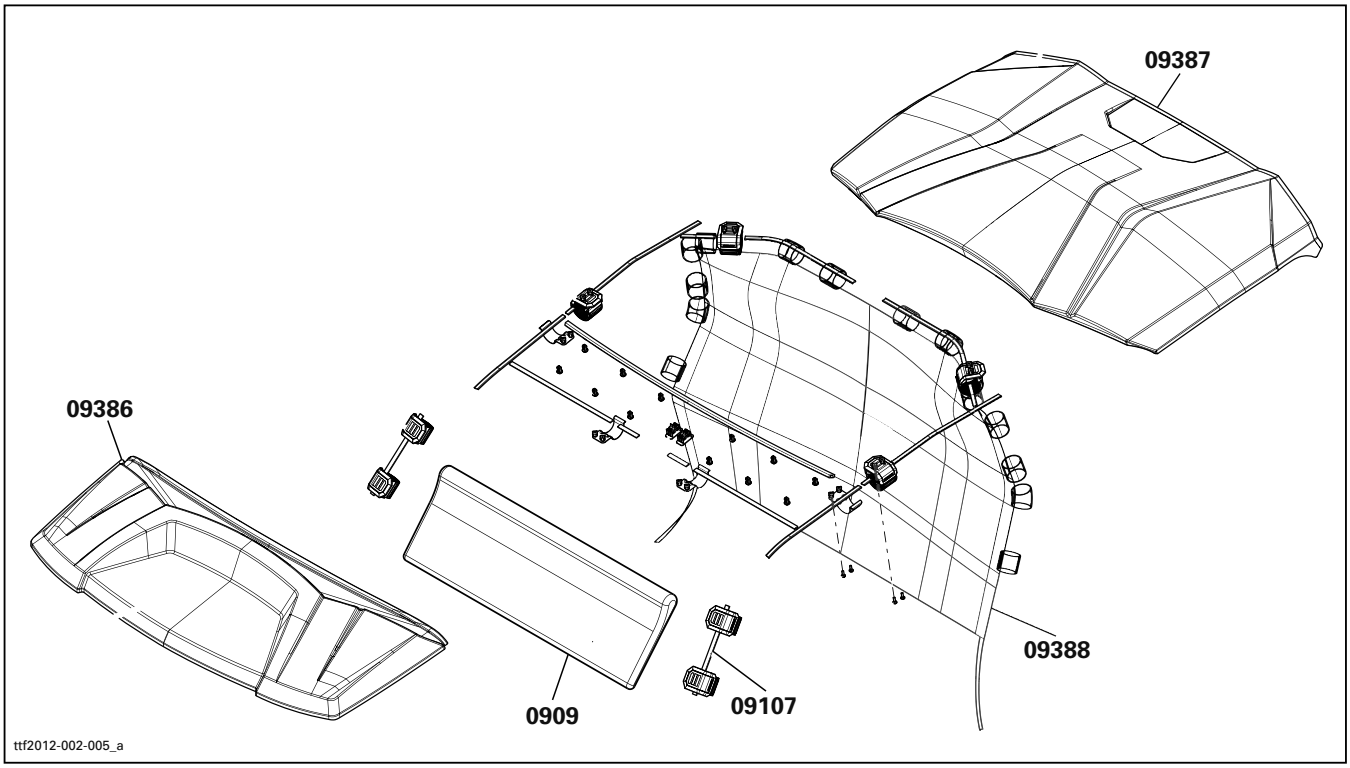
09387
09386
09388
0909
09107
ttf2012-002-005_a

BODY AND ACCESSORIES
CARROSSERIE ET ACCESSOIRES

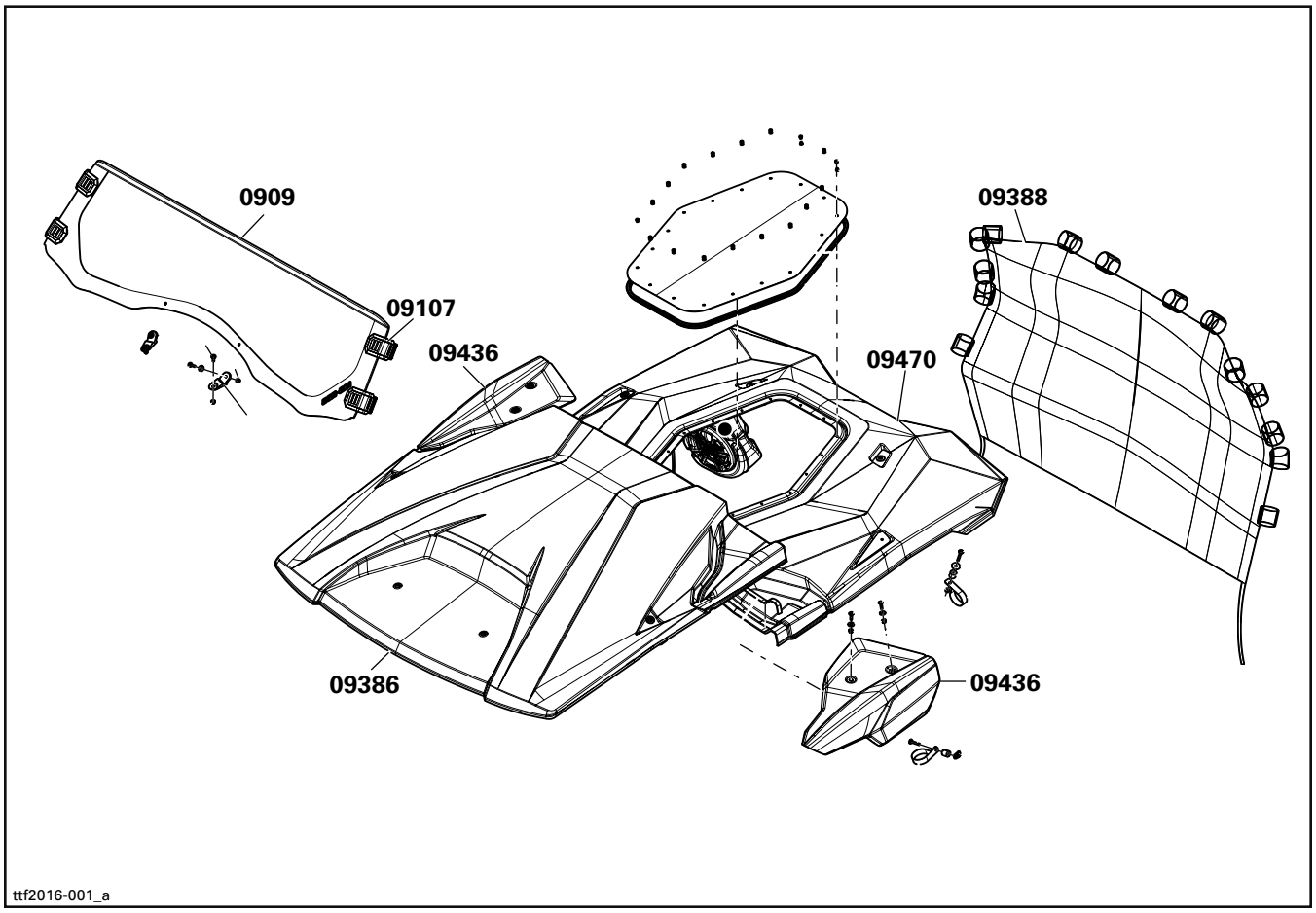

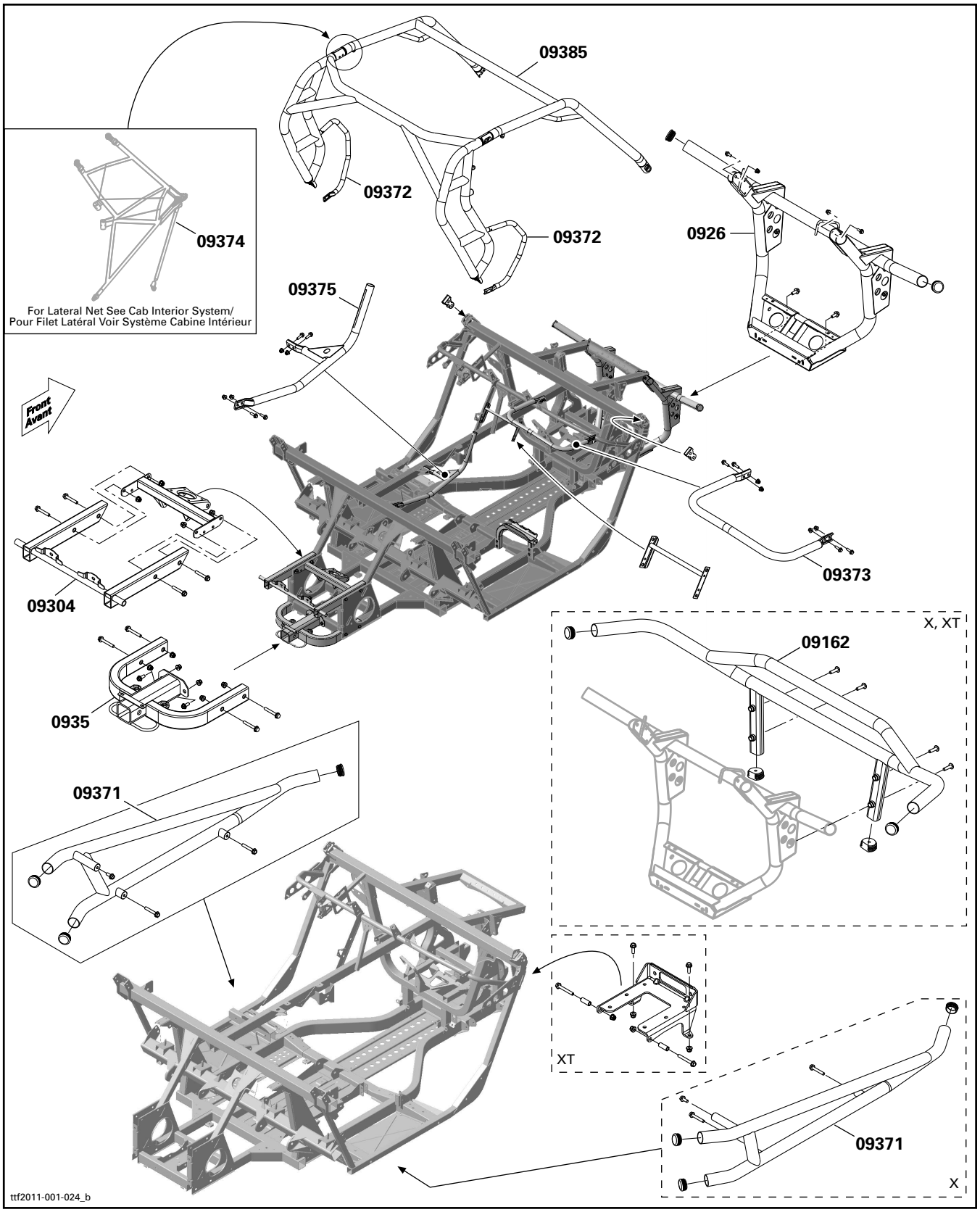
09385
09372
09372
09374
For Lateral Net See Cab Interior System/
Pour Filet Latéral Voir Système Cabine Intérieur
0926
09375
Front
Avant
09373
09304
0935
X, XT
09162
09371
XT
09371
X
ttf2011-001-024_b

SYSTEM SYSTÈME	CODE	DESCRIPTION	COMMANDER 800	COMMANDER 1000	COMMANDER LTD 1000	COMMANDER MAX	COMMANDER MAX LTD
			1	2	3	4	5
10	**00**	**NO LABOR INVOLVED AUCUNE MAIN-D'OEUVRE**	**0**	**0**	**0**	**0**	**0**
10	01	IGNITION SWITCH INTERRUPTEUR D'ALLUMAGE	0.3	0.3	0.3	0.3	0.3
10	04	HEADLIGHT SWITCH INTERRUPTEUR DE PHARE	0.3	0.3	0.3	0.3	0.3
10	09	HEADLAMP AND/OR HEADLAMP SUPPORT (ASS'Y) (RH OR LH) PHARE AVANT ET/OU SUPPORT (COMPLET) (DROIT OU GAUCHE)	0.5	0.5	0.5	0.5	0.5
10	10	VOLTAGE REGULATOR RÉGULATEUR DE TENSION	0.3	0.3	0.3	0.3	0.3
10	13	BATTERY BATTERIE	0.3	0.3	0.3	0.5	0.5
10	14	FUSE BOX BOÎTE-FUSIBLE	0.4	0.4	0.4	0.5	0.5
10	29	TAIL LAMP HOUSING (ASS'Y) BOÎTIER DE FEU ARRIÈRE (COMPLET)	0.3	0.3	0.3	0.3	0.3
10	31	DC OUTLET PLUG PRISE D'ACCESSOIRE DC	0.3	0.3	0.3	0.3	0.3
10	34	ELECTRONIC MODULE MODULE ÉLECTRONIQUE	0.3	0.3	0.3	0.3	0.3
10	41	ENGINE HARNESS CÂBLAGE MOTEUR	1.6	1.6	1.6	2.0	2.0
10	45	WINCH (ASS'Y) (XT) TREUIL (COMPLET) (XT)	0.6	0.6	0.6	0.6	0.6
10	46	WINCH SOLENOID (XT) SOLÉNOÏDE DE TREUIL (XT)	0.5	0.5	0.5	0.5	0.5
10	47	WINCH SWITCH (XT) INTERRUPTEUR DE TREUIL (XT)	0.3	0.3	0.3	0.3	0.3
10	49	MULTIFUNCTION GAUGE CADRAN MULTIFONCTION	0.3	0.3	0.3	0.3	0.3
10	51	MAIN WIRE HARNESS CÂBLAGE PRINCIPAL	3.0	3.0	3.0	3.6	3.6
10	52	STARTING RELAY RELAIS DE DÉMARRAGE	0.4	0.4	0.4	0.4	0.4
10	61	FRONT FLASHERS 1 OR 2 (**CE** ONLY) CLIGNOTANTS AVANT 1 OU 2 (**CE** SEULEMENT)	0.3	0.3	0.3	0.3	0.3
10	62	REAR FLASHERS 1 OR 2 (**CE** ONLY) CLIGNOTANTS ARRIÈRE 1 OU 2 (**CE** SEULEMENT)	0.3	0.3	0.3	0.3	0.3
10	63	HAZARD WARNING BUTTON (**CE** ONLY) COMMUTATEUR D'URGENCE (**CE** SEULEMENT)	0.3	0.3	0.3	0.3	0.3
10	64	DIRECTION INDICATOR SWITCH (**CE** ONLY) INTERRUPTEUR CLIGNOTANTS (**CE** SEULEMENT)	0.3	0.3	0.3	0.3	0.3

SYSTEM SYSTÈME	CODE	DESCRIPTION	COMMANDER 800	COMMANDER 1000	COMMANDER LTD 1000	COMMANDER MAX	COMMANDER MAX LTD
			1	2	3	4	5
10	65	12 VOLT RELAY (CE ONLY) RELAIS 12 VOLT (CE SEULEMENT)	0.3	0.3	0.3	0.3	0.3
10	66	HORN AVERTISSEUR	0.3	0.3	0.3	0.3	0.3
10	67	RELAY RELAIS	0.3	0.3	0.3	0.3	0.3
10	68	ANY BULBS TOUTES LES AMPOULES	0.4	0.4	0.4	0.4	0.4
10	71	LICENSE LIGHT (ASS'Y) LUMIÈRE D'IMMATRICULATION (COMPLET)	0.3	0.3	0.3	0.3	0.3
10	75	REAR HARNESS CÂBAGLE ARRIÈRE			1.0		1.2
10	76	FRONT HARNESS CÂBLAGE AVANT			1.2		1.2
10	83	SWITCH INTERRUPTEUR			0.3		0.3
10	93	ANTENNA ANTENNE			0.4		0.4
10	96	RADIO CONTROL SWITCH INTERRUPTEUR DE COMMANDE RADIO			0.4		0.4
10	97	RADIO MODULE MODULE RADIO			0.4		0.4
10	98	REAR SPEAKER HAUT-PARLEUR ARRIÈRE			0.3		0.3
10	104	FRONT SPEAKER HAUT-PARLEUR AVANT			0.3		0.3
10	111	START BUTTON BOUTON DE DÉMARRAGE	0.3	0.3	0.3	0.3	0.3
10	112	OVERRIDE SWITCH INTERRUPTEUR DE NEUTRALISATION	0.3	0.3	0.3	0.3	0.3
10	113	REMOTE CONTROL COMMANDE À DISTANCE	0.3	0.3	0.3	0.3	0.3
10	114	WINCH CONNECTOR CONNECTEUR DE TREUIL	0.3	0.3	0.3	0.3	0.3
10	119	RADIO HARNESS CÂBLAGE RADIO			1.2		1.2
10	120	AIR COMPRESSOR HARNESS CÂBLAGE DU COMPRESSEUR D'AIR			1.1		
10	129	SUSPENSION CONTROL MODULE (SCM) MODULE COMMANDE DE SUSPENSION (SCM)			0.5		

ELECTRICAL SYSTEM
SYSTÈME ÉLECTRIQUE

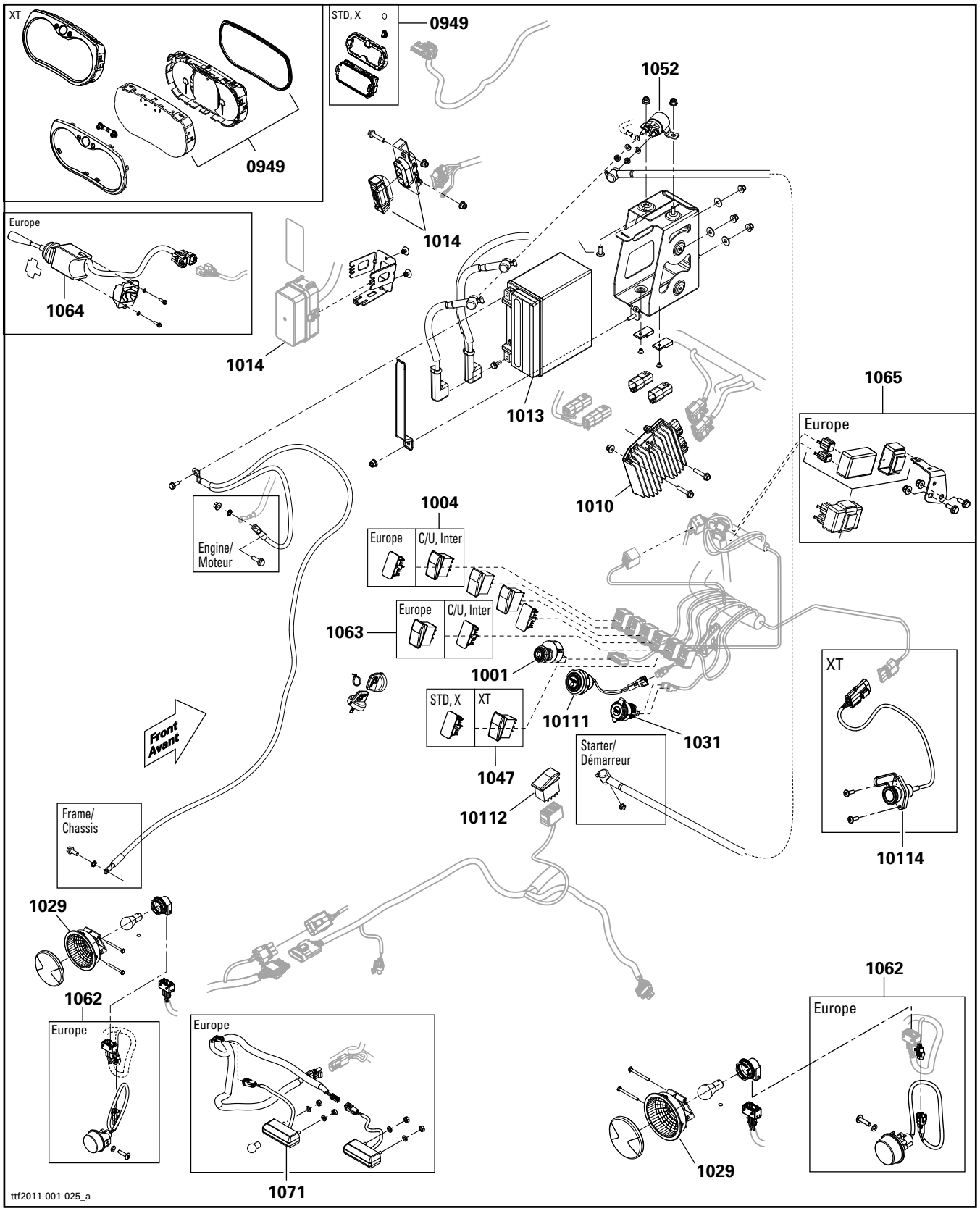

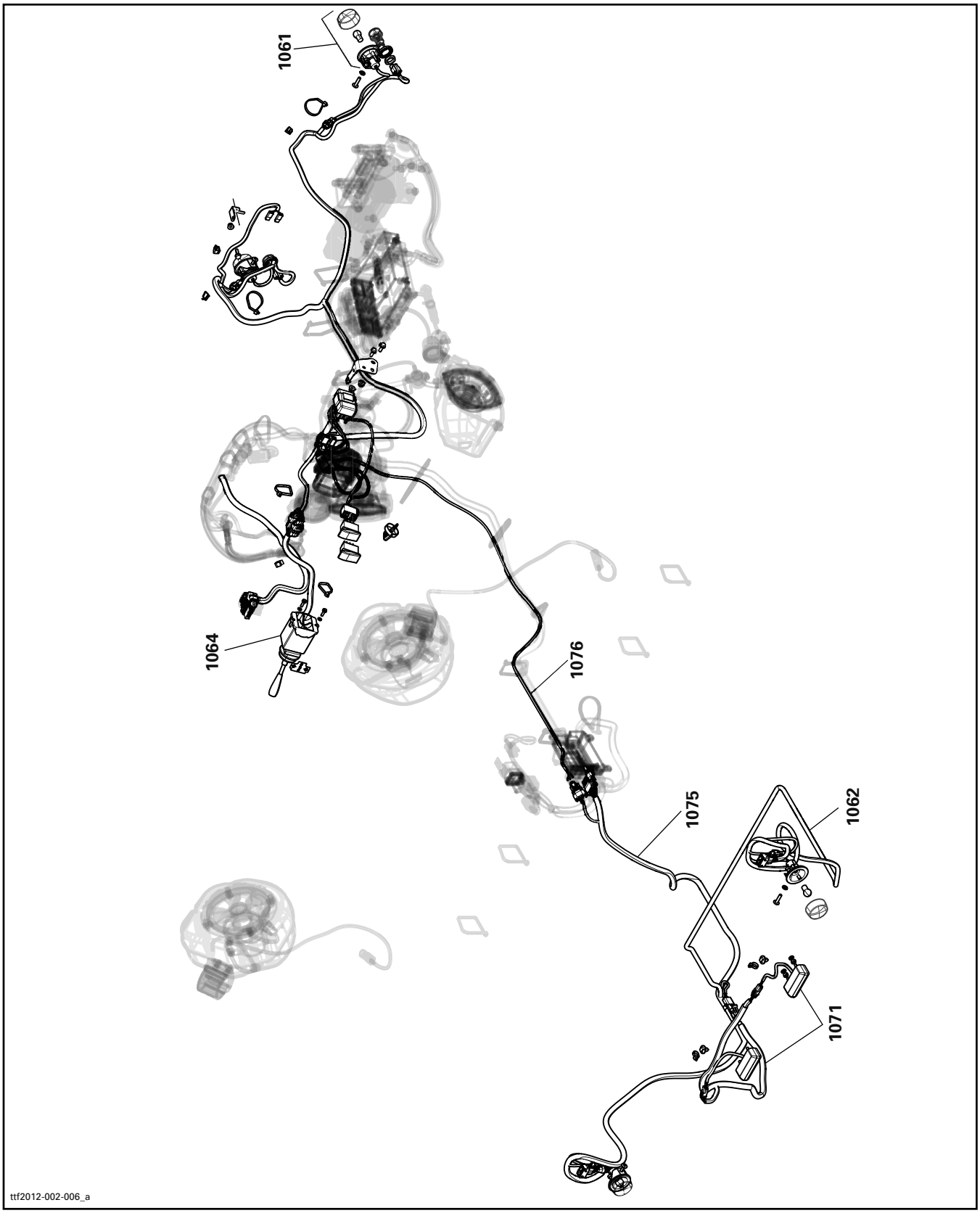
1061
1064
1076
1075
1062
1071
ttf2012-002-006_a

ELECTRICAL SYSTEM
SYSTÈME ÉLECTRIQUE

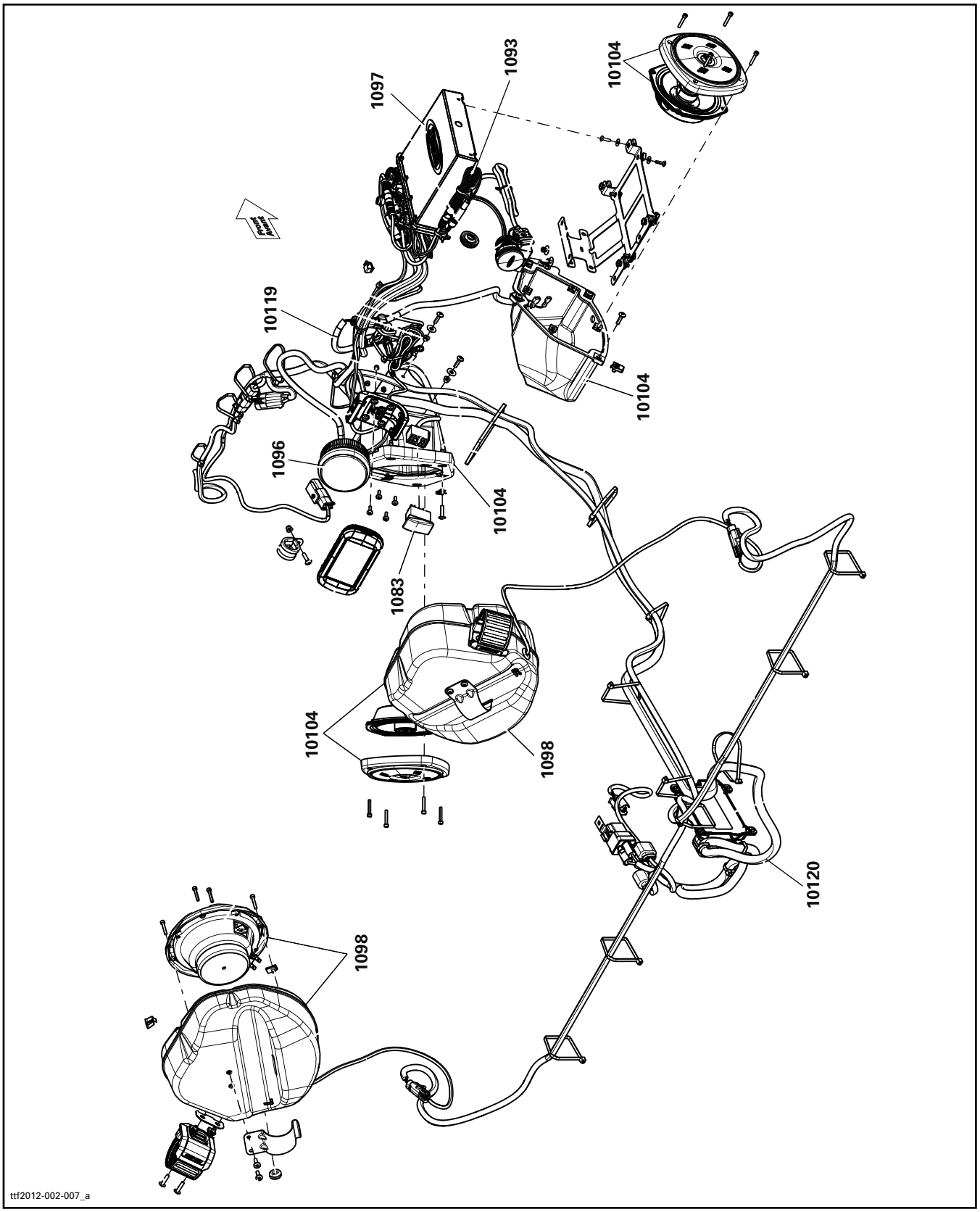

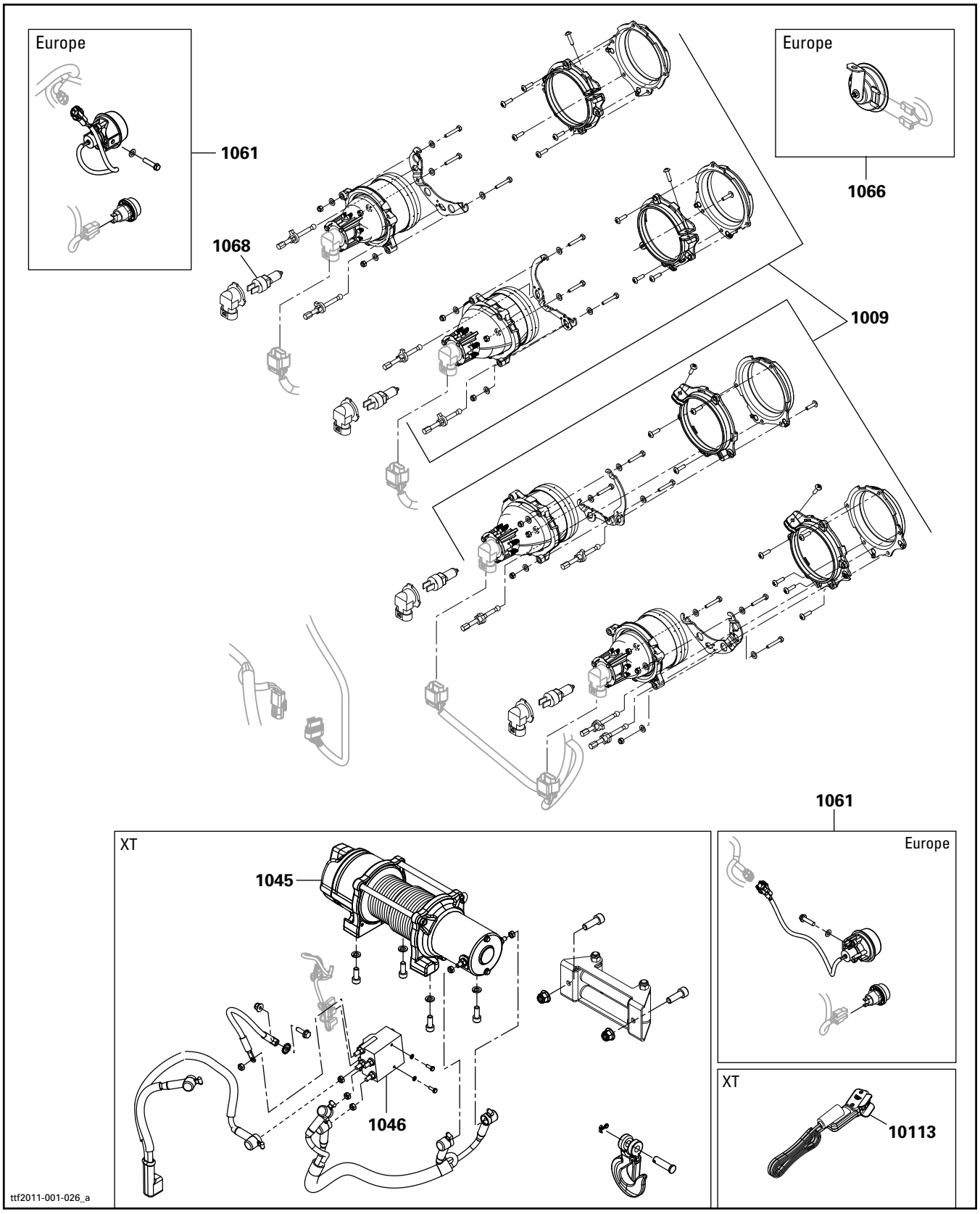
Europe
1061
Europe
1066
1068
1009
1061
XT
1045
Europe
XT
1046
10113
ttf2011-001-026_a



Good day everyone, my name is Dany Davey, Can-Am Off-Road Product Specialist at BRP. We will go over the 2017 Side-By-Side technical presentation illustrating the line-up improvements and new features.



Let’s start with our utility-recreational segment.



BRP is proud to present the new Mossy Oak Hunting Edition to the Defender family.

NEW DEFENDER HD10 Mossy Oak Hunting Edition



Defender XT HD10 Camo plus…

Function	• Double Kolpin Stronghold Gun Boots - Impact & tool holders • Headache rack with LinQ quick-attach system • LinQ tool holder (2) • LED RAM spot light
Protection	• Half windshield • Heavy-duty front steel bumper • Full hard roof • Full underbody skid plate with front aluminum pre-runner skid plate
Rider-focused amenities	• Left side mirror • 14-in wheel design

With this vehicle you get everything already included in the Defender XT HD10 Camo plus fully equipped right out of the factory with these much appreciated accessories and options.



This unit will surely satisfy the adamant hunters in your regions.



Officially announced in last March, the Defender MAX model



Will provide comfortable seating for 6 adults

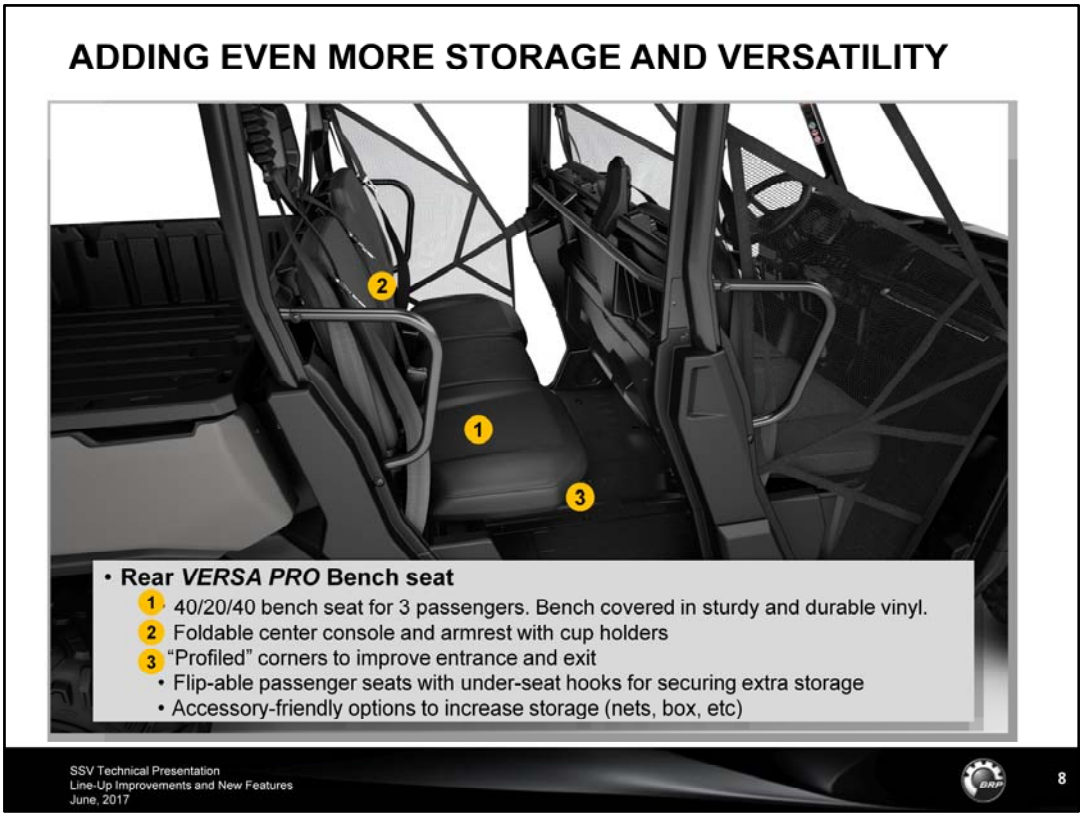

Adding even more storage and versatility with rear versa pro bench seats.

ADDING EVEN MORE STORAGE AND VERSATILITY



- **Rear VERSA PRO Bench seat**
  - 40/20/40 bench seat for 3 passengers. Bench covered in sturdy and durable vinyl.
  - Foldable center console and armrest with cup holders
  - "Profiled" corners to improve entrance and exit
  - Flip-able passenger seats with under-seat hooks for securing extra storage
  - Accessory-friendly options to increase storage (nets, box, etc)

Note the flip-able passenger seats with under-seat hooks for securing extra cargo and storage.

CHASSIS



- Fully welded frame
- Wheelbase increased by 32.5-inches for 115.5-inch total

The frame is fully welded with an increased wheelbase of 32.5 inches for a 115.5 inches in total.

NEW DEFENDER MAX PACKAGES

DEFENDER MAX DPS

TOUGH
- High torque HD8 / HD10 engine options
- PRO-TORQ Transmission
- High rigidity chassis
- Easy to service

CAPABLE
- True 4-mode traction system
- TTA-HD rear suspension
- DPS / Visco Lok QE
- 12-in cast-aluminum wheels
- Maxxis 26-in tires

CLEVER
- Multifunction cargo box
- Dual VERSA-PRO bench seat
- Profiled cage
- Removable toolbox
- Under-dash storage
- Digital gauge







The Defender MAX models will be offered with HD8 and HD10 engines in DPS

NEW DEFENDER MAX PACKAGES

DEFENDER MAX XT

TOUGH
- High torque HD8 / HD10 engine options
- PRO-TORQ Transmission
- High rigidity chassis
- Easy to service

CAPABLE
- True 4-mode traction system **/ 3 driving modes**
- TTA-HD rear suspension
- DPS / Visco Lok QE
- **14**-in cast-aluminum wheels
- **Maxxis Bighorn 27-in tires**
- **4,500 lbs winch**
- **Full hard roof**
- **Full skid plate**

CLEVER
- Multifunction cargo box
- Dual **Advanced** VERSA-PRO bench seat
- Profiled cage
- Removable toolbox
- Under-dash / **Enclosed under-seat storage**
- **Analog / digital gauge w/ enclosed storage**



And XT models

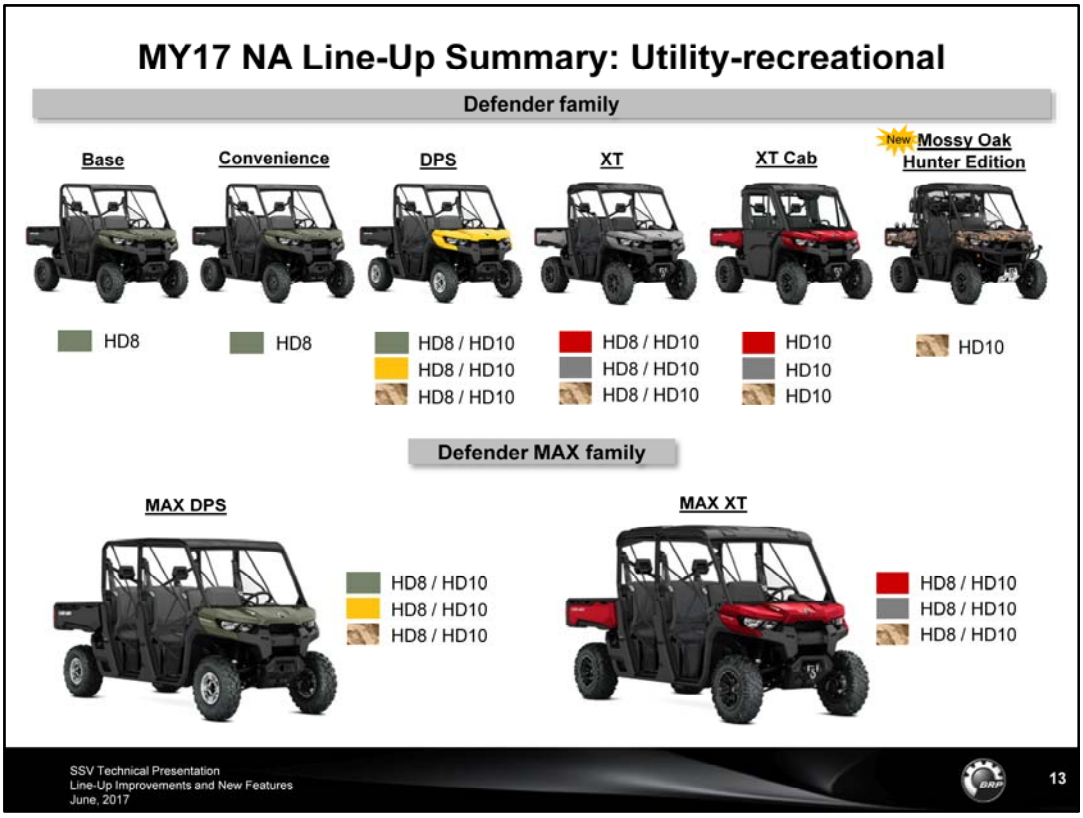

Here you have the full Utility-recreational family for 2017

Technical Improvements - Engine

- Defender exhaust gets an O2 sensor
  - All HD8 and HD10 models get O2 sensor
  - CARB Compliant

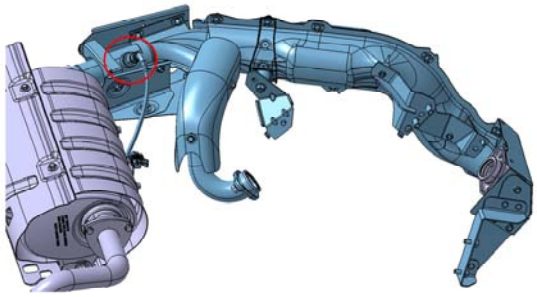

On the technical side, improvements to the engine include the addition of an O2 sensor which make the Defender CARB compliant.

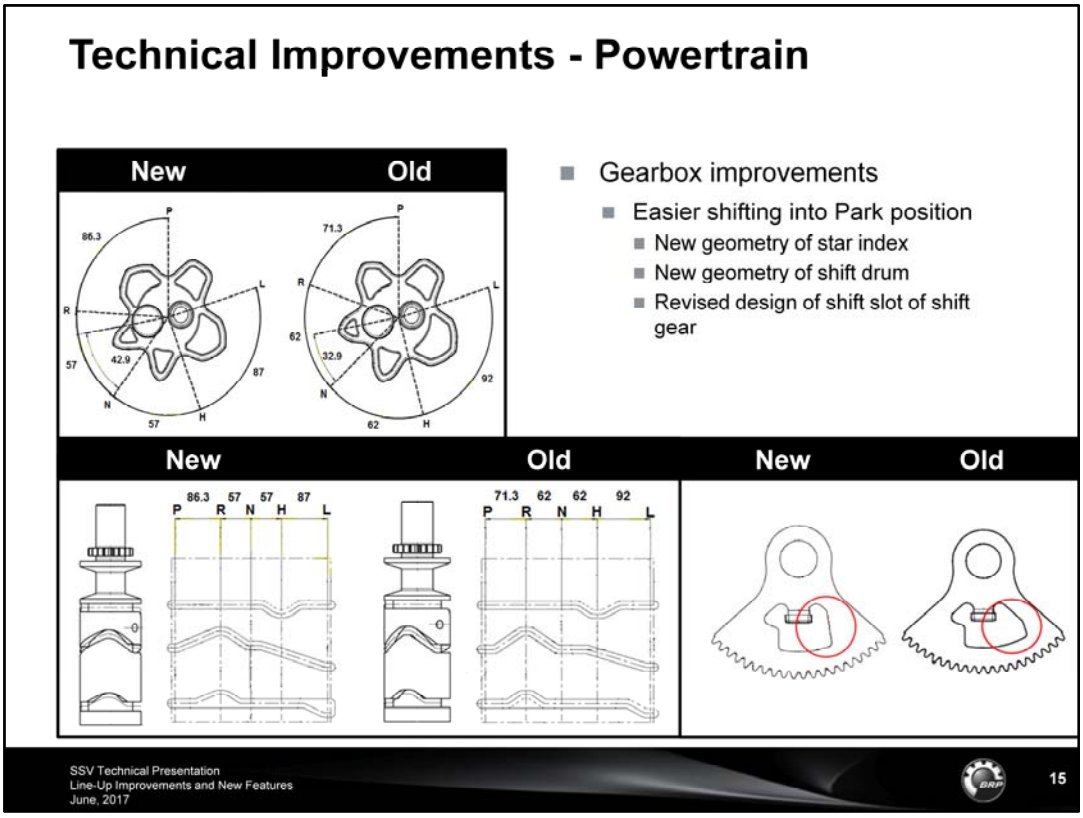

Improvements to the powertrain include changes to the gearbox to allow easier shifting into Park position.
Park gear will engage easier due to new geometries of the star index and shift drum.
Note that the shift lever movement will feel stiff due to a revised design of the shift slot of the shift gear which increases spring strength.



Now let’s take a look at the recreational-utility and recreational-sport segments.



The new midnight blue coloration of the Commander Limited and MAX limited is sure to catch the attention of customers.

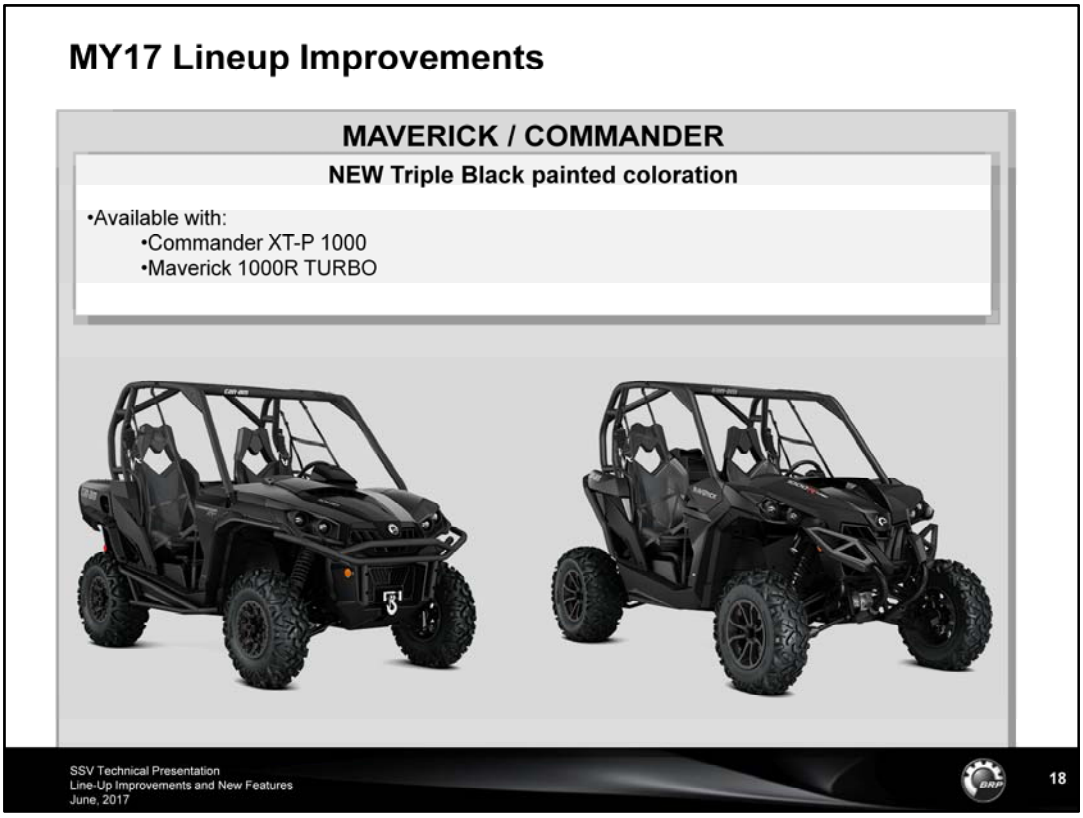

Triple black is offered on the Commander XT-P 1000 and Maverick 1000R Turbo.

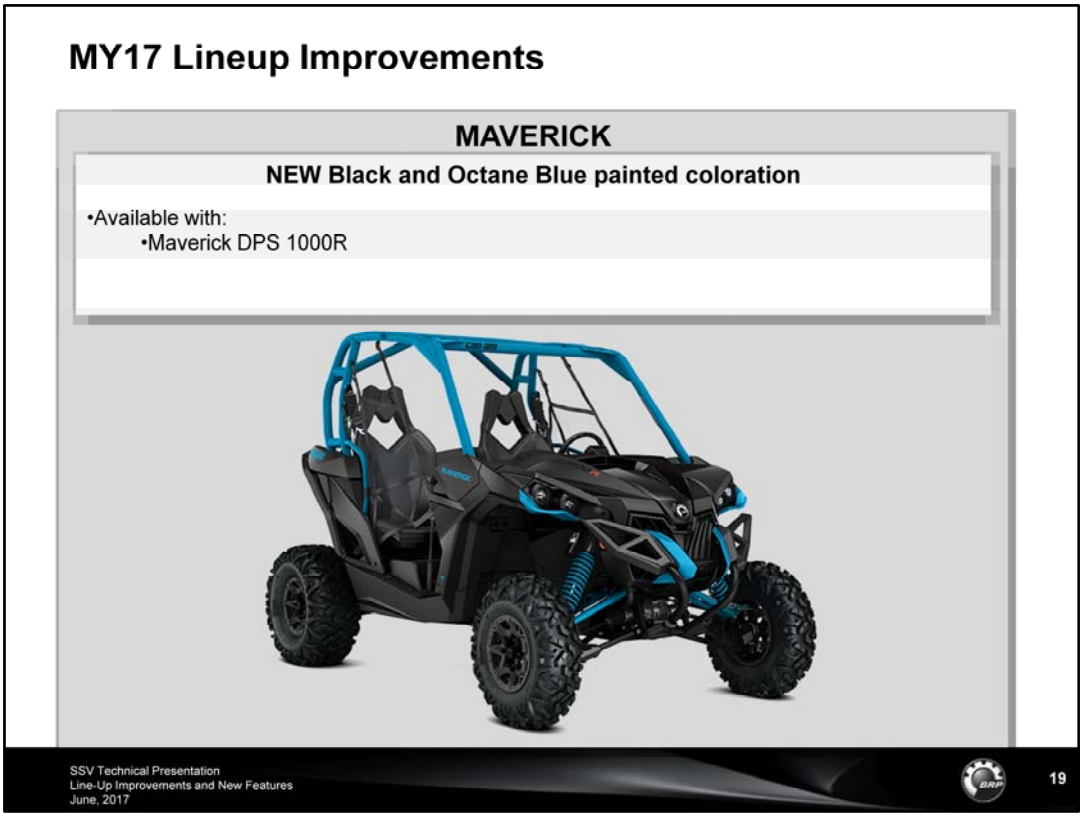

The Maverick DPS 1000R will be available in black and octane blue.

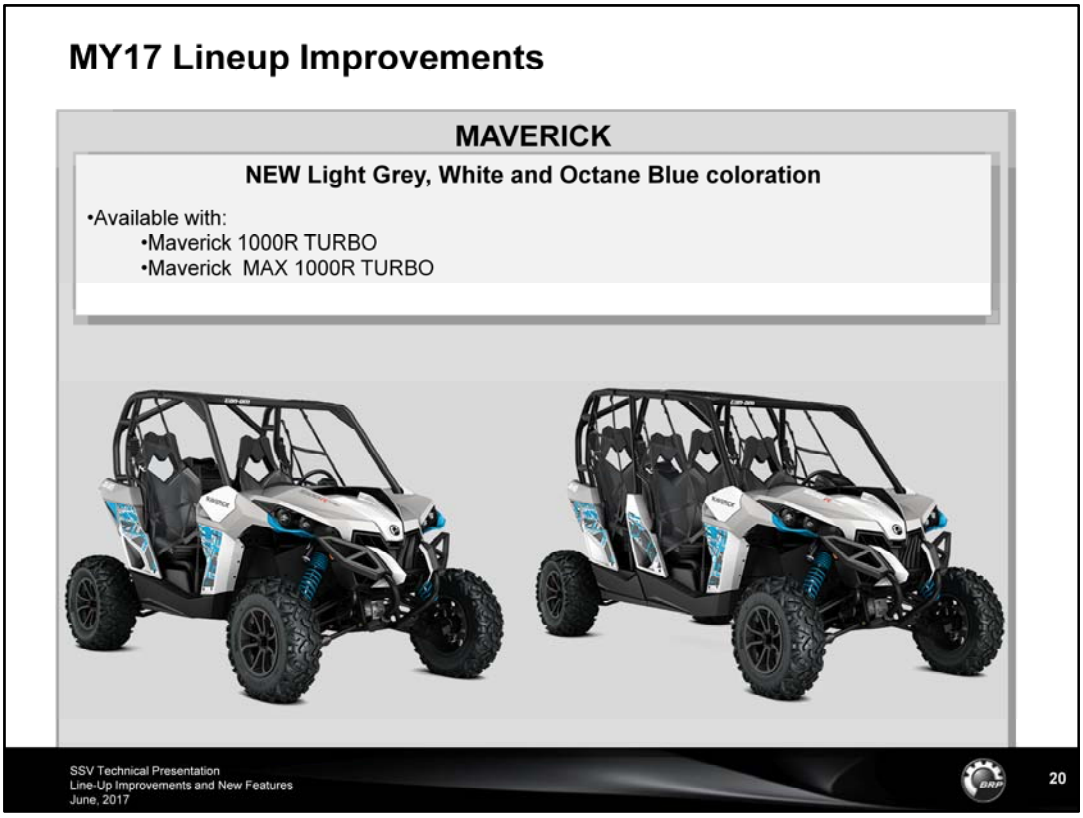

Maverick and Maverick MAX 1000R Turbo models will be available in light grey, white and octane blue coloration

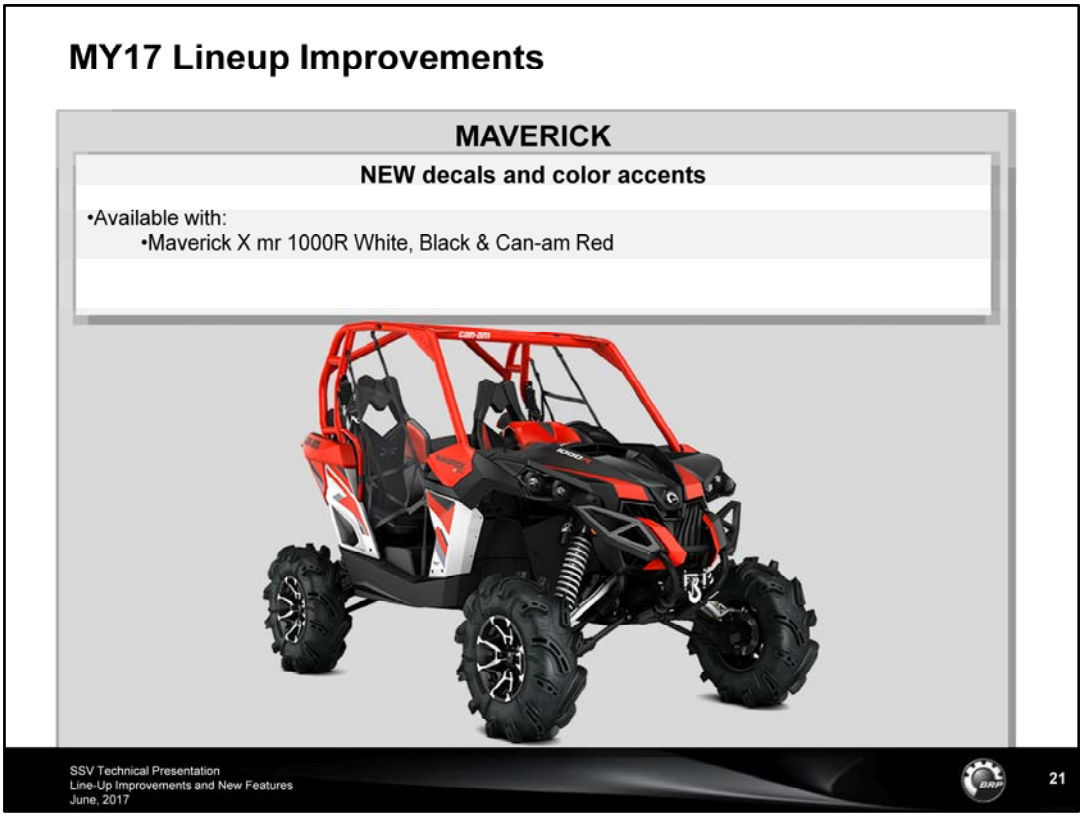

The Maverick Xmr 1000R will be available with white, black and can-am red color accents



How can we make the Maverick more accessible?

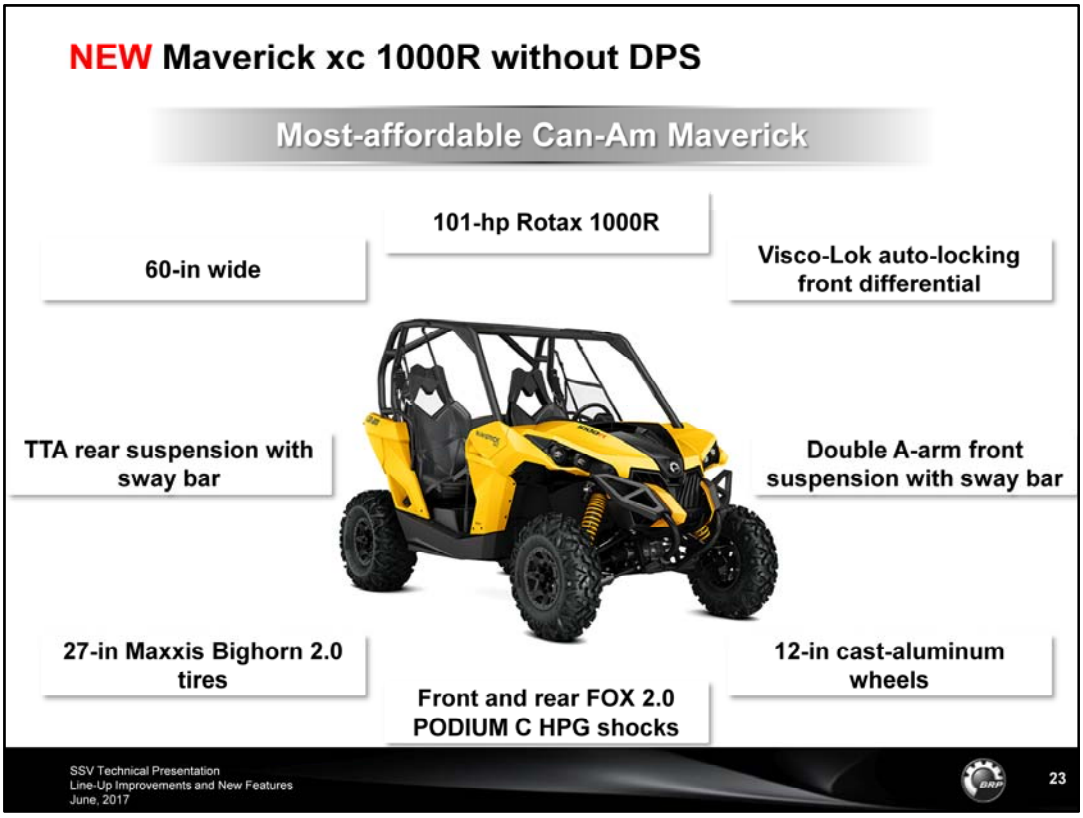

Now available without DPS.
Still a great package at 60 inches wide with a 1000R, 101 horsepower Rotax engine. Visco-lok front differential, double a-arm front suspension with sway bar, 12 inch cast aluminum wheels, front and rear FOX 2.0 Podium C HPG shocks, 27 in Maxxis Bighorn 2.0 tires, and TTA rear suspension with sway bar.



Why not bring all your friends and family in the mud?

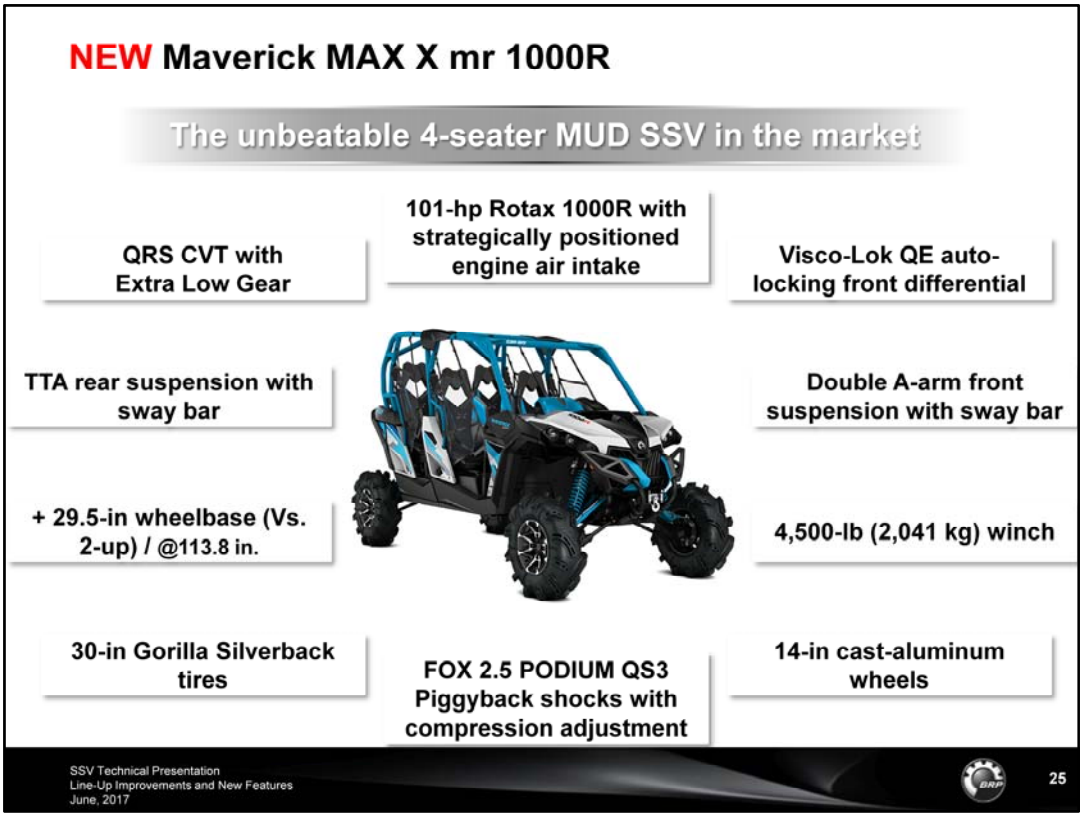

Introducing the new Maverick MAX Xmr.
With a 101-hp Rotax 1000R engine with strategically positioned air intake, Visco-Lok QE auto-locking front differential, Double A-arm front suspension with sway bar, 4,500-lb (2,041 kg) winch, 14-in cast-aluminum wheels, FOX 2.5 PODIUM QS3 Piggyback shocks with compression adjustment, 30-in Gorilla Silverback tires, + 29.5-in wheelbase (Vs. 2-up) / @113.8 in., TTA rear suspension with sway bar , and QRS CVT with Extra Low Gear.

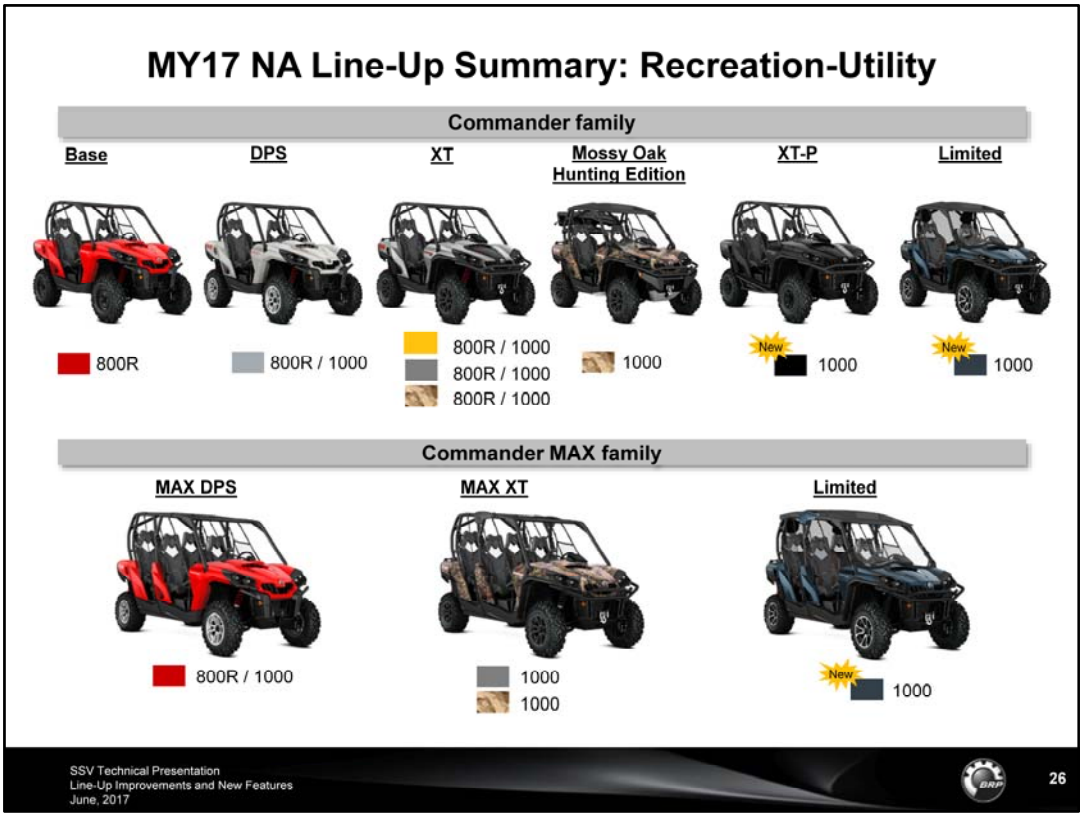

Here we have the full recreational-utility line up for 2017.

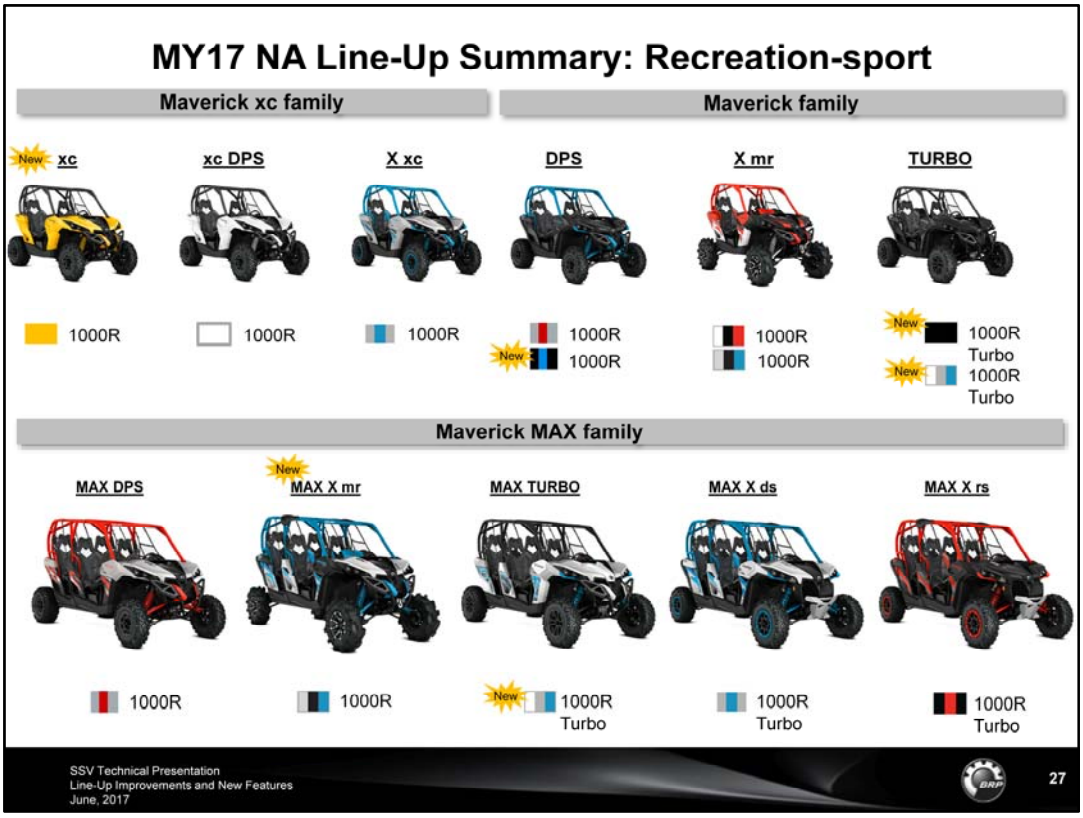

And we have the full recreational-sport line up for 2017

Technical Improvements - Accessories

- 4500lbs SuperWinch from Defender now installed on Commander and Maverick (applicable models)

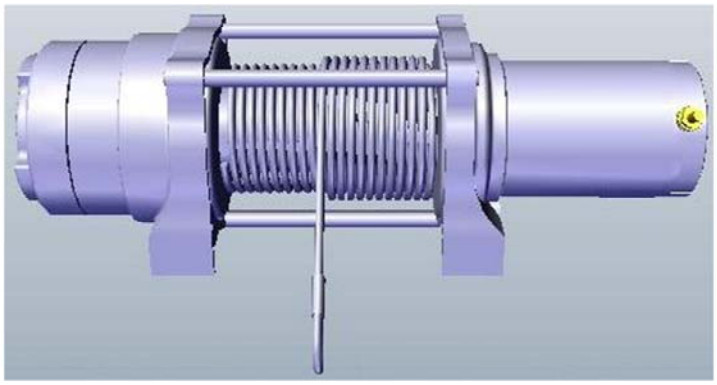

Accessories technical improvements, for applicable models, the 4500lbs winch from the Defender now installed on Commander and Maverick.

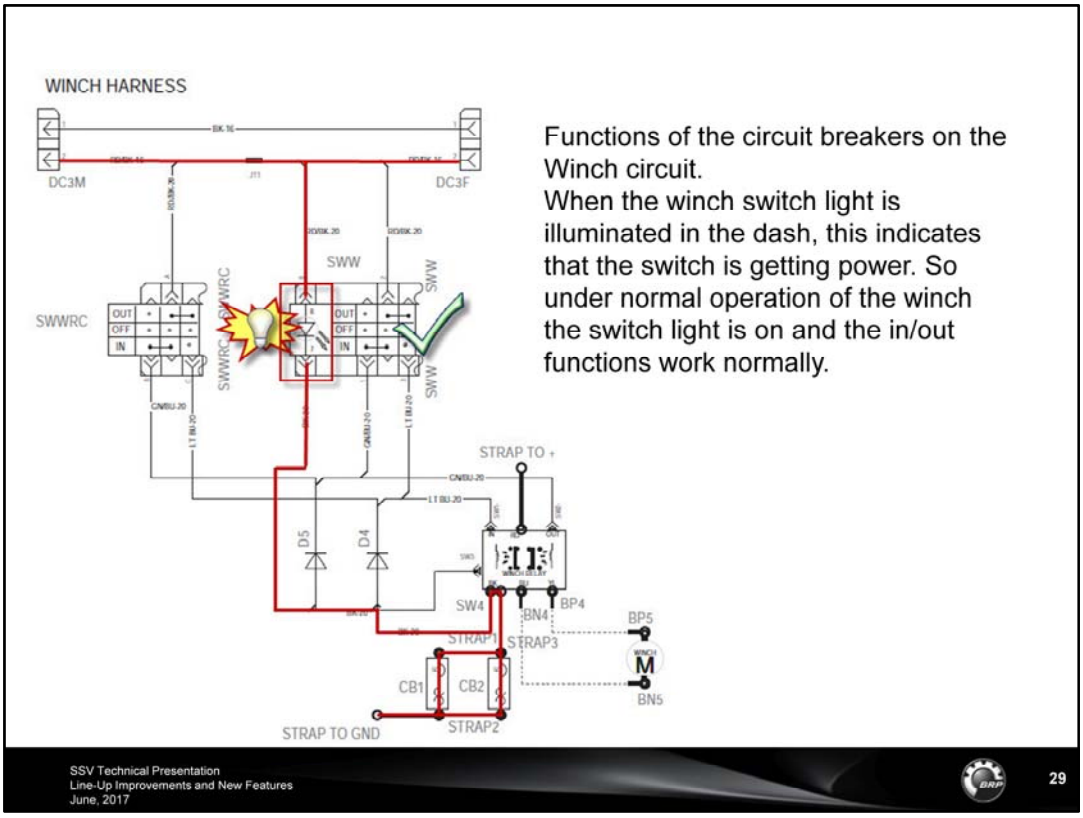

With this winch you will notice the electrical circuit has 2 50 amp circuit breakers. This is added over-current protection which increases winch life. A particularity of this circuit is that the circuit breakers also ground the winch activation switch backlight.
Therefore, under normal operation the winch will work when the switch back light is ON.

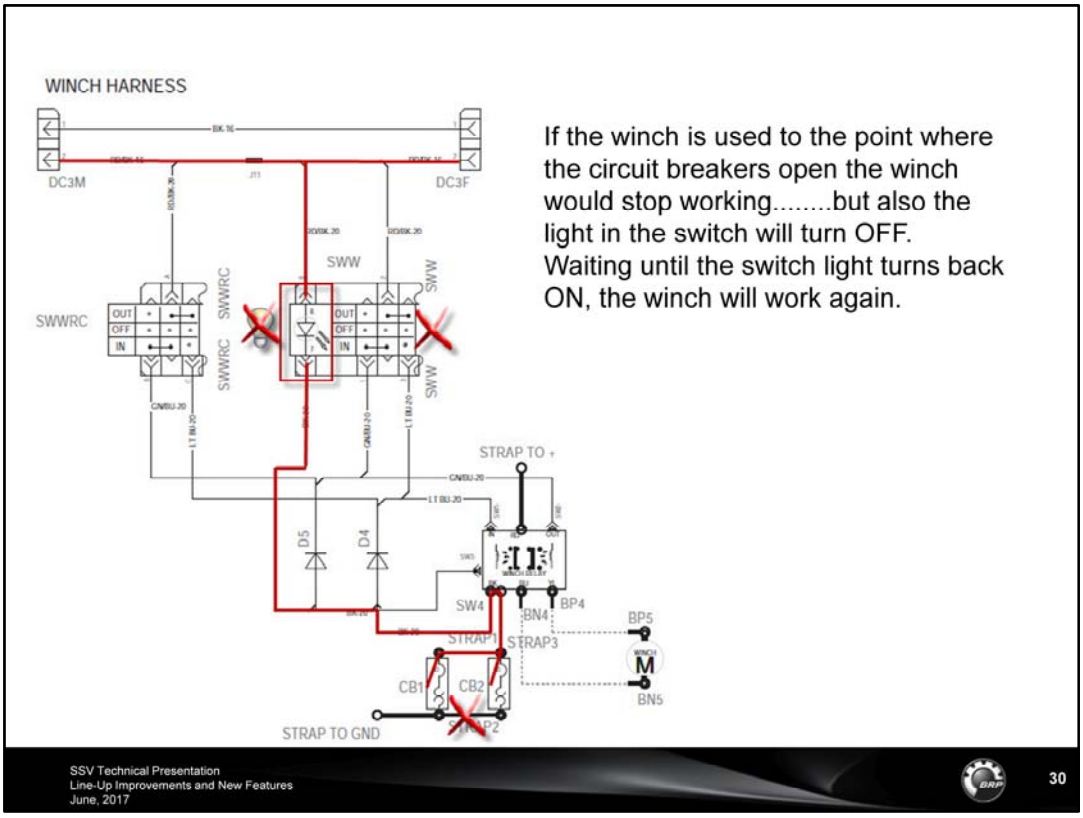

If after repeated or extended winch use the circuit breakers open the winch will no longer function and the switch back light will also be off.
This is a clear sign that the circuit breakers have opened and the winch needs to cool down. Once the switch light comes back on, the winch will be functional again.

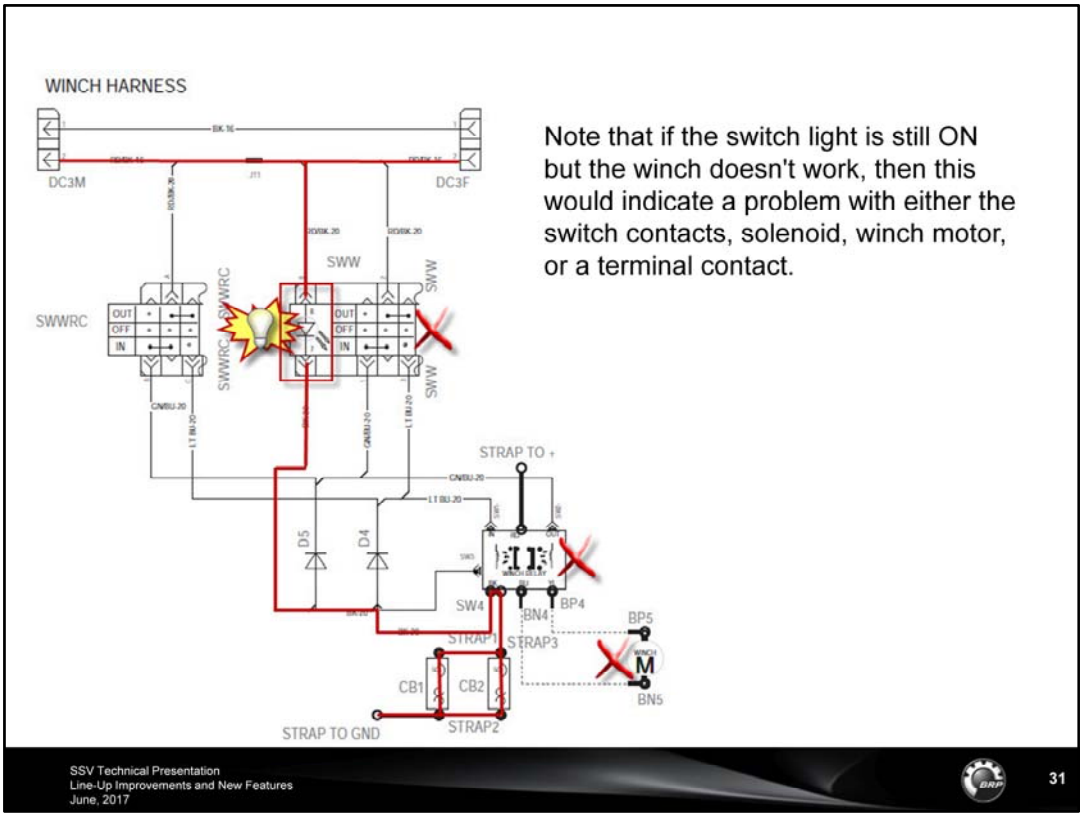

Note that if the switch light is still ON but the winch doesn't work, then this would indicate a problem with either the switch contacts, solenoid, winch motor, or a terminal contact.

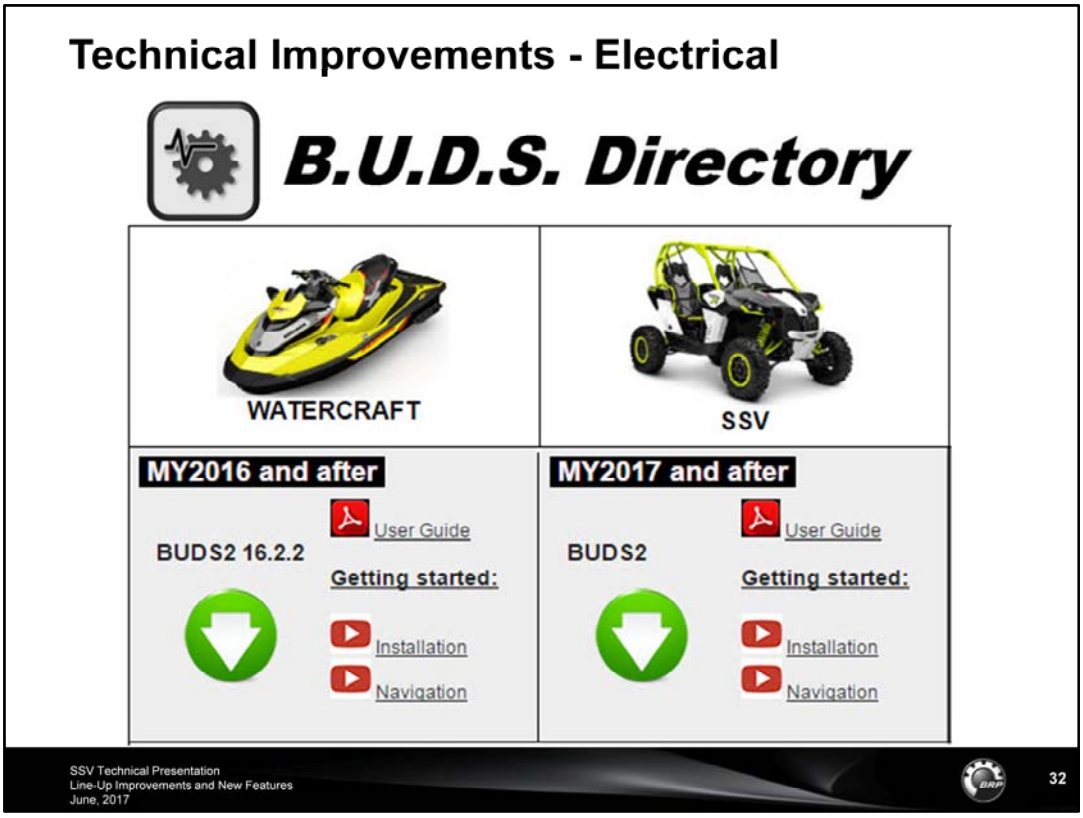

2017 SSV now joins Sea-Doo using B.U.D.S. 2 offering advanced diagnostic capabilities. Sign-on, Security, and Updates will be done through a BOSSweb connection to the internet, cable or wi-fi. No more multiple
versions. One BUDS does it all from now on.

Therefore you will need to go to the B.U.D.S. directory in the knowledge center and download the latest B.U.D.S. 2 version available.

Keep in mind that B.U.D.S. E version will continue to be used for all previous model year SSV models (2016 and below).

Technical Improvements - Steering

- DPS derating improvement
  - New calibration will practically eliminate the effects of derating.
    - As you know “derating” is a protection mode the DPS has to prevent circuit failures due to heat caused by repetitive use of the DPS.
    - This protection is now more permissive to offer, longer, full assistance while keeping the DPS safe.

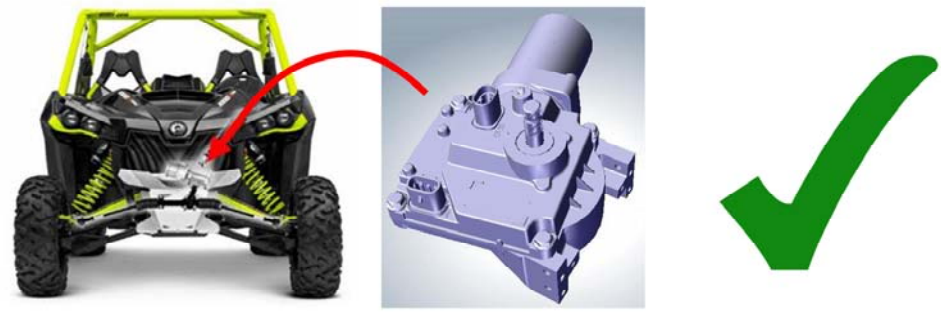

For 2017, the DPS derating has been improved with a new calibration which practically eliminates DPS derating.
As you know “derating” is a protection mode the DPS has to prevent circuit failures due to heat caused by repetitive use of the DPS.
This protection is now more permissive to offer, longer, full assistance while keeping the DPS safe.

Technical Improvements - Powertrain

- Seal in knuckle for CV joint has been removed on all models

2017 execution

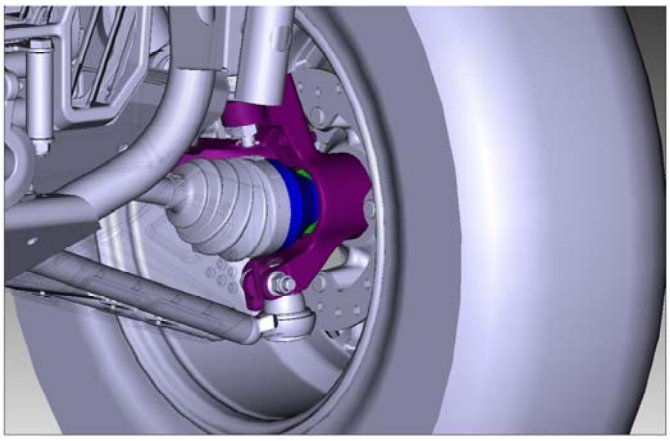

Purple: Knuckle
Blue: CV joint
Green: Wheel bearing

For 2017, the seal in the knuckle, between the CV joint and wheel bearing has been removed. The bearing is already sealed and through physical testing it was determined that it was no longer necessary.

Technical Improvements - Powertrain

- Non greaseable U-joint on front prop shaft
  - All models Defender, Commander, and Maverick
  - U-joints are permanently greased and sealed.

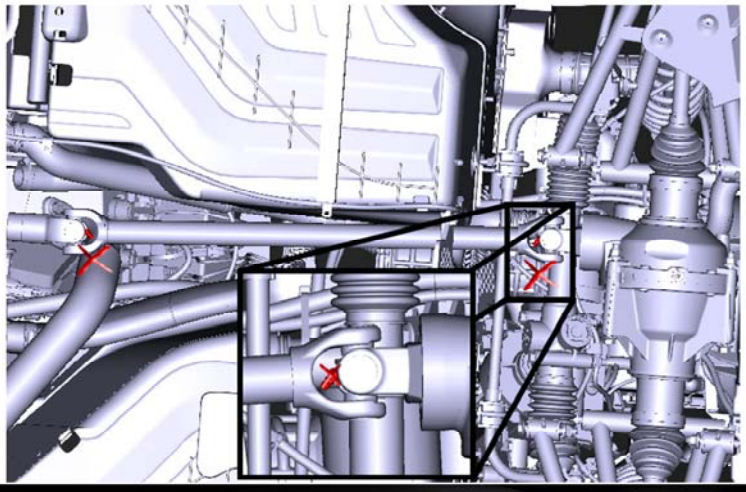

Non greaseable U-joint on front prop shaft will be used on all Defender, Commander, and Maverick models.
U-joints are permanently greased and sealed.

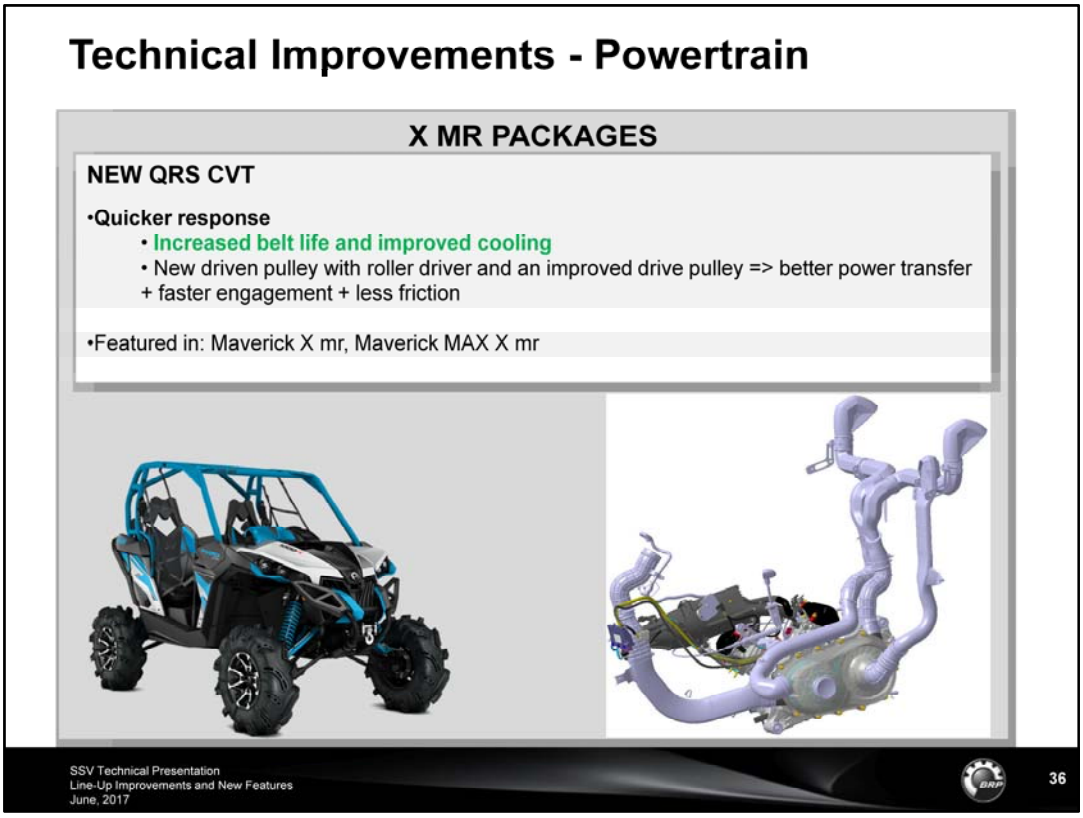

The Maverick Xmr packages have QRS CVT system. This greatly Increased belt life and improves cooling.
The CVT ventilation has been improved by modifying the inlets and outlets and by adapting the design of the impellers, resulting in 68% more cold air flowing through the pulleys.



New wheels will be featured on the Maverick Xmr and Maverick MAX Xmr models



The commander Base model will benefit from Maxxis Bighorn 2.0 tires which will increase traction and durability without compromising comfort.

Technical Improvements - Brake

- Commander MAX rear wheel hub change for brake noise issue.

Old

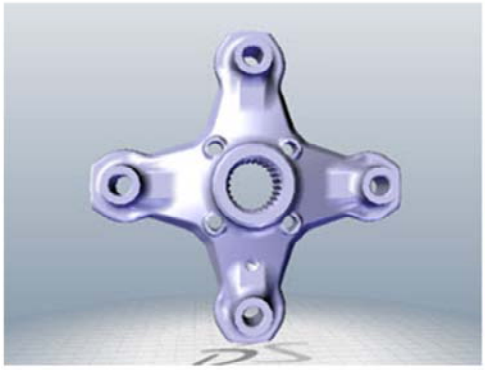

New

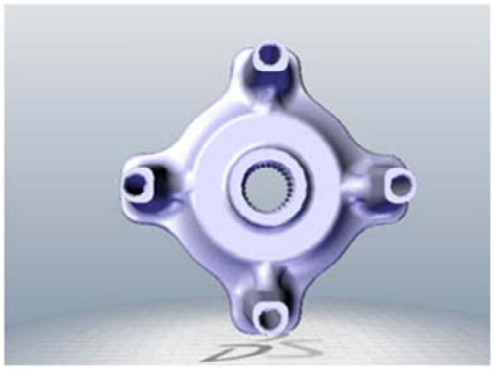

An improvement to the Commander Max model is the upgrade to the Commander 2-up rear wheel hubs which greatly reduce brake noise.

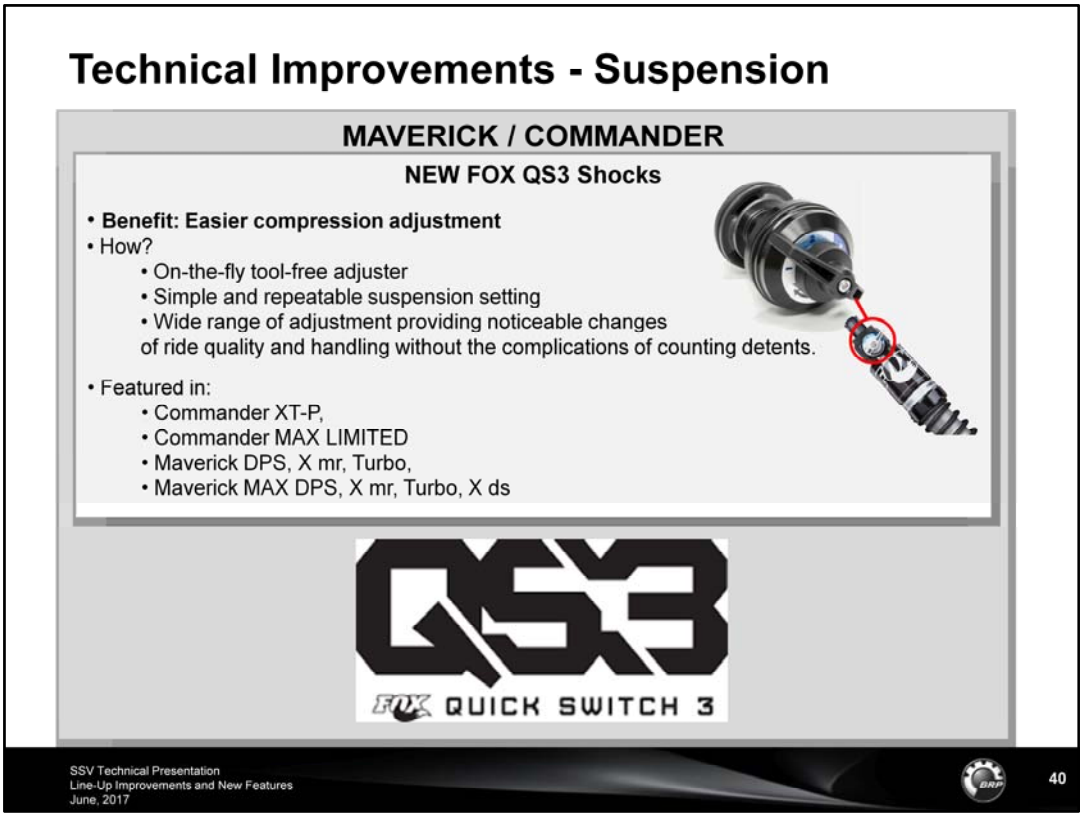

New FOX QS3 shocks that allow simpler and quicker compression adjustments. These high-performance front and rear shocks feature a tool-free adjuster without the complication of counting detents. Through a 3-position knob, the suspension can be easily adjusted depending on the terrain or riding preference. The FOX QS3 shocks will be featured on Commander XT-P, Commander MAX Limited, Maverick & Maverick MAX DPS, Maverick & Maverick MAX X mr, Maverick & Maverick MAX Turbo, and on the Maverick MAX X ds TURBO.

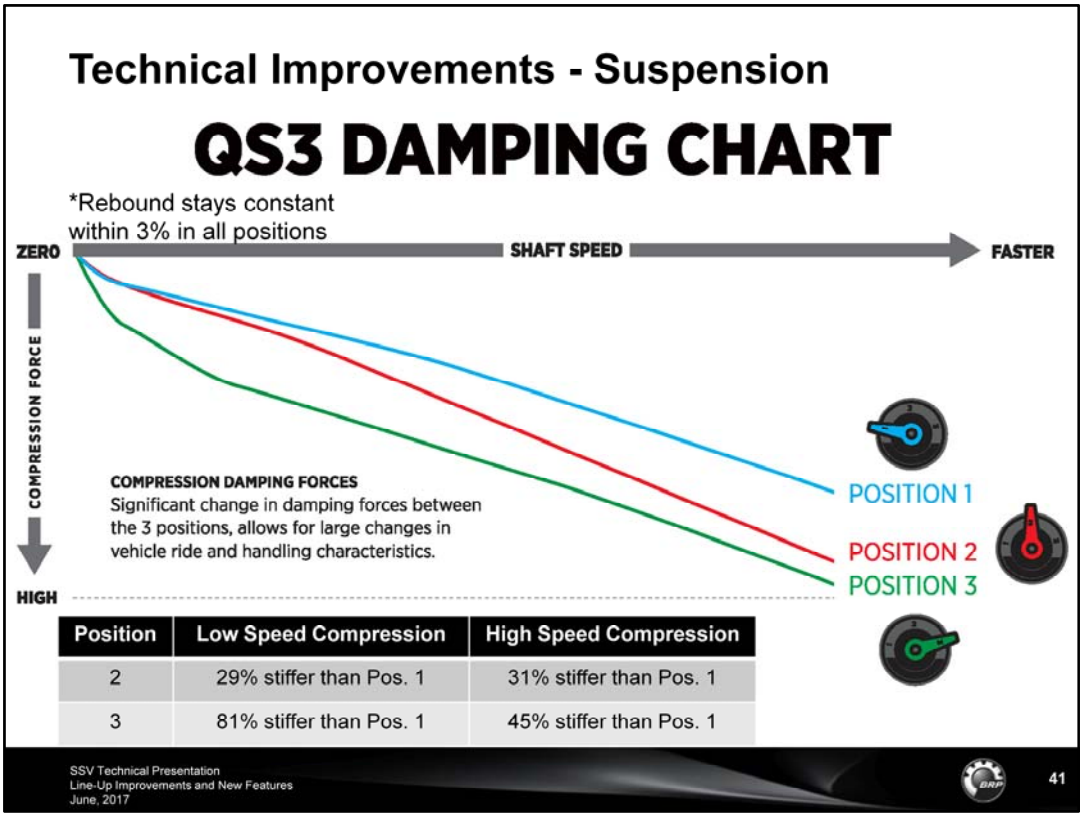

Turn the knob to position 1 to get a smooth compression optimizing comfort and performance for the long rides, select position 2 for a good all-around leisure ride, or go to position 3 to get that high-performance race-ready suspension. Note that rebound stays constant within 3% in all positions.

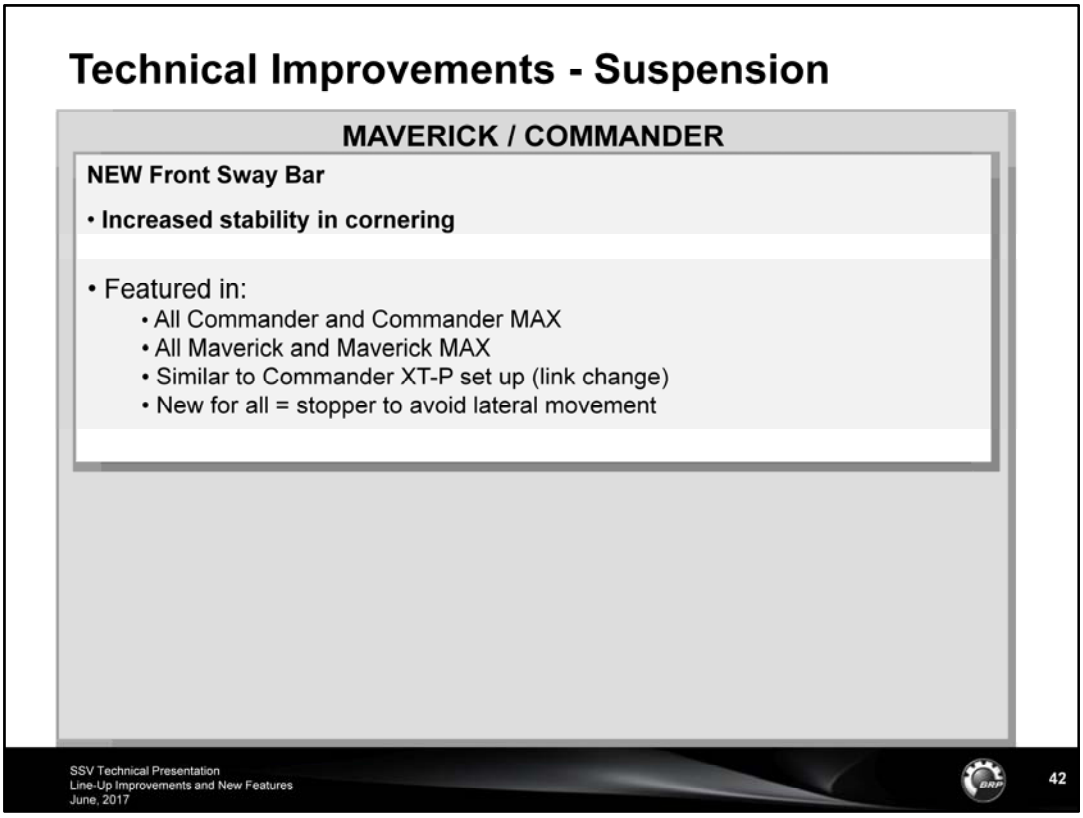

A new front sway bar helps improve cornering stability on all 2017 Commander, Commander MAX, Maverick and Maverick MAX models.
This is similar to the Commander XT-P model except for the linkage change but also benefits from an upgrade to stoppers to avoid sway bar lateral movement.

Suspension Maverick

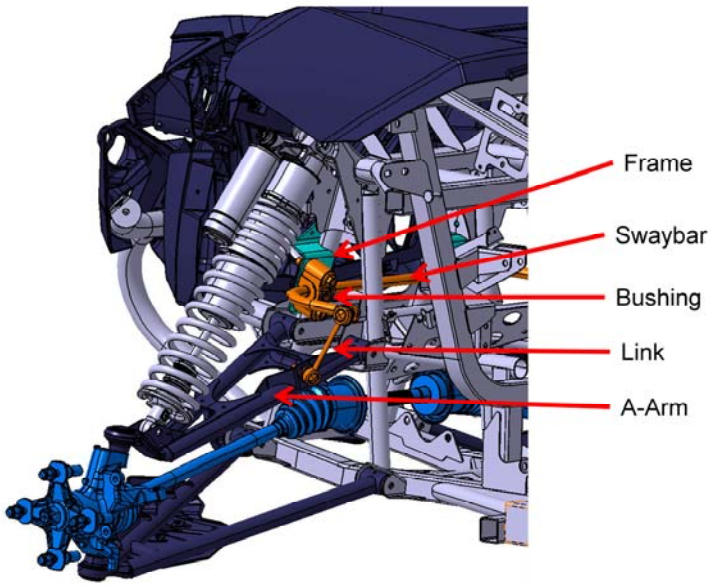

Suspension Commander

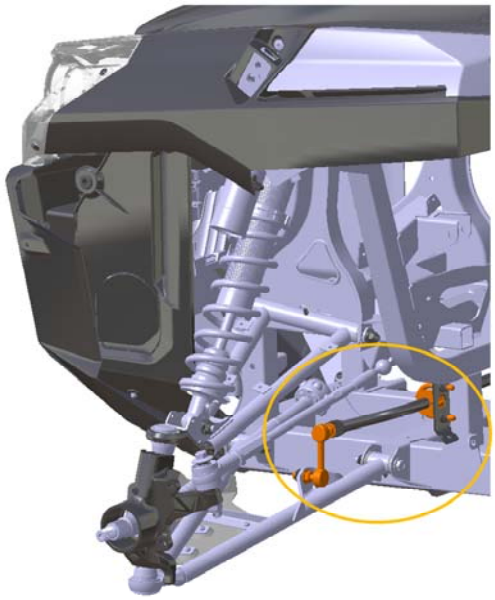

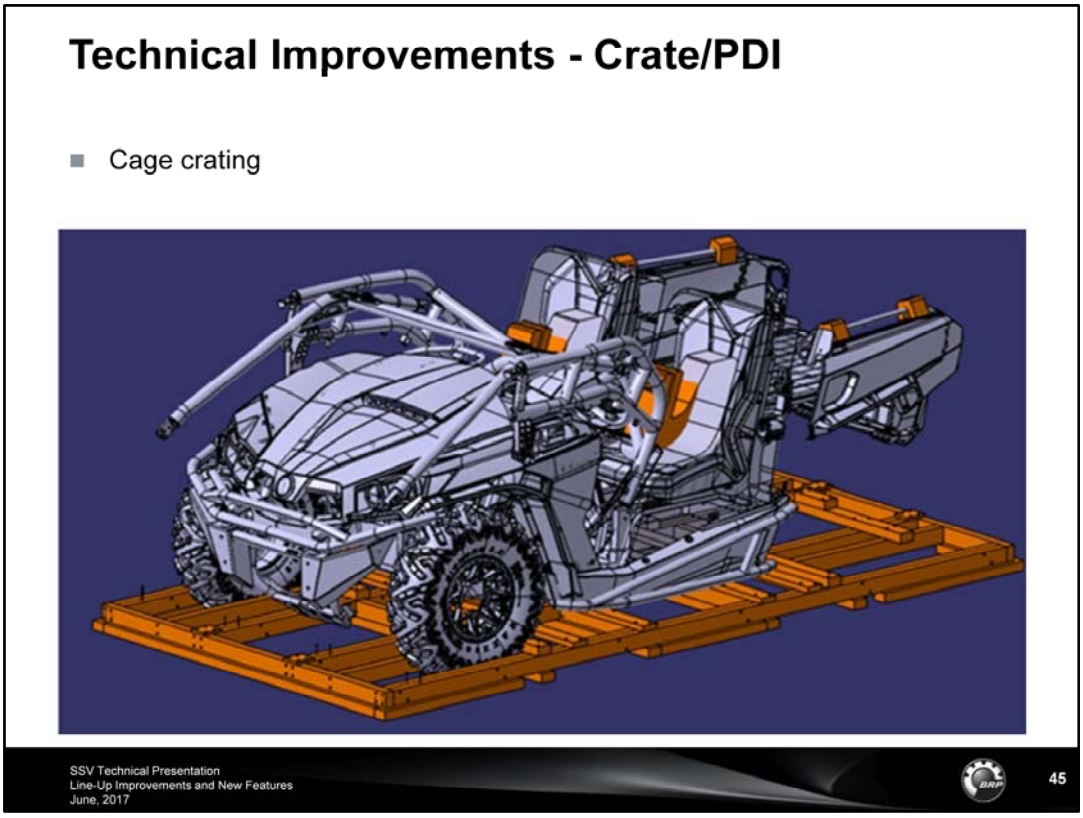

Improvements you will notice in the crating of the vehicles is the fact that the cage will now be attached 100% to the unit. It will not be installed but rather fixed in a way that it is not touching the crate to avoid movement and damage.
This will be new for all Maverick and Commander models.

Ski-Doo®
Lynx®
Sea-Doo®
Evinrude®
Rotax®
Can-Am®

THE **ULTIMATE** POWERSPORTS EXPERIENCE



© 2015 BRP. All rights reserved. /™ ® and the BRP logo are trademarks of BRP or its affiliates.

2017

Operator's Guide

Includes
Safety, Vehicle
and Maintenance Information



COMMANDER™ Series

⚠ WARNING

Read this guide thoroughly. It contains important safety information.
Minimum age: Operator: 16 or older with a valid driver's license. Keep this Operator's Guide in the vehicle.

2 1 9 0 0 1 6 7 7

Original Instructions

⚠ WARNING

YOUR VEHICLE CAN BE HAZARDOUS TO OPERATE. A collision or rollover can occur quickly, if you fail to take proper precautions, even during routine maneuvers such as turning and driving on hills or over obstacles.
For your safety, understand and follow all the warnings contained in this Operator's Guide and on the labels on your vehicle. **Failure to follow these warnings can result in SEVERE INJURY OR DEATH!**
Keep this Operator's Guide with the vehicle at all times.

⚠ WARNING

Disregarding any of the safety precautions and instructions contained in this Operator's Guide, *SAFETY VIDEO* and on-product safety labels could result in severe injury including the possibility of death!

⚠ WARNING

This vehicle may exceed the performance of other vehicles you may have ridden in the past. Take time to familiarize yourself with your new vehicle.

CALIFORNIA PROPOSITION 65 WARNING

⚠ WARNING

This vehicle contains or emits chemicals known to the state of California to cause cancer and birth defects or other reproductive harm.

In Canada, products are distributed by Bombardier Recreational Products Inc. (BRP).

In USA, products are distributed by BRP US Inc.

The following trademarks are the property of Bombardier Recreational Products Inc.:

ACS™ Can-Am® Commander™ D.E.S.S.™ DPS™ Rotax® TTI™ XPS™

This document contains the trademark of the following company:

- Garmin®, Garmin logo, City Navigator® and MapSource™ are trademarks of Garmin Ltd or its subsidiaries.
- MicroSD™ and SD™ are trademarks of SanDisk or its subsidiaries.
- † Mossy Oak is a trademark of Haas Outdoors, Inc.
- VELCRO® is a registered trademark of Velcro Industries B. V
- † Visco-Lok is a trademark of GKN Viscodrive GmbH.
- † QS3 is a trademark of Fox Factory, Inc.

219001677 en JT
®™ and the BRP logo are trademarks of Bombardier Recreational Products Inc. or its affiliates.
©2016 Bombardier Recreational Products Inc. and BRP US Inc. All rights reserved.

FOREWORD

Deutsch	Dieses Handbuch ist möglicherweise in Ihrer Landessprache verfügbar. Bitte wenden Sie sich an Ihren Händler oder besuchen Sie: **www.operatorsguides.brp.com**
English	This guide may be available in your language. Check with your dealer or go to: **www.operatorsguides.brp.com**
Español	Es posible que este manual esté disponible en su idioma. Consulte a su distribuidor o visite: **www.operatorsguides.brp.com**
Français	Ce guide peut être disponible dans votre langue. Vérifier avec votre concessionnaire ou aller à: **www.operatorsguides.brp.com**
日本語	このガイドは、言語によって翻訳版が用意されています。. ディーラーに問い合わせるか、次のアドレスでご確認ください： **www.operatorsguides.brp.com**
Nederlands	Deze handleiding kan beschikbaar zijn in uw taal. Vraag het aan uw dealer of ga naar: **www.operatorsguides.brp.com**
Norsk	Denne boken kan finnes tilgjengelig på ditt eget språk. Kontakt din forhandler eller gå til: **www.operatorsguides.brp.com**
Português	Este manual pode estar disponível em seu idioma. Fale com sua concessionária ou visite o site: **www.operatorsguides.brp.com**
Suomi	Käyttöohjekirja voi olla saatavissa omalla kielelläsi. Tarkista jälleenmyyjältä tai käy osoitteessa: **www.operatorsguides.brp.com**
Svenska	Denna bok kan finnas tillgänglig på ditt språk. Kontakta din återförsäljare eller gå till: **www.operatorsguides.brp.com**

Congratulations on your purchase of a new Can-Am® side-by-side vehicle. It's backed by the BRP limited warranty and a network of authorized Can-Am dealers ready to provide the parts, accessories or service you may require.

At delivery, you were informed of the warranty coverage and signed the *PREDELIVERY CHECK LIST* to ensure your new vehicle was prepared to your entire satisfaction.

Your dealer is committed to your satisfaction. If you need more information, please ask your dealer.

Know Before you Go

To learn how to reduce the risk of accident for you or bystanders, read this Operator's Guide before you operate the vehicle.

Also, read all safety labels on your vehicle and watch the *SAFETY VIDEO*.

Failure to follow the warnings contained in this Operator's Guide can result in SERIOUS INJURY or DEATH.

Safety Messages

The types of safety messages, what they look like and how they are used in this guide are explained as follows:

The safety alert symbol ⚠ indicates a potential injury hazard.

⚠ WARNING

Indicates a potential hazard which, if not avoided, could result in serious injury or death.

CAUTION Indicates a hazardous situation which, if not avoided, could result in minor or moderate injury.

NOTICE Indicates an instruction which, if not followed, could result in severely damaged vehicle components or other property.

About this Operator's Guide

This Operator's Guide has been prepared to acquaint the owner/operator of a new vehicle with the various vehicle controls, maintenance and safe operating instructions. It is indispensable for the proper use of the product.

Keep this Operator's Guide in the vehicle as you can refer to it for things such as maintenance, troubleshooting and instructing others.

Note that this guide is available in several languages. In the event of any discrepancy, the English version shall prevail.

If you want to view and/or print an extra copy of your Operator's Guide, simply visit the following website www.operatorsguides.brp.com.

The information contained in this document is correct at the time of publication. BRP, however, maintains a policy of continuous improvement of its products without imposing upon itself any obligation to install them on products previously manufactured. Due to late changes, some differences between the manufactured product and the descriptions and/or specifications in this guide may occur. BRP reserves the right at any time to discontinue or change specifications, designs, features, models or equipment without incurring any obligation upon itself.

This Operator's Guide and the *SAFETY DVD* should remain with the vehicle when it is sold.

TABLE OF CONTENTS

FOREWORD **1**
Know Before you Go 1
Safety Messages 1
About this Operator's Guide 2

SAFETY INFORMATION

GENERAL PRECAUTIONS **10**
Avoid Carbon Monoxide Poisoning 10
Avoid Gasoline Fires and Other Hazards 10
Avoid Burns from Hot Parts 10
Accessories and Modifications 10
SAFE OPERATION - RESPONSIBILITIES **11**
Owner - Be Responsible 11
Operator - Be Qualified and Responsible 11
Riding Carefully 12
Occupant Restraint System 12
Terrain Condition 12
PRE-RIDE INSPECTION **14**
Pre-Ride Inspection Check List 14
PREPARE TO RIDE **17**
Before you Ride 17
Riding Gear 17
AVOID ACCIDENTS **19**
Avoid Rollovers and Tipovers 19
Avoid Collisions 20
RIDING YOUR VEHICLE **21**
Practice Exercises 21
Off-Road Operation 22
General Riding Techniques 22
MOVING LOADS AND DOING WORK **27**
Working with your Vehicle 27
Carrying Loads 27
Hauling a Load 30
Pulling a Trailer 30
IMPORTANT ON-PRODUCT LABELS **32**
Hang Tag 32
Safety Labels 33
Compliance Labels 40
Technical Information Labels 41

VEHICLE INFORMATION

PRIMARY CONTROLS **44**

PRIMARY CONTROLS (cont'd)
1) Steering Wheel 44
2) Accelerator Pedal 45
3) Brake Pedal 45
4) Shift Lever 45
SECONDARY CONTROLS 47
1) Ignition Switch and Keys 47
2) Engine Start Button 49
3) Low/High Beam Headlight Switch 49
4) 2WD/4WD Switch 49
5) Sport/ECO Mode Switch 50
6) ACS Switch (LTD Models Only) 50
7) Winch Switch (Models with Winch) 50
8) Override Switch 51
9) DPS Switch (All Models Except Base) 51
MULTIFUNCTION GAUGE (LCD) (BASE AND DPS MODELS) 52
Multifunction Gauge Description 52
Multifunction Gauge Modes 53
Navigating in the LCD Gauge 56
Gauge Setup 56
MULTIFUNCTION GAUGE (ANALOG/DIGITAL) (XT, XT-P AND LTD MODELS) 58
Multifunction Gauge Description 58
Gauge Setup 62
EQUIPMENT 63
1) Tilt Steering 65
2) Cup Holders 66
3) Passenger Handholds 66
4) Glove Box 66
5) Tool Kit 66
6) Footrests 66
7) Side Nets 67
8) Shoulder Guards 67
9) Seat Belts 67
10) Driver's Seat 68
11) Passenger Seat 69
12) Fuel Reservoir Cap 69
13) Winch (Models with Winch) 69
14) Cargo Box 70
15) Cargo Box Tilt Release Handles 70
16) Anchoring Hooks 71
17) Upper Tailgate 71
18) Lower Tailgate 71
19) Hitch support 72
20) 12-Volt Power Outlet 72
21) ACS Compressor (LTD Models Only) 72
22) Radio (LTD Models Only) 73

EQUIPMENT (cont'd)
23) Radio AUX Output (LTD Models Only) 73
24) GPS Receiver (Global Positioning System) (LTD Models Only) 74
25) Rear Net (LTD Models Only) 75
26) Half Windshield (LTD and Mossy Oak Models Only) 76
27) Full Roof (LTD and Mossy Oak Models Only) 77
EQUIPMENT (IF AVAILABLE ON YOUR MODEL) **79**
1) Full Underbody Aluminum Skid Plate 79
2) Gear Rail 79
3) Gun Boot 79
4) Gun Boot Mount 81
TUNE YOUR RIDE **83**
Suspension Adjustment Guidelines 83
Suspension Factory Settings 83
Suspension Adjustments 84
Shock Air Pressure Adjustment (LTD Models Only) 86
DPS Function 89
FUEL **91**
Fuel Requirements 91
Vehicle Fueling Procedure 91
Fueling a Gasoline Container 92
BREAK-IN PERIOD **93**
Operation During Break-In 93
BASIC PROCEDURES **94**
Starting the Engine 94
Shifting the Transmission 94
Choosing the Correct Range (Low or High) 94
Stopping the Engine and Parking the Vehicle 95
Tips for Maximizing Drive Belt Durability 95
SPECIAL PROCEDURES **96**
What to do if Water is Suspected to be in the CVT 96
What to do if Battery is Drained out 96
What to do if Vehicle Rolled Over 96
What to do if Vehicle is Submerged 96
TRANSPORTING THE VEHICLE **97**
LIFTING AND SUPPORTING THE VEHICLE **98**
Front of Vehicle 98
Rear of Vehicle 98

MAINTENANCE

MAINTENANCE SCHEDULE **100**
SEVERE DUSTY CONDITIONS 100
MAINTENANCE SCHEDULE LEGEND 100
MAINTENANCE SCHEDULE 101

MAINTENANCE PROCEDURES 104
Engine Air Filter 104
Front Grill Kit 106
CVT Air Filter 107
Engine Oil 108
Oil Filter 109
Radiator 110
Engine Coolant 111
Muffler Spark Arrester 115
Gearbox Oil 117
Spark Plugs 118
CVT Cover 118
CVT Cover Installation 119
Drive Belt 120
Exhaust Area 121
Battery 121
Fuses 122
Lights 123
Drive Shaft Boot and Protector 125
Tightening Rear Stabilizer Bar Bolts 125
Wheel Bearing 126
Wheels and Tires 126
Suspensions 129
Brakes 130
Seat Belts 131
VEHICLE CARE 132
Post-Operation Care 132
Vehicle Cleaning and Protection 132
STORAGE AND PRESEASON PREPARATION 133

TECHNICAL INFORMATION

VEHICLE IDENTIFICATION 136
Vehicle Identification Number 136
Engine Identification Number 136
NOISE EMISSION CONTROL SYSTEM REGULATION 137
EC-DECLARATION OF CONFORMITY 138
SPECIFICATIONS 139

TROUBLESHOOTING

TROUBLESHOOTING GUIDELINES 148
MESSAGES IN MULTIFUNCTION GAUGE 152

WARRANTY

BRP LIMITED WARRANTY USA AND CANADA: 2017 CAN-AM® SSV 154
US EPA EMISSION-RELATED WARRANTY 157
BRP INTERNATIONAL LIMITED WARRANTY: 2017 CAN-AM® SSV 160
BRP LIMITED WARRANTY FOR THE EUROPEAN ECONOMIC AREA, THE COMMONWEALTH OF THE INDEPENDANT STATES AND TURKEY: 2017 CAN-AM® SSV 164

CUSTOMER INFORMATION

PRIVACY INFORMATION 170
CONTACT US 171
North America 171
Europe 171
Oceania 171
South America 171
Asia 171
CHANGE OF ADDRESS/OWNERSHIP 172

SAFETY INFORMATION

GENERAL PRECAUTIONS

Avoid Carbon Monoxide Poisoning

All engine exhaust contains carbon monoxide, a deadly gas. Breathing carbon monoxide can cause headaches, dizziness, drowsiness, nausea, confusion and eventually death.

Carbon monoxide is a colorless, odorless, tasteless gas that may be present even if you do not see or smell any engine exhaust. Deadly levels of carbon monoxide can collect rapidly, and you can quickly be overcome and unable to save yourself. Also, deadly levels of carbon monoxide can linger for hours or days in enclosed or poorly ventilated areas. If you experience any symptoms of carbon monoxide poisoning, leave the area immediately, get fresh air and seek medical treatment.

To prevent serious injury or death from carbon monoxide:

– Never run the vehicle in poorly ventilated or partially enclosed areas such as garages, carports or barns. Even if you try to ventilate engine exhaust with fans or open windows and doors, carbon monoxide can rapidly reach dangerous levels.
– Never run the vehicle outdoors where engine exhaust can be drawn into a building through openings such as windows and doors.

Avoid Gasoline Fires and Other Hazards

Gasoline is extremely flammable and highly explosive. Fuel vapors can spread and be ignited by a spark or flame many feet away from the engine. To reduce the risk of fire or explosion, follow these instructions:

– Use only an approved gasoline container to store fuel.
– Never fill the gasoline container in the vehicle cargo box or on the vehicle - an electrical static discharge may ignite the fuel.
– Strictly adhere to instructions in *FUELING PROCEDURE*.
– Never start or operate the engine if the fuel cap is not properly installed.

Gasoline is poisonous and can cause injury or death.

– Never siphon gasoline by mouth.
– If you swallow gasoline, get any in your eye(s), or inhale gasoline vapor, see a doctor immediately.

If gasoline spills on you, wash with soap and water and change your clothes.

Avoid Burns from Hot Parts

Certain components become hot during operation. Avoid contact with those parts during and shortly after operation to avoid burns.

Accessories and Modifications

Do not make unauthorized modifications, or use attachments or accessories that are not approved by BRP. Since these changes have not been tested by BRP, they may increase the risk of crash or injury, and can render the vehicle illegal. For example, modifications such as different tires can affect the handling and increase the risk of crash.

See your authorized Can-Am dealer for available accessories for your vehicle.

SAFE OPERATION - RESPONSIBILITIES

This is a high performance off-road vehicle. Operators must be responsible and use care to avoid rollovers, tipovers, collisions, and other accidents. Even with vehicle safety features (such as protective structure, seat belts, side nets) and protective gear (such as a helmet), there is always a risk of injury or death in these accidents. To reduce the risk of serious injury or death, follow the rules in this section.

Owner - Be Responsible

Read this Operator's Guide and watch the *SAFETY VIDEO*.

Always inspect and confirm the safe operating condition of your vehicle prior to ride. Always follow the maintenance schedule described in this Operator's Guide.

Never allow anyone to operate your vehicle unless they are responsible and can be trusted with a high performance vehicle. Consider supervising new or young operators and setting rules and limits (e.g., whether they can carry a passenger, what they may do with the vehicle, where they may ride, etc.) for anyone using your vehicle.

Select the appropriate key (see *IGNITION SWITCH AND KEYS*) based on the operator's experience, vehicle use and environment.

Discuss the safety information with anyone who will be using the vehicle. Be sure that all operators and passengers meet the qualifications below and agree to follow the safety information. Help users become familiar with the vehicle.

We encourage you to have an Annual Safety Inspection of your vehicle. Please contact an authorized BRP dealer for further details. Though not required, it is recommended that an authorized BRP dealer performs the preseason preparation of your vehicle. Each visit to your authorized BRP dealer is a great opportunity for your dealer to verify if your vehicle is included in any safety campaign. We also urge you to visit your authorized BRP dealer in a timely manner if you become aware of any safety related campaigns.

See an authorized BRP dealer for available accessories you may require.

Operator - Be Qualified and Responsible

Read this Operator's Guide and watch the *SAFETY VIDEO*.

Become completely familiar with the operational controls and the general operation of the vehicle.

Take a training course if available (contact an authorized Can-Am dealer to find out about training course availability as well as on the internet at http://www.rohva.org/), and perform the practice exercises in *PRACTICE EXERCISES* section. Practice driving in a suitable area free of hazards and feel the response of each control. Drive at low speeds. Higher speeds require greater experience, knowledge and suitable riding conditions.

Be at least 16 years of age.

Be tall enough to be properly seated: back against the backrest with the seat belt fastened, to hold the steering wheel with both hands and still be able to reach the full stroke of brake and accelerator pedals with the right foot and to firmly plant left foot on the footrest.

Have a proper driver's license in accordance with local laws.

Never use this vehicle with drugs or alcohol, or if tired or ill. These slow reaction time and impair judgment.

Carrying Passenger

Only carry one passenger. The passenger must be properly seated in the cockpit.

The passenger must be tall enough to always be properly seated: back against the backrest with seat belt fastened, holding both handholds, and feet firmly planted - right foot on the footrest and the left foot on the vehicle floor.

Never carry a passenger who has used drugs or alcohol, or is tired or ill. These slow reaction time and impair judgment.

Instruct the passenger to read the vehicle's safety labels.

Never carry a passenger if you judge his ability or judgement insufficient to concentrate on the terrain conditions and adapt accordingly. More specifically for side-by-side vehicles, the passenger must also pay constant attention to the terrain ahead and be able to brace for bumps.

Riding Carefully

- This vehicle handles differently from other vehicles. A collision or rollover can occur quickly, during abrupt maneuvers such as doing sharp turns, acceleration or deceleration and driving on hills or over obstacles, if you fail to take proper precautions.
- Never operate at excessive speeds. Always go at a speed that is proper for the terrain, visibility, and operating conditions, and your experience.
- Never attempt jumps, side slides, donuts or any other stunts.
- Never attempt rapid acceleration or deceleration when performing a sharp turn. This may result in a roll over.
- Never attempt skidding or sliding. If vehicle starts to skid or slide, counter steer in the direction of skidding or sliding. On extremely slippery surfaces, such as ice, go slowly and be very cautious in order to reduce the chance of skidding out of control.
- Always be sure there are no obstacles or people behind the vehicle when you operate in reverse. Pay attention to blind spots. When it is safe to proceed in reverse, go slowly.
- Never exceed the stated load limits for this vehicle. Cargo must be properly secured. Reduce speed, allow for greater braking distance and follow other instructions in *MOVING LOADS AND DOING WORK* subsection.
- Always remember that this vehicle is heavy! Its pure weight alone may entrap you should it tip or rollover.

Occupant Restraint System

- This vehicle is designed to carry one driver and one passenger, both wearing proper protective gears (refer to *RIDING GEAR* in this section).
- The driver and passenger must latch the side nets and wear the seat belts at all times when riding.

Terrain Condition

- This vehicle is not designed to ride on paved surfaces; if you must shortly use the vehicle on such surfaces, avoid abrupt inputs to steering wheel, accelerator and brake pedals.
- Always go slowly and be extra careful when operating on unfamiliar terrain. Always be alert to changing terrain conditions when operating this vehicle. Take the time to learn how the vehicle performs in different environments.
- Never operate on excessively rough, slippery or loose terrain until you have learned and practiced the skills necessary to control this vehicle on such terrain. Always be especially cautious on these kinds of terrain.

– Never operate this vehicle on hills too steep for the vehicle or your abilities. Practice on small inclines.
– Always follow proper procedures for climbing or going down hills as described in *RIDING YOUR VEHICLE* subsection. Check the terrain carefully before you start up or down any hill. Never climb or descend hills with excessively slippery or loose surfaces. Never go over the top of any hill at high speed.
– Never attempt steep hills or side hilling when pulling a trailer.
– Always check for obstacles before operating in a new area. Always follow proper procedures when operating over obstacles as described in *RIDING YOUR VEHICLE* subsection.
– Never operate this vehicle in fast flowing water or in water deeper than specified in *RIDING YOUR VEHICLE* subsection. Remember that wet brakes may have reduced stopping ability. Test your brakes after leaving water. If necessary, apply them several times to let friction dry out the brakes.
– Always ensure to properly park the vehicle on the flattest terrain section available. Put shift lever in PARK, stop engine and remove key before leaving the vehicle.
– Never assume that the vehicle will go everywhere safely. Sudden changes in terrain caused by holes, depressions, banks, softer or harder "ground" or other irregularities may cause the vehicle to topple or become unstable. To avoid this, slow down and always observe the terrain ahead. If the vehicle does begin to topple or rollover, the best advice is to immediately steer in the direction of the rollover! Never attempt to prevent a rollover with your arms or legs. You should keep your limbs inside the cage.

PRE-RIDE INSPECTION

Always inspect and confirm the safe operating condition of your vehicle prior to ride. Always follow the maintenance schedule described in this Operator's Guide.

⚠ WARNING

Perform a pre-ride inspection before each ride to detect any potential problem that could occur during operation. The pre-ride inspection can help you monitor component wear and deterioration before they become a problem. Correct any problem that you discover to reduce the risk of a breakdown or crash.

Before using this vehicle, the operator should always perform the following pre-ride inspection check list.

Pre-Ride Inspection Check List

What to Do Before Starting the Engine (Key OFF)

ITEMS TO BE INSPECTED	INSPECTION TO PERFORM	✔
Tires	Check tire pressure and condition. – Front: MIN 69 kPa (10 PSI), LOADED 83 kPa (12 PSI) (All models except Mossy Oak and LTD) – Front: MIN 83 kPa (12 PSI), LOADED 83 kPa (12 PSI) (Mossy Oak and LTD models) – Rear: MIN 83 kPa (12 PSI), LOADED 152 kPa (22 PSI)	
Wheels	Check wheels for damage and for abnormal play, and check lug nuts are tightened. Tighten wheel beadlock bolts (if equipped).	
Radiator	Check cleanliness of the radiator.	
Front grill kit	Inspect front grill kit for cleanliness.	
Engine oil	Check engine oil level.	
Coolant	Check coolant level.	
Brake fluid	Check brake fluid level.	
Engine air filter	Inspect the engine air filter, replace if needed (service more often when riding in dusty conditions).	
CVT air filter	Inspect and clean the CVT air filter (when riding in dusty conditions).	
Drive shaft boots	Check drive shaft boots and protectors condition.	

ITEMS TO BE INSPECTED	INSPECTION TO PERFORM	✔
Cargo and load	**Cargo Load:** If you transport a cargo, respect the maximum loading capacity of 272 kg (600 lb). Ensure cargo is properly secured to the rear cargo box. **Vehicle Load:** Ensure that total load on the vehicle (including operator, passenger, cargo, tongue weight and added accessories) does not exceed 363 kg (800 lb) (all models except LTD and Mossy Oak† Hunting Edition), 340 kg (750 lb) (LTD model) and 321 kg (707 lb) (Mossy Oak Hunting Edition).	
	If you are pulling a trailer or another equipment: – Check hitch and trailer ball condition. – Respect the tongue capacity and towing capacity. – Ensure trailer is properly secured to hitch.	
Rear cargo box	Check if the cargo box is properly latched.	
	Check if both tail gates are properly latched.	
Chassis and suspension	Check underneath vehicle for any debris on chassis or suspension and clean them properly.	

What to Do Before Starting the Engine (Key ON)

ITEMS TO BE INSPECTED	INSPECTION TO PERFORM	✔
Gauge	Check operation of indicator lamps in gauge (during first few seconds of key ON).	
	Check for messages in gauge.	
Lights	Check operation and cleanliness of headlights and taillight.	
	Check operation of high and low beam.	
	Check operation of brake light.	
Seats, side nets and seat belts	Check if seats are properly latched.	
	Check side nets for any damage. Have the nets replaced if any damage is found. Fasten both side nets and confirm that they latch securely. Use the adjustment strap to tighten the net as required.	
	Check seat belts for any damage. Fasten seat belts and confirm that they latch securely.	

ITEMS TO BE INSPECTED	INSPECTION TO PERFORM	✔
Accelerator pedal	Press on the accelerator pedal a few times to ensure it operates freely and it returns to the rest position when released.	
Brake pedal	Press down on the brake pedal and make sure you feel firm resistance and that it fully returns to position when released.	
Fuel level	Check the fuel level.	

What to Do After the Engine is Started

ITEMS TO BE INSPECTED	INSPECTION TO PERFORM	✔
Steering	Check if steering operates freely by completely turning it from side to side.	
Ignition switch	Turn the ignition switch to OFF to verify if engine will shut down. Restart engine.	
Shift lever	Check operation of shift lever (P, R, N, H and L).	
2WD/4WD selector	Check operation of 2WD/4WD selector.	
Brakes	Drive forward slowly a few feet and apply brakes. The brake pedal must feel firm when applied. The pedal must return to rest position when released. The brakes must respond adequately to the driver's input.	

Before you Ride

Perform pre-ride inspection to confirm the safe operating condition of your vehicle. Refer to *PRE-RIDE INSPECTION* subsection.

Driver and passenger must:

– Be properly seated.
– Latch both side nets and fasten seat belt.
– Wear appropriate riding gear. (Refer to *RIDING GEAR* subsection below.)

Riding Gear

It is important that the operator and passenger always wears appropriate protective clothing and apparel, including:

– An approved helmet
– Eye protection
– Boots
– Gloves
– A long sleeved shirt or jacket
– Long pants.

Depending on conditions, anti-fogging goggles may be required.

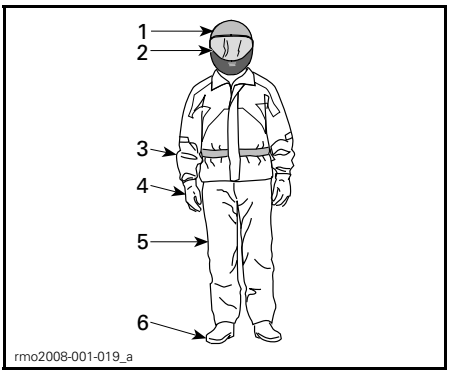

RIDING GEAR
1. *Approved helmet*
2. *Eye and face protection*
3. *Long sleeves shirt or jacket*
4. *Gloves*
5. *Long pants*
6. *Boots (over-the-ankle footwear)*

Weather conditions should help you decide how to dress. To maximize comfort and avoid frostbites in winter, dress for the coldest weather expected. Thermal underwear next to the skin also provides good insulation.

Never wear any loose clothing that may get entangled in the vehicle or on tree branches and shrubs.

Helmets and Eye Protection

Helmets protect the head and brain from injury. Even with the vehicle's cage and side nets, objects can enter the cockpit and strike the head, or the head can strike the cage itself or objects outside the vehicle. Even the best helmet is no guarantee against injury, but statistics indicate that helmet use significantly reduces the risk of brain injury. So, be safe and always wear a helmet while riding.

Choosing a Helmet

Helmets should be manufactured to meet the appropriate standard in your state, province or country and should fit properly.

A helmet with face protection is a better choice as it protects also against frontal impacts. It can also protect against debris, stones, insects, the elements, etc.

An open-face helmet does not offer the same protection for the face and chin. If you wear an open-face helmet, you should use a snap-on face shield and/or a pair of goggles. Ordinary glasses or sunglasses are not sufficient eye protection for riders. They can shatter or fly off, and they allow wind and airborne objects to reach the eyes.

For winter riding conditions, a stocking type cap, balaclava and face mask should always be carried or worn.

Use tinted face shields or goggles in the daytime only; do not use them at night or in poor illumination. Do not use them if they impair your ability to discern color.

Other Riding Gear

Footwear

Always wear closed toe footwear. Sturdy over-the-ankle boots with non-slip soles offer more protection and allow you to plant your foot properly on footrest.

Avoid long shoelaces that can be tangled in the accelerator or brake pedals.

For winter riding conditions, rubber soled boots with either a nylon or leather uppers, with removable felt liners are best suited.

Avoid rubber boots. Rubber boots may get trapped behind or between pedals, impairing the proper operation of brake and accelerator pedals.

Gloves

Full-fingered gloves protect hands from the wind, sun, heat, cold and flying objects. Gloves that fit snugly will improve grip on the steering wheel and help reduce hand fatigue. Sturdy, reinforced motorcycle or ATV gloves help protect hands better in the event of an accident or a rollover. If gloves are too bulky, it may be difficult to operate the controls.

For winter riding conditions, hands should be protected by a pair of snowmobile gloves which have sufficient insulation and allow use of thumbs and fingers for operation of controls.

Jackets, Pants and Riding Suits

Wear a jacket or a long sleeved shirt and long pants, or a full riding suit. Quality ATV-type protective gear will provide comfort, and it can help you avoid being distracted by adverse environmental elements. In case of a crash, good quality protective gear made of sturdy material may prevent or reduce injury.

In cool-weather riding, protect yourself against hypothermia. Hypothermia, a condition of low body temperature, can cause loss of concentration, slowed reactions and loss of smooth, precise muscle movement. In cool conditions, proper protective gear like a windproof jacket and insulated layers of clothing are essential. Even while riding at moderate temperatures, you can feel very cold due to the wind.

Protective gear that is appropriate for cold-weather riding may be too hot when stopped. Dress in layers so that clothing can be removed as desired. Topping the protective gear with a windproof outer layer can prevent cold air from reaching the skin.

Rain Gear

If you must ride in wet weather, a rain suit or a waterproof riding suit is recommended. On long rides, it is a good idea to carry rain gear. A dry rider will be much more comfortable and alert.

Hearing Protection

Long-term exposure to wind and engine noise when riding can cause permanent hearing loss. Properly worn hearing protective devices such as earplugs can help prevent hearing loss. Check local laws before using any hearing protective devices.

Avoid Rollovers and Tipovers

Side-by-side vehicles handle differently from other vehicles. Side-by-side vehicles are designed to handle off-road terrain (for example, their wheel base and track width, ground clearance, suspension, drivetrain, tires, etc.), and, as a result, can overturn in situations where vehicles designed for use primarily on paved or smooth terrain may not.

A rollover or other accident can occur quickly during abrupt maneuvers such as sharp turns or hard acceleration or deceleration when turning, or when driving on hills or over obstacles. Abrupt maneuvers or aggressive driving can cause rollovers or loss of control even in flat open areas. If the vehicle rolls over, any part of your body (such as arms, legs, or head) outside of the cockpit can be crushed and trapped by the cage or other parts of the vehicle. You can also be injured by impact with the ground, cockpit or other objects.

To reduce the risk of rollovers:

– Use care when turning.
  - Do not turn the steering wheel too far or too fast for your speed and environment. Adjust steering inputs according to your speed and environment.
  - Slow down before entering a turn. Avoid hard braking during a turn.
  - Avoid sudden or hard acceleration when turning, even from a stop or low speed.
– Never attempt donuts, skids, slides, fishtails, jumps, or other stunts. If vehicle starts to skid or slide, steer in the direction of the skid or slide. Never slam the brakes and lock the wheels.
– Avoid paved surfaces. This vehicle is not designed to operate on paved surfaces and is more likely to roll over. If you must drive on pavement, turn gradually, go slowly, and avoid abrupt acceleration and braking.

This vehicle can roll over sideways or tip over forward or backwards on slopes or uneven terrain.

– Avoid side hilling (driving along the slope rather than up or down a hill). When possible, drive straight up and down inclines rather than across them. If you must side hill, use extreme caution and avoid slippery surfaces, objects, or depressions. If you feel the vehicle start to rollover or slide sideways, steer downhill if possible.
– Avoid steep hills and follow procedures in this guide for climbing and descending hills.
– Sudden changes in terrain such as holes, depressions, banks, softer or harder ground or other irregularities may cause the vehicle to tip or become unstable. Observe the terrain ahead and slow down in areas of uneven terrain.

This vehicle will handle differently when carrying or pulling a load.

– Reduce speed and follow instructions in this manual for carrying cargo or pulling a trailer.
– Avoid hills and rough terrain.
– Allow more distance to stop.

Be Prepared in Case of Rollover

– Fasten side nets and seat belt to help you avoid sticking out arms or legs.

– Never grab the cage while riding. Hands can be crushed between the cage and the ground in a rollover. Keep hands on the steering wheel or handholds.
– Never try to stop a rollover using your arms or legs. If you think that the vehicle may tip or roll, the driver should keep both hands on the steering wheel and the left foot firmly planted on the footrest. The passenger should keep both hands on the handholds and both feet firmly planted on the floor.

Avoid Collisions

This vehicle can reach high speeds. At higher speeds, there is an increased risk of losing control, particularly in challenging off-road conditions, and the risk of injury in a collision is greater. Never operate at excessive speeds. Always go at a speed that is proper for the terrain, visibility, and operating conditions, and your experience. Consider reserving use of the performance key for situations in which full speed and acceleration capability are appropriate.

Never operate this vehicle on any public street, road or highway, even dirt or gravel ones. Riding your vehicle on roads or highways could result in a collision with another vehicle. This vehicle is not designed for operation on roads. For example, it does not meet motor vehicle safety standards that apply to automobiles. In many jurisdictions it is not legal to operate this vehicle on public roads.

This vehicle does not have the same kind of protection for collisions as a car; for example, there are no air bags, the cockpit is not fully enclosed, and it is not designed for collisions with other vehicles. Therefore, it is particularly important to fasten seat belts and side nets and wear an approved helmet.

Practice Exercises

Before you go out for a ride, it is very important to familiarize yourself with the handling of your vehicle by practicing in a controlled environment. If possible, it is also a very good idea to take a more formal training course to sharpen your skills and increase your knowledge of the vehicle.

Find a suitable area to practice and perform the following exercises. It should be at least 45 m (150 ft) by 45 m (150 ft) free of obstacles like trees and rocks. Once you've selected a suitable permitted location, proceed with the following practice exercises.

Turning Exercises

Turning is one of the most frequent causes of accidents. It is easier for the vehicle to lose traction or rollover if you turn too sharply, or go too fast. Slow down when you approach a turn.

- First learn how to perform slight right turns at very low speeds. Release the throttle before turning and slowly reapply the throttle when turning.
- Repeat turning exercise but this time maintain the throttle at the level while turning.
- Finally, repeat turning exercise while accelerating slowly.
- Practice exercises turning on the other side.

Note how your vehicle reacts in these different exercises. We recommend releasing the throttle before entering a turn to help initiate directional change. You will feel the lateral force increasing with the speed and with your steering input. The lateral force should be maintained as low as possible to make sure it does not cause the vehicle to roll over.

U Turn Exercises

Practice doing U turns.

- Accelerate slowly and while remaining at low speed, then gradually turn the steering wheel to the right until you have completed the U turn.
- Repeat U turn exercise with different steering inputs and always at a very low speed.
- Repeat U turn exercise on the other side.

As mentioned before in this guide, do not ride on paved surfaces as the vehicle behavior will not be the same, increasing the risk of rollover.

Braking Exercises

Practice braking to get familiar with the brake response.

- Do it at low speed first, then increase the speed.
- Practice braking in straight line at different speeds and different braking force.
- Practice emergency braking; optimal braking is obtained in straight line, with high force applied, without locking the wheels.

Remember, braking distance depends on vehicle speed, load and the type of surface. Also, the tires and brakes conditions play a major role.

Reverse Exercises

The next step involves using the reverse.

- Install 1 cone marker on both sides of the vehicle beside each rear wheel. Move the vehicle forward until you can see the cone markers, then stop the vehicle. Acknowledge the distance required to see obstacles behind you.
- Learn how the vehicle handles itself in reverse and reacts with steering inputs.

– Always perform this reverse exercise at slow speeds.
– Become familiar with the usage of the override function. Do not steer while using the override as it increases the risks of rollover.

Emergency Engine Stopping Exercise

Learn how to stop your engine quickly in an emergency situation.

– While running at low speed, simply turn the ignition key to the off position.

This is to familiarize you with the vehicle's reaction when the engine is turned off while driving and to develop this reflex.

Off-Road Operation

The very nature of off-road operation is dangerous. Any terrain, which has not been specially prepared to carry vehicles, presents an inherent danger where terrain substance, shape and steepness are unpredictable. The terrain itself presents a continual element of danger, which must be knowingly accepted by anyone venturing over it.

An operator who takes a vehicle off-road should always exercise the utmost care in selecting the safest path and keeping close watch on the terrain ahead of him. The vehicle should never be operated by anyone who is not completely familiar with the driving instructions applicable to the vehicle, nor should it be operated on steep or treacherous terrain.

General Riding Techniques

General Driving Tips

Care, caution, experience and driving skill are the best precautions against the hazards of vehicle operation.

Whenever there is the slightest doubt that the vehicle can safely negotiate an obstacle or a particular piece of terrain, always choose an alternate route.

In off-road operation, power and traction, not speed, are important. Never drive faster than visibility and your own ability to select a safe route permit. Always go slowly and be extra careful when operating on unfamiliar terrain. Always be alert to changing terrain conditions when operating this vehicle. Be especially cautious on excessively rough, slippery, icy or loose terrain.

Constantly watch the terrain ahead for sudden changes in slopes or obstacles, such as rocks or stumps, that may cause loss of stability, resulting in tip over or rollover.

Never operate the vehicle if the controls do not function normally. See an authorized Can-Am dealer.

To maintain proper control it is strongly advised that you keep your hands on the steering wheel and within easy reach of all controls. The same holds true for your feet. To minimize the possibility of any leg or foot injury, keep your left foot on the footrest and right foot on the floor at all times. Staying completely within the cockpit will also help keep you from striking objects outside the vehicle.

Watch for and avoid branches and other objects that could enter the cockpit and strike you or your passenger.

Operating in Reverse

When operating in reverse, check that the path behind the vehicle is free of people or obstacles. Pay attention to blind spots. When it is safe to proceed in reverse, go slowly and avoid sharp turns.

⚠ WARNING

Steering inputs in reverse operation increase the risk of rollover.

NOTE: In reverse operation, the engine RPM is limited thus limiting the vehicle reverse speed.

⚠ WARNING

When driving downhill in reverse, gravity can increase the vehicle speed above the set limited reverse speed.

Crossing Roads

If you have to cross a road, ensure to have complete visibility on both sides for incoming traffic and decide on exit point on other side of road. Drive in a straight line toward that point. Do not make sharp direction changes or abrupt accelerations as it may result in a rollover situation. Do not travel on sidewalks or bicycle trails as they are designated specifically for those uses.

Riding on Paved Surfaces

Avoid paved surfaces. This vehicle is not designed to operate on paved surfaces and is more likely to roll over. If you must drive on pavement, turn gradually, go slowly, and avoid abrupt acceleration and braking.

Shallow Water Crossing

Water can be a unique hazard. If it is too deep the vehicle may "float" and topple. Check the water depth and current before you attempt to cross any water. Water depth should not exceed 30 cm (12 in) for vehicle to safely cross the obstacle. Beware of slippery surfaces such as rocks, grass, logs, etc., both in the water and on its banks. A loss of traction may occur. Do not attempt to enter the water at high speed.

Water will affect the braking ability of your vehicle. Make sure you dry the brakes by applying them several times after the vehicle leaves the water.

Mud or marsh lands may be encountered near water. Be prepared for sudden "holes" or changes in depth. Similarly so, be watchful of hazards such as rocks, logs, etc., partially covered by vegetation.

Riding on Snow or Ice

When performing pre-ride inspection, pay special attention to locations on the vehicle where snow and/or ice accumulations may obstruct visibility of the tail lamp, clog ventilation openings, block the radiator and fan, and interfere with the movement of controls. Before starting with your vehicle, check the steering, accelerator and brake pedals for interference free operation.

Whenever this vehicle is ridden on a snow covered drive path, the tire grip is generally reduced causing the vehicle to react differently to control inputs from the operator. On low grip surfaces, the steering responses are not as crisp and precise, stopping distances are lengthened and acceleration is also affected. Slow down and do not "gun" the accelerator. This will only result in spinning of the tires and possibly in an over steering slide of the vehicle. Avoid hard braking. This will possibly result in a straight line slide of the vehicle. Again, the best advice is to safely reduce speed in anticipation of a maneuver to give yourself time and distance in order to keep control of the vehicle.

As you drive your vehicle over a loose snow covered surface, snow dust will be picked up in the wake turbulence of the moving vehicle and transported to contact and accumulate or melt on some exposed components including rotating parts like brake discs. Water, snow or ice may affect the response time of the brake system of your vehicle. Even when not required to reduce vehicle speed apply brakes frequently to prevent ice or snow accumulation and to dry brake pads and discs. While doing so in low risk driving situations you will test for grip level and keep yourself alerted to how the vehicle reacts to your control inputs. Always

keep brake and accelerator pedals and floor boards free of snow and ice. Frequently wipe snow off seat, steering wheel, headlights and tail lamps.

The depth of the snow cover may hide rocks, tree stumps or other objects and if it is wet may totally impede the drivability as the vehicle becomes bogged down or completely looses traction in slushy snow. Look far ahead and always be watchful of any visible clues that might indicate the presence of such obstacles. In doubt steer clear. Avoid driving on any frozen waterways before checking that the ice will safely support the vehicle, its riders and its load of cargo.

At the end of each ride it is a good practice to clean the vehicle and all moving components (brakes, steering components, drivelines, controls, radiator fan etc.) from any snow or ice accumulations. Wet snow will turn to ice during the shut down period and become more difficult to remove at the next pre-ride inspection.

Riding on Sand

Sand and riding on sand dunes is another unique experience but there are some basic precautions that should be observed. Wet, deep or fine sand may create a loss of traction and cause the vehicle to slide, drop off or become "bogged" down. If this occurs look for a firmer base. Again, the best advice is to slow down and be watchful of the conditions.

When riding in sand dunes it is advisable to equip the vehicle with an antenna type safety flag. This will help make your location more visible to others over the next sand dune. Proceed carefully should you see another safety flag ahead.

Riding on Gravel, Loose Stones or Other Slippery Surfaces

Riding on loose stones or gravel is very similar to riding on ice. They will affect the steering of vehicle, possibly causing it to slide and tip over especially at high speeds. In addition, braking distance may be affected. Remember that "gunning" the throttle or sliding may cause loose stones to be ejected rearwards into the path of another rider's way. Never do it deliberately.

If you do get into a slide or skid, it may help to turn the steering wheel into the direction of the skid until you regain control. Never jam the brakes and lock the wheels.

Crossing Obstacles

Use the low range (L) for crossing obstacles.

Obstacles on the "trail" should be traversed with caution. This includes rocks, fallen trees, and depressions. You should avoid them whenever possible. Remember that some obstacles are too large or dangerous to cross and should be avoided. As a guideline, never attempt to cross an obstacle higher than the ground clearance of the vehicle. Small rocks or small fallen trees may be safely crossed - approach obstacle at low speed and as much as possible at a right angle. Adjust speed without losing momentum and do not accelerate abruptly. Passenger must grasp handholds firmly and brace feet on the floor. Hold steering firmly without closing your fists around it and proceed. Be aware that the obstacle may be slippery or may move while crossing.

Hill Driving Conditions

When driving on hills or slopes, two things are highly important: be prepared for slippery surfaces or terrain variations and obstacles and brace yourself properly inside vehicle. If you climb or descend a hill that is too slip-

pery or has too loose a surface, you can lose control. If you go over the top of a hill at high speed, you may not have time to prepare for the terrain on the other side. Avoid parking on a slope. Always put the shift lever in PARK when stopped or parked, especially on an incline, to avoid rolling. If you must park on a steep incline, block the wheels using rocks or bricks.

Uphill Driving

Use the low range (L) for uphill driving.

Due to its configuration, this vehicle has very good traction even while climbing, so much so that tip over is possible before traction is lost. For example, it is common to encounter terrain situations where the top of the hill has eroded to a point that the hill peak rises very sharply. This vehicle is not designed to negotiate such a condition. Take an alternate route.

It is also wise to know the terrain condition on the other side of the hill or bank. All too often there exists a sharp drop-off that is impossible to negotiate or descend.

If you feel that the slope is getting too steep to climb, apply brakes to immobilize vehicle. Put shift lever in reverse (R), and back down the hill, barely releasing brakes to remain at low speed. Do not attempt to turn around. Never coast down hill while vehicle is in neutral. Do not perform hard braking as it increases the risk of tipover.

Downhill Driving

This vehicle can climb steeper slopes than it can descend safely. Therefore, it is essential to assure that a safe route exists to descend a slope before you climb it.

Decelerating while negotiating a slippery downhill slope could "toboggan" the vehicle, causing it to slide. Maintain steady speed and/or accelerate slightly to regain control. Never slam brakes and lock the wheels.

Side Hilling

Whenever possible, side hilling (driving across a slope rather than up or down it) should be avoided. If necessary, do so with extreme caution. Side hilling on steep inclines could result in rollover. In addition, slippery or unfirm surfaces could result in uncontrollable side sliding. Avoid all objects or depressions that will intensify the raising of one side of the vehicle higher than the other, thus causing rollover. If you feel the vehicle start to rollover or slide sideways, steer downhill if possible.

⚠ WARNING

Be careful when loading and transporting liquid reservoirs. They can affect vehicle stability when side hilling by pulling downhill and increasing the risk of a roll over.

Drop-Offs

This vehicle is not designed to negotiate drop-offs. It will "bottom-out" and usually stop if either the front or rear wheels are driven over a drop-off. If the drop is sharp or deep, the vehicle will nose dive and tip over.

Avoid negotiating drop-offs. Reverse and select an alternate route.

Recreational, Group and Distance Riding

Respect the rights and limitations of others. Stay away from areas designated for other types of off road use. This includes snowmobile trails, equestrian trails, cross country ski trails, mountain bike trails, etc. Never assume there are no other users on the trail. Always stay to the right of the trail and do not zig zag to one side of the trail then the other. Be prepared to stop or pull off to the side if another trail user appears in front of you.

Join a local side-by-side vehicle club. It will provide you with a map and advice or inform you where you can ride. If a

club does not exist in your area, help to start one. Group riding and club activities provide a pleasurable, social experience. Never use this vehicle with drugs or alcohol, or tired or ill.

Always keep a safe distance from other riders. Your judgment of speed, terrain conditions, weather, mechanical condition of your vehicle and the "trust in judgment" you have in others around you will help you make a better choice of appropriate safe distance. This vehicle, like any other motorized vehicle, cannot stop "on a dime".

Before you ride, tell someone where you are planning to travel and your expected time of return.

Depending on the length of your ride, carry additional tools or emergency equipment. Find out where you can get additional gasoline. Be prepared for the possible conditions you may encounter. An emergency first aid kit should always be a consideration.

Environment

One of the benefits of this vehicle is that it can take you off the beaten path away from most communities. However, you should always respect nature and the rights of others to enjoy it. Do not ride in environmentally sensitive areas. Do not drive over forest crops or shrubs, nor cut down trees or take down fencing, nor spin your wheels and destroy the terrain. "Tread Lightly".

This vehicle can cause OHV wildfires if debris builds up near the exhaust or other engine hot spots and ignites then falls off into dry grass. Avoid riding in wet areas, through muskeg or tall grass, where debris can build up. Should you ride in those areas, inspect and remove all debris from your engine and hot spots. Refer to *MAINTENANCE* section for details.

Chasing wildlife is in many areas illegal. Wildlife can die of exhaustion after being chased by a motorized vehicle. If you encounter animals on the trail, stop and observe quietly and with caution. It will be one of the better memories of your life.

Observe the rule... "what you take in, carry out". Do not litter. Do not start campfires unless you have permission to do so, and then only away from dry areas. The hazards you may create on the trail may cause injury to others or yourself, even at a later date.

Respect farm lands. Always obtain the permission of the landowner before riding on private land. Respect crops, farm animals and property lines.

Finally, do not pollute streams, lakes or rivers and do not modify the engine or exhaust system, or remove any of its components as it will alter the vehicle emissions.

MOVING LOADS AND DOING WORK

Working with your Vehicle

Your vehicle can help you perform a number of different LIGHT tasks ranging from snow removal to pulling wood or carrying cargo. A variety of accessories are available from your authorized Can-Am dealer. To prevent possible injury, follow the instructions and warnings that accompany the accessory. Always respect the load limits of the vehicle. Overloading the vehicle can overstress the components and cause failure. Avoid overexerting yourself if you lift or pull heavy loads or manually push the vehicle.

Carrying Loads

Any load carried on the vehicle will affect the handling, stability and braking distance of the vehicle. Do not exceed the load limits of the vehicle, including the weight of operator, passenger, cargo, accessories and trailer tongue weight.

LOAD LIMIT OF THE VEHICLE	
363 kg (800 lb) (all models except LTD and Mossy Oak Hunting Edition) 340 kg (750 lb) (LTD model) 321 kg (707 lb) (Mossy Oak Hunting Edition)	Includes occupants, cargo, tongue weight and added accessories

Following are examples of suitable total vehicle load distribution:

EXAMPLES OF SUITABLE VEHICLE TOTAL LOADS (ALL MODELS EXCEPT LTD AND MOSSY OAK HUNTING EDITION)				
OPERATOR AND PASSENGER	CARGO BOX LOAD	ACCESSORIES	TONGUE WEIGHT	TOTAL VEHICLE LOAD
200 kg (441 lb)	70 kg (154 lb)	25 kg (55 lb)	68 kg (150 lb)	363 kg (800 lb)
100 kg (220 lb)	263 kg (580 lb)	0 kg (0 lb)	0 kg (0 lb)	363 kg (800 lb)

EXAMPLES OF SUITABLE VEHICLE TOTAL LOADS (LTD MODELS)				
OPERATOR AND PASSENGER	CARGO BOX LOAD	ACCESSORIES	TONGUE WEIGHT	TOTAL VEHICLE LOAD
200 kg (441 lb)	47 kg (104 lb)	25 kg (55 lb)	68 kg (150 lb)	340 kg (750 lb)
100 kg (220 lb)	240 kg (530 lb)	0 kg (0 lb)	0 kg (0 lb)	340 kg (750 lb)

To reduce the risk to lose control or the load carried, follow these recommendations.

Vehicle Settings When Carrying Load

When the total load exceeds 180 kg (400 lb), including weight of operator, passenger, cargo, accessories and trailer tongue weight, inflate the tires to maximum pressure 83 kPa (12 PSI) Front, 152 kPa (22 PSI) Rear.

NOTE: When carrying heavy loads or passenger readjust suspension accordingly.

NOTE: When carrying heavy loads in cargo box or pulling a trailer operate with the shift lever in L (low range).

Loading the Cargo Box

NOTICE When loading or unloading, do not exceed the weight limit of 100 kg (220 lb) on either tailgate.

Load cargo as low as possible – a higher load can raise the vehicle's center of gravity, which can reduce stability. Position cargo toward the front and center of the cargo box and as evenly as possible.

Secure the load to the tie down hooks inside cargo box. Use only the tie down hooks on the bottom of the cargo box; do not secure cargo to the cage or other part of the vehicle. If it is not properly secured, a load may slide or fall off, possibly striking occupants or bystanders; or it may shift during riding, affecting the handling of the vehicle.

Objects that are higher than the walls of the cargo bed may affect visibility for the driver and may act as projectiles in case of an accident. Loads that protrude sideways can get snagged or caught in bush, branches or other obstacles. Avoid covering and obstructing the brake lights with the cargo. Ensure no cargo protrudes outside the box and that cargo will not interfere with your visibility or control of the vehicle.

Do not overload cargo box.

Close both tailgates before operating.

MAXIMUM CARGO BOX LOADS		
CARGO BOX (TOTAL)	272 kg (600 lb)	Evenly distributed and safely secured. Loaded as low as possible to reduce height of center of gravity.
LOWER CARGO BOX	272 kg (600 lb)	Evenly distributed.
UPPER CARGO BOX	181 kg (400 lb)	Evenly distributed on floor separator.
UPPER TAILGATE	100 kg (220 lb)	Only while loading cargo into cargo box. Never operate with tailgate open.
LOWER TAILGATE	100 kg (220 lb)	Only while loading cargo into cargo box. Never operate with tailgate open.

Following are examples of cargo box loading limits:

EXAMPLES OF CARGO BOX TOTAL LOADS		
CARGO BOX UPPER SECTION LOAD	CARGO BOX LOWER SECTION LOAD	TOTAL CARGO BOX LOAD
0 kg (0 lb)	272 kg (600 lb)	272 kg (600 lb)
100 kg (220 lb)	172 kg (380 lb)	272 kg (600 lb)
181 kg (400 lb)	91 kg (200 lb)	272 kg (600 lb)

Operating While Carrying a Load

Reduce your speed when carrying cargo and turn gradually. Avoid hills and rough terrain. Allow more distance for braking. This vehicle may require additional stopping distance if carrying heavy loads, especially on inclined surfaces.

Tilting the Cargo Box

The cargo box can be tilted to ease unloading. Use release handles on either side of cargo box.



tmo2011-001-518_a

1. RH release handle

NOTICE Always turn off engine when tilting the cargo box.

⚠ WARNING

- Always ensure no one is standing behind the cargo box before you actuate the release handle.
- The load weight may affect the operation of the cargo box tilting feature (tilting or lowering).

Be very careful with the operation of the tail gates and the cargo box as the load may have moved during transport.

To lower the cargo box, simply push it down into place.

⚠ WARNING

- Keep yourself and others clear of the cargo box and vehicle frame junction when lowering cargo box.
- Ensure to properly latch the cargo box and the tailgates before riding.
- Make sure you do not leave objects between lifted cargo box and vehicle frame to ensure proper latching of the cargo box when lowered.



FRONT SECTION OF INCLINED CARGO BOX FREE OF ANY OBJECTS



PUSH TO CLOSE
1. Hand guard

Hauling a Load

NOTICE A BRP approved rear hitch must be properly installed on the vehicle for hauling trailers.

Never pull a load by attaching it to the cage; this can cause the vehicle to tip over. Use only the trailer hitch or winch (if installed) to pull a load.

When pulling loads with a chain or cable, ensure that there is no slack before starting and maintain tension while pulling.

When pulling loads with a chain or cable, be sure to brake progressively. The inertia of the load could lead to an impact.

When hauling a load, respect the maximum hauling capacity. See *PULLING A TRAILER* subsection.

⚠ WARNING

Slack can cause the chain or cable to break and snap back.

When pulling another vehicle, be sure that someone is controlling the pulled vehicle. They must brake and steer to prevent the vehicle from going out of control.

Before pulling loads with a winch, refer to the winch manufacturer's instructions.

Reduce your speed when hauling a load and turn gradually. Avoid hills and rough terrain. Never attempt steep hills. Allow more distance for braking, especially on inclined surfaces and when a passenger is on board. Be careful not to skid or slide.

Pulling a Trailer

NOTICE A BRP approved rear hitch plate must be properly installed on the vehicle for hauling trailers.

Riding this vehicle with a trailer substantially increases the risk of toppling, especially on inclined slopes. If a trailer is used behind the vehicle make sure that its hitch is compatible with the one on the vehicle. Make sure the trailer is horizontal with the vehicle. (In some instances a special extension may have to be installed on the vehicle hitch). Use security chains or cables to secure the trailer with the vehicle.

Reduce your speed when pulling a trailer and turn gradually. Avoid hills and rough terrain. Never attempt steep hills. Allow more distance for braking, especially on inclined surfaces and when a passenger is on board. Be careful not to skid or slide.

Improperly loading a trailer may cause loss of control. Respect the recommended maximum hauling capacity and maximum tongue load (Refer to *MAXIMUM HAULING CAPACITY* table). Make sure there is at least some weight on the tongue.

Always make sure load is evenly distributed and safely secured on the trailer; an evenly balanced trailer is easier to control.

Always put the shift lever to L (low range) for hauling a trailer – in addition to providing more torque, operating in low range helps account for the increased load on the rear tires.

When stopped or parked, block the vehicle and trailer wheels from possible movement.

Use caution when disconnecting a loaded trailer; it or its load may topple on you or others.

When hauling a trailer, respect the following maximum hauling capacity.

MAXIMUM HAULING CAPACITY		
TYPE OF ATTACHMENT	TRAILER LOAD ALLOWED	TONGUE WEIGHT ALLOWED
50.8 mm (2 in) X 50.8 mm (2 in) hitch ball support	680 kg (1,500 lb)	68 kg (150 lb)
38 mm (1.5 in) X 38 mm (1.5 in) hitch ball support and the appropriate hitch adapter	400 kg (882 lb)	40 kg (88 lb)
NOTE: Includes trailer and trailer load. Ensure to properly load the trailer so that tongue is always pushing on hitch support and not pulling on hitch ball.		

IMPORTANT ON-PRODUCT LABELS

Hang Tag

This vehicle comes with a hang tag and labels containing important safety information.

Any person who rides this vehicle should read and understand this information before riding.

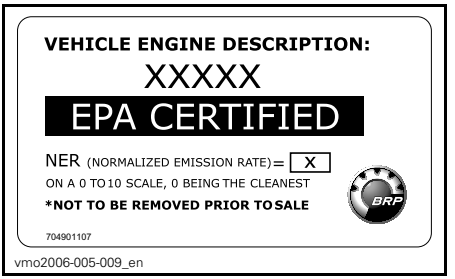

TYPICAL: APPLICABLE FOR ALL MODELS IN CANADA AND UNITED STATES, APPLICABLE FOR MODELS EVERYWHERE EXCEPT CANADA AND UNITED STATES WHEN EQUIVALENT TO A MODEL CERTIFIED TO US. EPA STANDARDS



ATTACHED TO COMPRESSOR HOSE

Safety Labels

Read and understand all the safety labels on your vehicle.

These labels are affixed to the vehicle for the safety of the operator, passenger or bystanders.

The following labels are on your vehicle, and they should be considered permanent parts of the vehicle. If missing or damaged, they can be replaced free of charge. See an authorized Can-Am dealer.

NOTE: In the event of any discrepancy between this guide and the vehicle, the safety labels on the vehicle have precedence over the labels in this guide.

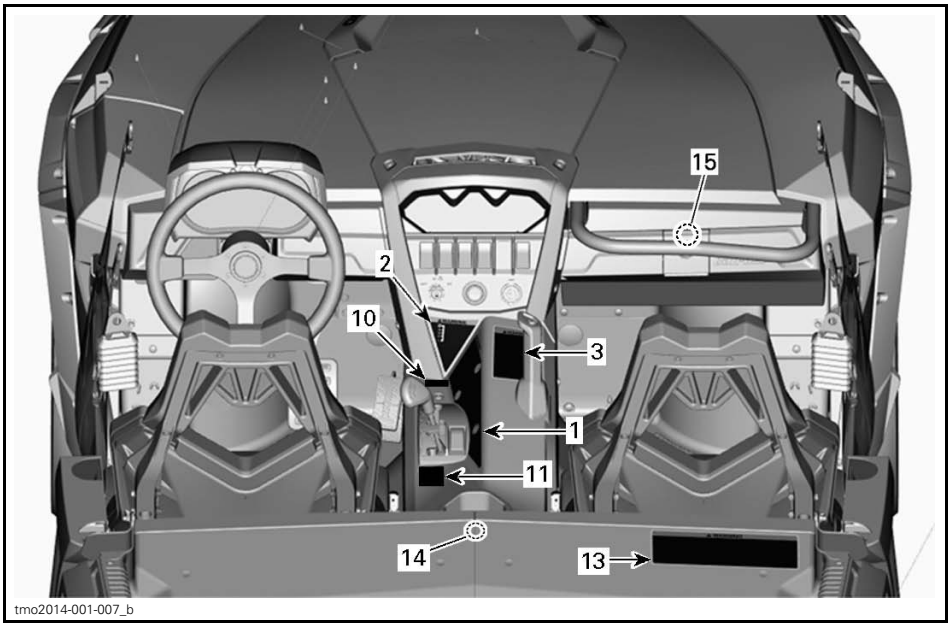

TYPICAL

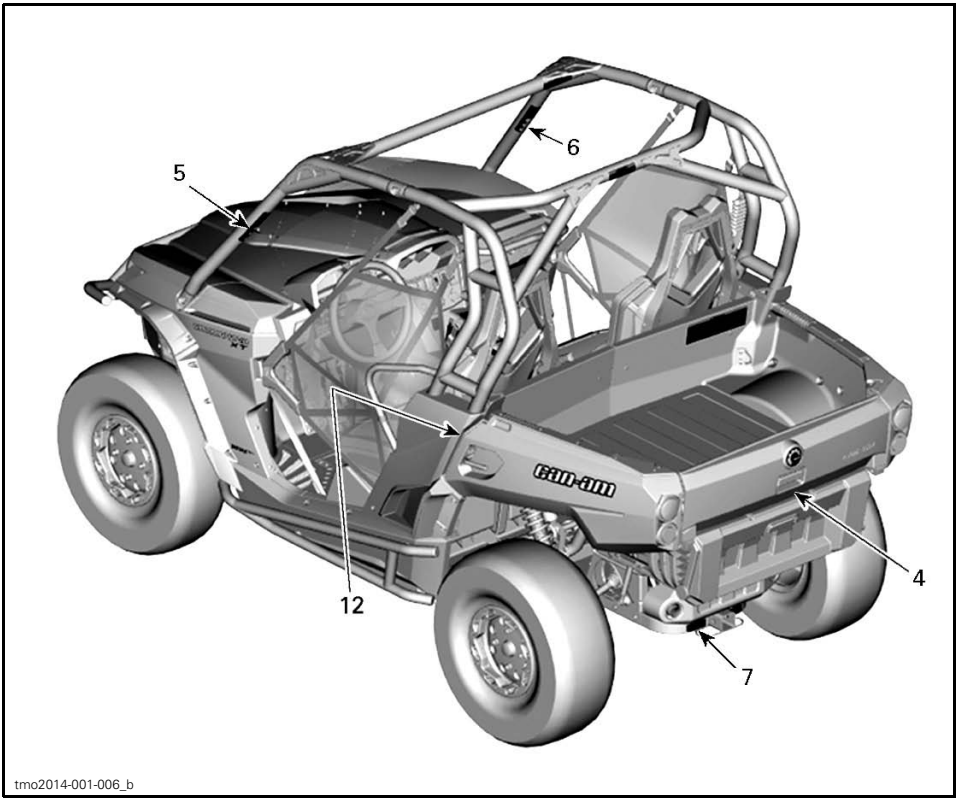

TYPICAL

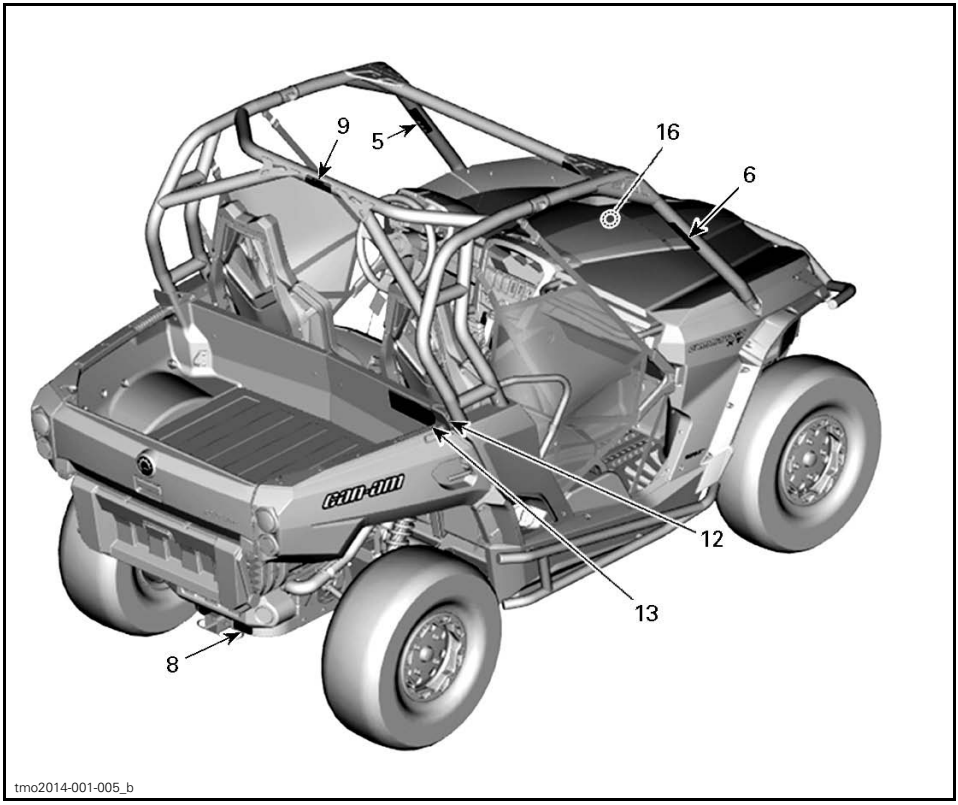

TYPICAL

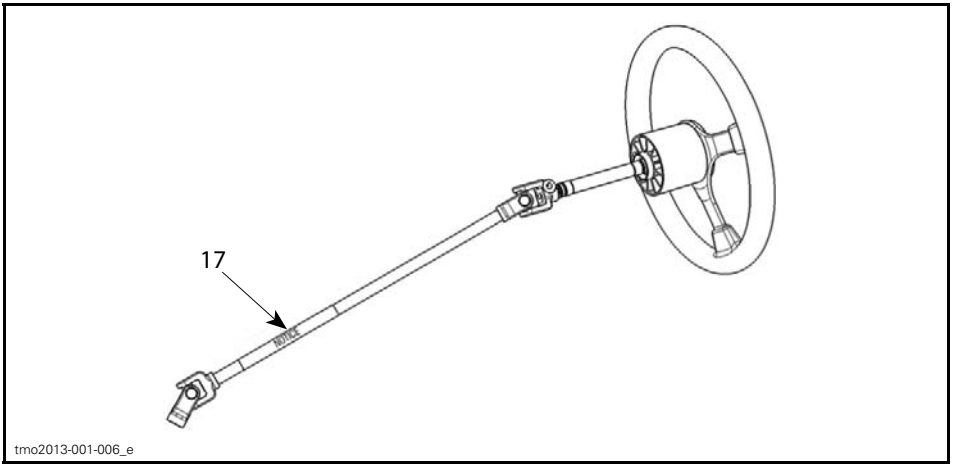

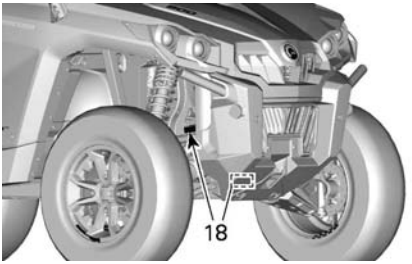

TYPICAL

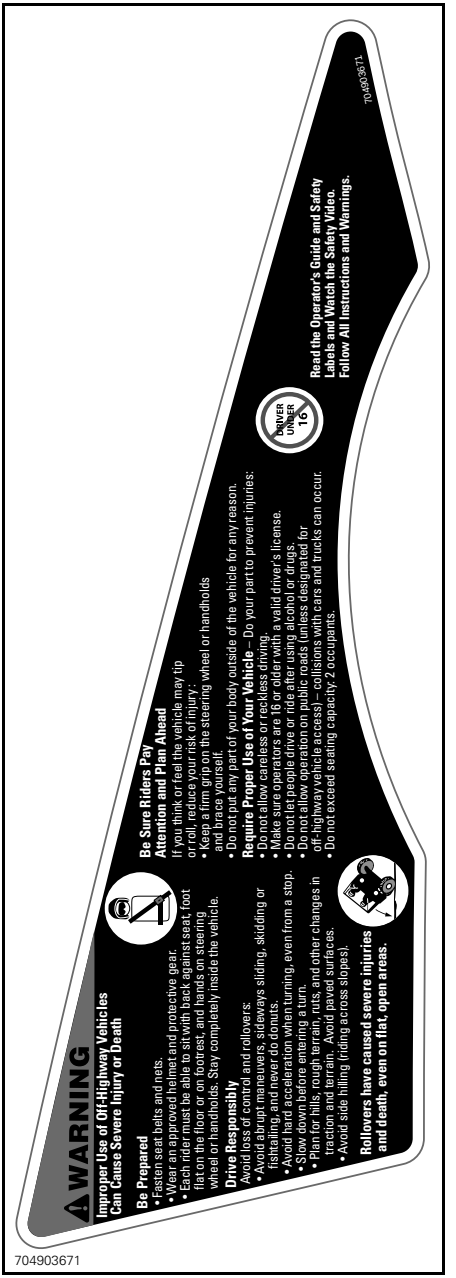

LABEL 1



LABEL 2



LABEL 4

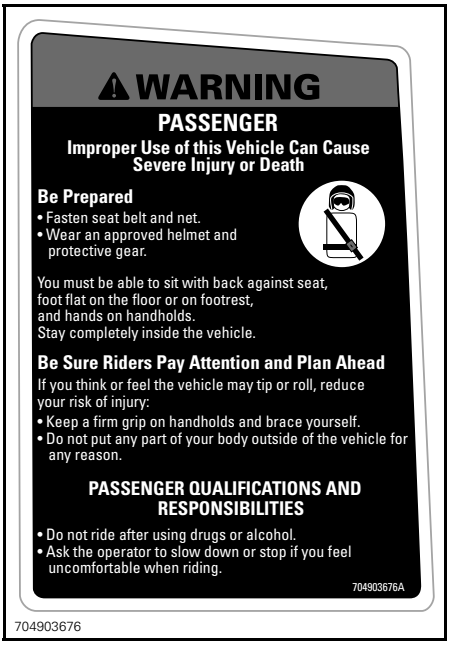

LABEL 3



LABEL 5



LABEL 6

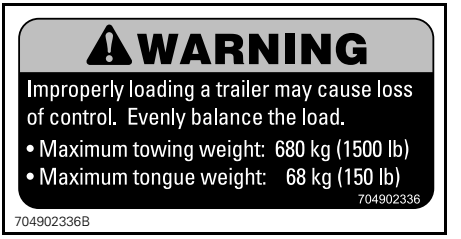

LABEL 7



LABEL 8

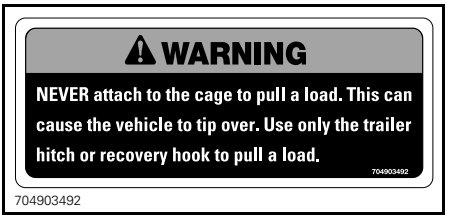

LABEL 9

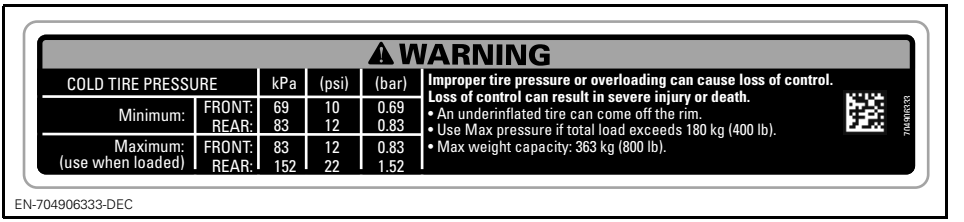

LABEL 10 - ALL MODELS EXCEPT MOSSY OAK AND LIMITED

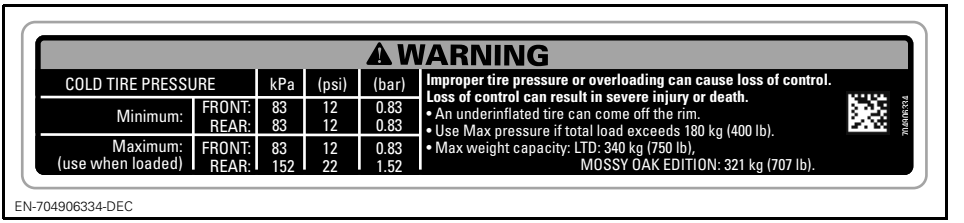

LABEL 10 - MOSSY OAK AND LTD MODELS



LABEL 11



LABEL 12

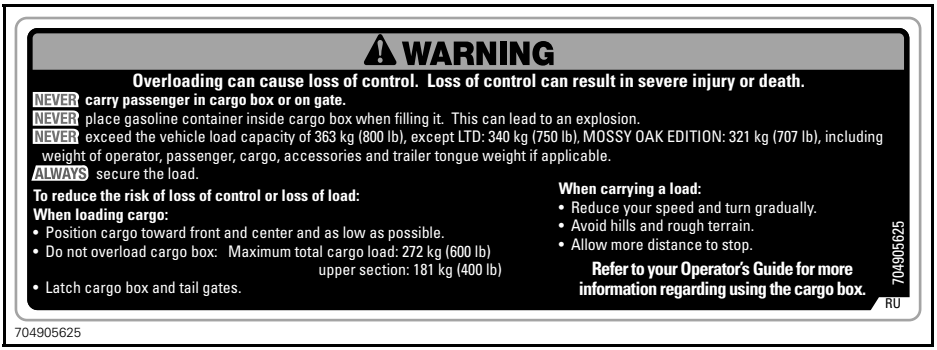

LABEL 13

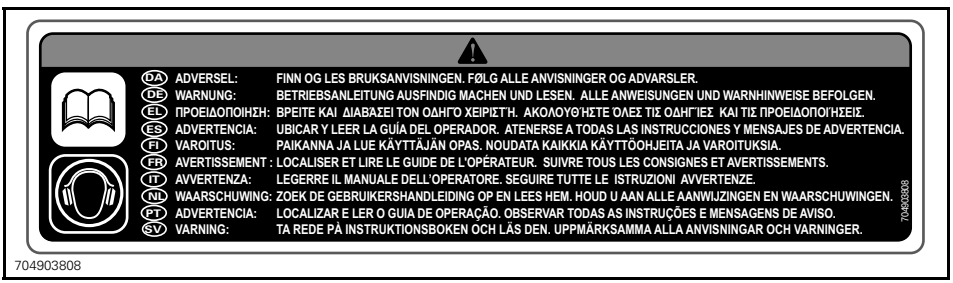

LABEL 14 - OUTSIDE CAN - US



LABEL 15

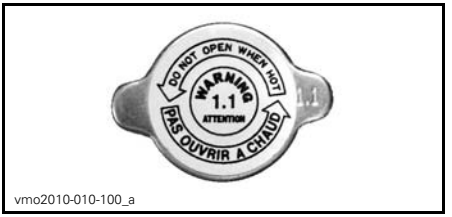

LABEL 16

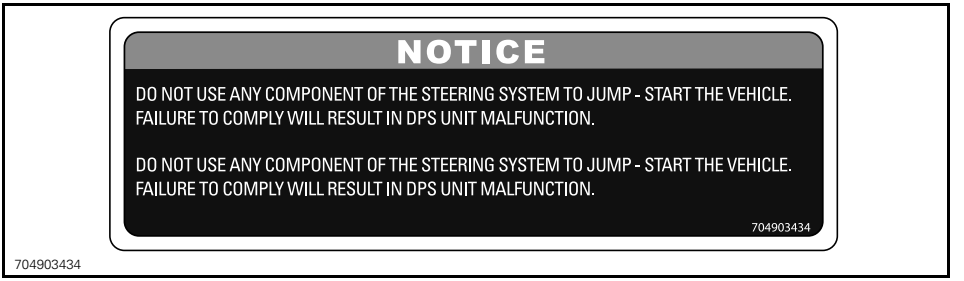

LABEL 17

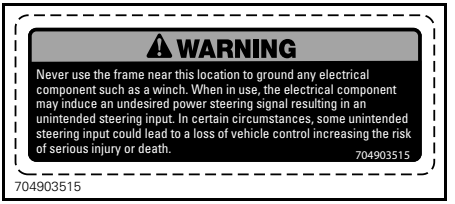

LABEL 18

Compliance Labels

These labels indicate vehicle's compliance.

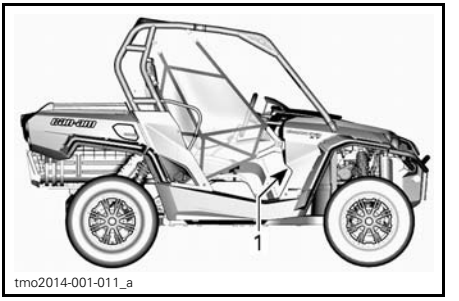

TYPICAL
1. Compliance labels located under glove box

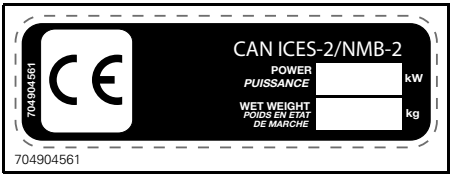



704904653

TYPICAL: APPLICABLE FOR ALL MODELS IN CANADA AND UNITED STATES, APPLICABLE FOR MODELS EVERYWHERE EXCEPT CANADA AND UNITED STATES WHEN EQUIVALENT TO A MODEL CERTIFIED TO US. EPA STANDARDS



EN-704906229-DEC

LOCATED ON TOP RIGHT OF FRONT BAR OF CAGE

Technical Information Labels

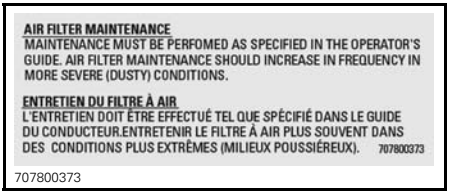

707800373

LOCATION: ON ENGINE AIR FILTER HOUSING COVER

This page is intentionally blank

VEHICLE INFORMATION

PRIMARY CONTROLS

It is important to know the location and operation of all controls, and to develop and practice smooth and coordinated use of them.

NOTE: Some vehicle safety labels are not shown on illustrations. For information on vehicle safety labels, refer to *VEHICLE SAFETY LABELS* subsection.

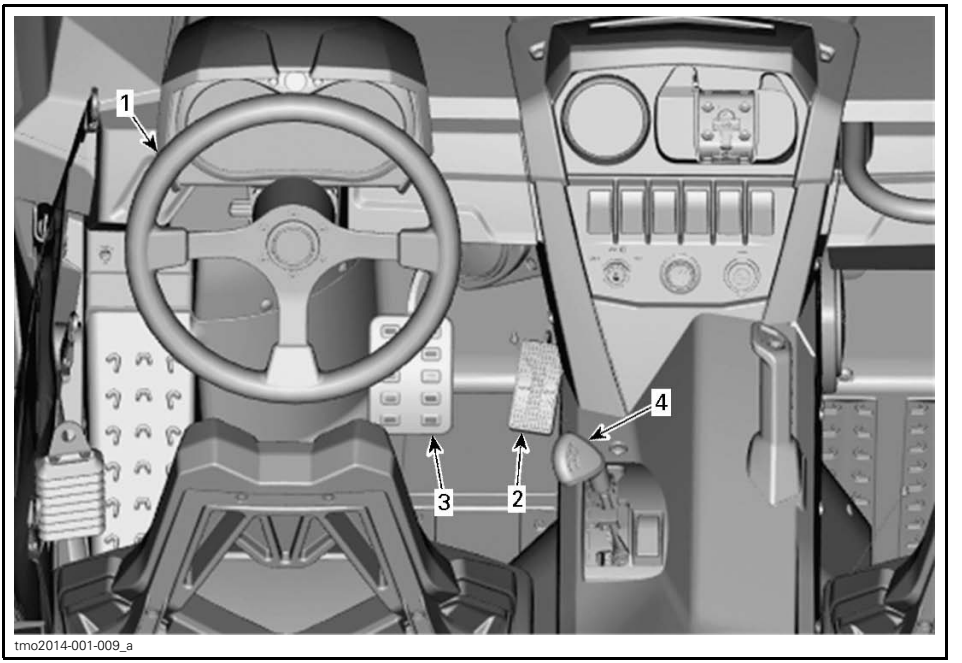

TYPICAL - PRIMARY CONTROLS

1) Steering Wheel

The steering wheel is located in front of the driver's seat.

The steering wheel steers the vehicle to the left or right.

Steer the steering wheel in the direction you want to go.

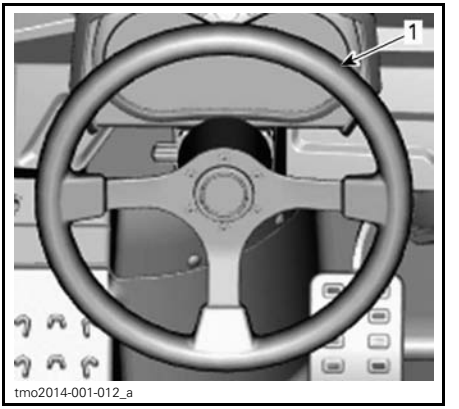

TYPICAL
1. Steering wheel

Grip the steering wheel with both hands, without having thumbs rolled around the steering wheel.

⚠ CAUTION Under rough trail conditions or when crossing an obstacle, the steering wheel could suddenly jerk on one side, causing hand or wrist injuries if the thumbs are rolled around the steering wheel.

Models with DPS

The DPS reduces the effort to turn the steering wheel.

2) Accelerator Pedal

The accelerator pedal is located on the right side of the brake pedal.

The accelerator pedal controls the engine speed.

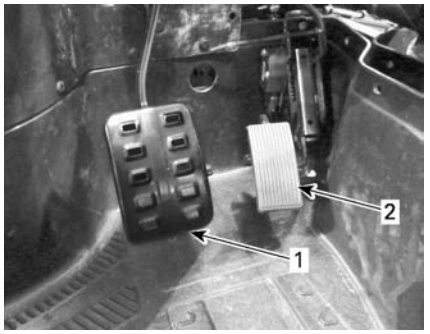

tmo2011-001-001_a

1. Brake pedal
2. Accelerator pedal

To increase or maintain vehicle speed, press on the accelerator pedal with your right foot.

To decrease vehicle speed, release the accelerator pedal.

The accelerator pedal is spring loaded and should return to rest position (idle) when not pressed.

NOTE: The accelerator pedal should never be disassembled.

3) Brake Pedal

The brake pedal is located on the left side of the accelerator pedal.

The brake pedal function is to slow down or stop the vehicle.

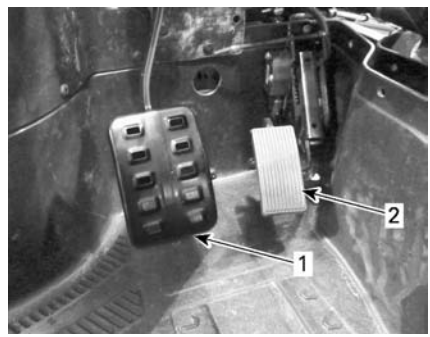

tmo2011-001-001_a

1. Brake pedal
2. Accelerator pedal

To decrease vehicle speed or to stop vehicle, press down the brake pedal with your right foot.

The brake pedal is spring loaded and should return to rest position when not pressed.

4) Shift Lever

The shift lever is located on the lower console.

The shift lever is used to change the gearbox position.

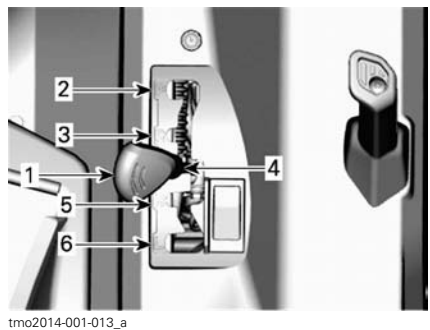

tmo2014-001-013_a

1. Shift lever
2. Park
3. Reverse
4. Neutral
5. High range (forward)
6. Low range (forward)

The vehicle must be stopped and brakes applied prior to selecting any gear.

NOTICE This gearbox is not designed to shift while vehicle is moving.

Park

The park position locks the gearbox to help prevent vehicle movement.

⚠ WARNING

Always use the PARK (P) position when the vehicle is not in operation. The vehicle can roll if the shift lever is not set to P (PARK).

Reverse

The reverse position allows the vehicle to go backwards.

NOTE: In reverse operation, the engine's RPM is limited, thus limiting the vehicle reverse speed.

⚠ WARNING

When driving downhill in reverse, gravity can increase the vehicle speed above the set limited reverse speed.

Neutral

The neutral position disengages the gearbox.

High Range (Forward)

This position selects the high speed range of the gearbox. It is the normal driving speed range. It allows the vehicle to reach its maximum speed.

Low Range (Forward)

This position selects the low speed range of the gearbox. It allows the vehicle to move slowly with maximum torque at the wheels.

NOTICE Use the low speed range to pull a trailer, carry heavy cargo, go over obstacles or drive uphill and downhill.

SECONDARY CONTROLS

NOTE: Some vehicle safety labels are not shown on illustrations. For information on vehicle safety labels, refer to *VEHICLE SAFETY LABELS* subsection.

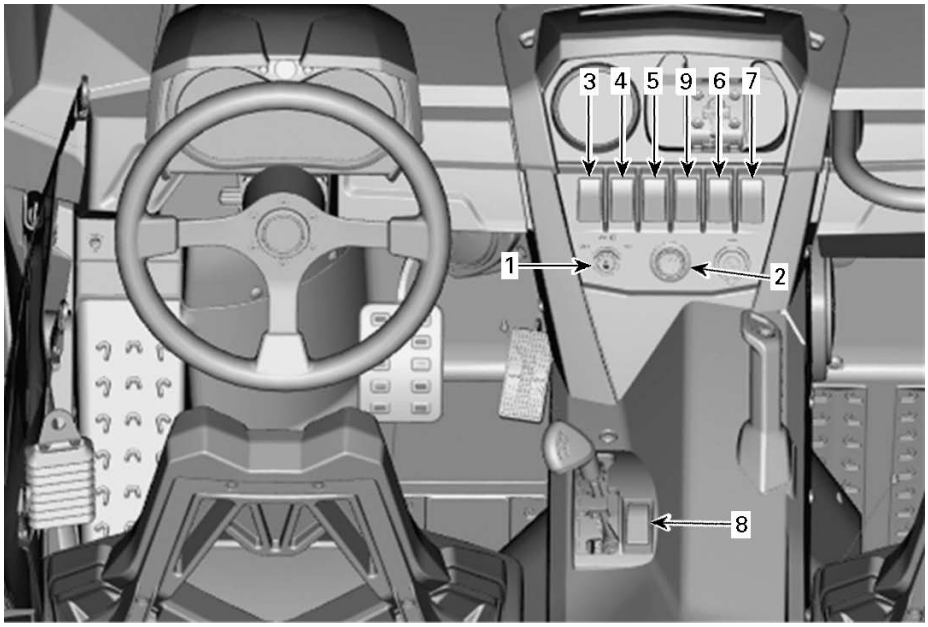

tmo2014-001-009_b

TYPICAL - SECONDARY CONTROLS

1) Ignition Switch and Keys

Ignition Switch

The ignition switch is located on the upper console area.

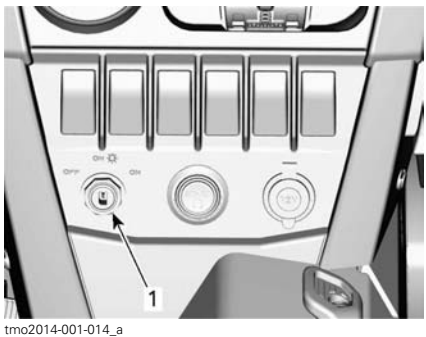

tmo2014-001-014_a

1. Ignition switch

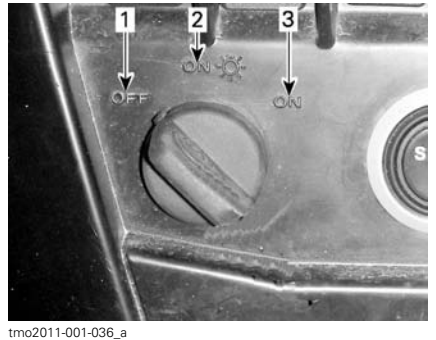

tmo2011-001-036_a

IGNITION SWITCH POSITION
1. *OFF*
2. *ON with lights*
3. *ON*

OFF

The key can be inserted or removed in this position only.

In OFF position, the electrical system of the vehicle is disabled.

The engine is shut down by turning the ignition switch to OFF position.

ON with Lights

When the key is turned in this position, the electrical system of the vehicle is activated.

The gauge should wake-up.

The vehicle lights are turned on.

The engine can be started.

ON

This position offers the same functions as ON with lights position, except the vehicle lights are turned off.

Ignition Keys

Digitally Encoded Security System (D.E.S.S.)

The ignition keys contain an electronic circuit that gives it a unique electronic serial number.

The D.E.S.S. system reads the key code and allows engine starting for keys it recognizes.

Types of Keys

This vehicle can be operated using 3 different types of ignition keys:

- Normal key (grey)
- Performance key (black)
- Optional Work key (orange).

The key type is differentiated by its color.

⚠ WARNING

Rollovers, tipovers, collisions and loss of control resulting in serious injury or death are possible with the performance, normal or optional work keys. Using the work key or normal key is not a substitute for the operator being prepared, qualified, and operating with care.

Normal Key

The vehicle is delivered with a normal key.

The normal key limits the overall performance to 70% of maximum engine torque and vehicle speed to 70 km/h (43 MPH).

⚠ WARNING

On steep downhills, the engine speed limiter may not prevent the vehicle from accelerating beyond this speed.

This key may be useful for riders who prefer more gradual acceleration, or for riding in environments where full speed and high acceleration are not desirable. For example, in narrow, winding trails, operators may prefer the normal key.

Performance Key

The vehicle is delivered with a performance key, which allows the user to access the full torque of the engine as well as the top speed of the vehicle.

This may be useful for riders who prefer greater acceleration, and for environments where higher speeds and greater acceleration are appropriate. For example, in wide-open, straight trails, operators may prefer the performance key.

Optional Work Key

A work key is also available at your dealership.

The work key limits the overall performance to 50% of maximum engine torque and vehicle speed to 40 km/h (25 MPH).

⚠ WARNING

On steep downhills, the engine speed limiter may not prevent the vehicle from accelerating beyond this speed.

This may be useful for riders who use this vehicle in a workplace environment where lower speeds and acceleration are a requirement.

2) Engine Start Button

The engine start button is located on the upper console. When pressed and held, it starts the engine.

NOTE: The ignition switch must be in the ON or ON with lights position to allow engine start.

NOTE: If the ignition switch is left ON for more than 15 minutes, engine will not start unless ignition switch is turned OFF, then ON again.

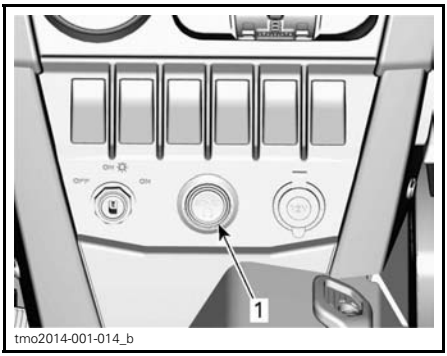

1. Engine start button

3) Low/High Beam Headlight Switch

The low/high beam headlight switch is located on the upper console.

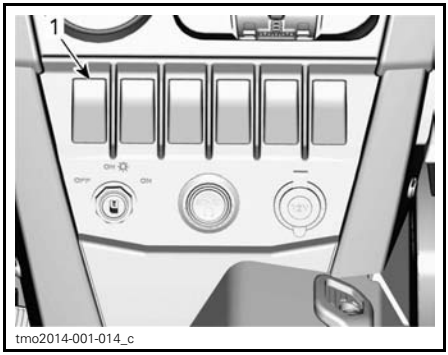

1. Low/High beam headlight switch

This switch is used to select either the headlights low or high beams.

4) 2WD/4WD Switch

The 2WD/4WD switch is located on the upper console.

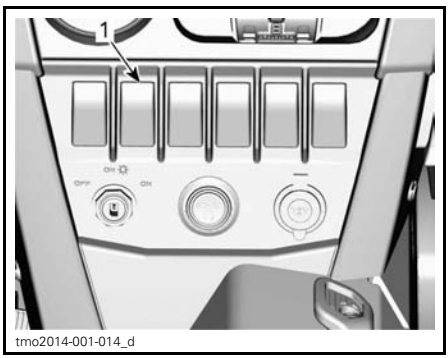

1. 2WD/4WD switch

This switch selects 2 wheel drive or 4 wheel drive mode when the vehicle is stopped and the engine is running.

NOTICE **The vehicle must be stopped to engage or disengage 2WD/4WD switch. Mechanical damage may occur if switch is engaged or disengaged while driving.**

The 4WD mode is engaged when the switch is pushed upwards.

The 2WD mode is engaged when the switch is pushed downwards. The vehicle is then rear wheel drive only.

5) Sport/ECO Mode Switch

The sport/ECO switch is located on the upper console.

It is used to select the sport or ECO mode in high range.

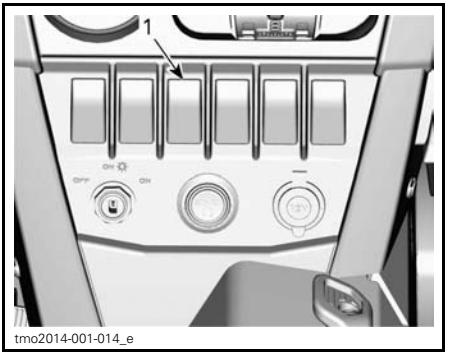

1. Sport/ECO switch

The sport mode provides a crisper throttle response.

NOTE: The sport mode can be activated with all key types and provides the maximum power with the used key.

The ECO (fuel economy mode) setting reduces fuel consumption by limiting throttle response and maximum throttle opening to maintain an optimal cruising setting.

NOTE: Use ECO mode on bumpy trails to provide smoother ride conditions.

6) ACS Switch (LTD Models Only)

The ACS switch is located on the upper console.

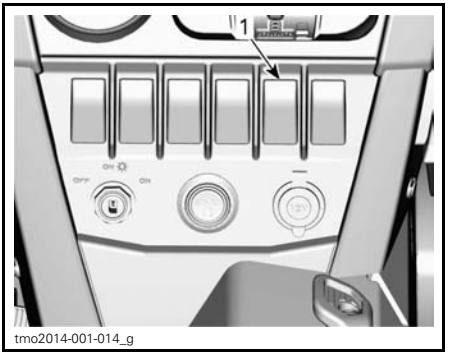

1. ACS switch

The ACS switch function is to adjust the ACS suspension.

To adjust the ACS suspension setting, refer to *SUSPENSION* subsection.

7) Winch Switch (Models with Winch)

The winch can be controlled from inside the vehicle with the winch control switch located in the upper console.

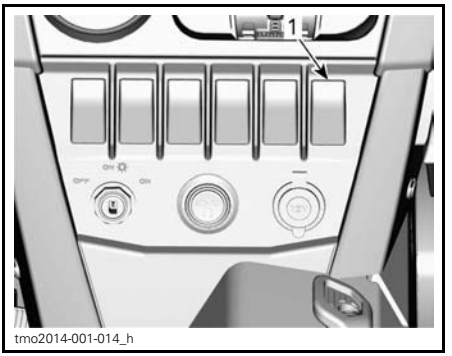

1. Winch switch

Refer to your winch *GUIDE* included with your vehicle for proper winch operation.

8) Override Switch

The override switch is located on the lower console beside the shift lever.

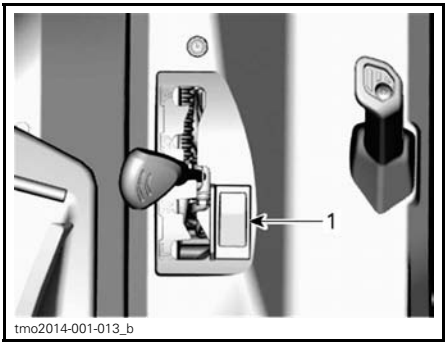

1. Override switch

The override switch main functions are:

1. To bypass the engine speed limiter in reverse operation by allowing maximum engine torque

⚠ WARNING

Only use the override to help get the vehicle unstuck from mud or other soft terrain. Do not use the override for normal operation in reverse. This would allow driving in reverse at excessive speeds and can increase the risk of losing control.

2. To temporarily deactivate the electronic drive belt protection (if available and activated on your model).

⚠ WARNING

Only use the override if it is not possible to shift in LOW range. Do not use the override for normal operation and always be aware of your surroundings when using the override.

3. To erase the MAINTENANCE REQUIRED message, refer to *MESSAGE DISPLAY MODE* or *MULTIFUNCTION DISPLAY* subsection.
4. To move vehicle in case of a pedal accelerator failure, refer to *TROUBLESHOOTING GUIDELINES* subsection.

To engage the override function, proceed as follows:

1. Press and hold the override switch then press the accelerator pedal gradually.

NOTE: While in REVERSE and using the override function, the gauge will scroll an OVERRIDE message to confirm that the function is activated.

2. To disengage the override function, simply release the override switch.

9) DPS Switch (All Models Except Base)

The DPS switch is used to change the DPS (Dynamic Power Steering) mode.

To change mode, DPS switch needs to be held for at least 2 seconds. If held for less than 2 seconds, it will show the selected mode.

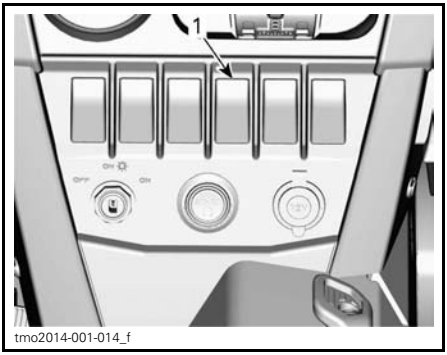

1. DPS switch

MULTIFUNCTION GAUGE (LCD) (BASE AND DPS MODELS)

The multifunction gauge (LCD) is located on the steering column.

⚠ WARNING

Do not adjust the display while riding . You could lose control.

Multifunction Gauge Description

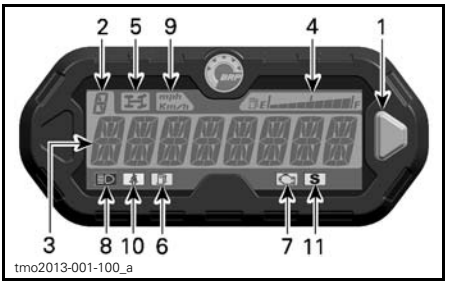

1. *Selector button*
2. *Transmission position display*
3. *Main screen*
4. *Fuel level display*
5. *4WD indicator lamp*
6. *Low fuel level indicator lamp*
7. *Check engine indicator lamp*
8. *High beam indicator lamp*
9. *MPH and KM/H indicator lamp*
10. *Seat belt indicator lamp*
11. *Sport mode indicator lamp*

1) Selector Button

The selector button is used to navigate or change settings in the multifunction gauge.

2) Transmission Position Display

This display will show transmission position.

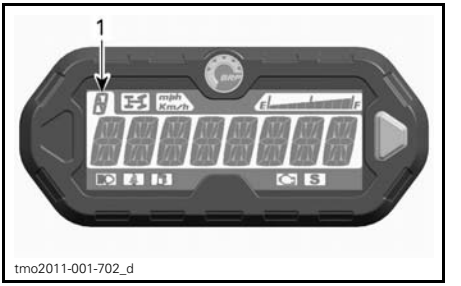

1. *Transmission position*

DISPLAY	FUNCTION
P	Park
R	Reverse
N	Neutral
H	High range
L	Low range

3) Main Screen

The main screen is used to display numerous functions of the multifunction gauge.

Refer to *MULTIFUNCTION GAUGE MODES* for the different available modes:

4) Fuel Level Display

Bar gauge continuously indicates the level of fuel in the fuel tank while riding.

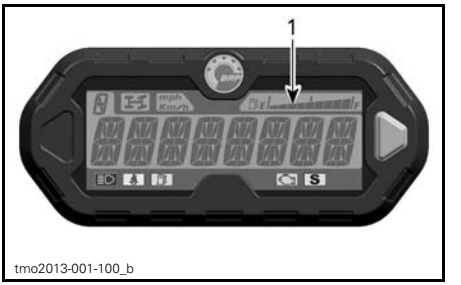

1. *Fuel level display*

5) 4WD Indicator Lamp

When this indicator is ON, it indicates the 4WD system is activated.

6) Low Fuel Level Indicator Lamp

When this indicator is ON, it indicates that there is approximately 12 L (3.2 U.S. gal.) of fuel left in fuel tank.

7) Check Engine Indicator Lamp

When this indicator is ON, it indicates an engine fault code, look for a message at the LCD display.

When this indicator blinks, it indicates that the LIMP HOME mode is activated.

Refer to *TROUBLESHOOTING* section for more details.

8) High Beam Indicator Lamp

When this indicator is ON, it indicates that high beam is selected on the headlights and that ignition key is in ON with lights position.

9) KM/H or MPH Indicator Lamp

mph
Km/h

The proper lamp turns on to indicate the unit the speedometer uses.

10) Seat Belt Indicator Lamp

When this indicator is ON, the driver's seat belt is not buckled.

11) Sport Mode Indicator Lamp

S

When this indicator is ON, the sport mode is active.

Multifunction Gauge Modes

Speed Mode

In this mode, the main screen shows the speed of the vehicle either in km/h or in MPH.



vdd2008-001-084

RPM Mode

In this mode, the main screen shows the engine RPM.

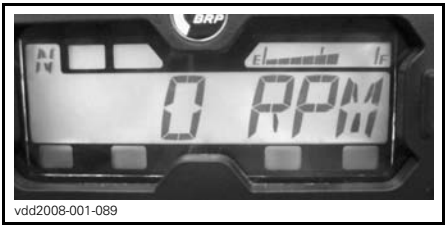

vdd2008-001-089

Combined Mode

In this mode, the main screen shows the speed of the vehicle and the engine RPM.

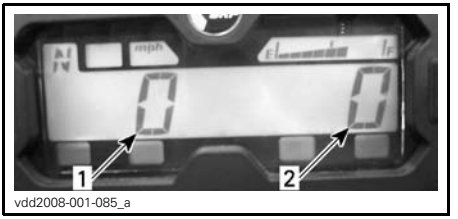

vdd2008-001-085_a

1. *Vehicle speed*
2. *Engine RPM*

Odometer (OD)

Odometer records the total distance travelled either in miles or kilometers.


vsi2009-018-030

Clock

Shows current time.


vmo2011-008-001

Refer to *GAUGE SETUP* to set current time.

Trip Meter (TP)

The trip meter records the travelled distance since it has been reset. Distance travelled is displayed either in kilometers or miles.


vsi2009-018-031

It can be used to establish a fuel tank range or distance between 2 way points.

Press and HOLD the selector button for 2 seconds to reset the trip meter.

Trip Hour Meter (TH)

The trip hour meter records vehicle running time when the electrical system is activated. It can be used to establish traveling time between 2 way points .


vsi2009-018-032

Press and HOLD the selector button for 2 seconds to reset the hour meter.

Engine Hour Meter (EH)

The engine hour meter records engine running time.


vsi2009-018-033

Message Display Mode

Important messages can be displayed in the main screen. Refer to table below.

If an abnormal engine condition occurs, a message may scroll across the main screen in conjunction with a pilot lamp. Refer to *TROUBLESHOOTING* section for details.

MESSAGE (NORMAL OPERATION)	DESCRIPTION
BRAKE	Message displayed when the brakes are applied continuously for 15 seconds. (Speed needs to be higher than 5 km/h (3 MPH))
NORMAL KEY	Displayed at power up when a normal key is used.
PERFORMANCE KEY	Displayed at power up when a performance key is used.
WORK KEY	Displayed at power up when the work key is used.
OVERRIDE	Override is displayed when the override switch is pressed and the shift lever is set to reverse gear.
SEAT BELT	When the driver seat belt is not buckled and the vehicle speed is less than 10 km/h (6 MPH), the message is displayed and the pilot lamp will be lit. No engine torque limitation engaged.
ENGINE LIMITATION ENGAGED FASTEN SEAT BELT	When the driver seat belt is not buckled and the vehicle speed is above 10 km/h (6 MPH), the message is displayed and the pilot lamp stays on. The engine management will engage a torque limitation that will limit the vehicle speed to approximately 20 km/h (12 MPH).
DPS MAX.	Maximum steering assist.
DPS MED	Medium steering assist
DPS MIN	Minimum steering assist.
SPORT MODE ACTIVE	Displayed when sport mode is activated.
ECO MODE	Displayed when ECO mode is activated.
MAINTENANCE REQUIRED (1)	Displayed in gauge when vehicle is due for a maintenance.
LOW GEAR	Displayed when belt protection is active in high gear. (If available and activated on your model)

(1) To erase the MAINTENANCE REQUIRED message, proceed as follows:

1. Select PARK.
2. Turn ignition switch to ON. Do NOT start engine.

NOTE: The steps 3 through 9 must be completed within **5 seconds**.

3. Press override switch and HOLD.
4. Press and release brake pedal.
5. Release override switch.
6. Press and release brake pedal.

7. Press override switch and HOLD.
8. Press and release brake pedal.
9. Release override switch.
10. Turn ignition switch to OFF

NOTE: Do not turn ignition switch to ON before the multifunction gauge turns off.

Fault Code Mode

Press and hold mode button while switching high and low beam (three cycles) to access diagnostic fault codes.

Navigating in the LCD Gauge

Default Display Mode

After vehicle startup, the default display mode is either:

– Vehicle speed
– Engine revolutions per minute (RPM)
– Both parameters simultaneously (combined mode).

To change from one display to the other, proceed as follows.

1. Turn ignition key to ON to power-up the system up.
2. Wait until the "greeting message" has been displayed.
3. Press and release selector button once to display OD (odometer).
4. Press the selector button again, this time for 2 seconds.

This will change the Mode to either Speed, RPM or Combined.



vdd2008-001-083

5. To select another mode, repeat steps 3 and 4 until the desired mode is displayed.

Temporary Display Mode

In the temporary display mode, the following functions are available:

– Odometer
– Clock
– Trip meter (resettable)
– Trip Hour meter (resettable)
– Engine hour meter.

Press and release selector button to change the default display mode to the temporary mode.



tmo2011-001-702_c

1. Selector button

The gauge will display the selected mode for 10 seconds then will return to the normal display mode.

While in a resettable mode, push and HOLD selector button for 2 seconds to reset it.

Gauge Setup

Clock Setting

Once clock display as been selected, use the display selector button to set clock as follows:

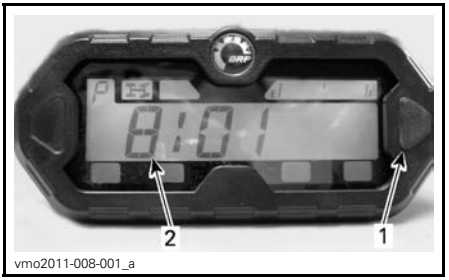

1. Selector button
2. Time

1. Press and HOLD button (Display will flash).
2. Choose the 12-hour (12H) or 24-hour (24H) format by pressing button.
3. If the 12-hour format was selected, choose Am ("A") or Pm ("P") by pressing button.
4. Press and HOLD button.
5. Choose hour first digit by pressing button.
6. Press and HOLD button.
7. Choose hour second digit by pressing button.
8. Press and HOLD button.
9. Choose minutes first digit by pressing button.
10. Press and HOLD button.
11. Choose minutes second digit by pressing button.
12. Press button to enter settings (CLOCK will appear on display).

NOTE: The gauge will display the current time for 10 seconds then will return to the normal display mode.

Unit Selection (km/h vs MPH)

The speedometer, odometer and trip meter are factory preset in **miles** but it is possible to change them to **kilometer** reading. Contact an authorized Can-Am dealer.

Language Selection

The gauge display language can be changed. Refer to an authorized Can-Am dealer for language availability and setup the gauge to your preference.

MULTIFUNCTION GAUGE (ANALOG/DIGITAL) (XT, XT-P AND LTD MODELS)

Multifunction Gauge Description

The multifunction gauge (analog/digital) is located on the steering column.

The multifunction gauge (analog/digital) is comprised of a digital gauge and two analog gauges (speedometer and tachometer).

The engine temperature and fuel level bar graphs are comprised in the digital gauge.

The indicators lamps are comprised in both analog gauges.

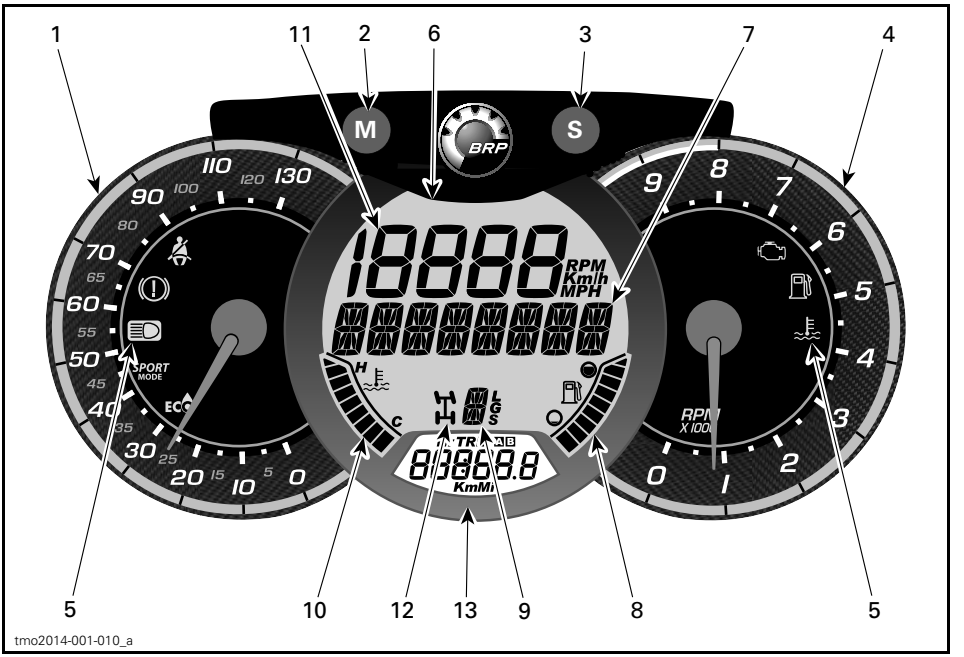

⚠ WARNING

Do not adjust the display while riding. You could lose control.

1) Analog Speedometer

Measures vehicle speed in km/h or mph.

2) MODE (M) Button

Pressing the MODE (M) button will scroll through the functions of the main digital display.

FUNCTION SEQUENCE	OPTIONS
Air Suspension (LTD model only)	Press ACS switch to change setting (1 to 6)
Numerical Display is flashing	Press SET (S) to scroll and select desired function and press MODE (M) to confirm
Multifunction display is flashing	Press SET (S) to scroll and select desired function and press MODE (M) to confirm

3) SET (S) Button

Pressing the SET (S) button will scroll through the functions of the secondary digital display.

FUNCTION SEQUENCE	INFORMATION DISPLAYED
Clock	XX:XX (24:00 time base) XX:XX A or P (12:00 AM/PM time base)
Cumulative distance odometer	XXXXX.X km or mi
Trip distance — odometer A (TRIP A)	XXXXX.X km or mi
Trip distance — odometer B (TRIP B)	XXXXX.X km or mi
Engine time chronometer (Hr)	XXXXX.X
Trip time chronometer (HrTRIP)	XXXXX.X

To reset any trip functions, push and hold the SET (S) button for three seconds.

4) Analog Tachometer (RPM)

Measures engine revolutions per minute (RPM). Multiply by 1000 to obtain actual revolutions.

5) Indicator Lamps

Indicator lamps will inform you of various conditions or problems.

An indicator lamp can flash alone or in combination with another lamp.

INDICATOR LAMP(S)		DESCRIPTION
All indicator lamps	On	All indicator lamps are activated when ignition switch is ON and the engine is not started
	On	Low fuel
	On	Check engine
	On	High engine temperature
	On	Headlights in the HIGH beam position
	On/Flash	Operator seat belt is not properly latched. Engine output will be limited, reducing the speed and operability of the vehicle. Main digital display: FASTEN SEAT BELT
	On	Sport mode activated
	On	ECO mode activated

6) Main Digital Display

Displays useful real-time information to the rider.

7) Multifunction Display

The vehicle speed or the engine revolutions (RPM) can be displayed. See *MODE (M) BUTTON* in this section.

Important messages can also be displayed. Refer to table below.

If an abnormal engine condition occurs, a message can be combined with a pilot lamp. Refer to *TROUBLESHOOTING* section for details.

MESSAGE	DESCRIPTION
BRAKE	Message displayed when the brakes are applied continuously for 15 seconds. (Speed needs to be higher than 5 km/h (3 MPH))
NORMAL KEY	Displayed at power up when a normal key is used.
PERFORMANCE KEY	Displayed at power up when a performance key is used.
WORK KEY	Displayed at power up when the work key is used.
OVERRIDE	Override is displayed when the override switch is pressed and the shift lever is set to reverse gear.
SEAT BELT	When the driver seat belt is not buckled and the vehicle speed is less than 10 km/h (6 MPH), the message is displayed and the pilot lamp will be lit. No engine torque limitation engaged.
ENGINE LIMITATION ENGAGED FASTEN SEAT BELT	When the driver seat belt is not buckled and the vehicle speed is above 10 km/h (6 MPH), the message is displayed and the pilot lamp stays on. The engine management will engage a torque limitation that will limit the vehicle speed to approximately 20 km/h (12 MPH).
DPS MAX.	Maximum steering assist.
DPS MED	Medium steering assist
DPS MIN	Minimum steering assist.
SPORT MODE ACTIVE	Displayed when sport mode is activated.
ECO MODE	Displayed when ECO mode is activated.
MAINTENANCE REQUIRED(1)	Displayed in gauge when vehicle is due for a maintenance.
LOW GEAR	Displayed when belt protection is active in high gear. (If available and activated on your model)

(1) To erase the MAINTENANCE REQUIRED message, proceed as follows:

1. Select PARK.
2. Turn ignition switch to ON. Do NOT start engine.

NOTE: The steps 3 through 9 must be completed within **5 seconds**.

3. Press override switch and HOLD.
4. Press and release brake pedal.
5. Release override switch.
6. Press and release brake pedal.
7. Press override switch and HOLD.
8. Press and release brake pedal.
9. Release override switch.
10. Turn ignition switch to OFF

NOTE: Do not turn ignition switch to ON before the multifunction gauge turns off.

8) Fuel Level Indicator

Bar graph that continuously indicates the level of fuel left in the fuel tank.

As a second function, the bar graph will indicate the ACS setting when the ACS is in manual mode.

9) Gearbox Position Indicator

Displays the selected gearbox position.

As a second function, will indicate the current ACS position setting in automatic and manual modes.

10) Engine Temperature Indicator

Bar graph that continuously indicates the engine coolant temperature.

As a second function, the bar graph will indicate the ACS setting when the ACS is in manual mode.

11) Numerical Display

The vehicle speed or the engine revolutions (RPM) can be displayed. See *MODE (M) BUTTON* in this section.

12) 2WD/4WD Indicator

When this indicator is ON, the 4WD system is activated.

13) Secondary Digital Display

Displays useful real time information to the rider. For display function informations, refer to *SET (S) BUTTON*.

Gauge Setup

Setting Metric/Imperial Units

See a Can-Am dealer for adjustments.

Setting Clock

1. Press MODE (M) button to select clock display.
2. Push and hold MODE (M) button for three seconds.
3. Press MODE (M) button to select 12:00 AM PM or 24:00 time base.
4. If 12:00 AM PM time base is selected, A or P flashes. Press MODE (M) button to select A (AM) or P (PM).
5. Press SET (S) button to change hours.
6. Press MODE (M) button to switch to minutes (minutes flash).
7. Press SET (S) button to change minutes.
8. Press MODE (M) button.

Setting Language

The gauge display language can be changed. Refer to an authorized Can-Am dealer for language availability and setup the gauge to your preference.

EQUIPMENT

NOTE: Some vehicle safety labels are not shown on illustrations. For information on vehicle safety labels, refer to *VEHICLE SAFETY LABELS* subsection.

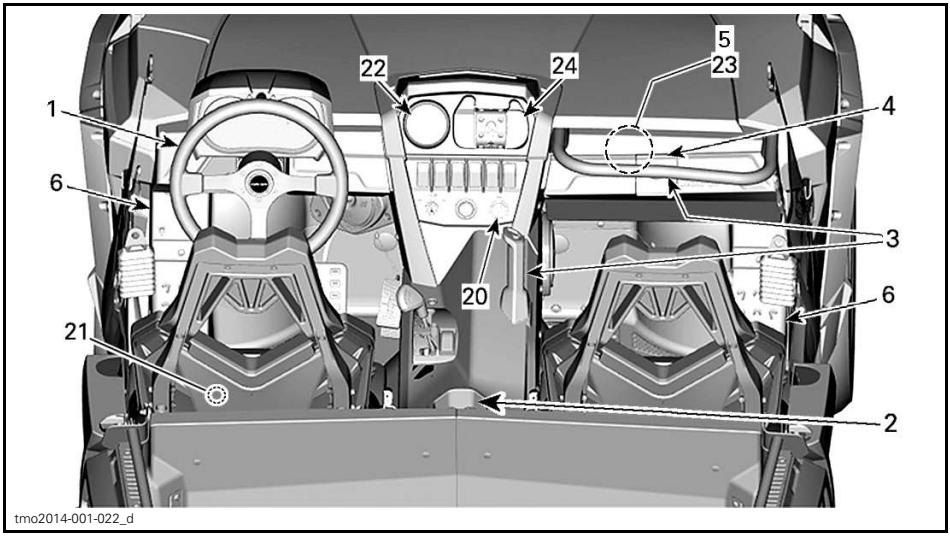

TYPICAL

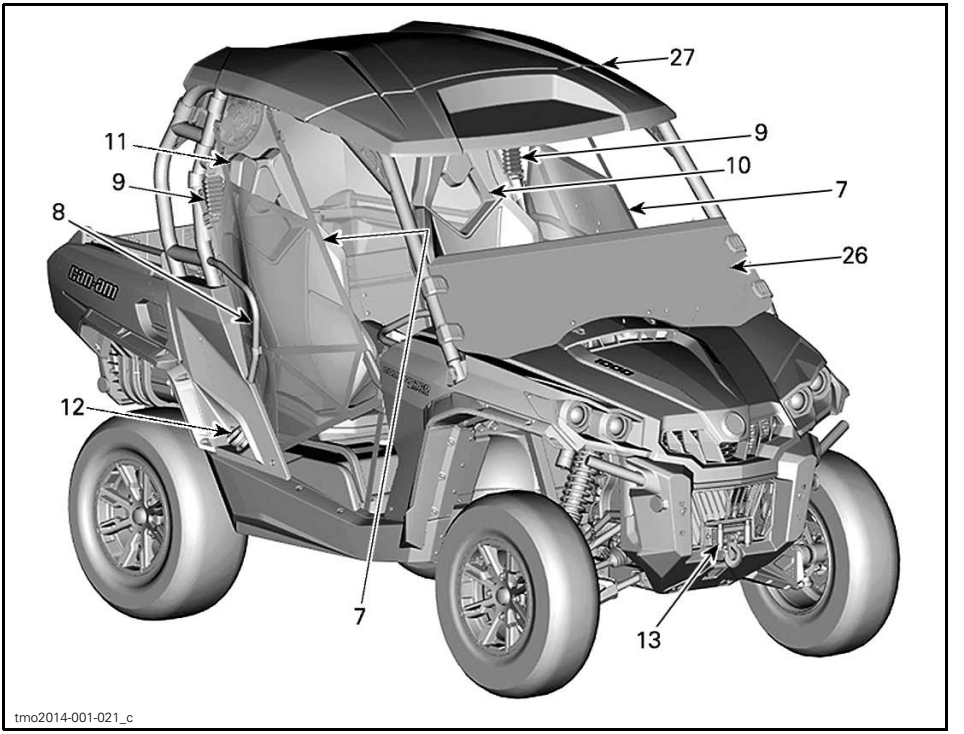

TYPICAL

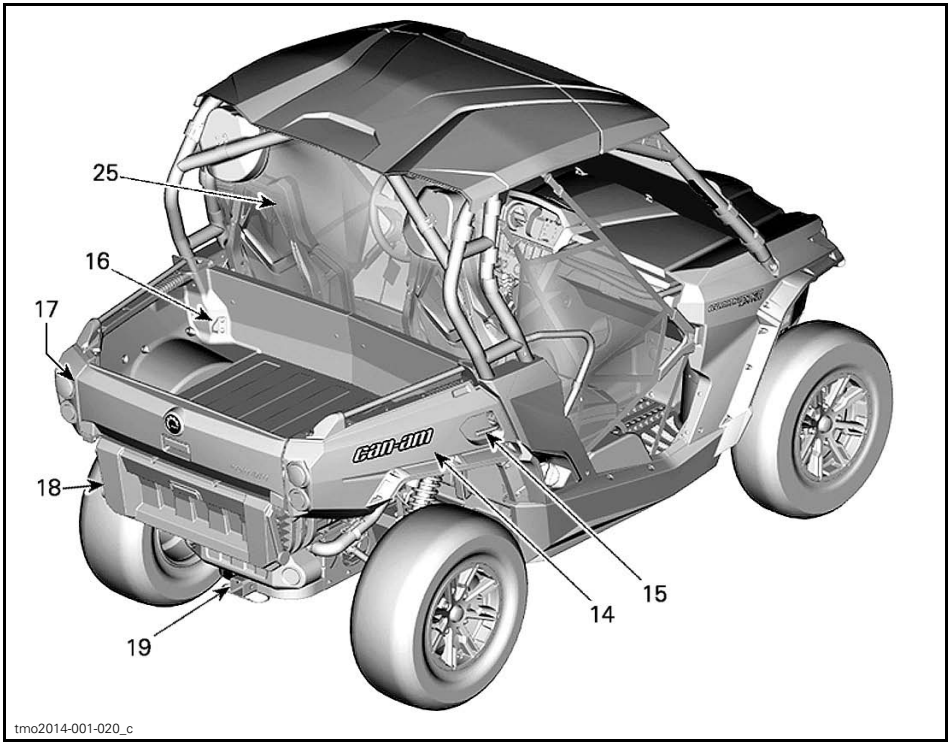

TYPICAL

1) Tilt Steering

The steering wheel height is adjustable.

Adjust the steering wheel height to face your chest, not your head.

To adjust steering wheel height:

1. Unlock steering by pulling the tilt lever toward you.
2. Move steering wheel to the desired position.
3. Release tilt lever to lock steering wheel in position.

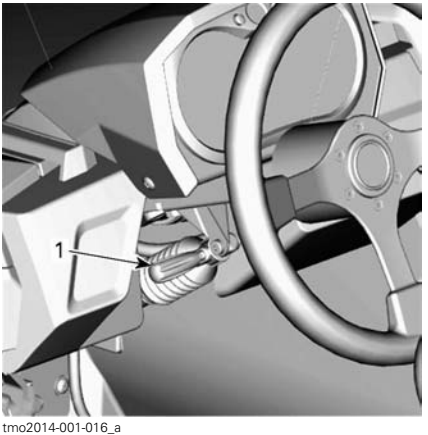

1. Tilt lever

⚠ WARNING

Never adjust the steering wheel height while riding. You may lose control.

2) Cup Holders

Two cup holders are located at the rear of the lower console.

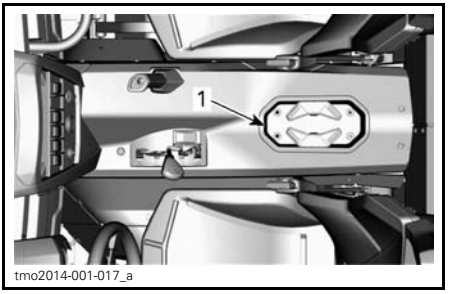

1. Cup holders

NOTE: Do not use cup holders while riding in rough conditions.

3) Passenger Handholds

The passenger has access to a front handhold located in front of seat above glove box.

A left hand handhold located in the center of the vehicle on the lower console is also accessible.

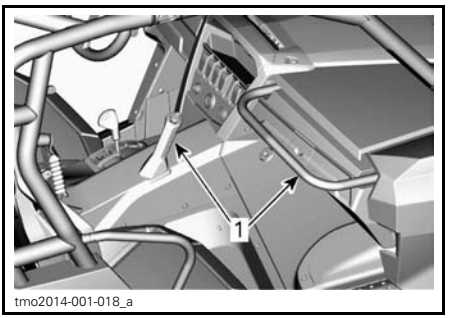

1. Passenger handholds

Holding the handholds helps the passenger brace against the movement of the vehicle and helps keep hands and body inside the cockpit in the event of a rollover.

⚠ WARNING

Never use any part of vehicle cage as handholds. Hands can be struck by objects outside the cockpit or crushed in a rollover.

4) Glove Box

The vehicle is equipped with a closed glove box made to carry light objects.

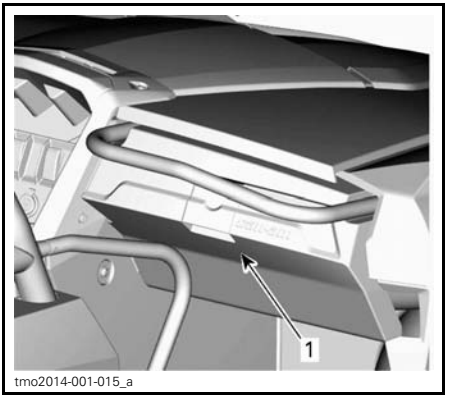

1. Glove box latch

GLOVE BOX CAPACITY	
MAXIMUM LOAD	5 kg (11 lb)

5) Tool Kit

A tool kit with basic tools is provided. It is located in the glove box.

6) Footrests

The vehicle is equipped with driver and passenger footrests to allow firmly planting feet on vehicle floor, which helps to maintain proper body position while riding.

The footrests help minimize the risk of leg or foot injury.

Always wear appropriate footwear. See *RIDING GEAR* subsection.

7) Side Nets

A side net is provided on each side of the cockpit to help arms, legs or shoulders stay inside the vehicle, thus reducing the risk of injuries. Side Nets may also keep brush or debris out of cockpit.

⚠ WARNING

Never operate the vehicle unless both side nets are in place and buckled.

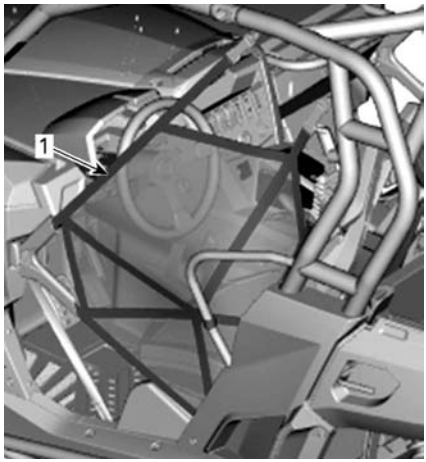

1. Side net

Side nets are adjustable and must be kept as tight as possible. To adjust side nets proceed as follows:

1. Secure side net with buckle.
2. Pull on three adjustment straps to tighten.

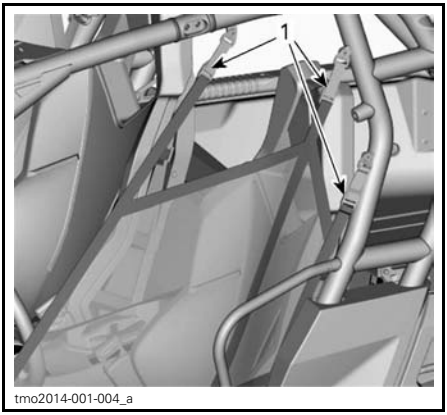

1. Adjustment straps

8) Shoulder Guards

The vehicle is equipped with shoulder guards to help restrain the entire body of driver and passenger inside vehicle.

9) Seat Belts

This vehicle is equipped with 3 points seat belts to help protect driver and passenger in the event of collisions, rollovers, or tipovers and to help keep driver and passenger in the cockpit.

⚠ WARNING

Wear seat belts properly at all times. Seat belts reduce the risk of injury in a crash and help keep limbs inside the cockpit in a rollover or any accidents.

If driver's seat belt is not fastened when:

– The ignition is turn ON, the seat belt indicator lamp will flash.
– The engine is started and shift lever is moved out of PARK, vehicle speed will be limited to a maximum of approximately 20 km/h (12 MPH) on flat ground.

⚠ WARNING

The vehicle may reach higher or lower speed depending on inclines.

To remind you to fasten the seat belt, the multifunction gauge will display the following message: ENGINE LIMITATION ENGAGED FASTEN SEAT BELT.

⚠ WARNING

There is no indicator light or message for the passenger seat belt. The driver is responsible for the passenger safety and should ensure the passenger buckles the seat belt.

Fastening and Adjusting the Seat Belt

The seat belt is equipped with a slide locking tab.



SEAT BELT ENGAGED
1. Slide locking tab

Insert the seat belt latch plate into the buckle, then pull the belt to ensure it is properly fastened.

To lock: adjust the seat belt tightly against your body and raise or move the lap belt upward.



⚠ WARNING

Wear seat belt properly. Make sure it is not twisted or defective.

To unlock: place seat belt as shown and push down on the lap belt where indicated.

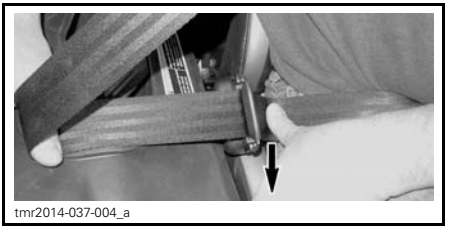

To release the seat belt, push on the red button on the seat belt buckle.

10) Driver's Seat

The driver's seat can be adjusted forward and backward.

To adjust seat, move the seat lever to unlock the seat. Release the lever to lock the seat into desired position.

⚠ WARNING

Never adjust the seat position while driving.

The driver's seat can be removed easily:

– Tilt seat forward by releasing latch between seat cushion and backrest.
– Pull seat upwards.

All Models Except LTD

A convenient storage compartment is located under the driver's seat.

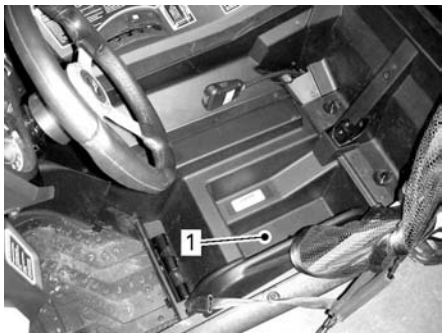

1. Storage compartment

LTD Models

The ACS compressor is located under the driver's seat.



ACS COMPRESSOR

11) Passenger Seat

The passenger seat is not adjustable.

The passenger seat can be tilted forward for removal by releasing the latch located between the seat cushion and the backrest. Once tilted forward the seat can be removed by pulling upwards.

12) Fuel Reservoir Cap

The fuel reservoir cap is located on the right hand side of the vehicle behind the passenger seat.

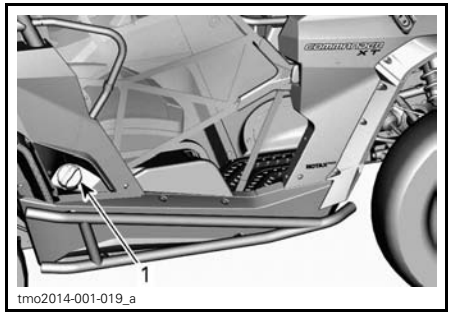

1. Fuel reservoir cap

Refer to *FUEL* subsection for information on fueling procedure and fuel requirements.

13) Winch (Models with Winch)

The winch can be actuated inside the vehicle using the winch control switch on the upper console.

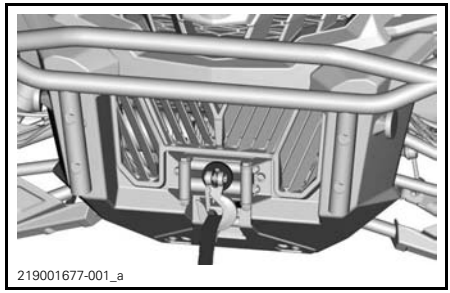

WINCH

NOTE: Using the winch intensively over a long period of time may discharge the battery.

The following tips will help to reduce the risk of discharging the battery:

Always unreel manually: Unlock the cable using the handle then pull on the hook strap to unreel.

It is recommended to let the vehicle run while winching. Do not stop vehicle immediately after winching to let battery recharge.

Also, when winching for more than 30 seconds, it is recommended to increase engine RPM in the range of 3000 RPM to increase charging power to the battery.

NOTE: Make sure vehicle is in NEUTRAL (N) before increasing engine RPM.

Refer to your winch *GUIDE* included with your vehicle for winch operation.

14) Cargo Box

The vehicle is equipped with a 2 level inclinable cargo box. The cargo box may be used for various types of cargo.

⚠ WARNING

To reduce the risk of loss of control or loss of load, use the cargo box only in accordance with *CARRYING LOADS* in the *SAFETY INFORMATION* section.

The cargo box is split into an upper and lower sections to provide more compartments for carrying separate loads.

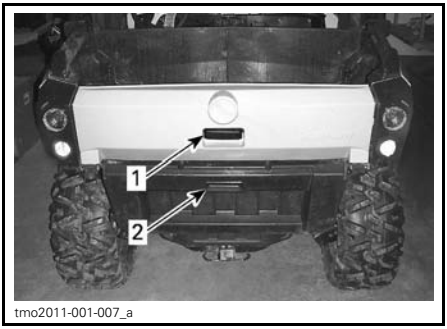

tmo2011-001-007_a

1. Cargo box upper section
2. Cargo box lower section

The floor separating both sections can be easily removed to make a single cargo area. Both the upper and lower tailgates must be opened to allow the floor separator to be removed.

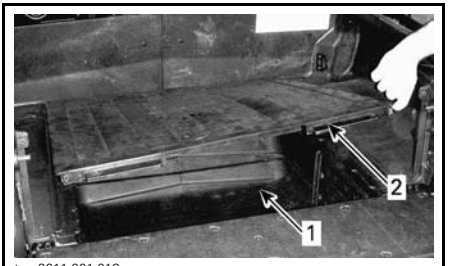

tmo2011-001-013_a

1. Increased cargo volume
2. Floor/Separator


tmo2011-001-014

CARGO AREA WITHOUT FLOOR/SEPARATOR

The lower section can be further split into two subsections by inserting a plywood piece into the vertical slots.

15) Cargo Box Tilt Release Handles

The latching mechanism of the cargo box can be actuated from either side of the vehicle through a release handle.

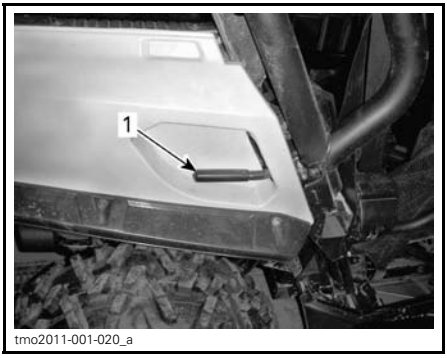

1. Cargo box release handle

Refer to *CARRYING LOADS* in the *SAFETY INFORMATION* section.

16) Anchoring Hooks

To provide anchoring point in order to secure cargo inside the cargo box, 4 anchoring hooks are located inside the cargo area.

17) Upper Tailgate

The upper section of the cargo box can be closed with a tailgate.

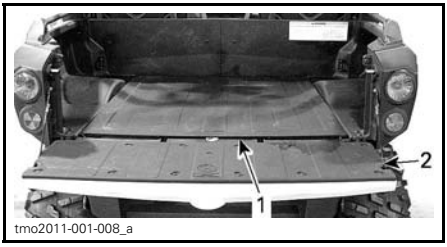

CARGO BOX UPPER SECTION
1. Floor section separator
2. Upper tailgate

NOTICE Do not exceed 100 kg (220 lb) of weight on the upper tailgate during loading or unloading. Always close the upper tailgate before operating to reduce the risk of loss of load.

Upper Tailgate Removal

The upper tailgate can easily be removed by inclining and pulling out of hinges, then removing the retaining cables.



1. Upper tailgate hinge

18) Lower Tailgate

The lower section of the cargo box has a lower tailgate.



LOWER SECTION WITH LOWER TAILGATE

The upper tailgate must be closed in order to open or close the lower tailgate.



1. *Lower tailgate*
2. *Lower section*

NOTICE Do not exceed 100 kg (220 lb) of weight on the lower tailgate during loading or unloading. Always close the lower tailgate before operating to reduce the risk of loss of load.

19) Hitch support

The vehicle comes equipped with a 51 mm x 51 mm (2 in x 2 in) box size standard hitch support.

For the proper usage of the hitch support, refer to *MOVING LOADS AND DOING WORK* in the *SAFETY INFORMATION* section.

⚠ WARNING

To reduce the risk of loss of control or loss of load, always respect the maximum hauling capacity.

20) 12-Volt Power Outlet

Convenient for handheld spotlight or other portable equipment.

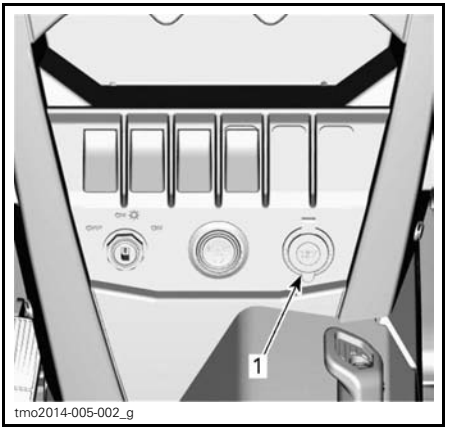

1. *12 V power outlet*

Remove protective cap to use. Always reinstall it after use to protect against weather.

Do not exceed the rating capacity. Refer to *SPECIFICATIONS* subsection.

21) ACS Compressor (LTD Models Only)

The ACS compressor main function is to provide air pressure for the suspensions. Refer to *SUSPENSION* subsection for more details.

The ACS compressor may be also used as a convenient feature to inflate your Commander tires.

NOTE: The engine must be running to allow for the compressor to start.

NOTICE Do not use the ACS compressor for more than 2 minutes to avoid overheating.

To inflate tires, proceed as follows:

1. Ensure that the shift lever is set in PARK position.
2. Start engine and let it run at idle.
3. Remove seat.
4. Connect supplied hose located in the glove box into the compressor fitting.

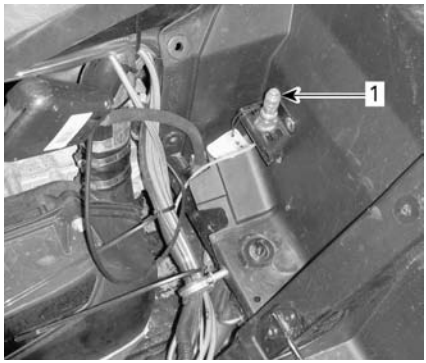

1. Compressor fitting

5. Inflate tire.



NOTE: For your convenience, a pressure gauge is supplied in tool kit.

⚠ WARNING

Always inflate tires to recommended air pressure.

22) Radio (LTD Models Only)

The radio controls are located in the upper console.

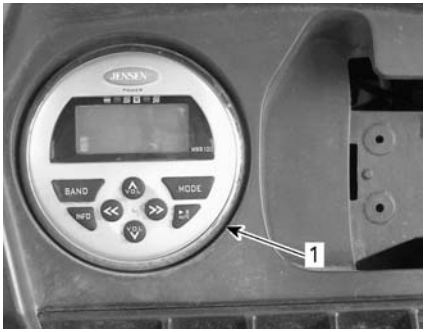

TYPICAL
1. Radio controls

⚠ WARNING

- Adjusting radio or reading radio display can distract from the operation of the vehicle, particularly from constantly scanning the environment.
- Before adjusting radio or reading radio display, ensure your environment is clear and free from obstacle, and bring the vehicle to a low speed.

Refer to radio owner manual for operating instruction.

23) Radio AUX Output (LTD Models Only)

These sockets are used to connect portable audio devices.

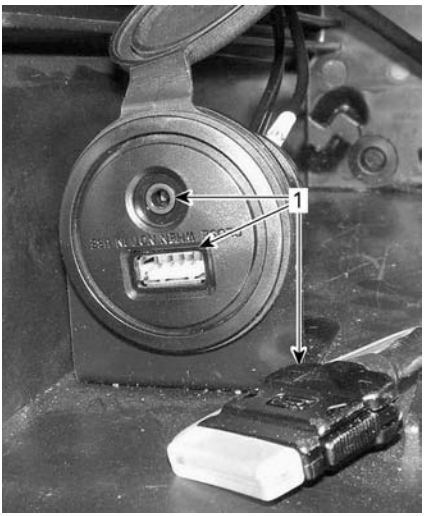

INSIDE GLOVE BOX
1. Portable audio device sockets

Refer to radio owner manual for operating instruction.

24) GPS Receiver (Global Positioning System) (LTD Models Only)

The GPS receiver is located on the upper control console.

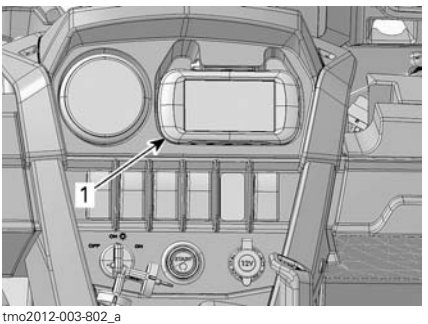

TYPICAL
1. GPS receiver

⚠ WARNING

- Reading the GPS receiver can distract from the operation of the vehicle, particularly from constantly scanning the environment.
- Before reading the GPS receiver, ensure your environment is clear and free from obstacle, and bring the vehicle to a low speed.

The GPS receiver is powered via the vehicle electrical system when installed on its support (with ignition switch to ON position), or via batteries when removed from its support.

GPS receiver can be activated using the ON/OFF button on the receiver or with the vehicle ignition switch when turned to ON or OFF position (when installed on the vehicle).

The following is provided with the GPS receiver:

- Lithium-ion battery pack
- USB cable
- AC charger
- Owner's manual on disk
- Quick start manual.

NOTE: Always refer to manufacturer's documentation supplied with the GPS receiver for proper use.

NOTE: For more details about the GPS receiver, available maps or accessories, contact an authorized Can-Am dealer or visit Garmin website at www.garmin.com.

⚠ WARNING

Remember, the data provided by the GPS receiver is for reference only. For your safety, NEVER rely solely on this information.

GPS Receiver Installation

Insert GPS receiver onto the lower tab of support.

Lock GPS receiver onto its support by pushing it towards locking tab.

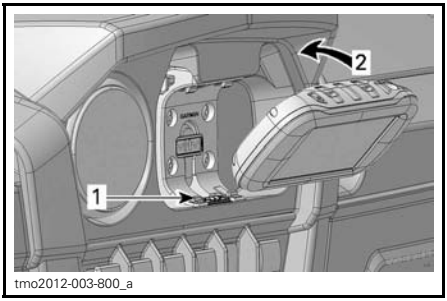

1. Lower tab
2. Push toward locking tab

NOTICE To prevent weather damage or theft to your GPS receiver, always remove it from its support when leaving the vehicle.

GPS Receiver Removal

Push on locking tab to release GPS.

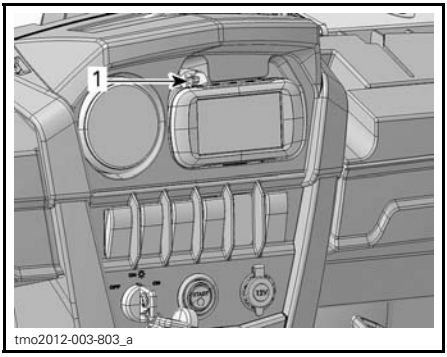

1. Locking tab

25) Rear Net (LTD Models Only)

The vehicle comes equipped with a rear net.

Rear Net Removal

Undo straps securing rear net to cage.

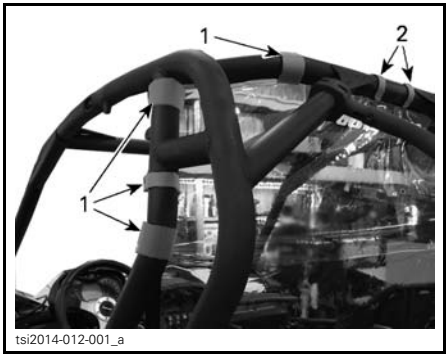

VELCRO ® FLAP LOCATIONS (TYPICAL : MAVERICK SHOWN)
1. LH side VELCRO® flap location
2. Center VELCRO® flap location

Remove rear fasteners from cage junction.

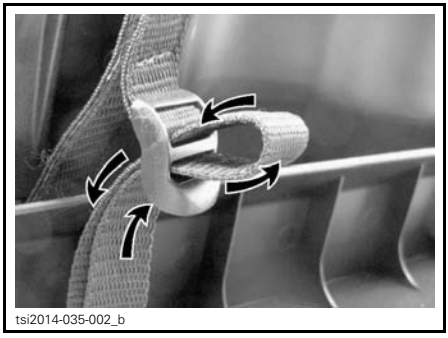

Remove and keep screw, washer and nut located on the lower section of net.

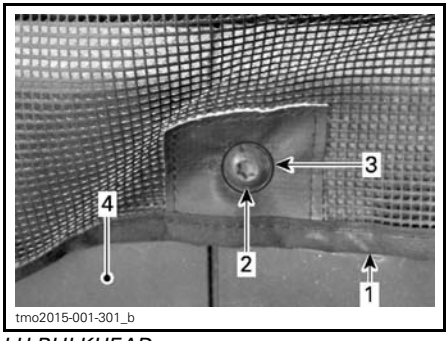

LH BULKHEAD
1. Rear wind screen
2. Bulkhead retaining screw
3. Washer
4. LH rear bulkhead

Remove rear net.

Reinstall screw, washers and nut located on the lower section of net.

Rear Net Installation

Installation is the reverse of the removal. However pay attention to the following.

Torque retaining nut to specification.

TORQUE	
Retaining nut	7.5 N•m ± 1.0 N•m (66 lbf•**in** ± 9 lbf•**in**)

26) Half Windshield (LTD and Mossy Oak Models Only)

The vehicle comes equipped with a half windshield.

Half Windshield Removal

1. Undo the 4 straps securing half windshield to the cockpit tubular structure.



2. Remove and keep retaining nut, washer and screw securing windshield to bracket.

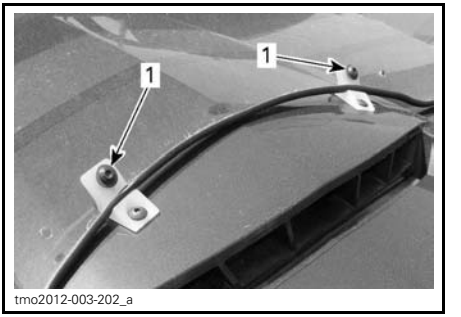

1. Retaining screw securing windshield to bracket

3. Remove windshield from vehicle.

NOTICE Make sure half windshield is resting on a clean non abrasive surface with the interior facing up.

Half Windshield Installation

Install windshield onto vehicle, making sure screw holes in the lower section of windshield align with bracket holes.

Fasten the 4 straps.



Install retaining screws in windshield and torque retaining screws to specification.

TORQUE	
Retaining screw	2.5 N•m ± .5 N•m (22 lbf•**in** ± 4 lbf•**in**)

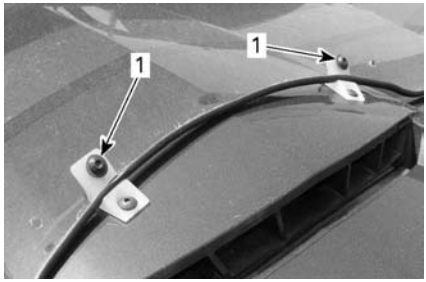

1. Brackets with retaining screws and washers installed

27) Full Roof (LTD and Mossy Oak Models Only)

The vehicle comes equipped with a full roof.

Full Roof Removal

1. Remove top mid section.
   1.1 Undo rear straps securing top mid section to cage.

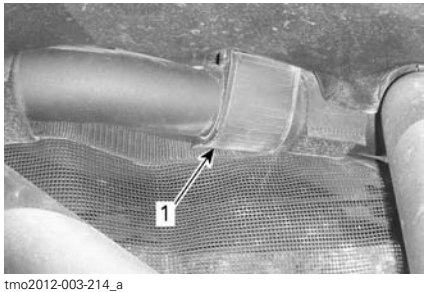

RH SIDE SHOWN
1. Rear strap

   1.2 Undo lateral straps securing top mid section to cage.

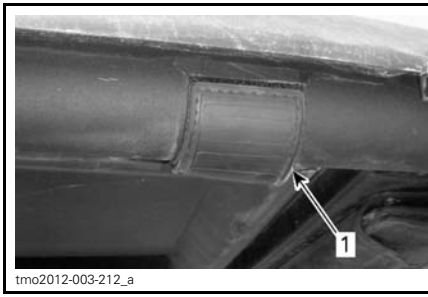

RH SIDE SHOWN
1. Lateral strap

   1.3 Remove top mid section from vehicle.
2. Remove sport visor from vehicle.
   2.1 Remove and keep screws securing front of sport visor clamps to cage.

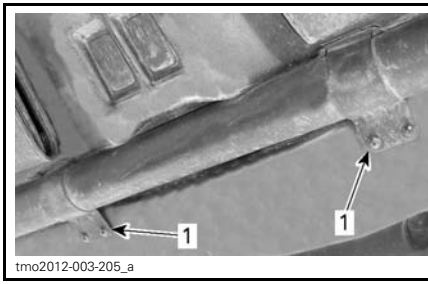

SPORT VISOR FRONT CLAMPS
1. Clamps secured with screws

   2.2 Remove and keep screws securing sides of sport visor clamps to cage.

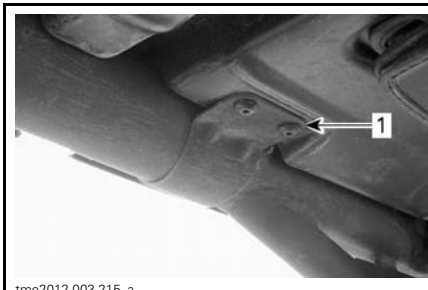

RH SIDE SHOWN
1. Lateral clamp secured with screws

2.3 Undo clamps and remove sport visor from vehicle.

NOTE: Top mid section needs to be removed before sport visor.

Full Roof Installation

Installation is the reverse of removal. However pay attention to the following.

TORQUE	
Roof clamps retaining screws	2.5 N•m ± .5 N•m (22 lbf•**in** ± 4 lbf•**in**)

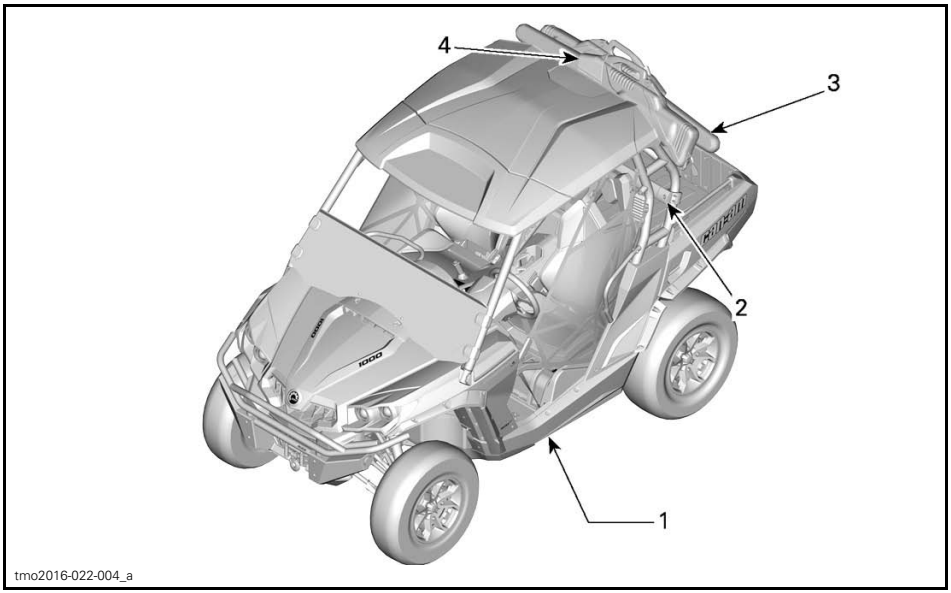

1) Full Underbody Aluminum Skid Plate

Aluminum plates provide essential protection.

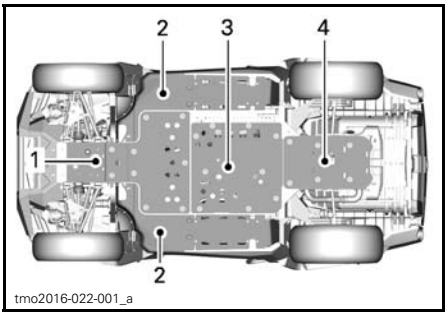

1. *Front skid plate*
2. *Lateral skid plate*
3. *Central skid plate*
4. *Rear skid plate*

2) Gear Rail

This stationary rail system is mounted on your roll bar behind the drive and passenger seats and can be used to mount accessories ranging from gear grips, fuel packs, gun boots, gun boot mounts and universal saw press.

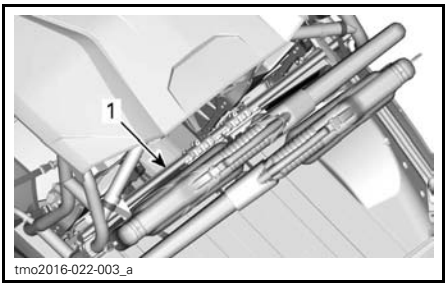

1. *Gear rail*

3) Gun Boot

This easy access gun boot is designed to accommodate a variety of rifle and shotguns along with their mods.

⚠ WARNING

Make sure firearm is unloaded and rendered inoperable by means of a secure locking device prior to inserting it in the Gun Boot

NOTE: Before using the Gun Boot to transport firearms, always verify with local law enforcement for specific laws regulating the use and transportation of gun boots and firearms.

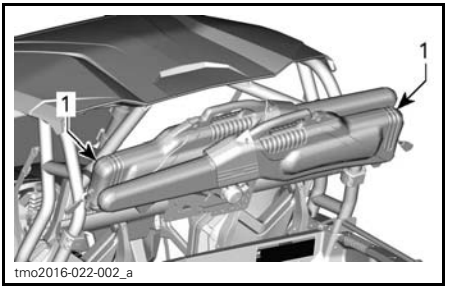

tmo2016-022-002_a

1. Gun boot

⚠ WARNING

Reduce your speed while firearm case is installed on vehicle.

NOTICE Ensure Gun Boot is centered on vehicle. Loosen C-Clamp knob as needed and center firearm assembly.

NOTICE To ensure firearm stability in gun boot, align Gun Boot horizontally with gear rail.

NOTICE Avoid areas with a lot of branches. If avoiding such areas is impossible, make sure branches do not hit the firearm case.

Installing Gun Boot Into Gun Boot Mount

Install gun boot into gun boot mount.

Secure case using locking pins.

Insert pin into lower section of gun boot.

Install lock onto pin.

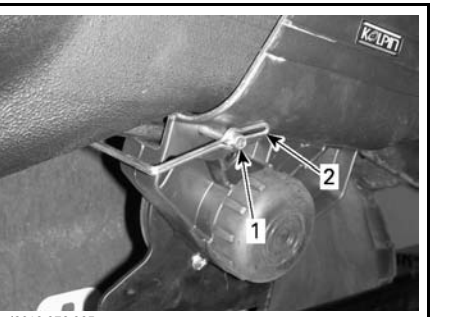

tsi2012-076-005_a

1. Pin
2. Lock

Insert pin into upper section of gun boot.

Install lock onto pin.

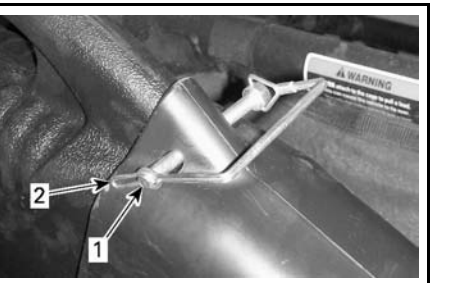

tsi2012-076-006_a

1. Pin
2. Lock

Close rear section.



tsi2012-076-002_a

SINGLE GUN BOOT MOUNT DISPLAYED
1. Rear section

Secure rear section of gun boot using locking pin.

Insert pin into rear section of gun boot. Install lock onto pin.

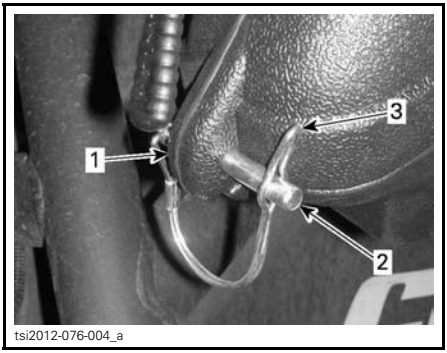

1. *Rear section of Gun Boot*
2. *Pin*
3. *Lock*

⚠ CAUTION Gun Boot must never be installed inclined on the grip side. It should be installed horizontally.

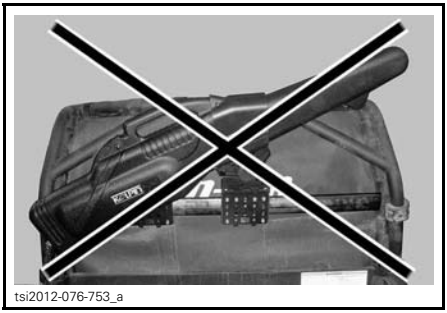

NEVER INSTALL INCLINED ON THE GRIP SIDE - SINGLE GUN BOOT MOUNT DISPLAYED

4) Gun Boot Mount

This lightweight and extremely durable gun boot mount is easily adjustable and allows for precision gun angling adjustability.

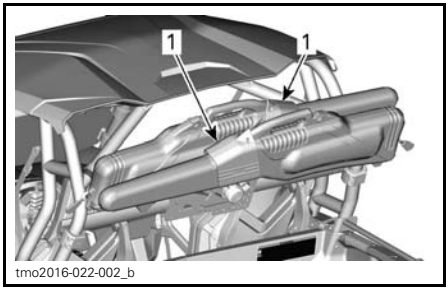

1. *Gun boot mount*

NOTICE Ensure knob of gun boot mount is properly tightened before moving vehicle.

Adjusting Gun Boot Mount Location

Loosen handle located on C-clamp to adjust assembly to desired location.



TIGHTENING C-CLAMP HANDLE

Tighten handle on C-clamp to secure into place.

NOTICE Ensure knob of gun boot mount is properly tightened before moving vehicle.



tsi2012-090-024

TIGHTENING GUN BOOT MOUNT KNOB

TUNE YOUR RIDE

Suspension Adjustment Guidelines

Your vehicle handling and comfort depend upon suspension adjustments.

⚠ WARNING

Suspension adjustment could affect vehicle handling. Always take time to familiarize yourself with the vehicle's behavior after any suspension adjustment has been made.

Choice of suspension adjustments vary with vehicle load, personal preference, riding speed and terrain condition.

The best way to set up the suspension, is to start from factory settings, then customize each adjustment one at a time.

Front and rear adjustments are interrelated. It may be necessary to readjust the rear shock absorbers after adjusting front shock absorbers for instance.

Test run the vehicle under the same conditions; trail, speed, load, etc. Change one adjustment and retest. Proceed methodically until you are satisfied.

Suspension Factory Settings

FRONT SUSPENSION FACTORY SETTINGS		
ADJUSTMENT	MODEL	FACTORY SETTING
Spring preload	Base DPS XT Mossy Oak	Cam position 1 (soft)
	XT-P	96.3 mm (3.79 in)
	LTD	ACS 1
Compression damping	XT-P	Position 2
	LTD	Position 10

REAR SUSPENSION FACTORY SETTINGS		
ADJUSTMENT	MODEL	FACTORY SETTING
Spring preload	Base DPS XT Mossy Oak	Cam position 1 (soft)
	XT-P	45.8 mm (1.8 in)
	LTD	ACS 1
Compression damping	XT-P	Position 2
	LTD	Position 10

Suspension Adjustments

Spring Preload Adjustment (All Models Except LTD)

Shorten the spring for a firmer ride and rough riding condition or when pulling a trailer.

Lengthen the spring for a softer ride and smooth riding condition.

⚠ WARNING

The left and right shock adjustment on front or rear suspension must always be set to the same position. Never adjust one shock only. Uneven adjustment can cause poor handling and loss of stability, which could lead to an accident.

Lift the vehicle. Spring length should be measured without load on the wheels.

Spring length should be equal on both sides.

NOTE: Spring preload affects ground clearance.

All Models Except XT-P and LTD

Adjust by turning adjusting cam. Use tool from vehicle tool kit.

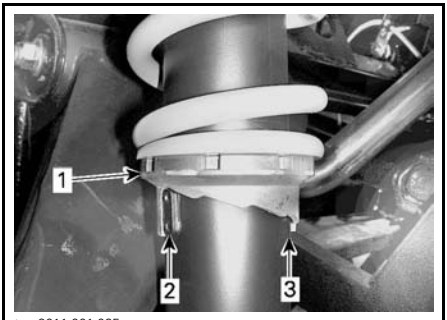

tmo2011-001-065_a

TYPICAL
1. *Turn adjusting cams*
2. *Smooth adjustment*
3. *Hard adjustment*

XT-P Model

Adjust by loosening lock ring and turning adjuster ring accordingly. Use tool from vehicle tool kit.

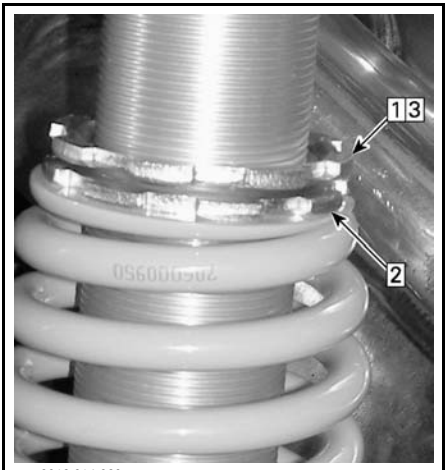

vmo2012-014-060_a

TYPICAL
Step 1: Loosen top locking ring
Step 2: Turn adjusting ring accordingly
Step 3: Tighten top locking ring

Shock Damping Adjustments (XT-P and LTD Models)

Compression Damping (XT-P Models)

Compression damping controls how the shock absorber reacts when riding.

POSITION	SETTING	RESULT ON BIG BUMPS
1	Soft	Softer compression damping
2	Medium (Factory)	Medium compression damping
3	Hard	Firmer compression damping

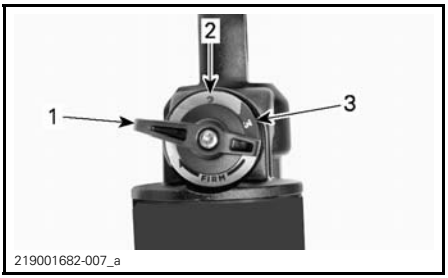

1. *Position 1*
2. *Position 2*
3. *Position 3*

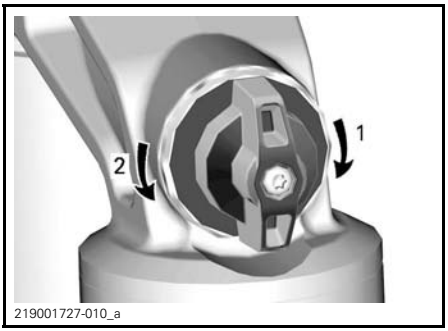

COMPRESSION DAMPING

1. Increases *damping (stiffer)*
2. Decreases *damping (softer)*

Turn adjuster clockwise to **increase** shock damping action (stiffer).

Turn adjuster counterclockwise to **decrease** shock damping action (softer).

ACTION	RESULT
Increasing compression damping force	Firmer compression damping
Decreasing compression damping force	Softer compression damping

⚠ WARNING

Make sure compression damping setting is the same on both sides.

Compression Damping (LTD Models)

Low speed compression damping controls how the shock absorber reacts to a low suspension velocity (slow compression strokes, in most cases when riding at lower speeds).

ACTION	RESULT ON BIG BUMPS
Increasing low speed compression damping force	Firmer compression damping (slow compression)
Decreasing low speed compression damping force	Softer compression damping (slow compression)

Use a flat screwdriver to adjust it.

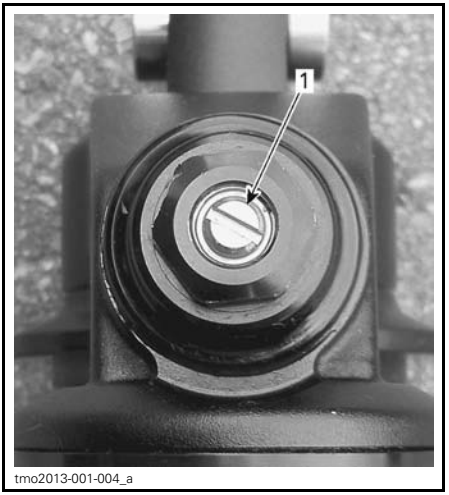

TYPICAL - LTD MODEL
1. Low speed compression adjuster

Turning it clockwise (H) **increases** shock damping action (stiffer).

Turning it counterclockwise (S) **decreases** shock damping action (softer).

Shock Air Pressure Adjustment (LTD Models Only)

The Air Controlled Suspension (ACS) system allows the operator to adjust the air pressure in the front and rear shock absorbers simultaneously or separately using controls without having to get off the vehicle. By changing the ACS setting, air pressure in the front and rear shock absorbers will change to provide a multitude of different suspension adjustments.

The ACS indicator can be accessed by pressing the ACS switch or Mode button.

NOTICE **ACS setting will change when using the ACS switch to access the air controlled (ACS) indicator.**

NOTE: The ACS suspension will NOT self-adjust unless the engine is running.

The ACS has 2 modes for suspension adjustment;
- Automatic mode
- Manual mode.

Automatic Mode

The automatic mode allows for simultaneous adjustments on the front and rear suspensions.

To Enter Automatic Mode:

Press the MODE button until either ACS AUTO or ACS MAN is displayed.

Press SET button to have current ACS mode blink on screen

Press SET button to select ACS AUTO mode.

NOTE: Selected ACS Setting from ACS1 to ACS6 displayed through gearbox position indicator.



Press and hold SET button to confirm selection.

To Adjust ACS in the Automatic Mode:

Use the ACS switch to select desired ACS setting for both front and rear suspensions.

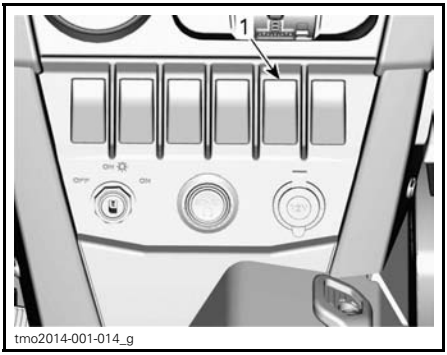

1. ACS switch

Refer to table to select appropriate ACS setting.

ACS SUSPENSION SETTINGS		
SETTING	RIDING COMFORT	RIDING CONDITION
ACS 1	Softest	Trail riding
ACS 2	Soft	
ACS 3	Semi-soft	Trail riding with cargo
ACS 4	Semi-firm	
ACS 5	Firm with high ground clearance	Soft terrain riding (muddy, watery) and obstacles
ACS 6	Firmest and highest ground clearance	Soft terrain riding (muddy, watery) and obstacles or Carrying heavy loads

⚠ WARNING

Always adjust the ACS suspension setting according to load, riding condition, and speed.

Manual Mode

The manual mode allows for independent adjustments on the front and rear suspensions.

To Enter Manual Mode:

Press the MODE button until either ACS AUTO or ACS MAN is displayed.

Press SET button to have current ACS mode blink on screen.

Press SET button to select ACS MAN mode.

NOTE: ACS set points and actual settings displayed through fuel, temp and gearbox position indicators.



Press and hold SET button to confirm selection.

To Adjust Front Suspension:

Press on the OVERRIDE switch until front (F) is blinking to select front (F) suspension setting.

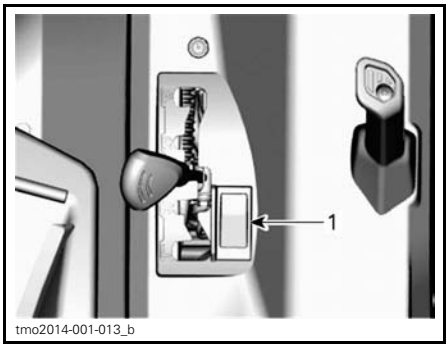

1. Override switch

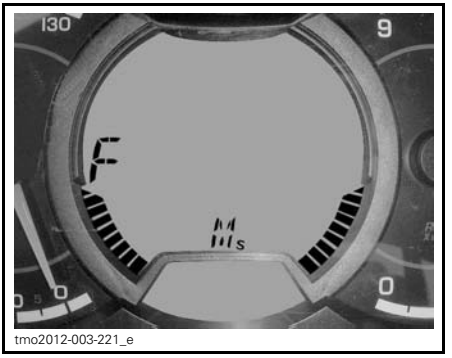

tmo2012-003-221_e

Press and hold ACS switch to lower or raise the front suspension until desired setting is achieved.

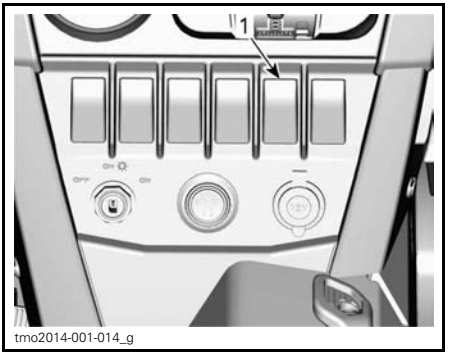

tmo2014-001-014_g

1. ACS switch

To Adjust Rear Suspension:

Press on the OVERRIDE switch until rear (R) is blinking to select rear (R) suspension setting.

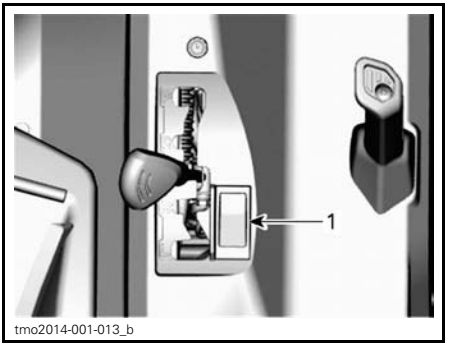

tmo2014-001-013_b

1. Override switch

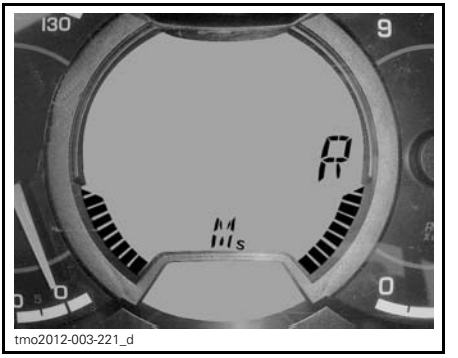

tmo2012-003-221_d

Use the ACS switch to lower or raise the rear suspension.

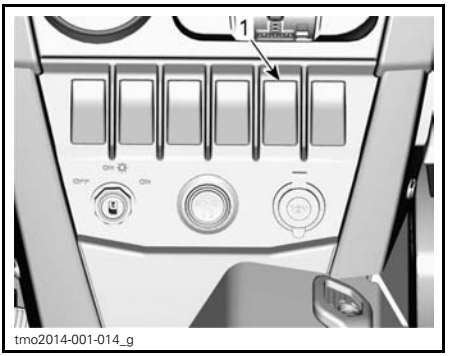

tmo2014-001-014_g

1. ACS switch

NOTE: Fuel and temperature indicators will respectively become front and rear ACS setting indicators.

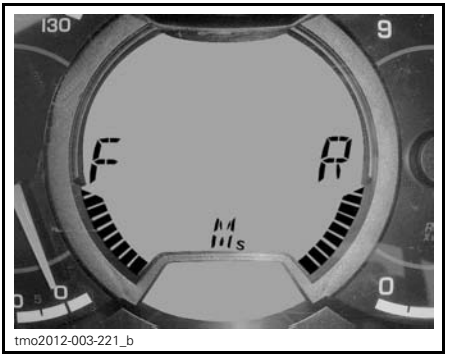

tmo2012-003-221_b

Quick Mode Selection

The last setting utilized in each mode is stored in the system. This allows for quick selections between the stored automatic mode setting and the stored manual mode setting.

To Enter Quick Mode Selection:

Press the MODE button until either ACS AUTO or ACS MAN is displayed.

Press SET button to have current ACS mode blink on screen.

Press SET button to select desired mode.



tmo2012-003-221_a



tmo2012-003-221_c

Press and hold SET button to confirm selection.

ACS system will adjust to the last settings.

DPS Function

The applicable models are equipped with a Dynamic Power Steering (DPS) system. The DPS reduces the effort to turn the steering wheel.

The following DPS modes are preset in the vehicle.

DPS MODE	
DPS MAX.	Maximum steering assist
DPS MED.	Medium steering assist
DPS MIN.	Minimum steering assist

To show the active DPS mode, proceed as follows:

1. Press and release **DPS** switch.

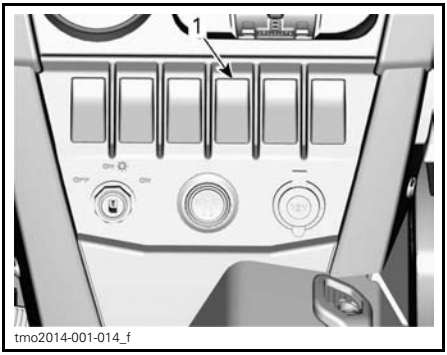

tmo2014-001-014_f

1. DPS switch

2. Check the multifunction gauge to confirm the active DPS mode.

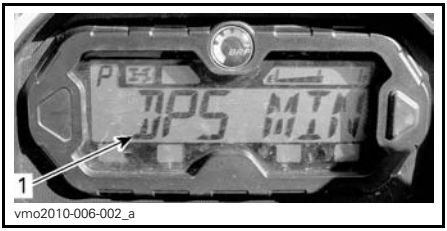

vmo2010-006-002_a

1. DPS mode display

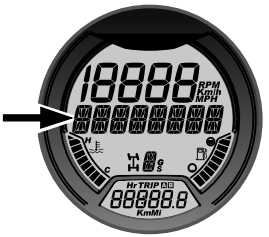

ANALOG/DIGITAL GAUGE

1. DPS mode display

To change the DPS mode, proceed as follows:

1. Press and hold **DPS** switch for 2 seconds to go to the next setting.
2. Release **DPS** switch.
3. Repeat until desired setting is selected.

NOTE: The DPS adjustment will not be possible if the vehicle transmission is set to **REVERSE** or if the ACS mode (LTD model) is displayed in the multi-function gauge.

Fuel Requirements

NOTICE Always use fresh gasoline. Gasoline will oxidize; the result is loss of octane, volatile compounds, and the production of gum and varnish deposits which can damage the fuel system.

Alcohol fuel blending varies by country and region. Your vehicle has been designed to operate using the recommended fuels, however, be aware of the following:

- Use of fuel containing alcohol above the percentage specified by government regulations is not recommended and can result in the following problems in the fuel system components:
  - Starting and operating difficulties.
  - Deterioration of rubber or plastic parts.
  - Corrosion of metal parts.
  - Damage to internal engine parts.
- Inspect frequently for the presence of fuel leaks or other fuel system abnormalities if you suspect the presence of alcohol in gasoline exceeds the current government regulations.
- Alcohol blended fuels attract and hold moisture which may lead to fuel phase separation and can result in engine performance problems or engine damage.

Recommended Fuel

Use common unleaded gasoline with an AKI (R+M)/2 octane rating of 87, or a RON octane rating of 92.

NOTICE Never experiment with other fuels. Engine or fuel system damages may occur with the use of an inadequate fuel.

NOTICE Do NOT use fuel from fuel pumps labeled E85.

Use of fuel labeled E15 is prohibited by U.S. EPA Regulations.

Vehicle Fueling Procedure

⚠ WARNING

- Fuel is flammable and explosive under certain conditions.
- Never use an open flame to check fuel level.
- Never smoke or allow flame or spark in vicinity.
- Always work in a well-ventilated area.

1. Stop engine.

⚠ WARNING

Always stop engine before refueling.

2. Have driver and passenger get out of vehicle.

⚠ WARNING

Do not allow anyone to remain in the vehicle while fueling. If there is a fire or explosion during fueling, a vehicle occupant could be unable to quickly leave the area.

3. Unscrew slowly the fuel reservoir cap counterclockwise to remove it.

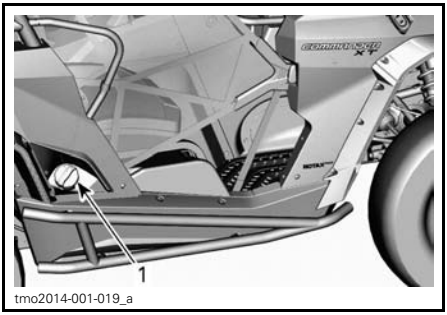

1. Fuel reservoir cap

⚠ WARNING

If a differential pressure condition is noticed (whistling sound heard when loosening fuel reservoir cap) have vehicle inspected and/or repaired before further operation.

4. Insert the spout into the filler neck.
5. Pour fuel slowly so that air can escape from the tank and prevent fuel flow back. Be careful not to spill fuel.
6. Stop filling when the fuel reaches the bottom of filler neck. Do not overfill.

⚠ WARNING

Never top up the fuel tank before placing the vehicle in a warm area. As temperature increases, fuel expands and may overflow.

7. Fully tighten fuel reservoir cap clockwise.

⚠ WARNING

Always wipe off any fuel spillage from the vehicle.

Fueling a Gasoline Container

⚠ WARNING

– Use only an approved gasoline container to store fuel.
– Never fill the gasoline container in the vehicle cargo box or on-the vehicle - an electrical static discharge may ignite the fuel.

BREAK-IN PERIOD

Operation During Break-In

A break-in period of 10 operating hours or 300 km (200 mi) is required for the vehicle.

Engine

During the break-in period:

- Avoid full throttle operation.
- Avoid pressing accelerator pedal more than 3/4 of the stroke.
- Avoid sustained accelerations.
- Avoid prolonged cruising speeds.

However, brief accelerations and speed variations contribute to a good break-in.

Brakes

⚠ WARNING

New brakes will not operate at their maximum efficiency until their break-in is completed. Braking performance may be reduced, so use extra caution.

Belt

A new belt requires a break in period of 50 km (30 mi).

During the break-in period:

- Avoid strong acceleration and deceleration.
- Avoid pulling a load.
- Avoid high speed cruising.

Starting the Engine

Insert key in ignition switch and turn to one of the ON position.

Press the brake pedal.

NOTE: If shift lever is not set to PARK (P), the brake pedal must be pressed to allow engine starting.

Press the engine start button and hold until the engine starts.

NOTE: Do not press the accelerator pedal. If the accelerator pedal is pressed at least 20%, the engine will not start.

Release the engine start button immediately when the engine has started.

NOTICE If engine does not start after a few seconds, do not hold the engine start button more than 10 seconds. Refer to *TROUBLESHOOTING* section.

Shifting the Transmission

Apply brakes and select the desired shift lever position.

Release brakes.

NOTICE When changing gear selection, always completely stop the vehicle and apply the brakes prior to shifting. Damage to the transmission may occur.

Choosing the Correct Range (Low or High)

It is important to limit situations known to make the drive belt slip excessively. The main reason the drive belt will slip is if the gearbox is in high range when it should be in low range.

Pay attention to the following:

Low range

Low range should be used whenever:

- Pulling
- Pushing
- Hauling a load
- 4x4 applications
- Mud holes
- Water holes
- Crossing obstacles
- Climbing onto trailer
- Hill climbing

It is also recommended to use low range if driving for prolonged periods at speeds under 24 km/h (15 MPH)

Please refer to *BREAK-IN PERIOD* subsection in this guide for information in regards to belt break-in period.

High range

High is the default riding range.

Electronic Drive Belt Protection (if available and activated on your model)

Some vehicles have the electronic drive belt protection function activated.

Refer to your authorized Can-Am dealer for availability and possible activation.

This function is activated when riding at too slow speed for the **high range**, such as in the following situations:

- Pulling
- Pushing
- Hauling a load
- 4x4 applications
- Mud holes
- Water holes
- Crossing obstacles
- Climbing onto trailer
- Hill climbing

In the above mentioned situations the electronic drive belt protection will help protect the CVT drive belt from being damaged by activating the engine torque limiter. The gauge will also scroll a ***LOW GEAR*** message, suggesting the operator to immobilize the vehicle and set to LOW GEAR.

Whenever the electronic drive belt protection is activated, you MUST shift in LOW range. Refer to *SHIFTING THE TRANSMISSION*.

If the situation does not allow you to shift in LOW range, it is possible to temporarily deactivate the electronic drive belt protection by pressing on the override switch. Refer to *OVERRIDE SWITCH*.

⚠ WARNING

DO NOT USE THE OVERRIDE SWITCH if the slope is too steep and that there might be a risk of tipover. Apply brakes to immobilize vehicle. Put shift lever in reverse (R), and back down the hill, barely releasing brakes to remain at low speed. Do not attempt to turn around. Never coast down hill while vehicle is in neutral. Do not perform hard braking as it increases the risk of tipover.

Stopping the Engine and Parking the Vehicle

⚠ WARNING

Avoid parking on steep slope as the vehicle may roll away.

⚠ WARNING

Always put the vehicle in PARK when stopped or parked to prevent rolling.

⚠ WARNING

Avoid parking in places where hot parts can start a fire.

When stopped or parked always bring shift lever to park position. This is especially important when parking on a slope. On very steep inclines or if the vehicle is carriyng a cargo, the wheels should be blocked using rocks or bricks.

Select the flattest terrain available for parking.

Release accelerator pedal and use brakes to completely stop the vehicle.

Set shift lever in PARK position.

Turn key in ignition switch to OFF position.

Remove key from ignition switch.

If you must park on a steep incline or if the vehicle is carrying cargo, block the wheels using rocks or bricks.

Tips for Maximizing Drive Belt Durability

Riding style and conditions have a direct impact on drive belt durability. Your vehicle features a CVT system design that is optimized to offer the best performance. The CVT and drive belt have successfully endured thousands of miles of durability tests. However, to maximize drive belt durability and to prevent premature failures, it is important that the operator understands the limits of a belt driven CVT system and adapts their riding style and speed accordingly.

If riding in any of the conditions listed below, BRP highly recommends not to constantly hold the throttle wide open (WOT) for more than five (5) minutes.

- High ambient temperatures (above 30°C (86°F)
- Heavy loads: Passenger / Heavy cargo
- Heavy drag: Soft sand / Hill climbing / Mud / Using a track kit.

After a few minutes at WOT, partially release the accelerator and allow the CVT to cool down.

For more tips for maximizing the drive belt durability, refer to *CHOOSING THE CORRECT RANGE (LOW OR HIGH)*.

What to do if Water is Suspected to be in the CVT

If water is present in the CVT, the engine will accelerate but the vehicle will remain still.

NOTICE Stop the engine and drain the water to avoid damage to the CVT.

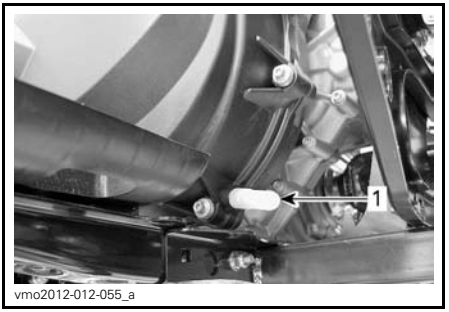

1. CVT drain

CVT drain is accessible by removing the skid plate under the LH side of the vehicle.

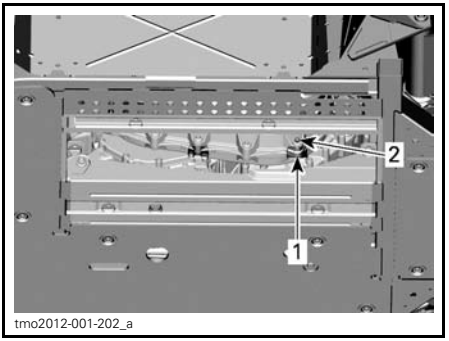

SKID PLATE REMOVED
1. Access hole under skid plate
2. CVT drain location

See an authorized Can-Am dealer to have the CVT inspected and cleaned.

What to do if Battery is Drained out

The vehicle can be jump started by using the red (+) cable to the battery positive pole and the black (-) cable to the vehicle chassis.

NOTICE Do not connect any electrical source to the steering column.

What to do if Vehicle Rolled Over

Abrupt maneuvers, sharp turns, side hilling or accident may cause vehicle to rollover.

Should the vehicle be rolled over, it will be necessary to have it transported to an authorized Can-Am dealer as soon as possible. NEVER START THE ENGINE!

What to do if Vehicle is Submerged

Should the vehicle become immersed, it will be necessary to have it transported to an authorized Can-Am dealer as soon as possible.

NOTICE Never start the engine as immersion of the vehicle can cause serious damage to the engine if the correct restart procedure is not followed.

TRANSPORTING THE VEHICLE

If your vehicle needs to be transported, it should be carried on a flatbed trailer of the proper size and capacity.

NOTICE **Do not tow this vehicle — towing can seriously damage the vehicle's drive system.**

When contacting a towing or transporting service, be sure to ask if they have a flatbed trailer, loading ramp or power ramp to safely lift the vehicle and tie-down straps. Ensure the vehicle is properly transported as specified in this section.

NOTICE **Avoid using chains to tie the vehicle — they may damage the surface finish or plastic components.**

⚠ WARNING

If the vehicle is equipped with a windshield, transport it facing forward to avoid damaging the windshield.

To load the vehicle on a platform for transport, proceed as follow:

1. Shift the vehicle into NEUTRAL (N).
2. If the vehicle is equipped with a winch, use the winch to roll the vehicle on the platform.
3. If the vehicle is not equipped with a winch, proceed as follows:
   - 3.1 Put a strap around the lower arm of each front suspension.
   - 3.2 Attach the straps to the winch cable of the towing vehicle.
   - 3.3 Pull the vehicle on the flatbed trailer with the winch.
4. Remove the key from the ignition switch.
5. Strap the front tires by using tire towing straps.
6. Pass a tie-down strap inside each rear wheel.
7. Firmly attach the rear wheels tie-down straps to both sides of the rear of the trailer with ratchets.
8. Ensure that both the front and rear wheels are firmly attached to the trailer.

⚠ WARNING

Make sure no loose objects are present inside vehicle or in cargo box during vehicle transportation.

Front of Vehicle

Place vehicle on a flat non slippery ground.

Ensure vehicle shift lever is set to PARK.

Install an hydraulic jack under front skid plate.

Lift front of vehicle and install a jack stand on each side under frame section in front of the lip for center skid plate.

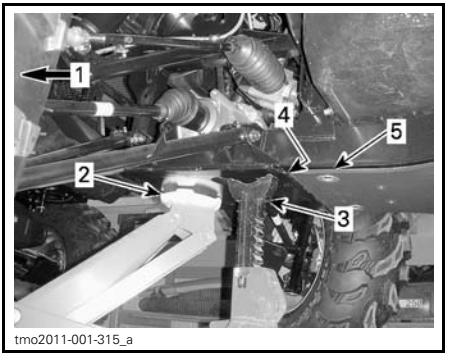

tmo2011-001-315_a

1. *Front of vehicle*
2. *Hydraulic jack*
3. *Jack stand*
4. *Lip for center skid plate*
5. *Center skid plate*

Lower hydraulic lift and ensure vehicle is supported safely onto both jack stands.

Rear of Vehicle

Place vehicle on a flat non slippery ground.

Activate 4WD mode.

Ensure vehicle shift lever is set to PARK.

Install an hydraulic jack under the trailer hitch.



tmo2011-001-317_a

1. *Hydraulic jack*
2. *Trailer hitch*

Lift rear of vehicle and install a jack stand on each side under frame section in front of rear wheel.

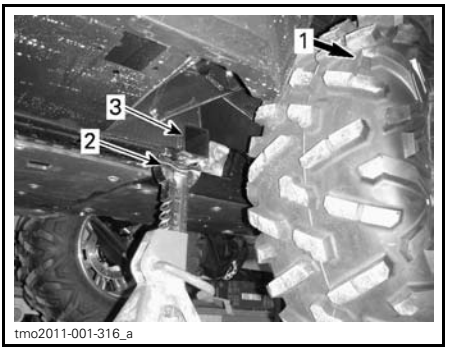

tmo2011-001-316_a

1. *Rear of vehicle*
2. *Jack stand*
3. *Frame section*

Lower hydraulic lift and ensure vehicle is supported safely onto both jack stands.

MAINTENANCE

MAINTENANCE SCHEDULE

Maintenance is very important for keeping your vehicle in safe operating condition. The vehicle should be serviced as per the maintenance schedule.

A repair shop or person of the owner's choosing may maintain, replace, or repair emission control devices and systems. These instructions do not require components or service by BRP or authorized Can-Am dealers. Although an authorized Can-Am dealer has an in-depth technical knowledge and tools to service the Can-Am SSV, the emission-related warranty is not conditioned on the use of an authorized Can-Am dealer or any other establishment with which BRP has a commercial relationship. For emission-related warranty claims, BRP is limiting the diagnosis and repair of emission-related parts to the authorized Can-Am dealers. For more information, please refer to the *US EPA EMISSION-RELATED WARRANTY* contained herein. Proper maintenance is the owner's responsibility. A warranty claim may be denied if, among other things, the owner or operator caused the problem through improper maintenance or use.

You must follow the instructions for fuel requirements in the fueling section of this manual. Even if gasoline containing greater than ten volume percent ethanol is readily available, the US EPA issued a prohibition against the use of gasoline containing greater than 10 vol% ethanol that applies to this vehicle. The use of gasoline containing greater than 10 vol% ethanol with this engine may harm the emission control system.

The following message appears in the gauge after every 50 hours of operation, to remind you of maintenance requirements: MAINTENANCE REQUIRED. To erase message, refer to *MESSAGE DISPLAY MODE* or *MULTIFUNCTION DISPLAY* subsections.

The maintenance schedule does not exempt the pre-ride inspection.

⚠ WARNING

Failure to properly maintain the vehicle according to the maintenance schedule and procedures can make it unsafe to operate.

SEVERE DUSTY CONDITIONS

Air Filter Maintenance Guideline

Air filter maintenance should be adjusted according to riding conditions.

Air filter maintenance must be increased in frequency in the following dusty conditions:

- Riding on dry sand
- Riding on dry dirt covered surfaces
- Riding on dry gravel roads or similar conditions.

NOTE: Riding in a group in these conditions would increase even more the air filter maintenance.

MAINTENANCE SCHEDULE LEGEND

Operation in trail riding conditions
Operation in severe riding conditions (dusty or muddy) or carrying heavy loads condition

MAINTENANCE SCHEDULE

Make sure to perform proper maintenance at recommended intervals as indicated in the tables. Some items of the maintenance schedule must be performed in function of the calendar, regardless of the distance or time of operation.

EVERY 1 500 KM (1,000 MI) OR 50 HOURS (whichever comes first)
EVERY 750 KM (500 MI) OR 25 HOURS (whichever comes first)
Verify and clean engine air filter. Replace as needed
Verify battery connections
Lubricate rear propeller shaft joints
Lubricate front stabilizer bar bushings
Inspect tie rod ends and ball joints for play and boots condition
Lubricate suspension arm bushings
Inspect the drive shaft boots and protectors
Inspect brake pads. Replace as needed
Inspect wheel bearings for abnormal play
Clean exhaust area
Tighten beadlock screws (if equipped)
Inspect and clean CVT air filters (service more often in dusty conditions)
Inspect, clean and lubricate front and rear shock absorber spherical bearings (Commander LTD/XT-P)

EVERY 3 000 KM (2,000 MI) OR 100 HOURS (whichever comes first)
EVERY 1 500 KM (1,000 MI) OR 50 HOURS (whichever comes first)
Adjust valve clearance
Clean muffler spark arrester
Verify and clean throttle body
Replace fuel vent breather filter
Verify CVT drive belt and clean CVT pulleys
Inspect, clean and lubricate CVT one way bearing
Inspect centrifugal levers and rollers of the drive pulley. Replace as needed
Inspect ACS shock absorber hoses and fittings (ACS equipped model)
Replace rear shock absorber spherical bearings (Commander LTD/XT-P)
Inspect all stabilizer bar bushings. Replace as needed

EVERY 3 000 KM (2,000 MI) OR 100 HOURS (whichever comes first)
EVERY 1 500 KM (1,000 MI) OR 50 HOURS (whichever comes first)
Inspect all suspension arm bushings and wear plates. Replace as needed
Tighten rear stabilizer bar bolts
The following must be performed at least once a year:
Change engine oil and filter
Inspect and clean brake system
Inspect battery condition
Verify steering system for abnormal play
Verify front differential and rear final drive oil level and look for contamination
Verify gearbox oil level and look for contamination

PERFORM AT THE FIRST 3 000 KM (2,000 MI)AND AT 6 000 KM (4,000 MI) THEN FOLLOW THE REGULAR SCHEDULE
PERFORM AT THE FIRST 1 500 KM (1,000 MI) AND AT 3 000 KM (2,000 MI) THEN FOLLOW THE REGULAR SCHEDULE
Replace gearbox oil
Clean the vehicle speed sensor (VSS)

EVERY 6 000 KM (4,000 MI) OR 200 HOURS (whichever comes first)
EVERY 3 000 KM (2,000 MI) OR 100 HOURS (whichever comes first)
Verify the cooling system
Test engine coolant strength
Verify fuel system for leaks
Verify fuel pump pressure
Replace spark plugs
Replace front differential oil
Replace rear final drive oil
Replace gearbox oil
Inspect input and output shaft seals (gearbox, differential and final drive)
Clean vehicle speed sensor
The following must be performed every 2 years:
Replace the brake fluid

EVERY 12 000 KM (8,000 MI) OR 5 YEARS (whichever comes first)
EVERY 6 000 KM (4,000 MI) OR 5 YEARS (whichever comes first)
Replace engine coolant

This section includes instructions for basic maintenance procedures.

NOTE: Maintenance message can be removed by alternately pressing the override switch and brake pedal 3 times at power up.

⚠ WARNING

Unless otherwise indicated, always turn ignition switch to the OFF position before performing any maintenance and remove key.

⚠ WARNING

Should removal of a locking device be required (e.g. lock tab, self-locking fastener, etc.) , always replace it with a new one.

Engine Air Filter

NOTICE Never modify the air intake system. Otherwise, engine performance degradation or damage can occur. The engine is calibrated to operate specifically with these components.

Engine Air Filter Replacement Guideline

Engine Air filter replacement frequency should be adjusted according to riding conditions as it is critical to ensure proper engine performance and life span.

Engine Air filter replacement frequency must be increased for the following severe riding conditions:

- Riding on dry sand.
- Riding on dry dirt covered surfaces.
- Riding on dry gravel trails or similar conditions.
- Riding in areas with high concentration of seeds or crop husks.
- Riding in severe snow conditions.

NOTE: Riding in a group under these conditions would increase even more the air filter replacement frequency.

Engine Air Filter Removal

1. Remove service cover.



1. Service cover

2. Release clamps and remove the engine air filter housing cover.

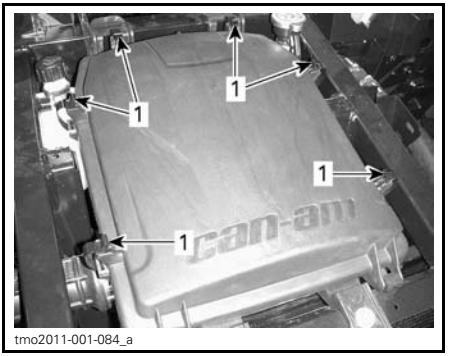

1. Release clamps

3. Remove engine air filter.

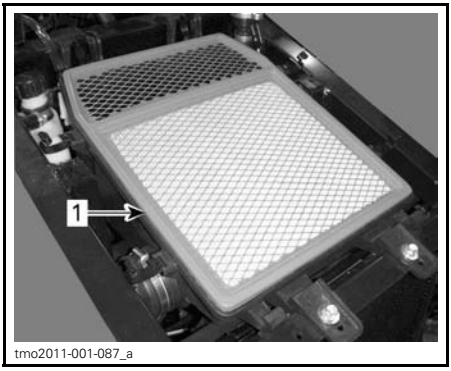

1. Engine air filter

Engine Air Filter Housing Cleaning

1. If there is water in the first air chamber, remove the drain plug, from underneath to expel water.

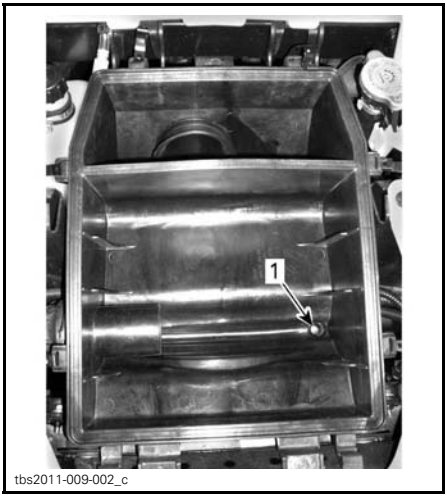

1. Drain hole



DRAIN PLUG ACCESS FROM LH SIDE OF VEHICLE
1. Remove drain plug to expel water

2. Clean both sections of the engine air filter housing with a vacuum cleaner.

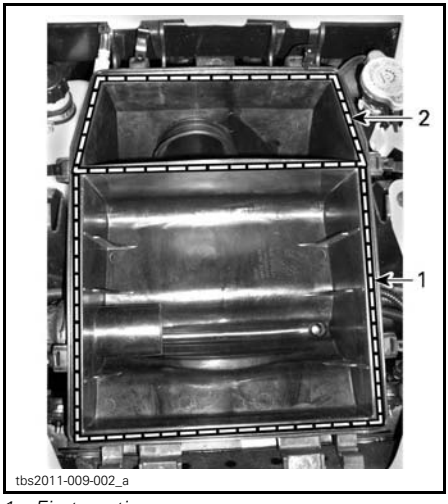

1. First section
2. Second section (clean chamber)

Engine Air Filter Housing Inspection

Verify that the engine air filter housing edges to hold the filter are straight and not damaged or warped.

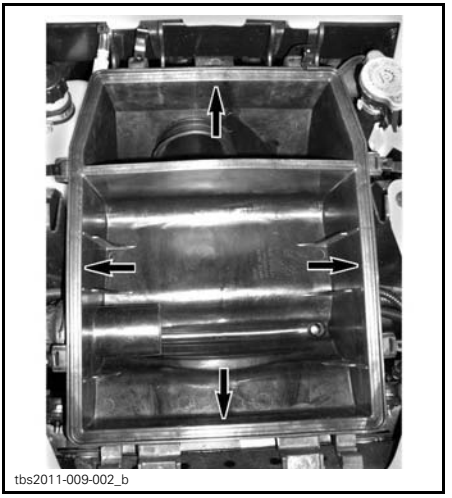
tbs2011-009-002_b

Engine Air Filter Cleaning

Clean engine air filter by tapping out heavy dust from paper element, this will allow dirt and dust to get out of the paper filter.

NOTICE It is not recommended to blow compressed air on the paper element; this could damage the paper fibers and reduce its filtration ability when used in dusty environments. If engine air filter is too dirty and cannot be cleaned following the recommended procedure, it should be replaced.

Engine Air Filter Installation

1. Install engine air filter.
2. Verify that engine air filter rubber seal has no gap with the engine air filter housing.

NOTICE If the fit is not good, dust may bypass the engine air filter.

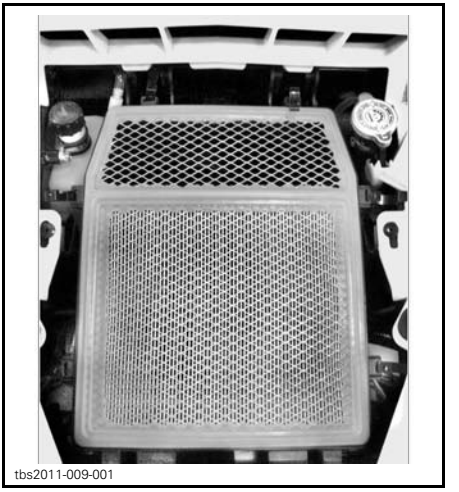
tbs2011-009-001

3. Verify that the cover fits well on the engine air filter housing before closing clamps.


tbs2011-009-003

Front Grill Kit

1. Remove debris from front grill kit.

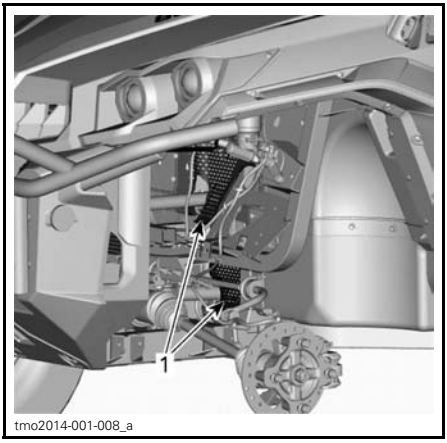

FRONT OF VEHICLE - COMPONENTS REMOVED FOR CLARITY
1. Front grill kit

2. Clean front grill kit with water.

CVT Air Filter

CVT air filter inspection and cleaning frequency should be adjusted according to riding conditions as it is critical to ensure proper engine performance and life span.

CVT Air filter inspection and cleaning frequency must be increased for the following severe riding conditions:

- Riding on dry sand.
- Riding on dry dirt covered surfaces.
- Riding on dry gravel trails or similar conditions.
- Riding in areas with high concentration of seeds or crop husks.
- Riding in severe snow conditions.

NOTE: Riding in a group in these conditions would increase even more the air filter replacement requirement.

CVT Air Filter Removal

1. Remove CVT air filter plastic cover located on left hand side of hood near driver.



1. CVT air filter plastic cover

2. Slide the cover rearward.

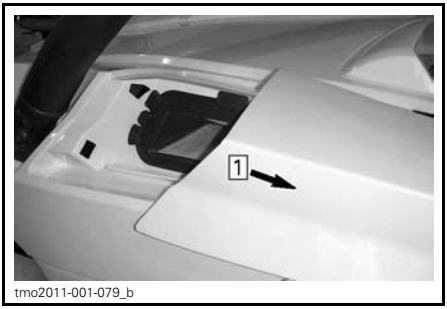

Step 1: Slide rearward

3. Pull CVT air filter out.



1. CVT air filter

CVT Air Filter Inspection and Cleaning

1. Inspect filter and replace if damaged.



1. CVT air filter

2. Clean filter, using soft soap and water, then water rinse.
3. Gently shake off excess water and allow filter to dry at room temperature.
4. Clean inside the CVT air inlet with a vacuum cleaner.

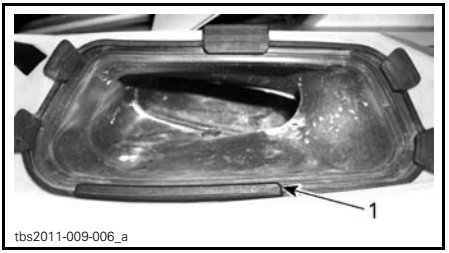

1. CVT air inlet

CVT Air Filter Installation

Reinstall CVT air filter and cover.

NOTE: Maintaining a clean CVT air filter will maximize air flow for an optimum CVT components lifespan.

Engine Oil

Engine Oil Level Verification

NOTICE Operating the engine with an improper level may severely damage engine.

NOTE: Dipstick is located under passenger seat.

With vehicle on a level surface and engine cold, check the oil level as follows:

1. Unscrew dipstick then remove it and wipe clean.

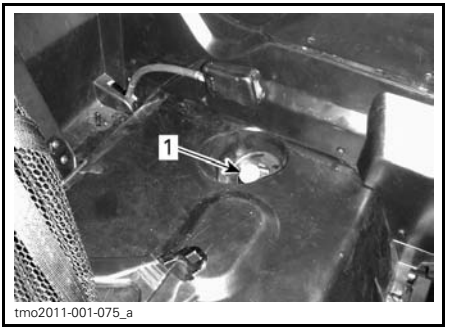

1. Dipstick

2. Reinstall dipstick, screw in it completely.
3. Remove dipstick and check oil level. It should be near or equal to the upper mark.

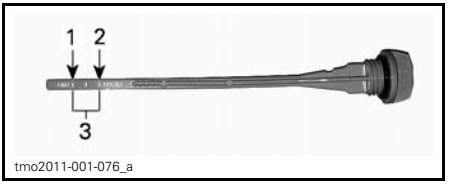

TYPICAL
1. MIN
2. MAX
3. Operating range

To add oil, remove the dipstick. Place a funnel into the dipstick tube.

Add a small amount of recommended oil and recheck oil level.

Repeat the above procedures until oil level reaches the dipstick's upper mark.

NOTE: Do not overfill. Wipe off any spillage.

Properly tighten dipstick.

Recommended Engine Oil

RECOMMENDED ENGINE OIL	
SEASON	TYPE
Summer	XPS 4-STROKE SYNTH. BLEND OIL (P/N 293 600 121)
All seasons	XPS 4-STROKE SYNTHETIC OIL (P/N 293 600 112)

NOTE: The XPS oil is specially formulated to meet the lubrication requirements of this engine. BRP recommends the use of its XPS 4-stroke oil. If XPS engine oil is not available, use a 4-stroke SAE 5W 40 engine oil that meets or exceeds the requirements for API service classification SJ, SL, SM or SN. Always check the API service label certification on the oil container it must contain at least one of the above standards.

NOTICE **Damages caused by the use of oil not suitable for this engine may not be covered by the BRP limited warranty.**

Engine Oil Change

Place vehicle on a level surface.

Oil change and oil filter replacement should be done with a warm engine.

⚠ **CAUTION** **The engine oil can be very hot. Wait until engine oil is warm.**

Place a drain pan under the engine drain plug area.

Clean the drain plug area.

Unscrew drain plug and discard the gasket ring.

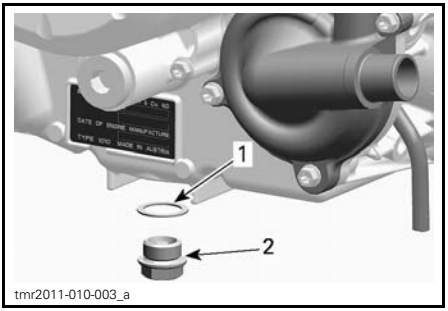

1. Gasket ring
2. Drain plug

Remove dipstick.

Allow oil to drain completely from the crankcase.

Clean the magnetic drain plug from metal shavings and residue. Presence of debris gives an indication of internal engine damage.

Install a NEW gasket ring on the drain plug.

NOTICE **Never use the gasket ring a second time. Always replace by a new one.**

Install and tighten drain plug to the recommended torque.

DRAIN PLUG TIGHTENING TORQUE
30 N•m ± 2 N•m (22 lbf•ft ± 1 lbf•ft)

Replace oil filter. Refer to *OIL FILTER* in this subsection.

Refill engine with recommended engine oil.

ENGINE OIL CAPACITY
2 L (2.1 qt (U.S. liq.))

Oil Filter

Oil Filter Access

Remove the passenger seat.

Remove the right hand side engine console panel.

Oil Filter Removal

Clean oil filter area.

Remove oil filter cover screws.

Remove oil filter cover.

Remove oil filter.

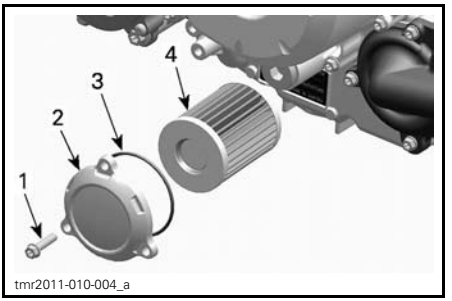

1. *Oil filter screw*
2. *Oil filter cover*
3. *O-ring*
4. *Oil filter*

Oil Filter Installation

Check and clean the oil filter inlet and outlet area for dirt and other contaminations.

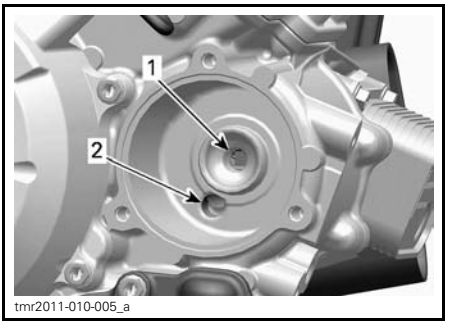

1. *Outlet to the engine oil providing system*
2. *Inlet from the oil pump to the oil filter*

Install a NEW O-ring on oil filter cover.

Install the filter into the cover.

Apply engine oil on O-ring and grease on the end of filter.

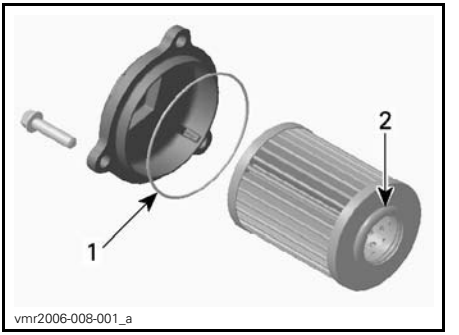

1. *Slightly oil*
2. *Slightly oil*

Install the cover on the engine.

Tighten oil filter cover screws to recommended torque.

OIL FILTER COVER SCREWS TIGHTENING TORQUE
10 N•m ± 1 N•m (89 lbf•**in** ± 9 lbf•**in**)

Radiator

Radiator Inspection and Cleaning

Periodically check the radiator area for cleanliness.



1. *Radiator*

Inspect radiator and hoses for leaks or any damage.

Inspect radiating fins. They must be clean, free of mud, dirt, leaves and any other deposit that would prevent the radiator to cool properly.

If available, use a garden hose to rinse the radiating fins.

⚠ CAUTION Never clean radiator with your hands when it is hot. Let the radiator cool down before cleaning.

NOTICE Be careful not to damage the radiating fins when cleaning. Do not use any object/tool that could damage the fins. When hosing, use low pressure only. Never use a HIGH PRESSURE washer.

Engine Coolant

Engine Coolant Level Verification

⚠ WARNING

Check coolant level with engine cold.

1. Place vehicle on a level surface.
2. Open service cover.
3. Remove the pressure cap.

⚠ WARNING

In order to avoid potential burns, do not remove the pressure cap if the engine is hot.

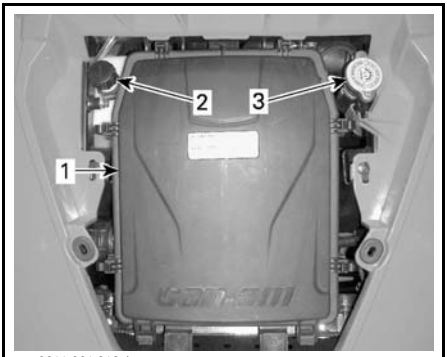

tmo2011-001-313_b

1. Air filter housing cover
2. Coolant expansion tank cap
3. Pressure cap

4. Ensure cooling system is full up to the pressure cap seat.

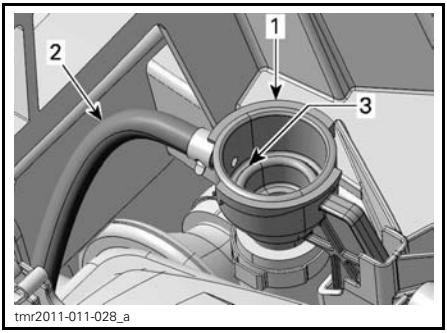

tmr2011-011-028_a

1. Cooling system refill adapter
2. Expansion tank hose
3. Coolant system full level (pressure cap seat)

5. Add coolant in system as necessary.
6. Properly reinstall pressure cap on refill adapter.
7. Check coolant level in expansion tank.

NOTE: Coolant level can be checked by looking at the side of the coolant expansion tank under the RH front fender.



COOLANT EXPANSION TANK
1. *MAX. level*
2. *MIN. level*
3. *Operating range*

8. Add coolant if level is below MIN. mark. Use a funnel to avoid spillage. Do not overfill.
9. Properly reinstall coolant expansion tank cap.
10. Reinstall service cover.

NOTE: A cooling system that frequently requires addition of coolant is an indication of leaks or engine problems.

Recommended Engine Coolant

BRP RECOMMENDED PRODUCT	COOLANT
Finland, Norway and Sweden	LONG LIFE ANTIFREEZE(F) (P/N 619 590 204)
All other countries	LONG LIFE ANTIFREEZE (P/N 219 702 685)
Alternative, or if not available	Distilled water and antifreeze solution (50% distilled water, 50% antifreeze)

NOTICE Always use ethylene-glycol antifreeze containing corrosion inhibitors specifically for internal combustion aluminum engines.

Engine Coolant Replacement

Cooling System Draining

⚠ WARNING

In order to avoid potential burns, do not remove the pressure cap or loosen the coolant drain plug if the engine is hot.

1. Remove service cover.
2. Remove the cooling system pressure cap.



1. Pressure cap

3. Unscrew coolant drain plug and drain the coolant into a suitable container.

NOTE: The drain plug is accessible from underneath the vehicle.

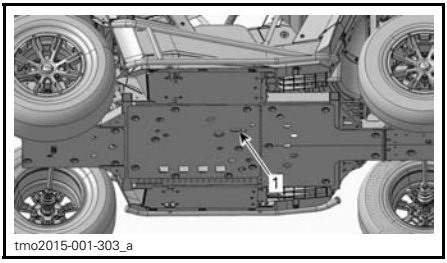

1. Cooling system drain plug access

NOTE: Do not unscrew the coolant drain plug completely.

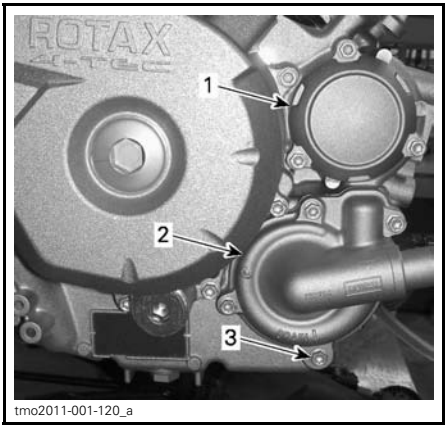

1. Oil filter cover
2. Water pump cover
3. Coolant drain plug

4. Disconnect the lower radiator hose and drain the remaining coolant into a suitable container.

NOTE: Take note of the position of the hose clamp on the lower radiator hose at the radiator.

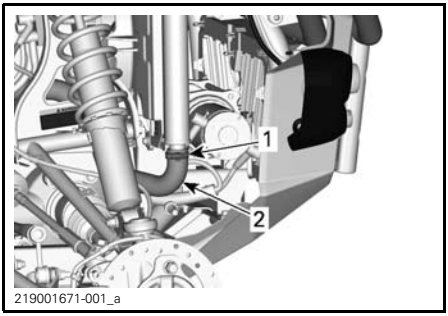

1. Hose clamp position to note
2. Lower radiator hose to remove

5. Drain cooling system completely.
6. Reinstall cooling system drain plug.

COOLING SYSTEM DRAIN PLUG TORQUE
9 N•m to 11 N•m (80 lbf•**in** to 97 lbf•**in**)

7. Reinstall radiator hose as noted prior to removal.

RADIATOR HOSE CLAMP
2.5 N•m to 3.5 N•m (22 lbf•**in** to 31 lbf•**in**)

8. Siphon the cooling system expansion tank.
9. Fill cooling system with coolant, refer to *COOLING SYSTEM BLEEDING* procedure.

Cooling System Bleeding

800R Models

1. Unscrew bleed screw on thermostat housing cover of front cylinder.



TYPICAL
1. Bleed screw

1000 Models

2. Unscrew bleed screws on thermostat housing covers of both front and rear cylinders.

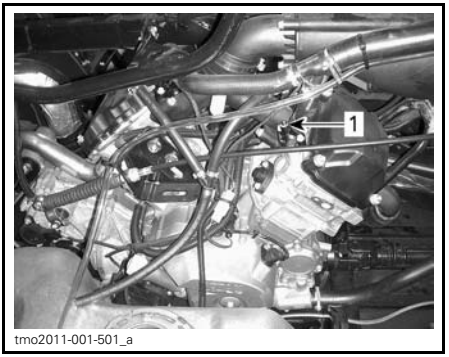

1. Front cylinder bleed screw

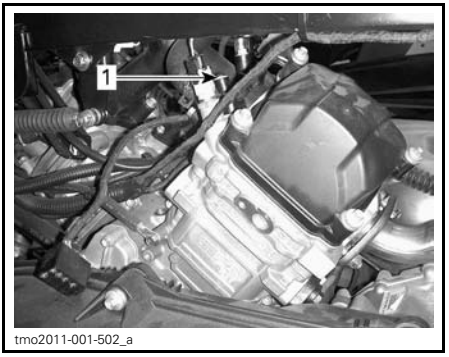

1. Rear cylinder bleed screw

All Models

3. Remove the pressure cap.
4. Fill the cooling system until coolant comes out of the bleed screw(s).
5. Install the bleed screw(s) using NEW gasket ring(s) and torque as per following chart.

BLEED SCREW INSTALLATION	
GASKET RING	TORQUE
New	4.4 N•m to 5.6 N•m (39 lbf•**in** to 50 lbf•**in**)

6. Continue adding coolant until system is full up to the pressure cap seat in the refill adapter.

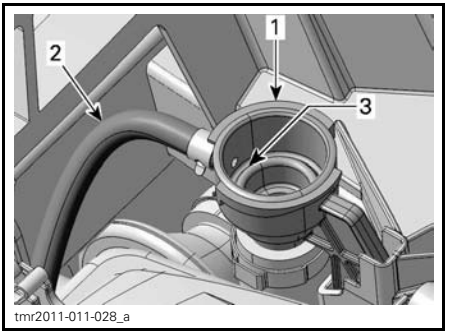

1. Cooling system refill adapter
2. Expansion tank hose
3. Coolant system full level (pressure cap seat)

7. Install pressure cap.

NOTICE **The following steps must be carried out as specified to ensure proper cooling system bleeding in addition to the previous steps.**

8. Lift the entire front end of the vehicle so the front tires are 60 cm (2 ft) above the ground for at least 1 minute.

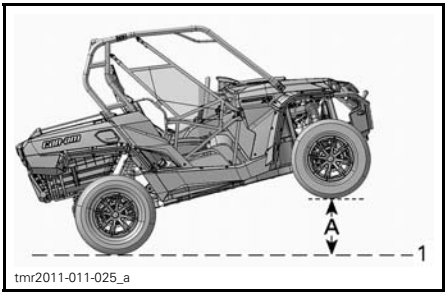

ENTIRE FRONT END LIFTED
1. *Ground level*

A. 60 cm (24 in)

9. Lower vehicle to the ground.
10. Remove pressure cap and add coolant as required.
11. Install pressure cap.
12. Lift driver's side of vehicle 60 cm (2 ft) above it's horizontal position for at least 1 minute.

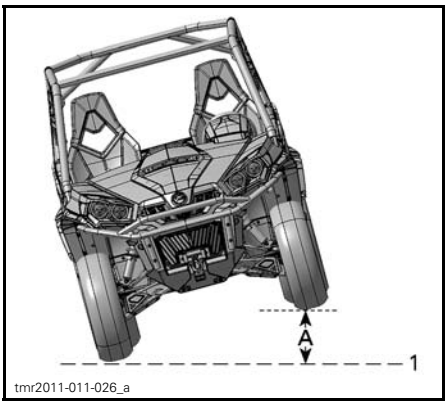

DRIVER'S SIDE LIFTED
1. *Ground level*

A. 60 cm (24 in)

13. Lower vehicle to the ground.
14. Remove pressure cap and add coolant as required up to the pressure cap seat in the refill adapter.

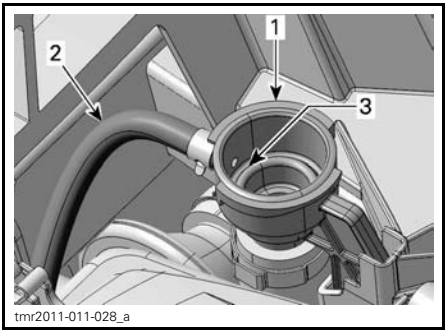

1. *Cooling system refill adapter*
2. *Expansion tank hose*
3. *Coolant system full level (pressure cap seat)*

15. Install the pressure cap.
16. Check coolant level in the coolant expansion tank and fill to the MIN. level (as required).
17. Run engine at idle with the pressure cap **ON** until the cooling fan cycles on for a second time.
18. Stop the engine and let it cool down.

⚠ WARNING

In order to avoid potential burns, do not remove the pressure cap if the engine is hot.

19. When the engine is cool, remove pressure cap and add coolant if required.
20. Install pressure cap.
21. Check coolant level in the expansion tank. Add coolant as required. Refer to *ENGINE COOLANT LEVEL VERIFICATION* in this subsection.

Muffler Spark Arrester

Muffler Spark Arrester Cleaning and Inspection

⚠ CAUTION Never perform this operation immediately after the engine has been running as exhaust system is very hot.

Remove the muffler cover.

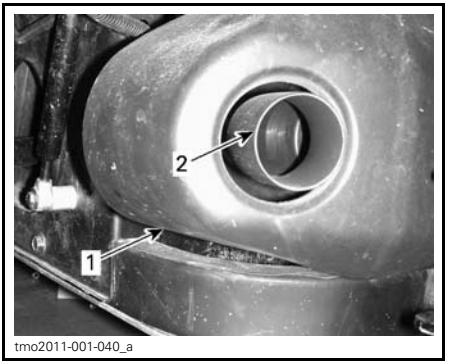

1. Muffler cover
2. Exhaust tail pipe

Remove and discard the tail pipe retaining screws.

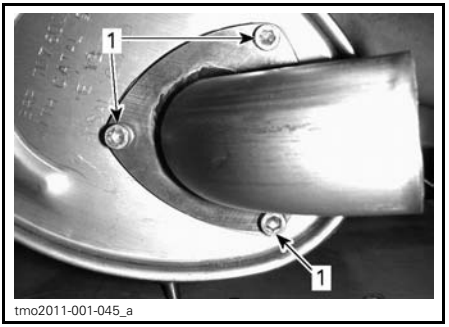

1. Retaining screws

Remove exhaust tail pipe, gasket (discard) and spark arrester.

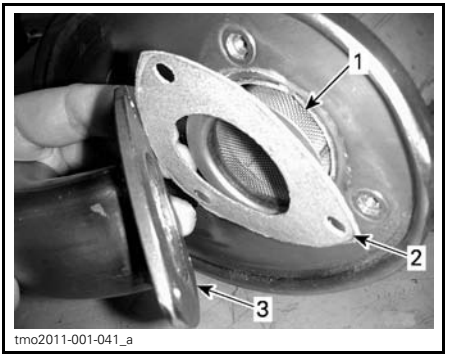

1. Spark arrester
2. Gasket
3. Exhaust tail pipe

Remove carbon deposits from the spark arrester using a brush.

NOTICE **Use a soft brush and be careful to avoid damaging spark arrester mesh.**

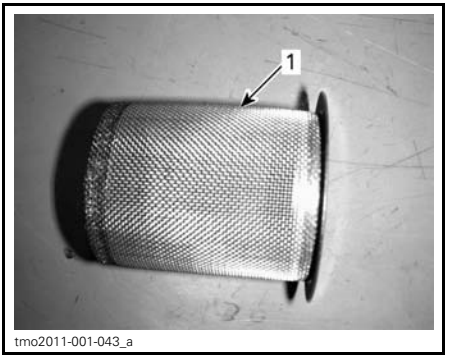

1. Clean spark arrester

Inspect mesh of spark arrester for any damage. Replace as required.

Inspect spark arrester chamber in muffler. Remove any debris as required.

Reinstall the muffler spark arrester in the reverse of the removal procedure. However pay attention to the following.

Install new gasket and retaining screws. Torque to specification.

TORQUE	
Tailpipe retaining screw	11 N•m ± 1 N•m (97 lbf•**in** ± 9 lbf•**in**)

Gearbox Oil

Gearbox Oil Level Verification

Place the vehicle on a level surface. Select PARK position.

Check the gearbox oil level by removing the gearbox oil level plug.

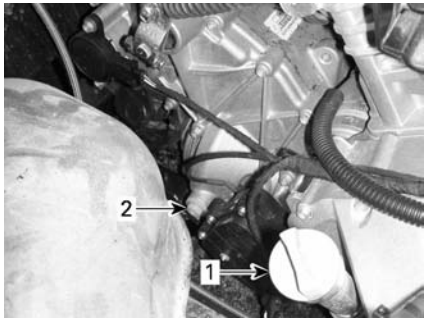

tmo2011-001-117_a

1. Engine oil dipstick
2. Gearbox oil level plug

The oil should be level with the bottom of the oil level hole.

NOTICE Operating the gearbox with an improper oil level may severely damage gearbox.

Recommended Gearbox Oil

Use the following gearbox oil.

RECOMMENDED GEARBOX OIL
XPS synthetic gear oil (P/N 293 600 140)

NOTE: The XPS oil is specially formulated to meet the lubrication requirements of this gearbox. BRP strongly recommends the use of its XPS oil. However, if the XPS synthetic gear oil is not available, use the following lubricant:

GEARBOX OIL REQUIREMENT
75W 140 API GL-5 synthetic gear oil

NOTICE Do not use another type of oil when servicing.

Gearbox Oil Change

NOTE: When replacing the gearbox oil, it is recommended to clean the vehicle speed sensor (VSS) at the same time.

Place the vehicle on a level surface.

Clean drain plug area.

Clean the oil level plug area.

Under the vehicle, place a drain pan underneath the oil drain plug area.

Remove the oil level plug.

Remove the gearbox drain plug.

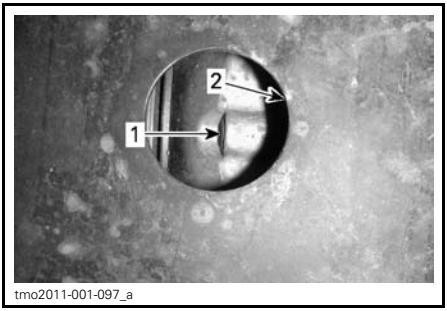

tmo2011-001-097_a

1. Oil drain plug
2. Skid plate opening

Let oil completely drain from gearbox.

Install the drain plug.

NOTE: Clean drain plug from any metallic particles prior to installation.

Refill gearbox.

NOTICE Use ONLY the recommended type of oil.

The oil should be level with the bottom of the oil level orifice.

NOTICE Do not overfill.

Reinstall oil level plug.

Wipe off any spillage.

Spark Plugs

Access to Spark Plugs

1. Remove both seats.
2. Remove upper console retaining screws and plastic rivets.
3. Slightly lift upper console to allow removal of lower console.
4. Remove lower console plastic rivets.
5. Pull lower console out of location.

Spark Plug Removal

Unplug spark plug cable.

NOTE: Spark plug removal procedure is the same for both cylinders.

Clean spark plug and cylinder head with pressurized air.

⚠ CAUTION Always wear safety goggles when using pressurized air.

Unscrew spark plug completely then remove it.

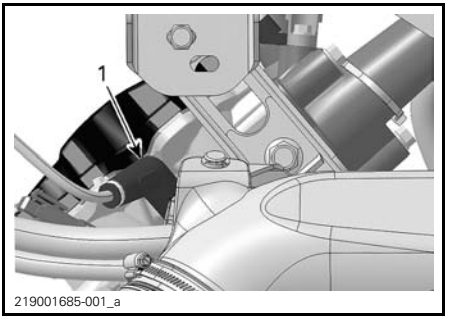

RH SIDE — REAR CYLINDER
1. Spark plug

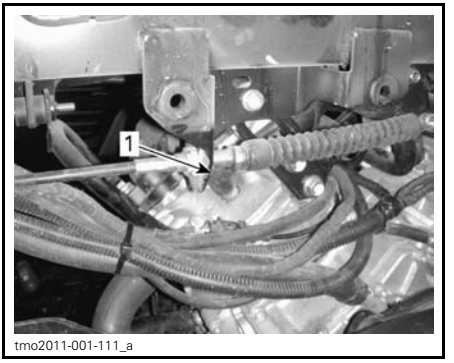

LH SIDE — FRONT CYLINDER
1. Spark plug

Spark Plug Installation

Prior to installation make sure that contact surface of cylinder head and spark plug is free of grime.

Using a feeler gauge, set the spark plug gap.

SPARK PLUG GAP
0.7 mm - 0.8 mm (.028 in - .031 in)

Apply a small amount of copper-based anti-seize lubricant over spark plug threads.

Screw spark plug into cylinder heads by hand and tighten with a torque wrench and a proper socket.

TORQUE	
Spark plug	20 N•m ± 2.4 N•m (15 lbf•ft ± 2 lbf•ft)

CVT Cover

NOTE: For a better understanding, some illustrations are taken with engine out of vehicle. To perform the following instructions, it is not necessary to remove engine.

This CVT is lubrication free. Never lubricate any components except drive pulley one-way clutch.

⚠ WARNING

Never touch CVT while engine is running. Never drive vehicle when CVT cover is removed.

⚠ WARNING

Engine must be cool before cover is removed. Always wear protective gloves when removing cover.

Place the vehicle on a level surface. Select PARK position.

CVT Cover Access

1. Remove LH seat.
2. Remove nine plastic rivets to remove LH lateral console panel.

NOTE: Use flat head screwdriver supplied in tool kit to remove plastic rivets.

3. Carefully pull out the panel.
4. Remove eight plastic rivets to remove under seat storage compartment.

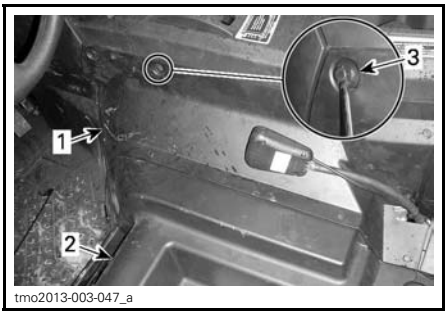

1. LH console panel
2. Under seat storage compartment
3. Plastic rivets

NOTE: This part will still be attached to the vehicle by the seat belt. Do not detach.

CVT Cover Removal

Remove the thirteen CVT cover screws.

NOTE: The CVT cover lower screws are accessible through the square holes in the central skid plate.

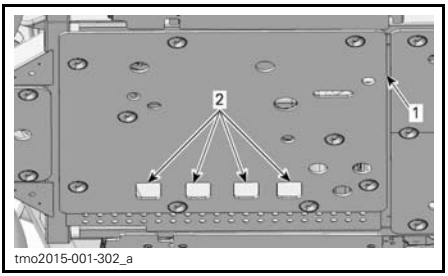

1. Central skid plate
2. Access holes

NOTE: Remove the center top screw last to support the cover during removal.

NOTE: Do not use and impact tool to remove CVT cover screws.

Remove the CVT cover and its gasket.

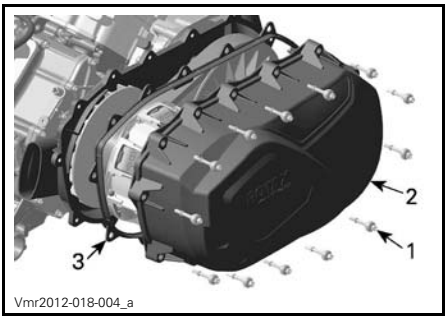

1. CVT cover lower screws
2. CVT cover screws
3. CVT cover

CVT Cover Installation

Install the center top screw of first.

Tighten the CVT cover screws as per following sequence.

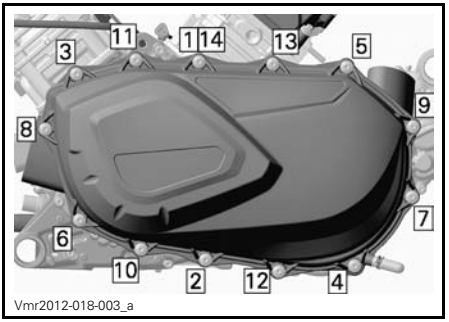

CVT COVER TIGHTENING SEQUENCE

CVT COVER SCREWS	
Tightening torque	7 N•m ± 0.8 N•m (62 lbf•**in** ± 7 lbf•**in**)

Drive Belt

Drive Belt Removal

NOTICE In case of a drive belt failure, the CVT, cover and air outlet must be cleaned.

Please refer to *TIPS FOR MAXIMIZING DRIVE BELT DURABILITY* in *BASIC PROCEDURES* section for some IMPORTANT information.

Remove *CVT COVER*.

Open driven pulley.

REQUIRED TOOL	
Puller/Locking tool (P/N 529 000 072)	

Screw tool in the threaded hole of driven pulley and tighten to open the pulley.

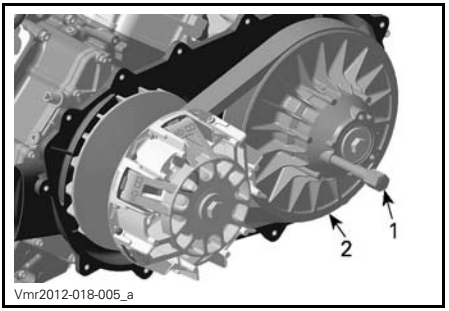

TYPICAL
1. *Puller/locking tool*
2. *Fixed sheave of driven pulley*

To remove belt, slip the belt over the top edge of fixed sheave, as shown.

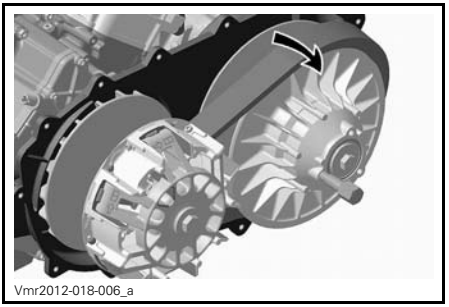

Drive Belt Installation

For installation, reverse the removal procedure. Pay attention to following details.

The maximum drive belt life span is obtained when the drive belt has the proper rotation direction. Install it so that the arrow printed on belt is pointing towards front of the vehicle, viewed from top.

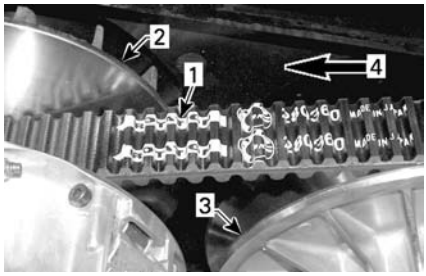

vmr2007-051-006_a

1. *Arrow printed on belt*
2. *Drive pulley (front)*
3. *Driven pulley (rear)*
4. *Rotation direction*

NOTE: Turn the driven pulley until the lowest portion of the cogs on the external surface of drive belt is even with the driven pulley edge.



tmo2013-003-060_a

1. *Lowest portion of cogs even with external surface of drive belt*

Exhaust Area

Exhaust Area Access

To access exhaust area, refer to *CVT COVER ACCESS* for removal of LH lateral console panel and underseat compartment on driver's side

Exhaust Area Cleaning

⚠ WARNING

Engine and exhaust must be cool before removing debris. Always wear protective gloves when removing debris.

1. Wearing gloves, hand remove all excess debris around exhaust.

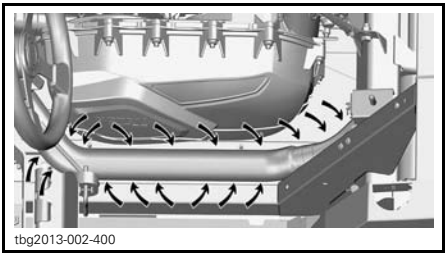
tbg2013-002-400

2. Using a garden hose, thoroughly clean the area so that no more debris can be in contact with the exhaust.

Battery

Battery Maintenance

NOTICE Never charge a battery while installed in vehicle.

These vehicles are equipped with a VRLA battery (Valve Regulated Lead Acid). It is a maintenance-free type battery, there is no need to add water to adjust electrolyte level.

NOTICE Never remove the battery sealing cap.

Battery Removal

Disconnect BLACK (-) cable first then RED (+) cable.

NOTICE Always respect this order for disassembly; disconnect BLACK (-) cable first.

Remove battery holder retaining screw.

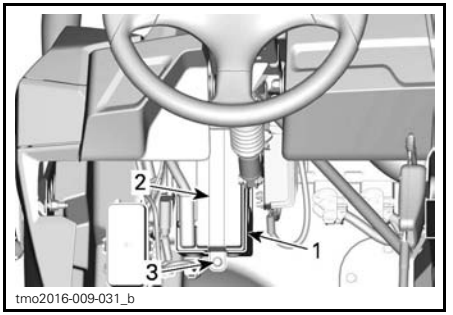

1. Battery
2. Battery holder retaining screw
3. Battery holder

Remove battery holder.

Remove battery.

Battery Cleaning

Clean battery, battery casing and battery posts using a solution of baking soda and water.

Remove corrosion from battery cable terminals and battery posts using a firm wire brush. Battery casing should be cleaned by soft brush and baking soda solution.

Battery Installation

Battery installation is the reverse of the removal procedure.

NOTICE Improper orientation of the battery cables (reverse polarity) will result in damage to the voltage regulator.

CAUTION Always connect RED (+) cable first then BLACK (-) cable.

Fuses

Fuse Replacement

If a fuse is burnt, replace it by one of the same rating.

NOTICE Do not use a higher rated fuse as this can cause severe damage.

Fuse Box Location

The vehicle is equipped with two fuse boxes. They are both located under the console on the driver's side next to the battery.

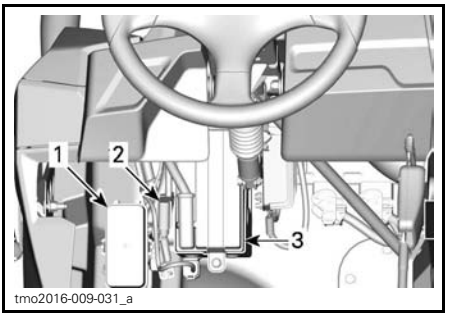

1. Fuse box
2. DPS fuse
3. Battery

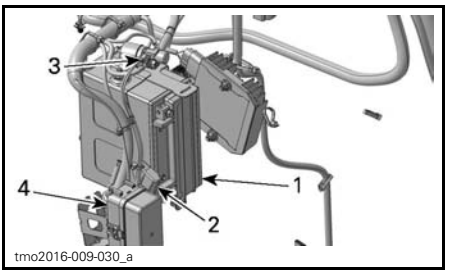

TYPICAL FOR ILLUSTRATIVE PURPOSES
1. Battery
2. DPS fuse
3. Fuse links
4. Fuse box

Fuse Box Description

MAIN FUSE BOX		
NO	DESCRIPTION	RATING
R1	Fan relay	-
R2	Main relay	-
R3	Accessories relay	-
R4	Light relay	-
R8	Brake relay	-
F4	Speedo/tail lamp	10 A

MAIN FUSE BOX		
NO	DESCRIPTION	RATING
F5	Ignition/injection/speed sensor	7.5 A
F6	Engine Control Module (ECM)	5 A
F7	4WD Actuator (winch if equipped)	5 A
F8	Key switch/starter solenoid/clock	5 A
F9	Fan	25 A
F10	European component	5 A
F11	Head lamp	30 A
F12	DC Outlet	15 A
F13	Relay driver	5 A
F14	Accessories	15 A
F15	Fuel pump	5 A

NOTE: Fuses are identified inside fuse box cover.

FUSE LINKS		
FUSE LINK	DESCRIPTION	RATING
1	Main	16 awg
2	Light/Accessories	14 awg
3	ACS/Power Add-on	16 awg

FUSE IN FUSE BOX 3		
F1	Dynamic power steering (DPS) (Models with DPS)	40 A

Lights

Always check light operation after replacement.

Headlight Bulb Replacement

NOTICE **Never touch glass portion of a halogen bulb with bare fingers, it shortens its operating life. If glass is touched, clean it with isopropyl alcohol which will not leave a film on the bulb.**

Unplug connector from bulb.

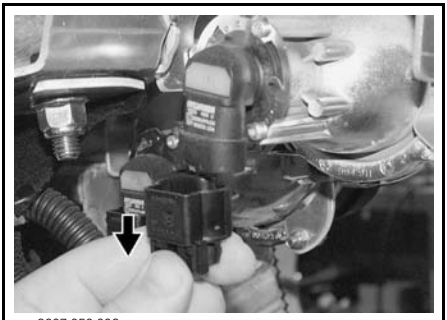

TYPICAL

Rotate bulb.



TYPICAL

Pull out bulb.

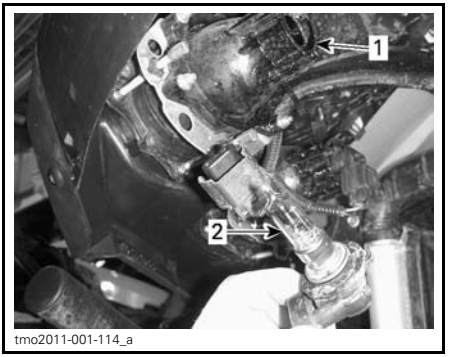

1. Light bulb socket
2. Light bulb

Properly reinstall removed parts in the reverse order of their removal.

Validate headlights operation.

Headlight Beam Aiming

Turn adjustment screws to adjust beam height to your convenience.

NOTE: Adjust headlights evenly.

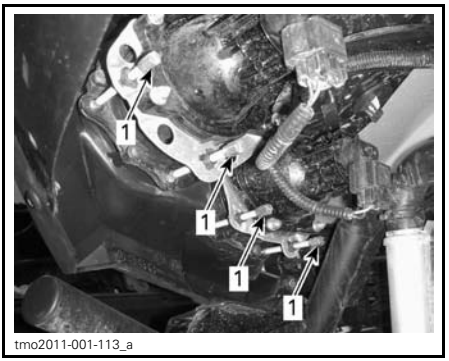

1. Adjustment screws

Taillight Bulbs Replacement

Open upper tailgate.

Remove both taillight retaining screws.

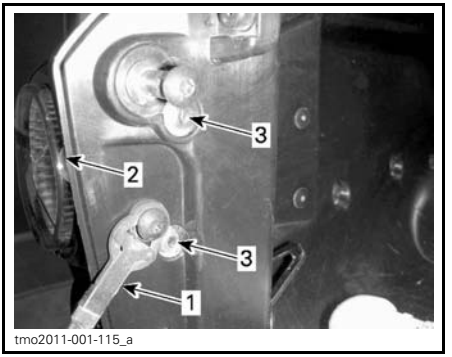

TYPICAL
1. Tailgate cable
2. Tail light
3. Retaining screws

Pull tail light out of its location.

Remove bulb socket from taillight.

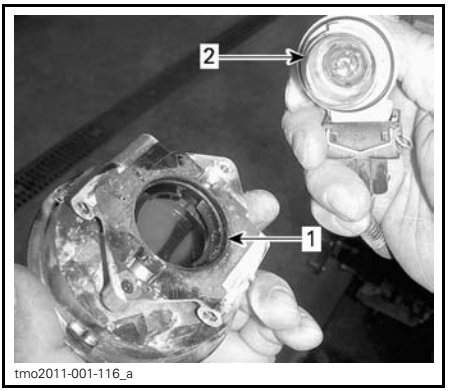

1. Tail light
2. Light bulb and socket

Push the bulb in and hold while turning counterclockwise to release.

Installation is the reverse of the removal procedure.

Position Lights Bulbs Replacement

Pull bulb out.

Installation is the reverse of removal.

Drive Shaft Boot and Protector

Drive Shaft Boot and Protector Inspection

Visually inspect drive shaft protectors and boots conditions.

Check protectors for damage or rubbing against shafts.

Check boots for cracks, tears, leaking grease, etc.

Repair or replace damaged parts as necessary.

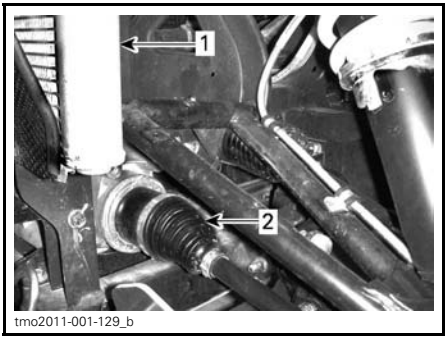

FRONT OF VEHICLE
1. *Radiator*
2. *Inner drive shaft boots*



FRONT OF VEHICLE
1. *Outer drive shaft boot*

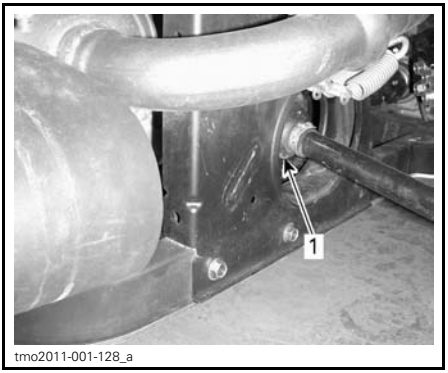

REAR OF VEHICLE
1. *Inner drive shaft boot*



REAR OF VEHICLE
1. *Outer drive shaft boot*

Tightening Rear Stabilizer Bar Bolts

Torque retaining screws of stabilizer bar according to the following sequence.

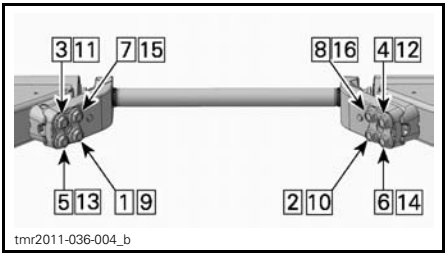

STABILIZER BAR TIGHTENING SEQUENCE

TIGHTENING TORQUE	
Stabilizer bar screws	85 N•m ± 10 N•m (63 lbf•ft ± 7 lbf•ft)

Wheel Bearing

Wheel Bearing Inspection

Lift and support vehicle. Refer to *LIFTING AND SUPPORTING THE VEHICLE* in *VEHICLE INFORMATION SECTION*.

Push and pull the wheels from the upper edge to feel the play.

See an authorized Can-Am dealer if there is any play.



tmo2011-001-131_a

TYPICAL

Wheels and Tires

Wheel Removal

Loosen nuts then lift and support vehicle. Refer to *LIFTING AND SUPPORTING VEHICLE* in *VEHICLE INFORMATION*.

Remove nuts then remove wheel.

Wheel Installation

At installation, it is recommended to apply anti-seize lubricant on threads.

The tires are unidirectional and their rotation must be kept in a specific direction for proper operation.

Torque wheel nuts in accordance with the following illustration.

TORQUE	
WHEEL LUG NUTS	100 N•m ± 10 N•m (74 lbf•ft ± 7 lbf•ft)



tmo2011-001-081_a

TIGHTENING SEQUENCE

NOTICE Always use the recommended wheel nuts for the type of wheel. Using a different nut could cause damages to the rim or studs.

Tire Pressure

⚠ WARNING

Tire pressure greatly affects vehicle handling and stability. Insufficient pressure may cause tire to deflate and rotate on wheel. Overpressure may burst the tire. Always follow recommended pressure. NEVER set tire pressure below minimum. It could cause the tire to dislodge from the rim.

Check pressure when tires are **cold** before using the vehicle. Tire pressure changes with temperature and altitude. Recheck pressure if one of these conditions has changed.

For your convenience, a pressure gauge is supplied in tool kit.

TIRE PRESSURE			
		FRONT	REAR
MIN.	All models except Mossy Oak and LTD	69 kPa (10 PSI)	83 kPa (12 PSI)
	Mossy Oak and LTD models	83 kPa (12 PSI)	
MAX. (Use when total load is greater than 180 kg (400 lb))		83 kPa (12 PSI)	152 kPa (22 PSI)

NOTE: Although the tires are specifically designed for off-road use, a flat may still occur. Therefore, it is recommended to carry a tire pump and a repair kit.

Tire Inspection

Check tire for damage and wear. Replace if necessary.

⚠ WARNING

Do not rotate tires. The front and rear tires have a different size. The left and right tires have different unidirectional tread patterns.

Tire Replacement

Tires replacement should be performed by an authorized Can-Am dealer.

⚠ WARNING

- Replace tires only with the same type and size as original tires.
- For unidirectional tread pattern, ensure that the tires are installed in the correct direction of rotation.
- Tires should be replaced, by an experienced person, in accordance with tire industry standards and tools.

Tire Mounting on Beadlock Wheels (XT-P Models Only)

1. Mount the tire on wheel.
   1.1 On the opposite side of beadlock, apply tire mounting lube on inner bead of tire and wheel to ensure proper seat when inflating. Mount the inner bead over the wheel like normal.

   NOTICE Mount tire from beadlock side only.

   1.2 Seat tire outer bead in the shoulder of the beadlock inner ring and center the tire.

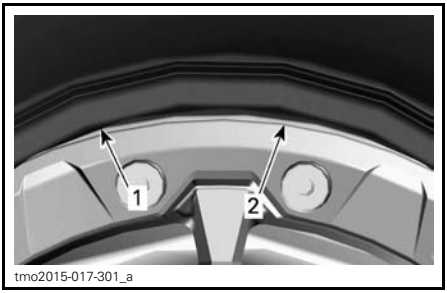

TYPICAL
1. Tire outer bead
2. Beadlock inner ring shoulder

2. Install all beadlock screws. To avoid cross threading, start all screws by hand.

NOTICE Do not use an impact wrench for installing beadlock screws. The risk of screw breaking or screw stripping is high when using an impact wrench.

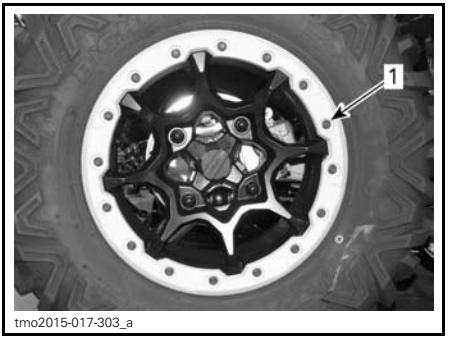

TYPICAL
1. Beadlock to be manually tightened

3. Tighten beadlock screws as per following specification and sequence.

NOTE: To ensure even pressure on the beadlock clamp ring, tighten screws **a few turns at a time**.

TIGHTENING TORQUE	
Beadlock screws (FIRST TORQUE)	3 N•m ± 1 N•m (27 lbf•**in** ± 9 lbf•**in**)

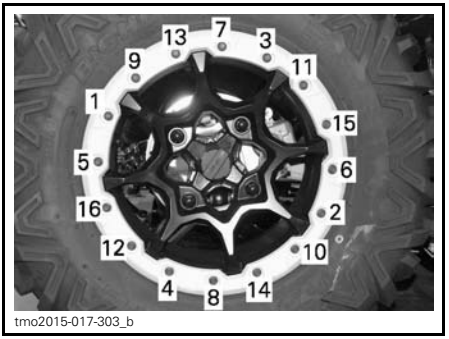

TYPICAL - TIGHTENING SEQUENCE

4. At this time check if the tire is still centered on wheel. Reposition it if necessary.

5. Tighten beadlock screws as per the **second** torque using the same sequence.

TIGHTENING TORQUE	
Beadlock screws (SECOND TORQUE)	8 N•m ± 1 N•m (71 lbf•**in** ± 9 lbf•**in**)

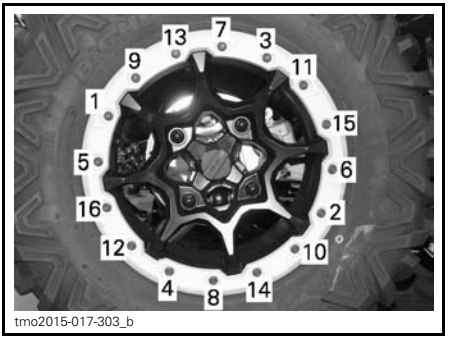

TYPICAL - TIGHTENING SEQUENCE

NOTE: The beadlock clamp ring should be in contact with the beadlock inner ring. The beadlock clamp ring can flex slightly to match the tire bead. IT IS NORMAL.

6. Verify the gap between tire and beadlock clamp ring, it should be practically equal all around the ring.

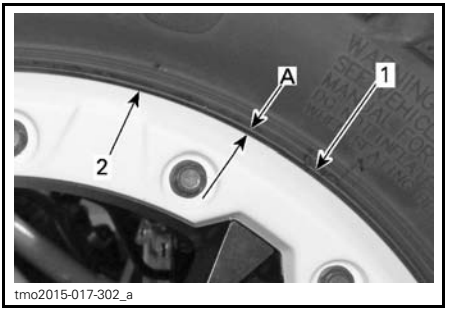

TYPICAL
1. Tire
2. Beadlock clamp ring edge
A. Gap equal all around beadlock clamp ring

If the gap is not acceptable,
- Loosen all screws.
- Check tire position on wheel and reposition it if necessary.
- Restart the torquing sequence as detailed.

7. Torque beadlock screws a **final** time following the indicated sequence.

TIGHTENING TORQUE	
Beadlock screws (FINAL TORQUE)	11 N•m ± 1 N•m (97 lbf•**in** ± 9 lbf•**in**)

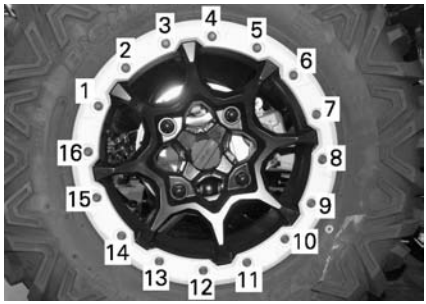

TYPICAL - FINAL TIGHTENING SEQUENCE

8. Inflate tire to seat the inner bead on wheel. Always use safe practices, such as a tire safety cage.

⚠ WARNING

Never exceed tire's recommended maximum pressure for seating beads.

Suspensions

Front Suspension Lubrication

Use SUSPENSION GREASE (P/N 293 550 033) or an equivalent.

Lubricate front A-arms.

There are three grease fittings on each A-arm oriented downwards.

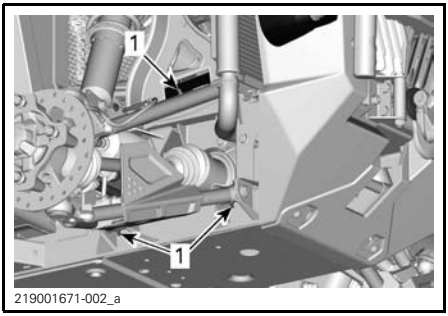

TYPICAL - FRONT SUSPENSION
1. Grease fittings

Suspension Inspection

See an authorized Can-Am dealer if any problem is detected.

Shock Absorbers

Inspect shock absorber for leaks, bump stop wear out or other damages. Verify fasteners are still well tightened.

Front A-Arms

Check A-arms for cracks, bending or other damages.

Rear Trailing Arms

Check trailing arms for distortion, cracks or bending.

ACS Air Filter

ACS Air Filter Access

To access to ACS air filter, remove the following:
- Driver's seat
- LH lateral console panel
- Floor panel.

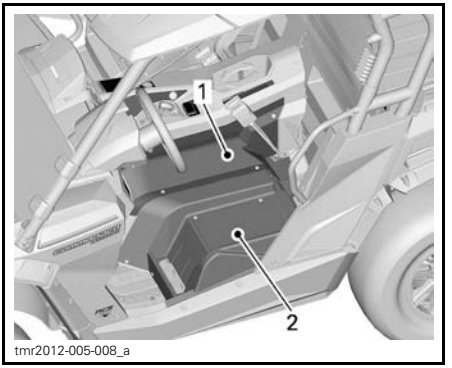

SIDE NET REMOVED FOR CLARITY
1. *LH lateral console panel*
2. *Floor panel*

The ACS compressor is located in front of air reservoirs.

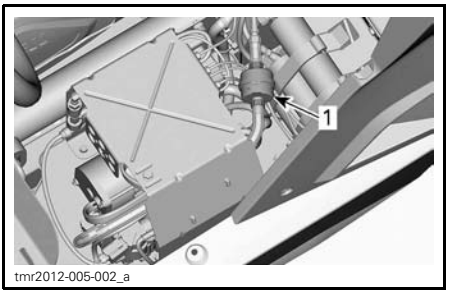

1. *ACS air filter*

ACS Air Filter Replacement

1. Remove and discard clamps securing hoses to air filter.

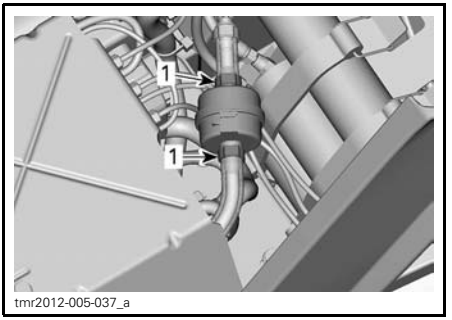

1. *Clamps to be removed*

2. Remove the air filter.

3. Install the new air filter with its attachment towards the compressor.
4. Secure air filter using **new** clamps.

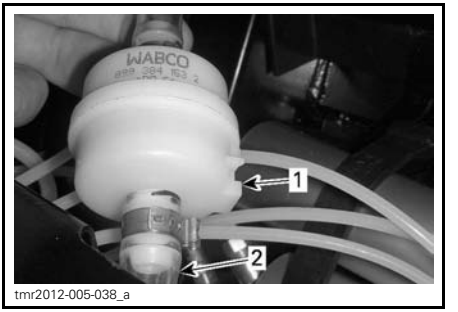

1. *Air filter attachment*
2. *Air hose from compressor*

ACS Hoses and Fittings

ACS Hoses and Fittings Inspection

Check shock hoses for damage.

Check shock fittings for damage.

Check hoses and fittings for air leaks.

Brakes

Brake Fluid Reservoir Level Verification

With vehicle on a level surface, check brake fluid in reservoir for proper level. Brake fluid level should be between MIN.and MAX. marks.

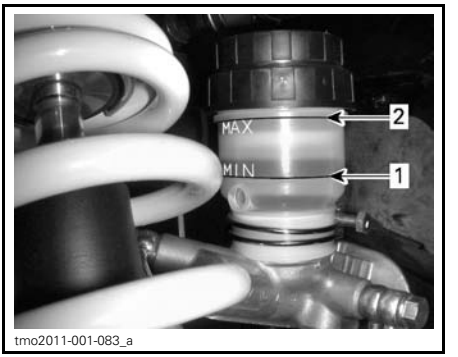

TYPICAL
1. *MIN*
2. *MAX*

NOTE: A low level may indicate leaks or worn brake pads.

Adding Brake Fluid

Clean filler cap before removing.

Add fluid as required. Do not overfill.

NOTE: Ensure filler cap diaphragm is pushed inside the cap before closing the brake fluid reservoir.

Recommended Brake Fluid

Always use brake fluid meeting the specification DOT 4 only.

⚠ WARNING

To avoid serious damage to the braking system, do not use fluids other than the recommended one, nor mix different fluids for topping up.

Brake Inspection

The brake inspection, maintenance and repair should be performed by an authorized Can-Am dealer.

However, verify the following between visits to your dealer:

- Brake fluid level
- Brake system for fluid leaks
- Brake pad wear
- Brake cleanliness.

⚠ WARNING

The brake fluid replacement or brake system maintenance and repairs should be performed by an authorized Can-Am dealer.

Seat Belts

Seat Belt Cleaning

To clean dirt and debris from the seat belts, sponge the straps with mild soap and water. Do not use bleach, dye, or household detergents.

⚠ WARNING

Do not use pressure washer to clean seat belt components. Use of pressure washer can permanently damage seat belt components.

Post-Operation Care

When vehicle is used in salt-water environment rinsing the vehicle with fresh water is necessary to preserve vehicle and its components. Metallic parts lubrication is highly recommended. Use XPS LUBE (P/N 293 600 016) or an equivalent. This must be performed at the end of each operating day.

When vehicle is operated in muddy conditions, rinsing the vehicle is recommended to preserve vehicle and its components.

Vehicle Cleaning and Protection

Never use a high pressure washer to clean the vehicle. USE LOW PRESSURE ONLY (like a garden hose). High pressure can cause damage to electrical or mechanical components.

Pay attention to certain areas where mud or debris can accumulate and potentially cause wear, interferences or promote corrosion. The list includes but is not limited to:

- Around exhaust system and between muffler and muffler cover
- Under and around the fuel tank
- Radiator
- Shock absorbers
- Around front and rear differentials
- Around and underneath engine and gearbox
- Inside wheels
- On top of skid plates.

Painted parts which are damaged should be properly repainted to prevent rust.

When required, wash the body with warm water and soap (only use mild detergent). Apply non-abrasive wax.

NOTICE Never clean plastic parts with strong detergent, degreasing agent, paint thinner, acetone, etc.

STORAGE AND PRESEASON PREPARATION

When a vehicle is not in use for more than 4 months, proper storage is a necessity.

When using your vehicle after storage, a preparation is required.

See an authorized Can-Am dealer, repair shop, or person of your own choosing to have your vehicle prepared for either storage or the preseason.

This page is intentionally blank

TECHNICAL INFORMATION

VEHICLE IDENTIFICATION

The main components of your vehicle (engine and frame) are identified by different serial numbers. It may sometimes become necessary to locate these numbers for warranty purposes or to trace your vehicle in the event of loss. These numbers are required by the authorized Can-Am dealer to complete warranty claims properly. We strongly recommend that you take note of all the serial numbers on your vehicle and supply them to your insurance company.

Vehicle Identification Number



TYPICAL — VEHICLE SERIAL NUMBER LABEL UNDER GLOVE BOX

Engine Identification Number

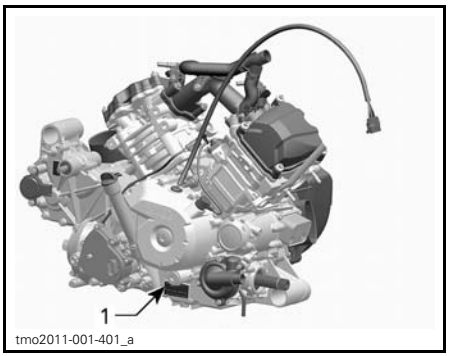

TYPICAL — ENGINE SERIAL NUMBER LABEL

1. EIN (Engine Identification Number)

NOISE EMISSION CONTROL SYSTEM REGULATION

USA and Canada Only

Tampering with Noise Control System Is Prohibited!

U.S. Federal law and Canadian provincial laws may prohibit the following acts or the causing there of:

1. The removal or rendering inoperative by any person other than for purposes of maintenance, repair or replacement of any device or element of design incorporated into any new vehicle for the purpose of noise control prior to its sale or delivery to the ultimate purchaser or while it is in use or
2. The use of the vehicle after such device or element of design has been removed or rendered inoperative by any person.

Among those Acts Presumed to Constitute Tampering Are the Acts Listed Below:

1. Removal or alteration or the puncturing of the muffler or any engine component which conducts removal of engine exhaust gases.
2. Removal or alteration or the puncturing of any part of the intake system.
3. Replacing any moving parts of the vehicle or parts of the exhaust or intake system, with parts other than those specified by the manufacturer.
4. Lack of proper maintenance.

The EC-Declaration of Conformity does not appear in this version of the Operator's Guide.

Please refer to the printed version that was delivered with your vehicle.

SPECIFICATIONS

MODEL		800R	1000
ENGINE			
Engine type		ROTAX® 800R	ROTAX® 1000
		4-stroke, Single Over Head Camshaft (SOHC), liquid cooled	
Number of cylinders		2	
Number of valves		8 valves (mechanical adjustment)	
Valve clearance	Intake	0.06 mm to 0.14 mm (.0024 in to .0055 in)	
	Exhaust	0.11 mm to 0.19 mm (.0043 in to .0075 in)	
Bore		91 mm (3.58 in)	91 mm (3.58 in)
Stroke		61.5 mm (2.42 in)	75 mm (2.95 in)
Displacement		799.9 cm^3 (48.81 in^3)	976 cm^3 (59.56 in^3)
Exhaust system		Spark arrester approved by USDA Forest Service	
Engine air filter		Synthetic paper filter	
LUBRICATION SYSTEM			
Type		Wet sump. Replaceable oil filter	
Oil filter		BRP Rotax® paper type, replaceable	
Engine oil	Capacity (oil change with filter)	2 L (2.1 qt (U.S. liq.))	
	Recommended	For the summer season, use XPS 4-STROKE SYNTH. BLEND OIL (P/N 293 600 121). For all seasons, use XPS 4-STROKE SYNTHETIC OIL (P/N 293 600 112). If not available, use a 5W 40 motor oil that meets the requirements for API service classification SJ, SL, SM or SN	
COOLING SYSTEM			
Coolant	Type	Ethyl glycol/water mix (50% coolant, 50% water). Use the Long life antifreeze (P/N 219 702 685) or (P/N 619 590 204) (Finland, Norway and Sweden) or coolant specifically designed for aluminum engines	
	Capacity	3.85 L (1.02 U.S. gal.)	4.25 L (1.12 U.S. gal.)
CVT TRANSMISSION			
Type		CVT (Continuously Variable Transmission)	
Engagement RPM		1800 RPM	

MODEL		800R	1000
GEARBOX			
Type		Dual range (HI-LO) with PARK, neutral and reverse	
Gearbox oil	Capacity	450 ml (15 U.S. oz)	
	Recommended	XPS synthetic gear oil (P/N 293 600 140) or a 75W 140 API GL-5	
ELECTRICAL SYSTEM			
Magneto generator output		625 W @ 6000 RPM	
Ignition system type		IDI (Inductive Discharge Ignition)	
Ignition timing		Not adjustable	
Spark plug	Quantity	2	
	Make and type	NGK DCPR8E or equivalent	
	Gap	0.7 mm to 0.8 mm (.028 in to .031 in)	
Engine RPM limiter setting		8000 RPM	
Battery	Type	Dry battery type	
	Voltage	12 volts	
	Nominal rating	18 A•h	
	Power starter output	0.7 KW	
Headlights		4 x 60 W	
Taillight		2 x 5/21 W	
Fuses	Main	16 awg	
	Accessories (main)	14 awg	
	ACS (if equipped)	16 awg	
	DPS (if equipped)	40 A	
	Speedometer/tail lamp	10 A	
	Ignition/injection/speed sensor	7.5 A	
	Engine control module (ECM)	5 A	
	4WD Actuator (winch if equipped)	5 A	
	Key switch	5 A	
	Fan (fuse breaker)	25 A	
	European component	5 A	
	Head lamp	30 A	
	DC Outlet	15 A	

MODEL			800R	1000
ELECTRICAL SYSTEM (cont'd)				
Fuses (cont'd)	Relay Driver		5 A	
	Accessories		15 A	
	Fuel pump		5 A	
FUEL SYSTEM				
Fuel delivery	Type		Electronic fuel injection (EFI) with iTC	
Throttle body			54 mm with ETA	
Fuel pump	Type		Electric (in fuel tank)	
Idle speed			1250 ± 100 RPM (not adjustable)	
Fuel	Type		Regular unleaded gasoline	
	Minimum octane		87 Pump Posted AKI (92 RON) - Refer to *FUEL REQUIREMENTS*	
Fuel tank capacity			37.8 L (10 U.S. gal.)	
Fuel remaining when low fuel light turns ON			± 12 L (3.2 U.S. gal.)	
DRIVE SYSTEM				
Drive system type			Selectable 2WD/4WD	
Front Differential oil/rear final drive oil	Capacity	Front	500 ml (17 U.S. oz)	
		Rear	280 ml (9.5 U.S. oz)	
	Type	Front	XPS Synthetic gear oil (75W 90 API GL-5) (P/N 293 600 043) or synthetic oil 75W 90 API GL5	
		Rear	XPS Synthetic gear oil (P/N 293 600 140) or a 75W 140 API GL-5 synthetic gear oil	
Front drive		Base	Visco-lok† auto-locking front differential	
		All models except Base	Visco-lok† QE auto-locking front differential	
Front drive ratio			3.6:1	
Rear drive			Spiral bevel gears/final drive	
Rear drive ratio			3.6:1	
CV joint grease			CV joint grease (P/N 293 550 062)	
Propeller shaft grease			Propeller shaft grease (P/N 293 550 063)	
STEERING				
Steering wheel			Adjustable tilt steering	
Turning radius			244 cm (96.063 in)	
Total toe (vehicle on ground)			0° ± 0.2° (±)	
Camber angle (vehicle on ground)			0.7° positive	

MODEL			800R	1000
FRONT SUSPENSION				
Suspension type		All models except LTD	Double suspension a-arm with dive-control geometry and stabilizer bar	
		LTD	Double suspension a-arm with dive-control geometry with ACS and stabilizer bar	
Preload adjustment type		All models except XT-P and LTD	5 positions cam	
		XT-P	Threaded	
		LTD	No preload adjustment	
Suspension travel			254 mm (10 in)	
Shock absorber	Qty		2	
	Type	All models except XT-P and LTD	Oil/5 spring preload settings	
		XT-P	HPG shocks with piggyback reservoir. QS3† compression and preload adjustments	
		LTD	HPG shock with piggyback reservoir. Compression damping (low speed) and air pressure adjustments	
REAR SUSPENSION				
Suspension type		All models except LTD	Torsional Trailing arm Independant (TTI) with external stabilizer bar	
		LTD	Torsional Trailing arm Independant (TTI) with external stabilizer bar with ACS	
Preload adjustment type		All models except XT-P and LTD	5 positions cam	
		XT-P	Threaded	
		LTD	No preload adjustment	
Suspension travel			254 mm (10 in)	
Shock absorber	Qty		2	
	Type	All models except XT-P and LTD	Oil/5 spring preload settings	
		XT-P	HPG shocks with piggyback reservoir. QS3† compression and preload adjustments	
		LTD	HPG shock with piggyback reservoir. Compression damping (low speed) and air pressure adjustments	

MODEL			800R	1000
BRAKES				
Front brake	Type		Dual 214 mm ventilated disc brakes with hydraulic twin-piston calipers	
Rear brake	Type		Single 214 mm ventilated disc brake with hydraulic twin-piston caliper	
Brake fluid	Capacity		250 ml (8.5 U.S. oz)	
	Type		DOT 4	
Caliper			Floating	
Brake pad material	Front		Metallic	
	Rear		Metallic	
Minimum brake pad thickness			1 mm (.039 in)	
Minimum brake disc thickness	Front		4 mm (.157 in)	
	Rear		4 mm (.157 in)	
Maximum brake disc warpage			0.2 mm (.01 in)	
TIRES				
Pressure	Front	All models except Mossy Oak and LTD	Maximum: 83 kPa (12 PSI) Minimum: 69 kPa (10 PSI)	
		Mossy Oak LTD	Maximum: 83 kPa (12 PSI) Minimum: 83 kPa (12 PSI)	
	Rear		Maximum: 152 kPa (22 PSI) Minimum: 83 kPa (12 PSI)	
Minimum tire thread depth			3 mm (.118 in)	
Tire size	Front	Base/XT-P	27 x 9 x 12 (in)	
		Al models except Base and XT-P	27 x 9 x 14 (in)	
	Rear	Base/XT-P	27 x 11 x 12 (in)	
		Al models except Base and XT-P	27 x 11 x 14 (in)	

MODEL			800R	1000
WHEELS				
Type		Base	Steel	
		XT-P	Aluminum beadlock wheels	
		All models except Base and XT-P	Cast Aluminum	
Rim size	Front	Base	12 x 6 (in)	
		XT-P	12 x 6 (in)	
		All models except Base and XT-P	14 x 7 (in)	
	Rear	Base	12 x 8 (in)	
		XT-P	12 x 7.5 (in)	
		All models except Base and XT-P	14 x 8.5 (in)	
Wheel nuts torque			100 N•m ± 10 N•m (74 lbf•ft ± 7 lbf•ft)	
CHASSIS				
Cage type			50 mm (2 in) diameter, high strength steel, ROPS-approved cage	
DIMENSIONS				
Overall length		Base DPS	300.4 cm (118.3 in)	
		All models except Base and DPS	305.3 cm (120.2 in)	
Overall width		Base/DPS	148.9 cm (58.6 in)	
		All models except Base and DPS	158.7 cm (62.5 in)	
Overall height			182.9 cm (72 in)	
Wheelbase			192.4 cm (75.8 in)	
Wheel track	Front		125.7 cm (49.5 in)	
	Rear		121.9 cm (48 in)	
Ground clearance		All models except Mossy Oak Hunting Edition	27.9 cm (11 in)	
		Mossy Oak Hunting Edition	25.4 cm (10 in)	

MODEL			800R	1000
LOADING CAPACITY AND WEIGHT				
Dry weight			584 kg (1,287 lb)	
Weight distribution (front/rear)			44/56	
Cargo box capacity	Total		272 kg (600 lb)	
	Upper		181 kg (400 lb)	
	Lower		272 kg (600 lb)	
Total vehicle load allowed (including driver, passenger, all other loads and added accessories)		All models except LTD and Mossy Oak Hunting Edition	363 kg (800 lb)	
		LTD model	340 kg (750 lb)	
		Mossy Oak Hunting Edition	321 kg (707 lb)	
Gross vehicle weight rating		Base	994 kg (2,191 lb)	-
		DPS	1 004 kg (2,213 lb)	
		XT	1 046 kg (2,306 lb)	
		XT-P	-	1 047 kg (2,308 lb)
		LTD	-	1 063 kg (2,344 lb)
		Mossy Oak Hunting Edition	-	1 063 kg (2,344 lb)
Towing capacity			680 kg (1,500 lb)	
Hitch support			50.8 mm (2 in) x 50.8 mm (2 in)	

This page is intentionally blank

TROUBLESHOOTING

TROUBLESHOOTING GUIDELINES

CVT BELT IS SLIPPING

1. Water has entered in the CVT.
   – *Refer to SPECIAL PROCEDURES subsection.*

E IS DISPLAYED ON TRANSMISSION POSITION DISPLAY

1. Shift lever is between 2 positions.
   – *Properly position the shift lever in the desired position.*
2. Shift lever is not properly adjusted.
   – *Contact an authorized Can-Am dealer.*
3. Electrical communication error.
   – *Contact an authorized Can-Am dealer.*

ENGINE DOES NOT TURN

1. Ignition switch is in the OFF position.
   – *Place switch to either ON position.*
2. Shift lever is not set on PARK or NEUTRAL.
   – *Set shift lever to either in PARK or in NEUTRAL or press the brake pedal.*
3. Burnt fuse.
   – *Check fuses.*
4. Weak battery or loose connections.
   – *Check charging system fuse.*
   – *Check fault message in cluster.*
   – *Check battery connections and terminals condition.*
   – *Have the battery checked by an authorized Can-Am dealer.*
5. Defective engine start button.
   – *Contact an authorized Can-Am dealer.*
6. Defective starter solenoid.
   – *Contact an authorized Can-Am dealer.*
7. D.E.S.S. key not recognized is displayed in the multifunction gauge.
   – *Clean D.E.S.S. key.*

ENGINE TURNS OVER BUT FAILS TO START

1. Flooded engine (spark plug wet when removed).
   – *(If the engine does not start and it is fuel-flooded, the drowned mode can be activated to prevent fuel injection and to cut ignition while cranking. Proceed as follows:*
   • Insert key in ignition switch and turn to either ON position.
   • Press completely and HOLD accelerator pedal.
   • Press the engine START button.
   The engine should be cranked for 10 seconds. Release engine START button.
   Release accelerator pedal and start/crank engine again to allow starting.
   If it does not work:
   • Remove the spark plugs. Refer to SPARK PLUGS in the MAINTENANCE PROCEDURES section.
   • Crank engine several times.
   • Install new spark plugs if possible or clean and dry spark plugs.
   • If engine does not start, seek service from an authorized Can-Am dealer, repair shop, or person of your own choosing for maintenance, repair, or replacement. Please refer to the US EPA EMISSIONS-RELATED WARRANTY contained herein for information about warranty claims.

2. No fuel to the engine (spark plug dry when removed).
   – *Check fuel tank level.*
   – *Check fuel pump fuse.*
   – *Obstructed fuel pump pre-filter or fuel pump failure. Seek service from an authorized Can-Am dealer, repair shop, or person of your own choosing for maintenance, repair, or replacement. Please refer to the US EPA EMISSIONS-RELATED WARRANTY contained herein for information about warranty claims.*
3. Spark plug/ignition (no spark).
   – *Check ignition fuse.*
   – *Remove spark plug then reconnect to ignition coil.*
   – *Start engine with spark plug grounded to the engine away from spark plug hole. If no spark appears, replace spark plug.*
   – *If trouble persists, seek service from an authorized Can-Am dealer, repair shop, or person of your own choosing for maintenance, repair, or replacement. Please refer to the US EPA EMISSIONS-RELATED WARRANTY contained herein for information about warranty claims.*

ENGINE LACKS ACCELERATION OR POWER

1. Seat belt not buckled properly. Check cluster message.
   – *Buckle up seat belt.*
2. Fouled or damaged spark plug.
   – *Replace spark plugs.*
3. Engine air filter plugged or dirty.
   – *Check air filter and replace if necessary.*
   – *Check deposits in engine air filter housing.*

ENGINE LACKS ACCELERATION OR POWER (cont'd)

4. Water in CVT
   – *Drain water from CVT. Refer to SPECIAL PROCEDURES subsection.*
5. CVT dirty or worn-out.
   – *Contact an authorized Can-Am dealer.*
6. Lack of fuel
   – *Dirty or clogged fuel pump pre-filter. Seek service from an authorized Can-Am dealer, repair shop, or person of your own choosing for maintenance, repair, or replacement. Please refer to the US EPA EMISSIONS-RELATED WARRANTY contained herein for information about warranty claims.*
7. Engine is in limp home mode.
   – *Check multifunction gauge display for messages.*
   – *Multifunction gauge CHECK ENGINE indicator lamp is on and display shows LIMP HOME, seek service from an authorized Can-Am dealer, repair shop, or person of your own choosing for maintenance, repair, or replacement. Please refer to the US EPA EMISSIONS-RELATED WARRANTY contained herein for information about warranty claims.*

ENGINE OVERHEATS

1. Low coolant level in cooling system.
   – *Check coolant level and refill. See MAINTENANCE PROCEDURES. Seek service from an authorized Can-Am dealer, repair shop, or person of your own choosing for maintenance, repair, or replacement. Please refer to the US EPA EMISSIONS-RELATED WARRANTY contained herein for information about warranty claims*
2. Cooling fan is not working.
   – *Ensure cooling fan is not jammed and working properly.*
   – *Check fan fuse. See FUSES in the MAINTENANCE PROCEDURES subsection.*
3. Dirty radiators fins.
   – *Check and clean radiator fins. See MAINTENANCE PROCEDURES subsection.*

ENGINE MISFIRE

1. Fouled/damaged/worn spark plug.
   – *Replace spark plugs as required.*
2. Water in fuel.
   – *Drain fuel system and refill with fresh fuel.*

THE RPM INCREASES BUT THE VEHICLE DOES NOT MOVE

1. Water in the CVT.
   – *Drain water from CVT. See SPECIAL PROCEDURES subsection.*
2. CVT dirty or worn-out or belt failure.
   – *Contact an authorized Can-Am dealer.*

PARTIAL OR NO RESPONSE FROM THE ACCELERATOR PEDAL INPUTS (CHECK ENGINE IS ON AND PPS FAULT MESSAGE IS DISPLAYED)

1. Partial failure of the accelerator pedal sensors (PPS).
   – *Use the override switch to retrieve accelerator pedal normal operation. Contact an authorized Can-Am dealer.*
2. Total failure of the accelerator pedal sensors (PPS).
   – *Use the override switch to bypass the accelerator pedal in order to move vehicle. Contact an authorized Can-Am dealer.*

ACS OVERHEAT IS DISPLAYED IN GAUGE

1. ACS compressor was used too much over a short period of time.
   – *Wait for overheat message* ACS OVERHEAT *to disappear from display.*
   – *If message does not disappear, contact an authorized Can-Am dealer.*

ACS FAULT IS DISPLAYED IN GAUGE

1. A leak or problem in the ACS system is detected.
   – *Contact an autorized Can Am dealer.*

MESSAGES IN MULTIFUNCTION GAUGE

If an abnormal engine condition occurs, the following messages can be combined with a pilot lamp.

MESSAGE	DESCRIPTION
D.E.S.S. KEY NOT RECOGNIZED	D.E.S.S. key requires cleaning.
BAD KEY	Wrong key used in the ignition switch. Use the right key for the vehicle.
CHECK ENGINE	All active or previously activated faults that require attention. No engine limitation engaged.
LIMP HOME	Critical faults requiring diagnostic as soon as possible. An engine limitation is engaged and/or the engine behavior is modified.
ECM CRC ERROR	Error message from ECM.
TPS FAULT	Throttle body fault, generally followed by a Limp Home message.
BRAKE SWITCH FAULT	Brake signal fault.
ECM NOT RECOGNIZED	Message displayed when the gauge is unable to identify the ECM.
CHECK DPS (models with DPS)	Check engine pilot light on. Indicates that the DPS (Dynamic Power Steering) does not work properly. See an authorized Can-Am dealer.
PPS FAULT	When one or both sensor of the PPS is/are faulty, erratic or out of range or that the ratio between the two is incorrect, the message will be displayed and the check engine will be lit.
MANUAL LIMP HOME	When the PPS Limp Home is engaged, the message will be displayed.
FUEL SENDER RANGE PERFORMANCE	When the fuel sender resistor value is out of range the multifunction gauge (analog/digital) will detect it and display the message.
ACS FAULT (LTD model only)	Leak or problem detected in the ACS system.
ACS OVERHEAT (LTD model only)	ACS compressor overheated. Do not run compressor for more than 2 minutes. Let compressor cool down.

WARRANTY

BRP LIMITED WARRANTY USA AND CANADA: 2017 CAN-AM® SSV

1) SCOPE OF THE LIMITED WARRANTY

Bombardier Recreational Products Inc. ("BRP")* warrants its 2017 Can-Am side-by-side vehicles ("SSV") sold by authorized Can-Am SSV dealers (as hereinafter defined) in the United States of America ("USA") and in Canada from defects in material or workmanship for the period and under the conditions described below. This limited warranty will become null and void if: (1) the SSV was used for racing or any other competitive activity, at any point, even by a previous owner; or (2) the SSV has been altered or modified in such a way so as to adversely affect its operation, performance or durability, or has been altered or modified to change its intended use.

Non-factory installed parts and accessories are not covered under this limited warranty. Please refer to the applicable parts and accessories limited warranty text.

2) LIMITATIONS OF LIABILITY

THIS WARRANTY IS EXPRESSLY GIVEN AND ACCEPTED IN LIEU OF ANY AND ALL OTHER WARRANTIES, EXPRESSED OR IMPLIED, INCLUDING WITHOUT LIMITATION ANY WARRANTY OF MERCHANTABILITY OR FITNESS FOR A PARTICULAR PURPOSE. TO THE EXTENT THAT THEY CANNOT BE DISCLAIMED, THE IMPLIED WARRANTIES ARE LIMITED IN DURATION TO THE LIFE OF THE EXPRESS WARRANTY. INCIDENTAL AND CONSEQUENTIAL DAMAGES ARE EXCLUDED FROM COVERAGE UNDER THIS WARRANTY. SOME STATES/ PROVINCES DO NOT ALLOW FOR THE DISCLAIMERS, LIMITATIONS AND EXCLUSIONS IDENTIFIED ABOVE, AS A RESULT, THEY MAY NOT APPLY TO YOU. THIS WARRANTY GIVES YOU SPECIFIC RIGHTS, AND YOU MAY ALSO HAVE OTHER LEGAL RIGHTS WHICH MAY VARY FROM STATE TO STATE, OR PROVINCE TO PROVINCE.

Neither the distributor, any BRP dealer nor any other person has been authorized to make any affirmation, representation or warranty regarding the product, other than those contained in this limited warranty, and if made, shall not be enforceable against BRP. BRP reserves the right to modify this limited warranty at any time, being understood that such modification will not alter the warranty conditions applicable to the products sold while this warranty is in effect.

3) EXCLUSIONS – ARE NOT WARRANTED

The following are not warranted under any circumstances:

- Normal wear and tear;
- Routine maintenance items, tune ups, adjustments;
- Damage caused by failure to provide proper maintenance and/or storage, as described in the Operator's Guide;
- Damage resulting from removal of parts, improper repairs, service, maintenance, modifications or use of parts not manufactured or approved by BRP or resulting from repairs done by a person that is not an authorized servicing Can-Am SSV dealer;
- Damage caused by abuse, abnormal use, neglect or operation of the product in a manner inconsistent with the recommended operation described in the Can-Am SSV Operator's Guide;

– Damage resulting from accident, submersion, fire, theft, vandalism or any act of God;
– Operation with fuels, oils or lubricants which are not suitable for use with the product (see the Operator's Guide);
– Damages from rust, corrosion or exposure to the elements;
– Damage resulting from water or snow ingestion;
– Incidental or consequential damages, or damages of any kind including without limitation towing, storage, telephone, rental, taxi, inconvenience, insurance coverage, loan payments, loss of time, loss of income.

4) WARRANTY COVERAGE PERIOD

This limited warranty will be in effect from (1) the date of delivery to the first retail consumer or (2) the date the product is first put into use, whichever occurs first and for the following period:

– SIX (6) CONSECUTIVE MONTHS, for private use or commercial use owners. For emission-related components; please also refer to the *US EPA EMISSION-RELATED WARRANTY* contained herein.

The repair or replacement of parts or the performance of service under this warranty does not extend the life of this warranty beyond its original expiration date.

5) CONDITIONS TO HAVE WARRANTY COVERAGE

This warranty coverage is available **only** if **each** of the following conditions has been fulfilled:

– The 2017 Can-Am SSV must be purchased as new and unused by its first owner from a Can-Am SSV dealer authorized to distribute Can-Am SSV's in the country in which the sale occurred ("Can-Am SSV dealer");
– The BRP specified pre-delivery inspection process must be completed and documented and signed by the purchaser;
– The 2017 Can-Am SSV must have undergone proper registration by an authorized Can-Am SSV dealer;
– The 2017 Can-Am SSV must be purchased in the country in which the purchaser resides;
– Routine maintenance outlined in the Operator's Guide must be timely performed in order to maintain warranty coverage. BRP reserves the right to make warranty coverage contingent upon proof of proper maintenance.

BRP will not honor this limited warranty to any private use owner or commercial use owner if one of the preceding conditions has not been met. Such limitations are necessary in order to allow BRP to preserve both the safety of its products, and also that of its consumers and the general public.

6) WHAT TO DO TO OBTAIN WARRANTY COVERAGE

The customer must cease using the SSV upon the appearance of an anomaly. The customer must notify a servicing BRP dealer within three (3) days of the appearance of a defect, and provide it with reasonable access to the product and reasonable opportunity to repair it. The customer must also present to the authorized BRP dealer, proof of purchase of the product and must sign the repair/work order prior to starting the repair in order to validate the warranty repair. All parts replaced under this limited warranty become the property of BRP.

7) WHAT BRP WILL DO

BRP's obligations under this warranty are limited to, at its sole discretion, repairing parts found defective under normal use, maintenance and service, or replacing such parts with new genuine Can-Am SSV parts without charge for parts and labor, at any authorized BRP dealer during the warranty coverage period under the conditions described herein. BRP's responsibility is limited to making the required repairs or replacements of parts. No claim of breach of warranty shall be cause for cancellation or rescission of the sale of the SSV to the owner.

In the event that service is required outside of the country of original sale, the owner will bear responsibility for any additional charges due to local practices and conditions, such as, but not limited to, freight, insurance, taxes, license fees, import duties, and any and all other financial charges, including those levied by governments, states, territories and their respective agencies.

BRP reserves the right to improve or modify products from time to time without assuming any obligation to modify products previously manufactured.

8) ADDITIONAL SUPPLIER WARRANTIES

A GPS receiver may be supplied by BRP as standard equipment on certain 2017 Can-Am SSV. The GPS receiver is covered under BRP's limited warranty policy. Additional warranty coverage if offered by the GPS receiver "supplier" that is longer than BRP's limited warranty is to be dealt by the dealer or consumer directly with the GPS receiver "supplier".

9) TRANSFER

If the ownership of a product is transferred during the warranty coverage period, this limited warranty, subject to its terms and conditions, shall also be transferred and be valid for the remaining coverage period provided BRP or an authorized Can-Am SSV Distributor/Dealer receives a proof that the former owner agreed to the transfer of ownership, in addition to the co-ordinates of the new owner.

10) CONSUMER ASSISTANCE

In the event of a controversy or a dispute in connection with this limited warranty, BRP suggests that you try to resolve the issue at the dealership level. We recommend discussing the issue with the authorized dealer's service manager or owner.

If the matter still remains unresolved, contact BRP by filling out the customer contact form at www.brp.com or contact BRP by mail at one of the addresses listed under the *CONTACT US* section of this guide.

* In the USA, products are distributed and serviced by BRP US Inc.

© 2016 Bombardier Recreational Products Inc. All rights reserved.
® Trademark of Bombardier Recreational Products Inc. or its affiliates.

US EPA EMISSION-RELATED WARRANTY

Bombardier Recreational Products Inc. ("BRP")* warrants to the ultimate purchaser and each subsequent purchaser that this new vehicle, including all parts of its exhaust emission control system and its evaporative emission control system, meets two conditions:

1. It is designed, built, and equipped so it conforms at the time of sale to the ultimate purchaser with the requirements of 40 CFR 1051 and 40 CFR 1060.
2. It is free from defects in materials and workmanship that may keep it from meeting the requirements of 40 CFR 1051 and 40 CFR 1060.

Where a warrantable condition exists, BRP will repair or replace, as it elects, any part or component with a defect in materials or workmanship that would increase the engine's emissions of any regulated pollutant within the stated warranty period at no cost to the owner, including expenses related to diagnosing and repairing or replacing emission-related parts. All defective parts replaced under this warranty become the property of BRP.

For all emission-related warranty claims, BRP is limiting the diagnosis and repair of emission-related parts to the authorized Can-Am dealers, unless for emergency repairs as required by item 2 of the following list.

As a certifying manufacturer, BRP will not deny emission-related warranty claims based on any of the following:

1. Maintenance or other service BRP or BRP's authorized facilities performed.
2. Engine/equipment repair work that an operator performed to correct an unsafe, emergency condition attributable to BRP as long as the operator tries to restore the engine/equipment to its proper configuration as soon as possible.
3. Any action or inaction by the operator unrelated to the warranty claim.
4. Maintenance that was performed more frequently than BRP specify.
5. Anything that is BRP fault or responsibility.
6. The use of any fuel that is commonly available where the equipment operates unless BRP written maintenance instructions state that this fuel would harm the equipment's emission control system and operators can readily find the proper fuel. See maintenance information section and fuel requirements of fueling section.

Emission-Related Warranty Period

The emission-related warranty is valid for the following period whichever comes first:

	HOURS	MONTHS	KILOMETERS
Exhaust emission-related components	500	30	5000
Evaporative emission-related components	N/A	24	N/A

Components Covered

The emission-related warranty covers all components whose failure would increase an engine's emissions of any regulated pollutant, including the following listed components:

1. For exhaust emissions, emission-related components include any engine parts related to the following systems:
   - Air-induction system
   - Fuel system
   - Ignition system
   - Exhaust gas recirculation systems
2. The following parts are also considered emission-related components for exhaust emissions:
   - Aftertreatment devices
   - Crankcase ventilation valves
   - Sensors
   - Electronic control units
3. The following parts are considered emission-related components for evaporative emissions:
   - Fuel tank
   - Fuel cap
   - Fuel line
   - Fuel line fittings
   - Clamps*
   - Pressure relief valves*
   - Control valves*
   - Control solenoids*
   - Electronic controls*
   - Vacuum control diaphragms*
   - Control cables*
   - Control linkages*
   - Purge valves
   - Vapor hoses
   - Liquid/vapor separator
   - Carbon canister
   - Canister mounting brackets
   - Carburetor purge port connector
4. Emission-related components also include any other part whose only purpose is to reduce emissions or whose failure will increase emissions without significantly degrading engine/equipment performance.

*As related to the evaporative emission control system

Limited Applicability

As a certifying manufacturer, BRP may deny emission-related warranty claims for failures that have been caused by the owner's or operator's improper maintenance or use, by accidents for which the manufacturer has no responsibility, or by acts of God. For example, an emission-related warranty claim need not be honored for failures that have been directly caused by the operator's abuse of the engine/equipment or the operator's use of the engine/equipment in a manner for which it was not designed and are not attributable to the manufacturer in any way.

* In the USA, products are distributed and serviced by BRP US Inc.

BRP INTERNATIONAL LIMITED WARRANTY: 2017 CAN-AM® SSV

1) SCOPE OF THE LIMITED WARRANTY

Bombardier Recreational Products Inc. (“BRP”)* warrants its 2017 Can-Am SSV sold by Can-Am SSV distributors or dealers authorized by BRP to distribute Can-Am SSVs ("Can-Am SSV Distributor/Dealer") outside of the fifty United States, Canada, member states of the European Economic Area (which is comprised of the states of the European Union plus Norway, Iceland and Liechtenstein) (“EEA”), member states of the Commonwealth of the Independent States (including Ukraine and Turkmenistan) (“CIS”) and Turkey, from defects in material or workmanship for the period and under the conditions described below.

Non-factory installed parts and accessories are not covered under this limited warranty. Please refer to the applicable parts and accessories limited warranty text.

This limited warranty will become null and void if: (1) The SSV was used for racing or any other competitive activity, at any point, even by a previous owner; or (2) the SSV has been altered or modified in such a way so as to adversely affect its operation, performance or durability, or has been altered or modified to change its intended use.

2) LIMITATIONS OF LIABILITY

TO THE EXTENT PERMITTED BY LAW, THIS WARRANTY IS EXPRESSLY GIVEN AND ACCEPTED IN LIEU OF ANY AND ALL OTHER WARRANTIES, EXPRESSED OR IMPLIED, INCLUDING WITHOUT LIMITATION ANY WARRANTY OF MERCHANTABILITY OR FITNESS FOR A PARTICULAR PURPOSE. TO THE EXTENT THAT THEY CANNOT BE DISCLAIMED, THE IMPLIED WARRANTIES ARE LIMITED IN DURATION TO THE LIFE OF THE EXPRESS WARRANTY. INCIDENTAL AND CONSEQUENTIAL DAMAGES ARE EXCLUDED FROM COVERAGE UNDER THIS WARRANTY. SOME JURISDICTIONS DO NOT ALLOW FOR THE DISCLAIMERS, LIMITATIONS AND EXCLUSIONS IDENTIFIED ABOVE, AS A RESULT, THEY MAY NOT APPLY TO YOU. THIS WARRANTY GIVES YOU SPECIFIC RIGHTS, AND YOU MAY ALSO HAVE OTHER LEGAL RIGHTS WHICH MAY VARY FROM COUNTRY TO COUNTRY. (FOR PRODUCTS PURCHASED IN AUSTRALIA SEE CLAUSE 4 BELOW).

Neither the Can-Am SSV Distributor/Dealer nor any other person has been authorized to make any affirmation, representation or warranty regarding the product, other than those contained in this limited warranty, and if made, shall not be enforceable against BRP.

BRP reserves the right to modify this warranty at any time, being understood that such modification will not alter the warranty conditions applicable to the products sold while this warranty is in effect.

3) EXCLUSIONS ARE NOT WARRANTED

The following are not warranted under this limited warranty under any circumstances:

- Normal wear and tear;
- Routine maintenance items, tune ups, adjustments (parts and labor);
- Damage caused by negligence or failure to provide proper maintenance and/or storage, as described in the Operator's Guide;

– Damage resulting from removal of parts, improper repairs, service, maintenance, modifications or use of parts not manufactured or approved by BRP or resulting from repairs done by a person that is not an authorized servicing Can-Am SSV Distributor/Dealer;
– Damage caused by abuse, abnormal use, neglect or operation of the product in a manner inconsistent with the recommended operation described in the Operator's Guide;
– Damage resulting from accident, submersion, fire, theft, vandalism or any act of God;
– Operation with fuels, oils or lubricants which are not suitable for use with the product (see the Operator's Guide);
– Damage resulting from rust, corrosion or exposure to the elements;
– Damage resulting from water or snow ingestion;
– Incidental or consequential damages, or damages of any kind including without limitation towing, transportation expenses, storage, telephone, rental, taxi, inconvenience, insurance coverage, loan payments, loss of time, loss of income or time missed for downtime experience due to service work.

4) WARRANTY COVERAGE PERIOD

This warranty will be in effect from (1) the date of delivery to the first retail consumer or (2) the date the product is first put into use, whichever occurs first and for a period of:

– SIX (6) CONSECUTIVE MONTHS for private use or commercial use.

The repair or replacement of parts or the performance of service under this warranty does not extend the life of this warranty beyond its original expiration date.

FOR PRODUCTS SOLD IN AUSTRALIA ONLY

Nothing in these Warranty terms and conditions should be taken to exclude, restrict or modify the application of any condition, warranty, guarantee, right or remedy conferred or implied under the Competition and Consumer Act 2010 (Cth), including the Australian Consumer Law or any other law, where to do so would contravene that law, or cause any part of these terms and conditions to be void. The benefits given to you under this limited warranty hereto are in addition to other rights and remedies that you have under Australian law.

Our goods come with guarantees that cannot be excluded under the Australian Consumer Law. You are entitled to a replacement or refund for a major failure and for compensation for any other reasonably foreseeable loss or damage. You are also entitled to have the goods repaired or replaced if the goods fail to be of acceptable quality and the failure does not amount to a major failure.

5) CONDITIONS TO HAVE WARRANTY COVERAGE

This warranty coverage is available **only** if **each** of the following conditions has been fulfilled:

– The 2017 Can-Am SSV must be purchased as new and unused by its first owner from a Can-Am SSV Distributor/Dealer authorized to distribute Can-Am SSVs in the country in which the sale occurred;
– The BRP specified pre-delivery inspection process must be completed and documented;

– The product must have undergone proper registration by an authorized Can-Am SSV Distributor/Dealer;
– The 2017 Can-Am SSV must be purchased in the country or union of countries in which the purchaser resides; and
– Routine maintenance outlined in the Operator's Guide must be timely performed in order to maintain warranty coverage. BRP reserves the right to make warranty coverage contingent upon proof of proper maintenance.

BRP will not honor this limited warranty to any private use owner or commercial use owner if one of the preceding conditions has not been met. Such limitations are necessary in order to allow BRP to preserve both the safety of its products, and also that of its consumers and the general public.

6) WHAT TO DO TO OBTAIN WARRANTY COVERAGE

The customer must cease using the SSV upon the appearance of an anomaly. The customer must notify a servicing Can-Am SSV Distributor/Dealer within two (2) days of the appearance of a defect, and provide it with reasonable access to the product and reasonable opportunity to repair it. The customer must also present to the authorized Can-Am SSV Distributor/Dealer proof of purchase of the product and must sign the repair/work order prior to starting the repair in order to validate the warranty repair. All parts replaced under this limited warranty become the property of BRP.

Note that the notification period is subject to the applicable national or local legislation in customer's country.

7) WHAT BRP WILL DO

To the extent permitted by law, BRP's obligations under this warranty are limited to, at its sole discretion, repairing parts found defective under normal use, maintenance and service; or replacing such parts with new genuine Can-Am SSV parts without charge for parts and labour, at any authorized Can-Am SSV Distributor/Dealer during the warranty coverage period under the conditions described herein. BRP's responsibility is limited to making the required repairs or replacements of parts. No claim of breach of warranty shall be cause for cancellation or rescission of the sale of the Can-Am SSV to the owner. You may have other legal rights which may vary from country to country.

In the event that service is required outside of the country of original sale, the owner will bear responsibility for any additional charges due to local practices and conditions, such as, but not limited to, freight, insurance, taxes, license fees, import duties, and any and all other financial charges, including those levied by governments, states, territories and their respective agencies.

BRP reserves the right to improve or modify products from time to time without assuming any obligation to modify products previously manufactured.

8) TRANSFER

If the ownership of a product is transferred during the warranty coverage period, this limited warranty, subject to its terms and conditions, shall also be transferred and be valid for the remaining coverage period provided BRP or an authorized Can-Am SSV Distributor/Dealer receives a proof that the former owner agreed to the transfer of ownership, in addition to the coordinates of the new owner.

9) CONSUMER ASSISTANCE

In the event of a controversy or a dispute in connection with this limited warranty, BRP suggests that you try to resolve the issue at the Can-Am SSV Distributor/Dealer level. We recommend discussing the issue with the authorized Can-Am SSV Distributor/Dealer's service manager or owner.

If the matter still remains unresolved, contact BRP by filling out the customer contact form at www.brp.com or contact BRP by mail at one of the addresses listed under the *CONTACT US* section of this guide.

* For the territory covered by this limited warranty, products are distributed and serviced by Bombardier Recreational Products Inc. or its affiliates.

© 2016 Bombardier Recreational Products Inc. All rights reserved.
® Trademark of Bombardier Recreational Products Inc. or its affiliates.

BRP LIMITED WARRANTY FOR THE EUROPEAN ECONOMIC AREA, THE COMMONWEALTH OF THE INDEPENDANT STATES AND TURKEY: 2017 CAN-AM® SSV

1) SCOPE OF THE LIMITED WARRANTY

Bombardier Recreational Products Inc. ("BRP")* warrants its 2017 Can-Am SSVs sold by Can-Am SSV distributors or dealers authorized by BRP to distribute Can-Am SSVs ("Can-Am SSV Distributor/Dealer").in member states of the European Economic Area (which is comprised of the member states of the European Union plus Norway, Iceland and Liechtenstein) ("EEA"), in member states of the Commonwealth of the Independent States (including Ukraine and Turkmenistan) ("CIS") and Turkey from defects in material or workmanship for the period and under the conditions described below.

Non-factory installed parts and accessories are not covered under this limited warranty. Please refer to the applicable parts and accessories limited warranty text.

This limited warranty will become null and void if: (1) The SSV was used for racing or any other competitive activity, at any point, even by a previous owner; or (2) the SSV has been altered or modified in such a way so as to adversely affect its operation, performance or durability, or has been altered or modified to change its intended use.

2) LIMITATIONS OF LIABILITY

TO THE EXTENT PERMITTED BY LAW, THIS WARRANTY IS EXPRESSLY GIVEN AND ACCEPTED IN LIEU OF ANY AND ALL OTHER WARRANTIES, EXPRESSED OR IMPLIED, INCLUDING WITHOUT LIMITATION ANY WARRANTY OF MERCHANTABILITY OR FITNESS FOR A PARTICULAR PURPOSE. TO THE EXTENT THAT THEY CANNOT BE DISCLAIMED, THE IMPLIED WARRANTIES ARE LIMITED IN DURATION TO THE LIFE OF THE EXPRESS WARRANTY. INCIDENTAL AND CONSEQUENTIAL DAMAGES ARE EXCLUDED FROM COVERAGE UNDER THIS WARRANTY. SOME JURISDICTIONS DO NOT ALLOW FOR THE DISCLAIMERS, LIMITATIONS AND EXCLUSIONS IDENTIFIED ABOVE, AS A RESULT, THEY MAY NOT APPLY TO YOU. THIS WARRANTY GIVES YOU SPECIFIC RIGHTS, AND YOU MAY ALSO HAVE OTHER LEGAL RIGHTS WHICH MAY VARY FROM COUNTRY TO COUNTRY.

Neither the Can-Am SSV Distributor/Dealer nor any other person has been authorized to make any affirmation, representation or warranty regarding the product, other than those contained in this limited warranty, and if made, shall not be enforceable against BRP.

BRP reserves the right to modify this warranty at any time, being understood that such modification will not alter the warranty conditions applicable to the products sold while this warranty is in effect.

3) EXCLUSIONS – ARE NOT WARRANTED

The following are not warranted under this limited warranty under any circumstances:

– Normal wear and tear;
– Routine maintenance items, tune ups, adjustments (parts and labor);

– Damage caused by negligence or failure to provide proper maintenance and/or storage, as described in the Operator's Guide;
– Damage resulting from removal of parts, improper repairs, service, maintenance, modifications or use of parts not manufactured or approved by BRP or resulting from repairs done by a person that is not an authorized servicing Can-Am SSV Distributor/Dealer;
– Damage caused by abuse, abnormal use, neglect or operation of the product in a manner inconsistent with the recommended operation described in the Operator's Guide;
– Damage resulting from accident, submersion, fire, snow or water ingestion, theft, vandalism or any act of God;
– Operation with fuels, oils or lubricants which are not suitable for use with the product (see the Operator's Guide);
– Damage resulting from rust, corrosion or exposure to the elements;
– Incidental or consequential damages, or damages of any kind including without limitation towing, transportation expenses, storage, telephone, rental, taxi, inconvenience, insurance coverage, loan payments, loss of time, loss of income or time missed for downtime experience due to service work.

4) WARRANTY COVERAGE PERIOD

This warranty will be in effect from (1) the date of delivery to the first retail consumer or (2) the date the product is first put into use, whichever occurs first and for a period of:

– TWENTY-FOUR (24) CONSECUTIVE MONTHS for private use.
– SIX (6) CONSECUTIVE MONTHS for commercial use or rental use.

The product is used commercially when it is used in connection with any work or employment that generates income during any part of the warranty period. The product is also used commercially when, at any point during the warranty period, it is licensed for commercial use.

The repair or replacement of parts or the performance of service under this warranty does not extend the life of this warranty beyond its original expiration date.

Note that the duration and any other modalities of the warranty coverage are subject to the applicable national or local legislation in your country.

5) CONDITIONS TO HAVE WARRANTY COVERAGE

This warranty coverage is available **only** if **each** of the following conditions has been fulfilled:

– The 2017 Can-Am SSV must be purchased as new and unused by its first owner from a Can-Am SSV Distributor/Dealer authorized to distribute Can-Am SSVs in the country in which the sale occurred;
– The BRP specified pre-delivery inspection process must be completed and documented;
– The product must have undergone proper registration by an authorized Can-Am SSV Distributor/Dealer;

– The 2017 Can-Am SSV must be purchased in the country or union of countries in which the purchaser resides; and
– Routine maintenance outlined in the Operator's Guide must be timely performed in order to maintain warranty coverage. BRP reserves the right to make warranty coverage contingent upon proof of proper maintenance.

BRP will not honor this limited warranty to any private use owner or commercial use owner if one of the preceding conditions has not been met. Such limitations are necessary in order to allow BRP to preserve both the safety of its products, and also that of its consumers and the general public.

6) WHAT TO DO TO OBTAIN WARRANTY COVERAGE

The customer must cease using the SSV upon the appearance of an anomaly. The customer must notify a servicing Can-Am SSV Distributor/Dealer within two (2) months of the appearance of a defect and provide it with reasonable access to the product and reasonable opportunity to repair it. The customer must also present to the authorized Can-Am SSV Distributor/Dealer, proof of purchase of the product and must sign the repair/work order prior to starting the repair in order to validate the warranty repair. All parts replaced under this limited warranty become the property of BRP.

Note that the notification period is subject to the applicable national or local legislation in your country.

7) WHAT BRP WILL DO

To the extent permitted by law, BRP's obligations under this warranty are limited to, at its sole discretion, repairing parts found defective under normal use, maintenance and service, or replacing such parts with new genuine Can-Am SSV parts without charge for parts and labor, at any authorized Can-Am SSV Distributor/Dealer during the warranty coverage period under the conditions described herein. BRP's responsibility is limited to making the required repairs or replacements of parts. No claim of breach of warranty shall be cause for cancellation or rescission of the sale of the Can-Am SSV to the owner. You may have other legal rights which may vary from country to country.

In the event that service is required outside of the EEA, the owner will bear responsibility for any additional charges due to local practices and conditions, such as, but not limited to, freight, insurance, taxes, license fees, import duties, and any and all other financial charges, including those levied by governments, states, territories and their respective agencies.

BRP reserves the right to improve or modify products from time to time without assuming any obligation to modify products previously manufactured.

8) TRANSFER

If the ownership of a product is transferred during the warranty coverage period, this warranty shall also be transferred and be valid for the remaining coverage period provided BRP or an authorized Can-Am SSV Distributor/Dealer receives a proof that the former owner agreed to the transfer of ownership, in addition to the co-ordinates of the new owner.

9) CONSUMER ASSISTANCE

In the event of a controversy or a dispute in connection with this limited warranty, BRP suggests that you try to resolve the issue at the Can-Am SSV Distributor/Dealer level. We recommend discussing the issue with the authorized Can-Am SSV Distributor/Dealer's service manager or owner.

If the matter still remains unresolved, contact BRP by filling out the customer contact form at www.brp.com or contact BRP by mail at one of the addresses listed under the *CONTACT US* section of this guide.

* In the EEA, products are distributed and serviced by BRP European Distribution S.A. and other affiliates or subsidiaries of BRP.

© 2016 Bombardier Recreational Products Inc. All rights reserved.
® Trademark of Bombardier Recreational Products Inc. or its affiliated.

ADDITIONAL TERMS AND CONDITIONS FOR FRANCE ONLY

The following terms and conditions are applicable to products sold in France only:

The seller shall deliver goods that are complying with the contract and shall be responsible for defects existing upon delivery. The seller shall also be responsible for defects resulting from packaging, assembling instructions or the installation when it is its responsibility per the contract or if accomplished under its responsibility. To be compliant with the contract, the good shall:

1. Be fit for normal use for goods similar thereto and, if applicable:
   - Correspond to the description provided by the seller and have the qualities presented to the buyer though sample or model;
   - Have the qualities that a buyer may legitimately expect considering the public declarations of the seller, the manufacturer of its representative, including in advertising or labeling; or
2. Have the characteristics mutually agreed upon as between the parties or be fit for the specific use intended by the buyer and brought to the attention of the seller and which accepted.

The action for failure to comply is prescribed after two years after delivery of the goods. The seller is responsible for the warranty for hidden defects of the goods sold if such hidden defects are rendering the good unfit for the intended use, or if they diminish its use in such a way that the buyer would not have acquired the good or would have given a lesser price, had he known. The action for such hidden defects shall be taken by the buyer within 2 years of the discovery of the defect.

CUSTOMER INFORMATION

CHANGE OF ADDRESS/OWNERSHIP

If your address has changed or if you are the new owner of the vehicle, be sure to notify BRP by either:

- Notifying an authorized Can-Am dealer.
- North America Only: calling at 1 888 272-9222.
- Mailing one of the change of address cards on the following pages at one of the BRP addresses indicated in the *CONTACT US* section of this guide.

In case of change of ownership, please join a proof that the former owner agreed to the transfer.

Notifying BRP, even after the expiration of the limited warranty, is very important as it enables BRP to reach the vehicle owner if necessary, like when safety recalls are initiated. It is the owner's responsibility to notify BRP.

STOLEN UNITS: If your personal vehicle is stolen, you should notify BRP or an authorized Can-Am dealer. We will ask you to provide your name, address, phone number, the vehicle identification number and the date it was stolen.

CHANGE OF ADDRESS ☐ CHANGE OF OWNERSHIP ☐

VEHICLE IDENTIFICATION NUMBER

Model Number | Vehicle Identification Number (V.I.N.)

OLD ADDRESS OR PREVIOUS OWNER:

NAME

NO. STREET APT

CITY STATE/PROVINCE ZIP/POSTAL CODE

COUNTRY TELEPHONE

NEW ADDRESS OR NEW OWNER:

NAME

NO. STREET APT

CITY STATE/PROVINCE ZIP/POSTAL CODE

COUNTRY TELEPHONE

E-MAIL ADDRESS

V00A2F

CHANGE OF ADDRESS ☐ CHANGE OF OWNERSHIP ☐

VEHICLE IDENTIFICATION NUMBER

Model Number | Vehicle Identification Number (V.I.N.)

OLD ADDRESS OR PREVIOUS OWNER:

NAME

NO. STREET APT

CITY STATE/PROVINCE ZIP/POSTAL CODE

COUNTRY TELEPHONE

NEW ADDRESS OR NEW OWNER:

NAME

NO. STREET APT

CITY STATE/PROVINCE ZIP/POSTAL CODE

COUNTRY TELEPHONE

E-MAIL ADDRESS

V00A2F

This page is intentionally blank

CHANGE OF ADDRESS ☐ CHANGE OF OWNERSHIP ☐

VEHICLE IDENTIFICATION NUMBER

Model Number | Vehicle Identification Number (V.I.N.)

OLD ADDRESS OR PREVIOUS OWNER:

NAME

NO. STREET APT

CITY STATE/PROVINCE ZIP/POSTAL CODE

COUNTRY TELEPHONE

NEW ADDRESS OR NEW OWNER:

NAME

NO. STREET APT

CITY STATE/PROVINCE ZIP/POSTAL CODE

COUNTRY TELEPHONE

E-MAIL ADDRESS

V00A2F

CHANGE OF ADDRESS ☐ CHANGE OF OWNERSHIP ☐

VEHICLE IDENTIFICATION NUMBER

Model Number | Vehicle Identification Number (V.I.N.)

OLD ADDRESS OR PREVIOUS OWNER:

NAME

NO. STREET APT

CITY STATE/PROVINCE ZIP/POSTAL CODE

COUNTRY TELEPHONE

NEW ADDRESS OR NEW OWNER:

NAME

NO. STREET APT

CITY STATE/PROVINCE ZIP/POSTAL CODE

COUNTRY TELEPHONE

E-MAIL ADDRESS

V00A2F

⚠ WARNING

To reduce risk of serious injury or death, read this Operator's Guide and safety labels, watch the safety video and:

Be prepared
- Fasten seat belts and make sure nets and doors are securely latched in place.
- Wear an approved helmet and protective gear.
- Each rider must be able to sit with back against seat, foot flat on the floor or on footrest, and hands on steering wheel or handholds. Stay completely inside the vehicle.

Drive responsibly
- Avoid loss of control and rollovers.
- Avoid abrupt maneuvers, sideways sliding, skidding or fishtailing and never do donuts.
- Avoid hard acceleration when turning, even from a stop.
- Slow down before entering a turn.
- Plan for hills, rough terrain, ruts and other changes in traction and terrain.
- Avoid paved surfaces.
- Avoid side hilling (riding across slopes).

Be Qualified and Responsible
- Do not allow careless or reckless driving.
- Driver must be at least 16 years old with a valid driver's license.
- Do not operate after using drugs or alcohol.
- Do not allow operation on public roads (unless designated for off-highway vehicle access) – collisions with cars and trucks can occur.
- Do not exceed vehicle seating capacity.

219 001 677
OPERATOR'S GUIDE COMMANDER Series / ENGLISH
GUIDE DU CONDUCTEUR Séries COMMANDER / ANGLAIS

FAIT AU / MADE IN CANADA U/M:P.C.

®™ AND THE BRP LOGO ARE TRADEMARKS OF BOMBARDIER RECREATIONAL PRODUCTS INC. OR ITS AFFILIATES.
©2016 BOMBARDIER RECREATIONAL PRODUCTS INC. ALL RIGHTS RESERVED. PRINTED IN CANADA.

can-am®

2017

Operator's Guide

Includes
Safety, Vehicle
and Maintenance Information



COMMANDER™ MAX™ Series

⚠ WARNING

Read this guide thoroughly. It contains important safety information.
Minimum age: Operator: 16 or older with a valid driver's license. Keep this Operator's Guide in the vehicle.

2 1 9 0 0 1 6 7 8

Original Instructions

⚠ WARNING

YOUR VEHICLE CAN BE HAZARDOUS TO OPERATE. A collision or rollover can occur quickly, if you fail to take proper precautions, even during routine maneuvers such as turning and driving on hills or over obstacles.
For your safety, understand and follow all the warnings contained in this Operator's Guide and on the labels on your vehicle. **Failure to follow these warnings can result in SEVERE INJURY OR DEATH!**
Keep this Operator's Guide with the vehicle at all times.

⚠ WARNING

Disregarding any of the safety precautions and instructions contained in this Operator's Guide, *SAFETY VIDEO* and on-product safety labels could result in severe injury including the possibility of death!

⚠ WARNING

This vehicle may exceed the performance of other vehicles you may have ridden in the past. Take time to familiarize yourself with your new vehicle.

CALIFORNIA PROPOSITION 65 WARNING

⚠ WARNING

This vehicle contains or emits chemicals known to the state of California to cause cancer and birth defects or other reproductive harm.

In Canada, products are distributed by Bombardier Recreational Products Inc. (BRP).

In USA, products are distributed by BRP US Inc.

The following trademarks are the property of Bombardier Recreational Products Inc.:

Can-Am® D.E.S.S.™ DPS™ Commander™ MAX Rotax® TTI™ XPS™

This document contains the trademark of the following companies:

- Garmin®, Garmin logo, City Navigator® and MapSource™ are trademarks of Garmin Ltd or its subsidiaries.
- MicroSD™ and SD™ are trademarks of SanDisk or its subsidiaries.
- VELCRO® is a registered trademark of Velcro Industries B. V
- † Visco-Lok is a trademark of GKN Viscodrive GmbH.
- † QS3 is a trademark of Fox Factory, Inc.

219001678 en JT
®™ and the BRP logo are trademarks of Bombardier Recreational Products Inc. or its affiliates.
©2016 Bombardier Recreational Products Inc. and BRP US Inc. All rights reserved.

FOREWORD

Deutsch	Dieses Handbuch ist möglicherweise in Ihrer Landessprache verfügbar. Bitte wenden Sie sich an Ihren Händler oder besuchen Sie: **www.operatorsguides.brp.com**
English	This guide may be available in your language. Check with your dealer or go to: **www.operatorsguides.brp.com**
Español	Es posible que este manual esté disponible en su idioma. Consulte a su distribuidor o visite: **www.operatorsguides.brp.com**
Français	Ce guide peut être disponible dans votre langue. Vérifier avec votre concessionnaire ou aller à: **www.operatorsguides.brp.com**
日本語	このガイドは、言語によって翻訳版が用意されています。. ディーラーに問い合わせるか、次のアドレスでご確認ください： **www.operatorsguides.brp.com**
Nederlands	Deze handleiding kan beschikbaar zijn in uw taal. Vraag het aan uw dealer of ga naar: **www.operatorsguides.brp.com**
Norsk	Denne boken kan finnes tilgjengelig på ditt eget språk. Kontakt din forhandler eller gå til: **www.operatorsguides.brp.com**
Português	Este manual pode estar disponível em seu idioma. Fale com sua concessionária ou visite o site: **www.operatorsguides.brp.com**
Suomi	Käyttöohjekirja voi olla saatavissa omalla kielelläsi. Tarkista jälleenmyyjältä tai käy osoitteessa: **www.operatorsguides.brp.com**
Svenska	Denna bok kan finnas tillgänglig på ditt språk. Kontakta din återförsäljare eller gå till: **www.operatorsguides.brp.com**

Congratulations on your purchase of a new Can-Am® side-by-side vehicle. It's backed by the BRP limited warranty and a network of authorized Can-Am dealers ready to provide the parts, accessories or service you may require.

At delivery, you were informed of the warranty coverage and signed the *PREDELIVERY CHECK LIST* to ensure your new vehicle was prepared to your entire satisfaction.

Your dealer is committed to your satisfaction. If you need more information, please ask your dealer.

Know Before you Go

To learn how to reduce the risk of accident for you or bystanders, read this Operator's Guide before you operate the vehicle.

Also, read all safety labels on your vehicle and watch the *SAFETY VIDEO*.

Failure to follow the warnings contained in this Operator's Guide can result in SERIOUS INJURY or DEATH.

Safety Messages

The types of safety messages, what they look like and how they are used in this guide are explained as follows:

The safety alert symbol ⚠ indicates a potential injury hazard.

⚠ WARNING

Indicates a potential hazard which, if not avoided, could result in serious injury or death.

CAUTION Indicates a hazardous situation which, if not avoided, could result in minor or moderate injury.

NOTICE Indicates an instruction which, if not followed, could result in severely damaged vehicle components or other property.

About this Operator's Guide

This Operator's Guide has been prepared to acquaint the owner/operator of a new vehicle with the various vehicle controls, maintenance and safe operating instructions. It is indispensable for the proper use of the product.

Keep this Operator's Guide in the vehicle as you can refer to it for things such as maintenance, troubleshooting and instructing others.

Note that this guide is available in several languages. In the event of any discrepancy, the English version shall prevail.

If you want to view and/or print an extra copy of your Operator's Guide, simply visit the following website www.operatorsguides.brp.com.

The information contained in this document is correct at the time of publication. BRP, however, maintains a policy of continuous improvement of its products without imposing upon itself any obligation to install them on products previously manufactured. Due to late changes, some differences between the manufactured product and the descriptions and/or specifications in this guide may occur. BRP reserves the right at any time to discontinue or change specifications, designs, features, models or equipment without incurring any obligation upon itself.

This Operator's Guide and the *SAFETY DVD* should remain with the vehicle when it is sold.

TABLE OF CONTENTS

FOREWORD **1**
Know Before you Go 1
Safety Messages 1
About this Operator's Guide 2

SAFETY INFORMATION

GENERAL PRECAUTIONS **10**
Avoid Carbon Monoxide Poisoning 10
Avoid Gasoline Fires and Other Hazards 10
Avoid Burns from Hot Parts 10
Accessories and Modifications 10
SAFE OPERATION - RESPONSIBILITIES **11**
Owner - Be Responsible 11
Operator - Be Qualified and Responsible 11
Riding Carefully 12
Occupant Restraint System 12
Terrain Condition 12
PRE-RIDE INSPECTION **14**
Pre-Ride Inspection Check List 14
PREPARE TO RIDE **17**
Before you Ride 17
Riding Gear 17
AVOID ACCIDENTS **19**
Avoid Rollovers and Tipovers 19
Avoid Collisions 20
RIDING YOUR VEHICLE **21**
Practice Exercises 21
Off-Road Operation 22
General Riding Techniques 22
MOVING LOADS AND DOING WORK **27**
Working with your Vehicle 27
Carrying Loads 27
Hauling a Load 30
Pulling a Trailer 30
IMPORTANT ON-PRODUCT LABELS **32**
Hang Tag 32
Safety Labels 32
Compliance Labels 43
Technical Information Labels 43

VEHICLE INFORMATION

PRIMARY CONTROLS **46**

PRIMARY CONTROLS (cont'd)
1) Steering Wheel 46
2) Accelerator Pedal 47
3) Brake Pedal 47
4) Shift Lever 47
SECONDARY CONTROLS 49
1) Ignition Switch and Keys 49
2) Engine Start Button 51
3) Low/High Beam Headlight Switch 51
4) 2WD/4WD Switch 51
5) Sport/ECO Mode Switch 51
6) Override Switch 52
7) DPS Switch 52
8) Winch Switch (Models with Winch) 53
MULTIFUNCTION GAUGE (LCD) (DPS MODELS) 54
Multifunction Gauge Description 54
Multifunction Gauge Modes 55
Navigating in the LCD Gauge 58
Gauge Setup 58
MULTIFUNCTION GAUGE (ANALOG/DIGITAL) (XT AND LTD MODELS) .. 60
Multifunction Gauge Description 60
Gauge Setup 64
EQUIPMENT 65
1) Tilt Steering 67
2) Cup Holders 68
3) Passengers Handholds 68
4) Glove Box 68
5) Tool Kit 68
6) Footrests 68
7) Side Nets 69
8) Shoulder Guards 69
9) Seat Belts 69
10) Driver's Seat 70
11) Passenger Seats 70
12) Fuel Reservoir Cap 70
13) Winch (Models with Winch) 71
14) Cargo Box 71
15) 12-Volt Power Outlet 72
16) Rear Storage Compartment 72
17) Cargo Box Tilt Release Handles 72
18) Anchoring Hooks 73
19) Upper Tailgate 73
20) Lower Tailgate 73
21) Hitch support 74
22) Radio (LTD Models Only) 74
23) Radio AUX Output (LTD Models Only) 74
24) GPS Receiver (Global Positioning System) (LTD Models Only) 75

EQUIPMENT (cont'd)
25) Rear Net (LTD Models Only) 76
26) Half Windshield (LTD Models Only) 77
27) Full Roof (LTD Models Only) 78
TUNE YOUR RIDE 79
Suspension Adjustment Guidelines 79
Suspension Factory Settings 79
Suspension Adjustments 79
Shock Damping Adjustments (LTD Models Only) 80
DPS Function 81
FUEL 83
Fuel Requirements 83
Vehicle Fueling Procedure 83
Fueling a Gasoline Container 84
BREAK-IN PERIOD 85
Operation During Break-In 85
BASIC PROCEDURES 86
Starting the Engine 86
Shifting the Transmission 86
Choosing the Correct Range (Low or High) 86
Stopping the Engine and Parking the Vehicle 87
Tips for Maximizing Drive Belt Durability 87
SPECIAL PROCEDURES 88
What to do if Water is Suspected to be in the CVT 88
What to do if Battery is Drained out 88
What to do if Vehicle Rolled Over 88
What to do if Vehicle is Submerged 89
TRANSPORTING THE VEHICLE 90
LIFTING AND SUPPORTING THE VEHICLE 91
Front of Vehicle 91
Rear of Vehicle 91

MAINTENANCE

MAINTENANCE SCHEDULE 94
SEVERE DUSTY CONDITIONS 94
MAINTENANCE SCHEDULE LEGEND 94
MAINTENANCE SCHEDULE 95
MAINTENANCE PROCEDURES 98
Engine Air Filter 98
Front Grill Kit 100
CVT Air Filter 101
Engine Oil 102
Oil Filter 104
Radiator 104

MAINTENANCE PROCEDURES (cont'd)
Engine Coolant 105
Muffler Spark Arrester 110
Gearbox Oil 111
Spark Plugs 112
CVT Cover 113
CVT Cover Installation 115
Drive Belt 115
Exhaust Area 116
Battery 117
Fuses 117
Lights 119
Drive Shaft Boot and Protector 120
Wheel Bearing 121
Wheels and Tires 122
Suspensions 123
Tightening Rear Stabilizer Bar Bolts 123
Brakes 123
Seat Belts 124

VEHICLE CARE 125
Post-Operation Care 125
Vehicle Cleaning and Protection 125

STORAGE AND PRESEASON PREPARATION 126

TECHNICAL INFORMATION

VEHICLE IDENTIFICATION 128
Vehicle Identification Number 128
Engine Identification Number 128

NOISE EMISSION CONTROL SYSTEM REGULATION 129

EC-DECLARATION OF CONFORMITY 130

SPECIFICATIONS 131

TROUBLESHOOTING

TROUBLESHOOTING GUIDELINES 138

MESSAGES IN MULTIFUNCTION GAUGE 142

WARRANTY

BRP LIMITED WARRANTY USA AND CANADA: 2017 CAN-AM® SSV 144

US EPA EMISSION-RELATED WARRANTY 148

BRP INTERNATIONAL LIMITED WARRANTY: 2017 CAN-AM® SSV 151

BRP LIMITED WARRANTY FOR THE EUROPEAN ECONOMIC AREA, THE COMMONWEALTH OF THE INDEPENDANT STATES AND TURKEY: 2017 CAN-AM® SSV 155

CUSTOMER INFORMATION

PRIVACY INFORMATION 162

CONTACT US 163

North America 163
Europe 163
Oceania 163
South America 163
Asia 163

CHANGE OF ADDRESS/OWNERSHIP 164

SAFETY INFORMATION

GENERAL PRECAUTIONS

Avoid Carbon Monoxide Poisoning

All engine exhaust contains carbon monoxide, a deadly gas. Breathing carbon monoxide can cause headaches, dizziness, drowsiness, nausea, confusion and eventually death.

Carbon monoxide is a colorless, odorless, tasteless gas that may be present even if you do not see or smell any engine exhaust. Deadly levels of carbon monoxide can collect rapidly, and you can quickly be overcome and unable to save yourself. Also, deadly levels of carbon monoxide can linger for hours or days in enclosed or poorly ventilated areas. If you experience any symptoms of carbon monoxide poisoning, leave the area immediately, get fresh air and seek medical treatment.

To prevent serious injury or death from carbon monoxide:

– Never run the vehicle in poorly ventilated or partially enclosed areas such as garages, carports or barns. Even if you try to ventilate engine exhaust with fans or open windows and doors, carbon monoxide can rapidly reach dangerous levels.
– Never run the vehicle outdoors where engine exhaust can be drawn into a building through openings such as windows and doors.

Avoid Gasoline Fires and Other Hazards

Gasoline is extremely flammable and highly explosive. Fuel vapors can spread and be ignited by a spark or flame many feet away from the engine. To reduce the risk of fire or explosion, follow these instructions:

– Use only an approved gasoline container to store fuel.
– Never fill the gasoline container in the vehicle cargo box or on the vehicle - an electrical static discharge may ignite the fuel.
– Strictly adhere to instructions in *FUELING PROCEDURE*.
– Never start or operate the engine if the fuel cap is not properly installed.

Gasoline is poisonous and can cause injury or death.

– Never siphon gasoline by mouth.
– If you swallow gasoline, get any in your eye(s), or inhale gasoline vapor, see a doctor immediately.

If gasoline spills on you, wash with soap and water and change your clothes.

Avoid Burns from Hot Parts

Certain components become hot during operation. Avoid contact with those parts during and shortly after operation to avoid burns.

Accessories and Modifications

Do not make unauthorized modifications, or use attachments or accessories that are not approved by BRP. Since these changes have not been tested by BRP, they may increase the risk of crash or injury, and can render the vehicle illegal. For example, modifications such as different tires can affect the handling and increase the risk of crash.

See your authorized Can-Am dealer for available accessories for your vehicle.

SAFE OPERATION - RESPONSIBILITIES

This is a high performance off-road vehicle. Operators must be responsible and use care to avoid rollovers, tipovers, collisions, and other accidents. Even with vehicle safety features (such as protective structure, seat belts, side nets) and protective gear (such as a helmet), there is always a risk of injury or death in these accidents. To reduce the risk of serious injury or death, follow the rules in this section.

Owner - Be Responsible

Read this Operator's Guide and watch the *SAFETY VIDEO*.

Always inspect and confirm the safe operating condition of your vehicle prior to ride. Always follow the maintenance schedule described in this Operator's Guide.

Never allow anyone to operate your vehicle unless they are responsible and can be trusted with a high performance vehicle. Consider supervising new or young operators and setting rules and limits (e.g., whether they can carry passengers, what they may do with the vehicle, where they may ride, etc.) for anyone using your vehicle.

Select the appropriate key (see *IGNITION SWITCH AND KEYS*) based on the operator's experience, vehicle use and environment.

Discuss the safety information with anyone who will be using the vehicle. Be sure that all operators and passengers meet the qualifications below and agree to follow the safety information. Help users become familiar with the vehicle.

We encourage you to have an Annual Safety Inspection of your vehicle. Please contact an authorized BRP dealer for further details. Though not required, it is recommended that an authorized BRP dealer performs the preseason preparation of your vehicle. Each visit to your authorized BRP dealer is a great opportunity for your dealer to verifiy if your vehicle is included in any safety campaign. We also urge you to visit your authorized BRP dealer in a timely manner if you become aware of any safety related campaigns.

See an authorized BRP dealer for available accessories you may require.

Operator - Be Qualified and Responsible

Read this Operator's Guide and watch the *SAFETY VIDEO*.

Become completely familiar with the operational controls and the general operation of the vehicle.

Take a training course if available (contact an authorized Can-Am dealer to find out about training course availability as well as on the internet at http://www.rohva.org/), and perform the practice exercises in *PRACTICE EXERCISES* section. Practice driving in a suitable area free of hazards and feel the response of each control. Drive at low speeds. Higher speeds require greater experience, knowledge and suitable riding conditions.

Be at least 16 years of age.

Be tall enough to be properly seated: back against the backrest with the seat belt fastened, to hold the steering wheel with both hands and still be able to reach the full stroke of brake and accelerator pedals with the right foot and to firmly plant left foot on the footrest.

Have a proper driver's license in accordance with local laws.

Never use this vehicle with drugs or alcohol, or if tired or ill. These slow reaction time and impair judgment.

Carrying Passengers

Only carry a maximum of three passengers. The passengers must be properly seated in the cockpit.

Every passenger should be tall enough to always be properly seated: back against the backrest with seat belt fastened, while holding both handholds, and feet firmly planted on the floor or on footrest.

Never carry a passenger who has used drugs or alcohol, or is tired or ill. These slow reaction time and impair judgment.

Instruct the passengers to read the vehicle's safety labels.

Never carry a passenger if you judge his ability or judgement insufficient to concentrate on the terrain conditions and adapt accordingly. More specifically for side-by-side vehicles, the passengers must also pay constant attention to the terrain ahead and be able to brace for bumps.

Riding Carefully

- This vehicle handles differently from other vehicles. A collision or rollover can occur quickly, during abrupt maneuvers such as doing sharp turns, acceleration or deceleration and driving on hills or over obstacles, if you fail to take proper precautions.
- Never operate at excessive speeds. Always go at a speed that is proper for the terrain, visibility, and operating conditions, and your experience.
- Never attempt jumps, side slides, donuts or any other stunts.
- Never attempt rapid acceleration or deceleration when performing a sharp turn. This may result in a roll over.
- Never attempt skidding or sliding. If vehicle starts to skid or slide, counter steer in the direction of skidding or sliding. On extremely slippery surfaces, such as ice, go slowly and be very cautious in order to reduce the chance of skidding out of control.
- Always be sure there are no obstacles or people behind the vehicle when you operate in reverse. Pay attention to blind spots. When it is safe to proceed in reverse, go slowly.
- Never exceed the stated load limits for this vehicle. Cargo must be properly secured. Reduce speed, allow for greater braking distance and follow other instructions in *MOVING LOADS AND DOING WORK* subsection.
- Always remember that this vehicle is heavy! Its pure weight alone may entrap you should it tip or rollover.

Occupant Restraint System

- This vehicle is designed to carry one driver and a maximum of three passengers, all wearing proper protective gears (refer to RIDING GEAR in this section).
- The driver and passengers must latch the side nets and wear the seat belts at all times when riding.

Terrain Condition

- This vehicle is not designed to ride on paved surfaces; if you must shortly use the vehicle on such surfaces, avoid abrupt inputs to steering wheel, accelerator and brake pedals.
- Always go slowly and be extra careful when operating on unfamiliar terrain. Always be alert to changing terrain conditions when operating this vehicle. Take the time to learn how the vehicle performs in different environments.
- Never operate on excessively rough, slippery or loose terrain until you have learned and practiced the skills necessary to control this vehicle on such terrain. Always be especially cautious on these kinds of terrain.

– Never operate this vehicle on hills too steep for the vehicle or your abilities. Practice on small inclines.
– Always follow proper procedures for climbing or going down hills as described in *RIDING YOUR VEHICLE* subsection. Check the terrain carefully before you start up or down any hill. Never climb or descend hills with excessively slippery or loose surfaces. Never go over the top of any hill at high speed.
– Never attempt steep hills or side hilling when pulling a trailer.
– Always check for obstacles before operating in a new area. Always follow proper procedures when operating over obstacles as described in *RIDING YOUR VEHICLE* subsection.
– Never operate this vehicle in fast flowing water or in water deeper than specified in *RIDING YOUR VEHICLE* subsection. Remember that wet brakes may have reduced stopping ability. Test your brakes after leaving water. If necessary, apply them several times to let friction dry out the brakes.
– Always ensure to properly park the vehicle on the flattest terrain section available. Put shift lever in PARK, stop engine and remove key before leaving the vehicle.
– Never assume that the vehicle will go everywhere safely. Sudden changes in terrain caused by holes, depressions, banks, softer or harder "ground" or other irregularities may cause the vehicle to topple or become unstable. To avoid this, slow down and always observe the terrain ahead. If the vehicle does begin to topple or rollover, the best advice is to immediately steer in the direction of the rollover! Never attempt to prevent a rollover with your arms or legs. You should keep your limbs inside the cage.

PRE-RIDE INSPECTION

Always inspect and confirm the safe operating condition of your vehicle prior to ride. Always follow the maintenance schedule described in this Operator's Guide.

⚠ WARNING

Perform a pre-ride inspection before each ride to detect any potential problem that could occur during operation. The pre-ride inspection can help you monitor component wear and deterioration before they become a problem. Correct any problem that you discover to reduce the risk of a breakdown or crash.

Before using this vehicle, the operator should always perform the following pre-ride inspection check list.

Pre-Ride Inspection Check List

What to Do Before Starting the Engine (Key OFF)

ITEMS TO BE INSPECTED	INSPECTION TO PERFORM	✔
Tires	Check tire pressure and condition. – Front: MIN 103 kPa (15 PSI), LOADED 110 kPa (16 PSI) (All models except LTD) – Front: MIN 103 kPa (15 PSI), LOADED 124 kPa (18 PSI) (LTD model) – Rear: MIN 103 kPa (15 PSI), LOADED 179 kPa (26 PSI)	
Wheels	Check wheels for damage and for abnormal play, and check lug nuts are tightened	
Radiator	Check radiator for cleanliness.	
Front grill kit	Inspect front grill kit for cleanliness.	
Engine oil	Check engine oil level.	
Coolant	Check coolant level.	
Brake fluid	Check brake fluid level.	
Engine air filter	Inspect the engine air filter, replace if needed (service more often when riding in dusty conditions).	
CVT air filter	Inspect and clean the CVT air filter (when riding in dusty conditions).	
Drive shaft boots	Check drive shaft boots and protectors condition.	

ITEMS TO BE INSPECTED	INSPECTION TO PERFORM	✔
Cargo and load	**Cargo Load:** If you transport a cargo, respect the maximum loading capacity of 272 kg (600 lb). Ensure cargo is properly secured to the rear cargo box. **Vehicle Load:** Ensure that total load on the vehicle (including operator, passengers, cargo, tongue weight and added accessories) does not exceed 526 kg (1,160 lb) for DPS and XT models and 503 kg (1,110 lb) for LTD models.	
	If you are pulling a trailer or another equipment: – Check hitch and trailer ball condition. – Respect the tongue capacity and towing capacity. – Ensure trailer is properly secured to hitch.	
Rear cargo box	Check if the cargo box is properly latched.	
	Check if both tail gates are properly latched.	
Chassis and suspension	Check underneath vehicle for any debris on chassis or suspension and clean them properly.	

What to Do Before Starting the Engine (Key ON)

ITEMS TO BE INSPECTED	INSPECTION TO PERFORM	✔
Gauge	Check operation of indicator lamps in gauge (during first few seconds of key ON).	
	Check for messages in gauge.	
Lights	Check operation and cleanliness of headlights and taillight.	
	Check operation of high and low beam.	
	Check operation of brake light.	
Seats, side nets and seat belts	Check if seats are properly latched.	
	Check side nets for any damage. Have the nets replaced if any damage is found. Fasten all side nets and confirm that they latch securely. Use the adjustment strap to tighten the net as required.	
	Check seat belts for any damage. Fasten seat belts and confirm that they latch securely.	

ITEMS TO BE INSPECTED	INSPECTION TO PERFORM	✔
Accelerator pedal	Press on the accelerator pedal a few times to ensure it operates freely and it returns to the rest position when released.	
Brake pedal	Press down on the brake pedal and make sure you feel firm resistance and that it fully returns to position when released.	
Fuel level	Check the fuel level.	

What to Do After the Engine is Started

ITEMS TO BE INSPECTED	INSPECTION TO PERFORM	✔
Steering	Check if steering operates freely by completely turning it from side to side.	
Ignition switch	Turn the ignition switch to OFF to verify if engine will shut down. Restart engine.	
Shift lever	Check operation of shift lever (P, R, N, H and L).	
2WD/4WD selector	Check operation of 2WD/4WD selector.	
Brakes	Drive forward slowly a few feet and apply brakes. The brake pedal must feel firm when applied. The pedal must return to rest position when released. The brakes must respond adequately to the driver's input.	

Before you Ride

Perform pre-ride inspection to confirm the safe operating condition of your vehicle. Refer to *PRE-RIDE INSPECTION* subsection.

Driver and passengers must:

– Be properly seated.
– Latch all side nets and fasten seat belts.
– Wear appropriate riding gear. (Refer to *RIDING GEAR* subsection below.)

Riding Gear

It is important that the operator and passengers always wears appropriate protective clothing and apparel, including:

– An approved helmet
– Eye protection
– Boots
– Gloves
– A long sleeved shirt or jacket
– Long pants.

Depending on conditions, anti-fogging goggles may be required.

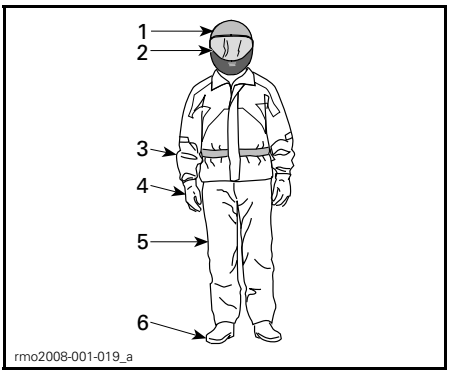

RIDING GEAR
1. *Approved helmet*
2. *Eye and face protection*
3. *Long sleeves shirt or jacket*
4. *Gloves*
5. *Long pants*
6. *Boots (over-the-ankle footwear)*

Weather conditions should help you decide how to dress. To maximize comfort and avoid frostbites in winter, dress for the coldest weather expected. Thermal underwear next to the skin also provides good insulation.

Never wear any loose clothing that may get entangled in the vehicle or on tree branches and shrubs.

Helmets and Eye Protection

Helmets protect the head and brain from injury. Even with the vehicle's cage and side nets, objects can enter the cockpit and strike the head, or the head can strike the cage itself or objects outside the vehicle. Even the best helmet is no guarantee against injury, but statistics indicate that helmet use significantly reduces the risk of brain injury. So, be safe and always wear a helmet while riding.

Choosing a Helmet

Helmets should be manufactured to meet the appropriate standard in your state, province or country and should fit properly.

A helmet with face protection is a better choice as it protects also against frontal impacts. It can also protect against debris, stones, insects, the elements, etc.

An open-face helmet does not offer the same protection for the face and chin. If you wear an open-face helmet, you should use a snap-on face shield and/or a pair of goggles. Ordinary glasses or sunglasses are not sufficient eye protection for riders. They can shatter or fly off, and they allow wind and airborne objects to reach the eyes.

For winter riding conditions, a stocking type cap, balaclava and face mask should always be carried or worn.

Use tinted face shields or goggles in the daytime only; do not use them at night or in poor illumination. Do not use them if they impair your ability to discern color.

Other Riding Gear

Footwear

Always wear closed toe footwear. Sturdy over-the-ankle boots with non-slip soles offer more protection and allow you to plant your foot properly on footrest.

Avoid long shoelaces that can be tangled in the accelerator or brake pedals.

For winter riding conditions, rubber soled boots with either a nylon or leather uppers, with removable felt liners are best suited.

Avoid rubber boots. Rubber boots may get trapped behind or between pedals, impairing the proper operation of brake and accelerator pedals.

Gloves

Full-fingered gloves protect hands from the wind, sun, heat, cold and flying objects. Gloves that fit snugly will improve grip on the steering wheel and help reduce hand fatigue. Sturdy, reinforced motorcycle or ATV gloves help protect hands better in the event of an accident or a rollover. If gloves are too bulky, it may be difficult to operate the controls.

For winter riding conditions, hands should be protected by a pair of snowmobile gloves which have sufficient insulation and allow use of thumbs and fingers for operation of controls.

Jackets, Pants and Riding Suits

Wear a jacket or a long sleeved shirt and long pants, or a full riding suit. Quality ATV-type protective gear will provide comfort, and it can help you avoid being distracted by adverse environmental elements. In case of a crash, good quality protective gear made of sturdy material may prevent or reduce injury.

In cool-weather riding, protect yourself against hypothermia. Hypothermia, a condition of low body temperature, can cause loss of concentration, slowed reactions and loss of smooth, precise muscle movement. In cool conditions, proper protective gear like a windproof jacket and insulated layers of clothing are essential. Even while riding at moderate temperatures, you can feel very cold due to the wind.

Protective gear that is appropriate for cold-weather riding may be too hot when stopped. Dress in layers so that clothing can be removed as desired. Topping the protective gear with a windproof outer layer can prevent cold air from reaching the skin.

Rain Gear

If you must ride in wet weather, a rain suit or a waterproof riding suit is recommended. On long rides, it is a good idea to carry rain gear. A dry rider will be much more comfortable and alert.

Hearing Protection

Long-term exposure to wind and engine noise when riding can cause permanent hearing loss. Properly worn hearing protective devices such as earplugs can help prevent hearing loss. Check local laws before using any hearing protective devices.

Avoid Rollovers and Tipovers

Side-by-side vehicles handle differently from other vehicles. Side-by-side vehicles are designed to handle off-road terrain (for example, their wheel base and track width, ground clearance, suspension, drivetrain, tires, etc.), and, as a result, can overturn in situations where vehicles designed for use primarily on paved or smooth terrain may not.

A rollover or other accident can occur quickly during abrupt maneuvers such as sharp turns or hard acceleration or deceleration when turning, or when driving on hills or over obstacles. Abrupt maneuvers or aggressive driving can cause rollovers or loss of control even in flat open areas. If the vehicle rolls over, any part of your body (such as arms, legs, or head) outside of the cockpit can be crushed and trapped by the cage or other parts of the vehicle. You can also be injured by impact with the ground, cockpit or other objects.

To reduce the risk of rollovers:

– Use care when turning.
  - Do not turn the steering wheel too far or too fast for your speed and environment. Adjust steering inputs according to your speed and environment.
  - Slow down before entering a turn. Avoid hard braking during a turn.
  - Avoid sudden or hard acceleration when turning, even from a stop or low speed.
– Never attempt donuts, skids, slides, fishtails, jumps, or other stunts. If vehicle starts to skid or slide, steer in the direction of the skid or slide. Never slam the brakes and lock the wheels.
– Avoid paved surfaces. This vehicle is not designed to operate on paved surfaces and is more likely to roll over. If you must drive on pavement, turn gradually, go slowly, and avoid abrupt acceleration and braking.

This vehicle can roll over sideways or tip over forward or backwards on slopes or uneven terrain.

– Avoid side hilling (driving along the slope rather than up or down a hill). When possible, drive straight up and down inclines rather than across them. If you must side hill, use extreme caution and avoid slippery surfaces, objects, or depressions. If you feel the vehicle start to rollover or slide sideways, steer downhill if possible.
– Avoid steep hills and follow procedures in this guide for climbing and descending hills.
– Sudden changes in terrain such as holes, depressions, banks, softer or harder ground or other irregularities may cause the vehicle to tip or become unstable. Observe the terrain ahead and slow down in areas of uneven terrain.

This vehicle will handle differently when carrying or pulling a load.

– Reduce speed and follow instructions in this manual for carrying cargo or pulling a trailer.
– Avoid hills and rough terrain.
– Allow more distance to stop.

Be Prepared in Case of Rollover

– Fasten side nets and seat belt to help you avoid sticking out arms or legs.

– Never grab the cage while riding. Hands can be crushed between the cage and the ground in a rollover. Keep hands on the steering wheel or handholds.
– Never try to stop a rollover using your arms or legs. If you think that the vehicle may tip or roll, the driver should keep both hands on the steering wheel and the left foot firmly planted on the footrest. The passengers should keep both hands on the handholds and both feet firmly planted on the floor.

Avoid Collisions

This vehicle can reach high speeds. At higher speeds, there is an increased risk of losing control, particularly in challenging off-road conditions, and the risk of injury in a collision is greater. Never operate at excessive speeds. Always go at a speed that is proper for the terrain, visibility, and operating conditions, and your experience. Consider reserving use of the performance key for situations in which full speed and acceleration capability are appropriate.

Never operate this vehicle on any public street, road or highway, even dirt or gravel ones. Riding your vehicle on roads or highways could result in a collision with another vehicle. This vehicle is not designed for operation on roads. For example, it does not meet motor vehicle safety standards that apply to automobiles. In many jurisdictions it is not legal to operate this vehicle on public roads.

This vehicle does not have the same kind of protection for collisions as a car; for example, there are no air bags, the cockpit is not fully enclosed, and it is not designed for collisions with other vehicles. Therefore, it is particularly important to fasten seat belts and side nets and wear an approved helmet.

Practice Exercises

Before you go out for a ride, it is very important to familiarize yourself with the handling of your vehicle by practicing in a controlled environment. If possible, it is also a very good idea to take a more formal training course to sharpen your skills and increase your knowledge of the vehicle.

Find a suitable area to practice and perform the following exercises. It should be at least 45 m (150 ft) by 45 m (150 ft) free of obstacles like trees and rocks. Once you've selected a suitable permitted location, proceed with the following practice exercises.

Turning Exercises

Turning is one of the most frequent causes of accidents. It is easier for the vehicle to lose traction or rollover if you turn too sharply, or go too fast. Slow down when you approach a turn.

- First learn how to perform slight right turns at very low speeds. Release the throttle before turning and slowly reapply the throttle when turning.
- Repeat turning exercise but this time maintain the throttle at the level while turning.
- Finally, repeat turning exercise while accelerating slowly.
- Practice exercises turning on the other side.

Note how your vehicle reacts in these different exercises. We recommend releasing the throttle before entering a turn to help initiate directional change. You will feel the lateral force increasing with the speed and with your steering input. The lateral force should be maintained as low as possible to make sure it does not cause the vehicle to roll over.

U Turn Exercises

Practice doing U turns.

- Accelerate slowly and while remaining at low speed, then gradually turn the steering wheel to the right until you have completed the U turn.
- Repeat U turn exercise with different steering inputs and always at a very low speed.
- Repeat U turn exercise on the other side.

As mentioned before in this guide, do not ride on paved surfaces as the vehicle behavior will not be the same, increasing the risk of rollover.

Braking Exercises

Practice braking to get familiar with the brake response.

- Do it at low speed first, then increase the speed.
- Practice braking in straight line at different speeds and different braking force.
- Practice emergency braking; optimal braking is obtained in straight line, with high force applied, without locking the wheels.

Remember, braking distance depends on vehicle speed, load and the type of surface. Also, the tires and brakes conditions play a major role.

Reverse Exercises

The next step involves using the reverse.

- Install 1 cone marker on both sides of the vehicle beside each rear wheel. Move the vehicle forward until you can see the cone markers, then stop the vehicle. Acknowledge the distance required to see obstacles behind you.
- Learn how the vehicle handles itself in reverse and reacts with steering inputs.

– Always perform this reverse exercise at slow speeds.
– Become familiar with the usage of the override function. Do not steer while using the override as it increases the risks of rollover.

Emergency Engine Stopping Exercise

Learn how to stop your engine quickly in an emergency situation.

– While running at low speed, simply turn the ignition key to the off position.

This is to familiarize you with the vehicle's reaction when the engine is turned off while driving and to develop this reflex.

Off-Road Operation

The very nature of off-road operation is dangerous. Any terrain, which has not been specially prepared to carry vehicles, presents an inherent danger where terrain substance, shape and steepness are unpredictable. The terrain itself presents a continual element of danger, which must be knowingly accepted by anyone venturing over it.

An operator who takes a vehicle off-road should always exercise the utmost care in selecting the safest path and keeping close watch on the terrain ahead of him. The vehicle should never be operated by anyone who is not completely familiar with the driving instructions applicable to the vehicle, nor should it be operated on steep or treacherous terrain.

General Riding Techniques

General Driving Tips

Care, caution, experience and driving skill are the best precautions against the hazards of vehicle operation.

Whenever there is the slightest doubt that the vehicle can safely negotiate an obstacle or a particular piece of terrain, always choose an alternate route.

In off-road operation, power and traction, not speed, are important. Never drive faster than visibility and your own ability to select a safe route permit. Always go slowly and be extra careful when operating on unfamiliar terrain. Always be alert to changing terrain conditions when operating this vehicle. Be especially cautious on excessively rough, slippery, icy or loose terrain.

Constantly watch the terrain ahead for sudden changes in slopes or obstacles, such as rocks or stumps, that may cause loss of stability, resulting in tip over or rollover.

Never operate the vehicle if the controls do not function normally. See an authorized Can-Am dealer.

To maintain proper control it is strongly advised that you keep your hands on the steering wheel and within easy reach of all controls. The same holds true for your feet. To minimize the possibility of any leg or foot injury, keep your left foot on the footrest and right foot on the floor at all times. Staying completely within the cockpit will also help keep you from striking objects outside the vehicle.

Watch for and avoid branches and other objects that could enter the cockpit and strike you or your passengers.

Operating in Reverse

When operating in reverse, check that the path behind the vehicle is free of people or obstacles. Pay attention to blind spots. When it is safe to proceed in reverse, go slowly and avoid sharp turns.

⚠ WARNING

Steering inputs in reverse operation increase the risk of rollover.

NOTE: In reverse operation, the engine RPM is limited thus limiting the vehicle reverse speed.

⚠ WARNING

When driving downhill in reverse, gravity can increase the vehicle speed above the set limited reverse speed.

Crossing Roads

If you have to cross a road, ensure to have complete visibility on both sides for incoming traffic and decide on exit point on other side of road. Drive in a straight line toward that point. Do not make sharp direction changes or abrupt accelerations as it may result in a rollover situation. Do not travel on sidewalks or bicycle trails as they are designated specifically for those uses.

Riding on Paved Surfaces

Avoid paved surfaces. This vehicle is not designed to operate on paved surfaces and is more likely to roll over. If you must drive on pavement, turn gradually, go slowly, and avoid abrupt acceleration and braking.

Shallow Water Crossing

Water can be a unique hazard. If it is too deep the vehicle may "float" and topple. Check the water depth and current before you attempt to cross any water. Water depth should not exceed 30 cm (12 in) for vehicle to safely cross the obstacle. Beware of slippery surfaces such as rocks, grass, logs, etc., both in the water and on its banks. A loss of traction may occur. Do not attempt to enter the water at high speed.

Water will affect the braking ability of your vehicle. Make sure you dry the brakes by applying them several times after the vehicle leaves the water.

Mud or marsh lands may be encountered near water. Be prepared for sudden "holes" or changes in depth. Similarly so, be watchful of hazards such as rocks, logs, etc., partially covered by vegetation.

Riding on Snow or Ice

When performing pre-ride inspection, pay special attention to locations on the vehicle where snow and/or ice accumulations may obstruct visibility of the tail lamp, clog ventilation openings, block the radiator and fan, and interfere with the movement of controls. Before starting with your vehicle, check the steering, accelerator and brake pedals for interference free operation.

Whenever this vehicle is ridden on a snow covered drive path, the tire grip is generally reduced causing the vehicle to react differently to control inputs from the operator. On low grip surfaces, the steering responses are not as crisp and precise, stopping distances are lengthened and acceleration is also affected. Slow down and do not "gun" the accelerator. This will only result in spinning of the tires and possibly in an over steering slide of the vehicle. Avoid hard braking. This will possibly result in a straight line slide of the vehicle. Again, the best advice is to safely reduce speed in anticipation of a maneuver to give yourself time and distance in order to keep control of the vehicle.

As you drive your vehicle over a loose snow covered surface, snow dust will be picked up in the wake turbulence of the moving vehicle and transported to contact and accumulate or melt on some exposed components including rotating parts like brake discs. Water, snow or ice may affect the response time of the brake system of your vehicle. Even when not required to reduce vehicle speed apply brakes frequently to prevent ice or snow accumulation and to dry brake pads and discs. While doing so in low risk driving situations you will test for grip level and keep yourself alerted to how the vehicle reacts to your control inputs. Always

keep brake and accelerator pedals and floor boards free of snow and ice. Frequently wipe snow off seat, steering wheel, headlights and tail lamps.

The depth of the snow cover may hide rocks, tree stumps or other objects and if it is wet may totally impede the drivability as the vehicle becomes bogged down or completely looses traction in slushy snow. Look far ahead and always be watchful of any visible clues that might indicate the presence of such obstacles. In doubt steer clear. Avoid driving on any frozen waterways before checking that the ice will safely support the vehicle, its riders and its load of cargo.

At the end of each ride it is a good practice to clean the vehicle and all moving components (brakes, steering components, drivelines, controls, radiator fan etc.) from any snow or ice accumulations. Wet snow will turn to ice during the shut down period and become more difficult to remove at the next pre-ride inspection.

Riding on Sand

Sand and riding on sand dunes is another unique experience but there are some basic precautions that should be observed. Wet, deep or fine sand may create a loss of traction and cause the vehicle to slide, drop off or become "bogged" down. If this occurs look for a firmer base. Again, the best advice is to slow down and be watchful of the conditions.

When riding in sand dunes it is advisable to equip the vehicle with an antenna type safety flag. This will help make your location more visible to others over the next sand dune. Proceed carefully should you see another safety flag ahead.

Riding on Gravel, Loose Stones or Other Slippery Surfaces

Riding on loose stones or gravel is very similar to riding on ice. They will affect the steering of vehicle, possibly causing it to slide and tip over especially at high speeds. In addition, braking distance may be affected. Remember that "gunning" the throttle or sliding may cause loose stones to be ejected rearwards into the path of another rider's way. Never do it deliberately.

If you do get into a slide or skid, it may help to turn the steering wheel into the direction of the skid until you regain control. Never jam the brakes and lock the wheels.

Crossing Obstacles

Use the low range (L) for crossing obstacles.

Obstacles on the "trail" should be traversed with caution. This includes rocks, fallen trees, and depressions. You should avoid them whenever possible. Remember that some obstacles are too large or dangerous to cross and should be avoided. As a guideline, never attempt to cross an obstacle higher than the ground clearance of the vehicle. Small rocks or small fallen trees may be safely crossed - approach obstacle at low speed and as much as possible at a right angle. Adjust speed without losing momentum and do not accelerate abruptly. Passengers must grasp handholds firmly and brace feet on the floor. Hold steering firmly without closing your fists around it and proceed. Be aware that the obstacle may be slippery or may move while crossing.

Hill Driving Conditions

When driving on hills or slopes, two things are highly important: be prepared for slippery surfaces or terrain variations and obstacles and brace yourself properly inside vehicle. If you climb or descend a hill that is too slip-

pery or has too loose a surface, you can lose control. If you go over the top of a hill at high speed, you may not have time to prepare for the terrain on the other side. Avoid parking on a slope. Always put the shift lever in PARK when stopped or parked, especially on an incline, to avoid rolling. If you must park on a steep incline, block the wheels using rocks or bricks.

Uphill Driving

Use the low range (L) for uphill driving.

Due to its configuration, this vehicle has very good traction even while climbing, so much so that tip over is possible before traction is lost. For example, it is common to encounter terrain situations where the top of the hill has eroded to a point that the hill peak rises very sharply. This vehicle is not designed to negotiate such a condition. Take an alternate route.

It is also wise to know the terrain condition on the other side of the hill or bank. All too often there exists a sharp drop-off that is impossible to negotiate or descend.

If you feel that the slope is getting too steep to climb, apply brakes to immobilize vehicle. Put shift lever in reverse (R), and back down the hill, barely releasing brakes to remain at low speed. Do not attempt to turn around. Never coast down hill while vehicle is in neutral. Do not perform hard braking as it increases the risk of tipover.

Downhill Driving

This vehicle can climb steeper slopes than it can descend safely. Therefore, it is essential to assure that a safe route exists to descend a slope before you climb it.

Decelerating while negotiating a slippery downhill slope could "toboggan" the vehicle, causing it to slide. Maintain steady speed and/or accelerate slightly to regain control. Never slam brakes and lock the wheels.

Side Hilling

Whenever possible, side hilling (driving across a slope rather than up or down it) should be avoided. If necessary, do so with extreme caution. Side hilling on steep inclines could result in rollover. In addition, slippery or unfirm surfaces could result in uncontrollable side sliding. Avoid all objects or depressions that will intensify the raising of one side of the vehicle higher than the other, thus causing rollover. If you feel the vehicle start to rollover or slide sideways, steer downhill if possible.

⚠ WARNING

Be careful when loading and transporting liquid reservoirs. They can affect vehicle stability when side hilling by pulling downhill and increasing the risk of a roll over.

Drop-Offs

This vehicle is not designed to negotiate drop-offs. It will "bottom-out" and usually stop if either the front or rear wheels are driven over a drop-off. If the drop is sharp or deep, the vehicle will nose dive and tip over.

Avoid negotiating drop-offs. Reverse and select an alternate route.

Recreational, Group and Distance Riding

Respect the rights and limitations of others. Stay away from areas designated for other types of off road use. This includes snowmobile trails, equestrian trails, cross country ski trails, mountain bike trails, etc. Never assume there are no other users on the trail. Always stay to the right of the trail and do not zig zag to one side of the trail then the other. Be prepared to stop or pull off to the side if another trail user appears in front of you.

Join a local side-by-side vehicle club. It will provide you with a map and advice or inform you where you can ride. If a

club does not exist in your area, help to start one. Group riding and club activities provide a pleasurable, social experience. Never use this vehicle with drugs or alcohol, or tired or ill.

Always keep a safe distance from other riders. Your judgment of speed, terrain conditions, weather, mechanical condition of your vehicle and the "trust in judgment" you have in others around you will help you make a better choice of appropriate safe distance. This vehicle, like any other motorized vehicle, cannot stop "on a dime".

Before you ride, tell someone where you are planning to travel and your expected time of return.

Depending on the length of your ride, carry additional tools or emergency equipment. Find out where you can get additional gasoline. Be prepared for the possible conditions you may encounter. An emergency first aid kit should always be a consideration.

Environment

One of the benefits of this vehicle is that it can take you off the beaten path away from most communities. However, you should always respect nature and the rights of others to enjoy it. Do not ride in environmentally sensitive areas. Do not drive over forest crops or shrubs, nor cut down trees or take down fencing, nor spin your wheels and destroy the terrain. "Tread Lightly".

This vehicle can cause OHV wildfires if debris builds up near the exhaust or other engine hot spots and ignites then falls off into dry grass. Avoid riding in wet areas, through muskeg or tall grass, where debris can build up. Should you ride in those areas, inspect and remove all debris from your engine and hot spots. Refer to *MAINTENANCE* section for details.

Chasing wildlife is in many areas illegal. Wildlife can die of exhaustion after being chased by a motorized vehicle. If you encounter animals on the trail, stop and observe quietly and with caution. It will be one of the better memories of your life.

Observe the rule... "what you take in, carry out". Do not litter. Do not start campfires unless you have permission to do so, and then only away from dry areas. The hazards you may create on the trail may cause injury to others or yourself, even at a later date.

Respect farm lands. Always obtain the permission of the landowner before riding on private land. Respect crops, farm animals and property lines.

Finally, do not pollute streams, lakes or rivers and do not modify the engine or exhaust system, or remove any of its components as it will alter the vehicle emissions.

MOVING LOADS AND DOING WORK

Working with your Vehicle

Your vehicle can help you perform a number of different LIGHT tasks ranging from snow removal to pulling wood or carrying cargo. A variety of accessories are available from your authorized Can-Am dealer. To prevent possible injury, follow the instructions and warnings that accompany the accessory. Always respect the load limits of the vehicle. Overloading the vehicle can overstress the components and cause failure. Avoid overexerting yourself if you lift or pull heavy loads or manually push the vehicle.

Carrying Loads

Any load carried on the vehicle will affect the handling, stability and braking distance of the vehicle. Do not exceed the load limits of the vehicle, including the weight of operator, passengers, cargo, accessories and trailer tongue weight.

LOAD LIMIT OF THE VEHICLE		
DPS AND XT MODELS	526 kg (1,160 lb)	Includes occupants, cargo, tongue weight and added accessories
LTD MODELS	503 kg (1,110 lb)	

Following are examples of suitable total vehicle load distribution:

EXAMPLES OF SUITABLE VEHICLE TOTAL LOADS (DPS AND XT MODELS)				
OPERATOR AND PASSENGERS	CARGO BOX LOAD	ACCESSORIES	TONGUE WEIGHT	TOTAL VEHICLE LOAD
250 kg (551 lb)	183 kg (403 lb)	25 kg (55 lb)	68 kg (150 lb)	526 kg (1,160 lb)
186 kg (410 lb)	272 kg (600 lb)	0 kg (0 lb)	68 kg (150 lb)	526 kg (1,160 lb)

EXAMPLES OF SUITABLE VEHICLE TOTAL LOADS (LTD MODELS)				
OPERATOR AND PASSENGERS	CARGO BOX LOAD	ACCESSORIES	TONGUE WEIGHT	TOTAL VEHICLE LOAD
250 kg (551 lb)	160 kg (354 lb)	25 kg (55 lb)	68 kg (150 lb)	503 kg (1,110 lb)
186 kg (410 lb)	272 kg (600 lb)	0 kg (0 lb)	45 kg (100 lb)	503 kg (1,110 lb)

NOTE: Spread left and right occupant weight evenly.

NOTE: When the vehicle's transmission is in high range, the combined weight in cargo box and tongue weight must not exceed 68 kg (150 lb).

To reduce the risk to lose control or the load carried, follow these recommendations.

Vehicle Settings When Carrying Load

When the total load exceeds 195 kg (430 lb), including weight of operator, passengers, cargo, accessories and trailer tongue weight, inflate the tires to maximum pressure 110 kPa (16 PSI) (all models except LTD), or 124 kPa (18 PSI) (LTD model) Front, and 179 kPa (26 PSI) Rear (all models).

NOTE: When carrying heavy loads or passengers readjust suspension accordingly.

NOTE: When carrying heavy loads in cargo box or pulling a trailer operate with the shift lever in L (low range).

Loading the Cargo Box

NOTICE When loading or unloading, do not exceed the weight limit of 100 kg (220 lb) on either tailgate.

Load cargo as low as possible – a higher load can raise the vehicle's center of gravity, which can reduce stability. Position cargo toward the front and center of the cargo box and as evenly as possible.

Secure the load to the tie down hooks inside cargo box. Use only the tie down hooks on the bottom of the cargo box; do not secure cargo to the cage or other part of the vehicle. If it is not properly secured, a load may slide or fall off, possibly striking occupants or bystanders; or it may shift during riding, affecting the handling of the vehicle.

Objects that are higher than the walls of the cargo bed may affect visibility for the driver and may act as projectiles in case of an accident. Loads that protrude sideways can get snagged or caught in bush, branches or other obstacles. Avoid covering and obstructing the brake lights with the cargo. Ensure no cargo protrudes outside the box and that cargo will not interfere with your visibility or control of the vehicle.

Do not overload cargo box.

Close both tailgates before operating.

MAXIMUM CARGO BOX LOADS		
CARGO BOX (TOTAL)	272 kg (600 lb)	Evenly distributed and safely secured. Loaded as low as possible to reduce height of center of gravity.
LOWER CARGO BOX	272 kg (600 lb)	Evenly distributed.
UPPER CARGO BOX	181 kg (400 lb)	Evenly distributed on floor separator.
UPPER TAILGATE	100 kg (220 lb)	Only while loading cargo into cargo box. Never operate with tailgate open.
LOWER TAILGATE	100 kg (220 lb)	Only while loading cargo into cargo box. Never operate with tailgate open.

Following are examples of cargo box loading limits:

EXAMPLES OF CARGO BOX TOTAL LOADS		
CARGO BOX UPPER SECTION LOAD	CARGO BOX LOWER SECTION LOAD	TOTAL CARGO BOX LOAD
0 kg (0 lb)	272 kg (600 lb)	272 kg (600 lb)
100 kg (220 lb)	172 kg (380 lb)	272 kg (600 lb)
181 kg (400 lb)	91 kg (200 lb)	272 kg (600 lb)

Operating While Carrying a Load

Reduce your speed when carrying cargo and turn gradually. Avoid hills and rough terrain. Allow more distance for braking. This vehicle may require additional stopping distance if carrying heavy loads or passengers, especially on inclined surfaces.

Tilting the Cargo Box

The cargo box can be tilted to ease unloading. Use release handles on either side of cargo box.



tmo2011-001-518_a

1. RH release handle

NOTICE Always turn off engine when tilting the cargo box.

⚠ WARNING

- Always ensure no one is standing behind the cargo box before you actuate the release handle.
- The load weight may affect the operation of the cargo box tilting feature (tilting or lowering).

Be very careful with the operation of the tail gates and the cargo box as the load may have moved during transport.

To lower the cargo box, simply push it down into place.

⚠ WARNING

- Keep yourself and others clear of the cargo box and vehicle frame junction when lowering cargo box.
- Ensure to properly latch the cargo box and the tailgates before riding.
- Make sure you do not leave objects between lifted cargo box and vehicle frame to ensure proper latching of the cargo box when lowered.



FRONT SECTION OF INCLINED CARGO BOX FREE OF ANY OBJECTS



PUSH TO CLOSE
1. Hand guard

Hauling a Load

Never pull a load by attaching it to the cage; this can cause the vehicle to tip over. Use only the trailer hitch or winch (if installed) to pull a load.

When pulling loads with a chain or cable, ensure that there is no slack before starting and maintain tension while pulling.

When pulling loads with a chain or cable, be sure to brake progressively. The inertia of the load could lead to an impact.

When hauling a load, respect the maximum hauling capacity. See *PULLING A TRAILER* subsection.

⚠ WARNING

Slack can cause the chain or cable to break and snap back.

When pulling another vehicle, be sure that someone is controlling the pulled vehicle. They must brake and steer to prevent the vehicle from going out of control.

Before pulling loads with a winch, refer to the winch manufacturer's instructions.

Reduce your speed when hauling a load and turn gradually. Avoid hills and rough terrain. Never attempt steep hills. Allow more distance for braking, especially on inclined surfaces and when a passenger is on board. Be careful not to skid or slide.

Pulling a Trailer

NOTICE **A BRP approved rear hitch must be properly installed on the vehicle for hauling trailers.**

Riding this vehicle with a trailer substantially increases the risk of toppling, especially on inclined slopes. If a trailer is used behind the vehicle make sure that its hitch is compatible with the one on the vehicle. Make sure the trailer is horizontal with the vehicle. (In some instances a special extension may have to be installed on the vehicle hitch). Use security chains or cables to secure the trailer with the vehicle.

Reduce your speed when pulling a trailer and turn gradually. Avoid hills and rough terrain. Never attempt steep hills. Allow more distance for braking, especially on inclined surfaces and when a passenger is on board. Be careful not to skid or slide.

Improperly loading a trailer may cause loss of control. Respect the recommended maximum hauling capacity and maximum tongue load (Refer to

MAXIMUM HAULING CAPACITY table). Make sure there is at least some weight on the tongue.

Always make sure load is evenly distributed and safely secured on the trailer; an evenly balanced trailer is easier to control.

Always put the shift lever to L (low range) for hauling a trailer – in addition to providing more torque, operating in low range helps account for the increased load on the rear tires.

When stopped or parked, block the vehicle and trailer wheels from possible movement.

Use caution when disconnecting a loaded trailer; it or its load may topple on you or others.

When hauling a trailer, respect the following maximum hauling capacity.

MAXIMUM HAULING CAPACITY		
TYPE OF ATTACHMENT	TRAILER LOAD ALLOWED	TONGUE WEIGHT ALLOWED
50.8 mm (2 in) X 50.8 mm (2 in) hitch ball support	680 kg (1,500 lb)	68 kg (150 lb)
38 mm (1.5 in) X 38 mm (1.5 in) hitch ball support and the appropriate hitch adapter	400 kg (882 lb)	40 kg (88 lb)
NOTE: Includes trailer and trailer load. Ensure to properly load the trailer so that tongue is always pushing on hitch support and not pulling on hitch ball.		

IMPORTANT ON-PRODUCT LABELS

Hang Tag

This vehicle comes with a hang tag and labels containing important safety information.

Any person who rides this vehicle should read and understand this information before riding.

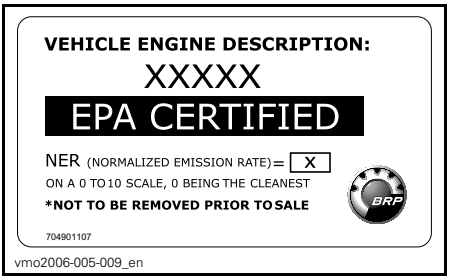

TYPICAL: APPLICABLE FOR ALL MODELS IN CANADA AND UNITED STATES, APPLICABLE FOR MODELS EVERYWHERE EXCEPT CANADA AND UNITED STATES WHEN EQUIVALENT TO A MODEL CERTIFIED TO US. EPA STANDARDS

Safety Labels

Read and understand all the safety labels on your vehicle.

These labels are affixed to the vehicle for the safety of the operator, passengers or bystanders.

The following labels are on your vehicle, and they should be considered permanent parts of the vehicle. If missing or damaged, they can be replaced free of charge. See an authorized Can-Am dealer.

NOTE: In the event of any discrepancy between this guide and the vehicle, the safety labels on the vehicle have precedence over the labels in this guide.

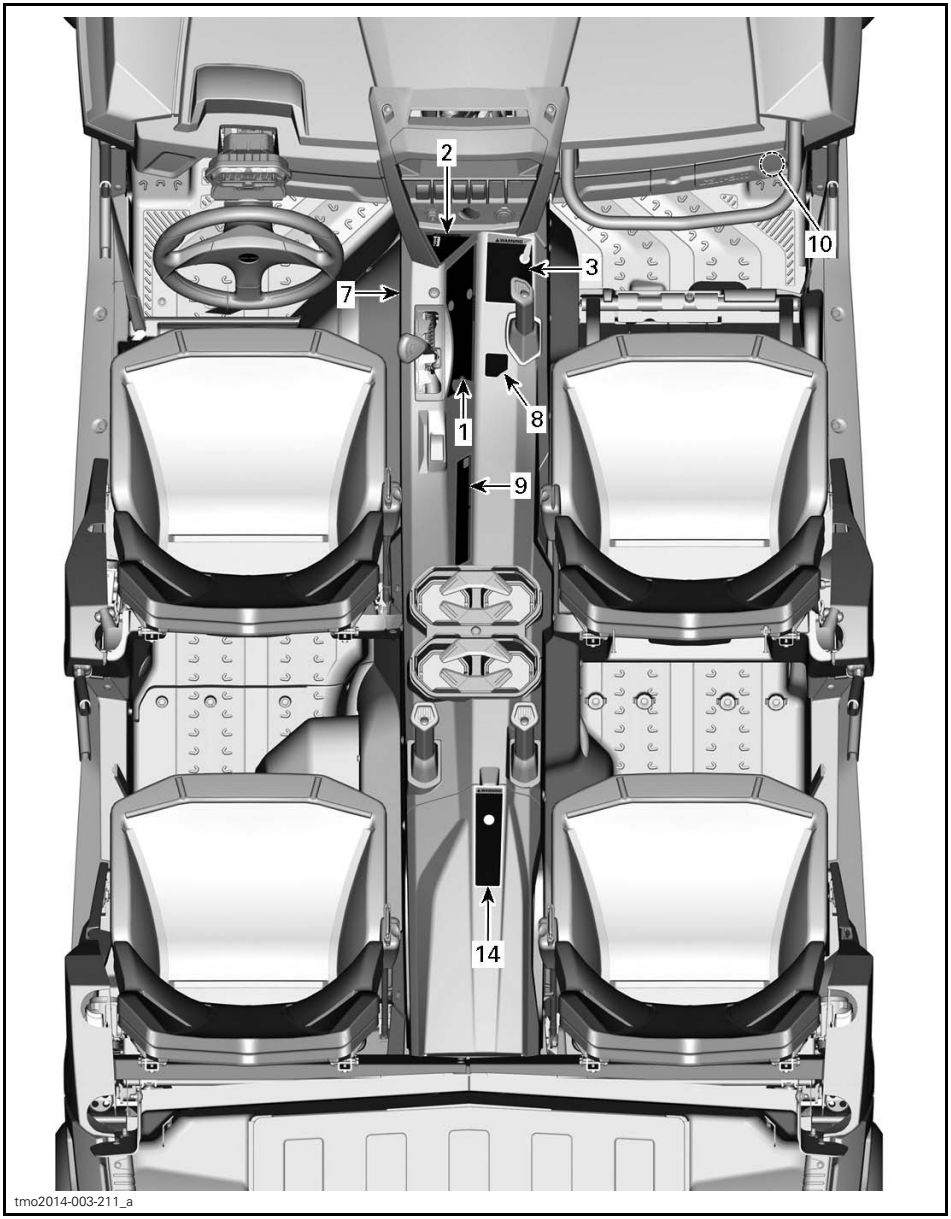

TYPICAL - DPS AND XT MODELS

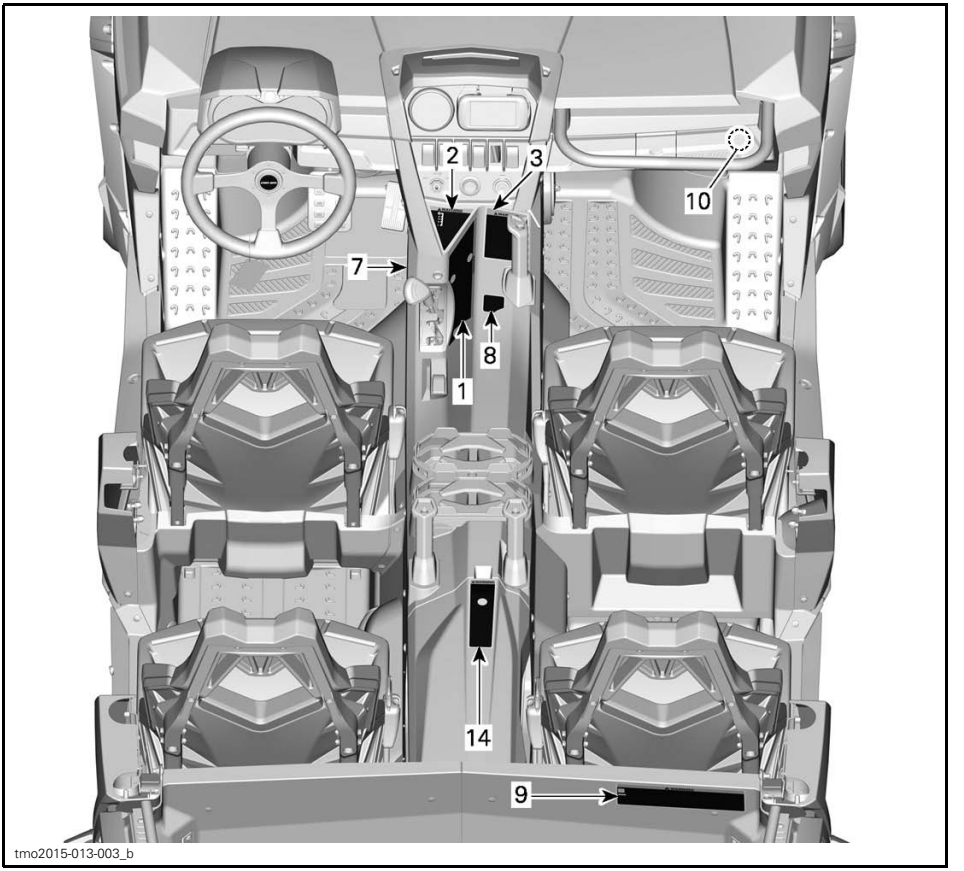

TYPICAL - LTD MODELS

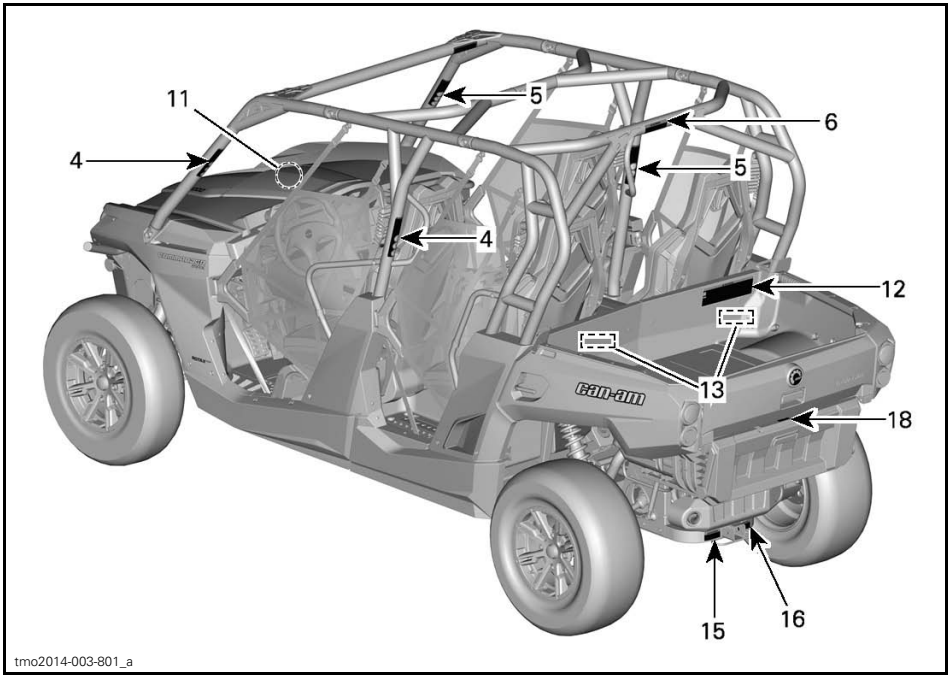

TYPICAL - DPS AND XT MODELS

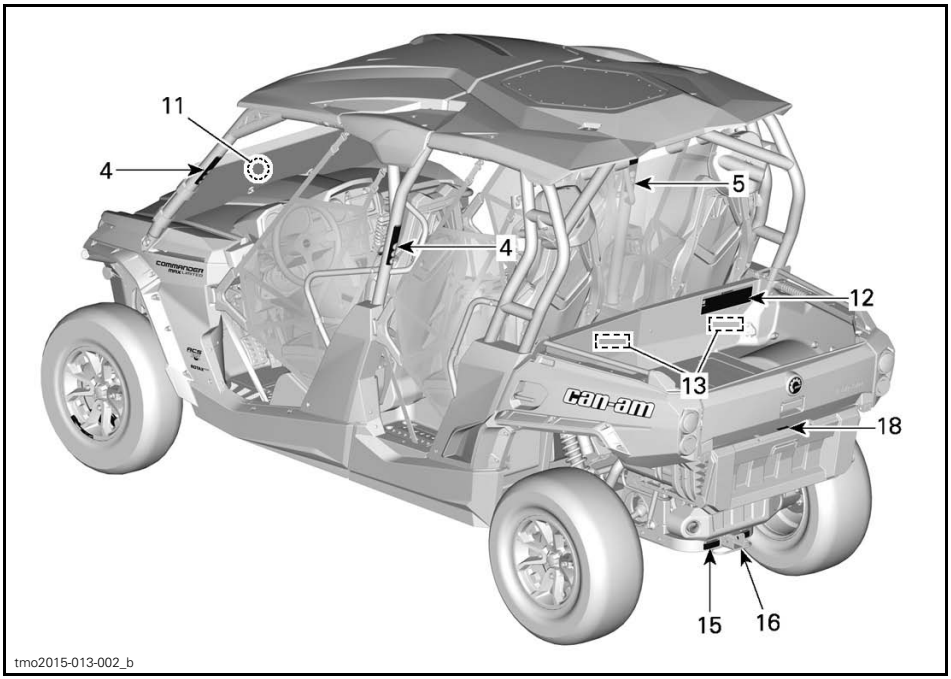

TYPICAL - LTD MODELS

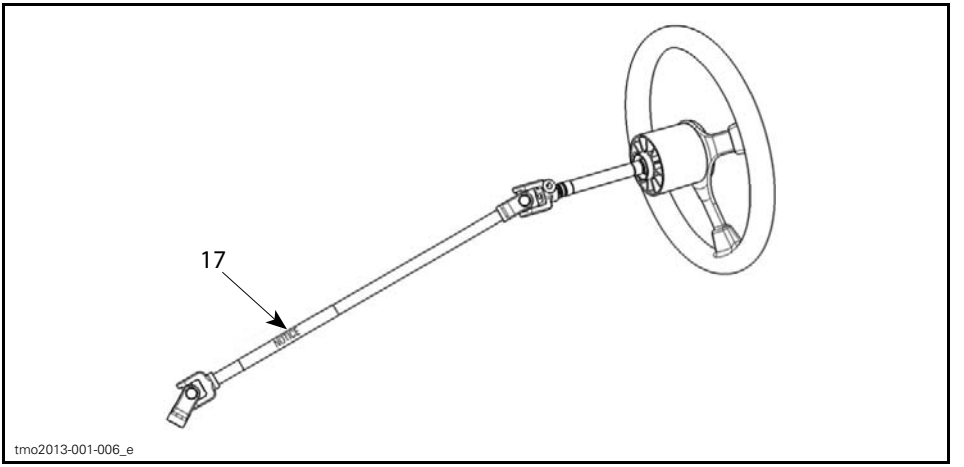

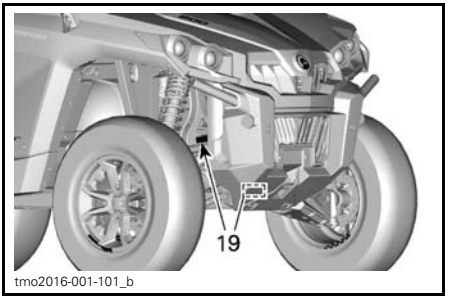

TYPICAL

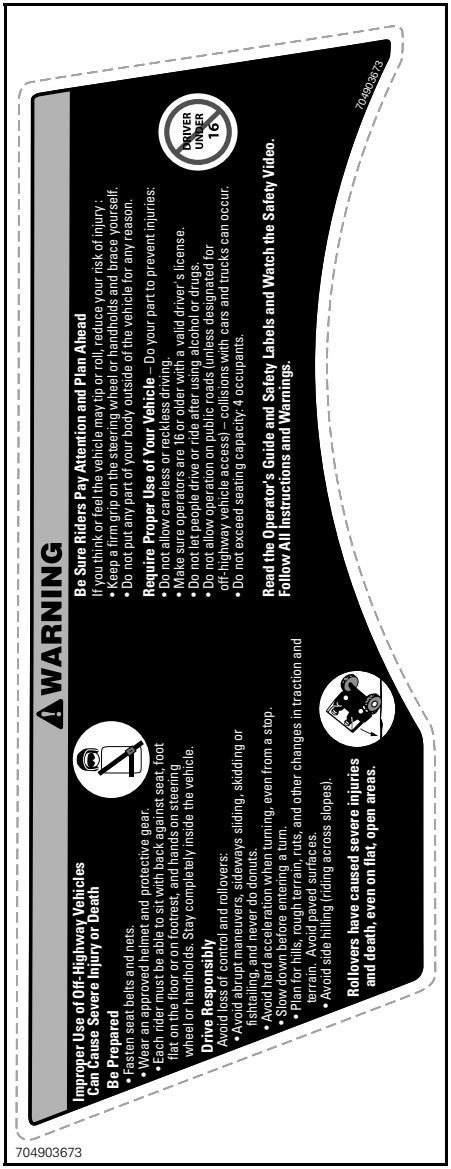

LABEL 1



LABEL 2

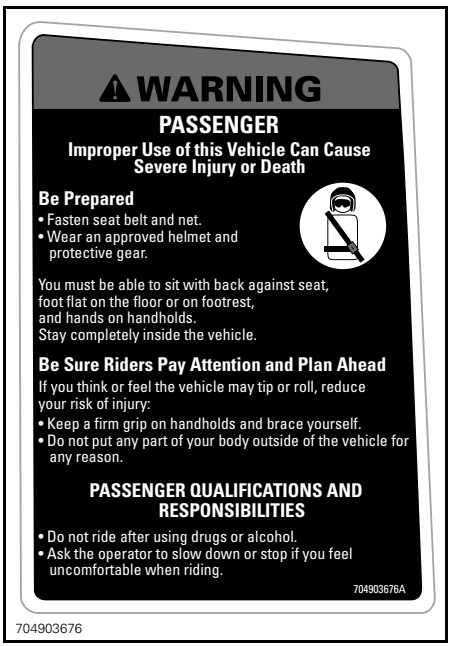

LABEL 3



LABEL 4

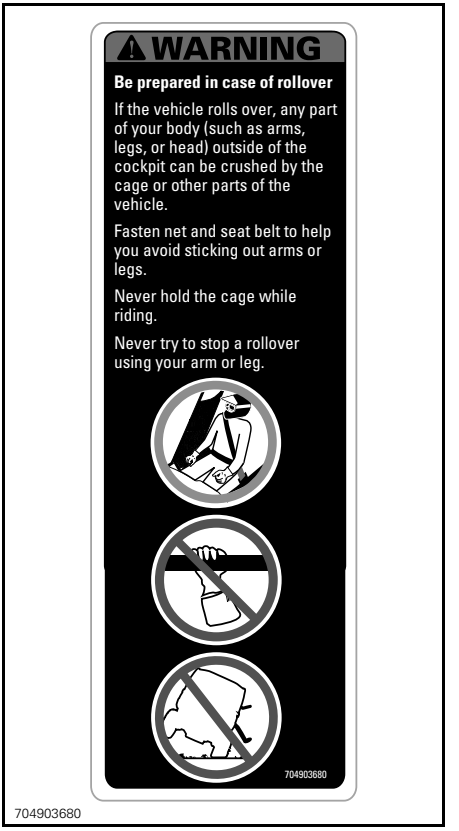

LABEL 5

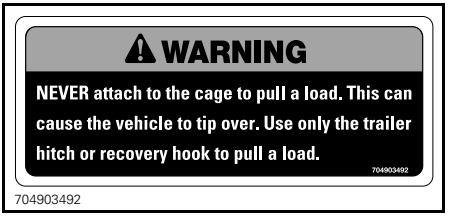

LABEL 6

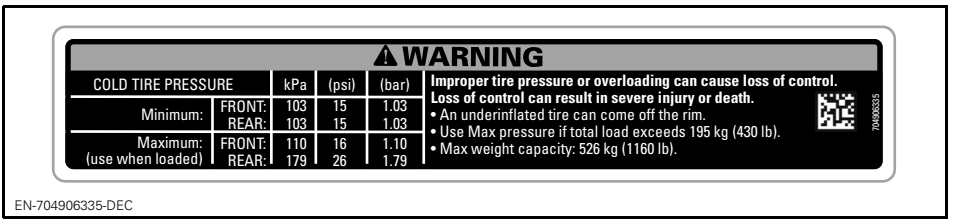

LABEL 7 - ALL MODELS EXCEPT LTD

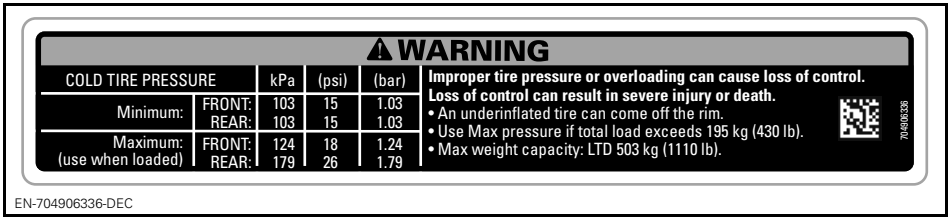

LABEL 7 - LTD MODEL



LABEL 8

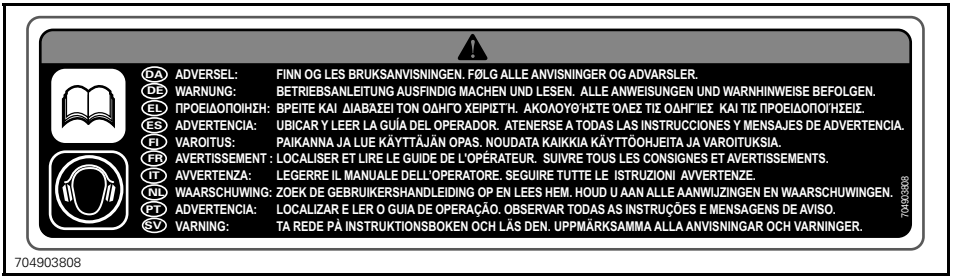

LABEL 9 - OUTSIDE CAN - US



LABEL 10

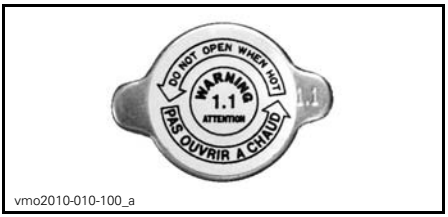

LABEL 11

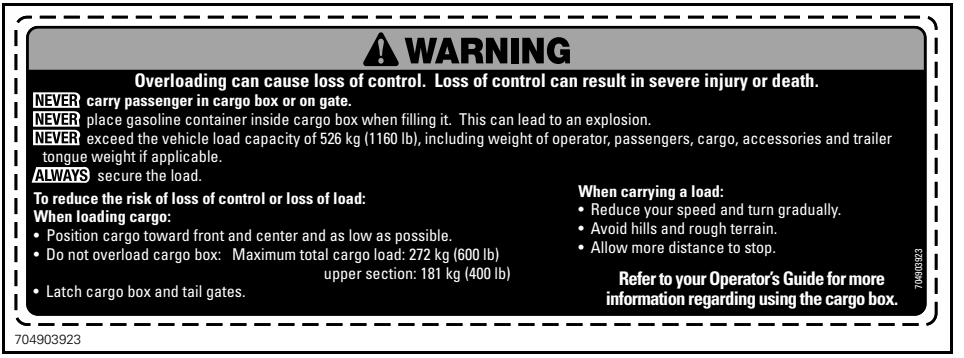

LABEL 12 - DPS AND XT MODELS

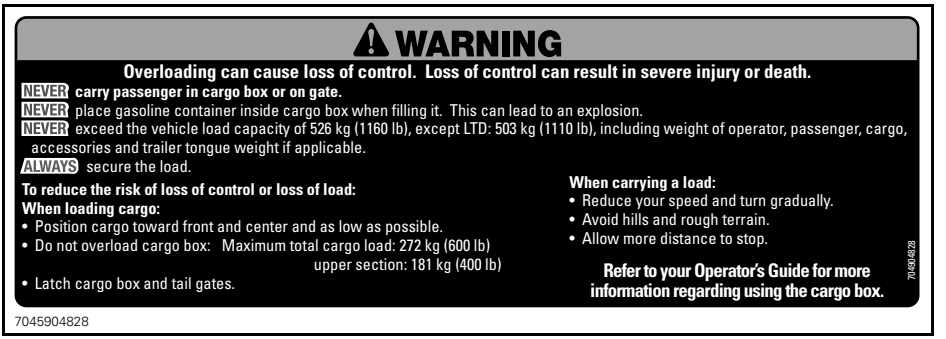

LABEL 12 - LTD MODELS



LABEL 13



704903893

LABEL 14



704902336B

LABEL 15



704902345C

LABEL 16

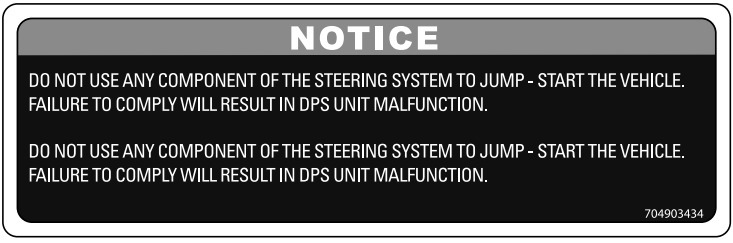

704903434

LABEL 17



LABEL 18

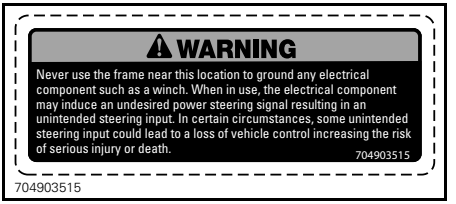

LABEL 19

Compliance Labels

These labels indicate vehicle's compliance.



TYPICAL

1. *Compliance labels located under glove box*



TYPICAL: APPLICABLE FOR ALL MODELS IN CANADA AND UNITED STATES, APPLICABLE FOR MODELS EVERYWHERE EXCEPT CANADA AND UNITED STATES WHEN EQUIVALENT TO A MODEL CERTIFIED TO US. EPA STANDARDS

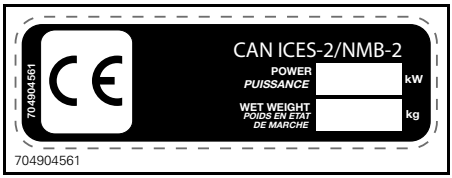



ON TOP RIGHT OF FRONT BAR OF CAGE

Technical Information Labels

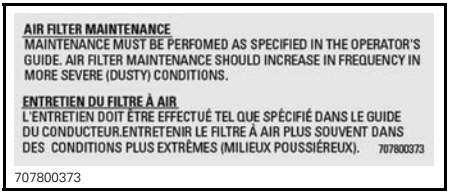

LOCATION: ON ENGINE AIR FILTER HOUSING COVER

This page is intentionally blank

VEHICLE INFORMATION

PRIMARY CONTROLS

It is important to know the location and operation of all controls, and to develop and practice smooth and coordinated use of them.

NOTE: Some vehicle safety labels are not shown on illustrations. For information on vehicle safety labels, refer to *VEHICLE SAFETY LABELS* subsection.

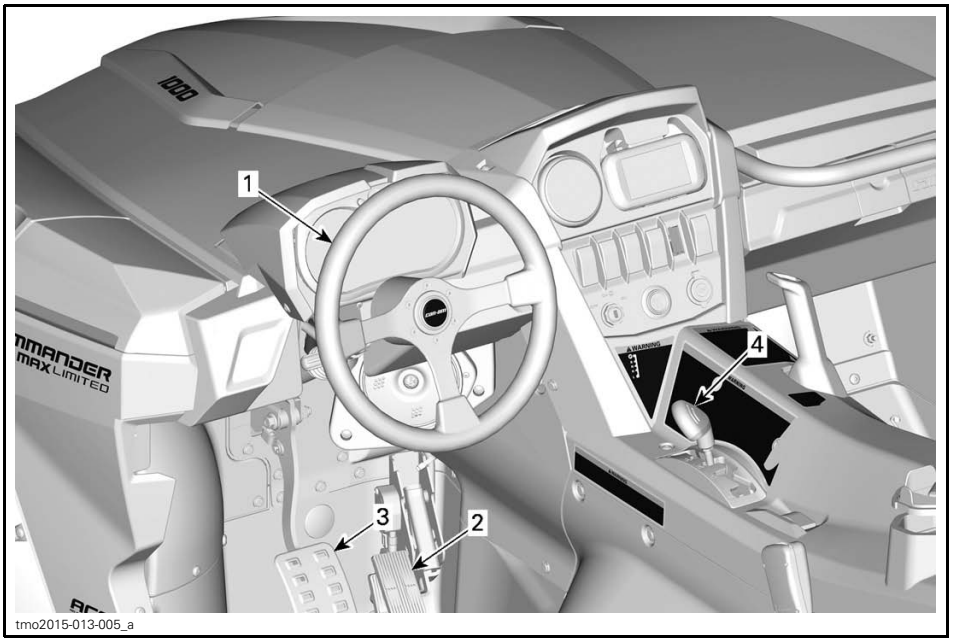

tmo2015-013-005_a

TYPICAL - PRIMARY CONTROLS

1) Steering Wheel

The steering wheel is located in front of the driver's seat.

The steering wheel steers the vehicle to the left or right.

Steer the steering wheel in the direction you want to go.

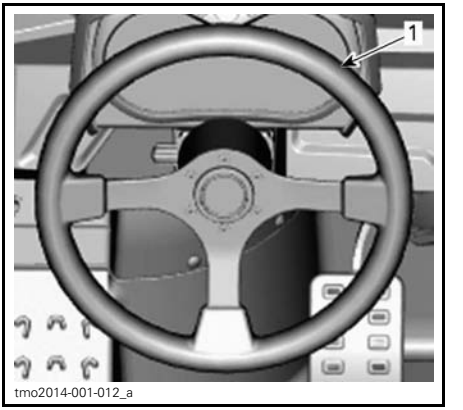

tmo2014-001-012_a

TYPICAL
1. Steering wheel

Grip the steering wheel with both hands, without having thumbs rolled around the steering wheel.

⚠ CAUTION Under rough trail conditions or when crossing an obstacle, the steering wheel could suddenly jerk on one side, causing hand or wrist injuries if the thumbs are rolled around the steering wheel.

Models with DPS

Those models are equipped with Dynamic Power Steering (DPS) system. The DPS reduces the effort to turn the steering wheel.

2) Accelerator Pedal

The accelerator pedal is located on the right side of the brake pedal.

The accelerator pedal controls the engine speed.

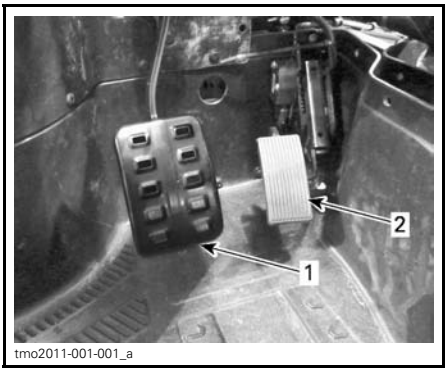

1. Brake pedal
2. Accelerator pedal

To increase or maintain vehicle speed, press on the accelerator pedal with your right foot.

To decrease vehicle speed, release the accelerator pedal.

The accelerator pedal is spring loaded and should return to rest position (idle) when not pressed.

NOTE: The accelerator pedal should never be disassembled.

3) Brake Pedal

The brake pedal is located on the left side of the accelerator pedal.

The brake pedal function is to slow down or stop the vehicle.

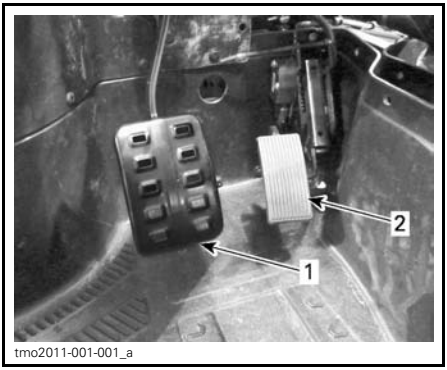

1. Brake pedal
2. Accelerator pedal

To decrease vehicle speed or to stop vehicle, press down the brake pedal with your right foot.

The brake pedal is spring loaded and should return to rest position when not pressed.

4) Shift Lever

The shift lever is located on the lower console.

The shift lever is used to change the gearbox position.

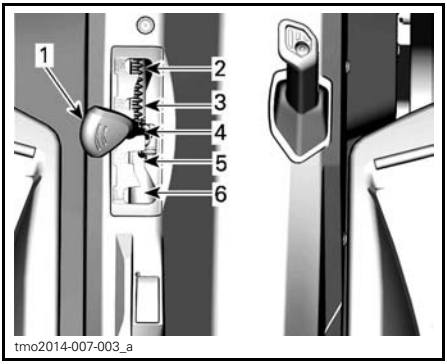

1. Shift lever
2. Park
3. Reverse
4. Neutral
5. High range (forward)
6. Low range (forward)

The vehicle must be stopped and brakes applied prior to selecting any gear.

NOTICE This gearbox is not designed to shift while vehicle is moving.

Park

The park position locks the gearbox to help prevent vehicle movement.

⚠ WARNING

Always use the PARK (P) position when the vehicle is not in operation. The vehicle can roll if the shift lever is not set to P (PARK).

Reverse

The reverse position allows the vehicle to go backwards.

NOTE: In reverse operation, the engine's RPM is limited, thus limiting the vehicle reverse speed.

⚠ WARNING

When driving downhill in reverse, gravity can increase the vehicle speed above the set limited reverse speed.

Neutral

The neutral position disengages the gearbox.

High Range (Forward)

This position selects the high speed range of the gearbox. It is the normal driving speed range. It allows the vehicle to reach its maximum speed.

Low Range (Forward)

This position selects the low speed range of the gearbox. It allows the vehicle to move slowly with maximum torque at the wheels.

NOTICE Use the low speed range to pull a trailer, carry heavy cargo, go over obstacles or drive uphill and downhill.

SECONDARY CONTROLS

NOTE: Some vehicle safety labels are not shown on illustrations. For information on vehicle safety labels, refer to *VEHICLE SAFETY LABELS* subsection.

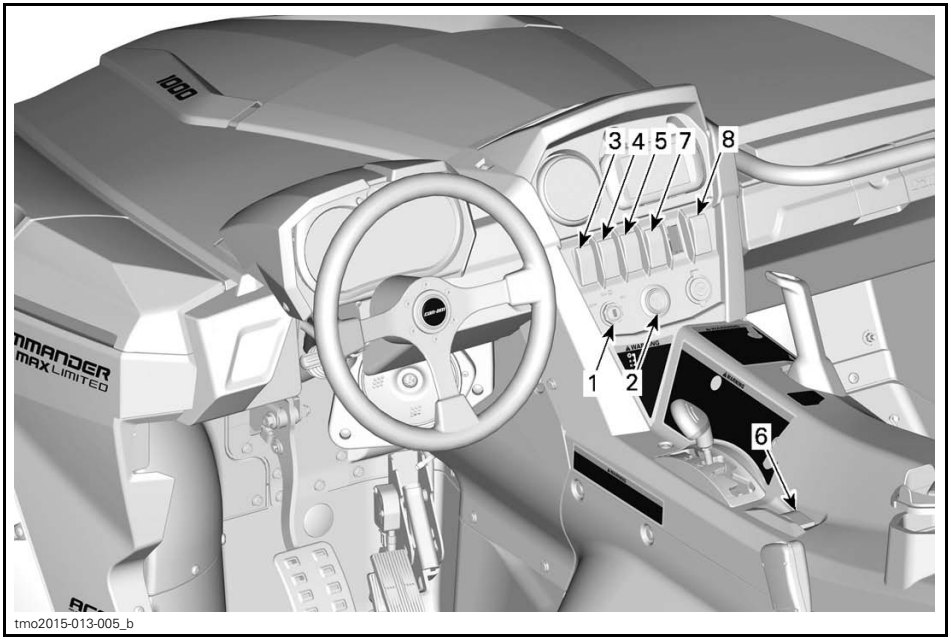

TYPICAL - SECONDARY CONTROLS

1) Ignition Switch and Keys

Ignition Switch

The ignition switch is located on the upper console area.

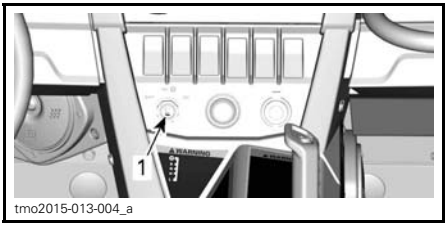

TYPICAL
1. Ignition switch

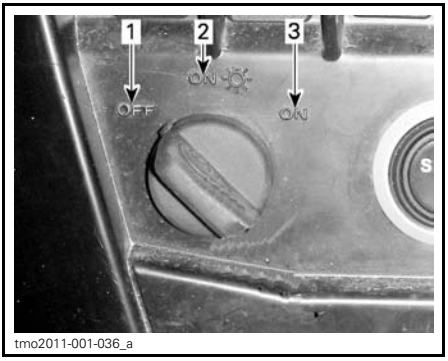

IGNITION SWITCH POSITION
1. OFF
2. ON with lights
3. ON

OFF

The key can be inserted or removed in this position only.

In OFF position, the electrical system of the vehicle is disabled.

The engine is shut down by turning the ignition switch to OFF position.

ON with Lights

When the key is turned in this position, the electrical system of the vehicle is activated.

The gauge should wake-up.

The vehicle lights are turned on.

The engine can be started.

ON

This position offers the same functions as ON with lights position, except the vehicle lights are turned off.

Ignition Keys

Digitally Encoded Security System (D.E.S.S.)

The ignition keys contain an electronic circuit that gives it a unique electronic serial number.

The D.E.S.S. system reads the key code and allows engine starting for keys it recognizes.

Types of Keys

This vehicle can be operated using 3 different types of ignition keys:

- Normal key (grey)
- Performance key (black)
- Optional Work key (orange).

The key type is differentiated by its color.

⚠ WARNING

Rollovers, tipovers, collisions and loss of control resulting in serious injury or death are possible with the performance, normal or optional work keys. Using the work key or normal key is not a substitute for the operator being prepared, qualified, and operating with care.

Normal Key

The vehicle is delivered with a normal key.

The normal key limits the overall performance to 70% of maximum engine torque and vehicle speed to 70 km/h (43 MPH).

⚠ WARNING

On steep downhills, the engine speed limiter may not prevent the vehicle from accelerating beyond this speed.

This key may be useful for riders who prefer more gradual acceleration, or for riding in environments where full speed and high acceleration are not desirable. For example, in narrow, winding trails, operators may prefer the normal key.

Performance Key

The vehicle is delivered with a performance key, which allows the user to access the full torque of the engine as well as the top speed of the vehicle.

This may be useful for riders who prefer greater acceleration, and for environments where higher speeds and greater acceleration are appropriate. For example, in wide-open, straight trails, operators may prefer the performance key.

Optional Work Key

A work key is also available at your dealership.

The work key limits the overall performance to 50% of maximum engine torque and vehicle speed to 40 km/h (25 MPH).

⚠ WARNING

On steep downhills, the engine speed limiter may not prevent the vehicle from accelerating beyond this speed.

This may be useful for riders who use this vehicle in a workplace environment where lower speeds and acceleration are a requirement.

2) Engine Start Button

The engine start button is located on the upper console. When pressed and held, it starts the engine.

NOTE: The ignition switch must be in the ON or ON with lights position to allow engine start.

NOTE: If the ignition switch is left ON for more than 15 minutes, engine will not start unless ignition switch is turned OFF, then ON again.

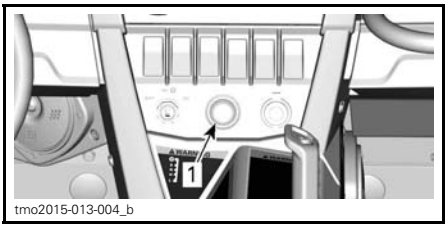

1. Engine start button

3) Low/High Beam Headlight Switch

The low/high beam headlight switch is located on the upper console.

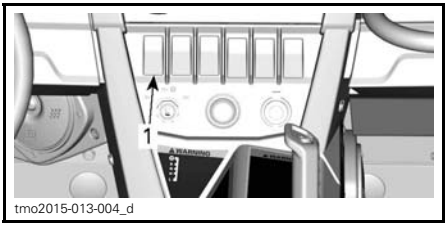

1. Low/High beam headlight switch

This switch is used to select either the headlights low or high beams.

4) 2WD/4WD Switch

The 2WD/4WD switch is located on the upper console.

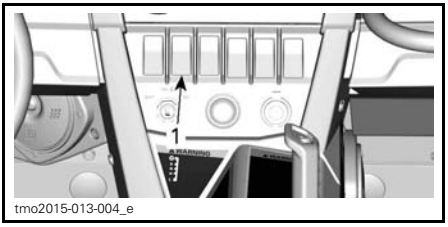

1. 2WD/4WD switch

This switch selects 2 wheel drive or 4 wheel drive mode when the vehicle is stopped and the engine is running.

NOTICE **The vehicle must be stopped to engage or disengage 2WD/4WD switch. Mechanical damage may occur if switch is engaged or disengaged while driving.**

The 4WD mode is engaged when the switch is pushed upwards.

The 2WD mode is engaged when the switch is pushed downwards. The vehicle is then rear wheel drive only.

5) Sport/ECO Mode Switch

The sport/ECO switch is located on the upper console.

It is used to select the sport or ECO mode in high range.

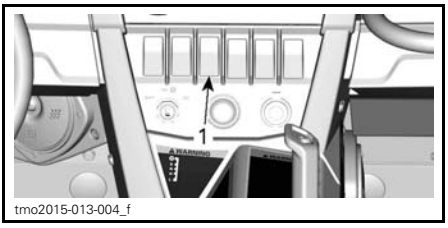

1. Sport/ECO switch

The sport mode provides a crisper throttle response.

NOTE: The sport mode can be activated with all key types and provides the maximum power with the used key.

The ECO (fuel economy mode) setting reduces fuel consumption by limiting throttle response and maximum throttle opening to maintain an optimal cruising setting.

NOTE: Use the ECO mode on bumpy trails to provide smoother ride conditions.

6) Override Switch

The override switch is located on the lower console beside the shift lever.

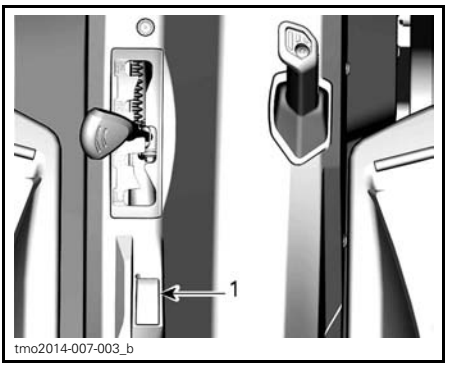

1. Override switch

The override switch main functions are:

1. To bypass the engine speed limiter in reverse operation by allowing maximum engine torque.

⚠ WARNING

Only use the override to help get the vehicle unstuck from mud or other soft terrain. Do not use the override for normal operation in reverse. This would allow driving in reverse at excessive speeds and can increase the risk of losing control.

2. To temporarily deactivate the electronic drive belt protection (If available and activated on your model).

⚠ WARNING

Only use the override if it is not possible to shift in LOW range. Do not use the override for normal operation and always be aware of your surroundings when using the override.

3. To erase the MAINTENANCE REQUIRED message, refer to *MESSAGE DISPLAY MODE* or *MULTIFUNCTION DISPLAY* subsection.
4. To move vehicle in case of a pedal accelerator failure, refer to *TROUBLESHOOTING GUIDELINES* subsection.

To engage the override function, proceed as follows:

1. Press and hold the override switch then press the accelerator pedal gradually.

NOTE: While in REVERSE, and using the override function, the gauge will scroll an OVERRIDE message to confirm that the function is activated.

2. To disengage the override function, simply release the override switch.

7) DPS Switch

The DPS switch is used to change the DPS (Dynamic Power Steering) mode.

To change mode, DPS switch needs to be held for at least 2 seconds. If held for less than 2 seconds, it will show the selected mode.

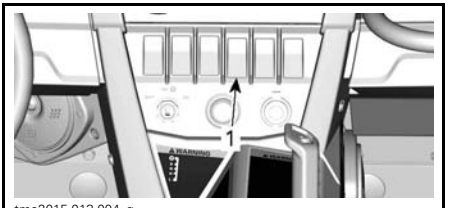

1. DPS switch

8) Winch Switch (Models with Winch)

The winch can be controlled from inside the vehicle with the winch control switch located in the upper console.

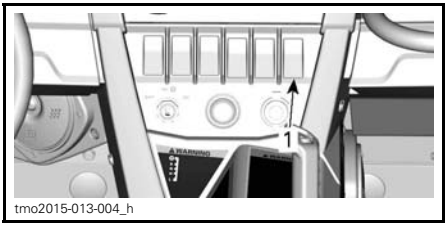

1. Winch switch

Refer to your winch *GUIDE* included with your vehicle for proper winch operation.

MULTIFUNCTION GAUGE (LCD) (DPS MODELS)

The multifunction gauge (LCD) is located on the steering column.

⚠ WARNING

Do not adjust the display while riding . You could lose control.

Multifunction Gauge Description

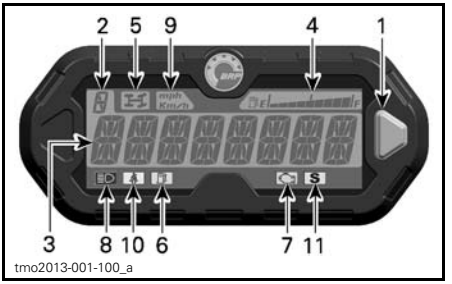

1. *Selector button*
2. *Transmission position display*
3. *Main screen*
4. *Fuel level display*
5. *4WD indicator lamp*
6. *Low fuel level indicator lamp*
7. *Check engine indicator lamp*
8. *High beam indicator lamp*
9. *MPH and KM/H indicator lamp*
10. *Seat belt indicator lamp*
11. *Sport mode indicator lamp*

1) Selector Button

The selector button is used to navigate or change settings in the multifunction gauge.

2) Transmission Position Display

This display will show transmission position.

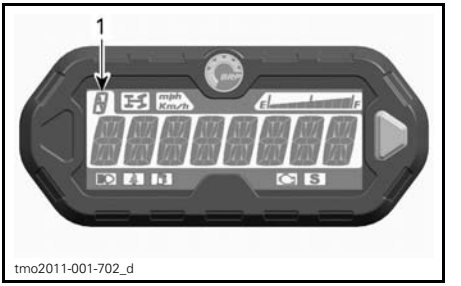

1. *Transmission position*

DISPLAY	FUNCTION
P	Park
R	Reverse
N	Neutral
H	High range
L	Low range

3) Main Screen

The main screen is used to display numerous functions of the multifunction gauge.

Refer to *MULTIFUNCTION GAUGE MODES* for the different available modes:

4) Fuel Level Display

Bar gauge continuously indicates the level of fuel in the fuel tank while riding.

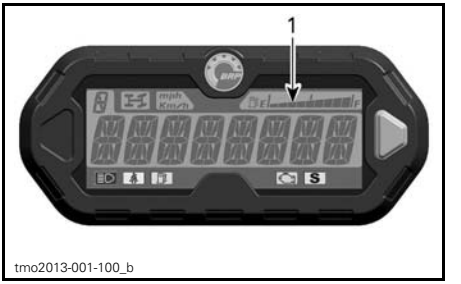

1. *Fuel level display*

5) 4WD Indicator Lamp



When this indicator is ON, it indicates the 4WD system is activated.

6) Low Fuel Level Indicator Lamp



When this indicator is ON, it indicates that there is approximately 12 L (3.2 U.S. gal.) of fuel left in fuel tank.

7) Check Engine Indicator Lamp



When this indicator is ON, it indicates an engine fault code, look for a message at the LCD display.

When this indicator blinks, it indicates that the LIMP HOME mode is activated.

Refer to *TROUBLESHOOTING* section for more details.

8) High Beam Indicator Lamp



When this indicator is ON, it indicates that high beam is selected on the headlights and that ignition key is in ON with lights position.

9) KM/H or MPH Indicator Lamp

mph
Km/h

The proper lamp turns on to indicate the unit the speedometer uses.

10) Seat Belt Indicator Lamp



When this indicator is ON, the driver's seat belt is not buckled.

11) Sport Mode Indicator Lamp



When this indicator is ON, the sport mode is active.

Multifunction Gauge Modes

Speed Mode

In this mode, the main screen shows the speed of the vehicle either in km/h or in MPH.



vdd2008-001-084

RPM Mode

In this mode, the main screen shows the engine RPM.



vdd2008-001-089

Combined Mode

In this mode, the main screen shows the speed of the vehicle and the engine RPM.

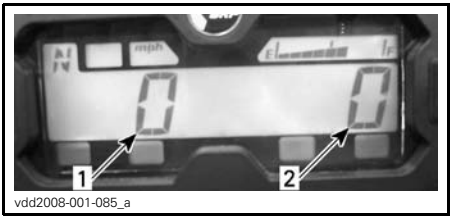

vdd2008-001-085_a

1. *Vehicle speed*
2. *Engine RPM*

Odometer (OD)

Odometer records the total distance travelled either in miles or kilometers.



vsi2009-018-030

Clock

Shows current time.



vmo2011-008-001

Refer to *GAUGE SETUP* to set current time.

Trip Meter (TP)

The trip meter records the travelled distance since it has been reset. Distance travelled is displayed either in kilometers or miles.



vsi2009-018-031

It can be used to establish a fuel tank range or distance between 2 way points.

Press and HOLD the selector button for 2 seconds to reset the trip meter.

Trip Hour Meter (TH)

The trip hour meter records vehicle running time when the electrical system is activated. It can be used to establish traveling time between 2 way points .



vsi2009-018-032

Press and HOLD the selector button for 2 seconds to reset the hour meter.

Engine Hour Meter (EH)

The engine hour meter records engine running time.



vsi2009-018-033

Message Display Mode

Important messages can be displayed in the main screen. Refer to table below.

If an abnormal engine condition occurs, a message may scroll across the main screen in conjunction with a pilot lamp. Refer to *TROUBLESHOOTING* section for details.

MESSAGE (NORMAL OPERATION)	DESCRIPTION
BRAKE	Message displayed when the brakes are applied continuously for 15 seconds. (Speed needs to be higher than 5 km/h (3 MPH))
NORMAL KEY	Displayed at power up when a normal key is used.
PERFORMANCE KEY	Displayed at power up when a the performance key is used.
WORK KEY	Displayed at power up when the work key is used.
OVERRIDE	Override is displayed when the override switch is pressed and the shift lever is set to reverse gear.
SEAT BELT	When the driver seat belt is not buckled and the vehicle speed is less than 10 km/h (6 MPH), the message is displayed and the pilot lamp will be lit. No engine torque limitation engaged.
ENGINE LIMITATION ENGAGED FASTEN SEAT BELT	When the driver seat belt is not buckled and the vehicle speed is above 10 km/h (6 MPH), the message is displayed and the pilot lamp stays on. The engine management will engage a torque limitation that will limit the vehicle speed to approximately 20 km/h (12 MPH).
DPS MAX.	Maximum steering assist.
DPS MED	Medium steering assist
DPS MIN	Minimum steering assist.
SPORT MODE ACTIVE	Displayed when sport mode is activated.
ECO MODE ACTIVE	Displayed when ECO mode is activated.
MAINTENANCE REQUIRED (1)	Displayed in gauge when vehicle is due for a maintenance.
LOW GEAR	Displayed when belt protection is active in high gear. (If available and activated on your model)

(1) To erase the MAINTENANCE REQUIRED message, proceed as follows:

1. Select PARK.
2. Turn ignition switch to ON. Do NOT start engine.

NOTE: The steps 3 through 9 must be completed within **5 seconds**.

3. Press override switch and HOLD.
4. Press and release brake pedal.
5. Release override switch.
6. Press and release brake pedal.

7. Press override switch and HOLD.
8. Press and release brake pedal.
9. Release override switch.
10. Turn ignition switch to OFF

NOTE: Do not turn ignition switch to ON before the multifunction gauge turns off.

Fault Code Mode

While having the key to ACC and the cluster showing the Engine Hour Meter (EH), press and hold mode button while switching high and low beam (three cycles) to access diagnostic fault codes. Make sure that you start the sequence with high beams position ON.

Navigating in the LCD Gauge

Default Display Mode

After vehicle startup, the default display mode is either:

– Vehicle speed
– Engine revolutions per minute (RPM)
– Both parameters simultaneously (combined mode).

To change from one display to the other, proceed as follows.

1. Turn ignition key to ON to power-up the system up.
2. Wait until the "greeting message" has been displayed.
3. Press and release selector button once to display OD (odometer).
4. Press the selector button again, this time for 2 seconds.

This will change the Mode to either Speed, RPM or Combined.



vdd2008-001-083

5. To select another mode, repeat steps 3 and 4 until the desired mode is displayed.

Temporary Display Mode

In the temporary display mode, the following functions are available:

– Odometer
– Clock
– Trip meter (resettable)
– Trip Hour meter (resettable)
– Engine hour meter.

Press and release selector button to change the default display mode to the temporary mode.



tmo2011-001-702_c

1. Selector button

The gauge will display the selected mode for 10 seconds then will return to the normal display mode.

While in a resettable mode, push and HOLD selector button for 2 seconds to reset it.

Gauge Setup

Clock Setting

Once clock display as been selected, use the display selector button to set clock as follows:

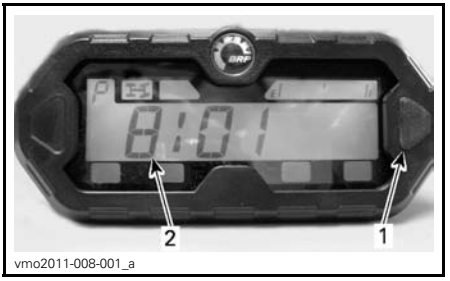

1. Selector button
2. Time

1. Press and HOLD button (Display will flash).
2. Choose the 12-hour (12H) or 24-hour (24H) format by pressing button.
3. If the 12-hour format was selected, choose Am ("A") or Pm ("P") by pressing button.
4. Press and HOLD button.
5. Choose hour first digit by pressing button.
6. Press and HOLD button.
7. Choose hour second digit by pressing button.
8. Press and HOLD button.
9. Choose minutes first digit by pressing button.
10. Press and HOLD button.
11. Choose minutes second digit by pressing button.
12. Press button to enter settings (CLOCK will appear on display).

NOTE: The gauge will display the current time for 10 seconds then will return to the normal display mode.

Unit Selection (km/h vs MPH)

The speedometer, odometer and trip meter are factory preset in **miles** but it is possible to change them to **kilometer** reading. Contact an authorized Can-Am dealer.

Language Selection

The gauge display language can be changed. Refer to an authorized Can-Am dealer for language availability and setup the gauge to your preference.

MULTIFUNCTION GAUGE (ANALOG/DIGITAL) (XT AND LTD MODELS)

Multifunction Gauge Description

The multifunction gauge (analog/digital) is located on the steering column.

The multifunction gauge (analog/digital) is comprised of a digital gauge and two analog gauges (speedometer and tachometer).

The engine temperature and fuel level bar graphs are comprised in the digital gauge.

The indicators lamps are comprised in both analog gauges.

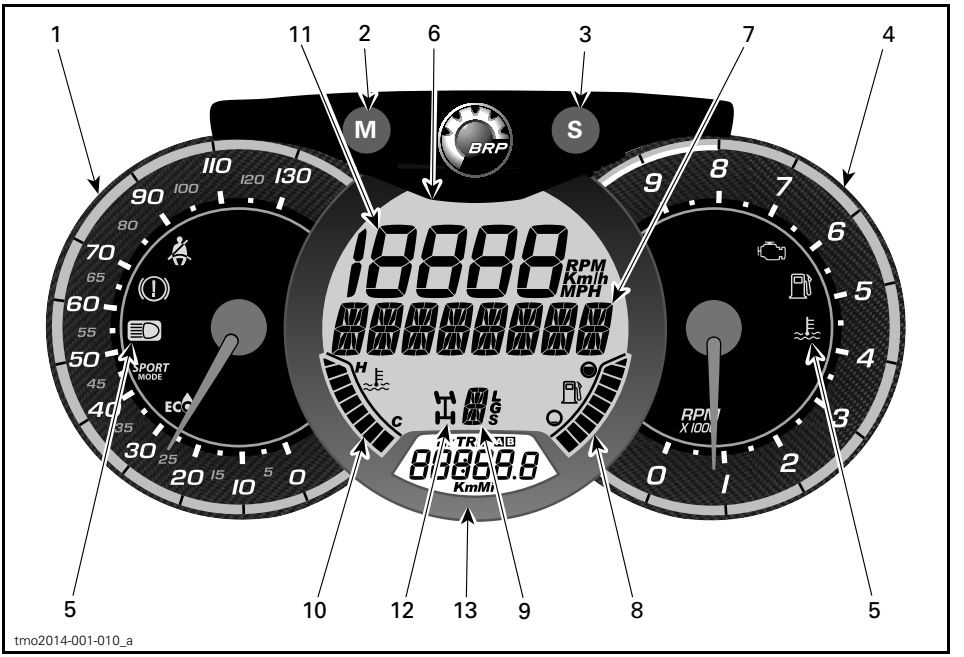

⚠ WARNING

Do not adjust the display while riding. You could lose control.

1) Analog Speedometer

Measures vehicle speed in km/h or mph.

2) MODE (M) Button

Pressing the MODE (M) button will scroll through the functions of the main digital display.

FUNCTION SEQUENCE	OPTIONS
Numerical Display is flashing	Press SET (S) to scroll and select desired function and press MODE (M) to confirm
Multifunction display is flashing	Press SET (S) to scroll and select desired function and press MODE (M) to confirm

3) SET (S) Button

Pressing the SET (S) button will scroll through the functions of the secondary digital display.

FUNCTION SEQUENCE	INFORMATION DISPLAYED
Clock	XX:XX (24:00 time base) XX:XX A or P (12:00 AM/PM time base)
Cumulative distance odometer	XXXXX.X km or mi
Trip distance — odometer A (TRIP A)	XXXXX.X km or mi
Trip distance — odometer B (TRIP B)	XXXXX.X km or mi
Engine time chronometer (Hr)	XXXXX.X
Trip time chronometer (HrTRIP)	XXXXX.X

To reset any trip functions, push and hold the SET (S) button for three seconds.

4) Analog Tachometer (RPM)

Measures engine revolutions per minute (RPM). Multiply by 1000 to obtain actual revolutions.

5) Indicator Lamps

Indicator lamps will inform you of various conditions or problems.

An indicator lamp can flash alone or in combination with another lamp.

INDICATOR LAMP(S)		DESCRIPTION
All indicator lamps	On	All indicator lamps are activated when ignition switch is ON and the engine is not started
	On	Low fuel
	On	Check engine
	On	High engine temperature
	On	Headlights in the HIGH beam position
	On/Flash	Operator seat belt is not properly latched. Engine output will be limited, reducing the speed and operability of the vehicle. Main digital display: FASTEN SEAT BELT
	On	Sport mode activated
	On	ECO mode activated

6) Main Digital Display

Displays useful real-time information to the rider.

7) Multifunction Display

The vehicle speed or the engine revolutions (RPM) can be displayed. See *MODE (M) BUTTON* in this section.

Important messages can also be displayed. Refer to table below.

If an abnormal engine condition occurs, a message can be combined with a pilot lamp. Refer to *TROUBLESHOOTING* section for details.

MESSAGE	DESCRIPTION
BRAKE	Message displayed when the brakes are applied continuously for 15 seconds. (Speed needs to be higher than 5 km/h (3 MPH))
NORMAL KEY	Displayed at power up when a normal key is used.
PERFORMANCE KEY	Displayed at power up when a the performance key is used.
WORK KEY	Displayed at power up when the work key is used.
OVERRIDE	Override is displayed when the override switch is pressed and the shift lever is set to reverse gear.
SEAT BELT	When the driver seat belt is not buckled and the vehicle speed is less than 10 km/h (6 MPH), the message is displayed and the pilot lamp will be lit. No engine torque limitation engaged.
ENGINE LIMITATION ENGAGED FASTEN SEAT BELT	When the driver seat belt is not buckled and the vehicle speed is above 10 km/h (6 MPH), the message is displayed and the pilot lamp stays on. The engine management will engage a torque limitation that will limit the vehicle speed to approximately 20 km/h (12 MPH).
SPORT MODE ACTIVE	Displayed when sport mode is activated.
ECO MODE	Displayed when ECO mode is activated.
MAINTENANCE REQUIRED(1)	Displayed in gauge when vehicle is due for a maintenance.
LOW GEAR	Displayed when belt protection is active in high gear. (If available and activated on your model)

(1) To erase the MAINTENANCE REQUIRED message, proceed as follows:

1. Select PARK.
2. Turn ignition switch to ON. Do NOT start engine.

NOTE: The steps 3 through 9 must be completed within **5 seconds**.

3. Press override switch and HOLD.
4. Press and release brake pedal.
5. Release override switch.
6. Press and release brake pedal.
7. Press override switch and HOLD.
8. Press and release brake pedal.
9. Release override switch.
10. Turn ignition switch to OFF

NOTE: Do not turn ignition switch to ON before the multifunction gauge turns off.

8) Fuel Level Indicator

Bar graph that continuously indicates the level of fuel left in the fuel tank.

9) Gearbox Position Indicator

Displays the selected gearbox position.

10) Engine Temperature Indicator

Bar graph that continuously indicates the engine coolant temperature.

11) Numerical Display

The vehicle speed or the engine revolutions (RPM) can be displayed. See *MODE (M) BUTTON* in this section.

12) 2WD/4WD Indicator

When this indicator is ON, the 4WD system is activated.

13) Secondary Digital Display

Displays useful real time information to the rider. For display function informations, refer to *SET (S) BUTTON*.

Gauge Setup

Setting Metric/Imperial Units

See a Can-Am dealer for adjustments.

Setting Clock

1. Press MODE (M) button to select clock display.
2. Push and hold MODE (M) button for three seconds.
3. Press MODE (M) button to select 12:00 AM PM or 24:00 time base.
4. If 12:00 AM PM time base is selected, A or P flashes. Press MODE (M) button to select A (AM) or P (PM).
5. Press SET (S) button to change hours.
6. Press MODE (M) button to switch to minutes (minutes flash).
7. Press SET (S) button to change minutes.
8. Press MODE (M) button.

Setting Language

The gauge display language can be changed. Refer to an authorized Can-Am dealer for language availability and setup the gauge to your preference.

EQUIPMENT

NOTE: Some vehicle safety labels are not shown on illustrations. For information on vehicle safety labels, refer to *VEHICLE SAFETY LABELS* subsection.

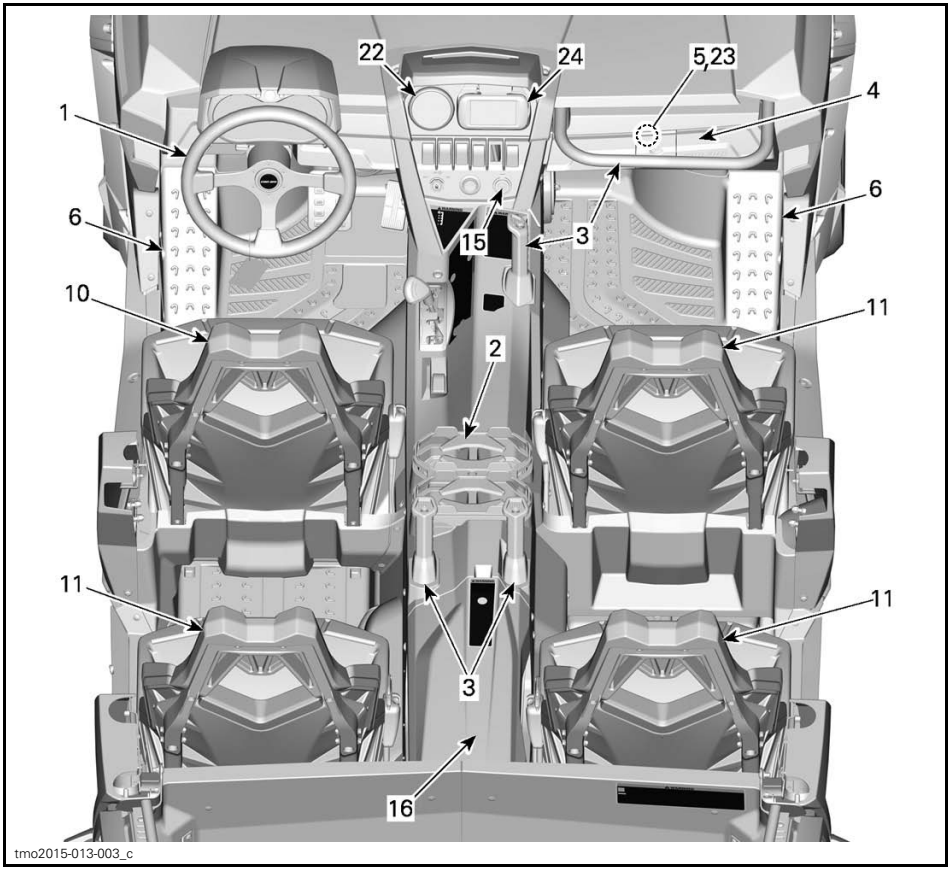

TYPICAL

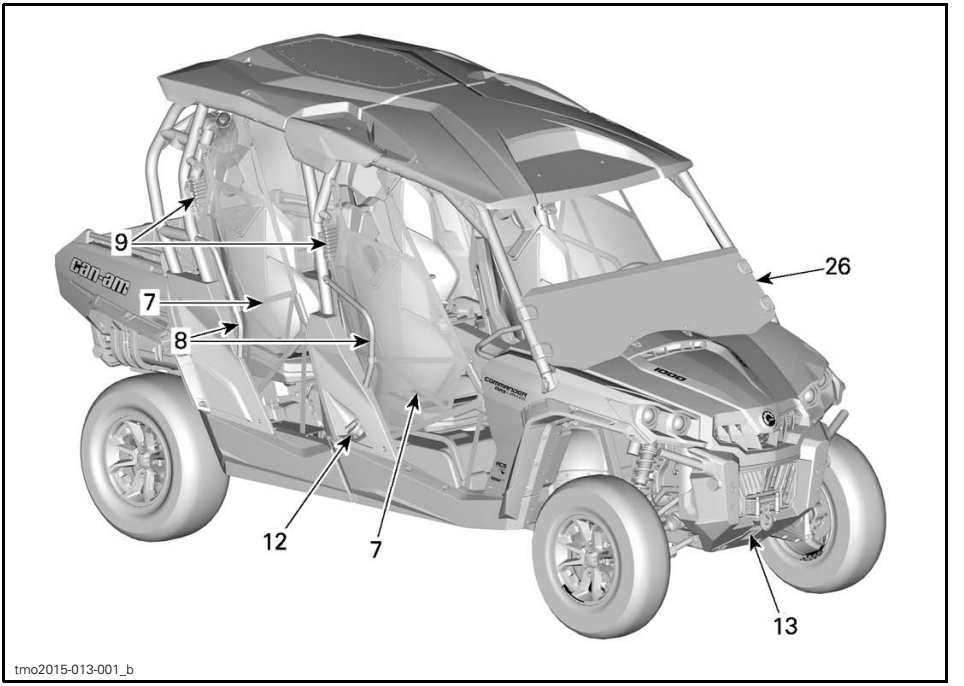

TYPICAL

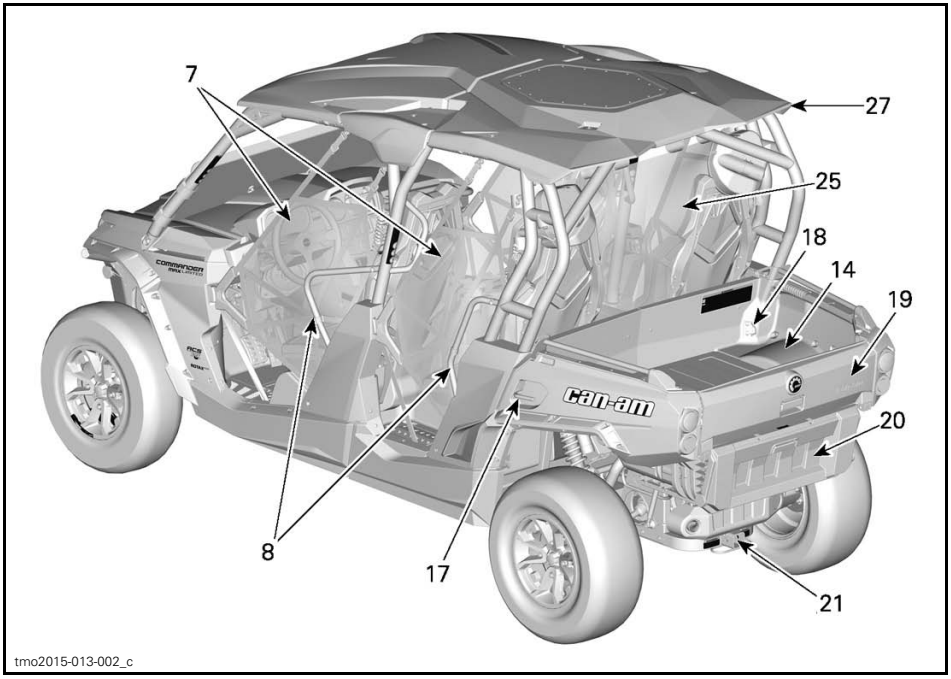

TYPICAL

1) Tilt Steering

The steering wheel height is adjustable.

Adjust the steering wheel height to face your chest, not your head.

To adjust steering wheel height:

1. Unlock steering by pulling the tilt lever toward you.
2. Move steering wheel to the desired position.
3. Release tilt lever to lock steering wheel in position.

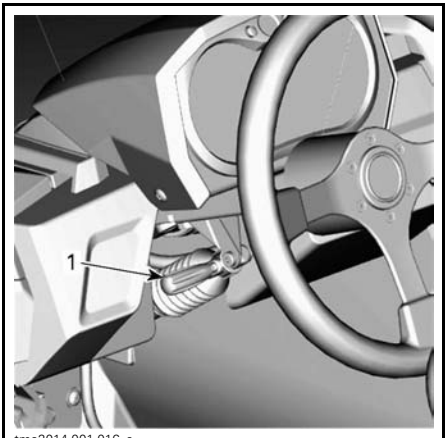

1. Tilt lever

⚠ WARNING

Never adjust the steering wheel height while riding. You may lose control.

2) Cup Holders

Four cup holders are located at the rear of the lower console.

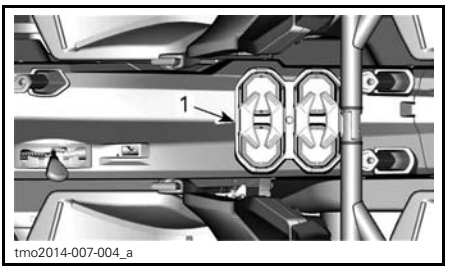

1. Cup holders

NOTE: Do not use cup holders while riding in rough conditions.

3) Passengers Handholds

The front passenger has access to a front handhold located in front of seat above glove box.

A left hand handhold located in the center of the vehicle on the lower console is also accessible.

Each rear passenger has access to a handhold located at the center of the vehicle, on the console, and a handhold attached to the cage.

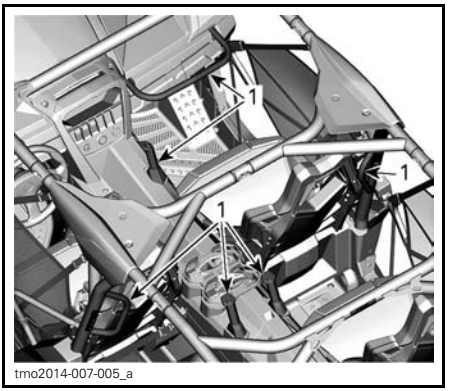

TYPICAL
1. Passengers handholds

Holding the handholds helps the passengers brace against the movement of the vehicle and helps keep hands and body inside the cockpit in the event of a rollover.

⚠ WARNING

Never use any part of vehicle cage as handholds. Hands can be struck by objects outside the cockpit or crushed in a rollover.

4) Glove Box

The vehicle is equipped with a closed glove box made to carry light objects.

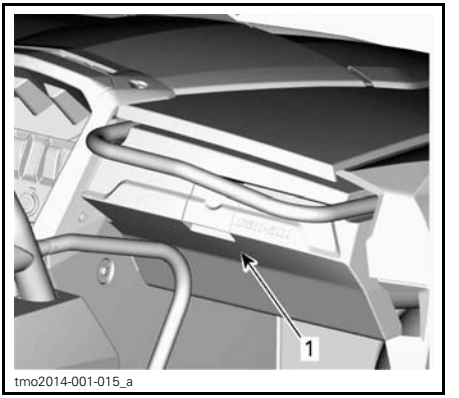

1. Glove box latch

GLOVE BOX CAPACITY	
MAXIMUM LOAD	5 kg (11 lb)

5) Tool Kit

A tool kit with basic tools is provided. It is located in the glove box.

6) Footrests

The vehicle is equipped with driver and front passenger footrests to allow firmly planting feet on vehicle floor, which helps to maintain proper body position while riding.

The footrests help minimize the risk of leg or foot injury.

Always wear appropriate footwear. See *RIDING GEAR* subsection.

7) Side Nets

Side nets are provided on each side of the cockpit to help arms, legs or shoulders stay inside the vehicle, thus reducing the risk of injuries. Side Nets may also keep brush or debris out of cockpit.

⚠ WARNING

Never operate the vehicle unless all four side nets are in place and buckled.

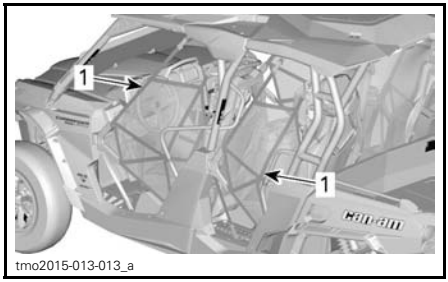

1. Side nets

Side nets are adjustable and must be kept as tight as possible. To adjust side nets proceed as follows:

1. Secure side net with buckle.
2. Pull on three adjustment straps to tighten.

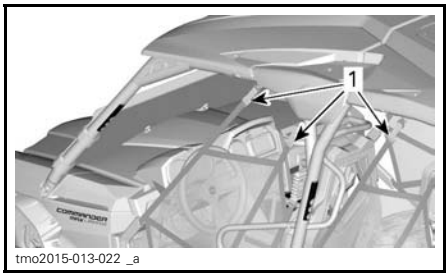

1. Adjustment straps

8) Shoulder Guards

The vehicle is equipped with shoulder guards to help restrain the entire body of driver and passengers inside vehicle.

9) Seat Belts

This vehicle is equipped with 3 point seat belts to help protect driver and passengers in the event of collisions, rollovers, or tipovers to help keep driver and passengers in the cockpit.

⚠ WARNING

Wear seat belts properly at all times. Seat belts reduce the risk of injury in a crash and help keep limbs inside the cockpit in a rollover or any accidents.

If driver's seat belt is not fastened when:

– The ignition is turn ON, the seat belt indicator lamp will flash.
– The engine is started and shift lever is moved out of PARK, vehicle speed will be limited to a maximum of approximately 20 km/h (12 MPH) on flat ground.

⚠ WARNING

The vehicle may reach higher or lower speed depending on inclines.

To remind you to fasten the seat belt, the multifunction gauge will display the following message: ENGINE LIMITATION ENGAGED FASTEN SEAT BELT.

⚠ WARNING

There is no indicator light or message for the passengers seat belt. The driver is responsible for the passengers safety and should ensure the passengers buckles the seat belt.

Fastening and Adjusting the Seat Belt

The seat belt is equipped with a slide locking tab.



SEAT BELT ENGAGED
1. Slide locking tab

Insert the seat belt latch plate into the buckle, then pull the belt to ensure it is properly fastened.

To lock: adjust the seat belt tightly against your body and raise or move the lap belt upward.



⚠ WARNING

Wear seat belt properly. Make sure it is not twisted or defective.

To unlock: place seat belt as shown and push down on the lap belt where indicated.

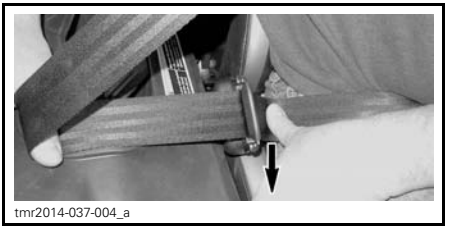

To release the seat belt, push on the red button on the seat belt buckle.

10) Driver's Seat

The driver's seat can be adjusted forward and backward.

To adjust seat, move the seat lever to unlock the seat. Release the lever to lock the seat into desired position.

⚠ WARNING

Never adjust the seat position while driving.

The driver's seat can be removed easily:

– Tilt seat forward by releasing latch between seat cushion and backrest.
– Pull seat upwards.

11) Passenger Seats

The three passenger seats are not adjustable.

The front passenger seat can be tilted forward for removal by releasing the latch located between the seat cushion and the backrest. Once tilted forward the seat can be removed by pulling upwards.

The rear passenger seats are attached to the vehicle with four bolts. For removal of the rear seats, tools from tool kit can be used.

12) Fuel Reservoir Cap

The fuel reservoir cap is located on the right hand side of the vehicle behind the front passenger seat.

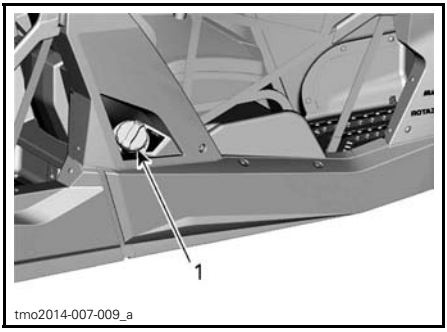

1. Fuel reservoir cap

Refer to *FUEL* subsection for information on fueling procedure and fuel requirements.

13) Winch (Models with Winch)

The winch can be actuated inside the vehicle using the winch control switch on the upper console.

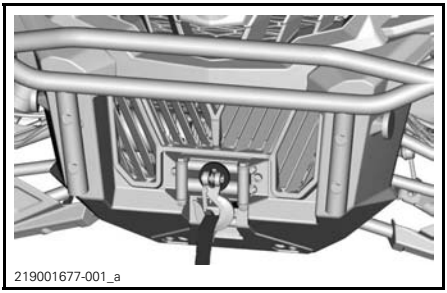

WINCH

NOTE: Using the winch intensively over a long period of time may discharge the battery.

The following tips will help to reduce the risk of discharging the battery:

Always unreel manually: Unlock the cable using the handle then pull on the hook strap to unreel.

It is recommended to let the vehicle run while winching. Do not stop vehicle immediately after winching to let battery recharge.

Also, when winching for more than 30 seconds, it is recommended to increase engine RPM in the range of 3000 RPM to increase charging power to the battery.

NOTE: Make sure vehicle is in NEUTRAL (N) before increasing engine RPM.

Refer to your winch *GUIDE* included with your vehicle for winch operation.

14) Cargo Box

The vehicle is equipped with a 2 level inclinable cargo box. The cargo box may be used for various types of cargo.

⚠ WARNING

To reduce the risk of loss of control or loss of load, use the cargo box only in accordance with *CARRYING LOADS* in the *SAFETY INFORMATION* section.

The cargo box is split into an upper and lower sections to provide more compartments for carrying separate loads.

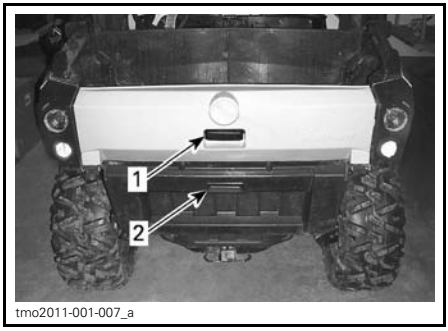

1. Cargo box upper section
2. Cargo box lower section

The floor separating both sections can be easily removed to make a single cargo area. Both the upper and lower tailgates must be opened to allow the floor separator to be removed.

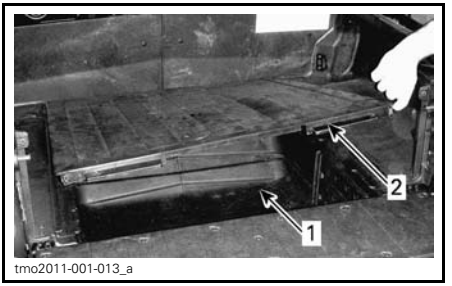

1. *Increased cargo volume*
2. *Floor/Separator*



CARGO AREA WITHOUT FLOOR/SEPARATOR

The lower section can be further split into two subsections by inserting a plywood piece into the vertical slots.

15) 12-Volt Power Outlet

Convenient for handheld spotlight or other portable equipment.

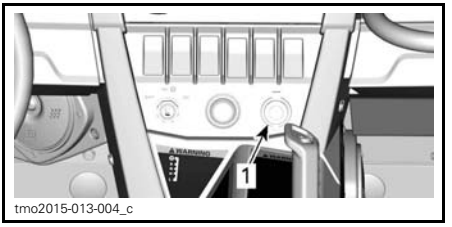

1. *12-Volt Power Outlet*

Remove protective cap to use. Always reinstall it after use to protect against weather.

Do not exceed the rating capacity. Refer to SPECIFICATIONS subsection.

16) Rear Storage Compartment

⚠ WARNING

Never use rear storage compartment as a seat. Passengers should always be properly seated in their seat with seat belts fastened.

A convenient storage compartment that can be used to store items. This storage compartment is latched at the back and can be opened by pulling up on the front of the cover.

NOTE: Do not store loose objects in the compartment.

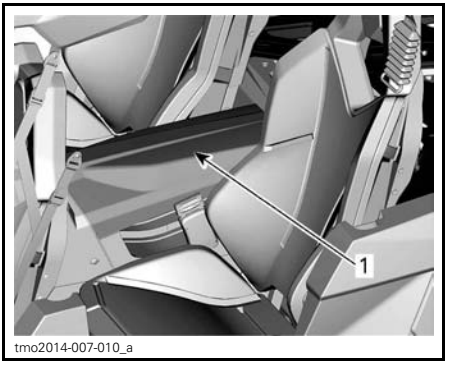

1. *Rear storage compartment*

17) Cargo Box Tilt Release Handles

The latching mechanism of the cargo box can be actuated from either side of the vehicle through a release handle.

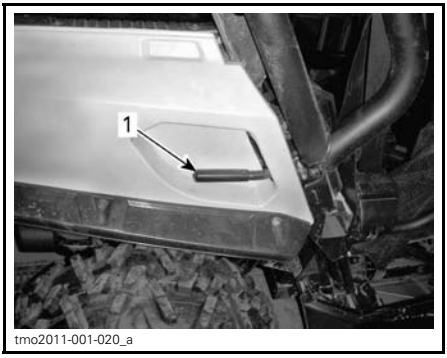

1. Cargo box release handle

Refer to *CARRYING LOADS* in the *SAFETY INFORMATION* section.

18) Anchoring Hooks

To provide anchoring point in order to secure cargo inside the cargo box, 4 anchoring hooks are located inside the cargo area.

19) Upper Tailgate

The upper section of the cargo box can be closed with a tailgate.

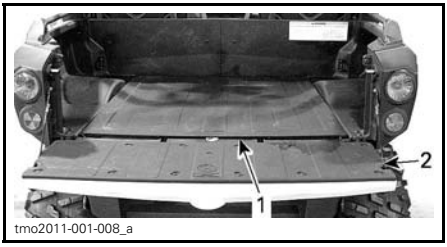

CARGO BOX UPPER SECTION
1. Floor section separator
2. Upper tailgate

NOTICE Do not exceed 100 kg (220 lb) of weight on the upper tailgate during loading or unloading. Always close the upper tailgate before operating to reduce the risk of loss of load.

Upper Tailgate Removal

The upper tailgate can easily be removed by inclining and pulling out of hinges, then removing the retaining cables.



1. Upper tailgate hinge

20) Lower Tailgate

The lower section of the cargo box has a lower tailgate.



LOWER SECTION WITH LOWER TAILGATE

The upper tailgate must be closed in order to open or close the lower tailgate.



tmo2011-001-318_a

1. *Lower tailgate*
2. *Lower section*

NOTICE Do not exceed 100 kg (220 lb) of weight on the lower tailgate during loading or unloading. Always close the lower tailgate before operating to reduce the risk of loss of load.

21) Hitch support

The vehicle comes equipped with a 51 mm x 51 mm (2 in x 2 in) box size standard hitch support.

For the proper usage of the hitch support, refer to *MOVING LOADS AND DOING WORK* in the *SAFETY INFORMATION* section.

⚠ WARNING

To reduce the risk of loss of control or loss of load, always respect the maximum hauling capacity.

22) Radio (LTD Models Only)

The radio controls are located in the upper console.

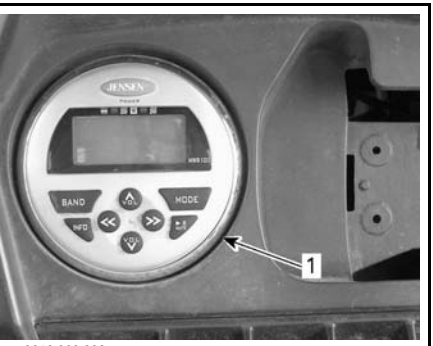

tmo2012-003-208_a

TYPICAL
1. *Radio controls*

⚠ WARNING

- Adjusting radio or reading radio display can distract from the operation of the vehicle, particularly from constantly scanning the environment.
- Before adjusting radio or reading radio display, ensure your environment is clear and free from obstacle, and bring the vehicle to a low speed.

Refer to radio owner manual for operating instruction.

23) Radio AUX Output (LTD Models Only)

These sockets are used to connect portable audio devices.

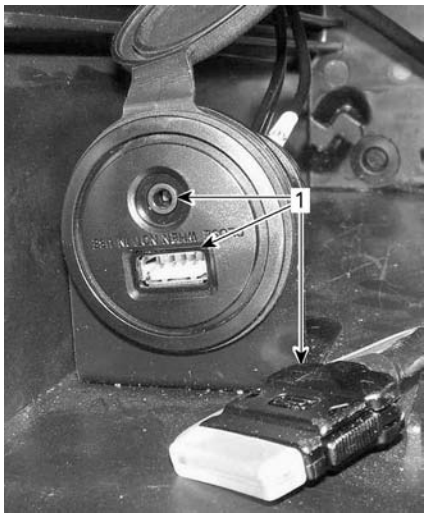

INSIDE GLOVE BOX
1. Portable audio device sockets

Refer to radio owner manual for operating instruction.

24) GPS Receiver (Global Positioning System) (LTD Models Only)

The GPS receiver is located on the upper control console.

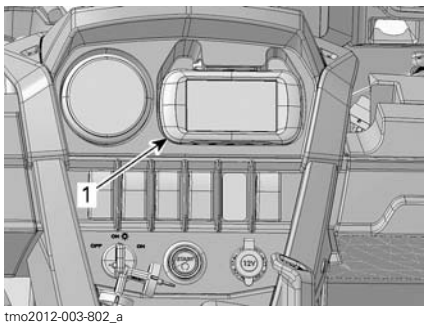

TYPICAL
1. GPS receiver

⚠ WARNING

- Reading the GPS receiver can distract from the operation of the vehicle, particularly from constantly scanning the environment.
- Before reading the GPS receiver, ensure your environment is clear and free from obstacle, and bring the vehicle to a low speed.

The GPS receiver is powered via the vehicle electrical system when installed on its support (with ignition switch to ON position), or via batteries when removed from its support.

GPS receiver can be activated using the ON/OFF button on the receiver or with the vehicle ignition switch when turned to ON or OFF position (when installed on the vehicle).

The following is provided with the GPS receiver:

- Lithium-ion battery pack
- USB cable
- AC charger
- Owner's manual on disk
- Quick start manual.

NOTE: Always refer to manufacturer's documentation supplied with the GPS receiver for proper use.

NOTE: For more details about the GPS receiver, available maps or accessories, contact an authorized Can-Am dealer or visit Garmin website at www.garmin.com.

⚠ WARNING

Remember, the data provided by the GPS receiver is for reference only. For your safety, NEVER rely solely on this information.

GPS Receiver Installation

Insert GPS receiver onto the lower tab of support.

Lock GPS receiver onto its support by pushing it towards locking tab.

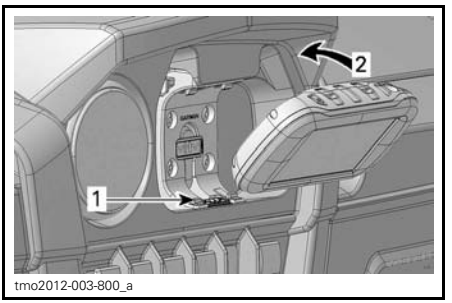

1. Lower tab
2. Push toward locking tab

NOTICE To prevent weather damage or theft to your GPS receiver, always remove it from its support when leaving the vehicle.

GPS Receiver Removal

Push on locking tab to release GPS.

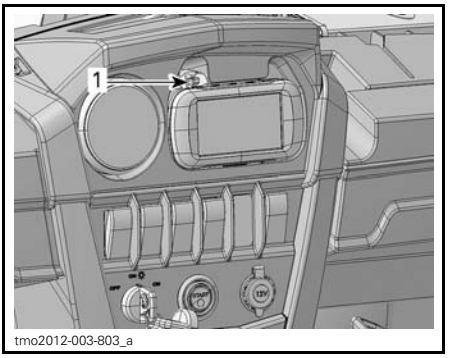

1. Locking tab

25) Rear Net (LTD Models Only)

The vehicle comes equipped with a rear net.

Rear Net Removal

Undo straps securing rear net to cage.

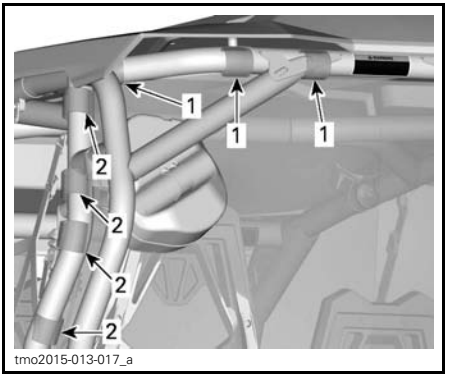

VELCRO ® FLAP LOCATIONS
1. Center VELCRO® flap location
2. LH side VELCRO® flap location

Remove rear fasteners from cage junction.

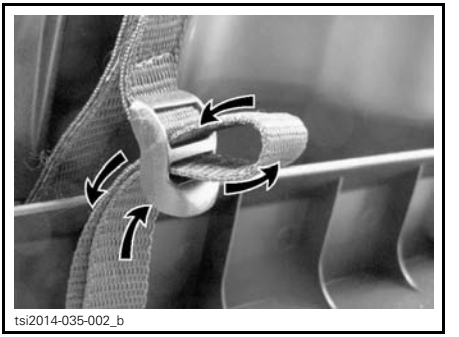

Remove and keep screw, washer and nut located on the lower section of net.

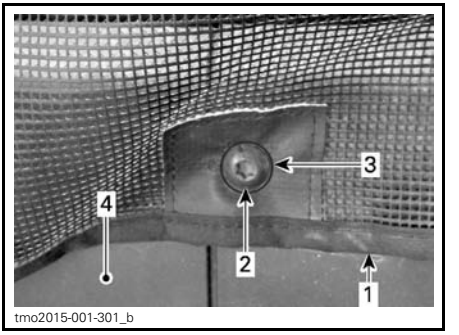

LH BULKHEAD - TYPICAL
1. Rear wind screen
2. Bulkhead retaining screw
3. Washer
4. LH rear bulkhead

Remove rear net.

Reinstall screw, washers and nut located on the lower section of net.

Rear Net Installation

Installation is the reverse of the removal. However pay attention to the following.

Torque retaining nut to specification.

TORQUE	
Retaining nut	7.5 N•m ± 1.0 N•m (66 lbf•**in** ± 9 lbf•**in**)

26) Half Windshield (LTD Models Only)

The vehicle comes equipped with a half windshield.

Half Windshield Removal

1. Undo the 4 straps securing half windshield to the cockpit tubular structure.



2. Remove and keep retaining nut, washer and screw securing windshield to bracket.

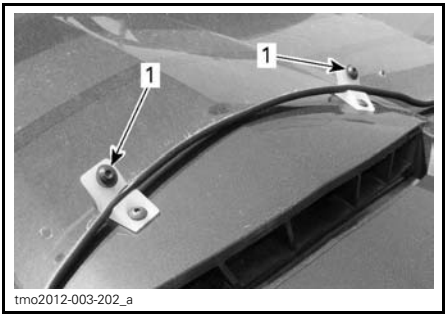

1. Retaining screw securing windshield to bracket

3. Remove windshield from vehicle.

NOTICE Make sure half windshield is resting on a clean non abrasive surface with the interior facing up.

Half Windshield Installation

Install windshield onto vehicle, making sure screw holes in the lower section of windshield align with bracket holes.

Fasten the 4 straps.



Install retaining screws in windshield and torque retaining screws to specification.

TORQUE	
Retaining screw	2.5 N•m ± .5 N•m (22 lbf•**in** ± 4 lbf•**in**)

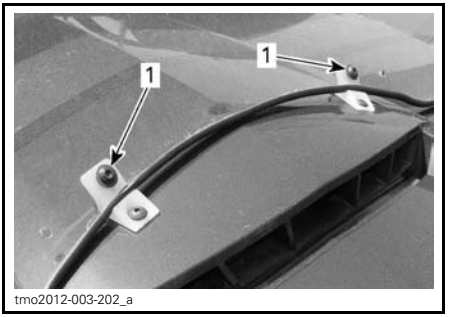

1. Brackets with retaining screws and washers installed

27) Full Roof (LTD Models Only)

The vehicle comes equipped with a full roof.

Full Roof Removal

1. Remove full roof.

1.1 Undo rear clamps securing top mid section to cage.

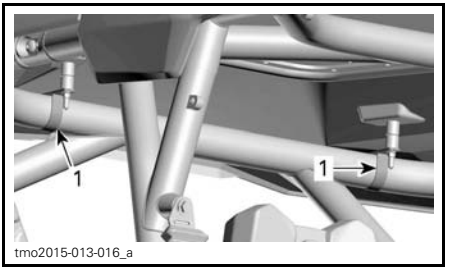

REAR CLAMPS VIEWED FROM FRONT
1. Rear clamps

1.2 Undo lateral clamps securing top mid section to cage.

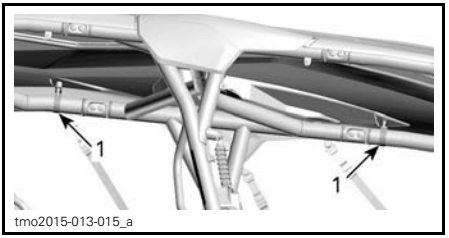

LH SIDE VIEWED FROM RH SIDE OF VEHICLE
1. Lateral clamps

1.3 Undo front clamps securing mid section to cage.

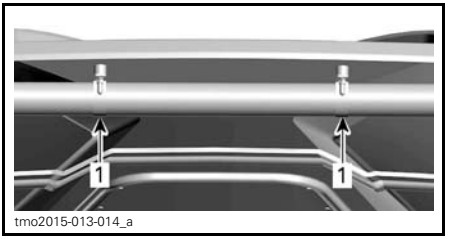

FRONT CLAMPS VIEWED FROM FRONT
1. Front clamps

1.4 Remove rear section of roof then front section of roof.

Full Roof Installation

Installation is the reverse of removal. However pay attention to the following.

TORQUE	
Roof clamps retaining screws	2.5 N•m ± .5 N•m (22 lbf•**in** ± 4 lbf•**in**)

TUNE YOUR RIDE

Suspension Adjustment Guidelines

Your vehicle handling and comfort depend upon suspension adjustments.

⚠ WARNING

Suspension adjustment could affect vehicle handling. Always take time to familiarize yourself with the vehicle's behavior after any suspension adjustment has been made.

Choice of suspension adjustments vary with vehicle load, personal preference, riding speed and terrain condition.

The best way to set up the suspension, is to start from factory settings, then customize each adjustment one at a time.

Front and rear adjustments are interrelated. It may be necessary to readjust the rear shock absorbers after adjusting front shock absorbers for instance.

Test run the vehicle under the same conditions; trail, speed, load, etc. Change one adjustment and retest. Proceed methodically until you are satisfied.

Suspension Factory Settings

FRONT SUSPENSION FACTORY SETTINGS		
ADJUSTMENT	MODEL	FACTORY SETTING
Spring preload	DPS/XT	Cam position 1 (soft)
Spring preload	LTD	50.6 mm (1.99 in)
Compression damping	LTD	Position 2

REAR SUSPENSION FACTORY SETTINGS		
ADJUSTMENT	MODEL	FACTORY SETTING
Spring preload	DPS/XT	Cam position 1 (soft)
Spring preload	LTD	42.9 mm (1.69 in)
Compression damping	LTD	Position 2

Suspension Adjustments

Spring Preload Adjustment

Shorten the spring for a firmer ride and rough riding condition or when pulling a trailer.

Lengthen the spring for a softer ride and smooth riding condition.

⚠ WARNING

The left and right shock adjustment on front or rear suspension must always be set to the same position. Never adjust one shock only. Uneven adjustment can cause poor handling and loss of stability, which could lead to an accident.

Lift the vehicle. Spring length should be measured without load on the wheels.

Spring length should be equal on both sides.

DPS and XT models

Adjust by turning adjusting cam. Use tool from vehicle tool kit.

NOTE: Spring preload affects ground clearance.

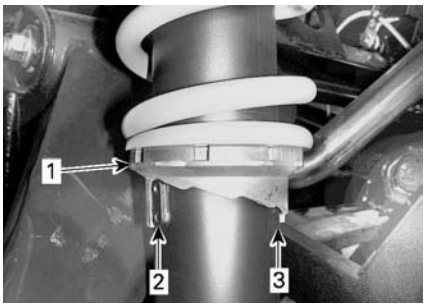

tmo2011-001-065_a

TYPICAL
1. *Turn adjusting cams*
2. *Smooth adjustment*
3. *Hard adjustment*

LTD models

Adjust by loosening lock ring and turning adjuster ring as desired. Use tool from vehicle tool kit.

NOTE: Do not increase the front/rear spring preload by more than 15 mm (.59 in)over the factory setting.

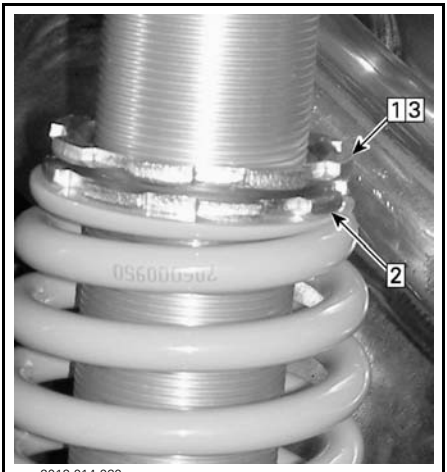

vmo2012-014-060_a

TYPICAL
Step 1: Loosen top locking ring
Step 2: Turn adjusting ring accordingly
Step 3: Tighten top locking ring

Shock Damping Adjustments (LTD Models Only)

Compression damping controls how the shock absorber reacts when riding.

POSITION	SETTING	RESULT ON BIG BUMPS
1	Soft	Softer compression damping
2	Medium (Factory)	Medium compression damping
3	Hard	Firmer compression damping

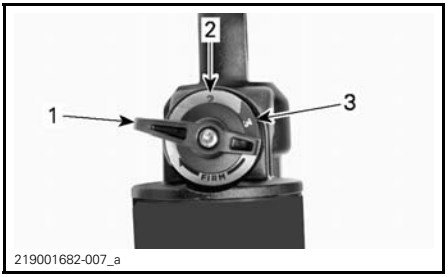

1. *Position 1*
2. *Position 2*
3. *Position 3*

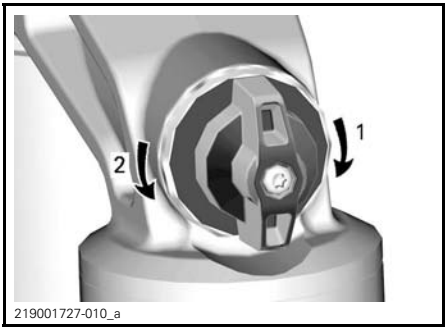

COMPRESSION DAMPING
1. **Increases** *damping (stiffer)*
2. **Decreases** *damping (softer)*

Turn adjuster clockwise to **increase** shock damping action (stiffer).

Turn adjuster counterclockwise to **decrease** shock damping action (softer).

ACTION	RESULT
Increasing compression damping force	Firmer compression damping
Decreasing compression damping force	Softer compression damping

⚠ WARNING

Make sure compression damping setting is the same on both sides.

DPS Function

The applicable models are equipped with a Dynamic Power Steering (DPS) system. The DPS reduces the effort to turn the steering wheel.

The following DPS modes are preset in the vehicle.

DPS MODE	
DPS MAX.	Maximum steering assist
DPS MED.	Medium steering assist
DPS MIN.	Minimum steering assist

To show the active DPS mode, proceed as follows:

1. Press and release **DPS** switch.

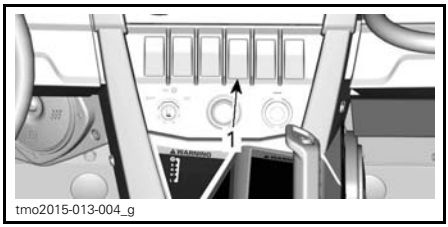

TYPICAL
1. *DPS switch*

2. Check the multifunction gauge to confirm the active DPS mode.

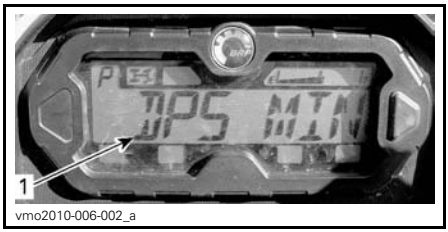

1. *DPS mode display*

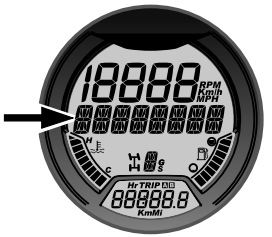

ANALOG/DIGITAL GAUGE

1. DPS mode display

To change the DPS mode, proceed as follows:

1. Press and hold **DPS** switch for 2 seconds to go to the next setting.
2. Release **DPS** switch.
3. Repeat until desired setting is selected.

NOTE: The DPS adjustment will not be possible if the vehicle transmission is set to **REVERSE**.

Fuel Requirements

NOTICE Always use fresh gasoline. Gasoline will oxidize; the result is loss of octane, volatile compounds, and the production of gum and varnish deposits which can damage the fuel system.

Alcohol fuel blending varies by country and region. Your vehicle has been designed to operate using the recommended fuels, however, be aware of the following:

- Use of fuel containing alcohol above the percentage specified by government regulations is not recommended and can result in the following problems in the fuel system components:
  - Starting and operating difficulties.
  - Deterioration of rubber or plastic parts.
  - Corrosion of metal parts.
  - Damage to internal engine parts.
- Inspect frequently for the presence of fuel leaks or other fuel system abnormalities if you suspect the presence of alcohol in gasoline exceeds the current government regulations.
- Alcohol blended fuels attract and hold moisture which may lead to fuel phase separation and can result in engine performance problems or engine damage.

Recommended Fuel

Use common unleaded gasoline with an AKI (R+M)/2 octane rating of 87, or an RON octane rating of 92.

NOTICE Never experiment with other fuels. Engine or fuel system damages may occur with the use of an inadequate fuel.

NOTICE Do NOT use fuel from fuel pumps labeled E85.

Use of fuel labeled E15 is prohibited by U.S. EPA Regulations.

Vehicle Fueling Procedure

⚠ WARNING

- Fuel is flammable and explosive under certain conditions.
- Never use an open flame to check fuel level.
- Never smoke or allow flame or spark in vicinity.
- Always work in a well-ventilated area.

1. Stop engine.

⚠ WARNING

Always stop engine before refueling.

2. Have driver and passengers get out of vehicle.

⚠ WARNING

Do not allow anyone to remain in the vehicle while fueling. If there is a fire or explosion during fueling, a vehicle occupant could be unable to quickly leave the area.

3. Unscrew slowly the fuel reservoir cap counterclockwise to remove it.

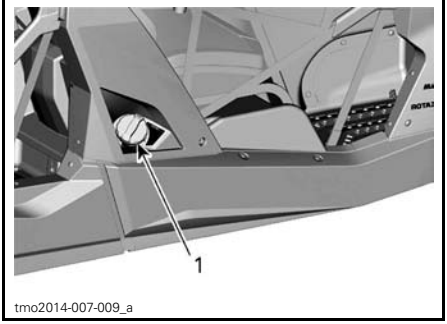

1. Fuel reservoir cap

⚠ WARNING

If a differential pressure condition is noticed (whistling sound heard when loosening fuel reservoir cap) have vehicle inspected and/or repaired before further operation.

4. Insert the spout into the filler neck.
5. Pour fuel slowly so that air can escape from the tank and prevent fuel flow back. Be careful not to spill fuel.
6. Stop filling when the fuel reaches the bottom of filler neck. Do not overfill.

⚠ WARNING

Never top up the fuel tank before placing the vehicle in a warm area. As temperature increases, fuel expands and may overflow.

7. Fully tighten fuel reservoir cap clockwise.

⚠ WARNING

Always wipe off any fuel spillage from the vehicle.

Fueling a Gasoline Container

⚠ WARNING

– Use only an approved gasoline container to store fuel.
– Never fill the gasoline container in the vehicle cargo box or on-the vehicle - an electrical static discharge may ignite the fuel.

BREAK-IN PERIOD

Operation During Break-In

A break-in period of 10 operating hours or 300 km (200 mi) is required for the vehicle.

Engine

During the break-in period:

- Avoid full throttle operation.
- Avoid pressing accelerator pedal more than 3/4 of the stroke.
- Avoid sustained accelerations.
- Avoid prolonged cruising speeds.

However, brief accelerations and speed variations contribute to a good break-in.

Brakes

⚠ WARNING

New brakes will not operate at their maximum efficiency until their break-in is completed. Braking performance may be reduced, so use extra caution.

Belt

A new belt requires a break in period of 50 km (30 mi).

During the break-in period:

- Avoid strong acceleration and deceleration.
- Avoid pulling a load.
- Avoid high speed cruising.

Starting the Engine

Insert key in ignition switch and turn to one of the ON position.

Press the brake pedal.

NOTE: If shift lever is not set to PARK (P), the brake pedal must be pressed to allow engine starting.

Press the engine start button and hold until the engine starts.

NOTE: Do not press the accelerator pedal. If the accelerator pedal is pressed at least 20%, the engine will not start.

Release the engine start button immediately when the engine has started.

NOTICE If engine does not start after a few seconds, do not hold the engine start button more than 10 seconds. Refer to *TROUBLESHOOTING* section.

Shifting the Transmission

Apply brakes and select the desired shift lever position.

Release brakes.

NOTICE When changing gear selection, always completely stop the vehicle and apply the brakes prior to shifting. Damage to the transmission may occur.

Choosing the Correct Range (Low or High)

It is important to limit situations known to make the drive belt slip excessively. The main reason the drive belt will slip is if the gearbox is in high range when it should be in low range.

Pay attention to the following:

Low Range

Low range should be used whenever:

- Pulling
- Pushing
- Hauling a load
- 4X4 applications
- Mud holes
- Water holes
- Crossing obstacles
- Climbing onto trailer
- Hill climbs.

It is also recommended to use low range if driving for prolonged periods at speeds under 24 km/h (15 MPH).

Please refer to *BREAK-IN PERIOD* subsection in this guide for information in regards to belt break-in period.

High Range

High is the default riding range.

Electronic Drive Belt Protection (If available and activated on your model)

Some vehicles have the electronic drive belt protection function activated.

Refer to your authorized Can-Am dealer for availability and possible activation.

This function is activated when riding at too slow speed for the high range, such as in the following situations:

- Pulling
- Pushing
- Hauling a load
- 4X4 applications
- Mud holes
- Water holes
- Crossing obstacles
- Climbing onto trailer
- Hill climbing

In the above mentioned situations the electronic drive belt protection will help protect the CVT drive belt from being damaged by activating the engine torque limiter. The gauge will also scroll a *LOW GEAR* message, suggesting the operator to immobilize the vehicle and set to LOW GEAR.

Whenever the electronic drive belt protection is activated, you MUST shift in LOW range. Refer to *SHIFTING THE TRANSMISSION*.

If the situation does not allow you to shift in LOW range, it is possible to temporarily deactivate the electronic drive belt protection by pressing on the override switch. Refer to *OVERRIDE SWITCH*.

⚠ WARNING

DO NOT USE THE OVERRIDE SWITCH if the slope is too steep and that there might be a risk of tipover. Apply brakes to immobilize vehicle. Put shift lever in reverse (R), and back down the hill, barely releasing brakes to remain at low speed. Do not attempt to turn around. Never coast down hill while vehicle is in neutral. Do not perform hard braking as it increases the risk of tipover.

Stopping the Engine and Parking the Vehicle

⚠ WARNING

Avoid parking on steep slope as the vehicle may roll away.

⚠ WARNING

Always put the vehicle in PARK when stopped or parked to prevent rolling.

⚠ WARNING

Avoid parking in places where hot parts can start a fire.

When stopped or parked always bring shift lever to park position. This is especially important when parking on a slope. On very steep inclines or if the vehicle is carriyng a cargo, the wheels should be blocked using rocks or bricks.

Select the flattest terrain available for parking.

Release accelerator pedal and use brakes to completely stop the vehicle.

Set shift lever in PARK position.

Turn key in ignition switch to OFF position.

Remove key from ignition switch.

If you must park on a steep incline or if the vehicle is carrying cargo, block the wheels using rocks or bricks.

Tips for Maximizing Drive Belt Durability

Riding style and conditions have a direct impact on drive belt durability. Your vehicle features a CVT system design that is optimized to offer the best performance. The CVT and drive belt have successfully endured thousands of miles of durability tests. However, to maximize drive belt durability and to prevent premature failures, it is important that the operator understands the limits of a belt driven CVT system and adapts their riding style and speed accordingly.

If riding in any of the conditions listed below, BRP highly recommends not to constantly hold the throttle wide open (WOT) for more than five (5) minutes.

- High ambient temperatures (above 30°C (86°F)
- Heavy loads: Passengers / Heavy cargo
- Heavy drag: Soft sand / Hill climbing / Mud / Using a track kit.

After a few minutes at WOT, partially release the accelerator and allow the CVT to cool down.

For more tips for maximizing the drive belt durability, refer to *CHOOSING THE CORRECT RANGE (LOW OR HIGH)*.

What to do if Water is Suspected to be in the CVT

If water is present in the CVT, the engine will accelerate but the vehicle will remain still.

NOTICE Stop the engine and drain the water to avoid damage to the CVT.

To allow good access to CVT drain, it is best to remove the skid plate.

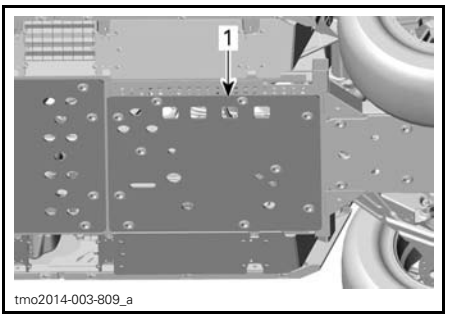

1. Remove skid plate

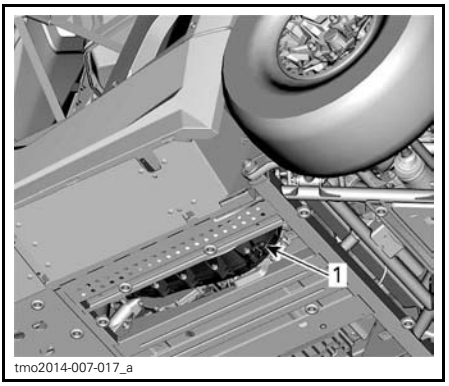

SKID PLATE REMOVED FOR CLARITY
1. CVT drain

See an authorized Can-Am dealer to have the CVT inspected and cleaned.

What to do if Battery is Drained out

The vehicle can be jump started by using the red (+) cable to the battery positive pole (protective boot removed) and the black (-) cable to the vehicle chassis.

The battery is located under the rear right passenger seat. It can be accessed without removing the seat. The cover on top of battery is only clipped into place.

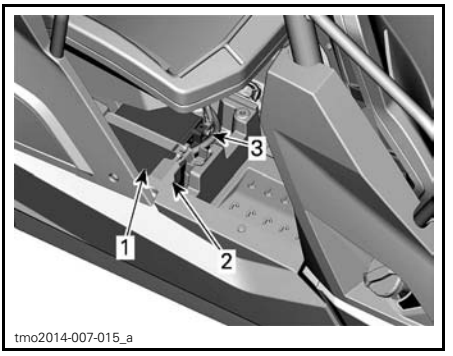

COVER REMOVED FOR CLARITY
1. Battery
2. Positive pole protective boot
3. Negative Pole

NOTICE Do not connect any electrical source to the steering column.

What to do if Vehicle Rolled Over

Abrupt maneuvers, sharp turns, side hilling or accident may cause vehicle to rollover.

Should the vehicle be rolled over, it will be necessary to have it transported to an authorized Can-Am dealer as soon as possible. NEVER START THE ENGINE!

What to do if Vehicle is Submerged

Should the vehicle become immersed, it will be necessary to have it transported to an authorized Can-Am dealer as soon as possible.

NOTICE Never start the engine as immersion of the vehicle can cause serious damage to the engine if the correct restart procedure is not followed.

TRANSPORTING THE VEHICLE

If your vehicle needs to be transported, it should be carried on a flatbed trailer of the proper size and capacity to accommodate the length of this vehicle.

NOTICE **Do not tow this vehicle — towing can seriously damage the vehicle's drive system.**

When contacting a towing or transporting service, be sure to ask if they have a flatbed trailer, loading ramp or power ramp to safely lift the vehicle and tie-down straps. Ensure the vehicle is properly transported as specified in this section.

NOTICE **Avoid using chains to tie the vehicle — they may damage the surface finish or plastic components.**

⚠ WARNING

If the vehicle is equipped with a windshield, transport it facing forward to avoid damaging the windshield.

To load the vehicle on a platform for transport, proceed as follow:

1. Shift the vehicle into NEUTRAL (N).
2. If the vehicle is equipped with a winch, use the winch to roll the vehicle on the platform.
3. If the vehicle is not equipped with a winch, proceed as follows:
   - 3.1 Put a strap around the lower arm of each front suspension.
   - 3.2 Attach the straps to the winch cable of the towing vehicle.
   - 3.3 Pull the vehicle on the flatbed trailer with the winch.
4. Remove the key from the ignition switch.
5. Strap the front tires by using tire towing straps.
6. Pass a tie-down strap inside each rear wheel.
7. Firmly attach the rear wheels tie-down straps to both sides of the rear of the trailer with ratchets.
8. Ensure that both the front and rear wheels are firmly attached to the trailer.

⚠ WARNING

Make sure no loose objects are present inside vehicle or in cargo box during vehicle transportation.

LIFTING AND SUPPORTING THE VEHICLE

Front of Vehicle

Place vehicle on a flat non slippery ground.

Ensure vehicle shift lever is set to PARK.

Install an hydraulic jack under front skid plate.

Lift front of vehicle and install a jack stand on each side under frame section in front of the lip for center skid plate.

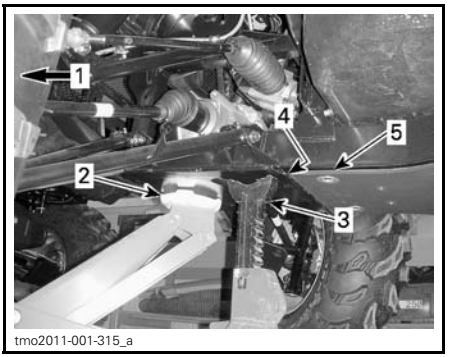

tmo2011-001-315_a

1. *Front of vehicle*
2. *Hydraulic jack*
3. *Jack stand*
4. *Lip for center skid plate*
5. *Center skid plate*

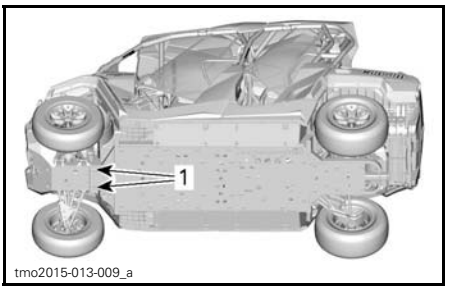

tmo2015-013-009_a

TYPICAL - FRONT OF VEHICLE
1. *Jack stand position*

Lower hydraulic lift and ensure vehicle is supported safely onto both jack stands.

Rear of Vehicle

Place vehicle on a flat non slippery ground.

Activate 4WD mode.

Ensure vehicle shift lever is set to PARK.

Install an hydraulic jack under the trailer hitch.

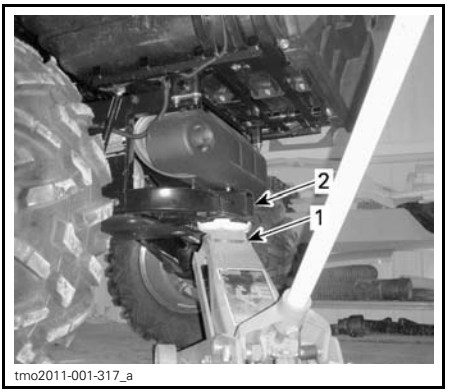

tmo2011-001-317_a

1. *Hydraulic jack*
2. *Trailer hitch*

Lift rear of vehicle and install a jack stand on each side under frame section in front of rear wheel.

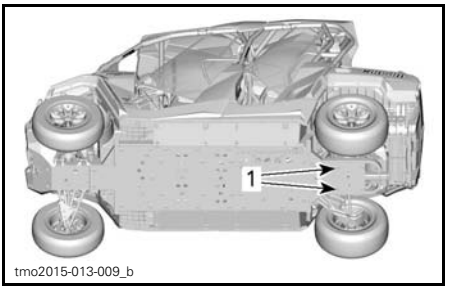

tmo2015-013-009_b

TYPICAL - REAR OF VEHICLE
1. *Jack stand position*

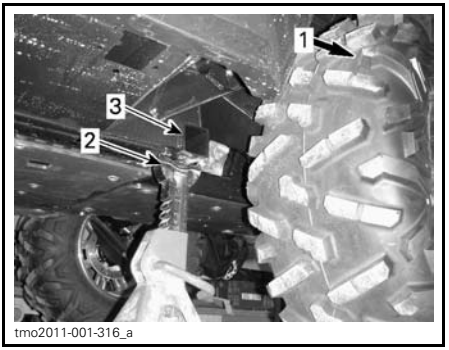

1. *Rear of vehicle*
2. *Jack stand*
3. *Frame section*

Lower hydraulic lift and ensure vehicle is supported safely onto both jack stands.

MAINTENANCE

MAINTENANCE SCHEDULE

Maintenance is very important for keeping your vehicle in safe operating condition. The vehicle should be serviced as per the maintenance schedule.

A repair shop or person of the owner's choosing may maintain, replace, or repair emission control devices and systems. These instructions do not require components or service by BRP or authorized Can-Am dealers. Although an authorized Can-Am dealer has an in-depth technical knowledge and tools to service the Can-Am SSV, the emission-related warranty is not conditioned on the use of an authorized Can-Am dealer or any other establishment with which BRP has a commercial relationship. For emission-related warranty claims, BRP is limiting the diagnosis and repair of emission-related parts to the authorized Can-Am dealers. For more information, please refer to the *US EPA EMISSION-RELATED WARRANTY* contained herein. Proper maintenance is the owner's responsibility. A warranty claim may be denied if, among other things, the owner or operator caused the problem through improper maintenance or use.

You must follow the instructions for fuel requirements in the fueling section of this manual. Even if gasoline containing greater than ten volume percent ethanol is readily available, the US EPA issued a prohibition against the use of gasoline containing greater than 10 vol% ethanol that applies to this vehicle. The use of gasoline containing greater than 10 vol% ethanol with this engine may harm the emission control system.

The following message appears in the gauge after every 50 hours of operation, to remind you of maintenance requirements: MAINTENANCE REQUIRED. To erase message, refer to *MULTIFUNCTION GAUGE (LCD)* or *MULTIFUNCTION GAUGE (ANALOG/DIGITAL)* subsections.

The maintenance schedule does not exempt the pre-ride inspection.

⚠ WARNING

Failure to properly maintain the vehicle according to the maintenance schedule and procedures can make it unsafe to operate.

SEVERE DUSTY CONDITIONS

Air Filter Maintenance Guideline

Air filter maintenance should be adjusted according to riding conditions.

Air filter maintenance must be increased in frequency in the following dusty conditions:

- Riding on dry sand
- Riding on dry dirt covered surfaces
- Riding on dry gravel roads or similar conditions.

NOTE: Riding in a group in these conditions would increase even more the air filter maintenance.

MAINTENANCE SCHEDULE LEGEND

Operation in trail riding conditions
Operation in severe riding conditions (dusty or muddy) or carrying heavy loads condition

MAINTENANCE SCHEDULE

Make sure to perform proper maintenance at recommended intervals as indicated in the tables. Some items of the maintenance schedule must be performed in function of the calendar, regardless of the distance or time of operation.

EVERY 1 500 KM (1,000 MI) OR 50 HOURS (whichever comes first)
EVERY 750 KM (500 MI) OR 25 HOURS (whichever comes first)
Verify and clean engine air filter. Replace as needed
Verify battery connections
Lubricate rear propeller shaft joints
Add inspect all sway bar bushings. Replace as needed.
Inspect tie rod ends and ball joints for play and boots condition
Lubricate suspension arm bushings
Inspect the drive shaft boots and protectors
Inspect brake pads. Replace as needed
Inspect wheel bearings for abnormal play
Clean exhaust area
Tighten cage fasteners
Tighten beadlock screws (if equipped)
Inspect and clean CVT air filters (service more often in dusty conditions)
Inspect, clean and lubricate front and rear shock absorber spherical bearings (LTD)

EVERY 3 000 KM (2,000 MI) OR 100 HOURS (whichever comes first)
EVERY 1 500 KM (1,000 MI) OR 50 HOURS (whichever comes first)
Adjust valve clearance
Clean muffler spark arrester
Verify and clean throttle body
Replace fuel vent breather filter
Verify CVT drive belt and clean CVT pulleys
Inspect, clean and lubricate CVT one way bearing
Inspect centrifugal levers and rollers of the drive pulley. Replace as needed
Replace rear shock absorber spherical bearings (LTD)
Inspect every suspension arm bushings and wear plates. Replace as needed
Tighten rear stabilizer bar bolts

EVERY 3 000 KM (2,000 MI) OR 100 HOURS (whichever comes first)
EVERY 1 500 KM (1,000 MI) OR 50 HOURS (whichever comes first)
The following must be performed at least once a year:
Change engine oil and filter
Inspect and clean brake system
Inspect battery condition
Verify steering system for abnormal play
Verify front differential and rear final drive oil level and look for contamination
Verify gearbox oil level and look for contamination

PERFORM AT THE FIRST 3 000 KM (2,000 MI)AND AT 6 000 KM (4,000 MI) THEN FOLLOW THE REGULAR SCHEDULE
PERFORM AT THE FIRST 1 500 KM (1,000 MI) AND AT 3 000 KM (2,000 MI) THEN FOLLOW THE REGULAR SCHEDULE
Replace gearbox oil
Clean the vehicle speed sensor (VSS)

EVERY 6 000 KM (4,000 MI) OR 200 HOURS (whichever comes first)
EVERY 3 000 KM (2,000 MI) OR 100 HOURS (whichever comes first)
Verify the cooling system
Test engine coolant strength
Verify fuel system for leaks
Verify fuel pump pressure
Replace spark plugs
Replace front differential oil
Replace rear final drive oil
Replace gearbox oil
Inspect input and output shaft seals (gearbox, differential and final drive)
Clean vehicle speed sensor
The following must be performed every 2 years:
Replace the brake fluid

EVERY 12 000 KM (8,000 MI) OR 5 YEARS (whichever comes first)
EVERY 6 000 KM (4,000 MI) OR 5 YEARS (whichever comes first)
Replace engine coolant

This section includes instructions for basic maintenance procedures.

NOTE: Maintenance message can be removed by alternately pressing the override switch and brake pedal 3 times at power up.

⚠ WARNING

Unless otherwise indicated, always turn ignition switch to the OFF position before performing any maintenance and remove key.

⚠ WARNING

Should removal of a locking device be required (e.g. lock tab, self-locking fastener, etc.) , always replace it with a new one.

Engine Air Filter

NOTICE Never modify the air intake system. Otherwise, engine performance degradation or damage can occur. The engine is calibrated to operate specifically with these components.

Engine Air Filter Replacement Guideline

Engine Air filter replacement frequency should be adjusted according to riding conditions as it is critical to ensure proper engine performance and life span.

Engine Air filter replacement frequency must be increased for the following severe riding conditions:

- Riding on dry sand.
- Riding on dry dirt covered surfaces.
- Riding on dry gravel trails or similar conditions.
- Riding in areas with high concentration of seeds or crop husks.
- Riding in severe snow conditions.

NOTE: Riding in a group under these conditions would increase even more the air filter replacement frequency.

Engine Air Filter Removal

1. Remove service cover.



1. Service cover

2. Release clamps and remove the engine air filter housing cover.

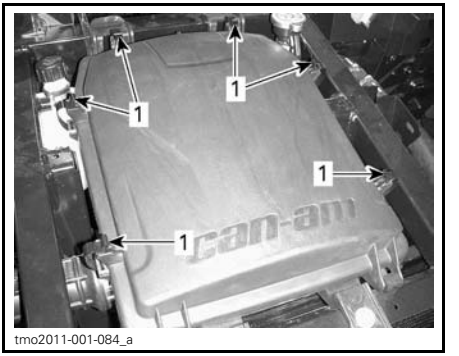

1. Release clamps

3. Remove engine air filter.

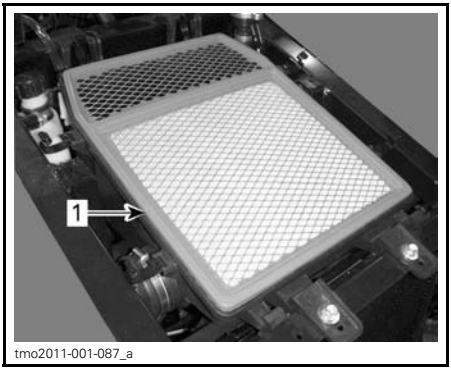

1. Engine air filter

Engine Air Filter Housing Cleaning

1. If there is water in the first air chamber, remove the drain plug, from underneath to expel water.

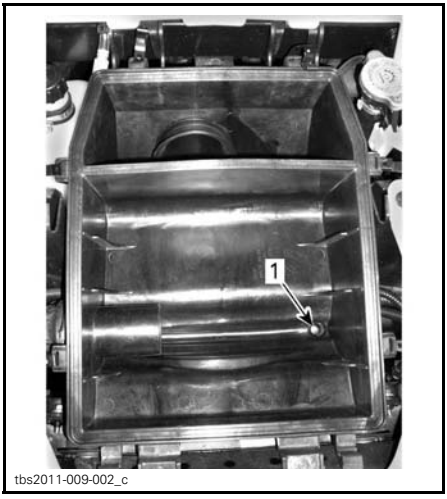

1. Drain hole



DRAIN PLUG ACCESS FROM LH SIDE OF VEHICLE
1. Remove drain plug to expel water

2. Clean both sections of the engine air filter housing with a vacuum cleaner.

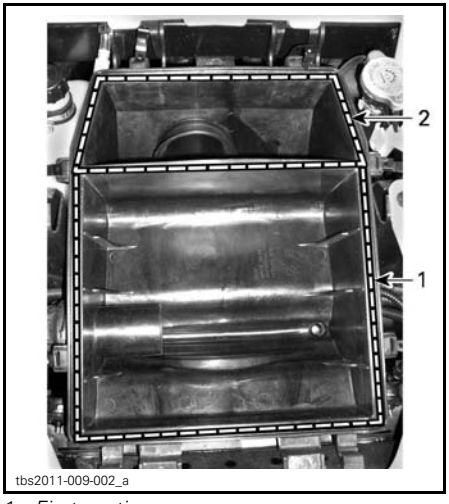

1. First section
2. Second section (clean chamber)

Engine Air Filter Housing Inspection

Verify that the engine air filter housing edges to hold the filter are straight and not damaged or warped.

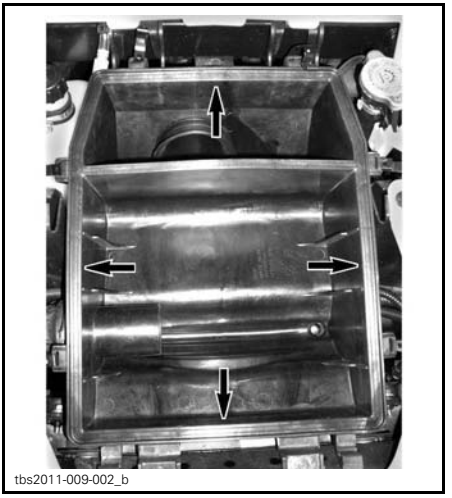
tbs2011-009-002_b

Engine Air Filter Cleaning

Clean engine air filter by tapping out heavy dust from paper element, this will allow dirt and dust to get out of the paper filter.

NOTICE It is not recommended to blow compressed air on the paper element; this could damage the paper fibers and reduce its filtration ability when used in dusty environments. If engine air filter is too dirty and cannot be cleaned following the recommended procedure, it should be replaced.

Engine Air Filter Installation

1. Install engine air filter.
2. Verify that engine air filter rubber seal has no gap with the engine air filter housing.

NOTICE If the fit is not good, dust may bypass the engine air filter.

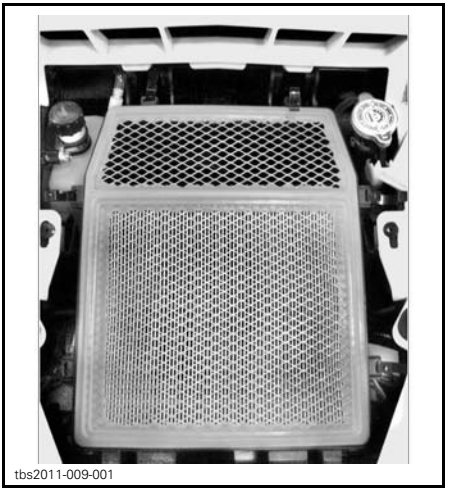
tbs2011-009-001

3. Verify that the cover fits well on the engine air filter housing before closing clamps.


tbs2011-009-003

Front Grill Kit

1. Remove debris from front grill kit.

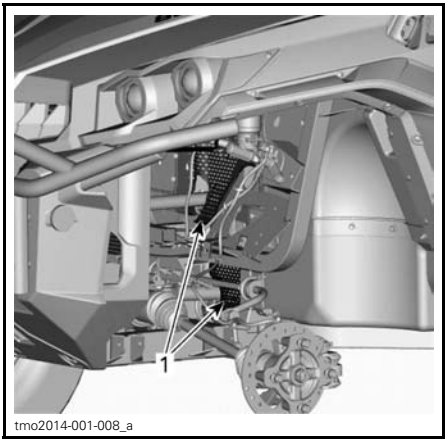

FRONT OF VEHICLE - COMPONENTS REMOVED FOR CLARITY
1. Front grill kit

2. Clean front grill kit with water.

CVT Air Filter

CVT air filter inspection and cleaning frequency should be adjusted according to riding conditions as it is critical to ensure proper engine performance and life span.

CVT Air filter inspection and cleaning frequency must be increased for the following severe riding conditions:

- Riding on dry sand.
- Riding on dry dirt covered surfaces.
- Riding on dry gravel trails or similar conditions.
- Riding in areas with high concentration of seeds or crop husks.
- Riding in severe snow conditions.

NOTE: Riding in a group in these conditions would increase even more the air filter replacement requirement.

CVT Air Filter Removal

1. Remove CVT air filter plastic cover located on left hand side of hood near driver.



1. CVT air filter plastic cover

2. Slide the cover rearward.

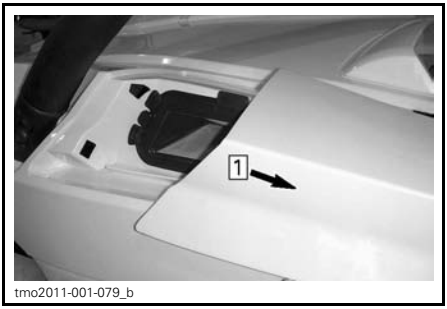

Step 1: Slide rearward

3. Pull CVT air filter out.



1. CVT air filter

CVT Air Filter Inspection and Cleaning

1. Inspect filter and replace if damaged.



1. CVT air filter

2. Clean filter, using soft soap and water, then water rinse.
3. Gently shake off excess water and allow filter to dry at room temperature.
4. Clean inside the CVT air inlet with a vacuum cleaner.

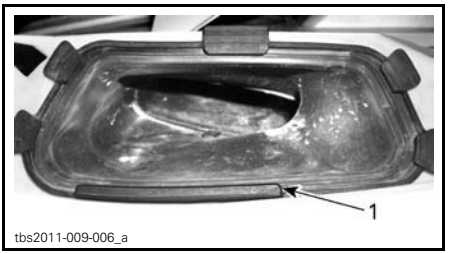

1. CVT air inlet

NOTE: Maintaining clean CVT air filters will maximize air flow for an optimum CVT components life span.

CVT Air Filter Installation

Reinstall CVT air filter and cover.

Engine Oil

Engine Oil Level Verification

NOTICE **Operating the engine with an improper level may severely damage engine.**

NOTE: Dipstick is located under rear right passenger seat.

With vehicle on a level surface and engine cold, check the oil level as follows:

1. Unscrew dipstick then remove it and wipe clean.

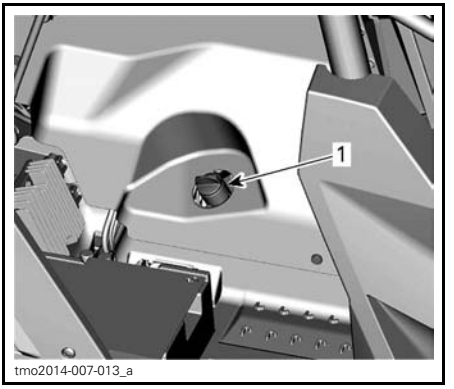

SOME PARTS REMOVED FOR CLARITY
1. Dipstick

2. Reinstall dipstick, screw in it completely.
3. Remove dipstick and check oil level. It should be near or equal to the upper mark.

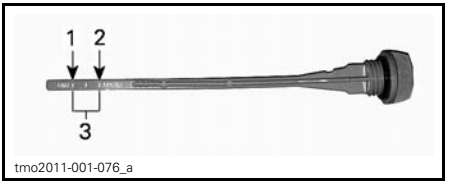

TYPICAL
1. MIN
2. MAX
3. Operating range

To add oil, remove the dipstick. Place a funnel into the dipstick tube.

Add a small amount of recommended oil and recheck oil level.

Repeat the above procedures until oil level reaches the dipstick's upper mark.

NOTE: Do not overfill. Wipe off any spillage.

Properly tighten dipstick.

Recommended Engine Oil

RECOMMENDED ENGINE OIL	
SEASON	TYPE
Summer	XPS 4-STROKE SYNTH. BLEND OIL (P/N 293 600 121)
All seasons	XPS 4-STROKE SYNTHETIC OIL (P/N 293 600 112)

NOTE: The XPS oil is specially formulated to meet the lubrication requirements of this engine. BRP recommends the use of its XPS 4-stroke oil. If XPS engine oil is not available, use a 4-stroke SAE 5W 40 engine oil that meets or exceeds the requirements for API service classification SJ, SL, SM or SN. Always check the API service label certification on the oil container it must contain at least one of the above standards.

NOTICE **Damages caused by the use of oil not suitable for this engine may not be covered by the BRP limited warranty.**

Engine Oil Change

Place vehicle on a level surface.

Oil change and oil filter replacement should be done with a warm engine.

⚠ **CAUTION** **The engine oil can be very hot. Wait until engine oil is warm.**

Place a drain pan under the engine drain plug area.

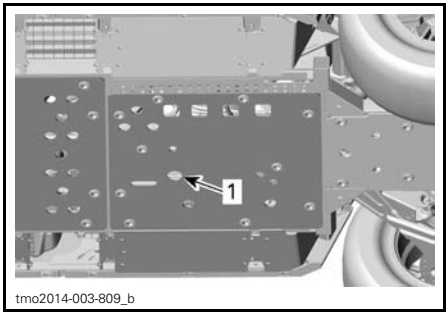

1. Engine drain plug

Clean the drain plug area.

Unscrew drain plug and discard the gasket ring.

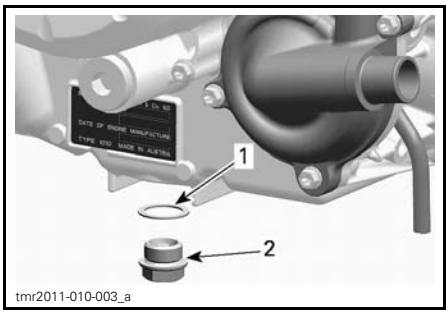

1. Gasket ring
2. Drain plug

Remove dipstick.

Allow oil to drain completely from the crankcase.

Clean the magnetic drain plug from metal shavings and residue. Presence of debris gives an indication of internal engine damage.

Install a NEW gasket ring on the drain plug.

NOTICE **Never use the gasket ring a second time. Always replace by a new one.**

Install and tighten drain plug to the recommended torque.

DRAIN PLUG TIGHTENING TORQUE
30 N•m ± 2 N•m (22 lbf•ft ± 1 lbf•ft)

Replace oil filter. Refer to *OIL FILTER* in this subsection.

Refill engine with recommended engine oil.

ENGINE OIL CAPACITY
2 L (2.1 qt (U.S. liq.))

Oil Filter

Oil Filter Access

Remove the rear right passenger seat.

Remove the right hand side engine console panel.

Oil Filter Removal

Clean oil filter area.

Remove oil filter cover screws.

Remove oil filter cover.

Remove oil filter.

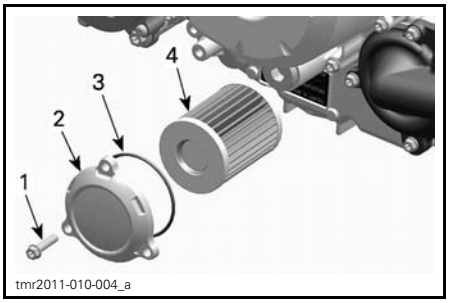

1. *Oil filter screw*
2. *Oil filter cover*
3. *O-ring*
4. *Oil filter*

Oil Filter Installation

Check and clean the oil filter inlet and outlet area for dirt and other contaminations.

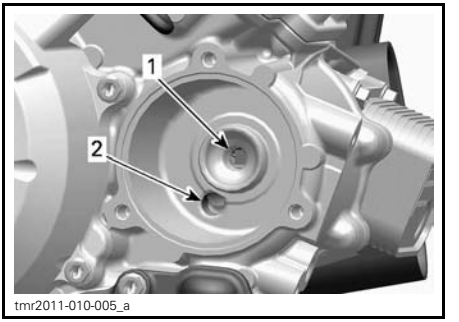

1. *Outlet to the engine oil providing system*
2. *Inlet from the oil pump to the oil filter*

Install a NEW O-ring on oil filter cover.

Install the filter into the cover.

Apply engine oil on O-ring and grease on the end of filter.

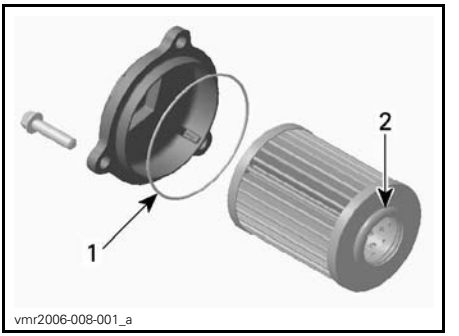

1. *Slightly oil*
2. *Slightly oil*

Install the cover on the engine.

Tighten oil filter cover screws to recommended torque.

OIL FILTER COVER SCREWS TIGHTENING TORQUE
10 N•m ± 1 N•m (89 lbf•**in** ± 9 lbf•**in**)

Radiator

Radiator Inspection and Cleaning

Periodically check the radiator area for cleanliness.



1. Radiator

Inspect radiator and hoses for leaks or any damage.

Inspect radiating fins. They must be clean, free of mud, dirt, leaves and any other deposit that would prevent the radiator to cool properly.

If available, use a garden hose to rinse the radiating fins.

⚠ CAUTION Never clean radiator with your hands when it is hot. Let the radiator cool down before cleaning.

NOTICE Be careful not to damage the radiating fins when cleaning. Do not use any object/tool that could damage the fins. When hosing, use low pressure only. Never use a HIGH PRESSURE washer.

Engine Coolant

Engine Coolant Level Verification

⚠ WARNING

Check coolant level with engine cold.

1. Place vehicle on a level surface.
2. Open service cover.
3. Remove the pressure cap.

⚠ WARNING

In order to avoid potential burns, do not remove the pressure cap if the engine is hot.

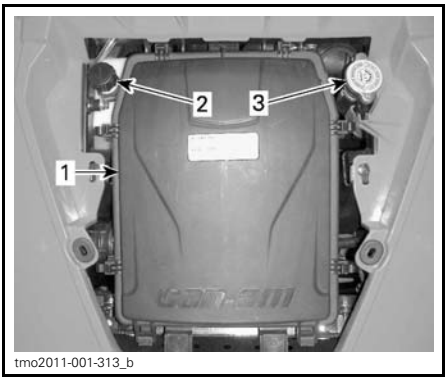

1. Air filter housing cover
2. Coolant expansion tank cap
3. Pressure cap

4. Ensure cooling system is full up to the pressure cap seat.

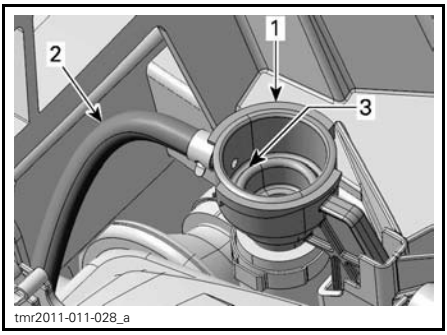

1. Cooling system refill adapter
2. Expansion tank hose
3. Coolant system full level (pressure cap seat)

5. Add coolant in system as necessary.
6. Properly reinstall pressure cap on refill adapter.
7. Check coolant level in expansion tank.

NOTE: Coolant level can be checked by looking at the side of the coolant expansion tank under the RH front fender.



COOLANT EXPANSION TANK
1. *MAX. level*
2. *MIN. level*
3. *Operating range*

8. Add coolant if level is below MIN. mark. Use a funnel to avoid spillage. Do not overfill.
9. Properly reinstall coolant expansion tank cap.
10. Reinstall service cover.

NOTE: A cooling system that frequently requires addition of coolant is an indication of leaks or engine problems.

Recommended Engine Coolant

BRP RECOMMENDED PRODUCT	COOLANT
Finland, Norway and Sweden	LONG LIFE ANTIFREEZE(F) (P/N 619 590 204)
All other countries	LONG LIFE ANTIFREEZE (P/N 219 702 685)
Alternative, or if not available	Distilled water and antifreeze solution (50% distilled water, 50% antifreeze)

NOTICE Always use ethylene-glycol antifreeze containing corrosion inhibitors specifically for internal combustion aluminum engines.

Engine Coolant Replacement

Cooling System Draining

⚠ WARNING

In order to avoid potential burns, do not remove the pressure cap or loosen the coolant drain plug if the engine is hot.

1. Remove service cover.
2. Remove the cooling system pressure cap.



1. Pressure cap

3. Unscrew coolant drain plug and drain the coolant into a suitable container.

NOTE: The drain plug is accessible from underneath the vehicle.

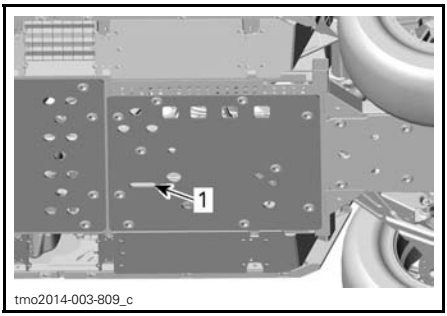

1. Cooling system drain plug access

NOTE: Do not unscrew the coolant drain plug completely.

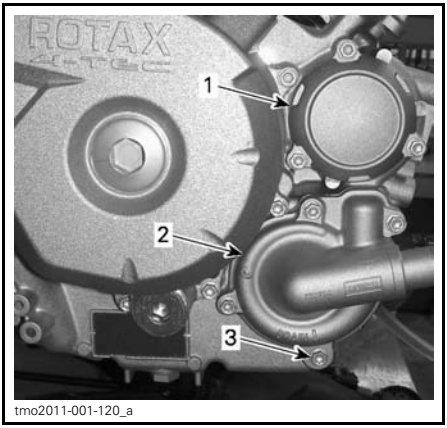

1. Oil filter cover
2. Water pump cover
3. Coolant drain plug

4. Disconnect the lower radiator hose and drain the remaining coolant into a suitable container.

NOTE: Take note of the position of the hose clamp on the lower radiator hose at the radiator.

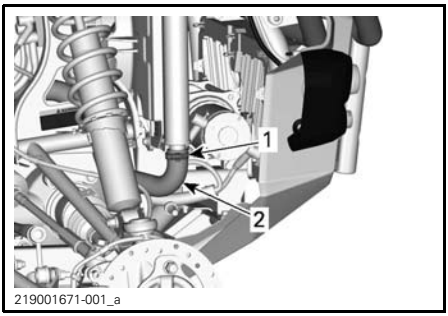

1. Hose clamp position to note
2. Lower radiator hose to remove

5. Drain cooling system completely.
6. Reinstall cooling system drain plug.

COOLING SYSTEM DRAIN PLUG TORQUE
9 N•m to 11 N•m (80 lbf•**in** to 97 lbf•**in**)

7. Reinstall radiator hose as noted prior to removal.

RADIATOR HOSE CLAMP
2.5 N•m to 3.5 N•m (22 lbf•**in** to 31 lbf•**in**)

8. Siphon the cooling system expansion tank.
9. Fill cooling system with coolant, refer to *COOLING SYSTEM BLEEDING* procedure.

Cooling System Bleeding

800R Models

1. Unscrew bleed screw on thermostat housing cover of front cylinder.



TYPICAL
1. Bleed screw

1000 Models

2. Unscrew bleed screws of both front and rear cylinders.

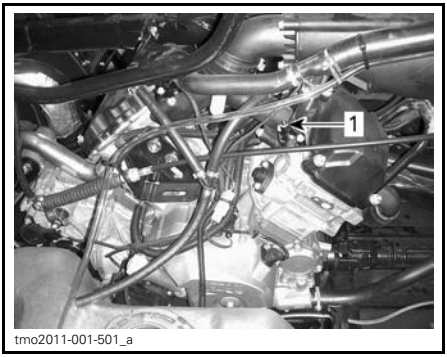

1. Front cylinder bleed screw

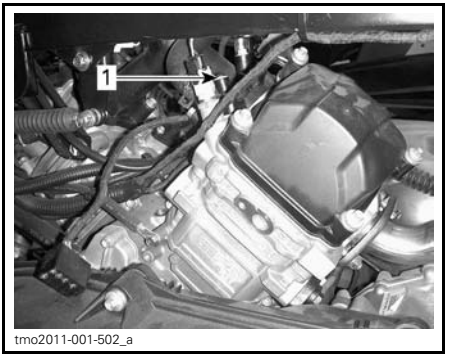

1. Rear cylinder bleed screw

All Models

3. Remove the pressure cap.
4. Fill the cooling system until coolant comes out of the bleed screw(s).
5. Install the bleed screw(s) using NEW gasket ring(s) and torque as per following chart.

BLEED SCREW INSTALLATION	
GASKET RING	TIGHTENING TORQUE
New	4.4 N•m to 5.6 N•m (39 lbf•**in** to 50 lbf•**in**)

6. Continue adding coolant until system is full up to the pressure cap seat in the refill adapter.

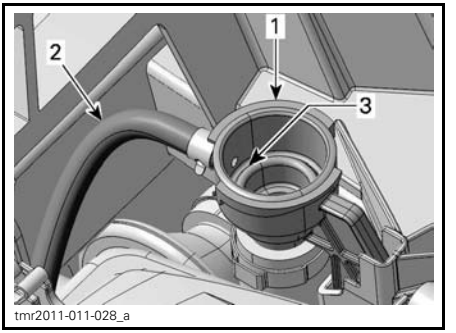

1. Cooling system refill adapter
2. Expansion tank hose
3. Coolant system full level (pressure cap seat)

7. Install pressure cap.

NOTICE The following steps must be carried out as specified to ensure proper cooling system bleeding in addition to the previous steps.

8. Lift the entire front end of the vehicle so the front tires are 60 cm (2 ft) above the ground for at least 1 minute.

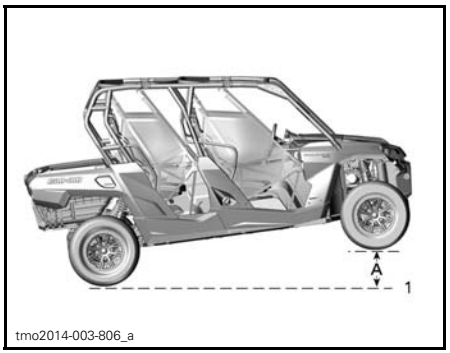

ENTIRE FRONT END LIFTED
1. Ground level
A. 60 cm (24 in)

9. Lower vehicle to the ground.
10. Remove pressure cap and add coolant as required.
11. Install pressure cap.
12. Lift driver's side of vehicle 60 cm (2 ft) above it's horizontal position for at least 1 minute.

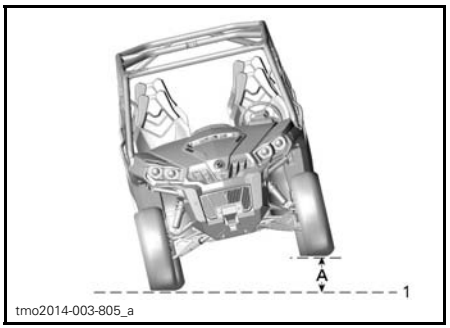

DRIVER'S SIDE LIFTED
1. Ground level
A. 60 cm (24 in)

13. Lower vehicle to the ground.
14. Remove pressure cap and add coolant as required up to the pressure cap seat in the refill adapter.

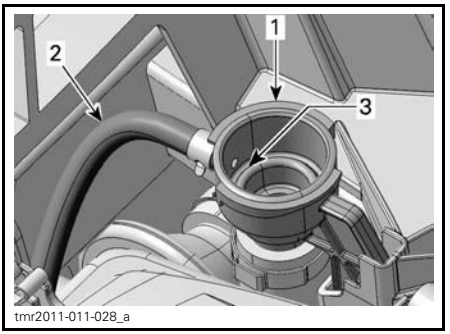

1. Cooling system refill adapter
2. Expansion tank hose
3. Coolant system full level (pressure cap seat)

15. Install the pressure cap.
16. Check coolant level in the coolant expansion tank and fill to the MIN. level (as required).
17. Run engine at idle with the pressure cap ON until the cooling fan cycles on for a second time.
18. Stop the engine and let it cool down.

⚠ WARNING

In order to avoid potential burns, do not remove the pressure cap if the engine is hot.

19. When the engine is cool, remove pressure cap and add coolant if required.
20. Install pressure cap.
21. Check coolant level in the expansion tank. Add coolant as required. Refer to *ENGINE COOLANT LEVEL VERIFICATION* in this subsection.

Muffler Spark Arrester

Muffler Spark Arrester Cleaning and Inspection

⚠ CAUTION Never perform this operation immediately after the engine has been running as exhaust system is very hot.

Remove the muffler cover.

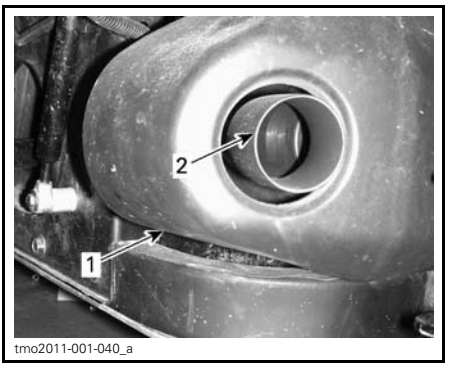

1. Muffler cover
2. Exhaust tail pipe

Remove and discard the tail pipe retaining screws.

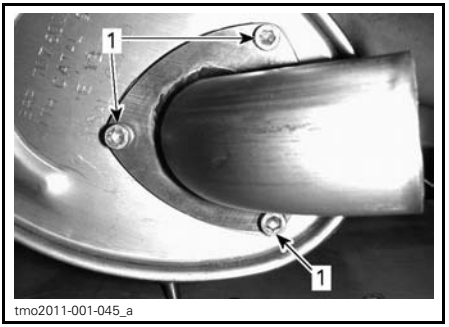

1. Retaining screws

Remove exhaust tail pipe, gasket (discard) and spark arrester.

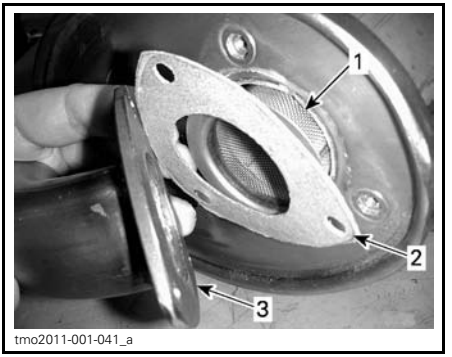

1. Spark arrester
2. Gasket
3. Exhaust tail pipe

Remove carbon deposits from the spark arrester using a brush.

NOTICE Use a soft brush and be careful to avoid damaging spark arrester mesh.

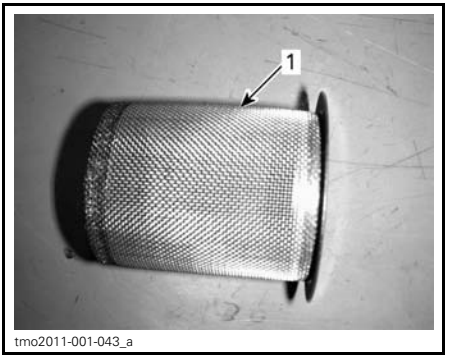

1. Clean spark arrester

Inspect mesh of spark arrester for any damage. Replace as required.

Inspect spark arrester chamber in muffler. Remove any debris as required.

Reinstall the muffler spark arrester in the reverse of the removal procedure. However pay attention to the following.

Install new gasket and retaining screws. Torque to specification.

TIGHTENING TORQUE	
Tailpipe retaining screw	11 N•m ± 1 N•m (97 lbf•**in** ± 9 lbf•**in**)

Gearbox Oil

Gearbox Oil Level Verification

Place the vehicle on a level surface. Select PARK position.

Remove rear right passenger seat.

Remove plastic rivets to remove rear right lower console.

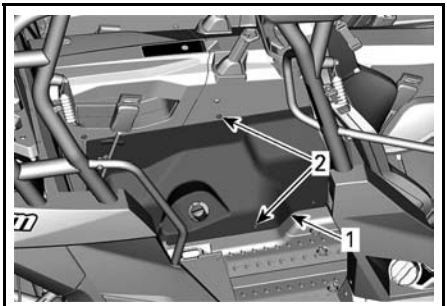

1. Rear right lower console
2. Plastic rivets

Slightly lift upper console to allow removal of lower console.

Pull rear right lower console out of location.

Check the gearbox oil level by removing the gearbox oil level plug.

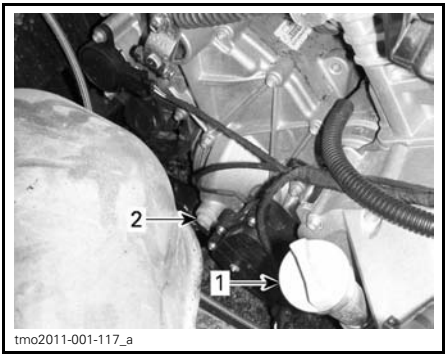

1. Engine oil dipstick
2. Gearbox oil level plug

The oil should be level with the bottom of the oil level hole.

NOTICE Operating the gearbox with an improper oil level may severely damage gearbox.

When completed, reinstall rear right lower console and rear right passenger seat.

TIGHTENING TORQUE	
Rear seat bolts	10 N•m ± 1 N•m (89 lbf•**in** ± 9 lbf•**in**)

Recommended Gearbox Oil

Use the following gearbox oil.

RECOMMENDED GEARBOX OIL
XPS synthetic gear oil (P/N 293 600 140)

NOTE: The XPS oil is specially formulated to meet the lubrication requirements of this gearbox. BRP strongly recommends the use of its XPS oil. However, if the XPS synthetic gear oil is not available, use the following lubricant:

GEARBOX OIL REQUIREMENT
75W 140 API GL-5 synthetic gear oil

NOTICE Do not use another type of oil when servicing.

Gearbox Oil Change

NOTE: When replacing the gearbox oil, it is recommended to clean the vehicle speed sensor (VSS) at the same time.

Place the vehicle on a level surface.

Clean drain plug area.

Clean the oil level plug area.

Under the vehicle, place a drain pan underneath the oil drain plug area.

Remove the oil level plug.

Remove the gearbox drain plug.

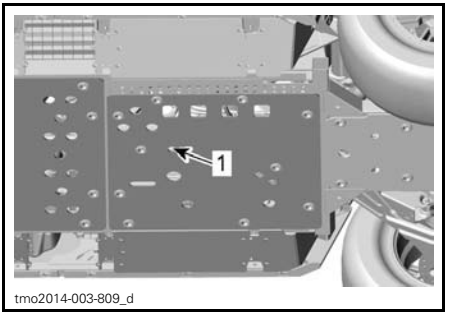

1. Oil drain plug

Let oil completely drain from gearbox.

Install the drain plug.

NOTE: Clean drain plug from any metallic particles prior to installation.

Refill gearbox.

NOTICE Use ONLY the recommended type of oil.

The oil should be level with the bottom of the oil level orifice.

NOTICE Do not overfill.

Reinstall oil level plug.

Wipe off any spillage.

Spark Plugs

Access to Spark Plugs

1. Adjust driver seat to the front position for easier access
2. Remove plastic rivets securing rear CVT access panel and remove it.

NOTE: CVT access panel is designed to be flexible and needs to be "twisted" to get around the surrounding parts.

NOTICE Be careful to avoid damaging rear passenger seat during CVT access panel removal and installation.

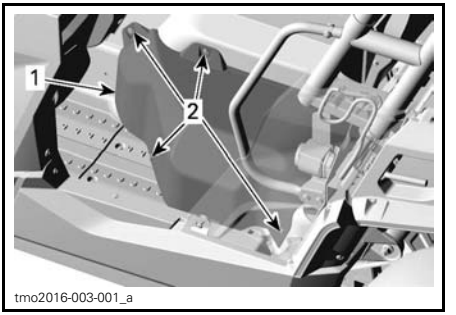

PARTS REMOVED FOR CLARITY PURPOSES
1. CVT access panel
2. Plastic rivets

3. Remove plastic rivets to remove rear right lower console.

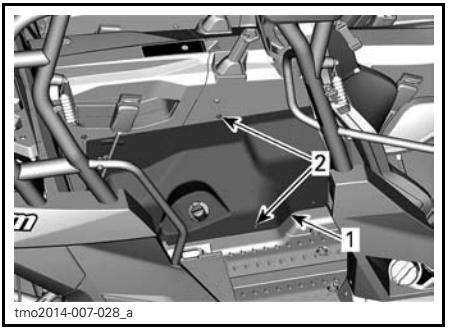

1. Rear right lower console
2. Plastic rivets

4. Slightly lift upper console to allow removal of lower console.
5. Pull rear right lower console out of location.
6. When completed, reinstall rear right lower console and rear right passenger seat.

TIGHTENING TORQUE	
Rear seat bolts	10 N•m ± 1 N•m (89 lbf•**in** ± 9 lbf•**in**)

Spark Plug Removal

Unplug spark plug cable.

NOTE: Spark plug removal procedure is the same for both cylinders.

Clean spark plug and cylinder head with pressurized air.

⚠ CAUTION Always wear safety goggles when using pressurized air.

Unscrew spark plug completely then remove it.

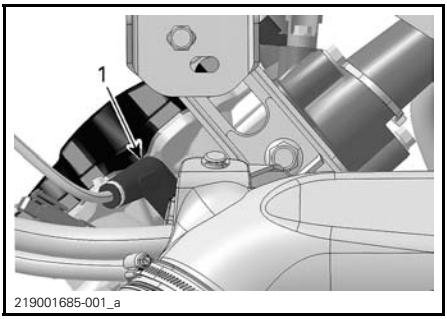

RH SIDE — REAR CYLINDER
1. Spark plug

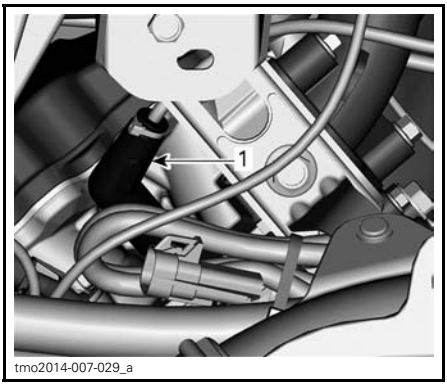

LH SIDE — FRONT CYLINDER
1. Spark plug

Spark Plug Installation

Prior to installation make sure that contact surface of cylinder head and spark plug is free of grime.

Using a feeler gauge, set the spark plug gap.

SPARK PLUG GAP
0.7 mm - 0.8 mm (.028 in - .031 in)

Apply a small amount of copper-based anti-seize lubricant over spark plug threads.

Screw spark plug into cylinder heads by hand and tighten with a torque wrench and a proper socket.

TIGHTENING TORQUE	
Spark plug	20 N•m ± 2.4 N•m (15 lbf•ft ± 2 lbf•ft)

CVT Cover

NOTE: For a better understanding, some illustrations are taken with engine out of vehicle. To perform the following instructions, it is not necessary to remove engine.

This CVT is lubrication free. Never lubricate any components except drive pulley one-way clutch.

⚠ WARNING

Never touch CVT while engine is running. Never drive vehicle when CVT cover is removed.

⚠ WARNING

Engine must be cool before cover is removed. Always wear protective gloves when removing cover.

Place the vehicle on a level surface. Select PARK position.

CVT Cover Access

1. Adjust driver seat to the front position for easier access
2. Remove plastic rivets securing rear CVT access panel and remove it.

NOTE: CVT access panel is designed to be flexible and needs to be "twisted" to get around the surrounding parts.

NOTICE Be careful to avoid damaging rear passenger seat during CVT access panel removal and installation.

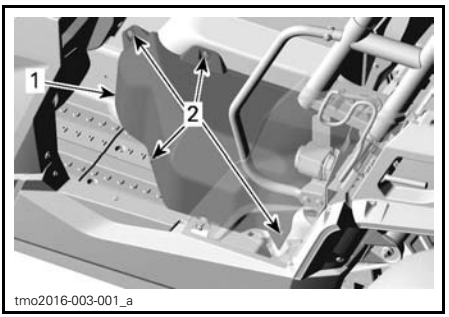

PARTS REMOVED FOR CLARITY PURPOSES
1. *CVT access panel*
2. *Plastic rivets*

CVT Cover Removal

Loosen CVT outlet hose clamp.

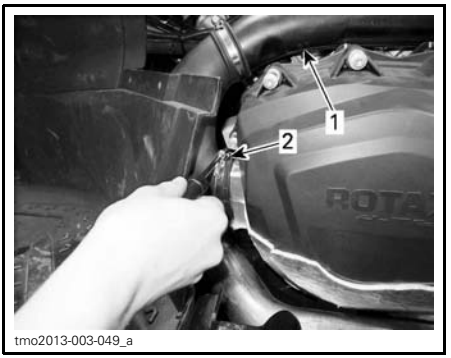

1. *CVT outlet hose*
2. *Clamp*

Remove the thirteen CVT cover screws.

To allow good access to CVT lower screws, it is best to remove the skid plate.

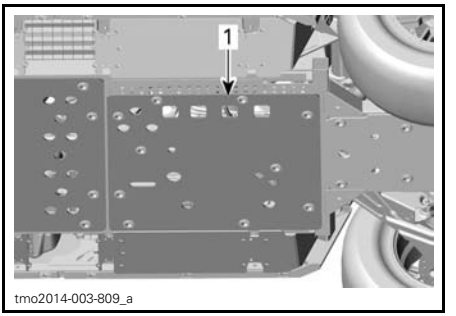

1. *Remove skid plate*

NOTE: Remove the center top screw last to support the cover during removal.

NOTICE Do not use and impact tool to remove CVT cover screws.

Remove the CVT cover and its gasket.

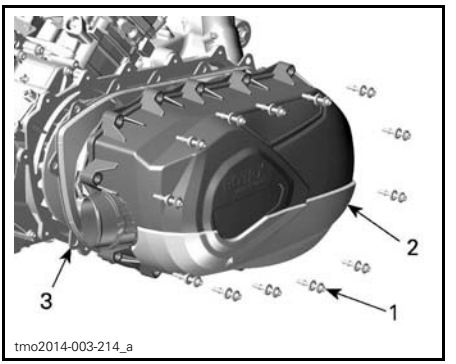

1. *CVT cover lower screws*
2. *CVT cover screws*
3. *CVT cover*

Check inside front and rear CVT outlet hose to make sure there are no debris.



TYPICAL
1. Inside CVT outlet hose

CVT Cover Installation

Install the center top screw of first.

Tighten the CVT cover screws as per following sequence.

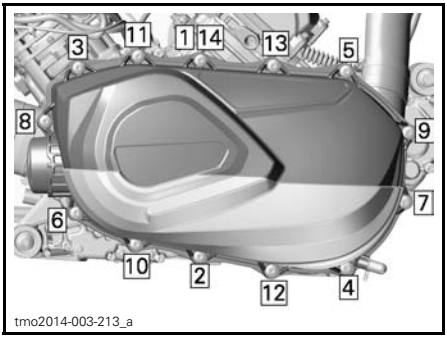

CVT COVER TIGHTENING SEQUENCE

TIGHTENING TORQUE	
CVT cover screws	7 N•m ± 0.8 N•m (62 lbf•**in** ± 7 lbf•**in**)

Drive Belt

Drive Belt Removal

NOTICE In case of a drive belt failure, the CVT, cover and air outlet must be cleaned.

Please refer to *TIPS FOR MAXIMIZING DRIVE BELT DURABILITY* in *BASIC PROCEDURES* section for some IMPORTANT information.

Remove *CVT COVER*.

Open driven pulley.

REQUIRED TOOL	
Puller/Locking tool (P/N 529 000 072)	

Screw tool in the threaded hole of driven pulley and tighten to open the pulley.

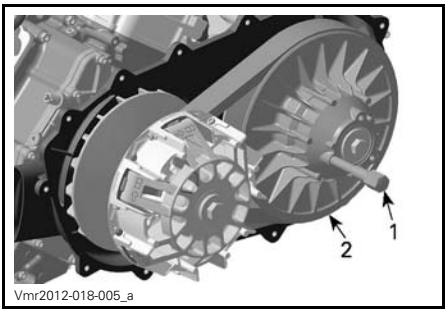

TYPICAL
1. Puller/locking tool
2. Fixed sheave of driven pulley

To remove belt, slip the belt over the top edge of fixed sheave, as shown.

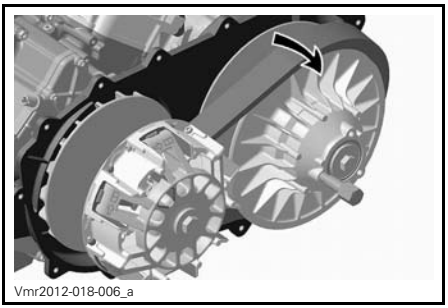

Drive Belt Installation

For installation, reverse the removal procedure. Pay attention to following details.

The maximum drive belt life span is obtained when the drive belt has the proper rotation direction. Install it so that the arrow printed on belt is pointing towards front of the vehicle, viewed from top.

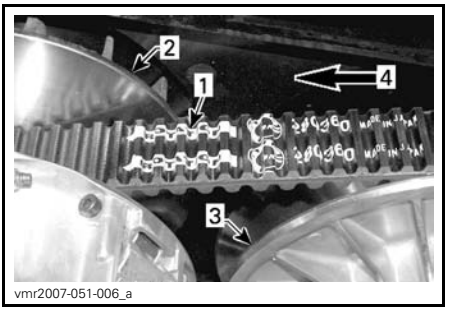

vmr2007-051-006_a

1. *Arrow printed on belt*
2. *Drive pulley (front)*
3. *Driven pulley (rear)*
4. *Rotation direction*

NOTE: Turn the driven pulley until the lowest portion of the cogs on the external surface of drive belt is even with the driven pulley edge.



tmo2013-003-060_a

1. *Lowest portion of cogs even with external surface of drive belt*

Exhaust Area

Exhaust Area Access

1. To access exhaust area from inside the vehicle, refer to *CVT COVER ACCESS* for removal of lateral console panels.
2. Remove rear skid plate and central skid plate.

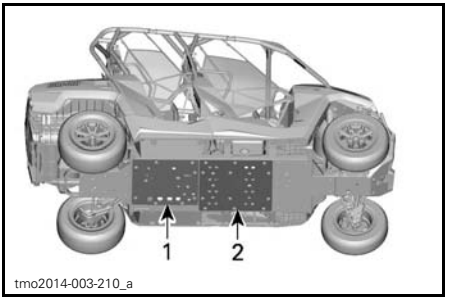

tmo2014-003-210_a

TYPICAL
1. *Rear skid plate*
2. *Central skid plate*

Exhaust Area Cleaning

⚠ WARNING

Engine and exhaust must be cool before removing debris. Always wear protective gloves when removing debris.

1. Wearing gloves, hand remove all excess debris around exhaust.

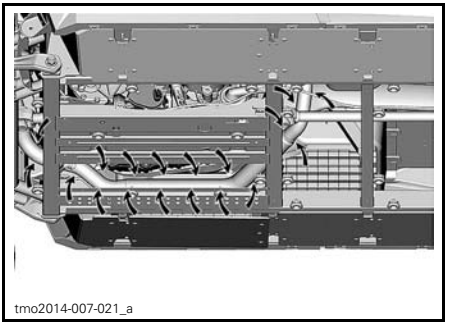
tmo2014-007-021_a

2. Using a garden hose, thoroughly clean the area so that no more debris can be in contact with the exhaust.
3. Install both skid plates back.

TIGHTENING TORQUE	
Skid plate screws	8.5 N•m ± 0.5 N•m (75 lbf•**in** ± 4 lbf•**in**)

Battery

Battery Maintenance

NOTICE Never charge a battery while installed in vehicle.

These vehicles are equipped with a VRLA battery (Valve Regulated Lead Acid). It is a maintenance-free type battery, there is no need to add water to adjust electrolyte level.

NOTICE Never remove the battery sealing cap.

Battery Removal

To access the battery, remove the cover under rear right passenger seat.

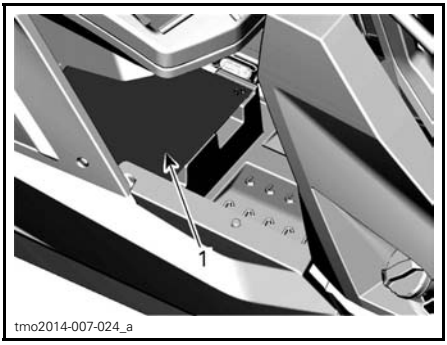

1. Battery access cover

Disconnect BLACK (-) cable first then RED (+) cable.

NOTICE Always respect this order for disassembly; disconnect BLACK (-) cable first.

Remove battery holder retaining nut.

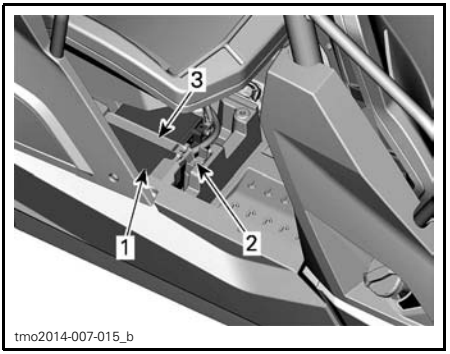

1. Battery
2. Battery holder retaining nut
3. Battery holder

Remove battery holder.

Remove battery.

Battery Cleaning

Clean battery, battery casing and battery posts using a solution of baking soda and water.

Remove corrosion from battery cable terminals and battery posts using a firm wire brush. Battery casing should be cleaned by soft brush and baking soda solution.

Battery Installation

Battery installation is the reverse of the removal procedure.

NOTICE Improper orientation of the battery cables (reverse polarity) will result in damage to the voltage regulator.

⚠ CAUTION Always connect RED (+) cable first then BLACK (-) cable.

Fuses

Fuse Replacement

If a fuse is burnt, replace it by one of the same rating.

NOTICE Do not use a higher rated fuse as this can cause severe damage.

Fuse Box Location

The vehicle is equipped with two fuse boxes. The main fuse box, located by the driver's feet, and the second fuse box, located under the rear right passenger seat near the battery close to the fuse links.

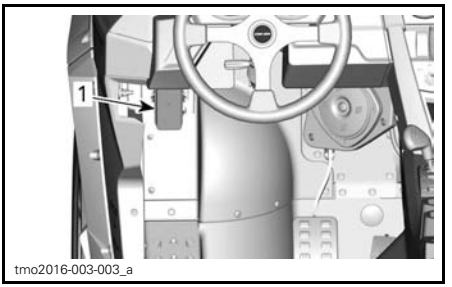

TYPICAL - FUSE BOX LOCATION

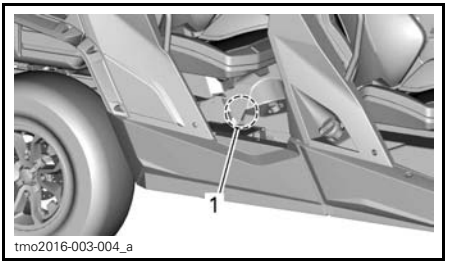

TYPICAL - FUSE LINKS AND FUSE BOX 3 LOCATION ON VEHICLE

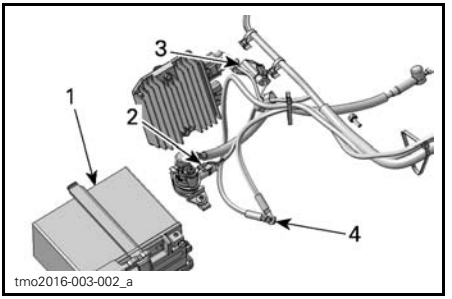

TYPICAL FOR ILLUSTRATIVE PURPOSES
1. *Battery*
2. *Fuse links*
3. *DPS fuse*
4. *Winch pre-wiring*

NOTE: On DPS models, use the pre-wiring for winch installation on vehicle.

Fuse Box Description

MAIN FUSE BOX		
NO	DESCRIPTION	RATING
R1	Fan relay	-
R2	Main relay	-
R3	Accessories relay	-
R4	Light relay	-
R8	Brake relay	-
F4	Speedo/tail lamp	10 A
F5	Ignition/injection/speed sensor	7.5 A
F6	Engine Control Module (ECM)	5 A
F7	4WD Actuator (winch if equipped)	5 A
F8	Key switch/starter solenoid/clock	5 A
F9	Fan	25 A
F10	European component	5 A
F11	Head lamp	30 A
F12	DC Outlet	15 A
F13	Relay driver	5 A
F14	Accessories	15 A
F15	Fuel pump	5 A

NOTE: Fuses are identified inside fuse box cover.

FUSE LINKS		
FUSE LINK	DESCRIPTION	RATING
1	Main	16 awg
2	Light/Accessories	14 awg
3	Power Add-on	16 awg

FUSE IN FUSE BOX 3		
F1	Dynamic power steering (DPS) (Models with DPS)	40 A

Lights

Always check light operation after replacement.

Headlight Bulb Replacement

NOTICE Never touch glass portion of a halogen bulb with bare fingers, it shortens its operating life. If glass is touched, clean it with isopropyl alcohol which will not leave a film on the bulb.

Unplug connector from bulb.

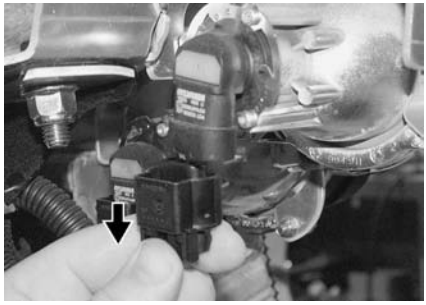

TYPICAL

Rotate bulb.

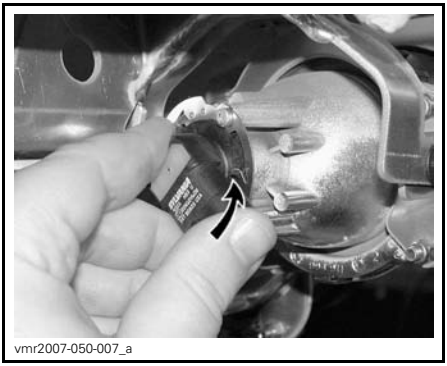

TYPICAL

Pull out bulb.

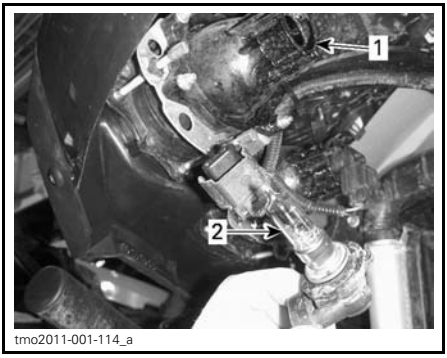

1. *Light bulb socket*
2. *Light bulb*

Properly reinstall removed parts in the reverse order of their removal.

Validate headlights operation.

Headlight Beam Aiming

Turn adjustment screws to adjust beam height to your convenience.

NOTE: Adjust headlights evenly.

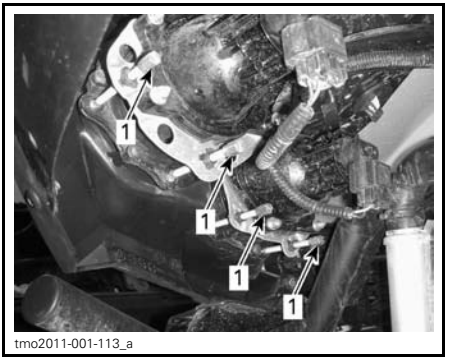

1. Adjustment screws

Taillight Bulbs Replacement

Open upper tailgate.

Remove both taillight retaining screws.

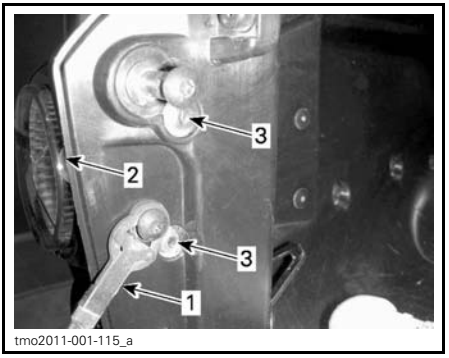

TYPICAL
1. Tailgate cable
2. Tail light
3. Retaining screws

Pull tail light out of its location.

Remove bulb socket from taillight.

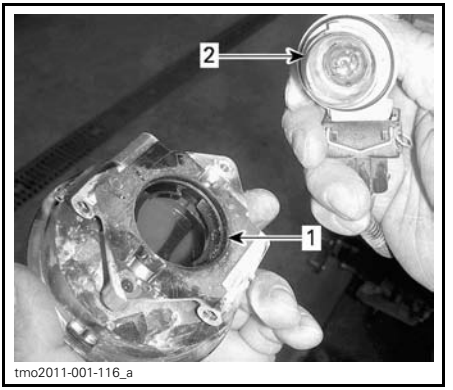

1. Tail light
2. Light bulb and socket

Push the bulb in and hold while turning counterclockwise to release.

Installation is the reverse of the removal procedure.

Position Lights Bulbs Replacement

Pull bulb out.

Installation is the reverse of removal.

Drive Shaft Boot and Protector

Drive Shaft Boot and Protector Inspection

Visually inspect drive shaft protectors and boots conditions.

Check protectors for damage or rubbing against shafts.

Check boots for cracks, tears, leaking grease, etc.

Repair or replace damaged parts as necessary.

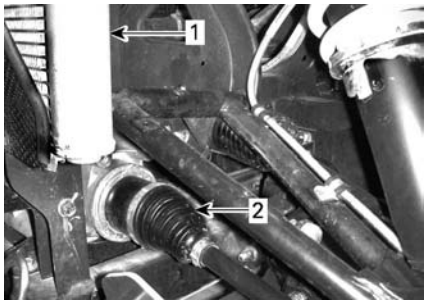

FRONT OF VEHICLE
1. *Radiator*
2. *Inner drive shaft boots*



FRONT OF VEHICLE
1. *Outer drive shaft boot*



REAR OF VEHICLE
1. *Inner drive shaft boot*

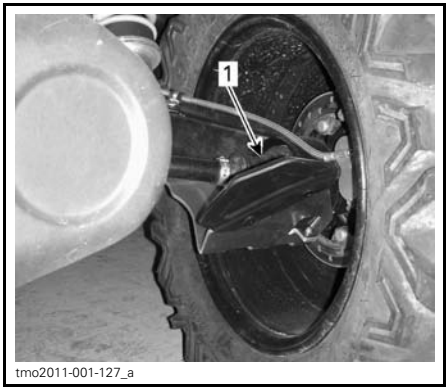

REAR OF VEHICLE
1. *Outer drive shaft boot*

Wheel Bearing

Wheel Bearing Inspection

Lift and support vehicle. Refer to *LIFTING AND SUPPORTING THE VEHICLE* in *VEHICLE INFORMATION SECTION*.

Push and pull the wheels from the upper edge to feel the play.

See an authorized Can-Am dealer if there is any play.



TYPICAL

Wheels and Tires

Wheel Removal

Loosen nuts then lift and support vehicle. Refer to *LIFTING AND SUPPORTING VEHICLE* in *VEHICLE INFORMATION*.

Remove nuts then remove wheel.

Wheel Installation

At installation, it is recommended to apply anti-seize lubricant on threads.

The tires are unidirectional and their rotation must be kept in a specific direction for proper operation.

Torque wheel nuts in accordance with the following illustration.

TIGHTENING TORQUE	
WHEEL LUG NUTS	100 N•m ± 10 N•m (74 lbf•ft ± 7 lbf•ft)



tmo2011-001-081_a

TIGHTENING SEQUENCE

NOTICE Always use the recommended wheel nuts for the type of wheel. Using a different nut could cause damages to the rim or studs.

Tire Pressure

⚠ WARNING

Tire pressure greatly affects vehicle handling and stability. Insufficient pressure may cause tire to deflate and rotate on wheel. Overpressure may burst the tire. Always follow recommended pressure. NEVER set tire pressure below minimum. It could cause the tire to dislodge from the rim.

Check pressure when tires are **cold** before using the vehicle. Tire pressure changes with temperature and altitude. Recheck pressure if one of these conditions has changed.

For your convenience, a pressure gauge is supplied in tool kit.

TIRE PRESSURE			
		FRONT	REAR
MIN.		103 kPa (15 PSI)	103 kPa (15 PSI)
MAX. (Use when total load is greater than 195 kg (430 lb))	**All models except LTD**	110 kPa (16 PSI)	179 kPa (26 PSI)
	LTD	124 kPa (18 PSI)	

NOTE: Although the tires are specifically designed for off-road use, a flat may still occur. Therefore, it is recommended to carry a tire pump and a repair kit.

Tire Inspection

Check tire for damage and wear. Replace if necessary.

⚠ WARNING

Do not rotate tires. The front and rear tires have a different size. The left and right tires have different unidirectional tread patterns.

Tire Replacement

Tires replacement should be performed by an authorized Can-Am dealer.

⚠ WARNING

- Replace tires only with the same type and size as original tires.
- For unidirectional tread pattern, ensure that the tires are installed in the correct direction of rotation.
- Tires should be replaced, by an experienced person, in accordance with tire industry standards and tools.

Suspensions

Front Suspension Lubrication

Use SUSPENSION GREASE (P/N 293 550 033) or an equivalent.

Lubricate front A-arms.

There are three grease fittings on each A-arm side oriented downwards.

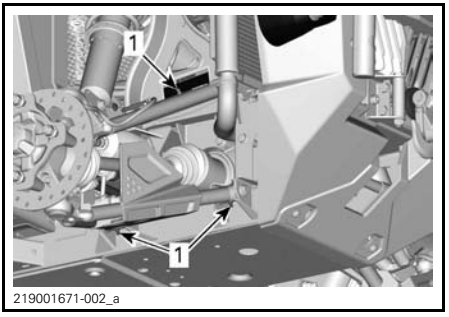

TYPICAL - FRONT SUSPENSION
1. Grease fittings

Suspension Inspection

See an authorized Can-Am dealer if any problem is detected.

Shock Absorbers

Inspect shock absorber for leaks, bump stop wear out or other damages. Verify fasteners are still well tightened.

Front A-Arms

Check A-arms for cracks, bending or other damages.

Rear Trailing Arms

Check trailing arms for distortion, cracks or bending.

Tightening Rear Stabilizer Bar Bolts

Torque retaining screws of stabilizer bar according to the following sequence.

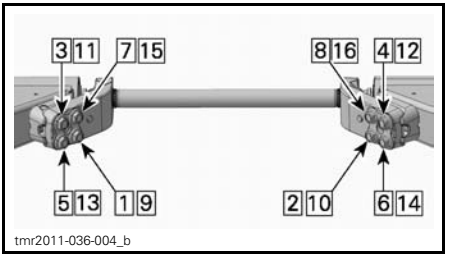

STABILIZER BAR TIGHTENING SEQUENCE

TIGHTENING TORQUE	
Stabilizer bar screws	85 N•m ± 10 N•m (63 lbf•ft ± 7 lbf•ft)

Brakes

Brake Fluid Reservoir Level Verification

With vehicle on a level surface, check brake fluid in reservoir for proper level. Brake fluid level should be between MIN.and MAX. marks.

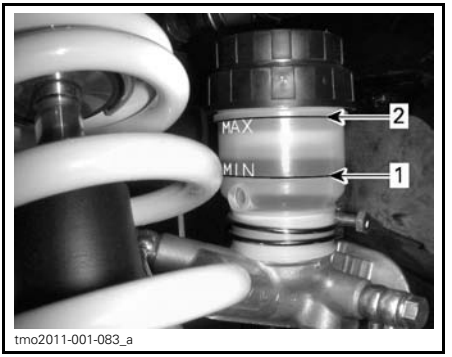

tmo2011-001-083_a

TYPICAL
1. *MIN*
2. *MAX*

NOTE: A low level may indicate leaks or worn brake pads.

Adding Brake Fluid

Clean filler cap before removing.

Add fluid as required. Do not overfill.

NOTE: Ensure filler cap diaphragm is pushed inside the cap before closing the brake fluid reservoir.

Recommended Brake Fluid

Always use brake fluid meeting the specification DOT 4 only.

⚠ WARNING

To avoid serious damage to the braking system, do not use fluids other than the recommended one, nor mix different fluids for topping up.

Brake Inspection

The brake inspection, maintenance and repair should be performed by an authorized Can-Am dealer.

However, verify the following between visits to your dealer:

– Brake fluid level
– Brake system for fluid leaks
– Brake pad wear
– Brake cleanliness.

⚠ WARNING

The brake fluid replacement or brake system maintenance and repairs should be performed by an authorized Can-Am dealer.

Seat Belts

Seat Belt Cleaning

To clean dirt and debris from the seat belts, sponge the straps with mild soap and water. Do not use bleach, dye, or household detergents.

⚠ WARNING

Do not use pressure washer to clean seat belt components. Use of pressure washer can permanently damage seat belt components.

Post-Operation Care

When vehicle is used in salt-water environment rinsing the vehicle with fresh water is necessary to preserve vehicle and its components. Metallic parts lubrication is highly recommended. Use XPS LUBE (P/N 293 600 016) or an equivalent. This must be performed at the end of each operating day.

When vehicle is operated in muddy conditions, rinsing the vehicle is recommended to preserve vehicle and its components.

Vehicle Cleaning and Protection

Never use a high pressure washer to clean the vehicle. **USE LOW PRESSURE ONLY (like a garden hose).** High pressure can cause damage to electrical or mechanical components.

Pay attention to certain areas where mud or debris can accumulate and potentially cause wear, interferences or promote corrosion. The list includes but is not limited to:

- Around exhaust system and between muffler and muffler cover
- Under and around the fuel tank
- Radiator
- Shock absorbers
- Around front and rear differentials
- Around and underneath engine and gearbox
- Inside wheels
- On top of skid plates.

Painted parts which are damaged should be properly repainted to prevent rust.

When required, wash the body with warm water and soap (only use mild detergent). Apply non-abrasive wax.

NOTICE **Never clean plastic parts with strong detergent, degreasing agent, paint thinner, acetone, etc.**

STORAGE AND PRESEASON PREPARATION

When a vehicle is not in use for more than 4 months, proper storage is a necessity.

When using your vehicle after storage, a preparation is required.

See an authorized Can-Am dealer, repair shop, or person of your own choosing to have your vehicle prepared for either storage or the preseason.

TECHNICAL INFORMATION

VEHICLE IDENTIFICATION

The main components of your vehicle (engine and frame) are identified by different serial numbers. It may sometimes become necessary to locate these numbers for warranty purposes or to trace your vehicle in the event of loss. These numbers are required by the authorized Can-Am dealer to complete warranty claims properly. We strongly recommend that you take note of all the serial numbers on your vehicle and supply them to your insurance company.

Vehicle Identification Number



TYPICAL — VEHICLE SERIAL NUMBER LABEL UNDER GLOVE BOX

Engine Identification Number

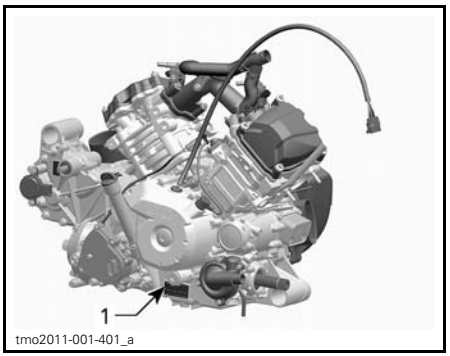

TYPICAL — ENGINE SERIAL NUMBER LABEL

1. EIN (Engine Identification Number)

NOISE EMISSION CONTROL SYSTEM REGULATION

USA and Canada Only

Tampering with Noise Control System Is Prohibited!

U.S. Federal law and Canadian provincial laws may prohibit the following acts or the causing there of:

1. The removal or rendering inoperative by any person other than for purposes of maintenance, repair or replacement of any device or element of design incorporated into any new vehicle for the purpose of noise control prior to its sale or delivery to the ultimate purchaser or while it is in use or
2. The use of the vehicle after such device or element of design has been removed or rendered inoperative by any person.

Among those Acts Presumed to Constitute Tampering Are the Acts Listed Below:

1. Removal or alteration or the puncturing of the muffler or any engine component which conducts removal of engine exhaust gases.
2. Removal or alteration or the puncturing of any part of the intake system.
3. Replacing any moving parts of the vehicle or parts of the exhaust or intake system, with parts other than those specified by the manufacturer.
4. Lack of proper maintenance.

The EC-Declaration of Conformity does not appear in this version of the Operator's Guide.

Please refer to the printed version that was delivered with your vehicle.

SPECIFICATIONS

MODEL			800R	1000
ENGINE				
Engine type			ROTAX® 800R	ROTAX® 1000
			4-stroke, Single Over Head Camshaft (SOHC), liquid cooled	
Number of cylinders			2	
Number of valves			8 valves (mechanical adjustment)	
Valve clearance	Intake		0.06 mm to 0.14 mm (.0024 in to .0055 in)	
	Exhaust		0.11 mm to 0.19 mm (.0043 in to .0075 in)	
Bore			91 mm (3.58 in)	91 mm (3.58 in)
Stroke			61.5 mm (2.42 in)	75 mm (2.95 in)
Displacement			799.9 cm^3 (48.81 in^3)	976 cm^3 (59.56 in^3)
Exhaust system			Spark arrester approved by USDA Forest Service	
Engine air filter			Synthetic paper filter	
LUBRICATION SYSTEM				
Type			Wet sump. Replaceable oil filter	
Oil filter			BRP Rotax® paper type, replaceable	
Engine oil	Capacity (oil change with filter)		2 L (2.1 qt (U.S. liq.))	
	Recommended		For the summer season, use XPS 4-STROKE SYNTH. BLEND OIL (P/N 293 600 121). For all seasons, use XPS 4-STROKE SYNTHETIC OIL (P/N 293 600 112). If not available, use a 5W 40 motor oil that meets the requirements for API service classification SJ, SL, SM or SN	
COOLING SYSTEM				
Coolant	Type		Ethyl glycol/water mix (50% coolant, 50% water). Use the Long life antifreeze (P/N 219 702 685) or (P/N 619 590 204) (Finland, Norway and Sweden) or coolant specifically designed for aluminum engines	
	Capacity	800R	4.6 L (1.22 U.S. gal.)	
		1000	5 L (1.32 U.S. gal.)	
CVT TRANSMISSION				
Type			CVT (Continuously Variable Transmission)	
Engagement RPM			1800 RPM	
GEARBOX				
Type			Dual range (HI-LO) with PARK, neutral and reverse	

MODEL		800R	1000
GEARBOX (cont'd)			
Gearbox oil	Capacity	450 ml (15 U.S. oz)	
	Recommended	XPS synthetic gear oil (P/N 293 600 140) or a 75W 140 API GL-5	
ELECTRICAL SYSTEM			
Magneto generator output		625 W @ 6000 RPM	
Ignition system type		IDI (Inductive Discharge Ignition)	
Ignition timing		Not adjustable	
Spark plug	Quantity	2	
	Make and type	NGK DCPR8E or equivalent	
	Gap	0.7 mm to 0.8 mm (.028 in to .031 in)	
Engine RPM limiter setting		8000 RPM	
Battery	Type	Maintenance free	
	Voltage	12 volts	
	Nominal rating	18 A•h	
	Power starter output	0.7 KW	
Headlights		4 x 60 W	
Taillight		2 x 5/21 W	
Fuses	Main	16 awg	
	Accessories (main)	14 awg	
	Power Add-on	16 awg	
	DPS (if equipped)	40 A	
	Speedometer/tail lamp	10 A	
	Ignition/injection/speed sensor	7.5 A	
	Engine control module (ECM)	5 A	
	4WD Actuator (winch if equipped)	5 A	
	Key switch	5 A	
	Fan (fuse breaker)	25 A	
	European component	5 A	
	Head lamp	30 A	
	DC Outlet	15 A	

MODEL			800R	1000
ELECTRICAL SYSTEM (cont'd)				
Fuses	Relay Driver		5 A	
	Accessories		15 A	
	Fuel pump		5 A	
FUEL SYSTEM				
Fuel delivery	Type		Electronic fuel injection (EFI) with iTC	
Throttle body			54 mm with ETA	
Fuel pump	Type		Electric (in fuel tank)	
Idle speed			1250 ± 100 RPM (not adjustable)	
Fuel	Type		Regular unleaded gasoline	
	Minimum octane		87 Pump Posted AKI (92 RON) - Refer to *FUEL REQUIREMENTS*	
Fuel tank capacity			37.8 L (10 U.S. gal.)	
Fuel remaining when low fuel light turns ON			± 12 L (3.2 U.S. gal.)	
DRIVE SYSTEM				
Drive system type			Selectable 2WD/4WD	
Front differential oil/rear final drive oil	Capacity	Front	500 ml (17 U.S. oz)	
		Rear	280 ml (9.5 U.S. oz)	
	Type	Front	XPS Synthetic gear oil (75W 90 API GL-5) (P/N 293 600 043) or synthetic oil 75W 90 API GL5	
		Rear	XPS Synthetic gear oil (P/N 293 600 140) or a 75W 140 API GL-5 synthetic gear oil	
Front drive			Visco-lok† QE auto-locking front differential	
Front drive ratio			3.6:1	
Rear drive			Spiral bevel gears/final drive	
Rear drive ratio			3.6:1	
CV joint grease			CV joint grease (P/N 293 550 062)	
Propeller shaft grease			Propeller shaft grease (P/N 293 550 063)	
STEERING				
Steering wheel			Adjustable tilt steering	
Turning radius			349 cm (137.402 in)	
Total toe (vehicle on ground)			0° ± 0.2° (±)	
Camber angle (vehicle on ground)			0.7° positive	

MODEL			800R	1000
FRONT SUSPENSION				
Suspension type			Double suspension a-arm with dive-control geometry and stabilizer bar	
Suspension travel			254 mm (10 in)	
Preload adjustment type		DPS/XT	5 position preload setting	
		LTD	Threaded	
Shock absorber	Qty		2	
	Type	DPS/XT	Oil	
		LTD	HPG shocks with piggyback reservoir. QS3† compression and preload adjustments	
REAR SUSPENSION				
Suspension type			Torsional Trailing arm Independant (TTI) with external stabilizer bar	
Suspension travel			254 mm (10 in)	
Preload adjustment type		DPS/XT	5 position preload setting	
		LTD	Threaded	
Shock absorber	Qty		2	
	Type	DPS/XT	Oil	
		LTD	HPG shocks with piggyback reservoir. QS3† compression and preload adjustments	
BRAKES				
Front brake	Type		Dual 220 mm ventilated disc brakes with hydraulic twin-piston calipers	
Rear brake	Type		Dual 214 mm ventilated disc brake with hydraulic single-piston caliper	
Brake fluid	Capacity		260 ml (8.8 U.S. oz)	
	Type		DOT 4	
Caliper			Floating	
Brake pad material	Front		Metallic	
	Rear		Metallic	
Minimum brake pad thickness			1 mm (.039 in)	
Minimum brake disc thickness	Front		4 mm (.157 in)	
	Rear		4 mm (.157 in)	
Maximum brake disc warpage			0.2 mm (.01 in)	

MODEL			800R	1000
TIRES				
Pressure	Front	All models except LTD	Maximum: 110 kPa (16 PSI) Minimum: 103 kPa (15 PSI)	
		LTD	Maximum: 124 kPa (18 PSI) Minimum: 103 kPa (15 PSI)	
	Rear		Maximum: 179 kPa (26 PSI) Minimum: 103 kPa (15 PSI)	
Minimum tire thread depth			3 mm (.118 in)	
Tire size	Front		27 x 9 x 14 (in) NHS	
	Rear		27 x 11 x 14 (in) NHS	
WHEELS				
Type			Cast Aluminum	
Rim size	Front		14 x 7 (in)	
	Rear		14 x 8.5 (in)	
Wheel nuts torque			100 N•m ± 10 N•m (74 lbf•ft ± 7 lbf•ft)	
CHASSIS				
Cage type			50 mm (2 in) diameter, high strength steel, ROPS-approved cage	
DIMENSIONS				
Overall length		DPS	377.3 cm (148.5 in)	
		XT/LTD	380.2 cm (149.7 in)	
Overall width		DPS	148.9 cm (58.6 in)	
		XT/LTD	158.7 cm (62.5 in)	
Overall height		DPS/XT	193 cm (76 in)	
		LTD	191.8 cm (75.5 in)	
Wheelbase			269.4 cm (106.1 in)	
Wheel track	Front	DPS/XT	125.7 cm (49.5 in)	
		LTD	127.6 cm (50.25 in)	
	Rear	All Models	121.9 cm (48 in)	
Ground clearance		DPS/XT	27.9 cm (11 in)	
		LTD	25.4 cm (10 in)	

MODEL			800R	1000
LOADING CAPACITY AND WEIGHT				
Dry weight			710 kg (1,566.4 lb)	
Weight distribution (front/rear)			45/55	
Cargo box capacity	Total		272 kg (600 lb)	
	Upper		181 kg (400 lb)	
	Lower		272 kg (600 lb)	
Total vehicle load allowed (including driver, passengers, all other loads and added accessories)		DPS/XT	526 kg (1,160 lb)	
		LTD	503 kg (1,110 lb)	
Gross vehicle weight rating		DPS	1 299 kg (2,863.8 lb)	1 297 kg (2,859.4 lb)
		XT	1 316 kg (2,901.3 lb)	
		LTD	1 330 kg (2,932.1 lb)	
Towing capacity			680 kg (1,500 lb)	
Hitch support			50.8 mm (2 in) x 50.8 mm (2 in)	

TROUBLESHOOTING

TROUBLESHOOTING GUIDELINES

CVT BELT IS SLIPPING

1. Water has entered in the CVT.
   – *Refer to SPECIAL PROCEDURES subsection.*

E IS DISPLAYED ON TRANSMISSION POSITION DISPLAY

1. Shift lever is between 2 positions.
   – *Properly position the shift lever in the desired position.*
2. Shift lever is not properly adjusted.
   – *Contact an authorized Can-Am dealer.*
3. Electrical communication error.
   – *Contact an authorized Can-Am dealer.*

ENGINE DOES NOT TURN

1. Ignition switch is in the OFF position.
   – *Place switch to either ON position.*
2. Shift lever is not set on PARK or NEUTRAL.
   – *Set shift lever to either in PARK or in NEUTRAL or press the brake pedal.*
3. Burnt fuse.
   – *Check fuses.*
4. Weak battery or loose connections.
   – *Check charging system fuse.*
   – *Check fault message in cluster.*
   – *Check battery connections and terminals condition.*
   – *Have the battery checked by an authorized Can-Am dealer.*
5. Defective engine start button.
   – *Contact an authorized Can-Am dealer.*
6. Defective starter solenoid.
   – *Contact an authorized Can-Am dealer.*
7. D.E.S.S. key not recognized is displayed in the multifunction gauge.
   – *Clean D.E.S.S. key.*

ENGINE TURNS OVER BUT FAILS TO START

1. Flooded engine (spark plug wet when removed).
   – *(If the engine does not start and it is fuel-flooded, the drowned mode can be activated to prevent fuel injection and to cut ignition while cranking. Proceed as follows:*
   • Insert key in ignition switch and turn to either ON position.
   • Press completely and HOLD accelerator pedal.
   • Press the engine START button.
   The engine should be cranked for 10 seconds. Release engine START button.
   Release accelerator pedal and start/crank engine again to allow starting.
   If it does not work:
   • Remove the spark plugs. Refer to SPARK PLUGS in the MAINTENANCE PROCEDURES section.
   • Crank engine several times.
   • Install new spark plugs if possible or clean and dry spark plugs.
   • If engine does not start, seek service from an authorized Can-Am dealer, repair shop, or person of your own choosing for maintenance, repair, or replacement. Please refer to the US EPA EMISSIONS-RELATED WARRANTY contained herein for information about warranty claims.

2. No fuel to the engine (spark plug dry when removed).
   – *Check fuel tank level.*
   – *Check fuel pump fuse.*
   – *Obstructed fuel pump pre-filter or fuel pump failure. Seek service from an authorized Can-Am dealer, repair shop, or person of your own choosing for maintenance, repair, or replacement. Please refer to the US EPA EMISSIONS-RELATED WARRANTY contained herein for information about warranty claims.*
3. Spark plug/ignition (no spark).
   – *Check ignition fuse.*
   – *Remove spark plug then reconnect to ignition coil.*
   – *Start engine with spark plug grounded to the engine away from spark plug hole. If no spark appears, replace spark plug.*
   – *If trouble persists, seek service from an authorized Can-Am dealer, repair shop, or person of your own choosing for maintenance, repair, or replacement. Please refer to the US EPA EMISSIONS-RELATED WARRANTY contained herein for information about warranty claims.*

ENGINE LACKS ACCELERATION OR POWER

1. Seat belt not buckled properly. Check cluster message.
   – *Buckle up seat belt.*
2. Fouled or damaged spark plug.
   – *Replace spark plugs.*
3. Engine air filter plugged or dirty.
   – *Check air filter and replace if necessary.*
   – *Check deposits in engine air filter housing.*

ENGINE LACKS ACCELERATION OR POWER (cont'd)

4. Water in CVT
   – *Drain water from CVT. Refer to SPECIAL PROCEDURES subsection.*
5. CVT dirty or worn-out.
   – *Contact an authorized Can-Am dealer.*
6. Lack of fuel
   – *Dirty or clogged fuel pump pre-filter. Seek service from an authorized Can-Am dealer, repair shop, or person of your own choosing for maintenance, repair, or replacement. Please refer to the US EPA EMISSIONS-RELATED WARRANTY contained herein for information about warranty claims.*
7. Engine is in limp home mode.
   – *Check multifunction gauge display for messages.*
   – *Multifunction gauge CHECK ENGINE indicator lamp is on and display shows LIMP HOME, seek service from an authorized Can-Am dealer, repair shop, or person of your own choosing for maintenance, repair, or replacement. Please refer to the US EPA EMISSIONS-RELATED WARRANTY contained herein for information about warranty claims.*

ENGINE OVERHEATS

1. Low coolant level in cooling system.
   – *Check coolant level and refill. See MAINTENANCE PROCEDURES. Seek service from an authorized Can-Am dealer, repair shop, or person of your own choosing for maintenance, repair, or replacement. Please refer to the US EPA EMISSIONS-RELATED WARRANTY contained herein for information about warranty claims.*
2. Cooling fan is not working.
   – *Ensure cooling fan is not jammed and working properly.*
   – *Check fan fuse. See FUSES in the MAINTENANCE PROCEDURES subsection.*
3. Dirty radiators fins.
   – *Check and clean radiator fins. See MAINTENANCE PROCEDURES subsection.*

ENGINE MISFIRE

1. Fouled/damaged/worn spark plug.
   – *Replace spark plugs as required.*
2. Water in fuel.
   – *Drain fuel system and refill with fresh fuel.*

THE RPM INCREASES BUT THE VEHICLE DOES NOT MOVE

1. Water in the CVT.
   – *Drain water from CVT. See SPECIAL PROCEDURES subsection.*
2. CVT dirty or worn-out or belt failure.
   – *Contact an authorized Can-Am dealer.*

PARTIAL OR NO RESPONSE FROM THE ACCELERATOR PEDAL INPUTS (CHECK ENGINE IS ON AND PPS FAULT MESSAGE IS DISPLAYED)

1. Partial failure of the accelerator pedal sensors (PPS).
   – *Use the override switch to retrieve accelerator pedal normal operation. Contact an authorized Can-Am dealer.*
2. Total failure of the accelerator pedal sensors (PPS).
   – *Use the override switch to bypass the accelerator pedal in order to move vehicle. Contact an authorized Can-Am dealer.*

MESSAGES IN MULTIFUNCTION GAUGE

If an abnormal engine condition occurs, the following messages can be combined with a pilot lamp.

MESSAGE	DESCRIPTION
D.E.S.S. KEY NOT RECOGNIZED	D.E.S.S. key requires cleaning.
BAD KEY	Wrong key used in the ignition switch. Use the right key for the vehicle.
CHECK ENGINE	All active or previously activated faults that require attention. No engine limitation engaged.
LIMP HOME	Critical faults requiring diagnostic as soon as possible. An engine limitation is engaged and/or the engine behavior is modified.
ECM CRC ERROR	Error message from ECM.
TPS FAULT	Throttle body fault, generally followed by a Limp Home message.
BRAKE SWITCH FAULT	Brake signal fault.
ECM NOT RECOGNIZED	Message displayed when the gauge is unable to identify the ECM.
CHECK DPS (models with DPS)	Check engine pilot light on. Indicates that the DPS (Dynamic Power Steering) does not work properly. See an authorized Can-Am dealer.
PPS FAULT	When one or both sensor of the PPS is/are faulty, erratic or out of range or that the ratio between the two is incorrect, the message will be displayed and the check engine will be lit.
MANUAL LIMP HOME	When the PPS Limp Home is engaged, the message will be displayed.
FUEL SENDER RANGE PERFORMANCE	When the fuel sender resistor value is out of range the multifunction gauge (analog/digital) will detect it and display the message.

WARRANTY

BRP LIMITED WARRANTY USA AND CANADA: 2017 CAN-AM® SSV

1) SCOPE OF THE LIMITED WARRANTY

Bombardier Recreational Products Inc. ("BRP")* warrants its 2017 Can-Am side-by-side vehicles ("SSV") sold by authorized Can-Am SSV dealers (as hereinafter defined) in the United States of America ("USA") and in Canada from defects in material or workmanship for the period and under the conditions described below. This limited warranty will become null and void if: (1) the SSV was used for racing or any other competitive activity, at any point, even by a previous owner; or (2) the SSV has been altered or modified in such a way so as to adversely affect its operation, performance or durability, or has been altered or modified to change its intended use.

Non-factory installed parts and accessories are not covered under this limited warranty. Please refer to the applicable parts and accessories limited warranty text.

2) LIMITATIONS OF LIABILITY

THIS WARRANTY IS EXPRESSLY GIVEN AND ACCEPTED IN LIEU OF ANY AND ALL OTHER WARRANTIES, EXPRESSED OR IMPLIED, INCLUDING WITHOUT LIMITATION ANY WARRANTY OF MERCHANTABILITY OR FITNESS FOR A PARTICULAR PURPOSE. TO THE EXTENT THAT THEY CANNOT BE DISCLAIMED, THE IMPLIED WARRANTIES ARE LIMITED IN DURATION TO THE LIFE OF THE EXPRESS WARRANTY. INCIDENTAL AND CONSEQUENTIAL DAMAGES ARE EXCLUDED FROM COVERAGE UNDER THIS WARRANTY. SOME STATES/ PROVINCES DO NOT ALLOW FOR THE DISCLAIMERS, LIMITATIONS AND EXCLUSIONS IDENTIFIED ABOVE, AS A RESULT, THEY MAY NOT APPLY TO YOU. THIS WARRANTY GIVES YOU SPECIFIC RIGHTS, AND YOU MAY ALSO HAVE OTHER LEGAL RIGHTS WHICH MAY VARY FROM STATE TO STATE, OR PROVINCE TO PROVINCE.

Neither the distributor, any BRP dealer nor any other person has been authorized to make any affirmation, representation or warranty regarding the product, other than those contained in this limited warranty, and if made, shall not be enforceable against BRP. BRP reserves the right to modify this limited warranty at any time, being understood that such modification will not alter the warranty conditions applicable to the products sold while this warranty is in effect.

3) EXCLUSIONS – ARE NOT WARRANTED

The following are not warranted under any circumstances:

- Normal wear and tear;
- Routine maintenance items, tune ups, adjustments;
- Damage caused by failure to provide proper maintenance and/or storage, as described in the Operator's Guide;
- Damage resulting from removal of parts, improper repairs, service, maintenance, modifications or use of parts not manufactured or approved by BRP or resulting from repairs done by a person that is not an authorized servicing Can-Am SSV dealer;
- Damage caused by abuse, abnormal use, neglect or operation of the product in a manner inconsistent with the recommended operation described in the Can-Am SSV Operator's Guide;

– Damage resulting from accident, submersion, fire, theft, vandalism or any act of God;
– Operation with fuels, oils or lubricants which are not suitable for use with the product (see the Operator's Guide);
– Damages from rust, corrosion or exposure to the elements;
– Damage resulting from water or snow ingestion;
– Incidental or consequential damages, or damages of any kind including without limitation towing, storage, telephone, rental, taxi, inconvenience, insurance coverage, loan payments, loss of time, loss of income.

4) WARRANTY COVERAGE PERIOD

This limited warranty will be in effect from (1) the date of delivery to the first retail consumer or (2) the date the product is first put into use, whichever occurs first and for the following period:

– SIX (6) CONSECUTIVE MONTHS, for private use or commercial use. For emission-related components; please also refer to the *US EPA EMISSION-RELATED WARRANTY* contained herein.

The repair or replacement of parts or the performance of service under this warranty does not extend the life of this warranty beyond its original expiration date.

5) CONDITIONS TO HAVE WARRANTY COVERAGE

This warranty coverage is available **only** if **each** of the following conditions has been fulfilled:

– The 2017 Can-Am SSV must be purchased as new and unused by its first owner from a Can-Am SSV dealer authorized to distribute Can-Am SSV's in the country in which the sale occurred ("Can-Am SSV dealer");
– The BRP specified pre-delivery inspection process must be completed and documented and signed by the purchaser;
– The 2017 Can-Am SSV must have undergone proper registration by an authorized Can-Am SSV dealer;
– The 2017 Can-Am SSV must be purchased in the country in which the purchaser resides;
– Routine maintenance outlined in the Operator's Guide must be timely performed in order to maintain warranty coverage. BRP reserves the right to make warranty coverage contingent upon proof of proper maintenance.

BRP will not honor this limited warranty to any private use owner or commercial use owner if one of the preceding conditions has not been met. Such limitations are necessary in order to allow BRP to preserve both the safety of its products, and also that of its consumers and the general public.

6) WHAT TO DO TO OBTAIN WARRANTY COVERAGE

The customer must cease using the SSV upon the appearance of an anomaly. The customer must notify a servicing BRP dealer within three (3) days of the appearance of a defect, and provide it with reasonable access to the product and reasonable opportunity to repair it. The customer must also present to the authorized BRP dealer, proof of purchase of the product and must sign the repair/work order prior to starting the repair in order to validate the warranty repair. All parts replaced under this limited warranty become the property of BRP.

7) WHAT BRP WILL DO

BRP's obligations under this warranty are limited to, at its sole discretion, repairing parts found defective under normal use, maintenance and service, or replacing such parts with new genuine Can-Am SSV parts without charge for parts and labor, at any authorized BRP dealer during the warranty coverage period under the conditions described herein. BRP's responsibility is limited to making the required repairs or replacements of parts. No claim of breach of warranty shall be cause for cancellation or rescission of the sale of the SSV to the owner.

In the event that service is required outside of the country of original sale, the owner will bear responsibility for any additional charges due to local practices and conditions, such as, but not limited to, freight, insurance, taxes, license fees, import duties, and any and all other financial charges, including those levied by governments, states, territories and their respective agencies.

BRP reserves the right to improve or modify products from time to time without assuming any obligation to modify products previously manufactured.

8) ADDITIONAL SUPPLIER WARRANTIES

A GPS receiver may be supplied by BRP as standard equipment on certain 2017 Can-Am SSV. The GPS receiver is covered under BRP's limited warranty policy. Additional warranty coverage if offered by the GPS receiver "supplier" that is longer than BRP's limited warranty is to be dealt by the dealer or consumer directly with the GPS receiver "supplier".

9) TRANSFER

If the ownership of a product is transferred during the warranty coverage period, this limited warranty, subject to its terms and conditions, shall also be transferred and be valid for the remaining coverage period provided BRP or an authorized Can-Am SSV Distributor/Dealer receives a proof that the former owner agreed to the transfer of ownership, in addition to the co-ordinates of the new owner.

10) CONSUMER ASSISTANCE

In the event of a controversy or a dispute in connection with this limited warranty, BRP suggests that you try to resolve the issue at the dealership level. We recommend discussing the issue with the authorized dealer's service manager or owner.

If the matter still remains unresolved, contact BRP by filling out the customer contact form at www.brp.com or contact BRP by mail at one of the addresses listed under the *CONTACT US* section of this guide.

* In the USA, products are distributed and serviced by BRP US Inc.
© 2016 Bombardier Recreational Products Inc. All rights reserved.
® Trademark of Bombardier Recreational Products Inc. or its affiliates.

US EPA EMISSION-RELATED WARRANTY

Bombardier Recreational Products Inc. ("BRP")* warrants to the ultimate purchaser and each subsequent purchaser that this new vehicle, including all parts of its exhaust emission control system and its evaporative emission control system, meets two conditions:

1. It is designed, built, and equipped so it conforms at the time of sale to the ultimate purchaser with the requirements of 40 CFR 1051 and 40 CFR 1060.
2. It is free from defects in materials and workmanship that may keep it from meeting the requirements of 40 CFR 1051 and 40 CFR 1060.

Where a warrantable condition exists, BRP will repair or replace, as it elects, any part or component with a defect in materials or workmanship that would increase the engine's emissions of any regulated pollutant within the stated warranty period at no cost to the owner, including expenses related to diagnosing and repairing or replacing emission-related parts. All defective parts replaced under this warranty become the property of BRP.

For all emission-related warranty claims, BRP is limiting the diagnosis and repair of emission-related parts to the authorized Can-Am dealers, unless for emergency repairs as required by item 2 of the following list.

As a certifying manufacturer, BRP will not deny emission-related warranty claims based on any of the following:

1. Maintenance or other service BRP or BRP's authorized facilities performed.
2. Engine/equipment repair work that an operator performed to correct an unsafe, emergency condition attributable to BRP as long as the operator tries to restore the engine/equipment to its proper configuration as soon as possible.
3. Any action or inaction by the operator unrelated to the warranty claim.
4. Maintenance that was performed more frequently than BRP specify.
5. Anything that is BRP fault or responsibility.
6. The use of any fuel that is commonly available where the equipment operates unless BRP written maintenance instructions state that this fuel would harm the equipment's emission control system and operators can readily find the proper fuel. See maintenance information section and fuel requirements of fueling section.

Emission-Related Warranty Period

The emission-related warranty is valid for the following period whichever comes first:

	HOURS	MONTHS	KILOMETERS
Exhaust emission-related components	500	30	5000
Evaporative emission-related components	N/A	24	N/A

Components Covered

The emission-related warranty covers all components whose failure would increase an engine's emissions of any regulated pollutant, including the following listed components:

1. For exhaust emissions, emission-related components include any engine parts related to the following systems:
   - Air-induction system
   - Fuel system
   - Ignition system
   - Exhaust gas recirculation systems
2. The following parts are also considered emission-related components for exhaust emissions:
   - Aftertreatment devices
   - Crankcase ventilation valves
   - Sensors
   - Electronic control units
3. The following parts are considered emission-related components for evaporative emissions:
   - Fuel tank
   - Fuel cap
   - Fuel line
   - Fuel line fittings
   - Clamps*
   - Pressure relief valves*
   - Control valves*
   - Control solenoids*
   - Electronic controls*
   - Vacuum control diaphragms*
   - Control cables*
   - Control linkages*
   - Purge valves
   - Vapor hoses
   - Liquid/vapor separator
   - Carbon canister
   - Canister mounting brackets
   - Carburetor purge port connector
4. Emission-related components also include any other part whose only purpose is to reduce emissions or whose failure will increase emissions without significantly degrading engine/equipment performance.

*As related to the evaporative emission control system

Limited Applicability

As a certifying manufacturer, BRP may deny emission-related warranty claims for failures that have been caused by the owner's or operator's improper maintenance or use, by accidents for which the manufacturer has no responsibility, or by acts of God. For example, an emission-related warranty claim need not be honored for failures that have been directly caused by the operator's abuse of the engine/equipment or the operator's use of the engine/equipment in a manner for which it was not designed and are not attributable to the manufacturer in any way.

* In the USA, products are distributed and serviced by BRP US Inc.

BRP INTERNATIONAL LIMITED WARRANTY: 2017 CAN-AM® SSV

1) SCOPE OF THE LIMITED WARRANTY

Bombardier Recreational Products Inc. ("BRP")* warrants its 2017 Can-Am SSV sold by Can-Am SSV distributors or dealers authorized by BRP to distribute Can-Am SSVs ("Can-Am SSV Distributor/Dealer") outside of the fifty United States, Canada, member states of the European Economic Area (which is comprised of the states of the European Union plus Norway, Iceland and Liechtenstein) ("EEA"), member states of the Commonwealth of the Independent States (including Ukraine and Turkmenistan) ("CIS") and Turkey, from defects in material or workmanship for the period and under the conditions described below.

Non-factory installed parts and accessories are not covered under this limited warranty. Please refer to the applicable parts and accessories limited warranty text.

This limited warranty will become null and void if: (1) The SSV was used for racing or any other competitive activity, at any point, even by a previous owner; or (2) the SSV has been altered or modified in such a way so as to adversely affect its operation, performance or durability, or has been altered or modified to change its intended use.

2) LIMITATIONS OF LIABILITY

TO THE EXTENT PERMITTED BY LAW, THIS WARRANTY IS EXPRESSLY GIVEN AND ACCEPTED IN LIEU OF ANY AND ALL OTHER WARRANTIES, EXPRESSED OR IMPLIED, INCLUDING WITHOUT LIMITATION ANY WARRANTY OF MERCHANTABILITY OR FITNESS FOR A PARTICULAR PURPOSE. TO THE EXTENT THAT THEY CANNOT BE DISCLAIMED, THE IMPLIED WARRANTIES ARE LIMITED IN DURATION TO THE LIFE OF THE EXPRESS WARRANTY. INCIDENTAL AND CONSEQUENTIAL DAMAGES ARE EXCLUDED FROM COVERAGE UNDER THIS WARRANTY. SOME JURISDICTIONS DO NOT ALLOW FOR THE DISCLAIMERS, LIMITATIONS AND EXCLUSIONS IDENTIFIED ABOVE, AS A RESULT, THEY MAY NOT APPLY TO YOU. THIS WARRANTY GIVES YOU SPECIFIC RIGHTS, AND YOU MAY ALSO HAVE OTHER LEGAL RIGHTS WHICH MAY VARY FROM COUNTRY TO COUNTRY. (FOR PRODUCTS PURCHASED IN AUSTRALIA SEE CLAUSE 4 BELOW).

Neither the Can-Am SSV Distributor/Dealer nor any other person has been authorized to make any affirmation, representation or warranty regarding the product, other than those contained in this limited warranty, and if made, shall not be enforceable against BRP.

BRP reserves the right to modify this warranty at any time, being understood that such modification will not alter the warranty conditions applicable to the products sold while this warranty is in effect.

3) EXCLUSIONS ARE NOT WARRANTED

The following are not warranted under this limited warranty under any circumstances:

- Normal wear and tear;
- Routine maintenance items, tune ups, adjustments (parts and labor);
- Damage caused by negligence or failure to provide proper maintenance and/or storage, as described in the Operator's Guide;

– Damage resulting from removal of parts, improper repairs, service, maintenance, modifications or use of parts not manufactured or approved by BRP or resulting from repairs done by a person that is not an authorized servicing Can-Am SSV Distributor/Dealer;
– Damage caused by abuse, abnormal use, neglect or operation of the product in a manner inconsistent with the recommended operation described in the Operator's Guide;
– Damage resulting from accident, submersion, fire, theft, vandalism or any act of God;
– Operation with fuels, oils or lubricants which are not suitable for use with the product (see the Operator's Guide);
– Damage resulting from rust, corrosion or exposure to the elements;
– Damage resulting from water or snow ingestion;
– Incidental or consequential damages, or damages of any kind including without limitation towing, transportation expenses, storage, telephone, rental, taxi, inconvenience, insurance coverage, loan payments, loss of time, loss of income or time missed for downtime experience due to service work.

4) WARRANTY COVERAGE PERIOD

This warranty will be in effect from (1) the date of delivery to the first retail consumer or (2) the date the product is first put into use, whichever occurs first and for a period of:

– SIX (6) CONSECUTIVE MONTHS for private use or commercial use.

The repair or replacement of parts or the performance of service under this warranty does not extend the life of this warranty beyond its original expiration date.

FOR PRODUCTS SOLD IN AUSTRALIA ONLY

Nothing in these Warranty terms and conditions should be taken to exclude, restrict or modify the application of any condition, warranty, guarantee, right or remedy conferred or implied under the Competition and Consumer Act 2010 (Cth), including the Australian Consumer Law or any other law, where to do so would contravene that law, or cause any part of these terms and conditions to be void. The benefits given to you under this limited warranty hereto are in addition to other rights and remedies that you have under Australian law.

Our goods come with guarantees that cannot be excluded under the Australian Consumer Law. You are entitled to a replacement or refund for a major failure and for compensation for any other reasonably foreseeable loss or damage. You are also entitled to have the goods repaired or replaced if the goods fail to be of acceptable quality and the failure does not amount to a major failure.

5) CONDITIONS TO HAVE WARRANTY COVERAGE

This warranty coverage is available **only** if **each** of the following conditions has been fulfilled:

– The 2017 Can-Am SSV must be purchased as new and unused by its first owner from a Can-Am SSV Distributor/Dealer authorized to distribute Can-Am SSVs in the country in which the sale occurred;
– The BRP specified pre-delivery inspection process must be completed and documented;

– The product must have undergone proper registration by an authorized Can-Am SSV Distributor/Dealer;
– The 2017 Can-Am SSV must be purchased in the country or union of countries in which the purchaser resides; and
– Routine maintenance outlined in the Operator's Guide must be timely performed in order to maintain warranty coverage. BRP reserves the right to make warranty coverage contingent upon proof of proper maintenance.

BRP will not honor this limited warranty to any private use owner or commercial use owner if one of the preceding conditions has not been met. Such limitations are necessary in order to allow BRP to preserve both the safety of its products, and also that of its consumers and the general public.

6) WHAT TO DO TO OBTAIN WARRANTY COVERAGE

The customer must cease using the SSV upon the appearance of an anomaly. The customer must notify a servicing Can-Am SSV Distributor/Dealer within two (2) days of the appearance of a defect, and provide it with reasonable access to the product and reasonable opportunity to repair it. The customer must also present to the authorized Can-Am SSV Distributor/Dealer proof of purchase of the product and must sign the repair/work order prior to starting the repair in order to validate the warranty repair. All parts replaced under this limited warranty become the property of BRP.

Note that the notification period is subject to the applicable national or local legislation in customer's country.

7) WHAT BRP WILL DO

To the extent permitted by law, BRP's obligations under this warranty are limited to, at its sole discretion, repairing parts found defective under normal use, maintenance and service; or replacing such parts with new genuine Can-Am SSV parts without charge for parts and labour, at any authorized Can-Am SSV Distributor/Dealer during the warranty coverage period under the conditions described herein. BRP's responsibility is limited to making the required repairs or replacements of parts. No claim of breach of warranty shall be cause for cancellation or rescission of the sale of the Can-Am SSV to the owner. You may have other legal rights which may vary from country to country.

In the event that service is required outside of the country of original sale, the owner will bear responsibility for any additional charges due to local practices and conditions, such as, but not limited to, freight, insurance, taxes, license fees, import duties, and any and all other financial charges, including those levied by governments, states, territories and their respective agencies.

BRP reserves the right to improve or modify products from time to time without assuming any obligation to modify products previously manufactured.

8) TRANSFER

If the ownership of a product is transferred during the warranty coverage period, this limited warranty, subject to its terms and conditions, shall also be transferred and be valid for the remaining coverage period provided BRP or an authorized Can-Am SSV Distributor/Dealer receives a proof that the former owner agreed to the transfer of ownership, in addition to the coordinates of the new owner.

9) CONSUMER ASSISTANCE

In the event of a controversy or a dispute in connection with this limited warranty, BRP suggests that you try to resolve the issue at the Can-Am SSV Distributor/Dealer level. We recommend discussing the issue with the authorized Can-Am SSV Distributor/Dealer's service manager or owner.

If the matter still remains unresolved, contact BRP by filling out the customer contact form at www.brp.com or contact BRP by mail at one of the addresses listed under the *CONTACT US* section of this guide.

* For the territory covered by this limited warranty, products are distributed and serviced by Bombardier Recreational Products Inc. or its affiliates.

© 2016 Bombardier Recreational Products Inc. All rights reserved.
® Trademark of Bombardier Recreational Products Inc. or its affiliates.

BRP LIMITED WARRANTY FOR THE EUROPEAN ECONOMIC AREA, THE COMMONWEALTH OF THE INDEPENDANT STATES AND TURKEY: 2017 CAN-AM® SSV

1) SCOPE OF THE LIMITED WARRANTY

Bombardier Recreational Products Inc. ("BRP")* warrants its 2017 Can-Am SSVs sold by Can-Am SSV distributors or dealers authorized by BRP to distribute Can-Am SSVs ("Can-Am SSV Distributor/Dealer").in member states of the European Economic Area (which is comprised of the member states of the European Union plus Norway, Iceland and Liechtenstein) ("EEA"), in member states of the Commonwealth of the Independent States (including Ukraine and Turkmenistan) ("CIS") and Turkey from defects in material or workmanship for the period and under the conditions described below.

Non-factory installed parts and accessories are not covered under this limited warranty. Please refer to the applicable parts and accessories limited warranty text.

This limited warranty will become null and void if: (1) The SSV was used for racing or any other competitive activity, at any point, even by a previous owner; or (2) the SSV has been altered or modified in such a way so as to adversely affect its operation, performance or durability, or has been altered or modified to change its intended use.

2) LIMITATIONS OF LIABILITY

TO THE EXTENT PERMITTED BY LAW, THIS WARRANTY IS EXPRESSLY GIVEN AND ACCEPTED IN LIEU OF ANY AND ALL OTHER WARRANTIES, EXPRESSED OR IMPLIED, INCLUDING WITHOUT LIMITATION ANY WARRANTY OF MERCHANTABILITY OR FITNESS FOR A PARTICULAR PURPOSE. TO THE EXTENT THAT THEY CANNOT BE DISCLAIMED, THE IMPLIED WARRANTIES ARE LIMITED IN DURATION TO THE LIFE OF THE EXPRESS WARRANTY. INCIDENTAL AND CONSEQUENTIAL DAMAGES ARE EXCLUDED FROM COVERAGE UNDER THIS WARRANTY. SOME JURISDICTIONS DO NOT ALLOW FOR THE DISCLAIMERS, LIMITATIONS AND EXCLUSIONS IDENTIFIED ABOVE, AS A RESULT, THEY MAY NOT APPLY TO YOU. THIS WARRANTY GIVES YOU SPECIFIC RIGHTS, AND YOU MAY ALSO HAVE OTHER LEGAL RIGHTS WHICH MAY VARY FROM COUNTRY TO COUNTRY.

Neither the Can-Am SSV Distributor/Dealer nor any other person has been authorized to make any affirmation, representation or warranty regarding the product, other than those contained in this limited warranty, and if made, shall not be enforceable against BRP.

BRP reserves the right to modify this warranty at any time, being understood that such modification will not alter the warranty conditions applicable to the products sold while this warranty is in effect.

3) EXCLUSIONS – ARE NOT WARRANTED

The following are not warranted under this limited warranty under any circumstances:

– Normal wear and tear;
– Routine maintenance items, tune ups, adjustments (parts and labor);

– Damage caused by negligence or failure to provide proper maintenance and/or storage, as described in the Operator's Guide;
– Damage resulting from removal of parts, improper repairs, service, maintenance, modifications or use of parts not manufactured or approved by BRP or resulting from repairs done by a person that is not an authorized servicing Can-Am SSV Distributor/Dealer;
– Damage caused by abuse, abnormal use, neglect or operation of the product in a manner inconsistent with the recommended operation described in the Operator's Guide;
– Damage resulting from accident, submersion, fire, snow or water ingestion, theft, vandalism or any act of God;
– Operation with fuels, oils or lubricants which are not suitable for use with the product (see the Operator's Guide);
– Damage resulting from rust, corrosion or exposure to the elements;
– Incidental or consequential damages, or damages of any kind including without limitation towing, transportation expenses, storage, telephone, rental, taxi, inconvenience, insurance coverage, loan payments, loss of time, loss of income or time missed for downtime experience due to service work.

4) WARRANTY COVERAGE PERIOD

This warranty will be in effect from (1) the date of delivery to the first retail consumer or (2) the date the product is first put into use, whichever occurs first and for a period of:

– TWENTY-FOUR (24) CONSECUTIVE MONTHS for private use.
– SIX (6) CONSECUTIVE MONTHS for commercial use or rental use.

The product is used commercially when it is used in connection with any work or employment that generates income during any part of the warranty period. The product is also used commercially when, at any point during the warranty period, it is licensed for commercial use.

The repair or replacement of parts or the performance of service under this warranty does not extend the life of this warranty beyond its original expiration date.

Note that the duration and any other modalities of the warranty coverage are subject to the applicable national or local legislation in your country.

5) CONDITIONS TO HAVE WARRANTY COVERAGE

This warranty coverage is available **only** if **each** of the following conditions has been fulfilled:

– The 2017 Can-Am SSV must be purchased as new and unused by its first owner from a Can-Am SSV Distributor/Dealer authorized to distribute Can-Am SSVs in the country in which the sale occurred;
– The BRP specified pre-delivery inspection process must be completed and documented;
– The product must have undergone proper registration by an authorized Can-Am SSV Distributor/Dealer;

– The 2017 Can-Am SSV must be purchased in the country or union of countries in which the purchaser resides; and
– Routine maintenance outlined in the Operator's Guide must be timely performed in order to maintain warranty coverage. BRP reserves the right to make warranty coverage contingent upon proof of proper maintenance.

BRP will not honor this limited warranty to any private use owner or commercial use owner if one of the preceding conditions has not been met. Such limitations are necessary in order to allow BRP to preserve both the safety of its products, and also that of its consumers and the general public.

6) WHAT TO DO TO OBTAIN WARRANTY COVERAGE

The customer must cease using the SSV upon the appearance of an anomaly. The customer must notify a servicing Can-Am SSV Distributor/Dealer within two (2) months of the appearance of a defect and provide it with reasonable access to the product and reasonable opportunity to repair it. The customer must also present to the authorized Can-Am SSV Distributor/Dealer, proof of purchase of the product and must sign the repair/work order prior to starting the repair in order to validate the warranty repair. All parts replaced under this limited warranty become the property of BRP.

Note that the notification period is subject to the applicable national or local legislation in your country.

7) WHAT BRP WILL DO

To the extent permitted by law, BRP's obligations under this warranty are limited to, at its sole discretion, repairing parts found defective under normal use, maintenance and service, or replacing such parts with new genuine Can-Am SSV parts without charge for parts and labor, at any authorized Can-Am SSV Distributor/Dealer during the warranty coverage period under the conditions described herein. BRP's responsibility is limited to making the required repairs or replacements of parts. No claim of breach of warranty shall be cause for cancellation or rescission of the sale of the Can-Am SSV to the owner. You may have other legal rights which may vary from country to country.

In the event that service is required outside of the EEA, the owner will bear responsibility for any additional charges due to local practices and conditions, such as, but not limited to, freight, insurance, taxes, license fees, import duties, and any and all other financial charges, including those levied by governments, states, territories and their respective agencies.

BRP reserves the right to improve or modify products from time to time without assuming any obligation to modify products previously manufactured.

8) TRANSFER

If the ownership of a product is transferred during the warranty coverage period, this warranty shall also be transferred and be valid for the remaining coverage period provided BRP or an authorized Can-Am SSV Distributor/Dealer receives a proof that the former owner agreed to the transfer of ownership, in addition to the co-ordinates of the new owner.

9) CONSUMER ASSISTANCE

In the event of a controversy or a dispute in connection with this limited warranty, BRP suggests that you try to resolve the issue at the Can-Am SSV Distributor/Dealer level. We recommend discussing the issue with the authorized Can-Am SSV Distributor/Dealer's service manager or owner.

If the matter still remains unresolved, contact BRP by filling out the customer contact form at www.brp.com or contact BRP by mail at one of the addresses listed under the *CONTACT US* section of this guide.

* In the EEA, products are distributed and serviced by BRP European Distribution S.A. and other affiliates or subsidiaries of BRP.

© 2016 Bombardier Recreational Products Inc. All rights reserved.
® Trademark of Bombardier Recreational Products Inc. or its affiliated.

ADDITIONAL TERMS AND CONDITIONS FOR FRANCE ONLY

The following terms and conditions are applicable to products sold in France only:

The seller shall deliver goods that are complying with the contract and shall be responsible for defects existing upon delivery. The seller shall also be responsible for defects resulting from packaging, assembling instructions or the installation when it is its responsibility per the contract or if accomplished under its responsibility. To be compliant with the contract, the good shall:

1. Be fit for normal use for goods similar thereto and, if applicable:
   - Correspond to the description provided by the seller and have the qualities presented to the buyer though sample or model;
   - Have the qualities that a buyer may legitimately expect considering the public declarations of the seller, the manufacturer of its representative, including in advertising or labeling; or
2. Have the characteristics mutually agreed upon as between the parties or be fit for the specific use intended by the buyer and brought to the attention of the seller and which accepted.

The action for failure to comply is prescribed after two years after delivery of the goods. The seller is responsible for the warranty for hidden defects of the goods sold if such hidden defects are rendering the good unfit for the intended use, or if they diminish its use in such a way that the buyer would not have acquired the good or would have given a lesser price, had he known. The action for such hidden defects shall be taken by the buyer within 2 years of the discovery of the defect.

This page is intentionally blank

CUSTOMER INFORMATION

CHANGE OF ADDRESS/OWNERSHIP

If your address has changed or if you are the new owner of the vehicle, be sure to notify BRP by either:

- Notifying an authorized Can-Am dealer.
- North America Only: calling at 1 888 272-9222.
- Mailing one of the change of address cards on the following pages at one of the BRP addresses indicated in the *CONTACT US* section of this guide.

In case of change of ownership, please join a proof that the former owner agreed to the transfer.

Notifying BRP, even after the expiration of the limited warranty, is very important as it enables BRP to reach the vehicle owner if necessary, like when safety recalls are initiated. It is the owner's responsibility to notify BRP.

STOLEN UNITS: If your personal vehicle is stolen, you should notify BRP or an authorized Can-Am dealer. We will ask you to provide your name, address, phone number, the vehicle identification number and the date it was stolen.

CHANGE OF ADDRESS ☐ CHANGE OF OWNERSHIP ☐

VEHICLE IDENTIFICATION NUMBER

Model Number | Vehicle Identification Number (V.I.N.)

OLD ADDRESS OR PREVIOUS OWNER:

NAME

NO. STREET APT

CITY STATE/PROVINCE ZIP/POSTAL CODE

COUNTRY TELEPHONE

NEW ADDRESS OR NEW OWNER:

NAME

NO. STREET APT

CITY STATE/PROVINCE ZIP/POSTAL CODE

COUNTRY TELEPHONE

E-MAIL ADDRESS

V00A2F

CHANGE OF ADDRESS ☐ CHANGE OF OWNERSHIP ☐

VEHICLE IDENTIFICATION NUMBER

Model Number | Vehicle Identification Number (V.I.N.)

OLD ADDRESS OR PREVIOUS OWNER:

NAME

NO. STREET APT

CITY STATE/PROVINCE ZIP/POSTAL CODE

COUNTRY TELEPHONE

NEW ADDRESS OR NEW OWNER:

NAME

NO. STREET APT

CITY STATE/PROVINCE ZIP/POSTAL CODE

COUNTRY TELEPHONE

E-MAIL ADDRESS

V00A2F

This page is intentionally blank

CHANGE OF ADDRESS ☐ CHANGE OF OWNERSHIP ☐

VEHICLE IDENTIFICATION NUMBER

Model Number | Vehicle Identification Number (V.I.N.)

OLD ADDRESS OR PREVIOUS OWNER:

NAME

NO. STREET APT

CITY STATE/PROVINCE ZIP/POSTAL CODE

COUNTRY TELEPHONE

NEW ADDRESS OR NEW OWNER:

NAME

NO. STREET APT

CITY STATE/PROVINCE ZIP/POSTAL CODE

COUNTRY TELEPHONE

E-MAIL ADDRESS

V00A2F

CHANGE OF ADDRESS ☐ CHANGE OF OWNERSHIP ☐

VEHICLE IDENTIFICATION NUMBER

Model Number | Vehicle Identification Number (V.I.N.)

OLD ADDRESS OR PREVIOUS OWNER:

NAME

NO. STREET APT

CITY STATE/PROVINCE ZIP/POSTAL CODE

COUNTRY TELEPHONE

NEW ADDRESS OR NEW OWNER:

NAME

NO. STREET APT

CITY STATE/PROVINCE ZIP/POSTAL CODE

COUNTRY TELEPHONE

E-MAIL ADDRESS

V00A2F

WARNING

To reduce risk of serious injury or death, read this Operator's Guide and safety labels, watch the safety video and:

Be prepared
- Fasten seat belts and make sure nets and doors are securely latched in place.
- Wear an approved helmet and protective gear.
- Each rider must be able to sit with back against seat, foot flat on the floor or on footrest, and hands on steering wheel or handholds. Stay completely inside the vehicle.

Drive responsibly
- Avoid loss of control and rollovers.
- Avoid abrupt maneuvers, sideways sliding, skidding or fishtailing and never do donuts.
- Avoid hard acceleration when turning, even from a stop.
- Slow down before entering a turn.
- Plan for hills, rough terrain, ruts and other changes in traction and terrain.
- Avoid paved surfaces.
- Avoid side hilling (riding across slopes).

Be Qualified and Responsible
- Do not allow careless or reckless driving.
- Driver must be at least 16 years old with a valid driver's license.
- Do not operate after using drugs or alcohol.
- Do not allow operation on public roads (unless designated for off-highway vehicle access) – collisions with cars and trucks can occur.
- Do not exceed vehicle seating capacity.

219 001 678
OPERATOR'S GUIDE COMMANDER MAXSeries / ENGLISH
GUIDE DU CONDUCTEUR Séries COMMANDER MAX / ANGLAIS

FAIT AU / MADE IN CANADA U/M:P.C.

®™ AND THE BRP LOGO ARE TRADEMARKS OF BOMBARDIER RECREATIONAL PRODUCTS INC. OR ITS AFFILIATES.
©2016 BOMBARDIER RECREATIONAL PRODUCTS INC. ALL RIGHTS RESERVED. PRINTED IN CANADA.

2017 ACCESSORIES
RIDING GEAR
GENUINE PARTS



OUTLANDER | RENEGADE | DEFENDER | MAVERICK | COMMANDER

can-am
BRP
Can-AmOffRoad.com





WHY CHOOSE CAN-AM ACCESSORIES?

QUALITY & SEAMLESS INTEGRATION.

It's that simple. Our commitment to innovation, high-quality materials and seamless integration means no one is more qualified to create the accessories for our industry-leading ATVs and Side-by-Side vehicles. They fit in and fit right, look great, and are made to last. Only Can-Am accessories can truly make it your Can-Am.

TRUST & RELIABILITY.

Quality and confidence are built into everything we make, even our warranty. That's why off-road enthusiasts trust Can-Am accessories. It's a responsibility we take seriously, so you'll be pleased to know that genuine BRP parts, accessories and riding gear[1] are covered for an entire year[2] - no matter when they're purchased[3]. And if it's an aftermarket product and BRP or an authorized dealer sells it, it's also covered[4]! Add to that a 4-year limited warranty on helmets and it's clear: our commitment to quality and to you is rock solid.

In addition, our limited warranty comes with significant added value, because labor and collateral damage to the vehicle may be covered only if the failed part or accessory was installed by a BRP authorized dealer or distributor. We build them - we back them. Which is why for generations you've trusted us to get you there, and you know you can trust us to keep you going.

PERFORMANCE & PERSONALITY.

Can-Am. It's power, performance, freedom and versatility driven by unrivalled quality and reliability. Can-Am can quench your thirst for adventure and help get things done. Nothing beats our huge range of customized accessories designed to get the most out of every thrill, every mile, and every job.

CATCH THE VIDEO AT STORE.CAN-AM.BRP.COM

VISIT YOUR DEALER TODAY AND CREATE YOUR VERY OWN CAN-AM.



[1] Purchased at an authorized BRP dealership / distributor OR on a BRP-authorized online store. This warranty does not apply to factory-installed accessories. Excludes B.E.S.T extended service. Certain conditions apply. See your local dealer for details.
[2] From date of purchase.
[3] This limited warranty is effective as of March 1st, 2016.
[4] Under the limited warranty.


MAVERICK
ROTAX

2017 ACCESSORIES RIDING GEAR GENUINE PARTS



Be sure to consult our convenient ATV & Side-by-side vehicle accessory COMPATIBILITY GUIDES before outfitting your vehicle.

ATV ACCESSORIES

18 COMPATIBILITY GUIDE
20 CARGO
26 WINDSHIELDS
28 HANDLEBARS & MIRRORS
29 RACKS
32 SKID PLATES
36 BUMPERS
38 LIGHTING & ELECTRICAL
41 WINCHES
44 HITCHES
45 PERFORMANCE
50 APACHE 360 TRACK SYSTEMS
52 PLOWS
59 COVERS, DECALS AND ADD-ONS
60 OUTLANDER 6x6 ACCESSORIES

SIDE-BY-SIDE VEHICLE ACCESSORIES

72 COMPATIBILITY GUIDE
74 CAB ENCLOSURES
81 ROOFS
87 WINDSHIELDS & MIRRORS
92 DOORS
96 REAR WIND PROTECTION
99 SKID PLATES
103 BUMPERS & PROTECTION
114 CARGO & RACKS
128 LIGHTING
134 ELECTRICAL
139 WINCHES & HITCHES
142 PERFORMANCE
148 APACHE 360 LT TRACK SYSTEM
150 PLOWS
152 COVERS & ADD-ONS

RIDING GEAR

160 KAPPA
170 SPORTSWEAR
175 TEEN & KIDSWEAR
176 HELMETS
185 BLUETHOOTH
186 GOGGLES
188 GLOVES
189 JERSEYS
190 JACKETS & PANTS
195 BOOTS
197 TECHNOLOGY GUIDE
198 TECHNICAL WEAR
200 BAGS
201 SIZING CHART

© 2016 Bombardier Recreational Products Inc. (BRP). All rights reserved. ®, ™ and the BRP logo are trademarks of BRP or its affiliates. CARLISLE is a trademark of Carlisle Companies. CHAMUDE and HIPORA are registered trademarks of Kolon Industries, Inc. CLARINO is a trademark of Kuraray Co. Ltd. COOLMAX and THERMOLITE are registered trademark of INVISTA for durable fabrics. DRIRELEASE is a registered trademark of Optimer Inc. FOX is a registered trademark of Fox Racing Canada. GARMIN and MONTANA are registered trademarks of Garmin Ltd. iPod is a registered trademark of Apple Inc. KOLPIN, GUN BOOT and IMPACT are registered trademarks of Kolpin Powersports Inc. KYB is a registered trademark of Kayaba. MicroSD is a registered trademark of SD Card Association. Mud Lite XTR and SS312 are trademarks of ITP Tires. NEXT G-1 VISTA is a trademark of Next Camo, LLC. NGK is a registered trademark of NGK Spark Plugs, Ltd. PRIMALOFT GOLD and PRIMALOFT BLACK are registered trademarks of Albany International Corp. SUPERWINCH and S SUPERWINCH (design) are registered trademarks of Superwinch LLC. TEFLON, TEFLON HT and KEVLAR are trademarks of E.I. DuPont de Nemours & Co. TWINAIR is a trademark of Twin Air USA.UNI is a trademark of UNIFILTER Inc. VELCRO is a registered trademark of Velcro Industries. WARN is a trademark of Warn Industries Inc. YUASA is a registered trademark of YUASA Batteries Inc. ZILLA and BIGHORN 2.0 are trademarks of Maxxis. SCOTT is a trademark of Scott Sports SA. The following trademarks are the property of their respective owners: BLUETOOTH, CREE, DURO, DWT, HELLA, ITP, KENDA, MOSSY OAK, RAM, SUR LAST, VISION, XPS and YOSHIMURA. Some models depicted herein may include optional equipment. Prices, if shown, are based on Manufacturer Suggested Retail Prices. Dealers may sell for a different price. For Canada & US. taxes are not included. Depending on location, products are distributed by BRP US Inc., Bombardier Recreational Products Inc., BRP European Distribution SA, BRP Finland Oy., BRP Australia Pty Ltd. or Bombardier Recreational Products Motores da Amazonia Ltda. BRP reserves the right, at any time, to discontinue or change specifications, prices, designs, features, equipment without incurring obligation. Printed in Canada.





TIRES & RIMS

153 TIRES

155 RIMS

PARTS & MAINTENANCE

202 PARTS

205 OILS & MAINTENANCE





VISIT US AT CAN-AMOFFROAD.COM

Shop the online store for parts, accessories and riding gear.

Check out our videos to learn more about our new innovative riding gear and accessories.

Explore our interactive online catalog. Instantly explore products, videos, large format images and share with friends!

XPS

Learn about and purchase XPS oils and lubricants.



CLAIM YOUR PRIZE.

A hunt is a serious thing. It takes patience, determination, and above all, preparation. Be ready for anything with our extensive collection of vehicle accessories that'll help you make quick work of any prey, any day. The chase is on…



ATV ACCESSORIES P. 12



SIDE-BY-SIDE VEHICLE ACCESSORIES P. 66



SPORTSWEAR & RIDING GEAR P. 158



GOOD TIMES. GREAT FRIENDS.

Adventure tastes better when shared with friends. There's just something about getting out, and getting away, and nothing makes it easier, or more fun than the right accessories. Think of them as "adventure intensifiers" and start planning your next one now.



ATV ACCESSORIES P. 12



SIDE-BY-SIDE VEHICLE ACCESSORIES P. 66



SPORTSWEAR & RIDING GEAR P. 158



RIGHT FOR THE JOB.

Nothing's done until it's done, and you never run out of things to do, or days where you've got to do them. Thankfully we're not about to run out of great accessories that'll help you with any of those jobs. You'll be surprised just how hard they can work for you..



ATV ACCESSORIES P. 12



SIDE-BY-SIDE VEHICLE ACCESSORIES P. 66



SPORTSWEAR & RIDING GEAR P. 158

CAN-AM ADDS EVEN MORE EXCITEMENT FOR 2017



Kappa

CYCLOPSGEAR



In 2016, Can-Am's dealer network will begin featuring 4 dynamic clothing collections by Kappa in addition to Cyclops Gear's innovative, feature-packed CGX2 action camera.

The result is going to be pure adrenaline. It's big news for lovers of great sportswear and great gear. Kappa captures your sense of style, and Cyclops Gear captures all the action.

But it gets even better. Can-Am's association with Kappa and Cyclops Gear heralds the first of 36 races for the Go Fas #32 and NASCAR Sprint Cup Series racing teams that'll show off the skills of drivers Jeffrey Earnhardt and Bobby Labonté, as well as Alex Labbé's full 2016 season in the NASCAR Canadian Tire Series.



LSR LONESTAR RACING for Can-am

BRP and Lonestar Racing are teaming up to offer Can-Am Side-by-Side vehicle owners performance accessories with a distinctive racing-inspired look and feel. We're talking premium components designed to fit the outstanding Can-Am Maverick Side-by-Side vehicles. Aluminum roofs, bumpers, intrusion bars and much more, all exclusively for Can-Am, available in Can-Am Red, Octane Blue, and Manta Green.

Lonestar Racing are big believers in performance, and in Can-Am. In fact its president, Dan Fisher, has chosen to race a kick-ass Can-Am Maverick X rs Turbo in the 2016 UTV World Championships. He obviously knows quality, and with Lonestar Racing accessories he knows how to get the most out of it.

The real winners are Can-Am Side-by-Side vehicle owners, who can begin equipping their rides by checking out Lonestar Racing accessories at their nearest Can-Am dealership.

BEARD for Can-am



Here's a bit of news you'll want to take sitting down... Beard, recognized as one of the leading aftermarket seat manufacturers, has developed, in concert with BRP, an exclusive seat package for both Maverick and Commander Side-by-Side vehicles.

Beard Seats True Performance Seating is slated to appear in 3 different Can-Am coordinated colors this year!

Sold in pairs, these innovative welded-steel frame seats are as stylish as they are rugged. Covered in sculpted foam, wrapped in a custom cover of marine-grade vinyl, they're the perfect touch for anyone looking to customize their ride.

IF WE SELL IT, WE STAND BY IT.

BRP LIMITED WARRANTY*

FOR NEW PARTS, ACCESSORIES AND RIDING GEAR.

GENUINE BRP PARTS AND ACCESSORIES
installed by you or your authorized BRP dealer

1 YEAR LIMITED WARRANTY**

AFTERMARKET PRODUCTS SOLD BY BRP

1 YEAR LIMITED WARRANTY**

RIDING GEAR

1 YEAR LIMITED WARRANTY**

HELMETS

4 YEARS LIMITED WARRANTY**



GET ALL THE DETAILS FROM YOUR CAN-AM OFF-ROAD DEALER

†Use other than which the product is designed for will void the product lifetime warranty. *Purchased at an authorized BRP dealership / distributor or on a BRP-authorized online store. Other exclusions may apply, see complete limited warranty or contact your Can-Am off-road authorized dealer. **Unless otherwise stipulated or required by law. This limited warranty does not apply to factory installed accessories. This limited warranty does not apply on Evinrude parts and accessories. This limited warranty is effective as of March 1st 2016.

CAN-AM ATV ACCESSORIES

EXTRA EXCITEMENT & ADDED CONVENIENCE

And we've got everything you need to make it as versatile and adaptable as you have to be every single day. Choosing Can-Am means choosing to do things your way.

ACCESSORY RECOMMENDATIONS

IT'S AN EASY CHOICE.

Whatever you do, and however you want to do it, we've got solutions. And we've made choosing the right accessory easier than ever. Take your pick…



P. 14-17

ACCESSORY COMPATIBILITY GUIDE

THE RIGHT FIT.

Be sure to consult our convenient ATV accessory compatibility guides before outfitting your vehicle.



P. 18-19

CARGO BOX OPTIONS

WHO SAYS YOU CAN'T BRING IT WITH YOU?

We've given plenty of room for your stuff with a range of convenient, flexible and durable storage solutions. There's one built for you, and ready to go.



P. 20-25



OUTLANDER

18	COMPATIBILITY GUIDE
20	CARGO
26	WINDSHIELDS
28	HANDLEBARS & MIRRORS
29	RACKS
32	SKID PLATES
36	BUMPERS
38	LIGHTING & ELECTRICAL
41	WINCHES
44	HITCHES
45	PERFORMANCE
50	APACHE 360 TRACK SYSTEMS
52	PLOWS
59	COVERS, DECALS & ADD-ONS



RENEGADE

18	COMPATIBILITY GUIDE
20	CARGO
27	WINDSHIELDS
28	HANDLEBARS & MIRRORS
29	RACKS
34	SKID PLATES
37	BUMPERS
38	LIGHTING & ELECTRICAL
41	WINCHES
44	HITCHES
45	PERFORMANCE
50	APACHE 360 TRACK SYSTEMS
52	PLOWS
59	COVERS, DECALS & ADD-ONS



OUTLANDER 6X6

18	COMPATIBILITY GUIDE
60	APACHE 360 LT TRACK SYSTEM
61	HARD TOP
61	LOG BARS
61	TAILGATE EXTENSION/DIVIDER
61	TAILGATE LIMITER KIT
62	18 GAL (70L) UTILITY BOX
62	FLATBED PROTECTION TUBES
62	REAR WINCH KIT
63	TARPAULIN
63	STORAGE COVER
63	FULL BODY SKID PLATE

THE CHOICE IS YOURS.



UTILITY

GETTING IT DONE. IT'S IN YOUR BLOOD.



ADVENTURE

ALONE, IT'S A RIDE. WITH FAMILY, IT'S AN ADVENTURE.



TRAIL

IT'S YOUR RIDE. MAKE YOUR PATH.

ACCESSORY PACKAGES FOR YOUR RIDE.

UTILITY ACCESSORIES

1. High Windshield p. 27
2. LinQ Base p. 24
   LinQ Heavy-Duty Basket p. 25
3. 5" (13 cm) Rack Extension p. 30
4. Multi-Fit Holder p. 31
5. Extreme Front Bumper p. 37
6. XT Rear Bumper p. 37
7. XT Front Bumper p. 37
8. Front Bumper Lights p. 40
9. Fender Flare p. 47



OUTLANDER
450 / 570

ADVENTURE ACCESSORIES

1. Deluxe Fairing p. 26
2. High Windshield p. 26
3. LinQ 23 Gal (86 L) Trunk Box p. 22
4. LinQ 6" (15 cm) Rack Extension p. 29



OUTLANDER

TRAIL ACCESSORIES

1. Sport Windshield p. 27
2. Handlebar Wind Deflectors p. 28
3. LinQ Luggage Rack p. 30
4. LinQ 11.5 Gal (43 L) Audio Cargo Box p. 23



RENEGADE

THE CHOICE IS YOURS.



HUNTING

SUCCESS IS YOUR PREY. DETERMINATION IS YOUR STRATEGY.



WINTER

OTHERS HEAD SOUTH. YOU HEAD OUT.



MUD

MUD IS MEAN. YOU'RE MEANER.

ACCESSORY PACKAGES FOR YOUR RIDE.

HUNTING ACCESSORIES

1. Gear Grips by Kolpin p. 31
2. LinQ Gun Boot Rack p. 31
   Gun Boot 6.0 Impact by Kolpin p. 31
3. XT Front Bumper p. 37
4. XT Rear Bumper p. 37
5. RAM Spotlight p. 40



OUTLANDER

WINTER ACCESSORIES

1. LinQ Heavy-Duty Basket p. 25
2. High Windshield Kit p. 27
3. 8'' (20 cm) Rack Extension p. 30
4. XT Rear Bumper p. 37
5. 60'' (152 cm) Alpine Flex Plow Kit p. 53



OUTLANDER
450 / 570

MUD ACCESSORIES

1. LinQ Luggage Rack p. 30
2. Yoshimura Slip-On Exhaust p. 48
3. LinQ 12 Gal (45L) Cargo Box p. 23
4. Mud Strap p. 45
5. Renegade Snorkel Kit p. 46
6. Renegade Extreme Front Bumper p. 37
7. Renegade Radiator Relocator Kit p. 46



RENEGADE

ATV ACCESSORY COMPATIBILITY GUIDE

WE'VE MADE THINGS SUPER SIMPLE.

Determine your model year, find your model and engine configuration, and that'll reveal your platform code. This code will let you know at a glance if the accessory is compatible with your vehicle.

EXAMPLE



FULL WRAP ALUMINUM MOUNTING KIT

- Lightweight black die cast aluminum construction.
- Includes complete hardware.
- Handlebar wind deflectors sold separately.

Fits: G2, G2L, G2S

715001378

$84.99

For G1 and DS accessories, refer to your local dealer.

	MODEL	ENGINE	PLATFORM
2012	Outlander	400, 500, 650	**G1**
	Outlander	800, 1000	**G2**
	Outlander MAX	400, 500, 650, 800	**G1**
	Renegade	500	**G1S**
	Renegade	800, 1000	**G2S**
	DS	70, 90, 250, 450	**DS**
2013	Outlander	400	**G1**
	Outlander	500, 650, 800, 1000	**G2**
	Outlander MAX	400	**G1**
	Outlander MAX	500, 650, 800, 1000	**G2**
	Renegade	500, 800, 1000	**G2S**
	DS	70, 90, 250, 450	**DS**



G1



G1S

	MODEL	ENGINE	PLATFORM
2014	Outlander	400	**G1**
	Outlander	500, 650, 800, 1000	**G2**
	Outlander MAX	400	**G1**
	Outlander MAX	500, 650, 800, 1000	**G2**
	Renegade	500, 800, 1000	**G2S**
	DS	70, 90, 250, 450	**DS**
2015	Outlander L	450,500	**G2L**
	Outlander	500, 650, 800, 1000	**G2**
	Outlander L MAX	450, 500	**G2L**
	Outlander MAX	500, 650, 800, 1000	**G2**
	6x6	650, 1000	**G2**
	Renegade	500, 800, 1000	**G2S**
	DS	70, 90, 250, 450	**DS**
2016	Outlander L	450, 570	**G2L**
	Outlander	570, 650, 850, 1000	**G2**
	Outlander L MAX	450, 570	**G2L**
	Outlander MAX	570, 650, 850, 1000	**G2**
	6x6	650, 1000	**G2**
	Renegade	570, 850, 1000	**G2S**
	DS	90, 250	**DS**
2017	Outlander	450, 570	**G2L**
	Outlander	650, 850, 1000	**G2**
	Outlander MAX	450, 570	**G2L**
	Outlander MAX	650, 850, 1000	**G2**
	6x6	650, 1000	**G2**
	Renegade	570, 850, 1000	**G2S**
	DS	70, 90, 250	**DS**



G2



G2L



G2S



G2



CARGO BOX OPTIONS

CHOOSE THE STORAGE SOLUTION THAT FITS YOU.

When it comes to cargo, we've got a cargo box that suits your needs, your vehicle, and everything you need to bring along for the ride, and in the case of our LinQ 11.5 Gal (124L). Audio Cargo Box, that includes your favorite tunes!

All our cargo boxes are built rugged, and install or remove instantly. They're ideal for work or play, ride after ride after ride.

CATCH THE VIDEO AT STORE.CAN-AM.BRP.COM

LinQ SYSTEM™ TRUNK BOXES

LinQ 11.5 GAL / 43L
715003018 P.23



LinQ 12 GAL / 45L
715001936 P.23



LinQ 20 GAL / 74L
715002473 P.22



LinQ 23 GAL / 86L
715002474 P.22



LinQ 32 GAL / 124L
715001749 P.21 715001747 P.21

OUTLANDER RENEGADE

LinQ 32 GAL (124L) TRUNK BOXES

SEAMLESS INTEGRATION WITH VEHICLE

- Built from the design stage to specifically match your Can-Am vehicle.
- Totally cohesive design eliminates the need to modifiy your vehicle in any way*.
- Rear tail light.

EASY QUICK-ATTACH INSTALLATION

- Equipped with the LinQ System, the rear trunk box plugs in and out in seconds.
- Instantly transforms your vehicle to suit the need of the moment.

UNPARALLELED STORAGE

- 32 Gal (124L) load capacity with contiguous unobstructed space to maximize storage room and access to the trunk's interior.

BUILD TOUGH

- Made of injection-molded polyethylene, double walled in critical areas.

DUST & WEATHER PROOF

- The fully sealed lid protects your belongings from dust, moisture and the elements.



LinQ 32 GAL (124L) TRUNK BOX

- LinQ Retrofit Adaptor Plate (715001334) is required for older models.
- Trunk Box Panels sold separately.
- LinQ Luggage Rack (715001734) is required for G2S.

Fits: G2 (except MAX models & 6x6), G2S

715001747

$349.99



Ergonomic padding made of closed cell foam.

LinQ 32 GAL (124L) TRUNK BOX FOR OUTLANDER MAX

- Passenger comfort is ensured on active rides as well as longer recreational rides thanks to the ergonomically designed passenger padding comfort-fitted with a portion made of closed cell foam that won't absorb water.
- Very easy to embark even when driver is seated.
- Trunk Box Panels sold separately.

Fits: G2 (MAX models only)

715001749

$429.99

LinQ 32 GAL (124L) TRUNK BOX PANELS

- Color panels to match the 32 Gal (124L) LinQ Trunk Box to your vehicle.

Fits: LinQ 32 Gal (124L) Trunk Boxes

715001391 • Black
715001392 • Yellow
715001395 • Viper Red
715002481 • White
715002480 • Light Grey
715002984 • Octane Blue
715002985 • Manta Green
715002986 • Can-Am Red

$39.99

EUROPEAN VERSION (EC compliant)

- No rear tail light

715001397 • Black
715001398 • Yellow
715002482 • Light Grey
715002483 • White



CAMO DECALS FOR BLACK TRUNK BOX PANELS

- Camo pattern perfectly matches your camo vehicle.
- Installs in a snap.

Fits: Black LinQ 32 Gal (124L) Trunk Box Panel

715002975 • Mossy Oak Break-Up Country Camo

$44.99

715001683 • Next G-1 Vista Camo

$44.99



Mossy Oak Break-Up Country



Next G-1 Vista



LinQ REPLACEMENT PART

715001707

$19.99

* WARNING: You should never accessorize your Can-Am Off-road vehicle with accessories not approved by BRP because your vehicle may no longer meet certain safety and construction standards. This situation could increase the risk of severe injury or death and render your vehicle not legal for use.

NOT SURE IF AN ACCESSORY FITS YOUR MODEL? CHECK OUT OUR ACCESSORY COMPATIBILITY GUIDE ON P.18-19!



OUTLANDER RENEGADE



LinQ 20 GAL (74L) TRUNK BOX

- Installs without vehicle modification.
- LinQ mount for easy-on, easy-off installation.
- Lockable and weather-resistant.
- Holds cargo safely and securely while riding.
- LinQ Base (715002350) is required for G2L.
- LinQ Luggage Rack (715001734) is required for G2S.

Fits: G2 (except MAX & 6x6), G2L (except MAX models), G2S

715002473

$259.99



LinQ 23 GAL (86L) TRUNK BOX

- Installs without vehicle modification.
- LinQ mounted for easy-on, easy-off installation.
- Lockable and weather-resistant.
- Holds cargo safely and securely while riding.
- Comfort pads for passenger.
- LinQ Base (715002350) is required for G2L.

Fits: G2 (MAX models only except 6x6), G2L (MAX models only)

715002474

$279.99



OUTLANDER RENEGADE

CATCH THE VIDEO AT STORE.CAN-AM.BRP.COM



MUST HAVE

LinQ SYSTEM™

NEW

LinQ 11.5 GAL (43L) AUDIO CARGO BOX

- Delivers the best sound quality on the market to sweeten your ride courtesy of a built-in full range high efficiency amplifier.
- Mounts on/off easily to hold/carry cargo safely and securely.
- Automatic shut-off function protects your battery by turning the system off after 10 minutes of inactivity.
- The Bluetooth enabled receiver and 6.5" (16.5 cm) speakers are smartly concealed and integrated in the cover.
- Backlit control panel perfect for night riding.
- LinQ Base (715002350) is required for G2L.
- LinQ Luggage Rack (715001734) is required for G2S.

Fits: G2 (front only for 6x6 & MAX models 2013-2014), G2L, G2S

715003018

$549.99



LinQ SYSTEM™

LinQ 12 GAL (45L) CARGO BOX

- Installs without vehicle modification.
- LinQ mounted for easy-on, easy-off installation.
- Flip-over cover becomes a tray.
- Holds cargo safely and securely while riding.
- LinQ Base (715002350) is required for G2L.
- LinQ Luggage Rack (715001734) is required for G2S.

Fits: G2 (front only for 6x6 & MAX models 2013-2014), G2L, G2S

715001936

$209.99

LinQ SYSTEM™

LinQ DELUXE MODULAR BAG

- Installs without vehicle modification.
- LinQ mount for easy-on, easy-off installation.
- Versatile, rugged and spacious.
- Ideal for carrying anything you need in any conditions.
- Weatherproof, scratch-resistant, with molded rubber bottom.
- Central compartment can be used alone, on the rack.
- Removable bin.
- The 12 Gal (44L) bag will not obstruct light beam on Deluxe Fairing.
- LinQ Luggage Rack (715001734) is required for G2S.

Fits: G2, G2S

12 Gal (44L) Bag

715001695

$249.99

20 Gal (73L) Bag (front only for 6x6)

715001694

$289.99



OUTLANDER RENEGADE

SOFT STORAGE BAG

- 3-section bag.
- Transport gear in a weatherproof bag.
- 6" (15 cm) tall soft cargo bag designed with vehicle's rear or front rack and rack extensions in mind to maximize potential storage.
- LinQ Luggage Rack (715001734) is required for G2S.

Fits: G2, G2L, G2S

715001934 • Black

$134.99

NEW **715001935**

Mossy Oak Break-Up Country Camo

$169.99







REAR TRUNK BOX 25 GAL (95L)

- Perfect fit with vehicle.
- Made of impact-resistant polyethylene.
- Fully sealed lid.
- Tray quick-hooks to box.
- Molded handle makes lifting and moving the box easy.
- Equipped with lid key lock.
- Robust double wall lid.
- Improved trunk latch and attachment system on rack.
- Cannot be used with Rear Rack Extensions.
- LinQ Luggage Rack (715001734) is required for G2S.

Fits: G2, G2S (except X mr)

715001842 • Black

$289.99



LinQ SYSTEM™

LinQ STORAGE BOX 2 GAL (7.5L)

- Features easy quick-attach LinQ installation on Outlander front and rear racks.
- Also installable behind the driver seat on Outlander MAX.
- Fully sealed box provides additional storage for essential and valuable items.
- LinQ Luggage Rack (715001734) is required for G2S.

Fits: G2, G2S

708200255

$69.99

Fits: G2, G2L (Outlander L MAX only behind the driver seat), G2S

708200408

$69.99

REAR COMPARTMENT STORAGE 2.6 GAL (10L) BAG

- Roll-top dry bag for fully protecting your cargo from the elements.
- Fits in rear compartment of your vehicle.

Fits: G2

269502121

$29.99



LinQ SYSTEM™

LINQ BASE

(Not illustrated)

- Made of polypropylene glass fiber.
- Allows you to install LinQ accessories.

Fits: G2L

715002350

$19.99

CARGO BAG

- Rugged all-purpose cargo bag with rain cover for additional protection against the elements.

Fits: G2, G2L, G2S

280000539 • Black

$154.99



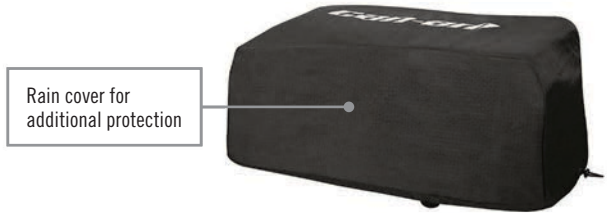



OUTLANDER RENEGADE

CATCH THE VIDEO AT STORE.CAN-AM.BRP.COM



LinQ HEAVY-DUTY BASKET

- Made of high-strength, low-alloy steel.
- Installs without vehicle modification.
- LinQ mount for easy-on, easy-off installation.
- Can be placed on both front and back racks of vehicle.
- LinQ Base (715002350) is required for G2L.
- LinQ Luggage Rack (715001734) is required for G2S.

Fits: G2, G2L (front only for Outlander L MAX), G2S

715001215

$209.99

NEW

LinQ LOW PROFILE BASKET

(Not illustrated)

- Low profile, open basket increases cargo space.
- Perfect for easy access to tools, rope, winch and plow accessories, etc.
- Multiple bungee cord and tie-down anchor points.
- Black, impact-resistant injected HDPE.
- LinQ base (715002350) is required for Outlander L.

Fits: G2L (front only for MAX models)

715003027

$159.99

RENEGADE

REAR BAG FOR RENEGADE 4.5 GAL (17L)

- Weatherproof, scratch-resistant, with a molded rubber bottom.
- Tool-less installation and removal.
- With 2 straps that go underneath the rack and click into the front of the bag.
- Requires Rear Aluminum Rack (715001360).

Fits: G2S

715002391

$179.99



OUTLANDER

CREATE YOUR ULTIMATE WIND PROTECTION IN 3 EASY STEPS

01 CHOOSE A DELUXE FAIRING COLOR

DELUXE FAIRING

- Innovative, richly-featured wind protection.
- Quick tool-less removal once base brackets are mounted on handlebar.
- 2 cup holders.
- GPS-mounting-kit-ready.
- Optional mirrors and auxiliary lighting.
- Requires low, high or extra high windshield (715001227, 715001211 or 715000936).
- Tapered Handlebar Adaptor Kit (715002470) is required for vehicles with 1 1/8" (28 mm) tapered aluminum handlebars.

Fits: G2 (except X mr), G2L

715000935 • Yellow
715001231 • Red
715001232 • Black
715002479 • Light Grey

$199.99



CAMO DECALS FOR BLACK DELUXE FAIRING

- Camo pattern perfectly matches your camo vehicle.
- Installs in a snap.

Fits: Deluxe Fairing

715002976
Mossy Oak Break-Up Country Camo
$44.99

715001684
Next G-1 Vista Camo
$44.99



Mossy Oak Break-Up Country



Next G-1 Vista

TAPERED HANDLEBAR ADAPTOR KIT

- Required to install Deluxe Fairing on a Renegade, on an Outlander X-TP and on any vehicle equiped with an aluminum tapered handlebar.

Fits: Deluxe Fairing

715002470
$24.99

02 CHOOSE A DELUXE WINDSHIELD



LOW WINDSHIELD

- 6" (15 cm) windshield allows you to keep your vehicle looking sporty while giving you some protection from the elements and the possibility of enjoying directional lighting.
- Tool-less installation and replacement.

Fits: Deluxe Fairing

715001227
$59.99



HIGH WINDSHIELD

- 11" (28 cm) high, for wind protection and winter applications.
- Tool-less installation and replacement.

Fits: Deluxe Fairing

715001211
$69.99



EXTRA HIGH WINDSHIELD

- 16" (41 cm) windshield provides the ultimate protection against the elements while touring.
- For wind protection and winter applications.
- Tool-less installation and replacement.

Fits: Deluxe Fairing

715000936
$94.99

03 YOU MIGHT ALSO LIKE...

AUXILIARY WINDSHIELD LIGHTING

- 2 premium LED spots for Deluxe Fairing for both increased output and directional lighting.

Fits: Deluxe Fairing

715001214
$309.99



DELUXE MIRROR KIT

- Improved mounting system.
- Wide rear view.
- Perfect fit with your Deluxe Fairing and Deluxe Windshield.

Fits: Deluxe Fairing

715002353
$59.99



OUTLANDER RENEGADE

HIGH WINDSHIELD KIT

- Provides excellent wind protection.
- Fits straight and tapered handlebars.
- Easy mounting system allows you to install it effortlessly.

Fits: G2, G2L, G2S

715001937 • Yellow
715001938 • Black
715002061 • Red

$184.99



SPORT WINDSHIELD

- Offers your Renegade wind protection without compromising its sporty look.
- Fits straight and tapered handlebars.
- Easy mounting system allows you to install it effortlessly.

Fits: G2S

715001212 • Yellow
715001429 • White
715001468 • Black

$179.99



HANDLEBARS & MIRRORS

OUTLANDER RENEGADE



HANDLEBAR WIND DEFLECTORS

- Rugged injected plastic construction with Can-Am logo.
- Include removable cap for air flow adjustment.
- Mounting kit sold separately (715001378, 715001379).

Fits: G2, G2L, G2S

715000525 • Black / Yellow
715000537 • White / Black
715001706 • Black / Black
715000733 • Yellow / Black
715003811 - Can-Am Red / Black
715003812 - Manta Green / Black
715003813 - Orange / Black
715003814 - Octane Blue / Black

$24.99



PASSENGER WIND DEFLECTORS

- These wind deflectors fit on the passenger handles and provide greater comfort while riding.
- Easy to install and remove.

Fits: G2 & G2L (MAX models only)

715001669

$79.99

FULL WRAP ALUMINUM MOUNTING KIT

- Lightweight black die cast aluminum construction.
- Includes complete hardware.
- Handlebar wind deflectors sold separately.

Fits: G2, G2L, G2S

715001378

$84.99



SHORT ALUMINUM MOUNTING KIT

- Lightweight black die cast aluminum construction.
- Includes complete hardware.
- Handlebar wind deflectors sold separately.

Fits: G2, G2L, G2S

715001379

$59.99





ALUMINUM TAPERED HANDLEBAR

- 7/8"- 1 1/8" (22 mm - 28 mm) tapered handlebar made of 6061-T6 aluminum.
- Includes all hardware, center steering foam and cover.

Fits: G2, G2L, G2S

715000550

$99.99





MIRROR KIT FOR HANDLEBAR WIND DEFLECTORS

- Do not fit with Full Wrap Aluminum Mounting Kit (715001378).
- Sold in pairs.

Fits: Handlebar Wind Deflectors

860200080

$24.99



XT HANDLEBAR PROTECTOR KIT

- Not compatible with Mud Strap (715003053).

Fits: G2, G2L

703100352 • Black

$74.99

MIRRORS

- True vision surface 5" x 3" (13 cm x 8 cm).
- Matte finish.
- Stem includes 3/8" (10 mm) thread.

Left - 3/8" (10 mm)

- Bracket (715000190) is required for installation on DS 450.
- Braket not required for installation on Outlander and Renegade.

709400406

$29.99

Right - 3/8" (10 mm)

- Bracket (715000190) required except for vehicles with right hand break.

709400523

$29.99





OUTLANDER RENEGADE



LinQ SYSTEM™

LinQ 4" (10 CM) RACK EXTENSION

- Fits front or rear.
- Strong and durable.
- Helps keep cargo securely in place.
- Easy and tool-less installation thanks to the LinQ System.
- Anti-corrosion coating with durable powder coat finish.
- LinQ Luggage Rack (715001734) is required for G2S.

Fits: G2, G2S

715001711 • Silver
715001665 • Black

$174.99

CATCH THE VIDEO AT STORE.CAN-AM.BRP.COM



LinQ SYSTEM™

LinQ 6" (15 CM) RACK EXTENSION

- Fits front or rear.
- Strong and durable.
- Helps keep cargo securely in place.
- Easy and tool-less installation thanks to the LinQ System.
- Anti-corrosion coating with durable powder coat finish.
- LinQ Luggage Rack (715001734) is required for G2S.

Fits: G2, G2S

715001712 • Silver
715001671 • Black

$184.99



OUTLANDER

5” (13 CM) RACK EXTENSION

- Fits front or rear.
- Made of carbon steel.
- Provides tie-down points to secure cargo on racks.
- Easy installation on tubular rack.
- Anti-corrosion coating with durable powder coat finish.

Fits: G2L

715001913

$104.99



8” (20 CM) RACK EXTENSION

- Fits front or rear.
- Made of carbon steel.
- Provides tie-down points to secure cargo on racks.
- Easy installation on tubular rack.
- Anti-corrosion coating with durable powder coat finish.

Fits: G2L

715001914

$119.99



RENEGADE

LinQ SYSTEM™

LinQ LUGGAGE RACK

- Bolt-on rack.
- Enables use of LinQ mounted accessories on the G2S.

Fits: G2S (except X mr models)

715001734

$239.99



REAR ALUMINUM RACK

- 30 lb (14 kg) capacity.
- Compact, lightweight aluminum construction.
- Engraved Can-Am logo.
- Stamped 5052 aluminum center plate.
- Easy to install.

Fits: G2S

715001360

$194.99





OUTLANDER

LinQ GUN BOOT RACK

(Not illustrated)

- This lightweight Gun Boot Rack can be mounted on either side of your Outlander using the tool-less LinQ System.
- For use with Gun Boot 6.0 Impact by Kolpin (715001419).

Fits: G2 (except MAX & 6x6 models)

715002112 • Black

$134.99

Fits: G2 (MAX models only)

715002113 • Black

$129.99



715001918

GUN BOOT RACK

- Made of steel.
- Designed for the tubular rack.
- For use with Gun Boot 6.0 Impact by Kolpin (715001419).
- Can be mounted to either side of the vehicle.

Fits: G2L (except MAX models)	Fits: G2L (MAX models only)
715001918	715001919
$114.99	$114.99

GEAR GRIPS BY KOLPIN

- Durable, flexible grips cushion and protect while providing a custom fit for a variety of items from 1" to 4" (2.5 cm to 10 cm) in diameter.
- Heavy-duty design for carrying bows, fishing poles, rakes, farm tools and more.
- Quick-release button opens grip quickly for easy access to gear.
- Heavy-duty base system built for the toughest adventures.
- Sold in pairs.
- Easy installation on tubular racks, extension racks, brackets or bumpers.

Fits: G2L

715001421

$69.99





GUN BOOT 6.0 IMPACT† BY KOLPIN†

- Extra room for pistol-grip-type weapons and small bipods.
- Easily fits firearms up to 51" (130 cm) in total length.
- Provides ample room for 2 3/8" (60 mm) scopes.
- Hatchback design allows easy access.
- Ergonomically designed handle and molded attachment points for sling.
- Snap-close cover with locking capability.
- Designed to accommodate left and right hand bolt-action rifles and shotguns.
- Includes removable, shock absorbing foam and nylon impact liner for superior interior protection.
- Requires appropriate mounting kit for installation (715002112, 715002113, 715001918 or 715001919).

715001419

$79.99

MULTI-FIT HOLDER

- Open u-shaped bracket for carrying tools (shovel, axe) and hunting weapons (rifle, bow) that are safely secured, but easily accessible.
- Easy installation on tubular rack, extension racks, basket or bumpers.
- Sold in pairs.

Fits: G2, G2L Single	Fits: G2, G2L Double
715002354	715001945
$49.99	$69.99



OUTLANDER RENEGADE

LinQ MOUNTED GEAR GRIPS BY KOLPIN

(Not illustrated)

- Same features as Gear Grip by Koplin (715001421).
- Make transporting your tools a snap by combining the Gear Grips with the LinQ System.
- 360° orientation.
- LinQ Luggage Rack (715001734) is required for G2S.

Fits: G2, G2S

715001351

$104.99

LinQ TOOL HOLDER

- Ultra-versatile tool holder.
- Convenient swivel-latch allows tools to be stored in any orientation.
- LinQ Luggage Rack (715001734) is required for G2S.
- Sold in pairs.

Fits: G2, G2S

715003059

$49.99



SKID PLATES

OUTLANDER

ALUMINUM SKID PLATES

Our Aluminum Plates are made with high strength 5052 H32 aluminum.
A must-have for rugged terrain.

CATCH THE VIDEO AT STORE.CAN-AM.BRP.COM



FIND YOUR PLATFORM

G2 (EXCEPT MAX MODELS)	G2 (MAX MODELS & OUTLANDER X MR 1000 ONLY)	G2L (EXCEPT MAX MODELS)	G2L (MAX MODELS ONLY)	G2 (6X6 ONLY)

ALUMINUM SKID PLATE PROTECTION KIT

INCLUDES:
- Front Skid Plate
- Rear Differential Protectors
- A-Arm Protectors
- Rear Skid Plate
- Central Skid Plate
- Trailing Arm Protectors (not included for Outlander L and Outlander L MAX)
- Footwell Protector Plates

715002137* $649.93	715002138* $679.93	715002299 $579.94	715002300 $594.94	

* Fits: 2016 & prior models

INDIVIDUAL ALUMINUM SKID PLATES

A-ARM PROTECTORS

- 1/8" (3 mm) thick lightweight and durable design.
- Add more protection to the CV joints and rubber boots.
- Drain holes to release water, mud and debris.
- Easy to install.
- Replace stock plastic protectors.
- Can-Am logo.
- Sold in pairs.
- Except X mr

715001667 $119.99	715001667 $119.99	715001667 $119.99	715001667 $119.99	715001667 $119.99

FRONT SKID PLATE

- 3/16" (4.5 mm) thick and die-formed for strength and durability.
- Use in conjunction with the central skid plate for full frame protection.

715000926 $69.99	715000926 $69.99	715001906 $94.99	715001906 $94.99	

CENTRAL SKID PLATE

- 3/16" (4.5 mm) thick for durability and strength.
- Drain holes to release water, mud and debris.
- Allows access to oil drain plug.
- Can-Am Logo.
- Must be installed with front skid plate.

715002078 $94.99	715002078 $94.99	715002078 $94.99	715002078 $94.99	

FOOTWELL PROTECTOR PLATES

- 1/8" (3 mm) thick lightweight and durable design.
- Use in conjunction with the central skid plate.
- Drain holes to release water, mud and debris.
- Sold in pairs.

715000922 $124.99	715000922 $124.99	715000922 $124.99	715000922 $124.99	

TRAILING ARM PROTECTORS

- 1/8" (3 mm) thick lightweight and durable design.
- Replace stock plastic protectors.
- Can-Am logo.
- Sold in pairs.
- Fits: G2 2016 & prior.

715001129 $109.99	715001129 $109.99			715001129 $109.99

REAR DIFFERENTIAL PROTECTORS

- 1/8" (3 mm) thick lightweight and durable design.
- Replace stock plastic protector.

715000920 $59.99	715000920 $59.99	715000920 $59.99	715000920 $59.99	

REAR SKID PLATE

- 3/16" (4.5 mm) thick for durability and strength.
- Must be installed with the central and front skid plates.

715002028 $84.99	715002029 $99.99	715002028 $84.99	715002029 $99.99	

RENEGADE

ALUMINUM SKID PLATES

Our Aluminum Plates are made with high strength 5052 H32 aluminum. A must-have for rugged terrain.

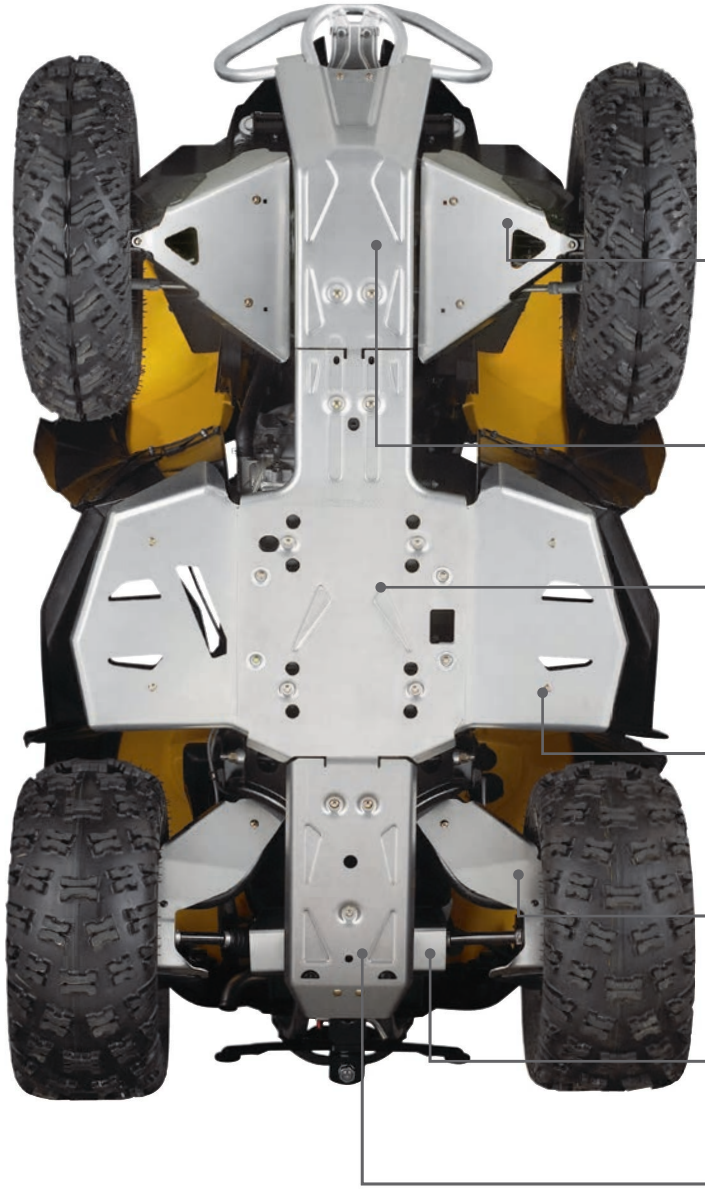

G2S

ALUMINUM SKID PLATE PROTECTION KIT

INCLUDES:
- Front Skid Plate
- Central Skid Plate
- Rear Differential Protectors
- Trailing Arm Protectors
- A-Arm Protectors
- Footwell Protector Plates
- Rear Skid Plate

715002139
$669.93

INDIVIDUAL ALUMINUM SKID PLATES

A-ARM PROTECTORS

- 1/8" (3 mm) thick lightweight and durable design.
- Add more protection to the CV joints and rubber boots.
- Drain holes to release water, mud and debris.
- Easy to install.
- Replace stock plastic protectors.
- Can-Am logo.
- Sold in pairs.

715001667
$119.99

FRONT SKID PLATE

- 3/16" (4.5 mm) thick and die-formed for strength and durability.
- Recessed bolt holes.
- Can-Am logo.

715000925
$69.99

CENTRAL SKID PLATE

- 3/16" (4.5 mm) thick for durability and strength.
- Drain holes to release water, mud and debris.
- Allows access to oil drain plug.
- Can-Am logo.
- Standard on Renegade X xc.
- Must be installed with Front Skid Plate.

715002078
$94.99

FOOTWELL PROTECTOR PLATES

- 1/8" (3 mm) thick lightweight and durable design.
- Drain holes to release water, mud and debris.
- Use in conjunction with Central Skid Plate.
- Sold in pairs.

715001359
$144.99

TRAILING ARM PROTECTORS

- 1/8" (3 mm) thick lightweight and durable design.
- Replace stock plastic protectors.
- Can-Am logo.
- Sold in pairs.

715001129
$109.99

REAR DIFFERENTIAL PROTECTORS

- 1/8" (3 mm) thick lightweight and durable design.
- Replace stock plastic protector.
- Fits: G2S 2016 & prior.

715000920
$59.99

REAR SKID PLATE

- 3/16" (4.5 mm) thick for durability and strength.
- Must be installed with the central and front skid plates.

715002028
$84.99

OUTLANDER RENEGADE

HMWPE SKID PLATES

Our Plastic Plates glide smoothly and silently over obstacles, offering great protection in rough terrain. Made of 1/4" (6 mm) thick abrasion-resistant thermoformed High Molecular Weight Polyethylene (HMWPE). Lighter than aluminum.

CATCH THE VIDEO AT STORE.CAN-AM.BRP.COM

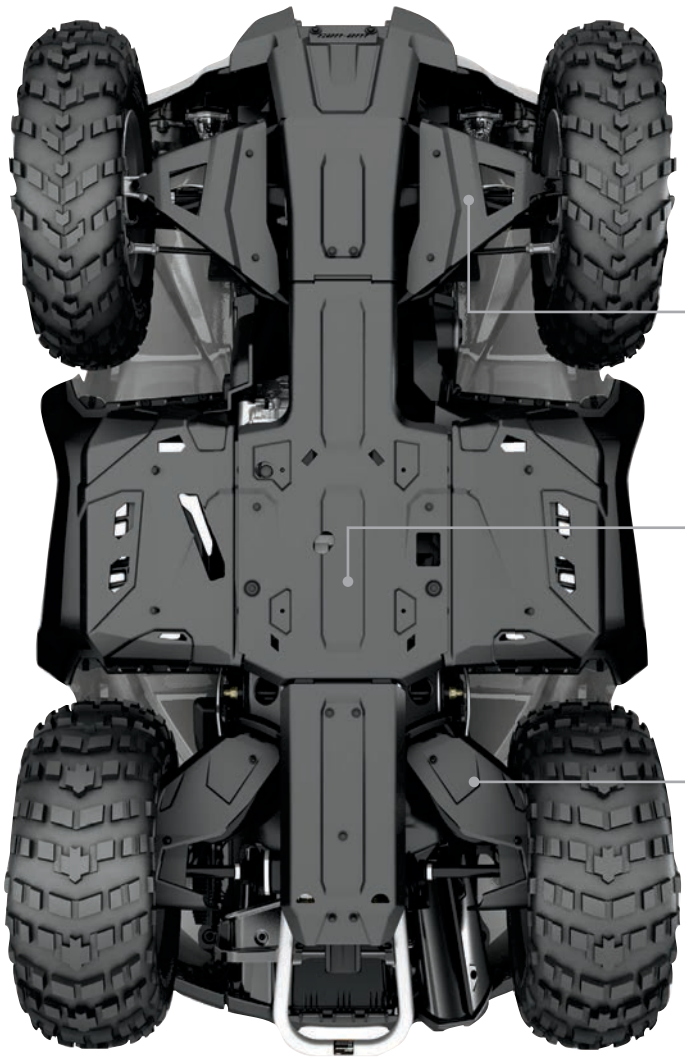

FIND YOUR PLATFORM

G2 2017	G2 2016 & PRIOR	G2 MAX 2017	G2 MAX 2016 & PRIOR	G2L 2017	G2L MAX 2017	G2S 2017

HMWPE PLASTIC SKID PLATE PROTECTION KIT

INCLUDES: • A-Arm Protectors • Underbelly plates • Trailing Arm Protectors

G2 2017	G2 2016 & PRIOR	G2 MAX 2017	G2 MAX 2016 & PRIOR	G2L 2017	G2L MAX 2017	G2S 2017
NEW 715004209 $639.99	NEW 715004214 $639.99	NEW 715004210 $659.99	NEW 715004215 $659.99	NEW 715004211 $639.99	NEW 715004212 $659.99	NEW 715004213 $639.99

INDIVIDUAL HMWPE PLASTIC SKID PLATES

A-ARM PROTECTORS

- Protect CV joints and rubber boots.
- Include water and mud drainage holes.
- Can-Am logo.
- Sold in pairs.

G2 2017	G2 2016 & PRIOR	G2 MAX 2017	G2 MAX 2016 & PRIOR	G2L 2017	G2L MAX 2017	G2S 2017
715002924 $109.99	715002924 $109.99	715002924 $109.99	715002924 $109.99	715002924 $109.99	715002924 $109.99	715002924 $109.99

UNDERBELLY PLATES

- Includes Front Skid Plate, Central Skid Plate, Footwell Protector Plates and Rear Skid Plate.
- Allows access to oil drain plug.
- Include water and mud drainage holes.
- Can-Am logo.

G2 2017	G2 2016 & PRIOR	G2 MAX 2017	G2 MAX 2016 & PRIOR	G2L 2017	G2L MAX 2017	G2S 2017
715002926 $419.99	715002926 $419.99	715002927 $439.99	715002927 $439.99	NEW 715002928 $419.99	NEW 715002929 $439.99	NEW 715002974 $419.99

TRAILING ARM PROTECTORS

- Include water and mud drainage holes.
- Sold in pairs.

G2 2017	G2 2016 & PRIOR	G2 MAX 2017	G2 MAX 2016 & PRIOR	G2L 2017	G2L MAX 2017	G2S 2017
NEW 715003466 $109.99	715002925 $109.99	NEW 715003466 $109.99	715002925 $109.99	NEW 715003466 $109.99	NEW 715003466 $109.99	NEW 715003466 $109.99

PLASTIC SKID PLATES

FRONT AND CENTRAL PLASTIC SKID PLATES

- Designed to protect frame and engine from rough terrain conditions.
- Standard on Outlander L DPS® and Outlander L MAX DPS.

Fits: G2L (STD only)
715002374
$49.99

BUMPERS



OUTLANDER

CATCH THE VIDEO AT STORE.CAN-AM.BRP.COM

NEW

COMPLETE RANCHER PROTECTION KIT

(Not illustrated)

- Introducing a whole new level of surround protection for your ATV thanks to this Full Body Protection Kit that includes a Rancher Front Bumper (715003461), Rancher Rear Bumper (715003462), and Body Side Protector (715003459).
- Requires Body Side Protector Extensions (715003460) for installation on MAX models.

Fits: G2, G2L

715003463

$789.99

NEW

BODY SIDE PROTECTOR EXTENSIONS

(Not illustrated)

- This specially designed extension for Body Side Protector (715003459 or 715003614) is made specifically to fit and seamlessly integrate the look of Outlander MAX models.

Fits: G2, G2L (MAX models only)

715003460

$59.99



NEW

RANCHER REAR BUMPER

- The heavy-duty bumper designed to pull double duty: protect your ATV and anything it comes in contact with, while also enhancing the look of your ATV.
- Made tough and designed to deliver a rugged appearance, this bumper offers rear protection for farmer, rancher and forestry applications.
- Ideal for using your ATV within cattle herds and guard the safety of both the vehicle and the animals.
- Coverage extends to provide an extra layer of defense to your tail lights.
- Inside and outside anti-corrosion coating with durable powder coat finish.
- Not compatible with track systems.

Fits: G2, G2L

715003462

$229.99



NEW

BODY SIDE PROTECTOR

- The heavy-duty fender guard designed to pull double duty: protect your ATV and also enhance the look of your ATV.
- Made tough and designed to deliver a rugged appearance, this fender guard offers full side protection for farmer, rancher and forestry applications.
- Built of durably bold 1.25" (3 cm) diameter steel-tube construction, with inside and outside anti-corrosion coating with durable powder coat finish.
- XT Front Bumper, XT Rear Bumper, Rancher Front Bumper or Rancher Rear Bumper required for installation.
- Sold in pairs.

Fits: G2 with XT Bumpers and G2L with Rancher Bumpers

- Requires Body Side Protector Extensions (715003460) for installation on MAX models.

715003459

$289.99

Fits: G2L with XT Bumpers

715003614

$319.99



NEW

RANCHER FRONT BUMPER

- The heavy-duty bumper designed to pull double duty: protect your ATV and anything it comes in contact with, while also enhancing the look of your ATV.
- Made tough and designed to deliver a rugged appearance, this bumper offers front protection for farmer, rancher and forestry applications.
- The low front end protection and plates allow you to use your ATV within cattle herds and guard the safety of both the vehicle and the animals.
- The flat front portion facilitates gently prodding cattle or pushing light objects, e.g. closing a fence.
- The full frontage coverage extends to provide an extra layer of defense to your headlights and radiator.
- Inside and outside anti-corrosion coating with durable powder coat finish.
- Not compatible with track systems and plows.

Fits: G2, G2L

715003461

$269.99

OUTLANDER



XT FRONT BUMPER

- Provides additional protection against the elements.
- Tough and durable, can be added on base Outlander model to convert vehicle into XT model.
- Large tube construction with textured black finish.
- Standard on XT model.

Fits: G2

715000947

$164.99



XT FRONT BUMPER

- Large tube construction.
- Protects vehicle frame against obstacles.
- Winch compatible.

Fits: G2L

715001910

$134.99



EXTREME FRONT BUMPER

- Ultra-sturdy build.
- Enhances front-vehicle protection.
- Compatible with XT Front Bumper.
- Fits the Apache 360 Track System (when side panels are removed).

Fits: G2

715001286

$239.99



EXTREME FRONT BUMPER

- Ultra-sturdy build.
- Enhances front-vehicle protection.
- Compatible with XT Front Bumper.
- Fits the Apache 360 Track System (when side panels are removed).

Fits: G2L

715002468

$224.99



XT REAR BUMPER

- Provides additional protection against the elements.
- Tough and durable, can be added on base Outlander model to convert vehicle into XT model.
- Large tube construction with textured black finish.
- Standard on XT model.

Fits: G2

715000948

$154.99



XT REAR BUMPER

- Large tube construction.
- Protects vehicle frame against the obstacles.

Fits: G2L

715001911

$104.99

RENEGADE

RENEGADE EXTREME FRONT BUMPER

- Enhanced vehicle front protection.
- Required as a mounting point for Radiator Relocator (715001929).

Fits: G2S

715002469

$214.99



LIGHTING & ELECTRICAL



OUTLANDER RENEGADE

CATCH THE VIDEO AT STORE.CAN-AM.BRP.COM

LinQ SYSTEM

NEW

LinQ 11.5 GAL (43L) AUDIO CARGO BOX

- Delivers the best sound quality on the market to sweeten your ride courtesy of a built-in full range high efficiency amplifier.
- Mounts on/off easily to hold/carry cargo safely and securely.
- Now that's music to any rider's ears!
- The Bluetooth enabled receiver and 6.5" speakers are smartly concealed and integrated in the cover.
- Automatic shut-off function protects your battery by turning the system off after 10 minutes of inactivity.
- Backlit control panel perfect for night riding.
- LinQ Base (715002350) is required for G2L.
- LinQ Luggage Rack (715001734) is required for G2S.

Fits: G2 (front only for 6x6 & MAX models 2013-2014), G2L, G2S

715003018

$549.99



MUST HAVE

OUTLANDER RENEGADE

HEATED HAND GRIPS & THROTTLE COMBO

Fits: G2, G2L (Wiring Cable (710004567) required for installation), G2S

715001849

$174.99

MUST HAVE

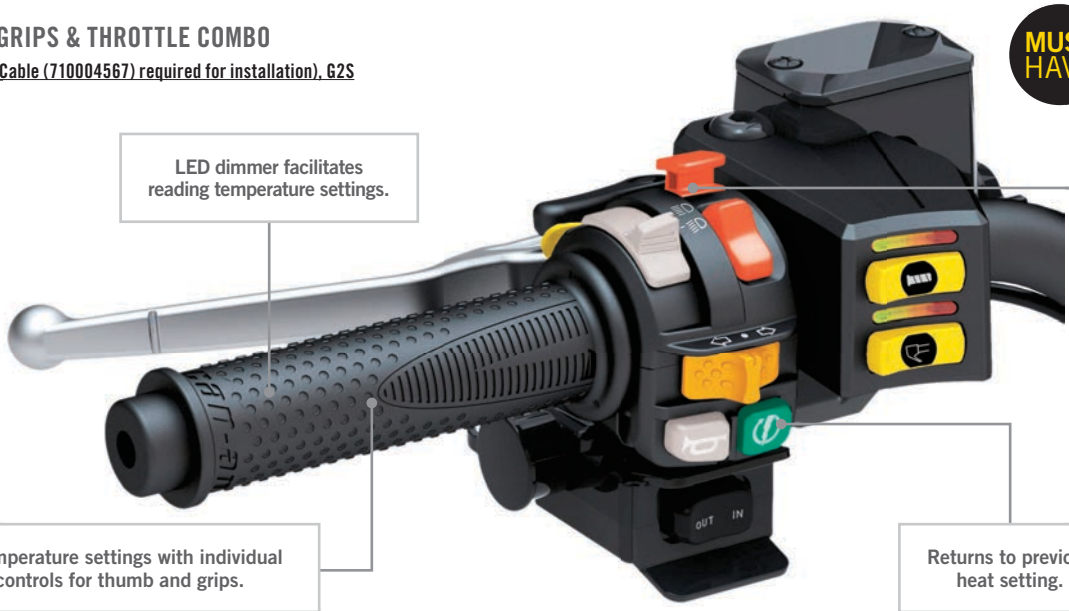



NEW

CGX2 CAMERA

- 4K HD and 1080p at 60fps.
- 2" LCD display screen.
- Waterproof housing of up to 165 ft (50 m) underwater and the 2.4gh waterproof remote.
- Comes with 32gb micro SD card class 10 and 9 mounts.
- WIFI available to control your camera from your smart phone or tablet with the free iCyclops App for IOS and Android.

2866860090

$299.99

OUTLANDER

HEATED PASSENGER GRIPS & VISOR OUTLET

- Replace your stock passenger handles.
- Dual temperature switch integrated into seat arm for 3-zone heated handles and grips.
- Heated visor outlet integrated into seat arm.

Fits: G2, G2L (MAX models only)

715001926

$209.99

Fits: G2 (2013-2014) (MAX models only)

715002116

$209.99



HEATED VISOR OUTLET

- Strategically positioned on vehicle to maintain your agility.
- Optional visor outlet that delivers fog-free riding.
- Quick and easy installation.
- Sold individually.
- Heated Visor not included.

Fits: G2, G2L

715001246

$49.99



WIRING CABLE

- Required for installation of Heated Hand Grips & Throttle Combo (715001849).

Fits: G2L

710004567

$9.99



DPS MODULE

(Not illustrated)

Fits: G2L (except P-STD), G2 (except P-STD)

715001202

$179.99

OUTLANDER RENEGADE

FRONT BUMPER LIGHTS



- Complete 1,800 lumens 10W LED Cree light kit.
- Long-range illumination up to 350' (107 m), drawing less than 1 amp per light.
- Included multi-position clamps that fit on various tubing sizes.

Fits: G2, G2L

715001741

$259.99

AUXILIARY WINDSHIELD LIGHTING

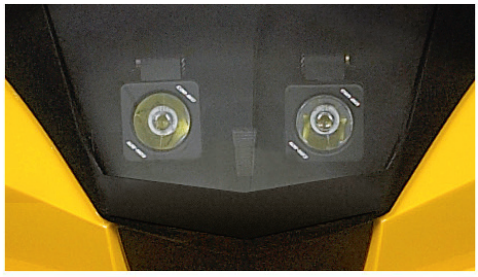

- 2 premium LED spots for Deluxe Fairing for both increased output and directional lighting.
- 1,800 lumens.
- 2 10W LED Cree light kit.
- Long-range illumination up to 350' (107 m), drawing less than 1 amp per light.

Fits: Deluxe fairing

715001214

$309.99

FLASHER & HORN KIT



- Integrates with vehicle.
- Easy to install.
- Not for road use.

Fits: G2 (except 2017 models)

715001358

$359.99

NEW

RAM LED SPOTLIGHT



- 540 lumens LED light (9 Watt) heavy-duty spotlight standard-equipped with 1" (2.5 cm) diameter rubber-coated double ball and socket system.

710005423 • Black

$119.99

CENTER CONSOLE DAY LIGHT



- Mountable on top end of center console.
- Enhances look of vehicle.

Fits: G2S

715000691

$59.99



NEW

GARMIN† MONTANA† 680T GPS

- Rugged and waterproof, the Montana 680T is element-proof.
- 4-inch dual-orientation, sunlight-readable touchscreen and glove-friendly touchscreen display, to give you vivid colors and high-resolution images.
- 8-megapixel autofocus camera automatically geotags photos.
- Tracks both GPS and GLONASS satellites for improved positioning and typically faster fixes.
- Preloaded TOPO maps, plus 1-year BirdsEye Satellite Imagery subscription.
- 3-axis compass with barometric altimeter.
- Specific GPS cradle included (vehicle mounting kit required).
- Includes a preloaded map for US.

Fits: G2, G2L, G2S

715002830

$659.99

EUROPEAN VERSION

- EC compliant.
- Includes preloaded European recreation map.

715003456

NEW

CANADIAN MAP FOR GARMIN MONTANA 680T GPS

- Additional and readily-programmable Canadian basemap for Garmin Montana 680T GPS system.
- Requires Garmin Montana 680T GPS (715002830).

710005065

$129.99



GPS RAM®MOUNT FOR HANDLEBAR

- Convenient bracket for installing the Garmin Montana GPS (not included) onto your unit's handlebar.

Fits: G2, G2L, G2S

715001985

$59.99



OUTLANDER RENEGADE

WARN† PROVANTAGE

- Patented roller disc brake for outstanding control while winching.
- Ergonomic clutch handle.
- Three-stage planetary gear train for smooth, efficient operation.
- All-metal gear housing and gears.
- Fully sealed motor and drive train to keep the elements out.
- Corded remote and mini-rocker control switch with integrated socket.
- Limited lifetime warranty for mechanical components and 3-year warranty for electrical components.
- Winch mounting plate (715000927) is required for G2S.
- Winch wire harness (715002453) is required for G2L.
- EC Compliant.



WARN PROVANTAGE 3500-S WINCH

- Double-powder-coated hawse fairlead.
- Pulling strength capability of 3,500 lb (1,588 kg).
- 50 ft. of 3/16" (15.2 m of 4.8 mm) synthetic rope.

Fits: G2, G2L, G2S

715003473

$679.99



WARN PROVANTAGE 3000 WINCH

- Roller fairlead.
- Pulling strength capability of 3,000 lb (1,361 kg).
- 50 ft. of 3/16" (15.2 m of 4.8 mm) wire steel cable.

Fits: G2, G2L, G2S

715003474

$549.99



WARN PROVANTAGE 2500-S WINCH

- Double-powder-coated hawse fairlead.
- Pulling strength capability of 2,500 lb (1,134 kg).
- 50 ft. of 3/16" (15.2 m of 4.8 mm) synthetic rope.

Fits: G2, G2L, G2S

715003472

$579.99



OUTLANDER

CAN-AM TERRA BY SUPERWINCH†

- Heavy-duty 4-way roller fairlead.
- Ergonomic clutch handle.
- Rugged all-steel gears and bushings, provides more torque and longer life.
- 100% mechanical load holding brake and electronic dynamic brake.
- Sealed solenoid for all weather protection.
- Corded 10' (3m) weather sealed hand-held remote.
- Weather sealed handlebar mounted switch.
- EC Compliant.



MUST HAVE

CAN-AM TERRA 35 WINCH BY SUPERWINCH

- Pulling strength capability of 3,500 lb (1,588 kg).
- 50 ft. of 13/64" (15.2 m of 5.2 mm) wire steel cable.

Fits: G2, G2L

715003476

$359.99



CAN-AM TERRA 25 WINCH BY SUPERWINCH

- Pulling strength capability of 2,500 lb (1,134 kg).
- 50 ft. of 3/16" (15.2 m of 4.8 mm) wire steel cable.

Fits: G2, G2L

715003475

$319.99

OUTLANDER RENEGADE

WINCH MOUNTING PLATE

- Adds functionality to your Renegade.
- Fits Can-Am winches by Warn.

Fits: G2S

715000927

$109.99



WIRELESS REMOTE CONTROL

- The system is quick and easy to install, thanks to a wiring harness with an integrated antenna and all necessary mounting hardware.
- The system allows you to operate your winch from anywhere within a 50' (15.2 m) radius, increasing your recovery options.
- All components are weatherproof.

Fits: Warn winches

715002542

$179.99



WIRED REMOTE CONTROL

- This kit allows winch owners to add the hand-held remote to their winch.
- Works in conjunction with the mini-rocker switch.

Fits: 2016 models & prior

715002270

$129.99

Fits: 2017 models & up

- Remote socket (715003651) is required.

710001002

$59.99



WARN REMOTE SOCKET

(Not illustrated)

715003651

$24.99

WINCH WIRE HARNESS

(Not illustrated)

- Required plug-and-go wiring to install Warn winch only.
- Not required for Can-Am Terra winch.

Fits: G2L

715002453

$39.99

HARDWARE ADAPTER KIT

(Not illustrated)

- Required to install Warn Winch Kit (715002500, 715002561, 715002499) on 2016 & up models.
- Required to install Can-Am Terra 25 Winch (715002167) and Can-Am Terra 35 Winch (715002057) on G2L 2017 & up models.

715003477

$29.99

WINCH ACCESSORIES KIT

- Get the most out of your winch.
- Double your pulling power, change your pulling direction and keep your winch in proper working order.
- Includes tree straps, snatch block, shackle and winching gloves.

715002409

$104.99









SYNTHETIC WINCH CABLE

- Easier to manipulate than steel cable.
- Replaces the original cable on any factory installed Warn winch or sold as an accessory by BRP.
- Kit includes synthetic rope and rock guard sleeve.
- Always use with new Roller Fairlead (715000011) to prevent premature wear.

50' (15.2 m), 3,500 lb (1,588 kg) pulling strength

715000539

$114.99



REPLACEMENT WIRE ROPE

- Play it safe, always carry a replacement wire rope.
- 50' (15.2 m) aircraft grade steel wire.
- 3/16" (4.8 mm) diameter.
- 3,500 lb (1.588 kg) pulling strength.

Fits: All Warn winches

715000047

$59.99



ROLLER FAIRLEAD

- Features top, bottom and side rollers for less cable wear and smoother operation from any direction for easier winching.

715000011

$59.99



HOOK WITH SAFETY LATCH & STRAP KIT

- Heavy-duty winch-rope hook with stainless steel snap.
- Includes a nylon safety strap.

715000069

$17.99



HITCHES



OUTLANDER



FRONT HITCH

- Front hitch for Outlander with or without a winch.
- This hitch offers 1,300 lb (590 kg) of towing capacity.
- Allows you to maneuver your trailer easily in tight, confined areas.
- Hitch bar sold separately.

Fits: G2

715000921

$84.99

OUTLANDER RENEGADE



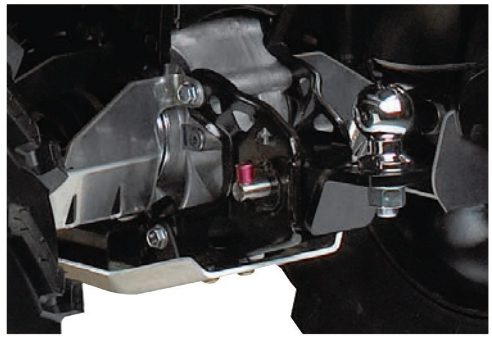

FRONT & REAR HITCH DRAWBAR

- Fits 2" (5 cm) receiver hitch that comes standard on Outlanders.
- Hitch ball not included.
- This hitch offers 1,300 lb (590 kg) of towing capacity.

Fits: G2, G2L, G2S

715000972

$79.99

EUROPEAN VERSION

715001473 • Drawbar with 50mm European ball

REAR RECEIVER HITCH

- E-coat finish.
- Does not affect ground clearance.
- Trailer ball not included.
- This hitch offers 1,300 lb (590 kg) of towing capacity.

Fits: G2L, G2S

715001329

$84.99



REAR RECEIVER HITCH

- E-coat finish.
- Fixed hitch ball mounting bracket.
- Provides fixed mounting point for trailer ball to provide vehicle with towing capabilities.
- This hitch offers 1,300 lb (590 kg) of towing capacity.

Fits: G2, G2L, G2S

715001925

$49.99



RUBBER RECEIVER PLUG

- Rubber cap for 2" (5 cm) hitch receiver.

705204503

$10.99





OUTLANDER



OUTLANDER RADIATOR RELOCATOR KIT

- Relocates radiator to top mount position.
- Prevents cooling performance loss in muddy conditions.
- Uses existing radiator.
- Includes support, hardware and hoses.
- Engineered for easy cooling system bleeding and maintenance.
- Radiator not included.

Fits: G2, G2L

715001930 • Black

$379.99



OUTLANDER SNORKEL KIT

- Comprehensive kit.
- Extended air intakes and CVT exhaust.
- CVT Outlet integrates into pod cover.
- Ideal for muddy conditions.
- Must be installed on a vehicle without XT handlebar protector kit.
- For 6x6, appropriate gauge support is required for best result and fit and finish.

Fits: G2, G2L

715002392

$359.99

Fits: G2 (X mr models only), G2L (X mr models only)

- Raised horn only.
- Provides higher intake.
- For best result, appropriate gauge support is required.

715002518

$89.99

Fits: G2 (2012-2014 only)

715001730

$359.99



X MR TRACTION PLATES

- Provide extra foot grip for driver when riding in extreme mud conditions.
- Help driver to maintain ideal riding position to maximize vehicle traction.
- Made of aluminum.
- Not meant for a passenger.

Fits: G2, G2L (MAX models only)

715001752 • Aluminum

$99.99

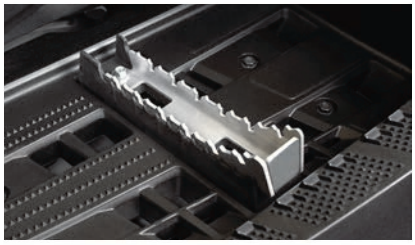

FOOTPEG KIT

- Provides maximum integrated grip and more stability during vigorous riding.
- Kick-up end generates added grip during hard cornering.
- Made of aluminum.
- Sold in pairs.

Fits: G2, G2L

715001131

$44.99

OUTLANDER RENEGADE



MUD STRAP

- Convenient sturdy grab-handle.
- Lets drivers redistribute their weight for improved traction in demanding conditions.
- Not compatible with XT Handelbar Protector Kit (703100352).

Fits: G2, G2L, G2S

715003053

$39.99



RENEGADE



RENEGADE SNORKEL KIT

- Comprehensive kit.
- Extended air intakes and CVT exhaust.
- CVT Outlet integrates into pod cover.
- Ideal for muddy conditions.

Fits: G2S

715001928

$449.99

ADAPTOR KIT

(Not illustrated)

- Necessary to install the G2S Snorkel Kit (715001928) on 2012 to 2014 models.

Fits: G2S (for 2012-2014 models only)

715003122

$44.99



RENEGADE RADIATOR RELOCATOR KIT

- Relocates radiator to top mount position.
- Prevents cooling performance loss in muddy conditions.
- Uses existing radiator.
- Includes support, hardware and hoses.
- Engineered for easy cooling system bleeding and maintenance.
- Radiator not included.
- Renegade Extreme Front Bumper (715002469) required for installation (except X mr).

Fits: G2S

715001929

$379.99



OUTLANDER

FENDER FLARE

- Kit designed to deliver extra protection from dirt and debris, therefore a must if you enjoy riding in the mud.
- Made of injected plastic that hugs your vehicle fenders perfectly.
- Gives vehicle added flair for that rugged cool look.
- Includes front and rear extensions and all mounting hardware.

Fits: G2 (except X mr 850 & 1000R)
715001764
$129.99
Fits: G2L
715001909
$129.99



NEW

FENDER FLARE EXTENSIONS

- Block terrain debris from kicking up onto you as you ride or damaging your vehicle thanks to these extra-large Fender Flare Extensions, which also include mud flaps for added protection from mud/ snow, especially when riding with track kits.
- Made of High Molecular Weight Polyethylene (HMWPE) for advanced abrasion resistance.
- Include front and rear extensions.

Fits: G2
- Must be used with Fender Flare for G2 (715001764).

715003458
$199.99
Fits: G2L
- Must be used with Fender Flare for G2L (715001909).

715003615
$199.99



RENEGADE



FENDER FLARE

- Integrated extended Fender Flare for sporty look and full body protection from dirt and water.
- Includes front and rear extensions and all mounting hardware.

Fits: G2S (except X mr models)
715001681
$169.99



OUTLANDER



YOSHIMURA SLIP-ON EXHAUST

- Developed in collaboration with Yoshimura.
- Made from 304-grade stainless steel.
- Better sounding, better looking and lighter than stock muffler.
- USDF/USDA approved spark arrester.
- NON EPA compliant (for racing application only).
- Not EC compliant.
- Fuel injection system tuning not required.

Fits: G2 (except 6x6 models)

715001738

$429.99

RENEGADE



YOSHIMURA SLIP-ON EXHAUST

- Developed in collaboration with Yoshimura.
- Made from 304-grade stainless steel.
- Better sounding, better looking and lighter than stock muffler.
- USDF/USDA approved spark arrester.
- NON EPA compliant (for racing application only).
- Not EC compliant.
- Fuel injection system tuning not required.

Fits: G2S (except X mr models)

715001739

$529.99

CATCH THE VIDEO AT STORE.CAN-AM.BRP.COM

OUTLANDER

OUTLANDER MAX PASSENGER SEAT KIT

• Perfect to replace used or damaged passenger seat.

Fits: G2 2015 & up, G2L (MAX models only)
715002373
$589.99

Fits: G2 2013-2014 (MAX models only except with 400 engine)
715002032
$589.99



OUTLANDER RENEGADE



FRONT SHOCK COVERS

• Feature ventilation holes.
• Offer added protection in rough terrain and weather conditions.
• Sold in pairs.

Fits: G2, G2L, G2S
715500301
$39.99

HEAVY-DUTY SPRINGS

• Heavy-duty springs provide enhanced stiffness.
• Perfect for snow clearing and hauling heavy loads.
• Improves handling and helps prevent accidental overturns.
• Sold in pairs.
• Standard on Outlander Pro & Mossy Oak models

Fits: G2

Front
G2 (base model, DPS, XT, X mr with 650 engine only & Limited), G2S (base model with 500 & 570 engines only)
715003199
$99.99


Front

Rear
G2 (base model, DPS, XT & X mr with 650 engine only), G2S (base model with 500 & 570 engines only)
715003200
$99.99


Rear

FOX PERFORMANCE SHOCKS 1.5 PODIUM X RC2 HPG

• High-performance front and rear shocks.
• Allow handling to readily adapt to terrain and riding style.
• Easy-adjust dual-speed compression, rebound and preload settings.
• Standard on X xc.

Fits: G2 (except with 400 engine, X mr, Limited, & 6x6), G2 X mr 650 & G2S (base model & X mr 570 only)
715003201
$1,999.99



RADIATOR PROTECTOR

• Metal shield which mounts over radiator face, providing protection from stones and branches.

Fits: G2, G2S (except Renegade with 500 engine)
715001744
$59.99

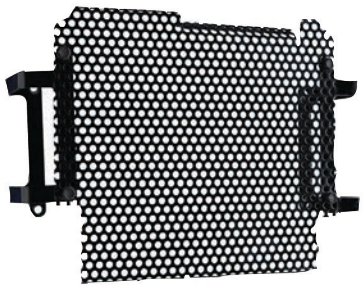

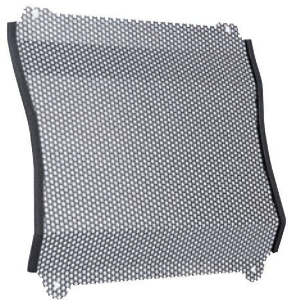

FOAM AIR FILTER BY TWINAIR†

• Maximizes performance by increasing air flow throughout RPM range.
• Maintenance-friendly, i.e. just wash, re-oil and re-use after riding in severely dusty/muddy environments.

Fits: G2, G2S
715001333
$69.99



FOX SHOCKS

• Engineered for the more agressive riders.
• Offers increased bump absorption and better roll control.
• Offers a slightly firmer ride than standard kits but remains very useable for all-around use.
• Kit includes 4 shocks and springs.
• Rebuildable.
• Threaded preload adjusters.

Fits: G2 (except with 400 engine, X mr, XT-P, Limited & 6x6), G2 X mr 650 & G2S (base model with 500 & 570 only)
715001471
$579.99



APACHE 360 TRACK SYSTEMS

BEST TRACK SYSTEM OF ITS KIND.



OUTLANDER RENEGADE

APACHE 360 TRACK SYSTEMS

- Highly engineered track system provides ultimate traction in snow and any other type of ground surface for your Can-Am vehicle.
- Front track design reduces vibration, eases turning and enhances performance in any hard packed conditions.
- The angled front lugs minimize resistance, and the way the lugs overlap over the wheels ensures smooth rolling.
- The rear track pattern and lug height are balanced for greater traction.
- Unique adjustable contact patch enables you to tackle the toughest conditions year round.
- This new system has two settings: the user can choose a better attack angle in rough terrain or greater floatation in deep snow.
- Thanks to the heightened rubber over molded heavy-duty double bearing wheels and offset wheel spacing, friction and vibration are reduced to a minimum while ensuring reliability.
- Easy installation and quick conversion from tires to tracks once the Apache 360 Mounting Kit is installed (sold separately).
- The DPS[1] module, included in the Apache 360 Mounting Kit, optimizes your Dynamic Power Steering (DPS) performance, maximizing steering agility at lower speeds while providing firmer steering at cruising speeds. It also provides a speed correction factor for the speedometer.
- EC compliant.

APACHE 360 TRACK SYSTEM

- Apache 360 Mounting Kit (715002388) is required (sold separately).

Fits: G2 (except 6x6 models), G2L, G2S

715001981

$3,799.99

APACHE 360 LT TRACK SYSTEM

- The Apache 360 LT Track System offers the same features and technology as the Apache 360 Track System, plus some specific design elements.
- Heavy-duty components ensure reliability and the design offers excellent acceleration, turning, braking and side-hilling performance.
- Larger contact patch than the Apache 360 Track System by 15 in² (97 cm²) at front and 41 in² (265 cm²) at back.
- Higher ground clearance than the Apache 360 Track System by 3/4" front and 1.25" rear.
- Higher rear angle of attack.
- Apache 360 Mounting Kit (715002388) and Apache 360 LT ATV Adaptor (715003063) are required (sold separately).

Fits: G2 (except 6x6 models), G2L, G2S

715003064

$4,699.99

APACHE 360 LT ATV ADAPTOR

(Not illustrated)

- Required to install an Apache 360 LT Track System (715003064).
- Apache 360 Mounting Kit (715002388) also required.

Fits: G2 (except 6x6 models), G2L, G2S

715003063

$149.99

APACHE 360 MOUNTING KIT

(Not illustrated)

- Simple system that reduces installation time.
- Includes DPS Module.
- Requires Apache 360 LT ATV Adaptor (715003063) for installation of the Apache 360 LT Track System.

Fits: G2 (except 6x6 models), G2L, G2S

715002388

$309.99

AIR INTAKE PRE-FILTER

- Adds extra protection for your engine in harsh riding conditions.
- Filter blocks particles larger than 0.005".
- A pre-filter is necessary to maintain the vehicle warranty when an Apache 360 Track System or an Apache 360 LT Track System is installed.

Fits: G2, G2L, G2S

715000291

$29.99



HIGHLY ENGINEERED TRACK DESIGN PROVIDES ULTIMATE TRACTION IN ANY TERRAIN AND LOWEST STEERING EFFORT.

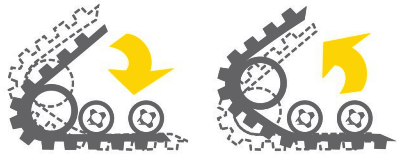

Unique adjustable contact patch system to tackle the toughest year-round conditions.



Easy installation and quick conversion from tires to tracks.

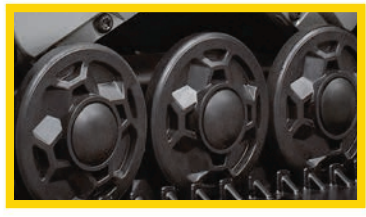

Rubber over molded heavy-duty double bearing wheels and offset wheel spacing reduce friction and vibration while ensuring reliability.


Can-am
OUTLANDER L

PLOW KITS

OUTLANDER

60" (152 CM) ALPINE FLEX PLOW KIT

Fits: G2, G2L
715003149
$984.97



THIS KIT INCLUDES

60" (152 cm) Alpine Flex Plow
715001181 • Black

Alpine Flex Push Frame with Quick-Attach System
715001847

Plow Mounting Kit
715001411

60" (152 CM) ALPINE SUPER-DUTY STRAIGHT PLOW KIT

Fits: G2 (except 6x6 models), G2L
715003148
$714.97



THIS KIT INCLUDES

60" (152 cm) Alpine Super-Duty Straight Plow
715000648 • Yellow

Alpine Super-Duty Push Frame with Quick-Attach System
715001182

Plow Mounting Kit
715001411

OUTLANDER RENEGADE

54" (137 CM) ALPINE SUPER-DUTY STRAIGHT PLOW KIT

Fits: G2 (except 6x6 models), G2L, G2S
715003147
$574.97



THIS KIT INCLUDES

54" (137 cm) Alpine Super-Duty Straight Plow
715000208 • Black

Alpine Super-Duty Push Frame
715001064

Plow Mounting Kit
715002858

ALPINE FLEX PLOWS



OUTLANDER RENEGADE

PLOWS

ALPINE FLEX PLOW 54" (137 CM) & 60" (152 CM)

- Clears 50" (127 cm) or 54" (137 cm) when plow is angled.
- Ideal for clearing narrower areas, like sidewalks.
- Plow made of flexible UHMWPE, which delivers the highest impact strength of any thermoplastic presently made.
- Enormous flex action prevents damaging your plow when accidental impact happens.
- Impact absorption properties return plow to its original shape.
- Rearward release action practically eliminates jolts from being transferred to the driver or unit.
- Attaches and detaches effortlessly thanks to a fast and easy mounting system.
- Blade-turning mechanism mounted high to eliminate having to bend down to change or adjust blade's angle.
- High pivot point keeps plow on pavement.
- Compatible with all Alpine Flex Plow accessories to further enhance plow versatility.

Fits: 54" (137 cm)
715001677
$339.99

Fits: 60" (152 cm)
715001181
$369.99



60" (152 cm)

BUILD YOUR CUSTOM ALPINE FLEX PLOW SYSTEM

01 FIND YOUR PLATFORM	02 MATCH THE PUSH FRAME	03 MATCH THE MOUNTING KIT	04 CHOOSE THE PLOW WIDTH	
G2, G2L	715001847	715001411	60" (152 cm) Alpine Flex Plow **715001181** OR 54" (137 cm) Alpine Flex Plow **715001677**	ADD ALPINE FLEX PUSH FRAME EXTENSION (715001389) IF USING ALPINE FLEX UHMW THERMOPLASTIC PLOW WITH APACHE 360 TRACK SYSTEM
G2S	715001848			

PUSH FRAME

ALPINE FLEX PUSH FRAME WITH QUICK ATTACH SYSTEM

• Refer to the chart on page 54 for the fitting.

715001848

$509.99

715001847

• Includes cable saver limit switch and plow roller fairlead.

$509.99



ALPINE FLEX PUSH FRAME EXTENSION

• Bolt-on push frame extension for use with Apache 360 Track System.
• Does not alter plow functionality.
• Fits Alpine Flex Push Frames (715001847 & 715001848).

Fits: Alpine Flex Plows

715001389

$104.99



MOUNTING KIT

PLOW MOUNTING KIT

(Not illustrated)

• Required to install Alpine Super-Duty Push Frames with Quick Attach system (715001182, 715001474) and Alpine Flex Push Frames (715001847, 715001848).
• Mounting plate precision-designed to stay on year round without compromising ground clearance.
• Fits with or without Can-Am Skid Plates.

715001411

$104.99

ALPINE FLEX PLOW ACCESSORIES

ALPINE FLEX PLOW EDGE MARKERS

• For a more accurate view of the width of your plow so you avoid damaging your curb, your car or your house.

Fits: Fit Alpine Flex Plows

715001388

$39.99

ALPINE FLEX DRIFT CUTTER

• Keeps snow securely in the plow.
• Fits on either left or right side.
• Sold individually.
• Requires Plow Extensions.

Fits: Alpine Flex Plows

715001386

$94.99

ALPINE FLEX 8" (20 CM) PLOW EXTENSIONS

• These conveniently extend your Alpine Flex Plow.

Fits: Fit Alpine Flex Plows

715001385

$134.99



ALPINE FLEX WEAR BLADE (STEEL)

• Long lasting wear blade that provides a sharper cut than the stock wear blade.
• Replaces stock wear blade.

Fits: Alpine Flex Plow 54" (137 cm)

715001704

$89.99

Fits: Alpine Flex Plow 60" (152 cm)

715001476

$89.99

• Stock replacement blade that is versatile for general plowing.

Fits: Alpine Flex Plow 54" (137 cm)

705203199

$89.99

Fits Alpine Flex Plow 60" (152 cm)

705202835

$89.99

ALPINE FLEX WEAR BLADE (PLASTIC)

• Flexible UHMWPE plastic construction won't scratch your driveway.
• Replaces stock wear blade.

Fits: Alpine Flex Plow 54" (137 cm)

715001703

$134.99

Fits Alpine Flex Plow 60" (152 cm)

715001475

$134.99

ALPINE FLEX PLOW RUBBER FLAP

(Not illustrated)

• Keeps snow away from the driver.
• Minimizes snow flowing over plow.
• Increases snow rolling effect.

Fits: Alpine Flex Plow 60" (152 cm)

715001387

$59.99

Fits: Alpine Flex Plow 54" (137 cm)

715001767

$59.99

ALPINE SUPER-DUTY STEEL PLOWS



OUTLANDER RENEGADE

PLOWS

ALPINE SUPER-DUTY STRAIGHT PLOW

- Super-duty plow blades made from 12-gauge steel.
- Replaceable wear blades.
- When angled, 60" (152 cm) blade clears 53½" (136 cm) path, 54" (137 cm) blade clears 48" (123 cm) path.
- Blades swivel left or right, 5 positions.
- Large pin designed for easy blade rotation to eliminate dirt and snow buildup at pivot point.
- Blade design provides best snow/dirt roll-off at any angle.
- Yellow-colored version Can-Am branded.

Fits: 60" (152 cm)
715000209 • Black
715000648 • Yellow
$229.99

Fits: 54" (137 cm)
715000208 • Black
715000647 • Yellow
$219.99



54" (137 cm)

ALPINE SUPER-DUTY ONE WAY STATE PLOW

- One-way "winged" state plow designed to throw snow higher.
- Wing end of plow measures 25" (63 cm) high and tapers down to 16" (41 cm).
- Rubber flap designed to keep snow away from driver.
- Yellow-colored version Can-Am branded.

Fits: 60" (152 cm)
715000649 • Yellow
715000207 • Black
$309.99

Fits: 66" (168 cm)
715000650 • Yellow
$349.99



60" (152 cm)

BUILD YOUR CUSTOM ALPINE SUPER-DUTY STEEL PLOW SYSTEM

01 FIND YOUR PLATFORM	02 CHOOSE YOUR TYPE OF PUSH FRAME	03 MATCH THE MOUNTING KIT	04 CHOOSE THE PLOW WIDTH	
G2, G2L	**715001064 + 715002858** **OR** **715001182 + 715001411**		66" (168 cm) Alpine Super-Duty One Way State Plow **715000650 • Yellow** **OR** 60" (152 cm) Alpine Super-Duty One Way State Plow **715000649 • Yellow** **715000207 • Black** **OR** 60" (152 cm) Alpine Super-Duty Straight Plow **715000648 • Yellow** **715000209 • Black** **OR** 54" (137 cm) Alpine Super-Duty Straight Plow **715000647 • Yellow** **715000208 • Black**	ADD ALPINE SUPER-DUTY PUSH FRAME EXTENSION (703500603) IF USING ALPINE SUPER-DUTY STEEL PLOW WITH APACHE 360 TRACK SYSTEM
G2S	**715001064 + 715002858** **OR** **715001474 + 715001411**			

PUSH FRAME

ALPINE SUPER-DUTY PUSH FRAME WITH QUICK ATTACH SYSTEM

- Tubes withstand roughest use.
- Mid-mount carriage provides up to 11½" (29 cm) lift.
- Fits all steel blade styles.
- Improved auto aligning quick-attach system, easy foot lever release pedal, cable saver limit switch preventing cable breakage by automatically stopping the winch.
- Fits on Plow Mounting Kit (715001411 & 715002858) depending on your vehicle platform.
- Refer to the chart above for the fitting.

715001182 • Includes plow roller fairlead
715001474

$379.99



ALPINE SUPER-DUTY PUSH FRAME

- Super-duty push tubes withstand the roughest use.
- Mid-mount carriage provides up to 11½" (29 cm) of lift.
- Fits all steel blade styles.
- Quick-attach not included.
- Refer to the chart above for the fitting.

715001064

$249.99



MOUNTING KIT

PLOW MOUNTING KIT

(Not illustrated)

- Required to install Alpine Super-Duty Push Frames with Quick Attach System (715001182, 715001474) and Alpine Flex Push Frames (715001847 & 715001848).
- Mounting plate precision-designed to stay on year round without compromising ground clearance.
- Fits with or without Can-Am Skid Plates.
- Refer to the chart above for the fitting.

715001411

$104.99

PLOW MOUNTING KIT

(Not illustrated)

- Required to install Alpine Super-Duty Push Frame (715001064).
- Quick-release pins attach and detach plow blade and base assembly in minutes.
- Simplified installation.
- Can be used with or without Alpine Super-Duty Quick Attach System (715000731).
- No frame drilling required.
- Refer to the chart above for the fitting.

715002858

$104.99

ALPINE SUPER-DUTY ACCESSORIES





ALPINE SUPER-DUTY REMOTE ANGLING SYSTEM

- Increases operator convenience.
- Swivel system allows the driver to manually pivot the plow blade from the driver's seat.
- Cannot be used with the Push Frame Extension (703500603) and Push Frames with Quick Attach System (715001182 & 715001474).
- Does not fit Alpine Flex Plows.

715000260

$229.99

ALPINE SUPER-DUTY DRIFT CUTTER

- Helps keep snow in the plow.
- Designed with a rear pivot point.
- Works with both Straight and One Way State Blades.

Fits: Alpine Super-Duty Plow

Left	Right
715000217	715000218
$84.99	$84.99



ALPINE SUPER-DUTY QUICK ATTACH SYSTEM

- Available as an option to upgrade Alpine Super-Duty Push Frame (715001064).
- The plow will be easy to install with this quick attach system.
- Durable with a powder-coated rust-resistant finish.

715000731

$174.99



ALPINE SUPER-DUTY PUSH FRAME EXTENSION

- 12 1/4" (31 cm) chassis extension for use with Apache 360 Track System.
- Increases angle and enables extra blade rotation.
- Fits on Alpine Super-Duty Push Frame (715001063, 715001064, 715001182 & 715001474).

703500603

$149.99

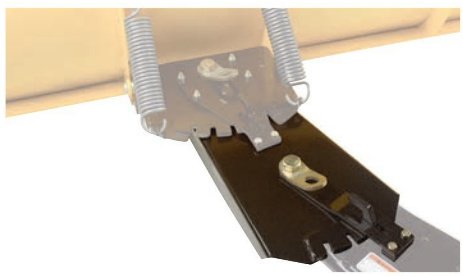

ALPINE SUPER-DUTY PULLEY KIT

- Pulley kit to be used in conjunction with the winch when using a snow plow.
- Recommended to increase winch efficiency.
- To be used with the XT Front Bumper.

Fits: Alpine Super-Duty Plow

715000279

$49.99



OTHER PLOW ACCESSORIES

ALPINE SYNTHETIC WINCH CABLE

- Specially designed for plowing applications.
- 8' (2.4 m) section of durable, extra-strong synthetic rope.
- Stands up to repeated, sharp angle pulls used to lift heavy plow blades.
- Temporarily replace your winch rope for plow season to save wear and tear on wire rope.

715000540

$39.99

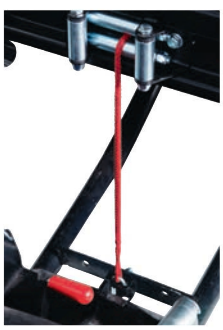

PLOW LIGHTS

- Featuring 35W H3 halogen bulbs and a lens design that achieves 110-degree beam spread to provide excellent lighting for plowing.

Fits: G2L

715000063

$69.99



PLOW ROLLER FAIRLEAD

- Larger diameter lower roller reduces wear on wire rope for plow application.
- For use with Alpine Super-Duty Plow.

Fits: G2

705005715

$59.99



REAR TIRE CHAINS

- Improve your traction in mud and snow.
- Sold in pairs.

Fits: 26" x 10" x 12"	Fits: 25" x 10" x 12"
715500218	715000225
$79.99	$79.99



COVERS, DECALS & ADD-ONS

TRAILERING COVERS

- X-attachment system.
- 300-denier solution-dyed, water-repellent 100% polyester construction.
- Fits with or without mirrors and windshield.
- Key areas are reinforced.
- Snug fitting and weather tough.

- Fits with or without trunk box and passenger seat.
- Has opening for access to the fuel tank.

Fits: G2 (except MAX models)
715001737
$194.99

Fits: G2 (MAX models only)
715001736
$219.99

- Fits with rack extensions.
- Has opening for access to the fuel tank.

Fits: G2L (except MAX models)
715002026
$194.99

Fits: G2L (MAX models only)
- Fits with passenger seat.

715002025
$219.99

- Fits with or without mirrors and windshield attachment brackets (windshield must be removed).

Fits: G2S (except X mr models)
715000683
$159.99

STORAGE COVERS

- For storage use only.
- Fits with or without windshield and mirrors.
- Heavy-duty elastic cord around bottom for secure fit.
- Snug fitting and weather tough.

- 100-denier water-repellent 100% polyester construction.
- Fits with or without trunk box and passenger seat.

Fits: G2 (except MAX models)
715001720
$144.99

Fits: G2 (MAX models only)
715001668
$154.99

- 100-denier water-repellent 100% polyester construction.

Fits: G2L (except MAX models)
715001916
$134.99

Fits: G2L (MAX models only)
715001917
$144.99

- All-season, all-weather, 300-denier solution-dyed water-repellent polyester protection for your vehicle.

Fits: G2L (except MAX models)
715001597 • Mossy Oak Break-Up Country Camo
$209.99

Fits: G2L (MAX models only)
715001735 • Mossy Oak Break-Up Country Camo
$219.99

- 100-denier water-repellent 100% polyester construction.

Fits: G2S
715000678
$109.99



LOCKABLE GAS TANK CAP
- Protects your fuel.
- Meets EPA requirements.

Fits: G2, G2L, G2S
860200387 • Black
$39.99



CUP HOLDER
- Mounts easily to handlebars or racks.

715000121
$79.99



LICENSE PLATE BRACKET
- Provides specific area to install license plate.
- Mounts to rear of vehicle.

Fits: G2L
715002498
$19.99

Fits: G2S
715001401
$19.99

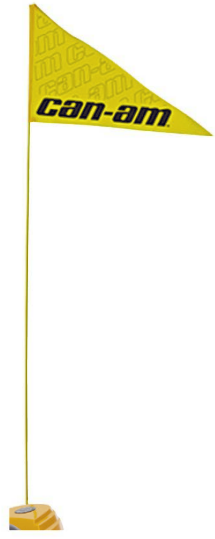

FLAG
- Make sure everyone knows what you're riding.
- Perfect for the dunes and new riders.
- 8-foot (2.4 m) length.
- Includes flag mount (715000127).

715000277 • Yellow
$24.99

FLAG MOUNT
715000127
$19.99

DECAL
- Set of 2
- 2" x 6" (5 cm x 15 cm)

704901480
$9.99

DECAL
- 9 per sheet
- 24" x 8" (60 cm x 20 cm)

704901481
$11.99

DECAL
- 6" x 12 3/4" (15 cm x 32 cm)

704901483
$13.99

DECAL
- 6" x 12 3/4" (15 cm x 32 cm)

704901484
$13.99

OUTLANDER 6X6 ACCESSORIES



OUTLANDER 6X6

APACHE 360 LT TRACK SYSTEM

- Exclusively for the 6x6.
- Cross obstacles up to 12" (30 cm).
- Enjoy superior acceleration, turning, braking, and side-hilling.
- Switch easily between enhanced attack angle or improved flotation.
- Reliable heavy-duty build.
- Can-Am designed technology.
- Delivers the highest ground clearance on the market.
- Mounting kit included.
- For winter use only.
- EC Compliant.

Fits: G2 (6x6 models only)

715002386

$5,999.99

Fits: G2 (6x6 2014-2015 models only)

619590299

$6,049.98





OUTLANDER 6X6



HARD TOP

- The hard top provides a 116 Gal (440L) cargo box.
- Locking secures your belongings.
- The cover raises assisted by gas cylinders.

Fits: G2 (6x6 models only)

715002490

$849.99



LOG BARS

- Log bars allow you to convert the cargo bed into a perfect transport space for 4' (120 cm) timber.
- The driver's safety is guaranteed by the protective front screen.

Fits: G2 (6x6 models only)

715002486

$919.99



LinQ SYSTEM™

TAILGATE EXTENSION/DIVIDER

- The sturdy tailgate extension provides a 10" (25 cm) extension to the cargo space.
- Thanks to the longer cargo bed, even large loads pose no problem.
- With the help of LinQ quick locks, the extension also acts as a solid space divider for the cargo bed.

Fits: G2 (6x6 models only)

715002488

$439.99

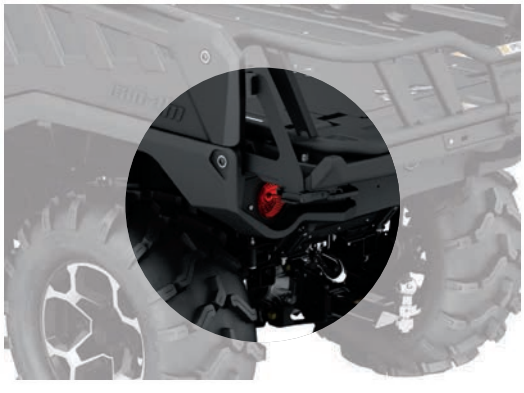

TAILGATE LIMITER KIT

- 2 L-shape brackets that hold the tailgate open horizontally.
- Keeps tailgate flush with the rest of the flatbed for longer oversized cargo.

Fits: G2 (6x6 models only)

715002534

$59.99



OUTLANDER 6X6



18 GAL (70L) UTILITY BOX

- Wherever you go and whatever you do, this handy 18 Gal (70L) utility box is your mobile storage.
- The lid keeps your equipment safe from the elements in all conditions.
- Slides under the flatbed with handles for easy access.

Fits: G2 (6x6 models only)

715002487

$439.99



FLATBED PROTECTION TUBES

- Bolt-on bumpers for the sides of the 6x6 flatbed.
- Protects the exterior plastic components of the flatbed from rocks, trees and other obstacles when traversing enclosed areas or loading cargo onto the bed.

Fits: G2 (6x6 models only)

715002489

$409.99



REAR WINCH KIT

- The remote-controlled rear winch is a godsend when you want to pull yourself out of a tough spot or move heavy loads.
- Includes a fully-sealed Warn winch and all wiring and hardware needed for an easy and quick installation.
- Pulling strength capability of 3,000 lb (1,361 kg).
- 50 ft. of 3/16" (15.2 m of 4.8 mm) wire steel cable.

Fits: G2 (6x6 models only)

715002484

$999.99



OUTLANDER 6X6



TARPAULIN

- Fitted to cover all of the items in your cargo box thoroughly.
- Prevents splash from entering cargo box.
- Easily removable for quick access.

Fits: G2 (6x6 models only)

715002491

$309.99

STORAGE COVER

(Not illustrated)

- For storage use only.
- Heavy-duty elastic cord around bottom for secure fit.
- 100-dernier polyester construction.
- Fits with or without windshield and mirrors.

Fits: G2 (6x6 models only)

715002492

$259.99



FULL BODY SKID PLATE

- A full body plastic skid plate (10 mm HDPE) designed to protect the frame and the engine case from rough terrain conditions.
- The plastic allows your ATV to slide easily over stumps and logs.

Fits: G2 (6x6 models only)

715002485

$559.99

RACING-INSPIRED. CAN-AM STYLED. WINNING LOOKS.





INTRODUCING

LONESTAR RACING CUSTOMIZED CAN-AM ACCESSORIES

LSR LONESTAR RACING For can-am

BRP and Lonestar Racing, an icon of performance renowned for their premium components, are teaming up to offer you an exclusive line of Can-Am Side-by-Side vehicle accessories. Inject a little oomph into your ride by tricking it out with any one of Lonestar Racing's distinctive accessories. Shift the look of your vehicle into overdrive with superior quality Can-Am-matched styling and turn heads the next time you turn corners.

Whether it's a customized aluminum roof, bumpers, intrusion bars or any of the other exciting racing-influenced, racer-tested accessories Lonestar Racing is creating for Can-Am, you can be sure they'll deliver the goods with a bang.

LONESTAR RACING AND CAN-AM. WOW MEETS WONDERFUL.



CATCH THE VIDEO AT STORE.CAN-AM.BRP.COM

EXCLUSIVE MAVERICK WRAP KITS

BEING A MAVERICK MEANS CHOOSING YOUR OWN PATH. SHOW OFF YOUR INDEPENDENCE WITH ANY OF THESE BOLD STATEMENTS FROM SCS.

The creative minds at SCS are constantly collaborating with BRP designers, coming up with innovative, perfectly-sized wrap designs that will complement your vehicle and refresh its look. You're unique. Your ride should be too.

BAYOU



CENTURY



URBAN



GRAFFITI



SCORPIO



STYLES





Adding doors? We can add graphics that are a perfect match to any of our Maverick Wrap Kits!

SCS wraps are of the highest quality, made with 0.004" engineering-grade vinyl overlaid with a 0.008" UV-protective laminate. That means vibrant colors, easy installation and a wrap that will hold up to the rigors of the off-road.
> SCS can even customize the color combinations; adding names, numbers and logos according to your exact specifications.
> Available for both 2-seat and 4-seat Maverick models.
> Available at participating Can-Am dealers

Produit Autorisé
Licensed Product

Available at participating Can-Am dealers and **scscanamgraphics.com**

CAN-AM SIDE-BY-SIDE VEHICLE ACCESSORIES

CHOOSE TO DO MORE.

Your Side-by-Side Vehicle is the master of multitasking – all you need to do is add versatility. Pick and choose from countless accessories that make life on and off your Can-Am a lot easier, and be ready for any job, any trail, any time.

ACCESSORY RECOMMENDATIONS

IT'S AN EASY CHOICE.

Whatever you do, and however you want to do it, we've got solutions. And we've made choosing the right accessory easier than ever. Take your pick…



P. 68-71

ACCESSORY COMPATIBILITY GUIDE

THE RIGHT FIT.

Be sure to consult our convenient Side-by-side vehicle accessory compatibility guides before outfitting your vehicle.



P. 72-73



DEFENDER

72 COMPATIBILITY GUIDE
74 HARD CAB ENCLOSURES
77 SOFT CAB ENCLOSURES
81 ROOFS
87 WINDSHIELDS
91 MIRRORS
92 DOORS
96 REAR WIND PROTECTION
99 SKID PLATES
103 BUMPERS & PROTECTION
114 CARGO & RACKS
128 LIGHTING
134 ELECTRICAL
139 WINCHES & HITCHES
148 APACHE 360 LT TRACK SYSTEM
150 PLOWS
152 COVERS & ADD-ONS



MAVERICK

72 COMPATIBILITY GUIDE
79 SOFT CAB ENCLOSURES
84 ROOFS
89 WINDSHIELDS
91 MIRRORS
94 DOORS
98 REAR WIND PROTECTION
100 SKID PLATES
106 BUMPERS & PROTECTION
121 CARGO & RACKS
128 LIGHTING
135 ELECTRICAL
139 WINCHES & HITCHES
142 PERFORMANCE
148 APACHE 360 LT TRACK SYSTEM
150 PLOWS
152 COVERS & ADD-ONS



COMMANDER

72 COMPATIBILITY GUIDE
76 HARD CAB ENCLOSURES
80 SOFT CAB ENCLOSURES
84 ROOFS
89 WINDSHIELDS
91 MIRRORS
94 DOORS
98 REAR WIND PROTECTION
102 SKID PLATES
109 BUMPERS & PROTECTION
121 CARGO & RACKS
128 LIGHTING
135 ELECTRICAL
139 WINCHES & HITCHES
142 PERFORMANCE
148 APACHE 360 LT TRACK SYSTEM
150 PLOWS
152 COVERS & ADD-ONS

THE CHOICE IS YOURS.



UTILITY

GETTING IT DONE. IT'S IN YOUR BLOOD.



DUNE

MAKING IT THERE IS GREAT. MAKING IT THERE FIRST IS BETTER.



ADVENTURE

ALONE, IT'S A RIDE. WITH FAMILY, IT'S AN ADVENTURE.

ACCESSORY PACKAGES FOR YOUR RIDE.

UTILITY ACCESSORIES

1. Bed Wall Extender p. 115
2. Headache Rack p. 114
3. Side Mirror p. 91
4. Xtreme Front Bumper Plates p. 104
5. Front Bumper p. 104
6. Front Corner Protectors p. 104
7. Half Windshield p. 88
8. Sport Roof p. 81
9. Light Rack p. 130
10. HID Lights by Hella p. 130
11. Halogen Lights by Hella p. 130



DEFENDER

DUNE ACCESSORIES

1. Sport Aluminum Roof p. 85
2. Half Windshield p. 90
3. Sport Aluminum Doors p. 95
4. Front Pre-Runner Bumper p. 108
5. Sport Rock Sliders p. 111
6. 39" (99 cm) LED Light Bar (240 Watts) p. 131
7. 17" (43 cm) LED Light Bar (100 Watts) p. 130
8. 4-Point Harness Bar p. 110
9. 4-Point Harness Driver & 4-Point Harness Passenger p. 110
10. Baja-Spare Tire Holder p. 109



MAVERICK X ds TURBO

ADVENTURE ACCESSORIES

1. Rear Wind Screen p. 98
2. Half Windshield p. 90
3. Sport Roof p. 85
4. XT Front Bumper p. 112



COMMANDER

THE CHOICE IS YOURS.

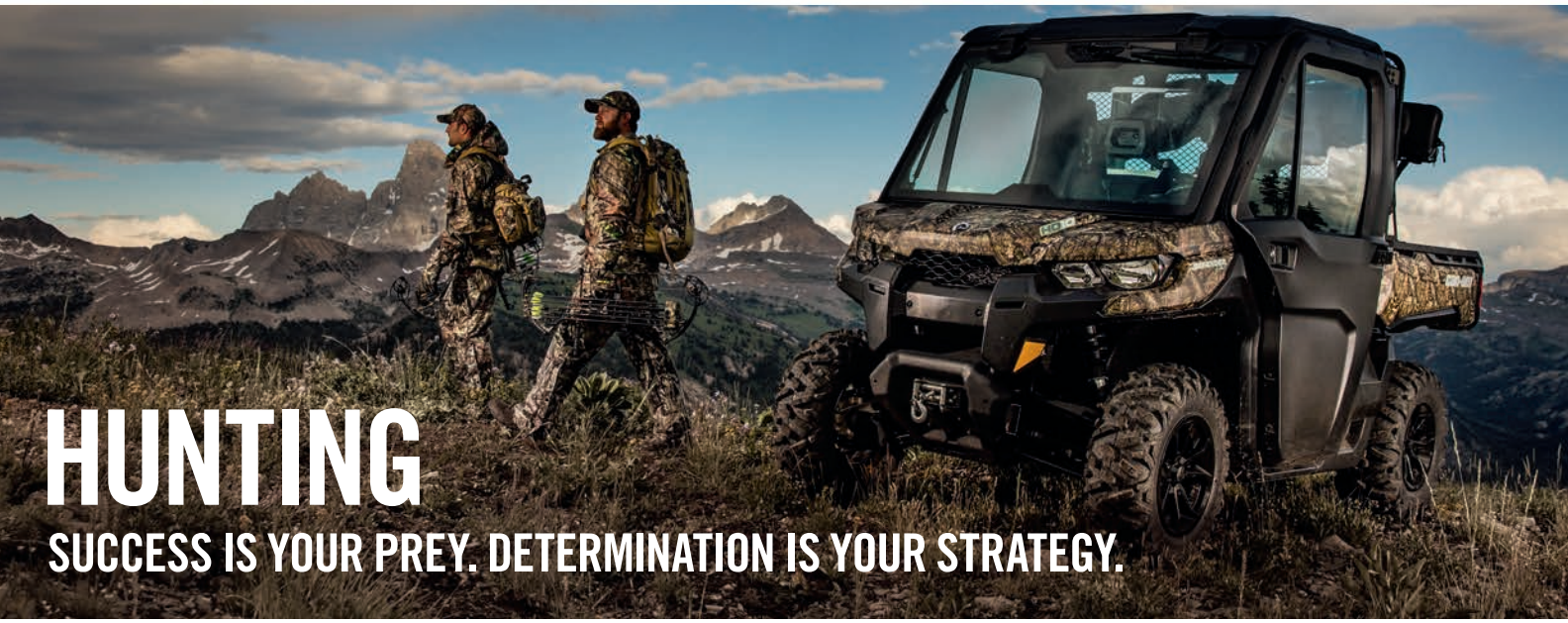

HUNTING

SUCCESS IS YOUR PREY. DETERMINATION IS YOUR STRATEGY.



MUD

MUD IS MEAN. YOU'RE MEANER.



WINTER

OTHERS HEAD SOUTH. YOU HEAD OUT.

ACCESSORY PACKAGES FOR YOUR RIDE.

HUNTING ACCESSORIES

1. Sport Roof p. 81
2. Half Windshield p. 88
3. Headache Rack p. 114
4. Front Bumper p. 104
5. Gear Rail p. 122
6. Gun Boot 6.0 Impact by Kolpin p. 121
   Gun Boot Mount by Kolpin p. 121



DEFENDER

MUD ACCESSORIES

1. Sport Aluminum Roof p. 85
2. Half Windshield p. 90
3. Front Pre-Runner Bumper p. 108
4. Rear Bumper p. 109
5. Rock Sliders p. 111
6. Radiator Protector p. 147
7. 39" (99 cm) Double Stacked LED Light Bar (270 Watts) p. 128
8. Super Extended Fender Flare p. 144
9. Snorkel Kit p. 145



MAVERICK X xc

WINTER ACCESSORIES

1. Soft Cab Enclosure p. 78
2. Apache 360 LT Track System p. 149
3. Alpine Flex Plow Kit p. 150
4. Xtreme Front Bumper Plates p. 104
5. Front Bumper p. 104
6. Front Corner Protectors p. 104
7. Side Mirror p. 91
8. Can-Am Terra 45 by Superwinch p. 139
9. Light Rack p. 130
10. Halogen Lights by Hella p. 130
11. 15” (38 cm) Double Stacked LED Light Bar (90 Watts) p. 128



DEFENDER

SIDE-BY-SIDE VEHICLES ACCESSORY COMPATIBILITY GUIDE

WE'VE MADE THINGS SUPER SIMPLE.

Determine your model year, find your model and engine configuration, and that'll reveal your platform code. This code will let you know at a glance if the accessory is compatible with your vehicle.

EXAMPLE



AIR INTAKE PRE-FILTER

- Adds extra protection to your engine in harsh riding conditions.
- Filter blocks particles larger than 0.005" (0.1 mm).
- Necessary to maintain the vehicle warranty when tracks are installed.

Fits: RS (except X mr, X ds Turbo, Turbo, X rs Turbo 2016 & up models), RU

715000953

$39.99

RS = Maverick & Maverick MAX for all option packages (DPS, XC DPS, X xc, X mr, X ds & X rs).
RU = Commander & Commander MAX for all option packages (DPS, X, XT, Mossy Oak Edition, XT-P & Limited).
UR = Defender for all option packages (DPS, XT, XT CAB)

	MODEL	ENGINE	PLATFORM
2011	Commander	800, 1000	**RU**
2012	Commander	800, 1000	**RU**
2013	Commander	800, 1000	**RU**
	Maverick	1000	**RS**
2014	Commander	800, 1000	**RU**
	Commander MAX	1000	**RU**
	Maverick	1000	**RS**
	Maverick MAX	1000	**RS**



RU



RU

	MODEL	ENGINE	PLATFORM
2015	Commander	800, 1000	**RU**
	Commander MAX	1000	**RU**
	Maverick	1000	**RS**
	Maverick MAX	1000	**RS**



RS

2016	Commander	800, 1000	**RU**
	Commander MAX	800, 1000	**RU**
	Maverick	1000	**RS**
	Maverick MAX	1000	**RS**
	Defender	HD8, HD10	**UR**



RS

2017	Commander	800, 1000	**RU**
	Commander MAX	800, 1000	**RU**
	Defender	HD8, HD10	**UR**
	Defender MAX	HD8, HD10	**UR**
	Maverick	1000	**RS**
	Maverick MAX	1000	**RS**



UR



YOU'VE GOT THE VEHICLE? WE'VE GOT THE CAB!

ADD FLEXIBILITY AND PRACTICALITY TO YOUR VEHICLE WITH OUR READY-TO-GO HARD CAB ENCLOSURES.

We've got an option that lets you enjoy your Can-Am in perfect comfort, in any season. It's totally up to you… make things really easy and choose one of our ready-to-go, ready-for-anything cab enclosures or create your own from an extensive range of components and accessories.

Mix and match to suit your exact needs by taking advantage of our innovative modular approach to cabs. There's an endless number of possible combinations, so let your imagination run wild.

DEFENDER



NEW

DELUXE XT RIGID CAB ENCLOSURE

- Rigid cab enclosure ideal for Defender XT vehicles that come stock with a roof, but also fits on Base and DPS models With the addition of a roof.
- Offers good driver and passenger protection from the elements.

Included:

- Flip Glass Windshield (715002942)
- Rear Polycarbonate Window (715002922)
- Full Doors with Power Windows (715001968)
- Wiper and Power Windows Cable (710004462)
- Roof Power Cable (715003094)
- Sport Roof Seal Kit (715003126)

Fits: UR (except MAX models)

715003482 · Black

$5,129.94

NEW

PREMIUM RIGID CAB ENCLOSURE

(Not illustrated)

- Provides driver and passenger with the best protection from the elements and the cold, and features the most complete top-of-the-line accessories our product line-up has to offer.

Included:

- Sport Roof With Liner (715002511)
- Flip Glass Windshield With Wiper and Washer Kit (715002441)
- Full Doors With Power Windows (715001968)
- Rear Glass Window With Sliding Panel (715002440)
- Wiper and Powered Windows Cable (710004462)
- Roof Power Cable (715003099)

Fits: UR (except MAX models)

715001966

$6,779.91

NEW

SPORT ROOF SEAL KIT

(Not illustrated)

Fits: UR (except MAX models)

- Necessary when installing individual cab components with Sport Roof (715002430) or when installing the front and rear roof liners (715003098, 715003099).

715003126

$29.99

100% MODULAR. IT'S YOUR CAB, YOUR WAY.

Can-Am's got a wide selection of components, so if you feel like designing your own cab, your own way, our modular system can make it happen. This is flexibility and versatility at work for you. Simply pick the windshield (p.88), doors (p.93), rear window (p.96) and roof (p.81) of your choice, and you're off. Whatever you choose to build your cab With we guarantee the components will work together, because they were designed to work together.

COMMANDER



RIGID CAB ENCLOSURE

- Encloses cab of vehicle to protect rider and passenger from the elements and cold.
- Compatible with gear rail bar with an adaptor.
- Cannot be used with Snorkel Kit (715001978).

CATCH THE VIDEO AT STORE.CAN-AM.BRP.COM

Included:

- Sport Roof (715001679)
- Full Doors (715001301)
- Glass Windshield with wiper package (715001678)
- Rear Window (715001300)

Fits: RU 2014 & up (except MAX models)

715001299

$4,299.99

100% MODULAR. IT'S YOUR CAB, YOUR WAY.

Can-Am's got a wide selection of components, so if you feel like designing your own cab, your own way, our modular system can make it happen. This is flexibility and versatility at work for you. Simply pick the windshield (p.89), doors (p.95), rear window (p.98) and roof (p.84) of your choice, and you're off. Whatever you choose to build your cab with, we guarantee the components will work together, because they were designed to work together.



YOU CHOOSE. OFF-THE-SHELF CAB ENCLOSURES OR MIX & MATCH MODULARITY.

GET MORE OUT OF YOUR CAN-AM WITH OUR SOFT CAB ENCLOSURES OR CREATE ONE OF YOUR OWN.

Looking for a complete soft cab enclosure? Or do you already have the roof and windshield and are looking to add more cab components? Either way we've got everything you need to begin getting more out of your Can-Am today.

Check out our off-the-shelf soft cabs or choose from a wide selection of soft cab components and you'll see at once that our commitment to complete modularity means everything just works. We love making your life easier.

DEFENDER



SOFT CAB ENCLOSURE

• Protection for rider and passenger from the elements.

Included:
- Bimini Roof with Sun Visor (715002918 (not sold separately)/715003030)
- Full Windshield - Hardcoated (715002432)
- Soft Doors (715002919/715003033)
- Soft Rear Panel (715002920)

Fits: UR (except MAX models)

715002917 • Black

$1,849.99

Fits: UR (MAX models only)

NEW **715003032 • Black**

$2,999.99

Included:
- Bimini Roof with Sun Visor (715002849/715003469)
- Full Windshield - Hardcoated (715002432)
- Soft Doors (715003402/715003470)
- Soft Rear Panel (715003403)

Fits: UR (except MAX models)

715003401 • Mossy Oak Break-Up Country Camo

$2,199.99

Fits: UR (MAX models only)

NEW **715003468 • Mossy Oak Break-Up Country Camo**

$3,489.99



100% MODULAR. IT'S YOUR CAB, YOUR WAY.

Can-Am's got a wide selection of components, so if you feel like designing your own cab, your own way, our modular system can make it happen. This is flexibility and versatility at work for you. Simply pick the windshield (p.88), doors (p.93), rear window (p.96) and roof (p.81) of your choice, and you're off. Whatever you choose to build your cab with, we guarantee the components will work together, because they were designed to work together.

MAVERICK



SOFT CAB ENCLOSURE

- Offers good protection from the elements for driver and passenger.
- Complete with roof, sun visor, doors, and rear panel.
- Cannot be used with Snorkel Kit (715001728).

Included:

- Bimini Roof With Sun Visor (715001198/715001965)
- Soft Doors and Rear Panel (715003451/715003525)
- Full Windshield (715001786)

Fits: RS 2014 & up (except Turbo, X mr, X ds Turbo, X rs Turbo 2016 & up & MAX models)

715003452 • Black

$1,299.99

Fits: RS 2014 & up (MAX models except Turbo, X mr, X ds Turbo & X rs Turbo 2016 & up)

NEW **715003453 • Black**

$1,999.99



SOFT DOORS & REAR PANEL

- Doors and rear panel are made of a solution dyed polyester Sur Last Series 70 for added durability.
- High UV, water and mildew resistance and has excellent tear and abrasion resistance.
- Windows are made of laminated polished vinyl material.
- Aluminum frame.
- Zip-Down windows.
- Quick and easy installation and easy to remove on hot and sunny days.
- Standard automotive type door opening.
- Can only be installed with Bimini Roof.
- Cannot be used with Snorkel Kit (715001728).
- Requires replacing half windshield with full windshield.

Fits: RS 2014 & up (except Turbo, X mr, X ds Turbo, X rs Turbo 2016 & up & MAX models)

715003451 • Black

$769.99

Fits: RS 2014 & up (MAX models except X mr, Turbo, X ds Turbo & X rs Turbo 2016 & up)

NEW **715003525 • Black**

$1,399.99

COMMANDER



SOFT CAB ENCLOSURE

- Offers good protection from the elements for driver and passenger.
- Complete with roof, sun visor, doors, and rear panel.
- Cannot be used with the Snorkel Kit (715001728).
- Cannot be used with half windshields for Commander MAX Limited.

Included:

- Bimini Roof with Sun Visor (715001198)
- Soft Doors and Rear Panel (715002438)
- Full windshield (715001697)

Fits: RU 2014 & up (except MAX models)

715003394 • Black

$1,299.99

RU 2014 & up (MAX models only)

NEW **715002105 • Black**

$1,999.99



SOFT DOORS & REAR PANEL

- Doors and rear panel are made of Series 70 Sur Last® solution-dyed polyester for added durability.
- High UV, water and mildew resistance, and excellent tear and abrasion resistance.
- Windows are made of laminated polished vinyl material.
- Aluminum frame.
- Zip-down windows.
- Quick and easy installation, and easy to remove on hot and sunny days.
- Standard automotive type door opening.
- Cannot be used with the Snorkel Kit (715001728).
- Cannot be used with half windshields for Commander MAX Limited.
- Requires replacing half windshield with full windshield.
- Can only be installed with Bimini Roof.

Fits: RU 2014 & up (except MAX models)

715002438 • Black

$769.99

Fits: RU 2014 & up (MAX models only)

NEW **715002106 • Black**

$1,399.99



DEFENDER

SPORT ROOF

• Robust injection-molded polypropylene construction.
• Provides added protection for rider and passenger from the elements.

Fits: UR (except MAX models)

715002430

$399.99

Fits: UR (MAX models only)

NEW **715003038**

$649.99



NEW

DELUXE SPORT ROOF

(Not illustrated)

• Complete roof kit provides extra driver and passenger protection and also diminishes noise within the cab.
• Perfect fit and finish thanks to the seal kit and the liners included.
• Includes Sport Roof (715002430), Sport Roof Seal Kit (715003126), Front Roof Liner (715003098) and Rear Roof Liner (715003099) .

Fits: UR (except MAX models)

715002511

$879.99



DEFENDER

NEW

BIMINI ROOF WITH SUN VISOR

- Innovative soft top comes with a hard visor which allows for storage of rolled-up soft top and permits the mounting of the Light Rack for Sport Visor.
- Offers good protection from the elements, falling debris and overhead obstacles, and excellent shade from sun and heat.

Fits: UR (MAX models only)

- UV-resistant, water-repellent and coated weather-though fabric.

715003030 • Black

$479.99

- UV-resistant, water-repellent 600-denier coated fabric.

715003469 • Mossy-Oak Break-Up Country Camo

$549.99



BIMINI ROOF WITH SUN VISOR

- Innovative soft top comes with a hard visor which allows for storage of rolled-up soft top and permits the mounting of the Light Rack for Sport Visor.
- Offers good protection from the elements, falling debris and overhead obstacles, and excellent shade from sun and heat.

Fits: UR (except MAX models)

- UV-resistant, water-repellent 600-denier solution-dyed polyester with Can-Am branding.
- Not compatible for use with soft and rigid full doors.

NEW **715003418 • Black**

$299.99

- UV-resistant, water-repellent 600-denier coated fabric.

715002849 • Mossy Oak Break-Up Country Camo

$419.99





DEFENDER

FRONT ROOF LINER

- Vehicle enhancement.
- Integrates seamlessly with roof-mounted light switch.
- Must be used for light installation on the roof.
- Must be used for radio and allows a better integration of Windshield Wiper and Washer Kit (715001638).

Fits: UR

715003098

$199.99



NEW

REAR ROOF LINER

- Quick and easy vehicle enhancement.
- Allows better integration of other accessories installed on the roof.
- Needs to be installed with Sport Roof (715002430).

Fits: UR

715003099

$249.99

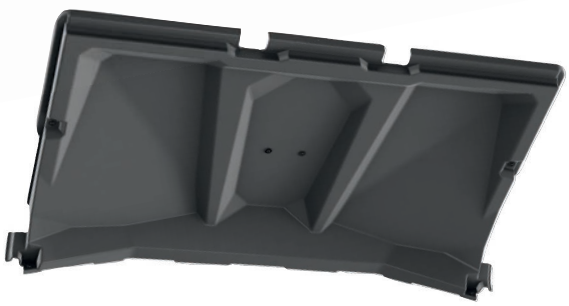



MAVERICK COMMANDER

CATCH THE VIDEO AT STORE.CAN-AM.BRP.COM

NEW

LONESTAR RACING ALUMINUM ROOF

- 0.083" (2.1 mm) thick aluminum roof.
- Durable and lightweight.
- Enhances the vehicle's racing appearance thanks to an authentic sporty look combined with unique eye-popping graphics.
- Not compatible with light racks and with full windshields.
- Offers you protection from the elements with a personalized touch.
- "Lonestar Racing for Can-Am" branded.

Fits: RS 2014 & up, RU 2014 & up (except MAX models)

- 715003590 • Manta Green
- 715003805 • Octane Blue
- 715003806 • Can-Am Red

$479.99

Fits: RS, RU (MAX models only)

- 715003591 • Manta Green
- 715003807 • Octane Blue
- 715003808 • Can-Am Red

$699.99



MAVERICK COMMANDER

SPORT ALUMINUM ROOF



- Formed aluminum roof 2.25 mm thick.
- Durable and lightweight.
- Sporty look.
- Not compatible with full windshields (715001678, 715001697, 715001698, 715001786, 715001787).
- Not compatible with Intrusion Bar (715002979 715002980, 715002863).

Fits: RS 2013 & up, RU (except MAX models)

715001659 • Bare Aluminum

$579.99

SPORT ROOF



- Excellent protection from the elements.
- Thermoformed TPO construction.
- Can be assembled with Light Rack for Cage or Sport Roof (715001686 or 715001094).

Fits: RS, RU (except MAX models)

715003061 • Mossy Oak Break-Up Country Camo
715001444 • Next G-1 Vista Camo

$849.99

715001679 • Black

$499.99

SPORT ROOF WITH SKYLIGHT

- Roof for protection against the elements without compromising exposure to natural outside light.
- Thermoformed TPO construction.
- Tinted skylight.
- Can be assembled with Light Rack for Sport Roof (715001686 or 715001094).

Fits: RS, RU (MAX models only)

715001967 • Black
715002504 • Light Grey

$849.99



ROLL CAGE COVER

- Plastic cover shields roll cage.
- Gives a color accent and more a finished look.
- Standard on Maverick MAX X rs DPS and XT models.

Fits: RS, RU

705009840 • Octane Blue
705009841 • Viper Red
705008450 • Black
705008976 • Can-Am Red
705007956 • White
705007955 • Yellow

$129.99



DELUXE CONVERTIBLE ROOF

- Ultimate in protection, style and integration.
- Twinsheet HDPE manufacturing delivers premium look, and complete coverage when combined with Sport Visor.
- Quick-attach bracket procures fast, easy and tool-less installation and removal.

Fits: RS 2013, RU 2011-2013 (except MAX models)

715001306 • Red
715001478 • Black
715001479 • Yellow

$499.99

Fits: RS 2014 & up, RU 2014 & up (except MAX models)

715001951 • Red
715001949 • Black
715001950 • Yellow
715002503 • Light Grey

$499.99

SPORT VISOR

- Twinsheet HDPE sport visor complete with integrated driver and passenger inner storage pockets.
- Required for installation of Light Rack (715001718 or 715001687).
- Complete with integrated light switch knock outs.
- Creates full roof for maximum element protection when combined with the Deluxe Convertible Roof.
- Easy installation and removal.
- Can be used in conjunction with any windshield.

Fits: RS 2013, RU 2011-2013

- Standard on Limited model.

715000762 • Black

$319.99

Fits: RS 2014 & up, RU 2014 & up

715001952 • Black
715002502 • Light Grey

$319.99

MAVERICK COMMANDER

BIMINI ROOF WITH SUN VISOR

- Soft top with hard visor.
- Allows user to stow the soft top on the hard visor.
- Hard visor allows the possibility of installing the light rack.
- UV-resistant, water-repellent 600-denier solution-dyed polyester with Can-Am branding.

Fits: RS, RU (except MAX models)

715001198 • Black

$259.99

NEW **715001316 • Mossy Oak Break-Up Country Camo**

$279.99

Fits: RS, RU (MAX models only)

715001965 • Black

$329.99





CATCH THE VIDEO AT
STORE.CAN-AM.BRP.COM

MESH ROOF

- Provides protection from falling debris and overhead obstacles.
- UV-resistant with Can-Am branding.
- Velcro† straps for quick and easy installation.
- Allows user to stow the soft top on the cage.
- Compatible with Light Rack for Cage or for Sport Roof (715001094, 715001686).

Fits: RS, RU (except MAX models)

715003130

$99.99



SOFT ROOF

- Provides protection from falling debris and overhead obstacles.
- UV-resistant, water-repellent 600-denier solution-dyed polyester with Can-Am branding.
- Velcro straps for quick and easy installation.
- Roof can be folded on the cage.
- Compatible with Light Rack for Cage or for Sport Roof (715001094, 715001686).
- Allows user to stow the soft top on the cage.

Fits: RS, RU (except MAX models)

715003395

$99.99





DEFENDER



NEW

FLIP GLASS WINDSHIELD WITH WIPER & WASHER KIT

- Curved and laminated glass full windshield in metal frame.
- Provides excellent optical clarity.
- Seals firmly against the cage and protects rider and passenger from the elements while allowing for controlled airflow.
- 3-position flip can be set at fully closed, ¼ open, or fully open.
- Ideal for muddy conditions.
- Gas-shock-assisted operation and pivots on 2 hinges located at the top of the windshield.
- Single-speed wiper with washer fluid dispenser.
- Requires Wiper and Power Cable (710004462) and Roof Power Cable (715003094).
- Not EC compliant.

Fits: UR

715002441

$1,599.99



MUST HAVE

NEW

FLIP GLASS WINDSHIELD

- Curved and laminated glass full windshield in metal frame.
- Provides excellent optical clarity.
- Seals firmly against the cage and protects rider and passenger from the elements while allowing for controlled airflow.
- 3-position flip can be set at fully closed, ¼ open, or fully open.
- Gas-shock-assisted operation and pivots on 2 hinges located at the top of the windshield.
- Ideal for muddy conditions.
- Can be used with Windows Wiper & Washer Kit (715001638).
- Not EC compliant.

Fits: UR

715002942

$1,149.99

NEW

WIPER AND POWER WINDOWS CABLE

(Not illustrated)

- Required to install Full Doors with Power Windows (715001968) and/or Windshield Wiper and Washer Kit (715001638).
- Necessary if you want to build your own cab enclosure from modular components.

Fits: UR

710004462

$59.99

NEW

WINDSHIELD WIPER AND WASHER KIT

- An ideal way to keep your windshield clear in rain, or while riding through mud and water.
- Single-speed one-wiper installation includes washer fluid dispenser and mounting on windshield frame.
- Must be used with the Glass Windshield (715001303) or Flip Glass Windshield (715002942).
- Requires Wiper and Power Windows Cable (710004462) and Roof Power Cable (715003094).
- Not EC compliant.

Fits: UR

715001638

$549.99



DEFENDER



NEW

FLIP WINDSHIELD - HARDCOATED

- High-impact-resistant Makrolon hardcoated polycarbonate full windshield in metal frame.
- Provides excellent optical clarity and better abrasion resistance.
- Seals firmly against the cage and protects rider and passenger from the elements while allowing for controlled airflow.
- 3-position flip can be set at fully closed, ¼ open, or fully open.
- Gas-shock-assisted operation.
- Ideal for muddy conditions.

Fits: UR

715002442

$849.99



NEW

GLASS WINDSHIELD

- Curved and laminated glass full windshield in metal frame.
- Seals firmly against the cage and protects rider and passenger from the elements while providing excellent optical clarity.
- Must be used with Windshield Wiper and Washer Kit (715001638) to maintain clear visibility during severe riding conditions, such as mud riding.
- Not EC compliant.

Fits: UR

715001303

$899.99



FULL WINDSHIELD-HARCOATED

- High-impact-resistant Makrolon hardcoated polycarbonate full windshield.
- Provides excellent optical clarity and better abrasion resistance.
- Protects driver and passenger from the elements.
- Quick and easy tool-less installation or removal.

Fits: UR

715002432

$539.99



FULL WINDSHIELD

- High-impact-resistant durable polycarbonate full windshield.
- Formulated to be non-yellowing, non-crazing, non-cracking with excellent UV resistance and optical clarity.
- Protects driver and passenger from the elements.
- Quick and easy tool-less installation or removal.

Fits: UR

715002431

$359.99

HALF WINDSHIELD

- High-impact-resistant durable polycarbonate half-windshield.
- Formulated to be non-yellowing, non-crazing, non-cracking with excellent UV resistance and optical clarity.
- Protects driver and passenger from the elements.
- Features reverse angle lip to deflect air flow.
- Quick and easy tool-less installation or removal.
- Not compatible with Soft Doors.

Fits: UR

715002433

$229.99



MAVERICK COMMANDER

FLIP WINDSHIELD

- Made of thick 6 mm polycarbonate.
- 3-position flip can be set at fully closed, 1/4 open or 1/2 open.
- Allows rider to obtain the air flow of a half windshield with the protection of a full windshield without changing any parts.
- Top can be removed without tools.
- Windshield pivots on 2 fixed points on cage.
- Ideal for muddy conditions.

Fits: RS	Fits: RU
715002465	715002466
$509.99	$509.99

MUST HAVE



CATCH THE VIDEO AT STORE.CAN-AM.BRP.COM



MAVERICK COMMANDER

HALF WINDSHIELD

- High-impact-resistant durable polycarbonate.
- Non yellowing, non crazing, non cracking with excellent UV resistance and optical clarity.
- Protects driver and passenger from the elements.
- Features reverse angle lip to deflect air flow.
- Quick-attach brackets procure fast, easy and tool-less installation and removal.
- Not compatible with Full Doors.

Fits: RS
715001653
$239.99

Fits: RU
715001696
$219.99



GLASS WINDSHIELD WITH WIPER & WASHER KIT

- Glass windshield with wipers and washer fluid dispenser.
- Metal frame with D.O.T. approved glass.
- Wide coverage (2 wipers).
- 2-speed wiper control.
- Windshield washer tank integrated in the vehicle service center.
- Requires power cable (715002036) for Commander MAX.

Europe:
- Not EC compliant.
- Requires Defrost, Heat and Ventilation System (715001390) for installation on EC homologated vehicles.

Fits: RU
715001678
$1,169.99



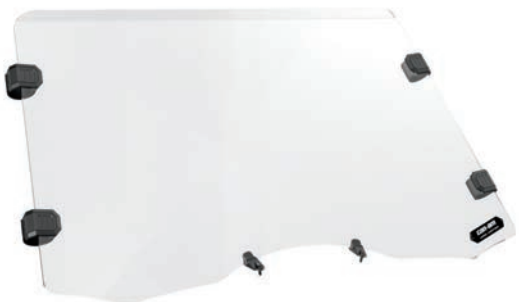

FULL WINDSHIELD - HARDCOATED

- High-impact-resistant Makrolon hardcoated polycarbonate full windshield.
- Quick-attach brackets procure fast, easy and tool-less installation and removal.
- Provides excellent optical clarity and better abrasion resistance.
- Protects driver and passenger from the elements.

Fits: RS
715001787
$559.99

Fits: RU
715001698
$539.99



FULL WINDSHIELD

- High-impact-resistant polycarbonate full windshield.
- Non yellowing, non crazing, non cracking with excellent UV resistance and optical clarity.
- Quick-attach brackets procure fast, easy and tool-less installation and removal.
- Protects driver and passenger from the elements.

Fits: RS
715001786
$389.99

Fits: RU
715001697
$359.99

DEFENDER

SIDE MIRROR

- Molded heavy-duty aluminum mirror.
- Stays in place on rough trails.
- Ball-joint design for steady multi-angle adjustment and outstanding vision.
- Use with or without roof, or windshield.
- Not for road use.
- Fits either side.
- Sold individually.

Fits: UR

715002459

$99.99





PANORAMIC CENTER MIRROR

- Wide-angle convex mirror.
- Offers enhanced visibility.
- Can be used with or without roof or windshield.

Fits: UR

715002512

$79.99

MAVERICK COMMANDER

ALUMINUM SIDE MIRROR

- Molded heavy-duty aluminum mirror.
- Stays in place on rough trails.
- Ball-joint design for steady multi-angle adjustment and outstanding vision.
- Use with or without roof, or windshield.
- Not for road use.
- Fits either side.
- Not compatible with Cab Enclosure.
- Sold individually.

Fits: RS, RU

715002091

$99.99



ALUMINUM CENTER REARVIEW MIRROR

- Molded heavy-duty central aluminum mirror.
- Stays in place on rough trails.
- Ball-joint design for steady multi-angle adjustment and outstanding vision.
- Not compatible with Light Rack for Cage or for Sport Roof (715001686, 715001094).
- Not for road use.

Fits: RS, RU

715002220

$119.99



MIRROR FOR CAB ENCLOSURE

- Large mirror for better visibility.
- Sold in pairs.
- Full Doors (715001301) or Rigid Cab Enclosure (715001299) required for installation.

715002544

$134.99



PANORAMIC CENTER MIRROR

- Convex mirror for wide angle visibility.
- Can be used with or without roof and windshields.

Fits: RS, RU

715000956

$79.99



SIDE MIRROR

- Includes clamp for installation on cage.
- Not compatible with Cab Enclosure.

Fits: RS, RU

Left	Right
715001192	715001418
$99.99	$99.99



REARVIEW MIRROR

- Car-type mirror.
- Can be used with or without roof and windshields.
- Not compatible with Light Rack for Cage or for Sport Roof (715001686, 715001094).

Fits: RS, RU

715001191

$99.99




HD10
can-am

DEFENDER

NEW

FULL DOORS WITH POWER WINDOWS

- Made from robust high-density polyethylene.
- Offer excellent protection from the elements.
- Easy to remove on hot and sunny days.
- Lockable doors with convenient integrated storage areas.
- Doors' curved-design provides even more roominess.
- Rear hinge wide opening for ease of ingress/egress in the cockpit.
- Power window delivers added ventilation.
- Compatible with all BRP windshields.
- Require Wiper and Power Windows Cable (710004462) and Roof Power Cable (715003094).
- Sport Roof Seal Kit (715003126) is required.

Fits: UR

715001968

$3,499.99



SOFT DOORS

- Steel-reinforced frame.
- Offer good protection from the elements.
- Rear hinge wide opening for ease of ingress/egress in the cockpit.
- Zippered windows for added ventilation.
- Easy to remove on hot and sunny days.
- Compatible with all BRP roofs, windshields, and mirrors.
- Not compatible with half windshield.

Fits: UR (except MAX models)

- Coated weather-tough and water-repellent fabric.

715002919 • Black

$939.99

- 600-denier weather-tough and water-repellent fabric.

715003402 • Mossy Oak Break-Up Country Camo

$1,099.99

Fits: UR (MAX models only)

- Coated weather-tough and water-repellent fabric.

NEW **715003033 • Black**

$1,849.99

- 600-denier weather-tough and water-repellent fabric.

NEW **715003470 • Mossy Oak Break-Up Country Camo**

$2,159.99







MAVERICK COMMANDER

NEW

SPORT HALF DOORS

- Half doors made of plastic.
- Metal frame for a higher level of fit and finish and rigidity.
- Rear hinge wide opening for ease of ingress/egress in the cockpit.
- ROHVA compliant.
- Interior pockets and liners for more protection.

Fits: RS, RU

- Sold in pairs.

715002930

$649.99

Fits: RS, RU (MAX models only)

- Includes 4 doors.

715003376

$1,149.99



MUST HAVE

MAVERICK COMMANDER

SPORT ALUMINUM DOORS

- Made of lightweight aluminum.
- Rotary latch and rear hinge wide opening for ease of ingress/egress in the cockpit.
- Powder coated black.

Fits: RS 2013, RU 2011-2013
715001658
$719.99

Fits: RS, RU 2014 & up
715002115
$719.99

Fits: RS, RU (MAX models only)
715001958
$1,299.99





CATCH THE VIDEO AT
STORE.CAN-AM.BRP.COM

PADDED STORAGE FOR SPORT ALUMINUM DOORS

- Padded door cushion with integrated pocket for storage.
- Protects driver and passenger legs from banging against doors during ride.
- Offers storage space for small items.

Fits: RS, RU 2014 & up
715002351 • Front
$144.99

Fits: RS, RU (MAX models only)
715002405 • Rear
$144.99



COMMANDER



FULL DOORS

- Made from durable polyethylene.
- Sliding side glass window for better ventilation.
- Lockable doors.
- Provide the best protection from the elements.
- Compatible with Sport and Deluxe Roofs.
- Keep you warm on cold days.
- Easy to remove on hot and sunny days.
- Can be used with glass windshield or full polycarbonate windshield.
- Do not fit with Bimini Roof, Rear Nets and Flip Windshield.

Fits: RU 2014 & up (except MAX models)
715001301
$2,499.99



REAR WIND PROTECTION

DEFENDER

NEW

REAR GLASS WINDOW WITH SLIDING PANEL

- Made of high-strength tempered glass.
- Ideal for preventing backdraft of dust or rain in harsh environments.
- Sliding panel for enhanced ventilation.
- Quick and easy tool-less installation.
- Sport Roof (715002430 or 715003038) required for installation.

Fits: UR

715002440

$699.99



DEFENDER



REAR WIND SCREEN

- Black full rear mesh reduces windshield backdraft.
- Roll-bar mounted.
- Can-Am branded.

Fits: UR

715002851

$89.99



SOFT REAR WINDOW

- Clear, flexible window made from transparent vinyl.
- Resists cold-cracking to -4°F (-20°C).
- Ideal for preventing backdraft of dust or rain in harsh environments.
- Velcro straps for quick and easy installation.

Fits: UR

715003249

$104.99



REAR GLASS WINDOW

- Made of high-strength tempered glass.
- Ideal for preventing backdraft of dust or rain in harsh environments.
- Quick and easy tool-less installation.
- Sport Roof (715002430 or 715003038) required for installation.

Fits: UR

715003009

$449.99



REAR POLYCARBONATE WINDOW

- High-impact-resistant polycarbonate window.
- Ideal for preventing backdraft of dust or rain in harsh environments.
- Quick and easy tool-less installation.
- Sport Roof (715002430 or 715003038) required for installation.

Fits: UR

715002922

$349.99

SOFT REAR PANEL

- Offers good protection from the elements.
- Resists cold-cracking to -22 °F (-30 °C).
- Compatible with all BRP roofs and doors.
- Easy-to-remove when installed with Bimini Roof.
- Steel-reinforced frame.

Fits: UR

- Coated weather-tough and water-repellent fabric.

715002920 • Black

$199.99

- 600-denier weather-tough and water-repellent fabric.

715003403 • Mossy Oak Break-Up Country Camo

$239.99





MAVERICK COMMANDER



REAR WIND SCREEN

- Full rear mesh coverage reduces windshield backdraft.
- Roll-bar mounted.
- White Can-Am logo on black mesh.
- Not Snorkel Kit compatible.
- Standard on Limited model.

Fits: RS (Turbo, X ds Turbo & X rs Turbo 2016 & up models only)
715002552
$89.99

Fits: RS (Turbo, X ds Turbo & X rs Turbo 2016 & up models only), RU
715003078
$89.99



SOFT REAR WINDOW

- Clear soft window made from see-through vinyl with cold cracking resistance to temperatures down to -4°F (-20°C).
- Prevents dust and rain from drafting back into the vehicle in harsh riding environments.
- Quick installation with 2" (5 cm) Velcro straps.

Fits: RS 2013, RU 2011-2013 (except MAX models)
715001373
$104.99

Fits: RS 2014 & up (except MAX models & X mr, Turbo, X ds Turbo, X rs Turbo 2016 & up), RU 2014 & up (except MAX models)
715003131
$104.99

Fits: RS (MAX models only except X mr, X ds Turbo, X rs Turbo 2016 & up), RU (MAX models only)
715002035
$104.99



REAR WINDOW

- Durable polyethylene frame and polycarbonate window.
- Quick and easy installation.
- Protects rear of cabin, like the rear windshield on a car.
- Same model as in Cab Enclosure.
- Not compatible with Harness Bars (715002953, 715002954, 715002955 and 715002535).
- Compatible with Gear Rail.

Fits: RS 2014 & up (except Turbo, X mr, X ds Turbo, X rs Turbo 2016 & up & MAX models)
715002856
$379.99

Fits: RS (MAX models only except X mr, X ds Turbo, X rs Turbo 2016 & up)
715002857
$399.99

Fits: RU 2014 & up (except MAX models)
715001300
$379.99

Fits: RU (MAX models only)
715002119
$399.99



REAR WINDOW NET

- Net designed to look sharp.
- Rally / Race inspired design.
- Installs in a snap.
- 2" (5 cm) Velcro straps.
- Mounts to roll over protective cage.

Fits: RS 2013, RU 2011-2013
715000832 • Black
$104.99

Fits: RS 2014 & up (except X ds Turbo), RU 2014 & up
715003132
$104.99

DEFENDER

ALUMINUM SKID PLATES

For ultimate durability and strength, all our Aluminum Skid Plates are made with High Strength 5052 H32 Aluminum 3/16" (4.5 mm) thick.

CATCH THE VIDEO AT STORE.CAN-AM.BRP.COM

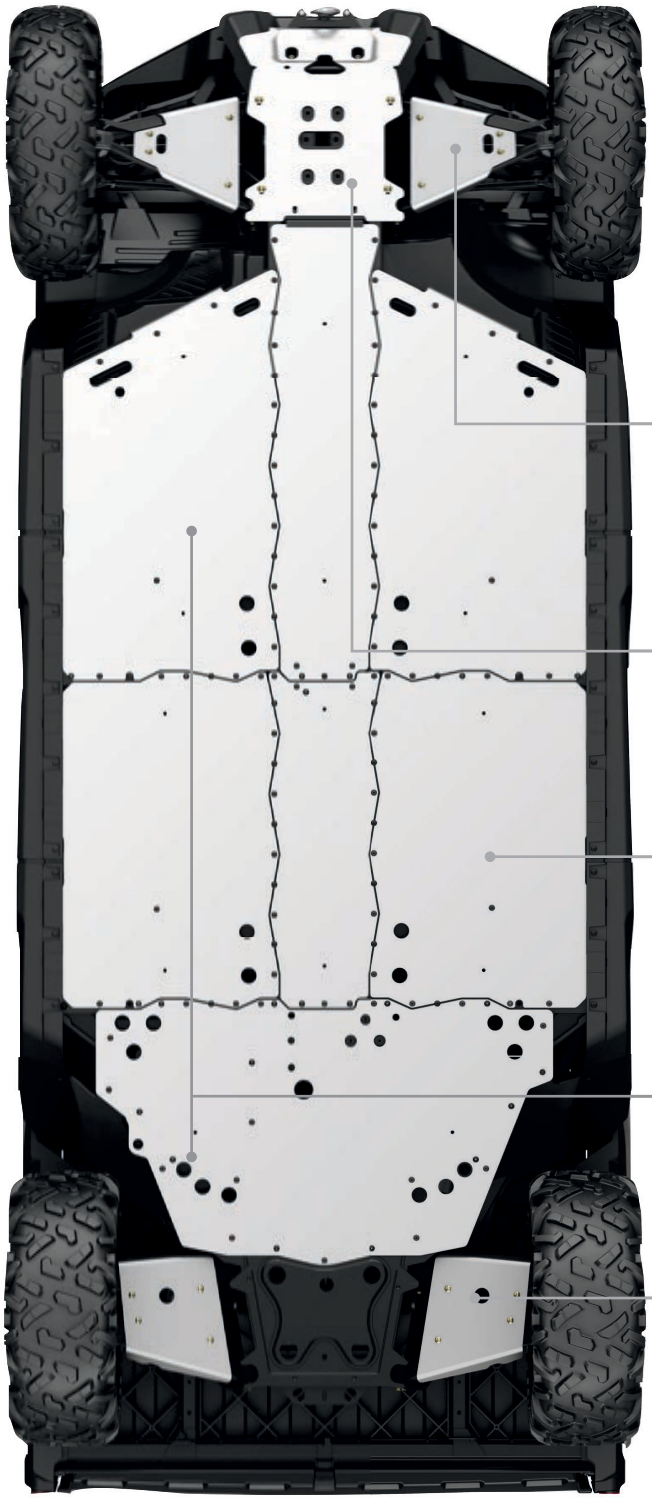

UR (MAX models only)	UR (excpet MAX models)

ALUMINUM SKID PLATE PROTECTION KIT

INCLUDES:
- Front A-Arm Protectors
- Rear A-Arm Protectors
- Front Skid Plate
- Central Skid Plate
- Underbelly Skid Plate Kit

715003712	715003711
$1,609.95	$1,229.99

INDIVIDUAL ALUMINUM SKID PLATES

FRONT A-ARM PROTECTORS

- Extra underside protection for your vehicle's steering mechanism and suspension (A-Arm).
- Can-Am branded.
- Sold in pairs.

715002444	715002444
$144.99	$144.99

FRONT SKID PLATE

- Protects the front underside of your vehicle when riding in rough terrain conditions.
- Adds style to the front of your vehicle.
- Can-Am branded.

715002447	715002447
$184.99	$184.99

NEW CENTRAL SKID PLATE

- Central skid plate kit includes central and lateral skid plates.
- Ultra-durable protection for the underside of your vehicle.
- Makes work easy in more demaning terrain.
- Must be used with Underbelly Skid Plate Kit (715002446).
- For MAX models only.

715003467	715003467
$379.99	$379.99

UNDERBELLY SKID PLATE KIT

- Ultra-durable protection for the underside of your vehicle.
- Makes work easy in more demanding terrain.
- Kit includes central, lateral and rear skid plates.

715002446	715002446
$749.99	$749.99

REAR A-ARM PROTECTORS

- Extra underside protection for your vehicle's suspension (A-Arm).
- Can-Am branded.
- Sold in pairs.

715002445	715002445
$149.99	$149.99

MAVERICK

HMWPE SKID PLATES

Lighter than aluminum. 3/8" (9.5 mm) High Molecular Weight Polyethylene (HMWPE) that glides smoothly and silently over obstacles.

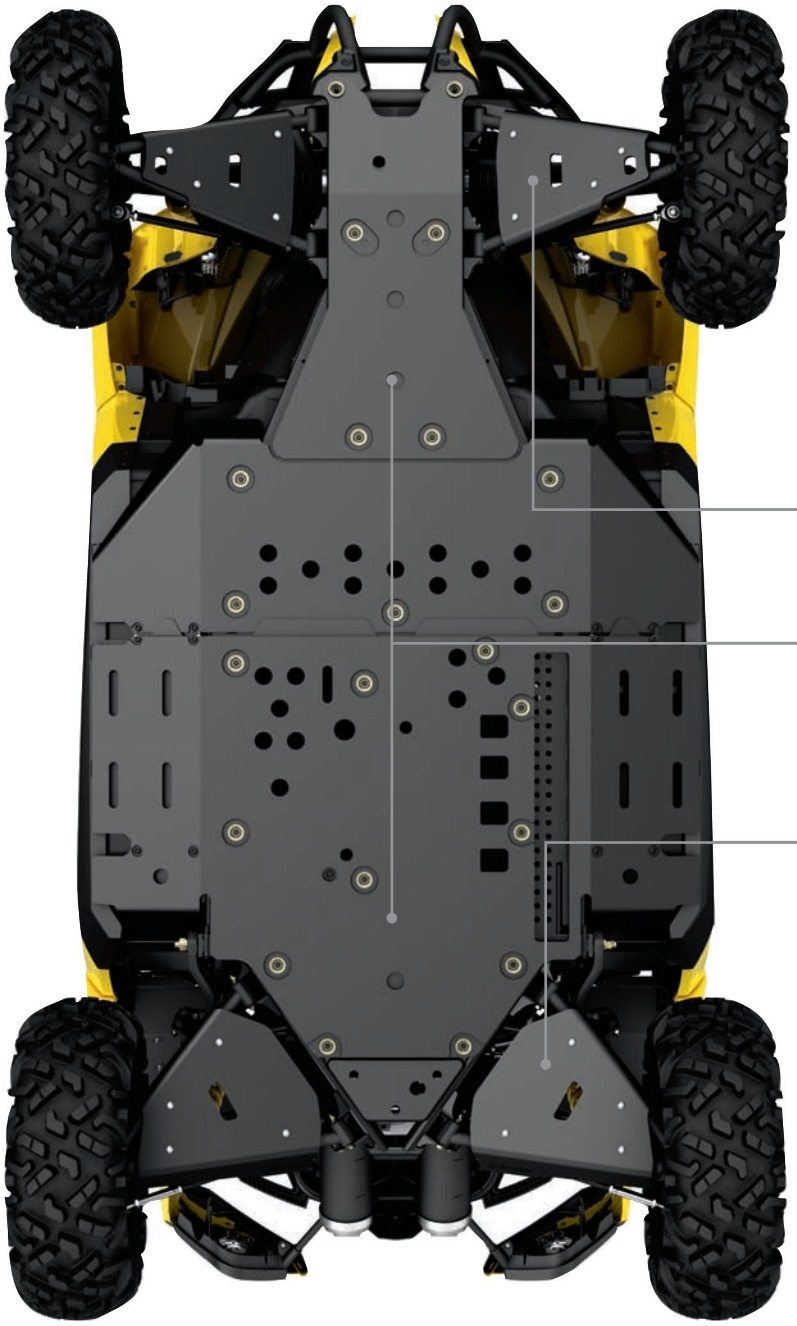

FIND YOUR PLATFORM

RS, RS X RS 2015 & PRIOR (EXCEPT MAX & X MR MODELS)	RS, RS X RS 2015 & PRIOR (MAX MODELS ONLY)	RS X XC, RS X C (EXCEPT MAX MODELS)	RS X DS, RS X RS 2016 & UP

HMWPE PLASTIC SKID PLATE PROTECTION KIT

INCLUDES:
- Front A-Arm Protectors
- Rear A-Arm Protectors
- Underbelly Plates

NEW 715004208 $919.99			

INDIVIDUAL HMWPE PLASTIC SKID PLATES

FRONT A-ARM PROTECTORS

715002100 $154.99	715002100 $154.99		715002100 $154.99

UNDERBELLY PLATES

- Includes front, central and rear skid plates.

715002109 $599.99		715002109 $599.99	

REAR A-ARM PROTECTORS

715002101 $164.99	715002101 $164.99		

MAVERICK

ALUMINUM SKID PLATES

For ultimate durability and strength all our Aluminum Skid Plates are made with High Strength 5052 H32 Aluminum 3/16" (4.5 mm) thick.

Maverick MAX illustrated

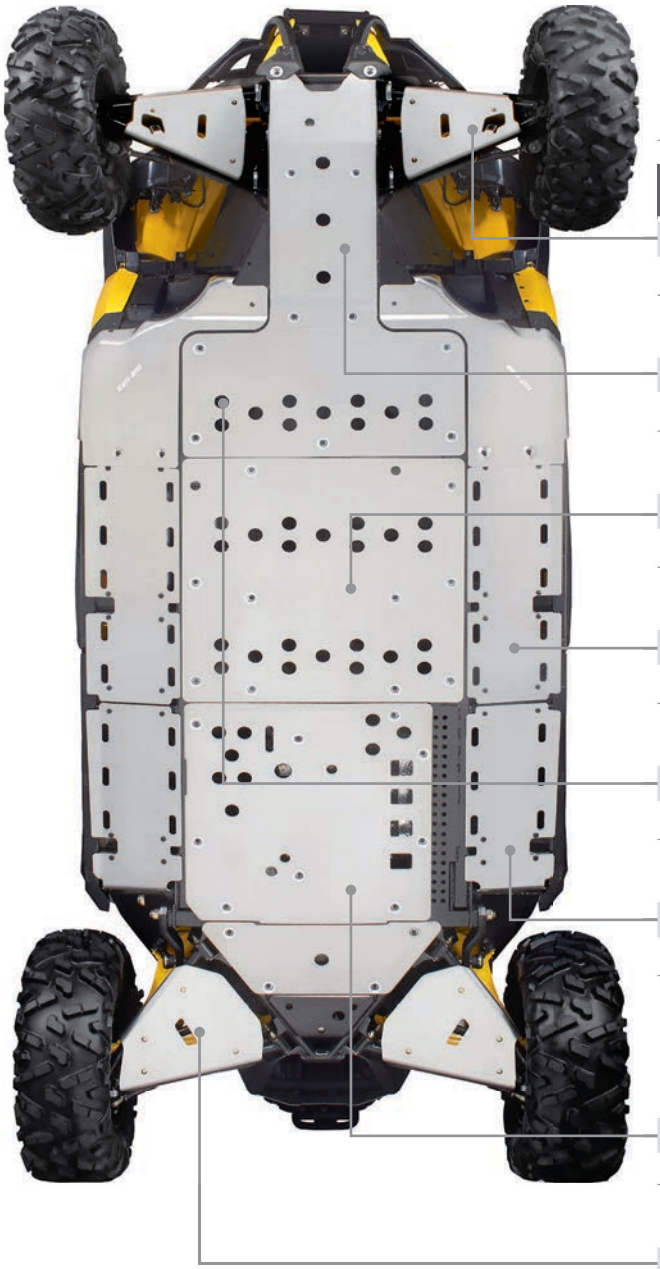

FIND YOUR PLATFORM

RS, RS X RS 2015 & PRIOR (EXCEPT MAX & X MR MODELS)	RS, RS X RS 2015 & PRIOR (MAX MODELS ONLY)	RS X DS, ALL TURBO MODELS (EXCEPT MAX MODELS)	RS X XC, RS XC (EXCEPT MAX MODELS)	RS X DS, RS X RS 2016 & UP (EXCEPT MAX MODELS)	RS X DS, RS X RS 2016 & UP (MAX MODELS ONLY)

ALUMINUM SKID PLATE PROTECTION KIT

INCLUDES:
- Front A-Arm Protectors
- Lateral Central Skid Plates (MAX only)
- Central Skid Plate (MAX only)
- Front Skid Plate
- Rear Lateral Skid Plates
- Rear Skid Plates
- Rear A-Arm Protectors

715002131 $1,099.94	715002132 $1,494.92	715003127 (Turbo) $1,164.94	715002294 $1,099.94	715002514 $1,159.94 715003127 (Turbo) $1,164.94	715002558 $1,554.92 715003313 (Turbo) $1,559.92

INDIVIDUAL ALUMINUM SKID PLATES

FRONT A-ARM PROTECTORS

- Sold in pairs.
- Can-Am logo.

715001639 $144.99	715001639 $144.99	715001639 $144.99	715002021 $144.99	715001639 $144.99	715001639 $144.99

FRONT SKID PLATE

- Can-Am logo.

715001641 $184.99	715001641 $184.99	715001641 $184.99	715001641 $184.99	715001641 $184.99	715001641 $184.99

CENTRAL SKID PLATE - MAVERICK MAX ONLY (INCLUDED IN COMPLETE KIT)

- Can-Am logo.

	715001969 $209.99				715001969 $209.99

LATERAL CENTRAL SKID PLATES - MAVERICK MAX ONLY (INCLUDED IN COMPLETE KIT)

- Sold in pairs.
- Can-Am logo.

	715001970 $184.99				715001970 $184.99

FRONT LATERAL SKID PLATES

- Sold in pairs.
- Can-Am logo.

715002494 $229.99	715002494 $229.99	715002494 $229.99	715002494 $229.99	715002494 $229.99	715002494 $229.99

REAR LATERAL SKID PLATES

- Sold in pairs.
- Can-Am logo.

715001640 $154.99	715001640 $154.99	715003128 (Turbo) $159.99	715001640 $154.99	715001640 $154.99 715003128 (Turbo) $159.99	715001640 $154.99 715003128 (Turbo) $159.99

REAR SKID PLATES

- Can-Am logo.

715001643 $219.99	715001643 $219.99	715002515 $259.99	715001643 $219.99	715002515 $259.99	715002515 $259.99

REAR A-ARM PROTECTORS

- Sold in pairs.
- Can-Am logo.

715001644 $164.99	715001644 $164.99	715002516 $184.99	715002022 $164.99	715002516 $184.99	715002516 $184.99

COMMANDER

ALUMINUM SKID PLATES

For ultimate durability and strength all our Aluminum Skid Plates are made with High Strength 5052 H32 Aluminum 3/16" (4.5 mm) thick.

Commander MAX illustrated

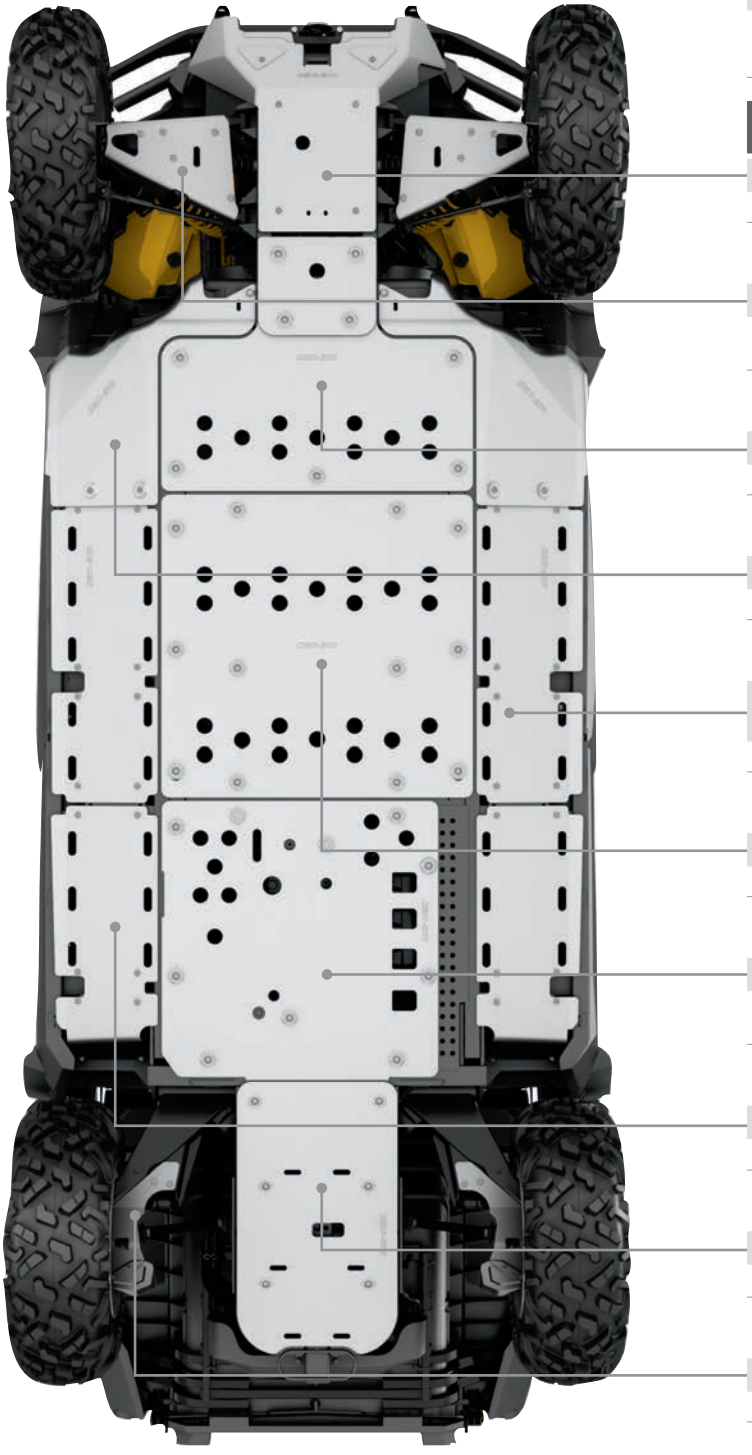

FIND YOUR PLATFORM

RU 2015 & UP (EXCEPT MAX MODELS)	RU 2011-2014 (EXCEPT MAX MODELS)	RU (MAX MODELS ONLY)

ALUMINUM SKID PLATE PROTECTION KIT

INCLUDES:
- Front Skid Plate
- Central Skid Plate
- A-Arm Protectors
- Rear Skid Plate
- Front Lateral Skid Plates
- Trailing Arm Protectors

715002735	715002130	715002133
$1,199.99	$1,014.99	$1,594.99

INDIVIDUAL ALUMINUM SKID PLATES

FRONT SKID PLATE

- Can-Am logo.

715000692	715000692	715000692
$184.99	$184.99	$184.99

A-ARM PROTECTORS

- Aluminum A-arm plates and plastic deflectors provide essential protection and aggressive look.
- Sold in pairs.
- Can-Am logo.

715000660	715000660	715000660
$124.99	$124.99	$124.99

FRONT CENTRAL SKID PLATE

- Can-Am logo.

715001996		715001996
$154.99		$154.99

FRONT LATERAL SKID PLATES

- Sold in pairs.
- Can-Am logo.

715002494	715000950	715002494
$229.99	$209.99	$229.99

LATERAL CENTRAL SKID PLATES - COMMANDER MAX ONLY (INCLUDED IN COMPLETE KIT)

- Sold in pairs.
- Can-Am logo.

		715001970
		$184.99

CENTRAL SKID PLATE - COMMANDER MAX ONLY (INCLUDED IN COMPLETE KIT)

- Can-Am logo.

		715001969
		$209.99

CENTRAL SKID PLATE

- Pre-cut holes for fluid and mud drainage, and servicing access.
- Can-Am logo.
- Direct replacement of factory installed plastic skid.

715001997	715000693	715001997
$164.99	$309.99	$164.99

REAR LATERAL SKID PLATES

- Sold in pairs.
- Can-Am logo.

715001640		715001640
$154.99		$154.99

REAR SKID PLATE

- Direct replacement of factory installed plastic skid.
- Can-Am logo.

715000694	715000694	715000694
$104.99	$104.99	$104.99

TRAILING ARM PROTECTORS

- Sold in pairs.

715000661	715000661	715000661
$79.99	$79.99	$79.99

DEFENDER

NEW

RANCHER BUMPER

- Heavy-duty, rugged look.
- Front protection for farm, ranch and forestry applications.
- Low front end protection and plates for Side-by-side use in cattle herds.
- Protects both vehicle and the animals.
- Headlight protection.
- Full front coverage.
- Inside and outside anti-corrosion coating with durable powder coat finish.
- Not compatible with Apache 360 LT Track System (715003064).
- Not compatible with Super-Duty Plow Kit (715003416), with or without Super-Duty Plow Hydraulic Angling Kit (715002840).
- Compatible with Alpine Flex Plow Kit (715003108).

Fits: UR

715002834

$449.99



DEFENDER



FRONT BUMPER

- Heavy-duty 1.5" (3.8 cm) diameter steel-tube construction.
- Provides enhanced protection.
- Inside and outside anti-corrosion coating with durable powder coat finish.
- Light-kit compatible.
- Required to install the following accessories: Xtreme Front Bumper (715003005) and Front Corner Protectors (715002833).

Fits: UR

715002418

$229.99



REAR BUMPER

- Heavy-duty 1.5" (3.8 cm) diameter steel construction and integrated tubular design.
- Increased protection of rear box and lower box corner while allowing normal tailgate function.
- Integrated steps.
- Inside and outside anti-corrosion coating with durable powder coat finish.
- Required to install Rear Body Side Protector (715003055).

Fits: UR

715002419

$249.99

FRONT CORNER PROTECTORS

- Heavy-duty 1.25'' (3.2 cm) diameter steel-tube construction.
- Provide enhanced protection for front corners.
- Inside and outside anti-corrosion coating with durable powder coat finish.
- Require Front Bumper (715002418) for installation.
- Sold in pairs.

Fits: UR

715002833

$159.99





XTREME FRONT BUMPER PLATES

- Made of high-strength heavy-gauge steel with rubber pads for increased protection.
- Inside and outside anti-corrosion coating with durable powder coat finish.
- Provide additional front-end protection.
- Require Front Bumper (715002418) for installation.

Fits: UR

715003005

$189.99



REAR BODY SIDE PROTECTORS

- Heavy-duty 1.5" (3.8 cm) diameter steel-tube construction.
- Reliable cargo box protection.
- Inside and outside anti-corrosion coating with durable powder coat finish.
- Integrated brush and low-lying branch deflector.
- Require Rear Bumper (715002419) for installation.
- Compatible with Fender Flare (715002424).
- Sold in pairs.

Fits: UR

715003055

$169.99



FENDER FLARE

- Robust injection-molded polypropylene construction.
- Perfect for keeping mud and debris outside the vehicle.
- Includes front and rear extension, and all mounting hardware.

Fits: UR

715002424

$204.99

DEFENDER



NEW

FRONT BODY SIDE PROTECTORS

- Heavy-duty 1.25" (3.2 cm) diameter steel-tube construction.
- Front side protection for farm, ranch and forestry applications.
- Require Front Bumper (715002418) with Front Corner Protectors (715002833) and Rock Sliders (715002569) or Rock Sliders (715003040 for MAX models) for installation.
- Offer complete front body protection.
- Inside and outside anti-corrosion coating with durable powder coat finish.
- Sold in pairs.

Fits: UR

715003450

$129.99



NEW

FRONT RANCHER BODY SIDE PROTECTORS

- Heavy-duty 1.25" (3.2 cm) diameter steel-tube construction.
- Front side protection for farm, ranch and forestry applications.
- Require Rancher Bumper (715002834) and Rock Sliders (715002569) or Rock Sliders (715003040 for MAX models) for installation.
- Offer complete front body protection.
- Inside and outside anti-corrosion coating with durable powder coat finish.
- Sold in pairs.

Fits: UR

715003617

$159.99

NEW

ROCK SLIDERS

- Protects vehicle's sides and undercarriage against large obstacles.
- Made of heavy-duty 1.5" (3.8 cm) diameter steel tube.
- Inside and outside anti-corrosion coating with durable powder coat finish.
- Integrated step for easy cargo box access.
- Sold in pairs.

Fits: UR (except MAX models)

715002569 · Black

$299.99

Fits: UR (MAX models only)

715003040 · Black

$359.99



NEW

MUD FLAPS

- Keep mud and debris out of cargo area and protects trailer or vehicles behind you.
- Add aesthetic appeal to your vehicle.
- Made of EPDM rubber.
- Require Rear Bumper (715002419) for installation.
- Sold in pairs.

Fits: UR

715003041

$129.99





MAVERICK

CATCH THE VIDEO AT STORE.CAN-AM.BRP.COM



NEW

LONESTAR RACING FRONT BUMPER

- Made of 1.5" (3.8 cm) diameter anti-corrosion coating with durable powder coat finish tube with a 1/8" (3 mm) aluminum plate for extra durability.
- Delivers additional heavy-duty protection in extreme conditions.
- Enhances the racing look of the vehicle while adding extra protection.
- Features Lonestar Racing logos on the aluminum plate and tubing.
- Compatible with Front Bumper Lights.
- Not winch compatible.
- "Lonestar Racing for Can-Am" branded.
- Not EC compliant.

Fits: RS

715003594 • Octane Blue
715003773 • Can-Am Red
715003593 • Manta Green

$389.99



NEW

LONESTAR RACING REAR BUMPER

- Made of 1.5" (3.8 cm) diameter anti-corrosion coating with durable powder coat finish tube.
- Protects vehicle bodywork and exhaust system.
- Enhances the racing look of the vehicle while adding extra protection.
- Not compatible with winch, hitch and Baja-Style Spare Tire Holder.
- "Lonestar Racing for Can-Am" branded.
- Not EC compliant.

Fits: RS (except Turbo, X ds, X ds Turbo, & X rs Turbo 2016 & up models)

715003602 • Octane Blue
715003804 • Can-Am Red
715003601 • Manta Green

$399.99

Fits: RS (Turbo, X ds Turbo, X rs Turbo 2016 & up)

715003612 • Manta Green
715003613 • Octane Blue

$399.99



MAVERICK



NEW

LONESTAR RACING FRONT INTRUSION BAR

- Made of 1.5" (3.8 cm) diameter anti-corrosion coating with durable powder coat finish tube.
- Enhances the racing look of the vehicle while adding extra protection.
- Matches vehicle styling.
- Not compatible with Aluminum Roof, Sport Visor and Light Rack.
- "Lonestar Racing for Can-Am" branded.

Fits: RS, RU

715003596 • Octane Blue
715003603 • Can-Am Red
715003595 • Manta Green

$399.99



NEW

LONESTAR RACING REAR INTRUSION BAR

- Made of 1.5" (3.8 cm) diameter anti-corrosion coating with durable powder coat finish tube.
- Enhances the racing look of the vehicle while adding extra protection.
- Matches vehicle styling.
- Not compatible with Rear Window (715002856).
- "Lonestar Racing for Can-Am" branded.
- Requires assorted Lonestar Rear Bumper for installation.

Fits: RS (except MAX models)

715003600 • Octane Blue
715003803 • Can-Am Red
715003599 • Manta Green

$289.99

Fits: RS (MAX models only)

715003598 • Octane Blue
715003802 • Can-Am Red
715003597 • Manta Green

$289.99



MAVERICK



FRONT PRE-RUNNER BUMPER

- Made of 1.5" (3.8 cm) diameter steel tube with a 1/8" (3 mm) aluminum plate for extra durability.
- Added heavy-duty protection in extreme conditions.
- Mounting points for lights.
- Requires Mounting Plate for Winch installation (715001699 or 705203196 for Maverick X mr).
- Not EC compliant.

Fits: RS

715002525 • Octane Blue
715002526 • Can-Am Red
715002520 • Manta Green

$389.99

715001645 • Black

$329.99



DUNE FRONT BUMPER

- Made of 1.5" (3.8 cm) diameter steel tube with a 1/8" (3 mm) aluminum plate for extra durability.
- Delivers additional heavy-duty protection in extreme conditions.
- Features a more pronounced attack angle and mounting points for lights.
- Not winch compatible.
- Not EC compliant.

Fits: RS

715001954 • Black

$209.99

MAVERICK

REAR BUMPER

- Extra-durable 1.5" (3.8 cm) diameter steel tube with a 1/8" (3 mm) aluminum plate.
- Sporty look.
- Protects vehicle bodywork and exhaust system.
- Rear receiver hitch compatible.
- Required for Baja-Style Spare Tire Holder installation.
- Not EC compliant.

Fits: RS (except Turbo, X ds, Turbo X ds, & X rs Turbo 2016 & up models)

715002527 • Octane Blue
715002528 • Can-Am Red
715002529 • Manta Green
$359.99

715001646 • Black
$299.99



X DS REAR BUMPER

- Extra-durable 1.5" (3.8 cm) diameter steel tubing with a 1/8" (3 mm) aluminum plate.
- Sporty look.
- Protects vehicle bodywork and exhaust system.
- Rear receiver hitch compatible.
- Baja-Style Spare Tire Holder compatible.
- Does not fit with EC homologated models.

Fits: RS (Turbo, X ds, X ds Turbo & X rs Turbo 2016 & up models only)

715002947 • Octane Blue
715002497 • Manta Green
$359.99





TAIL LIGHT PROTECTORS

- Anti-corrosion coating with durable powder coat finish.
- Rugged style, agressive look.
- Sold in pairs.

Fits: RS

715002982 • Octane Blue
715002981 • Can-Am Red
715002864 • Manta Green
$89.99

715002506 • Black
$74.99

MAVERICK COMMANDER



INTRUSION BAR

- Matches vehicle styling.
- Not windshield compatible.
- Steel intrusion bar.
- Not compatible with Aluminum Sportroof, Sport Visor and Light Rack.

Fits: RS, RU

715002980 • Octane Blue
715002979 • Can-Am Red
715002863 • Manta Green
$319.99

715002505 • Black
$269.99



BAJA-STYLE SPARE TIRE HOLDER

- Durable 1.5" (3.8 cm) diameter steel tubing.
- Holds spare tire in place.
- Custom tie-down strap for fast tire installation or removal.
- Compatible with the Wheel Jack (715001719).
- Rear Bumper required for installation.
- Wheel not included.

Fits: RS

715002957 • Octane Blue
715002956 • Can-Am Red
715002539 • Manta Green
$399.99

715002011 • Black
$329.99



WHEEL JACK

- ProArmor† Quickshot Wheel Jack.
- Helps you change a flat out on the trail.
- Includes a large base for more stability, even in soft soil.
- Includes 17 mm key for ease of wheel removal.
- Fits on Baja-Style Tire Holder.
- Can sit in Commander and Defender bed.
- Wheel not included.

Fits: RS, RU (in Commander bed only), UR (except MAX models)

715001719 • Black
$184.99



MAVERICK COMMANDER



4-POINT HARNESS

- This 4-point harness uses 2" (5 cm) shoulder and hip straps and an automotive style buckle.
- Sewn-on shoulder pads and a leather pad on hips keep you comfortable.
- A removable upper mounting point maintains the removable seat feature.
- Requires 4-point harness bar.
- Our exclusive system offers the safety buckle switch feature and is ROHVA compliant when used in conjunction with Can-Am 4-Point Harness Bars.
- Not EC compliant.

Fits: RS 2014 & up (except X mr models), RU 2014 & up

715000736 • Driver
$179.99

715002010 • Passenger
$154.99



4-POINT HARNESS BAR - 2-UP AND REAR SEAT OF MAX MODELS

- 1.5" (3.8 cm) diameter, thick-walled steel tubing.
- Designed for use with Can-Am 4-Point Harness (715000736 (driver) and 715002010 (passenger)).
- Meets ROHVA requirements when used in conjonction with Can-Am 4-point harness.
- Not EC compliant.

Fits: RS 2014 & up (except X mr models), RU

715002954 • Octane Blue
715002955 • Can-Am Red
715002535 • Manta Green
$239.99

715002953 • Black
$199.99



4-POINT HARNESS BAR - FRONT SEAT ON MAX MODELS

- 1.5" (3.8 cm) diameter, thick-walled steel tubing.
- Designed for use with Can-Am 4-Point Harness (715000736 (driver) and 715002010 (passenger)).
- Meets ROHVA requirements when used in conjonction with Can-Am 4-point harness.
- Includes bar foam and covers.
- Not EC compliant.

Fits: RS (MAX models except X mr), RU (MAX models only)

715002952 • Octane Blue
715002951 • Can-Am Red
715002541 • Manta Green
$289.99

715002069 • Black
$239.99



MAVERICK COMMANDER

SPORT ROCK SLIDERS FOR MAX

- Protects vehicle's sides and undercarriage against large obstacles.
- Made of heavy-duty 1.5" (3.8 cm) diameter steel tube.
- Anti-corrosion coating with durable powder coat finish.
- Sold in pairs.

Fits: RS, RU (MAX models only)

715002943 • Octane Blue
715002944 • Can-Am Red
715002540 • Manta Green

$389.99

715002088 • Black

$329.99



SPORT ROCK SLIDERS

- Protects vehicle's sides and undercarriage against large obstacles.
- Made of heavy-duty 1.5" (3.8 cm) diameter steel tube.
- Anti-corrosion coating with durable powder coat finish.
- Sold in pairs.

Fits: RS, RU (except MAX models)

715002532 • Manta Green

$309.99

715001649 • Black

$259.99



ROCK SLIDERS

- Protects vehicle's sides and undercarriage against large obstacles.
- Made of heavy-duty 1.5" (3.8 cm) diameter steel tube.
- Anti-corrosion coating with durable powder coat finish.
- Standard on XT-P models.
- Sold in pairs.

Fits: RS, RU (except MAX models)

715003125 • Octane Blue
715003124 • Can-Am Red
715003123 • Manta Green

$309.99

715001722 • Black

$259.99



COMMANDER



XTREME FRONT BUMPER

- Delivers additional heavy-duty protection that works with or without the Front XT Bumper (715000958).
- Anti-corrosion coating with durable powder coat finish.
- Can-Am logo tag.
- Does not fit with Signaling Kit (715001308).
- Not available on EC homologated vehicles.

Fits: RU

715000951

$309.99



XT FRONT BUMPER

- Made of heavy gauge steel for additional protection.
- XT styled for matching appearance.
- Anti-corrosion coating with durable powder coat finish.
- Effortless mounting.
- Standard on XT, XT-P and Limited models.

Fits: RU

715000958

$229.99

COMMANDER



FRONT LIGHT PROTECTION

- Works in conjuction with Front XT Bumper (715000958), offering protection to front headlights and sporting aggressive look.
- Anti-corrosion coating with durable powder coat finish.
- Integrated Can-Am fastening system provides efficient mounting vs traditional P-clamps.

Fits: RU

715000656

$164.99



FRONT ACCESSORY BAR

- Can-Am casted clamps for easy mounting.
- Anti-corrosion coating with durable powder coat finish.
- Allows installation of Front Rack (715000985) and HID or Halogen lights and LED bars (sold separately).
- Not compatible with XT Front Bumper (715000958).

Fits: RU (except Limited, XT, XT-P and Mossy Oak Hunting Edition models)

715001377 • Black

$104.99



FRONT RACK

- Equipped with genuine Can-Am clamps for easy mounting on required XT Front Bumper (715000958) or Front Accessory Bar (715001377) (sold separately).
- Anti-corrosion coating with durable powder coat finish.
- Allows access to air filter, washer fluid or coolant.
- 75 lbs (34 kg) load capacity.

Fits: RU

715000985

$309.99



XT BOX RAILS

- Add integrated tie down area to your cargo box while enhancing the look.
- Anti-corrosion coating with durable powder coat finish.
- Standard on XT and Limited models.

Fits: RU

715000957

$104.99

REAR BUMPER

- Integrated tubular system provides sporty look while protecting vehicle's bodywork.
- Flips with cargo box and lower tailgate.

Fits: RU

715000657

$229.99

LOWER TAILGATE PROTECTOR

- Aluminum body plating covering lower tailgate provides additional protection and aggressive look.

Fits: RU

715001097

$94.99





Allows you to open lower tailgate.

DEFENDER

CATCH THE VIDEO AT STORE.CAN-AM.BRP.COM

HEADACHE RACK

- Protects cab components from cargo load.
- Increases box capacity when used in tandem with the Bed Wall Extender (715002421).
- Required to install the Bed Wall Extender (715002421) and Gear Rail (715003391).

Fits: UR

715002423

$349.99



DEFENDER





BED WALL EXTENDER

- Increases box capacity.
- Quick and easy tool-less modularity.
- Easily-removable rear door can be latched open.
- Variable full or half height settings.
- Foldable top panels come off in seconds.
- Requires Headache Rack (715002423).

Fits: UR

715002421

$699.99

LinQ TOOL HOLDER



- Ultra-versatile tool holder.
- Convenient swivel-latch allows tools to be stored in any orientation.
- Suitable for installation onto the cargo walls, Headache Rack (715002423), or Bed Wall Extender (715002421).
- If mounted on the Headache Rack (715002423) or the Bed Wall Extender (715002421), LinQ Adaptor (715003058) is required for installation.
- Sold in pairs.

Fits: UR

715003059

$49.99

LinQ ADAPTOR

(Not illustrated)

- Allows the installation of the LinQ Tool Holder (715003059) to the Bed Wall Extender (715002421) or the Headache Rack (715002423).
- Sold in pack of 4.

Fits: UR

715003058

$24.99



NEW

TONNEAU COVER

- Fitted to cover all of the items in your cargo box thoroughly.
- Prevents splash from entering the cargo box.
- Easily removable for quick access.
- Not compatible with accessories that exceed the box height.

Fits: UR (except Mossy Oak Hunting Edition models)

715003017 • Black

$229.99

715003048 • Mossy Oak Break-Up Country Camo

$299.99



NEW

LinQ TAILGATE EXTENSION/DIVIDER





- Adds rear cargo capacity when the tailgate is open.
- Steel-tubing-system-style barrier mounts on top of the bed walls using the easy, tool-less LinQ System.
- Can be mounted to serve as cargo divider at different locations along the bed wall while preventing larger items from falling off the back.
- Stores neatly out of the way and offers additional cab area protection since it can be mounted upside down on the front bed wall as a mini headache rack.
- Inside and outside anti-corrosion coating with durable powder coat finish.

Fits: UR

715002464

$219.99



DEFENDER

CATCH THE VIDEO AT STORE.CAN-AM.BRP.COM



LinQ SYSTEM™

NEW

LinQ LOW PROFILE BASKET

- Low profile, open basket increases cargo space.
- Perfect for easy access to tools, rope, winch and plow accessories, etc.
- Multiple bungee cord and tie-down anchor points.
- Made of impact-resistant injected polypropylene.
- LinQ Cargo Rack (715003443) or LinQ Front Rack (715002420) is required for installation on UR.

Fits: UR

715003027

$159.99



LinQ SYSTEM™

NEW

LinQ FRONT RACK

- Rugged looking front rack mounts on top of vehicle hood and provides additional storage.
- Heavy-duty 1.25" (3 cm) diameter steel-tube construction.
- Inside and outside anti-corrosion coating with durable powder coat finish.
- Flip-up configuration provides easy access to service area.
- Allows the installation of LinQ accessories (especially for use with LinQ Low Profile Basket (715003027).
- Kit includes LinQ Base.
- Multiple bungee cord and tie-down anchor points.
- Requires Rancher Bumper (715002834) or Front Bumper (715002418) for installation.
- A great place to store tools while working in the field.
- Not compatible with Flip Glass Windshield with Wiper and Washer Kit (715002441) and Flip Windshield - Hardcoated (715002442).

Fits: UR

715002420

$329.99



DEFENDER



LinQ SYSTEM™

NEW

LinQ CARGO RACK

- Strong, durable steel rack.
- Easy and tool-less installation thanks to the LinQ System.
- Allows the installation of LinQ accessories.
- 2 racks can be installed at the same time.
- Allows multi-level storage on cargo bed (accommodates 5 Gal (19L) bucket).
- Helps keep cargo securely in place.
- Multiple bungee cord and tie-down anchor points.
- Kit includes LinQ Base.
- Provides more usable space in the cargo box.
- Extends vehicle cargo options.

Fits: UR

715003443

$299.99



LinQ SYSTEM™

NEW

LinQ TIRE HOLDER

- Cargo box spare-tire holder.
- Inside and outside anti-corrosion coating with durable powder coat finish.
- Heavy-duty steel construction.
- Mounts on top of the bed walls using the easy, tool-less LinQ System.
- Uses BRP standard wheel bolt pattern to mount tire (nuts included).
- Accommodates BRP tires up to 28".

Fits: UR (except Mossy Oak Hunting Edition models)

715003448

$169.99



DEFENDER



NEW

DRIVER UNDERSEAT STORAGE BIN

- Polypropylene-injected 4 Gal (15L) capacity bin fits securely under the driver's seat.
- Front opening for quick and easy access.
- Ideal for storing weather-resistant items, such as ropes, tow straps and winch accessories that are needed at a moment's notice.

Fits: UR

715003399

$99.99



MUST HAVE

NEW

CENTER UNDERSEAT STORAGE BIN

- Polypropylene-injected 2 Gal (8L) capacity storage bin.
- Watertight design keep ice and drinks cold.
- Easy to drain and wash by removing it with integrated handle.
- Accessible by lifting center seat section.

Fits: UR

715003446

$79.99



NEW

REMOVABLE STORAGE BIN - PASSENGER

- Convenient passenger-side under-seat storage polypropylene-injected 3.7 Gal (14L) storage capacity bin.
- Bin installs and removes in a snap and comes with an integrated handle.
- Water-resistant.

Fits: UR

715003314

$69.99

DEFENDER



NEW

CARGO BED RAILS

- Add integrated tie down area to your cargo box while enhancing the look.
- Added cargo box protection.
- Inside and outside anti-corrosion coating with durable powder coat finish.
- Heavy-duty 1" (2.5 cm) diameter steel-tube construction.
- Add height to the bed sidewall and serve as a tie-down anchor for ropes, straps or bungees.
- Not compatible with Bedwall Extender (715002421).
- Sold in pairs.
- Standard on XT and Limited models.

Fits: UR

715003444

$99.99



NEW

CARGO BED NET

- Solid net designed to hook to the bottom of the cargo box for secure and compact confinement of your cargo.
- Keeps items tightly against the bed floor.

Fits: UR

715003445

$69.99

NEW

DASH STORAGE COMPARTMENT NETS

- Perfect for securing items in the dash storage area.
- Not compatible with Defrost, Heat & Ventillation System (715001978).
- Sold in pairs.

Fits: UR (except XT Cab models)

715003129

$24.99



NEW

DASH STORAGE COMPARTMENT NET FOR HEATING SYSTEM

- Perfect for securing items in the dash storage area.
- To be installed when Defrost, Heat & Ventilation System (715001978) is in place.

Fits: UR

715003544

$24.99



NEW

BACKREST REAR STORAGE

- Netting installs easily.
- Made from polyester that won't discolor.
- Sold in pairs.

Fits: UR (MAX models only)

715003019

$49.99



NEW

LOWER DASHBOARD FOR HEATING SYSTEM

- Replaces the dashboard that comes stock with the vehicle, and features a tablet that makes it possible for driver and passenger to conveniently store small items in the dash.
- To be used when the Defrost, Heat & Ventilation System (715001978) is installed.
- Use together with the Dash Storage Compartment Net for Heating System (715003544) to prevent the items placed in the dash storage compartment from falling.

Fits: UR

715003441

$69.99




can-am
BRP
can-am

DEFENDER



NEW

GEAR RAIL ADAPTOR

- Allows for the installation of the Gear Rail (715003391) directly onto the cargo box without the need for the headache rack.

Fits: UR

715003392

$139.99

DEFENDER MAVERICK COMMANDER

Snap-close cover with locking capability



GUN BOOT 6.0 IMPACT† BY KOLPIN†

- Extra room for pistol-grip-type weapons and small bipods.
- Easily fits firearms up to 51" (1.3 m) in total length.
- Provides ample room for 2.4" (60 mm) scopes.
- Hatchback design allows easy access.
- Snap-close cover with locking capability.
- Ergonomically designed handle and molded attachment points for sling.
- Designed to accomodate left and right hand bolt-action rifles and shotguns.
- Requires Gear Rail (715001420) and Gun Boot Mount by Kolpin (715001320 or 715003391) for installation.
- Includes removable, shock absorbing foam and nylon Impact liner for superior interior protection.
- Compatible for dual mount with Additional Gun Boot Mount (715001586).

Fits: RS (except Turbo, X ds Turbo, X rs Turbo 2016 & up models), UR, RU

715001419 • Black

$79.99

GUN BOOT MOUNT BY KOLPIN

- Fits one Kolpin Gun Boot 6.0 Impact (715001419).
- Lightweight and extremely durable.
- Easily adjustable without the use of any tools.
- Offers precision gun angle adjustability.
- Requires Gear Rail (715001320 or 715003391) for installation.

Fits: RS (except Turbo, X ds Turbo, X rs Turbo 2016 & up models), UR, RU

715001420 • Black

$79.99



ADDITIONAL GUN BOOT MOUNT

(Not illustrated)

Fits: RS (except Turbo, X ds Turbo, X rs Turbo 2016 & up models), UR, RU

715001586

$119.99



DEFENDER MAVERICK COMMANDER

GEAR RAIL

- Stationary rail system specially designed for your Side-by-side vehicle.
- Mounts on roll bar.
- Universal mounting options for many Kolpin accessories like Gear Grips, Gun Boot 6.0, Gun Boot Mount and Universal Saw Press.
- Rail is made with heavy-duty 7-gauge extruded anodized black aluminum.
- Includes one versatile Gear Rail Mount by Kolpin (715001422).

Fits: RS (except Turbo, X ds Turbo, X rs Turbo 2016 & up models), RU

715001320 • Black

$219.99

Fits: UR

- Requires Headache Rack (715002423 or 715003392).

715003391

$249.99





Includes one versatile Gear Rail Mount by Kolpin (715001422)

DEFENDER MAVERICK COMMANDER

GEAR RAIL MOUNT BY KOLPIN

- Accessory bracket for mounting additional accessories to the Gear Rail.
- Includes C-clamp and metal mounting brackets.

Fits: RS (except Turbo, X ds Turbo, X rs Turbo 2016 & up models), UR, RU

715001422

$39.99

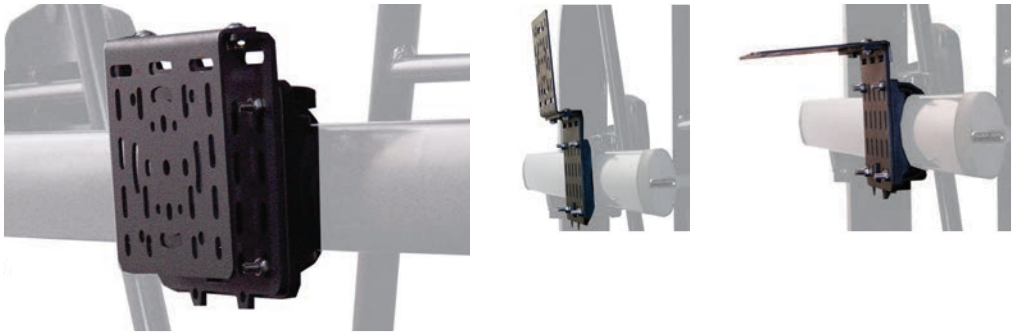

UNIVERSAL SAW PRESS BY KOLPIN

- Specially crafted for transporting your chainsaw securely and safely aboard your Side-by-side vehicle.
- Heavy-duty, black powder-coated metal bracket designed to attach any chainsaw model with up to a 20" (51 cm) bar.
- Rubber pads provide cushion and tight fit.
- Hinged design for quick removal.
- Holds saw in vertical position or 45° angle in either direction.
- Requires Gear Rail (715001320 or 715003391).
- Protective sheath included.

Fits: RS (except Turbo, X ds Turbo, X rs Turbo 2016 & up models), UR, RU

715001423 • Black

$104.99



GEAR GRIPS BY KOLPIN

- Durable, flexible grips cushion and protect while providing a custom fit for a variety of items from 1" to 4" (2.5 cm to 10 cm) in diameter.
- Heavy-duty design for carrying bows, fishing poles, rakes, farm tools and more.
- Quick-release button opens grip quickly for easy access to gear.
- Heavy-duty base system built for the toughest adventures.
- Sold in pairs.

Fits: RS (except Turbo, X ds Turbo, X rs Turbo 2016 & up models), UR (except Mossy Oak models), RU

715001421

$69.99



LinQ MOUNTED GEAR GRIPS BY KOLPIN

(Not illustrated)

- Same features as Gear Grip by Kolpin (715001421).
- Make transporting your tools a snap by combining the Gear Grips with the LinQ System.
- 360° orientation.

Fits: RS (except Turbo, X ds Turbo, X rs Turbo 2016 & up models)

715001351

$104.99

FUEL PACK BRACKET BY KOLPIN

- Easy, quick and secure bracket for your fuel pack that leaves plenty of room for your other gear.
- ¼-turn-action knob allows quick and easy removal of fuel pack from bracket.
- Not EC compliant to attach fuel packs.

Fits: RS (except Turbo, X ds Turbo, X rs Turbo 2016 & up models), UR (except Mossy Oak models), RU

715001427 • Black

$54.99



MAVERICK COMMANDER

GEAR RAIL ADAPTOR FOR REAR WINDOW

- Allows you to install a Gear Rail on a rear window.

Fits: RS (except Turbo, X ds Turbo, X rs Turbo 2016 & up models), RU 2014 & up

715002545

$59.99



COMMANDER

TONNEAU COVER

- Thoroughly covers and secures your cargo box items.
- Prevents splash from entering the cargo box.
- Easily removable for quick access.
- Fits with or without XT Box Rails (715000957).

Fits: RU

715001194 • Black

$259.99



DEFENDER MAVERICK COMMANDER

LinQ SYSTEM™

LinQ DELUXE MODULAR BAGS

- Tool-less installation and removal.
- Versatile, rugged and spacious.
- Ideal for carrying anything you need in any conditions.
- Weatherproof, scratch-resistant, with molded rubber bottom.
- Central compartment can be used alone on the rack.
- Removable bin.

Fits: RS (except Turbo, X ds Turbo, X rs Turbo 2016 & up models)

715001695 • 12 Gal (44L)

$249.99

715001694 • 20 Gal (73L)

$289.99



CARGO BAG

- Rugged all-purpose cargo bag with rain cover for additional protection against the elements.

Fits: RS, RU, UR

280000539 • Black

$154.99



REAR ARMREST COOLER BOX

- Designed specifically for insertion in the compartment nestled between the 2 rear seats of a Commander MAX or Maverick MAX.
- Magnetic lid makes removal a breeze.
- Can hold 6 cans (5L).

Fits: RS (except Turbo, X ds Turbo, X rs Turbo 2016 & up models), RU

715001961

$44.99



BACKREST REAR STORAGE

- Netting installs and unfastens easily.
- Made from polyester that won't discolor.
- Sold in pairs.

Fits: RS, RU (MAX models only)

715001960

$49.99



CARGO BOX NET

- Solid net designed to hook to the bottom of the cargo box for secure and compact confinement of your cargo.

Fits: RU

715001371 • Black

$59.99



SOFT STORAGE BAG

(Not illustrated)

- 3-section bag.
- Transport gear in a weatherproof bag.
- 6" (15 cm) tall soft cargo bag designed with vehicle's rear rack and rack extensions in mind to maximize potential storage.

Fits: RS (except Turbo, X ds Turbo, X rs Turbo 2016 & up models)

715001934

$134.99

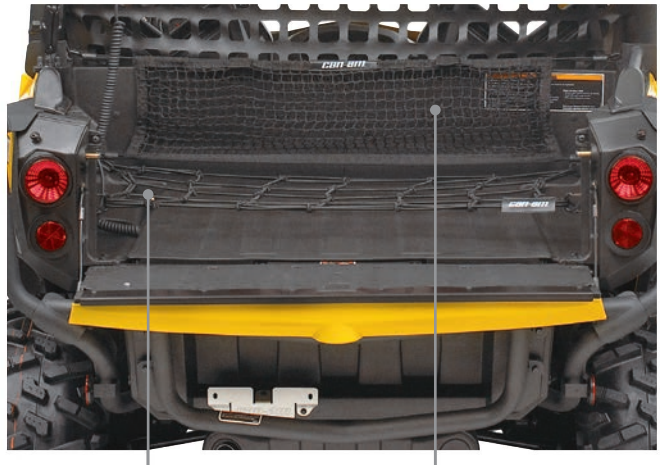

CARGO BOX ELASTIC NET

- Elastic net designed to hook to the bottom of the cargo box.
- Ideal for retaining lighter, irregular-shaped items.

Fits: RU

715001372 • Black

$39.99

CARGO BOX STORAGE NET

- Mesh net.
- Stores items vertically.
- Quick installation.

Fits: RU

715001370 • Black

$59.99

DEFENDER MAVERICK

CATCH THE VIDEO AT STORE.CAN-AM.BRP.COM



MUST HAVE

LinQ SYSTEM™

NEW

LinQ 11.5 GAL (43L) AUDIO CARGO BOX

- An affordable and quick solution to adding music and storage to your next ride. The rear installation does not use up any cab space and allows easy listening at an average speed.
- Mounts on/off easily to hold/carry cargo safely and securely.
- The Bluetooth enabled receiver and 6.5" (16.5 cm) speakers are smartly concealed and integrated in the cover.
- Automatic shut-off function protects your battery by turning the system off after 10 minutes of inactivity.
- Backlit control panel perfect for night riding.
- LinQ Cargo Rack (715003443) is required for Defender.
- Not compatible with Lonestar Racing Rear Intrusion Bar.

Fits: UR, RS

715003018

$549.99



LinQ SYSTEM™

LinQ 12 GAL (45L) CARGO BOX

- Holds cargo safely and securely while riding.
- Easy and fast to install and remove from racks thanks to the LinQ System.
- Flip-over cover becomes a tray.

Fits: UR, RS (except Turbo, X ds Turbo, X rs Turbo 2016 & up)

715001936

$209.99

MAVERICK



LinQ 32 GAL (124L) TRUNK BOX

- Equipped with the LinQ System, the rear trunk box plugs in and out in seconds.
- 32 Gal (124L) load capacity with unobstructed space to maximize storage room and access to the trunk's interior.
- Made of injection-molded polyethylene, double walled in critical areas.
- The fully sealed lid protects your belongings from dust, moisture and the elements.
- Requires Wiring Cable (710003419).
- Rear tail light.
- Trunk box panels not included.
- Not compatible with Lonestar Racing Rear Intrusion Bar and Baja-Style Spare Tire Holder.

Fits: RS

715001747 • Black

$349.99

WIRING CABLE FOR LinQ TRUNK BOX

- Required for the tail light to function.

Fits: RS

710003419 • Black

$22.99



LinQ 32 GAL (124L) TRUNK BOX PANELS

- Fit LinQ 32 Gal (124L) Trunk Box (715001747).
- Color pannels to match the LinQ 32 Gal (124L) to your vehicle.

Fits: RS

715001391 • Black
715001392 • Yellow
715001395 • Viper Red
715002481 • White
715002480 • Light Grey
715002984 • Octane Blue
715002985 • Manta Green
715002986 • Can-Am Red

$39.99

EUROPEAN VERSION (EC compliant)

- No rear tail light

715001397 • Black
715001398 • Yellow
715002482 • Light Grey
715002483 • White

LinQ 20 GAL (74L) TRUNK BOX

- Installs without vehicle modification.
- LinQ mount for easy-on, easy-off installation.
- Lockable and weather-resistant.
- Holds cargo safely and securely while riding.
- Not compatible with Lonestar Racing Rear Intrusion Bar and Baja-Style Spare Tire Holder.

Fits: RS (except Turbo, X ds Turbo, X rs Turbo 2016 & up)

715002473

$259.99





CARGO BED LINER

- Covers the rear end of your vehicle.
- Includes solid mounting location to attach your stuff.
- Tool-less removal.
- Made of durable polyethylene plastic.

Fits: RS (except Turbo, X ds Turbo, X rs Turbo 2016 & up)

715001904 • Black

$259.99



LinQ RACK EXTENSION

- Strong and durable.
- Helps keep cargo securely in place.
- Easy and tool-less installation thanks to the LinQ System.
- Inside and outside anti-corrosion coating with durable powder coat finish.

Fits: RS

715001665 • Black 4" (10 cm)
715001711 • Silver 4" (10 cm)

$174.99

715001671 • Black 6" (15 cm)
715001712 • Silver 6" (15 cm)

$184.99

TO BUILD YOUR LIGHTING SYSTEM, REFER TO PAGES 132-133

MAVERICK COMMANDER

CATCH THE VIDEO AT STORE.CAN-AM.BRP.COM



39" (99 CM) DOUBLE STACKED LED LIGHT BAR (270 WATTS)

NEW PRICE

- Equipped with 54 5W Cree LEDs.
- 24,300 lumens.
- Sits protected inside the cage area to deliver powerful and accurate lighting.
- Includes installation brackets and wiring harness.
- Not compatible with Full Windshield, Flip Windshield and Intrusion Bar.

Fits: RS, RU

715002932

$849.99

LIGHTS UP TO MORE THAN 2900 FT (900 M) IN FRONT OF THE VEHICLE AND AROUND 115 FT (35 M) WIDE ON EACH SIDE

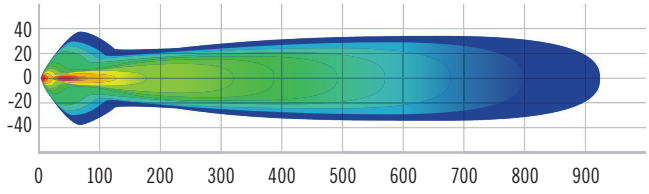

DEFENDER MAVERICK COMMANDER



15" (38 CM) DOUBLE STACKED LED LIGHT BAR (90 WATTS)

NEW PRICE

- Equipped with 18 5W Cree LEDs.
- 8,400 lumens.
- Complements the Light Rack for Sport Visor and most bumpers.
- Includes wiring kit and switch.

Fits: UR, RS, RU

715002934

$359.99

LIGHTS UP TO MORE THAN 1900 FT (580 M) IN FRONT OF THE VEHICLE AND AROUND 65 FT (20 M) WIDE ON EACH SIDE

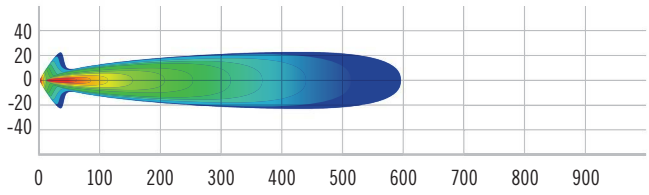



10" (25 CM) DOUBLE STACKED LED LIGHT BAR (60 WATTS)

NEW PRICE

- Equipped with 12 5W Cree LEDs.
- 5,400 lumens.
- Packs a big punch for its size.
- Includes wiring kit and switch.
- Not compatible with Front Pre-Runner Bumper (715001645).

Fits: UR, RS, RU

715002933

$289.99

LIGHTS UP TO MORE THAN 1500 FT (460 M) IN FRONT OF THE VEHICLE AND AROUND 65 FT (20 M) WIDE ON EACH SIDE

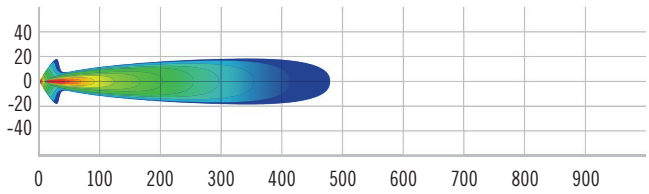





TO BUILD YOUR LIGHTING SYSTEM, REFER TO PAGES 132-133

DEFENDER



LIGHT RACK

- Rugged steel construction serves as both mount and protection for accessory light systems.
- Lights not included.
- Roof front liner is required for installation on the roof (except Cab models or with Deluxe Sport Roof (715002511).
- Roof Power Cable (715003094), Sport Roof (715002430), Bimini Roof with Sun Visor (715002849) , Deluxe Sport Roof (715002511) or Sport Roof for MAX (715003038) required for installation (except Cab models).
- Integrates elegantly and seamlessly into our roof products.

Fits: UR

715002456

$149.99

DOME LIGHT

- LED array integrates perfectly with vehicle.
- Wiring included.
- Can be installed on cage or roof, with or without roof liner.



Fits: UR, RS, RU

715002455

$69.99

REAR CARGO LIGHT

- Powerful 55W H3 illumination for rear cargo area.
- Convenient in-dash switch.
- Wiring included.
- Sport Roof (715002430), Deluxe Sport Roof (715002511) or Sport Roof for MAX (715003038) are required for installation.
- Not EC compliant.



Fits: UR

715002422

$129.99

LIGHT KIT POWER CABLE

(Not illustrated)

- Power cable for installation of compatible Can-Am light kits on Front Bumper (715002418) or Rancher Bumper (715002834).

Fits: UR

715002454

$39.99

ROOF POWER CABLE

(Not illustrated)

- Fully integrated with the vehicle.
- Required to install lights on the roof.

Fits: UR

715003094

$39.99

DEFENDER MAVERICK COMMANDER

2 x 1,800 lumens



4" (10 CM) ROUND LED LIGHTS (2 X 25 WATTS)

NEW PRICE

- 25W LED spotlights.
- 2 x 1,800 lumens.
- Rugged and waterproof.
- Includes basic wiring and switch.
- Can-Am branded grill.
- Perfect fit with the Light Rack for Sport Visor and most bumpers with Light Mount Kit.
- Sold in pairs.
- Not EC compliant.

Fits: UR, RS, RU

715002935

$359.99

5,400 lumens



10" (25 CM) LED LIGHT BAR (60 WATTS)

- Equipped with 6 x 10W Cree LEDs.
- 5,400 lumens.
- Packs a big punch for its size.
- Not EC compliant.

Fits: UR, RS, RU

715001955 • Black

$489.99

9,000 lumens



17" (43 CM) LED LIGHT BAR (100 WATTS)

- Equipped with 10 x 10W Cree LEDs.
- 9,000 lumens.
- Perfectly complements the Light Rack for Sport Visor and most bumpers.
- Not EC compliant.

Fits: UR, RS, RU

715001979 • Black

$769.99



Luminous flux is 2.5 times higher than a conventional halogen bulb with 35% less energy consumption.

HID LIGHTS BY HELLA†

- Incomparable and powerful HID long range illumination plug-and-play system converts night usage into virtually daytime riding.
- Integrated ballast unit with 3.25" (8 cm) clear glass lens and swivel mounting heavy-duty bracket provides compact design.
- IP67 and IP6K9K rated water and dust proof.
- Highest electromagnetic compatibility rating, i.e. EMC Class 5 according to CISPR 25, for total disturbance-free electronic operation.
- Peak light performance with just 35W.
- Luminous flux is 2.5 times higher than conventional halogen bulb with 35% less energy consumption.
- High vibration resistance with longer lifetime than halogen bulb.
- Constant light intensity even under unsteady power supply voltage.
- Include basic wiring and switch.
- Sold in pack of 2.
- Not EC compliant.

Fits: UR (except bumper position), RS, RU

715001382

$919.99



HALOGEN LIGHTS BY HELLA

- Deliver long range illumination.
- 3.25" (8 cm) clear glass lens and swivel mounting heavy-duty bracket provides compact design.
- Include basic wiring and switch.
- Sold in pack of 2.
- Not EC compliant.

Fits: UR, RS, RU

715001383

$174.99



NEW

RAM† LED SPOTLIGHT

- High-intensity (37.5 W), heavy-duty spotlight standard-equipped with 1" (2.5 cm) diameter rubber-coated double ball and socket system.
- Can be easily moved from your XT Box Rails to any other location.
- 12 V Power Outlet (715001321) is required for cargo box mounting.
- Not EC compliant.

Fits: UR, RU 2012 & up

710005423 • Black

$119.99

*All lights are intended for Off-Road use only.

MAVERICK COMMANDER

CATCH THE VIDEO AT STORE.CAN-AM.BRP.COM

39" (99 CM) LED LIGHT BAR (240 WATTS)

- Equipped with 24 x 10W Cree LEDs.
- 21,600 lumens.
- Sits protected inside the cage area to deliver powerful and accurate lighting.
- Includes installation brackets.
- Not compatible with Full Windshield, Flip Windshield and Intrusion Bar.
- Not EC compliant.

Fits: RS, RU 2014 & up

715001943 • Black

$1,629.99

21,600 lumens



LIGHT RACK FOR SPORT VISOR

- Provides Can-Am Side-by-side vehicles with a custom look.
- Made of rugged aluminum.
- Essential protection for your accessory lighting systems.
- Fully integrated.
- Can be mounted directly on the Sport Visor (715000762, 715001952 or 715002502).
- Wiring included.
- Lights sold separately.

Fits: RS, RU (except Limited models)

715001687 • Black
715001718 • Silver

$229.99



LIGHT RACK FOR CAGE OR FOR ROOFS

- Provides Can-Am Side-by-side vehicle with a custom look.
- Made of rugged aluminum.
- Essential protection for your accessory lighting systems.
- Fully integrated.
- Can be fixed directly to the cage and can be used with Mesh Roof (715003130) or Sport Roof (715003395).
- Wiring included.
- Lights sold separately.

Fits: RS, RU (except Limited models)

715001094 • Silver
715001686 • Black

$299.99



2 x 900 lumens



FRONT BUMPER LIGHTS

- 2 x 900 lumens 10W LED Cree light kit.
- Long-range illumination up to 350' (107 m), drawing less than 1 amp per light.
- Include multi-position clamps that fit on various tubing sizes.
- Not EC compliant.

Fits: RS, RU with XT Front Bumper or Front Accessory Bar

715001741

$259.99

LIGHT MOUNTING KIT

(Not illustrated)

- Required for installation of HID lights, Halogen lights or 4" round LED lights.
- Switch not included.

Fits: RS 2016 & up (X ds 2015 & up), RU (except MAX models)

715001366 • Black

$149.99

Fits: RS 2015 & prior (except X ds & MAX models), RU (MAX models only)

715001713 • Black

$149.99

LIGHT POWER CABLE

(Not illustrated)

- Brings power from rear battery to dash location.
- Includes fuse for safety.

Fits: RS 2015 & prior (except X ds & MAX models), RU (MAX models only)

715002036

$39.99

LIGHT MOUNTING KIT FOR LED LIGHT BAR

(Not illustrated)

- Required for installation of 10" (25 cm), 15" (38 cm) and 17" (43 cm) LED Light Bars on Bumpers or Front Accessory Bar.

Fits: RS, RU

715002175

$149.99

SIGNALING KIT

- Complete flasher, horn and illuminated license plate holder.
- Integrates onto vehicle.
- Not for road use.
- Does not fit with the Xtreme Front Bumper (715000951) and Lower Tailgate Protector (715001097).

Fits: RU (except MAX models)

715001308

$439.99





BUILD YOUR LIGHTING SYSTEM – 4 STEPS TO A HASSLE-FREE ORDER

01 FIND YOUR PLATFORM	02 CHOOSE YOUR MOUNT POINT	03 CHOOSE YOUR LIGHTS		
		10" (25 CM) LED BAR	15" (38 CM) OR 17"(43 cm) LED BAR	39" (99 CM) LED BAR (2014 MODELS & UP)
UR	ORIGINAL BUMPER	NA	NA	NA
	FRONT BUMPER OR RANCHER BUMPER	715001955 (Single) or 715002933 (Double) **PLUS** 715002454 (Light Mount Kit)	715001979 (Single) or 715002934 (Double) **PLUS** 715002454 (Light Mount Kit)	NA
UR (EXCEPT XT CAB)	SPORT ROOF, DELUXE SPORT ROOF OR BIMINI ROOF *Front Roof Liner (715003098) is required (except for Deluxe Sport Roof (715002511)	715001955 (Single) or 715002933 (Double) **PLUS** 715002456 (Rack) & 715003094 (Roof Power Cable)	715001955 (Single) or 715002933 (Double) **PLUS** 715002456 (Rack) & 715003094 (Roof Power Cable)	NA
	ROOF WITH A DELUXE XT RIGID CAB ENCLOSURE *Front Roof Liner (715003098) is required (except for Deluxe Sport Roof (715002511)	715001955 (Single) or 715002933 (Double) **PLUS** 715002456 (Rack)	715001955 (Single) or 715002933 (Double) **PLUS** 715002456 (Rack)	NA
	ROOF OF THE PREMIUM RIGID CAB ENCLOSURE	715001955 (Single) or 715002933 (Double) **PLUS** 715002456 (Rack)	715001955 (Single) or 715002933 (Double) **PLUS** 715002456 (Rack)	NA
UR (XT CAB ONLY)	DELUXE SPORT ROOF	715001955 (Single) or 715002933 (Double) **PLUS** 715002456 (Rack)	715001955 (Single) or 715002933 (Double) **PLUS** 715002456 (Rack)	NA
RS *For Maverick MAX and Maverick 2015 and prior (except X ds), Light Power Cable (715002036) is required.	ORIGINAL BUMPER	715001955 (Single LED bar) or 715002933 (Double LED bar) **PLUS** 715002175 (Light Mounting Kit)	715001979 (17" Single LED bar) or 715002934 (15" Double LED bar) **PLUS** 715002175 (Light Mounting Kit)	NA
	PRE-RUNNER BUMPER	NA	715001979 (17" Single LED bar) or 715002934 (15" Double LED bar) **PLUS** 715002175 (Light Mounting Kit)	NA
	DUNE FRONT BUMPER	715001955 (Single LED bar) or 715002933 (Double LED bar) **PLUS** 715002175 (Light Mounting Kit)	715001979 (17" Single LED bar) or 715002934 (15" Double LED bar) **PLUS** 715002175 (Light Mounting Kit)	NA
	SPORT VISOR	715001955 (Single LED bar) or 715002933 (Double LED bar) 715001718 (Silver Rack) **PLUS OR** 715001687 (Black Rack)	715001979 (17" Single LED bar) or 715002934 (15" Double LED bar) 715001718 (Silver Rack) **PLUS OR** 715001687 (Black Rack)	715001943 (Single LED bar) or 715002932 (Double LED bar)
	SPORT ROOF, BIMINI ROOF OR ROLL CAGE	715001955 (Single LED bar) or 715002933 (Double LED bar) 715001094 (Silver Rack) **PLUS OR** 715001686 (Black Rack)	715001979 (17" Single LED bar) or 715002934 (15" Double LED bar) 715001094 (Silver Rack) **PLUS OR** 715001686 (Black Rack)	
	SPORT ALUMINUM ROOF	NA	NA	
RU *For Commander MAX, Light Power Cable (715002036) is required.	FRONT XT BUMPER FRONT ACCESSORY BAR	715001955 (Single LED bar) or 715002933 (Double LED bar) **PLUS** 715002175 (Light Mounting Kit)	715001979 (17" Single LED bar) or 715002934 (15" Double LED bar) **PLUS** 715002175 (Light Mounting Kit)	NA
	SPORT VISOR	715001955 (Single LED bar) or 715002933 (Double LED bar) 715001718 (Silver Rack) **PLUS OR** 715001687 (Black Rack)	715001979 (17" Single LED bar) or 715002934 (15" Double LED bar) 715001718 (Silver Rack) **PLUS OR** 715001687 (Black Rack)	715001943 (Single LED bar) or 715002932 (Double LED bar)
	SPORT ROOF, BIMINI ROOF OR ROLL CAGE	715001955 (Single LED bar) or 715002933 (Double LED bar) 715001094 (Silver Rack) **PLUS OR** 715001686 (Black Rack)	715001979 (17" Single LED bar) or 715002934 (15" Double LED bar) 715001094 (Silver Rack) **PLUS OR** 715001686 (Black Rack)	
	SPORT ALUMINUM ROOF	NA	NA	

03 CHOOSE YOUR LIGHTS

04 ORDER

HID (SOLD IN PAIRS)	HALOGEN (SOLD IN PAIRS)	4" (10 CM) ROUND LED (SOLD IN PAIRS)
NA	NA	NA
NA	715001383 (Halogen) or 715002935 (LED) **PLUS** 715002454 (Light Mount Kit)	
715001382 (HID), 715001383 (Halogen) or 715002935 (LED) **PLUS** 715002456 (Rack) & 715003094 (Roof Power Cable)		
715001382 (HID), 715001383 (Halogen) or 715002935 (LED) **PLUS** 715002456 (Rack)		
715001382 (HID), 715001383 (Halogen) or 715002935 (LED) **PLUS** 715002456 (Rack)		
715001382 (HID), 715001383 (Halogen) or 715002935 (LED) **PLUS** 715002456 (Rack)		
715001382 (HID), 715001383 (Halogen) or 715002935 (LED) **PLUS** 715001366 or 715001713 (Light Mount Kit) when Light Power Cable (715002036) is required.		
715001382 (HID), 715001383 (Halogen) or 715002935 (LED) **PLUS** 715001366 or 715001713 (Light Mount Kit) when Light Power Cable (715002036) is required.		
715001382 (HID), 715001383 (Halogen) or 715002935 (LED) **PLUS** 715001366 or 715001713 (Light Mount Kit) when Light Power Cable (715002036) is required.		
715001382 (HID), 715001383 (Halogen) or 715002935 (LED) *SEE NOTE FOR 4-LIGHT INSTALL 715001718 (Silver Rack) **PLUS OR** 715001687 (Black Rack)		
715001382 (HID), 715001383 (Halogen) or 715002935 (LED) *SEE NOTE FOR 4-LIGHT INSTALL 715001094 (Silver Rack) **PLUS OR** 715001686 (Black Rack)		
NA		
715001382 (HID), 715001383 (Halogen) or 715002935 (LED) **PLUS** 715001366 for Commander or 715001713 for Commander MAX (Light Mount Kit)		
715001382 (HID), 715001383 (Halogen) or 715002935 (LED) *SEE NOTE FOR 4-LIGHT INSTALL 715001718 (Silver Rack) **PLUS OR** 715001687 (Black Rack)		
715001382 (HID), 715001383 (Halogen) or 715002935 (LED) *SEE NOTE FOR 4-LIGHT INSTALL 715001094 (Silver Rack) **PLUS OR** 715001686 (Black Rack)		
NA		

ORDER ALL PART NUMBERS IN THE INTERSECTING BOX

*NOTE: When installing more than one HID, Halogen or LED light kit on light rack, you only need to order one rack and one power cable.



DEFENDER

POWER TILT-BED

- Powerful cargo box tilter with dash integrated switch.

Fits: UR

715000829

$599.99



DIGITALLY ENCODED SECURITY SYSTEM (D.E.S.S.™) KEYS

- Top-security anti-theft protection for your vehicle.
- Encrypted chip technology restricts access to your vehicle's electronic ignition system.
- One vehicle / One code.
- A vibration / shock-resistant ball-and-socket design that ensures a reliable connection.
- Comes with 3 programmable keys:
  - Work key: limits vehicle speed to 40 kph (25 mph) but does not limit engine torque.
  - Normal key: limits vehicle speed to 70 kph (44 mph) and 10% torque reduction.
  - Performance key: No restrictions.

Fits: UR

715002458

$199.99



DEFENDER



NEW

COMPLETE OVERHEAD AUDIO SYSTEM

- Rugged waterproof Jensen† Bluetooth Stereo Audio system offers multi-source input: AM/FM/WB and USB (iPod® and iPhone® ready).
- Convenient white LED-backlit LCD display and buttons.
- Stream from any Bluetooth-enabled device (smartphone, mp3 player).
- Powerful 4x40W amplifier with remote turn-on.
- Voice-control of AVRCP-active device.
- 30 programmable AM/FM stations with auto-store/pre-set scan.
- Separate RCA audio output and input.
- UV-resistant finish / corrosion-resistant components.
- Complete with 4 ultra-sturdy outdoor speakers (2 front and 2 rear) and 4 black speaker boxes.
- Requires Sport Roof (715002430 (except on XT and Mossy Oak Hunting Edition models)), Front Roof Liner (715003098) or Deluxe Sport Roof (715002511) and Roof Power Cable (715003094 (except if you already have a Hard Cab Enclosure (715001699 or 715003482)).

Fits: UR

715002019

$839.99





NEW

OVERHEAD FRONT AUDIO SYSTEM

- Rugged waterproof Jensen† Bluetooth Stereo Audio system offers multi-source input: AM/FM/WB and USB (iPod® and iPhone® ready).
- Convenient white LED-backlit LCD display and buttons.
- Stream from any Bluetooth-enabled device (smartphone, mp3 player).
- Powerful 4x40W amplifier with remote turn-on.
- Voice-control of AVRCP-active device.
- 30 programmable AM/FM stations with auto-store/pre-set scan.
- Separate RCA audio output and input.
- UV-resistant finish / corrosion-resistant components.
- Complete with 2 ultra-sturdy front outdoor speakers and black speaker box.
- Requires Sport Roof (715002430 (except on XT and Mossy Oak Hunting Edition models)), Front Roof Liner (715003098) or Deluxe Sport Roof (715002511) and Roof Power Cable (715003094 (except if you already have a Hard Cab Enclosure (715001699 or 715003482)).

Fits: UR

715003095

$679.99

RAM GPS MOUNT

- Allows for GPS integration onto vehicle.
- Standard AMPS hole pattern for Garmin Cradle.

Fits: UR

715003325

$59.99



3-MODE SWITCH

- Switches quickly and conveniently between normal/work/eco modes.
- Work mode: Reduced throttle sensitivity for smoother acceleration and reduced load impact.
- Eco mode: Increased fuel economy.
- In-dash plug-and-play mount.
- Standard on XT, XT Cab and Mossy Oak Hunting Edition models.

Fits: UR

710004532

$29.99



DEFENDER MAVERICK COMMANDER

NEW

GARMIN MONTANA† 680T GPS

- Rugged and waterproof, the Montana 680T is element-proof.
- 4-inch dual-orientation, sunlight-readable touchscreen and glove-friendly touchscreen display, to give you vivid colors and high-resolution images.
- 8-megapixel autofocus camera automatically geotags photos.
- Tracks both GPS and GLONASS satellites for improved positioning and typically faster fixes.
- Preloaded TOPO maps, plus 1-year BirdsEye Satellite Imagery subscription.
- 3-axis compass with barometric altimeter.
- Specific GPS cradle included (vehicle mounting kit required).
- Includes a preloaded map for US.
- RAM GPS Mount (715003325) required for UR.
- Radio/GPS Console Adapter (715001404) required on RS, RU (except X mr models and with Snorkel Kit (715001728)).

Fits: UR, RS, RU

715002830

$659.99

EUROPEAN VERSION

- EC compliant.
- Includes preloaded European recreation map.

715003456



NEW

CANADIAN MAP FOR GARMIN MONTANA 680T GPS

(Not illustrated)

- Additional and readily-programmable Canadian basemap for Garmin Montana 680T GPS system.
- Requires Garmin Montana 680T GPS (715002830).

Fits: UR, RS, RU

710005065

$129.99



MAVERICK COMMANDER

MUST HAVE

WET SOUNDS STEALTH 6 ULTRA CAN-AM EDITION SOUND BAR

- Built-in full range class D amplifier (200W RMS, 400W peak).
- Integrated Bluetooth enabled receiver.
- Aux input allows for use with non-Bluetooth devices.
- Automatic shut-off function protects your battery.
- Turns itself off after 10 minutes of inactivity.
- Backlit control panel.
- 2V line-output allows for hooking up another sound bar or adding an external amplifier and speakers.
- Not compatible with Light Rack.

Fits: RS, RU (except Limited models)

715002086

$699.99

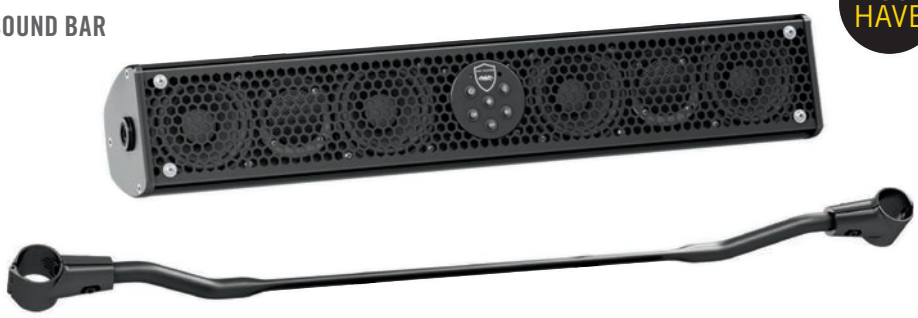



MAVERICK COMMANDER

CGX2 CAMERA

- 4K HD and 1080p at 60fps.
- 2" LCD display screen.
- Waterproof housing of up to 165 ft (50 m) underwater and the 2.4gh waterproof remote.
- Comes with 32gb micro SD card class 10 and 9 mounts.
- WIFI available to control your camera from your smart phone or tablet with the free iCyclops App for IOS and Android.

2866860090

$299.99



MUST HAVE





FRONT & REAR SPEAKERS

- Great sounding outdoor speakers.
- Kit includes black speaker boxes and plug-and-play wiring.
- Set of 2.
- Standard on Limited model.

Fits: RS, RU

715001309 • Front 5.25" (13 cm)

$139.99

715001315 • Rear 6.5" (16.5 cm)

$299.99

Included in the Complete Audio System



ADJUSTABLE LIGHTED WHIP FLAG

- A must for riding the dunes.
- 5W Cree LED.
- 5 colored lenses to allow personalisation
- Glow-through whip, quickly-removable and replaceable pole.
- Increases vehicle's visibility.
- Meets most dune-area requirements.
- Die cast aluminum base, acetal hand nut.
- Includes adjustable mounting brackets and wiring.

Fits: RS, RU

715001651

$279.99

COMPLETE AUDIO SYSTEM

- This integrated Jensen wired remote, amplifier/receiver and speaker combination provides durability, convenience and ease of installation.
- The waterproof design and UV-resistant materials mean no matter how extreme your riding, this system will follow you through.
- LED illumination makes it easy to use and to read.
- You can select between AM/FM tuner, 7-channel weather band or listen to your favorites with your IPod (USB 2.0 and MP3/WMA compatible).
- Plug-and-play wiring.
- 50W x4, -10°C to 60°C operating range.
- Radio/GPS Console Adapter (715001404) required (except X mr models and except with Snorkel Kit (715001728)).
- Standard on Limited model.

Fits: RS, RU

715001197

$859.99



RADIO / GPS CONSOLE ADAPTOR

- Update center console for GPS and/or audio system integration.
- Includes a cover for unused GPS or audio system slot.
- Standard on Limited model.

Fits: RS, RU

715001404 • Black

$69.99



DEFENDER MAVERICK COMMANDER

MUST HAVE

DEFROST, HEAT & VENTILATION SYSTEM

- Best integrated system on the market with 3-ventilation speed and in-dash adjustable temperature.
- Adjustable/directional vents.

Fits: RS, RU (except X mr models)

- 6 vents specially positioned for better windshield defrosting/deicing, foot and hand heat.

715001390

$819.99

Fits: UR

- 10 vents specially positioned for better windshield and side windows defrosting/deicing, foot and hand heat.
- Easy-service air filter.
- Once installed, you might want to add storage space with the Lower Dashboard for Heating System (715003441) and Dash Storage Compartment Net for Heating System (715003544).

NEW **715001978**

$1,199.99





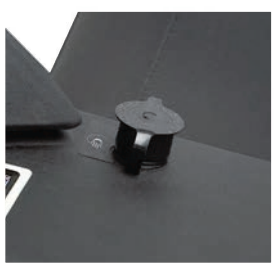

HEATED VISOR OUTLET

- Strategically positioned on vehicle to maintain your agility.
- Optional visor outlet that delivers fog-free riding.
- Quick and easy installation.
- Sold individually.
- Heated Visor not included.

Fits: RS, RU, UR

715001246

$49.99



DEFENDER MAVERICK COMMANDER

CATCH THE VIDEO AT STORE.CAN-AM.BRP.COM

WARN† PROVANTAGE

- Patented roller disc brake for enhanced winching control.
- Ergonomic clutch handle.
- Three-stage planetary gear train for smooth, efficient operation.
- All-metal gear housing and gears.
- Fully sealed motor and drive train keep the elements out.
- Weather sealed corded remote and dash mounted switch.
- Limited lifetime warranty for mechanical components and 3-year warranty for electrical components.
- EC compliant.



WARN PROVANTAGE 4500-S WINCH

- Pulling strength capability of 4,500 lb (2,041 kg).
- 50 ft. of 7/32" (15.2 m of 5.5 mm) synthetic rope.
- Double-powder-coated hawse fairlead.
- Winch Electrical Harness (715003093) is required for installation on UR base and DPS models.
- Winch Electrical Harness (710005215) is required for installation on RS 2017 & up (except X mr models).

Fits: UR
715002941
$804.99

Fits: RS, RU
- Mounting Plate is required.
- A Pre-Runner is required for RS X ds, X rs 2016 & up.

715002501
$804.99



WARN PROVANTAGE 4500 WINCH

- Pulling strength capability of 4,500 lb (2,041 kg).
- 55 ft. of 7/32" (16.8 m of 5.5 mm) wire steel cable.
- Roller fairlead.
- Winch Electrical Harness (715003093) is required for installation on UR base and DPS models.
- Winch Electrical Harness (710005215) is required for installation on RS 2017 & up (except X mr models).

Fits: UR
715002425
$704.99

Fits: RS, RU
- Mounting Plate is required.
- A Pre-Runner is required for RS X ds, X rs 2016 & up.

715002560
$704.99

CAN-AM TERRA BY SUPERWINCH†

- Ergonomic clutch handle.
- Rugged all-steel gears and bushings for more torque and durability.
- 100% mechanical load holding brake.
- Sealed solenoid for all-weather protection.
- Weather sealed corded remote and dash mounted switch.
- EC compliant.

CAN-AM TERRA 45 WINCH BY SUPERWINCH

- Pulling strength capability of 4,500 lb (2,041 kg).
- 47 ft. of 1/4" (14.3 m of 6.3 mm) wire steel cable.
- Heavy-duty 4-way roller fairlead.
- Winch Electrical Harness (715003093) is required for installation on UR base and DPS models (except XT models).
- Winch Electrical Harness (710005215) is required for installation on RS 2017 & up (except X mr models).

Fits: UR
715002838
$364.99

Fits: RS, RU
- Mounting Plate is required.
- A Pre-Runner is required for RS X ds, X rs 2016 & up.

715002092
$364.99





DEFENDER



REMOVABLE WINCH MOUNTING KIT

- Allows to remove your winch when needed.
- Use in combination with the Multimount Winch Harness (715004869) to quickly and conveniently relocate a front-mounted winch to the rear of the vehicle.
- Not compatible for use with the Lower Front Receiver Hitch.
- Requires Higher Front Receiver Hitch (715003109).

Fits: UR

715001652

$304.99



LOWER FRONT RECEIVER HITCH

- Heavy-duty 1,500 lb (680 kg) towing capacity 2" (5 cm) receiver hitch.
- Expand and enhance functionality by pairing it with Higher Front Receiver Hitch (715003109) and Removable Winch Mounting Kit (715001652 (need to relocate winch from its standard mounting position)).

Fits: UR

715002519

$99.99



HIGHER FRONT RECEIVER HITCH

- Heavy-duty 1,500 lb (680 kg) towing capacity 2" (5 cm) receiver hitch.
- No need to relocate winch from its standard mounting position.

Fits: UR

715003109

$99.99



DROP TOW BAR

- Sturdy 2" (5 cm) ball-less tow bar.
- Conveniently set at standard trailering height.
- Requires Higher Front Receiver Hitch (715003109).

Fits: UR

715002521

$99.99

WINCH ELECTRICAL HARNESS

(Not illustrated)

- Required to install a winch on base and DPS models.

Fits: UR

715003093

$49.99

MULTIMOUNT WINCH HARNESS

(Not illustrated)

- Converts Removable Winch Mounting Kit (715001652) into a practical multimount winch kit.

Fits: UR (except MAX models)

710004869

$49.99

Fits: UR (MAX models only)

NEW **710005082**

$84.99

DEFENDER MAVERICK COMMANDER

FRONT & REAR HITCH DRAWBAR

- Fits 2" (5 cm) receiver hitch that comes standard on Defender and the Lower and Higher Front Receiver Hitches (715002519 and 715003109).
- Hitch ball not included.

Fits: UR, RS, RU

715000972

$79.99

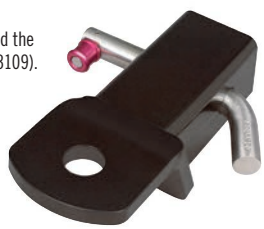

EUROPEAN VERSION

715001473 • Drawbar with 50 mm European ball

DEFENDER MAVERICK COMMANDER

MULTIMOUNT WINCH KIT

- For use with Warn Winch Kit.
- Versatile system that can be easily mounted at the front or rear of the Can-Am Commander.
- Complete with Can-Am plug-and-play front and rear wire harness.
- Ergonomically formed handle makes it easy to carry from front to rear.
- Front 2" (5 cm) Receiver Hitch (715000663) required for installation.
- Integrated receiver allows for use with Multimount Tow (715001142), sold separately.
- Roller Fairlead (715001119) is required for use with synthetic cable winch.

Fits: RU (MAX models only)
715002068
$324.99
Fits: RU (except MAX models)
715000659
$304.99



WINCH & HITCH SUPPORT PLATE

- Mounting plate for winch and Front 2" (5 cm) Receiver Hitch (715000663).
- Standard on XT, XT-P and Limited models.

Fits: RU
715000704
$94.99



MULTIMOUNT TOW

- 1.5" (3.8 cm) bar system, no ball.
- Requires Multimount Winch Kit (715002068, 715000659).

Fits: RU
715001142
$49.99





2" RECEIVER HITCH

- Heavy-duty 2" (5 cm) receiver hitch.
- Can pull up to 1,300 lb (590 kg).
- Not EC compliant.

Fits: RS (Turbo, X ds Turbo & X rs Turbo 2016 & up models only)
715002517
$189.99

MOUNTING PLATE FOR WINCH

Fits: RS
715001699
$114.99

Fits: RS (X mr models only)
(Not illustrated)
- Required with Front Pre-Runner Bumper.

705203196
$44.99



RUBBER RECEIVER PLUG

- Rubber cap for 2" (5 cm) Receiver Hitch.

705204503
$10.99



WINCH HARNESS

(Not illustrated)
- Required for all Maverick MY17s and up, since the X mr will be the only model standard-equipped with a winch.
- For front winching only (does not fit the multimount kit for rear hitching).

Fits: RS
710005215
$19.99

SYNTHETIC WINCH CABLE

- 50' of 7/32" (15.2 m of 5.5 mm) synthetic cable for Warn winch.
- NOTE: Replacing a wire rope with synthetic cable also requires changing the fairlead to avoid damage and wear to the synthetic cable from the rough surface of the old fairlead.

Fits: with Warn winch
715001118
$139.99



REPLACEMENT WIRE ROPE

- 55' of 7/32" (16.8 m of 5.5 mm) wire rope for Warn winch kit.

Fits: with Warn winch
715001117
$69.99



SYNTHETIC CABLE EXTENSION

- Lightweight 1/4" (6.3 mm) diameter, easy to handle and won't rattle in cargo box.
- Easily attaches to winch cable to provide additional 50' (15.2 m) of distance.
- 4,500 lb (2,041 kg) single line capacity.

Fits: RS, RU
715001120
$139.99



FRONT 2" (5 CM) RECEIVER HITCH

- Can be used with a standard 2" (5 cm) draw bar.
- Complete with integrated quick locking/release pin for easy installation and removal of draw bar.
- Allows for front-mount pulling/pushing or additional accessory attachments, such as a plow.
- Winch & Hitch Support Plate (715000704) is required for installation.

Fits: RU
715000663
$94.99



RECEIVER HITCH

- Heavy-duty 2" (5 cm) receiver hitch.
- Can pull up to 1,300 lb (590 kg).
- Not EC compliant.

Fits: RS (except Turbo, X ds Turbo & X rs Turbo 2016 & up models)
715001648 • Black
$184.99



ROLLER FAIRLEAD

- Suggested when changing the wire rope.
- Heavy-duty replacement fairlead for Warn winch.

Fits: with Warn winch
715001119
$54.99



WIRELESS REMOTE CONTROL

- The system is quick and easy to install, thanks to a wiring harness with an integrated antenna and all necessary mounting hardware.
- Allows you to operate your winch from anywhere within a 50' (15.2 m) radius, increasing your recovery options.
- All components are weatherproof.

Fits: with Warn winch
715002542
$179.99





MAVERICK COMMANDER

CATCH THE VIDEO AT STORE.CAN-AM.BRP.COM

NEW

BEARD SEATS

- True performance seating for driver and front passenger seats.
- Designed specifically for Side-by-side vehicles applications.
- Beard's unique technology has been developed over substantial testing sessions.
- Offer great posture for both driver and passenger during intense riding conditions, thanks to the ideal seat angle and pitch.
- Feature a high and unmatched level of containment support, which gives superior comfort and stability.
- The belt notch allows easy seat removal and added comfort for larger occupants.
- Made of rigid welded-steel frame, covered with sculpted foam and wrapped with a custom cover of premium marine-grade vinyl, which is durable in all driving conditions and resistant to mildew and fading.
- Enhances the racing look of the vehicle.
- No additional seat mounts required.
- Sold in pairs.

Fits: RS, RU

715003607 • Grey
715003609 • Octane Blue
715003608 • Manta Green

$849.99





MAVERICK



YOSHIMURA SLIP-ON EXHAUST

- Developed in collaboration with Yoshimura.
- Made from 304-grade stainless steel.
- Better sounding, better looking and 33% lighter than stock muffler.
- USDF/USDA approved spark arrester.
- Standard on Maverick X rs and Maverick MAX X rs 2016 & up models.
- ROHVA and EPA compliant.
- Not EC compliant.

Fits: RS (Turbo, X ds Turbo, X rs Turbo 2016 & up models)

715003051

$699.99

CATCH THE VIDEO AT STORE.CAN-AM.BRP.COM

COMMANDER



YOSHIMURA SLIP-ON EXHAUST

- Developed in collaboration with Yoshimura.
- Made from 304-grade stainless steel.
- Better sounding, better looking and lighter than stock muffler.
- USDF/USDA approved spark arrester.
- Non EPA compliant (for racing application only).
- ROHVA compliant.
- Not EC compliant.

Fits: RU

715002089

$469.99



MAVERICK COMMANDER

Keep MUD and debris out of vehicle.



FENDER FLARE

- Fender flare made from injection-molded polypropylene.
- Keeps mud and debris out of vehicle.
- Includes front and rear extensions and all mounting hardware.

Fits: RS

715002414

$204.99



SUPER EXTENDED FENDER FLARE

- Extended Fender Flare made from injection-molded polypropylene.
- Keeps mud and debris out of vehicle.
- Flexible mud flap included.
- Includes front and rear extensions and all mounting hardware.

Fits: RS

715001323

$259.99

XT FENDER FLARE

- Delivers aggressive look while providing added protection from dirt and debris.
- Includes front and rear extensions and all mounting hardware.
- Standard on XT, XT-P and Limited models.

Fits: RU

715002451

$204.99



MAVERICK COMMANDER

NEW

LONESTAR RACING FIRE EXTINGUISHER SUPPORT KIT

- Quick release support that allows you to slide the fire extinguisher out in a matter of seconds in an emergency situation.
- Made of billet anodized black aluminum with Lonestar Racing logo engraved.
- Fits 2" (5 cm) tubing.
- Can be fixed everywhere on the cage.
- Adds racing style while providing you with the safety and security of having dependable emergency equipment on board.
- Comes with both billet mounts, quick-pull pin, mounting plate and 2 clamps.
- Fire extinguisher sold separately.
- "Lonestar Racing for Can-Am" branded.

Fits: RS, RU

715003592

$169.99





FIRE EXTINGUISHER

- Ideal for grease, oil and electrical fires.
- Fits with Lonestar Racing Fire Extinguisher Support Kit.
- Not EC compliant.

295100056 • White
295100004 • Red

$24.99





SNORKEL KIT

- Raises point of engine air intake to cool CVT so vehicle can be semi-submersed in water / mud without taking in water to the engine.
- Not compatible with Rear Nets and Windows, Harness Bars and Cab Enclosures.
- Can be installed on Commander 2012 and up with Dual CVT air Intake (715002467).
- Not EC compliant.

Fits: RS (except Turbo, X mr, X ds, X rs 2016 & up & MAX models), RU 2012 & up (except MAX models)

715001728

$599.99



NEW

AIR INTAKE PRE-FILTER FOR SNORKEL KIT

- Adds extra protection to your engine in harsh riding conditions.
- Helps keep air filter cleaner.
- Filter blocks particles larger than 0.007" (0.19 mm).
- Easy, tool-less installation.

Fits: RS (X mr models) or in conjunction with Snorkel Kit (715001728)

715003616

$39.99

DUAL CVT AIR INTAKE

- Complete kit to upgrade CVT cover from 1 inlet - 1 outlet to 2 inlets - 2 outlets.
- Used in conjunction with Snorkel Kit to get maximum airflow to CVT.
- Needed to install Snorkel Kit (715001728) on Commander 2012 & up.
- Keeps CVT system cooler in extreme use conditions.

Fits: RU 2012 & up (except Limited & MAX models)

715002467

$299.99



NEW

CVT VENTILATION UPGRADE KIT

(Not illustrated)

- CVT inlet with better flow and increased belt ventilation by 10%.
- Increases drive belt durabilty (decreases heat).
- Allows you to get the maximum performance.
- Requires QRS Driven Clutch Upgrade Kit (715003045).
- Standard on X ds Turbo models.

Fits: RS X ds

715003044

$199.99

NEW

QRS DRIVEN CLUTCH UPGRADE KIT

(Not illustrated)

- QRS Driven Clutch Upgrade Kit from X ds Turbo model but calibrated for the 1000R (non-turbo) engine.
- Increases drive belt durabilty.
- Use it with the CVT Ventilation Upgrade Kit (715003044) for improved performance and reliability.

Fits: RS (except Turbo models)

715003045

$649.99



MAVERICK COMMANDER

FOAM AIR FILTER BY TWIN AIR†

- The best choice for the harshest conditions.
- Multiple staged oiled filtering foam for superior dust retaining capacity with high air flow.
- Washable and reusable.

Fits: RS, RU (except X ds Turbo, Turbo, X rs Turbo 2016 & up models)
715001956
$104.99
Fits: RS (only Turbo models)
715002837
$104.99



715001956



715002837

FOAM REPLACEMENT

(Not illustrated)
Fits: RS, RU
707800582
$25.99
Fits: RS (Turbo models only)
707800682
$39.99

AIR INTAKE PRE-FILTER

- Adds extra protection to your engine in harsh riding conditions.
- Filter blocks particles larger than 0.005" (0.1 mm).
- Necessary to maintain the vehicle warrantly when tracks are installed.

Fits: RS (except X mr, X ds Turbo, Turbo, X rs Turbo 2016 & up models), RU
715000953
$39.99



VALVE FOR DONALDSON AIRBOX

(Not illustrated)

- Ensures engine performance in dry sandy conditions.
- Evacuates sand and dust from airbox.
- Reduces the frequency of airbox cleaning.

Fits: RS (Turbo models only)
715003114
$9.99

MAVERICK COMMANDER

RADIATOR PROTECTOR

- Black epoxy electrocoated metal shield that mounts over radiator face to provide protection from stones and branches.

Fits: RU

715001126

$64.99

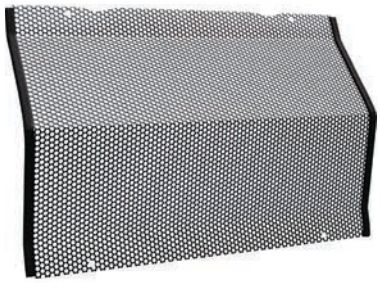

RADIATOR PROTECTOR

- Radiator grill that replaces stock plastic louver.
- Tool-less quick removal renders washing radiator a simple task.
- Made from 5052-grade aluminum.
- Metal shield mounted over radiator face provides protection from stones and branches.

Fits: RS (except X mr models)

715002393

$204.99



FRONT SHOCK COVERS

- Offer added protection in rough terrain and weather conditions.
- Sold in pairs.

Fits: RU

715001324

$39.99



SHOCK COVERS

(Not illustrated)

- Soft cover for shocks with ventilation holes.
- Eliminate dust and dirt intrusion into the shock cylinder, reducing risk of damage.
- Sold in pairs.

Fits: RS (except Turbo, X ds, X mr, X rs Turbo 2016 & up models)

715002368

$39.99

Fits: RS (except XXC, XC, XC DPS models)

715003471

$39.99

SPORT STEERING WHEEL

- Polyurethane soft-touch black grip highlighted with silver spokes.
- Standard on X, XT, XT Mossy Oak Hunting Edition, XT-P, X rs, X ds, X xc and Limited models.

Fits: RS, RU

715001134

$149.99



FRONT SWAY BAR

- Enhances vehicle performance and control during hard cornering.
- Standard on XT and XT-P models.

Fits: RU

715001125

$124.99





FOX PERFORMANCE FRONT SHOCKS

- Fox Piggyback racing shocks.
- Include rebound and high/low speed compression adjustments.
- Sold in pairs.
- Standard on XT and XT-P models.
- Need to be installed with Fox Performance Rear Shocks (715001023).

Fits: RU (except Limited & MAX models)

715001022

$1,019.99



FOX PERFORMANCE REAR SHOCKS

- Fox 2.0 Position Sensitive racing shocks.
- Include rebound and high/low speed compression adjustments.
- Sold in pairs.
- Standard on XT and XT-P models.
- Need to be installed with Fox Performance Front Shocks (715001022).

Fits: RU (except Limited & MAX models)

715001023

$1,129.99

APACHE 360 LT TRACK SYSTEM



DEFENDER MAVERICK COMMANDER

APACHE 360 LT TRACK SYSTEM

- Highly engineered track system provides ultimate traction in snow and any other type of ground surface for your Can-Am vehicle.
- Front track design reduces vibration, eases turning and enhances performance in any hard packed conditions. The angled front lugs minimize resistance, and the way the lugs overlap over the wheels ensures smooth rolling. The rear track pattern and lug height are balanced for greater traction.
- Unique adjustable contact patch enables you to tackle the toughest conditions year round. This new system has two settings: the user can choose a better attack angle in rough terrain or greater floatation in deep snow.
- Thanks to the heightened rubber over molded heavy-duty double bearing wheels and offset wheel spacing, friction and vibration are reduced to a minimum while ensuring reliability.
- Easy installation and quick conversion from tires to tracks once the Apache 360 LT Mounting Kit is installed (sold separately).
- The DPS module, included in the Apache 360 LT Mounting Kit, optimizes your Dynamic Power Steering (DPS) performance, maximizing steering agility at lower speeds while providing firmer steering at cruising speeds. It also provides a speed correction factor for the speedometer.
- Heavy-duty components ensure reliability and the design offers excellent acceleration, turning, braking and side-hilling performance.
- Larger contact patch than the Apache 360 Track System by 15 in² (97 cm²) at front and 41 in² (265 cm²) at back.
- Higher ground clearance than the Apache 360 Track System by 3/4" front and 1.25" rear.
- Higher rear angle of attack.
- Apache 360 LT Mounting Kit is required.
- EC compliant.

Fits: UR, RU

715003064

$4,699.99

APACHE 360 LT MOUNTING KIT

(Not illustrated)

- Required to install Apache 360 LT Track System (715003064).

Fits: UR

- Air intake pre-filter is included.

715002427

$549.99

Fits: RU

- DPS module is included for Commander 2013 and up.
- EC compliant.

715003062

$459.99

AIR INTAKE PRE-FILTER

- Adds extra protection to your engine in harsh riding conditions.
- Filter blocks particles larger than 0.005" (0.1 mm).
- Necessary to maintain the vehicle warranty when tracks are installed.

Fits: RS (except X mr, X ds Turbo, Turbo, X rs Turbo 2016 & up models), RU

715000953

$39.99



NEW

AIR INTAKE PRE-FILTER

- Adds extra protection to your engine in harsh riding conditions.
- Helps keep air filter cleaner.
- Filter blocks particles larger than 0.007" (0.19 mm).
- Easy, tool-less installation.
- Included in the Apache 360 LT Mounting Kit (715002427).

Fits: UR

715003483

$39.99





HIGHLY ENGINEERED TRACK DESIGN PROVIDES ULTIMATE TRACTION IN ANY TERRAIN AND LOWEST STEERING EFFORT.

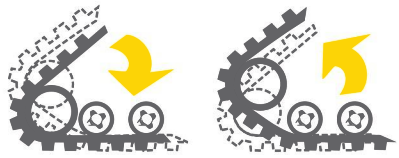

Unique adjustable contact patch system to tackle the toughest year-round conditions.



Easy installation and quick conversion from tires to tracks.

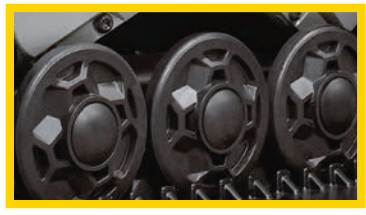

Rubber over molded heavy-duty double bearing wheels and offset wheel spacing reduce friction and vibration while ensuring reliability.

ALPINE FLEX PLOW



DEFENDER MAVERICK COMMANDER

72" (183 CM) ALPINE FLEX PLOW KIT

- 72" (183 cm) blade made of flexible high-impact-resistant UHMW thermoplastic.
- Impressive flexibility prevents plow damage during accidental impacts.
- Impact absorption properties return blade to its original shape.
- Rearward release action greatly reduces transmission of impact to driver or unit.
- Fast and easy attach/detach mounting system.
- Conveniently-placed blade-turning mechanism eliminates having to bend down to adjust blade angle.
- High-pivot design keeps plow on surface.
- Compatible with all Alpine Flex Plow accessories to further enhance plow versatility.
- Includes Plow Roller Fairlead and cable saver limit switch.

THIS KIT INCLUDES

72" (183 cm) Alpine Flex Plow (715001972), Alpine Flex Plow Push Frame (715002461), Alpine Flex Plow Mounting Kit (715002460)	72" (183 cm) Alpine Flex Plow (715001972), Alpine Flex Plow Push Frame (715001992), Alpine Flex Plow Mounting Kit (715001957)	72" (183 cm) Alpine Flex Plow (715001972), Alpine Flex Plow Push Frame (715002461), Alpine Flex Plow Mounting Kit (715003524)
Fits: UR	**Fits: RU**	**Fits: RS**
715003108	**715003150**	**715003545**
$1,404.97	**$1,404.97**	**$1,404.97**



ALPINE FLEX PLOW ACCESSORIES

ALPINE FLEX PLOW PUSH FRAME EXTENSION
(Not illustrated)
- Extension for Alpine Flex Plow Push Frame for use with the Apache 360 LT Track System.

Fits: UR, RU, RS (except X rs Turbo 2016 & up models)
715001973
$144.99

8" (20 CM) ALPINE FLEX PLOW EXTENSIONS
(Not illustrated)
- These conveniently extend your Alpine Flex Plow.

Fits: Alpine Flex Plow
715001385
$134.99

ALPINE FLEX PLOW RUBBER FLAP
(Not illustrated)
- Keeps snow away from the driver.
- Minimizes snow flowing over plow.
- Increases snow rolling effect.

Fits: 72" (183 cm) Alpine Flex Plow
715002117
$84.99

ALPINE FLEX WEAR BLADE (PLASTIC)
(Not illustrated)
- Flexible UHMW plastic construction won't scratch your driveway.
- Replaces stock wear blade.

Fits: 72" (183 cm) Alpine Flex Plow
715002120
$164.99

ALPINE FLEX WEAR BLADE (STEEL)
(Not illustrated)
- Long-lasting wear blade that provides a sharper cut.
- Replaces stock wear blade.

Fits: 72" (183 cm) Alpine Flex Plow
715002121
$114.99

ALPINE FLEX DRIFT CUTTER
(Not illustrated)
- Keeps snow securely in the plow.
- Fits on either left or right side.
- Sold individually.
- Requires 8" (20 cm) Alpine Flex Plow Extensions (715001385).

Fits: Alpine Flex Plow
715001386
$94.99

ALPINE FLEX PLOW EDGE MARKERS
(Not illustrated)
- For a more accurate view of the width of your plow so you avoid damaging your curb, your car or your house.

Fits: Alpine Flex Plow
715001388
$39.99

DEFENDER COMMANDER

72" (183 CM) SUPER-DUTY PLOW KIT

- A comprehensive plow system with manual lift and angling.
- Ultra-durable 72" (183 cm) blade made of 12-gauge steel with integrated reinforcement and heavy-duty push tubes to tackle the most demanding jobs.
- Requires a winch for raising and lowering.
- Convenient disconnect system for quick and easy installation or removal.
- Front mount provides minimum 11" (28 cm) lift distance.

THIS KIT INCLUDES

72" (183 cm) Super-Duty Plow (715001292)
Super-Duty Plow Push Frame (715001293)
Super-Duty Plow Mounting Kit (715002731)

Fits: UR
715003416
$1,229.97

72" (183 cm) Super-Duty Plow (715001292)
Super-Duty Plow Push Frame (715001293)
Super-Duty Plow Mounting Kit (715001294)

Fits: RU
715001140
$1,229.97



SUPER-DUTY PLOW ACCESSORIES

SUPER-DUTY PLOW HYDRAULIC ANGLING KIT

- Allows you to have full up/down and left/right plow control at your fingertips.
- Pre-assembled, it comes with everything you need to turn your Commander and Commander MAX Super-Duty Plow into a quick, easy-to-control unit from the driver's seat.
- Using one hand to control all plow motions with the supplied joystick will allow you to easily concentrate and manage your plowing tasks.
- With this commercial grade kit, you will send snowexactly where you want reliably all winter long.
- Winch and plow sold separately.

Fits: UR, RU
715002840
$1,299.99



Dual cylinders hydraulic

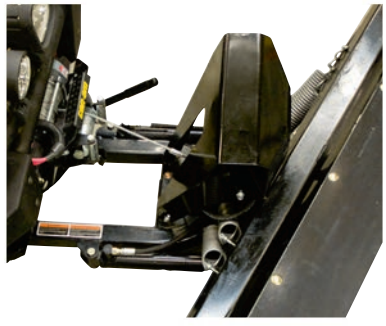

Electric hydraulic unit

PLOW BLADE EXTENSIONS

- Side extensions for widening your plow blade by 6" (15 cm) on each side.
- Include rubber flaps for extension parts.
- Sold in pairs.

Fits: Super-Duty Plow
715001217 • Black
$274.99



WARN† PLOW ROLLER FAIRLEAD

- Larger diameter lower roller reduces wear on wire rope for plow application.
- For use with Super-Duty Plow.

Fits: Super-Duty Plow
715001223
$69.99



SUPER-DUTY PLOW PUSH FRAME EXTENSION

(Not illustrated)

- Extension to use the Super Duty Plow with the Apache 360 LT Track System.
- Comes with Plow magnetic switch (715001995) and plow pulley (715002042).
- Requires Front Bumper or Front Accessory Bar for installation.

Fits: Super-Duty Plow
715001221 • Black
$289.99

PLOW EDGE MARKERS

(Not illustrated)

- For a more accurate view of the width of your plow.
- Allows you to work closely around objects.

Fits: Super-Duty Plow
715001216
$39.99

PLOW DRIFT CUTTER

(Not illustrated)

- Keeps snow securely in the plow.
- Allows you to cut a cleaner pass.
- Sold individually.

Fits: Super-Duty Plow
715001218 • Black
$94.99

PLOW RUBBER FLAP

(Not illustrated)

- Keeps snow away from the driver and helps snow to roll in front of the plow.

Fits: Super-Duty Plow
715001219
$94.99

PLOW PULLEY

(Not illustrated)

- For use with the Super-Duty Plow.
- Helps winching efficiency.
- Requires Front XT Bumper.

Fits: Super-Duty Plow
715002042
$49.99

PLOW MAGNETIC SWITCH

(Not illustrated)

- Magnetic switch that stops the winch to prevent cable, winch and frame damage.
- For use with Super-Duty Plow.

Fits: Super-Duty Plow
715001995
$104.99

COVERS & ADD-ONS

DEFENDER MAVERICK COMMANDER


715003393


715001369


715001025


715001368

TRAILERING COVERS

- Can-Am branded 300-denier solution-dyed, water-repellent polyester construction.
- Allow access to fuel, cargo box, and passenger compartment.
- Heavy-duty elastic strap around bottom for secure fit.
- Lined with soft fabric in the windshield area to prevent scratching.

• Fits with or without roof, light rack, front and rear bumpers, side mirrors and Baja-Style Spare Tire Holder.

Fits: RS (except MAX models)
715001655 • Black
$329.99
Fits: RS 2014 & up (MAX models only)
715002103
$359.99

• Fits with or without roof, light rack, front rack, light protector, front and rear bumpers, and side mirrors.

Fits: RU (except MAX models)
715001025
$289.99
Fits: RU 2014 & up (MAX models only)
715001963
$359.99

Fits: UR (except MAX models)
NEW **715001369 · Black**
$249.99
Fits: UR (MAX models only)
NEW **715003393**
$399.99

STORAGE COVERS

- Can-Am branded 100-denier solution-dyed, water-repellent polyester construction.
- Fit with or without most accessories.
- Heavy-duty elastic strap around bottom and polypropylene webbing across bottom for secure fit.

Fits: RU (except MAX models)
715001368 • Black
$229.99

ANTI-POOLING POLES

- 8 mm fiberglass poles to prevent snow or rain from accumulating on your trailer cover.
- Sold in pairs.
- Comes with nylon bag.
- Not for use while trailering.

Fits: RS, RU
715001374
$20.99



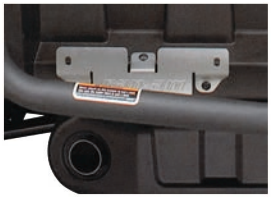

LICENSE PLATE HOLDER

- Supports your license plate.

Fits: RU
715001326
$29.99



LOCK FOR TAILGATE

- Device locks lower tailgate.
- Includes key.

Fits: RU
715001127
$29.99



WORK KEY

- Key limits vehicle speed to 25 mph (40 km/h) for use on construction sites.

Fits: RS, RU
715001201
$29.99



LOCKABLE GAS CAP

- Protects your fuel.
- Meets EPA requirements.

Fits: RS, RU
715001124
$44.99



12 V POWER OUTLET

- 12 V accessories outlet.
- Easy plug-in harness included.

Fits: RS
715001650
$39.99

Fits: RU, UR (on base & DPS models)
715001321
$39.99

ACCESSORY TIRES

ZILLA TIRE BY MAXXIS*



- Sold individually.

Front
27" x 10" x 14"
705401302
$179.99

Rear
27" x 12" x 14"
705501703
$194.99

NEW

ITP TERRACROSS TIRE



- This smooth-riding tire will command every bit of traction from the ground while still managing to float across loose snow, sand and mud.
- Features extreme-duty construction for improved puncture protection, extra-tough rubber compound for increased tread life, and the interlocking tread pattern and wide footprint make it one of the toughest and grippiest radials around.
- Not EC compliant.

Fits: G2 (DPS models except G2L), G2 (XT models except G2L, XT-P & Limited)

Front	Rear
26'' x 8'' x 14''	26'' x 10'' x 14''
705401906	705502421
$149.99	$189.99

OEM TIRES

GORILLA SILVERBACK TIRE



- AT30X9-14 Gorilla Silverback mud tire.
- Sold individually.
- Not EC compliant.

Fits: G2 (850 & 1000 models only)
30" x 9" x 14"
705400962
$229.99

MAXXIS MUDZILLA TIRE



- Not EC compliant.

Fits: G2 (X mr 570 & 650 models only)

Front	Rear
28" x 8" x 12"	28" x 10" x 12"
705401391	705501836
$199.99	$219.99

MAXXIS BIGHORN 2.0 TIRE



Fits: RU (XT & Limited models only)

Front	Rear
27" x 9" x 14"	27" x 11" x 14"
705401377	705502019
$209.99	$219.99
705400961 · CE	705501295 · CE

Fits: RS, RU (XT, XT-P models only)

Front	Rear
27" x 9" x 12"	27" x 11" x 12"
705401385	705501817
$174.99	$184.99
705401386 · CE	705501818 · CE

Fits: RS, RU
- Standard on RS (X ds models)

Front	Rear
28" x 9" x 14"	28" x 11" x 14"
705401592	705502144
$199.99	$229.99

CARLISLE ACT TIRE



Fits: G2 (500-1000 XT models only)

Front	Rear
26" x 8" x 12"	26" x 10" x 12"
705401333	705501769
$129.99	$139.99
705401334 · CE	705501770 · CE

Fits: G2 (400 XT models only)

Front	Rear
25" x 8" x 12"	25" x 11" x 12"
705400606	705500933
$119.99	$144.99
705400326 · CE	705500908 · CE

CARLISLE BLACK ROCK TIRE



Fits: RU (Base models only)

Front	Rear
27" x 9" x 12"	27" x 11" x 12"
705400781	705501129
$114.99	$149.99
705401961 · CE	705501295 · CE

CARLISLE BADLANDS A/R TIRE



Fits: G2 (500-1000 Base models only)

Front	Rear
26" x 8" x 12"	26" x 10" x 12"
705401331	705501767
$109.99	$124.99
705401332 · CE	705501768 · CE

CARLISLE TRAIL WOLF TIRE



Fits: G2 (400 Base models only)

Front	Rear
25" x 8" x 12"	25" x 11" x 12"
705400009	705502164
$109.99	$129.99
705400607 · CE	705502165 · CE

*Consult your operator's guide/owner's manual for proper tire type and rim sizing. Improper tire type and rim selection may affect vehicle handling. Check with your local authorities for proper regulation.

OEM TIRES

ITP HOLESHOT ATR TIRE



Fits: G2S

Front 205/80R12
25" x 8" x 12"
705400600
$129.99
705400475 · CE

Rear 270/60R12
25" x 10" x 12"
705500926
$154.99
705500820 · CE

DURO THRASHER TIRE



Fits: DS 90/70

Front - 19" x 7" x 8"
V42711DGF000LL
$69.99
Rear - 18" x 9.5" x 8"
V42712DGF010LL
$69.99

KENDA KLAW MXR TIRE



Fits: DS 90 X

Front - 20" x 6" x 10"
V42711DGF01HLL
$99.99
Rear - 18" x 10.5" x 8"
V42712DGF01HLL
$109.99

ITP HOLESHOT SR TIRE



Fits: DS 450

Front - 21" x 7" x 10"
705400432
$89.99
Rear - 20" x 10" x 9"
705500787
$119.99

ITP QUADCROSS MX PRO TIRE



Fits: DS 450 X mx

Front - 20" x 6" x 10"
705400765
$109.99
Rear - 18" x 10" x 8"
705501106
$119.99

ITP HOLESHOT GNCC TIRE



Fits: DS 450 X xc

Front - 21" x 7" x 10"
705400650
$114.99
Rear - 20" x 10" x 9"
705500989
$149.99

KENDA KNARLY TIRE



Fits: DS 250

Front - 22" x 7" x 10"
S44710RCA000
$89.99
Rear - 20" x 11" x 9"
S42710RCA000
$99.99

REAR TIRE CHAINS



- Improve your traction in mud and snow.
- Sold in pairs.

26" x 10" x 12"
715500218
$79.99
25" x 10"x 12"
715000225
$79.99

OEM RIMS & BEADLOCK FOR SIDE-BY-SIDE VEHICLES

NEW

X MR AND DEFENDER RIM

- Cast aluminum rim with trend setting explosive styling so you can ride - and look - like a trailblazer.
- Front: 14" x 6.5" offset = 10 mm

Fits: UR (front wheels), ATV, SSV (X mr models front & rear wheels)

705401848 • Black and machined
705401849 • Black

$129.99



NEW

X MR AND DEFENDER RIM

- Cast aluminum rims with trend setting explosive styling so you can ride - and look - like a trailblazer.
- Rear: 14" x 8.5" offset = 23 mm

Fits: UR (rear wheels)

705502397 • Black and machined
705502398 • Black

$129.99



NOTE: Matching Nuts - 250100100 Black, 250100082 Chrome / Matching Cap - 705401541



14" MAVERICK X DS RIM

- Black with clear coat aluminum rim.
- Choice of beadlock color (not included).
- Needs 16 bolts (250000435) for installing the beadlock.

Fits: RS, RU

Front - 14" x 6.5" offset = 41 mm	Rear- 14" x 8" offset = 51 mm
705401594	705502146
$229.99	$229.99



14" X DS BEADLOCK

- Cast aluminum beadlock.
- Must be installed on Front Rim (705401594) and Rear Rim (705502146).

Fits: RS, RU

705401586 • Manta Green
705401702 • Octane Blue
705401837 • Can-Am Red

$74.99

12" MAVERICK RIM

- Black with clear coat aluminum rim.
- Choice of beadlock color (not included).
- Needs 16 bolts (250000435) for installing the beadlock.

Fit: RS

Front - 12" x 6"	Rear - 12" x 7.5"
705401678 • Black	705502244 • Black
$194.99	$195.99



12" MAVERICK BEADLOCK

- Cast aluminum beadlock.
- Must be installed on Front Rim (705401678) and Rear Rim (705502244).

Fits: RS

705401445 • Can-Am Red
705401543 • Orange Crush
705401329 • Yellow
705401695 • Octane Blue

$69.99

NOTE: Matching Nuts - 250100100 / Matching Cap - 705400928

OEM RIMS & BEADLOCK FOR SIDE-BY-SIDE VEHICLES

LIMITED 14" RIM

- Premium cast aluminum rim.
- Black with machined face.
- Sold individually.
- Standard on Limited model.

Fits: RS, RU

Front - 14" x 7" offset = 41 mm
705401098 • Silver/Black
$129.99
Rear - 14" x 8.5" offset = 51 mm
705501471 • Silver/Black
$144.99



XT 14" RIM

- Premium cast aluminum rim.
- Sold individually.
- Standard on XT Camo models.

Fits: RS, RU

Front - 14" x 7" offset = 41 mm
705401379 • Black
$139.99
705400632 • Silver with clear coat
$129.99
Rear - 14" x 8.5" offset = 51 mm
705501814 • Black
$144.99
705501812 • Silver with clear coat
$159.99



NOTE: Matching Nuts - 250100100 Black & 250100082 Chrome / Matching Cap - 705400680 Black

OEM RIMS FOR ATV

ATV: G2 DPS, G2 XT, G2 MAX 650, G2 MAX XT, G2 MAX Limited

NEW

14" RIM

- Prenium cast aluminum black painted with machining and clear coat rim.
- Center hole: 72 mm
- Bolt circle pattern: 4/136 mm

Front - 14" x 6.5" offset = 40 mm
705401853 • Black and machined
$119.99
Rear - 14" x 8.5" offset = 50 mm
705502402 • Black and machined
$129.99



NEW

14" RIM

- Premium cast aluminum rim.
- Center hole: 72 mm
- Bolt circle pattern: 4/136 mm

Front - 14" x 6.5" offset = 40 mm
705401852 • Black with clear coat
705401851 • Silver with clear coat
$109.99
Rear - 14" x 8.5" offset = 50 mm
705502401 • Black with clear coat
705502400 • Silver with clear coat
$119.99



NOTE: Matching Nuts - 250100100 Black, 250100082 Chrome / Matching Cap - 705400928

COLORED FINS FOR RIMS

- Plastic fins that enhance the appearance of your vehicle.
- Pack of 8.

Fits on following rims: XT, XT-P and Limited 2016 (705500986, 705501015, 705501019, 705400687, 705400648, 705400683)

705400681 • Yellow
705400950 • Steel Grey
$1.99



XTR CUSTOM RIM KIT

- Custom Can-Am XTR branded 12" painted aluminum rims.
- Includes matching chrome nuts and center covers.
- Set of 4.

Fits: G2, G2S 2012 & prior (with 650 or 800R engine)

Front - 12" x 6"
Rear - 12" x 8"
715000611 • Black
$519.99



OEM RIMS & BEADLOCK FOR ATV

RENEGADE X XC & OUTLANDER XTP RIM



- Black with clear coat aluminum rim.
- Needs 16 bolts (250000435) for installing the Beadlock.
- Choice of beadlock color (not included).

Fits: G2, G2L, G2S

Front - 12" x 6"
705401678 • Black
$194.99

Rear - 12" x 7.5"
705502244 • Black
$195.99

BEADLOCK

- Cast aluminum beadlock.
- Must be installed on Front Rim (705401678) and Rear Rim (705502244).

Fits: G2, G2L, G2S

705401156 • Yellow
705401533 • Orange Crush
705401540 • Manta Green
$69.99

OUTLANDER RIM (CAMO MODEL)



- Black with clear coat aluminum rim.

Fits: G2, G2L, G2S

Front - 12" x 6"
705401127 • Black with clear coat
$144.99
Rear - 12" x 7.5"
705501493 • Black with clear coat
$154.99

NOTE: Matching Nuts - 250100100 / Matching Cap 705400928



ACCESSORY RIMS FOR ATV & SIDE-BY-SIDE VEHICLES



RED LABEL BLACK RIM BY DWT*

- Sold individually.

Front - 12" x 8"
Bolt circle pattern: 4/136 mm
Wheel offset: 4 + 4
705401261
$129.99

Rear - 12" x 10"
Bolt circle pattern: 4/136 mm
Wheel offset: 5 + 5
705501717
$129.99



LOCKOUT 393 14" RIM BY VISION*

- Sold individually.
- Matching Cap (705401362), Matching Nuts (250100100).

Front - 14" x 7"
Bolt circle pattern: 4/136 mm
Wheel offset: 4 + 3
705401363
$99.99

Rear - 14" x 8"
Bolt circle pattern: 4/136 mm
Wheel offset: 4 + 4
705501787
$99.99



OUTLANDER X MR RIM - ITP-SS212*

- Black with machining and clear coat rim.
- Matching Cap (705400963), Matching Nuts (250100100).
- Sold individually.

Fits: G2 (X mr models only)

Front & Rear - 14" x 6"
705400877 • Black and machined
$129.99

*Consult your operator's guide/owner's manual for proper tire type and rim sizing. Improper tire type and rim selection may affect vehicle handling. Check with your local authorities for proper regulation.

SPORTSWEAR & RIDING GEAR





KAPPA is for people on the move.
It's fashion at the crossroads of performance; aggressively stylish, adrenaline driven, and designed to make a lasting impression.

160 Go Fas Racing Team Gear
163 Kappa-Kombat Technical Gear
166 Can-Am Gear by Kappa
168 Kappa Casual Wear

Wear your heart on your sleeve, or at the very least your love of everything Can-Am. Our sportswear is where you'll find the perfect blend of technical excellence, versatility, comfort and great looks.

170 Men's
174 Ladies'
175 Teen & Kidswear



HELMETS & GOGGLES

Comfort and security. That's what it's all about. There's a lot to choose from, so it won't be hard to find a helmet that suits your needs and the right goggles that'll see you through every exciting Can-Am day.

176 CGX2 Camera
177 Cross Helmets
182 Which Cross Helmet is for you?
184 Open Face / Full Face Helmets
185 Bluetooth Communication Systems
186 Goggles



RIDING GEAR

Rugged, reliable and ready for just about anything you can throw at them. That's what we've engineered into all our riding gear. It's guts and glory, pride and that powerful can do Can-Am attitude that'll get you there, and get things done.

188 Gloves
189 Jerseys
190 Jackets & Pants
195 Boots
197 Technology Guide
198 Technical Wear
200 Bags
201 Sizing Chart

NEW

Kappa

GO FAS RACING TEAM GEAR
KAPPA-KOMBAT TECHNICAL GEAR
CAN-AM GEAR BY KAPPA
KAPPA CASUAL WEAR



CATCH THE VIDEO AT STORE.CAN-AM.BRP.COM

NEW GO FAS RACING TEAM GEAR

Fashion for the fearless, created with performance in mind, it includes a great big shout out to the exceptional Go Fas racing team. Kappa, Can-Am and Go Fas: be sure to look good during your victory lap.

GO FAS RACING TEAM POLO

- Short sleeve polo.
- Embroidered sponsor patches.
- Red numbering on back.
- Can-Am logos on front and back.
- Red numbering on left sleeve.

100% Polyester

MEN'S

286634
S, M, L, XL, 2XL, 3XL
White (01),
Yellow (10),
Black (90)
$34.99



LADIES'

- Feminine cut.

286635
XS, S, M, L, XL, 2XL
White (01)
$34.99



GO FAS RACING TEAM HOODIE

- Full-zip hooded fleece with long sleeves.
- Embroidered sponsor patches.
- Can-Am logos on front and back.
- Red numbering on left sleeve.

60% Cotton, 40% Polyester

MEN'S

286638
S, M, L, XL, 2XL, 3XL
Black (90)
$64.99



LADIES'

286639
XS, S, M, L, XL, 2XL
White (01)
$64.99





GO FAS RACING TEAM CAP

- Can-Am logo on front.
- Embroidered sponsor patches.
- Kappa logo on side.
- Red numbering on peak.

100% Polyester

286641 • One size • Yellow (10), Black (90)
$19.99

GO FAS RACING TEAM TECHNICIAN SHIRT

- Short sleeve shirt.
- Embroidered sponsor patches.
- Can-Am logos on front and back.
- Red numbering on left sleeve.
- Chest pocket.

58% Cotton, 38% Polyester, 4% Elastane

286636
S, M, L, XL, 2XL, 3XL
Yellow (10), Black (90)
$49.99



GO FAS RACING TEAM JACKET

- Mix of embroidered and printed sponsor patches.
- Can-Am logos on front and back.
- Red numbering on left sleeve.

58% Cotton, 38% Polyester, 4% Elastane

286640
S, M, L, XL, 2XL, 3XL
Black (90)
$79.99





GO FAS RACING TEAM JERSEY

- Long sleeve jersey with mesh inserts.
- Embroidered sponsor patches.
- Can-Am logo on front.
- Kappa logo on sleeves.

100% Polyester

286637
S, M, L, XL, 2XL, 3XL
Yellow (10), Green (70), Blue (80)
$49.99



GO FAS RACING TEAM T-SHIRT

- Short sleeve t-shirt.
- Embroidered sponsor patches.
- Can-Am logos on front and back.
- Red numbering on left sleeve and back.

100% Cotton

286632
S, M, L, XL, 2XL, 3XL
Yellow (10), Black (90)
$25.99



LADIES' GO FAS RACING TEAM T-SHIRT

- Short sleeve t-shirt.
- Feminine cut.
- Can-Am logo on front.
- Red numbering on sleeve and front.

100% Cotton

286633
XS, S, M, L, XL, 2XL
Yellow (10), Black (90)
$25.99



NEW KAPPA-KOMBAT TECHNICAL GEAR

Squeeze every last bit of adventure out of every moment on the trail or on the job by wearing only the very best. Kappa-Kombat Technical Gear raises the bar for excellence without compromising on style.



KOMBAT TECHNICAL JERSEYS

- Printed graphics and mesh inserts.
- Kappa logo on front.

100% Polyester

LONG SLEEVE
286666
S, M, L, XL, 2XL, 3XL
Blue (80)
$49.99



SHORT SLEEVE
286667
S, M, L, XL, 2XL, 3XL
Blue (80)
$44.99



SLEEVELESS
286668
S, M, L, XL, 2XL, 3XL
Blue (80)
$39.99



LADIES' KOMBAT TECHNICAL JERSEYS

- Printed graphics and mesh inserts.
- Feminine cut.
- Kappa logo on front.

100% Polyester

LONG SLEEVE
286655
XS, S, M, L, XL, 2XL
White (01)
$49.99



SHORT SLEEVE
286669
XS, S, M, L, XL, 2XL, 3XL
White (01)
$44.99



SLEEVELESS
286670
XS, S, M, L, XL, 2XL, 3XL
Black (90)
$39.99





KOMBAT TECHNICAL JERSEYS

- Printed graphics and mesh inserts.
- Kappa logo on front.

100% Polyester



LONG SLEEVE
286652
S, M, L, XL, 2XL, 3XL
Yellow (10), Green (70)
$49.99



SHORT SLEEVE
286653
S, M, L, XL, 2XL, 3XL
Yellow (10), Green (70)
$44.99



SLEEVELESS
286654
S, M, L, XL, 2XL, 3XL
Yellow (10), Green (70)
$39.99



KOMBAT TECHNICAL COMPRESSION SHIRT

- Compression shirt with mesh inserts.
- Kappa and Kombat logos.

95% Polyester 5% Spandex



LONG SLEEVE
286643
S, M, L, XL, 2XL, 3XL • Black (90)
$49.99



SHORT SLEEVE
286644
S, M, L, XL, 2XL, 3XL • Black (90)
$39.99

KAPPA-KOMBAT TECHNICAL WATERPROOF JACKET

- Waterproof jacket.
- Kappa logo on right shoulder and right sleeve.
- Kombat logo on left side.



MEN'S

96% Polyester, 4% Spandex
286656 • S, M, L, XL, 2XL, 3XL • Black (90)
$79.99



LADIES'

· Feminine cut.
100% Polyester
286657 • XS, S, M, L, XL, 2XL • Black (90)
$79.99

KOMBAT TECHNICAL JACKET

- Water-resistant jacket with mesh inserts.
- Kappa logo on right shoulder and on both sleeve.
- Kombat logo on left side.

100% Polyester

MEN'S

286658
S, M, L, XL, 2XL, 3XL
Black (90)
$69.99



LADIES'

- Feminine cut.

286659
XS, S, M, L, XL, 2XL
Grey (09), Pink (36)
$69.99



NEW CAN-AM GEAR BY KAPPA

Übercool never wears out its welcome, which explains why countless thousands swear by Kappa Gear's exciting sense of active urban chic. Attitude + action are the patterns behind this Can-Am style collection, and they'll make you a believer.



CATCH THE VIDEO AT STORE.CAN-AM.BRP.COM



LONG SLEEVE TEE

- Long sleeve t-shirt.
- Can-Am logo.
- Kappa logo on the back of the neckline and on left sleeve.

100% Cotton

286661 • S, M, L, XL, 2XL, 3XL • White (01), Yellow (10), Red (30), Black (90)

$34.99



LADIES' LONG SLEEVE TEE

- Long sleeve t-shirt.
- Feminine cut.
- Can-Am logo on front at neckline.
- Kappa logo on upper back.

100% Cotton

286662 • XS, S, M, L, XL, 2XL • White (01), Grey (09)

$34.99

POLO

- Short sleeve polo.
- Can-Am logo on left chest.
- Kappa logo on right shoulder.

100% Cotton

286663
S, M, L, XL, 2XL, 3XL
Red (30), Blue (80), Black (90)

$34.99



HOODIE

- Full-zip hoodie fleece.
- Printed graphics.
- Kappa logo on shoulder.

60% Cotton,
40% Polyester



MEN'S

- Can-Am logo on front.

286664 • S, M, L, XL, 2XL, 3XL • Grey (09), Blue (80)

$64.99

LADIES'

- Feminine cut.
- Can-Am logo on right sleeve.

286665 • XS, S, M, L, XL, 2XL • Grey (09), Purple (40)

$64.99

NEW KAPPA CASUAL WEAR

Kappa Gear. There's nothing quite like it, advanced and avant-garde – a cutting-edge European original is about to take North America by storm and Can-Am is proud to be leading the charge. Wear or be square.



POLO

- Short sleeve polo.
- Kappa logo on right shoulder.

100% Cotton



MEN'S

286645
S, M, L, XL, 2XL, 3XL
Grey (09), Blue (80), Black (90)
$34.99



LADIES'

286646
XS, S, M, L, XL, 2XL
White (01), Red (30)
$34.99

HOODIE

- Full-zip hoodie.
- Kappa logo on left chest and on right sleeve.

60% Cotton,
40% Polyester





MEN'S

286647 • S, M, L, XL, 2XL, 3XL • Yellow (10), Green (70)

$64.99





LADIES'

- Feminine cut.

286648 • XS, S, M, L, XL, 2XL • White (01), Black (90)

$64.99



SPORT SHOES

- Laced training shoes.
- Soft and ultralight removable PU foam insock.
- Phylon outsole with non-slip rubber inserts.
- Kappa logo.

286660 • 8, 9, 10, 10.5, 11
Black (90)

$99.99

LADIES' SPORT ZIP-UP TOP

- Full-zip top with mesh inserts.
- Kappa logo on left side of chest.

60% Cotton,
40% Polyester

286642
XS, S, M, L, XL, 2XL
Black (90)

$44.99



LADIES' SPORT PANTS

- Sport pants with mesh inserts.
- Kappa logo on right thigh.

60% Cotton,
40% Polyester

286671
XS, S, M, L, XL, 2XL
Black (90)

$34.99



FLEECE

- Full-zip fleece.
- Wicking fabric.
- Zipped pocket on left chest.
- Can-Am logo on chest.
- Kappa logo on left shoulder.

60% Cotton,
40% Polyester

MEN'S

286649
S, M, L, XL, 2XL, 3XL
Black (90)

$59.99



LADIES'

- Feminine cut.

286650
XS, S, M, L, XL, 2XL
White (01)

$59.99





SHORT

- Shorts with Kappa logo on left thigh and on right upper back.
- Two back pockets.

97% Cotton, 3% Elastane

286651 • S, M, L, XL, 2XL, 3XL
Black (90)

$49.99



NEW

ZIPPED HOODIE

- Full-zip hooded sweatshirt.
- 2 chest pockets.
- Ribbed waistband and cuffs.
- Can-Am print on hood with contrasting hood cords.
- Checkered print on sleeves (black model only).

60% Cotton, 40% Polyester

286620
S, M, L, XL, 2XL, 3XL
Khaki (05), Black (90)
$74.99



MOSSY OAK CAMO FLEECE

- Full-zip fleece with hand warmer pockets.
- Mossy Oak Break-Up Country Camo fabric matches ATV/Side-by-side pattern.

100% Polyester

286589
M, L, XL, 2XL, 3XL
Mossy Oak Break-Up Country Camo (37)
$79.99



WILD X-TEAM HOODIE

- Full-zip hooded sweatshirt.
- Ribbed waistband and cuffs.
- Non-fading sublimated graphics.
- 2 hand pockets.

100% Polyester

286576
S, M, L, XL, 2XL, 3XL
Blue (80), Black (90)
$79.99



X-TEAM FLEECE

- High-filament polyester with slight brushed finish for added softness and warmth.
- Spandex content enhances mobility.
- Ideal as a warm, dry first layer.
- Full-zip.
- Welded chest pocket.

95% Polyester,
5% Spandex

286568
S, M, L, XL, 2XL, 3XL
Charcoal Grey (07)
$74.99





IMPULSE HOODIE

- Ribbed waistband and cuffs.
- Contrasting inner hood.
- Kangaroo front pocket.

60% Cotton,
40% Polyester Fleece

286575
S, M, L, XL, 2XL, 3XL
Beige (02),
Heather Grey (27)

$74.99



OVERSHIRT

- Plaid flannel overshirt.
- Slightly insulated.
- Front opening with press buttons.
- 2 chest pockets.

100% Cotton

286587
S, M, L, XL, 2XL, 3XL
Black (90)

$74.99



MUST HAVE

TECHNICAL FLEECE

- Waterproof, windproof and breathable full-zip soft shell.
- Fleece interior for ultimate comfort.
- Pre-shaped sleeves.
- 2 zippered pockets.
- 3M† reflective print and piping.

100% Polyester

286330
S, M, L, XL, 2XL, 3XL
Black (90)

$109.99



LONG SLEEVE FLANNEL SHIRT

- Plaid flannel shirt.
- Chest pockets.

100% Cotton

286584
S, M, L, XL, 2XL, 3XL
Grey (09)

$59.99





NEW

X-TEAM TEE

- Print at sleeve and front.

100% Cotton

286618
S, M, L, XL, 2XL, 3XL
White (01), Black (90)
$29.99



TECHNICIAN SHIRT

- Large X-Team embroidery at upper back.
- Pleat at back center for ease of movement.
- Chest pocket.

65% Polyester, 35% Cotton

286566
S, M, L, XL, 2XL, 3XL
Charcoal Grey (07), Black (90)
$64.99



SIGNATURE TEE

100% Cotton

286320
S, M, L, XL, 2XL, 3XL
White (01), Khaki (05), Black (90)
$21.99



TRACK TEE

100% Cotton

286574
S, M, L, XL, 2XL, 3XL
Red (30), Blue (80), Black (90)
$25.99



ORIGINAL TEE

100% Cotton

286402
S, M, L, XL, 2XL, 3XL
Heather Grey (27), Ice (38), Black (90)
$24.99



LONG SLEEVE ORIGINAL TEE

100% Cotton

286415
S, M, L, XL, 2XL, 3XL
Heather Grey (27), Ice (38), Black (90)
$34.99







NEW

X-RACE CAP

- Adjustable plastic back strap.
- Flat peak.
- Can-Am embroidery and X-Team print on peak.

100% Cotton

286613 • One size • Charcoal Grey (07), Blue (80)

$24.99



MOSSY OAK CAMO CAP

- Matches ATV/Side-by-side Mossy Oak Break-Up Country Camo pattern.
- Front Can-Am embroidery.
- Metal adjuster with BRP logo.

100% Polyester

286548 • One size • Mossy Oak Break-Up Country Camo (37)

$19.99



CLASSIC CAP

- Ultra comfortable, stretch, lightweight fabric.
- Metal adjuster with BRP logo.

72% Polyester, 23% Rayon, 5% Spandex

286210 • One size • Black (90)

$19.99

TRACK CAP

- Fitted stretch twill cap.
- Flat peak.

97% Cotton, 3% Spandex

286573
S/M, L/XL
Red (30), Blue (80), Black (90)

$21.99



ORIGINAL CAP

- Metal adjuster with BRP logo.

100% Cotton

286401
One size
Beige (02), Orange (12), Black (90)

$21.99



RANCH CAP

- Metal adjuster with BRP logo.
- Water-resistant waxed cotton.

100% Cotton

286564
One size
Beige (02), Brown (04)

$19.99



SUMMER BEANIE

- Lightweight, plaid texturized knitted beanie.

95% Cotton, 5% Spandex

286323
One size
Charcoal Grey (07), Black (90)

$15.99



BANDANA

- Light and comfortable.
- Multiple wear options.

80% Polyester, 20% Cotton

286347
One size
Mixed Color (18), Black with graphics (94)

$9.99







LADIES' X-TEAM TEE

• V-neck.

95% Cotton, 5% Spandex

286567 • XS, S, M, L, XL, 2XL • White (01), Black (90)

$29.99



LADIES' IMPULSE TANK TOP

• Contrasting binding at collar and armholes.

• Can-Am print at back.

95% Cotton, 5% Spandex

286482 • XS, S, M, L, XL, 2XL • Camo (37), Black (90)

$24.99



LADIES' ZIPPED MICRO-POLYESTER

• Feminine cut.

• 2 zippered pockets.

95% Polyester, 5% Spandex

286565 • XS, S, M, L, XL, 2XL • Charcoal Grey (07)

$64.99

KIDS' BLOCK TEE

- Can-Am print on back shoulder.

100% Cotton

286472
2, 3-4, 5-6
Blue (80)
$24.99



BOY CHASE TEE

- Can-Am print at back.

100% Cotton

286489
7-8, 10-12, 14-16
Red (30), Black (90)
$21.99



GIRL CAN-AM HOODIE

- Can-Am print at back.

72% Cotton, 23% Polyester, 5% Spandex

286486
7-8, 10-12, 14-16
Purple (40)
$49.99



CAN-AM JUNIOR TRAIL GOGGLES BY SCOTT

- Integrated custom painted frame and strap graphics.
- No Fog† anti-fog lens treatment.
- 100% Plastic UV protected clear Lexan† lens.
- Multi-layer face foam.
- Durable anti-slip strap.

447898 • One size • Black with graphics (94)
$49.99



TEEN RACE JERSEY

- Quick-dry, antibacterial and moisture-wicking fabric.
- Extended back for riding position.
- Unisexe non-fading sublimated print.

100% Polyester

286464
7-8, 10-12, 14-16
Red (30)
$39.99



TEEN RACE PANTS

- Lightweight and extremely breathable pants.
- Overall water-repelling Teflon† treatment.
- Debossed fullgrain leather inner knees for heat and abrasion resistance.
- Non-fading sublimated graphics.
- Stretch panel at crotch, knees, side waist, upper back and lower back leg for ease of movement.
- Rubberized elastic waist to hold jersey in place.
- Ratchet style waist closure for better adjustment.
- Straight hem at leg opening for more comfort inside boots.
- 3/4 length mesh lining.

94% Polyester, 6% Leather

286493
7-8, 10-12, 14-16
Red (30)
$119.99



TEEN TEAM RIDING GLOVES

- Spandex construction for great flexibility.
- Direct-injection patches on back hand.
- Chamude† palm.
- Pre-curved design.
- Hook-and-loop wrist closure system.

Spandex, Chamude, Nylon, Polyester

286465
6-8, 10-12, 14-16
Red (30)
$24.99



JUNIOR HELMETS*

- High-tech, lightweight and tough.
- Fully-adjustable aero-tuned peak.
- Moisture-wicking and breathable chin strap, liner and cheek pads.
- Ventilation system.
- Easily removable and washable liner and cheek pads.
- Provide maximum visibility.
- Fit all goggles.
- Strap grip to hold goggles strap in place.
- D.O.T. certified.
- Breath deflector mask included.
- Available with clear-coated bold waterslide graphics.

Shell: ABS

JUNIOR CROSS X-1 GRAFFITI HELMET

447989
S, M, L
Black with graphics (94)
$99.99

DOT



JUNIOR X-1 BLAZE HELMET

447673
S, M, L
Orange (12)
$109.99

DOT



*Some models and accessories shown may not be available or homologated in your country. Contact your BRP dealer or local authorities for information.





KNOW YOUR HELMET SAFETY RATINGS

Ever wonder what those certification labels on your helmet mean? They are safety standards based on street motorcycling.

DOT

DOT (Department of Transportation - FMVSS 218) This is a test that all road-going motorcycle helmets have to pass. Has been the same standard for more than 20 years.

Snell

SNELL M2015
SNELL is an independent testing organization, and certification is voluntary. SNELL is more rigorous than DOT, and its standards are updated every 5 years – the M2015 standards are the most recent. Continuous tests of production helmets are conducted to ensure compliance.

ECE22.05

ECE (Economic Commission for Europe) **22.05**
The safety standard most used worldwide, recognized in more than 50 countries and every race organization. Considered very up-to-date. 50 production helmets must pass testing before being certified and continuous tests of production helmets are conducted to ensure compliance.

WHICH IS BEST? They are all adequate for riding. SNELL and ECE are more rigorous, but typically reject features like modular designs. Meeting SNELL and ECE standards generally costs more, so expect to pay more for a helmet certified at that level.

MUST HAVE



CGX2 CAMERA

- 4K HD and 1080p at 60fps.
- 2" LCD display screen.
- Waterproof housing of up to 165 ft (50 m) underwater and the 2.4gh waterproof remote.
- Comes with 32gb micro SD card class 10 and 9 mounts.
- WIFI available to control your camera from your smart phone or tablet with the free iCyclops App for IOS and Android.

2866860090

$299.99

CROSS HELMETS*

For warmer riding conditions and more active riding, you might want to opt for a cross helmet with goggles. In highly active riding where you will be sweating and breathing hard, goggles are the best solution for clear vision, and the extra open area will keep you from overheating.

XP-R2

ULTRA LIGHTWEIGHT AND STRONG MULTI-DIRECTIONAL CARBON FIBER CONSTRUCTION WITH PREMIUM STYLE AND DETAILS.





XP-R2 CARBON LIGHT ORIGINAL HELMET

Shell: Carbon Fiber Composite

447830
XS, S, M, L, XL, 2XL, 3XL
White (01)

$424.99

DOT ECE22.05



XP-R2 CARBON LIGHT HELMET

Shell: Carbon Fiber Composite

447656
XS, S, M, L, XL, 2XL, 3XL
Black (90)

$399.99

DOT ECE22.05



XP-R2 CARBON LIGHT BLAZE HELMET

Shell: Carbon Fiber Composite

447657
XS, S, M, L, XL, 2XL, 3XL
Orange (12)

$424.99

DOT ECE22.05

XP-R2 MORPHO KIT

- For a perfect custom fit.
- Left and right pads included.

447754
XS, S, M, L, XL, 2XL, 3XL • Clear (00)

$14.99



*Some models and accessories shown may not be available or homologated in your country. Contact your BRP dealer or local authorities for information.

WHICH CROSS HELMET IS FOR YOU? SEE COMPLETE DETAILS ON P.182-183.



XP-3

SUPERLIGHT CROSS-STYLE HELMET: FEATURE-PACKED FOR EXCEPTIONAL PERFORMANCE, PROTECTION AND COMFORT.

NEW

XP-3 X-RACE HELMET

• Durable multi-colored clear-coated graphics.
Shell: Fiberglass

448395 • XS, S, M, L, XL, 2XL • Orange (12), Blue (80)

$239.99

DOT Snell ECE22.05





XP-3 HELMET

Shell: Fiberglass

448253
XS, S, M, L, XL, 2XL
Matte Black (93)

$229.99

DOT Snell



WHICH CROSS HELMET IS FOR YOU? SEE COMPLETE DETAILS ON P.182-183.



XC-4

PREMIUM LOOK & STYLE.

XC-4 MODERN HERITAGE HELMET

Shell: Polycarbonate Composite

448251 • XS, S, M, L, XL, 2XL • White (01), Grey (09)

$149.99

DOT Snell

ECE VERSION (Not available in NA)

448340 • XS, S, M, L, XL, 2XL • White (01)

ECE 22.05





NEW

LADIES' XC-4 HELMET

Shell: Polycarbonate Composite

448397 • XS, S, M, L, XL, 2XL
Pink (36)

$159.99

DOT ECE 22.05



XC-4 HELMET

Shell: Polycarbonate Composite

448255
XS, S, M, L, XL, 2XL
Black (90)

$139.99

DOT Snell



WHICH CROSS HELMET IS FOR YOU? SEE COMPLETE DETAILS ON P.182-183.



X-1

PACKED WITH FEATURES AT AN UNBEATABLE PRICE.

NEW

X-1 ZONE HELMET

• Fully-adjustable aero-tuned peak.
Shell: ABS

448387 • XS, S, M, L, XL, 2XL • Blue (80), Black (90)

$109.99

DOT





X-1 HELMET

Shell: ABS

447942
XS, S, M, L, XL, 2XL
Matte Black (93)

$99.99

DOT



WHICH CROSS HELMET IS FOR YOU? SEE COMPLETE DETAILS ON P.182-183.



ENDURO

THE NAME SAYS IT ALL. DESIGNED FOR LONG RIDES AND HIGH ADVENTURE.

ENDURO CAMO HELMET

Shell: Polycarbonate Composite

448282
S, M, L, XL, 2XL, 3XL
Camo (37)

$159.99

DOT ECE22.05



ENDURO HELMET

Shell: Polycarbonate Composite

448259
S, M, L, XL, 2XL, 3XL
Matte Black (93)

$149.99

DOT ECE22.05



DUST MASKS

- Easily replaceable filters remove 99.9% of airborne dust, particles, pollen and odors.
- Made from soft yet durable neoprene material that fits snugly under helmets and goggles.
- XS/S fits most kids 12 and under, M/L fits most riders and XL/2XL fits larger frames (235+ lbs).
- Includes 2 replacement filters and a small storing pouch.

CAN-AM X-RACE DUST MASK

448247
XS/S, M/L, XL/2XL
Yellow (10)

$29.99



CAN-AM ORIGIN DUST MASK

447833
XS/S, M/L, XL/2XL
Black (90)

$29.99



CAN-AM VENTED DUST MASK

448246
XS/S, M/L, XL/2XL
Grey (09)

$32.99



WHICH CROSS HELMET IS FOR YOU? SEE COMPLETE DETAILS ON P.182-183.

WHICH CROSS HELMET IS FOR YOU?

Compare. Learn. Find.

		SHELL	PERFORMANCE METER	WEIGHT	SIZES
XP-R2	 XP-R2 Carbon Light Original  XP-R2 Carbon Light  XP-R2 Carbon Light Blaze	p.177	Carbon Fiber Composite	◀	Light Very Light Ultra Light	XS, S, M, L, XL, 2XL, 3XL
XP-3	 NEW XP-3 X-Race  XP-3	p.178	Fiberglass	◀	Light Very Light Ultra Light	XS, S, M, L, XL, 2XL
XC-4	 XC-4 Modern Heritage  XC-4 Helmet  NEW Ladies' XC-4 Helmet	p.179	Polycarbonate Composite	◀	Light Very Light Ultra Light	XS, S, M, L, XL, 2XL
X-1	 NEW X-1 Zone  X-1	p.180	ABS	◀	Light Very Light Ultra Light	XS, S, M, L, XL, 2XL
ENDURO	 Enduro Camo  Enduro	p.181	Polycarbonate Composite	◀	Light Very Light Ultra Light	S, M, L, XL, 2XL, 3XL

FEATURES	BENEFITS	PRICE
• Weighs only +/- 1200 g in Large size.	▶ Less stress on neck and shoulder muscles.	**XP-R2 Carbon Light Original** **447830 • D.O.T. & ECE** **$424.99** **XP-R2 Carbon Light** **447656 • D.O.T. & ECE** **$399.99** **XP-R2 Carbon Light Blaze** **447657 • D.O.T. & ECE** **$424.99**
• Tool-less multi-adjustable front peak with anti-reflecting underside.	▶ Allows quick visor adjustment and reduces glare.	
• Flexible face trim design with a large nose protector area.	▶ Protects from wind and snow.	
• F.A.S. (Full Air System) with 10 ventilation points and double rear extractor.	▶ Allows you to control airflow for cooling.	
• Integrated rear fin.	▶ Added stability and aerodynamic performance.	
• Integrated goggle anti-slip design.		
• Multi-density EPS foam inner shell.	▶ Superior protection over single-density foams.	
• Removable and washable inner liner and cheek pads.	▶ Keeps your helmet fresh.	
• Liner features sanitized treatment.	▶ Promotes wicking of moisture.	
• Front top pocket for sweat absorbing pads.		
• Morpho System Plus - Ergonomic 3D cheek pads.	▶ Allows for a better fit.	
• Double-D racing buckle.	▶ Most secure fastening method.	
• Aluminum screws, protective coated parts.	▶ Assures lasting appearance.	
• Helmet bag.		
• Meets or exceeds D.O.T. and ECE certifications.		
• Weighs only +/- 1470 g in Large size.	▶ Less stress on neck and shoulder muscles.	**XP-3 X-Race** **448395 • D.O.T., Snell & ECE** **$239.99** **XP-3** **448253 • D.O.T. & Snell** **$229.99**
• EPS inner shell.	▶ Impact absorbing protection.	
• Front and rear vent system to keep you cool.	▶ Allows you to control airflow for cooling.	
• Custom stainless steel front vent design.		
• Aero-tuned and fully adjustable visor system.	▶ Added stability and aerodynamic performance.	
• Removable, washable and replaceable CoolMax moisture-wicking liner and cheek pads.	▶ Keeps your helmet fresh.	
• Lightweight double-D chin strap.	▶ Most secure fastening method.	
• Meets or exceeds SNELL M2015, D.O.T. and ECE certifications.		
• Weighs only +/- 1470 g in Large size.	▶ Less stress on neck and shoulder muscles.	**XC-4 Modern Heritage** **448251 • D.O.T. & Snell** **$149.99** **448340 • ECE** **XC-4** **448255 • D.O.T.& Snell** **$139.99** **Ladies' XC-4** **448397 • D.O.T. & ECE** **$159.99**
• EPS inner shell.	▶ Impact absorbing protection.	
• Front and rear vent system to keep you cool.	▶ Allows you to control airflow for cooling.	
• Custom stainless steel front vent design.		
• Fully-adjustable visor system.	▶ Added stability and aerodynamic performance.	
• Removable, washable and replaceable moisture-wicking liner.	▶ Keeps your helmet fresh.	
• Goggle strap grip.		
• Lightweight double-D chin strap.	▶ Most secure fastening method.	
• Meets or exceeds SNELL M2015, D.O.T. and ECE certifications.		
• High-tech, lightweight and tough.	▶ Less stress on neck and shoulder muscles.	**X-1 Zone** **448387 • D.O.T.** **$109.99** **X-1** **447942 • D.O.T.** **$99.99**
• Adjustable, aero-tuned visor.	▶ Added stability and aerodynamic performance.	
• Ventilation system.	▶ Airflow for cooling.	
• Moisture-wicking and breathable chin strap, liner and cheek pads.		
• Easily removable and washable liner and cheek pads.	▶ Keeps your helmet fresh.	
• Provides maximum visibility.		
• Fits all goggles.		
• Strap grip keeps goggle strap in place.	▶ Keeps goggles in place.	
• Meets or exceeds D.O.T. certification.		
• Advanced polycarbonate alloy shell.	▶ High-impact resistance.	**Enduro Camo** **448282 • D.O.T. & ECE** **$159.99** **Enduro** **448259 • D.O.T. & ECE** **$149.99**
• Versatile visor design.	▶ Allows for use with goggles or shield.	
• Multi-position, ratcheted face shield.		
• Dual-density EPS foam inner shell.	▶ Enhanced impact absorption.	
• Easily removable and washable liner and cheek pads.	▶ Keeps your helmet fresh.	
• 16-vent intake and exhaust system.	▶ Superior aeration and cooling.	
• S to 3XL, meets D.O.T. and ECE certifications. (3XL, D.O.T. only).		

OPEN FACE HELMET*

You do trail riding or simply work and play on your land, and you want to be able to drink, eat or talk without taking your helmet off? The open face helmet is for you. It also offers maximum airflow.

ST-5

BASIC, COMFORTABLE AND INEXPENSIVE WITH A COOL RETRO OPTION.



ST-5 OPEN FACE HELMET

- Weight +/- 1050 g in Large size.
- Injection molded shell.
- 3-snap visor included.
- Comfortable head liner and cheek pad fabric.
- Rubber edge molding for best finish.
- Padded chin strap with D-ring closure.
- D.O.T. approved / ECE certified.

Shell: Thermoplastic Composite

447880 • XS, S, M, L, XL, 2XL • Black (90)

$59.99

DOT ECE22.05

ST-2

LIGHTWEIGHT FIBERGLASS HELMET IN A RETRO DESIGN WITH MODERN DETAILS.



ST-2 OPEN FACE HELMET

- Weight +/- 1200 g in Large size.
- Sport visor peak with sunshield.
- Soft and comfortable head liner and cheek pad fabric.
- Padded chin strap with D-ring closure.
- D.O.T. approved / ECE certified.

Shell: Fiberglass

447884 • XS, S, M, L, XL, 2XL, 3XL • White (01), Black (90)

$114.99

DOT ECE22.05

FULL FACE HELMETS*

If you ride in cold areas, choose the Modular Helmet. Its full coverage, sealed design will keep you warm while providing great vision. With a modular-style helmet, you can easily stop and talk with your riding group or grab a snack.

MODULAR 3

OUTSTANDING VISION WITH CRYSTAL CLEAR VISOR AND BREATH EVAC SYSTEM TO PREVENT FOGGING.

MODULAR 3 HELMET

- Clear Vision Technology with optically-correct dual lens visor.
- Front push-button release integrated into jaw section facilitates manipulation when wearing gloves.
- Adjustable sunshield lowers or raises at the touch of a button.
- BREATH EVAC fog-resistant mask system and increased vent diameter control breathing airflow.
- Quick-release chin strap.
- Spacious design allows room for eyeglasses.
- D.O.T. approved.

Shell: Polycarbonate Composite

447963 • S, M, L, XL, 2XL, 3XL

White (01),
Grey (09),
Hi-Vis Yellow (26),
Black (90)

$299.99

DOT



MODULAR 3 ELECTRIC SE HELMET

(Not illustrated)

- All the great features of the new Modular 3 helmet, plus an electric shield for extra protection against fogging.

Shell: Polycarbonate Composite

447964 • S, M, L, XL, 2XL, 3XL • Black (90)

$369.99

DOT

*Some models and accessories shown may not be available or homologated in your country. Contact your BRP dealer or local authorities for information.



SENA 20S BLUETOOTH COMMUNICATION SYSTEM

- Super-versatile, water-resistant multi-function Bluetooth communication, navigation and music system designed for outdoor and vehicle sound environment use.
- Driver-to-passenger and driver-to-driver communication at a range over 1.2 miles (2 km).
- Up to 12-hour talk and 10-day stand-by time on a single charge – permits simultaneous charge and play.
- 4-way conference, smartphone, intercom-to-phone connection, GPS and mp3 music playback via AVRCP operation, or easy-adjust manual operation with exclusive Jog Dial.
- Bluetooth technology allows for seamless connection with stereo headset, mp3 players, and smartphones.
- Voice-prompt feedback, clear and natural sound quality, individual volume control for each audio source, fully-integrated audio booster delivers optimal sound level – fully firmware-upgradable.
- Complete with integrated microphone, wired microphone, wired boom microphone, speakers, plus mp3, earbud, and GPS ports.

NEW

SENA 20S BLUETOOTH COMMUNICATION SYSTEM

Single Pack

448207 • One size
Black (90)
$299.99

Dual Pack

448208 • One size
Black (90)
$549.99



BLUETOOTH COMMUNICATION SYSTEM

- Bluetooth v3.0 Stereo Headset with long-range Bluetooth Intercom.
- 4-way conference intercom.
- Multipoint for mobile phone and GPS.
- Voice prompts.
- Bluetooth stereo headset for Bluetooth audio devices such as MP3 players.
- Bluetooth music playback control by AVRCP: play, pause, track forward and track back.
- Easy operation through versatile Jog Dial (Patent Pending).
- Sufficient sound level with integrated audio booster.
- Bluetooth handsfree for Bluetooth mobile phones.
- Bluetooth headset or stereo headset for Bluetooth GPS navigation.
- Stereo music through 3.5 mm audio cable.
- Crystal clear and natural sound quality.
- Up to 12 hours talk time, 10 days stand-by time.
- Can be used while charging.
- Individual volume control for each audio source.
- Bluetooth specification v3.0.
- Firmware upgradable.



BLUETOOTH COMMUNICATION SYSTEM

Single Pack

447714
One size • Black (90)
$209.99

Dual Pack

447715
One size • Black (90)
$379.99

*Some models and accessories shown may not be available or homologated in your country. Contact your BRP dealer or local authorities for information.

GOGGLES



CAN-AM RACE SAND GOGGLES BY SCOTT

- Integrated custom painted frame and strap graphics.
- No Fog† anti-fog lens treatment.
- 100% UV protected grey Lexan† lens.
- Multi-layer face foam.
- Durable anti-slip strap.
- Tear-off and roll-off compatible (sold separately).
- Dust catcher vent foam.

448224 • One size • Yellow (10), Charcoal Grey (07)

$64.99



CAN-AM ADVENTURE GOGGLES BY SCOTT

- No Fog anti-fog lens treatment.
- Clear Lexan lens.
- Multi-layer face foam.
- Durable anti-slip strap.
- Tear-off and roll-off compatible (sold separately).

447900

One size • White (01), Yellow (10), Black (90)

$54.99



CAN-AM ADVENTURE SPEED STRAP GOGGLES BY SCOTT

- No Fog anti-fog lens treatment.
- Clear Lexan lens.
- Multi-layer face foam.
- Durable rubber-threaded strap.
- Tear-off and roll-off compatible (sold separately).
- Clever and easy attachment system.

447934
One size
White (01), Yellow (10), Black (90)
$79.99





CAN-AM ADVENTURE OVER THE GLASSES GOGGLES BY SCOTT

- Same great features as the Can-Am Adventure goggles, engineered to fit comfortably with prescription eyeglasses.

447901
One size • Black (90)
$54.99



SPEED STRAP HELMET ATTACHMENT SYSTEM

- Quick fastening system features enhancements not found in other similar systems.
- Proven pivot design provides secure and easy-to-use durable attachment to any helmet.
- On-the-fly strap tension adjustment for riders on the go.

447912
One size • Black (90)
$20.99



CAN-AM TRAIL GOGGLES BY SCOTT

- 100% UV protected clear Lexan lens.
- Hypoallergenic super-soft face foam.
- Durable anti-slip strap.
- Tear-off and roll-off compatible (sold separately).

447899
One size
White (01), Yellow (10), Black (90)
$34.99





CAN-AM WORKS FILM SYSTEM BY SCOTT

- 1 anti-stick replacement lens.
- 2 rolls of film.
- 1 mud flap.
- 6 tear-offs.

447908
One size • Clear (00)
$43.99



CAN-AM WORKS SINGLE LENS TEAR-OFF BY SCOTT

- 1 clear replacement lens.
- 6 tear-offs.
- 2 posts included.

447910
One size • Clear (00)
$19.99



GOGGLES REPLACEMENT SINGLE LENS

- Impact-resistant polycarbonate.
- No Fog anti-fog lens treatment.

447905
One size • Clear (00), Grey (09)
$10.99

448225
One size • Mirror Silver (22)
$19.99



GOGGLES REPLACEMENT DUAL LENS

- Impact-resistant polycarbonate.
- No Fog anti-fog lens treatment.

447906
One size • Clear (00), Pink (36)
$20.99

Replacement parts are compatible with all Can-Am Goggles by Scott, except Junior Goggles.

GLOVES

NEW

X-RACE GLOVES

- Air mesh panels and perforated palm for ventilation and mobility.
- Double Clarino† layer at palm and thumb for extra durability and comfort.
- Knuckle gussets for better mobility.
- Pre-curved design.
- Silicone at fingertips for added grip and control.
- Direct-injection details on back hand.
- Hook-and-loop wrist closure system to keep glove in place.

MEN'S'

Air Mesh, Spandex, Clarino
286561
S, M, L, XL, 2XL
Charcoal Grey (07),
Blue (80)
$44.99



LADIES'

35% Synthetic Leather,
30% Polyester, 15% Lycra,
10% Nylon,
10% Neoprene
286617
S, M, L, XL, 2XL
Pink (36),
White (01)
$34.99





NEW

TEAM GLOVES

- Spandex construction for flexibility.
- Chamude palm.
- Pre-curved design.
- Non-fading sublimated graphics.
- Easy slip-on/slip-off convenience.

Shell: Spandex, Chamude, Polyester
286554 • S, M, L, XL, 2XL, 3XL
Charcoal Grey (07)
$26.99



RANCH HEAVY DUTY GLOVES

- Full leather gloves.
- Durable double-layer sueded palm.
- Elastic wrist for slip-on/slip-off convenience.

100% Cow Leather
286563 • S, M, L, XL, 2XL, 3XL
Beige (02)
$19.99

ACTION GLOVES

- Lightly insulated back-of-hand for chilly days.
- Protective neoprene-covered knuckles.
- Stretch fabric improves mobility.
- Comfortable dual-layer Clarino on palm and thumb improves durability.
- Pre-curved design.
- Hook-and-loop wrist closure keeps glove secure.

71% Nylon, 18% Polyurethane, 4% Spandex,
4% Chloroprene Rubber, 3% Polyester
Insulation: 65% Olefin, 35% Polyester
286580 • S, M, L, XL, 2XL, 3XL
Black (90)
$49.99



MOSSY OAK CAMO GLOVES

- Matches ATV/Side-by-side Mossy Oak Break-Up Country Camo pattern.
- 4 oz insulation keeps out the cold.
- Quick, easy forefinger trigger* access.
- Extra-durable leather-layered palm provides added grip.
- Hipora™ waterproof/windproof/breathable insert.
- Velcro† wrist adjustment.
- Pre-shaped fingers.
- Large gauntlet ensures proper jacket-sleeve overlap.

* Forefinger area not completely waterproofed.

85% Polyester, 15% Leather
Insulation: 100% Polyester
286572 • M, L, XL, 2XL, 3XL • Mossy Oak Break-Up Country Camo (37)
$49.99



WINTER RIDING GLOVES AND MITTS

- mcFIT† technology to improve grip at palm.
- Extra warm nylon gloves with leather palm.
- Removable antibacterial, stay-dry moisture management lining.
- Gloves with visor-wiping cotton terry left thumb for clearing water, snow or fog.
- Reflective details.

Nylon, Leather
Insulation: Primaloft Gold



mcFit stands for Maximum Comfort Fit because the membrane and outer shell are laminated together. Gloves using this technology are more flexible and ultimately result in a better feel.



GLOVES
286582
S, M, L, XL, 2XL
Black (90)
$89.99

MITTS
286583
S, M, L, XL, 2XL
Black (90)
$79.99





NEW

X-RACE JERSEY

- Ultralight, quick-dry, antibacterial and moisture-wicking fabric.
- Mesh fabric for maximum breathability.
- Extended back for coverage while riding.
- Non-fading sublimated graphics.
- Rib cuffs.

100% Polyester

286614 • S, M, L, XL, 2XL, 3XL
Orange (12), Blue (80)

$49.99



NEW

TEAM JERSEY

- Quick-dry, antibacterial moisture-wicking fabric.
- Extended back for coverage while riding.
- Non-fading sublimated graphics.
- Rib cuffs.

100% Polyester

286553 • S, M, L, XL, 2XL, 3XL • Khaki (05), Yellow (10)

$44.99

MOSSY OAK CAMO JERSEY

- Ultralight, quick-dry, antibacterial moisture-wicking fabric.
- Extended back improves coverage.
- Non-fade sublimated Mossy Oak Break-Up Country Camo fabric matches ATV/Side-by-side pattern.

100% Polyester

286606 • M, L, XL, 2XL, 3XL
Mossy Oak Break-Up Country Camo (37)

$44.99



NEW

LADIES' TEAM JERSEY

- Semi-fitted lady's cut.
- Quick-dry, antibacterial, moisture-wicking fabric for maximum comfort.
- Mesh fabric for extra ventilation underarms and side seam.
- Rib cuff.

90% Polyester, 10% Spandex

286616 • XS, S, M, L, XL, 2XL
Pink (36), Teal (74)

$44.99





RPM

MOSSY OAK CAMO JACKET

- Stealthy-silent waterproof Mossy Oak Break-Up Country Camo fabric matches ATV/Side-by-side pattern.
- Fully-sealed seams.
- Sleeve and side seam ventilation evacuates moisture.
- Detachable hood and molded visor with height-adjustment drawstring.
- Adjustable cuff with hook-and-loop tab.
- Chest pockets, 2 expandable lower pockets, plus hand-warmer pockets.
- Designed for backpack wear with easy access to vents and pockets.
- Articulated elbow with longer back tailored for riding position.

100% Polyester

286544 • M, L, XL, 2XL, 3XL
Mossy Oak Break-Up Country Camo (37)
$169.99



RPM

MOSSY OAK CAMO PANTS

- Stealthy-silent waterproof Mossy Oak Break-Up Country Camo fabric matches ATV/Side-by-side pattern.
- Fully-sealed seams.
- Dual easy-access cargo pockets.
- Knee-high side zipper.
- Thinner knee and seat foam for added comfort.
- Removable suspenders.
- Articulated knee and raised back waist ideal for riding position.
- Brushed tricot lining.
- Belt loops.
- Adjustable bottom leg system.

100% Polyester

286545 • M, L, XL, 2XL, 3XL
Mossy Oak Break-Up Country Camo (37)
$139.99









You can zip off sleeves to wear this jacket as a vest in warmer conditions and sleeves can be stored in lower back large pocket.

RPM

MEN'S RIDING JACKET

- Highly resistant, Teflon†-treated with RPM waterproof and breathable technology.
- Double-stitch construction throughout.
- Critical seams sealed.
- Double front flap and adjustable wrists and hem.
- Small opening at left shoulder for hydration pack water delivery tube (not included).
- Large ventilation at chest, sleeves and back for maximum breathability and good airflow.
- Shaped sleeves.
- Sleeves can be stored in lower large back pocket.
- Multiple pockets.
- Mesh lining.
- Reflective details.
- Jacket-to-pants connector.

100% Nylon

286390 • XS, S, M, L, XL, 2XL, 3XL • Yellow (10), Camo (37), Black (90)

$199.99



RPM

MEN'S ADVENTURE PANTS

- Lightweight durable pants with RPM waterproof and breathable technology.
- Stretch waterproof panel at crotch and upper back for ease of movement.
- Triple stitched construction at crotch.
- Critical seams sealed.
- Shaped knees with darts.
- Binding hem at cuff for reinforcement.
- Storm gaiters at bottom opening.
- Velcro† side waist adjustment.
- Side leg 2-way zipper to facilitate exit.
- Jacket-to-pants connector.
- Mesh lining.
- Belt loops.

100% Nylon

286391 • 28, 30, 32, 34, 36, 38, 40, 42, 44
Yellow (10), Camo (37), Black (90)

$169.99





RANCH HEAVY DUTY JACKET

- Heavy-duty stain and water-repellent cotton canvas.
- Lightly insulated.
- Rear armhole gusset enhances mobility.
- Shaped sleeves and back tail for riding comfort.
- Multiple pockets.

100% Cotton
Insulation: 100% Polyester

286551
S, M, L, XL, 2XL, 3XL
Brown (04)
$129.99





RANCH HEAVY DUTY PANTS

- Heavy-duty stain and water-repellent cotton canvas.
- 2 side-leg cargo pockets.
- Belt loops.
- Pre-shaped legs.

100% Cotton

286556
28, 30, 32, 34, 36, 38, 40, 42, 44
Brown (04)
$79.99



NEW RPM

STORM JACKET

- RPM MAX waterproof, windproof and breathable technology.
- Windproof DWR-treated polyester fabric.
- Fully-sealed seams.
- Double front-flap with interior rain gutter.
- Minimalist design helps repel mud and water.
- Zippered pockets at left chest and waist.
- Inner pocket with Velcro closure.
- Gussets at back armhole for ease of movement.
- Pre-shaped sleeves.
- Can-Am print at front.
- Embossed Can-Am patch at back.
- Adjustable wrists and hem.

100% Polyester

286611
S, M, L, XL, 2XL, 3XL
Khaki (05)

$129.99



NEW RPM

STORM PANTS

- RPM MAX waterproof, windproof and breathable technology.
- Windproof DWR-treated polyester fabric.
- Fully-sealed seams.
- Zippered pocket on left leg.
- Adjustable suspenders with bib.
- Y-shape strap designed to stay securely on shoulders.
- Storm gaiters at bottom opening.
- Self-fabric gusset at crotch keeps out water and mud.
- Pre-shaped legs.
- Can-Am print at right leg.
- Reinforced inner-leg fabric.

100% Polyester

286612
S, M, L, XL, 2XL, 3XL
Khaki (05)

$129.99





CAN-AM WINDPROOF JACKET

- Windproof DWR-treated nylon.
- Adjusted fit.
- Sealed critical seams.
- Hand pockets, plus interior Napoleon pocket.
- Large high-visibility reflective stripes on shoulders.
- Adjustable wrists and hem.
- Jacket-pant connector.
- Pre-shaped sleeves.
- Can-Am branded on front-rear.

100% Nylon

286578
XS, S, M, L, XL, 2XL, 3XL
Black (90)

$129.99



CAN-AM WINDPROOF PANTS

- Windproof DWR-treated nylon.
- Adjusted fit.
- Durable 500-denier seat fabric.
- Sealed critical seams.
- Thigh pocket.
- Elasticized waist with belt loop.
- Fitted to be worn over pants.
- Pre-shaped legs.
- Can-Am branded pocket.

100% Nylon

286579
28, 30, 32, 34, 36, 38, 40, 42, 44
Black (90)

$99.99





RPM

LADIES' RIDING JACKET

- Highly resistant, Teflon†-treated nylon with RPM waterproof and breathable technology.
- 500-denier nylon at hem and double stitch construction throughout.
- Critical seams sealed.
- Double front flap and adjustable wrist, hem and collar.
- Easy access collar adjustment on both sides.
- Brushed polyester at inner collar, pocket and wrist for extra comfort.
- Gussets at back armhole for ease of movement.
- Shaped elbows with expandable contrasting gussets.
- Long ventilation at side and underarm, plus additional ventilation at back for maximum airflow.
- 2 waist pockets and 1 interior zippered pocket.
- Jacket-to-pants connector.
- Reflective piping.
- Mesh lining.

100% Nylon

286294 • XS, S, M, L, XL, 2XL
Black (90)

$169.99



RPM

LADIES' CROSS PANTS

- Lightweight durable pants with RPM waterproof and breathable technology.
- 500-denier waterproof nylon at seat and bottom inseam.
- Stretch fabric waistband.
- Critical seams sealed.
- Water-resistant thigh zipper vent.
- Hip pocket with zipper and flap.
- Jacket-to-pants connector.
- Binding hem at cuff for reinforcement.
- Storm gaiters at bottom opening.
- Shaped knees with darts.
- Mesh lining.
- Belt loops.

100% Nylon

286478
4, 6, 8, 10, 12, 14 • Black (90)

$149.99



MUD JACKET

- 100% waterproof PVC.
- Electronically-welded seams.
- Underarm and rear vent panels.
- 2 hand pockets.
- Elastic cuffs.
- Drawstring hood and hem.

Polyvinyl Chloride (PVC), Mesh Polyester

286127 • S, M, L, XL, 2XL
Clear (00), Matte Black (93)

$29.99



MUD PANTS

- Oversized pants made of 100% waterproof PVC.
- Electronically-welded seams.
- Strategically placed ventilation.
- Side openings at bottom leg.

Polyvinyl Chloride (PVC)

286128 • S, M, L, XL, 2XL
Clear (00), Matte Black (93)

$14.99









CAN-AM RIDING BOOTS

- Rider-tough 8" lace-up-style riding boots.
- VIBRAM† Bifida† outsoles for superior performance.
- COSMO† HydroGuard† waterproofing.
- Full-grain leather upper (waterproof nubuck in beige model).
- Removable Meramec† Ultron† insoles.
- High-gusseted tongue keeps outs water and debris.
- Ultra-comfortable padded collar.
- Steel toecaps.
- Abrasion-resistant TPU toe protectors.
- Double heavy-duty stitching in higher-stress areas.
- Abrasion-resistant laces.

100% Leather

444197 • 7, 8, 9, 10, 11, 12, 13*
Beige (02), Black (90)
$184.99

CATCH THE VIDEO AT STORE.CAN-AM.BRP.COM

*For European footwear equivalencies see p. 201.



CAN-AM NEOPRENE MUD BOOTS

- 100% waterproof polyurethane boot.
- Neoprene upper for maximum flexibility while walking or riding.
- Lightweight and comfortable soft liner.
- Aggressive tread design for maximum grip on any surface.
- Excellent resistance to oils, grease and gasoline.

60% Polyurethane, 40% Neoprene

444196
8, 9, 10, 11, 12, 13*
Black (90)
$119.99

444201
8, 9, 10, 11, 12, 13*
Next G-1 Vista Camo (37)
$129.99



NEW

WINTER RIDING JACKET

- Robust textured fabric featuring RPM waterproof, windproof and breathable technology.
- Critical seams sealed for added protection.
- Vents at underarm to enhance moisture evacuation during rigorous riding or mild weather.
- 2 waist pockets and 1 Napoleon pocket.
- Cap inner pockets.
- Cold-blocking front flap with insulated under flap uniquely designed for off-road riding windproofness.
- Powder skirt to keep wind, cold and snow from entering.
- Reflective details.
- Micro-polyester at collar and micro-fleece integrated inner wrists.
- Inside front and back panels lined with micro-fleece to add warmth and comfort.
- Easy-access collar adjustment on both sides.
- Bottom and wrist adjustments.
- Can-Am print at front and on sleeve.
- Can-Am embroidery at back.

60% Polyester, 40% Nylon
Insulation: Primaloft Black

286609 • S, M, L, XL, 2XL, 3XL • Black (90)

$259.99



NEW

WINTER RIDING HIGHPANTS

- RPM waterproof, windproof and breathable technology.
- Intelligent combination of materials specifically adapted to winter riding.
- Critical seams sealed.
- Reinforced fabric at seat and knees.
- 3/4 length side zippers with adjustable hem.
- Reflective details.
- Storm gaiter with boot lace snap-on webbing to shield snow entry.
- Pre-shaped legs.
- Bib-style pants with high back and front to keep wind and snow out.
- Adjustable suspenders with Y-shape strap designed to stay securely on shoulders.
- Fleece-lined seat.

60% Polyester, 40% Nylon
Insulation: Primaloft Black

286610 • S, M, L, XL, 2XL, 3XL
Black (90)

$239.99



LADIES' WINTER RIDING JACKET

- RPM MAX waterproof, windproof and breathable technology.
- Overall water-repelling Teflon† treatment.
- Teflon HT treatment on light colors for additional water and stain resistance.
- All seams and logo sealed.
- Shaped sleeves.
- Underarm venting.
- MP3, cell phone and additional inner pockets.
- Zippered hand pockets.
- Contrasting water-resistant zipper at chest pocket.
- Micro-fleece at collar and integrated inner wrist.
- Powder skirt.
- Front double flap.
- Adjustable collar.
- Reflective details.

100% Nylon
Insulation: Primaloft Black

286461 • XS, S, M, L, XL, 2XL, 3XL • Matte Black (93)

$259.99



LADIES' WINTER RIDING HIGHPANTS

- RPM MAX waterproof, windproof and breathable technology.
- Technical, comfortable, versatile with feminine cut.
- All seams and logos sealed.
- 1000-denier nylon-lined seat, knees and inner legs.
- Polar-fleece lined seat and knees.
- Stretch-fleece bib.
- Drop seat design.
- Shaped knees.
- 2-way full-length side zippers.
- Adjustable waist.
- Hip pockets.
- Water-resistant zipperat right thigh pocket.
- Reflective details.

90% Nylon, 10% Polyester
Insulation: Primaloft Black

286460 • XS, S, M, L, XL, 2XL, 3XL
Matte Black (93)

$219.99



PRIMALOFT INSULATION

A HIGH-PERFORMANCE INSULATION WITH THE FULL SPECTRUM OF BENEFITS TO BRAVE THE ELEMENTS.

Warmer, drier, softer, and more compressable than any other synthetic insulation.

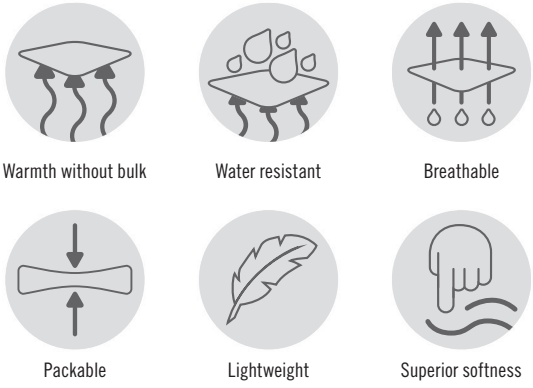

COMMITTED TO DELIVERING FEEL-GOOD PRODUCTS THAT EMPOWER YOU TO STAY IN THE MOMENT.

BLACK INSULATION

Men's and ladies' Winter Riding Jackets and Highpants use PrimaLoft Black insulation to give you the right amount of warmth and extra breathability.







HIGH PERFORMANCE GEAR WITH RPM TECHNOLOGY

Developed by BRP for powersports riders like you, RPM provides maximum warmth no matter how tough the ride or how cold the environment.

Critical seams and logos sealed



All seams and logos sealed



WHAT'S UNDER THE SHELL COUNTS

To keep warm, you've got to keep dry. Our technical base and mid layers wick perspiration away from your skin, where it can evaporate quickly for all-day warmth.



HOW IT WORKS

Each layer has a function. You get the best performance and versatility when you dress in a system with base layer, mid layer and outer layer.

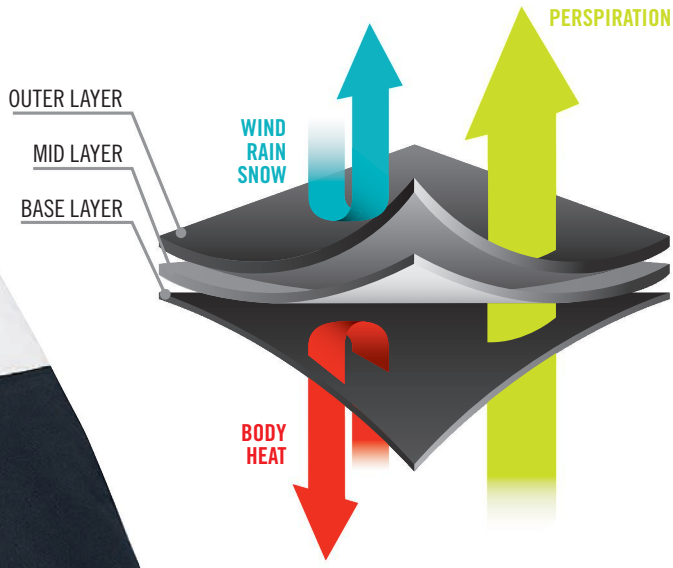

OUTER LAYER

Keeps wind and water out. Adds insulation for warmth.

MID LAYER

Dials in your warmth level. Add or remove during the day as conditions change.

BASE LAYER

Close to the body to wick perspiration and prevent chills. Adds warmth. Avoid cotton — it gets wet and stays wet.

TECHNICAL FIBERS



X-STATIC
X-STATIC eliminates 99.9% of bacteria to prevent odors.



MERINO WOOL
Excellent at regulating body temperature, even when damp.

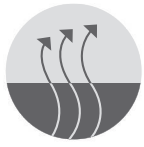

COCONUT FIBER
Natural material increases breathability by 40%.

BASE LAYER

MEN'S ACTIVE BASE LAYER

- X-STATIC† enhanced through to the fiber to thermodynamically regulate your temperature by conducting body heat out in warm weather and reflecting body heat back to the skin in cold weather.
- Permanently treated for long-lasting antibacterial performance undiminished even after 250 washes.
- Silver woven into fiber immediately binds with odor-causing agents such as ammonia and denatured proteins to instantly reduce odor.
- Mesh panels in specific areas for better ventilation and accelerated drying.
- Compressed for added comfort.

92% Polyester, 6% Spandex,
2% X-STATIC†



TOP
286332
M, L, XL, 2XL, 3XL
Black (90)
$59.99

BOTTOM
286333
M, L, XL, 2XL, 3XL
Black (90)
$54.99

MEN'S ULTRALIGHT BASE LAYER

- Coconut fibered to actively promote evaporative cooling and odor absorption, and to filter moisture out while trapping warmth in.
- Mesh paneled in specific areas for better ventilation and accelerated drying.
- Spandexed for ease of movement.

68% Polyester,
32% Coconut Fiber



TOP
286338
M, L, XL, 2XL, 3XL
Charcoal Grey (07)
$44.99

BOTTOM
286339
M, L, XL, 2XL, 3XL
Charcoal Grey (07)
$34.99

MEN'S & LADIES' THERMAL BASE LAYER

- Made of high-filament polyester enhanced by slight brushing to provide softness and warmth.
- Spandex Spondered for ease of movement.

95% Polyester,
5% Spandex (brushed)

MEN'S TOP
286334
M, L, XL, 2XL, 3XL
Charcoal Grey (07)
$64.99

MEN'S BOTTOM
286335
M, L, XL, 2XL, 3XL
Charcoal Grey (07)
$49.99



LADIES' TOP
286336
XS, S, M, L, XL, 2XL
White (01)
$64.99

LADIES' BOTTOM
286337
XS, S, M, L, XL, 2XL
Charcoal Grey (07)
$49.99



NECK AND BODY CORE PROTECTION



WINDPROOF LAYER

- Coverage for your crucial body core.
- Windproof, warm and breathable layer.
- Stretch fabric and unrestricted arm movement.
- Zipper on shoulder for easy slip on/off, even with a helmet.
- Flatlock seams to prevent skin chafing.

100% Polyester

286348
S, M, L, XL, 2XL • Black (90)
$49.99



NECK GAITER

- 14 oz anti-pilling fleece.
- Spandex binding for a better fit.

100% Polyester

286331
One size • Black (90)
$19.99

SOCKS

ULTRALIGHT SOCKS

- Warm and comfortable moisture-wicking for dry feet at all times.
- Extreme resistance to cold and active management of perspiration moisture.
- Dri-release† wool combines ease of care of synthetic fabric and look of natural fiber.
- Elastic ankle and arch support.
- Stay-up comfort top keeps socks up.

49% Polyester, 25% Polyamide Nylon, 17% Polypropylene,
7% Merino Wool, 2% Elastane

286340 • S/M, L/XL • Black (90)
$9.99



THERMAL SOCKS

- Same thickness as competing thermal socks, but lighter, warmer and with better moisture-wicking performance.
- Elastic ankle and arch support for pro feel.
- Thermolite† hollow-core fibers deliver new generation of warmth-comfort fusion.
- Stay-up comfort top keeps socks up.
- Fully cushioned shin segment.

50% Polyester Thermolite†, 21% Polyamide Nylon,
17% Merino Wool, 5% Acrylic, 2% Elastane

286341 • S/M, L/XL • Black (90)
$19.99



BAGS

CAN-AM CARRIER 8800 GEAR BAG BY OGIO

- Heavy-duty chassis with oversized treaded wheels.
- Wide mouth U-shaped opening for easy access to all gear.
- Large main ventilated compartment and multi-use dual end pockets.
- Secondary end pocket with accessory organization sleeves for smaller gear.
- iFOM† integrated foam panel construction throughout for added gear protection.
- Telescoping pull handle and padded adjustable shoulder strap.
- Easy grab end handles for transport.
- Dimensions: 15" H x 18" W x 32" D (38 cm x 46 cm x 81 cm).

90% Polyester, 10% Plastic

447854
One size
Black (90)
$164.99



CAN-AM CARRIER DUFFLE BAG BY OGIO

- High tensile strength, durable, lightweight construction.
- Ventilated shoe compartment (holds 2 pairs).
- Zippered front accessory pocket.
- Large main compartment with additional end storage pocket.
- Padded, ventilated, and adjustable shoulder strap.
- Molded carry handle.
- Durable abrasion-resistant base.
- High visibility liner.
- Dimensions: 11" H x 9.75" W x 25" D (28 cm x 25 cm x 64 cm).

100% Polyester

447856
One size
Black (90)
$69.99





CAN-AM CARRIER 9800 GEAR BAG BY OGIO

- Structural Load Equalization Deck (SLED) wheeled chassis system.
- Wide mouth lid opening for easy access to all compartments and specialty pockets.
- iFOM integrated foam panel construction throughout entire bag for added protection.
- Adjustable main compartment dividers for custom organization.
- Multiple zippered mesh organization pockets for garment, shoes, and accessories.
- Front accessory pocket and secure hold compression straps.
- Oversized heavy-duty treaded wheels.
- Telescoping pull handle.
- Dimensions: 16" H x 17" W x 36" D (40 cm x 43 cm x 91 cm).

75% Polyester, 25% Plastic

447853
One size
Black (90)
$274.99

CAN-AM CARRIER DRY BACKPACK BY OGIO

- Completely waterproof rolltop design.
- Constructed of 420-denier nylon for durability.
- Dual-density shoulder straps and adjustable sternum strap.
- Quick-access front pocket.
- Organization panel with 2 zip pockets on inside.
- Laptop and tablet sleeves.
- 360-degree reflective print.
- Removable high-visibility liner.
- Dimensions: 20.5" H (rolled) x 10.5" W x 6.75" D (52 cm x 27 cm x 17 cm).

100% Polyester

469544
One size
Black (90)
$139.99



CAN-AM CARRIER HEAD CASE BY OGIO

- Oversized helmet bag fits all helmet brands and sizes with fins and without.
- iFOM integrated foam panels and additional fleece interior provide the ultimate protection.
- Protective zipper teeth closure prevents scratches from zippers.
- Easy access oversized external sleeve pocket.
- Exterior zippered accessory pocket.
- Durable reinforced bottom.
- Dimensions: 11" H x 13" W x 19" D (28 cm x 33 cm x 48 cm).

100% Polyester

447857
One size
Black (90)
$49.99

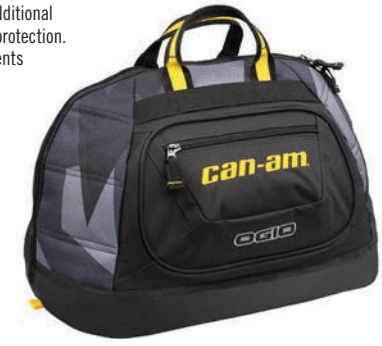

CAN-AM CARRIER BACKPACK BY OGIO

- Padded interior laptop compartment fits most 17" laptops.
- iFom integrated panels keep your electronics and other valuables protected.
- Padded iPad†, tablet or e-reader sleeve.
- Large main compartment.
- Comfortable padded back panel.
- Adjustable ergonomic shoulder straps.
- Zippered fleece lined top pocket for valuables.
- Dual side beverage or accessory holders.
- Dimensions: 19" H x 13" W x 7.5" D (48 cm x 83 cm x 19 cm).

100% Polyester

447858
One size
Black (90)
$79.99



CAN-AM HELMET CASE

- Easy-to-carry ergonomic handle.
- Outer pocket for helmet accessory.

100% Polyester

447678
One size
Black (90)
$29.99



HOW TO MEASURE

- For best results, have someone else take measurements.
- Measure body in underwear.
- Tape must be snug but not tight.
- If measurements fall between two sizes, order the larger size.

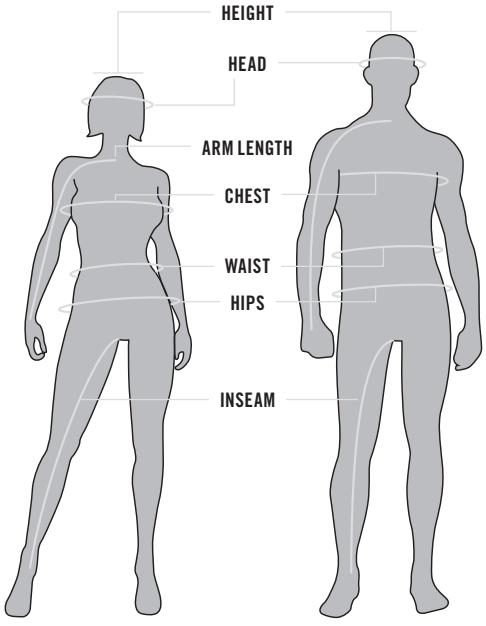

Chest/Bust: Measure under your arms, around the fullest part of your chest.

Waist: Measure around your natural waistline, keeping one finger between the tape and body.

Gloves: Measure palm width.

Inseam: Without shoes, from crotch to the floor.

Arm length: Hand on hip, from center back neck bone, along shoulder point round elbow to bottom of wrist bone.

Head: Around your head, from the center of the forehead, above the ears and over the natural bump at the back of the head.

WHAT CODE REPRESENTS YOUR SIZE?

1. Find your size.
2. The corresponding code is **THE CODE** you use to complete the part number on your order.
   Example: 440227__90 Size: M = Code "**06**", therefore 44022706<u>90</u>

SIZE	CODE	SIZE	CODE	SIZE	CODE
One Size	00	**L/XL**	73	**10**	30
XS	02	**2**	21	**10.5**	99
XS/S	90	**3/4**	79	**11**	31
S	04	**5/6**	52	**12**	32
M	06	**6/8**	48	**13**	33
MT	07	**7/8**	54	**14**	34
L	09	**9/10**	55	**28**	36
LT	10	**10/12**	49	**30**	37
XL	12	**11/12**	56	**32**	38
XLT	13	**13/14**	80	**34**	39
2XL	14	**14/16**	50	**36**	40
3XL	16	**4**	23	**38**	41
4XL	18	**6**	25	**40**	42
5XL	88	**7**	27	**42**	43
S/M	72	**8**	28	**44**	44
M/L	91	**9**	29		

MEN'S - REGULAR 5'8" - 6'0" BODY MEASUREMENTS (INCHES)

	S	M	L	XL	2XL	3XL
CHEST	35-37	37-40	40-44	44-48	48-52	52-56
WAIST	29-31	31-34	34-38	38-42	42-46	46-50
HIPS	35-37	37-40	40-44	44-48	48-52	52-56
ARM LENGTH	31	32	33	34	35	35
INSEAM	31 1/2	32	32	32	32	32 1/2

MEN'S - REGULAR - TALL 6'1" - 6'4"

	MT	LT	XLT
CHEST	37-40	40-44	44-48
WAIST	31-34	34-38	38-42
HIPS	37-40	40-44	44-48
ARM LENGTH	33 1/2	34 1/2	35 1/2
INSEAM	34	34	34

MEN'S - REGULAR NUMERIC (PANTS) 5'8" - 6'0"

	28	30	32	34	36	38	40	42	44
CHEST	35-36	36-38	38-39	39-41	41-43	43-45	45-47	47-49	49-51
WAIST	28-30	30-31 1/2	31 1/2 -33	33-35	35-37	37-39	39-41	41-43	43-45
HIPS	35-36	36-38	38-39	39-41	41-43	43-45	45-47	47-49	49-51
INSEAM	31	31 1/2	32	32	32	32	32	32	32

LADIES' - REGULAR 5'4" - 5'8"

	XS	S	M	L	XL	2XL	3XL
CHEST	32-34	34-36	36-39	39-42	42-45	45-49	49-53
WAIST	24-26	26-28	28-30	30-34	34-37	37-41	41-45
HIPS	34-36	36-38	38-40	40-44	44-47	47-51	51-55
ARM LENGTH	31	31	31 1/2	32	32 1/2	33	34
INSEAM	30	30	30	30	30	30 1/2	30 1/2

LADIES' - REGULAR NUMERIC (PANTS) 5'4" - 5'8"

	4	6	8	10	12	14
CHEST	32-34	34-36	36-38	38-40	40-42	42-44
WAIST	24-26	26-28	28-30	30-32	32-34	34-36
HIPS	34-36	36-38	38-40	40-42	42-44	44-46
INSEAM	30	30	30	30	30	30

MEN'S GLOVES (MEASURE PALM WIDTH)

	S	M	L	XL	2XL	3XL
INCHES	3	3 3/8	3 3/4	4 1/8	4 1/2	5 1/2

LADIES' GLOVES (MEASURE PALM WIDTH)

	S	M	L	XL	2XL
INCHES	2 5/8	3	3 1/4	3 1/2	4 1/2

JUNIOR HELMETS

	S	M	L
HAT SIZE	6 1/8 - 6 1/4	6 3/8 - 6 1/2	6 5/8 - 6 3/4
HEAD (INCHES)	19 1/4 - 19 3/4	20 - 20 1/2	20 7/8 - 21 1/4

TEEN GLOVES

	6-8	10-12	14-16
INCHES	3 1/8	3 3/8	3 5/8

SOCKS

S/M	L/XL
6 - 9	10 - 13

HELMETS

	XS	S	S/M	M	M/L	L	XL	2XL	3XL
HAT SIZE	6 5/8 - 6 3/4	6 7/8 - 7	7 1/8	7 1/8 - 7 1/4	7 1/4	7 3/8 - 7 1/2	7 5/8 - 7 3/4	7 7/8 - 8	8 1/8 - 8 1/4
HEAD (INCHES)	20 7/8 - 21 1/4	21 5/8 - 22	22 3/8	22 3/8 - 22 3/4	22 3/4	23 1/8 - 23 5/8	24 - 24 3/8	24 3/4 - 25 1/8	25 1/2 - 25 7/8

KIDS/TEEN

	2	3/4	5/6	7/8	10/12	14/16
CHEST	21	22 - 23	24 - 25	26 - 27	28 1/2 - 30	31 1/2 - 33
WAIST	20	20 1/2 - 21	21 1/2 - 22	22 1/2 - 23	24 - 25	26 - 27
HIP (SEAT)	21	22 - 23	24 - 25	26 - 27	28 1/2 - 30	31 1/2 - 33
ARM LENGTH	15 1/2	17 - 18 1/2	20 - 21 1/2	23 - 24 1/2	28 1/2 - 30	31 1/2 - 33
INSEAM	13 1/2	15 1/2 - 17 1/2	19 1/2 - 21	22 3/4 - 24 1/2	26 1/4 - 28	29 1/2 - 31

FOOTWEAR EQUIVALENCIES

CAN-AM NEOPRENE MUD BOOT	**US**		8	9	10	11	12	13
	EU		41	42	43	44	45	46
CAN-AM RIDING BOOT	**US**	7	8	9	10	11	12	13
	EU	39.5	41	42.5	44	45.5	47	48.5


GENUINE
BRP
PARTS.
BY USING ORIGINAL BRP PARTS,
YOU ARE TAKING CARE OF YOUR INVESTMENT.
MAKE THE RIGHT CHOICE.
can-am
BRP
Can-AmOffRoad.com



LEARN MORE ON PAGE 204

PERFORMANCE DRIVE BELT

- High-performance design ideal for off-road use.
- BRP-specific calibration adjusted to best suit your Can-Am vehicle.
- Ask your authorized Can-Am dealer which one fits your vehicle.

715000302	715900024	715900023
$139.99	$59.99	$139.99

PULLER/LOCKING TOOL

(Not illustrated)

- Spreads the secondary clutch open for easy belt replacement.
- Locks engine at TDC for maintenance tasks.

529036098

$18.99

PERFORMANCE DRIVE BELT (100% PBO)

- High-performance belt technology.
- 100% cutting-edge PBO high-tensile strength polymer fibre construction.
- Designed for high-temperature robustness and prolonged durability.
- Ask your authorized Can-Am dealer which one fits your vehicle.

715900212

$169.99

CV BOOT KITS

- Come with clamps and grease.
- Genuine BRP CV Boot Kits ensure absolute compatibility and a perfect fit.
- Ask your authorized Can-Am dealer which one fits your vehicle.





ORGANIC BRAKE PAD KIT

- Chosen as the standard OEM on Can-Am ATV.
- Provides excellent braking capacity with optimal efficiency, a great feel, and low noise.

Fits: G2 2013 & up (except with 400 engine), G2 2012 with 800R or 100 engine (except MAX models), G2L 2015 & up, G2S 2012 & up (except G2S 2012 with 500 engine)

Front Left	Front and Rear Right
705601015	705601014
$39.99	$39.99



METALLIC BRAKE PAD KIT

- Built strong to last long – heavy-duty construction stands up to hard braking.
- Designed to handle demanding riding conditions with challenging braking environments such as mud and dunes.
- Created specifically for use with Can-Am ATV.

Fits: G2 2013 & up (except with 400 engine), G2 2012 with 800R or 100 engine (except MAX models), G2L 2015 & up, G2S 2012 & up (except G2S 2012 with 500 engine)

Front Left	Front and Rear Right
715900248	715900249
$39.99	$39.99

AIR FILTERS

- Prevent airborne contaminants from reaching your engine.
- Protect internal components against premature wear.
- Genuine BRP air filters ensure absolute compatibility and a perfect fit.
- Ask your authorized Can-Am dealer which one fits your vehicle.



TOUCH UP PEN

- Ideal for do-it-yourself small paint repairs caused by rock chips and scratches on your bumpers, roll cage, a-arms, springs, beadlocks, etc.
- Genuine Can-Am color perfectly matches original paint for seamless coverage.
- For use on metal parts only.

529036363 · Can-Am Red
529036362 · Manta Green
529000084 · Octane Blue

$17.99





YUASA† BATTERIES

- Top of the line models from the leading preferred original equipment battery supplier in North America.

18 Amps. Wet (YTX20L-BS) · 410301203	19 Amps. Dry (YB16CL-B) · 278001756	13 Amps. Wet (YTX15L-BS) · 710000283
$115.99	$76.99	$120.99



YUASA† AUTOMATIC 1 AMP BATTERY CHARGER

- Keeps your battery charged and ready to ride.
- Hook it up - plug it in – charge. Includes adapter and clips.
- 3-stage charge cycle switches automatically to maintenance mode.
- Easy-to-read 3-color LED charge monitor.
- Built-in overcharge prevention.

529036307

$41.99

DRIVE BELTS

The drive belt is an integral part of your off-road vehicle's transmission and its importance for achieving its maximum performance can't be overstated. All the tuning or changes made in gearing, weights, ramps and springs in the world don't matter if the belt can't consistently maintain its performance.



SO, WHAT A MAKES A BELT STAND OUT?

You see that several elements include "Aramid." Aramid is a man-made fiber resistant to heat and abrasion. It is used to add strength and long life to the rubber belt. Aramid fibers and fabrics are common in belts.

- **Top Cog with Special Aramid Fiber**
- **Adhesion Rubber**
- **Specialized High Modulus Aramid Cord**
- **Compressive Rubber with High Modulus PBO Fiber**
- **Bottom Cog With Aramid Fabric**

BRP BELT CONSTRUCTION VS. COMPETITORS

	Brand A	Brand A C12	Brand B	BRP
Top Rubber Chopped Fiber	CR Aramid	CR Aramid	H-NBR Aramid/Cotton	CR Aramid
Upper Adhesion Rubber Chopped Fiber	CR	CR	H-NBR	CR
Cord	Aramid	Carbon	Aramid	Aramid
Lower Adhesion Rubber Chopped Fiber	CR	CR	H-NBR	CR
Bottom Rubber Chopped Fiber	CR Aramid	CR Aramid	H-NBR Aramid/Cotton	CR PBO Aramid
Bottom Fabric	Acrylic 1 ply	Acrylic 1 ply	CR Aramid/Cotton	Aramid/PET 1 ply

CR: Chloroprene Rubber

USE THE RIGHT BELT

Just as we calibrate our clutches and gearing to deliver the best possible performance for how a vehicle is ridden, we specialize the belt for the application, too.

Different types of riding create different heat and load conditions our engineers must account for. For instance, higher drivetrain loads, like on Maverick X ds Turbo, going through the dunes on the throttle hard for extended periods of time, generally require belts with a stiff construction and high heat resistance. A utility vehicle pulling equipment or heavily loaded sees high drivetrain loads too, but the clutch calibrations, engine RPM, vehicle speed and environment differ significantly – so will the required belt.

This is why it's best to match the exact model and year of your BRP vehicle to the replacement belt. And even though BRP belts might have the same width and length dimensions, the difference in the materials delivers the best performance and longevity for your vehicle's application and calibrations.

MODULUS & TENSILE STRENGTH
(Based on BRP Dynamometer Testing)

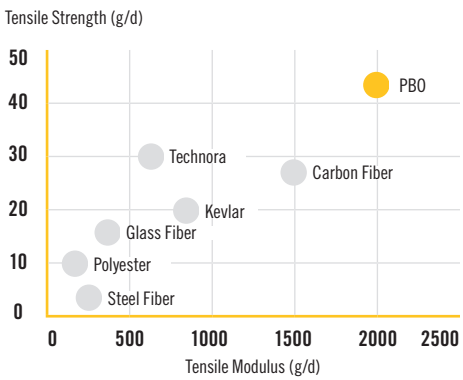

*When compared to BRP's Performance Drive Belt (100% PBO) (715900212).

DURABILITY COMPARISON*

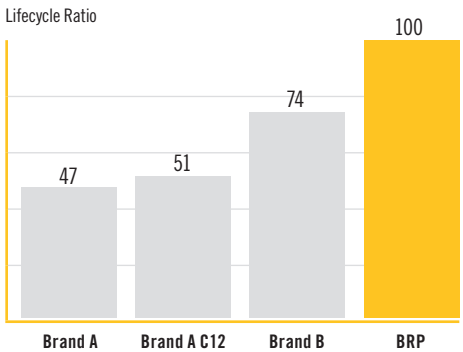



XPS ENGINE OILS AND MAINTENANCE PRODUCTS

The XPS brand has a complete family of performance products to expertly protect, enhance and extend life of your BRP vehicle. Every XPS product has been tested and approved for complete peace of mind. No second guesses, no assumptions. The exact product to use, every time.

XPS ENGINE OILS



XPS 4-STROKE SYNTHETIC OIL

- Specifically formulated and BRP-engineer-certified for use in your Can-Am vehicle.
- Premium synthetic base with custom additives provides unmatched lubrication and enhanced corrosion protection.
- Provides easier starting in cold temperature and enhanced cold start protection.

1 US gallon (3.785 L)
293600115

1 quart (946 ml)
293600112



XPS 4-STROKE SYNTHETIC BLEND OIL

- Specifically formulated and BRP-engineer-certified for use in your Can-Am vehicle.
- Synthetic blend with custom additives provides enhanced corrosion protection.

1 US gallon (3.785 L)
293600122

1 quart (946 ml)
293600121



XPS 4-STROKE OIL CHANGE KIT

- Ultra-convenient "all-in-one" oil-change kit saves time and money.
- Includes XPS Synthetic or Synthetic Blend Oil, oil filter, o-rings and washer.

For Can-Am off-road vehicles with 450 cc and less Rotax engine (except Rally® and DS™ models)

Synthetic Blend • 703500902
$62.99
Synthetic • 703500903
$71.99

For Can-Am off-road vehicles with 500 cc or more Rotax engine (except Traxter® or Quest models)

Synthetic Blend • 703500904
$51.99
Synthetic • 703500905
$59.99

Note: Please contact your dealer or visit our online store for suggested retail prices of oil based products.

USING THE RIGHT OIL MATTERS



The right oil delivers:

THE BEST PERFORMANCE
THE BEST RELIABILITY
THE LONGEST LIFE

It's a balancing act to deliver all three attributes – and only XPS, with its custom blend formulations and carefully matched additives, is specifically designed to do just that in a Rotax engine.

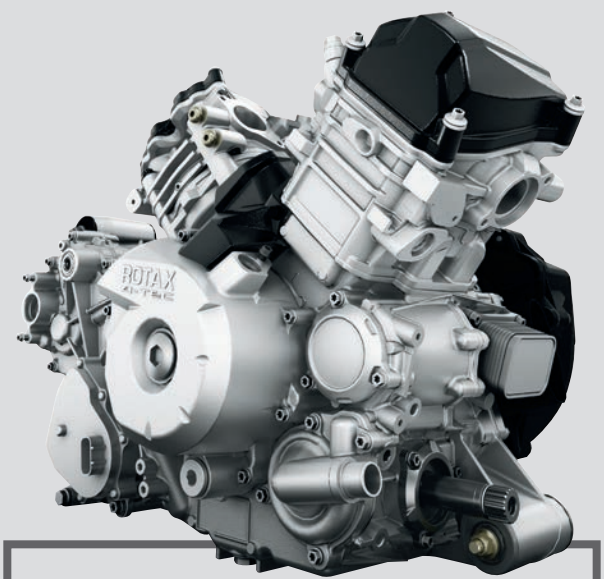

"The best oil is the oil that was specifically designed for the engine, without compromising the engine."

Mischa Zimmermann
Project Leader Engine Development, BRP

DOES ONE OIL FIT ALL?

Our efficient, high-output engines place strong demands on engine oil. At BRP, we treat oil like an actual mechanical part that is developed concurrent with our latest high-performance engine technology.

XPS 4-STROKE OILS

Fact: XPS 4-stroke oils are BRP engineer-certified for unmatched lubrication, the right characteristics for our wet clutches, the right viscosities to best protect our engines from startup to operating temperatures, and they all have extra corrosion protection to better protect your engine.

WHY CHOOSE XPS 4-STROKE ENGINE OILS INSTEAD OF LOWER-COST ALTERNATIVES?

BRP engineers and experts like Mischa Zimmerman have proven repeatedly that other brands of oil don't meet the high standards BRP desires for engines like the Rotax 4-Tec 1000 Turbo.

- Each vehicle manufacturer establishes their own lubrication standards and test criteria to validate OEM oil – this means XPS achieves a much higher standard.
- Even oil that is more expensive than XPS will not have the same custom-matched performance for Rotax engines.
- Our oil is tested on the whole lineup of vehicles and engines we manufacture – not just one or two models. Our specific testing includes real world test miles to ensure XPS meets our performance requirements as opposed to relying only on generalized, minimum specifications that most aftermarket oil brands use.

AREN'T THERE OTHER HIGH QUALITY OILS ON THE MARKET?

Yes. But no other oil is designed as an actual mechanical part during engine development like XPS. Your satisfaction matters.

FIND OUT WHY OIL MATTERS AT WWW.XPSLUBRICANTS.COM

XPS CLEANERS

XPS SPRAY CLEANER & POLISH



- Removes dirt, grease, road grime and water marks easily and quickly.
- Non petroleum based formula will not harm plastic finishes.
- 12 oz. (340 g).

219702844

$9.99

XPS BRAKES & PARTS CLEANER



- A concentrated blend of solvents with a powerful blasting spray that effectively removes grease, grime, brake fluid and other contaminants from brake components and metal parts without the need for disassembly.
- Evaporates instantly and completely, leaving no residue to hinder performance.
- Contains no ozone depleters.
- 14 oz. (400 g).

219701705

$7.99

XPS OFF-ROAD VEHICLE WASH



- A biodegradable non-toxic cleaner that removes mud and dried-on dirt from your off-road vehicle.
- Whether grimy from the track, the woods or the fields, this cleaner will leave your off-road vehicle sparkling.
- When used as directed, XPS Wash is safe for all off-road vehicle finishes.
- 32 oz. (946 ml).

219701702

$9.99

XPS MICROFIBER TOWELS



- The latest in high-quality detailing towels.
- Made up of extremely fine fibers, their soft surfaces have been perfected for drying and polishing painted, gel coated and hard shiny surfaces.
- They are so absorbent they hold up to 7 times their weight in water.
- Machine washable means they can be used over and over again.
- Pack of 2.

219701759

$8.99

XPS MAINTENANCE PRODUCTS

XPS SYNTHETIC GEAR OIL



- Exceeds API GL-5 specs and provides extra protection for a wide range of differential types.
- Formulated for extended drain intervals.
- Additional friction modifiers make it ideal for clutch-type limited slip differentials.
- Allows for higher load capacity, while providing better shear stability, and less oxidation than other synthetic or conventional gear oils.
- Superior thermal stability and relatively constant viscosity help fight wear and provide enhanced extreme-temperature performance.

75W-140
293600140

$31.99

75W-90
293600043

$23.99

XPS CARBON FREE



- XPS Carbon Free prevents problems inherent in Ethanol-blended fuels.
- Extends storage life of fuel up to 12 months.
- Cleans fuel system while preventing corrosion and oxidation.
- Helps keep piston rings, valves and combustion chamber carbon-free to prevent difficult starting and restore peak performance.

219702533

$8.99

XPS FUEL STABILIZER



- Extends fuel life by preventing fuel breakdown during storage.
- Helps prevent difficult starting, throttle hesitation and poor performance.
- Anti-corrosive, anti-oxidant formula protects fuel system and engine.
- Prevents problems inherent in Ethanol-blended fuels.

413408601

$9.99

XPS SYNTHETIC SUPSENSION GREASE



- Provides optimal lubrication at temperature extremes.
- Protects against external contamination.
- Specifically formulated for use in Can-Am off-road vehicles.
- Allows suspensions to perform regardless of conditions.
- 14 oz. (400 g).

293550033

$10.99

XPS DOT 4 BRAKE FLUID



- Exceeds D.O.T 3 and 4 requirements.
- Unique low-moisture formulation providing maximum protection against vapor lock.
- Recommended in Can-Am off-road vehicles.

293600131

$9.99

XPS PRE-MIXED ANTIFREEZE/COOLANT



- Pre-mixed, ready-to-use.
- Exceptional 5-year extended service life.
- Provides superior heat transfer, protection against corrosion and cavitation.
- Specifically formulated for use in your Can-Am vehicle.
- Ideal as a replacement coolant in vehicles that usually use 2-year antifreeze/coolant (green).

5-year (orange)
1 quart (946 ml)
219702685

$9.99

XPS LUBE



- A multipurpose lubricant that prevents rust, corrosion and moisture intrusion.
- Contains active extreme-pressure additives which provide excellent lubrification and antiwear properties.
- Comes in a spray that works upside down.
- 14 oz. (400 g).

293600016

$11.99

MORE THAN JUST OIL.



XPS OILS AND ROTAX ENGINES. CREATED, DEVELOPED, AND CONSTANTLY EVOLVING TOGETHER TO WORK BEST TOGETHER.

It's all about reaching optimum performance and protection, ensuring XPS oils have no equals when used in Rotax engines, and Rotax engines have no equals when they use XPS oils.

QUALITY, INNOVATION, RELIABILITY AND PERFORMANCE GO INTO EVERY BRP VEHICLE AND INTO EVERY DROP OF XPS OIL.

Our performance requirements exceed oil certification standards, so we set our own: Testing, and retesting our oils in every Rotax engine type under a wide range of rigorous operating conditions to make sure they work the best under all conditions.

XPS IS THE ONLY OIL SPECIFICALLY ENGINEERED FOR ROTAX ENGINES.

BRP's Rotax engines are the perfect embodiment of power and technology, and only highly specialized, specially engineered XPS oils can ensure they always operate at their maximum efficiency and potential.

XPS OILS & ROTAX ENGINES. PARTNERS IN PERFORMANCE.










ski-doo LYNX SEA-DOO EVINRUDE ROTAX can-am

©2016 Bombardier Recreational Products Inc. (BRP). All rights reserved. ®, ™ and the BRP logo are trademarks of BRP or its affiliates.

716001384 US



THE RIDE SAYS IT ALL • 2017

can-am | BRP





Renegade® X®xc 1000R

Outlander™ XT™ 570

Defender Mossy Oak† Hunting Edition HD10

Maverick™ xc 1000R

Commander™ LIMITED 1000

Outlander X mr 1000R

THIS IS THE ULTIMATE OFF-ROAD EXPERIENCE.

EVERY CAN-AM® OFF-ROAD VEHICLE IS A PERFECT COMBINATION OF INDUSTRY-LEADING PERFORMANCE, PRECISION-ENGINEERED HANDLING AND RIDER-FOCUSED DESIGN.

DEFENDER



Defender Mossy Oak Hunting Edition HD10 shown

WHATEVER YOU'RE INTO, DEFENDER IS UP FOR.

Getting the job done is what the Defender is designed to do and does best. Whether it's working the woods, roaming and ruling the farmland, or leading the hunt. From the toughness of its outperforming engines and all-terrain traction, to its steadfast, class-leading payload and towing capabilities, to the out-and-out intelligence and flexibility of its work and ride-enhancing innovations. Defender does it all. And better.



FEATURES



REDEFINING TOUGH.

72 HP

Rotax® heavy-duty engines are ready for whatever you can throw at them. Not only with superior torque power over that of Defender's closest rivals, but by also redefining 'tough' in gentler terms. You get a more comfortable ride with Rotax HD's low vibration and rear placement. And with their lower maintenance needs, you get all the reliable power you need, plus cost-efficiency you can really appreciate.



WHEN CAPABLE REALLY COUNTS.

2,000 LB

More thought has gone into how you'll use your Defender than has gone into any utility vehicle we've ever built. Which is why it's a more capable and versatile carrier than any in its class Defender's cargo box offers infinite flexibility for configuring to your working or sporting needs, thanks in part to its built-in LinQ quick-attach system and other integrated recesses. Load it up to 1,000 lb (454 kg), then hitch up another 2,000 lb (907 kg) and you're still good to go, even with a passenger or six.



WHERE CLEVER REALLY SHOWS.

Intelligent design is everywhere on the Can-Am Defender. But uncommon innovation—like the more forward pillar placement for easier cockpit access, flip-up seats revealing more storage, or full, hard or soft closed cab options—just takes 'clever' to a whole new level.

AVAILABLE FEATURES	DEFENDER		DPS	XT	XT CAB	NEW MOSSY OAK HUNTING EDITION
Engine selection	HD8	HD10	HD8 / HD10	HD8 / HD10	HD10	HD10
Versatile tilt-up cargo box with 1,000 lb (454 kg) capacity*	✔	✔	✔	✔	✔	✔
Convenience package: Removable toolbox, under-dash storage and lockable rear differential	Opt.	✔	✔	✔	✔	✔
Cast-aluminum wheels			12-in. (30.5 cm)	14-in. (35.6 cm)	14-in. (35.6 cm)	14-in. (35.6 cm)
4,500 lb (2,041 kg) winch				✔	✔	✔
Analog / Digital gauge with enclosed storage				✔	✔	✔
Rigid roof and bench seat with reinforced skin				✔	✔	✔
XT with cab enclosure extras (Full glass tilt-up windshield with wiper kit, full doors with electric opening windows, rear window with sliding opening and heater kit)					✔	
Mossy Oak Hunting Edition extras (Half windshield, front bumper, full underbody skid plate, headache rack, reinforced double gun boot, RAM spotlight, etc.)						✔
ALL-NEW: Available in 6-up configuration			✔	✔		
Available colors						

** 600 lb (272 kg) in California*

Engine and color choices vary per package. See full specifications on page 28 & 29.

COMMANDER



Commander LIMITED 1000 shown

WORK ALL DAY. PLAY ALL WEEKEND.

The Commander is what you make of it. Its versatility means it can be a great partner for getting the job done, a great companion on a hunt or satisfying trail cruiser. No matter which specialized package you choose, your Commander will be powerful, capable and comfortable.



FEATURES



PROVEN ROTAX ENGINE OPTIONS

INDUSTRY-LEADING PERFORMANCE

85 HP

Available in a 71-hp Rotax 800R or 85-hp Rotax 1000 liquid-cooled V-Twin engine, with four valves per cylinder and single overhead camshafts. Both feature twin fuel injectors that supply efficient fuel delivery into the combustion chamber for powerful, yet precise performance.



TORSIONAL TRAILING ARM INDEPENDENT REAR SUSPENSION (TTI)

COMFORT AND CONTROL

TTI

The only independent rear suspension that eliminates scrub and camber changes, the wheels pivot straight up and down rather than in a butterfly motion like competitors' systems. So, the vehicle moves only in the direction you point it. There's also an external sway bar for more controlled body roll in turns.



DUAL-LEVEL CARGO BOX

EXCLUSIVE AND VERSATILE

600 LB

The industry's most versatile and usable cargo box design has a 600-lb (272 kg) cargo capacity, dual storage levels, anti-rust box, and tilt-assist dumping. Cargo box with two levels separated by a removable, water-resistant panel, that offers an upper and lower bed with their independent tailgate.

AVAILABLE FEATURES	BASE	DPS	XT	MOSSY OAK HUNTING EDITION	XT-P	LIMITED
Adjustable driver's seat and tilt steering	✔	✔	✔	✔	✔	✔
Tri-Mode Dynamic Power Steering (DPS)		✔	✔	✔	✔	✔
Heavy-duty front bumper and mudguards			✔	✔	✔	✔
4,500 lb (2,041 kg) winch			✔	✔	✔	✔
Front and rear FOX† shocks					2.0 QS3	ACS / 2.0 QS3
LIMITED extras (FOX shocks, Garmin† Montana† GPS, hard roof, half windshield, Sound System, Speakers, etc.)						✔
Mossy Oak Hunting Edition extras (Double gun boot, Xtreme bumper, hard roof, half windshield, full under body skid plate, etc.)				✔		
Available in 4-up configuration		✔	✔			✔
Available colors						
Engine selection	800R	800R / 1000	800R / 1000	1000	1000	1000

Engine and color choices vary per package. See full specifications on page 29 & 30.

MAVERICK

Maverick xc 1000R & Maverick DPS 1000R shown

SHARE THE EXCITEMENT, ON EVERY TERRAIN.

Excitement is designed into every Can-Am off-road vehicle. The beauty of our Maverick performance side-by-sides is that you can share the acceleration, corner carving, climbing and whoops-taming with a buddy or the whole family. There's a Maverick for almost every terrain out there: Sand dunes, desert, tight wooded trails, deep mud. When you test ride one, bring along a friend to get the full effect.



FEATURES



POWERFUL ROTAX ENGINE

INDUSTRY-LEADING PERFORMANCE

101 HP

The 1000R engine is optimized for pure-sport performance by applying state-of-the-art high-flow dynamics. By optimizing the air intake, combustion and exhaust flow we improved engine efficiency to generate 101 horsepower.



FOX PERFORMANCE SERIES SHOCKS

PRECISE RIDE

FOX SHOCKS

Front and rear FOX Performance Series shocks with compression and preload adjustments. Rebuildable design allows for easy service and valving changes.



ROOMY AND STYLISH COCKPIT

COMFORT, ALL DAY LONG

ROOMY COCKPIT

Every inch of the Maverick is designed to provide both driver and passenger(s) with a more connected sport side-by-side experience, thanks to maximum comfort and easy access to cockpit controls and information.

AVAILABLE FEATURES	xc	xc DPS	X xc	DPS
Front & rear FOX shocks	✔	✔	✔	QS3
Maxxis Bighorn 2.0† tires 27-in. (68.6 cm)	✔	✔	✔	✔
Tri-mode Dynamic Power Steering (DPS)		✔	✔	✔
Analog / Digital gauge			✔	
60-in. (152.4 cm) width	✔	✔	✔	
X-package extras (graphics and sponsor decals, x-package steering wheel and seat trims)			✔	
Beadlock wheels			✔	
Available in 4-up configuration				✔
Available colors				
Engine selection	1000R	1000R	1000R	1000R

**X mr models information on page 22 & 23*

Engine and color choices vary per package. See full specifications on page 30 & 31

MAVERICK TURBO



Maverick MAX X ds 1000R TURBO shown

NOTHING COMPARES TO THEM. PERIOD.

What do you do after you introduce the most powerful and agile side-by-side vehicle of the industry? You add even more power, of course. We've upped the horsepower of our Rotax 1000R TURBO to 131 hp. Try one to experience how it tames dunes like they belong in a kid's sandbox.



FEATURES



POWERFUL ROTAX ENGINE WITH TURBOCHARGER OPTION

FIRST FACTORY-INSTALLED TURBO

131 HP

Boosting the performance of the proven Rotax 1000R engine with the industry's first factory-installed turbocharger enables the Maverick TURBO to produce an impressive 131 hp. The Continuously Variable Transmission (CVT) showcases a redesigned driven pulley with a Quick Response System (QRS) and an improved drive pulley that allows better power transfer and a faster engagement time.



TORSIONAL TRAILING A-ARMS REAR SUSPENSION (TTA)

INNOVATIVE REAR SUSPENSION

TTA

The innovative Torsional Trailing A-arms (TTA) rear suspension is a compact version of a five-link suspension featuring no bump steer and low scrub. This all translates to a more controlled wheel movement, optimal bump absorption and tire-to-ground contact for predictable handling. Compact design means low unsprung weight for quicker suspension reaction to changing terrain. Its 16-in. (40.6 cm) of travel will provide a smooth ride at hard-charging paces or in technical terrain.



28-IN. MAXXIS BIGHORN 2.0 TIRES ON ALUMINUM BEADLOCK WHEELS

PERFORMANCE WHEELS AND TIRES

TRUE BEADLOCK

These 14-in. (35.6 cm) aluminum beadlock wheels use a mechanical fastening system that makes it nearly impossible for the tire bead to break loose from the wheel during heavy acceleration or cornering. Proven 28-in. (71.1 cm), 6-ply Maxxis Bighorn 2.0 tires feature sturdy lugs and a non-directional tread pattern for a smooth and confident ride over a variety of surfaces. (Available on X ds and X rs packages)

AVAILABLE FEATURES	TURBO	X ds TURBO	X rs TURBO
Tri-mode Dynamic Power Steering (DPS)	✔	✔	✔
28-in. (71.1cm) Maxxis Bighorn 2.0 tires	✔	✔	✔
Front & rear FOX shocks	2.5 QS3	2.5 QS3	2.5 Fully Adjustable
Quick Response System (QRS), CVT transmission	✔	✔	✔
Turbo with integrated intercooler and Donaldson† air filter	✔	✔	✔
X-package seat trim and graphics		✔	✔
Beadlock wheels		✔	✔
X rs extras (Stiffer suspension settings, waterdip coloration, Yoshimura† exhaust, rear bumper)			✔
Available in 4-up configuration	✔	4-up configuration only	4-up configuration only
Available colors			
Engine selection	1000R TURBO	1000R TURBO	1000R TURBO

Engine and color choices vary per package. See full specifications on page 30 & 31.

OUTLANDER 450 / 570



Outlander XT 570 shown

PREMIUM CAN-AM PERFORMANCE. ACCESSIBLE PRICE.

With the Outlander 450 / 570, we've taken all the things that make our Outlander ATVs successful and made them more accessible than ever. Because whether you're hauling, towing, hunting or hitting the trail, you need a machine that more than meets your expectations.



FEATURES



PROVEN ROTAX ENGINE OPTIONS

CATEGORY-LEADING PERFORMANCE

48 HP

The proven Rotax engines offer unmatched power and performance while remaining both reliable and efficient. Select from either the 38-hp Rotax 450, that became the new benchmark in its category or the 48-hp Rotax 570 that offers more torque, and better acceleration. Both offer an impressive 1,300 lb (589 kg) of towing capacity.



TRI-MODE DYNAMIC POWER STEERING (DPS)

VARIABLE STEERING ASSISTANCE

DPS

The industry-exclusive Tri-Mode DPS features three selectable modes of assist – MIN, MED, and MAX. Each mode provides less assist at high speed for better precision and more assist at low speed for easier steering. (Available with DPS, XT and Mossy Oak Hunting Edition packages)



RUGGED FRONT AND REAR STEEL RACKS

EASY ON, EASY OFF

360 LB

The Outlander 450 / 570 models feature robust front and rear steel rack designs with a 360-lb (163 kg) combined rack capacity. The integrated LinQ quick-attach accessory system offers convenient and adaptable cargo hauling capabilities and works with numerous Can-Am accessories.

AVAILABLE FEATURES	BASE	DPS	**NEW** XT	MOSSY OAK HUNTING EDITION
Front and rear steel racks	✔	✔	✔	✔
Double A-arm front suspension and TTI rear suspension	✔	✔	✔	✔
Cast-aluminum wheels		✔	✔	✔
Tri-Mode Dynamic Power Steering (DPS)		✔	✔	✔
Front and rear bumpers & wind deflectors			✔	✔
3,000 lb (1,361 kg) Winch			✔	✔
Mossy Oak Hunting Edition extras (Gun boot, skid plate, gear grips and RAM spotlight)				✔
Available in 2-up configuration	✔	✔	✔	
Available colors				
Engine selection	450 / 570	450 / 570	570	570

Engine and color choices vary per package. See full specifications on page 32 & 33.

OUTLANDER 650 / 850 / 1000R



Outlander MAX LIMITED 1000R & Outlander MAX XT-P 1000R shown

ANY TERRAIN. ANY USE. ANY SEASON.

The Outlander is our flagship ATV for a reason – it is a showcase for Can-Am performance, handling, versatility and design. It's equally capable of a hard day's work, a long day's trail ride, a weekend hunt or a morning of snow plowing.



FEATURES



PROVEN ROTAX ENGINE OPTIONS

INDUSTRY-LEADING PERFORMANCE

89 HP

The proven Rotax engines offer unmatched power and performance while remaining both reliable and efficient. Select from either the Rotax 650, the Rotax 850, the most powerful engines of their classes and the Rotax 1000R, that offers an industry-leading 89 hp.



TORSIONAL TRAILING ARM INDEPENDENT REAR SUSPENSION (TTI)

COMFORT AND CONTROL

TTI

The only independent rear suspension that eliminates scrub and camber changes, the wheels pivot straight up and down rather than in a butterfly motion like competitors' systems. So, the vehicle moves only in the direction you point it. There's also an external sway bar for more controlled body roll in turns.



MULTIPURPOSE RACKS WITH LINQ QUICK-ATTACH SYSTEM

EASY ON, EASY OFF

LinQ

The Outlander is equipped with our high-strength racks that include anti-skid surfaces and raised edges to stabilize cargo during your ride. Multiple edges and holes offer numerous anchor points for tie-downs and bungee cords. It comes with our exclusive LinQ quick-attach system that enables you to add and remove Can-Am accessories in just seconds, including trunk boxes, gun scabbards, modular bags, rack extensions and more.

AVAILABLE FEATURES	BASE	DPS	XT	**NEW** MOSSY OAK HUNTING EDITION	XT-P	LIMITED
Multipurpose racks with LinQ quick-attach system	✔	✔	✔	✔	✔	✔
Tri-Mode Dynamic Power Steering (DPS)		✔	✔	✔	✔	✔
3,000 lb (1,361 kg) Winch			✔	✔	✔	✔
Heavy-duty front and rear bumpers			✔	✔	✔	✔
XT-P extras (FOX shocks, beadlock wheels, handguards, etc.)					✔	
LIMITED extras (Garmin Montana GPS, mudguards, FOX air assist shocks, etc.)						✔
Mossy Oak Hunting Edition extras (Gun boot, gear grips, RAM spotlight, full aluminium skid plate)				✔		
Available in 2-up configuration		✔	✔		✔	✔
Available colors						
Engine selection	650	650 / 850 / 1000R	650 / 850 / 1000R	1000R	850 / 1000R	1000R

Engine and color choices vary per package. See full specifications on pages 32 & 33.

OUTLANDER 6x6



Outlander 6X6 XT 1000 shown

THE ROUGHER THE TERRAIN, THE TOUGHER THE JOB, THE MORE IT SHINES.

Whatever you throw at it, the Outlander 6x6 is more than ready. True 6x6 drive mated with the most-powerful engines in their class means that almost no load is too heavy, no muck too sticky, no slope too steep. And its massive reconfigurable Dual-Level™ cargo bed is unlike anything in the industry.



FEATURES



PROVEN ROTAX ENGINE OPTIONS WITH LOW GEAR

INDUSTRY-LEADING PERFORMANCE

LOW GEARING

The proven Rotax engines offer unmatched power and performance while remaining both reliable and efficient. Select from either the 62-hp Rotax 650 or the proven Rotax 1000, that offers 82 hp. Both engines use specific gear ratio for more comfort in low-speed riding and better traction when pulling heavy loads.



DOUBLE TORSIONAL TRAILING ARM INDEPENDENT REAR SUSPENSION (TTI²)

PRECISION HANDLING

TTI²

The only independent rear suspension that eliminates scrub and camber changes, meaning the wheels pivot up and down rather than in a butterfly motion. This ensures the vehicle moves only in the direction you point it. Designed to improve traction and optimize transfer of power to the ground. Offering five-way preload adjustable shocks and 9.3 in. (23.6 cm) of suspension travel, it can soak up rough terrain while keeping the rider comfortable and focused on the trail.



DUAL-LEVEL CARGO BOX WITH MODULAR ACCESSORIES

EXCLUSIVE AND VERSATILE

700 LB

This unique cargo box features two storage levels, 700 lb (318 kg) of capacity and tilt-assist dumping. Its standard removable side panels enable you to create a flatbed in seconds. You can also add accessories such as a cargo cover, log bars, tailgate extension and more.

AVAILABLE FEATURES	NEW DPS	XT
Multipurpose rack with LinQ quick-attach system	✔	✔
Tri-Mode Dynamic Power Steering (DPS)	✔	✔
Cast-aluminum wheels	✔	✔
Dual-Level cargo box		✔
3,000 lb (1,361 kg) Winch		✔
Heavy-duty front bumper		✔
Available colors		
Engine selection	650	1000

Engine and color choices vary per package. See full specifications on page 34.

RENEGADE



Renegade X xc 1000R shown

BEST-IN-CLASS PERFORMANCE.

The Renegade's signature styling screams performance. Good thing we designed and equipped it with technology to back it up – as one ride will convince you.



FEATURES



PROVEN ROTAX ENGINE OPTIONS

INDUSTRY-LEADING PERFORMANCE

89 HP

The proven Rotax engines offer unmatched power and performance while remaining both reliable and efficient. Select from either the 48-hp Rotax 570; the Rotax 850, the most-powerful engine of its class or the Rotax 1000R, that offers an industry-leading 89 hp.



FRONT AND REAR FOX SHOCKS

HIGH-PERFORMANCE SHOCKS

FOX SHOCKS

These high-performance front and rear FOX shocks give riders the flexibility to fit the terrain and riding style, with easy dual-speed compression, rebound and preload adjustments. (Available on X xc and X mr packages)



25-IN. ITP HOLESHOT ATR TIRES ON ALUMINUM BEADLOCK WHEELS

PERFORMANCE WHEELS AND TIRES

TRUE BEADLOCK

These 12-in. (30.5 cm) aluminum beadlock wheels use a mechanical fastening system that makes it nearly impossible for the tire bead to break loose from the wheel during heavy acceleration or cornering. Proven 25-in.(63.5 cm), ITP Holeshot ATR tires feature sturdy lugs and a non-directional tread pattern for a smooth and confident ride over a variety of surfaces. (Available on X xc package)

AVAILABLE FEATURES	BASE	X xc
Double A-arm front suspension	✔	✔
Beadlock wheels		12-in. (30.5 cm)
Front and rear FOX shocks	850 and 1000R engine options	Performance Series 1.5 PODIUM RC2
Tri-Mode Dynamic Power Steering (DPS)		✔
Visco-Lok QE		✔
X-package extras (graphics, seat, aluminum taper-profile handlebar with handguards and square bar pad)		✔
Available colors		
Engine selection	570 / 850 / 1000R	850 / 1000R

**X mr models information on page 22 & 23.*
Engine and color choices vary per package. See full specifications on page 35.

DS 70 / DS 90 / DS 250



DS 90x and Outlander XT 1000R shown

START THEIR PASSION EARLY.

Our DS youth and teen ATVs have the ideal mix of performance features modeled off our adult vehicles, and safety features to give parents control and peace of mind.





FEATURES



FULLY AUTOMATIC CVT (CONTINUOUSLY VARIABLE TRANSMISSION)

ALWAYS IN THE RIGHT GEAR

CVT Continuously Variable Transmission means the drive shaft is always in the right gear. And with forward / neutral / reverse capability, it keeps kids from worrying about shifting gears or getting off the vehicle to go in reverse.



DOUBLE A-ARM FRONT SUSPENSION

SMOOTH RIDE

CONTROL A long travel suspension delivers a smooth ride with more control in the bumps. (Available on DS 90, DS 90X and DS 250)



BUILT-IN THROTTLE LIMITER

PARENTAL CONTROL

PEACE OF MIND Built-in throttle limiter so parents can keep their child's speed under control. The speed limiter allows you to increase the speed as they grow up.

AVAILABLE FEATURES	NEW DS 70	DS 90	DS 90X	DS 250
Fully automatic CVT	✔	✔	✔	✔
Electric start	✔	✔	✔	✔
Double A-arm front suspension		✔	✔	✔
Aluminum wheels			✔	
Front bumper with number plate			✔	
Available colors				
Age	6 and up	10 and up	10 and up	14 and up

Engine and color choices vary per package. See full specifications on page 35

X mr FAMILY



Maverick MAX X mr 1000R shown

READY FOR THE MUD, RIGHT FROM THE FACTORY.

Everyone knows the way to dominate the mud pit is with power. Each mud-specialized X mr family units – including the new Renegade X mr 570 and the Maverick MAX X mr - delivers best in class power. So you know they're ready.



FEATURES



PROVEN ROTAX ENGINE OPTIONS

INDUSTRY-LEADING POWER

89 HP

The proven Rotax engines offer unmatched power and performance while remaining both reliable and efficient, so you can get in and out of that mud pit. Select from either the 48-hp, Rotax 570 that offers more power; the Rotax 650 and the Rotax 850, the most powerful engines and the Rotax 1000R, that offers an industry-leading 89 hp. Each X mr engine is snorkeled to offer maximum performance in deep mud.



RELOCATED RADIATOR AND AIR INTAKE

ALL-DAY PERFORMANCE

MUD READY

Located in place of the front rack, the radiator is kept out of the mud and wears a protective, vented cover, ensuring you'll be able to enjoy all-day rides in deep goop (Outlander X mr family only). The air intake is also relocated high enough to get you in, and out of the mud.



SPECIALIZED MUD TIRES

MAXIMUM TRACTION

MUD TIRES

Every X mr ATV or side by side vehicle is equipped with specialized mud tires, designed to give maximum traction in the deepest mud holes and a smooth ride to the next one.

AVAILABLE FEATURES	Outlander X mr 570	Outlander X mr 650	Outlander X mr 850	Outlander X mr 1000R	Renegade X mr 570	Renegade X mr 1000R	Maverick X mr 1000R
Tri-Mode Dynamic Power Steering (DPS)	✔	✔	✔	✔	✔	✔	✔
Relocated radiator and air intake	✔	✔	✔	✔	Air intake	Air intake	Air intake
Heavy-duty bumpers	Front	Front	Front	Front and rear	Front and rear	Front and rear	
Heavy duty winch			3,000 lbs (1,361 kg)	3,000 lbs (1,361 kg)		3,000 lbs (1,361 kg)	4,500 lbs (2,041 kg)
FOX shocks			HPG	1.5 Podium QS3	HPG	1.5 Podium QS3	2.5 QS3
59-in. (149.9 cm) wheelbase				✔			
Wheels	12-in. (30.5 cm) cast aluminum	12-in. (30.5 cm) cast aluminum	14-in. (35.6 cm) cast aluminium	14-in. (35.6 cm) cast aluminium	12-in. (30.5 cm) Beadlocks	14-in. (35.6 cm) Beadlocks	14-in. (35.6 cm) cast aluminium
Mud tires	28-in. (71.1 cm) Maxxis Mudzilla†	28-in. (71.1 cm) Maxxis Mudzilla	30-in. (76.2 cm) Gorilla Silverback†	30-in. (76.2 cm) Gorilla Silverback	28-in. (71.1 cm) Maxxis Mudzilla	30-in. (76.2 cm) Gorilla Silverback	30-in. (76.2 cm) Gorilla Silverback
ALL-NEW: Available in 4-up configuration							✔
Available colors							

Engine and color choices vary per package. See full specifications on page 31, 34-35.

MOSSY OAK HUNTING EDITION



Outlander 1000R Mossy Oak Hunting Edition shown

UNITED FOR THE HUNT.

Your Can-Am vehicle is more than a tool – it's an important part of your life. So when it came to a camouflage partner, Mossy Oak was the perfect fit. Because like you and us, the outdoors isn't their passion, it's their obsession. All Can-Am models feature Mossy Oak's new Break-up Country pattern, with elements from North American forests and a design balance blending in to break up your ride's outline. We worked together to create the ultimate hunting package: the Mossy Oak Hunting Edition, available on the Outlander 570, Outlander 1000R, Commander 1000 and Defender HD10 .

BREAK-UP COUNTRY
MOSSY OAK®



THE ULTIMATE HUNTING PACKAGE

If you're heading out solo or with a friend, we have the perfect vehicle that will work with you to bring back your quarry. Mossy Oak Break-Up Country pattern combined with factory-installed accessories gives you the ultimate hunting package.

AVAILABLE FEATURES	OUTLANDER 570 MOSSY OAK HUNTING EDITION	NEW OUTLANDER 1000R MOSSY OAK HUNTING EDITION	COMMANDER MOSSY OAK HUNTING EDITION	NEW DEFENDER MOSSY OAK HUNTING EDITION
Dynamic Power Steering (DPS)	✔	✔	✔	✔
Heavy-duty bumper	Front & rear	Front & rear	Xtreme bumper	Front
Gun boot	Single	Single	Double	Double reinforced
Full skid plate	✔	✔	✔	✔
Winch	3,000 lb (1,361 kg)	3,000 lb (1,361 kg)	4,500 lb (2,041 kg)	4,500 lb (2,041 kg)
RAM spotlight	✔	✔		✔
Roof and half windshield			✔	✔
Engine selection	570	1000R	1000	HD10

See full specifications on page 28, 29 & 32.

CAN-AM GENUINE PARTS, RIDING GEAR AND ACCESSORIES



WHY CHOOSE CAN-AM ACCESSORIES?

QUALITY & SEAMLESS INTEGRATION.

It's that simple. Our commitment to innovation, high-quality materials and seamless integration means no one is more qualified to create the accessories for our industry-leading ATVs and Side-by-Side vehicles. They fit in and fit right, look great, and are made to last. Only Can-Am accessories can truly make it your Can-Am.

TRUST & RELIABILITY.

Quality and confidence are built into everything we make, even our warranty. That's why off-road enthusiasts trust Can-Am accessories. It's a responsibility we take seriously, so you will be pleased to know that genuine BRP parts and accessories[1] are covered for an entire year[2] - no matter when they're purchased[3]. And if it's an aftermarket product and BRP or an authorized dealer sells it, it's also covered[4]! Add to that a 4-year limited warranty on helmets and it's clear; our commitment to quality and to you is rock solid. In addition, our limited warranty comes with significant added value, because labor and collateral damage to the vehicle may be covered only if the failed part or accessory was installed by a BRP authorized dealer or distributor. We build them - we back them. Which is why for generations you've trusted us to get you there, and you know you can trust us to keep you going.

PERFORMANCE & PERSONALITY.

Can-Am. It's power, performance, freedom and versatility driven by unrivalled quality and reliability. Can-Am can quench your thirst for adventure and help get things done. Nothing beats our huge range of customized accessories designed to get the most out of every thrill, every mile, and every job.



Defender DPS HD10



Outlander DPS 650



Maverick TURBO 1000R

Visit your Dealer today and create your very own Can-Am.

[1]Purchased at an authorized BRP dealership / distributor OR on a BRP-authorized online store. This warranty does not apply to factory-installed accessories. Excludes B.E.S.T extended service. Certain conditions apply. See your local dealer for details. [2] From date of purchase. [3]This limited warranty is effective as of March 1st, 2016. [4]Under the limited warranty.

		DEFENDER		DEFENDER DPS		DEFENDER XT		DEFENDER XT CAB	DEFENDER MOSSY OAK HUNTING EDITION	DEFENDER MAX DPS		DEFENDER MAX XT	
MODELS & COLOR OPTIONS													
	Color(s)	Green / HD8 / HD10		Yellow / HD8 / HD10 Green / HD8 / HD10 Mossy Oak Break-Up Country Camo / HD8 / HD10		Mossy Oak Break-Up Country Camo / HD8 / HD10 Intense Red / HD8 / HD10 Pure Magnesium Metallic / HD8 / HD10		Mossy Oak Break-Up Country Camo / HD10 Intense Red / HD10 Pure Magnesium Metallic / HD10	Mossy Oak Break-Up Country Camo / HD10	Yellow / HD8 / HD10 Green / HD8 / HD10 Mossy Oak Break-Up Country Camo / HD8 / HD10		Mossy Oak Break-Up Country Camo / HD8 / HD10 Intense Red / HD8 / HD10 Pure Magnesium Metallic / HD8 / HD10	
ENGINES	Selection	HD8	HD10	HD8	HD10	HD8	HD10	HD10	HD10	HD8	HD10	HD8	HD10
	Type	50-hp Rotax 799.9 cc, V-twin, liquid cooled	72-hp Rotax 976 cc, V-twin, liquid cooled	50-hp Rotax 799.9 cc, V-twin, liquid cooled	72-hp Rotax 976 cc, V-twin, liquid cooled	50-hp Rotax 799.9 cc, V-twin, liquid cooled	72-hp Rotax 976 cc, V-twin, liquid cooled	72-hp Rotax 976 cc, V-twin, liquid cooled	72-hp Rotax 976 cc, V-twin, liquid cooled	50-hp Rotax 799.9 cc, V-twin, liquid cooled	72-hp Rotax 976 cc, V-twin, liquid cooled	50 hp, Rotax 799.9 cc V-twin, liquid cooled	72 hp, Rotax 976 cc V-twin, liquid cooled
	Fuel Delivery System	Intelligent Throttle Control (ITC™) with Electronic Fuel Injection (EFI)								Intelligent Throttle Control (ITC) with Electronic Fuel Injection (EFI)			
DRIVE TRAIN	Transmission	PRO-TORQ Transmission with Quick Response System (QRS), high airflow ventilation and Electronic Drive Belt Protection Extra-L / H / N / R / P								PRO-TORQ Transmission with Quick Response System (QRS), high airflow ventilation and Electronic Drive Belt Protection Extra-L / H / N / R / P			
	Drive Train	Selectable 2WD / 4WD with Visco-Lok[2] auto-locking front differential*	True 4-mode traction system: 2x4 open rear dif., 2x4 locked rear dif. 4x4 open rear dif., 4x4 locked rear dif. / Visco-Lok QE auto-locking front dif.							True 4-mode traction system: 2x4 open rear dif., 2x4 locked rear dif. 4x4 open rear dif., 4x4 locked rear dif. / Visco-Lok QE auto-locking front dif.			
	Driving assistance	Electronic Hill Descent Control		Electronic Hill Descent Control ECO™ / Work / Normal modes						Electronic Hill Descent Control		Electronic Hill Descent Control ECO / Work / Normal modes	
	Power Steering	N/A		Dynamic Power Steering (DPS)						Dynamic Power Steering (DPS)			
SUSPENSIONS	Front Suspension	Double A-arm / 10 in. (25.4 cm) travel								Double A-arm / 10 in. (25.4 cm) travel			
	Front Shocks	Twin tube gas charged shocks								Twin tube gas charged shocks			
	Rear Suspension	TTA-HD with external sway bar / 10 in. (25.4 cm) travel								TTA-HD with external sway bar / 10 in. (25.4 cm) travel			
	Rear Shocks	Twin tube gas charged shocks								Twin tube gas charged shocks			
TIRES & WHEELS	Front Tires	Maxxis M9231[1] 25 x 8 x 12 in. (63.5 x 20.3 x 30.5 cm)				Maxxis Bighorn 2.0 27 x 9 x 14 in. (68.6 x 22.9 x 35.6 cm)				Maxxis M9231 26 x 9 x 12 in. (66 x 22.9 x 30.5 cm)		Maxxis Bighorn 2.0 27 x 9 x 14 in. (68.6 x 22.9 x 35.6 cm)	
	Rear Tires	Maxxis M9241[1] 25 x 10 x 12 in. (63.5 x 25.4 x 30.5 cm)				Maxxis Bighorn 2.0 27 x 11 x 14 in. (68.6 x 27.9 x 35.6 cm)				Maxxis M9241 26 x 11 x 12 in. (66 x 27.9 x 30.5 cm)		Maxxis Bighorn 2.0 27 x 11 x 14 in. (68.6 x 27.9 x 35.6 cm)	
	Wheels	12-in. (30.5 cm) steel black		12-in. (30.5 cm) cast-aluminum		14-in. (35.6 cm) black cast-aluminum				12-in. (30.5 cm) cast-aluminum		14-in. (35.6 cm) black cast-aluminum	
BRAKES	Front	Dual 220 mm ventilated disc brakes with hydraulic twin-piston calipers								Dual 220 mm ventilated disc brakes with hydraulic twin-piston calipers			
	Rear	Dual 220 mm ventilated disc brakes with hydraulic single-piston calipers								Dual 220 mm ventilated disc brakes with hydraulic twin-piston calipers			
DIMENSIONS & CAPACITY	Cage	ROPS approved profiled cage Certified ISO 3471 and OSHA								ROPS approved profiled cage Certified ISO 3471 and OSHA			
	Dry Weight	1,395 lb (632.7 kg)		1,414 lb (641.4 kg)		1,550 lb (703 kg)		1,822 lb (826.4 kg)	1,658 lb (752 kg)	1,710 lb (775.6 kg)		1,861 lb (844.1 kg)	
	L x W x H	120 x 62 x 76 in. (305 x 157.5 x 193 cm)				120 x 62 x 78 in. (305 x 157.5 x 198.1 cm)		120 x 66 x 76 in. (305 x 170 x 193 cm)	125.6 x 64 x 78 in. (317.5 x 162.5 x 198.1 cm)	152.5 x 62 x 75.3 in. (387.5 x 157.5 x 191.2 cm)		152.5 x 64 x 77.3 in. (387.5 x 162.6 x 196.2 cm)	
	Wheelbase	83 in. (211.5 cm)								115.5 in. (294 cm)			
	Ground Clearance	11 in. (28 cm)						9 in. (23 cm)	11 in. (28 cm)	10 in. (25.4 cm)		11 in. (28 cm)	
	Cargo Box Dimensions	38 x 54.5 x 12 in. (96.5 x 138.4 x 30.5 cm)								38 x 54.5 x 12 in. (96.5 x 138.4 x 30.5 cm)			
	Cargo Box Capacity	1,000 lb (454 kg) *California only: 600lb (272 kg)*								1,000 lb (454 kg) *California only: 600lb (272 kg)*			
	Tailgate Load Capacity	250 lb (113.4 kg)								250 lb (113.4 kg)			
	Storage Capacity	Total: 3.1 gal (11.7 L)* Under dash (enclosed pocket) : 0.4 gal (1.3 L) Dash: 1.8 gal (6.9 L) Armrests and cup holders: 0.9 gal (3.5 L)	Total: 10.4 gal (39.5 L) Under dash: 6 gal (22.8 L) Dash: 1.8 gal (6.9 L) Water-resistant and removable toolbox: 1.7 gal (6.3 L) Armrests and cup holders: 0.9 gal (3.5 L)	Total: 10.4 gal (39.5 L) Under dash: 6 gal (22.8 L) Dash: 1.8 gal (6.9 L) Water-resistant and removable toolbox: 1.7 gal (6.3 L) Armrests and cup holders: 0.9 gal (3.5 L)		Total: 16.2 gal (61.3 L) Under dash: 6 gal (22.8 L) Waterproof and removable box under passenger seat: 5.6 gal (21 L) Dash: 2 gal (7.7 L) Water-resistant and removable toolbox: 1.7 gal (6.3 L) Armrests and cup holders: 0.9 gal (3.5 L)		Total: 12.7 gal (48.1 L) Waterproofand removable box under passenger seat: 5.6 gal (21 L) Dash: 2 gal (7.7 L) Water-resistant and removable toolbox: 1.7 gal (6.3 L) Under dash: 1.6 gal (6.1 L) Armrests and cup holders: 0.9 gal (3.5 L)Interior doors: 0.8 gal (3.4 L)	Total: 16.2 gal (61.3 L) Under dash: 6 gal (22.8 L) Waterproof and removable box under passenger seat: 5.6 gal (21 L) Dash: 2 gal (7.7 L) Water-resistant and removable toolbox: 1.7 gal (6.3 L) Armrests and cup holders: 0.9 gal (3.5 L)	Total: 11.1 gal (42.1 L) Under dash: 6 gal (22.8 L) Dash: 1.8 gal (6.9 L) Water-resistant and removable toolbox: 1.7 gal (6.3 L) Armrests and cup holders: 1.6 gal (6.1 L)		Total: 16.9 gal (63.9 L) Under dash: 6 gal (22.8 L) Waterproof and removable box under passenger seat: 5.6 gal (21 L) Dash: 2 gal (7.7 L) Water-resistant and removable toolbox: 1.7 gal (6.3 L) Armrests and cup holders: 1.6 gal (6.1 L)	
	Towing Capacity	2,000 lb (907.2 kg)								2,000 lb (907.2 kg)			
	Payload Capacity	1,500 lb (680 kg)						1,200 lb (544 kg)	1,500 lb (680 kg)	1,750 lb (793.8 kg)			
	Fuel Capacity	10.6 gal (40 L)								10.6 gal (40 L)			
	Person Capacity	3								6			
FEATURES	Gauge	Multifunction digital				Multifunction Analog / digital				Multifunction Digital		Multifunction Analog / digital	
	Battery	12-V (18 amp/h)				12-V (30 amp/h)				12-V (18 amp/h)		12-V (30 amp/h)	
	Magneto	650-W								650-W			
	Instrumentation	Speedometer, tachometer, odometer, trip and hour meters, fuel, gear position, seat belt, diagnostics, clock, auto shut off. Lighter type DC outlet (20-A)				Speedometer, tachometer, odometer, trip and hour meters, fuel, gear position, ECO / Normal / Work modes, seat belt and 4 x 4 indicator, diagnostics, clock, auto shut off. Two lighter type DC outlets, (20-A)		Speedometer, tachometer, odometer, trip and hour meters, fuel, gear position, ECO / Normal / Work modes, seat belt and 4 x 4 indicator, diagnostics, clock, auto shut off. Integrated heater kit	Speedometer, tachometer, odometer, trip and hour meters, fuel, gear position, ECO / Normal / Work modes, seat belt and 4 x 4 indicator, diagnostics, clock, auto shut off. Three lighter type DC outlets (20-A)	Speedometer, tachometer, odometer, trip and hour meters, fuel, gear position, seat belt, diagnostics, clock, auto shut off. Lighter type DC outlet (20-A)		Speedometer, tachometer, odometer, trip and hour meters, fuel, gear position, ECO / Normal / Work modes, seat belt and 4 x 4 indicator, diagnostics, clock, auto shut off. Two lighter type DC outlets, (20-A)	
	Lighting	140 W lighting output from four 35-W reflectors ensuring a wide visibility and LED tail lights				140 W lighting output from four 35-W reflectors ensuring a wide visibility, plus LED tail lights with halo glow effect			140 W lighting output from four 35-W reflectors ensuring a wide visibility, plus LED tail lights with halo glow effect and portable RAM LED spotlight	140 W lighting output from four 35-W reflectors ensuring a wide visibility and LED tail lights		140 W lighting output from four 35-W reflectors ensuring a wide visibility, plus LED tail lights with halo glow effect	
	Winch	N/A				4,500-lb (2,041 kg) winch with roller fairlead				N/A		4,500-lb (2,041 kg) winch with roller fairlead	
	Seat Adjustments	VERSA-PRO bench seat with passenger seats flipping up, underside hooks and contoured bench to improve entrance/exit of the cab.				VERSA-PRO bench seat with passenger seats flipping up, adjustable driver seat, underside hooks, reinforced XT seat skin and contoured bench to improve entrance/exit of the cab			VERSA-PRO bench seat with passenger seats flipping up, adjustable driver seat, underside hooks, reinforced vinyl with two-tones stitching™ and contoured bench to improve entrance/exit of the cab	Dual VERSA-PRO bench seats with passenger seats flipping up, underside hooks and contoured bench to improve entrance/exit of the cab		Dual VERSA-PRO bench seats with passenger seats flipping up, adjustable driver seat, underside hooks, reinforced XT seat skin and contoured bench to improve entrance/exit of the cab	
	Hitch type	2-in hitch receiver								2-in hitch receiver			
	Protection	Integrated front steel bumper Central skid plate				Integrated front steel bumper, Full skid plate, Full hard roof		Integrated front steel bumper, Full skid plate, Full hard roof with liner, Full black doors with electric opening windows, 3-position full glass tilt up windshield with wiper/washer kit, Rear glass with sliding opening	Heavy-duty front steel bumper, Full underbody skid plate with front aluminum pre-runner skid plate, Full hard roof, Half windshield, Headache rack with LinQ quick attach system, Double Kolpin Stronghold Gun Boots - Impact & tool holders, Side mirror	Integrated front steel bumper, Central skid plate		Integrated front steel bumper Full skid plate 2-piece full hard roof	
WARRANTY	Factory	6-months limited warranty								6-months limited warranty			
	Extended	Up to 36 months B.E.S.T. coverage								Up to 36 months B.E.S.T. coverage			

		COMMANDER		COMMANDER DPS	COMMANDER XT		COMMANDER MOSSY OAK HUNTING EDITION	COMMANDER XT-P	COMMANDER LIMITED
MODELS & COLOR OPTIONS									
	Color(s)	Viper Red / 800R		Light Grey / 800R / 1000	Yellow / 800R / 1000 Brushed Aluminum / 800R / 1000 Mossy Oak Break-Up Country Camo / 800R / 1000		Mossy Oak Break-Up Country Camo / 1000	Triple Black / 1000	Midnight Blue / 1000
ENGINES	Selection	800R		1000	800R	1000			
	Type	71 hp, Rotax 799.9 cc, V-twin, liquid cooled		85 hp, Rotax 976 cc, V-twin, liquid cooled	71 hp, Rotax 799.9 cc, V-twin, liquid cooled	85 hp, Rotax 976 cc, V-twin, liquid cooled			
	Fuel Delivery System	Intelligent Throttle Control (ITC) with Electronic Fuel Injection (EFI)							
DRIVE TRAIN	Transmission	CVT, L / H / N / R / P, standard engine braking							
	Drive Train	Selectable 2WD / 4WD with Visco-Lok auto-locking front differential	Selectable 2WD / 4WD with Visco-Lok QE auto-locking front differential						
	Power Steering	N/A	Tri-Mode Dynamic Power Steering (DPS)						
SUSPENSIONS	Front Suspension	Double A-arm with sway bar / 10 in. (25.4 cm) travel							
	Front Shocks	Twin tube gas charged shocks					FOX 2.0 PODIUM QS3 Piggyback with compression adjustment	Air Control Suspension (ACS) with FOX Air Assist[1]	
	Rear Suspension	Torsional Trailing arm Independent (TTI) with external sway bar / 10 in. (25.4 cm) travel							
	Rear Shocks	Twin tube gas charged shocks					FOX 2.0 PODIUM QS3 Piggyback with compression adjustment	Air Control Suspension (ACS) with Air Assist	
TIRES & WHEELS	Front Tires	Maxxis Bighorn 2.0 27 x 9 x 12 in. (68.6 x 22.9 x 30.5 cm)	Maxxis Bighorn 2.0 27 x 9 x 14 in. (68.6 x 22.9 x 35.6 cm)					Maxxis Bighorn 2.0 27 x 9 x 12 in. (68.6 x 22.9 x 30.5 cm)	Maxxis Bighorn 2.0 27 x 9 x 14 in. (68.6 x 22.9 x 35.6 cm)
	Rear Tires	Maxxis Bighorn 2.0 27 x 11 x 12 in. (68.6 x 27.9 x 30.5 cm)	Maxxis Bighorn 2.0 27 x 11 x 14 in. (68.6 x 27.9 x 35.6 cm)					Maxxis Bighorn 2.0 27 x 11 x 12 in. (68.6 x 27.9 x 30.5 cm)	Maxxis Bighorn 2.0 27 x 11 x 14 in. (68.6 x 27.9 x 35.6 cm)
	Wheels	14-in. (35.6 cm) cast-aluminum						12-in. (30.5 cm) aluminum beadlock	14-in. (35.6 cm) cast aluminum
BRAKES	Front	Dual 214 mm ventilated disc brakes with hydraulic twin-piston calipers							
	Rear	Single 214 mm ventilated disc brake with hydraulic twin-piston caliper							
DIMENSIONS & CAPACITY	Dry Weight*	1,291.4 lb (586 kg)							
	L x W x H	118.3 x 58.6 x 72 in. (300.4 x 148.9 x 182.9 cm)			120.2 x 62.5 x 72 in. (305.3 x 158.7 x 182.9 cm)				
	Wheelbase	75.8 in. (192.4 cm)							
	Ground Clearance	11 in. (27.9 cm)			10 in. (25.4 cm)		11 in. (27.9 cm)		
	Rack Capacity	600 lb (272 kg) Dual-Level cargo box Upper level: 400 lb (181 kg); Lower level: 200 lb (91 kg)							
	Storage	Glove box: 4.5 gal (17.2 L) / Under driver seat: 3.5 gal (13.1 L) / Center console: 0.3 gal (1.3 L)							
	Fuel Capacity	10 gal (37.8 L)							
	Towing Capacity	1,500 lb (680 kg)							
FEATURES	Gauge	Multifunction Digital			Multifunction Analog / Digital				
	Instrumentation	Speedometer, tachometer, odometer, trip and hour meters, fuel, gear position, sport mode, ECO mode, seat belt and 4 x 4 indicator, diagnostics, clock, auto shut off. Lighter type DC Outlet in console, standard connector in the back (15-A)							Integrated/removable Garmin Montana 650t touchscreen GPS, Sound system with four integrated speakers, iPod®-iPhone® connector with gauge controls, USB port and auxiliary input
	Anti-theft System	Digitally Encoded Security System (D.E.S.S.)							
	Lighting	240-W from four 60-W projectors with tail lights / brake lights							
	Winch	N/A	Prewired for winch		4,500-lb (2,041 kg) winch with roller fairlead				
	Seat Adjustments and Steering Wheel	Adjustable driver seat and tilt steering							
	Protection	N/A		Heavy-duty front bumper, mudguards, bed rails	Xtreme front bumper, mudguards, bed rails, full under body aluminum skid plate, 2-piece full hard roof, half windshield, Double Kolpin 6.0 Impact Gun Boots & holders		Heavy-duty front bumper, mudguards, rock sliders		Heavy-duty front bumper, mudguards, bed rails, half windshield, rear net, 2-piece full hard roof
WARRANTY	Factory	6-months limited warranty							
	Extended	Up to 36 months B.E.S.T. coverage							

		COMMANDER MAX DPS		COMMANDER MAX XT	COMANDER MAX LIMITED	MAVERICK xc	MAVERICK xc DPS	MAVERICK X xc	MAVERICK DPS	MAVERICK X mr	MAVERICK TURBO	MAVERICK MAX DPS	MAVERICK MAX X mr	MAVERICK MAX TURBO	MAVERICK MAX X ds TURBO	MAVERICK MAX X rs TURBO
MODELS & COLOR OPTIONS	Color(s)	Viper Red / 800R / 1000		Mossy Oak Break-Up Country Camo / 1000 Brushed Aluminum / 1000	Midnight Blue / 1000	Yellow / 1000R	White / 1000R	Light Grey & Octane Blue / 1000R	Light Grey / 1000R Black & Octane Blue / 1000R	White, Black & Can-Am Red / 1000R Hyper Silver, Black & Octane Blue / 1000R	Light Grey, White & Octane Blue / 1000R TURBO Triple Black / 1000R TURBO	Light Grey / 1000R	Hyper Silver & Octane Blue / 1000R TURBO	Light Grey, White & Octane Blue / 1000R TURBO	Hyper Silver & Octane Blue / 1000R TURBO	Carbon Black & Can-Am Red / 1000R TURBO
ENGINES	Selection	800R	1000	1000	1000	1000R				1000R	1000R TURBO	1000R	1000R	1000R TURBO		
	Type	71 hp, Rotax 799.9 cc, V-twin, liquid cooled	85 hp, Rotax 976 cc, V-twin, liquid cooled			101 hp, Rotax 976 cc, V-twin, liquid cooled				101 hp, Rotax 976 cc, V-twin, liquid cooled with strategically positioned engine air intake	131 hp, Rotax 976 cc Turbocharged V-twin engine with forged pistons, liquid cooled with integrated intercooler & Donaldson high-performance air filter	101 hp, Rotax 976 cc, V-twin, liquid cooled	101 hp, Rotax 976 cc, V-twin, liquid cooled with strategically positioned engine air intake	131 hp, Rotax 976 cc Turbocharged V-twin engine with forged pistons, liquid cooled with integrated intercooler & Donaldson high-performance air filter		
	Fuel Delivery System	Intelligent Throttle Control (iTC) with Electronic Fuel Injection (EFI)				Intelligent Throttle Control (iTC) with Electronic Fuel Injection (EFI)				Intelligent Throttle Control (iTC) with Electronic Fuel Injection (EFI)	Intelligent Throttle Control (iTC) with Electronic Fuel Injection (EFI)	Intelligent Throttle Control (iTC) with Electronic Fuel Injection (EFI)	Intelligent Throttle Control (iTC) with Electronic Fuel Injection (EFI)	Intelligent Throttle Control (iTC) with Electronic Fuel Injection (EFI)		
DRIVE TRAIN	Transmission	CVT, L / H / N / R / P, standard engine braking				CVT with Zylon®-reinforced belt, L / H / N / R / P, standard engine brake				Quick Response System (QRS) CVT with high airflow, L / H / N / R / P, Extra low L-Gear	Quick Response System (QRS) CVT with high airflow, L / H / N / R / P	CVT with Zylon-reinforced belt, L / H / N / R / P, standard engine brake	Quick Response System (QRS) CVT with high airflow, L / H / N / R / P, Extra low L-Gear	Quick Response System (QRS) CVT with high airflow, L / H / N / R / P		
	Drive Train	Selectable 2WD / 4WD with Visco-Lok QE auto-locking front differential				Selectable 2WD / 4WD with Visco-Lok auto-locking front differential	Selectable 2WD / 4WD with Visco-Lok QE auto-locking front differential		Selectable 2WD / 4WD with Visco-Lok QE auto-locking front differential	Selectable 2WD / 4WD with Visco-Lok QE auto-locking front differential	Selectable 2WD / 4WD with Visco-Lok QE auto-locking front differential	Selectable 2WD / 4WD with Visco-Lok QE auto-locking front differential	Selectable 2WD / 4WD with Visco-Lok QE auto-locking front differential	Selectable 2WD / 4WD with Visco-Lok QE auto-locking front differential		
	Power Steering	Tri-Mode Dynamic Power Steering (DPS)				N/A	Tri-Mode Dynamic Power Steering (DPS)			Tri-Mode Dynamic Power Steering (DPS)	Tri-Mode Dynamic Power Steering (DPS)	Tri-Mode Dynamic Power Steering (DPS)	Tri-Mode Dynamic Power Steering (DPS)	Tri-Mode Dynamic Power Steering (DPS)		
SUSPENSIONS	Front Suspension	Double A-arm with sway bar 10 in. (25.4 cm) travel				Double A-arm with sway bar 12 in. (30.5 cm) travel			Double A-arm with sway bar 14 in. (35.6 cm) travel	Double A-arm with sway bar 15 in. (38.1 cm) travel	Double A-arm with sway bar 15 in. (38.1 cm) travel	Double A-arm with sway bar 14 in. (35.6 cm) travel	Double A-arm with sway bar 12 in. (30.5 cm) travel	Double A-arm with sway bar15 in. (38.1 cm) travel		
	Front Shocks	Twin tube gas charged shocks	FOX 2.0 PODIUM QS3 Piggyback with compression adjustment			FOX 2.0 PODIUM C¹ Piggyback with compression adjustment			FOX 2.0 PODIUM QS3 Piggyback with compression adjustment	FOX 2.5 PODIUM QS3 Piggyback with compression adjustment	FOX 2.5 PODIUM QS3 Piggyback with compression adjustment	FOX 2.0 PODIUM QS3 Piggyback with compression adjustment	FOX 2.5 PODIUM QS3 Piggyback with compression adjustment	FOX 2.5 PODIUM QS3 Piggyback with compression adjustment	FOX 2.5 PODIUM RC2 Piggyback with dual speed compression and rebound adjustments	
	Rear Suspension	Torsional Trailing arm Independent (TTI) with external sway bar 10 in. (25.4 cm) travel				Torsional Trailing A-arms (TTA) independent with sway bar 12 in. (30.5 cm) travel			Torsional Trailing A-arms (TTA) independent with sway bar 14 in. (35.6 cm) travel	Torsional Trailing A-arms (TTA) independent with sway bar 12 in. (30.5 cm) travel	Torsional Trailing A-arms (TTA) independent with sway bar 16 in. (40.6 cm) travel	Torsional Trailing A-arms (TTA) independent with sway bar 14 in. (35.6 cm) travel	Torsional Trailing A-arms (TTA) independent with sway bar 12 in. (30.5 cm) travel	Torsional Trailing A-arms (TTA) independent with sway bar 16 in. (40.6 cm) travel		
	Rear Shocks	Twin tube gas charged shocks	FOX 2.0 PODIUM QS3 Piggyback with compression adjustment			FOX 2.0 PODIUM C Piggyback with compression adjustment			FOX 2.0 PODIUM QS3 Piggyback with compression adjustment	FOX 2.5 PODIUM QS3 Piggyback with compression adjustment	FOX 2.5 PODIUM QS3 Piggyback with compression adjustment and bottom-out control	FOX 2.0 PODIUM QS3 Piggyback with compression adjustment	FOX 2.5 PODIUM QS3 Piggyback with compression adjustment	FOX 2.5 PODIUM QS3 Piggyback with compression adjustment and bottom-out control	FOX 2.5 PODIUM RC2 Piggyback with dual speed compression. Rebound adjustments and bottom-out control	
TIRES & WHEELS	Front Tires	Maxxis Bighorn 2.0 27 x 9 x 14 in. (68.6 x 22.9 x 35.6 cm)				Maxxis Bighorn 2.0 27 x 9 x 12 in. (68.6 x 22.9 x 30.5 cm)				Gorilla Axle Silverback 30 x 9 x 14 in. (76.2 x 22.9 x 35.6 cm)	Maxxis Bighorn 2.0 28 x 9 x 14 in. (71.1 x 22.9 x 35.6 cm)	Maxxis Bighorn 2.0 27 x 9 x 12 in. (68.6 x 22.9 x 30.5 cm)	Gorilla Axle Silverback 30 x 9 x 14 in. (76.2 x 22.9 x 35.6 cm)	Maxxis Bighorn 2.0 28 x 9 x 14 in. (71.1 x 22.9 x 35.6 cm)		
	Rear Tires	Maxxis Bighorn 2.0 27 x 11 x 14 in. (68.6 x 27.9 x 35.6 cm)				Maxxis Bighorn 2.0 27 x 11 x 12 in. (68.6 x 27.9 x 30.5 cm)				Gorilla Axle Silverback 30 x 9 x 14 in. (76.2 x 22.9 x 35.6 cm)	Maxxis Bighorn 2.0 28 x 11 x 14 in. (71.1 x 27.9 x 35.6 cm)	Maxxis Bighorn 2.0 27 x 11 x 12 in. (68.6 x 27.9 x 30.5 cm)	Gorilla Axle Silverback 30 x 9 x 14 in. (76.2 x 22.9 x 35.6 cm)	Maxxis Bighorn 2.0 28 x 11 x 14 in. (71.1 x 27.9 x 35.6 cm)		
	Wheels	14-in. (35.6 cm) cast aluminum				12-in. (30.5 cm) cast-aluminum		12-in. (30.5 cm) aluminum beadlock	12-in. (30.5 cm) cast-aluminum	14-in. (35.6 cm) cast-aluminum	14-in. (35.6 cm) cast-aluminum	12-in. (30.5 cm) cast-aluminum	14-in. (35.6 cm) cast-aluminum	14-in. (35.6 cm) cast-aluminum	14-in. (35.6 cm) aluminum beadlock	
BRAKES	Front	Dual 220 mm ventilated disc brakes with hydraulic twin-piston calipers				Dual 220 mm ventilated disc brakes with hydraulic twin-piston calipers				Dual 220 mm ventilated disc brakes with hydraulic twin-piston calipers	Dual 220 mm ventilated disc brakes with hydraulic twin-piston calipers	Dual 220 mm ventilated disc brakes with hydraulic twin-piston calipers	Dual 220 mm ventilated disc brakes with hydraulic twin-piston calipers	Dual 220 mm ventilated disc brakes with hydraulic twin-piston calipers		
	Rear	Dual 214 mm ventilated disc brakes with hydraulic single-piston calipers				Dual 214 mm ventilated disc brakes with hydraulic single-piston calipers				Dual 214 mm ventilated disc brakes with hydraulic single-piston calipers	Dual 214 mm ventilated disc brakes with hydraulic single-piston calipers	Dual 214 mm ventilated disc brakes with hydraulic single-piston caliper	Dual 214 mm ventilated disc brakes with hydraulic single-piston caliper	Dual 214 mm ventilated disc brakes with hydraulic single-piston caliper		
DIMENSIONS & CAPACITY	Dry Weight²	1,566.4 lb (710 kg)				1,290.8 lb (585 kg)			1,323.8 lb (600 kg)	1,323.8 lb (600 kg)	1,407.8 lb (639 kg)	1,571.8 lb (713 kg)	1,571.8 lb (713 kg)	1,657.8 lb (752 kg)		
	L x W x H	148.5 x 58.6 x 76 in. (377.3 x 148.9 x 193 cm)	149.7 x 62.5 x 76 in.(380.2 x 158.7 x 193 cm)			118.8 x 60 x 72.2 in. (301.7 x 152.4 x 183.4 cm)			118.8 x 64 x 74.2 in. (301.7 x 162.5 x 188.5 cm)	118.8 x 67.9 x 76.2 in. (302 x 172 x 194 cm)	118.8 x 64 x 74.2 in. (301.7 x 162.5 x 188.5 cm)	148 x 64 x 78 in. (376 x 162.5 x 198 cm)	148 x 67.9 x 81.9 in. (376 x 172 x 208 cm)	148 x 64 x 78 in. (376 x 162.5 x 198 cm)	146.5 x 64 x 78 in. (372.1 x 162.5 x 198 cm)	148.3 x 64 x 78 in. (376.7 x 162.5 x 198 cm)
	Wheelbase	106.1 in. (269.4 cm)				84.3 in. (214.1 cm)				84.3 in. (214.1 cm)	88 in. (223.5 cm)	113.8 in. (289.1 cm)	113.8 in. (289.1 cm)	117.5 in. (298.5 cm)		
	Ground Clearance	11 in. (27.9 cm)	10 in. (25.4 cm)			11 in. (28 cm)			13 in. (33 cm)	15 in. (38 cm)	13 in. (33 cm)	12.5 in. (31.75 cm)	14.5 in. (36.8 cm)	13 in. (33 cm)		
	Rack Capacity	600 lb (272 kg) Dual-Level cargo box Upper: 400 lb (181 kg); Lower: 200 lb (91 kg)				200 lb (91 kg) with LinQ quick-attach				200 lb (91 kg) with LinQ quick-attach	200 lb (91 kg) with LinQ quick-attach	150 lb (68 kg) with LinQ quick-attach	150 lb (68 kg) with LinQ quick-attach	150 lb (68 kg) with LinQ quick-attach		
	Storage	Glove box: 4.5 gal (17.2 L) / Center console: 0.3 gal (1.3 L)				Glove box: 4.5 gal (17.2 L) Under driver seat: 3.5 gal (13.1 L) Center console: 0.3 gal (1.3 L)				Glove box: 4.5 gal (17.2 L) Under driver seat: 3.5 gal (13.1 L) Center console: 0.3 gal (1.3 L)	Glove box: 4.5 gal (17.2 L) / Center console: 0.3 gal (1.3 L)	Glove box: 4.5 gal (17.2 L) / Center console: 0.3 gal (1.3 L)	Glove box: 4.5 gal (17.2 L) / Center console: 0.3 gal (1.3 L)	Glove box: 4.5 gal (17.2 L) / Center console: 0.3 gal (1.3 L)		
	Fuel Capacity	10 gal (37.8 L)							10 gal (37.8 L)	10 gal (37.8 L)	10 gal (37.8 L)	10 gal (37.8 L)	10 gal (37.8 L)	10 gal (37.8 L)		
	Towing Capacity	1,500 lb (680 kg)				N/A				N/A	N/A	N/A	N/A	N/A		
FEATURES	Gauge	Multifunction Digital	Multifunction Analog / Digital			Multifunction Digital		Multifunction Analog / Digital	Multifunction Digital	Multifunction Analog / Digital	Multifunction Analog / Digital	Multifunction Digital	Multifunction Analog / Digital	Multifunction Analog / Digital		
	Instrumentation	Speedometer, tachometer, odometer, trip and hour meters, fuel, gear position, sport mode, ECO mode, seat belt and 4 x 4 indicator, diagnostics, clock, auto shut off. Lighter type DC Outlet in console, standard connector in the back (15-A)	Integrated/removable Garmin® Montana® 650t touchscreen GPS	Sound system with four integrated speakers, iPod® - iPhone® connector with gauge controls, USB port and auxiliary input		Speedometer, tachometer, odometer, trip and hour meters, fuel, gear position, sport mode, ECO™ mode, seat belt and 4 x 4 indicator, diagnostics, clock, auto shut off. Lighter type DC Outlet in console, standard connector in the back (15-A)				Speedometer, tachometer, odometer, trip and hour meters, fuel, gear position, sport mode, ECO mode, seat belt and 4 x 4 indicator, diagnostics, clock, auto shut off. Lighter type DC outlet in console, standard connector in the back (15-A)	Speedometer, tachometer, odometer, trip and hour meters, fuel, gear position, sport mode, ECO mode, seat belt and 4 x 4 indicator, diagnostics, clock, auto shut off. Lighter type DC outlet in console, standard connector in the back (15-A)	Speedometer, tachometer, odometer, trip and hour meters, fuel, gear position, sport mode, ECO mode, seat belt and 4 x 4 indicator, diagnostics, clock, auto shut off. Lighter type DC outlet in console, standard connector in the back (15-A)	Speedometer, tachometer, odometer, trip and hour meters, fuel, gear position, sport mode, ECO™ mode, seat belt and 4 x 4 indicator, diagnostics, clock, auto shut off. Lighter type DC Outlet in console, standard connector in the back (15-A)	Speedometer, tachometer, odometer, trip and hour meters, fuel, gear position, sport mode, ECO mode, seat belt and 4 x 4 indicator, diagnostics, clock, auto shut off. Lighter type DC Outlet in console, standard connector in the back (15-A)		
	Anti-theft System	Digitally Encoded Security System (D.E.S.S.)				Digitally Encoded Security System (D.E.S.S.)				Digitally Encoded Security System (D.E.S.S.)	Digitally Encoded Security System (D.E.S.S.)	Digitally Encoded Security System (D.E.S.S.)	Digitally Encoded Security System (D.E.S.S.)	Digitally Encoded Security System (D.E.S.S.)		
	Lighting	240-W from four 60-W projectors with tail lights / brake lights				240 W from four 60-W projectors with tail lights / brake lights				240 W from four 60-W projectors with tail lights / brake lights	240 W from four 60-W projectors with tail lights / brake lights	240 W from four 60-W projectors with tail lights / brake lights	240 W from four 60-W projectors with tail lights / brake lights	240 W from four 60-W projectors with tail lights / brake lights		
	Winch	Prewired for winch	4,500-lb (2,041 kg) winch with roller fairlead			Prewired for winch				4,500-lb (2,041 kg) winch with roller fairlead	Prewired for winch	Prewired for winch	4,500-lb (2,041 kg) winch with roller fairlead	Prewired for winch		
	Seat Adjustments and Steering Wheel	Adjustable driver's seat and tilt steering				Adjustable driver's seat and tilt steering				Adjustable driver's seat and tilt steering	Adjustable driver's seat and tilt steering	Adjustable driver's seat and tilt steering	Adjustable driver's seat and tilt steering	Adjustable driver's seat and tilt steering		
	Protection	N/A	Heavy-duty front bumper, mudguards, bed rails	Heavy-duty front bumper, mudguards, bed rails, half windshield, rear net, one-piece full hard roof with skylight		N/A				N/A	N/A	N/A	N/A	N/A	Front bumper	Front & rear bumpers
WARRANTY	Factory	6-months limited warranty				6-months limited warranty				6-months limited warranty	6-months limited warranty	6-months limited warranty	6-months limited warranty	6-months limited warranty		
	Extended	Up to 36 months B.E.S.T. coverage				Up to 36 months B.E.S.T. coverage				Up to 36 months B.E.S.T. coverage	Up to 36 months B.E.S.T. coverage	Up to 36 months B.E.S.T. coverage	Up to 36 months B.E.S.T. coverage	Up to 36 months B.E.S.T. coverage		

		OUTLANDER 450 / 570		OUTLANDER DPS 450 / 570		OUTLANDER XT 570	OUTLANDER MOSSY OAK HUNTING EDITION 570
MODELS & COLOR OPTIONS	Color(s)	 Viper Red / 450 / 570 Green / 450 / 570		 Yellow / 450 / 570 Green / 450 / 570 Mossy Oak Break-Up Country Camo / 450 / 570		 Yellow / 570 Pure Magnesium / 570	 Mossy Oak Break-Up Country Camo / 570
ENGINES	Selection	450	570	450	570	570	570
	Type	38 hp, Rotax 427 cc single cylinder, liquid cooled	48 hp, Rotax 570 cc V-twin, liquid cooled	38 hp, Rotax 427 cc single cylinder, liquid cooled	48 hp, Rotax 570 cc V-twin, liquid cooled	48 hp, Rotax 570 cc V-twin, liquid cooled	48 hp, Rotax 570 cc V-twin, liquid cooled
	Fuel Delivery System	Electronic Fuel Injection (EFI)					
DRIVE TRAIN	Transmission	CVT, P / R / N / H / L, standard engine braking					
	Drive Train	Selectable 2WD / 4WD with Visco-Lok auto-locking front differential		Selectable 2WD / 4WD with Visco-Lok QE auto-locking front differential			
	Power Steering	N/A		Tri-Mode Dynamic Power Steering (DPS)			
SUSPENSIONS	Front Suspension	Double A-arm 9 in. (22.9 cm) travel					
	Front Shocks	Oil					
	Rear Suspension	Torsional Trailing arm Independent rear suspension (TTI) 8.8 in. (22 cm) travel					
	Rear Shocks	Oil					
TIRES & WHEELS	Front Tires	Carlisle Trail Wolf 25 x 8 x 12 in. (63.5 x 20.3 x 30.5 cm)			Maxxis M923J 25 x 8 x 12 in. (63.5 x 20.3 x 30.5 cm)		Carlisle ACT HD 26 x 8 x 12 in. (66 x 20.3 x 30.5 cm)
	Rear Tires	Carlisle Trail Wolf 25 x 10 x 12 in. (63.5 x 25.4 x 30.5 cm)			Maxxis M923J 25 x 10 x 12 in. (63.5 x 25.4 x 30.5 cm)		Carlisle ACT HD 26 x 10 x 12 in. (66 x 25.4 x 30.5 cm)
	Wheels	12-in. (30.5 cm) steel black		12-in. (30.5 cm) cast-aluminum			
BRAKES	Front	Dual 214 mm ventilated disc brakes with hydraulic twin-piston calipers					
	Rear	Single 214 mm ventilated disc brake with hydraulic twin-piston caliper					
DIMENSIONS & CAPACITY	Dry Weight*	678 lb (308 kg)	704 lb (319 kg)	678 lb (308 kg)	704 lb (319 kg)		
	L x W x H	83 x 46 x 49 in. (211 x 116.8 x 124 cm)					
	Wheelbase	51 in. (129.5 cm)					
	Ground Clearance	10.5 in. (26.7 cm)					11.5 in. (29.2 cm)
	Seat / Ride Height	33.8 in. (85.8 cm)					
	Rack Capacity	Front: 120 lb (54.4 kg) Rear: 240 lb (109 kg)					
	Storage	Rear: 2.9 gal (10.9 L)					
	Fuel Capacity	5.4 gal (20.5 L)					
	Towing Capacity	1,300 lb (590 kg)					
FEATURES	Gauge	Multifunction Digital					
	Instrumentation	Speedometer, tachometer, odometer, trip & hour meters, fuel, gear position, 4 x 4 indicator, diagnostics, clock. Lighter type DC outlet in console, standard connector in the back (15-A)					
	Anti-theft System	N/A					
	Lighting	70 W from dual 35-W front light / brake light					
	Winch	Prewired for available winch				3,000-lb (1,363 kg) WARN winch with roller fairlead	
	Seat Adjustments and Steering Wheel	Standard					
	Protection	N/A				Heavy-duty front & rear bumpers, handlebar wind deflectors	Heavy-duty front & rear bumpers, Kolpin 6.0 Impact Gun Boot and gear grips, front, center & footwell skid plates, handlebar wind deflectors
WARRANTY	Factory	6-months limited warranty					
	Extended	Up to 36 months B.E.S.T. coverage					

		OUTLANDER 650		OUTLANDER DPS 650 / 850 / 1000R			OUTLANDER XT 650 / 850 / 1000R			OUTLANDER MOSSY OAK HUNTING EDITION 1000R
MODELS & COLOR OPTIONS	Color(s)	 Viper Red / 650		 Light Grey / 650 / 850 / 1000R			Brushed Aluminum / 650 / 850 / 1000R Pearl White & Black / 650 / 850 / 1000R Mossy Oak Break-Up Country Camo 650 / 850			Mossy Oak Break-Up Country Camo / 1000R
ENGINES	Selection	650		650	850	1000R	650	850	1000R	1000R
	Type	62 hp, Rotax 649.6 cc V-twin, liquid cooled		62 hp, Rotax 649.6 cc V-twin, liquid cooled	78 hp, Rotax 854 cc V-twin, liquid cooled	89 hp, Rotax 976 cc V-twin, liquid cooled	62 hp, Rotax 649.6 cc V-twin, liquid cooled	78 hp, Rotax 854 cc V-twin, liquid cooled	89 hp, Rotax 976 cc V-twin, liquid cooled	89 hp, Rotax 976 cc V-twin, liquid cooled
	Fuel Delivery System	Electronic Fuel Injection (EFI)								
DRIVE TRAIN	Transmission	CVT, P / R / N / H / L, standard engine braking								
	Drive Train	Selectable 2WD / 4WD with Visco-Lok auto-locking front differential		Selectable 2WD / 4WD with Visco-Lok QE auto-locking front differential						
	Power Steering	N/A		Tri-Mode Dynamic Power Steering (DPS)						
SUSPENSIONS	Front Suspension	Double A-arm 9 in. (22.9 cm) travel								
	Front Shocks	Oil								
	Rear Suspension	Torsional Trailing arm Independent rear suspension (TTI) 9.3 in. (23.6 cm) travel								
	Rear Shocks	Oil								
TIRES & WHEELS	Front Tires	Carlisle Badland 26 x 8 x 12 in. (66 x 20.3 x 30.5 cm)		ITP¹ Terracross 26 x 8 x 14 in. (66 x 20.3 x 35.6 cm)						Carlisle ACT HD 26 x 8 x 12 in. (66 x 20.3 x 30.5 cm)
	Rear Tires	Carlisle Badland 26 x 10 x 12 in. (66 x 25.4 x 30.5 cm)		ITP Terracross 26 x 10 x 14 in. (66 x 25.4 x 35.6 cm)						Carlisle ACT HD 26 x 10 x 12 in. (66 x 25.4 x 30.5 cm)
	Wheels	12-in. (30.5 cm) steel black		14-in. (35.6 cm) cast-aluminum						12-in. (30.5 cm) cast-aluminum
BRAKES	Front	Dual 214 mm ventilated disc brakes with hydraulic twin-piston calipers								
	Rear	Single 214 mm ventilated disc brake with hydraulic twin-piston caliper								
DIMENSIONS & CAPACITY	Dry Weight*	726 lb (329 kg)	726 lb (329 kg)	780 lb (354 kg)	795 lb (361 kg)	726 lb (329 kg)	780 lb (354 kg)	795 lb (361 kg)		795 lb (361 kg)
	L x W x H	86 x 46 x 49.5 in. (218.4 x 116.8 x 126 cm)								
	Wheelbase	51 in. (129.5 cm)								
	Ground Clearance	11 in. (27.9 cm)								
	Seat / Ride Height	34.5 in. (87.7 cm)								
	Rack Capacity	Front: 100 lb (45 kg) Rear: 200 lb (90 kg)								
	Storage	Rear: 5.7 gal (21.4 L)								
	Fuel Capacity	5.4 gal (20.5 L)								
	Towing Capacity	1,300 lb (590 kg)								
FEATURES	Gauge	Multifunction Digital								
	Instrumentation	Speedometer, tachometer (bar graph RPM, bottom bar numerical RPM), odometer, trip & hour meters, diagnostic center, gear position, engine hour meter, 4 x 4 indicator, temperature and engine lights, fuel gauge, clock. Lighter type DC outlet in console, standard connector in the back (15-A)								
	Anti-theft System	RF Digitally Encoded Security System (D.E.S.S.)								
	Lighting	230 W from twin 60-W projectors and dual 55-W reflectors with tail light / brake light								
	Winch	Prewired for available winch				3,000-lb (1,363 kg) WARN winch with roller fairlead				
	Seat Adjustments and Steering Wheel	Standard								
	Protection	N/A				Heavy-duty front & rear bumpers, handlebar wind deflectors				Heavy-duty front & rear bumpers Kolpin 6.0 Impact Gun Boot and Gear Grips, Front, center & footwell skid plates , Handlebar wind deflectors
WARRANTY	Factory	6-months limited warranty								
	Extended	Up to 36 months B.E.S.T. coverage								

		OUTLANDER XT-P 850 / 1000R		OUTLANDER MAX 450 / 570		OUTLANDER MAX DPS 450 / 570		OUTLANDER MAX XT 570
MODELS & COLOR OPTIONS	Color(s)	 Triple Black / 850 / 1000R		 Viper Red / 450 / 570		 Yellow / 450 / 570 Green / 450 / 570		 Yellow / 570 Pure Magnesium / 570
ENGINES	Selection	850	1000R	450	570	450	570	570
	Type	78 hp, Rotax 854 cc V-twin, liquid cooled	89 hp, Rotax 976 cc V-twin, liquid cooled	38 hp, Rotax 427 cc single cylinder, liquid cooled	48 hp, Rotax 570 cc V-twin cylinder, liquid cooled	38 hp, Rotax 427 cc single cylinder, liquid cooled	48 hp, Rotax 570 cc V-twin cylinder, liquid cooled	48 hp, Rotax 570 cc V-twin, liquid cooled
	Fuel Delivery System	Electronic Fuel Injection (EFI)						
DRIVE TRAIN	Transmission	CVT, P / R / N / H / L, standard engine braking						
	Drive Train	Selectable 2WD / 4WD with Visco-Lok QE auto-locking front differential		Selectable 2WD / 4WD with Visco-Lok auto-locking front differential		Selectable 2WD / 4WD with Visco-Lok QE auto-locking front differential		
	Power Steering	Tri-Mode Dynamic Power Steering (DPS)		N/A		Tri-Mode Dynamic Power Steering (DPS)		
SUSPENSIONS	Front Suspension	Double A-arm 9 in. (22.9 cm) travel						
	Front Shocks	FOX 1.5 PODIUM QS3						
	Rear Suspension	Torsional Trailing arm Independent rear suspension (TTI) 9.3 in. (23.6 cm) travel						
	Rear Shocks	FOX 1.5 PODIUM QS3						
TIRES & WHEELS	Front Tires	ITP Terracross 26 x 8 x 14 in. (66 x 20.3 x 35.6 cm)			Carlisle Trail Wolf 25 x 8 x 12 in. (63.5 x 20.3 x 30.5 cm)			Maxxis M923J 25 x 8 x 12 in. (63.5 x 20.3 x 30.5 cm)
	Rear Tires	ITP Terracross 26 x 10 x 14 in. (66 x 25.4 x 35.6 cm)			Carlisle Trail Wolf 25 x 10 x 12 in. (63.5 x 25.4 x 30.5 cm)			Maxxis M923J 25 x 10 x 12 in. (63.5 x 25.4 x 30.5 cm)
	Wheels	14-in. (35.6 cm) cast-aluminum Beadlock		12-in. (30.5 cm) steel black		12-in. (30.5 cm) cast-aluminum		
BRAKES	Front	Dual 214 mm ventilated disc brakes with hydraulic twin-piston calipers						
	Rear	Single 214 mm ventilated disc brake with hydraulic twin-piston calipers						
DIMENSIONS & CAPACITY	Dry Weight*	780 lb (354 kg)	795 lb (361 kg)	715 lb (324 kg)	741 lb (336 kg)	715 lb (324 kg)	741 lb (336 kg)	741 lb (336 kg)
	L x W x H	85 x 46 x 85.5 in. (218.4 x 116.8 x 126 cm)						
	Wheelbase	51 in. (129.5 cm)						
	Ground Clearance	11 in. (27.9 cm)						
	Seat / Ride Height	34.5 in. (87.7 cm)						
	Rack Capacity	Front: 100 lb (45 kg) Rear: 200 lb (90 kg)						
	Storage	Rear: 5.7 gal (21.4 L)						
	Fuel Capacity	5.4 gal (20.5 L)						
	Towing Capacity	1,300 lb (590 kg)						
FEATURES	Gauge	Multifunction Analog / Digital						
	Instrumentation	Speedometer, tachometer (bar graph RPM, bottom bar numerical RPM), odometer, trip & hour meters, diagnostic center, gear position, engine hour meter, 4 x 4 indicator, temperature and engine lights, fuel gauge, clock. Lighter type DC Outlet in console, standard connector in the back (15-A)						
	Anti-theft System	RF Digitally Encoded Security System (D.E.S.S.)						
	Lighting	230 W from twin 60-W projectors and dual 55-W reflectors with tail light / brake light						
	Winch	3,000-lb (1,363 kg) WARN winch with roller fairlead						3,000-lb (1,363 kg) WARN winch with roller fairlead
	Seat Adjustments and Steering Wheel	Standard						
	Protection	Heavy-duty front & rear bumpers, aluminum taper-profile handlebar with wind deflectors and square pad						Heavy-duty front & rear bumpers, Handlebar wind deflectors
WARRANTY	Factory	6-months limited warranty						
	Extended	Up to 36 months B.E.S.T. coverage						

		OUTLANDER MAX DPS 650	OUTLANDER MAX XT 650 / 850 / 1000R			OUTLANDER MAX XT-P 650 / 850 / 1000R		OUTLANDER MAX LIMITED 1000R
MODELS & COLOR OPTIONS	Color(s)	 Light Grey / 650	 Brushed Aluminum / 650 / 850 / 1000R Mossy Oak Break-Up Country Camo 650 / 850 Pearl White & Black / 650 / 850 / 1000R			 Triple Black / 850 / 1000R		 Midnight Blue / 1000R
ENGINES	Selection	650	650	850	1000R	850	1000R	1000R
	Type	62 hp, Rotax 649.6 cc V-twin, liquid cooled	62 hp, Rotax 649.6 cc V-twin, liquid cooled	78 hp, Rotax 854 cc V-twin, liquid cooled	89 hp, Rotax 976 cc V-twin, liquid cooled	78 hp, Rotax 854 cc V-twin, liquid cooled	89 hp, Rotax 976 cc V-twin, liquid cooled	89 hp, Rotax 976 cc V-twin, liquid cooled
	Fuel Delivery System	Electronic Fuel Injection (EFI)						
DRIVE TRAIN	Transmission	CVT, P / R / N / H / L, standard engine braking						
	Drive Train	Selectable 2WD / 4WD with Visco-Lok QE auto-locking front differential						
	Power Steering	Tri-Mode Dynamic Power Steering (DPS)						
SUSPENSIONS	Front Suspension	Double A-arm 9 in. (22.9 cm) travel						
	Front Shocks	Oil				FOX 1.5 PODIUM QS3		Oil
	Rear Suspension	Torsional Trailing arm Independent rear suspension (TTI) 9.3 in. (23.6 cm) travel						
	Rear Shocks	Oil				FOX 1.5 PODIUM QS3		FOX ACS
TIRES & WHEELS	Front Tires	ITP Terracross 26 x 8 x 14 in. (66 x 20.3 x 35.6 cm)						
	Rear Tires	ITP Terracross 26 x 10 x 14 in. (66 x 25.4 x 35.6 cm)						
	Wheels	14-in. (35.6 cm) cast-aluminum				14-in. (35.6 cm) cast-aluminum beadlock		14-in. (35.6 cm) cast-aluminum with LIMITED finish
BRAKES	Front	Dual 214 mm ventilated disc brakes with hydraulic twin-piston calipers						
	Rear	Single 214 mm ventilated disc brake with hydraulic twin-piston calipers						
DIMENSIONS & CAPACITY	Dry Weight*	821 lb (372 kg)	795 lb (361 kg)	821 lb (372 kg)	840 lb (381 kg)	821 lb (372 kg)	840 lb (381 kg)	840 lb (381 kg)
	L x W x H	94 x 46 x 53 in. (238.8 x 116.8 x 135 cm)						
	Wheelbase	59 in. (149.6 cm)						
	Ground Clearance	11 in. (27.9 cm)						
	Seat / Ride Height	34.5 in. (87.7 cm)						
	Rack Capacity	Front: 100 lb (45 kg) Rear: 200 lb (90 kg)						
	Storage	Rear: 5.7 gal (21.4 L)						
	Fuel Capacity	5.4 gal (20.5 L)						
	Towing Capacity	1,300 lb (590 kg)						
FEATURES	Gauge	Multifunction Digital				Multifunction Analog / Digital		
	Instrumentation	Speedometer, tachometer (bar graph RPM, bottom bar numerical RPM), odometer, trip & hour meters, diagnostic center, gear position, engine hour meter, 4 x 4 indicator, temperature and engine lights, fuel gauge, clock. Lighter type DC Outlet in console, standard connector in the back (15-A)						Integrated/removable Garmin Montana 650t touchscreen GPS, Lighter type DC Outlet in console, standard connector in the back (15-A)
	Anti-theft System	RF Digitally Encoded Security System (D.E.S.S.)						
	Lighting	230 W from twin 60-W projectors and dual 55-W reflectors with tail light / brake light						
	Winch	Prewired for available winch	3,000-lb (1,363 kg) WARN¹ winch with roller fairlead					
	Seat Adjustments and Steering Wheel	Convertible Rack System (CRS)						
	Protection	N/A	Heavy-duty front & rear bumpers, Handlebar wind deflectors			Heavy-duty front & rear bumpers, aluminum taper-profile handlebar with wind deflectors and square pad		Heavy-duty front & rear bumpers, Handlebar wind deflectors Mudguards
WARRANTY	Factory	6-months limited warranty						
	Extended	Up to 36 months B.E.S.T. coverage						

		OUTLANDER X mr 570	OUTLANDER X mr 650	OUTLANDER X mr 850	OUTLANDER X mr 1000R	OUTLANDER 6x6 DPS	OUTLANDER 6x6 XT	RENEGADE			RENEGADE X xc		RENEGADE X mr 570	RENEGADE X mr 1000R	DS 70	DS 90	DS 90 X	DS 250
MODELS & COLOR OPTIONS	Color(s)	 White, Black & Can-Am Red / 570	 White, Black & Can-Am Red / 650	 White, Black & Can-Am Red / 850	 White, Black & Can-Am Red / 1000R Triple Black / 1000R	 Light Grey / 650	 Mossy Oak Break-Up Country Camo	 Can-Am Red / 570 / 850 / 1000R			 White, Black & Can-Am Red / 850 / 1000R Triple Black / 1000R		 White, Black & Can-Am Red / 570	 Hyper silver, Black & Can-Am Red / 1000R Hyper silver, Black & Octane Blue / 1000R	Can-Am Red	 Can-Am Red	 Black & Red	 Yellow
ENGINES	Selection	570	650	850	1000R	650	1000	570	850	1000R	850	1000R	570	1000R	70	90	90	250
	Type	48 hp, Rotax 570 cc V-twin, snorkeled, liquid cooled with relocated radiator	62 hp, Rotax 649.6 cc V-twin, snorkeled, liquid cooled with relocated radiator	78 hp, Rotax 854 cc V-twin, snorkeled, liquid cooled with relocated radiator	89 hp, Rotax 976 cc V-twin, snorkeled, liquid cooled with relocated radiator	62 hp, Rotax 649.6 cc V-twin, liquid cooled	82 hp, Rotax 976 cc V-twin, liquid cooled	48 hp, Rotax 570 cc V-twin, liquid cooled	78 hp, Rotax 854 cc V-twin, liquid cooled	89 hp, Rotax 976 cc V-twin, liquid cooled	78 hp, Rotax 854 cc V-twin, liquid cooled	89 hp, Rotax 976 cc V-twin, liquid cooled	48 hp, Rotax 570 cc V-twin, snorkeled, liquid cooled	89 hp, Rotax 976 cc V-twin, snorkeled, liquid cooled	4-stroke single cylinder, air cooled	89.5 cc 4-stroke single cylinder, air cooled		249.4 cc 4-stroke single cylinder, liquid cooled
	Fuel Delivery System	Electronic Fuel Injection (EFI)				Electronic Fuel Injection (EFI)		Electronic Fuel Injection (EFI)					Electronic Fuel Injection (EFI)		Carburetion, Keihin†			Keihin PTG 23
DRIVETRAIN	Transmission	CVT, P / R / N / H / L, standard engine braking			CVT, P / R / N / H / Extra low L, standard engine braking	CVT, P / R / N / H / Extra low L, standard engine braking		CVT, P / R / N / H / L, standard engine braking					CVT, P / R / N / H / L, standard engine braking		CVT, F / N / R			
	Drive Train	Selectable 2WD / 4WD with Visco-Lok QE auto-locking front differential				Selectable 4WD / 6WD with Visco-Lok QE auto-locking front differential		Selectable 2WD / 4WD with Visco-Lok auto-locking front differential			Selectable 2WD / 4WD with Visco-Lok QE auto-locking front differential		Selectable 2WD / 4WD with Visco-Lok QE† auto-locking front differential		Chain driven / solid axle Electric and kick starting system			Chain driven / solid axle
	Power Steering	Tri-Mode Dynamic Power Steering (DPS)				Tri-Mode Dynamic Power Steering (DPS)		N/A			Tri-Mode Dynamic Power Steering (DPS)		Tri-Mode Dynamic Power Steering (DPS)		N/A			
SUSPENSIONS	Front Suspension	Double A-arm				Double A-arm 9 in. (22.9 cm) travel		Double A-arm 9 in. (22.9 cm) travel					Double A-arm		Independent A-arm 3.4 in. (8.6 cm) travel	Double A-arm 7 in. (17.6 cm) travel		Double A-arm 5.5 in. (14 cm) travel
	Front Shocks	Oil		FOX HPG	FOX 1.5 PODIUM QS3	Oil		Oil	FOX HPG	FOX 1.5 PODIUM RC2			FOX HPG	FOX 1.5 PODIUM QS3	Oil	HPG Piggyback		Oil
	Rear Suspension	Torsional Trailing arm Independent rear suspension (TTI)				Double Torsional Trailing arm Independent rear suspension (TTIF) with quick-release sway bar 9.3 in. (23.6 cm) travel		Torsional Trailing arm Independent rear suspension (TTI) 9.3 in. (23.6 cm) travel					Torsional Trailing arm Independent (TTI)		Swingarm 6.3 in. (16 cm) travel	Swingarm 9 in. (22.9 cm) travel		Swingarm 6.7 in. (17 cm) travel
	Rear Shocks	Oil		FOX HPG	FOX 1.5 PODIUM QS3	Oil		Oil	FOX HPG	FOX 1.5 PODIUM RC2			FOX HPG	FOX 1.5 PODIUM QS3	Oil	HPG Piggyback		Oil
TIRES & WHEELS	Front Tires	Maxxis Mudzilla 28 x 8 x 12 in. (71.1 x 20.3 x 30.5 cm)		Gorilla Axle Silverback 30 x 9 x 14 in. (76.6 x 22.9 x 35.6 cm)		Carlisle† Badland 26 x 8 x 12 in. (66 x 20.3 x 30.5 cm)	Carlisle ACT radial 26 x 8 x 12 in. (66 x 20.3 x 30.5 cm)	ITP Holeshot ATR 25 x 8 x 12 in. (63.5 x 20.3 x 30.5 cm)					Maxxis Mudzilla 28 x 8 x 12 in. (71.1 x 20.3 x 30.5 cm)	Gorilla Axle Silverback 30 x 9 x 14 in. (76.6 x 22.9 x 35.6 cm)	Kenda Pathfinder 19 x 7 x 8 in. (48.3 x 17.8 x 20.3 cm)	Kenda Claw 20 x 6 x 10 in. (48.3 x 17.8 x 20.3 cm)		Kenda 22 x 7 x 10 in. (55.9 x 17.8 x 25.4 cm)
	Rear Tires	Maxxis Mudzilla 28 x 10 x 12 in. (71.1 x 25.4 x 30.5 cm)		Gorilla Axle Silverback 30 x 9 x 14 in. (76.6 x 22.9 x 35.6 cm)		Carlisle Badland 26 x 10 x 12 in. (66 x 25.4 x 30.5 cm)	Carlisle ACT radial 26 x 10 x 12 in. (66 x 25.4 x 30.5 cm)	ITP Holeshot ATR 25 x 10 x 12 in. (63.5 x 25.4 x 30.5 cm)					Maxxis Mudzilla 28 x 10 x 12 in. (71.1 x 25.4 x 30.5 cm)	Gorilla Axle Silverback 30 x 9 x 14 in. (76.6 x 22.9 x 35.6 cm)	Kenda Pathfinder 18 x 9.5 x 8 in. (45.7 x 24.1 x 20.3 cm)	Kenda Claw 18 x 10.5 x 8 in. (45.7 x 26.7 x 20.3 cm)		Kenda 20 x 11 x 9 in. (50.8 x 27.9 x 22.9 cm)
	Wheels	12-in. (30.5 cm) cast-aluminum		14-in. (35.6 cm) cast-aluminum		12-in. (30.5 cm) cast-aluminum		12-in. (30.5 cm) cast-aluminum		12-in. (30.5 cm) cast-aluminum beadlock			12-in. (30.5 cm) cast-aluminum beadlock	14-in. (35.6 cm) cast-aluminum beadlock	8-in. (20.3 cm) steel black	8-in. (20.3 cm) aluminum		Front: 10-in. (25.4 cm) steel / Rear: 9-in. (22.9 cm) steel
BRAKES	Front	Dual 214 mm ventilated disc brakes with hydraulic twin-piston calipers				Dual 214 mm ventilated disc brakes with hydraulic twin-piston calipers		Dual 214 mm ventilated disc brakes with hydraulic twin-piston calipers					Dual 214 mm ventilated disc brakes with hydraulic twin-piston calipers		Dual drum brakes	Dual hydraulic disc brakes		
	Rear	Single 214 mm ventilated disc brake with hydraulic twin-piston caliper				Dual 214 mm ventilated disc brakes with hydraulic twin-piston calipers		Dual 214 mm ventilated disc brakes with hydraulic twin-piston calipers					Dual 214 mm ventilated disc brakes with hydraulic twin-piston calipers		Single drum brake	Single hydraulic disc brake		
DIMENSIONS & CAPACITY	Dry Weight*	843 lb (382 kg)	874 lb (396 kg)	963 lb (437 kg)	990 lb (449 kg)	1077 lb (489 kg)	1139 lb (517 kg)	615 lb (279 kg)	668 lb (303 kg)	692 lb (314 kg)	668 lb (303 kg)	692 lb (314 kg)	852 lb (386 kg)	973 lb (441 kg)	250 lb (113 kg)			429 lb (195 kg)
	L x W x H	83 x 46 x 49 in. (211 x 116.8 x 124 cm)	88 x 46.5 x 50.5 in. (224 x 118 x 128 cm)	88 x 50 x 51.5 in. (224 x 127 x 131 cm)	97 x 50 x 51.5 in. (246 x 127 x 131 cm)	122.8 x 48.8 x 49.5 in. (312 x 124 x 126 cm)		86 x 46 x 49 in. (218.4 x 116.8 x 124 cm)					83 x 50 x 56 in. (224 x 127 x 131 cm)		59.8 x 35.6 x 36.8 in. (152 x 90.5 x 93.5 cm)		59.8 x 43.7 x 38.2 in. (152 x 111 x 97 cm)	72 x 40.5 x 43.5 in. (183 x 103 x 110.5 cm)
	Wheelbase	51 in. (129.5 cm)			59 in. (149.9 cm)	82 in. (208.1 cm)		51 in. (129.5 cm)					51 in. (129.5 cm)		39 in. (100 cm)			47 in. (118.7 cm)
	Ground Clearance	10.5 in. (26.7 cm)	11.75 in. (29.9 cm)	13 in. (33 cm)		11 in. (27.9 cm)		10.5 in. (26.7 cm)					12 in. (30.5 cm)	12.5 in. (31.8 cm)	8.3 in. (21.1 cm) under frame / 4.5 in. (11.4 cm) under rear axle			10.2 in. (26 cm) center of ATV
	Seat / Ride Height	33.8 in. (85.8 cm)	35.25 in. (89.5 cm)	36.75 in. (93.3 cm)		34.5 in. (87.7 cm)		34.5 in. (87.7 cm)					35.25 in. (89.5 cm)	36.75 in. (93.3 cm)	27 in. (68.5 cm)			31.5 in. (80 cm)
	Rack Capacity	Rear: 240 lb (109 kg)	Rear: 200 lb (90 kg)			Front: 100 lb (45 kg) Rear: 700 lb (318 kg)		Rear: 35 lb (16 kg)					Rear: 35 lb (16 kg)		N/A			
	Storage	Rear: 2.9 gal (10.9 L)	Rear: 5.7 gal (21.4 L)			Dual-level cargo box with modular accessories Rear: 15.9 gal (70 L)		N/A					N/A		Front: 0.7 gal. (2.7 L)			N/A
	Fuel Capacity	5.4 gal (20.5 L)				5.4 gal (20.5 L)		5.4 gal (20.5 L)					5.4 gal (20.5 L)		1.6 gal (6 L)			3.3 gal (12.5 L)
	Towing Capacity	1,300 lb (590 kg)				1,650 lb (750 kg)		1,300 lb (590 kg)					1,300 lb (590 kg)		N/A			
FEATURES	Gauge	Multifunction Digital			Multifunction Analog / Digital	Multifunction Digital		Multifunction Digital					Multifunction Digital		Neutral and reverse lights			Neutral light, reverse light and oil / temperature light
	Instrumentation	Speedometer, tachometer (bar graph RPM, bottom bar numerical RPM), odometer, trip & hour meters, diagnostic center, gear position, engine hour meter, 4 x 4 indicator, temperature and engine lights, fuel gauge, clock. Lighter type DC outlet in console, standard connectorin the back (15-A)				Speedometer, tachometer (bar graph RPM, bottom bar numerical RPM), odometer, trip & hour meters, diagnostic center, gear position, engine hour meter, 4 x 4 indicator, temperature and engine lights, fuel gauge, clock. Lighter type DC outlet in console, standard connector in the back (15-A)		Speedometer, tachometer (bar graph RPM, bottom bar numerical RPM), odometer, trip & hour meters, diagnostic center, gear position, engine hour meter, 4 x 4 indicator, temperature and engine lights, fuel gauge, clock. Lighter type DC outlet in console, standard connector in the back (15-A)					Speedometer, tachometer (bar graph RPM, bottom bar numerical RPM), odometer, trip & hour meters, diagnostic center, gear position, engine hour meter, 4 x 4 indicator, temperature and engine lights, fuel gauge, clock. Lighter type DC Outlet in console, standard connector in the back (15-A)		N/A			
	Anti-theft System	N/A	RF Digitally Encoded Security System (D.E.S.S.)			RF Digitally Encoded Security System (D.E.S.S.)		RF Digitally Encoded Security System (D.E.S.S.)					RF Digitally Encoded Security System (D.E.S.S.)		N/A			
	Lighting	70 W from dual 35-W front light / brake light	230 W from twin 60-W projectors and dual 55-W reflectors with tail light / brake light			230 W from twin 60-W projectors and dual 55-W reflectors with tail light / brake light		240 W from 4 fender mounted projector beam headlamps (60-W) with tail light / brake light					240 W from 4 fender mounted projector beam headlamps (60-W) with tail light / brake light		Day lights	N/A		2 headlamps (35 W) with tail light and brake light
	Winch	Prewired for available winch		3,000-lb (1,361 kg) WARN winch with roller fairlead		Prewired for available winch	3,000-lb (1,361 kg) winch with roller fairlead	Prewired for available winch					Prewired for available winch	3,000-lb (1,361 kg) WARN† winch with roller fairlead	N/A			
	Seat Adjustments and Steering Wheel	Standard				Standard		Standard					Standard		Standard			
	Protection	Heavy-duty front bumper, mud-riding footrests			Heavy-duty front & rear bumpers, aluminum taper-profile handlebar with wind deflectors and square pad, mud-riding footrests and mudguards	N/A	Heavy-duty front bumper, handlebar wind deflectors	Front bumper, optional wind deflectors			Front bumper, aluminum taper-profile handlebar with wind deflectors and square pad, aluminum skid plate		Front & rear bumpers, Aluminum taper-profile handlebar with grab handle, wind deflectors and square pad, Mudguards	Front & rear bumpers, Aluminum taper-profile handlebar with grab handle, wind deflectors and square pad, Aluminum skid plate , Mudguards	N/A		Aluminum front bumper with number plate, handlebar riser block (+ 1 in.) with square race-style handlebar pad, nerf bars, racing kick-up pegs	N/A
WARRANTY	Factory	6-months limited warranty				6-months limited warranty		6-months limited warranty					6-months limited warranty		6-months limited warranty			
	Extended	Up to 36 months B.E.S.T. coverage				Up to 36 months B.E.S.T. coverage		Up to 36 months B.E.S.T. coverage					Up to 36 months B.E.S.T. coverage		Up to 36 months B.E.S.T. coverage			

©2016 Bombardier Recreational Products Inc. (BRP). All rights reserved. ™ ® and the BRP logo are registered trademarks of BRP or its affiliates. Products are distributed in the U.S.A. by BRP (US) Inc. Visco-Lok is a trademark of GKN Viscodrive GmbH. All other trademarks are the property of their respective owners. *Base model dry weight shown. Because of our ongoing commitment to product quality and innovation, BRP reserves the right at any time to discontinue or change specifications, price, design, features, models or equipment without incurring any obligation. Some models depicted may include optional equipment.BRP highly recommends that all ATV drivers take a training course. For safety and training information, see your dealer or, in the U.S.A. call the ATV Safety Institute at 1 (800) 887-2887. **ATVs can be hazardous to operate. For your safety: always wear a helmet, eye protection, and other protective clothing. Always remember that riding and alcohol/drugs don't mix. Never ride on paved surfaces or public roads. Never carry passengers on any ATV not specifically designed by the manufacturer for such use. Never engage in stunt driving. Avoid excessive speeds and be particularly careful on difficult terrain.** All Can-Am ATV adult models are Category G ATVs (General Use Models) intended for recreational and/or utility use by an operator age 16 or older. ATVs with engine sizes of greater than 90 cc are recommended for use only by those age 16 and older, except for those designated as Y14. Read the Side-by-Side vehicle (SSV) Operator's Guide and ATV Operator's Guide carefully before operating your vehicle. Always wear a helmet, eye protection and protective clothing. Never carry a passenger unless your vehicle is designed for two riders. Passenger capacity is one only. Never ride on paved surfaces or public roads. Operator must be at least 12 years old and able to hold handgrips and plant feet while seated against the backrest. BRP urges you to "TREAD LIGHTLY" on public and private lands. Preserve your future riding opportunities by showing respect for the environment, local laws and the rights of others when you ride. Make sure that all laws, regulations, and BRP's warnings/recommendations for ATV passengers are respected. Ride responsibly.










Printed in Canada. P/N: 716001390

ENGLISH FSC FPO

ski-doo LYNX SEA-DOO EVINRUDE ROTAX can-am

©2016 Bombardier Recreational Products Inc. (BRP). All rights reserved. ®, ™ and the BRP logo are trademarks of BRP or its affiliates.