

2013
Shop Manual

OUTLANDER™ 500/650/800R/1000
RENEGADE™ 500/800R/1000

219 100 651

2013
Shop Manual

Outlander™
500/650/800R/1000

Renegade™
500/800R/1000

can-am | BRP

TABLE OF CONTENTS

SAFETY NOTICE X

INTRODUCTION XI
VEHICLE INFORMATION XI
ENGINE EMISSIONS INFORMATION XII
MANUAL INFORMATION XII
FASTENER INFORMATION XVII

01 MAINTENANCE
01 – BREAK-IN INSPECTION 7
02 – PERIODIC MAINTENANCE SCHEDULE 9
GENERAL 9
MAINTENANCE SOON MESSAGE 9
SEVERE DUSTY CONDITIONS 9
MAINTENANCE SCHEDULE 10
03 – PERIODIC MAINTENANCE PROCEDURES 13
GENERAL 13
PROCEDURES 13
ENGINE (AIR INTAKE SYSTEM) 13
ENGINE (EXHAUST SYSTEM) 16
ENGINE (LUBRICATION SYSTEM) 17
ENGINE (COOLING SYSTEM) 19
ENGINE (CYLINDER HEAD) 23
GEARBOX 23
CONTINUOUSLY VARIABLE TRANSMISSION (CVT) 25
FUEL SYSTEM 26
ELECTRICAL SYSTEM 28
DRIVE SYSTEM 29
CHASSIS (WHEELS AND TIRES) 30
CHASSIS (STEERING SYSTEM) 31
CHASSIS (SUSPENSION) 31
CHASSIS (BRAKES) 33
CHASSIS (BODY) 35
CHASSIS (FRAME) 35
04 – STORAGE PROCEDURE 37
GENERAL 37
PROCEDURES 37
FUEL SYSTEM 37
ENGINE 37
ELECTRICAL SYSTEM 38
DRIVE SYSTEM 38
CHASSIS 38
05 – PRESEASON PREPARATION 41
06 – SPECIAL PROCEDURES 43
GENERAL 43
WHAT TO DO IF WATER IS IN THE CVT 43
WHAT TO DO IF WATER IS IN THE AIR FILTER HOUSING 43
WHAT TO DO IF VEHICLE IS TURNED OVER 43
WHAT TO DO IF VEHICLE IS IMMERSED IN WATER 44

02 ENGINE, CVT AND GEARBOX
01 – ENGINE REMOVAL AND INSTALLATION 45
PROCEDURES 46
ENGINE REMOVAL 46
ENGINE INSTALLATION 51

TABLE OF CONTENTS

02 ENGINE, CVT AND GEARBOX (cont'd)

01 – ENGINE REMOVAL AND INSTALLATION (cont'd)

PROCEDURES (cont'd)

ENGINE MOUNTS REPLACEMENT 51

02 – AIR INTAKE SYSTEM 53

GENERAL 54

PROCEDURES 54

AIR FILTER 54

AIR FILTER HOUSING 54

03 – EXHAUST SYSTEM 59

GENERAL 60

PROCEDURES 60

SPARK ARRESTER 60

MUFFLER 60

HEAT SHIELD 61

Y-EXHAUST PIPE 62

HEAD PIPE (FRONT CYLINDER) 62

04 – LUBRICATION SYSTEM 65

INSPECTION 68

ENGINE OIL PRESSURE 68

TROUBLESHOOTING 68

PROCEDURES 69

OIL COOLER 69

OIL PRESSURE SWITCH (OPS) 70

ENGINE OIL PRESSURE REGULATOR 71

OIL PUMP 72

ENGINE OIL STRAINER 74

REED VALVE 75

05 – COOLING SYSTEM 77

GENERAL 82

PROCEDURES 82

THERMOSTAT 82

RADIATOR 83

COOLANT TEMPERATURE SENSOR (CTS) 84

RADIATOR COOLING FAN RELAY (R1) 84

RADIATOR COOLING FAN 85

WATER PUMP HOUSING 87

WATER PUMP IMPELLER 88

WATER PUMP SHAFT AND SEALS 88

WATER PUMP GEARS 95

06 – MAGNETO SYSTEM 99

PROCEDURES 101

MAGNETO COVER 101

STATOR 102

ROTOR 104

SPRAG CLUTCH 106

SPRAG CLUTCH GEAR 107

STARTER DRIVE GEARS 108

07 – INTAKE MANIFOLD 109

PROCEDURES 110

INTAKE MANIFOLD 110

08 – TOP END 111

GENERAL 115

INSPECTION 115

LEAK TEST 115

02 ENGINE, CVT AND GEARBOX (cont'd)
08 – TOP END (cont'd)
PROCEDURES ... 117
VALVE COVER ... 117
ROCKER ARM ... 117
CAMSHAFT ... 119
CYLINDER HEAD ... 122
VALVE SPRINGS ... 124
VALVES ... 126
VALVE GUIDES ... 128
CYLINDER ... 129
PISTON ... 130
PISTON RINGS ... 135
09 – TIMING CHAIN ... 137
TROUBLESHOOTING ... 139
PROCEDURES ... 139
TIMING CHAIN TENSIONERS ... 139
CAMSHAFT TIMING GEARS ... 141
TIMING CHAIN ... 145
TIMING CHAIN GUIDE (TENSIONER SIDE) ... 147
10 – BOTTOM END ... 149
PROCEDURES ... 153
ENGINE DRIVE SHAFT ... 153
FRONT OIL SEAL (ENGINE DRIVE SHAFT) ... 155
REAR OIL SEAL (ENGINE DRIVE SHAFT) ... 155
PTO COVER OIL SEAL ... 156
PTO COVER ... 157
DRIVE GEARS ... 159
CRANKCASE ... 161
CRANKSHAFT ... 165
11 – CONTINUOUSLY VARIABLE TRANSMISSION (CVT) ... 173
GENERAL ... 176
PROCEDURES ... 176
CVT COVER ... 176
DRIVE BELT ... 177
DRIVE PULLEY ... 177
DRIVEN PULLEY ... 186
CVT AIR GUIDE ... 195
12 – GEARBOX AND 4X4 COUPLING UNIT (500/650/800R) ... 197
GENERAL ... 200
OVERVIEW ... 200
TROUBLESHOOTING ... 200
PROCEDURES ... 200
GEARBOX POSITION INDICATOR SWITCHES ... 200
4WD INDICATOR SWITCH ... 202
GEARBOX OIL SEALS ... 202
ACTUATOR ... 204
OUTPUT SHAFT AND COUPLING MECHANISM ... 206
GEARBOX ... 212
13 – GEARBOX AND 4X4 COUPLING UNIT (1000) ... 229
GENERAL ... 231
GEARBOX OVERVIEW ... 231
TROUBLESHOOTING ... 231
PROCEDURES ... 231
VEHICLE SPEED SENSOR (VSS) ... 231

TABLE OF CONTENTS

02 ENGINE, CVT AND GEARBOX (cont'd)

13 – GEARBOX AND 4X4 COUPLING UNIT (1000) (cont'd)

PROCEDURES (cont'd)

GEARBOX POSITION SENSOR (GBPS) 234
4WD INDICATOR SWITCH 236
ACTUATOR 236
GEARBOX OIL SEALS 238
GEARBOX 240

14 – SHIFTER 255

PROCEDURES 256
SHIFT LEVER 256
SHIFT ROD 257
SHIFT PLATE 257

03 ELECTRONIC MANAGEMENT SYSTEMS

01 – ENGINE MANAGEMENT SYSTEM (EMS) 261

GENERAL 262
SYSTEM DESCRIPTION 262

02 – CONTROLLER AREA NETWORK (CAN) 263

GENERAL 263
SYSTEM DESCRIPTION 263

03 – COMMUNICATION TOOLS AND B.U.D.S. 265

GENERAL 265
TROUBLESHOOTING 265
DIAGNOSTIC TIPS 265
PROCEDURES 266
MULTI-PURPOSE INTERFACE-2 (MPI-2) 266
B.U.D.S. 267

04 – DIAGNOSTIC SYSTEM AND FAULT CODES 271

GENERAL 271
MONITORING SYSTEM 271
FAULT CODES 272
FAULT CODE DIAGNOSTIC 276
FAULT CODE TABLE 279

04 FUEL SYSTEM

01 – ELECTRONIC FUEL INJECTION (EFI) 295

GENERAL 295
SYSTEM DESCRIPTION 295
ADJUSTMENT 296
IDLE SPEED 296
CLOSED THROTTLE AND IDLE ACTUATOR RESET 297
TROUBLESHOOTING 298
DIAGNOSTIC TIPS 298
PROCEDURES 298
ENGINE CONTROL MODULE (ECM) 298
FUEL INJECTOR 303
FUEL RAIL 306
THROTTLE CABLE 306
THROTTLE BODY 307
THROTTLE POSITION SENSOR (TPS) 310
IDLE AIR CONTROL VALVE (IACV) 312
CRANKSHAFT POSITION SENSOR (CPS) 313
MANIFOLD ABSOLUTE PRESSURE AND TEMPERATURE SENSOR (MAPTS) 314
CTS (COOLANT TEMPERATURE SENSOR) 317

04 FUEL SYSTEM (cont'd)
02 – FUEL TANK AND FUEL PUMP 319
GENERAL 321
SYSTEM DESCRIPTION 321
INSPECTION 322
FUEL TANK LEAK TEST 322
FUEL SYSTEM PRESSURE TEST 323
TROUBLESHOOTING 325
FUEL SYSTEM DIAGNOSTIC FLOW CHART 325
PROCEDURES 326
FUEL HOSE AND OETIKER CLAMPS 326
FUEL TANK 326
FUEL PUMP 330
FUEL PUMP PREFILTER (STRAINER) 334
FUEL LEVEL SENDER 335
FUEL TANK VENT VALVES 336

05 ELECTRICAL SYSTEM
01 – POWER DISTRIBUTION AND GROUNDS 339
GENERAL 339
POWER DISTRIBUTION DIAGRAM 339
FUSE BOX 1 340
FUSE BOX 2 341
GROUNDS 341
02 – WIRING HARNESS AND CONNECTORS 343
GENERAL 344
CONNECTOR ABBREVIATION DESCRIPTION 344
WIRING HARNESS ARRANGEMENT 345
WIRING HARNESS ROUTING 347
WIRING HARNESS SPLICE LOCATION 357
PROCEDURES 363
DEUTSCH CONNECTORS 363
PACKARD CONNECTORS 364
PACKARD CONNECTOR (MULTIFUNCTION GAUGE) 364
MOLEX CONNECTOR 366
FURUKAWA CONNECTOR 368
BATTERY AND STARTER CABLE TERMINALS 369
03 – IGNITION SYSTEM 371
GENERAL 371
SYSTEM DESCRIPTION 371
TROUBLESHOOTING 371
DIAGNOSTIC GUIDELINES 371
PROCEDURES 372
IGNITION SWITCH 372
EMERGENCY ENGINE STOP SWITCH 372
IGNITION COIL 374
SPARK PLUG 376
04 – CHARGING SYSTEM 377
GENERAL 377
SYSTEM DESCRIPTION 377
INSPECTION 378
CHARGING SYSTEM OUTPUT 378
TROUBLESHOOTING 378
PROCEDURES 379
VOLTAGE REGULATOR/RECTIFIER 379

TABLE OF CONTENTS

05 ELECTRICAL SYSTEM (cont'd)
04 – CHARGING SYSTEM (cont'd)
PROCEDURES (cont'd)
BATTERY 379
05 – STARTING SYSTEM 381
GENERAL 381
SYSTEM DESCRIPTION 381
TROUBLESHOOTING 381
DIAGNOSTIC GUIDELINES 381
PROCEDURES 382
D2 DIODE (STARTER SOLENOID) 382
START BUTTON 382
STARTER SOLENOID 383
ELECTRIC STARTER 386
06 – DIGITALLY ENCODED SECURITY SYSTEM (D.E.S.S.) 389
GENERAL 389
SYSTEM DESCRIPTION 389
TROUBLESHOOTING 389
DIAGNOSTIC TIPS 389
PROCEDURES 389
KEY PROGRAMMING 389
07 – LIGHTS, GAUGE AND ACCESSORIES 391
GENERAL 391
MULTIFUNCTION GAUGE - LCD (OUTLANDER) 391
MULTIFUNCTION GAUGE (ANALOG/DIGITAL) 394
1) ANALOG SPEEDOMETER 395
2) MODE (M) BUTTON 395
3) SET (S) BUTTON 395
4) ANALOG TACHOMETER (RPM) 395
5) INDICATOR LAMPS 395
6) MAIN DIGITAL DISPLAY 395
7) MULTIFUNCTION DISPLAY 395
8) FUEL LEVEL INDICATOR 396
9) GEARBOX POSITION INDICATOR 396
10) ENGINE TEMPERATURE INDICATOR 396
11) NUMERICAL DISPLAY 396
12) 2WD/4WD INDICATOR 396
13) SECONDARY DIGITAL DISPLAY 396
GAUGE SETUP 396
MULTIFUNCTION GAUGE (RENEGADE) 396
TROUBLESHOOTING 399
DIAGNOSTIC TIPS 399
DIAGNOSTIC GUIDELINES (GAUGE) 400
DIAGNOSTIC GUIDELINES (LIGHTS) 400
PROCEDURES 401
MULTIFUNCTION GAUGE (OUTLANDER AND RENEGADE MODELS) 401
12 VOLT POWER OUTLET 406
HEADLIGHTS 406
TAILLIGHTS/BRAKE LIGHTS 409
TURN SIGNALS/HAZARD (CE MODELS ONLY) 409
HORN (CE MODELS ONLY) 410
WINCH 410

TABLE OF CONTENTS

06 DRIVE SYSTEM

01 – FRONT DRIVE 413
- GENERAL 416
  - SYSTEM DESCRIPTION 416
- PROCEDURES 416
  - WHEEL HUB 416
  - FRONT DRIVE SHAFT 417
  - DRIVE SHAFT BOOT 417
  - FRONT DIFFERENTIAL 418
  - FRONT PROPELLER SHAFT 422

02 – REAR DRIVE 425
- PROCEDURES 428
  - WHEEL HUB 428
  - DRIVE SHAFT 429
  - DRIVE SHAFT BOOT 429
  - PROPELLER SHAFT 430
  - PROPELLER SHAFT U-JOINTS 432
  - REAR FINAL DRIVE 433

07 CHASSIS

01 – WHEELS AND TIRES 439
- PROCEDURES 439
  - TIRES 439
  - WHEELS 441

02 – STEERING SYSTEM 443
- GENERAL 447
- ADJUSTMENT 447
  - STEERING ALIGNMENT 447
- PROCEDURES 448
  - HANDLEBAR GRIP 448
  - HANDLEBAR COVER 448
  - HANDLEBAR 449
  - STEERING CONNECTORS 450
  - MULTIFUNCTION SWITCH 450
  - THROTTLE LEVER 451
  - BRAKE LEVER 452
  - STEERING COLUMN BEARING 452
  - STEERING COLUMN 452
  - TIE-ROD 455
  - KNUCKLE 456
  - WHEEL BEARINGS 456
  - PITMAN ARM (WITHOUT A DPS) 457
  - PITMAN ARM (WITH A DPS) 457

03 – DYNAMIC POWER STEERING (DPS) 459
- GENERAL 460
  - SYSTEM DESCRIPTION (FEATURES) 460
  - DPS SYSTEM DESCRIPTION (COMPONENTS) 461
- ADJUSTMENT 461
  - TORQUE OFFSET RESET 461
  - DPS ASSIST MODE 462
- TROUBLESHOOTING 463
  - TROUBLESHOOTING FLOW CHARTS 463
- PROCEDURES 469
  - DPS UNIT 469
  - PITMAN ARM 480

TABLE OF CONTENTS

07 CHASSIS (cont'd)

04 – FRONT SUSPENSION 485
GENERAL 487
PROCEDURES 487
SHOCK ABSORBER 487
SHOCK ABSORBER BUSHINGS 487
SPRINGS 487
LOWER SUSPENSION ARM 487
UPPER SUSPENSION ARM 488
SUSPENSION ARM BUSHINGS 490
BALL JOINTS 490

05 – REAR SUSPENSION 493
GENERAL 496
PROCEDURES 496
SHOCK ABSORBERS 496
SHOCK ABSORBER BUSHINGS 496
SPRINGS 497
ANTI-SWAY BAR 498
TRAILING ARM 499

06 – AIR CONTROLLED SUSPENSION (ACS) 503
GENERAL 505
SYSTEM DESCRIPTION (FEATURES) 505
SYSTEM DESCRIPTION (COMPONENTS) 506
TROUBLESHOOTING 508
DIAGNOSTIC TIPS 508
TROUBLESHOOTING GUIDELINES 508
TROUBLESHOOTING WITH B.U.D.S. 509
PROCEDURES 509
ACS SOLENOID VALVE 509
ACS MANIFOLD 512
ACS MODULE 513
ACS COMPRESSOR RELAY (R5) 515
ACS COMPRESSOR 516
ACS AIR FILTER 519
PRESSURE TRANSDUCER 519
ACS HOSES 521
SHOCK ABSORBERS 521

07 – BRAKES 525
GENERAL 535
SYSTEM DESCRIPTION 535
INSPECTION 535
BRAKE SYSTEM PRESSURE VALIDATION 535
PROCEDURES 536
BRAKE LIGHT SWITCHES 536
BRAKE PEDAL 538
MASTER CYLINDER 539
CALIPER 539
BRAKE PADS 540
BRAKE DISC 541

08 – BODY (OUTLANDER) 543
PROCEDURES 554
PLASTIC RIVET 554
DECALS 554
FRONT BODY MODULE 554
REAR BODY MODULE 556

07 CHASSIS (cont'd)
08 – BODY (OUTLANDER) (cont'd)
PROCEDURES (cont'd)
CONSOLE 558
GAUGE SUPPORT 559
INNER FENDER PANELS 559
SIDE PANELS 559
PANEL EXTENSIONS 560
LUGGAGE TRAY (MAX MODELS) 560
REAR SIDE PANEL EXTENSIONS (MAX MODEL) 561
REAR TOP PANEL 561
FOOTREST PANELS 561
PASSENGER GRIPS 565
RACK (FRONT AND REAR) 565
REAR STORAGE COMPARTMENT 567
09 – BODY (RENEGADE) 569
PROCEDURES 575
PLASTIC RIVET 575
DECALS 575
FRONT BODY MODULE 575
REAR BODY MODULE 577
CONSOLE 578
GAUGE SUPPORT 578
INNER FENDER PANELS 578
SIDE PANELS 579
FOOTREST PANELS 579
10 – FRAME 581
PROCEDURES 583
FRAME 583

08 TECHNICAL SPECIFICATIONS
01 – OUTLANDER SERIES (500/650/800R/1000) 585
02 – RENEGADE SERIES (500/800R/1000) 599

09 WIRING DIAGRAM
01 – WIRING DIAGRAM INFORMATION 611
GENERAL 611
WIRING DIAGRAM LOCATION 611
WIRING DIAGRAM CODES 611
TROUBLESHOOTING 613
DIAGNOSTIC TIPS 613

SAFETY NOTICE

This manual has been prepared as a guide to correctly service and repair the 2013 Can-Am™ Outlander and Renegade ATVs as described in the model list in the *INTRODUCTION*.

This edition was primarily published to be used by mechanics and technicians who are already familiar with all service procedures relating to BRP products. Technicians should attend training courses given by BRPTI.

Please note that the instructions in this manual will apply only if proper hand tools and special service tools are used.

The contents of this manual depicts parts and procedures applicable to the particular product at the time of writing. Service and warranty bulletins may be published to update the content of this manual. Dealer modifications that were carried out after manufacturing of the product, whether or not authorized by BRP, are not included.

In addition, the sole purpose of the illustrations throughout the manual, is to assist identification of the general configuration of the parts. They are not to be interpreted as technical drawings or exact replicas of the parts.

The use of BRP parts is most strongly recommended when considering replacement of any component. Dealer and/or distributor assistance should be sought in case of doubt.

The engines and the corresponding components identified in this document should not be utilized on product(s) other than those mentioned in this document.

It is understood that certain modifications may render use of the ATV illegal under existing federal, provincial and state regulations.

This manual emphasizes particular information denoted by the following wording and symbols:

⚠ WARNING

Indicates a potential hazard that, if not avoided, could result in serious injury or death.

⚠ CAUTION **Indicates a hazardous situation which, if not avoided, could result in minor or moderate injury.**

NOTICE **Indicates an instruction which, if not followed, could result in severe damage to vehicle components or other property.**

NOTE: Indicates supplementary information required to fully complete an instruction.

Although the mere reading of such information does not eliminate the hazard, your understanding of the information will promote its correct use.

Always observe common shop safety practice.

Unless otherwise noted, the engine must be stopped and the key must be removed prior to perform any services.

Torque wrench tightening specifications must be strictly adhered to. Use the torque values and service products as in the exploded views or in the procedures when noted.

Locking devices when removed must be replaced (e.g.: locking tabs, elastic stop nuts, self-locking fasteners, cotter pins, etc.).

Hoses, cables and locking ties removed during a procedure must be reinstalled as per factory standards.

When ordering parts always refer to the specific model *PARTS CATALOGS*.

We strongly recommend that any services be carried out and/or verified by a highly skilled professional mechanic.

It is understood that this manual may be translated into another language. In the event of any discrepancy, the English version shall prevail.

BRP disclaims liability for all damages and/or injuries resulting from the improper use of the contents of this publication.

INTRODUCTION

This shop manual covers the following BRP made 2013 Can-Am ATV vehicles.

MODEL	ENGINE TYPE	MODEL NUMBER
Outlander 500	490	2TDA, 2TDD, 2CDA, 2CDB, 2CDC, 2UDF, 2UDG, 2UDH
Outlander Max 500	490	2EDA, 2FDA, 2FDB, 2FDC, 2GDA, 2GDB, 2ZDA
Outlander 650	660	2NDA, 2BDA, 2PDA, 2PDB, 2PDC, 2PDD, 2PDE, 2PDF
Outlander Max 650	660	2RDA, 2RDB, 2DDA, 2DDB, 2SDA, 2SDB, 2SDC, 2SDD, 2SDE, 2SDF, 2SDG, 2VDA
Outlander 800R	810	2HDA, 2ADA, 2JDA, 2JDB, 2JDC, 2JDD, 2JDE, 2JDF, 5RDA
Outlander Max 800R	810	2KDB, 2KDC, 2KDD, 2LDB, 2LDC, 2LDD, 2LDE, 5FDB, 5FDC, 5FDD
Outlander 1000	1010	5LDA, 5TDA, 5TDC, 5TDD, 5TDE, 5TDF, 5TDG, 5XDA, 5XDB, 5XDC
Outlander Max 1000	1010	5MDB, 5UDB, 5UDD, 5UDE, 5JDA, 5JDB, 5JDC, 5WDB, 5WDC, 5WDD, 5WDE
Renegade 500	490	4EDA, 4EDF, 4EDG
Renegade 800R	810	4BDA, 4BDB, 4BDC, 4DDA
Renegade 1000	1010	4GDA, 5VDA, 5VDB, 5VDC

The information and component/system descriptions contained in this manual are correct at time of writing. BRP however, maintains a policy of continuous improvement of its products without imposing upon itself any obligation to install them on products previously manufactured.

Due to late changes, there may be some differences between the manufactured product and the description and/or specifications in this document.

BRP reserves the right at any time to discontinue or change specifications, designs, features, models or equipment without incurring obligation.

VEHICLE INFORMATION

VEHICLE IDENTIFICATION NUMBER (VIN)

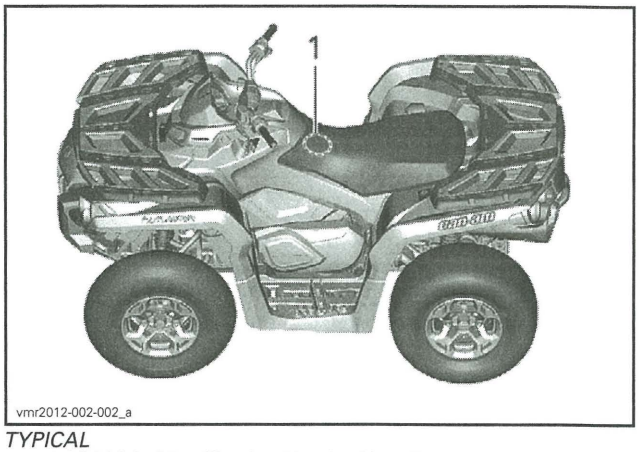

TYPICAL
1. VIN (Vehicle Identification Number) location

The VIN (Vehicle Identification Number) decal is located under the seat.

VIN Decal Description



TYPICAL — VEHICLE IDENTIFICATION NUMBER LABEL
1. VIN (Vehicle Identification Number)
2. Manufacturing date and model number

ENGINE IDENTIFICATION NUMBER (EIN)

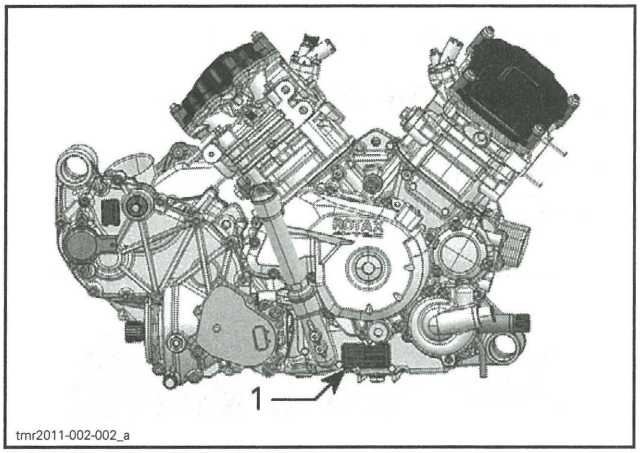

TYPICAL - RH SIDE OF ENGINE
1. Engine Identification Number (EIN)

ENGINE EMISSIONS INFORMATION

MANUFACTURER'S RESPONSIBILITY

Manufacturers of engines must determine the exhaust emission levels for each engine horsepower family and certify these engines with the United States of America Environmental Protection Agency (EPA). An emissions control information label, showing emission levels and engine specifications, must be placed on each vehicle at the time of manufacture.

DEALER RESPONSIBILITY

When servicing any vehicle that carry an emissions control information label, adjustments must be kept within published factory specifications.

Replacement or repair of any emission related component must be executed in a manner that maintains emission levels within the prescribed certification standards.

Dealers are not to modify the engine in any manner that would alter the horsepower or allow emission levels to exceed their predetermined factory specifications.

Exceptions include manufacturer's prescribed changes.

OWNER RESPONSIBILITY

The owner/operator is required to have engine maintenance performed to maintain emission levels within prescribed certification standards.

The owner/operator is not to, and should not allow anyone else to modify the engine in any manner that would alter the horsepower or allow emissions levels to exceed their predetermined factory specifications.

EPA EMISSION REGULATIONS

Vehicles manufactured by BRP are certified to the EPA standards as conforming to the requirements of the regulations for the control of air pollution emitted from new vehicle engines. This certification is contingent on certain adjustments being set to factory standards. For this reason, the factory procedure for servicing the product must be strictly followed and, whenever practicable, returned to the original intent of the design.

The responsibilities listed above are general and in no way a complete listing of the rules and regulations pertaining to the EPA requirements on exhaust emissions. For more detailed information on this subject, you may contact the following locations:

FOR ALL COURIER SERVICES:
U.S. Environmental Protection Agency
Office of Transportation and Air Quality
1310 L Street NW
Washington D.C. 20005

REGULAR US POSTAL MAIL:
1200 Pennsylvania Ave. NW
Mail Code 6403J
Washington D.C. 20460

INTERNET: http://www.epa.gov/otaq/

E-MAIL: otaqpublicweb@epa.gov

MANUAL INFORMATION

MANUAL PROCEDURES

Many of the procedures in this manual are interrelated. Before undertaking any task, you should read and thoroughly understand the entire section or subsection in which the procedure is contained.

⚠ WARNING

Unless otherwise specified, the engine should be turned OFF and cold for all maintenance and repair procedures.

A number of procedures throughout the book require the use of special tools. Before starting any procedure, be sure that you have on hand all required tools, or their approved equivalents.

The use of RIGHT and LEFT indications in the text are always referenced to the driving position (sitting on the vehicle).

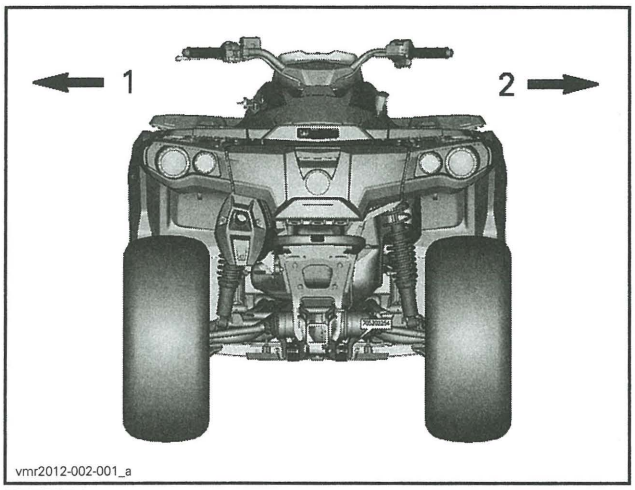

TYPICAL
1. Left
2. Right

This manual uses technical terms which may be different from the ones of the parts catalogs.

When ordering parts always refer to the specific model *PARTS CATALOGS*.

NOTICE **Most fasteners are metric, and most components are built with parts dimensioned using the metric system. Consult the appropriate *PARTS CATALOG* to obtain and use the correct parts and fasteners. Mismatched or incorrect fasteners could cause damage to the vehicle.**

MANUAL LAYOUT

This manual is divided into many major sections as can be seen in the main table of contents at the beginning of the manual.

Each section is divided into various subsections, and again, each subsection has one or more divisions.

Illustrations and photos show the typical construction of various assemblies and, in all cases, may not reproduce the full detail or exact shape of the parts used in a particular model vehicle. However, they represent parts which have the same or a similar function.

TYPICAL PAGE

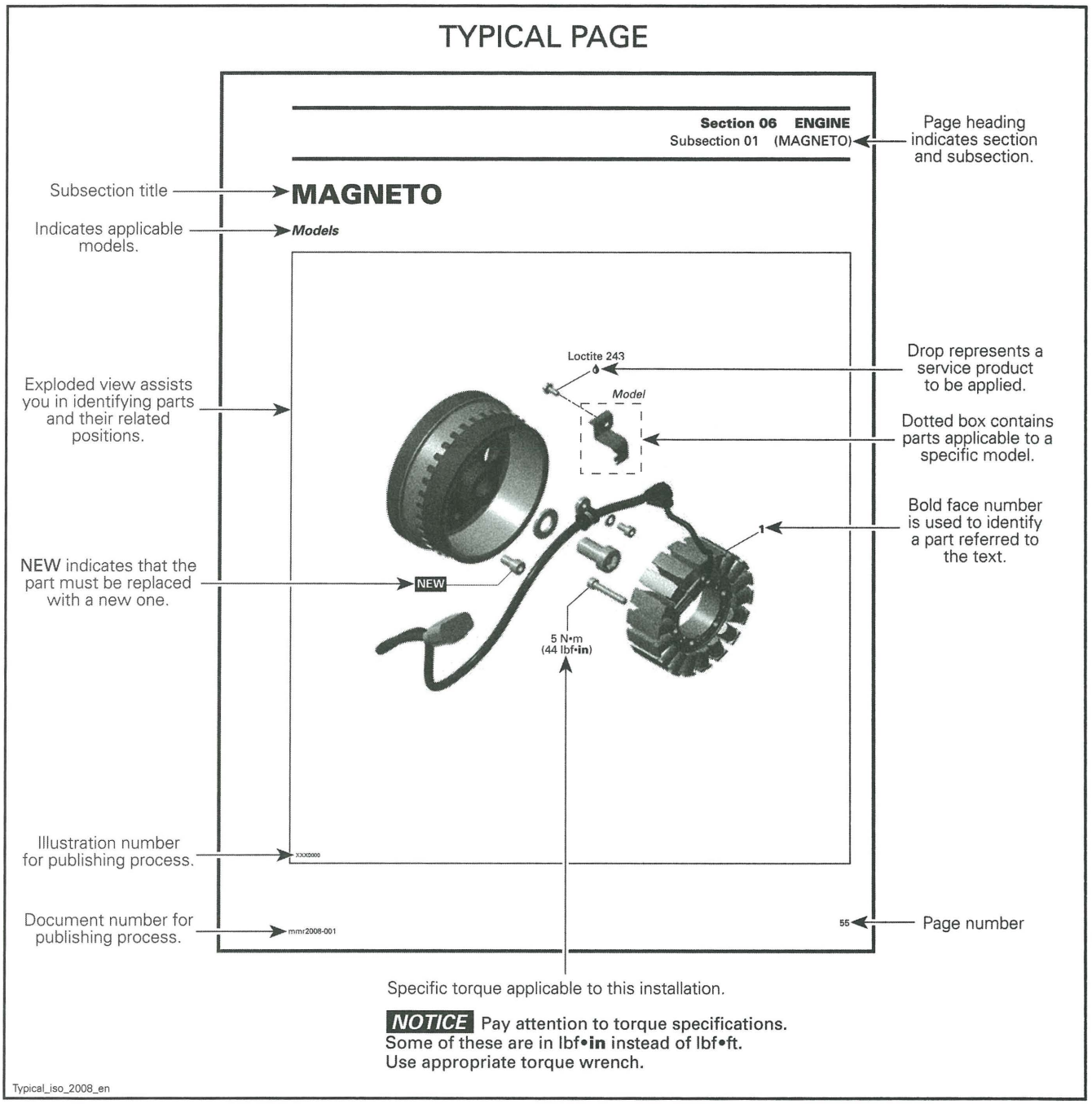

TYPICAL PAGE

Tittle in bold indicates category of information to be carried out.

GENERAL

NOTE: The following procedures can be done without removing the engine.

During assembly/installation, use the torque values and service products as in the exploded views.

Reference to a specific section or subsection.

Clean threads before applying a threadlocker. Refer to *SELF-LOCKING FASTENERS* and *LOCTITE APPLICATION* sections at the beginning of this manual for complete procedure.

⚠ WARNING

Torque wrench tightening specifications must be strictly adhered to.
Locking devices (e.g.: locking tabs, elastic stop nuts, self-locking fasteners, etc.) must be replaced with new ones.

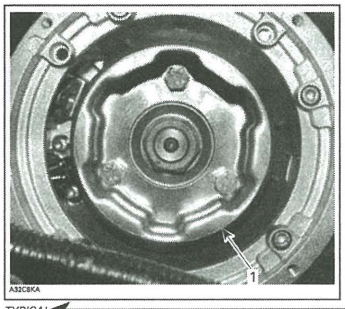

TYPICAL
1: Starting pulley

"TYPICAL" indicates a general view which may not represent exact details.

Call-outs pertaining to above illustration.

PROCEDURES

Indicates component procedures apply to.

MAGNETO FLYWHEEL

Magneto Flywheel Cleaning

Clean all metal components in a non-ferrous metal cleaner.

CAUTION: Clean magneto flywheel using only a clean cloth.

Indicates specific procedure to be carried out.

Magneto Flywheel Removal

Remove muffler, refer to the *EXHAUST SYSTEM* section.

Remove acoustic panel.

Remove rewind starter.

Remove starting pulley no. 2.

NOTE: To remove starting pulley bolts, hold magneto flywheel with a socket as shown.

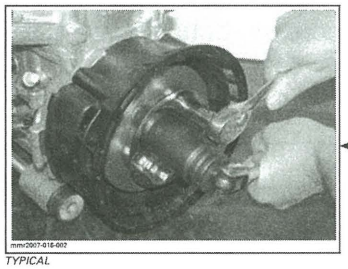

TYPICAL

Illustration always follows text to which it applies.

Models

Italic bold face typesetting indicates a procedure applicable to a specific model(s).

Remove the connecting flange retaining the rewind starter to the engine housing.

Bold face number following part name refers to exploded view at beginning of subsection.

typical_txt_2008_en

TIGHTENING TORQUE

Tighten fasteners to the torque specified in the exploded view(s) and/or in the written procedure. When a torque is not specified, refer to the following table.

⚠ WARNING

Torque wrench tightening specifications must be strictly adhered to.
Locking devices must be replaced when removed (e.g.: locking tabs, elastic stop nuts, self-locking fasteners, cotter pins, etc.).

In order to avoid a poor assembly, tighten screws, bolts, or nuts in accordance with the following procedure:

1. Manually screw in all screws, bolts and/or nuts.
2. Apply half the recommended torque value.
3. Tighten fastener to the recommended torque value.

NOTICE **Be sure to use the recommended tightening torque for the specified fastener used.**

NOTE: Whenever possible, always apply torque on the nut.

NOTE: Always torque screws, bolts and/or nuts using a crisscross pattern when multiple fasteners are used to secure a part (eg. a cylinder head). Some parts must be torqued according to a specific sequence and torque pattern as detailed in the installation procedure.

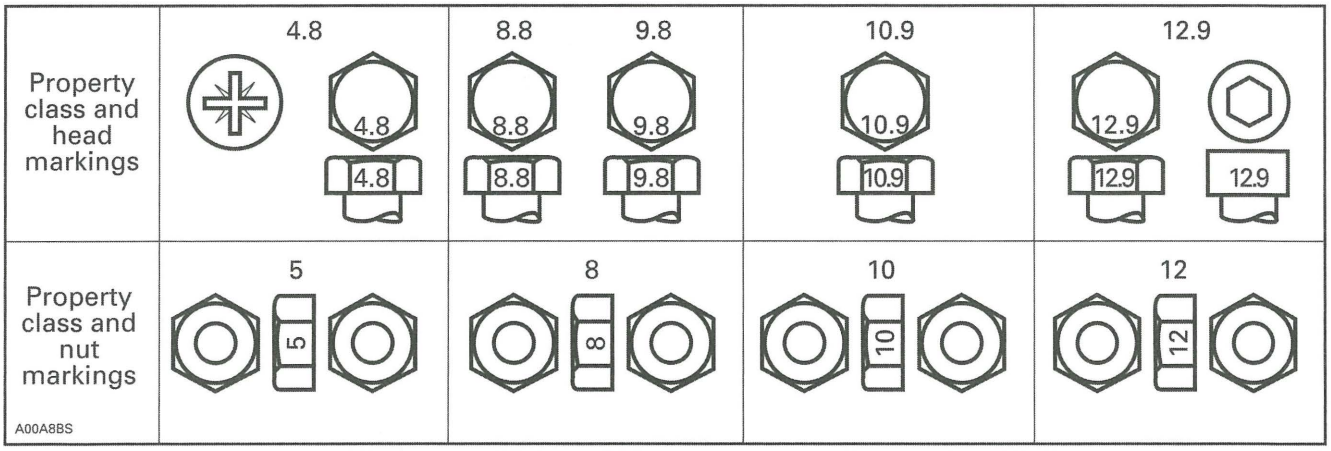

FASTENER SIZE	FASTENER GRADE/TORQUE			
	5.8 Grade	8.8 Grade	10.9 Grade	12.9 Grade
M4	1.5 – 2 N•m (13 – 18 lbf•**in**)	2.5 – 3 N•m (22 – 27 lbf•**in**)	3.5 – 4 N•m (31 – 35 lbf•ft)	4 – 5 N•m (35 – 44 lbf•ft)
M5	3 – 3.5 N•m (27 – 31 lbf•ft)	4.5 – 5.5 N•m (40 – 47 lbf•ft)	7 – 8.5 N•m (62 – 75 lbf•ft)	8 – 10 N•m (71 – 89 lbf•ft)
M6	6.5 – 8.5 N•m (58 – 75 lbf•ft)	8 – 12 N•m (71 – 106 lbf•ft)	10.5 – 15 N•m (93 – 133 lbf•**in**)	16 N•m (142 lbf•**in**)
M8	15 N•m (133 lbf•**in**)	25 N•m (18 lbf•ft)	32 N•m (24 lbf•ft)	40 N•m (30 lbf•ft)
M10	29 N•m (21 lbf•ft)	48 N•m (35 lbf•ft)	61 N•m (45 lbf•ft)	73 N•m (54 lbf•ft)
M12	52 N•m (38 lbf•ft)	85 N•m (63 lbf•ft)	105 N•m (77 lbf•ft)	128 N•m (94 lbf•ft)
M14	85 N•m (63 lbf•ft)	135 N•m (100 lbf•ft)	170 N•m (125 lbf•ft)	200 N•m (148 lbf•ft)

FASTENER INFORMATION

NOTICE Most components in the vehicles are built with parts dimensioned in the metric system. Most fasteners are metric and must not be replaced by customary fasteners or vice-versa. Mismatched or incorrect fasteners could cause damage to the vehicle or possible personal injury.

SELF-LOCKING FASTENER PROCEDURE

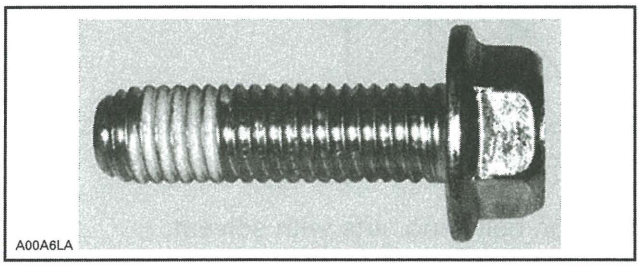

TYPICAL — SELF-LOCKING FASTENER

The following describes common procedures used when working with self-locking fasteners.

Use a metal brush or a tap to properly clean a threaded hole, then use a solvent. Allow the solvent time to act, approximately 30 minutes, then wipe off. Solvent utilization is to ensure proper adhesion of the product used for locking the fastener.

LOCTITE® THREADLOCKER APPLICATION PROCEDURE

The following describes common procedures used when working with Loctite products.

NOTE: Always use proper strength Loctite product as recommended in this Shop Manual.

Threadlocker Application for Uncovered Holes (Bolts and Nuts)

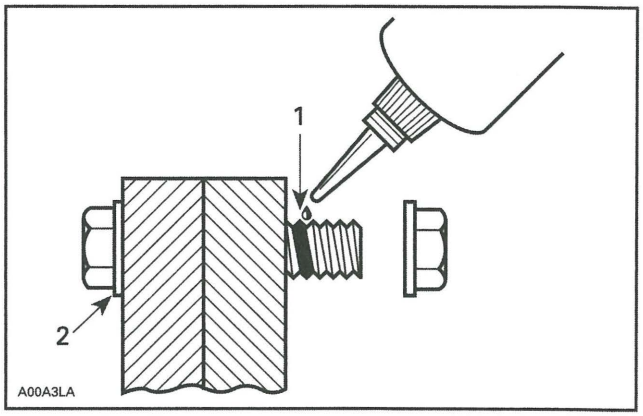

1. Apply here
2. Do not apply

1. Clean threads (bolt and nut) with solvent.
2. Apply LOCTITE PRIMER N (P/N 293 800 041) on threads and allow to dry.
3. Choose proper strength Loctite threadlocker.
4. Fit bolt in the hole.
5. Apply a few drops of threadlocker at proposed tightened nut engagement area.
6. Position nut and tighten as required.

Threadlocker Application for Blind Holes

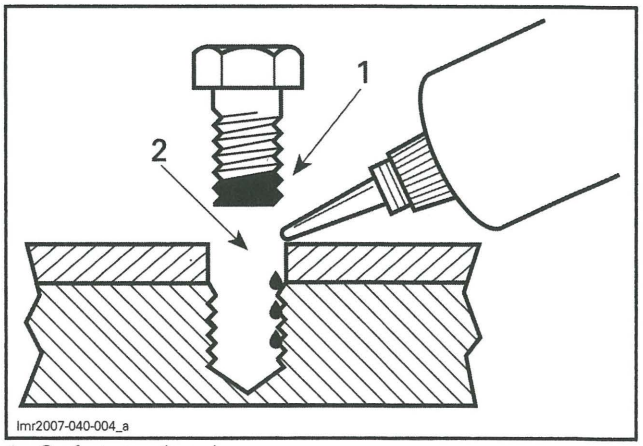

1. On fastener threads
2. On threads and at the bottom of hole

1. Clean threads (bolt and hole) with solvent.
2. Apply LOCTITE PRIMER N (P/N 293 800 041) on threads (bolt and nut) and allow to dry for 30 seconds.
3. Choose proper strength Loctite threadlocker.

4. Apply several drops along the threaded hole and at the bottom of the hole.
5. Apply several drops on bolt threads.
6. Tighten as required.

Threadlocker Application for Stud Installation in Blind Holes

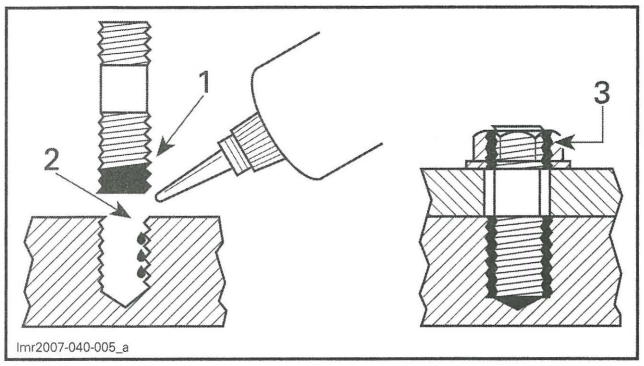

1. On stud threads
2. On threads and in the hole
3. On retaining nut threads

1. Clean threads (stud and hole) with solvent.
2. Apply LOCTITE PRIMER N (P/N 293 800 041) on threads and allow to dry.
3. Apply 2 or 3 drops of proper strength Loctite threadlocker on female threads and in hole.

NOTE: To avoid a hydro lock situation, do not apply too much Loctite.

4. Apply several drops of proper strength Loctite on stud threads.
5. Install stud.
6. Install cover, part, etc.
7. Apply a few drops of proper strength Loctite on uncovered stud threads.
8. Install and tighten retaining nut(s) as required.

Threadlocker Application for Pre-Assembled Parts

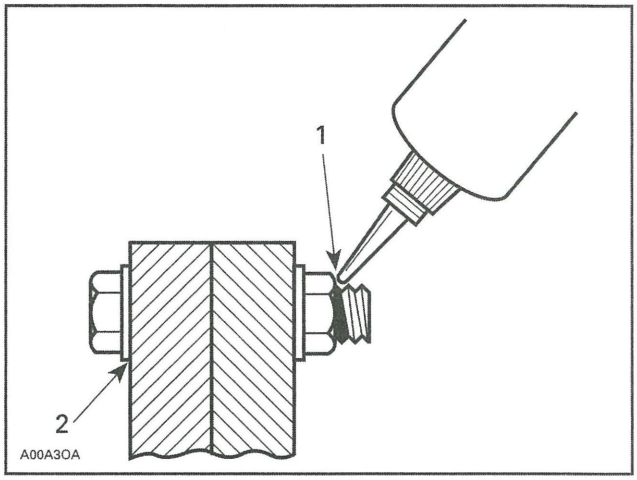

1. Apply here
2. Do not apply

1. Clean bolts and nuts with solvent.
2. Assemble components.
3. Tighten nuts.
4. Apply a few drops of proper strength Loctite on bolt/nut contact surfaces.
5. Avoid touching metal with tip of flask.

NOTE: For preventive maintenance on existing equipment, retighten nuts and apply proper strength Loctite on bolt/nut contact surfaces.

Threadlocker Application for an Adjustment Screw

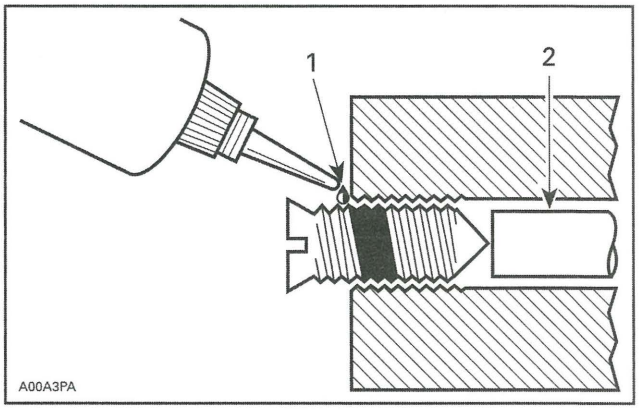

1. Apply here
2. Plunger

1. Adjust screw to proper setting.
2. Apply a few drops of proper strength Loctite threadlocker on screw/body contact surfaces.
3. Avoid touching metal with tip of flask.

NOTE: If it is difficult to readjust, heat screw with a soldering iron (232°C (450°F)).

Application for Stripped Thread Repair

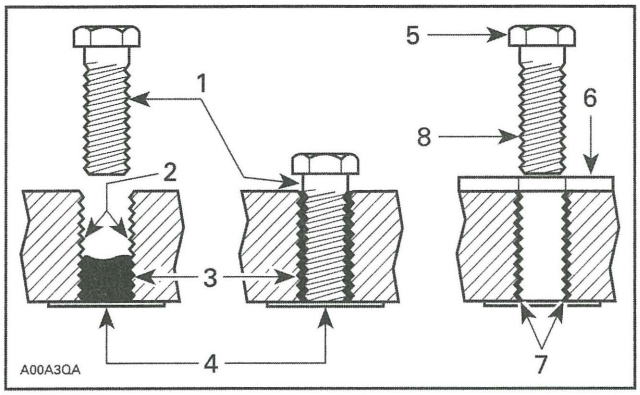

1. *Release agent*
2. *Stripped threads*
3. *Form-A-Thread*
4. *Tape*
5. *Cleaned bolt*
6. *Plate*
7. *New threads*
8. *Threadlocker*

Standard Thread Repair

Follow instructions on Loctite FORM-A-THREAD 81668 package.

If a plate is used to align bolt:

1. Apply release agent on mating surfaces.
2. Put waxed paper or similar film on the surfaces.
3. Twist bolt when inserting it to improve thread conformation.

NOTE: NOT intended for engine stud repairs.

Repair of Small Holes/Fine Threads

Option 1: Enlarge damaged hole, then follow *STANDARD THREAD REPAIR* procedure.

Option 2: Apply FORM-A-THREAD on the screw and insert in damaged hole.

Permanent Stud Installation (Light Duty)

1. Use a stud of the desired thread length.

NOTE: DO NOT apply release agent on stud.

2. Follow Standard Thread Repair procedure.
3. Allow 30 minutes for Loctite FORM-A-THREAD to cure.
4. Complete part assembly.

Gasket Compound Application

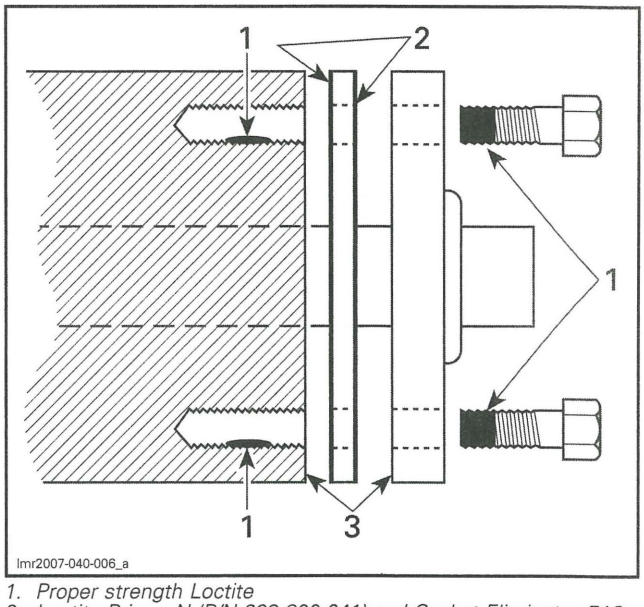

1. *Proper strength Loctite*
2. *Loctite Primer N (P/N 293 800 041) and Gasket Eliminator 518 (P/N 293 800 038) on both sides of gasket*
3. *Loctite Primer N only*

1. Remove old gasket and other contaminants using LOCTITE CHISEL (GASKET REMOVER) (P/N 413 708 500). Use a mechanical means only if necessary.

NOTE: Avoid grinding.

2. Clean both mating surfaces with solvent.
3. Spray Loctite Primer N on both mating surfaces and on both sides of gasket and allow to dry 1 or 2 minutes.
4. Apply LOCTITE 518 (P/N 293 800 038) on both sides of gasket, using a clean applicator.
5. Place gasket on mating surfaces and assemble parts immediately.

NOTE: If the cover is bolted to blind holes, apply proper strength Loctite in the hole and on threads. Tighten fastener.

NOTE: If holes are sunken, apply proper strength Loctite on bolt threads.

6. Tighten as usual.

Threadlocker Application for Mounting on a Shaft

Mounting with a Press

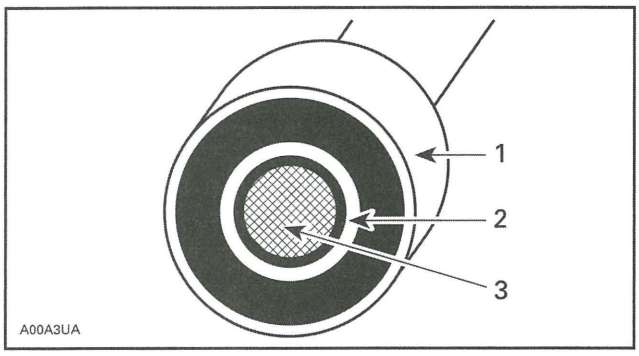

1. Bearing
2. Proper strength Loctite
3. Shaft

1. Clean shaft external contact surface.
2. Clean internal contact surface of part to be installed on shaft.
3. Apply a strip of proper strength Loctite on circumference of shaft contact surface at insertion or engagement point.

NOTE: Retaining compound is always forced out when applied on shaft. DO NOT use Loctite antiseize or any similar product. No curing period is required.

Mounting in Tandem

1. Apply retaining compound on internal contact surface (bore) of parts to be installed.
2. Continue parts assembly in the prescribed order.

Threadlocker Application for Case-In Components (Metallic Gaskets)

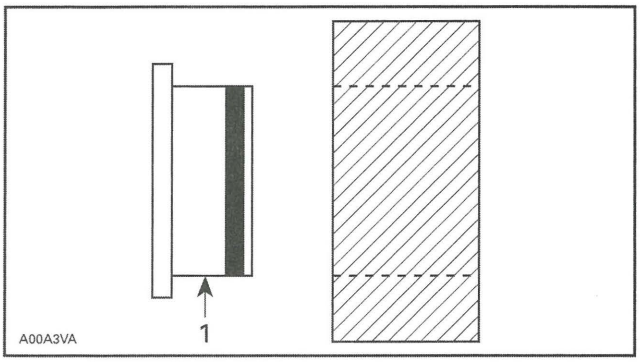

1. Proper strength Loctite

1. Clean inner housing diameter and outer gasket diameter.
2. Spray housing and gasket with LOCTITE PRIMER N (P/N 293 800 041).
3. Apply a strip of proper strength Loctite on leading edge of outer metallic gasket diameter.

NOTE: Any Loctite product can be used here. A low strength liquid is recommended as normal strength and gap are required.

4. Install according to standard procedure.
5. Wipe off excess product.
6. Allow 30 minutes for product to cure.

NOTE: Normally used on worn-out housings to prevent leaking or sliding.

It is generally not necessary to remove gasket compound applied on outer gasket diameter.

Midwest Manuals
Green Manuals
Paperless Manuals
For a Better Tomorrow
If you bought this manual from any other seller please leave them NEGATIVE feedback and notify me at bestshopmanuals@gmail.com

SERVICE TOOLS INDEX

ADAPTER HOSE
(P/N 529 035 652)

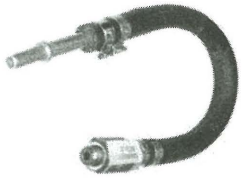

Page: 68

BACKLASH MEASUREMENT TOOL
(P/N 529 035 665)

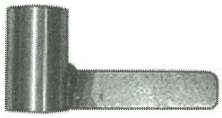

Page: 421, 433

BACKLASH MEASUREMENT TOOL
(P/N 529 036 030)



Page: 207

BEARING INSTALLER (GEARBOX)
(P/N 529 035 763)

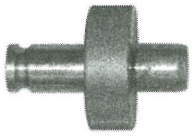

Page: 223

BEARING INSTALLER (GEARBOX)
(P/N 529 035 762)

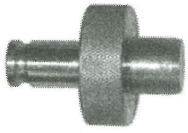

Page: 223

BLIND HOLE BEARING PULLER SET
(P/N 529 036 117)



Page: 216, 246

BLIND HOLE PULLER KIT
(P/N 529 036 056)



Page: 93

CAMSHAFT TIMING TOOL
(P/N 529 036 231)

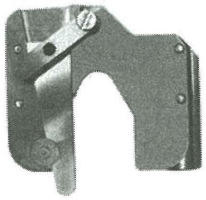

Page: 141

CLUTCH HOLDER
(P/N 529 036 238)



Page: 178, 186, 192–194

CLUTCH PULLER
(P/N 529 035 746)



Page: 178

COUNTERSHAFT OIL SEAL PUSHER
(P/N 529 036 222)



Page: 203, 239

CRANKCASE SUPPORT MAG/PTO
(P/N 529 036 031)



Page: 163

CRANKSHAFT LOCKING BOLT
(P/N 529 035 617)



Page: 104, 130, 166

CRANKSHAFT PROTECTOR
(P/N 529 036 034)



Page: 105

SERVICE TOOLS INDEX

CRANKSHAFT TDC POSITION TOOL
(P/N 529 036 201)

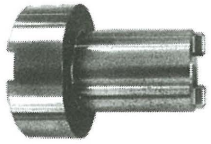

Page: 141, 145

CRIMPING TOOL (HEAVY GAUGE WIRE)
(P/N 529 035 730)



Page: 369

CV BOOT CLAMP PLIER
(P/N 529 036 120)



Page: 417, 429

CV JOINT EXTRACTOR
(P/N 529 036 005)



Page: 417, 430

DIGITAL INDUCTION TACHOMETER
(P/N 529 014 500)

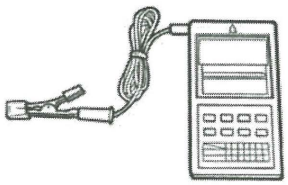

Page: 296

DISCONNECT TOOL
(P/N 529 035 714)

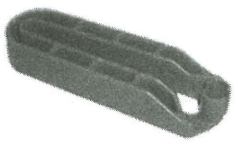

Page: 68

DRIVE SHAFT OIL SEAL INSTALLER
(P/N 529 036 028)

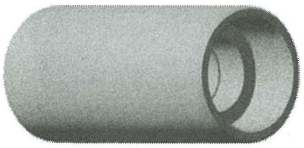

Page: 155–156, 204

DRIVE SHAFT OIL SEAL PROTECTOR
(P/N 529 036 029)

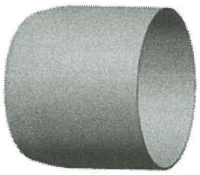

Page: 154

ECM ADAPTER TOOL
(P/N 529 036 166)



Page: 235, 299, 304, 311, 313, 315–317, 367, 372, 375–376, 382, 537

ECM TERMINAL REMOVER 2.25
(P/N 529 036 175)

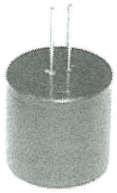

Page: 367

ECM TERMINAL REMOVER 3.36
(P/N 529 036 174)



Page: 367

ENGINE LEAK DOWN TEST KIT
(P/N 529 035 661)



Page: 116

ENGINE LIFTING TOOL
(P/N 529 036 022)



Page: 49

FLUKE 115 MULTIMETER
(P/N 529 035 868)



Page: 85, 102–103, 205, 232, 236, 299–300, 304–305, 311, 315–317, 331, 335–336, 375, 378, 383, 385, 405, 407, 469, 471, 510, 513–516, 519–520

FUEL HOSE ADAPTER
(P/N 529 036 023)

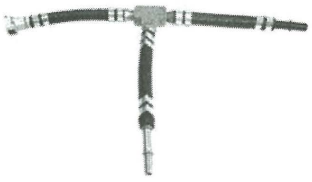

Page: 323

FUEL PUMP NUT TOOL
(P/N 529 035 899)



Page: 332, 334

SERVICE TOOLS INDEX

HANDLE
(P/N 420 877 650)



Page: 94, 204, 223, 239

MAGNETO PULLER
(P/N 529 035 748)



Page: 105

MPI-2 DIAGNOSTIC CABLE
(P/N 710 000 851)



Page: 267

MPI-2 INTERFACE CARD
(P/N 529 036 018)

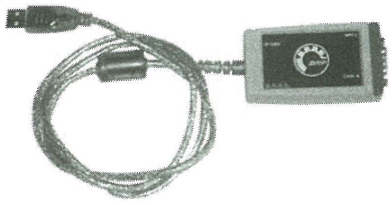

Page: 267

OETIKER PLIERS
(P/N 295 000 070)

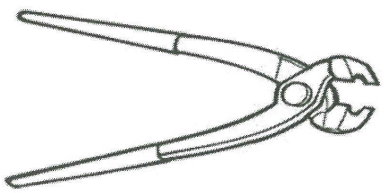

Page: 306, 326, 521, 554, 575

OIL SEAL INSTALLER (GEARBOX)
(P/N 529 035 758)



Page: 204, 239

OIL SEAL INSTALLER
(P/N 529 036 204)

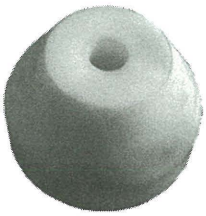

Page: 240

OIL SEAL PUSHER
(P/N 529 035 757)

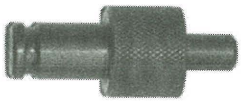

Page: 94

PISTON CIRCLIP INSTALLER
(P/N 529 035 921)

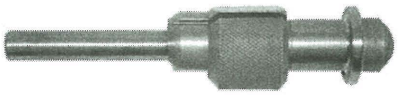

Page: 134

PISTON CIRCLIP INSTALLER
(P/N 529 036 153)



Page: 134

PISTON RING COMPRESSOR
(P/N 529 035 919)



Page: 130

PISTON RING COMPRESSOR
(P/N 529 035 977)



Page: 130

PITMAN ARM JIG
(P/N 529 036 225)

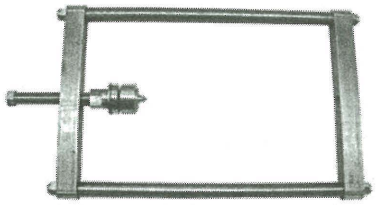

Page: 481, 483

PITMAN ARM PULLER
(P/N 529 036 227)



Page: 482

PLAIN BEARING
REMOVER/INSTALLER
(P/N 529 035 917)



Page: 163

SERVICE TOOLS INDEX

PLAIN BEARING REMOVER/INSTALLER
(P/N 529 036 032)



Page: 158

POSITIONING ADAPTOR
(P/N 529 036 230)



Page: 481

PRESSURE GAUGE
(P/N 529 035 709)



Page: 68, 323

PTO COVER OIL SEAL INSTALLER
(P/N 529 036 033)



Page: 157

PULLER/LOCKING TOOL
(P/N 529 036 098)



Page: 177, 192, 194

ROTARY SEAL PUSHER PLATE
(P/N 529 036 130)

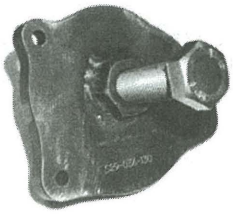

Page: 91

SEAL PUSHER
(P/N 529 035 766)

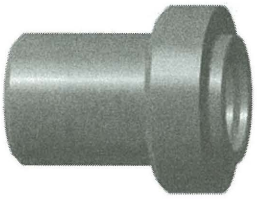

Page: 91, 94

SMALL HOSE PINCHER
(P/N 295 000 076)

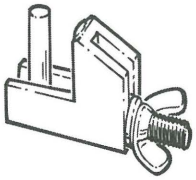

Page: 336

SPANNER SOCKET
(P/N 529 035 649)



Page: 420, 435

SPRING COMPRESSOR
(P/N 529 036 184)

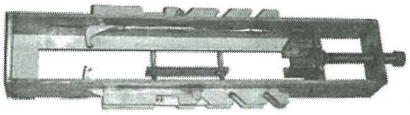

Page: 497

SPRING REMOVER
(P/N 529 036 007)

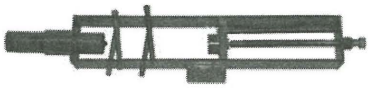

Page: 522

STEERING ALIGNMENT TOOL
(P/N 529 036 059)

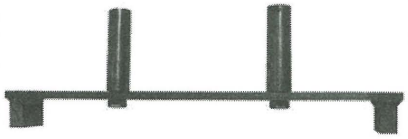

Page: 447

TDC DIAL INDICATOR
(P/N 414 104 700)

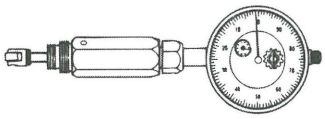

Page: 116

TEST CAP
(P/N 529 035 991)



Page: 21

VACUUM/PRESSURE PUMP
(P/N 529 021 800)

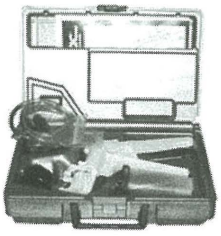

Page: 21, 35, 322, 336

VALVE GUIDE INSTALLER
(P/N 529 036 140)



Page: 128

VALVE GUIDE REMOVER 5 MM
(P/N 529 035 924)



Page: 128

VALVE SPRING COMPRESSOR CUP
(P/N 529 035 764)



Page: 124

VALVE SPRING COMPRESSOR
(P/N 529 035 724)



Page: 124

BREAK-IN INSPECTION

This vehicle should be serviced by an authorized Can-Am dealer after the first 10 hours or 300 km (200 mi) of operation, whichever comes first. The break-in inspection is very important and must not be neglected.

The following message will appear in the cluster as a reminder of when the break-in inspection is due: MAINTENANCE SOON. The message can be cancelled by alternately pressing the override button and the brake pedal 3 times, or by using B.U.D.S. software.

BREAK-IN INSPECTION
Change engine oil and filter
Check engine mounting fasteners
Check valve clearance and adjust as required
Check coolant level
Clean radiator and carry out a cooling system leak test
Inspect engine seals and gaskets for leaks
Inspect fuel lines, fuel rails, connections, check valves and carry out a fuel system leak test
Inspect throttle cable and adjust as required
Inspect exhaust system and check for leaks
Inspect engine air filter
Inspect/clean CVT inlet/outlet
Inspect CVT air filter (800R/1000)
Inspect battery connections
Replace gearbox oil
Clean vehicle speed sensor
Check operation of 4 x 4 coupling unit
Inspect front differential and rear final drive (oil level, seals and vents)
Inspect rear propeller shaft joints
Check brake fluid level
Inspect steering system for abnormal play or damage
Check front wheel alignment
Inspect wheel nuts/studs

PERIODIC MAINTENANCE SCHEDULE

GENERAL

Maintenance is very important for keeping the vehicle in a safe operating condition. Proper maintenance is the owner's responsibility. This vehicle should be serviced as per the maintenance schedule.

⚠ WARNING

Failure to properly maintain the vehicle according to the maintenance schedule and procedures can make it unsafe to operate.

MAINTENANCE SOON MESSAGE

The following message will appear in the cluster after the first 10 hours of operation and then at every 50 hours that follow as a reminder of when an inspection is due: MAINTENANCE SOON. The message can be cancelled by alternately pressing the override button and the brake pedal 3 times, or by using B.U.D.S. software.

SEVERE DUSTY CONDITIONS

Engine Air Filter Maintenance Guideline

Air filter maintenance should be adjusted according to riding conditions.

Air filter maintenance must be increased in frequency in the following dusty conditions:

- Riding on dry sand
- Riding on dry dirt covered surfaces
- Riding on dry gravel roads or similar conditions.

NOTE: Riding in a group in these conditions would increase even more the air filter maintenance.

MAINTENANCE SCHEDULE

EVERY 750 KM (500 MI) OR 25 HOURS OF OPERATION (WHICHEVER COMES FIRST)
Clean (or replace if necessary) engine air filter and oil foam filter (more often if required in severe dusty conditions).
Inspect and clean CVT air filter (800R/1000) (severe dusty conditions).
Check brake fluid level.
Inspect brake pads.
Tighten wheel lug nuts.
Inspect the drive shaft boots and protectors.
Inspect hitch condition.
Inspect seat latch operation.
Inspect rear cargo compartment latch operation.

EVERY 1 500 KM (1,000 MI) OR 50 HOURS OF OPERATION (WHICHEVER COMES FIRST)
Replace engine air filter and oil foam filter (normal riding conditions).
Inspect and clean CVT air filter (800R/1000) (normal riding conditions).
Inspect, adjust and lubricate throttle cable.
Check battery condition.
Inspect front differential/rear final drive oil level.
Inspect drive shaft joint condition.
Inspect front/rear propeller shaft joint condition.
Grease rear propeller shaft joints.
Inspect tie rod ends.
Inspect shock absorbers.
Lubricate shock absorber spherical bearings (Renegade and XT-P model).
Inspect and lubricate front suspension arms.
Inspect and lubricate rear anti-sway bar bushings.

EVERY 3 000 KM (2,000 MI) OR 100 HOURS OF OPERATION OR 1 YEAR (WHICHEVER COMES FIRST)
Replace engine oil and filter.
Inspect and adjust valve clearance.
Inspect and clean muffler spark arrester.
Check engine coolant strength.
Inspect and clean throttle body.
Clean the fuel pump prefilter.
Carry out a fuel pump pressure test.
Replace fuel vent breather filter.
Inspect drive belt.
Inspect, clean and lubricate drive and driven pulleys (including one-way bearing).
Check gearbox oil level and condition.
Inspect wheel bearings.
Inspect steering system (check for abnormal play).
Clean and lubricate lower and upper steering column half bushings (severe muddy conditions).
Inspect and clean brake system.
Inspect frame for any damage.
Replace rear final drive oil.
Inspect ACS rear shock absorber hoses and fittings (LTD model)

EVERY 6 000 KM (4,000 MI) OR 200 HOURS OF OPERATION OR 2 YEARS (WHICHEVER COMES FIRST)
Replace the engine coolant.
Check cooling system and perform a pressure test on pressure cap and cooling system.
Check fuel system condition and perform a fuel system leak test.
Replace spark plugs.
Replace front differential oil.
Clean and lubricate lower and upper steering column half bushings (normal riding conditions).
Replace gearbox oil.
Clean vehicle speed sensor.
Replace the brake fluid.

PERIODIC MAINTENANCE PROCEDURES

SERVICE TOOLS

Description	Part Number	Page
TEST CAP	529 035 991	21
VACUUM/PRESSURE PUMP	529 021 800	21, 35

SERVICE PRODUCTS

Description	Part Number	Page
AIR FILTER CLEANER	219 700 341	15
AIR FILTER OIL	219 700 340	15
BRAKE FLUID	293 600 131	34
BRP PREMIXED COOLANT	219 700 362	19
CABLE LUBRICANT	293 600 041	26
LOCTITE 243 (BLUE)	293 800 060	22
SUSPENSION GREASE	293 550 033	32–33
XPS 4-STROKE SYNTH. BLEND OIL (SUMMER)	293 600 121	17
XPS 4-STROKE SYNTHETIC OIL (ALL CLIMATE)	293 600 112	17
XPS BRAKES AND PARTS CLEANER	219 701 705	28, 33
XPS SYNTHETIC GEAR OIL (75W 140)	293 600 140	23, 30
XPS SYNTHETIC GEAR OIL (75W 90)	293 600 043	29
XPS SYNTHETIC GREASE	293 550 010	34

GENERAL

This subsection provides:
- Fluid level verifications
- Maintenance procedures.

The following systems should be serviced according to the *PERIODIC MAINTENANCE SCHEDULE*.

PROCEDURES

ENGINE (AIR INTAKE SYSTEM)

Engine Air Filter Maintenance Guideline

As with any ATV, air filter maintenance is critical to ensure proper engine performance and life span.

Air filter maintenance should be adjusted according to riding conditions.

Air filter maintenance must be increased in frequency and oil must be added to the foam filter for the following dusty conditions:
- Riding on dry sand
- Riding on dry dirt covered surfaces
- Riding on dry gravel trails or similar conditions.

NOTE: Riding in a group in these conditions would increase even more the air filter maintenance.

Engine Air Filter Removal

NOTICE **Never remove or modify any component in the air filter housing. Otherwise, engine performance degradation or damage can occur. The engine is calibrated to operate specifically with these components.**

1. Remove seat.
2. Remove console. Refer to *BODY* subsection.
3. Rotate air filter cover counterclockwise to remove it.

NOTE: A socket wrench may be used to remove the filter cover.

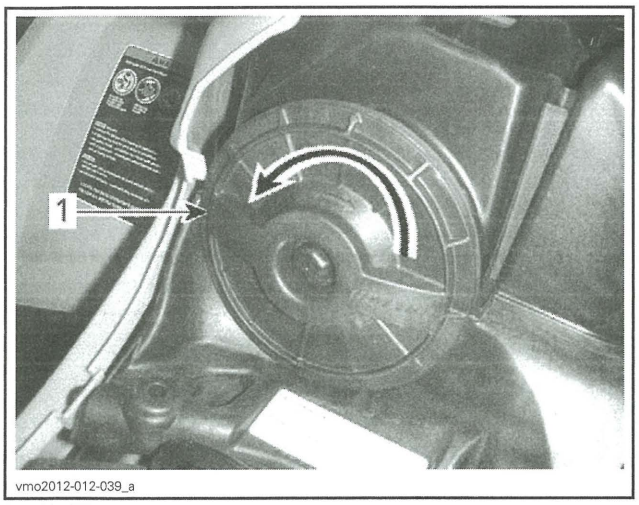

1. Air filter cover

4. Remove air filter.



AIR FILTER REMOVAL

Engine Air Filter Housing Inspection and Draining

1. Remove LH side panel. Refer to *BODY* subsection.
2. Drain air filter housing inlet drain tube.

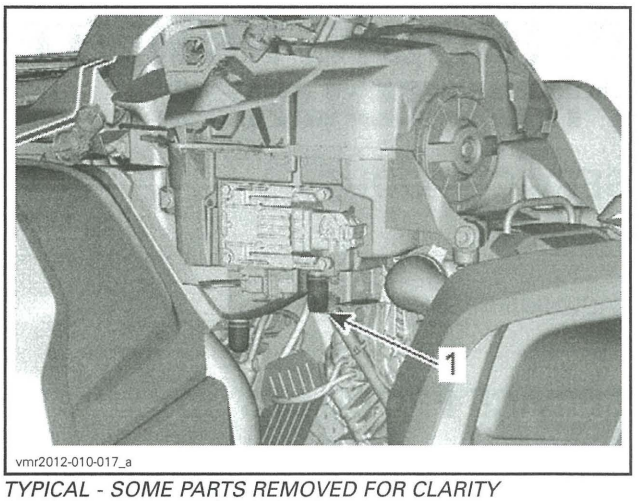

TYPICAL - SOME PARTS REMOVED FOR CLARITY
1. Air filter housing inlet drain tube

3. Check air filter dirty chamber for cleanliness.
   – If any debris or water are found, clean air filter chamber using a vacuum cleaner.

NOTICE **Do not blow compressed air into air filter chamber.**

4. Check air filter drain tube (clean chamber).
   – If any debris or water are found, refer to *SPECIAL PROCEDURES* subsection.
   – Investigate for contamination source.

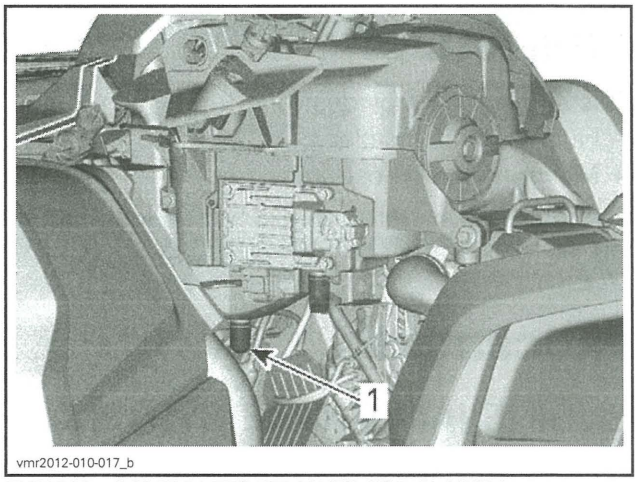

TYPICAL - SOME PARTS REMOVED FOR CLARITY
1. Air filter drain tube

Paper Filter Cleaning

1. Ensure that the foam filter is removed from paper filter.
2. Tap out heavy dust from the paper filter.

This will allow dirt and dust to get out of the paper filter.

NOTE: Paper filter have a limited life span; replace filter if too dirty or clogged.

NOTICE It is not recommended to blow compressed air on the paper filter; this could damage the paper fibers and reduce its filtration ability when used in dusty environments.

NOTICE Do not wash the paper filter with any cleaning solution.

Foam Filter Cleaning

1. Spray the foam filter inside and out with air filter cleaner.

RECOMMENDED PRODUCT	
AIR FILTER CLEANER (P/N 219 700 341)	

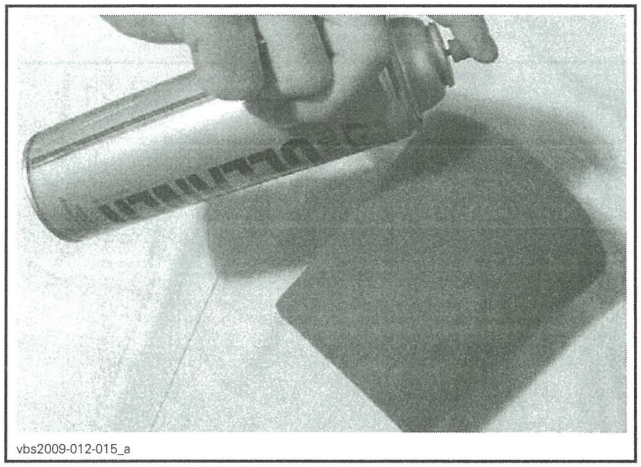
vbs2009-012-015_a

TYPICAL - SPRAY THE FOAM FILTER

2. Let stand for 3 minutes.
3. As stated on air filter cleaner (UNI) container, rinse with plain water.
4. Dry the foam filter completely.

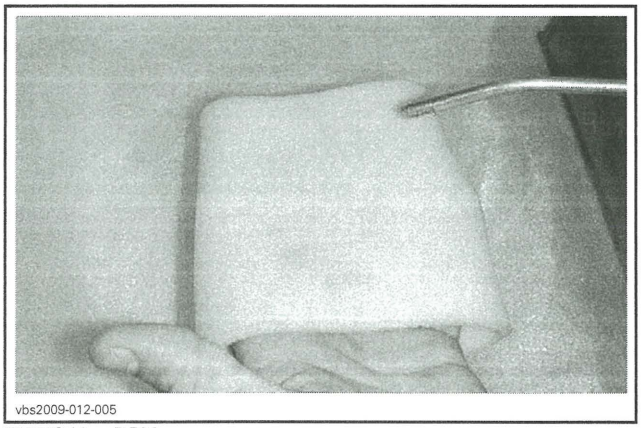
vbs2009-012-005

TYPICAL - DRY

NOTE: A second application may be necessary for heavily soiled elements.

Foam Filter Oiling

1. Carefully remove foam filter from air paper filter.
2. Spray recommended air filter oil on the foam filter.

RECOMMENDED PRODUCT	
AIR FILTER OIL (P/N 219 700 340)	

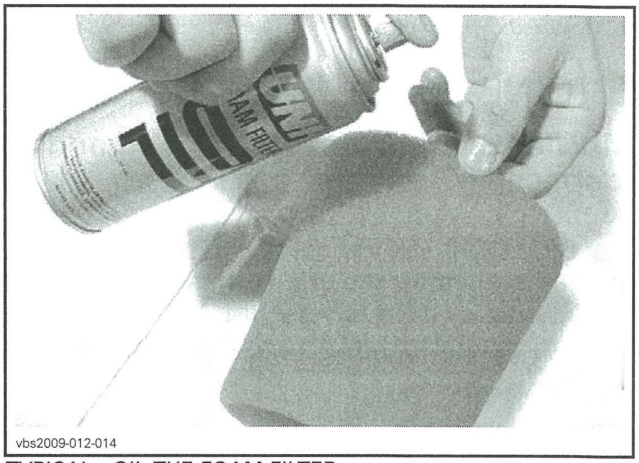
vbs2009-012-014

TYPICAL - OIL THE FOAM FILTER

3. Let stand for 3 to 5 minutes.
4. Remove any excess of oil that could transfer to the air paper filter by wrapping the foam filter into an absorbent cloth and squeezing gently. This will also ensure a full oil coverage on foam filter.

Engine Air Filter Installation

Reinstall oiled foam filter on paper air filter.

Slightly grease O-ring seal and plastic body of air filter. Refer to *AIR INTAKE SYSTEM* exploded view.

Install air filter as the reverse of removal.

Ensure air filter cover is properly locked onto the air filter housing. See indications on filter cover and housing.

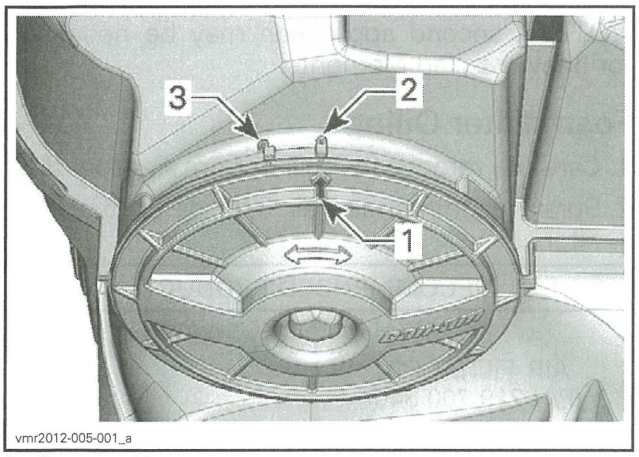

1. Cover position arrow
2. Locked
3. Unlocked

ENGINE (EXHAUST SYSTEM)

Muffler Spark Arrester Cleaning and Inspection

⚠ CAUTION Never perform this operation immediately after the engine has been running as exhaust system is very hot.

1. Remove the muffler cover and discard the screws.

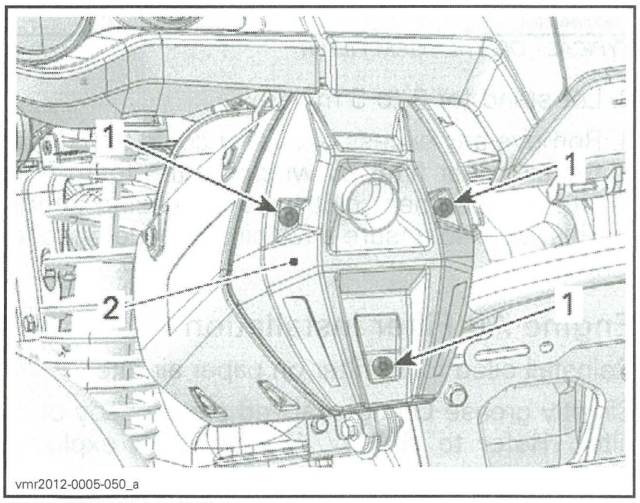

OUTLANDER MODELS
1. Remove screws
2. Cover

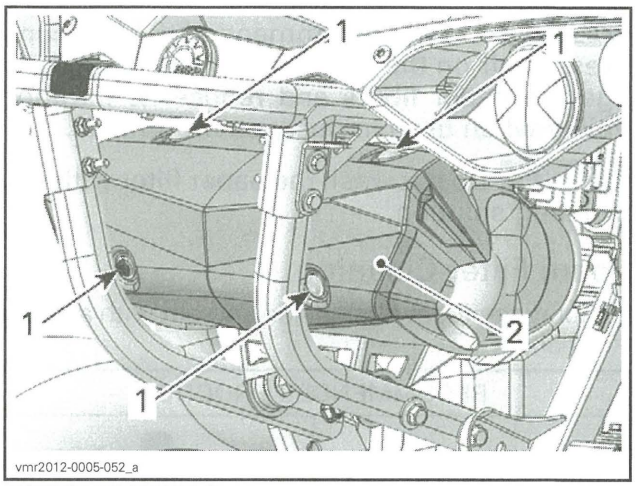

RENEGADE MODELS
1. Remove screws
2. Cover

2. Remove and discard the tail pipe retaining screws.

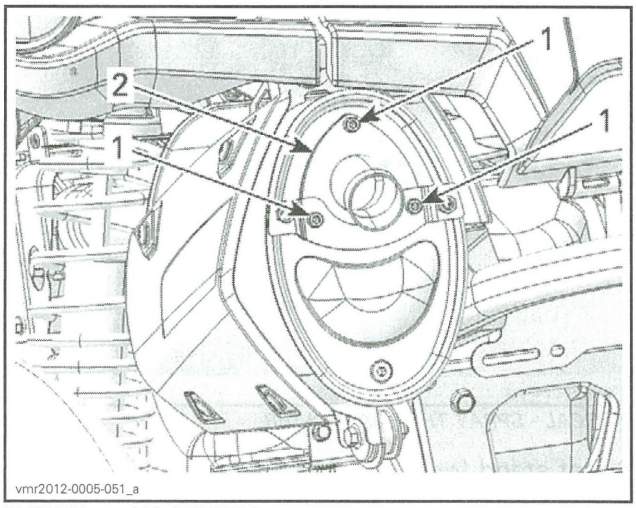

TYPICAL — ALL MODELS
1. Screws
2. Tail pipe

3. Remove exhaust tail pipe, gasket (discard) and spark arrester.

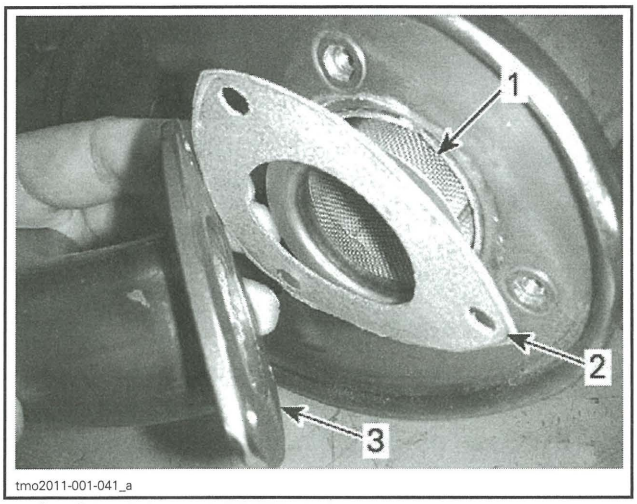

1. *Spark arrester*
2. *Gasket*
3. *Exhaust tail pipe*

4. Remove carbon deposits from the spark arrester using a brush.

NOTICE Use a soft brush and be careful to avoid damaging spark arrester mesh.

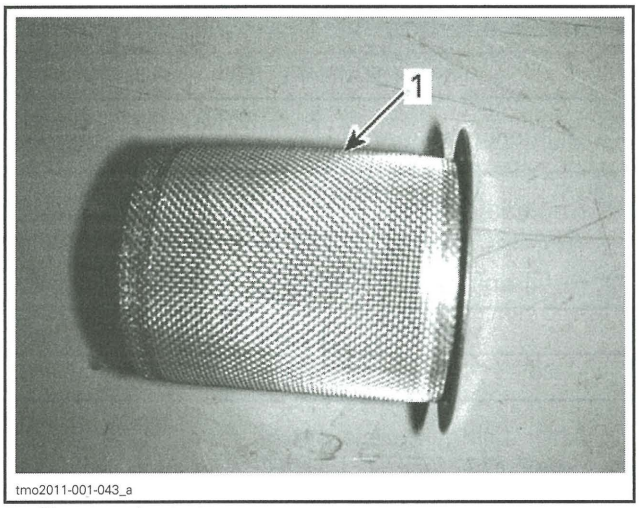

1. *Clean spark arrester*

5. Inspect mesh of spark arrester for any damage. Replace as required.
6. Inspect spark arrester chamber in muffler. Clean as required.

For installation, reverse the removal procedure. However pay attention to the following.

Install new gasket and new retaining screws.

TAIL PIPE RETAINING SCREWS	
Tightening torque	11 N•m ± 1 N•m (97 lbf•**in** ± 9 lbf•**in**)

ENGINE (LUBRICATION SYSTEM)

Recommended Engine Oil

RECOMMENDED ENGINE OIL	
SEASON	TYPE
Summer	XPS 4-STROKE SYNTH. BLEND OIL (SUMMER) (P/N 293 600 121)
Winter	XPS 4-STROKE SYNTHETIC OIL (ALL CLIMATE) (P/N 293 600 112)

If recommended XPS oil is not available, use a 4-stroke SAE 5W 40 engine oil that meets or exceeds the requirements for API service classification SG, SH or SJ. Always check the API service label certification on the oil container, it must contain at least one of the above standards.

Engine Oil Level Verification

NOTICE Operating the engine with an improper level may severely damage engine.

NOTE: While checking the oil level, visually inspect engine area for leaks.

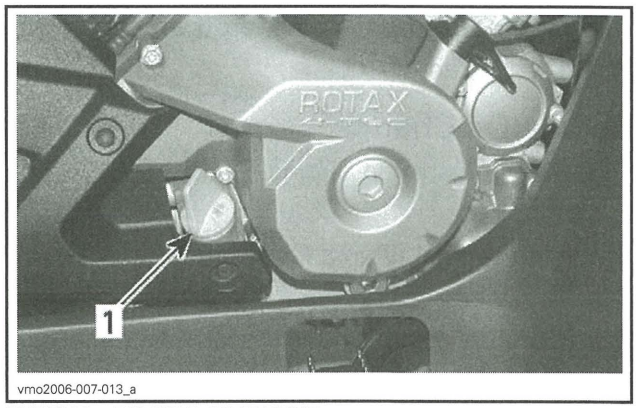

TYPICAL - RH SIDE OF ENGINE
1. *Dipstick*

With vehicle on a level surface and engine cold, not running, check the oil level as follows:

1. Unscrew dipstick then remove it and wipe clean.
2. Reinstall dipstick, screw in it completely.
3. Remove and check oil level. It should be near or equal to the upper mark.

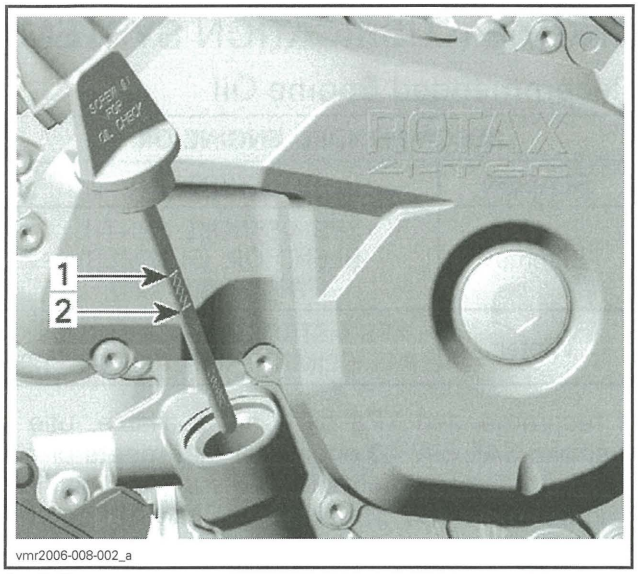

1. Full
2. Add

To add oil, remove the dipstick. Place a funnel into the dipstick orifice.

Add a small amount of recommended oil and recheck oil level.

Repeat the above procedures until oil level reaches the dipstick's upper mark.

NOTE: Do not overfill. Wipe off any spillage.

Properly tighten dipstick.

Engine Oil Change

1. Start and warm-up engine.
2. Stop engine.
3. Ensure vehicle is on a level surface.
4. Remove dipstick.
5. Place a drain pan under the engine drain plug area.
6. Clean the drain plug area.
7. Unscrew drain plug and discard the gasket ring.

⚠ CAUTION The engine oil can be very hot.

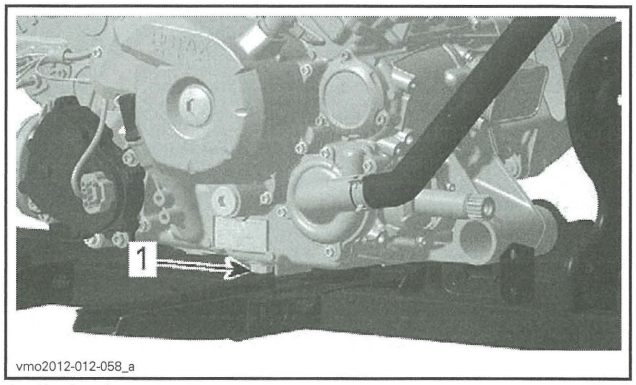

1. Drain plug

NOTE: Allow oil to drain completely from the crankcase.

8. Clean the magnetic drain plug from metal shavings and residue. Presence of debris gives an indication of internal engine damage.
9. Install a NEW gasket ring on the drain plug.

NOTICE **Never use the gasket ring a second time. Always replace by a new one.**

10. Install and tighten drain plug to the recommended torque.

DRAIN PLUG	
Tightening torque	30 N•m ± 2 N•m (22 lbf•ft ± 1 lbf•ft)

11. Replace oil filter. Refer to *ENGINE OIL FILTER REPLACEMENT* in this subsection.
12. Refill engine with recommended engine oil.

ENGINE OIL CAPACITY
2 L (2.1 qt (U.S. liq.))

13. After filling, check the oil level, refer to *ENGINE OIL LEVEL VERIFICATION* in this subsection.
14. Start engine and let it idle for a few minutes.
15. Ensure oil filter and drain plug areas are not leaking.
16. Stop engine.
17. Wait a while to allow oil to flow down to crankcase, then check oil level again.
18. Dispose oil and filter as per your local environmental regulations.

Engine Oil Filter Replacement

Engine Oil Filter Access

To reach oil filter, refer to *BODY* and remove the following parts (Outlander models):

- Seat
- Console
- RH side panel
- RH footrest panel.

Engine Oil Filter Removal

1. Clean oil filter area.
2. Remove oil filter cover screws.
3. Remove oil filter cover.
4. Remove oil filter.

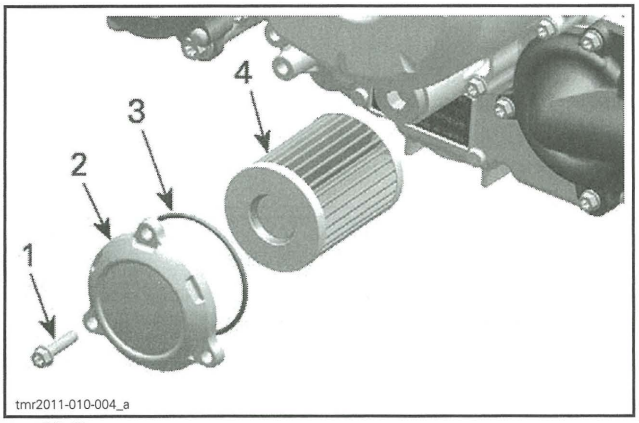

1. Oil filter screw
2. Oil filter cover
3. O-ring
4. Oil filter

Engine Oil Filter Installation

1. Check and clean the oil filter inlet and outlet area of dirt and other contaminations.

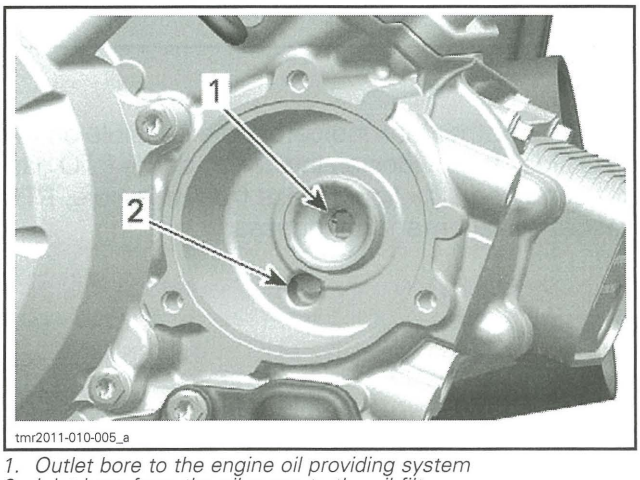

1. Outlet bore to the engine oil providing system
2. Inlet bore from the oil pump to the oil filter

2. Install a NEW O-ring on oil filter cover.
3. Install the filter into the cover.
4. Apply engine oil on O-ring and on end of filter.

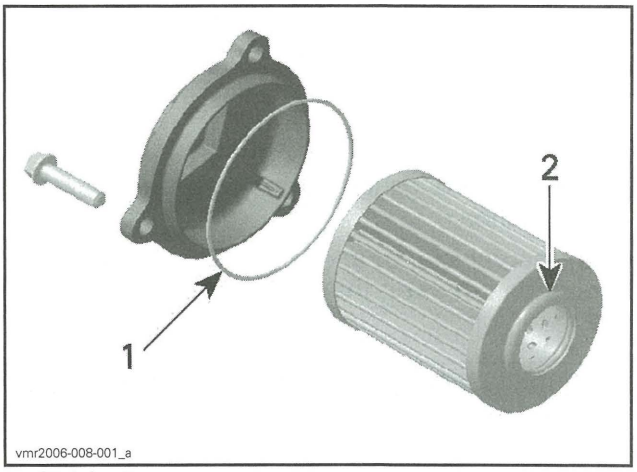

1. Slightly oil
2. Slightly oil

5. Install the cover on the engine.
6. Tighten oil filter cover screws to recommended torque.

OIL FILTER COVER SCREWS	
Tightening torque	10 N•m ± 1 N•m (89 lbf•**in** ± 9 lbf•**in**)

7. Reinstall remaining parts if applicable.

ENGINE (COOLING SYSTEM)

Recommended Engine Coolant

COOLANT	
BRP RECOMMENDED PRODUCT	BRP PREMIXED COOLANT (P/N 219 700 362)
ALTERNATIVE, OR IF NOT AVAILABLE	Distilled water and antifreeze solution (50% distilled water, 50% antifreeze)

NOTICE **Always use ethylene-glycol antifreeze containing corrosion inhibitors specifically formulated for internal combustion aluminum engines.**

Engine Coolant Level Verification

⚠ WARNING

Check coolant level with engine cold. Never add coolant in cooling system when engine is hot.

1. Place vehicle on a level surface.
2. Remove the gauge support. Refer to *BODY* subsection.

With the vehicle on a level surface, coolant level should be between the MIN. and MAX. marks of the reservoir.

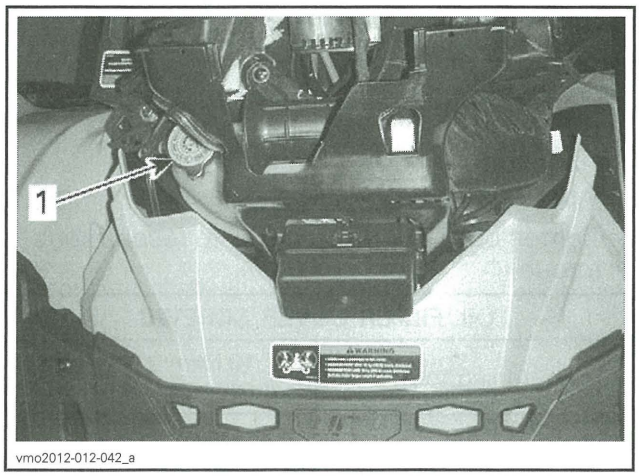

1. Engine coolant reservoir

NOTE: When checking level at temperature lower than 20°C (68°F), it may be slightly lower than MIN. mark.

3. Add coolant up to MAX. mark if required.

⚠ WARNING

Do not remove the coolant reservoir cap if engine is hot.

4. Use a funnel to avoid spillage. **Do not overfill.**
5. Properly reinstall and tighten reservoir cap.
6. Reinstall gauge support.

NOTICE **Do not store any objects under the gauge support.**

Engine Coolant Specific Gravity Check

1. Remove gauge support. Refer to *BODY* subsection.
2. Remove pressure cap.

⚠ WARNING

To avoid potential burns, do not remove the pressure cap if the engine is hot.

3. Using an antifreeze tester, test coolant strength.

MINIMUM RECOMMENDED COOLANT STRENGTH
-30°C (-22°F)

Engine Cooling System Inspection

1. Check general condition of hoses and clamps for tightness.
2. Check the leak indicator hose for oil or coolant.

NOTE: Leaking coolant indicates a defective rotary seal. Leaking oil indicates a defective oil seal. If either seal is leaking, both seals must be replaced at the same time. Refer to *WATER PUMP SHAFT AND SEALS* in the *COOLING SYSTEM* subsection.

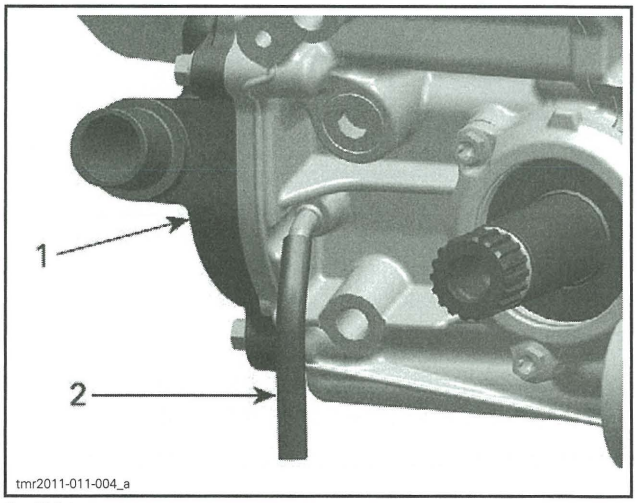

1. Water pump
2. Leak indicator hose

NOTE: Another leak indicator hole is visible on the PTO side. It provides an indication of the PTO gasket condition. If a liquid leaks from this hole, PTO gasket replacement is necessary.

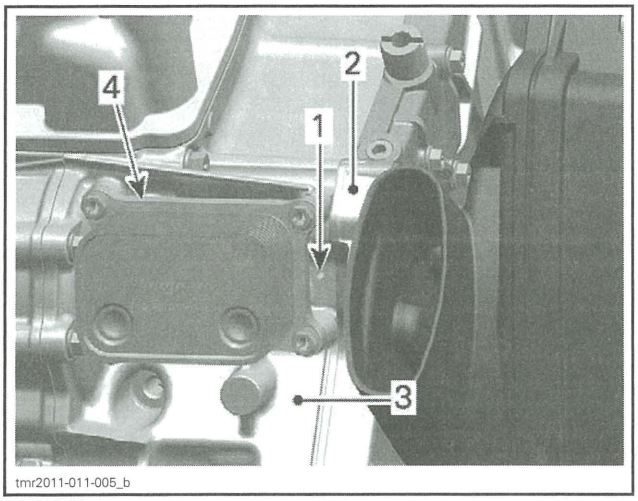

tmr2011-011-005_b

TYPICAL
1. *Leak indicator hole*
2. *PTO cover*
3. *Crankcase PTO, front side*
4. *Oil cooler (800R and 1000 only)*

3. Ensure vent hose on coolant expansion tank is not obstructed.

Engine Cooling System Pressure Cap Test

1. Remove gauge support. Refer to *BODY* subsection.
2. Remove pressure cap.

⚠ WARNING
To avoid potential burns, do not remove the pressure cap if the engine is hot.

3. Test the pressure cap using a cooling system tester.
4. Replace the cap if it does not hold the pressure, or if it opens at a relief pressure that is too low or too high.

PRESSURE CAP RELIEF PRESSURE
Approximately 110 kPa (16 PSI)

Engine Cooling System Leak Test

1. Remove gauge support. Refer to *BODY* subsection.
2. Remove pressure cap.

⚠ WARNING
To avoid potential burns, do not remove the pressure cap if the engine is hot.

3. Pressurize cooling system as follows.

REQUIRED TOOLS	
TEST CAP (P/N 529 035 991)	VACUUM/PRESSURE PUMP (P/N 529 021 800)
	

COOLING SYSTEM LEAK TEST
110 kPa (16 PSI)

If there is no pressure drop after 10 minutes, there is no leak in the cooling system.

If the pressure drops, check all hoses, radiator, cylinders and engine base for coolant leaks or air bubbles.

Engine Coolant Replacement

Engine Cooling System Draining

⚠ CAUTION Engine coolant can be very hot. Coolant draining should be carried out on a cold engine.

1. Remove gauge support. Refer to *BODY* subsection.
2. Remove cooling system pressure cap.

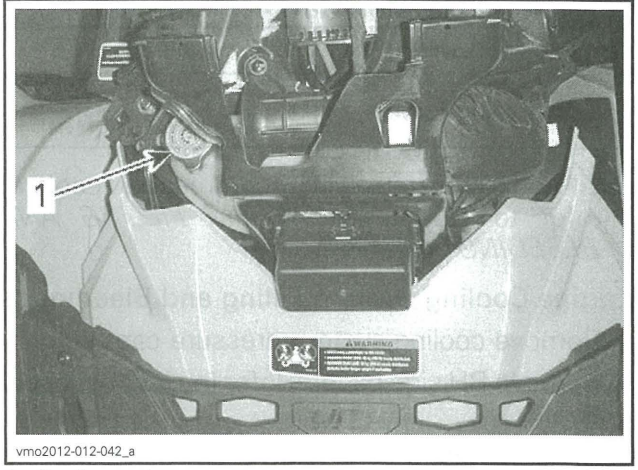

vmo2012-012-042_a

1. Cooling system pressure cap

3. Unscrew coolant drain plug.

NOTE: Coolant drain plug is accessible from underneath RH footrest panel.

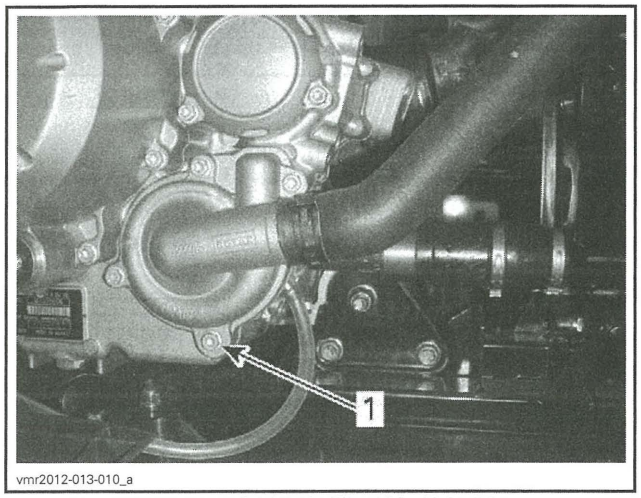

TYPICAL - SOME PARTS REMOVED FOR CLARITY
1. Coolant drain plug

4. Drain cooling system into a suitable container.

500, 650 and 800R Engines

5. Disconnect the lower radiator hose and drain the remaining coolant.

NOTE: Take note of the hose clamp position before it is loosened for hose removal.

All Engines

6. Reinstall coolant drain plug with a **NEW** sealing ring.
7. Tighten coolant drain plug to specification.

COOLANT DRAIN PLUG	
Gasket	NEW
Tightening torque	10 N•m ± 1 N•m (89 lbf•**in** ± 9 lbf•**in**)

8. Fill cooling system with recommended coolant, refer to *COOLING SYSTEM FILLING AND BLEEDING* procedure.

Engine Cooling System Filling and Bleeding

1. Remove cooling system pressure cap.
2. Remove RH side panel. Refer to *BODY* subsection.
3. Unscrew bleed screws on thermostat housing covers of both front and rear cylinders.

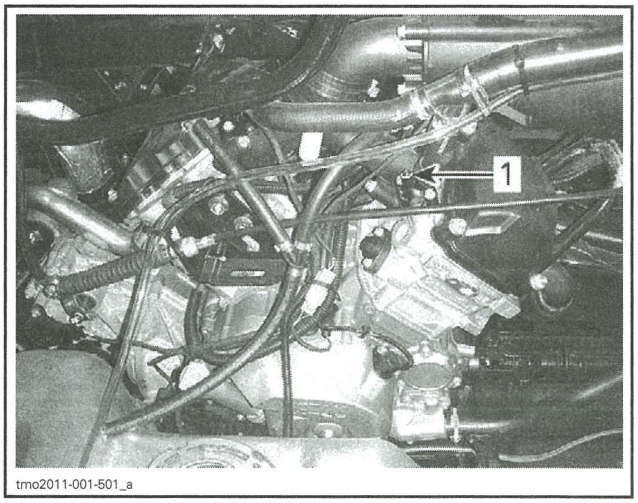

TYPICAL - 1000 ENGINE SHOWN
1. Front cylinder bleed screw

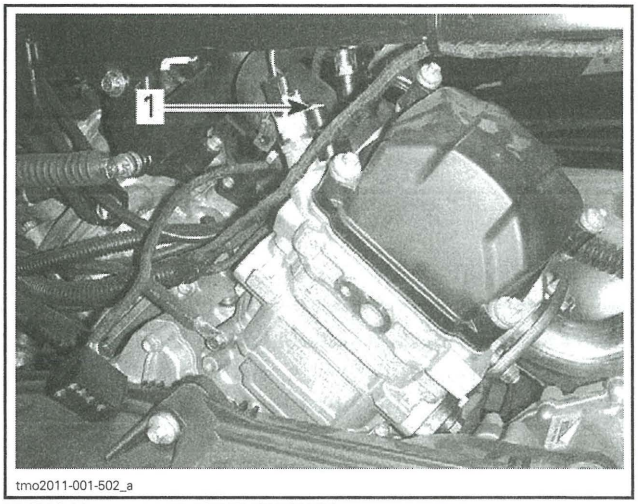

TYPICAL - 1000 ENGINE SHOWN
1. Rear cylinder bleed screw

4. Fill cooling system until coolant comes out of bleed screws.

500, 650 and 800R Engines

5. Squeeze the top of the coolant hose between the radiator and coolant pump several times to all air is bled from the highest point of the hose.

All Engines

6. Install bleed screws using **NEW** gasket rings.
7. Tighten bleed screws to specification.

HOLDING STRIP SCREWS	
Gasket	NEW
Service product	LOCTITE 243 (BLUE) (P/N 293 800 060)
Tightening torque	4 N•m ± 0.5 N•m (35 lbf•**in** ± 4 lbf•**in**)

BLEED SCREWS	
Gasket	NEW
Tightening torque	5.0 N•m ± 0.6 N•m (44 lbf•**in** ± 5 lbf•**in**)

8. Refill coolant tank up to MAX level mark.
9. Install cooling system pressure cap.
10. Run engine at idle with the pressure cap **ON** until the cooling fan cycles on for a second time.
11. Stop the engine and let it cool down.

⚠ WARNING

Do not remove the pressure cap if the engine is hot.

12. Check coolant level in the coolant tank. Refer to *ENGINE COOLANT LEVEL VERIFICATION* in this subsection.
13. Add coolant if required.

ENGINE (CYLINDER HEAD)

Engine Valve Clearance Inspection and Adjustment

NOTE: Check and adjust valve clearance only when engine is cold.

1. Remove valve covers, refer to *TOP END* subsection.
2. Before checking or adjusting the valve clearance, turn crankshaft clockwise to TDC ignition of the respective cylinder, refer to *CAMSHAFT TIMING GEAR* in the *TIMING CHAIN* subsection.

NOTICE **Crankshaft must be turned clockwise only to avoid loosening the magneto retaining bolt.**

3. Using a feeler gauge, check the valve clearance.

VALVE CLEARANCE	
EXHAUST	0.11 mm to 0.19 mm (.0043 in to .0075 in)
INTAKE	0.06 mm to 0.14 mm (.0024 in to .0055 in)

If the valve clearance is out of specification, adjust valves as follows.

NOTE: Use the center value of exhaust/intake specification to ensure a proper valve adjustment.

4. Hold the adjustment screw at the proper position and torque the locking nut.

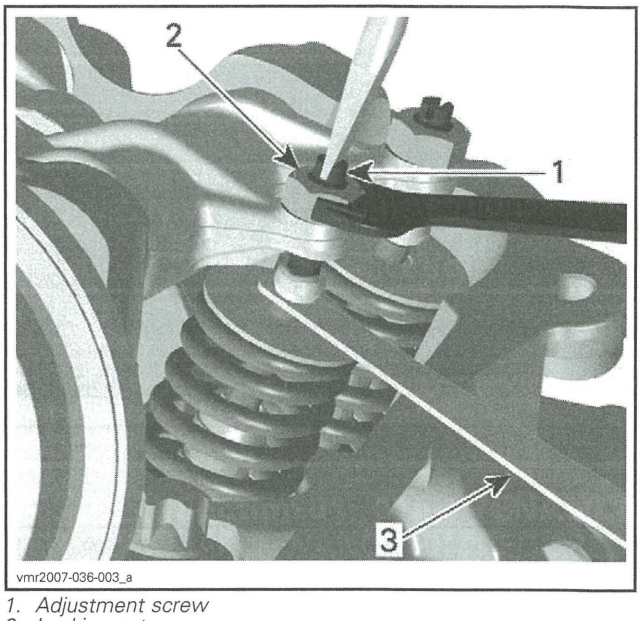

1. Adjustment screw
2. Locking nut
3. Feeler gauge

5. Repeat the procedure for each valve.
6. Before installing valve covers, recheck valve clearance.

GEARBOX

Recommended Gearbox Oil

ENGINE	RECOMMENDED PRODUCT	QUANTITY
500, 650, 800R	XPS SYNTHETIC GEAR OIL (75W 140) (P/N 293 600 140)	Approximately 400 ml (13.53 U.S. oz)
1000		Approximately 450 ml (15.22 U.S. oz)

If the recommended oil is not available, use a 75W140 gearbox oil that meets the API GL-5 specification.

Gearbox Oil Level Verification

NOTE: Prior checking the gearbox oil level, ensure vehicle is on a level surface.

1. To reach gearbox oil level plug, refer to *BODY* and remove the following parts:
   - Seat
   - Console
   - RH side panel

- RH footrest panel (Outlander)
- RH engine panel (Renegade).

2. Remove the gearbox oil level plug.

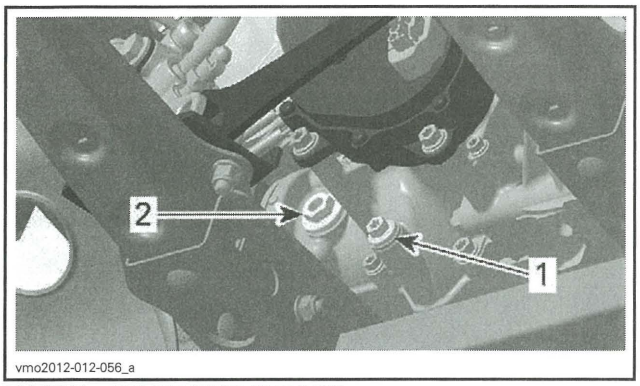

TYPICAL - 500/650/800R ENGINES
1. *Drain plug*
2. *Oil level plug*

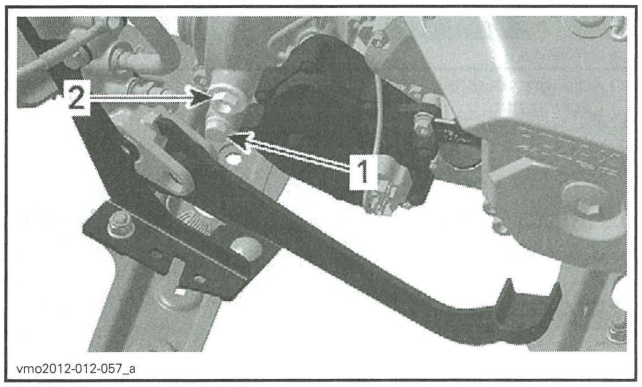

TYPICAL - 1000 ENGINE
1. *Drain plug*
2. *Oil level plug*

3. Check oil level.

The oil should be level with the bottom of the oil level hole.

NOTICE **Operating the gearbox with an improper oil level may severely damage gearbox.**

Gearbox Oil Replacement

Gearbox Oil Draining Procedure

1. Start engine and operate vehicle to warm-up the gearbox oil.

NOTE: Running engine at idle is not sufficient, vehicle transmission must be operated.

2. Position vehicle on a level surface.
3. Place a drain pan under the gearbox drain plug area.
4. Clean drain plug area.
5. Remove magnetic drain plug and sealing ring. Discard sealing ring.

⚠ WARNING

The gearbox oil can be very hot.

6. Remove oil level plug and its O-ring.

NOTE: Allow oil to completely flow out of gearbox.

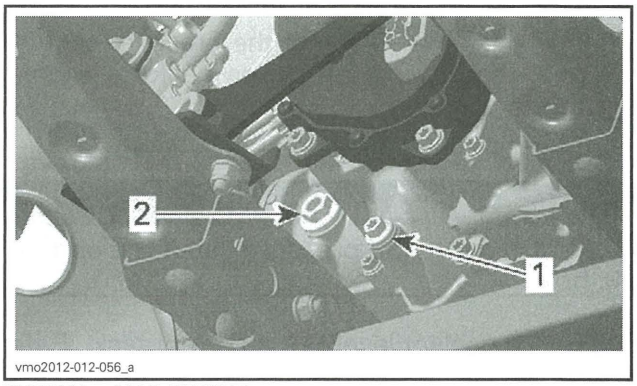

TYPICAL - 800R ENGINE
1. *Magnetic drain plug*
2. *Oil level plug*

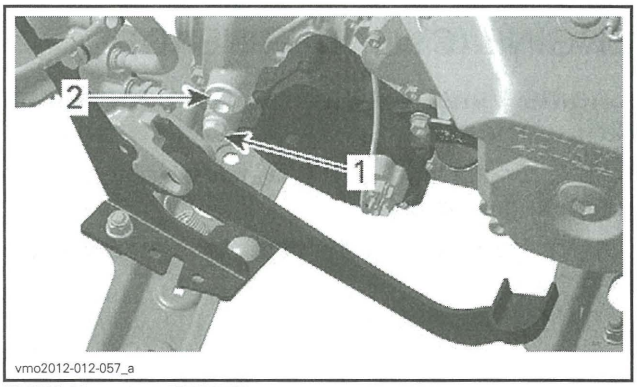

TYPICAL - 1000 ENGINE
1. *Magnetic drain plug*
2. *Oil level plug*

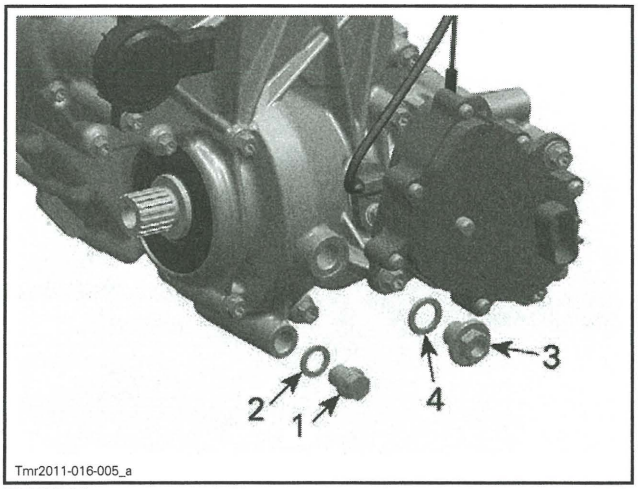

TYPICAL
1. *Magnetic drain plug*
2. *Sealing ring*
3. *Oil level plug*
4. *O-ring*

7. Clean magnetic drain plug and pay attention to any debris present on drain plug.

NOTE: Presence of excessive debris provides an indication of a gearbox problem.

8. Reinstall magnetic drain plug with a NEW sealing ring.

DRAIN PLUG	
Gasket	NEW
Tightening torque	20 N•m ± 2 N•m (15 lbf•ft ± 1 lbf•ft)

9. Dispose gearbox oil as per your local environmental regulations.

Gearbox Oil Filling Procedure

1. Fill the gearbox through the oil level hole until the oil reaches the bottom of the oil level hole.
2. Install the oil level plug with its O-ring. Tighten plug as per table.

OIL LEVEL PLUG	
Tightening torque	5 N•m ± 0.6 N•m (44 lbf•**in** ± 5 lbf•**in**)

Vehicle Speed Sensor (VSS) Cleaning

Remove the VSS. Refer to *GEARBOX AND 4X4 COUPLING UNIT (500/650/800R)* or *GEARBOX AND 4X4 COUPLING UNIT (1000)* subsection.

Remove all metal particles and oil from the VSS magnet.

NOTE: A dirty VSS will cause erratic speedometer readings.

CONTINUOUSLY VARIABLE TRANSMISSION (CVT)

CVT Air Inlet/Outlet Cleaning

1. Remove CVT cover, refer to *CONTINUOUSLY VARIABLE TRANSMISSION (CVT)* subsection.
2. Inspect and clean the air inlet and outlet openings from inside the CVT cover.
3. Inspect and clean the air outlet duct connected to the exhaust system heat shield under the seat.

NOTE: If a lot of debris or grime are found in the CVT system, it may be necessary to remove the ducts and thoroughly clean them.

4. Reinstall CVT cover.

CVT Air Filter Cleaning

CVT Air Filter Removal

1. Remove gauge support, refer to *LIGHTS, GAUGE AND ACCESSORIES* subsection.
2. Remove air filter from CVT air inlet by stretching its sides.

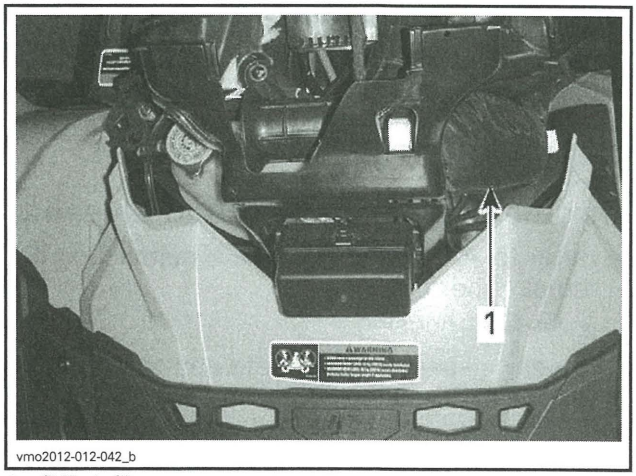

1. *CVT air filter*

CVT Air Filter Cleaning

1. Remove CVT air filter.
2. Inspect filter and replace if damaged.
3. Gently clean filter using a solution of soft soap and tap water, then rinse thoroughly.
4. Dry filter completely.
5. Clean inside the CVT air inlet duct.

CVT Air Filter Installation

1. Install air filter on CVT inlet.
2. Install gauge support.

Drive Belt Inspection

1. Inspect belt for cracks, fraying or abnormal wear. Replace if necessary.
2. Check drive belt width at cord level. Replace if it is out of specification (see table below).

DRIVE BELT WIDTH	
SERVICE LIMIT	30 mm (1.181 in)

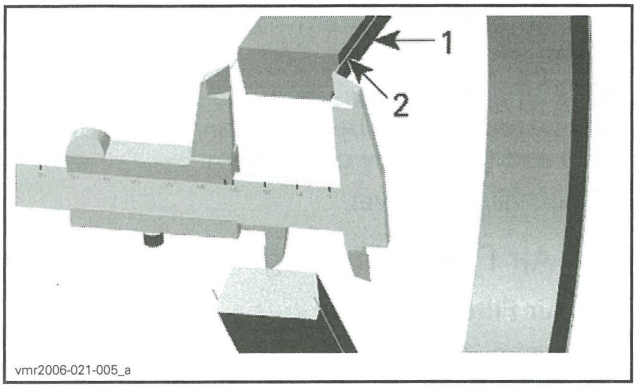

1. *Drive belt*
2. *Cord in drive belt*

Drive Pulley, Driven Pulley and One-Way Bearing Maintenance

Refer to *CONTINUOUSLY VARIABLE TRANSMISSION (CVT)* subsection.

FUEL SYSTEM

Throttle Body Inspection and Cleaning

1. Refer to *AIR INTAKE SYSTEM* subsection and remove the following.
   - Air filter housing.
2. Visually inspect throttle plate and throttle body venturi for cleanliness.
3. Clean inside throttle body if necessary. Refer to *ELECTRONIC FUEL INJECTION (EFI)*.

Throttle Cable Lubrication

The throttle cable must be lubricated with CABLE LUBRICANT (P/N 293 600 041) or an equivalent.

⚠ WARNING

Always use a silicone-based lubricant. Using another lubricant (like a water-based lubricant) could cause the throttle lever/cable to become sticky and stiff.

Open the throttle lever housing.

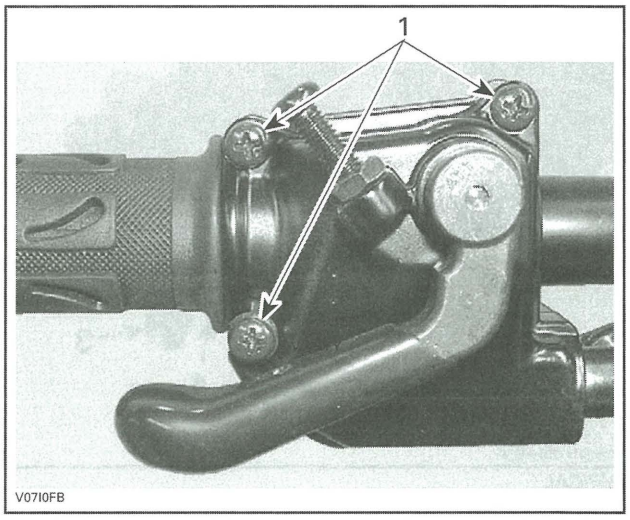

1. *Remove these screws*

Separate the housing.

Slide rubber protector back to expose throttle cable adjuster.

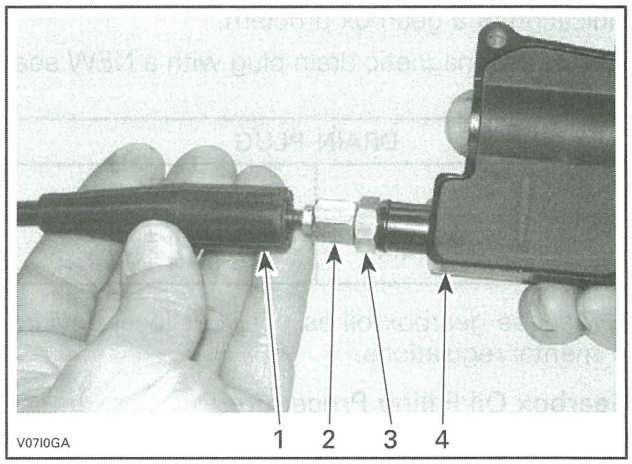

1. *Cable protector*
2. *Throttle cable adjuster*
3. *Lock nut*
4. *Throttle lever housing*

Screw in the throttle cable adjuster.

Remove inner housing protector.

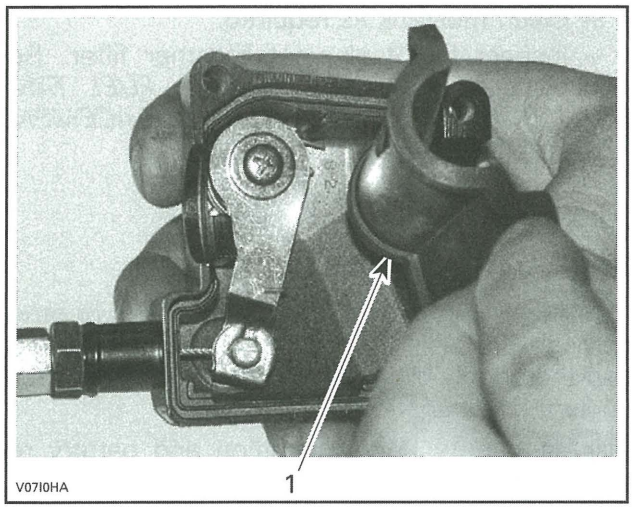

1. Inner housing protector

Remove the cable from the throttle lever housing.

NOTE: Slide cable in clip slot and remove the end of cable from clip.

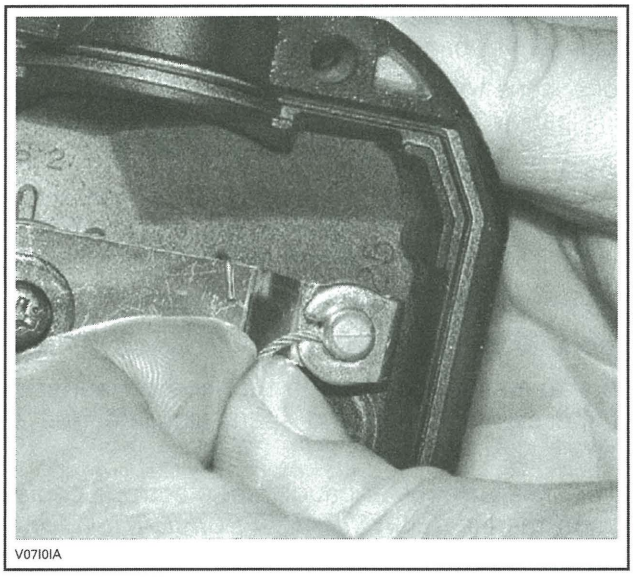

Remove the throttle body side cover.

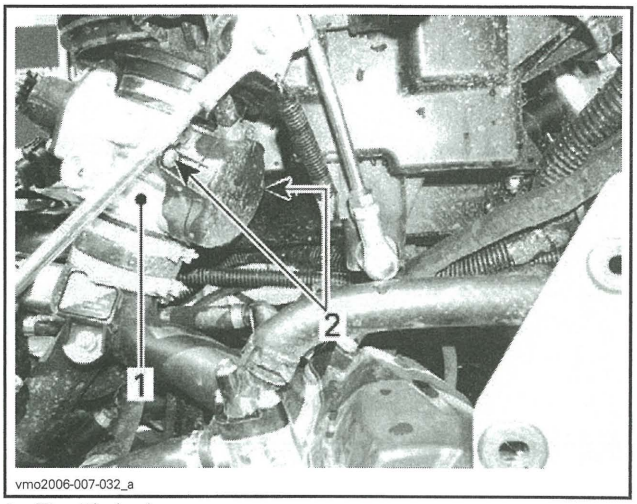

1. Throttle body
2. Side cover screws

Insert the needle of the lubricant can in the end of throttle cable adjuster.

⚠ CAUTION Always wear appropriate skin and eye protection. Chemicals can cause a skin rash and eye injury.

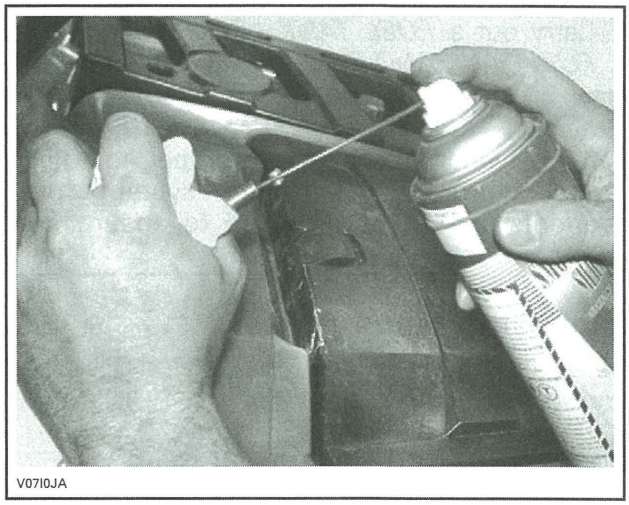

TYPICAL

NOTE: Place a rag around the throttle cable adjuster to prevent the lubricant from splashing.

Add lubricant until it runs out at throttle body end of the throttle cable.

Reinstall and adjust the cable. Refer to *ELECTRONIC FUEL INJECTION* subsection.

Fuel Tank Vent Breather Filter Replacement

Ensure breather filter is installed with the flow arrow pointing towards the vent inlet check valve.

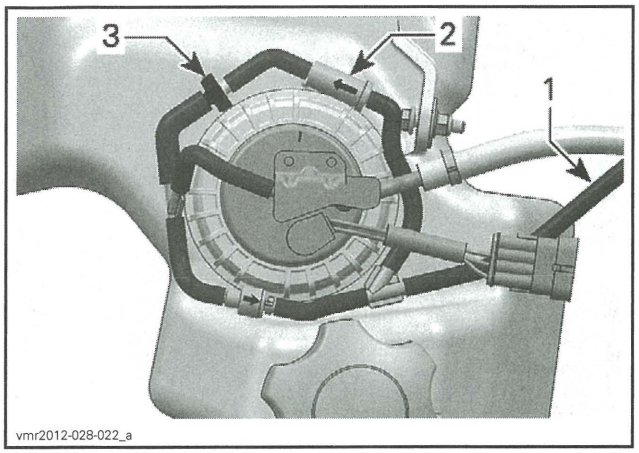

FUEL TANK VENT BREATHER FILTER
1. *Vent inlet hose*
2. *Direction arrow on breather filter pointing towards vent inlet check valve*
3. *Vent inlet check valve*

Fuel System Inspection

1. Visually inspect fuel tank for cracks, wear marks, signs of leakage or any other damages.
2. Visually inspect fuel system hoses for proper rooting, cracking, wear marks, signs of leakage or any other damages.
3. Carry out a *FUEL TANK LEAK TEST*, refer to *FUEL TANK AND FUEL PUMP* subsection.

⚠ WARNING

All fuel system leaks must be repaired. Damaged, worn or leaking fuel system components should be replaced to ensure fuel system tightness.

Fuel Pump Pressure Test

Refer to *FUEL TANK AND FUEL PUMP* subsection for procedure.

Fuel Pump Prefilter Cleaning

1. Remove fuel pump from fuel tank, refer to *FUEL PUMP REMOVAL* in *FUEL TANK AND FUEL PUMP* subsection.
2. Clean the fuel pump prefilter (strainer) using XPS BRAKES AND PARTS CLEANER (P/N 219 701 705) and low pressure air.
3. If the fuel pump prefilter is heavily soiled, clogged or damaged:
   - Replace it with a new one. Refer to *FUEL PUMP STRAINER REPLACEMENT* in the *FUEL TANK AND FUEL PUMP* subsection.
   - Inspect inside of fuel tank for contaminants.
   - Clean fuel tank as required.
   - Inspect fuel tank vent breather filter. Replace as necessary. Refer to *FUEL TANK VENT BREATHER FILTER REPLACEMENT* in this subsection.

ELECTRICAL SYSTEM

Battery Inspection

Visually inspect battery casing for cracks or other damage. If casing is damaged, replace battery and thoroughly clean battery rack with water and sodium bicarbonate (baking soda).

Inspect battery posts condition and battery retainer plate.

For battery testing, refer to *CHARGING SYSTEM* subsection.

Spark Plug Replacement

Spark Plug Access

For access to the LH spark plug, remove the aft inner fender panel from the front LH fender.

For access to the RH spark plug, remove the RH side panel.

Spark Plug Removal

1. Remove spark plug cable from spark plug.
2. Clean the spark plug area using pressurized air.
3. Remove spark plug.

Spark Plug Installation

Prior to installation, ensure that contact surfaces of the cylinder head and spark plug are free of grime.

1. Using a wire feeler gauge, set electrode gap as specified in *TECHNICAL SPECIFICATIONS*.
2. Apply antiseize lubricant over the spark plug threads to prevent possible seizure.

NOTICE Do not apply antiseize lubricant on the first 2 spark plug threads.

3. Hand screw spark plug into cylinder head, then tighten to specification using a torque wrench and an appropriate socket.

SPARK PLUG	
Tightening torque	20 N•m ± 2 N•m (15 lbf•ft ± 1 lbf•ft)

DRIVE SYSTEM

Front Differential Oil Level Verification

1. Clean filler plug prior to checking oil level.

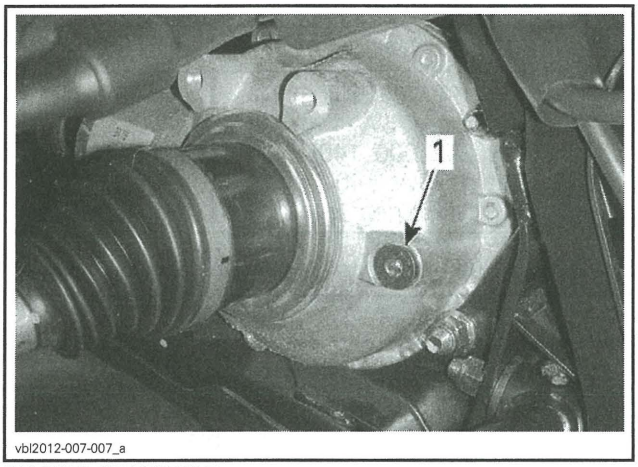

RH SIDE OF VEHICLE
1. Filler plug

2. With vehicle on a level surface, check oil level by removing filler plug. Oil level must reach the lower edge.
3. Reinstall filler plug with a NEW sealing ring.

FILLER PLUG	
Gasket	NEW
Tightening torque	22.5 N•m ± 2.5 N•m (17 lbf•ft ± 2 lbf•ft)

Front Differential Oil Replacement

1. Place vehicle on a level surface. Set transmission in park position.
2. Place a drain pan under the front differential.
3. Remove drain plug.
4. Remove filler plug.

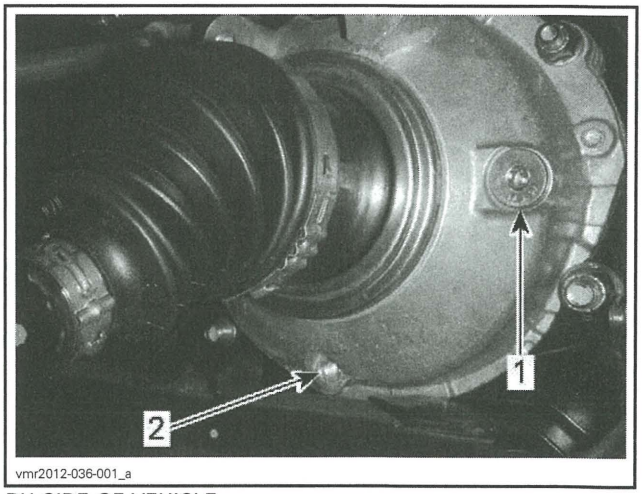

RH SIDE OF VEHICLE
1. Filler plug
2. Drain plug

5. Lift LH side of vehicle to completely drain front differential.

NOTE: Allow enough time for oil to flow out.

6. Lower vehicle on the ground.
7. Install and tighten drain plug to specification.

DRAIN PLUG	
Tightening torque	7.5 N•m ± 0.5 N•m (66 lbf•**in** ± 4 lbf•**in**)

8. Refill front differential with recommended oil.

CAPACITY	RECOMMENDED OIL
500 ml (17 U.S. oz)	XPS SYNTHETIC GEAR OIL (75W 90) (P/N 293 600 043) or a 75W 90 (API GL-5) gear oil

9. Reinstall filler plug with a NEW sealing ring.
10. Tighten filler plug to specification.

FILLER PLUG	
Gasket	NEW
Tightening torque	22.5 N•m ± 2.5 N•m (17 lbf•ft ± 2 lbf•ft)

Rear Final Drive Oil Level Verification

1. Ensure vehicle is on a level surface.
2. Clean filler plug area.
3. Remove filler plug.

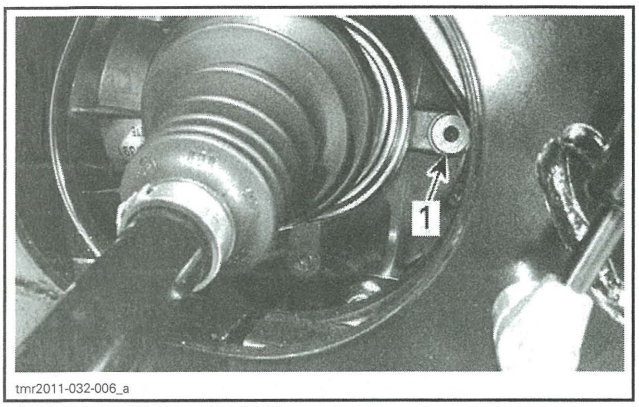

LH REAR SIDE OF VEHICLE
1. Filler plug

4. Verify the oil level by inserting a wire with a 90° bend through the oil filler hole.
5. Oil level must be within the following specification from the bottom of oil filler hole.

OIL LEVEL
20 mm ± 5 mm (9/16 in ± 3/16 in)

6. Reinstall filler plug with a NEW sealing ring.

FILLER PLUG	
Gasket	NEW
Tightening torque	22.5 N•m ± 2.5 N•m (17 lbf•ft ± 2 lbf•ft)

Rear Final Drive Oil Replacement

1. Ensure vehicle is on a level surface.
2. Clean filler and drain plug areas.
3. Place a drain pan under rear final drive.
4. Unscrew filler plug.
5. Remove drain plug.

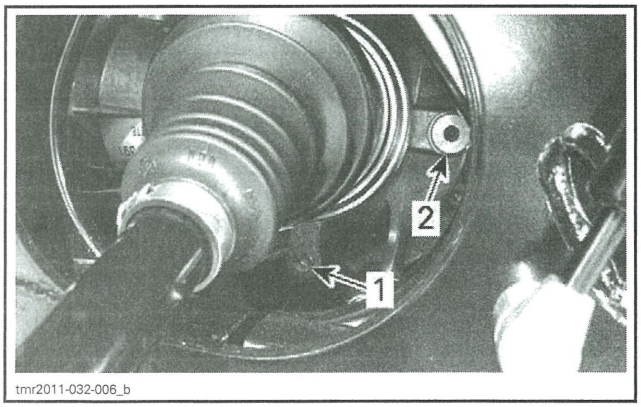

LH REAR SIDE OF VEHICLE
1. Drain plug
2. Filler plug

6. Install drain plug.

DRAIN PLUG	
Tightening torque	7.5 N•m ± 0.5 N•m (66 lbf•**in** ± 4 lbf•**in**)

7. Refill the rear final drive.

RECOMMENDED OIL	QUANTITY
XPS SYNTHETIC GEAR OIL (75W 140) (P/N 293 600 140) or a 75W 140 (API GL-5) gear oil	300 ml (10 U.S. oz)

8. Reinstall filler plug with a NEW sealing ring.

FILLER PLUG	
Gasket	NEW
Tightening torque	22.5 N•m ± 2.5 N•m (17 lbf•ft ± 2 lbf•ft)

Drive Shaft Boot and Protector Inspection

1. Visually inspect each drive shaft boot for grease leak, cracks or opening.
2. Check if the drive shaft boot protectors are fixed firmly, not torn or otherwise damaged.
3. Replace if necessary.

Drive Shaft Joint Inspection

Turn and move drive shaft back and forth to detect excessive play.

Rear Propeller Shaft U-Joint Condition

Check yoke U-joints for wear, backlash or axial play. Replace if necessary.

Rear Propeller Shaft U-Joint Lubrication

PROPELLER SHAFT U-JOINT LUBRICATION
Use Hi-temp bearing grease NLGI-2 or an equivalent

CHASSIS (WHEELS AND TIRES)

Wheel Lug Nut Torque Inspection

Tighten wheel lug nuts to the specified torque using the illustrated sequence.

WHEEL LUG NUTS	
Tightening torque	100 N•m ± 10 N•m (74 lbf•ft ± 7 lbf•ft)

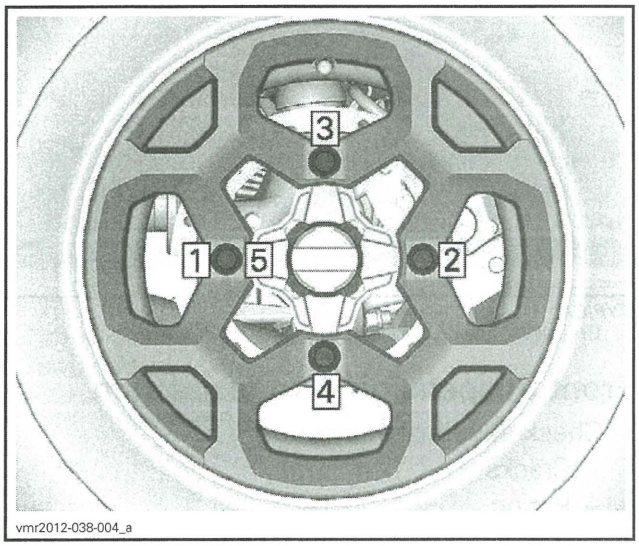

TIGHTENING SEQUENCE

Wheel Bearing Inspection

1. Safely lift and support the front of vehicle.
2. Hold wheel by the top and the bottom and try to move it by pulling and push alternately with both hands. Check for any play.
3. If there is any looseness detected, replace the wheel bearing. refer to *STEERING SYSTEM* subsection.

NOTE: To properly locate play during this inspection, be sure to check other components for wear or looseness (ball joints, suspension pivots, etc). If necessary repair or replace all defective parts before checking the wheel bearing condition. Be careful not to misinterpret a loose ball joint as a loose wheel bearing.

CHASSIS (STEERING SYSTEM)

Steering System Inspection

Steering Column

Turn and move steering column back and forth to detect any abnormal play.

If abnormal play is detected, inspect upper and lower steering column half bushings. Replace halve bushings and O rings as necessary, refer to *STEERING SYSTEM* subsection.

If steering column feels stiff, refer to *STEERING COLUMN HALF BUSHING CLEANING AND LUBRICATION* in this subsection.

Tie-Rod End

Check tie-rod end ball joint for:
- Damage
- Pitting
- Abnormal play.

Replace if necessary.

Steering Column Half Bushing Cleaning and Lubrication

Clean, inspect and lubricate upper and lower steering column half bushings and O rings. Refer to *STEERING SYSTEM* subsection.

CHASSIS (SUSPENSION)

Shock Absorber Inspection

Check shock absorber for any leaks, replace if necessary.

HPG Shock Absorber (without Remote Reservoir)

Check shock absorber for abnormal play:
- Front to back
- Up and down.

If any play is detected, replace shock absorber bushings. Refer to *REAR SUSPENSION* subsection.

Shock Absorber Spherical Bearing Lubrication

HPG Shock Absorber (with Remote Reservoir)

1. Remove shock absorber from vehicle.
2. Remove shock sleeves then O-rings from shock absorber.

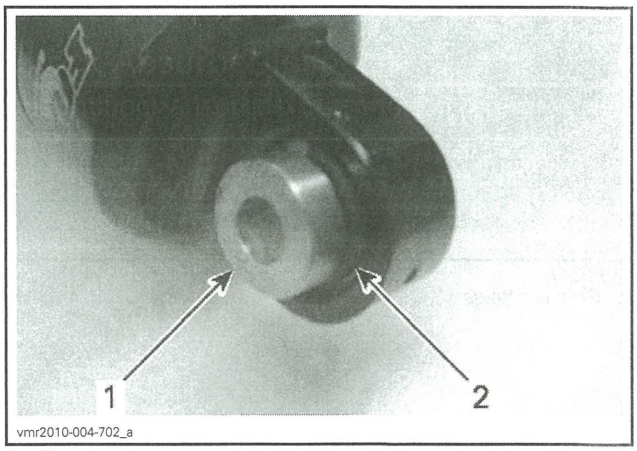

1. Sleeve
2. O-ring

3. Clean spherical bearing using a shop rag to remove any dirt and debris.
4. Lubricate spherical bearing as illustrated.

SPHERICAL BEARING LUBRICATION
SUSPENSION GREASE (P/N 293 550 033)

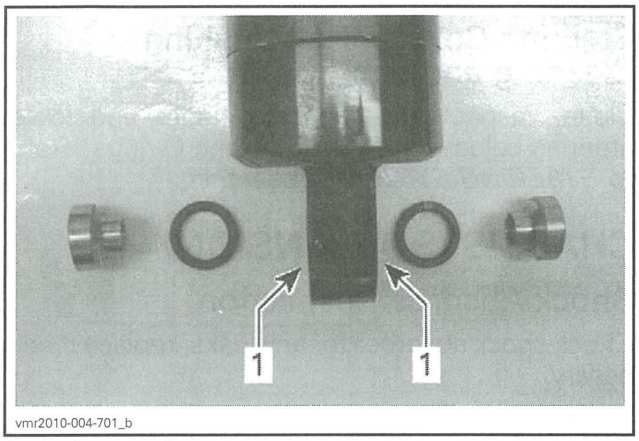

1. Apply grease here

5. Install O-rings then shock sleeves.
6. Install shock absorber.

Front Suspension Arm Lubrication

Lubricate suspension arm at grease fittings.

SUSPENSION ARM LUBRICATION
SUSPENSION GREASE (P/N 293 550 033)

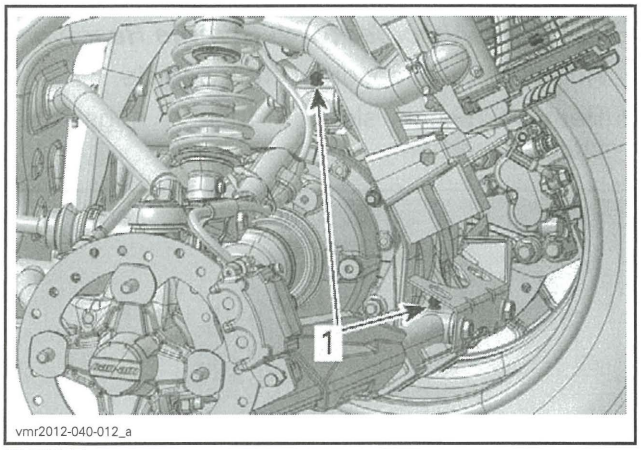

TYPICAL
1. Grease fittings

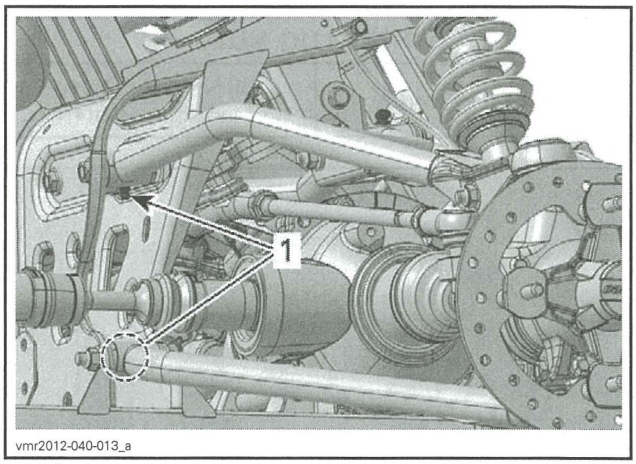

TYPICAL
1. Grease fittings

Front Suspension Arm Inspection

1. Check suspension arm for:
   - Cracks
   - Pitting
   - Bending
   - Distortion.
2. Check suspension arm for abnormal play:
   - Side to side
   - Up and down.
3. If any play is detected, inspect:
   - Bushings
   - Cushions.
4. Check ball joint for:
   - Damage
   - Pitting
   - Play.
5. Check ball joint bellows for:
   - Damage
   - Cracks.

Rear Suspension Arm Inspection

1. Check suspension arm for:
   - Cracks
   - Pitting
   - Bending
   - Distortion.
2. Check suspension arm for abnormal play:
   - Side to side
   - Up and down.
3. If any play is detected, inspect:
   - Bushings
   - Cushions.

4. Check ball joint for:
   - Damage
   - Pitting
   - Play.
5. Check ball joint bellows for:
   - Damage
   - Cracks.

Rear Anti-Sway Bar Bushing Inspection and Lubrication

Rear Anti-Sway Bar Bushing Inspection

Inspect bushings for:
- Cracks
- Damage
- Abnormal wear.

Rear Anti-Sway Bar Bushing Lubrication

Lubricate bushings at grease fittings.

LUBRICATION	
Anti-sway bar bushing	SUSPENSION GREASE (P/N 293 550 033)

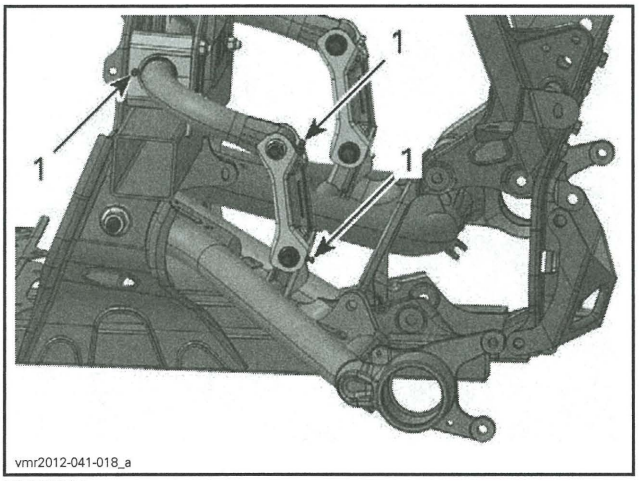

TYPICAL
1. Grease fittings

CHASSIS (BRAKES)

Brake System Inspection and Cleaning

NOTICE **Do not clean brake components in petroleum based solvent. Use brake system cleaner only. Soiled brake pads must be replaced with new ones.**

Brake Pads

1. Measure brake pad lining thickness.

BRAKE PAD MINIMUM THICKNESS
1 mm (1/32 in)

NOTE: The brake pad grooves are wear indicators.

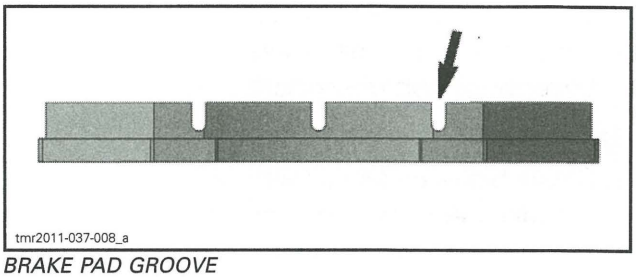

BRAKE PAD GROOVE

⚠ WARNING

Brake pads must always be replaced in pairs.

Brake Caliper

1. Remove caliper then check the following components:
   - Check brake pad pin
   - Check caliper boots for cracks
   - Check caliper movement on its support
   - Check pistons movement
   - Check pistons for scratches, rust or other damages.
2. Clean the following components using XPS BRAKES AND PARTS CLEANER (P/N 219 701 705):
   - Brake pads
   - Caliper support and slider
   - Caliper pistons and pin.

NOTE: Do not remove pistons from caliper for cleaning them.

3. Lubricate caliper slider using an appropriate *BRAKE CALIPER SYNTHETIC GREASE*.

Brake Disc

1. Check brake disc as follows:
   - Check disc thickness
   - Check disc surfaces
   - Check disc warpage.

NOTE: Refer to *BRAKE DISC INSPECTION* in *BRAKES* subsection for details.

2. Clean brake disc using XPS BRAKES AND PARTS CLEANER (P/N 219 701 705).

Master Cylinder

1. Check master cylinder as follows:
   - Leaks or damages.
   - Brake fluid level.

- Check cleanliness of master cylinder rod and boot.
- Check master cylinder boot for cracks or damage. Replace as necessary.

Hand Lever

Check hand lever as follows:
- Lever pivot bolt cleanliness
- Lever pivot bolt movement.

Brake Pedal

1. Check brake pedal as follows:
   - Brake pedal pivot movement
   - Brake pedal pivot cleanliness.
2. If required, clean then lubricate brake pedal pivot using XPS SYNTHETIC GREASE (P/N 293 550 010).

Brake Hoses

1. Check hoses for leaks, crushed, deformations, cracking or scrapes.

NOTE: Any deformation can restrict the proper flow of fluid and cause braking problems.

Brake Fluid Replacement

Brake Fluid Draining

1. Clean and remove reservoir cover with its diaphragm.
2. Connect a clear hose onto bleeder.

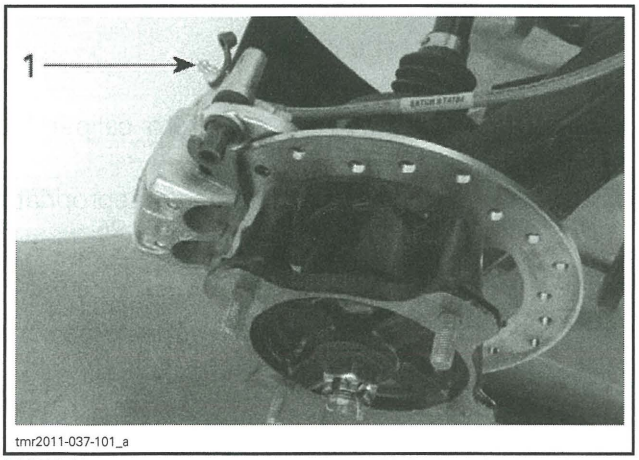

TYPICAL
1. Caliper bleeder

3. Loosen bleeder.
4. Pump brake lever(s) and/or brake pedal until no more fluid flows out.
5. Repeat draining procedure for the other bleeders.

NOTE: To locate all bleeders according to vehicle configuration, refer to *EXPLODED VIEW* and *BRAKE CIRCUIT CONFIGURATIONS*. See *BRAKES* subsection.

Brake Fluid Filling

1. Add recommended brake fluid to MAX. mark. Do not overfill.

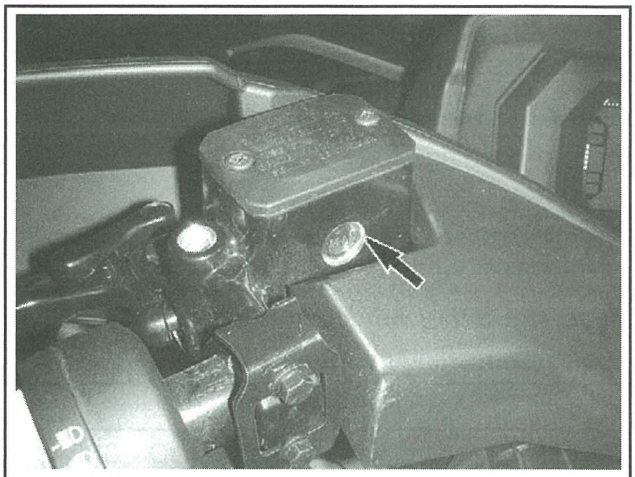

TYPICAL - BRAKE FLUID RESERVOIR

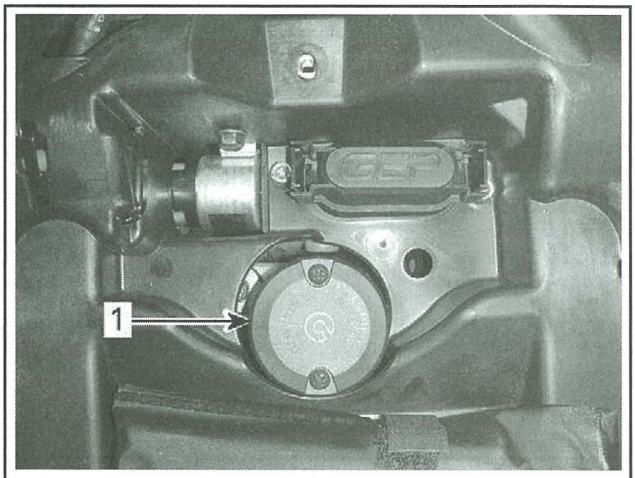

TYPICAL - UNDER THE SEAT
1. Brake fluid reservoir

NOTE: If applicable, ensure filler cap diaphragm is fully retracted before closing the cap.

RECOMMENDED BRAKE FLUID
DOT 4 BRAKE FLUID (P/N 293 600 131)

⚠ WARNING

- Use only DOT 4 brake fluid from a sealed container.
- Do not use brake fluid from an old or already opened container.

Brake Fluid Bleeding (Procedure Using a Vacuum Pump)

NOTE: Brake fluid reservoir must be kept full to prevent air from being pumped into the system.

1. Unscrew all bleeders until brake fluid comes out then close it.

NOTE: To locate all bleeders according to vehicle configuration, refer to *EXPLODED VIEW* and *BRAKE CIRCUIT CONFIGURATIONS*. See *BRAKES* subsection.

2. Install the Vacuum/pressure pump onto bleeder.

REQUIRED TOOL	
VACUUM/PRESSURE PUMP (P/N 529 021 800)	

3. Place pump to vacuum position.
4. Pump vacuum pump a few times.
5. Loosen bleeder.
6. Continue to pump until no more air bubbles appear in clear hose.
7. Close then tighten bleeder.

BLEEDER	
Tightening torque	5.5 N•m ± 1.5 N•m (49 lbf•**in** ± 13 lbf•**in**)

8. Add recommended brake fluid to MAX. mark. Do not overfill.
9. Perform bleeding procedure for the other bleeders.
10. Check brakes operation:
    - If brakes feel spongy, bleed system again then carry out the *BRAKE SYSTEM PRESSURE VALIDATION* as detailed in *BRAKES* subsection.

Brake Fluid Bleeding (Manual Procedure)

NOTE: Brake fluid reservoir must be kept full to prevent air from being pumped into the system.

1. Connect a clear hose onto bleeder.
2. Pump up system pressure slowly using brake pedal and/or lever(s) until resistance is felt.
3. Depress and hold brake pedal and/or lever(s).
4. Open bleeder and then close it.
5. Release brake pedal and/or lever(s) slowly.

NOTE: Do not release brake pedal and/or lever(s) until bleeder has been closed.

6. Repeat procedure until fluid flows out without any air bubbles.
7. Tighten bleeder.

BLEEDER	
Tightening torque	5.5 N•m ± 1.5 N•m (49 lbf•**in** ± 13 lbf•**in**)

8. Perform bleeding procedure for the other bleeders.

NOTE: To locate all bleeders according to vehicle configuration, refer to *EXPLODED VIEW* and *BRAKE CIRCUIT CONFIGURATIONS*. See *BRAKES* subsection.

9. Check brakes operation:
    - If brakes feel spongy, bleed system again then carry out the *BRAKE SYSTEM PRESSURE VALIDATION* as detailed in *BRAKES* subsection.

CHASSIS (BODY)

Seat Latch Inspection and Operation

Ensure seat latch functions properly and that seat is properly secured when latched.

Rear Cargo Compartment Latch Inspection and Operation

Ensure cargo compartment latch functions properly and that compartment panel is properly secured when latched.

CHASSIS (FRAME)

Frame Inspection

Inspect frame for damages such as:
- Cracks
- Dents
- Twisting
- Deformation
- Corrosion
- Loose fasteners.

Pay particular attention to:
- Front and rear frame extensions (body modules)
- Underside of frame
- Suspension attachment points
- Engine attachment points.

Tow Hitch Inspection

1. Ensure tow hitch receptacle module is solidly mounted.

2. Inspect hitch for cracks and other damages.
3. Repair or replace if necessary.

STORAGE PROCEDURE

SERVICE PRODUCTS

Description	Part Number	Page
BRP HEAVY DUTY CLEANER	293 110 001	39
XPS ATV CLEANING KIT	219 701 713	39
XPS ATV FINISHING SPRAY	219 701 704	39
XPS ATV WASH	219 701 702	38
XPS FUEL STABILIZER	413 408 601	37
XPS LUBE	293 600 016	38–39
XPS MULTI-PURPOSE CLEANER	219 701 709	39
XPS STORAGE OIL (EXCEPT U.S. COUNTRY)	413 711 600	37
XPS STORAGE OIL (U.S. COUNTRY ONLY)	413 711 900	37

GENERAL

If the ATV is not used or is to be stored for an extended period of time, more than 4 months, be sure to perform the storage procedures described below.

Where applicable, refer to the appropriate subsections in this manual for details of the required tasks as outlined in these procedures.

PROCEDURES

NOTE: To facilitate the inspection and ensure adequate lubrication of components, it is recommended to clean the entire vehicle. Refer to *VEHICLE CLEANING* in this subsection.

FUEL SYSTEM

Fuel System Protection

Pour fuel stabilizer in fuel tank and fill up fuel tank.

Start vehicle to allow for fuel stabilizer to spread through the fuel system.

Follow the manufacturer's instructions for proper use.

RECOMMENDED FUEL SYSTEM PROTECTION
XPS FUEL STABILIZER (P/N 413 408 601)

NOTICE **Fuel stabilizer should be added prior to engine lubrication to ensure fuel system components protection against varnish deposits.**

ENGINE

Engine Internal Lubrication

Engine internal parts must be lubricated to protect them from rust formation during the storage period.

Proceed as follows:

1. Remove side body panels.
2. Remove spark plugs.
3. Spray storage oil into each cylinder (see following table).

NOTE: Use the storage oil as per country availability.

RECOMMENDED PRODUCTS
XPS STORAGE OIL (EXCEPT U.S. COUNTRY) (P/N 413 711 600)
XPS STORAGE OIL (U.S. COUNTRY ONLY) (P/N 413 711 900)

4. Press start button, 1 or 2 seconds maximum, to lubricate cylinders.
5. Reinstall spark plugs.

NOTE: Do not run engine during storage period.

Engine Air Intake System

Remove parts required for access to engine air inlet hose, refer to *AIR INTAKE SYSTEM* subsection.

Block engine air inlet hose using a rag to prevent intrusion of small animals.

CVT Protection

1. Remove drive belt. Refer to *CONTINUOUSLY VAIABLE TRANSMISSION (CVT).*
2. Inspect and clean pulleys.

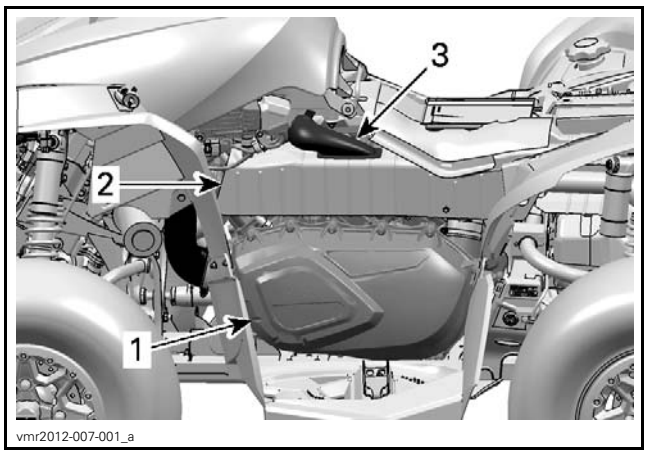

TYPICAL
1. *CVT cover*
2. *Exhaust system heat shield*
3. *CVT outlet*

6. Block CVT outlet hose using a rag.

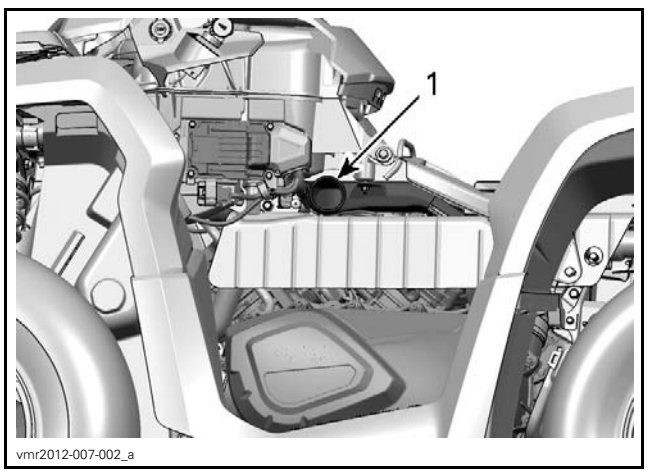

TYPICAL
1. *CVT outlet hose*

Exhaust System

Block muffler outlet using a rag to avoid intrusion of small animals.

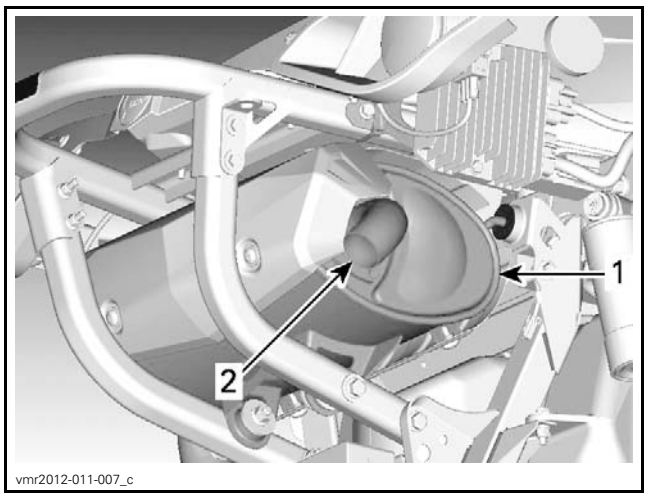

TYPICAL - RENEGADE MODEL ILLUSTRATED
1. *Muffler*
2. *Block with rag here*

ELECTRICAL SYSTEM

Battery Removal

Remove battery from ATV.

Store and charge battery as per battery manufacturer's recommendations.

DRIVE SYSTEM

Lubricate rear propeller shaft U-joints.

CHASSIS

Lubrication

Lubricate front and rear suspension.

Tire Pressure

Inflate tires to recommended pressure.

Vehicle Cleaning

Wash and dry the vehicle.

NOTICE **Never use a high pressure washer to clean the vehicle. USE LOW PRESSURE ONLY (such as a garden hose). The high pressure can cause electrical or mechanical damages.**

Remove any dirt or rust.

To clean plastic parts, use only flannel cloths and XPS ATV Wash (P/N 219 701 702) or soapy water.

To clean vinyl parts, use only flannel cloths and a mild non abrasive multipurpose cleaner.

RECOMMENDED PRODUCT FOR PLASTIC PARTS
XPS ATV Wash (P/N 219 701 702)
Soapy water

NOTICE It is necessary to use flannel cloths on plastic parts to avoid damaging surfaces. Never clean plastic parts with strong detergent, degreasing agent, paint thinner, acetone, products containing chlorine, etc. To avoid damaging the glossy finish on Polypropylene body parts, never use:

– Petroleum based cleaning products
– XP-S ATV Finishing Spray (P/N 219 701 704)
– XP-S ATV Cleaning Kit (P/N 219 701 713).

RECOMMENDED PRODUCT FOR VINYL PARTS
XPS MULTI-PURPOSE CLEANER (P/N 219 701 709)

To clean heavily soiled parts of the vehicle, including metallic parts use the following.

RECOMMENDED PRODUCT FOR HEAVILY SOILED PARTS
BRP HEAVY DUTY CLEANER (P/N 293 110 001)

Inspect the vehicle and repair any damage. Touch up all metal spots where paint has been scratched off.

Spray all metal parts with an appropriate lubricant for rust protection.

RECOMMENDED RUST PROTECTION
XPS LUBE (P/N 293 600 016)

Vehicle Protection

Protect the vehicle with a cover to prevent dust accumulation during storage.

NOTICE The vehicle has to be stored in a cool and dry place, and covered with an opaque tarpaulin. This will prevent sun rays and grime from affecting plastic components and vehicle finish.

PRESEASON PREPARATION

Proper vehicle preparation is required after a storage period.

Any worn, broken or damaged parts found must be replaced.

Remove rags that were installed for storage: engine air inlet hose, CVT outlet hose and muffler.

Clean drive and driven pulleys to remove storage protective lubricant, then reinstall drive belt. Refer to *CONTINUOUSLY VARIABLE TRANSMISSION (CVT)*.

Remove parts required to allow inspection of entire engine air inlet system. Check for animal nests and other foreign material. Reinstall removed parts.

Drain fuel tank and fill with fresh fuel if a fuel stabilizer was not used for storage.

Reinstall battery. Refer to *CHARGING SYSTEM* subsection.

Inflate tires to the recommended pressure.

Using the *MAINTENANCE SCHEDULE*, perform the items titled EVERY 3 000 km (2,000 mi) OR 100 HOURS OF OPERATION OR 1 YEAR.

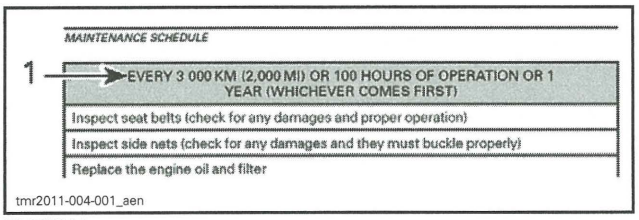

TYPICAL
1. Use this schedule

NOTE: If the EVERY 6 000 km (4,000 mi) OR 200 HOURS OF OPERATION OR 2 YEARS maintenance service is due, also perform the related items as per the *MAINTENANCE SCHEDULE*.

Test drive vehicle.

SPECIAL PROCEDURES

SERVICE PRODUCTS

Description	Part Number	Page
XPS LUBE	293 600 016	44

GENERAL

NOTE: Component failures resulting from these events are not warrantable.

Refer to the appropriate subsections in this manual for details of the required tasks as outlined in these procedures.

WHAT TO DO IF WATER IS IN THE CVT

The CVT drain plug is located on the rear portion of the CVT cover. It is accessible from the rear LH fender.

Inspect the CVT drain plug to validate if water is present.

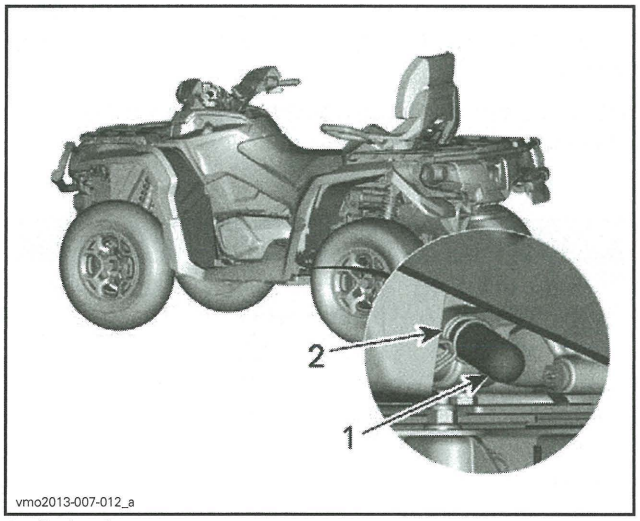

1. Drain plug
2. Spring clamp

NOTICE If water is present in the CVT, it could result in belt slippage. The engine will accelerate but the vehicle will remain still.

If water is present, remove CVT drain plug to expel water.

Reinstall the drain plug and secure it using the spring clamp.

NOTE: Make sure hose is properly inserted on CVT cover nipple.

If an appreciable amount of water is drained from the CVT cover, remove the cover and properly service the CVT.

WHAT TO DO IF WATER IS IN THE AIR FILTER HOUSING

Inspect the drain reservoir underneath the air filter housing to validate if water is present.

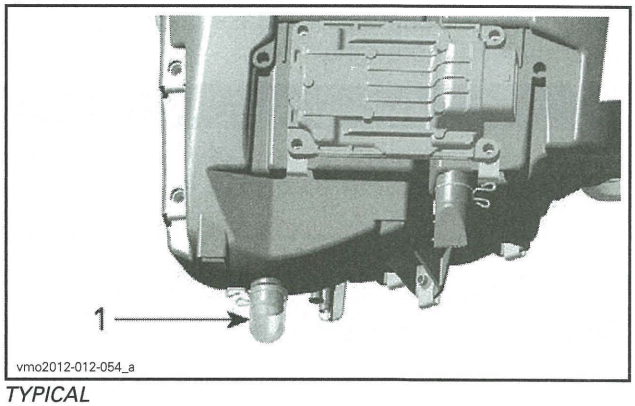

TYPICAL
1. Air filter housing drain reservoir

If water is present, press clamp and remove reservoir to drain water from air filter housing.

If one of the following conditions is met, refer to *WHAT TO DO IF VEHICLE IS IMMERSED IN WATER*:

- If more than 50 ml (2 U.S. oz) of water (approximately 5 drain reservoirs) is found in the air filter housing.
- If any deposits are present in the drain reservoir.

NOTICE Failure to service vehicle properly may lead to component permanent damage.

WHAT TO DO IF VEHICLE IS TURNED OVER

In the event the vehicle was rolled over tilted on it's side; put the vehicle back on its wheel, wait 3 to 5 minutes, then check the following:

- Inspect air filter housing for oil accumulation, if any oil is found, clean air filter and air filter housing.

- Check engine oil level and refill if necessary.
- Check engine coolant level and refill if necessary.
- Check gearbox oil level and refill if necessary.
- Check rear final drive oil level and refill if necessary.
- Inspect suspension components and steering system components.
- Inspect body and chassis for any damages.
- Start engine. If the oil pressure light stays on, stop engine immediately and investigate the problem.
- After restarting engine, check for indicator lights or messages displayed in the multifunction gauge. Correct as required.

Limited model: Inspect ACS intake hose for any trace of oil. Clean thoroughly if oil is found in hose. If oil reached compressor, disassemble compressor and clean thoroughly.

⚠ WARNING

Do not use vehicle if any of the controls, steering, suspension or brakes are damaged or inoperative.

WHAT TO DO IF VEHICLE IS IMMERSED IN WATER

In the event the vehicle was immersed, proceed with the following.

NOTICE **A vehicle that was immersed may be damaged or prone to malfunctions (short and long term) if not serviced promptly and appropriately. Do not crank or start engine.**

Drain the entire air intake system. Inspect the throttle body. Remove parts as required.

Inspect and clean air box as needed. Remove parts as required.

Replace the air filter.

Drain, inspect and clean the CVT.

Limited model: Inspect ACS hose. If water is present, disassemble and dry compressor.

Inspect front differential and rear final drive vents. Clean or replace as necessary.

Drain muffler and exhaust pipes (removal required).

Clean muffler spark arrester.

Remove fuse box covers. Check for presence of water. Dry as necessary.

Disconnect, clean and dry the following electrical connectors:
- ECM
- Multifunction gauge
- DPS.

Replace the engine oil (without starting the engine).

Replace gearbox oil.

Inspect fuel tank for water intrusion. If in doubt, flush fuel tank and refill with new fuel.

Inspect fuel tank vent system for water intrusion. Clean as required. Replace breather filter. Carry out a fuel pump pressure test.

Inspect brake system for water intrusion. Replace brake fluid as required.

Inspect all lights for water intrusion. Dry as required.

Inspect multifunction switch for water intrusion. Dry as required.

Remove spark plugs. Crank engine in drowned mode to expel any water.

⚠ CAUTION Keep away from spark plug holes to avoid being splashed when cranking engine.

Add a small quantity of engine oil in cylinders (approximately 2 teaspoonfuls).

Install spark plugs (replace if required).

⚠ WARNING

Before starting engine, use B.U.D.S. and check vehicle for fault codes.

Start the engine and allow it to run at idle speed until the engine reaches its operating temperature.

Stop the engine.

Change engine oil and filter.

NOTE: Change oil as many times as necessary, until there is no whitish appearance in engine oil.

Replace front differential oil.

Replace rear final drive oil.

Lubricate front and rear suspensions and propeller shaft joints.

Spray all metal parts with XPS LUBE (P/N 293 600 016).

Test drive to confirm proper operation.

ENGINE REMOVAL AND INSTALLATION

SERVICE TOOLS

Description	Part Number	Page
ENGINE LIFTING TOOL	529 036 022	49

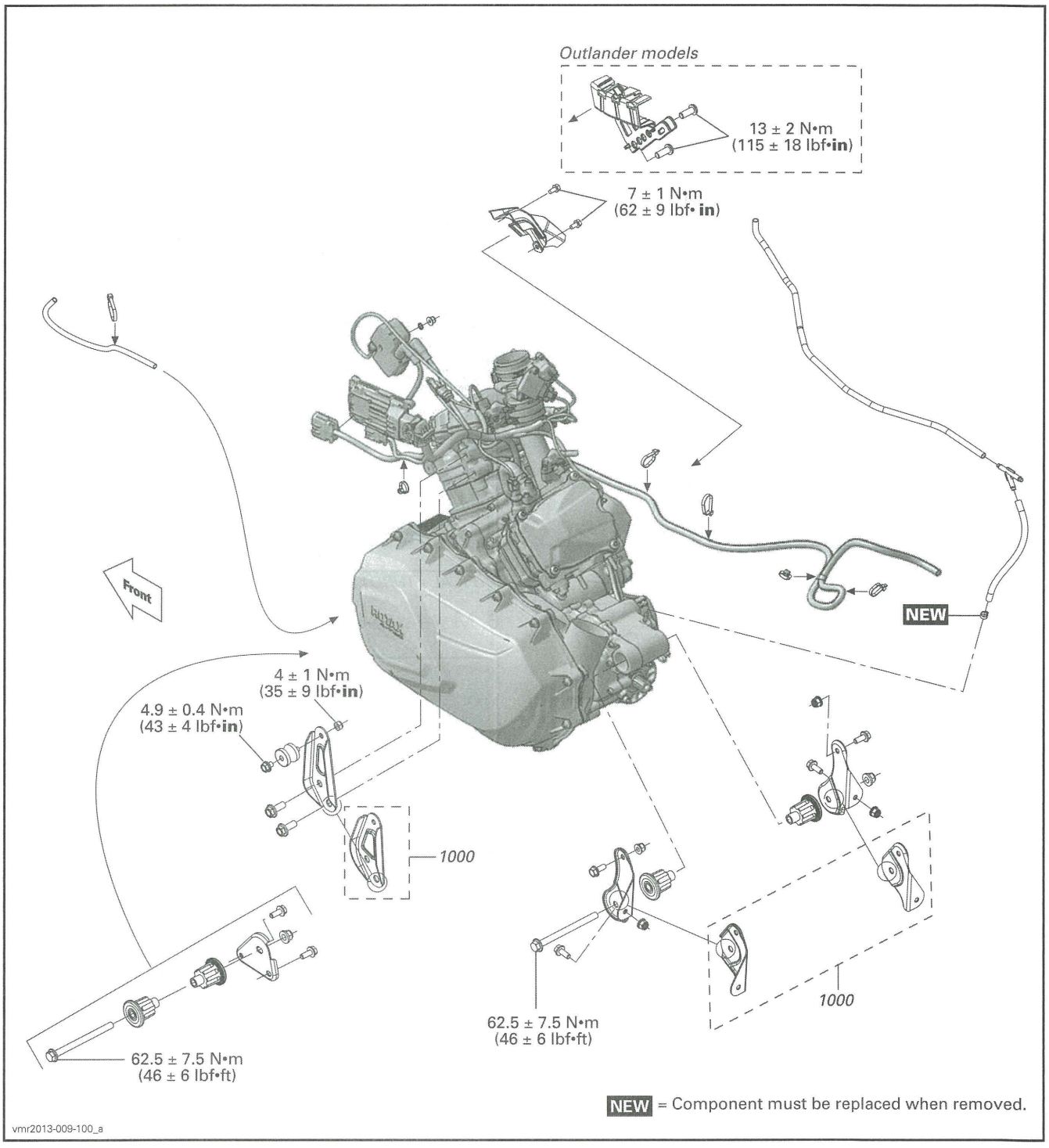

PROCEDURES

ENGINE REMOVAL

1. Place vehicle on a workstation equipped with an engine-lifting hoist.
2. Disconnect negative (-) cable from battery.
3. Carry out the following operations. Refer to table.

OPERATIONS	REFERENCES (SUBSECTION)
Safely lift and support the vehicle	*INTRODUCTION*
Release fuel pressure	*FUEL TANK AND FUEL PUMP*
Drain engine coolant	*PERIODIC MAINTENANCE PROCEDURES*
Remove front body module	*BODY*
Remove RH footrest panel	
Remove air filter housing	*AIR INTAKE SYSTEM*
Remove muffler	*EXHAUST SYSTEM*
Remove exhaust pipes	
Remove CVT air inlet	*CONTINUOUSLY VARIABLE TRANSMISSION (CVT)*
Remove CVT air outlet	
Disconnect positive (+) starter cable	*STARTING SYSTEM*
Disconnect TPS connector	*ELECTRONIC FUEL INJECTION (EFI)*
Disconnect MAPTS connector	
Remove intake manifold	*INTAKE MANIFOLD*
Remove spark plug cables	*IGNITION SYSTEM*

4. Remove RH footrest support.

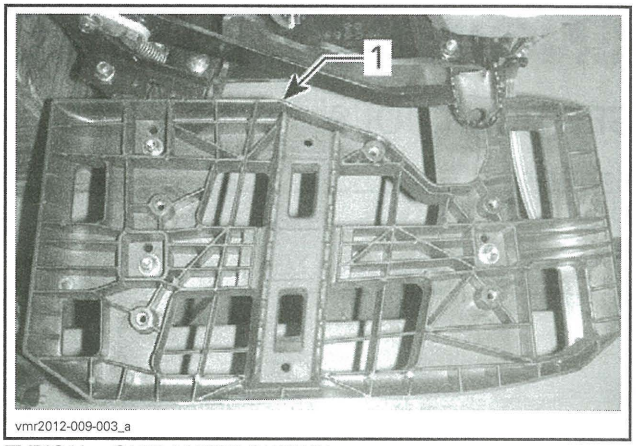

TYPICAL - OUTLANDER SHOWN
1. RH footrest support

5. Move throttle body aside to make room.

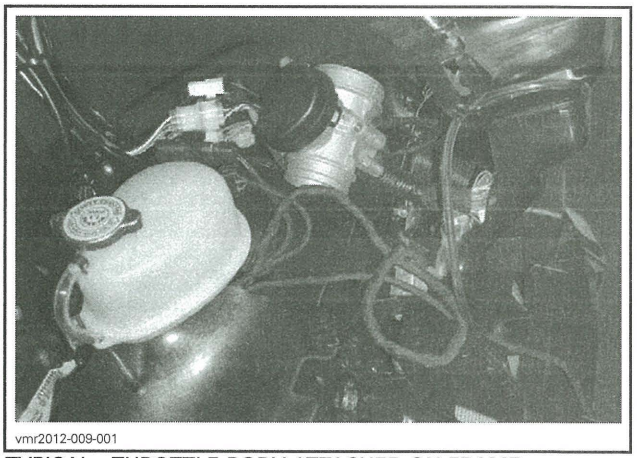

TYPICAL - THROTTLE BODY ATTACHED ON FRAME

6. Move master cylinder aside to make room.

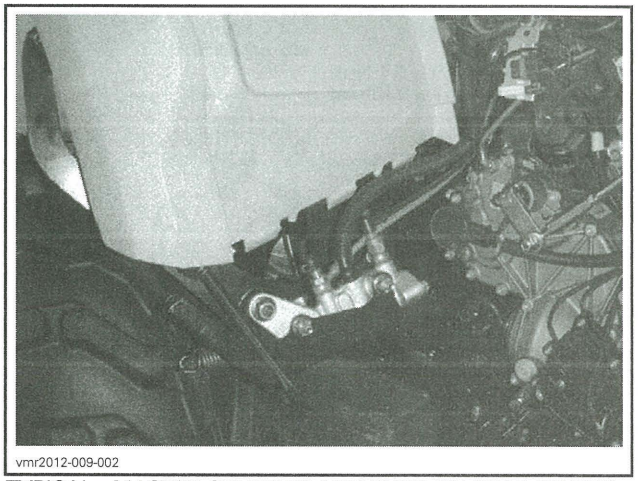

TYPICAL - MASTER CYLINDER ATTACHED ON REAR FENDER

7. Move crankcase vent hose as illustrated.

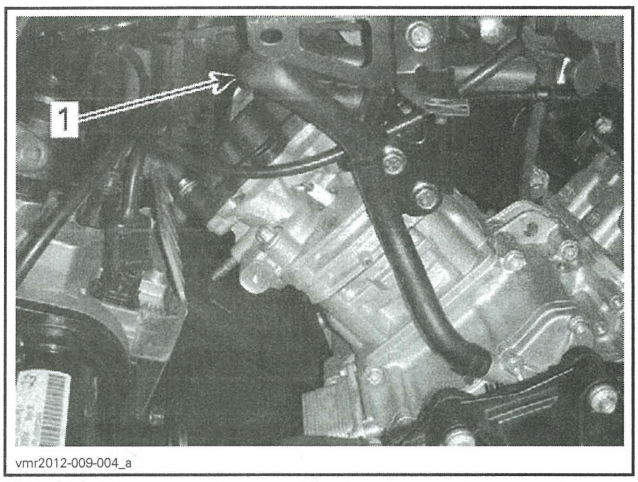

TYPICAL
1. Crankcase vent hose

8. Disconnect both engine harness connectors (HIC).

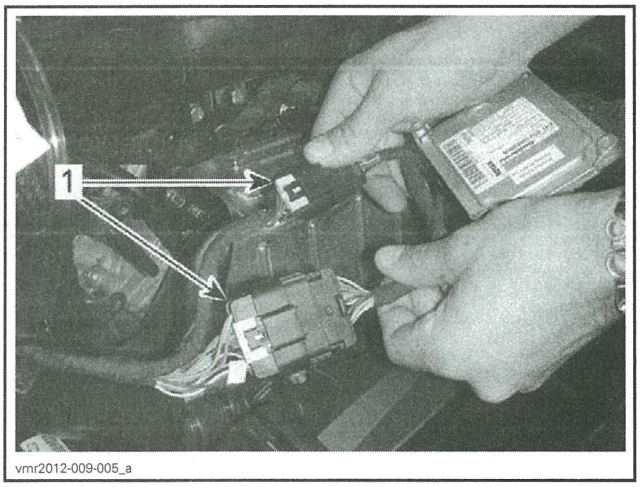

TYPICAL
1. Engine harness connectors (HIC)

9. Move ECM as illustrated.

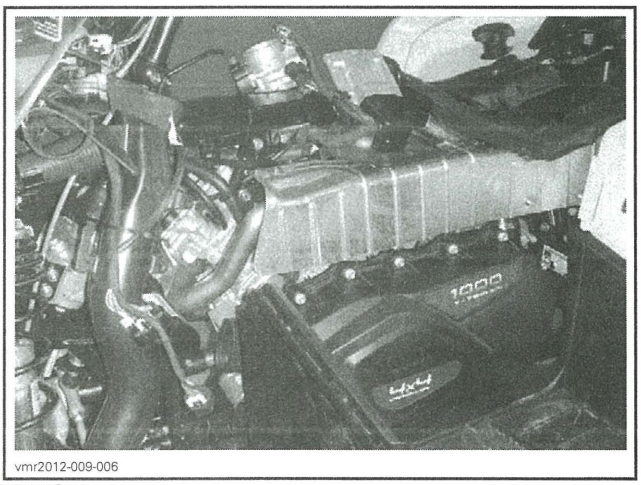

TYPICAL

10. Cut locking ties from ignition coil harness.

11. Disconnect ignition coil connector.

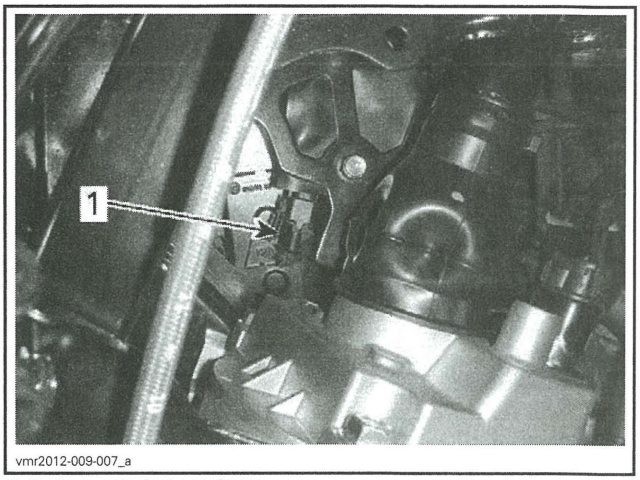

TYPICAL - FROM LH SIDE
1. Ignition coil connector

12. Remove the following locking ties.

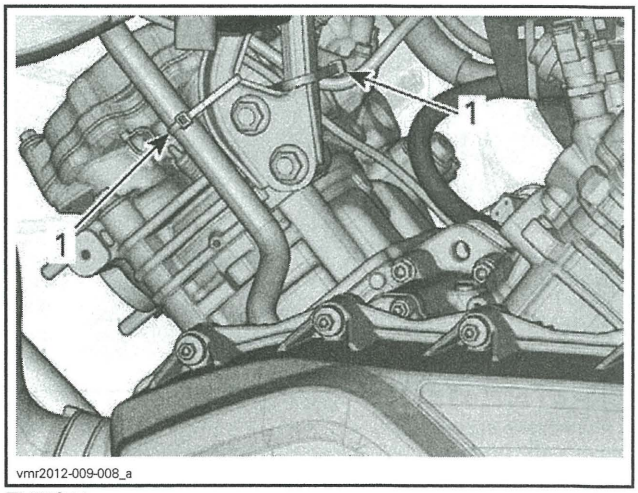

TYPICAL
1. Locking ties

13. Remove plastic cover from engine.



TYPICAL
1. Plastic cover

14. Remove harnesses support from engine.

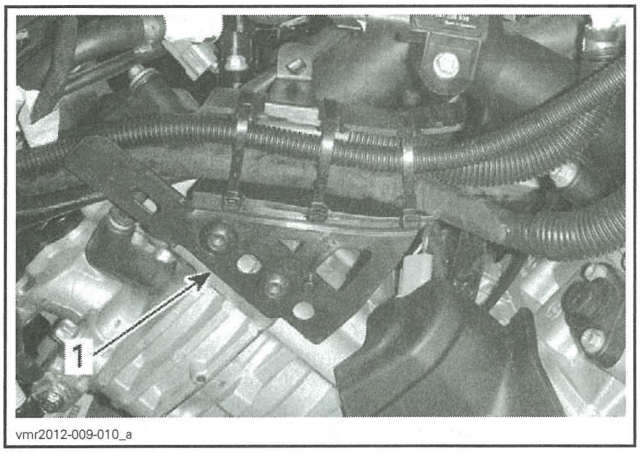

TYPICAL
1. Harnesses support

15. Disconnect magneto connector from voltage regulator rectifier.

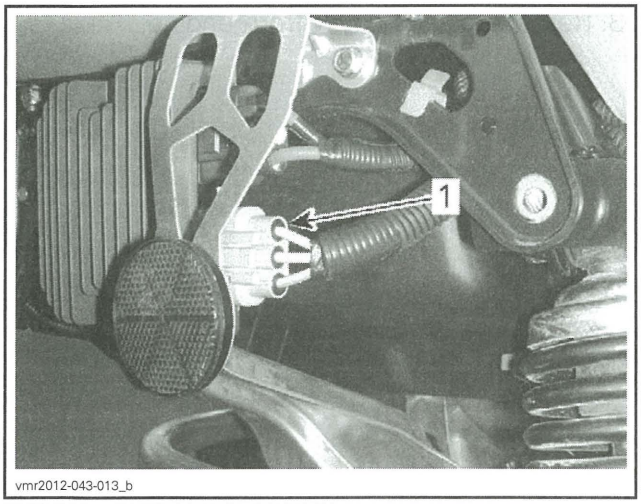

TYPICAL - OUTLANDER SHOWN
1. Magneto connector

16. Remove magneto harness from its location along vehicle and gather it in a bundle near engine.

NOTE: It may be necessary to slightly lift the rear body module to ease magneto harness removal. Refer to *BODY* subsection.

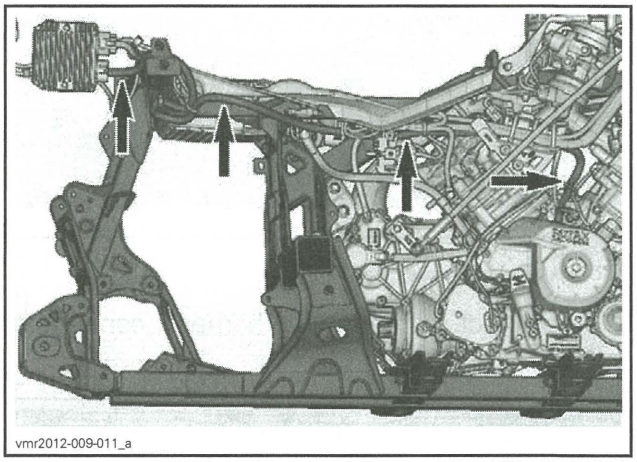

MAGNETO HARNESS (SOME PARTS REMOVED FOR CLARITY)

17. Disconnect vent hose from gearbox.

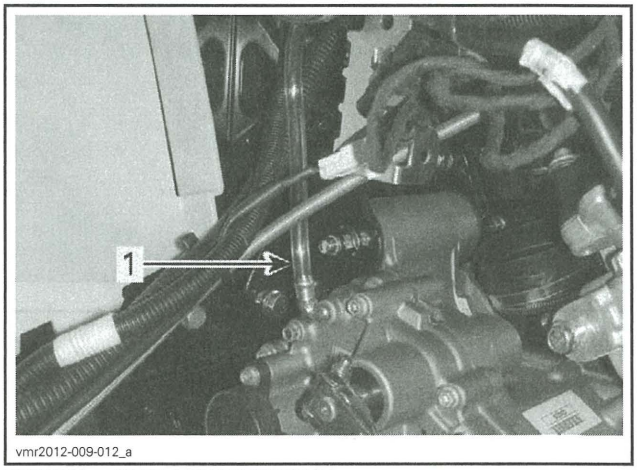

TYPICAL - OUTLANDER SHOWN
1. Vent hose

18. Disconnect coolant hoses as illustrated.

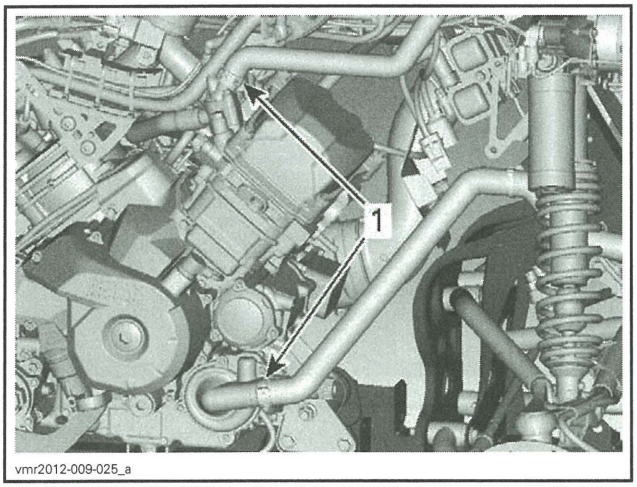

500/650/800R ENGINES - SOME PARTS REMOVED FOR CLARITY
1. Disconnect the following coolant hoses

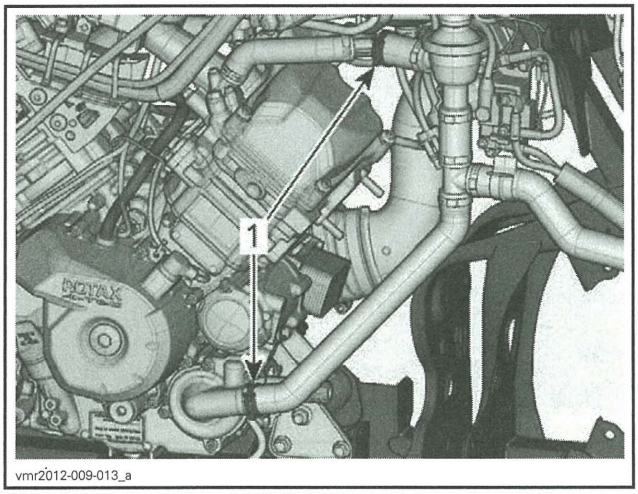

1000 ENGINE - SOME PARTS REMOVED FOR CLARITY
1. Disconnect the following coolant hoses

19. Remove main ground wire from engine.

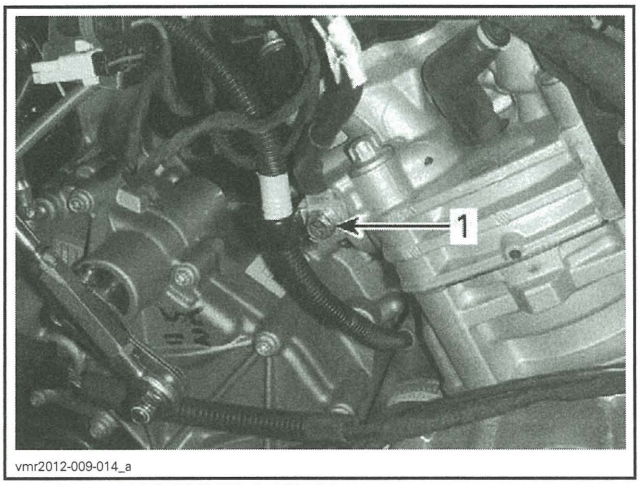

TYPICAL - OUTLANDER SHOWN
1. Main ground wire

Engine Lifting

1. Install the ENGINE LIFTING TOOL (P/N 529 036 022) on engine.

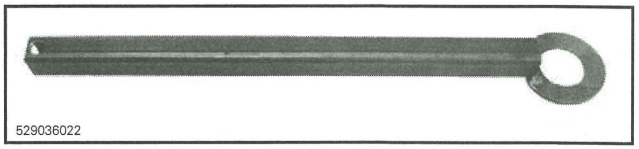

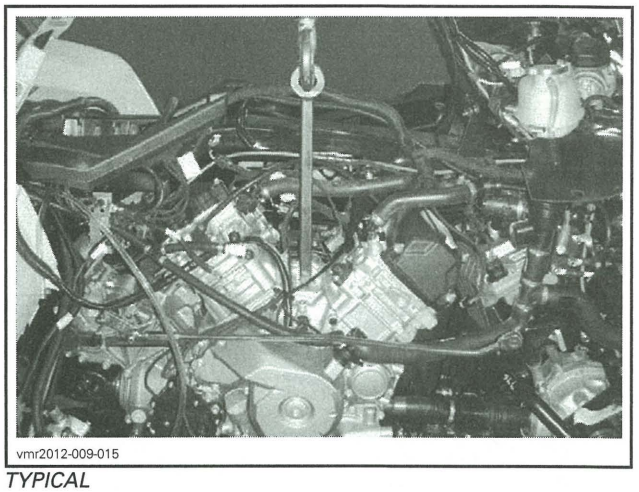

TYPICAL

2. Remove upper retaining screws from engine.

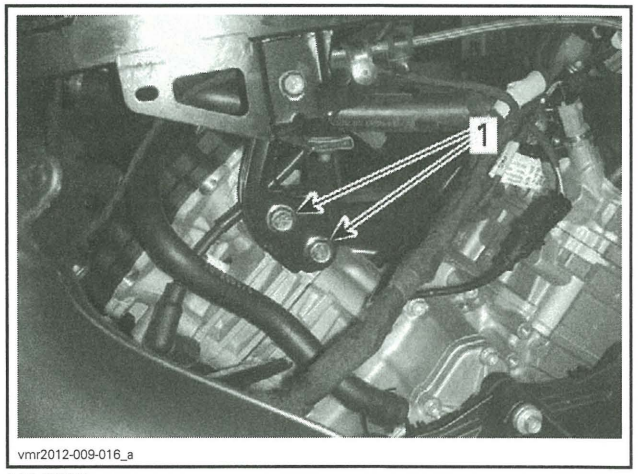

LH SIDE
1. Upper retaining screws

3. Remove rear retaining bolt from engine.

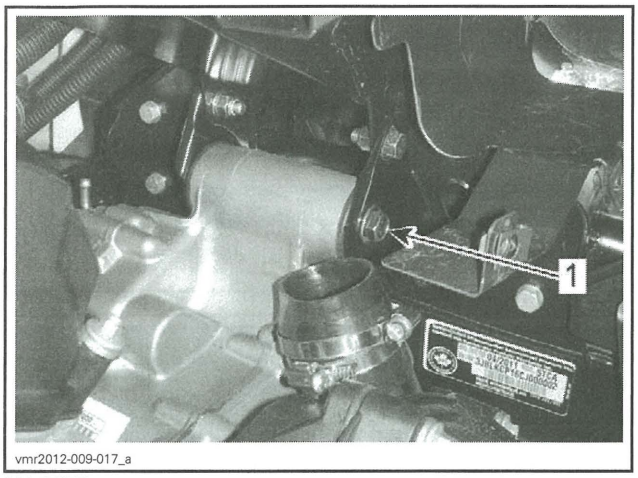

LH SIDE
1. Rear retaining bolt

4. Remove front retaining bolt from engine.



LH SIDE
1. Front retaining bolt

5. Remove engine support plate from frame.

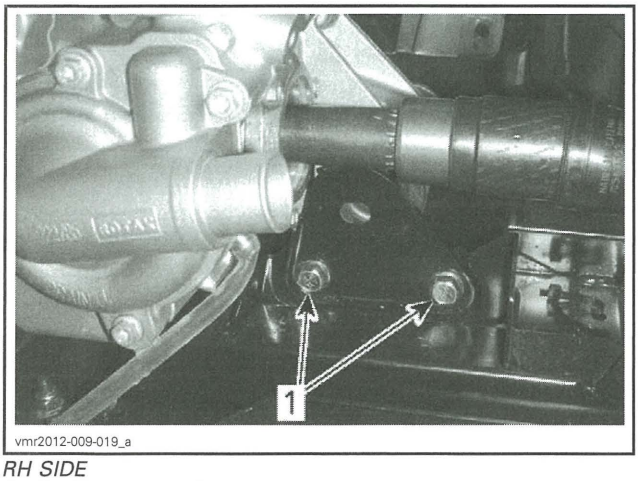

RH SIDE
1. Engine support plate screws

6. Remove the following Oetiker clamps from front propeller shaft.

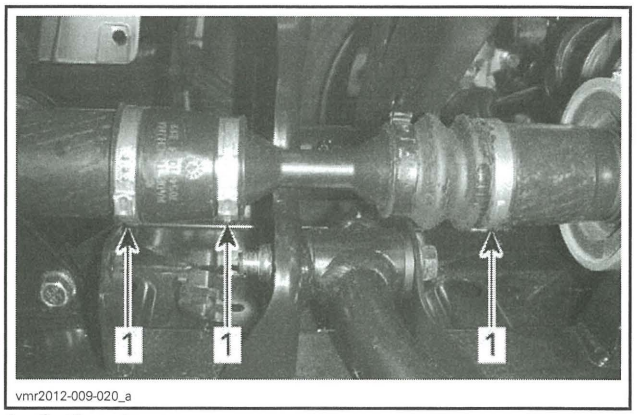

1. Oetiker clamps

7. Move front propeller shaft bellows forward.

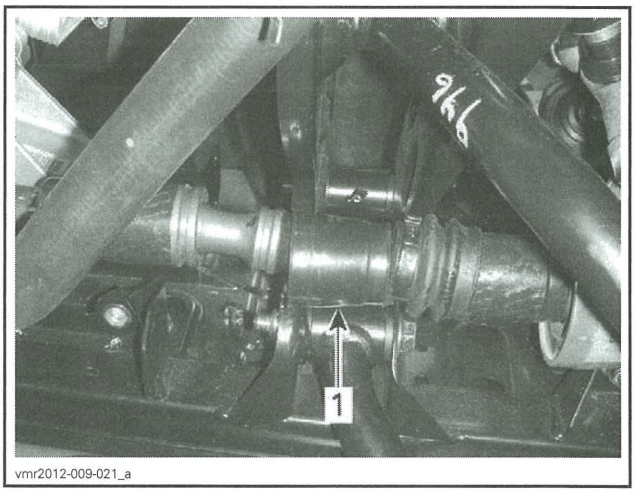

1. Front propeller shaft bellows

8. Remove propeller shaft screw from gearbox output shaft.

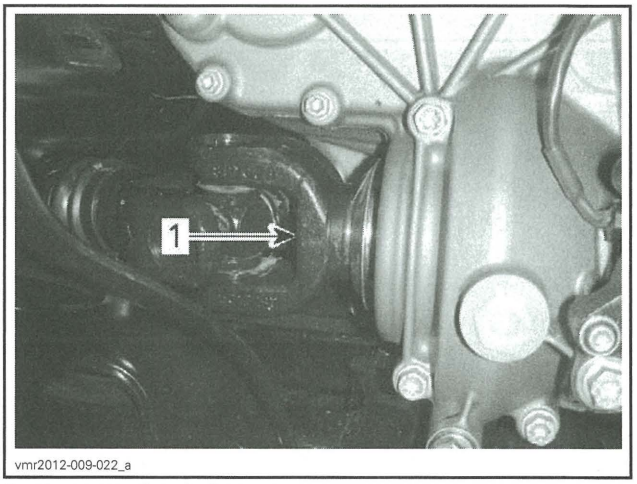

1. Rear propeller shaft screw

9. Slightly lift engine and move it forward to disconnect rear propeller shaft from engine.

10. Move propeller shaft yoke downwards to make room.

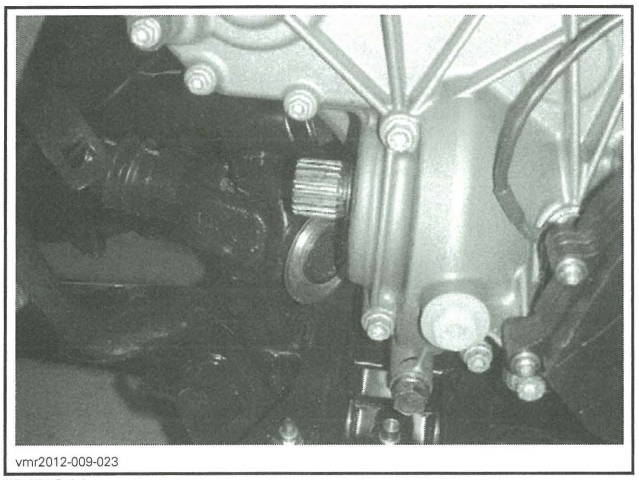

vmr2012-009-023

TYPICAL

11. Move engine rearward to disconnect front propeller shaft from engine.
12. Remove engine by the RH side.

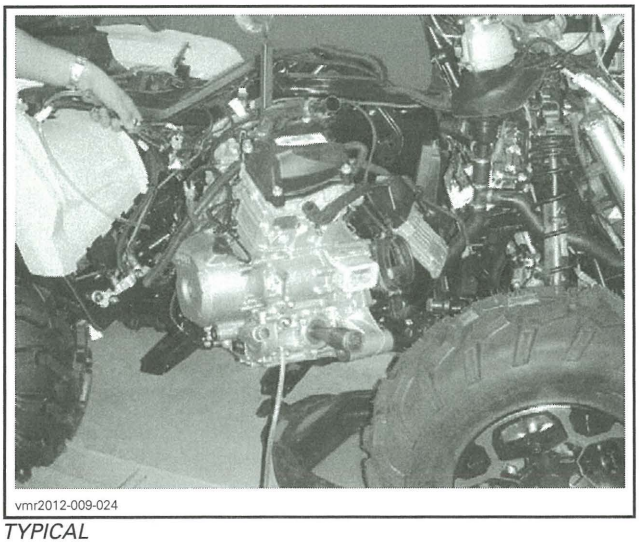

vmr2012-009-024

TYPICAL

ENGINE INSTALLATION

The installation is the reverse of the removal procedure. However, pay attention to the following.

1. Inspect condition of engine mounts.
2. Install engine on vehicle.
3. Install all engine retaining bolts loosely.
4. Install and tighten propeller shaft screw. Refer to *REAR DRIVE* subsection.
5. Tighten engine retaining bolts to specification.

TORQUE	
Engine retaining bolts	62.5 N•m ± 7.5 N•m (46 lbf•ft ± 6 lbf•ft)

6. If applicable, fill engine as per specification. Refer to *LUBRICATION SYSTEM* subsection.
7. Fill and bleed cooling system. Refer to *PERIODIC MAINTENANCE PROCEDURE* subsection.
8. Check for any leaks.
9. Reinstall all the remaining parts as the reverse of removal procedure. Refer to exploded views and proper subsections.
10. Test drive vehicle to confirm proper operation.

ENGINE MOUNTS REPLACEMENT

NOTE: Use the same procedure for the front and rear engine mounts.

Engine Mount Removal

Insert a punch into engine mount bushing and push the opposite engine mount out.

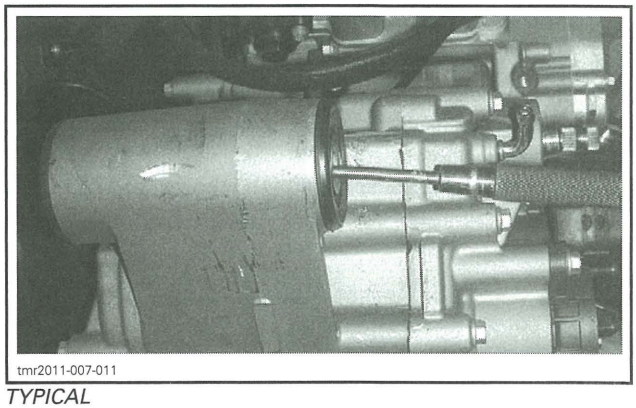

tmr2011-007-011

TYPICAL

Engine Mount Installation

The installation is the reverse of the removal procedure.

AIR INTAKE SYSTEM

AIR FILTER HOUSING

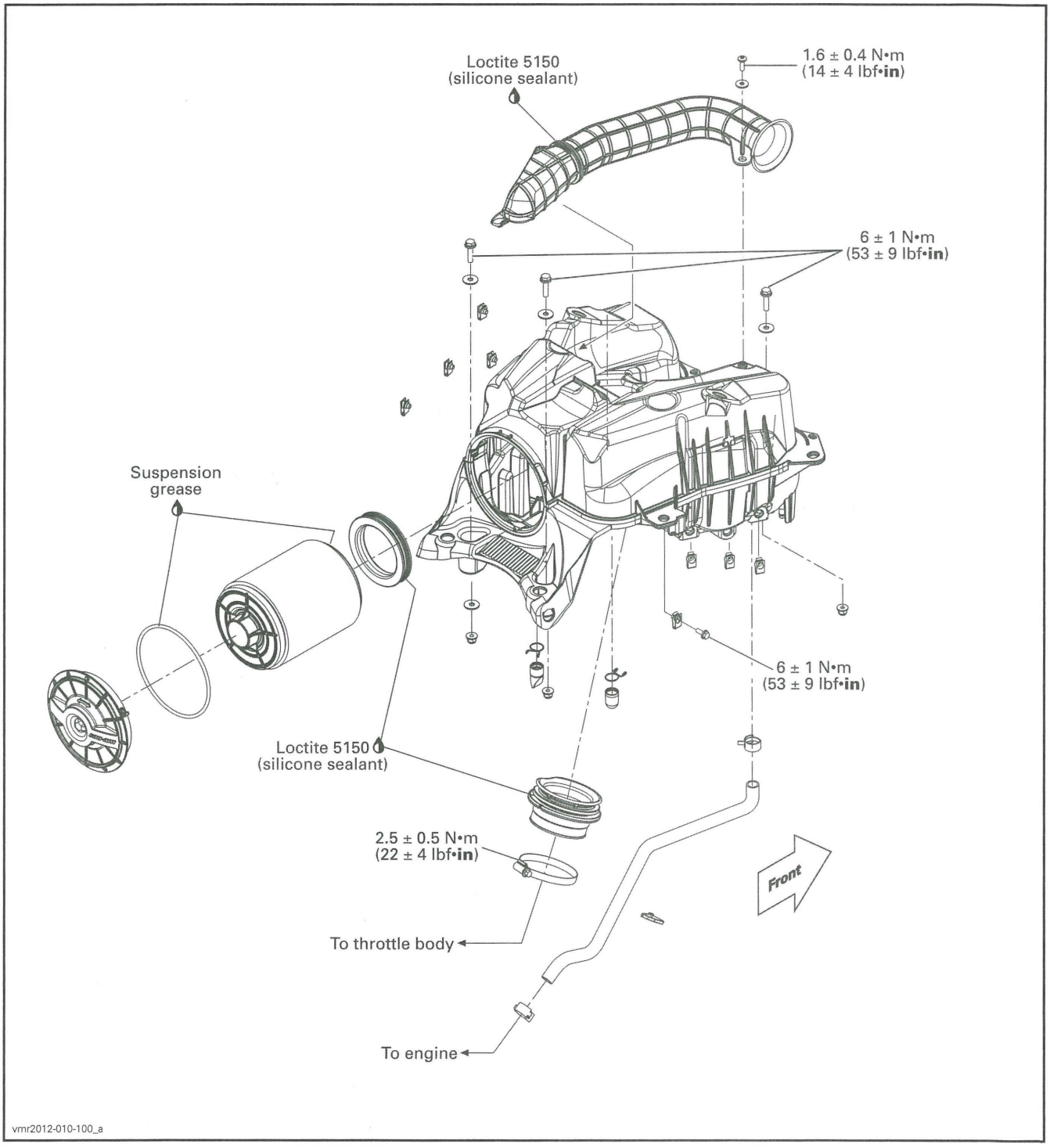

GENERAL

NOTICE Never modify the air intake system. Otherwise, engine performance degradation or damage can occur. The engine is calibrated to operate specifically with these components.

PROCEDURES

AIR FILTER

For air filter servicing, refer to *PERIODIC MAINTENANCE PROCEDURES* subsection.

AIR FILTER HOUSING

Air Filter Housing Removal

1. Remove front body module. Refer to *BODY* subsection.
2. On applicable models, remove the following plastic rivets.

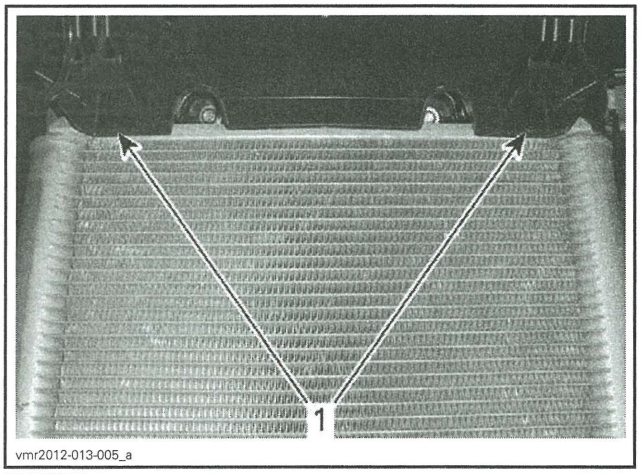

TYPICAL
1. Plastic rivets

3. On applicable models, move dashboard support toward front.

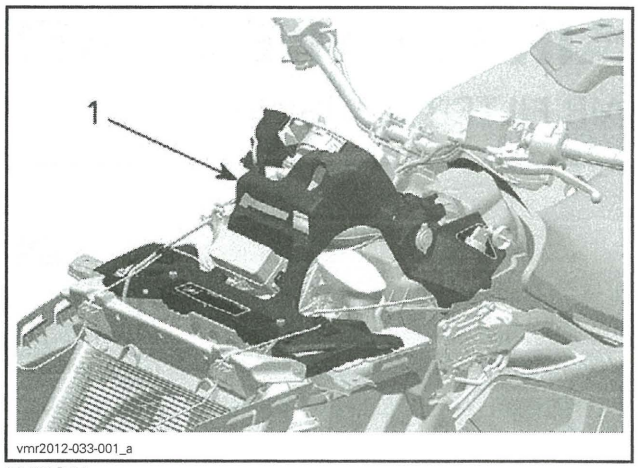

TYPICAL
1. Dashboard support

4. Remove screws securing CVT air inlet to air filter housing.

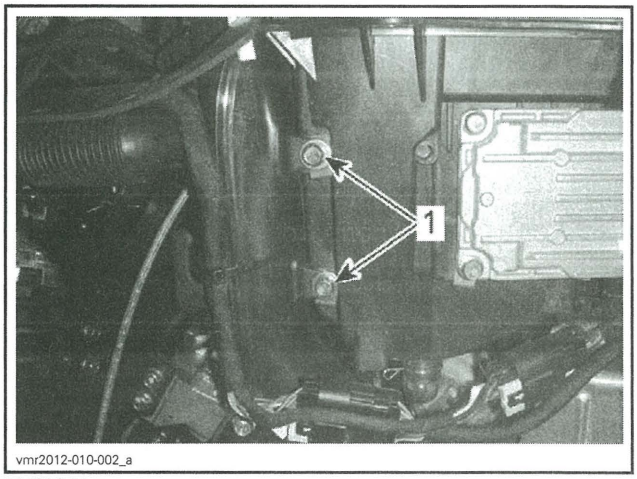

TYPICAL
1. CVT air inlet screws

5. Remove ECM retaining screws.

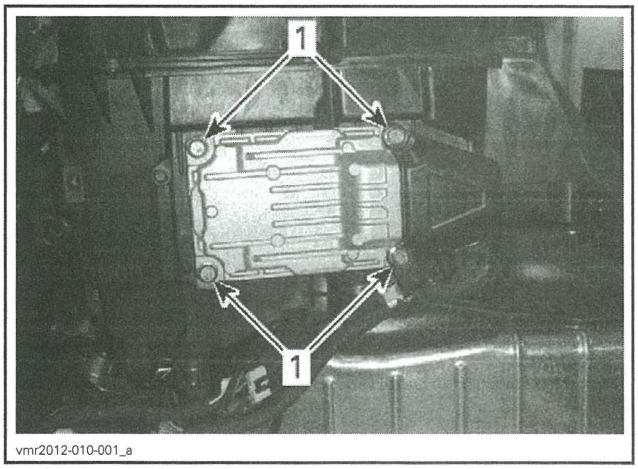

1. ECM retaining screws

6. Disconnect both engine harness connectors (HIC).

7. Move ECM aside.

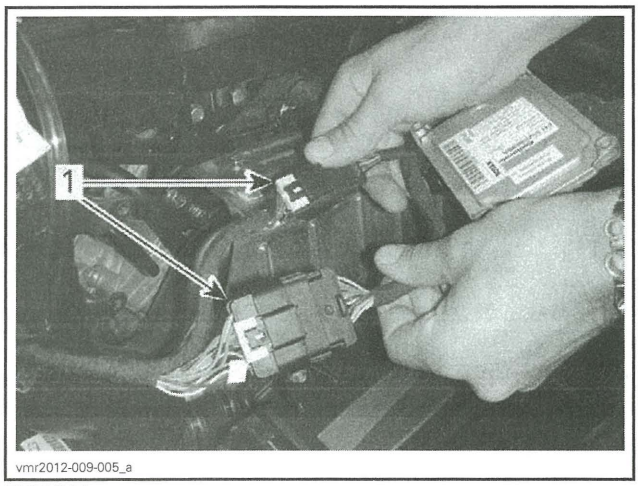

TYPICAL
1. Engine harness connectors (HIC)

8. Remove air intake tube retaining screw.

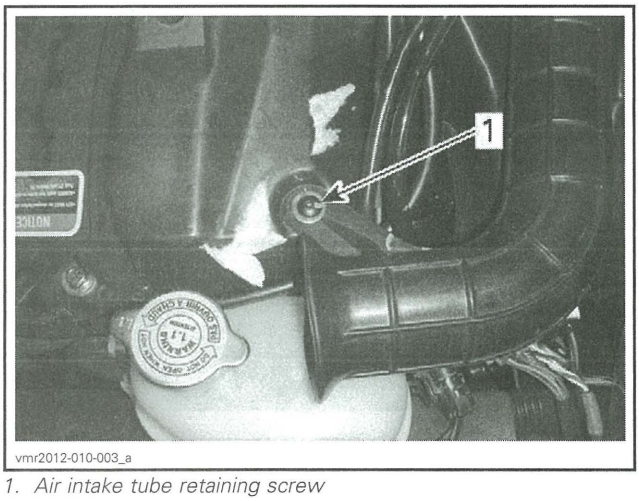

1. Air intake tube retaining screw

9. Move air intake tube to gain access to coolant tank LH screw.
10. Remove coolant tank retaining screws.

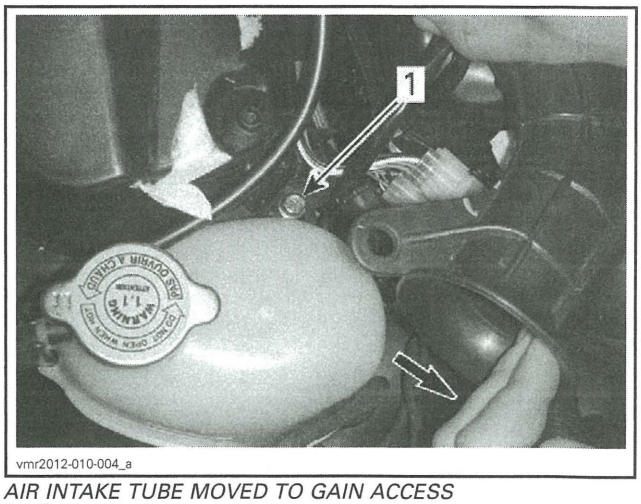

AIR INTAKE TUBE MOVED TO GAIN ACCESS
1. Coolant tank LH retaining screw

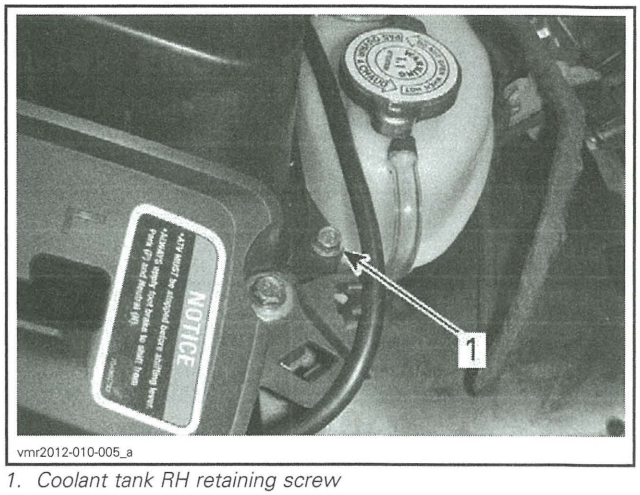

1. Coolant tank RH retaining screw

11. Detach link rod from shift lever.

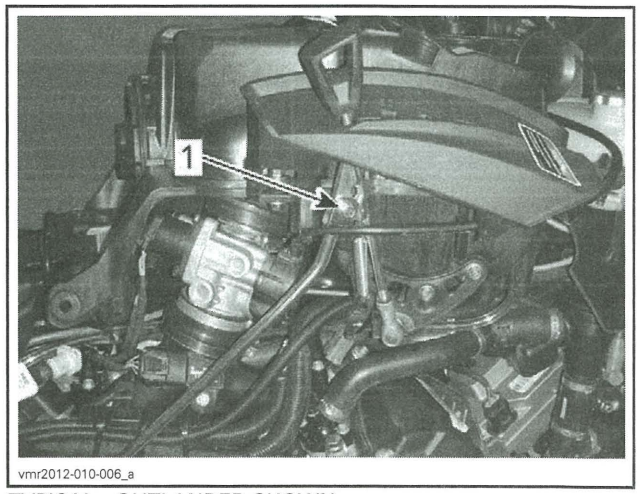

TYPICAL - OUTLANDER SHOWN
1. Link rod retaining bolt

12. Carefully move link rod downward.

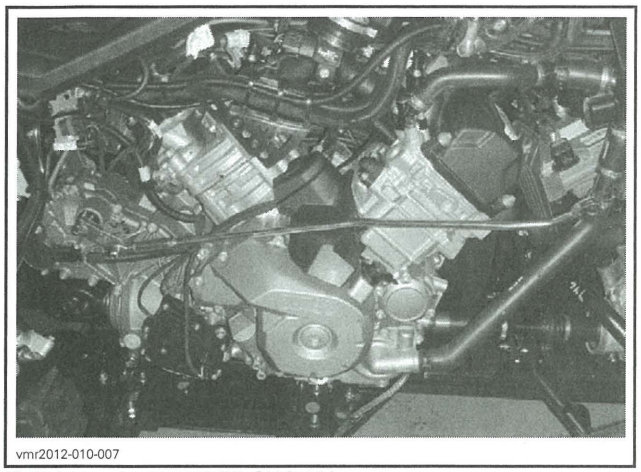
vmr2012-010-007

TYPICAL - OUTLANDER SHOWN

13. Remove the following locking ties.

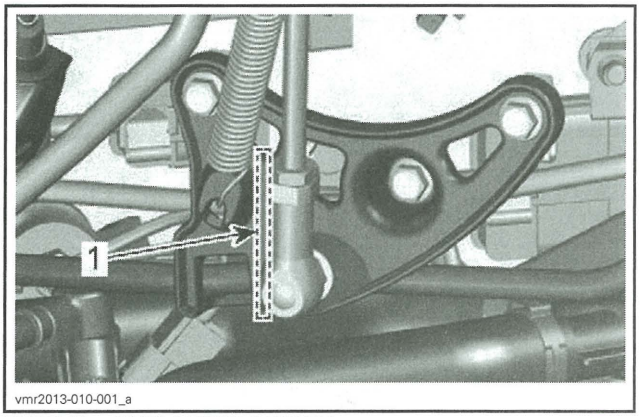

vmr2013-010-001_a

TYPICAL - OUTLANDER SHOWN
1. Locking tie to remove - location shown

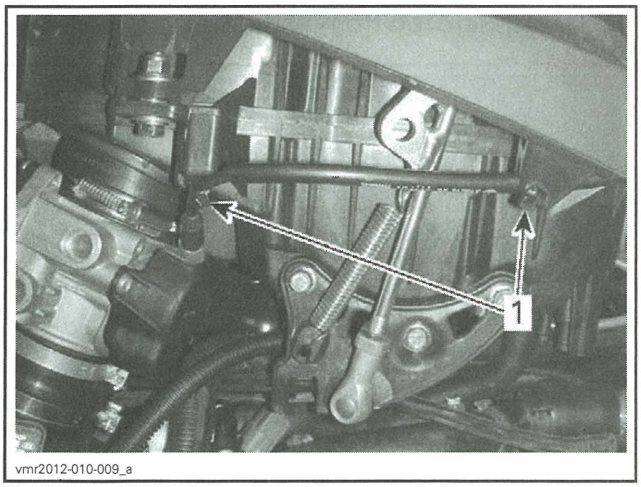

vmr2012-010-009_a

TYPICAL - OUTLANDER SHOWN
1. Locking ties to remove

14. Detach gearbox vent hose from air filter housing.

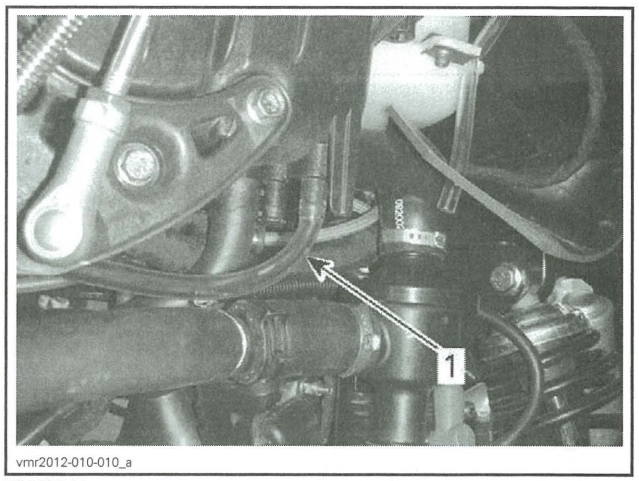

vmr2012-010-010_a

TYPICAL
1. Gearbox vent hose

15. Detach crankcase vent hose from air filter housing.

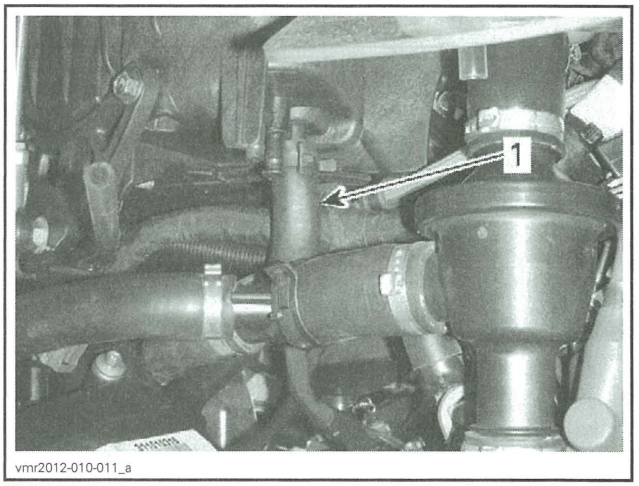

vmr2012-010-011_a

TYPICAL
1. Crankcase vent hose

16. Remove air filter housing retaining screws.

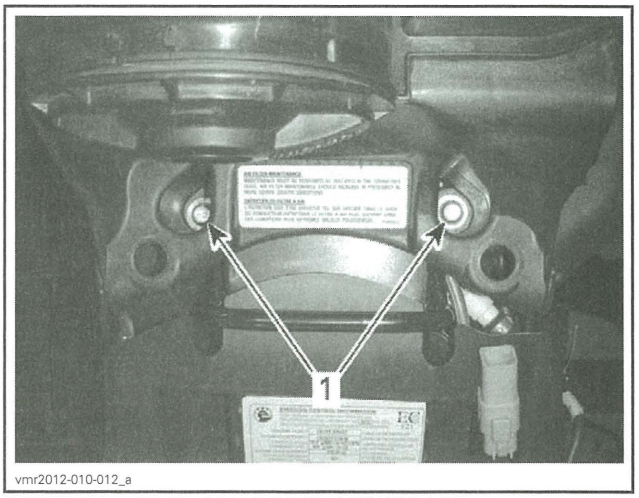

vmr2012-010-012_a

SCREWS LOCATED NEAR SEAT ANCHORAGE
1. Air filter housing retaining screws

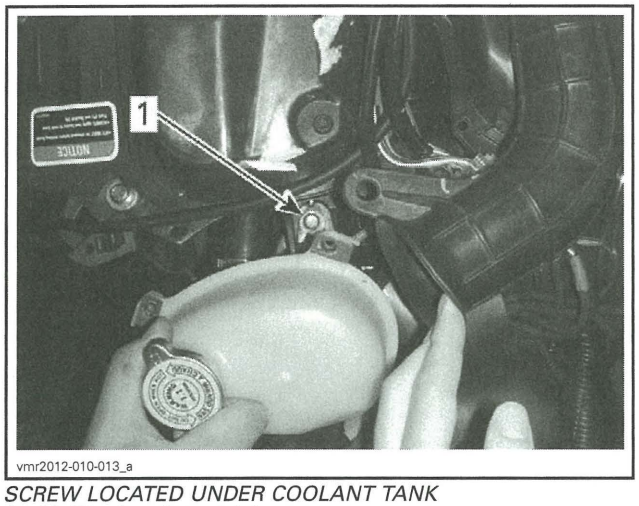

SCREW LOCATED UNDER COOLANT TANK
1. Air filter housing retaining screw

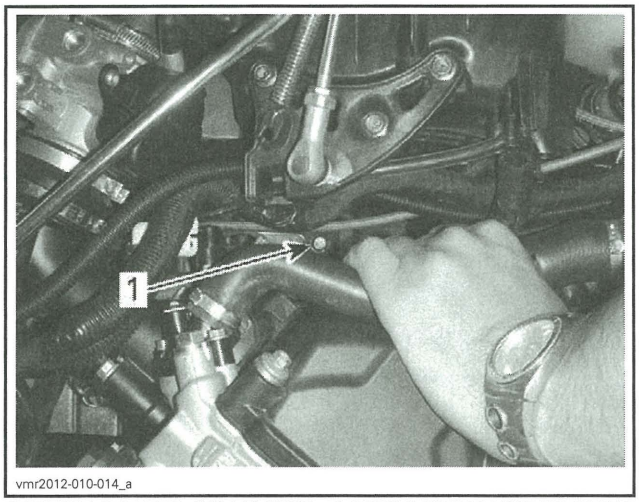

SCREW LOCATED ON LH SIDE - ACCESS FROM UNDER SHIFT LEVER
1. Air filter housing retaining screw

17. Detach throttle body from intake adapters.
18. Slightly lift air filter housing upward.
19. Move throttle body aside to make room.

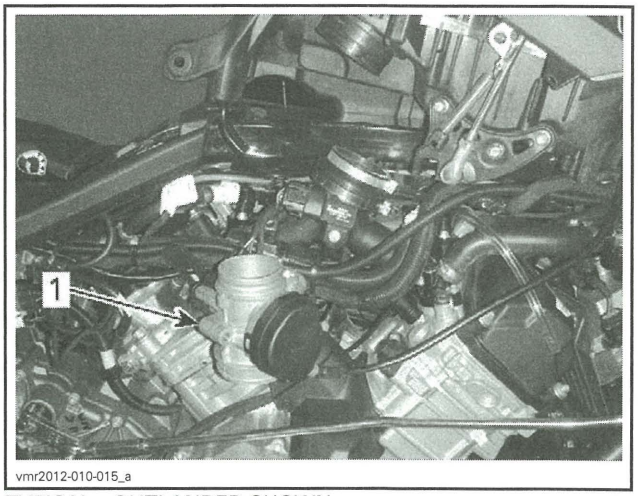

TYPICAL - OUTLANDER SHOWN
1. Throttle body

20. Remove air filter housing by pulling it towards rear.

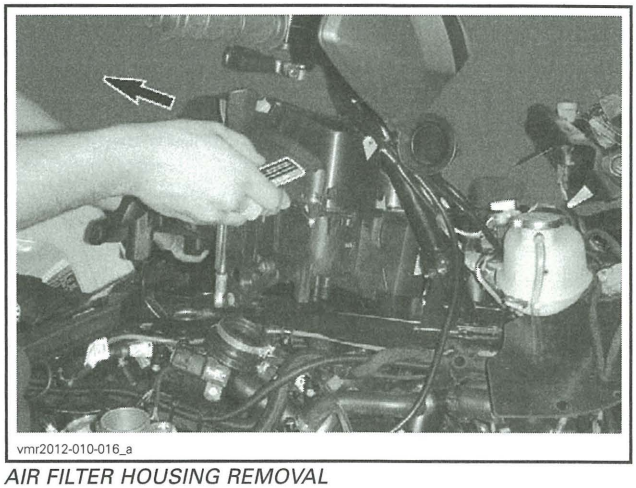

AIR FILTER HOUSING REMOVAL

21. Remove remaining components from air filter housing.

Air Filter Housing Inspection

Check air filter housing for cracks or other damage. Replace if necessary.

Air Filter Housing Installation

The installation is the reverse of the removal procedure. However, pay attention to the following.

Refer to applicable exploded views for tightening torque.

EXHAUST SYSTEM

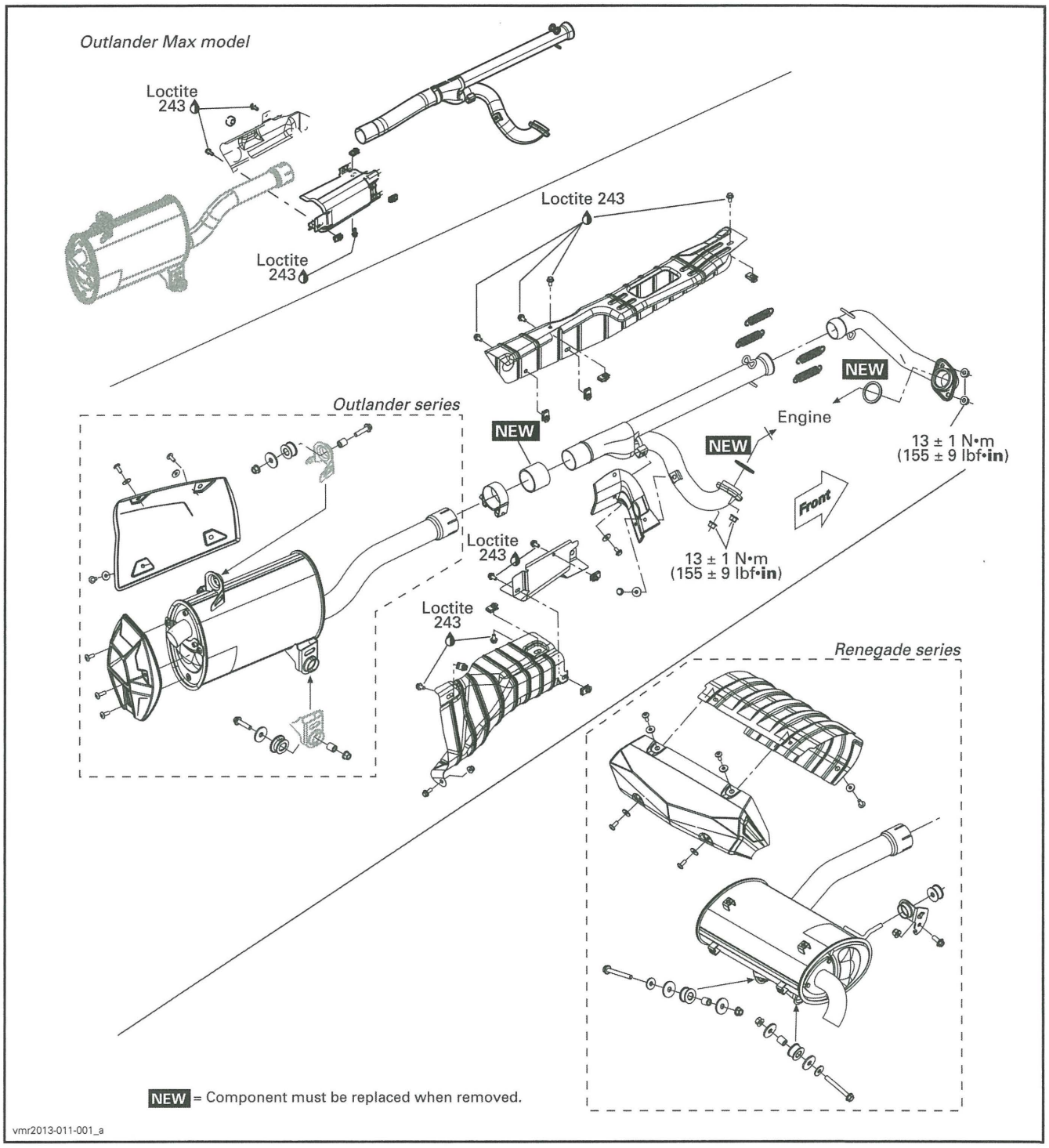

GENERAL

⚠ WARNING

Never touch exhaust system components immediately after the engine has run.

PROCEDURES

SPARK ARRESTER

For spark arrester servicing, refer to *PERIODIC MAINTENANCE PROCEDURES* subsection.

MUFFLER

Muffler Removal

Outlander Series

1. Loosen exhaust pipe clamp.

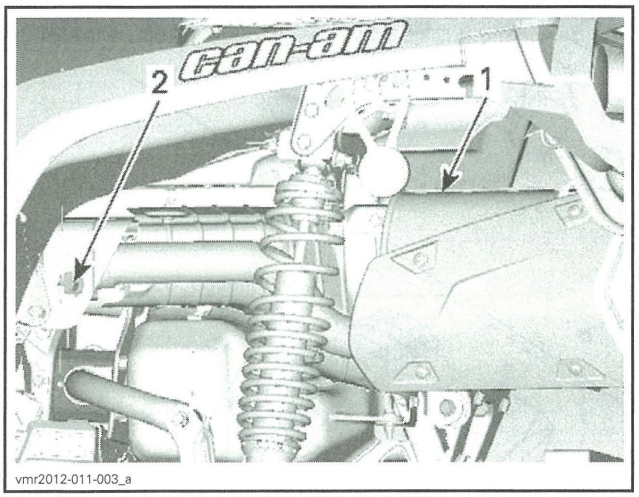

LH SIDE — PARTS REMOVED FOR CLARITY
1. Muffler
2. Loosen clamp

2. Remove muffler retaining bolts.

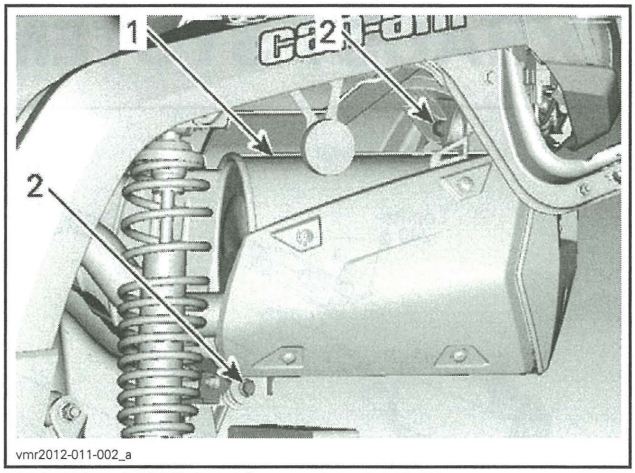

LH SIDE — PARTS REMOVED FOR CLARITY
1. Muffler
2. Remove bolts

3. Remove the muffler.

Renegade Series

1. Loosen exhaust pipe clamp.

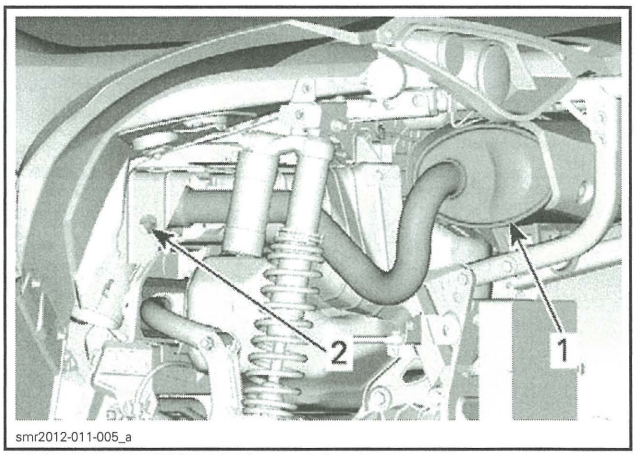

LH SIDE — PARTS REMOVED FOR CLARITY
1. Muffler
2. Loosen clamp

2. Remove muffler retaining bolts.

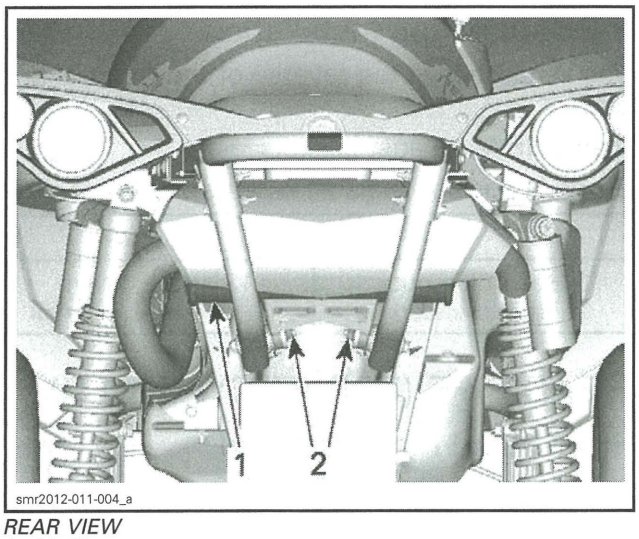

REAR VIEW
1. *Muffler*
2. *Remove bolts*

3. Refer to *BODY* and remove both rear bumper braces.

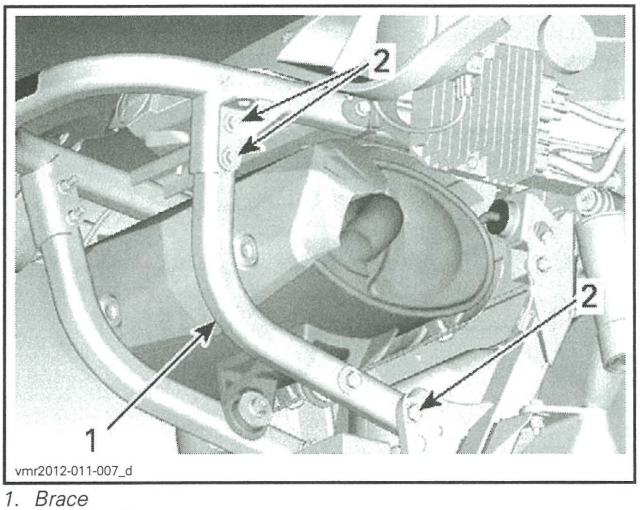

1. *Brace*
2. *Remove fasteners*

4. Remove muffler.

Muffler Inspection

Check muffler and cover for cracks or other damages. Replace if necessary.

Check if the rubber support is brittle, hard or otherwise damaged. Replace if needed.

Muffler Installation

For the installation, reverse the removal procedure. However, pay attention to the following.

Install new exhaust gasket.

Renegade Series

Refer to *BODY* and install both rear bumper braces.

NOTE: Loosely install all fasteners before tightening.

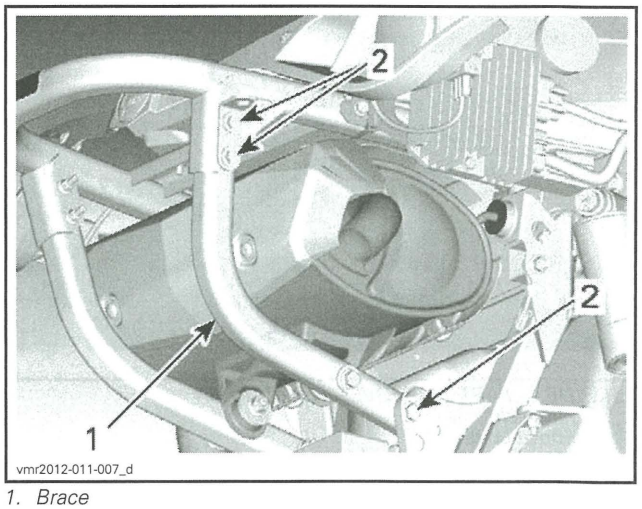

1. *Brace*
2. *Secure fasteners*

HEAT SHIELD

Heat Shield Removal

1. Refer to *BODY* and remove LH panel.
2. Remove heat shield retaining bolts.

NOTICE **Do not use impact tool to remove or install heat shield bolts.**

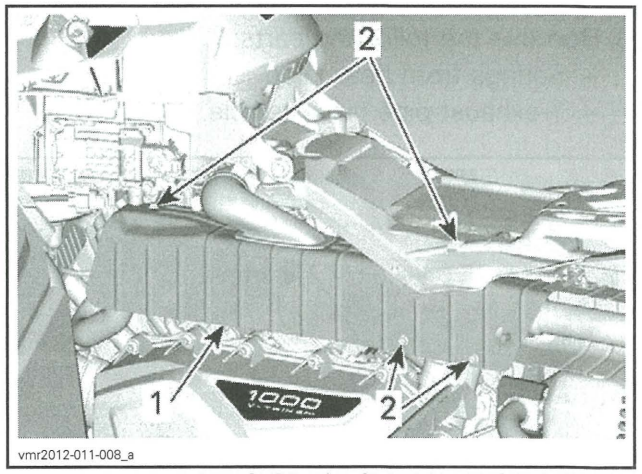

LH SIDE — PARTS REMOVED FOR CLARITY - SHORT MODEL SHOWN
1. *Heat shield*
2. *Remove bolts*

For Max Models

3. Remove heat shield extensions retaining bolts.

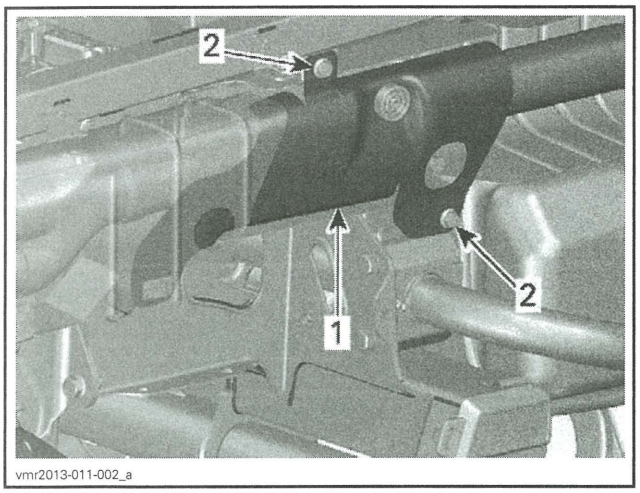

LH SIDE — PARTS REMOVED FOR CLARITY
1. *Heat shield*
2. *Remove bolts*

Heat Shield Installation

For the installation, reverse the removal procedure.

Y-EXHAUST PIPE

Y-Exhaust Pipe Removal

1. Remove *MUFFLER*. See procedure in this subsection.
2. Remove *HEAT SHIELD*. See procedure in this subsection.
3. Remove the following parts:
   - Springs from head pipe
   - Y-exhaust pipe from vehicle.

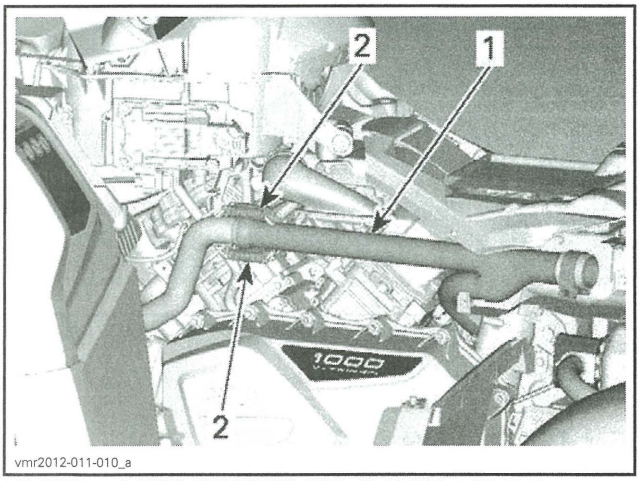

LH SIDE — PARTS REMOVED FOR CLARITY - TYPICAL
1. *Y-exhaust pipe*
2. *Springs*

Y-Exhaust Pipe Inspection

Check Y-exhaust pipe for cracks, bending or other damages. Replace if needed.

Y-Exhaust Pipe Installation

The installation is the reverse of the removal procedure.

Install NEW exhaust gaskets.

Properly position exhaust pipe before tightening.

TORQUE	
Head pipe nuts (rear cylinder)	13 N•m ± 1 N•m (115 lbf•**in** ± 9 lbf•**in**)

HEAD PIPE (FRONT CYLINDER)

Front Head Pipe Removal

1. Remove *Y-EXHAUST PIPE* See procedure in this subsection.
2. Refer to *BODY* and remove rear part of RH inner fender to reach head pipe screws (Outlander series only).

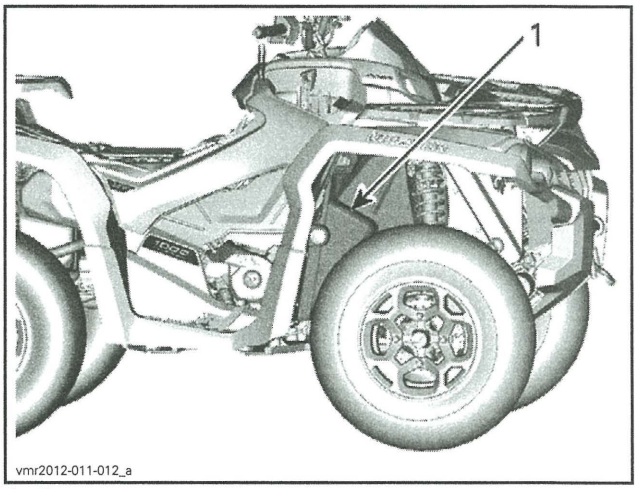

1. *Remove*

3. Remove front head pipe from vehicle.

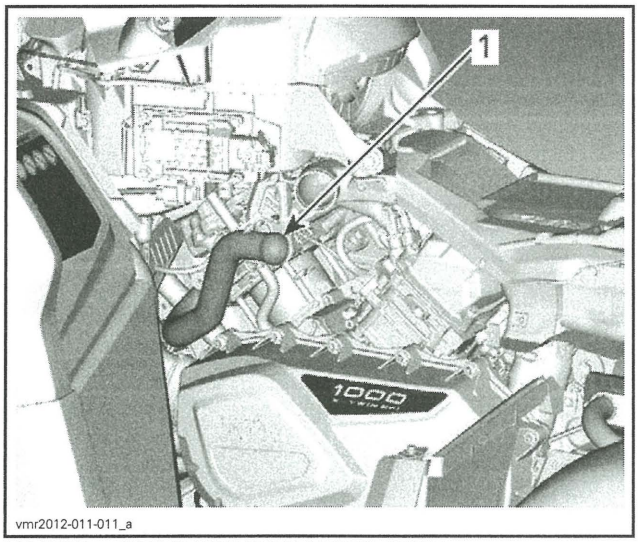

LH SIDE — PARTS REMOVED FOR CLARITY
1. Head pipe

NOTE: The space to remove the front head pipe is limited. Remove it without force.

Front Head Pipe Inspection

Check head pipe for cracks, bending or other damages. Replace if needed.

Check if the rubber support is brittle, hard or otherwise damaged. Replace if needed.

Front Head Pipe Installation

The installation is the reverse of the removal procedure. However, pay attention to the following.

Install NEW exhaust gaskets.

TORQUE	
Head pipe nuts	13 N•m ± 1 N•m (115 lbf•**in** ± 9 lbf•**in**)

LUBRICATION SYSTEM

SERVICE TOOLS

Description	Part Number	Page
ADAPTER HOSE	529 035 652	68
DISCONNECT TOOL	529 035 714	68
PRESSURE GAUGE	529 035 709	68

SERVICE PRODUCTS

Description	Part Number	Page
LOCTITE 243 (BLUE)	293 800 060	71, 74

COMPONENTS

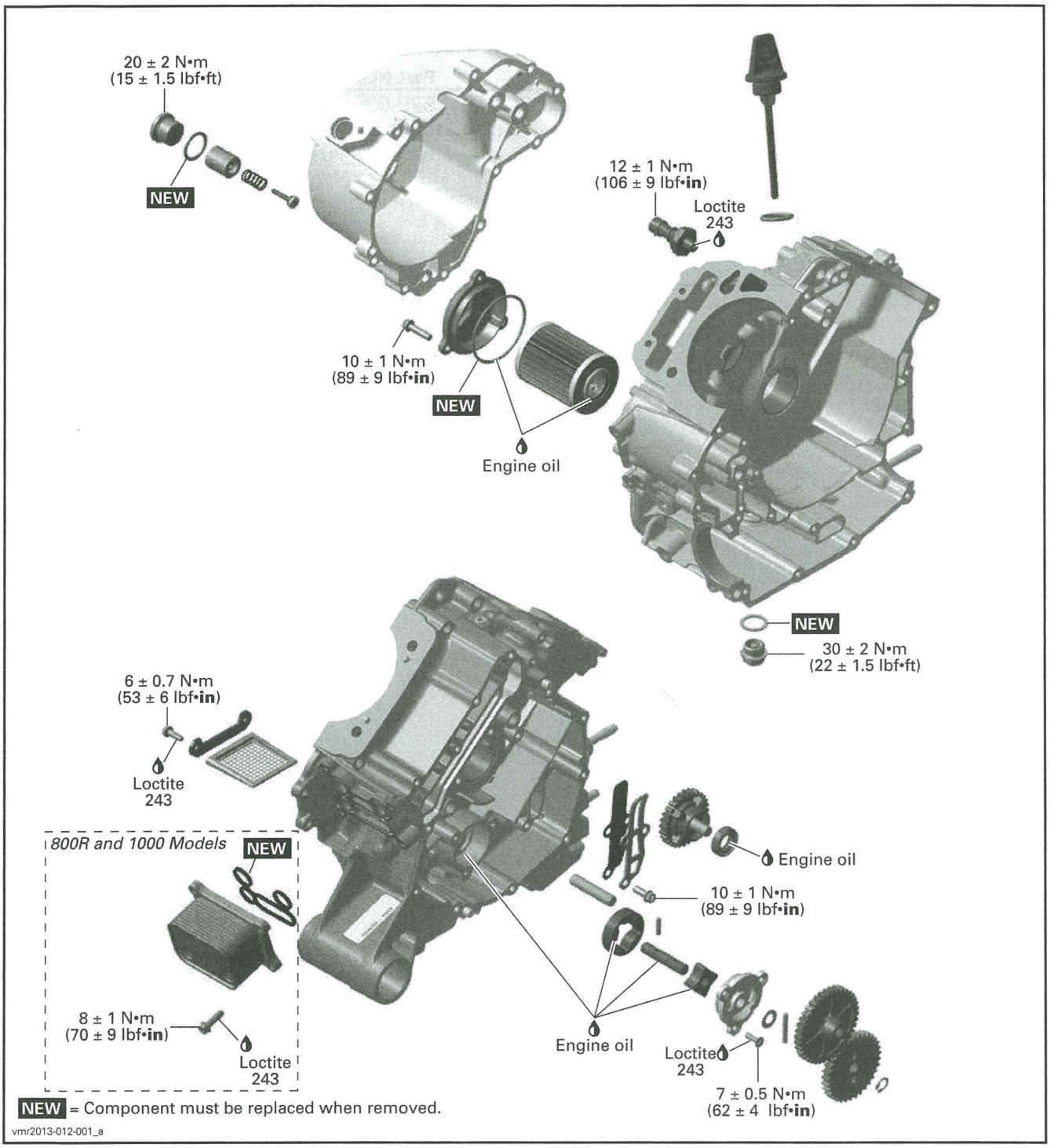
20 ± 2 N•m
(15 ± 1.5 lbf•ft)
NEW
12 ± 1 N•m
(106 ± 9 lbf•in)
Loctite
243
10 ± 1 N•m
(89 ± 9 lbf•in)
NEW
Engine oil
NEW
30 ± 2 N•m
(22 ± 1.5 lbf•ft)
6 ± 0.7 N•m
(53 ± 6 lbf•in)
Loctite
243
800R and 1000 Models
NEW
Engine oil
10 ± 1 N•m
(89 ± 9 lbf•in)
8 ± 1 N•m
(70 ± 9 lbf•in)
Loctite
243
Engine oil
Loctite
243
7 ± 0.5 N•m
(62 ± 4 lbf•in)
NEW = Component must be replaced when removed.
vmr2013-012-001_a

ENGINE LUBRICATION CIRCUIT

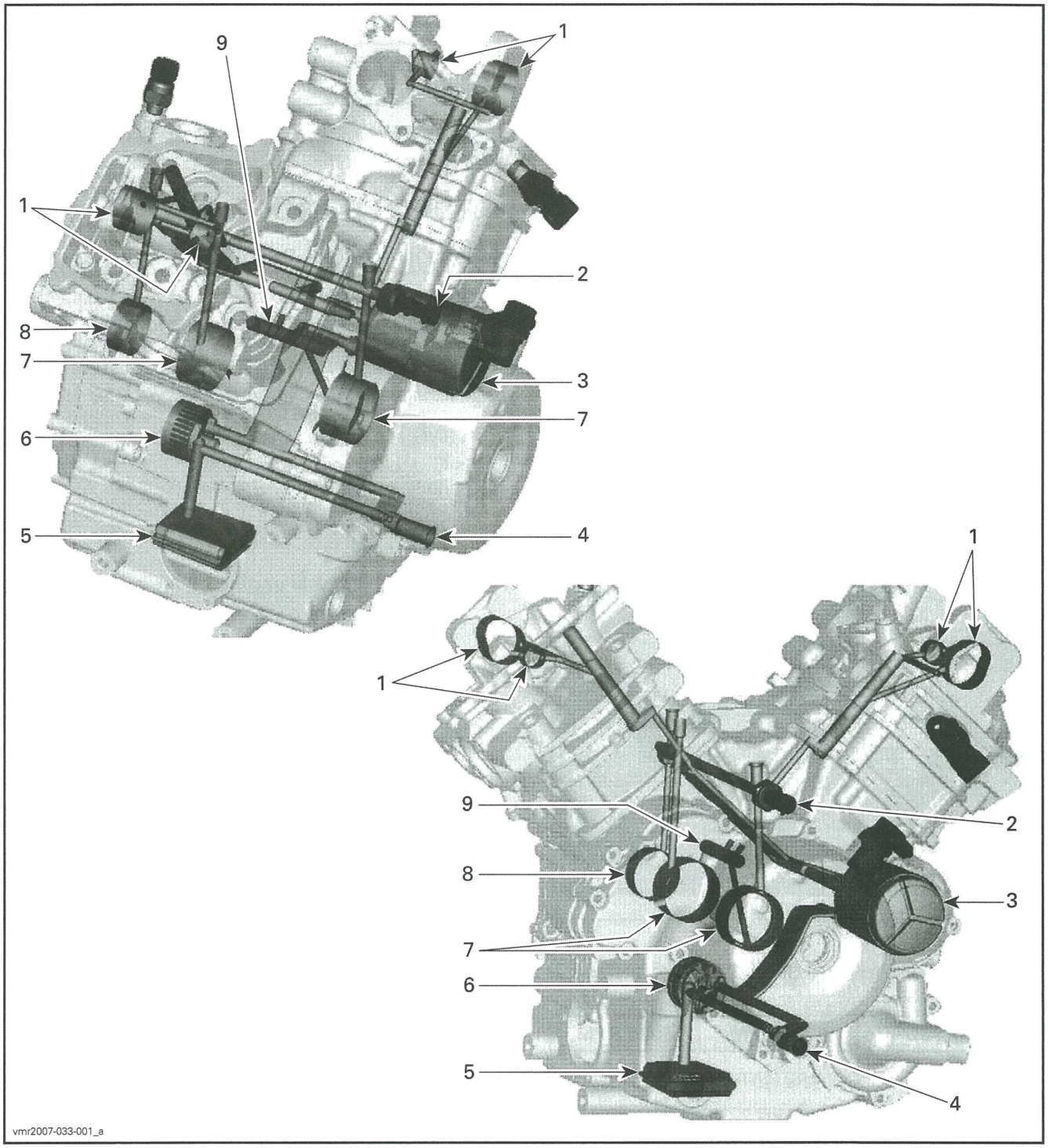

1. *Camshaft bearings*
2. *Oil pressure switch*
3. *Oil filter*
4. *Oil pressure regulator valve*
5. *Oil strainer*
6. *Oil pump*
7. *Crankshaft main bearings*
8. *Crankshaft support bearing*
9. *Connecting rod bearings*

INSPECTION

ENGINE OIL PRESSURE

NOTE: The engine oil pressure test should be done with a warm engine 100°C (212°F) and the recommended oil.

Remove the oil pressure switch. Refer to *OIL PRESSURE SWITCH* in this subsection.

Use the pressure gauge with the proper adapter hose.

REQUIRED TOOL	
PRESSURE GAUGE (P/N 529 035 709)	
ADAPTER HOSE (P/N 529 035 652)	

Install adapter hose in OPS location.

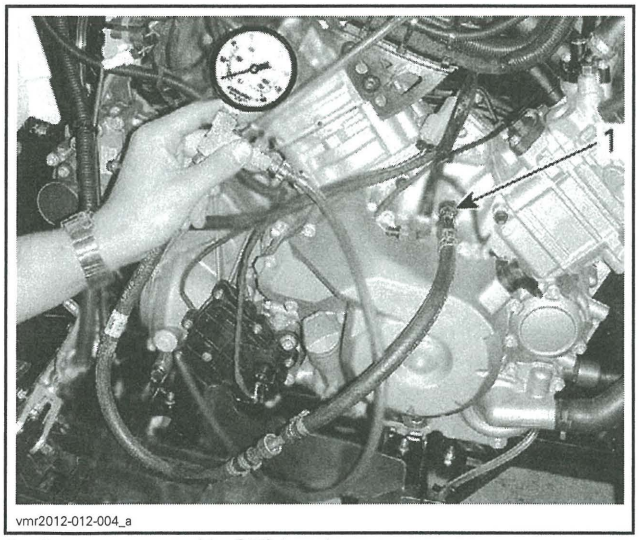

1. Gauge connected in OPS location

The engine oil pressure should be within the following values.

OIL PRESSURE	1250 RPM	6000 RPM
MINIMAL	70 kPa (10 PSI)	300 kPa (44 PSI)
NOMINAL	150 kPa (22 PSI)	350 kPa (51 PSI)
MAXIMAL	250 kPa (36 PSI)	450 kPa (65 PSI)

If the engine oil pressure is out of specifications, check the points described in *TROUBLESHOOTING* in this subsection.

Remove oil pressure gauge and adapter hose.

NOTE: To remove adapter hose from oil pressure gauge, use the disconnect tool.

REQUIRED TOOL	
DISCONNECT TOOL (P/N 529 035 714)	

Reinstall the oil pressure switch and remaining components.

TROUBLESHOOTING

LOW OR NO OIL PRESSURE

1. **Oil level is too low.**
   - *Refill engine with recommended engine oil. Refer to OIL LEVEL VERIFICATION in the PERIODIC MAINTENANCE PROCEDURES subsection.*
   - *Check for high oil consumption, refer to HIGH OIL CONSUMPTION in the TROUBLESHOOTING subsection.*
   - *Check for engine oil leaks. For leak indicator hose and leak indicator hole, refer to COOLING SYSTEM INSPECTION in the PERIODIC MAINTENANCE PROCEDURES subsection. Repair if necessary.*
2. **Use of unsuitable engine oil type.**
   - *Replace engine oil by the recommended engine oil.*
3. **Clogged oil filter.**
   - *Replace oil and oil filter at the same time.*
4. **Defective oil pressure switch.**
   - *Test oil pressure switch, see procedure in this subsection.*
5. **Defective or worn oil pump.**
   - *Check oil pump, see procedure in this subsection.*
6. **Defective engine oil pressure regulator.**
   - *Check engine oil pressure regulator, see procedure in this subsection.*
7. **Worn plain bearings in crankcase.**
   - *Check plain bearings clearance, refer to BOTTOM END subsection.*
8. **Clogged engine oil strainer.**
   - *Clean engine oil strainer, see procedure in this subsection.*

OIL CONTAMINATION

1. **Defective water pump seal ring or rotary seal.**
   - *Check for oil or coolant leak from indicator near water pump, refer to COOLING SYSTEM INSPECTION in the PERIODIC MAINTENANCE PROCEDURES subsection. Replace seal if necessary.*

2. **Cylinder head or cylinder base gasket leak.**
   - *Retighten cylinder head to specified torque, refer to TOP END subsection. Replace gasket if tightening does not solve the problem.*
3. **Engine internal damage.**
   - *Repair engine.*
4. **Oil cooler gasket leak.**
   - *Replace oil cooler gasket and change engine oil.*

HIGH OIL CONSUMPTION

1. **Leaking breather oil seal.**
   - *Check if the oil seal of the breather is brittle, hard or damaged. Refer to BOTTOM END subsection.*
2. **Valve stem seals worn or damaged.**
   - *Replace valve stem seals.*
3. **Worn piston rings (blue exhaust smoke).**
   - *Replace piston rings.*

PROCEDURES

OIL COOLER

800R and 1000 Engines Only

Oil Cooler Access

Refer to *BODY* and remove rear part of RH inner fender panel (Outlander series).

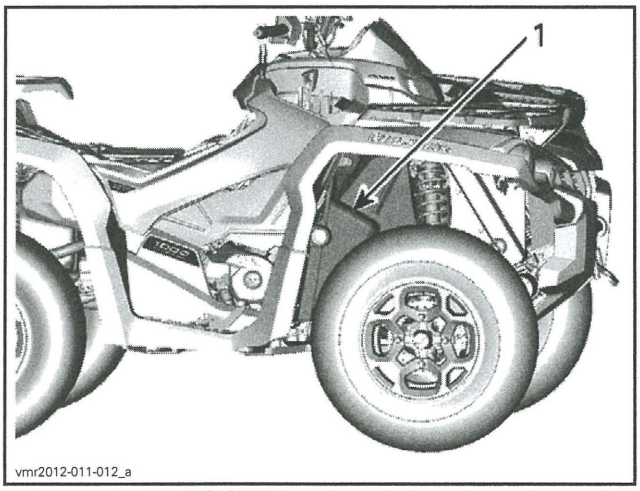

OUTLANDER SERIES ONLY
1. Remove

Oil Cooler Removal

Refer to *PERIODIC MAINTENANCE PROCEDURES* subsection to:

- Drain engine oil. Refer to *ENGINE OIL CHANGE*
- Drain coolant. Refer to *ENGINE COOLANT REPLACEMENT.*

Remove oil cooler retaining screws.

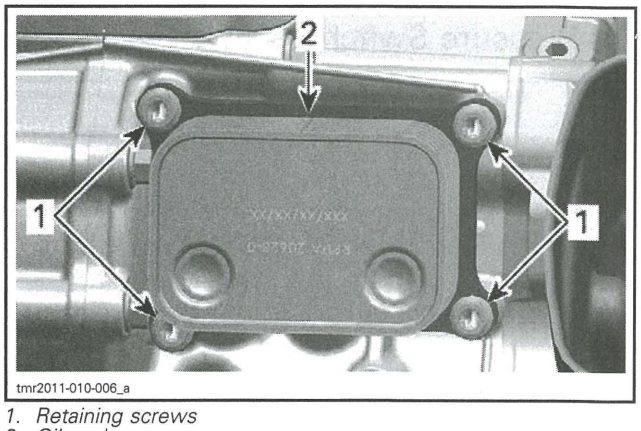

1. Retaining screws
2. Oil cooler

Place rags or towels under oil cooler to catch remaining oil and coolant.

Remove oil cooler and discard gasket.

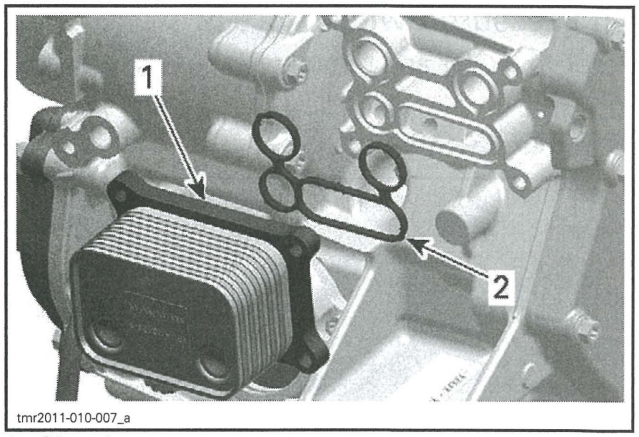

1. Oil cooler
2. Gasket

Oil Cooler Inspection

Check oil cooler for cracks or other damage.

Replace if necessary.

Oil Cooler Installation

For installation, reverse the removal procedure. Pay attention to the following details.

Wipe off any oil and coolant spillage.

Install a NEW gasket.

Refer to *PERIODIC MAINTENANCE PROCEDURES* subsection and carry out the following:

- Refill engine with recommended oil. See *ENGINE OIL CHANGE*.
- Refill and bleed cooling system. See *ENGINE COOLANT REPLACEMENT*.

OIL PRESSURE SWITCH (OPS)

Oil Pressure Switch Location

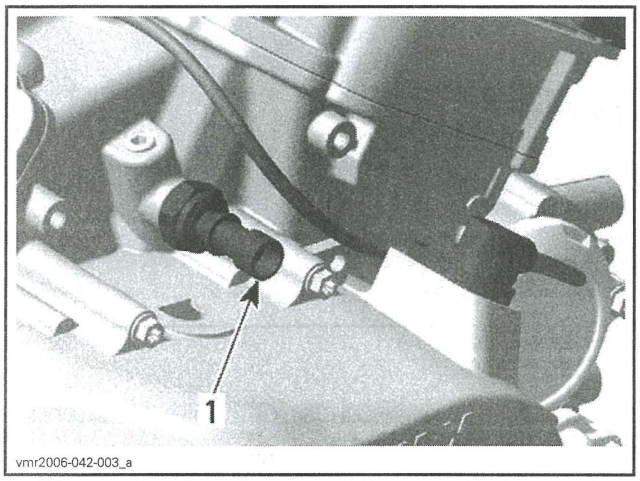

1. Oil pressure switch

Oil Pressure Switch Access

Refer to *BODY* and remove RH panel (Outlander series).

Remove OPS cover.

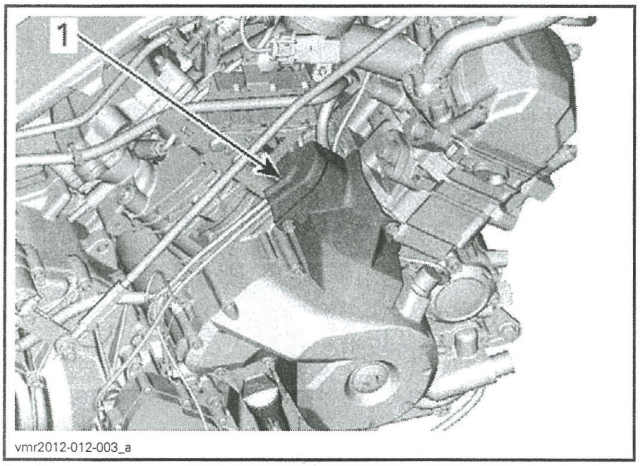

1. Remove

Oil Pressure Switch Activation

The oil pressure switch activates when the engine oil pressure is lower than following specified pressure range.

OIL PRESSURE SWITCH ACTIVATION RANGE
30 kPa ± 10 kPa (4.35 PSI ± 1.45 PSI)

To check the function of the oil pressure switch, an oil pressure test has to be performed. Refer to *ENGINE OIL PRESSURE* in this subsection.

If the engine oil pressure is good, perform the oil pressure switch resistance test.

Oil Pressure Switch Resistance Test

Disconnect the connector from the oil pressure switch.

Check resistance as per following tables.

OPS CONNECTOR	ENGINE	ENGINE NOT RUNNING
PIN		RESISTANCE (Ω)
1	Engine ground	Close to 0 Ω (normally closed switch)

OPS CONNECTOR	ENGINE	ENGINE RUNNING
PIN		RESISTANCE (Ω)
1	Engine ground	Infinite (open) when pressure reaches 30 kPa ± 10 kPa (4.35 PSI ± 1.45 PSI)

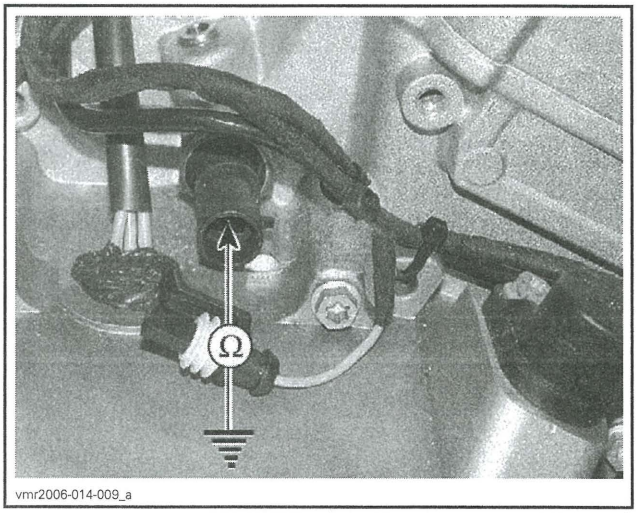

If resistance values are incorrect, replace the oil pressure switch.

If the values are correct, check wiring.

Oil Pressure Switch Removal

Unplug the oil pressure switch connector.

Unscrew and remove oil pressure switch.

Oil Pressure Switch Installation

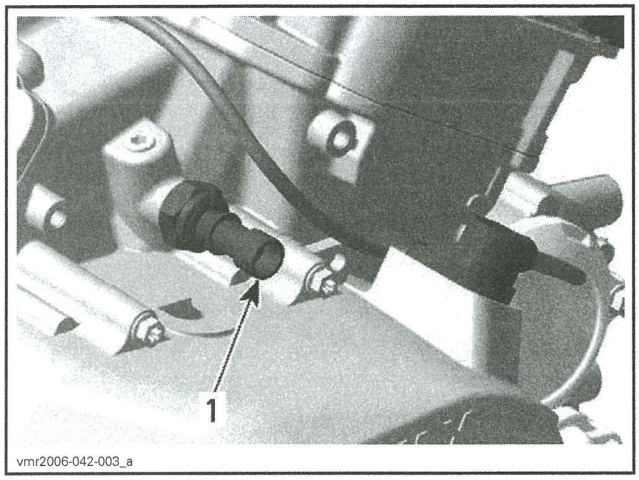

1. Oil pressure switch

Apply required service product on threads of oil pressure switch.

Tighten oil pressure switch to specification.

OIL PRESSURE SWITCH	
Service product	LOCTITE 243 (BLUE) (P/N 293 800 060)
Tightening torque	12 N•m ± 1 N•m (106 lbf•**in** ± 9 lbf•**in**)

ENGINE OIL PRESSURE REGULATOR

Oil Pressure Regulator Location

The oil pressure regulator is located on the engine magneto side, integrated in the magneto cover.

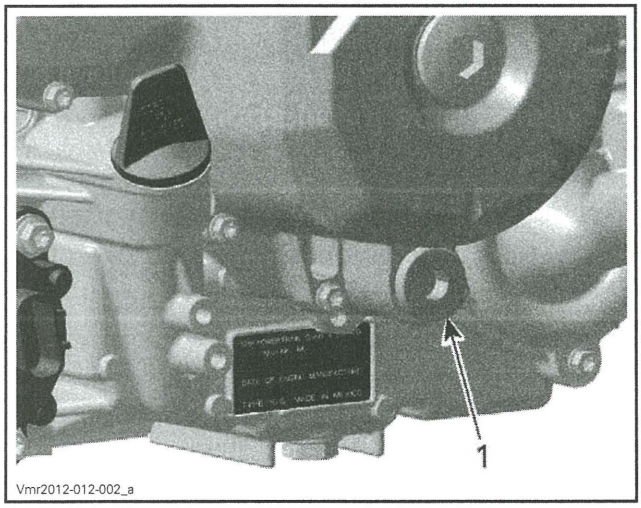

1. Engine oil pressure regulator

NOTE: The oil pressure regulator system works when the oil pressure exceeds 400 kPa (58 PSI).

Oil Pressure Regulator Access

To reach the pressure regulator (Outlander series), refer to *BODY* and remove:

- RH side panel
- RH footboard panel.

Oil Pressure Regulator Removal

Remove plug screw and pull oil pressure regulator out.

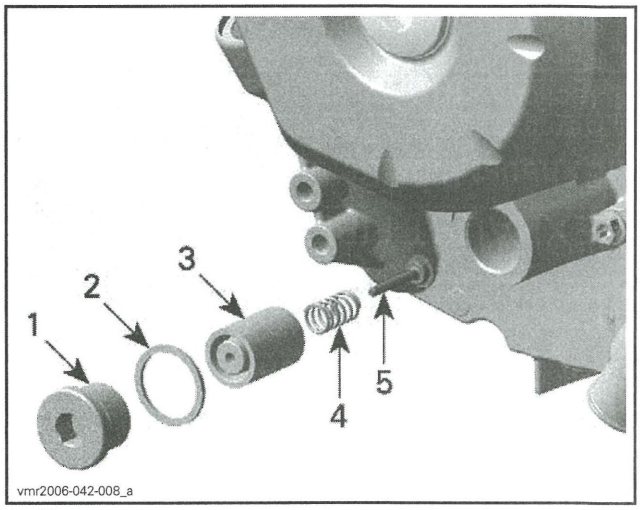

1. Plug screw
2. Gasket ring
3. Pressure regulator housing
4. Spring
5. Pressure regulator valve

Oil Pressure Regulator Inspection

Inspect pressure regulator housing and valve for scoring or other damages.

Check spring for free length.

SPRING FREE LENGTH	
NEW NOMINAL	39 mm (1.535 in)
SERVICE LIMIT	37 mm (1.457 in)

NOTE: Replace worn or damaged components.

Clean bore and thread in the magneto housing from metal shavings and other contaminations.

Oil Pressure Regulator Installation

For installation, reverse the removal procedure. Pay attention to the following details.

NOTE: At installation always replace the gasket ring of the plug screw by a NEW one.

OIL PUMP

Oil Pump Location

The oil pump is located on the engine PTO side (behind PTO cover).

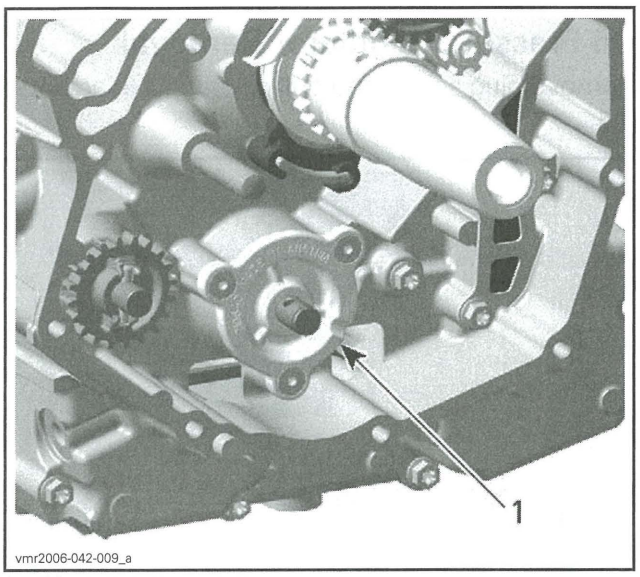

1. Oil pump

Oil Pump Removal

Remove the PTO cover. Refer to *PTO COVER* in the *BOTTOM END* subsection.

1. Remove:
   - Retaining ring
   - Oil pump gear
   - Needle pin
   - Thrust washer.

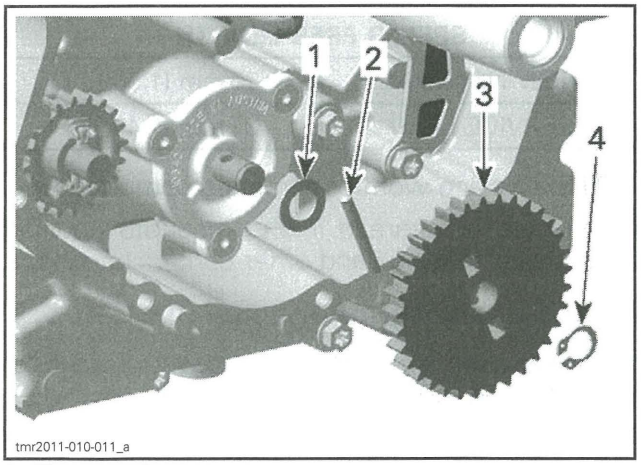

1. Thrust washer
2. Needle pin
3. Oil pump gear
4. Retaining ring

2. Remove oil pump cover screws and pull oil pump cover out.

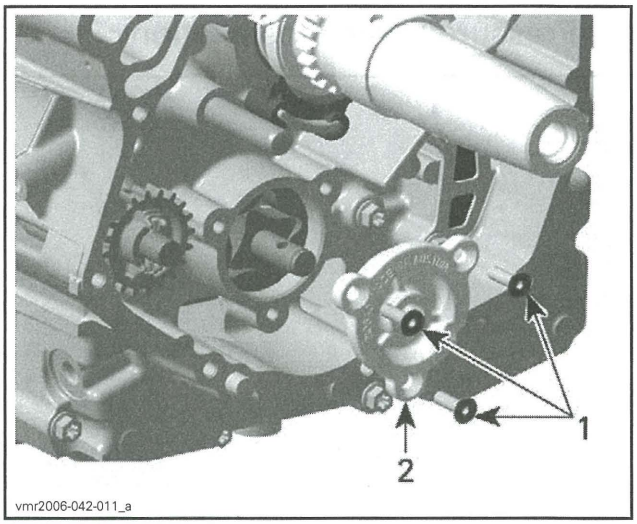

1. Retaining screws
2. Oil pump cover

3. Remove oil pump shaft with needle pin and inner rotor.
4. Remove outer rotor.

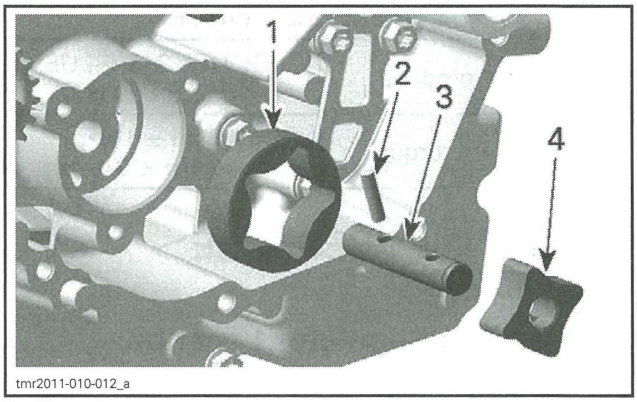

1. Outer rotor
2. Needle pin
3. Oil pump shaft
4. Inner rotor

Oil Pump Inspection

Inspect oil pump and oil pump cover bore for marks, scratches or other damages. Check for scratches in crankcase between outer rotor and oil pump bore. If so, replace damaged parts.

Check oil pump cover for damages and for surface straightness with a straightedge.

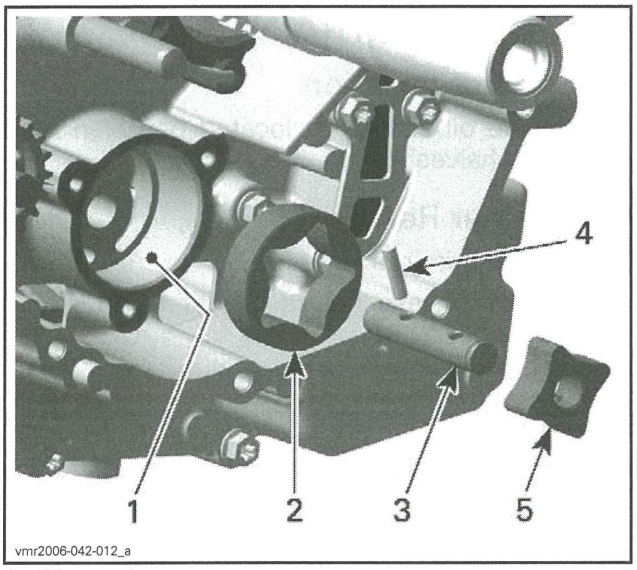

1. *Oil pump bore*
2. *Outer rotor*
3. *Oil pump shaft*
4. *Needle pin*
5. *Inner rotor*

Check inner rotor for corrosion pin holes or other damages. If so, replace oil pump shaft assembly.

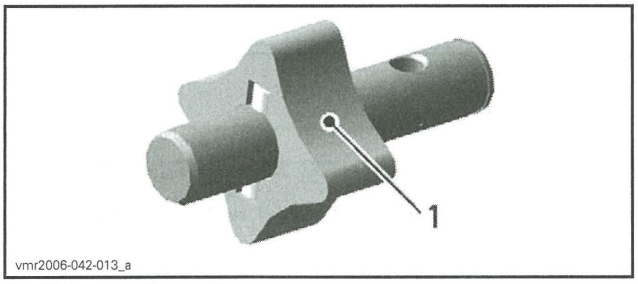

1. *Pittings on the teeth*

Using a feeler gauge, measure the clearance of inner and outer rotors as shown.

CLEARANCE OF INNER AND OUTER ROTOR	
SERVICE LIMIT	0.25 mm (.0098 in)

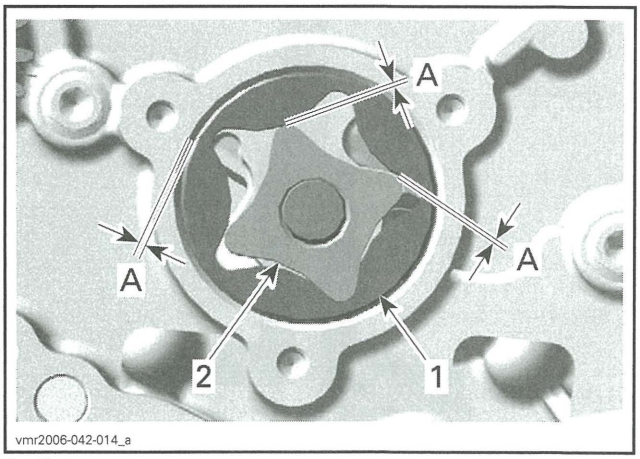

1. *Outer rotor*
2. *Inner rotor*

A. 0.25 mm (.0098 in)

If clearance of inner and outer rotors exceeds the tolerance, replace oil pump rotors. Ensure to also check oil pump cover. If damaged, replace the complete oil pump assembly.

If clearance between outer rotor and its bore in crankcase exceeds the tolerance, replace the complete oil pump rotors and/or the crankcase.

Using a depth gauge, measure the axial clearance of the oil pump as shown.

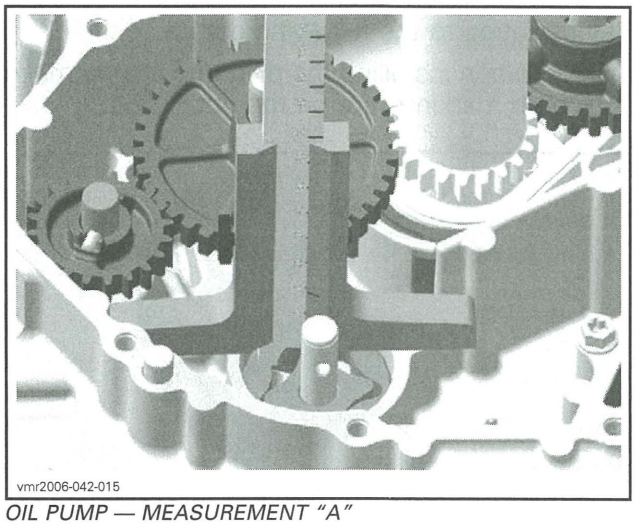

OIL PUMP — MEASUREMENT "A"

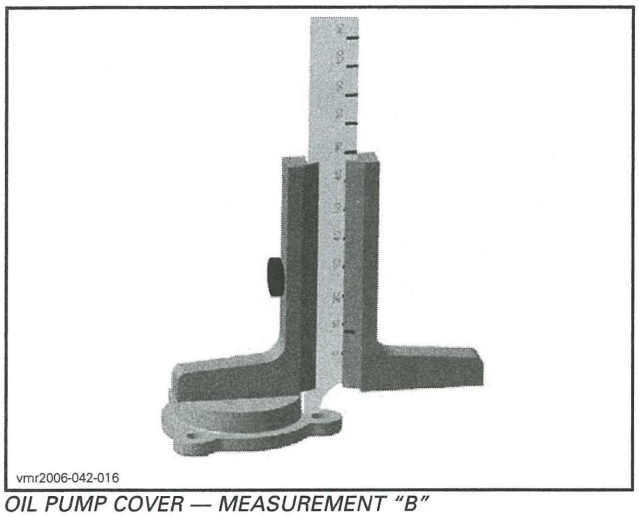

OIL PUMP COVER — MEASUREMENT "B"

Substract measurement B from measurement A to obtain axial clearance.

OIL PUMP AXIAL CLEARANCE	
SERVICE LIMIT	0.2 mm (.008 in)

NOTE: When the axial clearance of the oil pump assembly increases, the oil pressure decreases.

Oil Pump Installation

For installation, reverse the removal procedure.

Pay attention to the following details.

NOTE: When installing the oil pump rotors, make sure both markings are on the outer side.

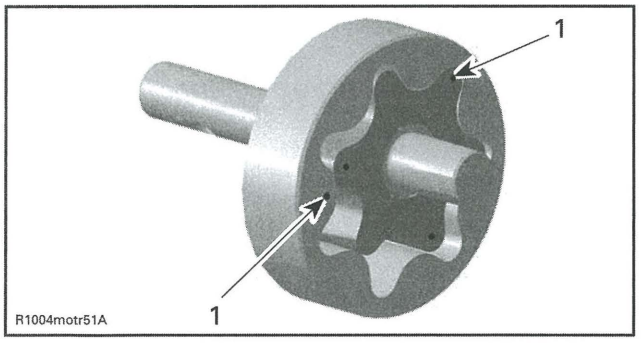

TYPICAL
1. Markings

After reinstallation of the remaining parts, check for smooth operation of the oil pump assembly.

Oil Pump Final Test

After engine is completely reassembled, start engine and make sure oil pressure is within specifications (refer to *ENGINE OIL PRESSURE* in this subsection).

ENGINE OIL STRAINER

Oil Strainer Location

The engine oil strainer is located between both crankcase halves.

Oil Strainer Removal

Remove engine from vehicle.

Separate crankcase halves. Refer to *BOTTOM END* subsection.

Remove screws and retaining plate.

Pull out engine oil strainer.

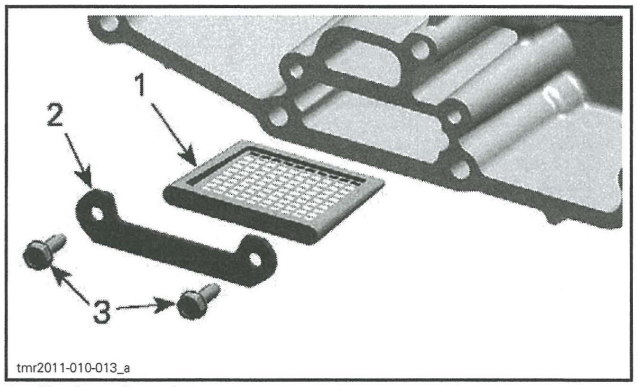

1. Engine oil strainer
2. Retaining plate
3. Screws

Oil Strainer Cleaning and Inspection

Clean engine oil strainer with a part cleaner then use an air gun to dry it.

⚠ WARNING

Always wear eye protector. Chemicals can cause a rash break out and injure your eyes.

Check engine oil strainer for cracks or other damage. Replace if damaged.

Oil Strainer Installation

The installation is the reverse of the removal procedure.

OIL STRAINER SCREWS	
Service product	LOCTITE 243 (BLUE) (P/N 293 800 060)
Tightening torque	6 N•m ± 0.7 N•m (53 lbf•**in** ± 6 lbf•**in**)

REED VALVE

The engine is equipped with a reed valve which prevents accumulation of larger oil quantities in the crankcase. The reed valve is fitted into the crankcase.

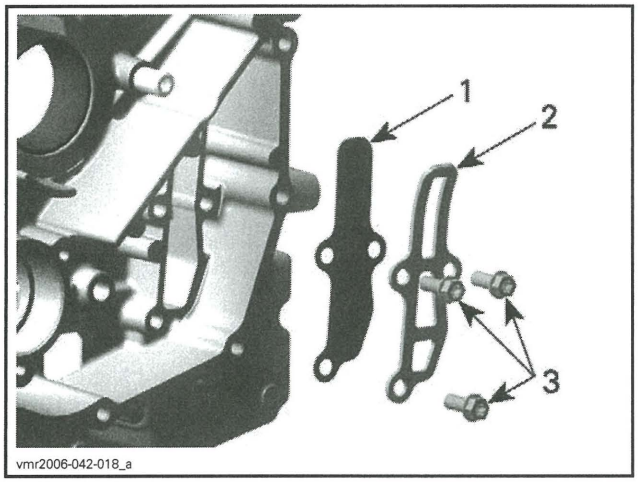

1. *Reed valve*
2. *Stopper*
3. *Screws*

Reed Valve Removal

Remove:

- Engine from vehicle
- PTO cover (refer to *PTO COVER* in the *BOTTOM END* subsection)
- Reed valve retaining screws
- Stopper plate
- Reed valve.

Reed Valve Inspection

Check reed valve for cracks or other damage.

Replace reed valve if damaged.

Reed Valve Installation

The installation is the reverse of the removal procedure.

COOLING SYSTEM

SERVICE TOOLS

Description	Part Number	Page
BLIND HOLE PULLER KIT	529 036 056	93
FLUKE 115 MULTIMETER	529 035 868	85
HANDLE	420 877 650	94
OIL SEAL PUSHER	529 035 757	94
ROTARY SEAL PUSHER PLATE	529 036 130	91
SEAL PUSHER	529 035 766	91, 94

SERVICE PRODUCTS

Description	Part Number	Page
DOW CORNING 111	413 707 000	94
LOCTITE 243 (BLUE)	293 800 060	83

RADIATOR

500, 650 and 800R Engine

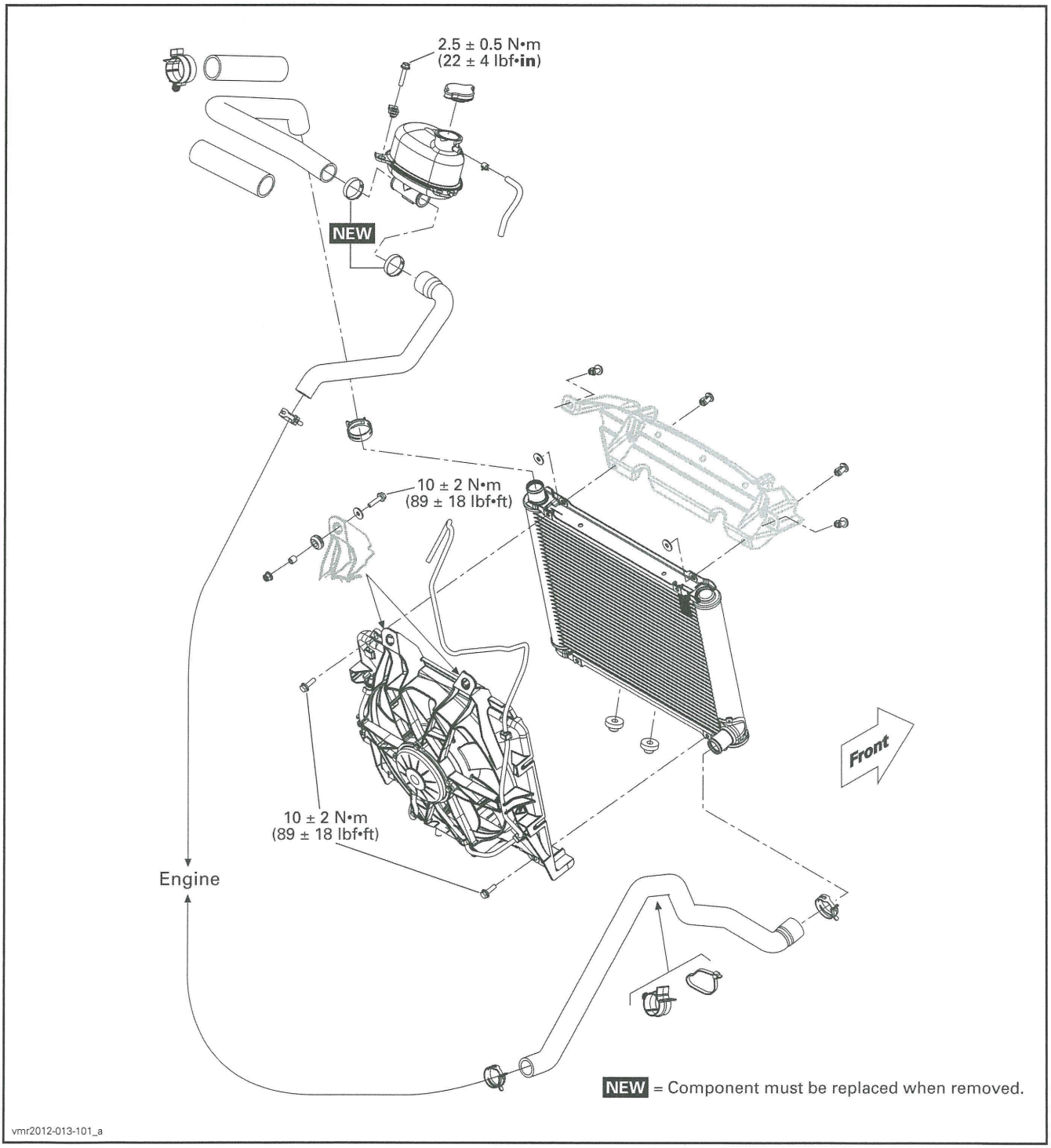

RADIATOR AND THERMOSTAT

1000 Engine

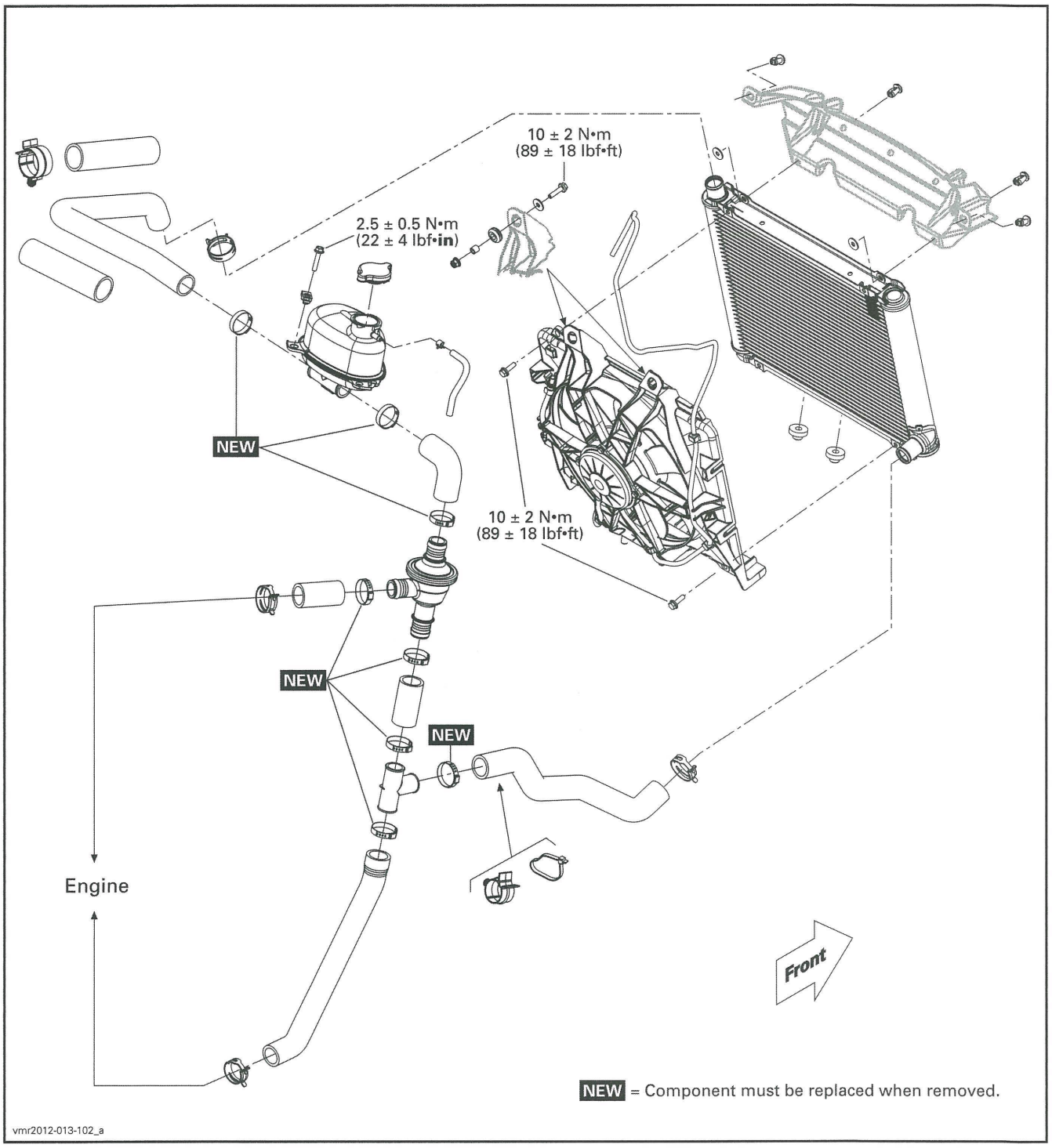

WATER PUMP AND THERMOSTAT

500, 650 and 800R Engine

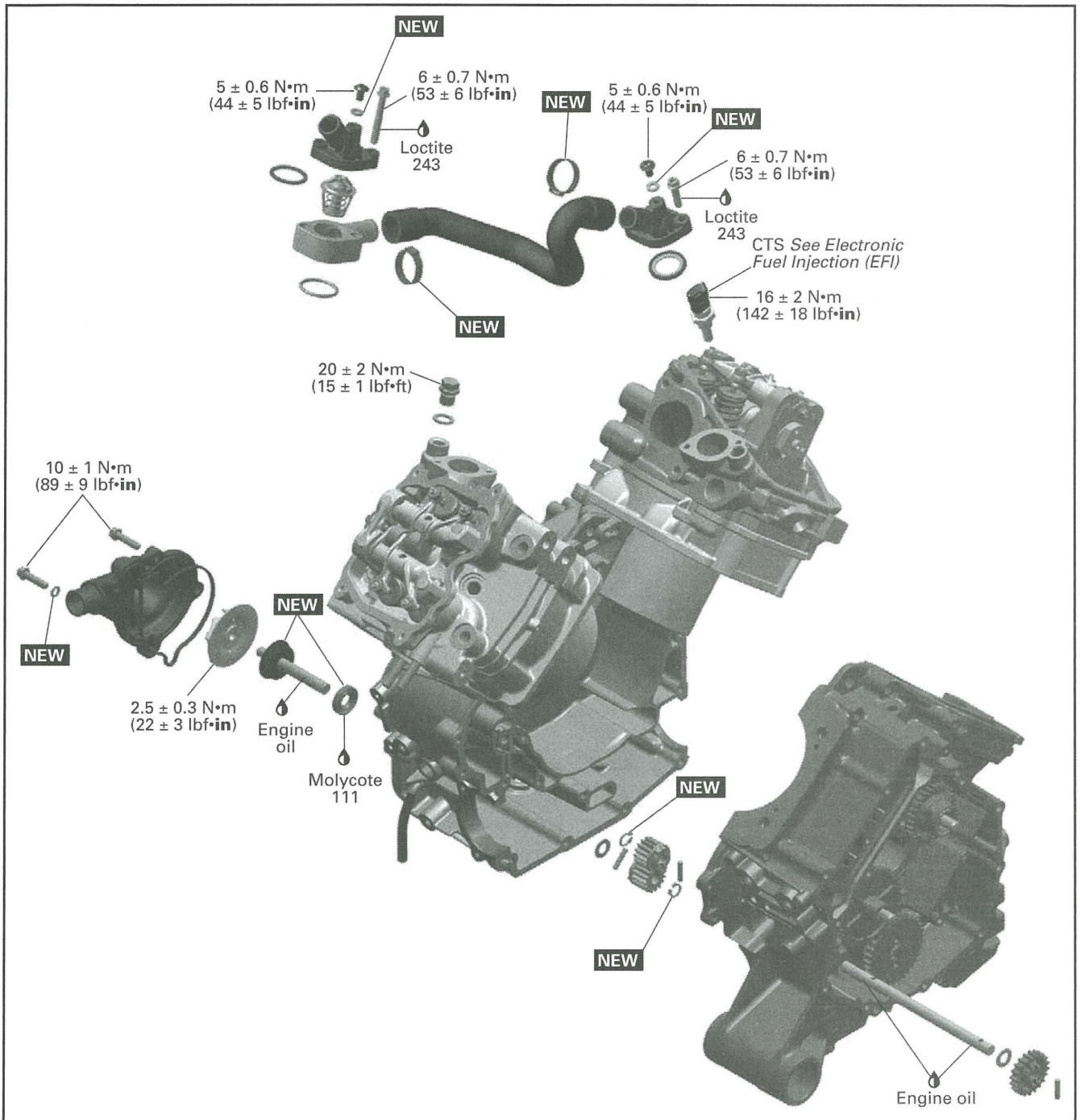

NEW = Component must be replaced when removed.

vmr2013-013-002_a

WATER PUMP

1000 Engine

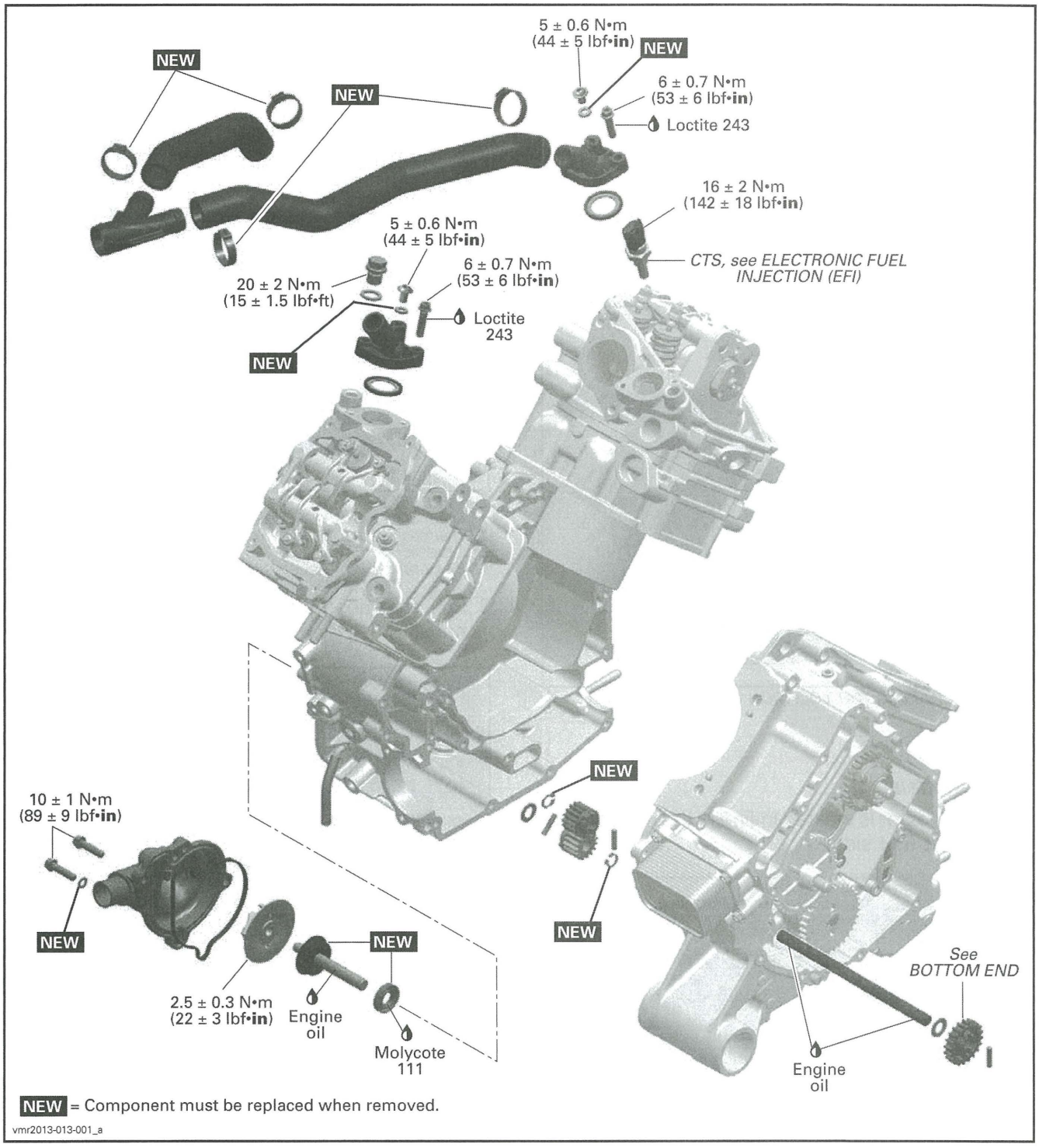

GENERAL

NOTICE Never start engine without coolant. Some engine parts such as the rotary seal on the water pump shaft can be damaged.

PROCEDURES

THERMOSTAT

Thermostat Location

500, 650 and 800R Models

The thermostat is located in the thermostat housing at the top of the front cylinder (RH side).

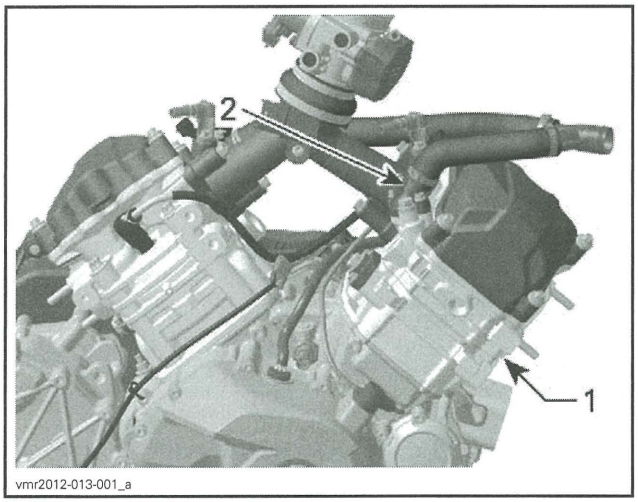

TYPICAL - THERMOSTAT LOCATION (500, 650 AND 800R MODELS)
1. *Front cylinder*
2. *Thermostat housing*

1000 Models

The thermostat is located in-line in the cooling system circuit (RH side).

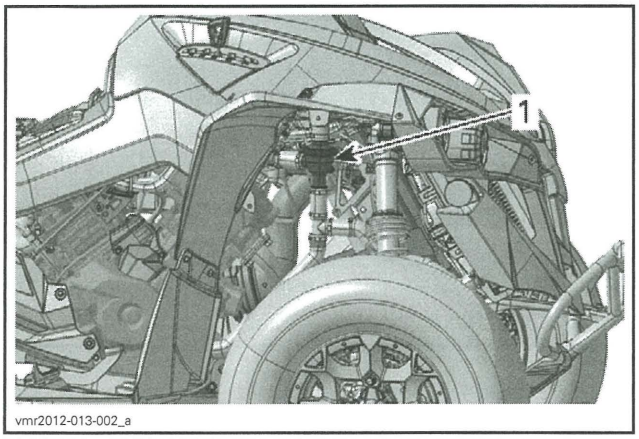

TYPICAL - THERMOSTAT LOCATION (1000 MODELS)
1. *In-line thermostat*

Thermostat Removal

500, 650 and 800R Models

1. Drain engine coolant, refer to *PERIODIC MAINTENANCE PROCEDURES* subsection.
2. Remove thermostat housing screws and remove thermostat cover.

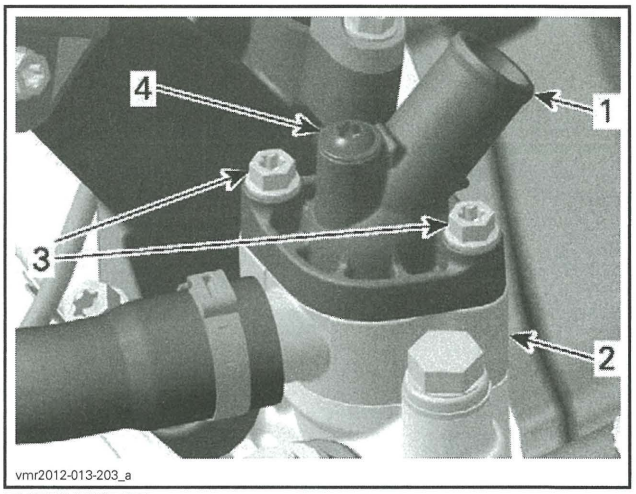

THERMOSTAT
1. *Thermostat cover*
2. *Thermostat housing*
3. *Cover screws*
4. *Bleed screw*

3. Pull thermostat and gasket from thermostat housing.

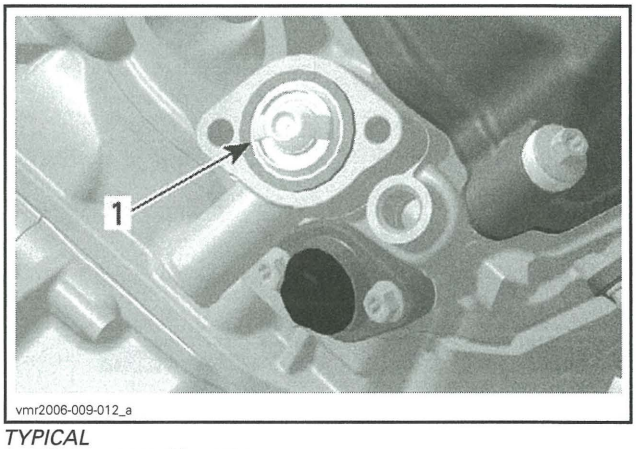

TYPICAL
1. *Thermostat with gasket*

1000 Models

1. Drain engine coolant, refer to *PERIODIC MAINTENANCE PROCEDURES* subsection.
2. Remove Oetiker clamps that secure hoses to thermostat.

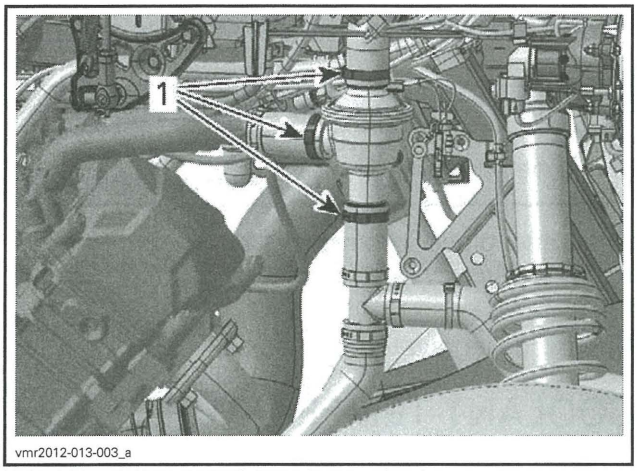

TYPICAL - SOME PARTS REMOVED FOR CLARITY
1. Oetiker clamps

3. Pull hoses from thermostat housing to remove thermostat.

Thermostat Test

To check thermostat, put it in water and heat the water.

THERMOSTAT OPENING TEMPERATURE		
MODELS	STARTS TO OPEN	FULLY OPEN
500, 650 and 800R	65°C (149°F)	75°C (167°F)
1000		

Replace thermostat if it does not begin to open at specified temperature.

Check if gasket is brittle, hard or damaged. If so, replace gasket.

Thermostat Installation

The installation is the reverse of the removal procedure. However, pay attention to the following.

500, 650 and 800R Models

THERMOSTAT COVER INSTALLATION	
Service product	LOCTITE 243 (BLUE) (P/N 293 800 060)
Tightening torque	6 N•m ± 0.6 N•m (53 lbf•**in** ± 5 lbf•**in**)

1000 Models

Reverse the removal procedure.

All Models

Refill and bleed cooling system, refer to *PERIODIC MAINTENANCE PROCEDURES* subsection.

Check cooling system for leaks.

RADIATOR

Radiator Inspection

Check radiator fins for clogging or damage.

Remove insects, mud or other obstructions with compressed air or low pressure water.

Radiator Removal

1. Drain engine coolant. Refer to *PERIODIC MAINTENANCE PROCEDURES* subsection.
2. Remove front body module. Refer to *BODY* subsection.
3. Disconnect both radiator hoses.

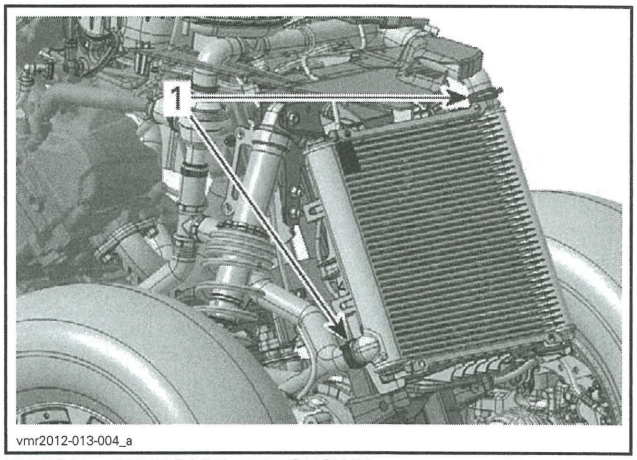

TYPICAL - RENEGADE 1000 SHOWN
1. Radiator hoses

4. On applicable models, remove the following plastic rivets.

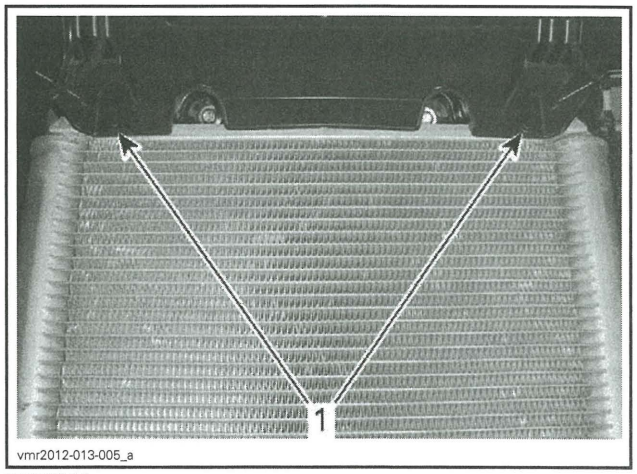

TYPICAL
1. Plastic rivets

5. Remove upper retaining bolts from radiator.

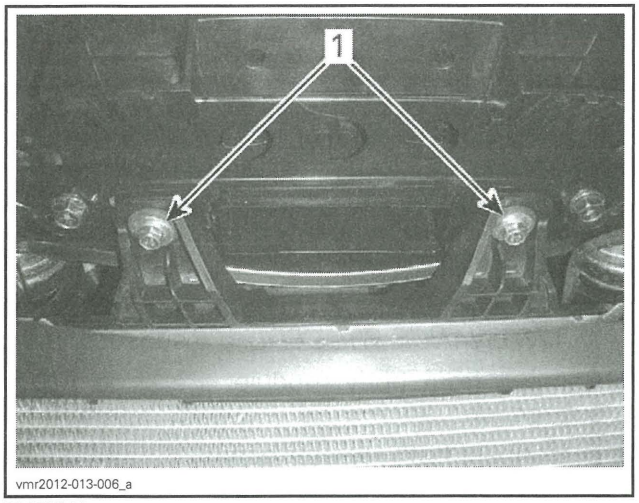

TYPICAL
1. Upper retaining bolts

6. Disconnect cooling fan connector.

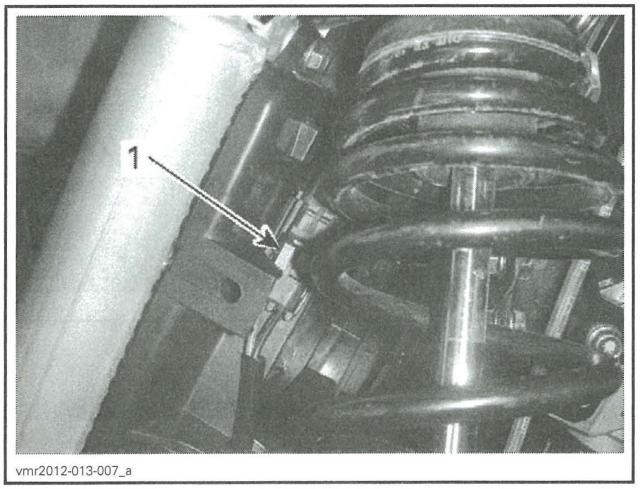

FROM LH SIDE
1. Cooling fan connector

7. Remove cooling fan vent hose from vehicle.

NOTE: Take note of the rooting of vent hose on vehicle to ease reinstallation.

8. Pull radiator upwards to release it from rubber bushings.

Radiator Installation

The installation is the reverse of the removal procedure. However, pay attention to the following.

Ensure that rubber bushings are properly installed between frame and radiator.

Ensure that vent hose of the cooling fan motor is properly rooted as prior to removal.

NOTICE **If the vent hose of the cooling fan motor is not properly rooted, the fan motor may be damaged due to improper venting.**

Tighten radiator upper retaining bolts to specification.

RADIATOR UPPER RETAINING BOLTS	
Tightening torque	10 N•m ± 2 N•m (89 lbf•**in** ± 18 lbf•**in**)

Refill and bleed cooling system, refer to *PERIODIC MAINTENANCE PROCEDURES* subsection.

Check cooling system for leaks.

COOLANT TEMPERATURE SENSOR (CTS)

Refer to *ELECTRONIC FUEL INJECTION (EFI)* subsection.

RADIATOR COOLING FAN RELAY (R1)

Relay Location (Radiator Cooling Fan)

The relay (R1) is located in front fuse box under gauge support.

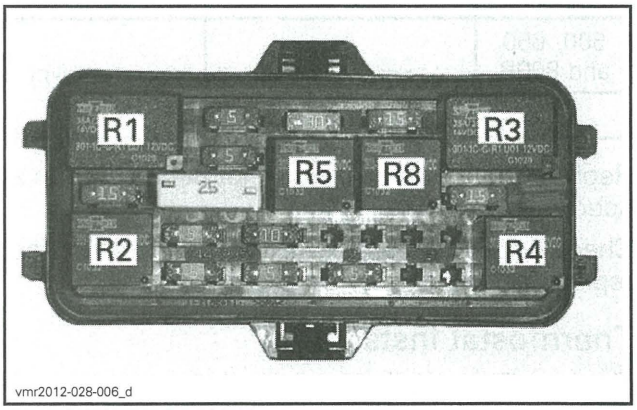

R1: RADIATOR COOLING FAN RELAY

Relay Operation Test (Radiator Cooling Fan)

1. Remove relay (R1).
2. Bypass relay using a jumper. Refer to *WIRING DIAGRAM* to locate proper terminals.
3. If the radiator cooling fan is activated, replace the relay.

Relay Continuity Test (Radiator Cooling Fan)

1. Remove relay.
2. Set multimeter to Ω.

REQUIRED TOOL
FLUKE 115 MULTIMETER (P/N 529 035 868)

3. Probe relay as follows.

TERMINAL		RESISTANCE
30	87	Open circuit (OL)

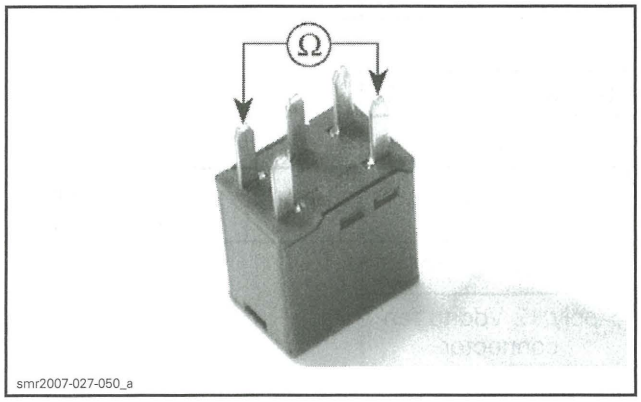

4. Connect battery as shown and probe relay again as follows.

TERMINAL		RESISTANCE
30	87	0.5 Ω max. (continuity)

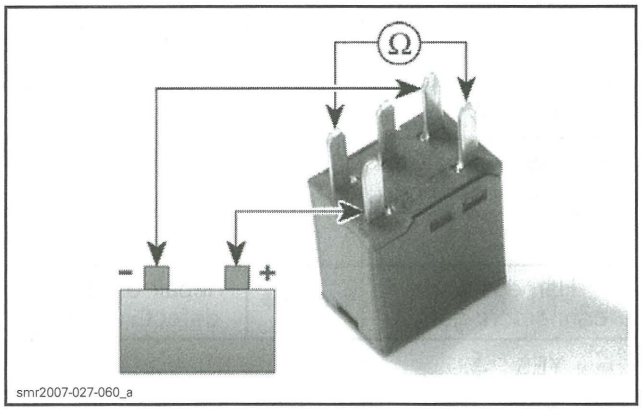

If relay failed any test, replace it.

RADIATOR COOLING FAN

Radiator Cooling Fan Operation

The ECM controls the radiator cooling fan via the input of the coolant temperature sensor (CTS) and the manifold air pressure and temperature sensor (MAPTS). Refer to the following tables.

AIR INTAKE TEMPERATURE	COOLING FAN
88°C (190°F)	Turns ON
85°C (185°F)	Turns OFF

ENGINE TEMP.	COOLING FAN	CHECK ENGINE LIGHT	GAUGE MESSAGE
95°C (203°F)	Turns ON		
93°C (199°F)	Turn OFF		
115°C (239°F)	ON	Turns ON	Check engine Hi Temp
118°C (244°F)	ON	Flashes	Limp Home

Radiator Cooling Fan Fuse Location

The fuse (F9) is located in front fuse box under gauge support.

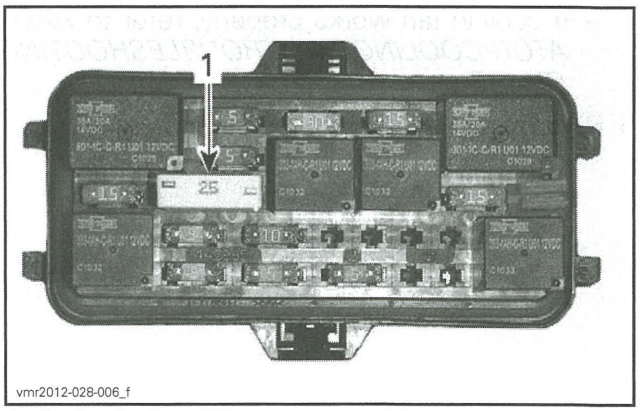

1. Cooling fan fuse (F9)

Radiator Cooling Fan Test

1. Disconnect radiator cooling fan connector.

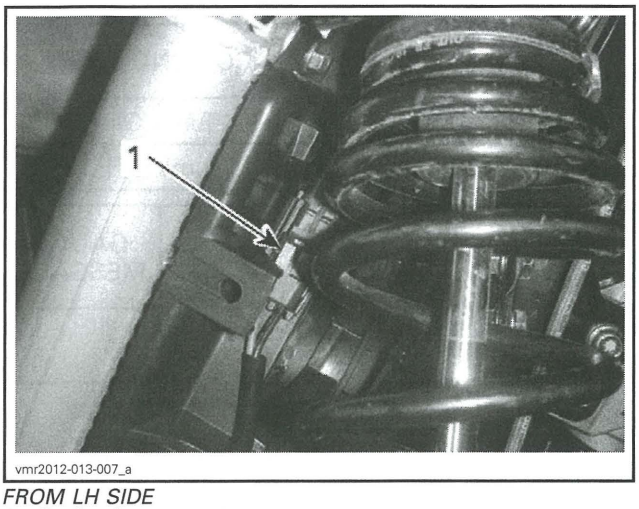

FROM LH SIDE
1. Cooling fan connector

2. Connect cooling fan connector pin B (BU wire) to a 20 A suitable fuse jumper and then directly to the positive battery post.
3. Connect cooling fan connector pin A (BK wire) directly to the negative battery post.
4. Check if cooling fan works properly.
   - If cooling fan does not work, replace it.
   - If cooling fan works properly, refer to *RADIATOR COOLING FAN TROUBLESHOOTING CHART*.
5. Reconnect radiator cooling fan connector.

Radiator Cooling Fan Troubleshooting Chart

COOLING FAN TROUBLESHOOTING CHART		
Is fan working?	YES →	Everything is OK
NO ↓		
Check ECM fuse (F6) Check FAN fuse (F9) Is fuse burnt?	YES →	Replace fuse Is fan working?
NO ↓		
Bypass fan relay R1		
↓		
Fan turns?	YES →	Replace relay Is fan working?
NO ↓		
Apply 12 Vdc to fan connector		
↓		
Fan turns?	NO →	Replace fan Is fan working?
YES ↓		
Check CTS		
↓		
CTS works?	NO →	Replace CTS Is fan working?
YES ↓		
Check wiring harness and connectors		
↓		
Harness and connectors good?	NO →	Repair or replace defective part(s)
YES ↓		
Try a new ECM	→	Is fan working?

Radiator Cooling Fan Removal

1. Proceed with *RADIATOR REMOVAL*. See procedure in this subsection.
2. Remove radiator cooling fan retaining screws.

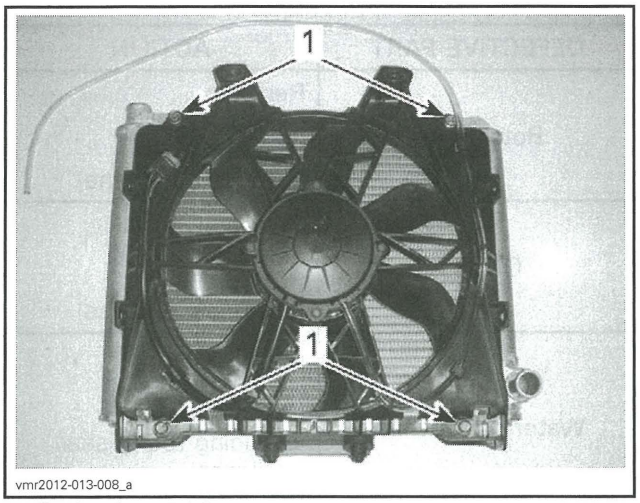

1. Cooling fan retaining screws

3. Remove radiator cooling fan.

Radiator Cooling Fan Installation

The installation is the reverse of the removal procedure. However, pay attention to the following.

Tighten cooling fan retaining screws to specification.

RADIATOR COOLING FAN SCREWS	
Tightening torque	10 N•m ± 2 N•m (89 lbf•**in** ± 18 lbf•**in**)

WATER PUMP HOUSING

Water Pump Housing Location

The water pump housing is located on the engine MAG side.

Water Pump Housing Access

Remove RH footrest panel, refer to *BODY* subsection.

Water Pump Housing Removal

⚠ WARNING

To avoid potential burns, do not remove the radiator cap or loosen the coolant drain plug if the engine is hot.

1. Drain engine coolant. Refer to *PERIODIC MAINTENANCE PROCEDURES* subsection.
2. Remove radiator outlet hose from water pump housing.
3. Remove screws retaining water pump housing.

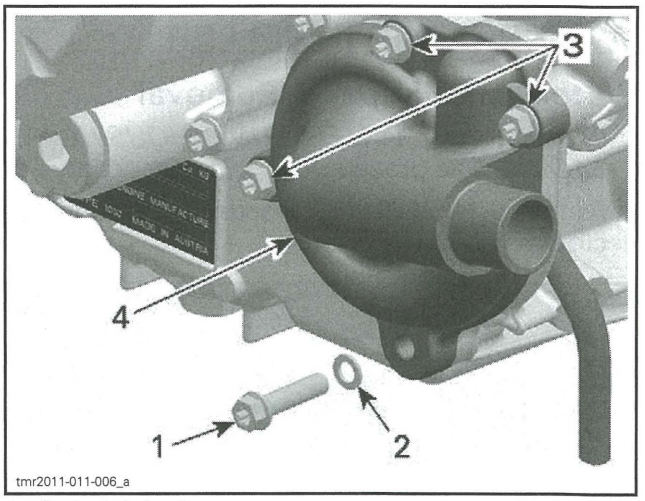

1. Coolant drain plug
2. Sealing ring
3. Screws
4. Water pump housing

4. Pull water pump housing to remove it.

Water Pump Housing Inspection

Check if gasket is brittle, hard or damaged and replace as necessary.

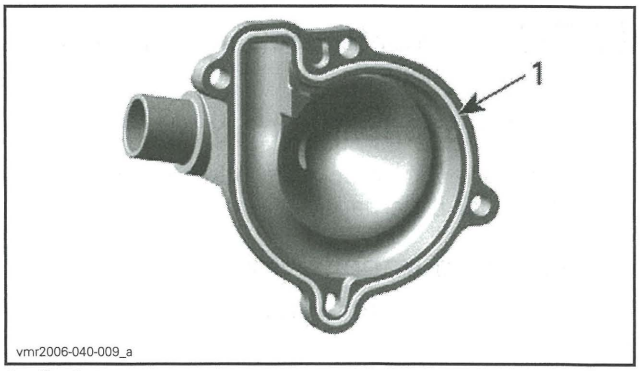

1. Gasket

Water Pump Housing Installation

The installation is the reverse of the removal procedure. However, pay attention to the following.

NOTICE **To prevent leaking, take care that the gasket is exactly in groove when you reinstall the water pump housing.**

Tighten screws of water pump housing in a criss-cross sequence to specification.

WATER PUMP HOUSING SCREWS	
Tightening torque	10 N•m ± 1 N•m (89 lbf•**in** ± 9 lbf•**in**)

WATER PUMP IMPELLER

Water Pump Impeller Removal

1. Proceed with *WATER PUMP HOUSING REMOVAL*. See procedure in this subsection.
2. Remove impeller by unscrewing it counterclockwise.

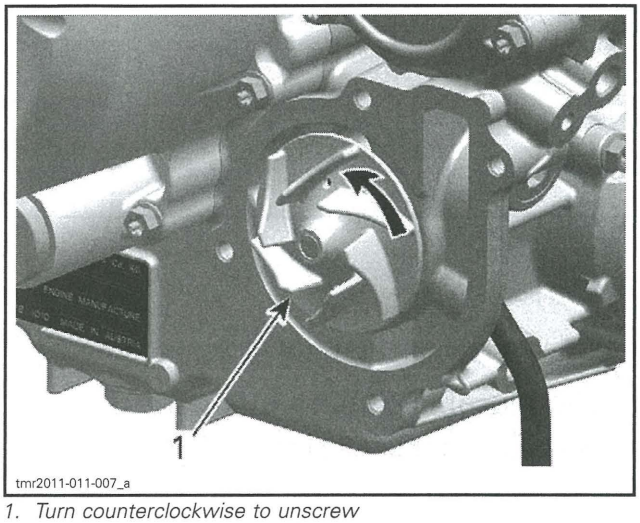

1. Turn counterclockwise to unscrew

NOTICE Water pump shaft and impeller have right-hand threads.

Water Pump Impeller Inspection

Check impeller for cracks or other damage. Replace impeller if damaged.

Water Pump Impeller Installation

The installation is the reverse of the removal procedure. However, pay attention to the following.

NOTICE Be careful not to damage impeller fins during installation.

WATER PUMP SHAFT AND SEALS

Use these guidelines to service these parts.

DEFECTIVE PART	ACTION
Rotary seal	Replace: - Rotary seal - Oil seal (assembled engine)
Oil seal	Replace: - Rotary seal - Oil seal (assembled engine)
Water pump shaft	Replace: - Water pump shaft assembly (including rotary seal) - Oil seal (engine disassembled)

Water Pump Seals Replacement (Assembled Engine)

NOTE: Read and thoroughly understand the entire procedure before starting it.

Seals Removal

1. Remove the following parts, see procedure in this subsection.
   - *WATER PUMP HOUSING*
   - *WATER PUMP IMPELLER.*
2. Carefully pry out inner part of the rotary seal using 2 screwdrivers.

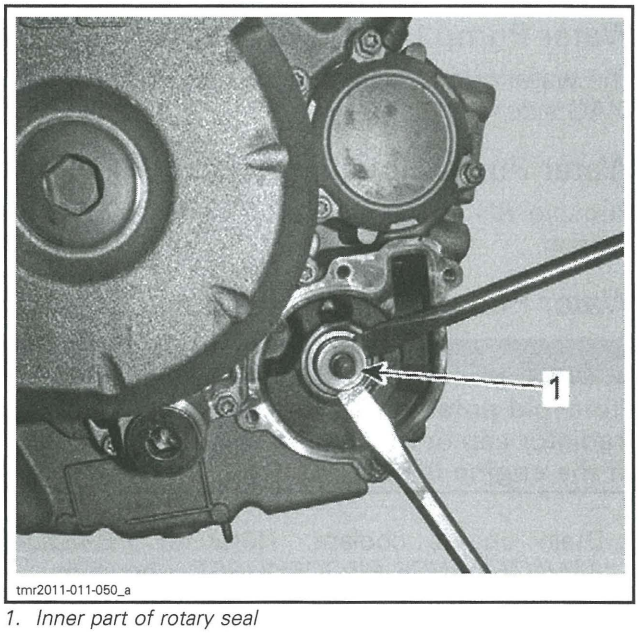

1. Inner part of rotary seal

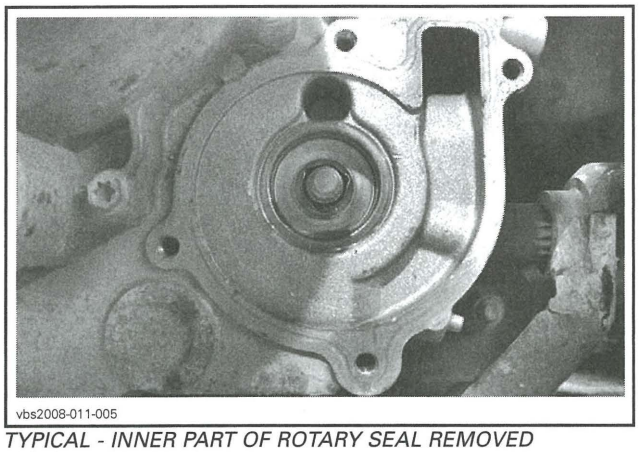
vbs2008-011-005

TYPICAL - INNER PART OF ROTARY SEAL REMOVED

3. Carefully bend down the outer part of rotary seal lip using a small chisel.

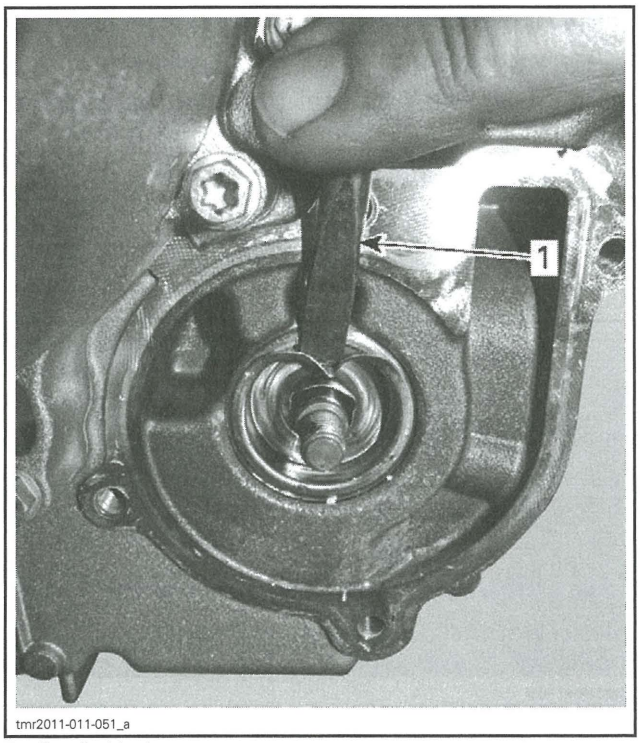

tmr2011-011-051_a

1. *Small chisel*

4. Use 2 screwdrivers and carefully remove the outer part of the rotary seal.

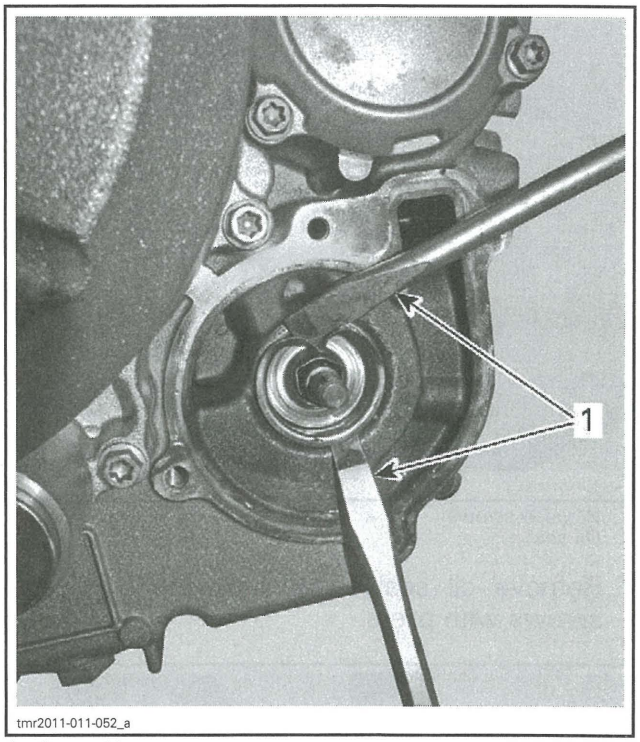

tmr2011-011-052_a

1. *Screwdrivers*

NOTICE **Be careful not to damage the crankcase while removing outer part of the rotary seal.**

5. Thoroughly remove sealing residue and burr of rotary seal using a scraper.

NOTICE **Be careful not to damage water pump shaft.**

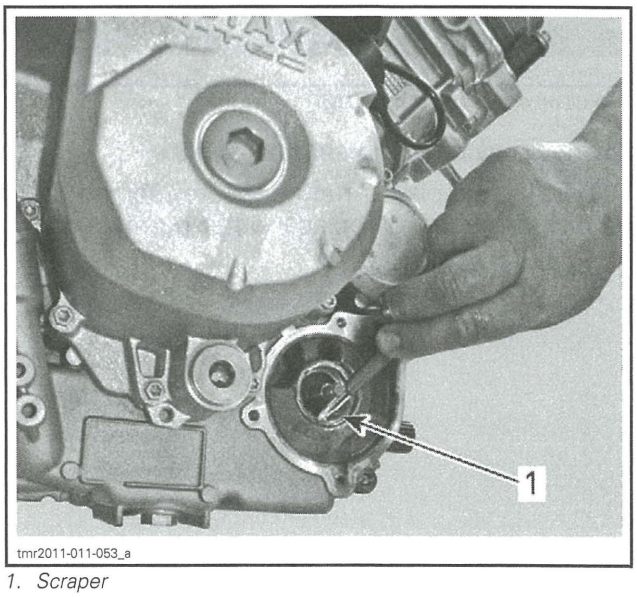

tmr2011-011-053_a

1. *Scraper*

6. Install 2 wooden screws in the seal.

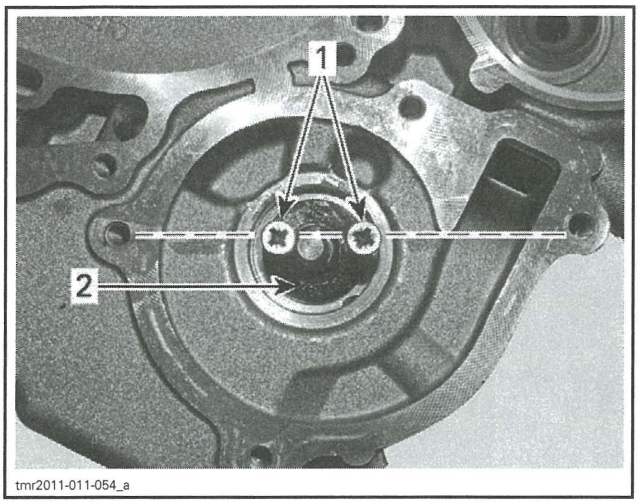

tmr2011-011-054_a

1. *Wooden screws*
2. *Oil seal*

7. Remove oil seal from crankcase by pulling screws with pliers.

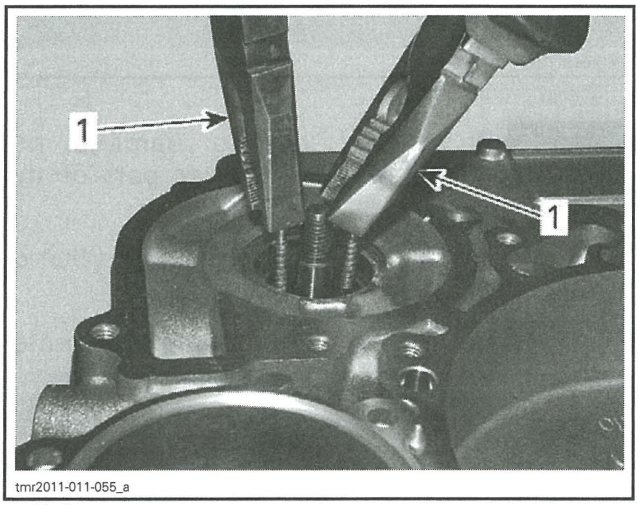

tmr2011-011-055_a

1. *Pull on screws to remove seal*

8. Check water pump shaft axial play.

NOTE: If axial play is not adequate, engine must be disassembled to replace water pump shaft.

9. Clean oil seal seat.

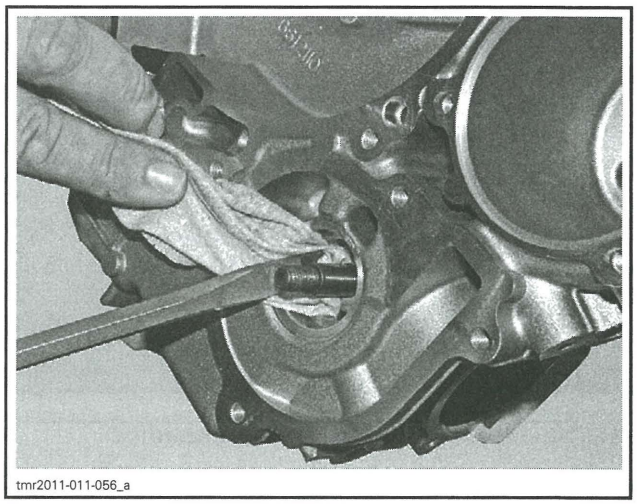
tmr2011-011-056_a

Seals Installation

1. Apply engine oil on water pump shaft.
2. Apply grease on the lips of the oil seal.
3. Carefully install oil seal over the water pump shaft.
4. Push oil seal into the water pump cavity.

REQUIRED TOOL
17 mm (11/16 in) deep socket

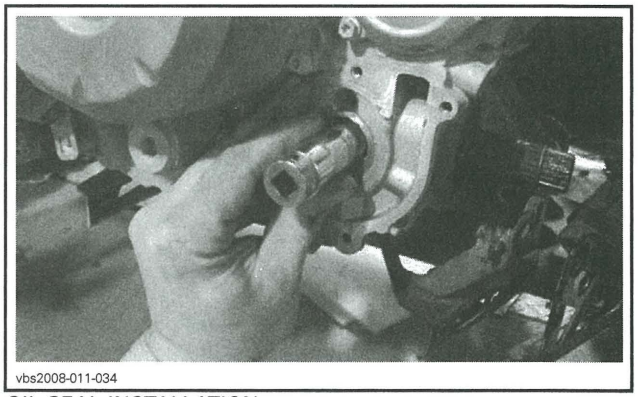
vbs2008-011-034

OIL SEAL INSTALLATION

5. Ensure that the oil seal is properly seated in water pump cavity.

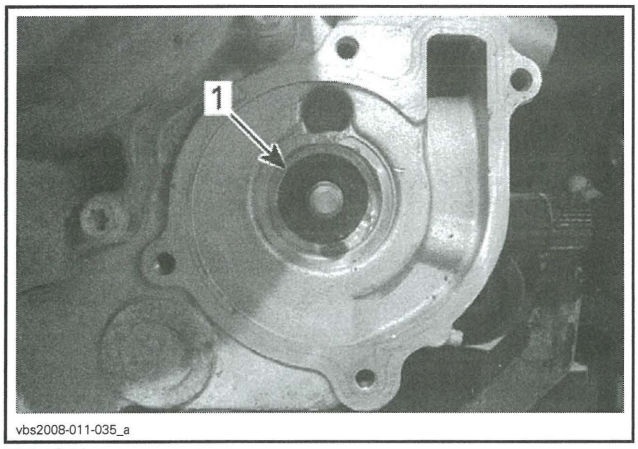

TYPICAL
1. *Oil seal properly seated*

6. Apply engine oil on water pump shaft.
7. Place rotary seal onto water pump shaft and pull out water pump shaft by hand.

NOTICE **Do not install the rotary seal completely into the crankcase to prevent the water pump shaft plastic gear from breaking. Push it partially in, then pull the shaft.**

8. Place a robust M8 flat washer (P/N 420 227 935) onto water pump shaft.
9. Install a M8 x 1.25 nut (P/N 233 281 414) onto water pump shaft by hand.
10. Thread nut **1-1/2 turns** to pull the shaft into rotary seal.

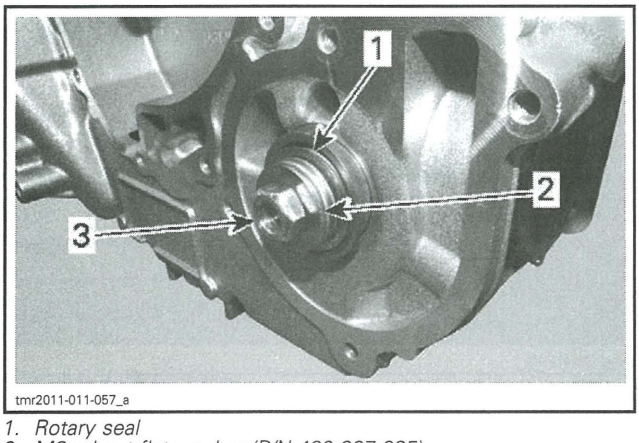

1. *Rotary seal*
2. *M8 robust flat washer (P/N 420 227 935)*
3. *M8 x 1.25 nut (P/N 233 281 414)*

11. Remove M8 nut.

NOTE: The robust M8 flat washer must remain on water pump shaft.

REQUIRED TOOLS
ROTARY SEAL PUSHER PLATE (P/N 529 036 130)
4x M6 x 85 screws (P/N 420 440 347)
4x tubes 70 mm (2.75 in)
SEAL PUSHER (P/N 529 035 766)

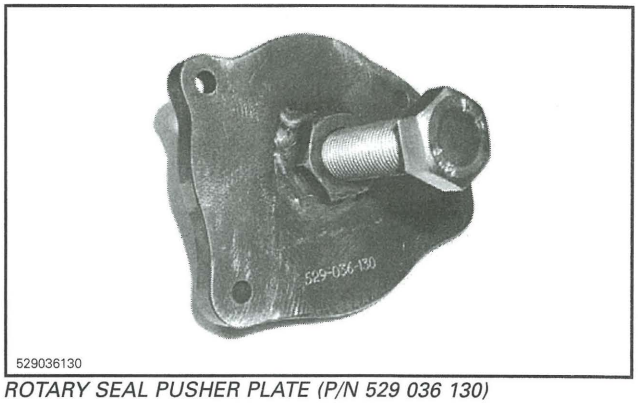

ROTARY SEAL PUSHER PLATE (P/N 529 036 130)

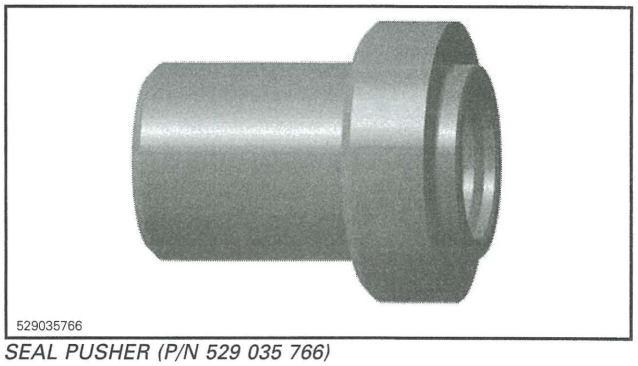

SEAL PUSHER (P/N 529 035 766)

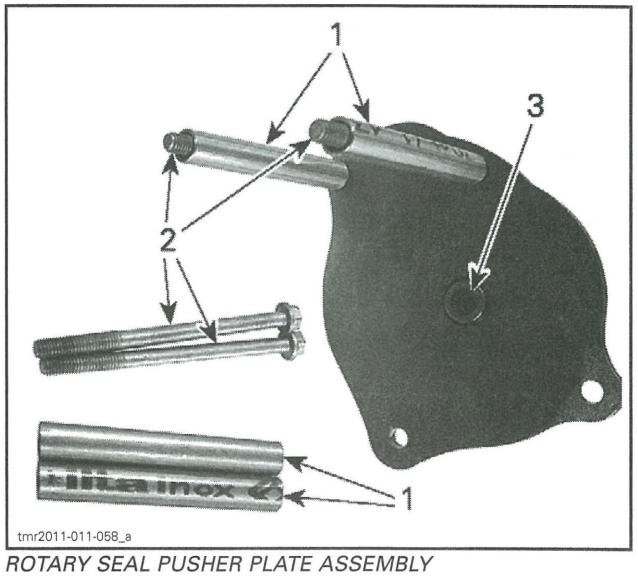

ROTARY SEAL PUSHER PLATE ASSEMBLY
1. *4 x tubes (70 mm (2.75 in) length)*
2. *4 x screws M6 x 85*
3. *Plane surface on pusher bolt*

12. Install rotary seal installation tools on crankcase as follows.

    NOTE: Make sure pusher bolt has a plane surface.

    12.1 Apply a little grease at the end of tool pusher bolt.

    12.2 Ensure that pusher bolt is completely unscrewed.

    12.3 Install rotary seal pusher plate on crankcase by tightening M6 screws.

    NOTICE **Do not use pneumatic or electric tools for tightening screws.**

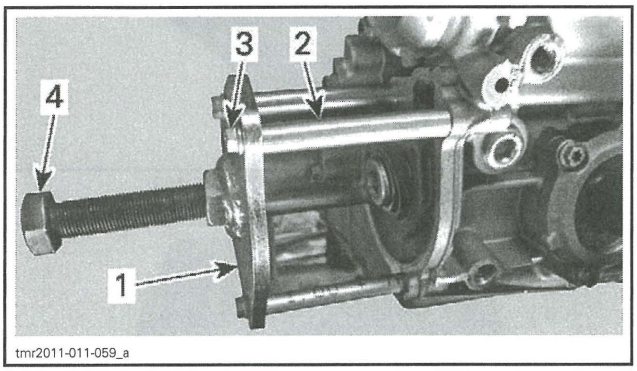

ROTARY SEAL PUSHER PLATE INSTALLATION
1. *Rotary seal pusher plate*
2. *Tube (70 mm (2.75 in) length)*
3. *M6 x 85 screw*
4. *Pusher bolt*

    12.4 Install seal pusher between rotary seal pusher plate and water pump shaft.

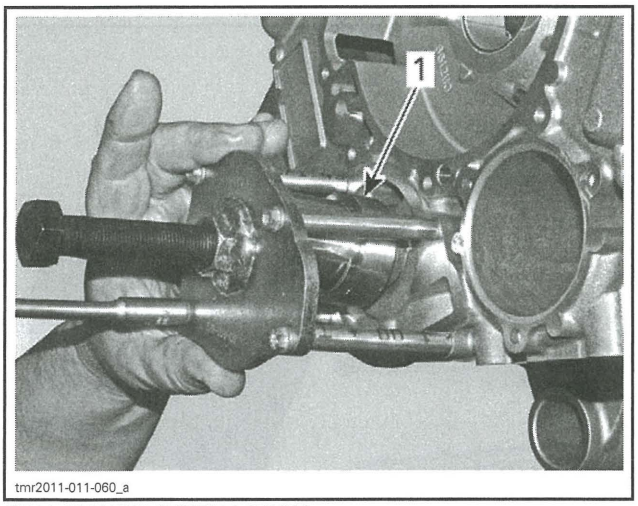

SEAL PUSHER INSTALLATION
1. *Seal pusher aligned with pusher bolt*

    12.5 Tighten the pusher bolt by hand until it stops against the seal pusher.

13. Carefully thread the pusher bolt **1-1/2 turns**.

14. Ensure that the rotary seal is going straight into crankcase.

15. Remove rotary seal installation tools from crankcase.

16. Repeat steps *9 TO 15* until rotary seal is completely seated in the crankcase.

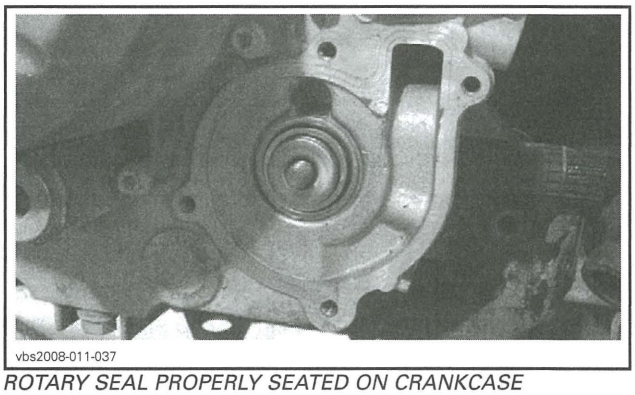

ROTARY SEAL PROPERLY SEATED ON CRANKCASE

17. Carry out the final adjustment of the water pump shaft as follows.

    17.1 Install M8 x 1.25 nut (P/N 233 281 414) onto water pump shaft.

    17.2 Carefully thread M8 nut until the rotary seal is flush with the end of water pump shaft threads.

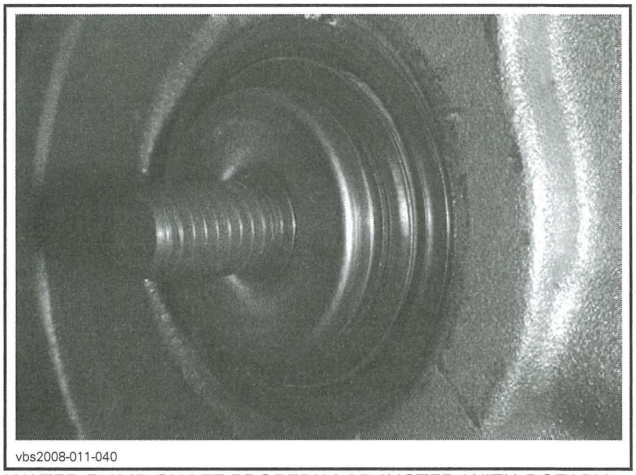

WATER PUMP SHAFT PROPERLY ADJUSTED WITH ROTARY SEAL

NOTICE **The water pump shaft must be properly adjusted with rotary seal. The water pump shaft must move freely while pushing it toward the crankcase.**

18. Install the following parts, see procedure in this subsection.
    - *WATER PUMP IMPELLER*
    - *WATER PUMP HOUSING.*

19. Refill and bleed cooling system. Refer to *PERIODIC MAINTENANCE PROCEDURES* subsection.
20. Check cooling system for leaks.

Water Pump Shaft and Seals Replacement (Disassembled Engine)

Water Pump Shaft and Seals Removal

1. Remove the following parts, see procedure in this subsection:
   - *WATER PUMP HOUSING*
   - *WATER PUMP IMPELLER*
   - *WATER PUMP GEARS*.
2. Push out water pump shaft with inner portion of rotary seal from inside of crankcase MAG side.

REQUIRED TOOL
Soft hammer

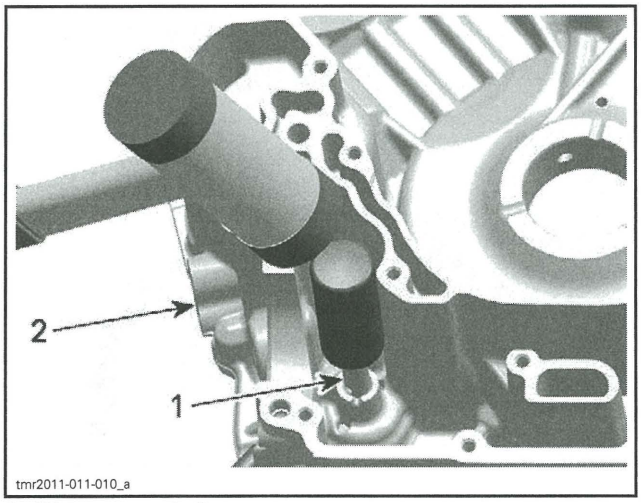

1. *Water pump shaft*
2. *Crankcase MAG side*

3. Remove outer part of rotary seal using an expander.

REQUIRED TOOL	
BLIND HOLE PULLER KIT (P/N 529 036 056)	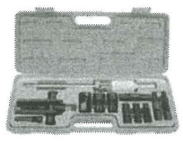

4. Install expander snugly against outer part of rotary seal and pull seal out.

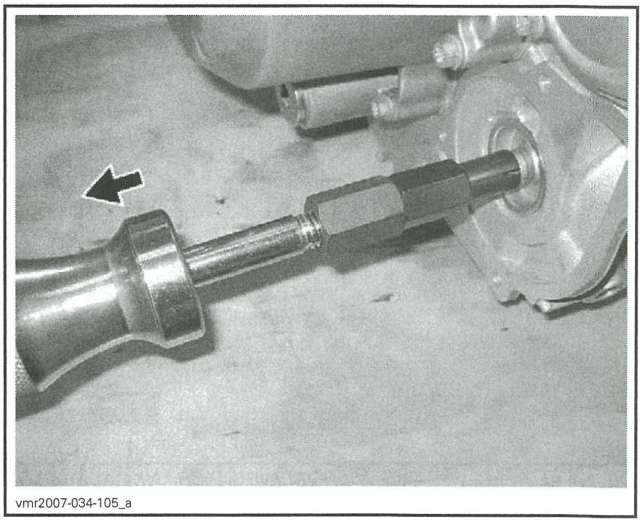

5. Remove oil seal from inside of crankcase MAG side using a pusher tool.

NOTICE **Be careful not to damage the rotary seal surface in crankcase.**

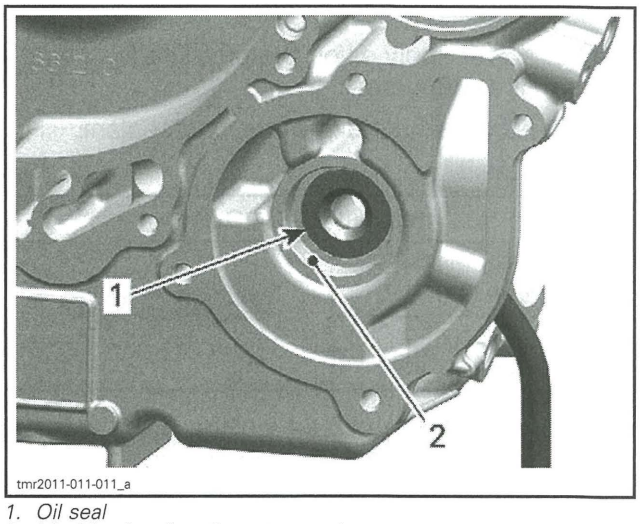

1. *Oil seal*
2. *Machined surface for rotary seal*

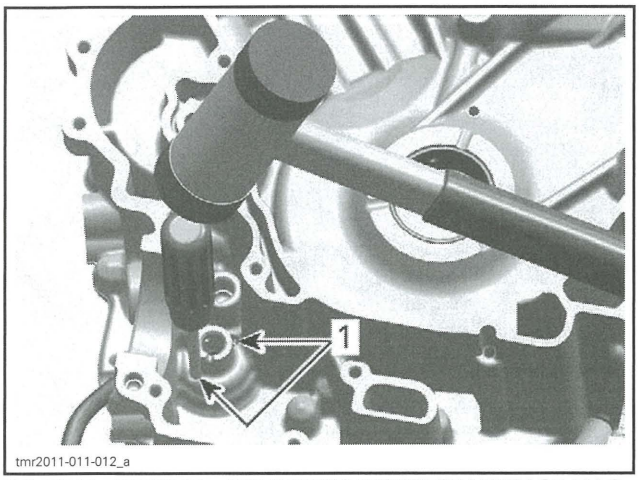

OIL SEAL REMOVAL - VIEW FROM INSIDE CRANKCASE MAG SIDE
1. *Orifices for oil seal removal*

Water Pump Shaft and Seals Installation

The installation is the reverse of the removal procedure. However, pay attention to the following.

Use tightening torque values specified in the exploded view.

NOTE: Never apply oil on the press fit area of the oil seal and rotary seal.

Clean rotary seal surface of any old sealant.

Install oil seal.

REQUIRED TOOL	
OIL SEAL PUSHER (P/N 529 035 757)	
HANDLE (P/N 420 877 650)	

When installing the oil seal on the pusher, make sure the sealing lip points outwards.

Push NEW oil seal in place.

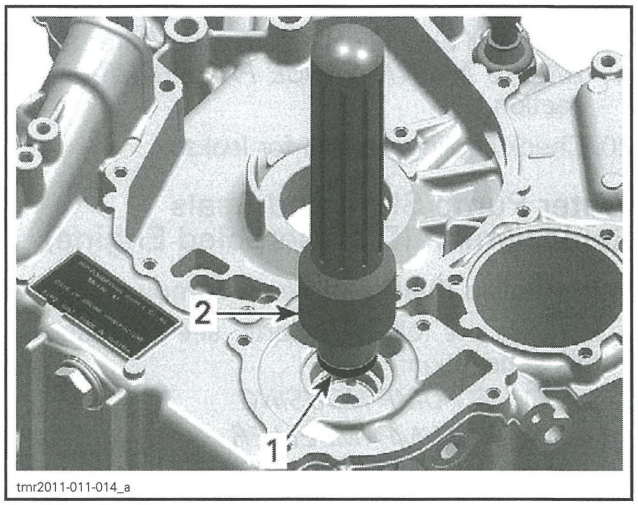

1. *Oil seal*
2. *Installer handle with oil seal pusher*

Apply DOW CORNING 111 (P/N 413 707 000) on sealing lip of the oil seal.

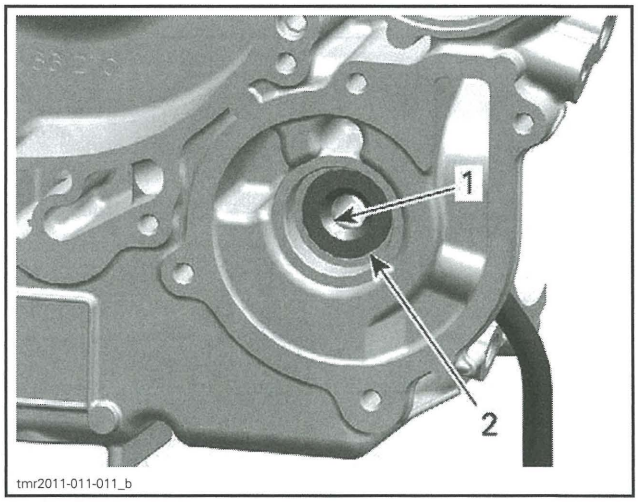

1. *Sealing lip*
2. *Oil seal properly installed*

Apply engine oil on the water pump shaft and intermediate shaft.

Slide **NEW** water pump shaft assembly into crankcase.

REQUIRED TOOL	
SEAL PUSHER (P/N 529 035 766)	

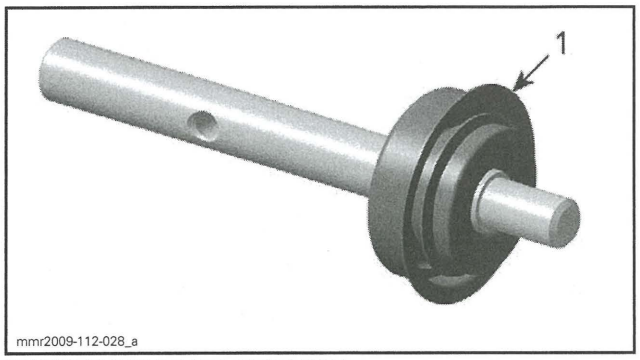

WATER PUMP SHAFT ASSEMBLY
1. *Surface where rotary seal is pushed by tool*

NOTICE Never use a hammer for rotary seal installation. Only use a press to avoid damaging the ceramic component.

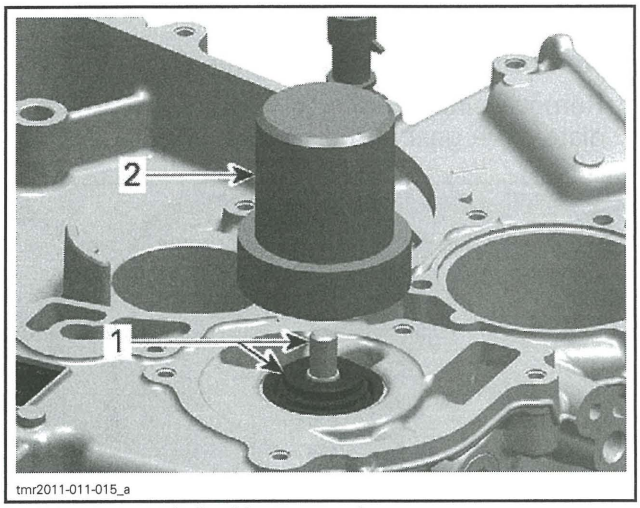

1. *Water pump shaft with rotary seal*
2. *Water pump seal installer*

NOTICE After installation, water pump shaft with rotary seal must rotate freely.

WATER PUMP GEARS

Water Pump Gears Identification

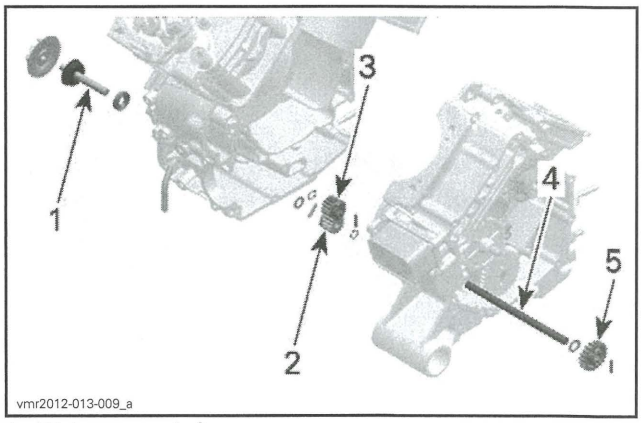

1. *Water pump shaft*
2. *Water pump gear*
3. *Water pump* **intermediate drive** *gear*
4. *Water pump* **intermediate** *shaft*
5. *Water pump* **drive** *gear (See BOTTOM END subsection)*

Water Pump Gears Inspection

Water Pump Gear

Inspect water pump gear for wear and damage on the snap mechanism to the needle pin. Replace if damaged.

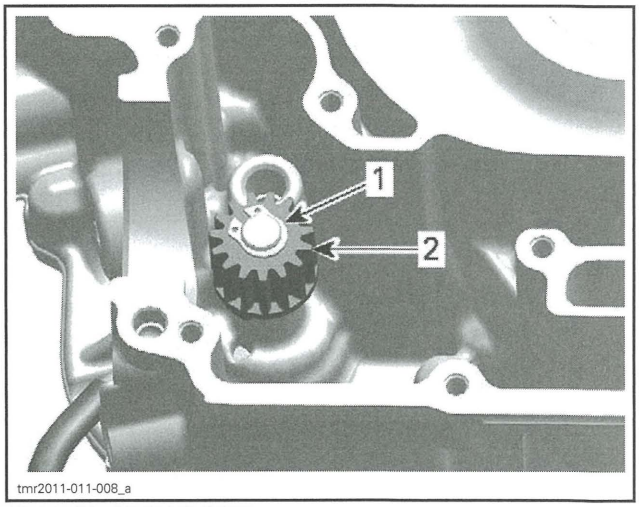

CRANKCASE MAG SIDE
1. *Circlip*
2. *Water pump gear*

Water Pump Intermediate Drive Gear

Check water pump intermediate drive gear for wear or broken teeth. Replace if damaged.

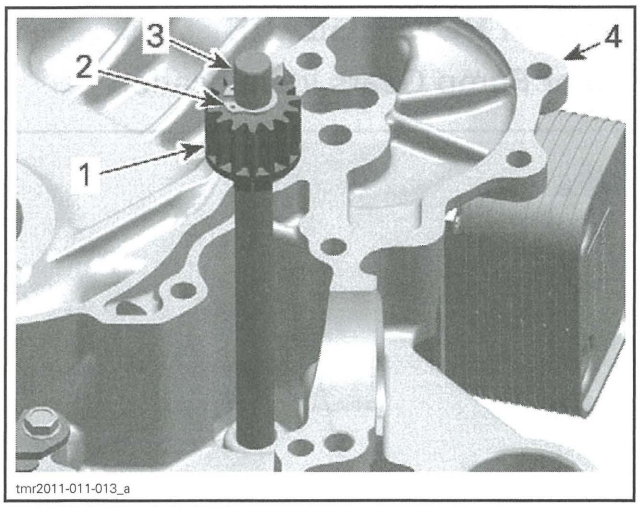

CRANKCASE PTO SIDE
1. *Water pump intermediate drive gear*
2. *Circlip*
3. *Water pump intermediate shaft*
4. *Crankcase PTO side*

Water Pump Drive Gear

See *BOTTOM END* subsection.

Water Pump Gears Removal

Water Pump Gear

1. Remove circlip retaining water pump gear and discard it.

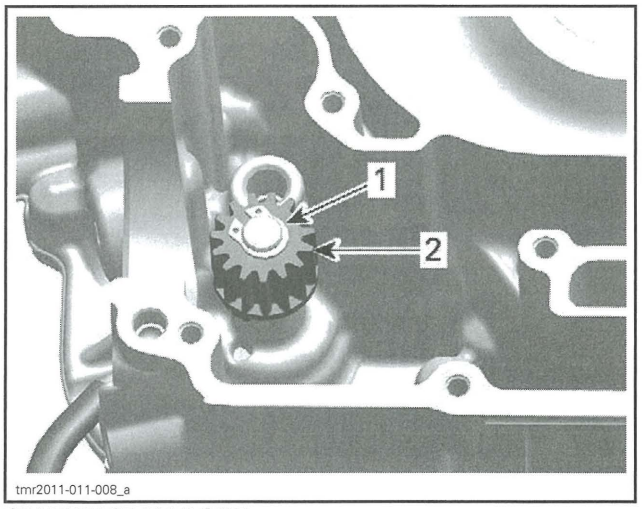

CRANKCASE MAG SIDE
1. *Circlip*
2. *Water pump gear*

2. Remove the following parts:
   - Water pump gear
   - Needle pin
   - Thrust washer.

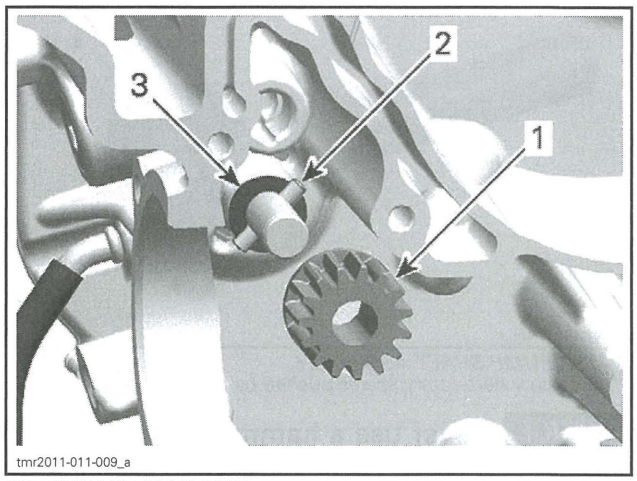

CRANKCASE MAG SIDE
1. *Water pump gear*
2. *Needle pin*
3. *Thrust washer*

Water Pump Intermediate Drive Gear

1. Remove circlip retaining water pump intermediate drive gear and discard it.

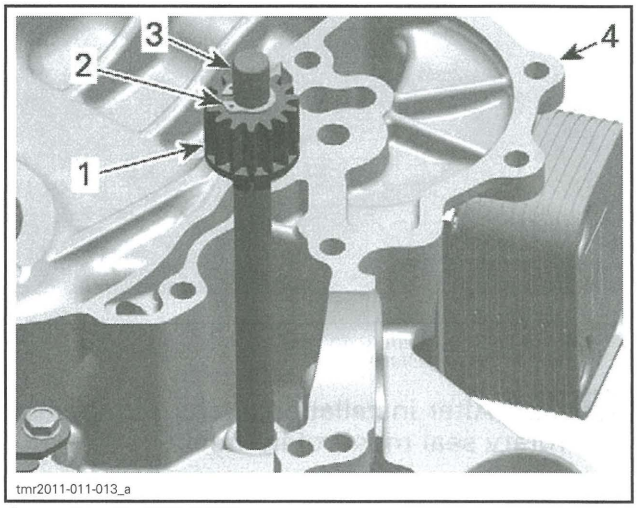

CRANKCASE PTO SIDE
1. *Water pump intermediate drive gear*
2. *Circlip*
3. *Water pump intermediate shaft*
4. *Crankcase PTO side*

2. Remove the following parts:
   - Water pump intermediate drive gear
   - Needle pin.

Water Pump Drive Gear

See *BOTTOM END* subsection.

Water Pump Gears Installation

Water Pump Gear

Install the following parts on water pump shaft.
- Thrust washer

– Needle pin
– Water pump gear.

NOTICE A missing thrust washer will cause a leaking rotary seal.

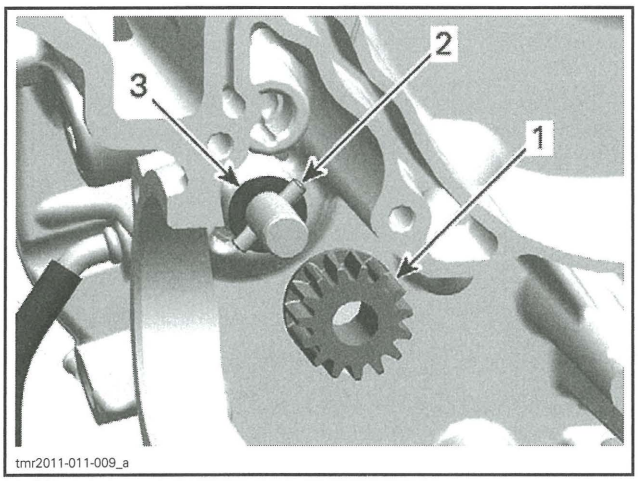

1. *Water pump gear*
2. *Needle pin*
3. *Thrust washer*

NOTE: Ensure water pump gear snaps properly onto needle pin.

Install NEW circlip to retain water pump gear.

NOTICE Never use the circlip a second time. Always install a NEW one.

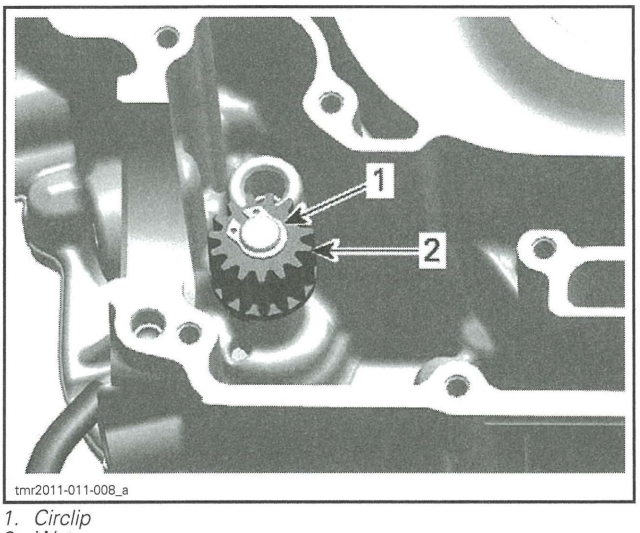

1. *Circlip*
2. *Water pump gear*

Water Pump Intermediate Drive Gear

Install the following parts on water pump intermediate shaft.
– Needle pin
– Water pump intermediate drive gear.

Install NEW circlip to retain water pump intermediate drive gear.

NOTICE Never use the circlip a second time. Always install a NEW one.

Water Pump Drive Gear

See *BOTTOM END* subsection.

MAGNETO SYSTEM

SERVICE TOOLS

Description	Part Number	Page
CRANKSHAFT LOCKING BOLT	529 035 617	104
CRANKSHAFT PROTECTOR	529 036 034	105
FLUKE 115 MULTIMETER	529 035 868	102–103
MAGNETO PULLER	529 035 748	105

SERVICE PRODUCTS

Description	Part Number	Page
DREI BOND SEALING COMPOUND	420 297 906	101
LOCTITE 243 (BLUE)	293 800 060	104
LOCTITE 648 (GREEN)	413 711 400	106–107
LOCTITE 767 (ANTISEIZE LUBRICANT)	293 800 070	108
LOCTITE CHISEL (GASKET REMOVER)	413 708 500	101
PULLEY FLANGE CLEANER	413 711 809	105

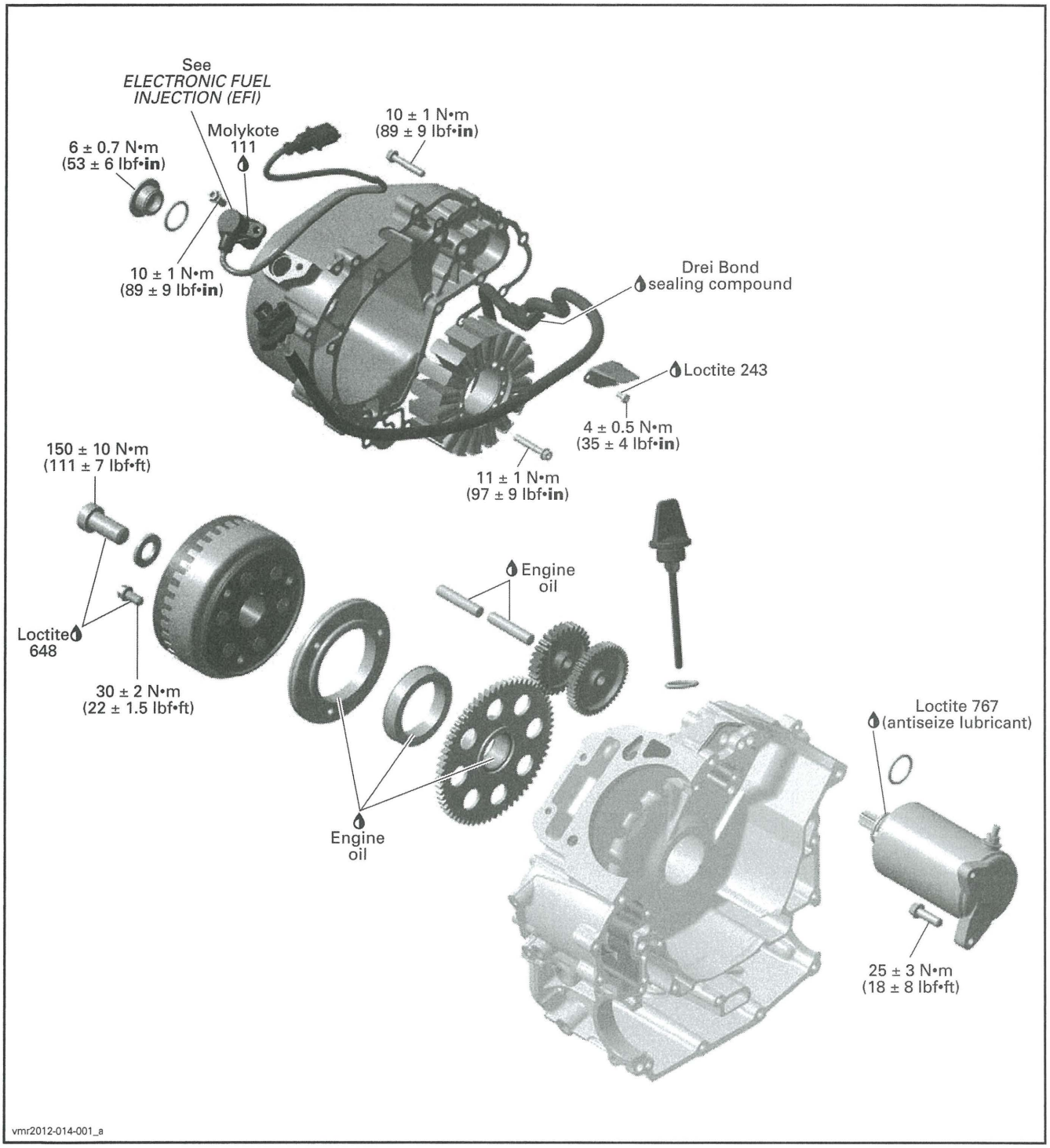
See
ELECTRONIC FUEL
INJECTION (EFI)
Molykote
111
10 ± 1 N•m
(89 ± 9 lbf•in)
6 ± 0.7 N•m
(53 ± 6 lbf•in)
10 ± 1 N•m
(89 ± 9 lbf•in)
Drei Bond
sealing compound
Loctite 243
4 ± 0.5 N•m
(35 ± 4 lbf•in)
11 ± 1 N•m
(97 ± 9 lbf•in)
150 ± 10 N•m
(111 ± 7 lbf•ft)
Engine
oil
Loctite
648
30 ± 2 N•m
(22 ± 1.5 lbf•ft)
Engine
oil
Loctite 767
(antiseize lubricant)
25 ± 3 N•m
(18 ± 8 lbf•ft)
vmr2012-014-001_a

PROCEDURES

MAGNETO COVER

Magneto Cover Access

Outlander Series

Refer to *BODY* and remove:
- RH side panel
- RH footboard panel.

Renegade Series

Refer to *BODY* and remove:
- RH engine panel.

Magneto Cover Removal

Drain engine oil (refer to *ENGINE OIL CHANGE* in the *PERIODIC MAINTENANCE PROCEDURES* subsection).

Remove crankshaft position sensor (CPS) and cut tie raps.

Disconnect the stator connector on the voltage regulator/rectifier, refer to *STATOR CONNECTOR ACCESS* in this subsection.

Remove dipstick with O-ring.

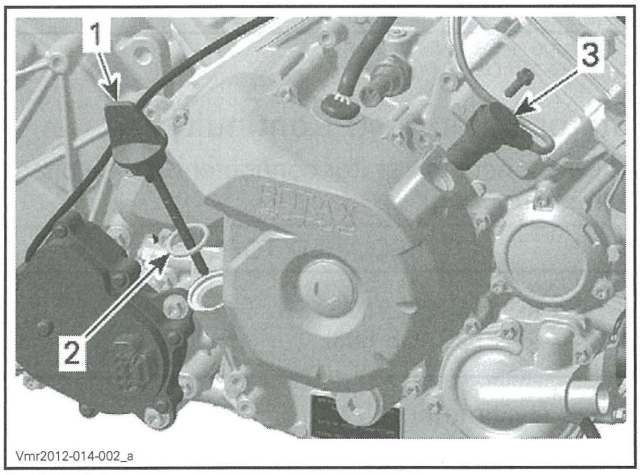

1. *Dipstick*
2. *O-ring*
3. *Crank position sensor (CPS)*

Remove magneto cover retaining screws.

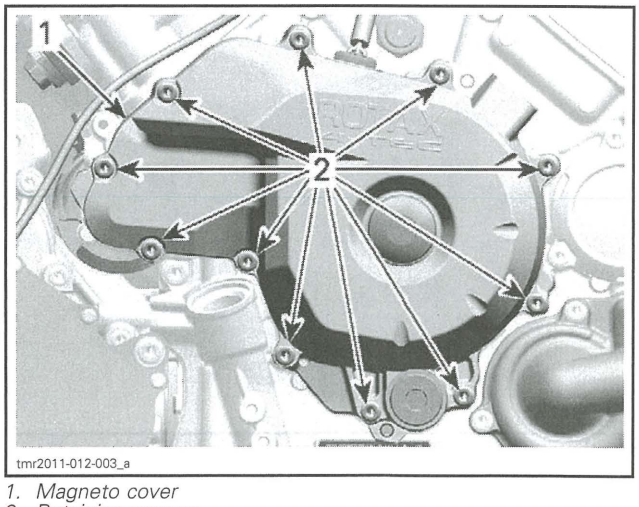

1. *Magneto cover*
2. *Retaining screws*

Pull out magneto cover.

Magneto Cover Inspection and Cleaning

Check magneto cover for cracks or other damage. Replace if necessary.

NOTE: Clean all metal components in a non-ferrous metal cleaner. Use LOCTITE CHISEL (GASKET REMOVER) (P/N 413 708 500), or suitable equivalent.

⚠ WARNING

Wear safety glasses and work in a well ventilated area when working with strong chemical products. Also wear suitable non-absorbent gloves to protect your hands.

Magneto Cover Installation

For installation, reverse the removal procedure. However, pay attention to the following.

Install a **NEW** magneto cover gasket.

Apply DREI BOND SEALING COMPOUND (P/N 420 297 906) on stator cable grommet as shown in next illustration.

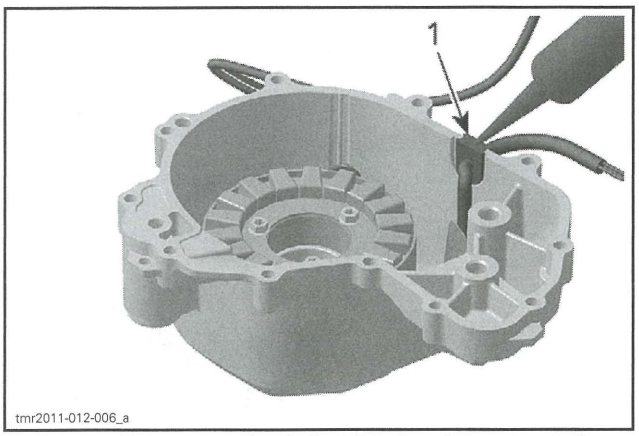

1. Stator cable grommet (apply Drei Bond sealing compound)

Tighten screws using the following sequence.

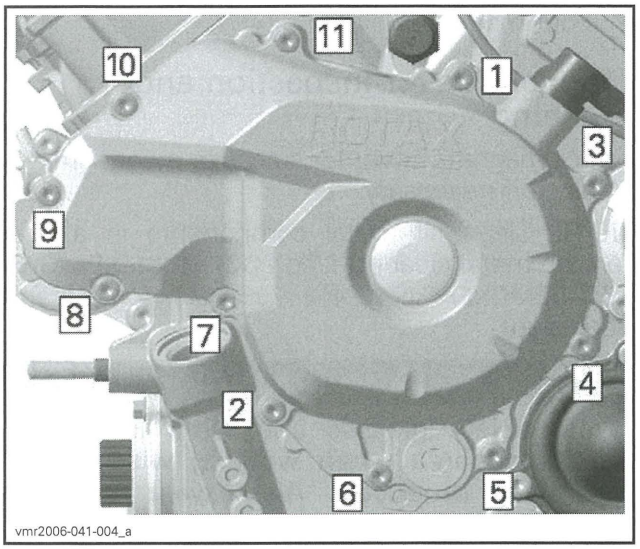

TIGHTENING SEQUENCE

MAGNETO COVER SCREWS	
Tightening torque	10 N•m ± 1 N•m (89 lbf•**in** ± 9 lbf•**in**)

Refill engine with recommended oil.

STATOR

Stator Connector Access

NOTE: The stator is directly connected to the voltage regulator/rectifier.

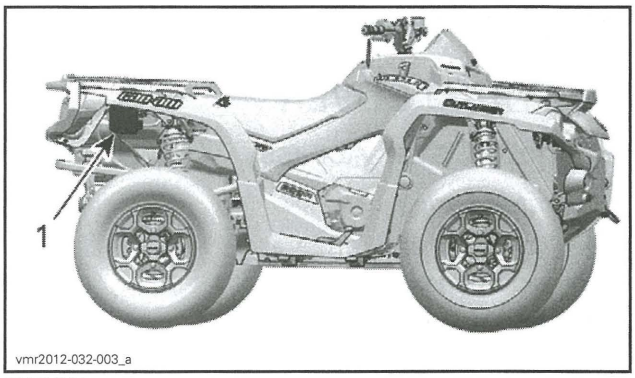

TYPICAL
1. Voltage regulator/rectifier location

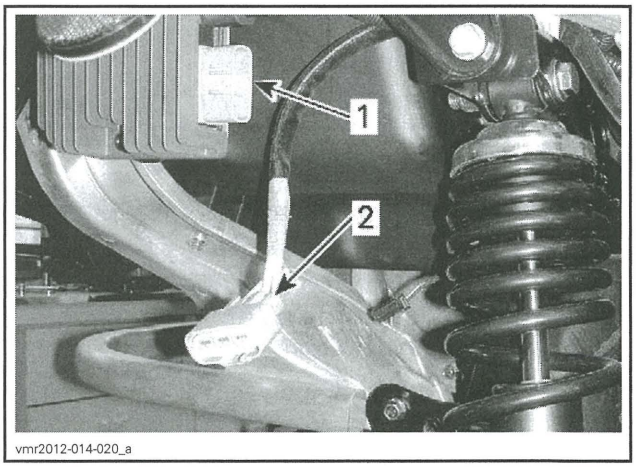

1. Voltage regulator/rectifier
2. Three YELLOW wires

Stator Static Test: Continuity

1. Disconnect the stator connector on the voltage regulator/rectifier.

REQUIRED TOOL	
FLUKE 115 MULTIMETER (P/N 529 035 868)	

2. Set multimeter to Ω.
3. Connect multimeter between YELLOW wires.
4. Read resistance.

TERMINAL	RESISTANCE @ 20°C (68°F)
1 and 2	0.15 - 0.30 Ω
1 and 3	
2 and 3	

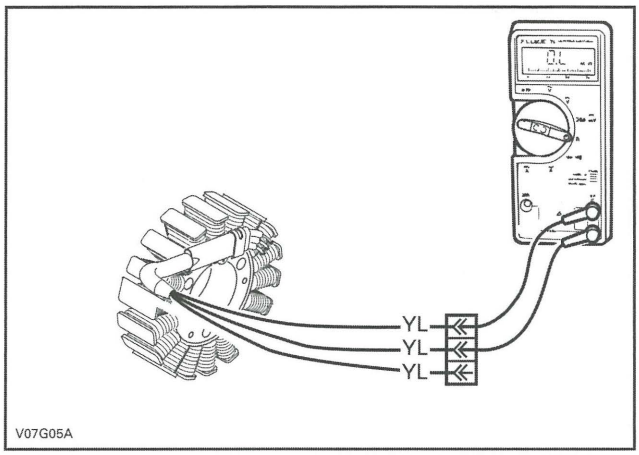

TYPICAL

5. If any reading is out of specification, replace stator.
6. Re-plug connectors properly.

Stator Static Test: Insulation

REQUIRED TOOL	
FLUKE 115 MULTIMETER (P/N 529 035 868)	

1. Set multimeter to Ω.
2. Connect multimeter between any YELLOW wire (on stator connector) and engine ground.
3. Read resistance.

TEST PROBES	RESISTANCE @ 20°C (68°F)
Any YELLOW wire and engine ground	Infinite (open circuit)

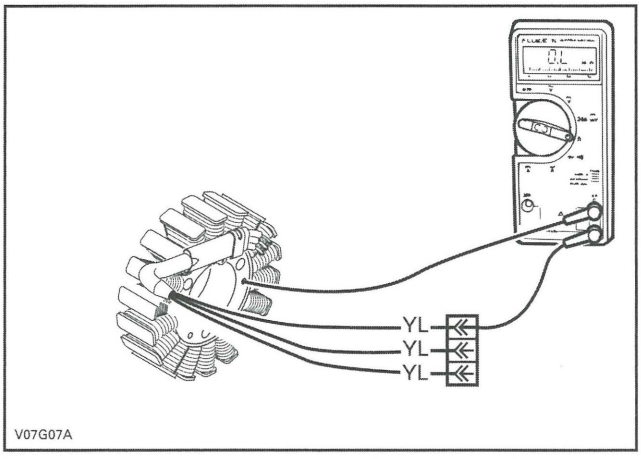

TYPICAL

4. If there is a resistance or continuity, the stator coils and/or the wiring is shorted to ground and needs to be repaired or replaced.
5. Re-plug connectors properly.

Stator Dynamic Test: AC Voltage

REQUIRED TOOL	
FLUKE 115 MULTIMETER (P/N 529 035 868)	

1. Set multimeter to Vac.
2. Start engine.
3. Probe terminals by touching (NOT inserting) terminals lock tabs as shown.

NOTICE **Never insert a multimeter probe into a terminal as it would ruin the terminal.**

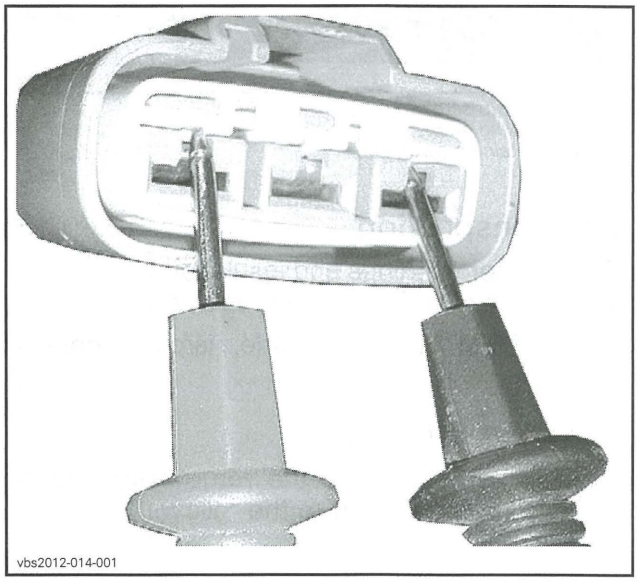

4. Read voltage as per following table.

TEST ENGINE SPEED	TERMINAL	VOLTAGE
4000 RPM	1 and 2	15 - 50 Vac
	1 and 3	
	2 and 3	

NOTE: The 3 readings must be close to each other.

RESULT - AC VOLTAGE	
Below specification	Replace magneto stator
As per specification or above specification	Good stator

Stator Removal

Remove *MAGNETO COVER*. See procedure in this subsection.

Remove screws securing the wire holding strip.

Remove stator retaining screws then the stator.

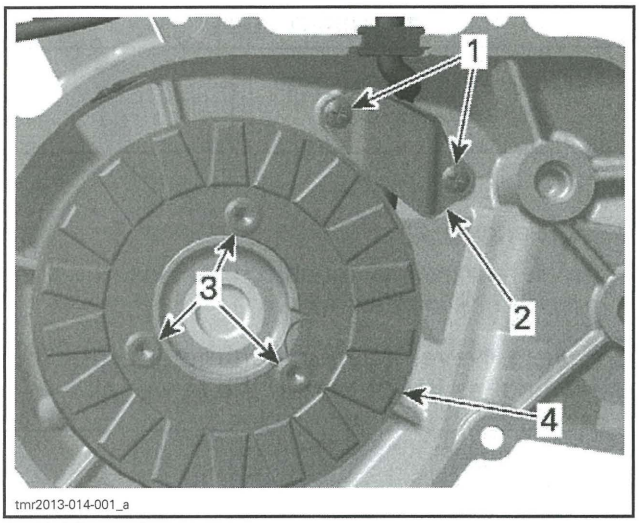

1. *Holding strip screws*
2. *Wire holding strip*
3. *Stator retaining screws*
4. *Stator*

Stator Inspection

Check stator windings and insulation for cracks or other damages. If damaged replace it.

Check if stator wires are brittle, hard or otherwise damaged.

Stator Installation

For installation, reverse the removal procedure. However, pay attention to the following.

NOTICE When installing the stator take care to route wires properly and install retaining strip.

NOTE: There is only one position for the stator (notch in the magneto housing cover).

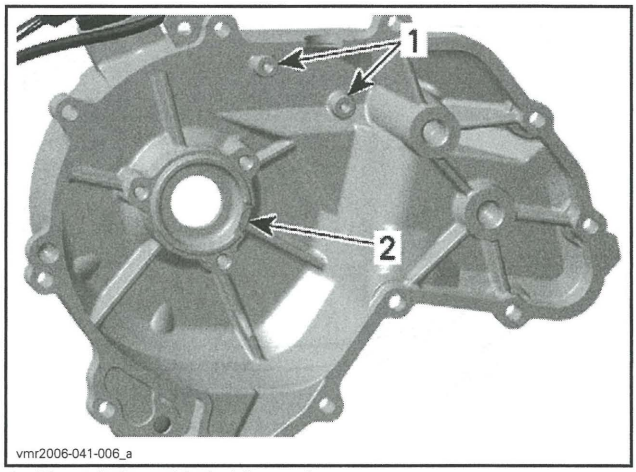

1. *Threads for cable holding strip*
2. *Notch for stator*

HOLDING STRIP SCREWS	
Service product	LOCTITE 243 (BLUE) (P/N 293 800 060)
Tightening torque	4 N•m ± 0.5 N•m (35 lbf•**in** ± 4 lbf•**in**)

STATOR RETAINING SCREWS	
Tightening torque	11 N•m ± 1 N•m (97 lbf•**in** ± 9 lbf•**in**)

ROTOR

Rotor Removal

Remove *MAGNETO COVER*. See procedure in this subsection.

Lock crankshaft (refer to *CRANKSHAFT LOCKING PROCEDURE* in the *BOTTOM END* subsection).

REQUIRED TOOL	
CRANKSHAFT LOCKING BOLT (P/N 529 035 617)	

Heat screw in order to break the Loctite.

Remove screw and washer securing rotor to crankshaft.

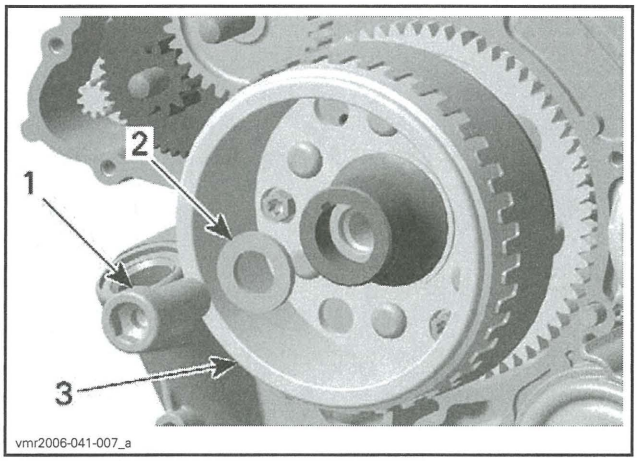

1. Screw M16
2. Washer
3. Rotor

Remove rotor.

REQUIRED TOOL	
CRANKSHAFT PROTECTOR (P/N 529 036 034)	
MAGNETO PULLER (P/N 529 035 748)	

NOTE: Use grease to place protector on crankshaft end prior to screw on the magneto puller.

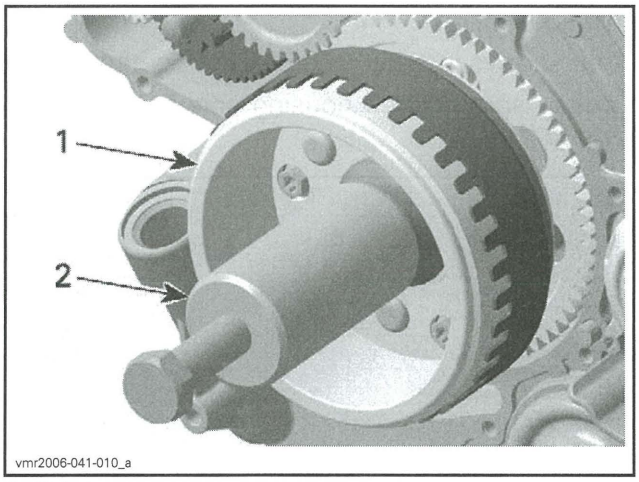

1. Rotor
2. Magneto puller

Screw magneto puller bolt to remove rotor.

Rotor Inspection

Check inner side of rotor for scratches or other damage.

Blow pressurized air in the rotor oil bore and make sure it is not clogged.

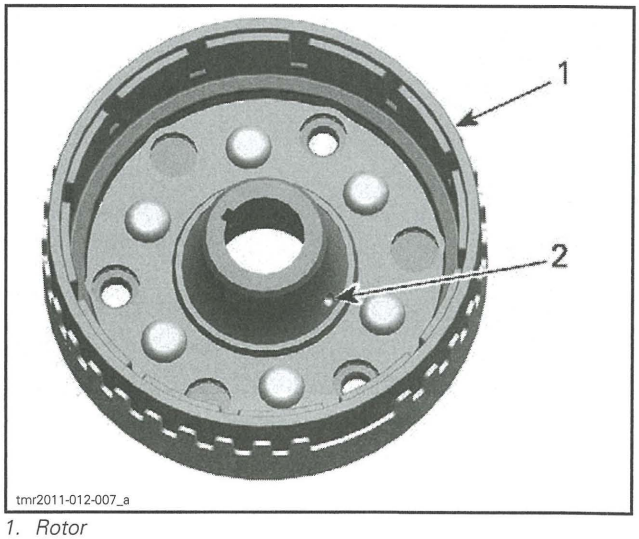

1. Rotor
2. Oil bore

Check keyway of the rotor for wear or damages.

Check if trigger wheel teeth are bent or otherwise damaged.

Check woodruff key and keyway on the crankshaft for wear or damages.

Replace parts as necessary.

Rotor Installation

For installation, reverse the removal procedure. However, pay attention to the following.

Use PULLEY FLANGE CLEANER (P/N 413 711 809) to clean following parts:

- Crankshaft taper
- Oil passage in crankshaft taper
- Thread in crankshaft
- Rotor taper
- Oil bore in rotor.

NOTICE Taper on crankshaft and rotor must be free of grease.

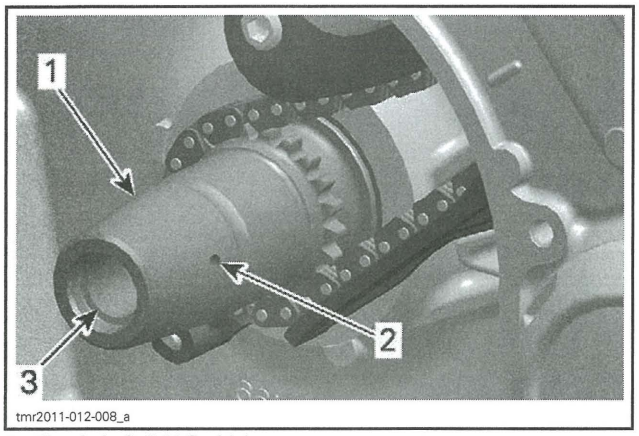

1. *Crankshaft (MAG side)*
2. *Oil passage*
3. *Threads*

Oil sprag clutch and install sprag clutch gear.

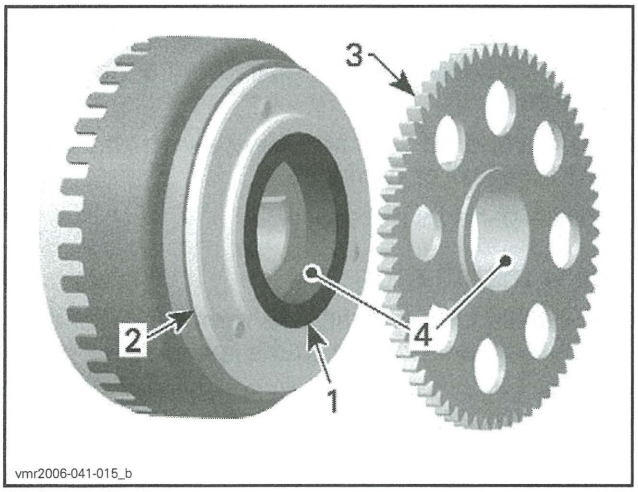

1. *Sprag clutch*
2. *Sprag clutch housing*
3. *Sprag clutch gear*
4. *Apply engine oil here*

Slide rotor onto crankshaft. The woodruff key and the keyway must be aligned.

Rotate starter double gear counterclockwise to align intermediate gear teeth with sprag clutch gear.

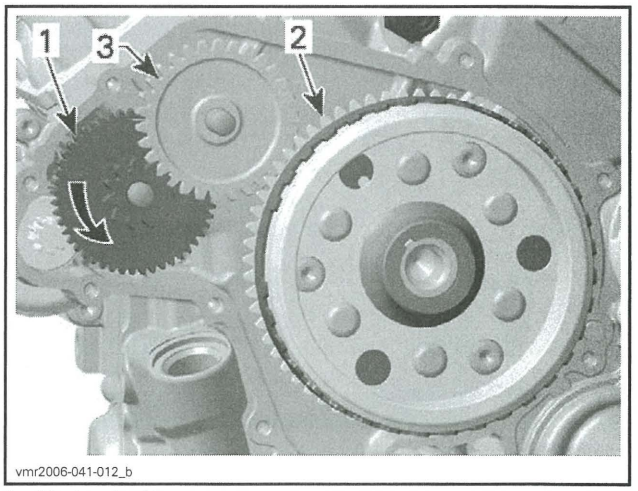

1. *Starter double gear*
2. *Sprag clutch gear*
3. *Intermediate gear*

ROTOR RETAINING SCREW	
Service product	LOCTITE 648 (GREEN) (P/N 413 711 400)
Tightening torque	150 N•m ± 10 N•m (111 lbf•ft ± 7 lbf•ft)

SPRAG CLUTCH

Sprag Clutch Removal

Remove *MAGNETO COVER*. See procedure in this subsection.

Heat screws in order to break the Loctite.

Loosen sprag clutch housing screws located inside rotor.

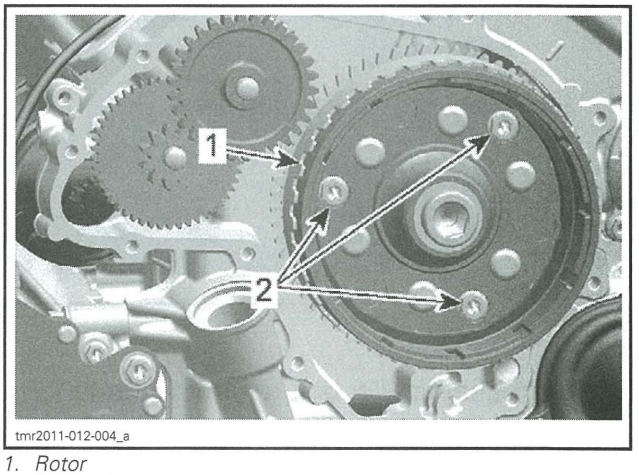

1. *Rotor*
2. *Sprag clutch housing screws*

Remove rotor (refer to *ROTOR* in this subsection).

Remove sprag clutch gear.

Remove sprag clutch housing screws and sprag clutch housing.

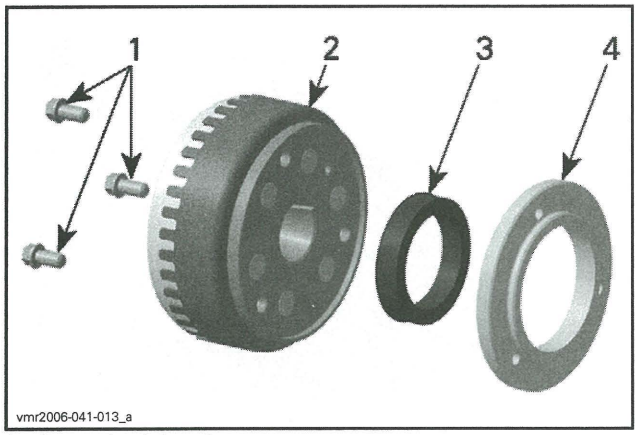

1. *Sprag clutch housing screws*
2. *Rotor*
3. *Sprag clutch*
4. *Sprag clutch housing*

Sprag Clutch Inspection

Inspect sprag clutch and sprag clutch housing for wear and damage.

Also check the collar of the sprag clutch gear.

Rotate sprag clutch gear in sprag clutch.

NOTE: Sprag clutch must lock in counterclockwise direction.

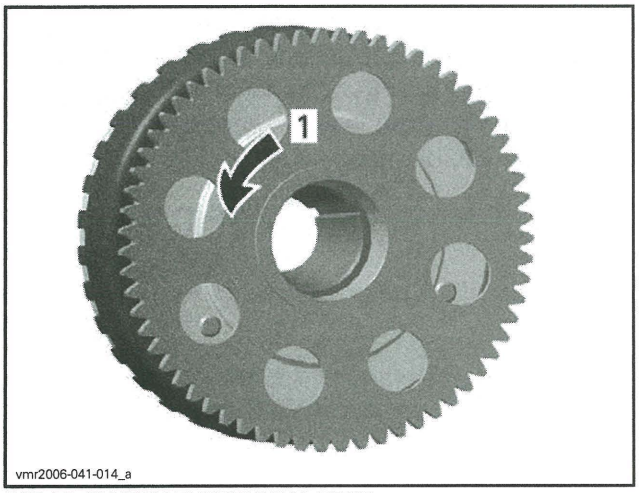

SPRAG CLUTCH FUNCTIONAL TEST
1. *Lock*

NOTE: Sprag clutch, housing and gear must be replaced at the same time, if damaged.

Sprag Clutch Installation

For installation, reverse the removal procedure. However, pay attention to the following details.

Apply LOCTITE 648 (GREEN) (P/N 413 711 400) on threads of sprag clutch housing screws.

Install screws but do not torque yet.

Apply engine oil on sprag clutch and sprag clutch gear needle bearing.

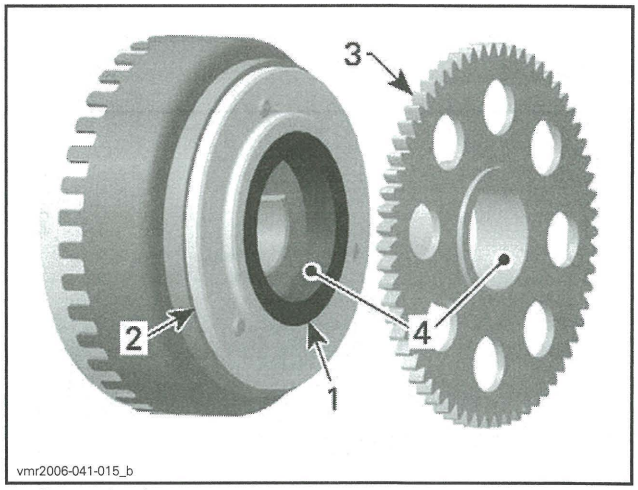

1. *Sprag clutch*
2. *Sprag clutch housing*
3. *Sprag clutch gear*
4. *Apply engine oil here*

Install rotor, refer to *ROTOR* in this subsection.

Tighten sprag clutch housing screws to specification.

SPRAG CLUTCH HOUSING SCREWS	
Tightening torque	30 N•m ± 2 N•m (22 lbf•ft ± 1 lbf•ft)

SPRAG CLUTCH GEAR

Sprag Clutch Gear Removal

Remove *ROTOR*. See procedure in this subsection.

Pull sprag clutch gear out of the rotor.

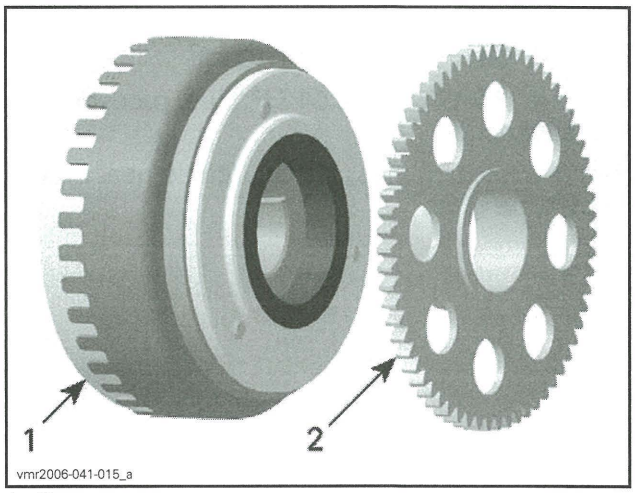

1. *Rotor*
2. *Sprag clutch gear*

Sprag Clutch Gear Inspection

Inspect gear, especially teeth and sprag clutch collar, for wear and other damage.

Check needle bearing condition. Replace sprag clutch gear if necessary.

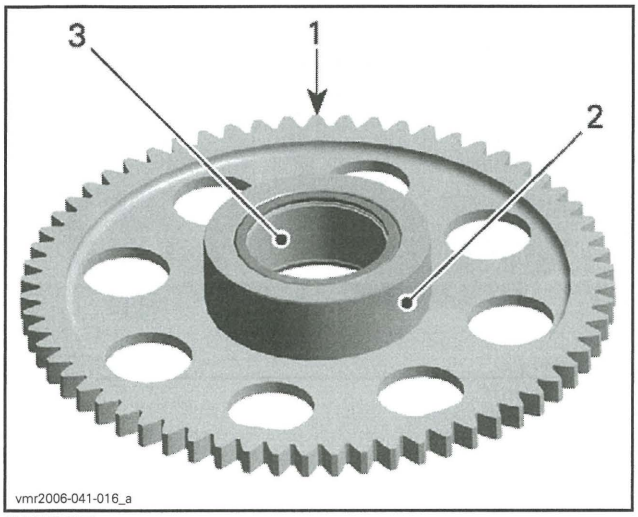

INSPECT
1. *Teeth*
2. *Collar*
3. *Needle bearing*

Sprag Clutch Gear Installation

The installation is the reverse of the removal procedure. However, pay attention to the following.

NOTE: Apply engine oil on needle bearing and collar of sprag clutch gear.

STARTER DRIVE GEARS

Starter Drive Gear Location

The starter drive gears are located on the engine MAG side behind the magneto cover.

Starter Drive Gear Removal

Remove *MAGNETO COVER*. See procedure in this subsection.

Remove location pins, starter double gear and intermediate gear.

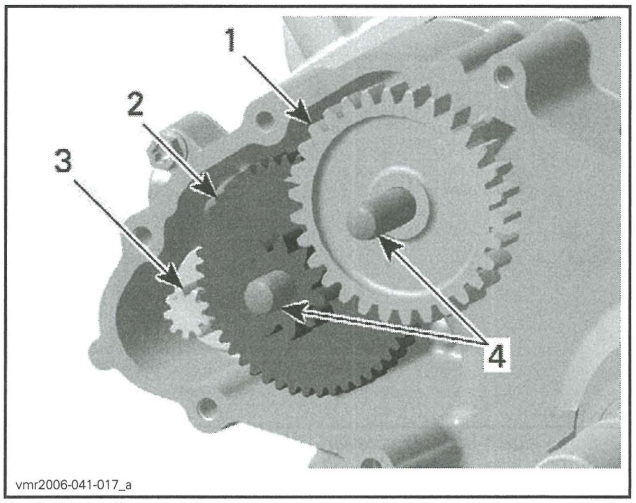

1. *Intermediate gear*
2. *Starter double gear*
3. *Starter gear*
4. *Location pins*

Starter Drive Gear Inspection

Inspect gears and location pins for wear and damage.

Replace parts as necessary.

Starter Drive Gear Installation

The installation is the reverse of the removal procedure. Pay attention to the following details.

Apply LOCTITE 767 (ANTISEIZE LUBRICANT) (P/N 293 800 070) on starter gear before installing the starter double gear.

Apply engine oil on location pins.

INTAKE MANIFOLD

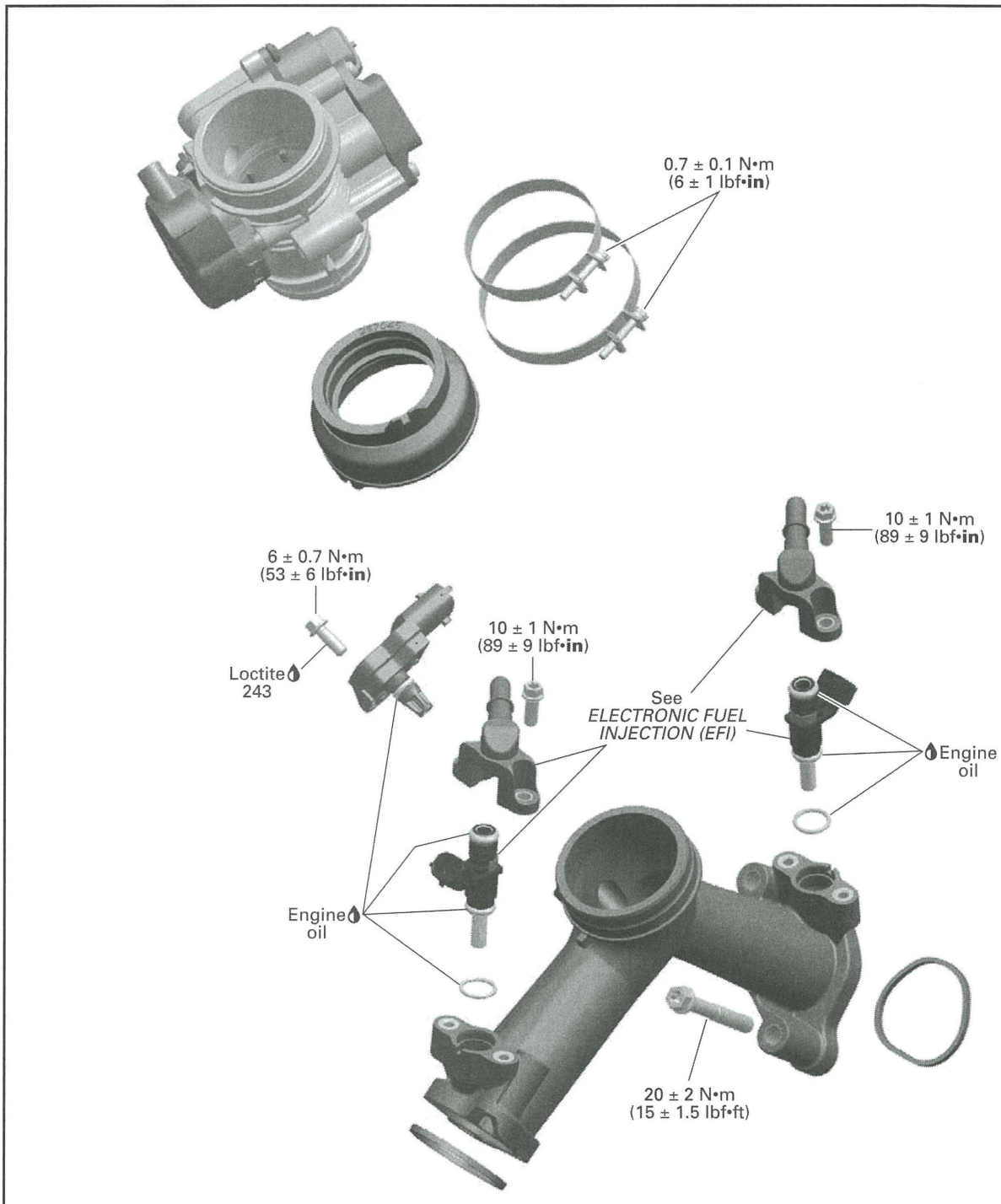

PROCEDURES

INTAKE MANIFOLD

Intake Manifold Access

Refer to *BODY* and remove the RH side panel.

Intake Manifold Removal

1. Release fuel pressure. Refer to *FUEL TANK AND FUEL PUMP* subsection.
2. Remove shift rod nut.

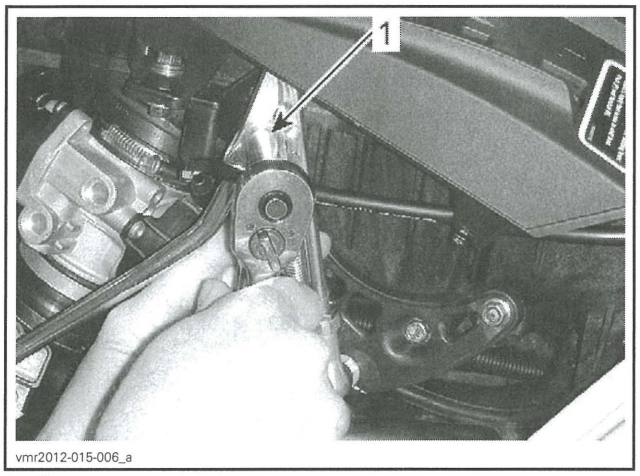

1. Remove nut

3. Disconnect the fuel hoses at the fuel injectors, refer to *ELECTRONIC FUEL INJECTION (EFI).*

⚠ CAUTION **The fuel hose may still be under pressure.**

4. Disconnect fuel injector electrical connectors.
5. Disconnect MAPTS connector.
6. Pull off throttle body from intake manifold and air intake silencer. Refer to *ELECTRONIC FUEL INJECTION (EFI).*

NOTE: Do not disconnect throttle cable needlessly.

7. Remove wiring harness support from engine.

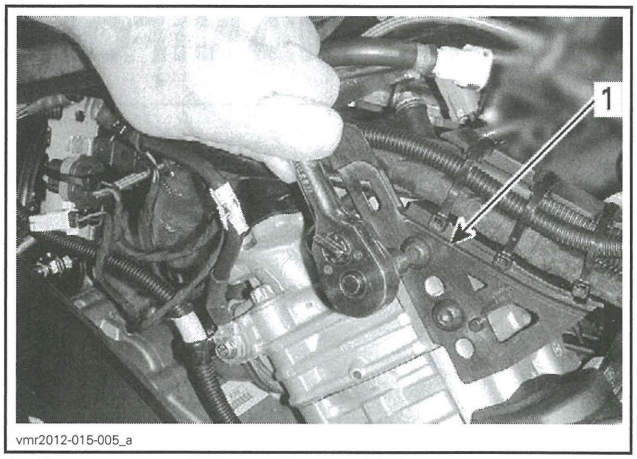

1. Remove

8. Remove intake manifold from engine.

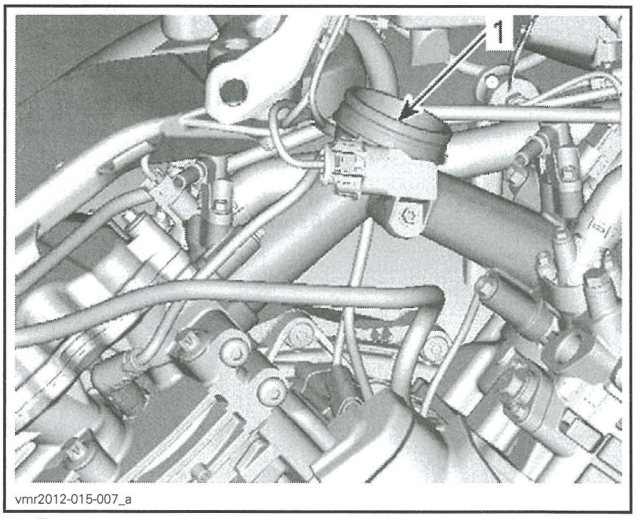

1. Remove

Intake Manifold Inspection

Check intake manifold for cracks, warping at flanges or any other damage. Replace if necessary.

Intake Manifold Installation

The installation is the reverse of the removal procedure. However, pay attention to the following.

Tighten intake manifold retaining screws to specified torque one cylinder at a time.

INTAKE MANIFOLD RETAINING SCREWS	
Tightening torque	20 N•m ± 2 N•m (15 lbf•ft ± 1 lbf•ft)

Enable fuel pump using B.U.D.S.

TOP END

SERVICE TOOLS

Description	Part Number	Page
CRANKSHAFT LOCKING BOLT	529 035 617	130
ENGINE LEAK DOWN TEST KIT	529 035 661	116
PISTON CIRCLIP INSTALLER	529 035 921	134
PISTON CIRCLIP INSTALLER	529 036 153	134
PISTON RING COMPRESSOR	529 035 919	130
PISTON RING COMPRESSOR	529 035 977	130
TDC DIAL INDICATOR	414 104 700	116
VALVE GUIDE INSTALLER	529 036 140	128
VALVE GUIDE REMOVER 5 MM	529 035 924	128
VALVE SPRING COMPRESSOR CUP	529 035 764	124
VALVE SPRING COMPRESSOR	529 035 724	124

SERVICE TOOLS – OTHER SUPPLIER

Description	Part Number	Page
PISTON CIRCLIP INSTALLER	529036058	134
SNAP-ON PLIERS	YA 8230	126

SERVICE PRODUCTS

Description	Part Number	Page
LOCTITE 767 (ANTISEIZE LUBRICANT)	293 800 070	128

CYLINDER HEAD NO. 1

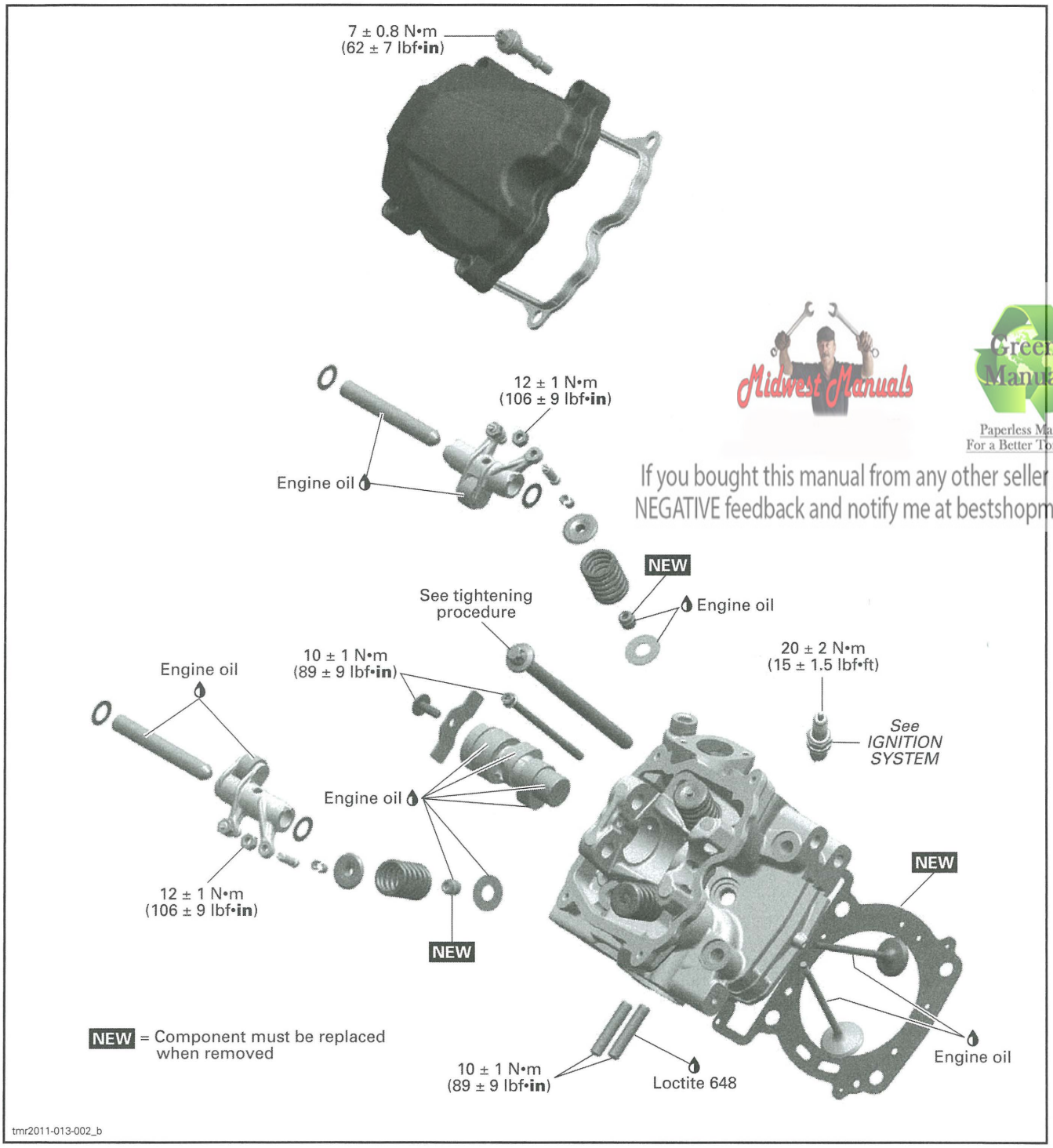

Midwest Manuals
Green Manuals
Paperless Manuals
For a Better Tomorrow
If you bought this manual from any other seller please leave them NEGATIVE feedback and notify me at bestshopmanuals@gmail.com

CYLINDER HEAD NO. 2

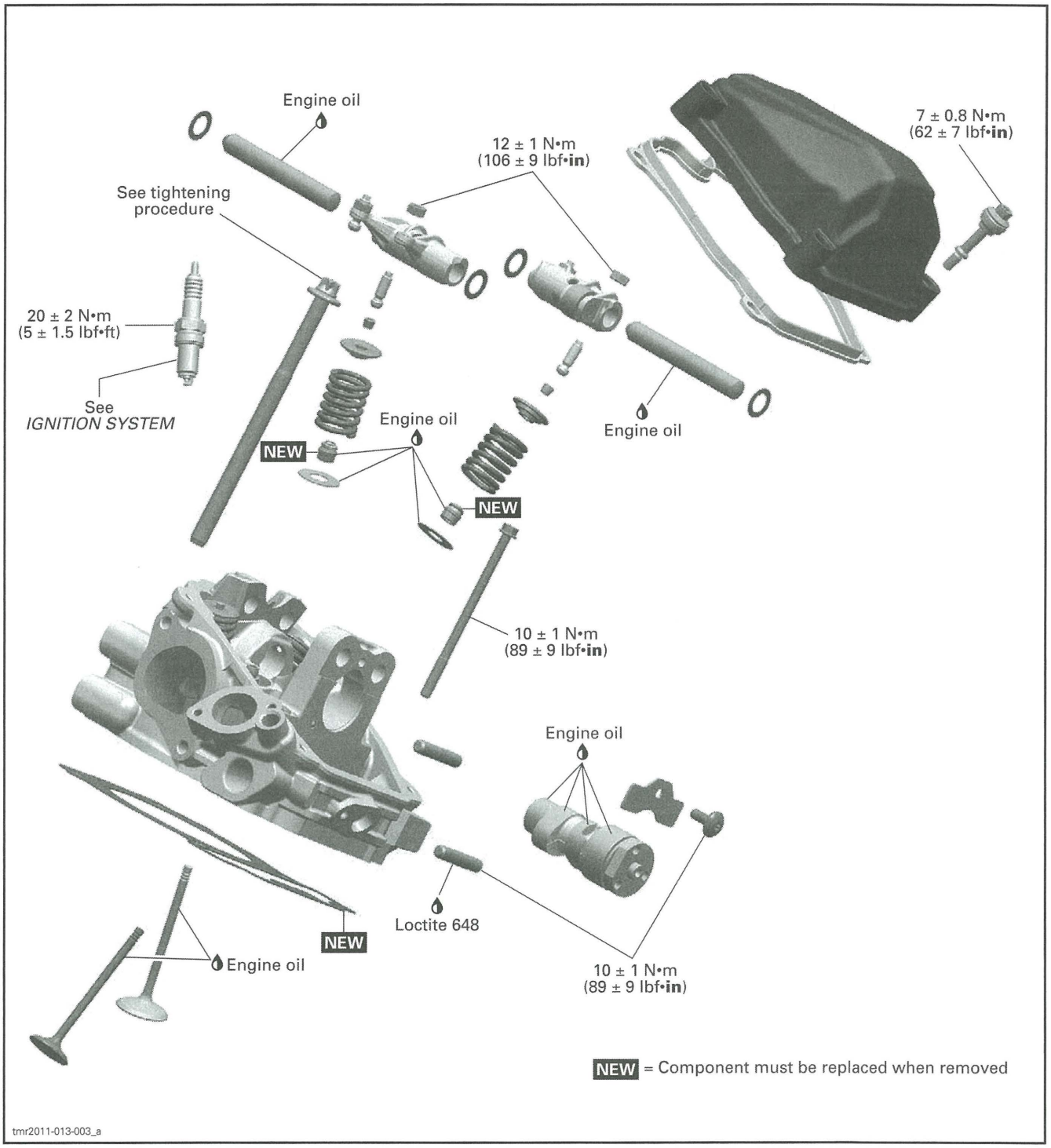

CYLINDERS AND PISTONS

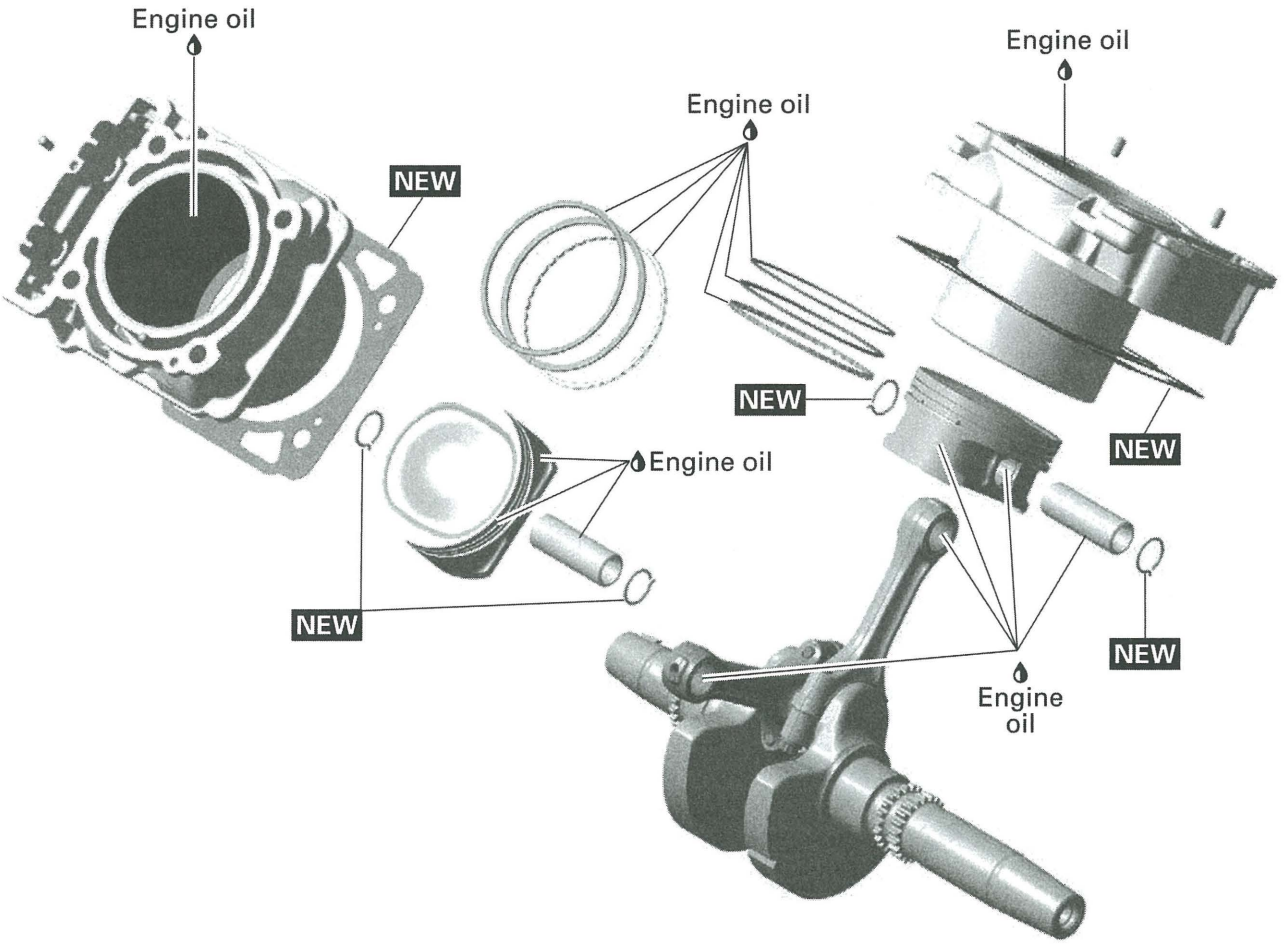

vmr2006-043-003_d

GENERAL

Special reference are made in the text for procedures which are different for cylinder no. 1 and cylinder no. 2.

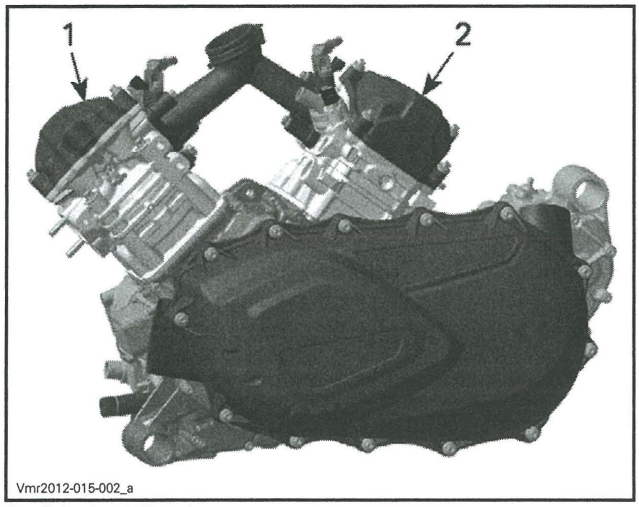

1. Cylinder 1 (front)
2. Cylinder 2 (rear)

When diagnosing an engine problem, always perform a cylinder leak test.

NOTE: Even though the following procedures do not require the engine removal, many illustrations show the engine out of the vehicle for more clarity.

IMPORTANT: Note position of parts upon disassembly. This may help to find the root cause of a problem. A component that is not replaced should be reinstalled in the same position as originally mounted.

INSPECTION

LEAK TEST

Before performing the cylinder leak test, verify the following:

- Clamp(s) tightness
- Radiator and hoses.

NOTE: For best accuracy, the leak test should be done with the engine at normal operating temperature.

⚠ WARNING

Prevent burning yourself on hot engine parts.

Preparation

Disconnect battery.

⚠ WARNING

Always respect this order for disassembly; disconnect BLACK (-) cable first.

Remove radiator cap.

⚠ WARNING

To prevent burning yourself only remove the radiator cap by wearing the appropriate safety equipment.

Unplug spark plug cable.

Clean spark plug area and remove spark plug from cylinder head.

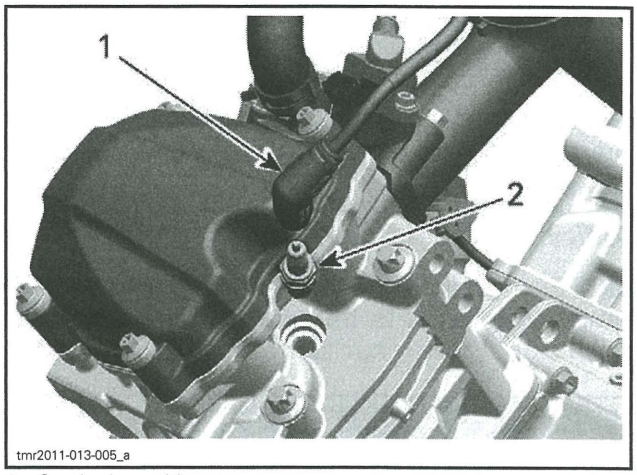

1. Spark plug cable
2. Spark plug

Remove *VALVE COVER*. See procedure in this susbsection.

Rotate crankshaft until piston is at ignition TDC.

To turn crankshaft, there are two possible procedures.

First Procedure

Turn the drive pulley.

Second Procedure

1. Remove plug screw with O-ring from magneto cover.
2. Use a 14 mm Allen key and turn crankshaft.

NOTICE **Turn only clockwise to avoid loosening of magneto flywheel Allen screw.**

Set the piston to precisely ignition TDC.

REQUIRED TOOL	
TDC DIAL INDICATOR (P/N 414 104 700)	

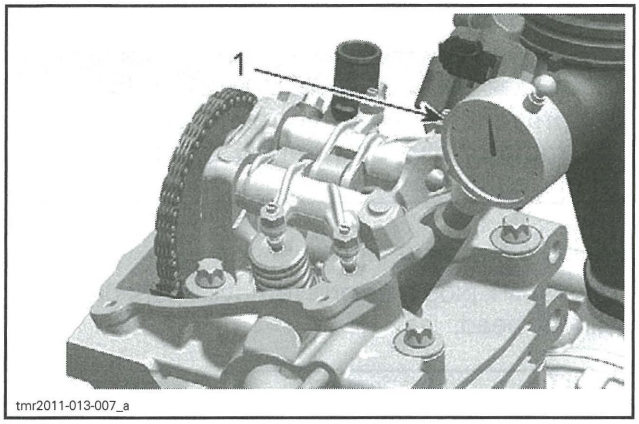

1. TDC dial indicator

NOTE: If a dial gauge is not available, use a screwdriver or another similarly suitable tool.

NOTICE Do not scratch or damage piston/cylinder surface.

NOTE: At ignition TDC the marks on the camshaft timing gear have to be parallel to cylinder head base as per following illustration.

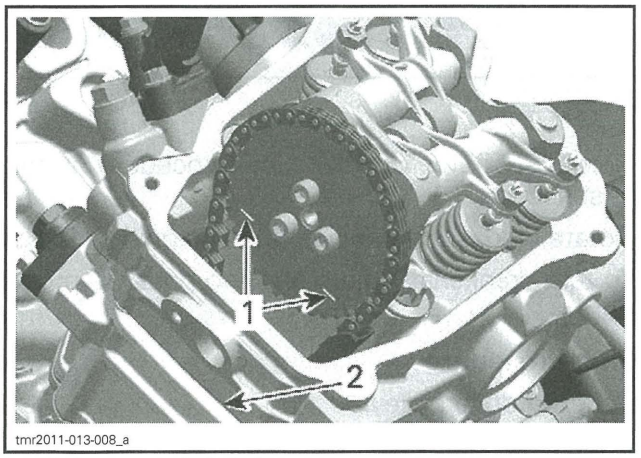

1. Marks on camshaft timing gear
2. Cylinder head base

Leak Test

Install gauge adapter into spark plug hole.

REQUIRED TOOL	
ENGINE LEAK DOWN TEST KIT (P/N 529 035 661)	

Connect to adequate air supply.

Set needle of measuring gauge to zero.

NOTE: All testers have specific instructions on gauge operation and required pressure.

Install gauge adapter into previously cleaned spark plug hole.

Supply combustion chamber with air pressure.

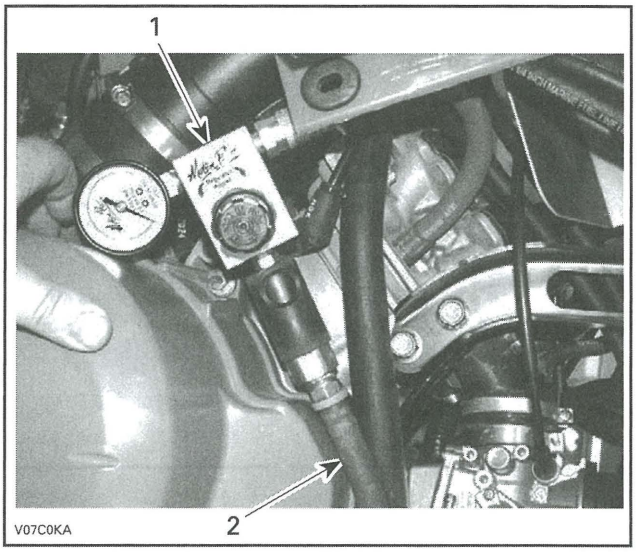

TYPICAL
1. Leak tester
2. Air supply hose

Note the amount or percentage of leakage (depending on tester).

LEAKAGE PERCENTAGE	ENGINE CONDITION
0% to 15%	Excellent condition
16% to 25%	Good condition
26% to 40%	Fair condition; reduced engine performance
41% and higher	Poor condition, diagnose and repair engine

NOTE: To make sure there is no false reading due to a valves not perfectly seated, tap each valve adjustment screw (on the rocker arm) using a soft hammer.

Diagnosis

Listen for air leaks.

- Air escaping in intake port/throttle body means leaking intake valve(s).
- Air escaping in exhaust port means leaking exhaust valve(s).
- Air bubbles in the coolant (radiator) means leaking cylinder head gasket.
- Air/coolant escaping from cylinder/head means damaged gasket(s) and/or loosened screws.

- Air escaping into crankcase area means excessively worn cylinder and/or broken piston rings.
- Air/oil escaping from crankcase means damaged gasket and/or loosened screws (refer to *BOTTOM END* subsection).

NOTE: For all the checkpoints mentioned above, see the appropriate engine section to diagnose and repair the engine.

Reassembly

Reverse the preparation procedure. Ensure to respect torque values and use of appropriate products/lubricants. Refer to exploded views in other subsections of this manual as required.

PROCEDURES

VALVE COVER

Valve Cover Access

Front Cylinder

Refer to *BODY* and remove:
- RH side panel
- Rear part of RH inner fender (Outlander series).

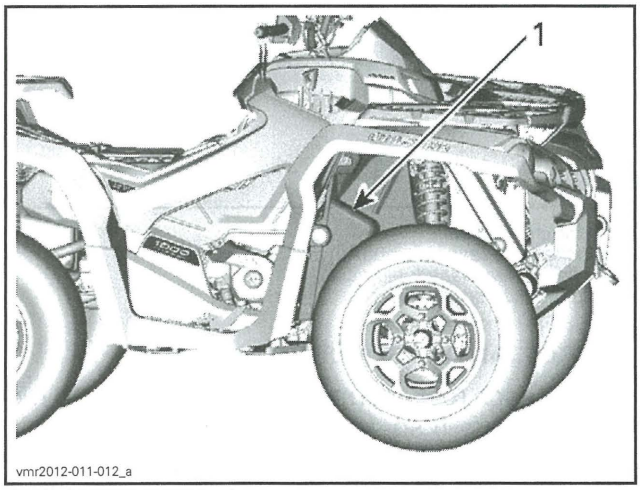

OUTLANDER SERIES ONLY
1. Remove

Rear Cylinder

Refer to *BODY* and remove:
- RH side panel
- LH side panel.

Refer to *EXHAUST SYSTEM* and remove exhaust pipe.

Valve Cover Removal

Remove valve cover screws.

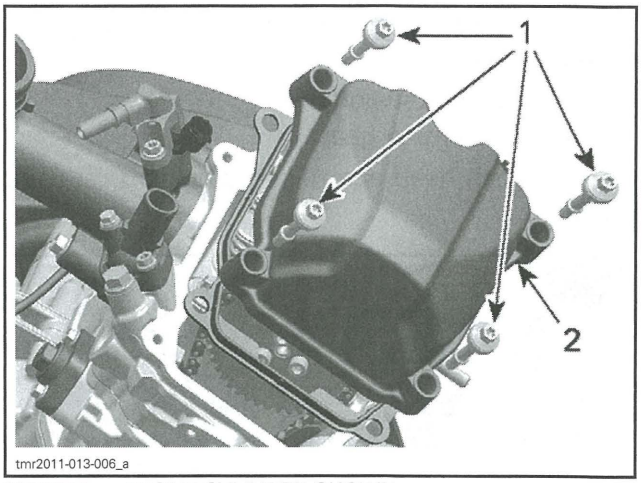

TYPICAL — FRONT CYLINDER SHOWN
1. Valve cover screws
2. Valve cover

Remove valve cover and gasket.

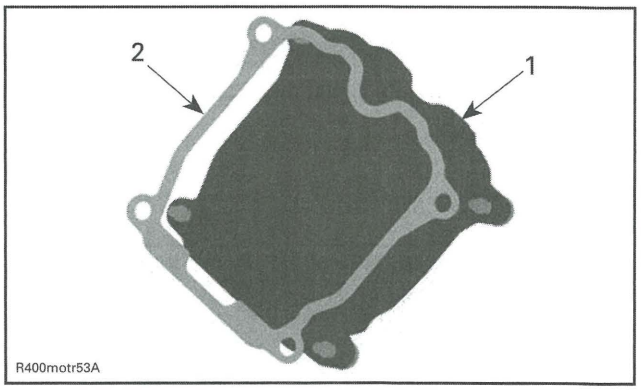

1. Valve cover
2. Gasket

Valve Cover Inspection

Check the gasket on the valve cover if it is brittle, cracked or hard. If so, replace the gasket.

Valve Cover Installation

For installation, reverse the removal procedure. However, pay attention to the following.

Tighten valve cover retaining screws to specified torque in a criss-cross sequence.

VALVE COVER RETAINING SCREWS	
Tightening torque	7 N•m ± 0.8 N•m (62 lbf•**in** ± 7 lbf•**in**)

ROCKER ARM

Rocker Arm Removal

Remove *VALVE COVER*. See procedure in this susbsection.

Refer to *TIMING CHAIN* subsection and remove following parts:
- Timing chain tensioner
- Camshaft timing gear.

Remove pan head screw and camshaft retaining plate.

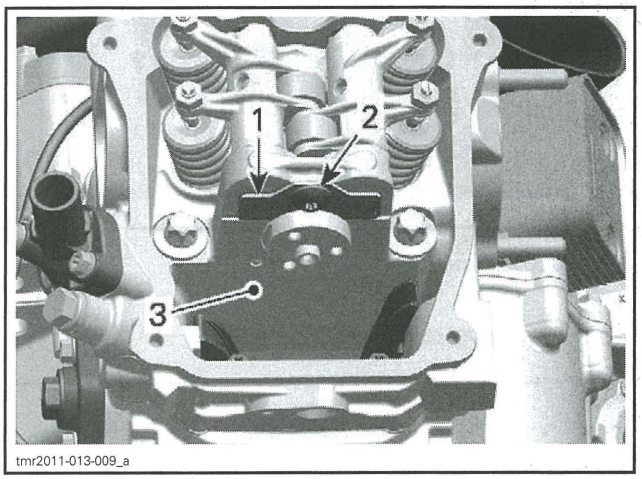

1. Camshaft retaining plate
2. Pan head screw
3. Cylinder head

Remove rocker arm shafts.

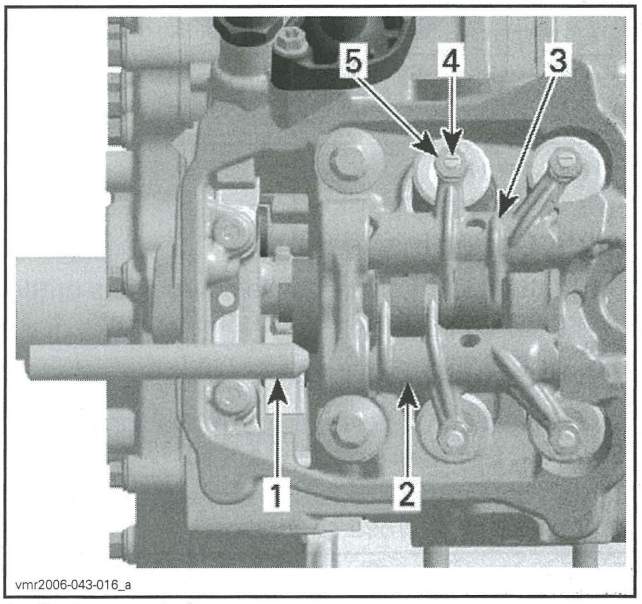

1. Rocker arm shaft
2. Rocker arm (exhaust side)
3. Rocker arm (intake side)
4. Adjustment screw
5. Lock nut

Remove rocker arm assembly (exhaust side and intake side) with adjustment screws and lock nuts.

Remove thrust washers.

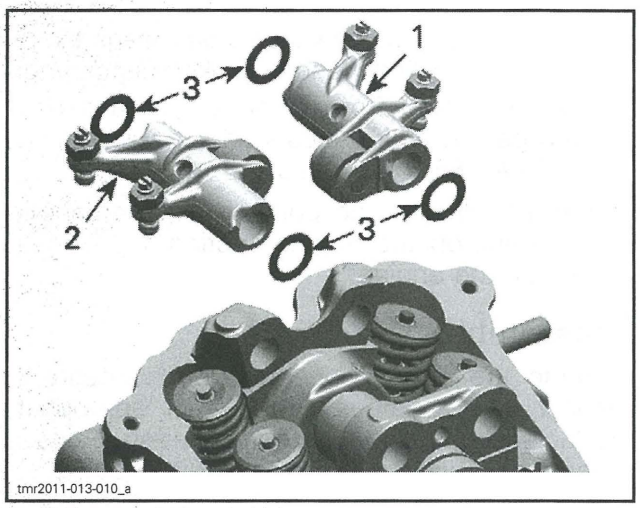

1. Rocker arm (exhaust side)
2. Rocker arm (intake side)
3. Thrust washers

NOTICE **Pay attention not to lose thrust washers or drop them into the timing chain compartment.**

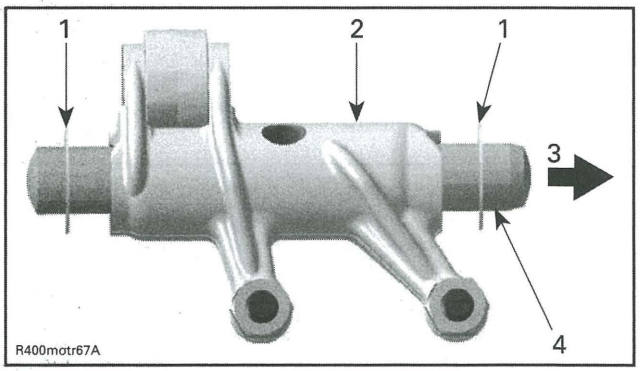

1. 2 thrust washers
2. Rocker arm (exhaust side)
3. Cylinder head (spark plug side)
4. Big taper to spark plug side

Rocker Arm Inspection

Inspect each rocker arm for cracks and scored friction surfaces. If so, replace rocker arm assembly.

Check the rocker arm rollers for free movement, wear and excessive radial play. Replace rocker arm assembly if necessary.

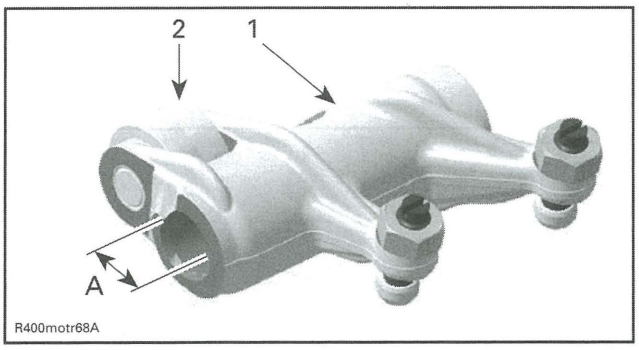

1. *Rocker arm (exhaust side)*
2. *Roller*

A. Bore for rocker arm shaft

Measure rocker arm bore diameter. If diameter is out of specification, change the rocker arm assembly.

ROCKER ARM BORE DIAMETER	
NEW	12.036 mm to 12.050 mm (.4739 in to .4744 in)
SERVICE LIMIT	12.060 mm (.4748 in)

Check adjustment screws for free movement, cracks and/or excessive play.

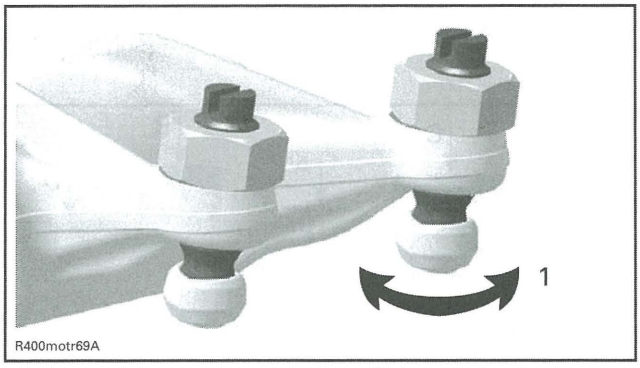

1. *Free movement of adjustment screw top*

Rocker Arm Shaft Inspection

Check for scored friction surfaces; if so, replace parts.

Measure rocker arm shaft diameter.

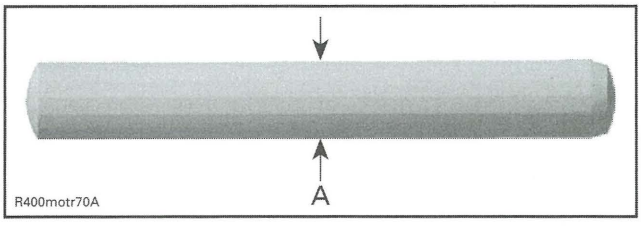

A. Measure rocker arm shaft diameter here

ROCKER ARM SHAFT DIAMETER	
NEW	12.00 mm to 12.018 mm (.4724 in to .4731 in)
SERVICE LIMIT	11.990 mm (.472 in)

Any area worn excessively will require parts replacement.

Rocker Arm Installation

NOTE: Use the same procedure for exhaust and intake rocker arm.

Apply engine oil on rocker arm shaft.

Insert a rocker arm shaft with the chamfered edge first through rocker arm pin bore.

Install a thrust washer at timing chain side, then the proper rocker arm (exhaust side or intake side).

Push in rocker arm shaft until its chamfer reaches the end of rocker arm bore.

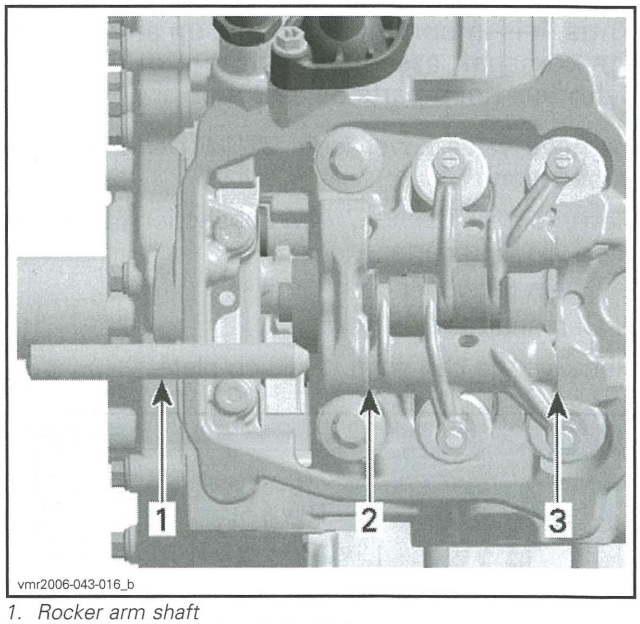

1. *Rocker arm shaft*
2. *Thrust washer (timing chain side)*
3. *Thrust washer (spark plug side)*

Place the other thrust washer and push rocker arm shaft to end position.

Install the camshaft retaining plate.

Adjust valve clearance, refer to *PERIODIC MAINTENANCE PROCEDURE*.

CAMSHAFT

NOTE: The engine is equipped with two different camshafts.

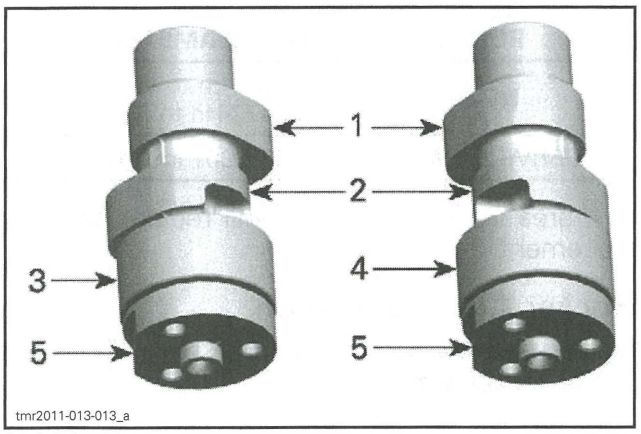

1. *Intake cam*
2. *Exhaust cam*
3. *Camshaft of cylinder 1*
4. *Camshaft of cylinder 2*
5. *Flat spot*

Camshaft Removal

The removal procedure is the same for both camshafts.

NOTICE Each camshaft is different in design. Thus, it is important not to mix up any parts of the camshaft assembly with that of the other cylinder. Keep parts as a group.

Remove valve cover (see *VALVE COVER* in this subsection).

Refer to the *TIMING CHAIN* subsection to remove the following parts:

- Chain tensioner
- Camshaft timing gear.

Remove the camshaft retaining plate.

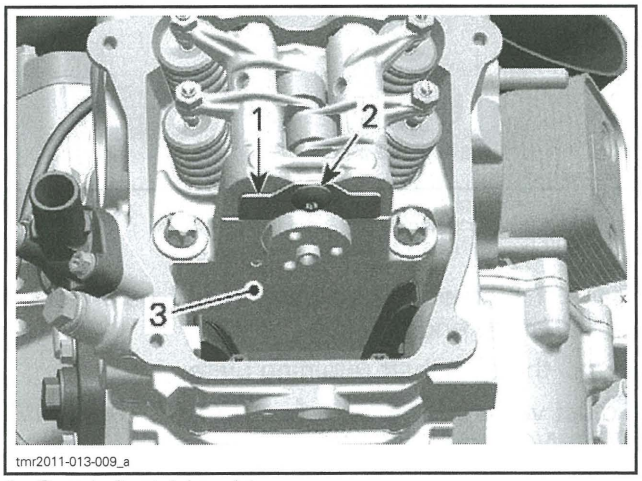

1. *Camshaft retaining plate*
2. *Pan head screw*
3. *Cylinder head*

Remove rocker arms (see *ROCKER ARM* in this subsection).

Remove the camshaft.

NOTE: For removal rotate camshaft so that intake/exhaust lobe shows to upper side of cylinder head.

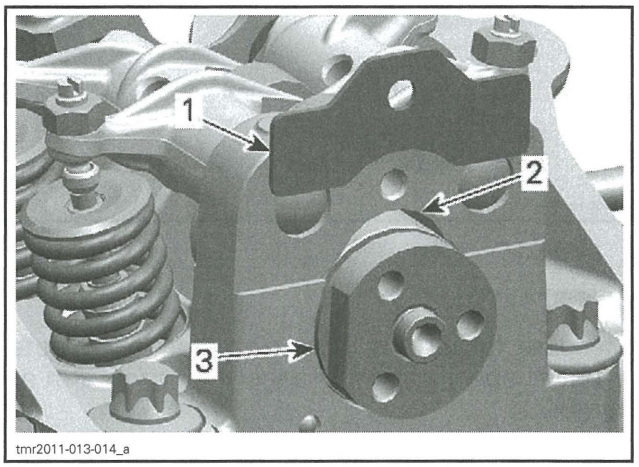

1. *Camshaft retaining plate*
2. *Area for camshaft lobes*
3. *Camshaft*

Camshaft Inspection

Camshaft Lobe Inspection

Check each lobe for scoring, scuffing, cracks or other signs of wear.

Measure camshaft lobe height using a micrometer.

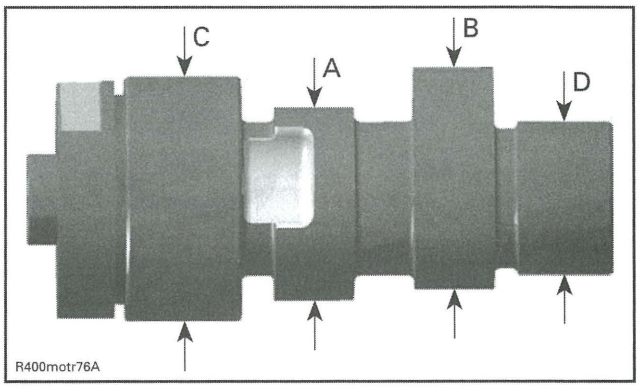

A. *Camshaft lobe (exhaust valves)*
B. *Camshaft lobe (intake valves)*
C. *Camshaft journal (timing chain side)*
D. *Camshaft journal (spark plug side)*

CAMSHAFT LOBE (EXHAUST)		
500 engine	NEW	31.730 mm to 31.930 mm (1.2492 in to 1.2571 in)
	SERVICE LIMIT	31.710 mm (1.2484 in)
650 engine	NEW	31.940 mm to 32.140 mm (1.2575 in to 1.2654 in)
	SERVICE LIMIT	31.920 mm (1.2567 in)
800R engine	NEW	32.950 mm to 33.150 mm (1.2972 in to 1.3051 in)
	SERVICE LIMIT	32.930 mm (1.2965 in)
1000 engine	NEW	32.860 mm to 33.060 mm (1.294 in to 1.302 in)
	SERVICE LIMIT	32.840 mm (1.293 in)

CAMSHAFT LOBE (INTAKE)		
500 engine	NEW	31.830 mm to 32.030 mm (1.2531 in to 1.261 in)
	SERVICE LIMIT	31.810 mm (1.2524 in)
650 engine	NEW	32.110 mm to 32.310 mm (1.2642 in to 1.272 in)
	SERVICE LIMIT	32.090 mm (1.2634 in)
800R engine	NEW	32.890 mm to 33.090 mm (1.2949 in to 1.3028 in)
	SERVICE LIMIT	32.870 mm (1.2941 in)
1000 engine	NEW	32.960 mm to 33.160 mm (1.298 in to 1.306 in)
	SERVICE LIMIT	32.940 mm (1.297 in)

Measure camshaft bearing in cylinder head. Refer to *CYLINDER HEAD INSPECTION* in this subsection.

Camshaft Journal Inspection

Check each journal for scoring, scuffing, cracks or other signs of wear.

Measure camshaft journal using a micrometer.

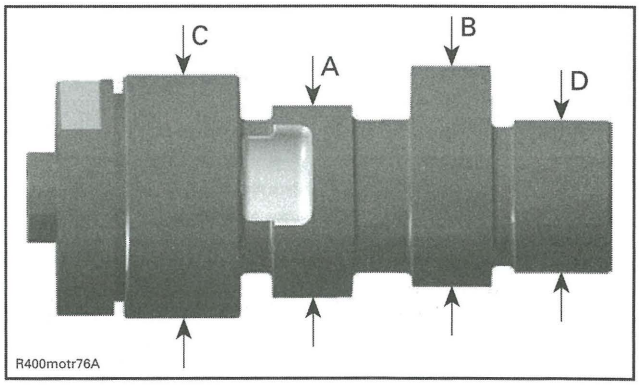

A. Camshaft lobe (exhaust valves)
B. Camshaft lobe (intake valves)
C. Camshaft journal (timing chain side)
D. Camshaft journal (spark plug side)

CAMSHAFT JOURNAL (TIMING CHAIN SIDE)	
NEW	34.959 mm to 34.975 mm (1.3763 in to 1.377 in)
SERVICE LIMIT	34.950 mm (1.376 in)

CAMSHAFT JOURNAL (SPARK PLUG SIDE)	
NEW	21.959 mm to 21.980 mm (.8645 in to .8654 in)
SERVICE LIMIT	21.950 mm (.8642 in)

Camshaft Installation

For installation, reverse the removal procedure. Pay attention to the following details.

NOTICE **The camshafts are not identical in design. Do not invert the camshafts during assembly. Any mix-up of the components will lead to engine damage.**

Place the camshaft retaining plate in the slot of the camshaft.

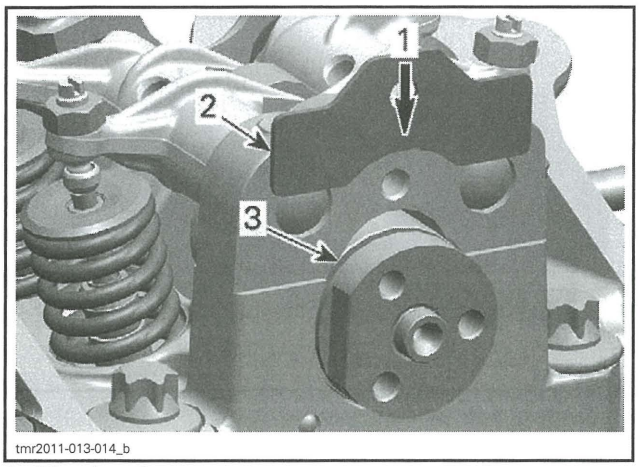

1. *Direction of movement*
2. *Camshaft retaining plate*
3. *Slot retaining camshaft*

For other parts, refer to proper installation procedure.

CYLINDER HEAD

Cylinder Head Access

Refer to *VALVE COVER* in this subsection.

Cylinder Head Removal

The removal procedure is the same for both cylinder heads.

Drain coolant (refer to *PERIODIC MAINTENANCE PROCEDURES* subsection).

NOTE: Before removing cylinder head, blow out remaining coolant by air pressure. During cylinder head removal, the remaining coolant in cylinder head could overflow into the engine and a little quantity of coolant could drop into the engine. In this case, the engine oil will be contaminated.

Disconnect spark plug wire.

Disconnect temperature sensor connector, located at rear cylinder head.

Remove the intake manifold. Refer to *INTAKE MANIFOLD* subsection.

Remove the valve cover and its gasket (see *VALVE COVER* in this subsection).

Refer to the *TIMING CHAIN* subsection to remove the following parts:

- Chain tensioner
- Camshaft timing gear.

First remove the M6 cylinder head screws, then the cylinder head screws M10.

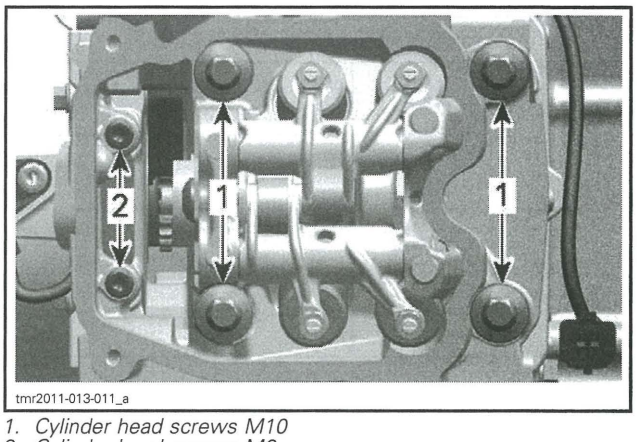

1. *Cylinder head screws M10*
2. *Cylinder head screws M6*

Pull up cylinder head.

Remove timing chain guide (fixed).

Remove and discard the cylinder head gasket.

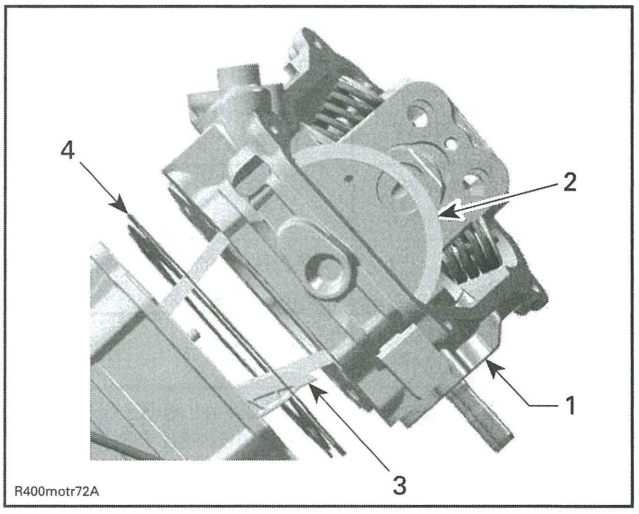

1. *Cylinder head*
2. *Timing chain*
3. *Chain guide (fixed)*
4. *Cylinder head gasket*

Cylinder Head Inspection

Inspect timing chain guide (fixed) for wear, cracks or other damages. Replace if necessary.

Check for cracks between valve seats, if so, replace cylinder head.

Check mating surface between cylinder and cylinder head for contamination. If so, clean both surfaces.

Clean oil support through the cylinder head from contamination.

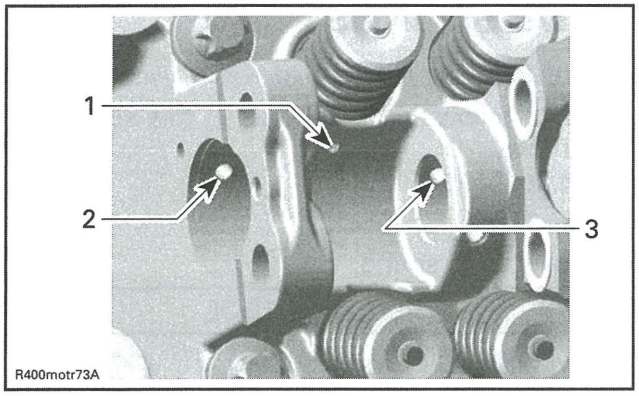

1. *Oil port to lubricate camshaft lobes intake/exhaust*
2. *Oil supply to camshaft bearing journal (timing chain side)*
3. *Oil supply to camshaft bearing journal (spark plug side)*

Cylinder Head Camshaft Bearing Inspection

Measure camshaft bearing in cylinder head.

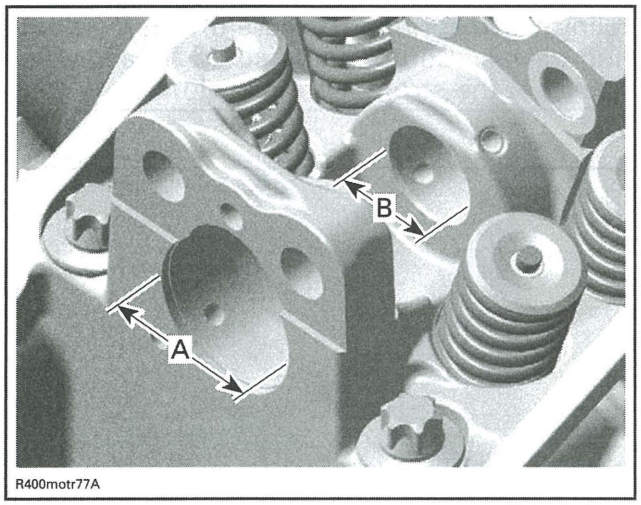

A. Camshaft bearing (timing chain side)
B. Camshaft bearing (spark plug side)

CAMSHAFT BEARING (TIMING CHAIN SIDE)	
NEW	35.000 mm to 35.025 mm (1.378 in to 1.3789 in)
SERVICE LIMIT	35.040 mm (1.3795 in)
CAMSHAFT BEARING (SPARK PLUG SIDE)	
NEW	22.000 mm to 22.021 mm (.8661 in to .867 in)
SERVICE LIMIT	22.040 mm (.8677 in)

Cylinder Head Installation

NOTE: Never invert front and rear cylinder heads. On the 500, 650 and 800R engine, cylinder heads are not identical.

For installation, reverse the removal procedure. Pay attention to the following details.

Ensure dowel pins are in place.

NOTICE Timing chain guide (fixed) has to be fixed between cylinder and cylinder head.

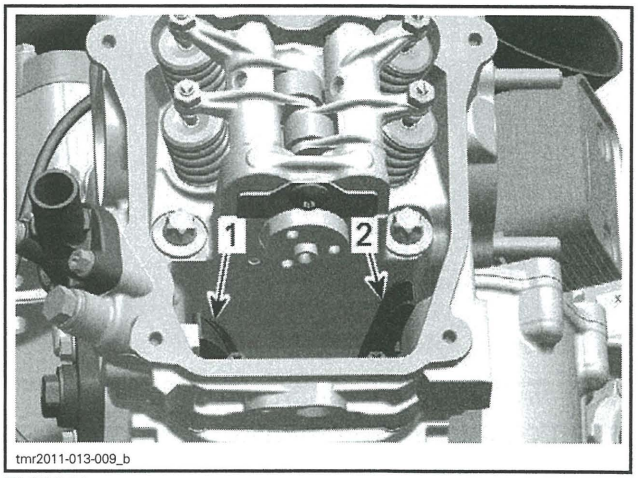

TYPICAL
1. *Timing chain guide (tensioner side) mounted in crankcase*
2. *Timing chain guide (fixed) between cylinder and cylinder head*

Install a NEW cylinder head gasket.

Install cylinder head screws in correct position.

NOTICE Cylinder head screws have different sizes and lengths.

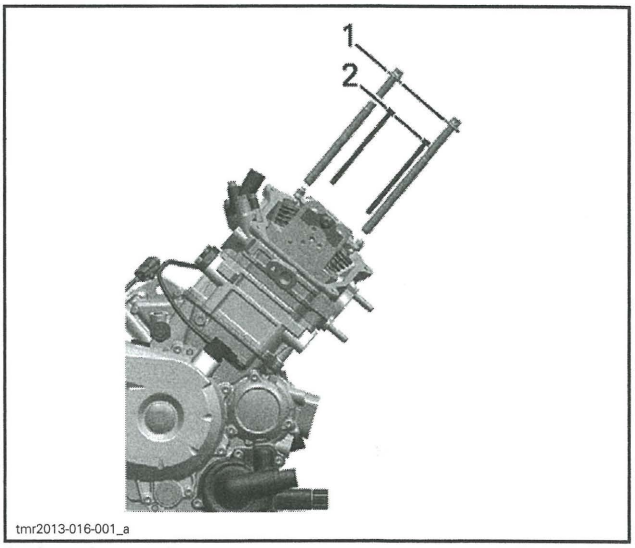

1. *Location no. 1*
2. *Location no. 2*

CYLINDER HEAD SCREW IDENTIFICATION		
500/650/800R engines	Location no. 1	M10 x 140
	Location no. 2	M6 x 85
1000 engine	Location no. 1	M10 x 159
	Location no. 2	M6 x 105

Tighten M10 cylinder head screws FIRST as per following specifications.

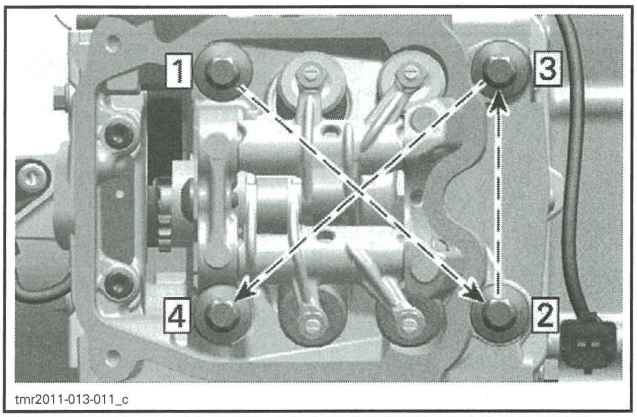

tmr2011-013-011_c

TIGHTENING SEQUENCE - M10 CYLINDER HEAD SCREWS

M10 CYLINDER HEAD SCREWS	
TIGHTENING TORQUE	
STEP 1	20 N•m ± 1 N•m (15 lbf•ft ± 1 lbf•ft)
STEP 2	180° +/- 5°

Tighten M6 cylinder head screws as per following specification.

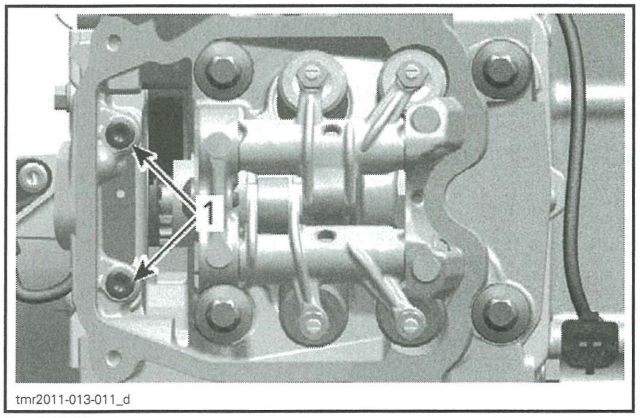

tmr2011-013-011_d

1. M6 Screws

M6 CYLINDER HEAD SCREWS	
TIGHTENING TORQUE	10 N•m ± 1 N•m (89 lbf•**in** ± 9 lbf•**in**)

Check timing chain guide (tensioner side) for movement.

VALVE SPRINGS

Valve Spring Removal

Refer to following procedures in this subsection to remove:
- *CAMSHAFT*
- *CYLINDER HEAD.*

Remove valve spring.

REQUIRED TOOL	
VALVE SPRING COMPRESSOR (P/N 529 035 724)	
VALVE SPRING COMPRESSOR CUP (P/N 529 035 764)	

⚠ WARNING

Always wear safety glasses when disassembling valve springs. Be careful when unlocking valves. Components could fly away because of the strong spring preload.

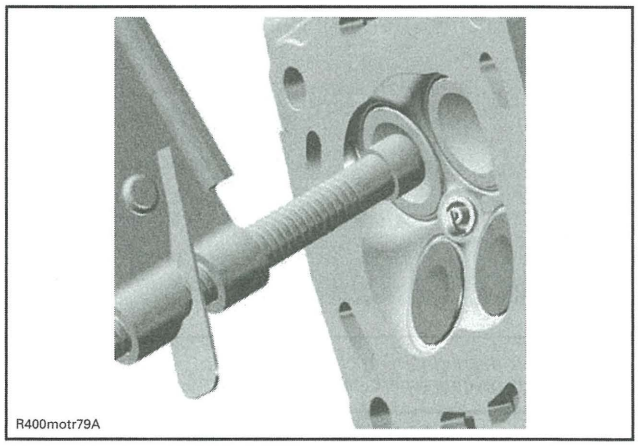
R400motr79A

LOCATE VALVE SPRING COMPRESSOR CLAMP IN CENTER OF THE VALVE

Remove valve cotters.

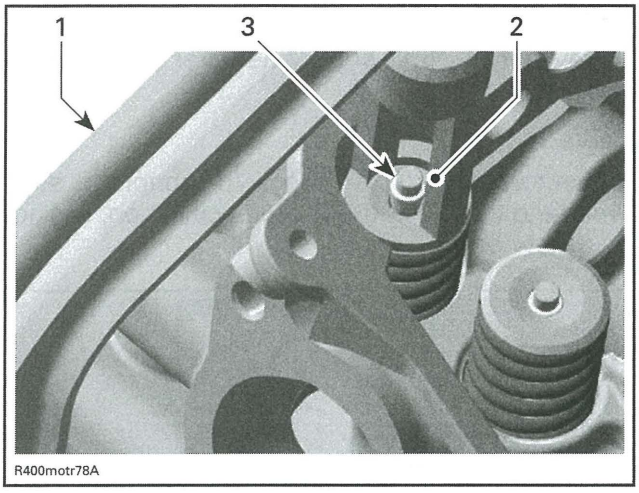

1. *Valve spring compressor clamp*
2. *Valve spring compressor cup*
3. *Valve cotter*

Remove tools and withdraw valve spring retainer and valve spring.

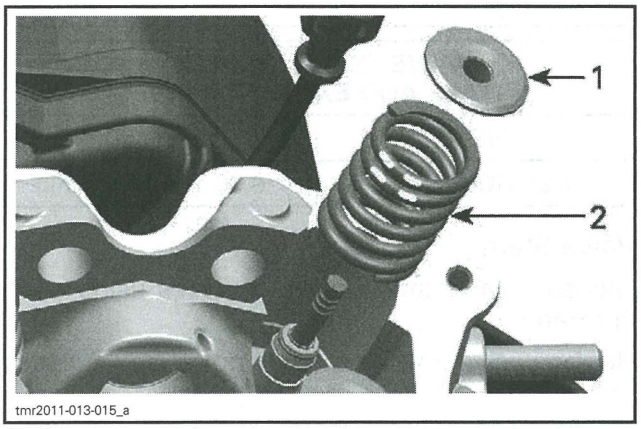

1. *Valve spring retainer*
2. *Valve spring*

Valve Spring Inspection

Check valve spring for visible damage. If so, replace valve spring.

Check valve spring for free length and straightness.

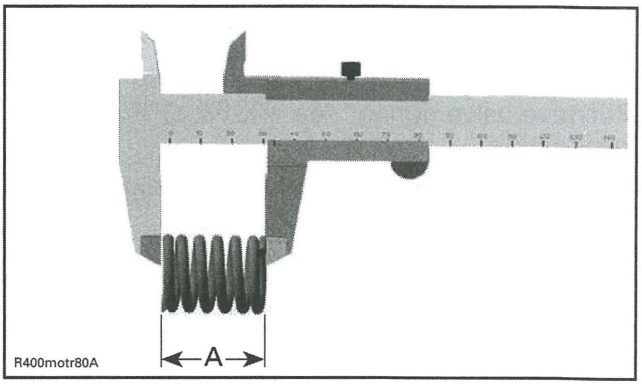

A. Valve spring length

VALVE SPRING FREE LENGTH	
NOMINAL NEW	40.81 mm (1.607 in)
SERVICE LIMIT	39.00 mm (1.535 in)

Replace valve springs if not within specifications.

Valve Spring Installation

For installation, reverse the removal procedure. Pay attention to the following details.

Colored area of the valve spring must be placed on top.

To ease installation of cotters, apply oil or grease on them so that they remain in place while releasing the spring.

NOTE: Valve cotter must be properly engaged in valve stem grooves.

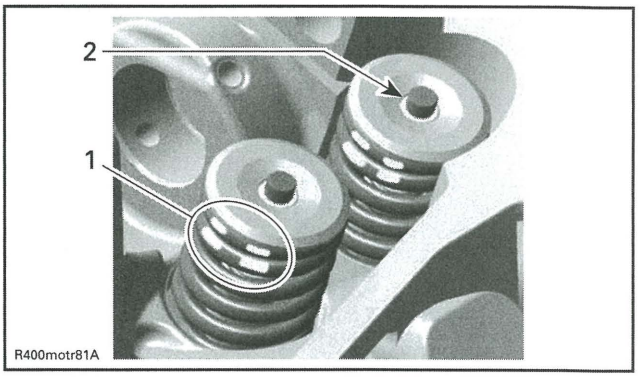

1. *Position of the valve spring*
2. *Valve cotter*

After spring is installed, ensure it is properly locked by tapping on valve stem end with a soft hammer so that valve opens and closes a few times.

NOTICE **An improperly locked valve spring will cause engine damage.**

VALVES

Valve Removal

Remove valve spring, see *VALVE SPRING* in this subsection.

Push valve stem, then pull valves (intake and exhaust) out of valve guide.

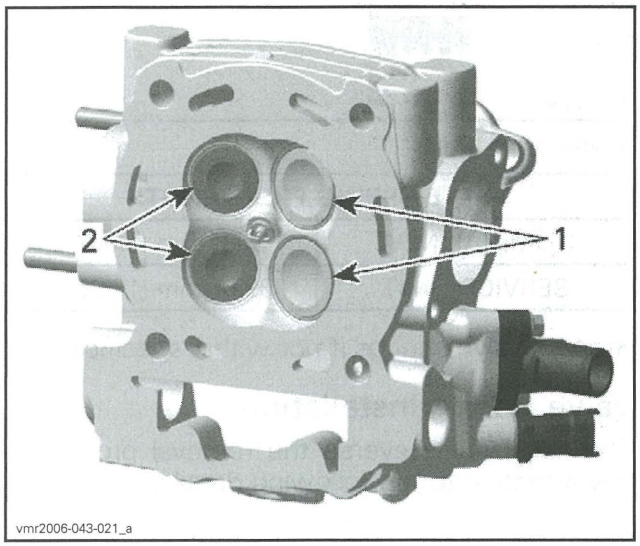

1. *Intake valves 31 mm*
2. *Exhaust valves 27 mm*

Remove valve stem seal and discard it.

REQUIRED TOOL
SNAP-ON PLIERS (P/N YA 8230)

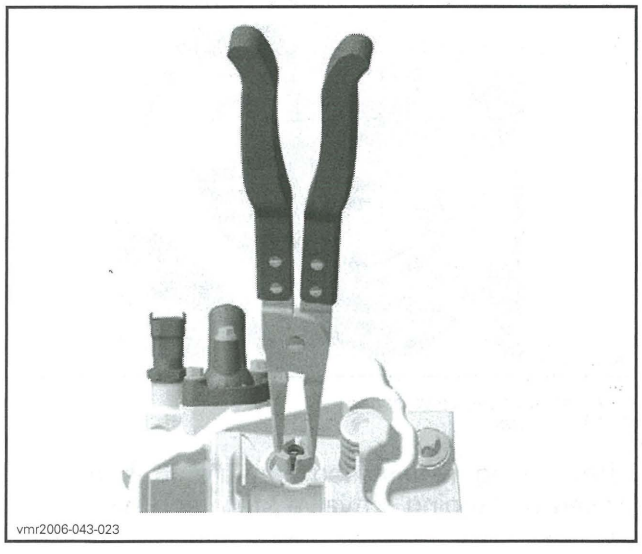

Valve Inspection

Whenever valves are removed always inspect valve guides. Refer to *VALVE GUIDES* in this subsection.

Valve Stem Seal

Always install **NEW** seals whenever valves are removed.

Valve

Inspect valve surface, check for abnormal stem wear and bending. If out of specification, replace by a new one.

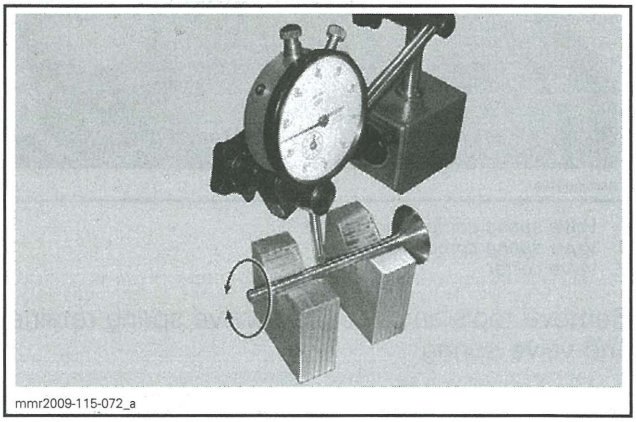

VALVE OUT OF ROUND (INTAKE AND EXHAUST VALVES)	
NEW	0.005 mm (.0002 in)
SERVICE LIMIT	0.06 mm (.0024 in)

Valve Stem

Measure valve stem in three places using a micrometer.

Replace valve if valve stem is out of specification or has other damages such as wear or friction surface.

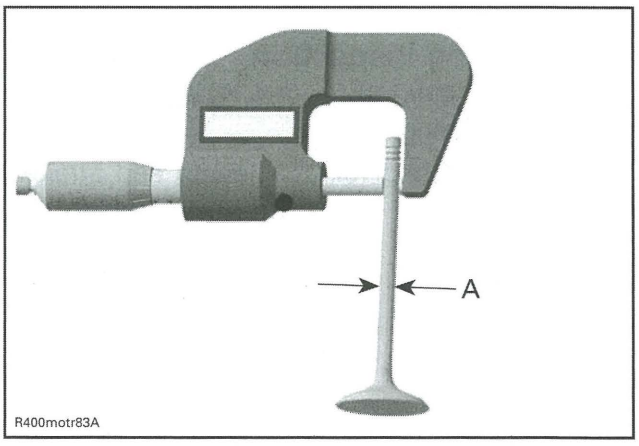

A. Valve stem diameter

VALVE STEM DIAMETER	
EXHAUST VALVE	
NEW	4.956 mm to 4.970 mm (.1951 in to .1957 in)
SERVICE LIMIT	4.930 mm (.1941 in)
INTAKE VALVE	
NEW	4.966 mm to 4.980 mm (.1955 in to .1961 in)
SERVICE LIMIT	4.930 mm (.1941 in)

Valve Face and Seat

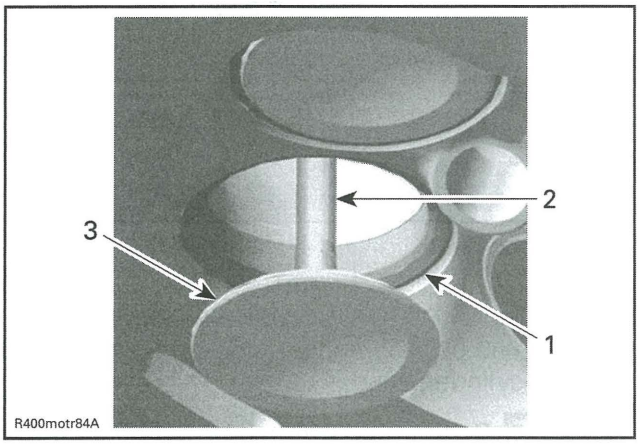

1. Valve seat
2. Exhaust valve contaminated area
3. Valve face (contact surface to valve seat)

Check valve face and seat for burning or pittings and replace valve or cylinder head if there are signs of damage.

Ensure to seat valves properly. Apply some lapping compound to valve face and work valve on its seat with a lapping tool (see *VALVE GUIDES* in this subsection).

Measure valve face contact width.

NOTE: The location of contact area should be in center of valve seat.

Measure valve seat width using a caliper.

VALVE SEAT CONTACT WIDTH	
EXHAUST VALVE	
NEW	1.25 mm to 1.55 mm (.049 in to .061 in)
SERVICE LIMIT	2.00 mm (.079 in)
INTAKE VALVE	
NEW	1.05 mm to 1.35 mm (.041 in to .053 in)
SERVICE LIMIT	1.80 mm (.071 in)

If valve seat contact width is too wide or has dark spots, replace the cylinder head.

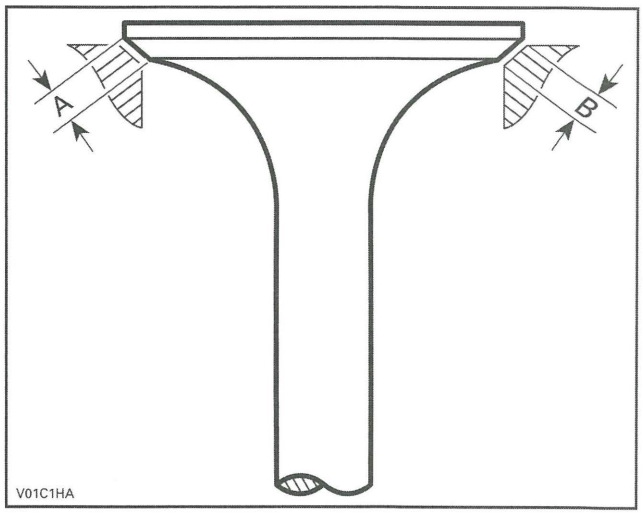

A. Valve face contact width
B. Valve seat contact width

Valve Installation

For installation, reverse the removal procedure. Pay attention to the following details.

Install a NEW valve stem seal. Make sure thrust washer is installed before installing seal.

Apply engine oil on valve stem and install it.

NOTICE Be careful when valve stem is passed through sealing lips of valve stem seal.

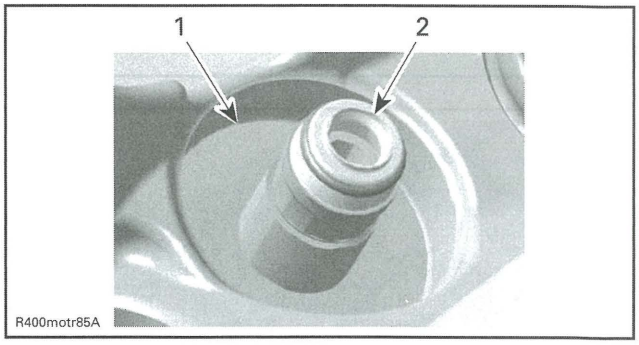

1. Thrust washer
2. Sealing lips of valve stem seal

To ease installation of cotters, apply oil or grease on them so that they remain in place while releasing the spring.

After spring is installed, ensure it is properly locked by tapping on valve stem end with a soft hammer so that valve opens and closes a few times.

NOTICE An improperly locked valve spring will cause engine damage.

VALVE GUIDES

Valve Guide Inspection

Always replace valve stem seals whenever valve guides are removed.

Measure valve guide in three places using a small bore gauge.

NOTE: Clean valve guide to remove carbon deposits before measuring.

Replace valve guide if it is out of specification or has other damages such as wear or friction surface.

VALVE GUIDE DIAMETER (INTAKE AND EXHAUST VALVES)	
NEW	4.998 mm to 5.018 mm (.1968 in to .1976 in)
SERVICE LIMIT	5.050 mm (.1988 in)

Valve Guide Removal

Remove cylinder head (see *CYLINDER HEAD* in this subsection).

Remove valves (see *VALVES* in this subsection).

NOTE: Clean valve guide area from contamination before removal.

Drive the valve guide out of cylinder head.

REQUIRED TOOL	
VALVE GUIDE REMOVER 5 MM (P/N 529 035 924)	
Hammer	

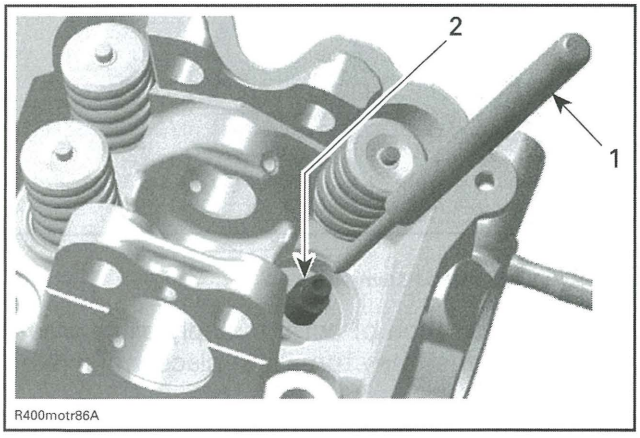

1. Valve guide remover
2. Valve guide

Valve Guide Installation

For installation, reverse the removal procedure. Pay attention to the following details.

Clean the valve guide bore before reinstalling the valve guide into cylinder head.

Install valve guide.

REQUIRED TOOL	
VALVE GUIDE INSTALLER (P/N 529 036 140)	

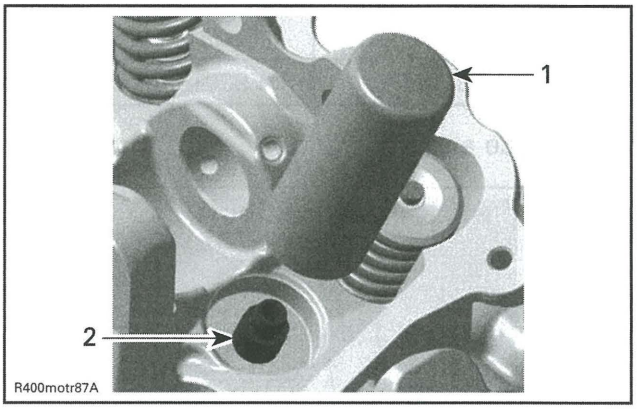

1. Valve guide installer
2. Valve guide

NOTE: Apply LOCTITE 767 (ANTISEIZE LUBRICANT) (P/N 293 800 070) on valve guide prior to install it into the cylinder head.

NOTICE **Push valve guide in the cold cylinder head as per following illustration.**

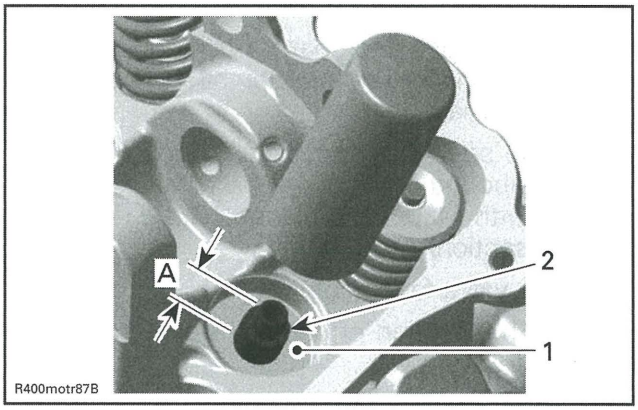

1. Thrust surface of cylinder head
2. Valve guide
A. Measurement from thrust surface to valve guide top

VALVE GUIDE (MEASUREMENT A)	
NEW	14.00 mm to 14.40 mm (.5512 in to .5669 in)

Apply some lapping compound to valve face and work valve on its seat with a lapping tool.

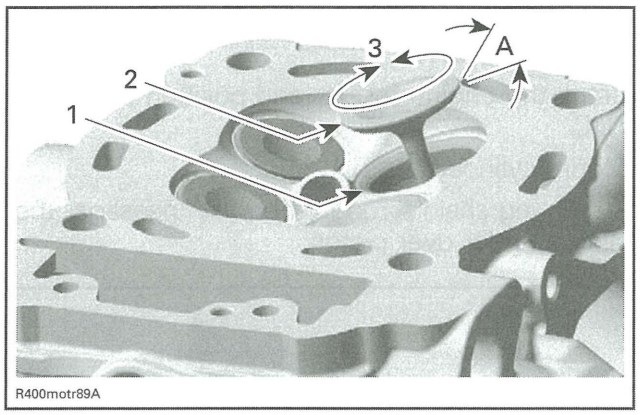

1. *Valve seat*
2. *Valve face (contact surface to valve seat)*
3. *Turn valve while pushing against cylinder head*

A. Valve seat angle 45°

NOTE: Ensure to seat valves properly. Apply marking paste to ease checking contact pattern.

Repeat procedure until valve seat/valve face fits together.

CYLINDER

Cylinder Removal

Refer to the *TIMING CHAIN* subsection to remove the following parts:

- Chain tensioner
- Camshaft timing gear.

Remove the cylinder head (see *CYLINDER HEAD* in this subsection).

Pull cylinder.

Discard cylinder base gaskets.

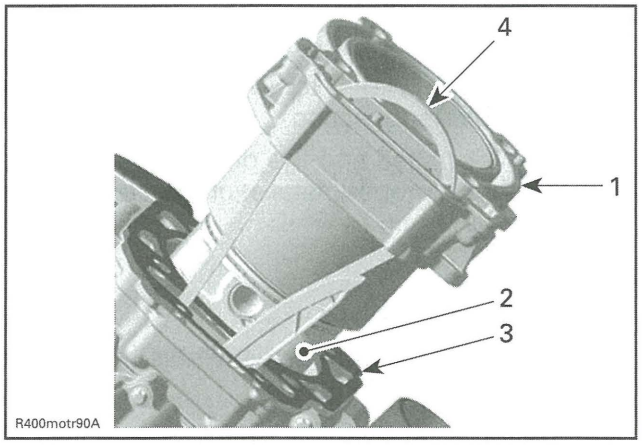

1. *Cylinder*
2. *Piston assembly*
3. *Cylinder base gasket*
4. *Camshaft timing chain*

Cylinder Inspection

Check cylinder for cracks, scoring and wear ridges on the top and bottom of the cylinder. If so, replace cylinder.

Cylinder Taper

Measure cylinder bore at recommended positions.

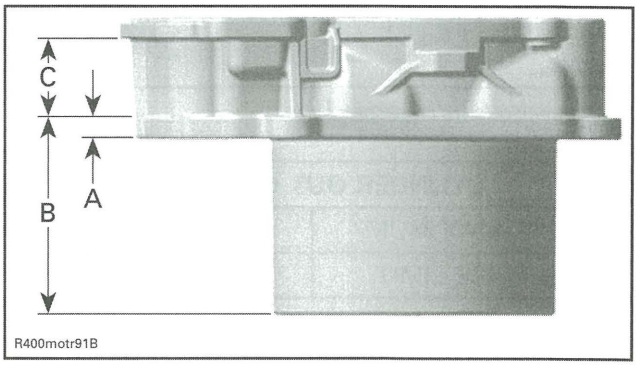

A. First measurement (from cylinder bottom)
B. Second measurement
C. Third measurement

CYLINDER TAPER MEASUREMENTS		
ENGINE	MEASUREMENT	SPECIFICATION
500/650/ 800R engines	A	5 mm (.197 in)
	B	63 mm (2.48 in)
	C	32 mm (1.26 in)
1000 engine	A	5 mm (.197 in)
	B	58 mm (2.283 in)
	C	52 mm (2.047 in)

CYLINDER TAPER SPECIFICATION	
NEW (MAXIMUM)	0.038 mm (.0015 in)
SERVICE LIMIT	0.090 mm (.0035 in)

Distance between measurements should not exceed the service limit. Otherwise, replace cylinder and piston rings.

Cylinder Out of Round

Measure cylinder diameter in piston axis direction from top of cylinder. Take another measurement 90° from first one and compare.

NOTE: Take the same measuring points like described in *CYLINDER TAPER* above.

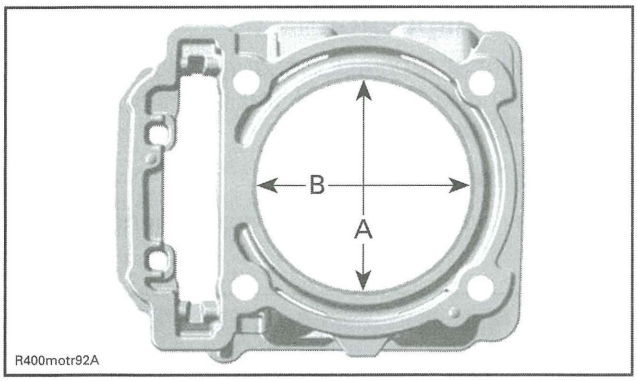

A. Perpendicular to crankshaft axis
B. Parallel to crankshaft axis

CYLINDER OUT OF ROUND	
NEW (MAXIMUM)	0.015 mm (.0006 in)
SERVICE LIMIT	0.020 mm (.0008 in)

Cylinder Installation

For installation, reverse the removal procedure. Pay attention to the following details.

NOTICE Always replace cylinder base gasket before installing the cylinder.

NOTE: Make sure piston rings are properly spaced, refer to *PISTON RINGS* in this subsection.

Apply engine oil in the bottom area of the cylinder bore and on piston rings.

Apply engine oil on the compressor tool.

Compress piston rings.

REQUIRED TOOL	
500/650 engines	PISTON RING COMPRESSOR (P/N 529 035 977)
800R/1000 engines	PISTON RING COMPRESSOR (P/N 529 035 919)

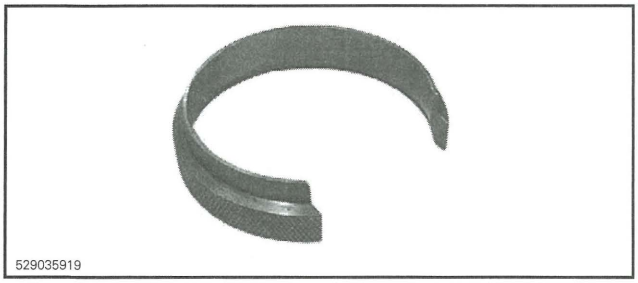

First mount cylinder 2.

NOTE: The cylinder can not be pushed fully over the piston unless the piston is located at TDC.

Then remove the CRANKSHAFT LOCKING BOLT (P/N 529 035 617).

Crank the engine further and position piston 1 at TDC.

Mount cylinder 1.

Put timing chain through the chain passage, then slide cylinder over piston.

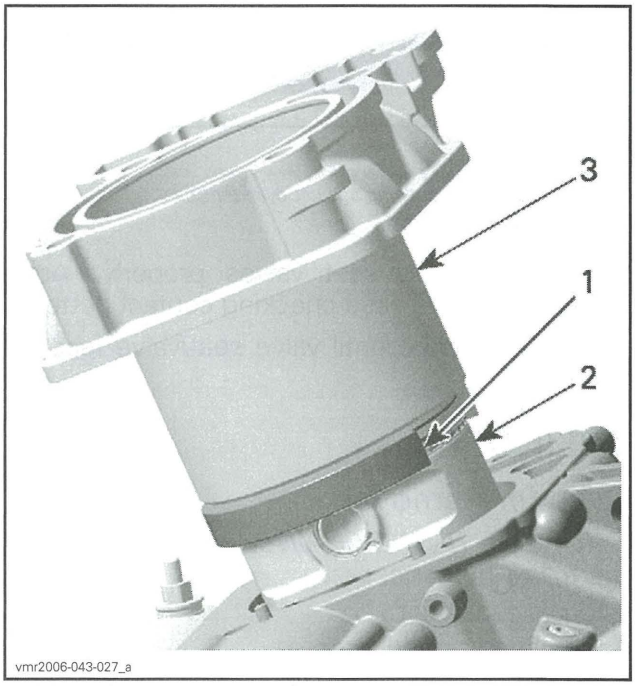

1. Piston ring compressor tool
2. Piston
3. Cylinder

NOTICE Chain guide has to be fixed between cylinder and cylinder head.

NOTE: After both cylinders are installed, turn crankshaft until piston of cylinder 2 is at TDC and lock crankshaft. Refer to *CRANKSHAFT* in the *BOTTOM END* subsection.

Install cylinder head and the other parts in accordance with the proper installation procedures.

PISTON

Piston Removal

Refer to following procedures in this subsection and remove following parts:

- Cylinder head
- Cylinder.

Place a rag under piston and in the area of timing chain compartment.

⚠ WARNING

Piston circlips are spring loaded.

Remove one piston circlip and discard it.

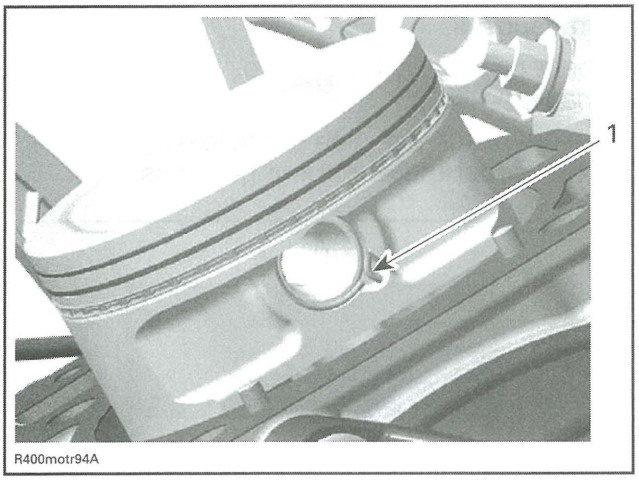

1. Piston circlip

NOTE: The removal of both piston circlips is not necessary to remove piston pin.

Push piston pin out of piston.

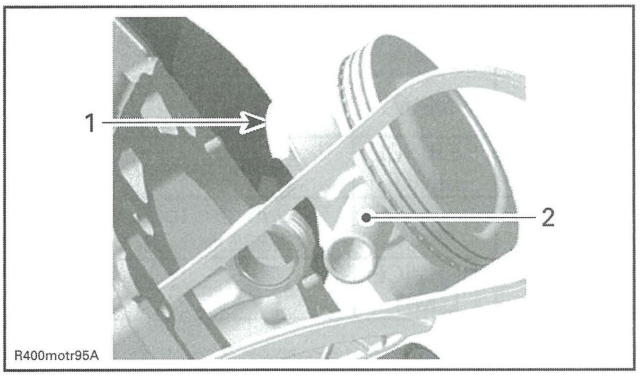

1. Piston
2. Piston pin

Detach piston from connecting rod.

Piston Inspection

Inspect piston for scoring, cracking or other damages. Replace piston and piston rings if necessary.

Using a micrometer, measure piston at 8 mm (.315 in) perpendicularly (90°) to piston pin.

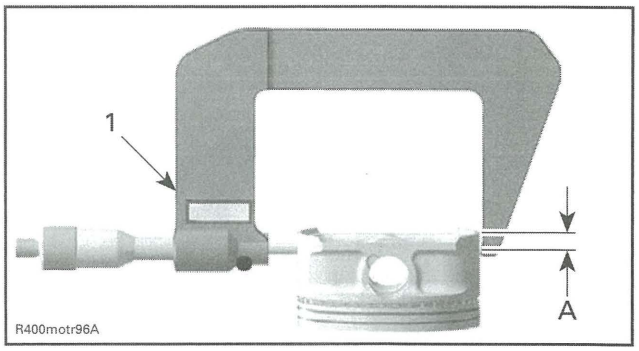

1. Measuring perpendicularly (90°) to piston pin
A. 8 mm (.315 in)

The measured dimension should be as described in the following tables. If not, replace piston.

PISTON MEASUREMENT		
500/650 ENGINES	NEW	81.950 mm to 81.966 mm (3.2264 in to 3.227 in)
	SERVICE LIMIT	81.850 mm (3.222 in)
800R/1000 ENGINES	NEW	90.950 mm to 90.966 mm (3.5807 in to 3.5813 in)
	SERVICE LIMIT	90.850 mm (3.577 in)

Piston/Cylinder Clearance

Adjust and lock a micrometer to the piston dimension.

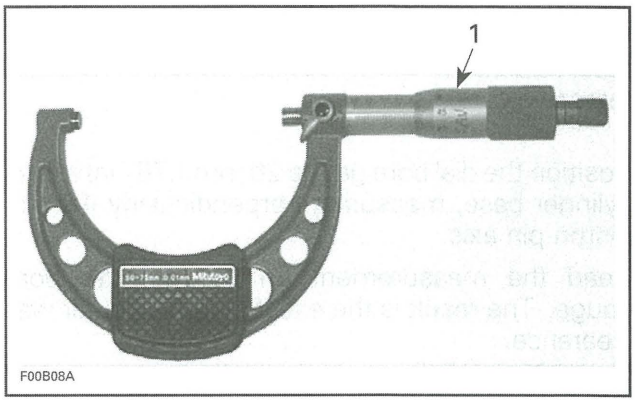

1. Micrometer set to the piston dimension

With the micrometer set to the dimension, adjust a cylinder bore gauge to the micrometer dimension and set the indicator to 0 (zero).

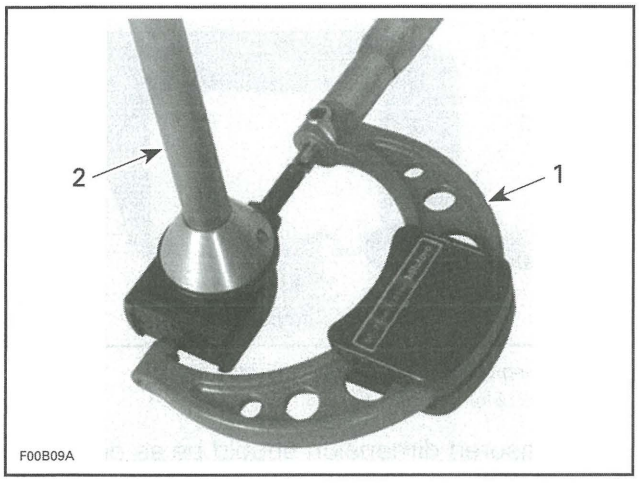

1. Use the micrometer to set the cylinder bore gauge
2. Dial bore gauge

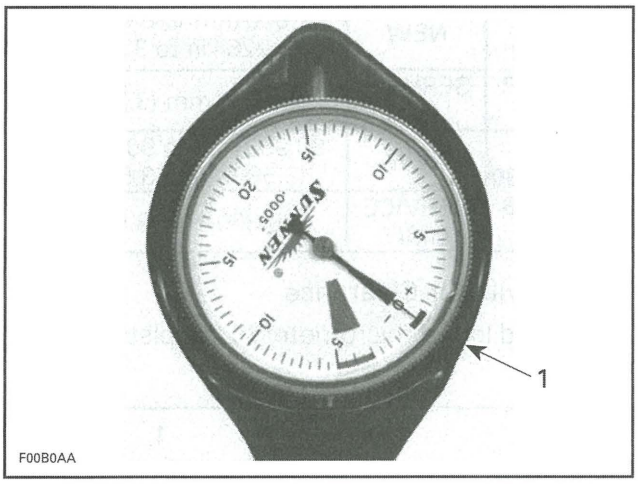

TYPICAL
1. Indicator set to 0 (zero)

Position the dial bore gauge 20 mm (.787 in) above cylinder base, measuring perpendicularly (90°) to piston pin axis.

Read the measurement on the cylinder bore gauge. The result is the exact piston/cylinder wall clearance.

PISTON/CYLINDER CLEARANCE		
500/650 ENGINES	NEW	0.057 mm to 0.087 mm (.0022 in to .0034 in)
	SERVICE LIMIT	0.130 mm (.0051 in)
800R/1000 ENGINES	NEW	0.027 mm to 0.057 mm (.0011 in to .0022 in)
	SERVICE LIMIT	0.100 mm (.0039 in)

NOTE: Make sure used piston is not worn.

If clearance exceeds specified tolerance, replace piston by a new one and measure piston/cylinder clearance again.

NOTE: Make sure the cylinder bore gauge indicator is set exactly at the same position as with the micrometer, otherwise the reading will be false.

Connecting Rod/Piston Pin Clearance

Using synthetic abrasive woven, clean piston pin from deposits.

Inspect piston pin for scoring, cracking or other damages.

Measure piston pin. See the following illustration for the proper measurement positions.

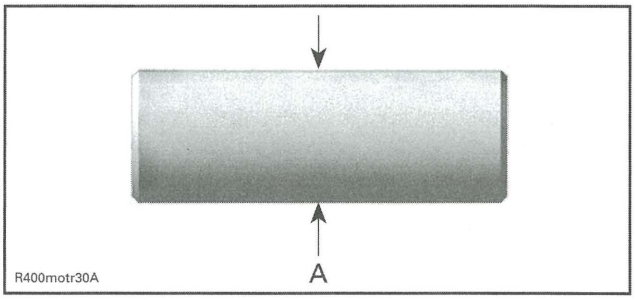

A. Piston pin diameter

PISTON PIN DIAMETER		
500 ENGINES	NEW	17.996 mm to 18.000 mm (.7085 in to .7087 in)
	SERVICE LIMIT	17.980 mm (.7079 in)
650/800R ENGINE	NEW	19.996 mm to 20.000 mm (.7872 in to .7874 in)
	SERVICE LIMIT	19.980 mm (.7866 in)
1000 ENGINE	NEW	21.996 mm to 22.000 mm (.866 in to .8661 in)
	SERVICE LIMIT	21.980 mm (.8654 in)

Replace piston pin if diameter is out of specifications.

Measure inside diameter of connecting rod small end bushing.

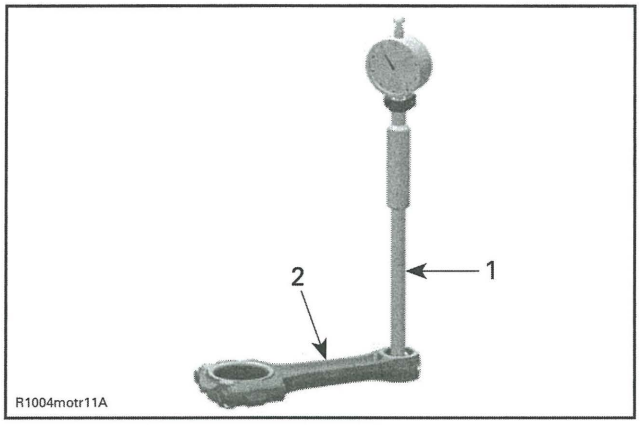

1. *Bore gauge*
2. *Connecting rod*

CONNECTING ROD SMALL END DIAMETER		
500 ENGINE	NEW	18.010 mm to 18.020 mm (.7091 in to .7094 in)
	SERVICE LIMIT	18.060 mm (.711 in)
650/800R ENGINES	NEW	20.010 mm to 20.020 mm (.7878 in to .7882 in)
	SERVICE LIMIT	20.060 mm (.7898 in)
1000 ENGINE	NEW	22.010 mm to 22.020 mm (.8665 in to .8669 in)
	SERVICE LIMIT	22.050 mm (.8681 in)

Replace connecting rod if diameter of connecting rod small end is out of specifications. Refer to *BOTTOM END* subsection for removal procedure.

Compare measurements to obtain the connecting rod/piston pin clearance.

CONNECTING ROD/ PISTON PIN CLEARANCE	
SERVICE LIMIT	0.080 mm (.0031 in)

Piston Installation

For installation, reverse the removal procedure. Pay attention to the following details.

Apply engine oil on the piston pin.

Insert piston pin into piston and connecting rod.

⚠ CAUTION The mounting direction of the pistons is different between the 500/650 engines and the 800R/1000 engines.

500 and 650 engines

For each cylinder, install piston with the punched arrow on piston dome is pointing toward the exhaust side of the engine.

Front cylinder: Mark on top of piston must show to exhaust side.

Rear cylinder: Mark on top of piston must show to exhaust side.

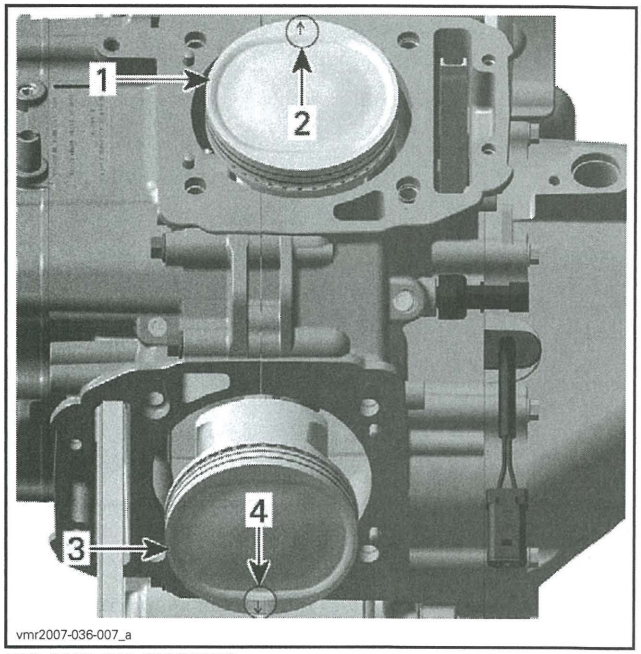

500 AND 650 ENGINES
1. *Piston of cylinder 1*
2. *Mark on piston must show to exhaust side of cylinder 1*
3. *Piston of cylinder 2*
4. *Mark on piston must show to exhaust side of cylinder 2*

800R and 1000 engines

For each cylinder, install piston with the punched arrow on piston dome is pointing toward the rear side of the engine.

Front cylinder: Mark on top of piston must show to intake side.

Rear cylinder: Mark on top of piston must show to exhaust side.

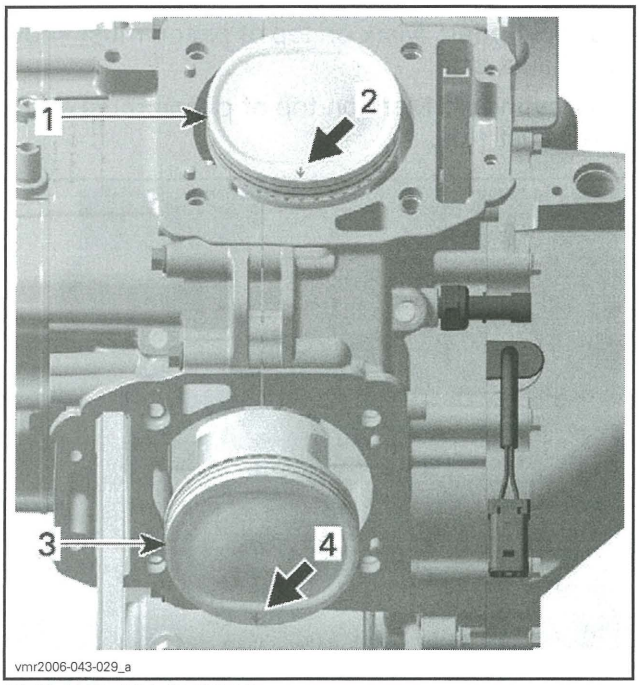

800R AND 1000 ENGINES
1. *Piston of cylinder 1*
2. *Mark on piston must show to intake side of cylinder 1*
3. *Piston of cylinder 2*
4. *Mark on piston must show to exhaust side of cylinder 2*

All Engines

Use the piston appropriate circlip installer to assemble the NEW piston circlip as per following procedure:

ENGINE	REQUIRED TOOL
500	PISTON CIRCLIP INSTALLER (P/N 529036058) 
650/800R	PISTON CIRCLIP INSTALLER (P/N 529 035 921) 
1000	PISTON CIRCLIP INSTALLER (P/N 529 036 153) 

NOTICE **Always replace disassembled piston circlip(s) by NEW ones. Place a rag on cylinder base to avoid dropping the circlip inside the engine.**

Place circlip in sleeve as per following illustration.

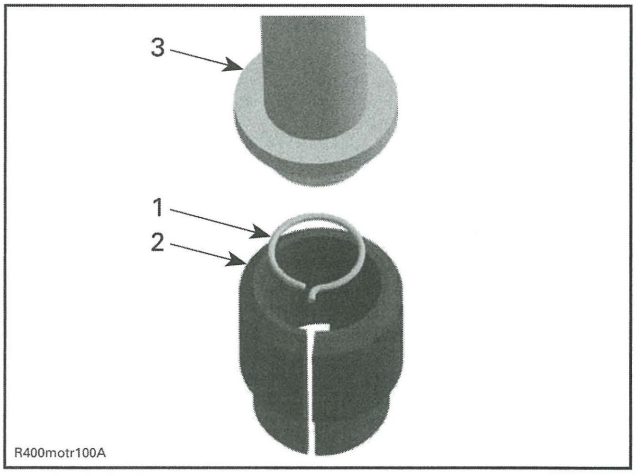

1. *Circlip*
2. *Sleeve*
3. *Assembly jig from piston clip installer*

Push taper side of assembly jig until circlip reaches middle of sleeve.

Align sleeve with piston pin axis and push assembly jig until circlip engages in piston.

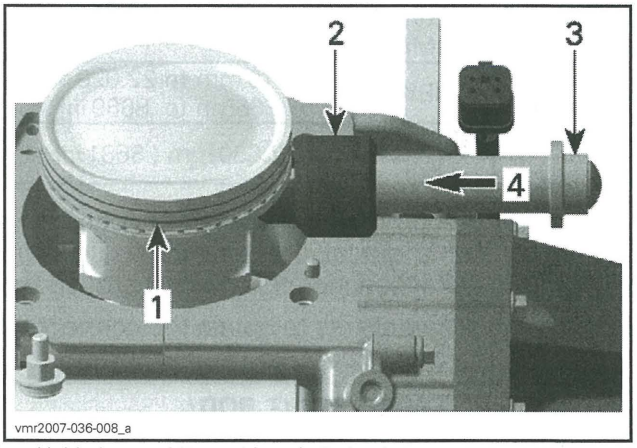

1. *Hold piston while pushing circlip in place*
2. *Sleeve*
3. *Assembly jig*
4. *Direction to push circlip*

NOTE: Take care that the hook of the piston circlip is positioned properly.

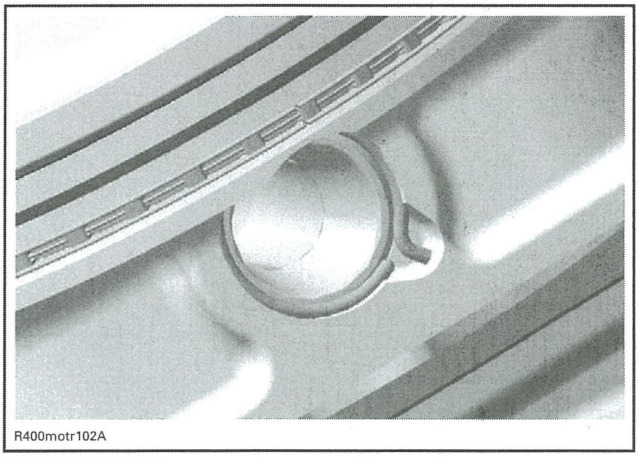
R400motr102A

CORRECT POSITION OF THE PISTON CIRCLIP

PISTON RINGS

Ring Removal

Remove the piston (see *PISTON* in this subsection).

Ring Inspection

Ring/Piston Groove Clearance

Using a feeler gauge measure each ring/piston groove clearance. If the clearance is too large, the piston and the piston rings should be replaced.

RING/PISTON GROOVE CLEARANCE	
UPPER COMPRESSION RING	
NEW	0.03 mm to 0.07 mm (.0012 in to .0028 in)
SERVICE LIMIT	0.150 mm (.0059 in)
LOWER COMPRESSION RING	
NEW	0.02 mm to 0.06 mm (.0008 in to .0024 in)
SERVICE LIMIT	0.150 mm (.0059 in)
OIL SCRAPER RING	
NEW	0.01 mm to 0.18 mm (.0004 in to .0071 in)
SERVICE LIMIT	0.250 mm (.0098 in)

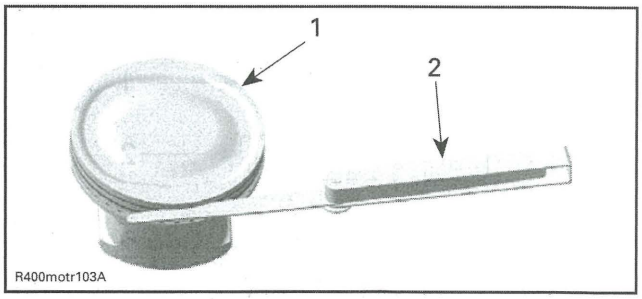

R400motr103A

1. Piston
2. Feeler gauge

Ring End Gap

RING END GAP	
UPPER COMPRESSION RING	
NEW	0.20 mm to 0.40 mm (.008 in to .016 in)
SERVICE LIMIT	0.60 mm (.024 in)
LOWER COMPRESSION RING	
NEW	0.20 mm to 0.40 mm (.008 in to .016 in)
SERVICE LIMIT	0.70 mm (.028 in)
OIL SCRAPER RING	
NEW	0.20 mm to 0.70 mm (.008 in to .028 in)
SERVICE LIMIT	1.00 mm (.039 in)

To measure the ring end gap place the ring in the cylinder in the area of 8 mm to 16 mm (5/16 in to 5/8 in) from top of cylinder.

NOTE: In order to correctly position the ring in the cylinder, use piston as a pusher.

Using a feeler gauge, check ring end gap. Replace ring if gap exceeds specified tolerance.

Ring Installation

For installation, reverse the removal procedure. Pay attention to the following details.

NOTE: First install spring and then rings of oil scraper ring.

NOTE: Use a ring expander to prevent breakage during installation. The oil ring must be installed by hand.

Install the oil scraper ring first, then the lower compression ring with the word "N and TOP " facing up, then the upper compression ring with the word "N and TOP" facing up.

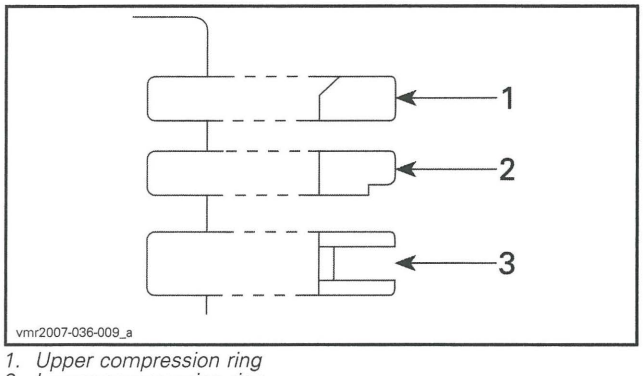

1. Upper compression ring
2. Lower compression ring
3. Oil scraper ring

NOTICE Ensure that top and second rings are not interchanged.

Check that rings rotate smoothly after installation.

Space the piston ring end gaps 120° apart and do not align the gaps with the piston pin bore or the thrust side axis.

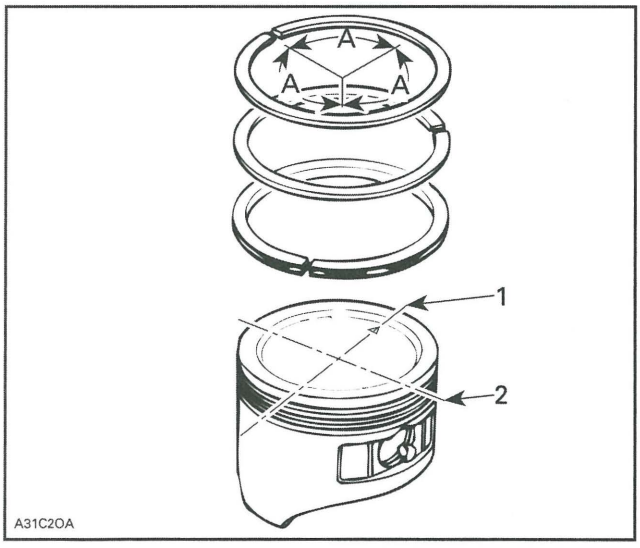

1. DO NOT align ring gap with piston thrust side axis
2. DO NOT align ring gap with piston pin bore axis
A. 120°

TIMING CHAIN

SERVICE TOOLS

Description	Part Number	Page
CAMSHAFT TIMING TOOL	529 036 231	141
CRANKSHAFT TDC POSITION TOOL	529 036 201	141, 145

SERVICE PRODUCTS

Description	Part Number	Page
LOCTITE 243 (BLUE)	293 800 060	142, 147

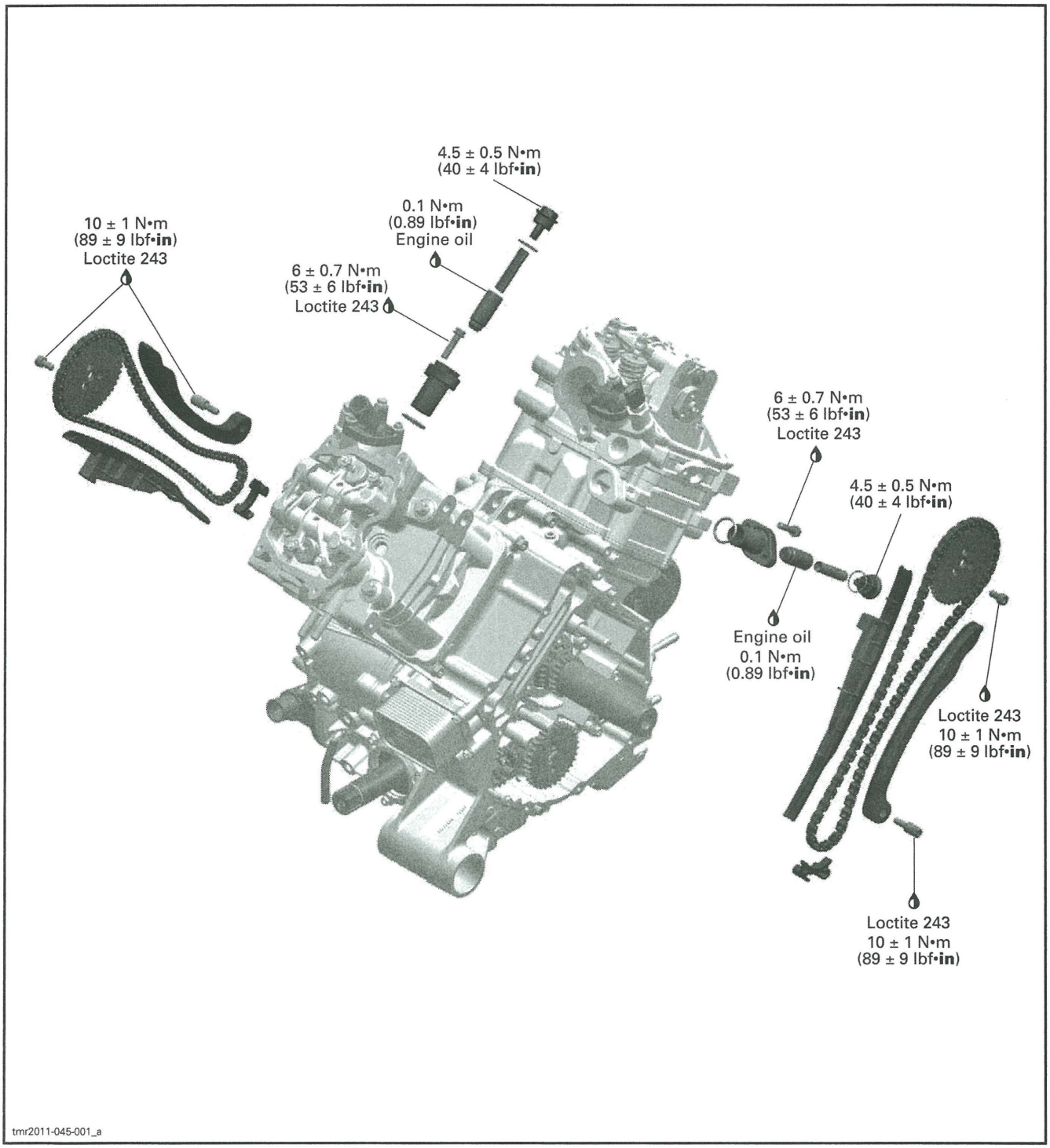
4.5 ± 0.5 N•m
(40 ± 4 lbf•in)
0.1 N•m
(0.89 lbf•in)
Engine oil
10 ± 1 N•m
(89 ± 9 lbf•in)
Loctite 243
6 ± 0.7 N•m
(53 ± 6 lbf•in)
Loctite 243
6 ± 0.7 N•m
(53 ± 6 lbf•in)
Loctite 243
4.5 ± 0.5 N•m
(40 ± 4 lbf•in)
Engine oil
0.1 N•m
(0.89 lbf•in)
Loctite 243
10 ± 1 N•m
(89 ± 9 lbf•in)
Loctite 243
10 ± 1 N•m
(89 ± 9 lbf•in)
tmr2011-045-001_a

TROUBLESHOOTING

UNUSUAL ENGINE NOISE OR VIBRATION

1. IMPROPER VALVE CLEARANCE ADJUSTMENT AND/OR WORN OUT ROCKER ARM(S)
   - *Readjust valve clearance and/or replace defective part(s), refer to TOP END subsection.*
2. DEFECTIVE CHAIN TENSIONER
   - *Replace chain tensioner.*
3. WORN OUT TIMING CHAIN GUIDE(S)
   - *Replace timing chain guide(s).*
4. STRETCHED TIMING CHAIN OR WORN OUT TIMING GEARS
   - *Replace timing chain and timing gears.*
5. LOOSE TIMING GEAR RETAINING SCREWS
   - *Retighten screws to recommended torque.*
6. INCORRECT CAMSHAFT TIMING
   - *Replace damaged components and readjust camshaft timing.*

ENGINE LACKS ACCELERATION OR POWER

1. INCORRECT CAMSHAFT TIMING
   - *Replace damaged components and readjust camshaft timing.*

PROCEDURES

TIMING CHAIN TENSIONERS

Timing Chain Tensioner Location

500, 650 and 800R Engine

The timing chain tensioner is located in the cylinder head.

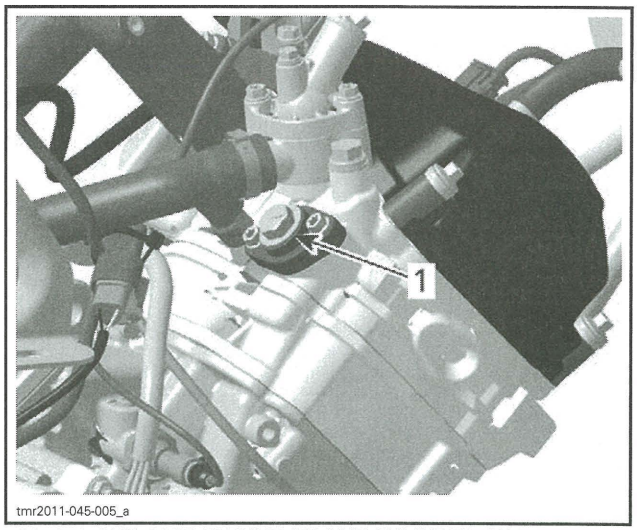

500, 650 AND 800R ENGINE (FRONT CYLINDER SHOWN)
1. Timing chain tensioner

1000 Engine

The timing chain tensioner is located in the cylinder.

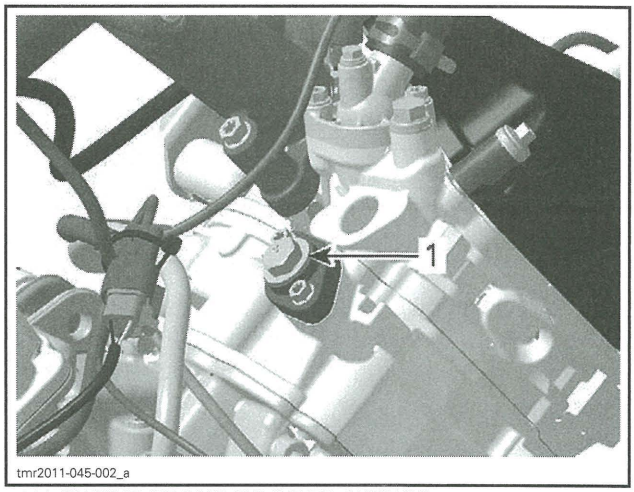

1000 ENGINE (FRONT CYLINDER SHOWN)
1. Timing chain tensioner

Timing Chain Tensioner Removal

1. Make sure the applicable cylinder is set to TDC ignition. Refer to *CAMSHAFT TIMING GEARS* in this subsection.
2. Carefully remove chain tensioner screw plug and release spring tension.

⚠ CAUTION **Tensioner is spring loaded.**

3. Remove:
   - O-ring
   - Spring
   - Chain tensioner plunger.

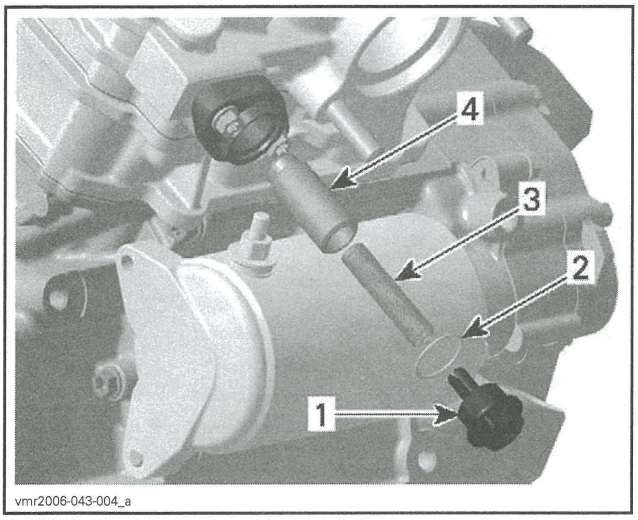

1. *Chain tensioner screw plug*
2. *O-ring*
3. *Spring*
4. *Chain tensioner plunger*

4. Remove:
   - Chain tensioner housing retaining screws
   - Chain tensioner housing
   - O-ring.

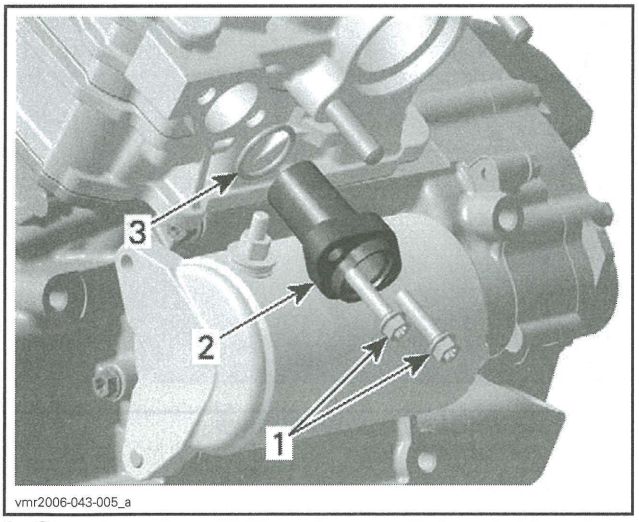

1. *Screws*
2. *Chain tensioner housing*
3. *O-ring*

Timing Chain Tensioner Inspection

Check chain tensioner housing and screw plug for cracks or other damages. Replace if necessary.

Check chain tensioner plunger for freedom of movement and/or scoring.

Ensure O-rings are not brittle, cracked or hard. Replace if necessary.

Check spring condition. Replace if bent, broken or worn.

Timing Chain Tensioner Installation

For installation, reverse the removal procedure. However, pay attention to the following.

NOTE: Before installing the chain tensioner, make sure the camshaft timing gear can be moved back and forth.

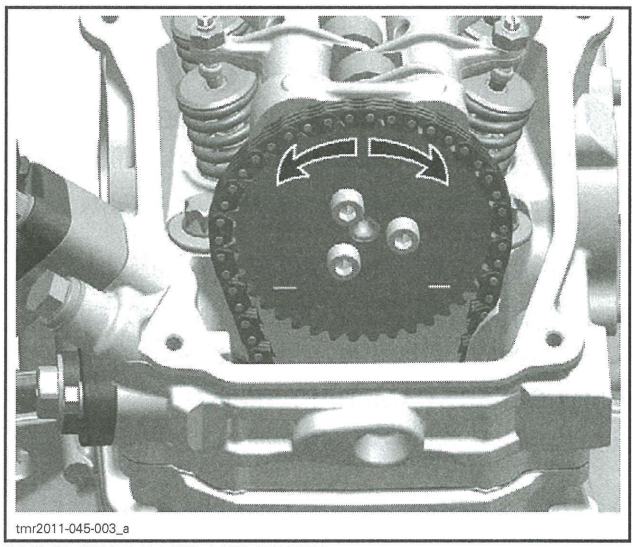

MOVE GEAR BACK AND FORTH

1. Apply engine oil on the chain tensioner plunger before installation.
2. Slightly turn the camshaft timing gear in order to move the timing chain excess play to the tensioner side.
3. Slightly screw in the plunger until the timing chain does not allow back and forth movement of the camshaft timing gear.
4. Screw the plunger in an additional 1/8 turn to obtain the required specified torque.

TIMING CHAIN TENSIONER ADJUSTMENT (TIGHTENING TORQUE)
0.1 N•m (.9 lbf•**in**)

NOTICE Improper adjustment of the timing chain will lead to severe engine damage.

5. Insert the spring on one side into the slot of the chain tensioner screw plug, and on the other side, into the plunger.

NOTE: Turn spring only clockwise in order to fit the spring end into the notch of the plunger to avoid loosening the plunger during spring installation. Do not preload the spring.

NOTE: Do not forget to place the O-ring on chain tensioner screw plug.

6. Then compress the spring and screw the plug in.

NOTE: To avoid overstressing the timing chain, the chain tensioner screw plug must engage in the tensioner bore threads within the first full turn.

7. Remove locking tool and install all other removed parts.
8. Tighten the chain tensioner screw plug.

CAMSHAFT TIMING GEARS

Camshaft Timing Gear Removal

1. Remove valve cover, refer to *TOP END* subsection.
2. Set applicable piston to TDC ignition and lock magneto flywheel. Refer to *CAMSHAFT TIMING* in this subsection.
3. Remove timing chain tensioner. Refer to *TIMING CHAIN TENSIONERS* in this subsection.
4. Remove camshaft timing gear retaining screws.

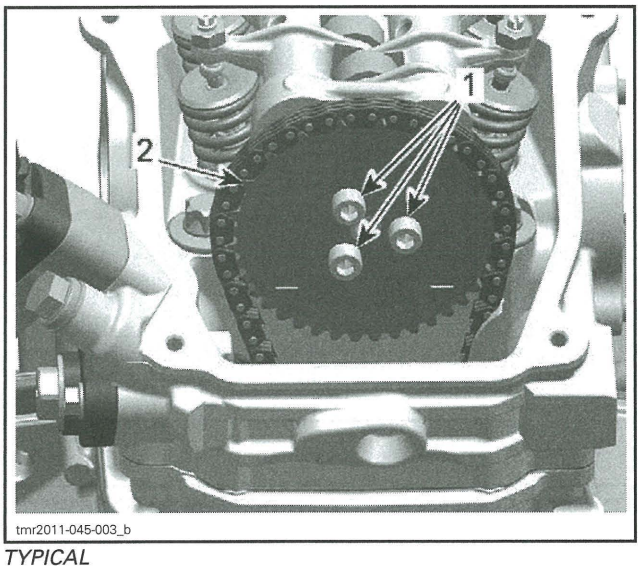

TYPICAL
1. *Camshaft timing gear retaining screws*
2. *Camshaft timing gear*

5. Remove the camshaft timing gear.

NOTE: Secure timing chain with a piece of wire.

Camshaft Timing Gear Inspection

Check camshaft timing gear for wear or deterioration.

If timing gear is worn or damaged, replace it as a set with the timing chain.

For crankshaft gear inspection, refer to *CRANKSHAFT* in the *BOTTOM END* subsection.

Camshaft Timing Gear Installation

For installation, reverse the removal procedure. Pay attention to the following details.

1. Clean camshaft mating surface and threads prior to installing camshaft timing gear.

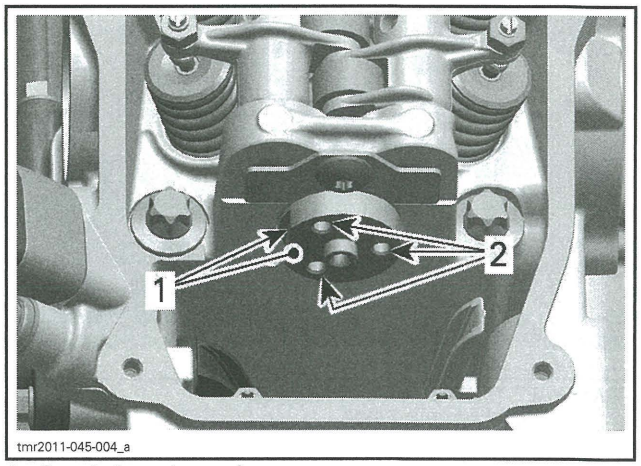

1. *Camshaft mating surface*
2. *Camshaft screw threads*

2. Set applicable piston to TDC ignition position and install the crankshaft position tool, refer to *CAMSHAFT TIMING* in this subsection.

REQUIRED TOOL	
CRANKSHAFT TDC POSITION TOOL (P/N 529 036 201)	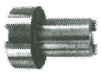

3. Install camshaft timing tool on the cylinder head.

REQUIRED TOOL	
CAMSHAFT TIMING TOOL (P/N 529 036 231)	

NOTE: Properly align tube of camshaft timing tool with machined radius on cylinder head.

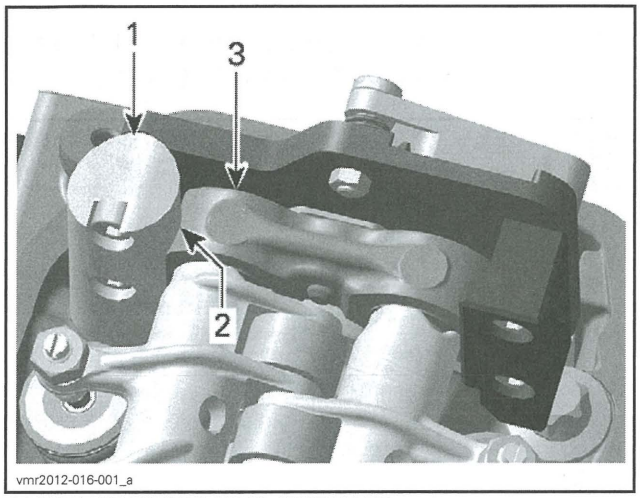

CAMSHAFT TIMING TOOL INSTALLED
1. *Tube (camshaft timing tool)*
2. *Machined radius (camshaft timing tool)*
3. *Cylinder head*

4. Set camshaft to TDC ignition position by aligning the flat portion on the camshaft flange with the tool lever.

NOTE: In addition, to ensure proper camshaft timing, press camshaft timing tool lever downwards.

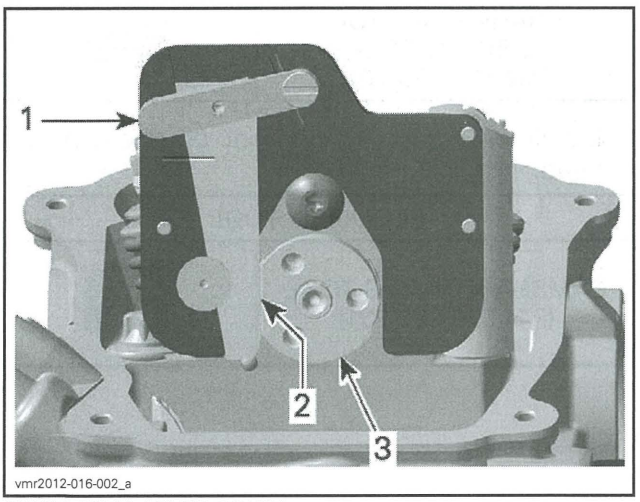

PRESS TOOL LEVER DOWN
1. *Lever*
2. *Flat portion*
3. *Camshaft*

NOTICE **Crankshaft and camshaft must be locked at TDC ignition position to place camshaft timing gear and timing chain in the proper position.**

5. Place camshaft timing gear and timing chain on the camshaft.

NOTE: The printed marks on the camshaft timing gear must be parallel to the cylinder head base.

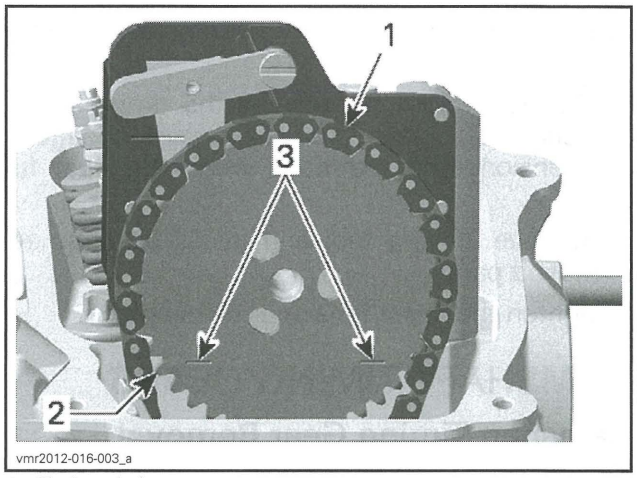

1. *Timing chain*
2. *Camshaft timing gear*
3. *Printed marks on camshaft timing gear*

6. Install and adjust timing chain tensioner, refer to *TIMING CHAIN TENSIONER* in this subsection.
7. Install and tighten camshaft timing gear retaining screws to specified torque.

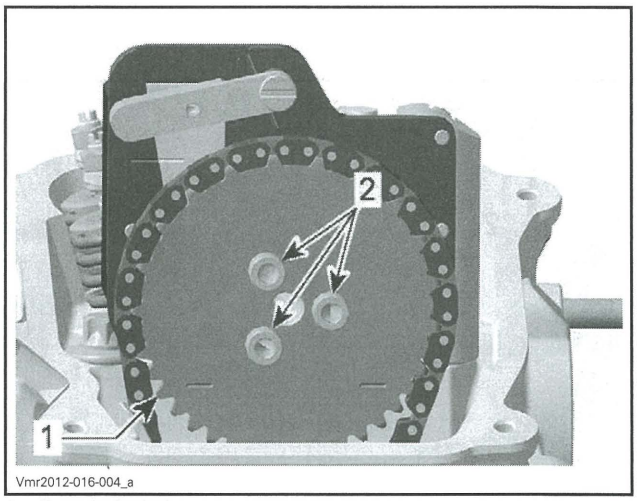

1. *Camshaft timing gear*
2. *Timing gear retaining screws*

CAMSHAFT TIMING GEAR RETAINING SCREWS	
Service product	LOCTITE 243 (BLUE) (P/N 293 800 060)
Tightening torque	10 N•m ± 1 N•m (89 lbf•**in** ± 9 lbf•**in**)

8. Remove the camshaft timing tool.

Camshaft Timing

NOTE: If a piston (cylinder 1 or 2) is set to TDC ignition, the camshaft timing gear of the opposite cylinder must be in the following position.

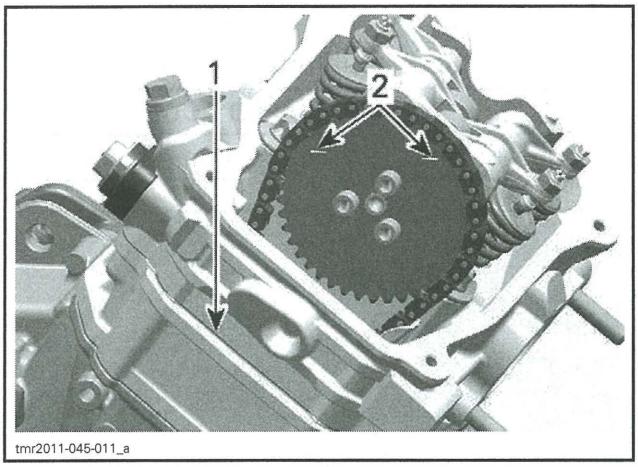

TYPICAL
1. *Cylinder head base*
2. *Marks on timing gear of the opposite cylinder*

Camshaft Timing Piston No. 2 (rear)

1. Remove spark plugs of both cylinders.
2. Remove valve covers of both cylinders.
3. Remove the screw plug and O-ring from magneto cover.

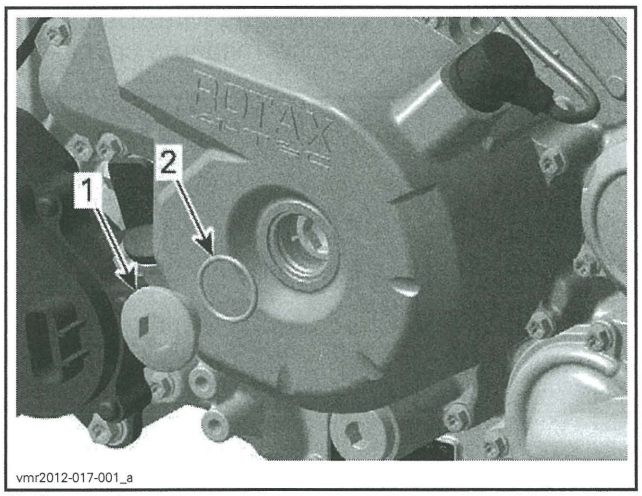

1. *Screw plug*
2. *O-ring*

4. Remove the crankshaft position sensor (CPS).

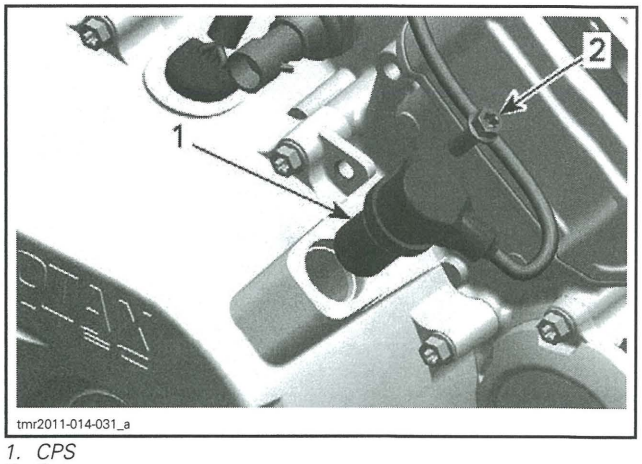

1. *CPS*
2. *Screw*

5. Set rear piston no. 2 to **TDC ignition** by turning the crankshaft clockwise.

REQUIRED TOOL
Allen key 14 mm

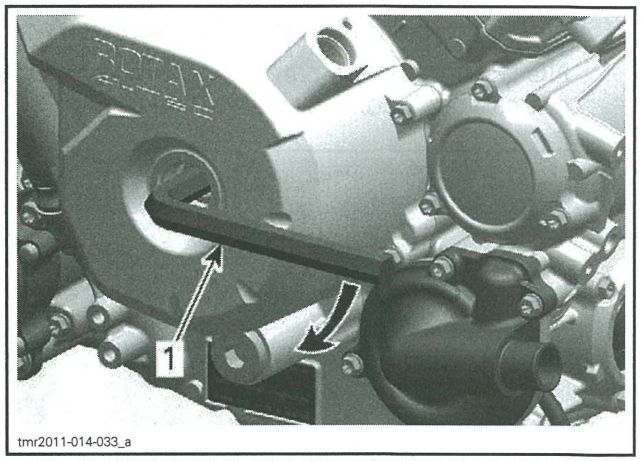

TURN CRANKSHAFT CLOCKWISE TO PISTON NO. 2 TDC
1. *Allen key 14 mm*

5.1 The rear piston is at TDC when it's index mark on the magneto flywheel is aligned with the notch in the magneto cover.

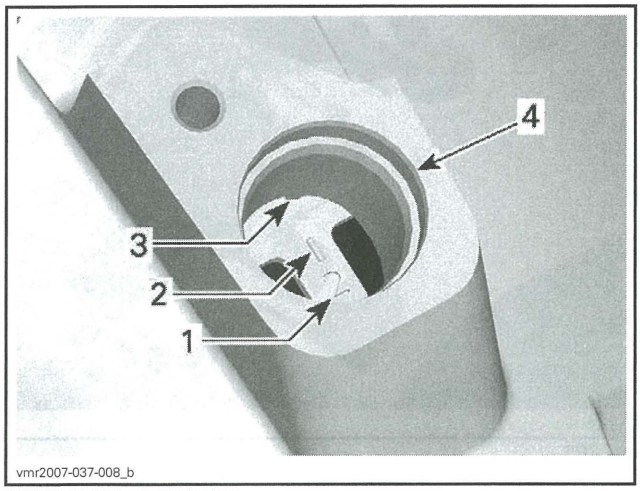

PISTON NO. 2 AT TDC
1. *Piston no. 2 identifier*
2. *Index mark on magneto flywheel*
3. *Notch on magneto cover*
4. *CPS bore in magneto cover*

5.2 Confirm printed marks on the camshaft timing gear are parallel with cylinder head base, in the lowest position. In this position the piston is set to **TDC ignition**.

NOTE: If marks on camshaft timing gear are not as specified, turn crankshaft 360°.

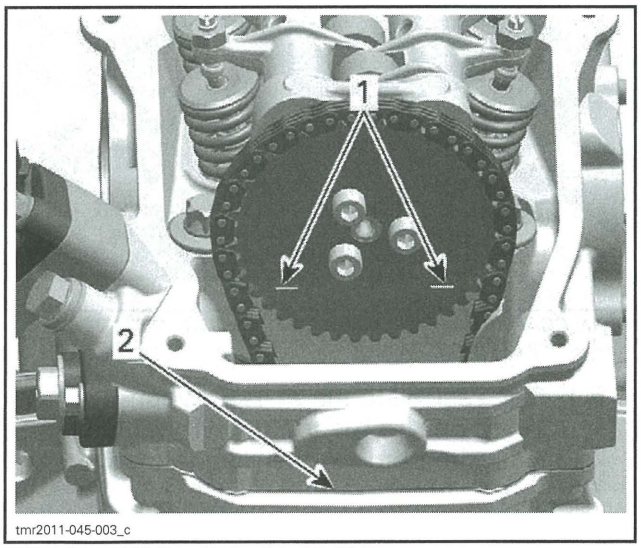

TYPICAL - PISTON AT TDC IGNITION
1. *Printed marks on camshaft timing gear*
2. *Cylinder head base*

6. Install the crankshaft TDC position tool to lock crankshaft in position. Refer to *CRANKSHAFT TDC POSITION TOOL* in this subsection.

Camshaft Timing Piston No. 1 (front)

1. Set rear piston no. 2 to **TDC ignition**, see *CAMSHAFT TIMING PISTON NO. 2 (REAR)* in this subsection.
2. Remove crankshaft TDC position tool.
3. To set front piston no. 1 to **TDC ignition** turn crankshaft 280° **counterclockwise**.

REQUIRED TOOL
Allen key 14 mm

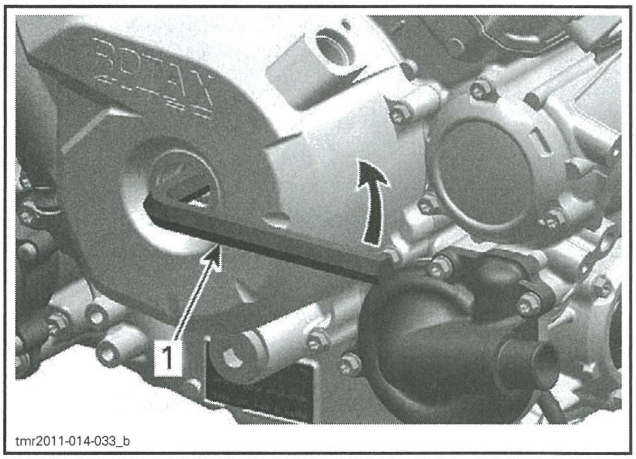

TURN COUNTERCLOCKWISE 280° TO NUMBER 1 PISTON TDC
1. *Allen key 14 mm*

3.1 The front piston is at TDC when it's index mark on the magneto flywheel is aligned with the notch in the magneto cover.

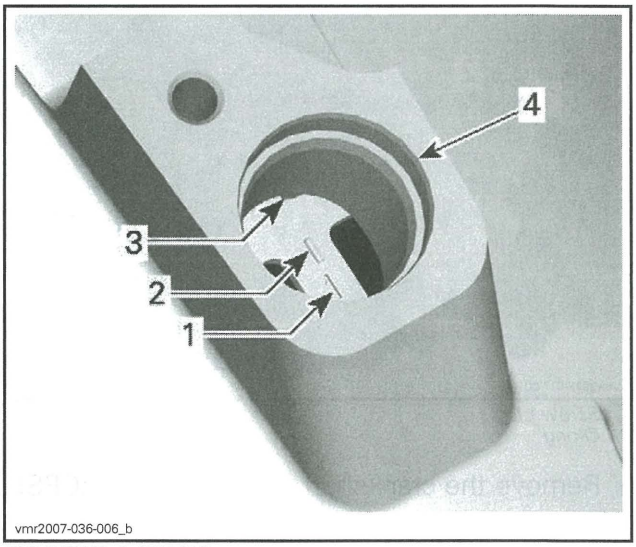

CYLINDER 1 AT TDC
1. *Number 1 piston identifier*
2. *Index mark "1" on magneto flywheel*
3. *Notch on magneto cover*
4. *Crankshaft position sensor bore*

3.2 Confirm printed marks on the camshaft timing gear are parallel with cylinder head base, in the lowest position. In this position the piston is set to **TDC ignition**.

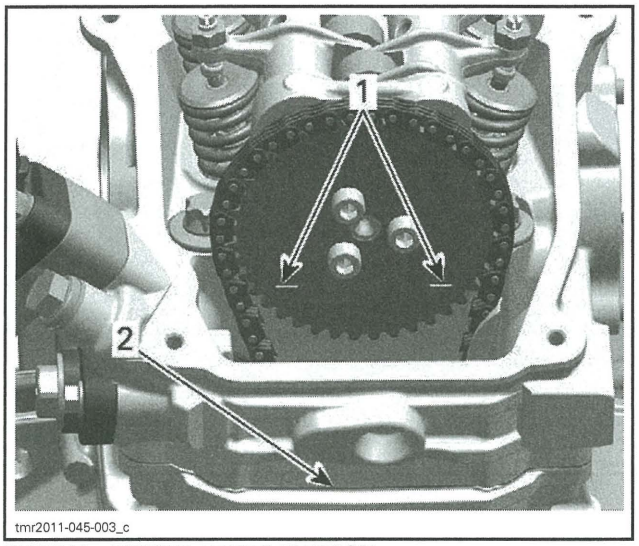

TYPICAL - PISTON AT TDC IGNITION
1. *Printed marks on camshaft timing gear*
2. *Cylinder head base*

4. Insert the crankshaft TDC position tool to lock crankshaft in position. Refer to *CRANKSHAFT TDC POSITION TOOL INSTALLATION* in this subsection.

Crankshaft TDC Position Tool Installation

Install tool in magneto cover CPS bore.

REQUIRED TOOL	
CRANKSHAFT TDC POSITION TOOL (P/N 529 036 201)	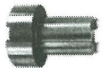

NOTE: Make sure to match the teeth on the crankshaft TDC position tool with the magneto rotor.

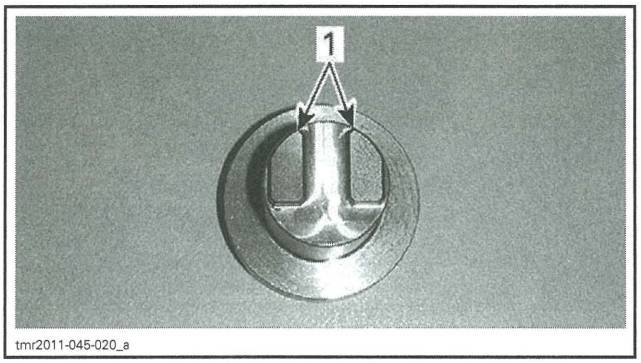

1. *Crankshaft TDC position tool teeth (end view)*

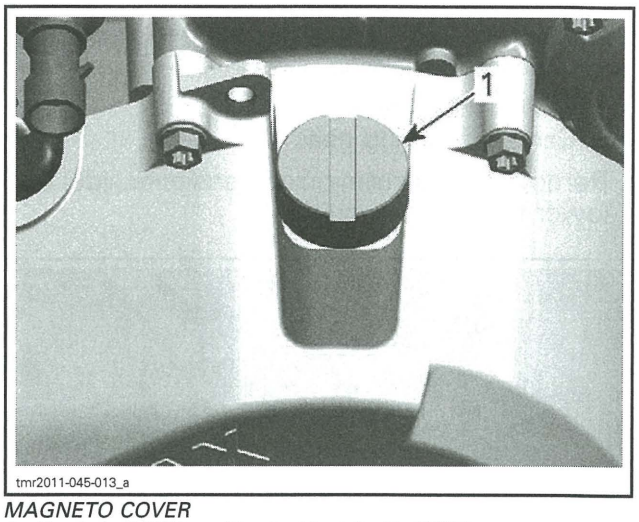

MAGNETO COVER
1. *Crankshaft TDC position tool installed in CPS bore*

NOTICE **Tool must be fully inserted.**

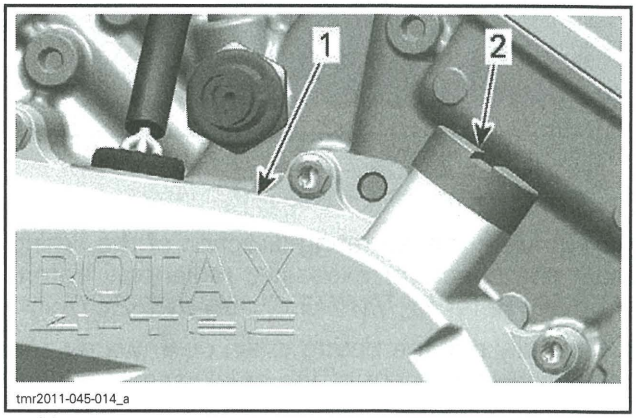

1. *Magneto cover*
2. *TDC position tool*

TIMING CHAIN

Timing Chain Location

The engine is equipped with two timing chains.
- MAG side timing chain is located behind the magneto cover.
- PTO side timing chain is located behind the PTO cover.

Timing Chain Removal (MAG Side)

1. Refer to *MAGNETO SYSTEM* subsection and remove following parts:
   - Magneto cover
   - Rotor
   - Sprag clutch gear.
2. Refer to *TOP END* subsection and remove the following part:
   - Valve cover.

3. Refer to following procedures in this subsection and remove following parts:
   - Chain tensioner
   - Camshaft timing gear.
4. Remove timing chain guide (tensioner side) and lower timing chain guide.

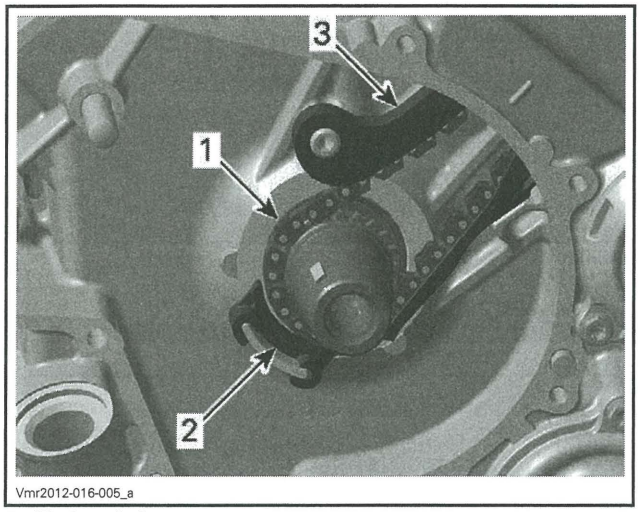

1. Timing chain
2. Lower timing chain guide
3. Timing chain guide (tensioner side)

NOTE: Mark the operating direction of the timing chain and check for excessive radial play before removal. Refer to *TIMING CHAIN INSPECTION*.

5. Carefully pull the timing chain downwards and sideways, then out of the crankcase.

Timing Chain Removal (PTO Side)

1. Refer to *BOTTOM END* subsection and remove following parts:
   - PTO cover
   - Breather gear
   - Intermediate gear.
2. Refer to *TOP END* subsection and remove following part:
   - Valve cover.
3. Refer to applicable procedures in this subsection and remove following parts:
   - Chain tensioner
   - Camshaft timing gear.
4. Remove timing chain guide (tensioner side) and lower timing chain guide.

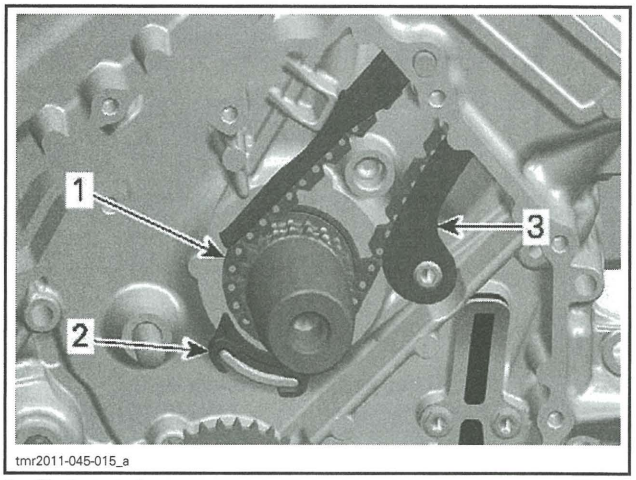

1. Timing chain
2. Lower timing chain guide
3. Timing chain guide (tensioner side)

NOTE: Mark the operating direction of the timing chain and check for excessive radial play before removal. Refer to *TIMING CHAIN INSPECTION*.

5. Carefully pull the timing chain sideward and down from the crankcase.

Timing Chain Inspection

Inspection is the same for both timing chains.

Check timing chain on camshaft timing gear for excessive radial play.

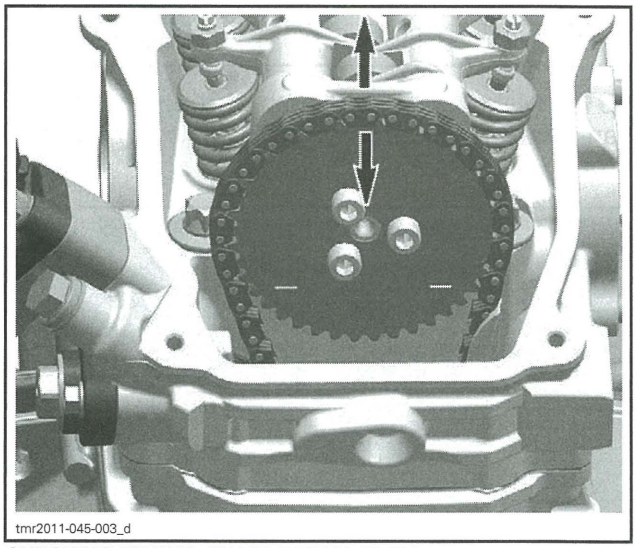

CHECKING TIMING CHAIN RADIAL PLAY

Check chain condition for wear and teeth condition.

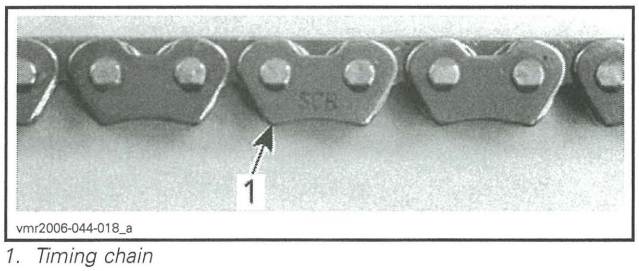

1. Timing chain

If chain is excessively worn or damaged, replace it as a set (camshaft timing gear and timing chain).

Check timing chain guides for wear, cracks or deformation. Replace as required.

NOTE: Check also the timing chain guide (tensioner side).

Timing Chain Installation

The installation is essentially the reverse of the removal procedure however, pay attention to the following details.

NOTE: Installation is the same for both timing chains.

Install timing chain with camshaft timing gear.

NOTE: Ensure to carry out proper valve timing, refer to *CAMSHAFT TIMING GEARS* in this subsection.

NOTICE **Improper valve timing will damage engine components.**

TIMING CHAIN GUIDE (TENSIONER SIDE)

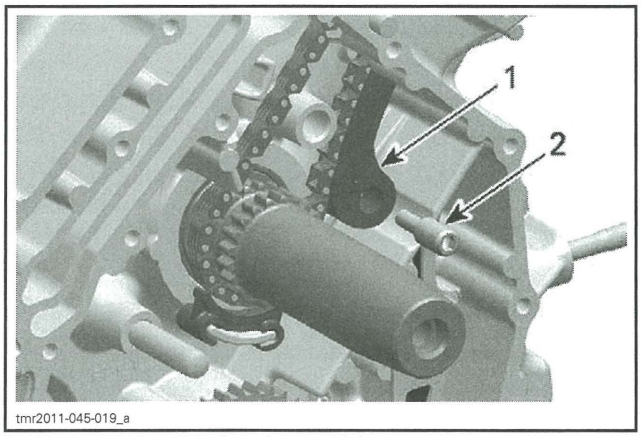

1. Timing chain guide (tensioner side)
2. Bearing screw

Timing Chain Guide Removal (Tensioner Side)

Refer to *TIMING CHAIN* in this subsection.

Timing Chain Guide Inspection (Tensioner Side)

Check timing chain guide for wear, cracks or deformation. Replace if necessary.

Timing Chain Guide Installation (Tensioner Side)

The installation is the reverse of the removal procedure.

TIMING CHAIN GUIDE BEARING SCREW	
Service product	LOCTITE 243 (BLUE) (P/N 293 800 060)
Tightening torque	10 N•m ± 1 N•m (89 lbf•**in** ± 9 lbf•**in**)

BOTTOM END

SERVICE TOOLS

Description	Part Number	Page
CRANKCASE SUPPORT MAG/PTO	529 036 031	163
CRANKSHAFT LOCKING BOLT	529 035 617	166
DRIVE SHAFT OIL SEAL INSTALLER	529 036 028	155–156
DRIVE SHAFT OIL SEAL PROTECTOR	529 036 029	154
PLAIN BEARING REMOVER/INSTALLER	529 035 917	163
PLAIN BEARING REMOVER/INSTALLER	529 036 032	158
PTO COVER OIL SEAL INSTALLER	529 036 033	157

SERVICE PRODUCTS

Description	Part Number	Page
LOCTITE 243 (BLUE)	293 800 060	155
LOCTITE 5910	293 800 081	154
LOCTITE CHISEL (GASKET REMOVER)	413 708 500	154

ENGINE DRIVE SHAFT

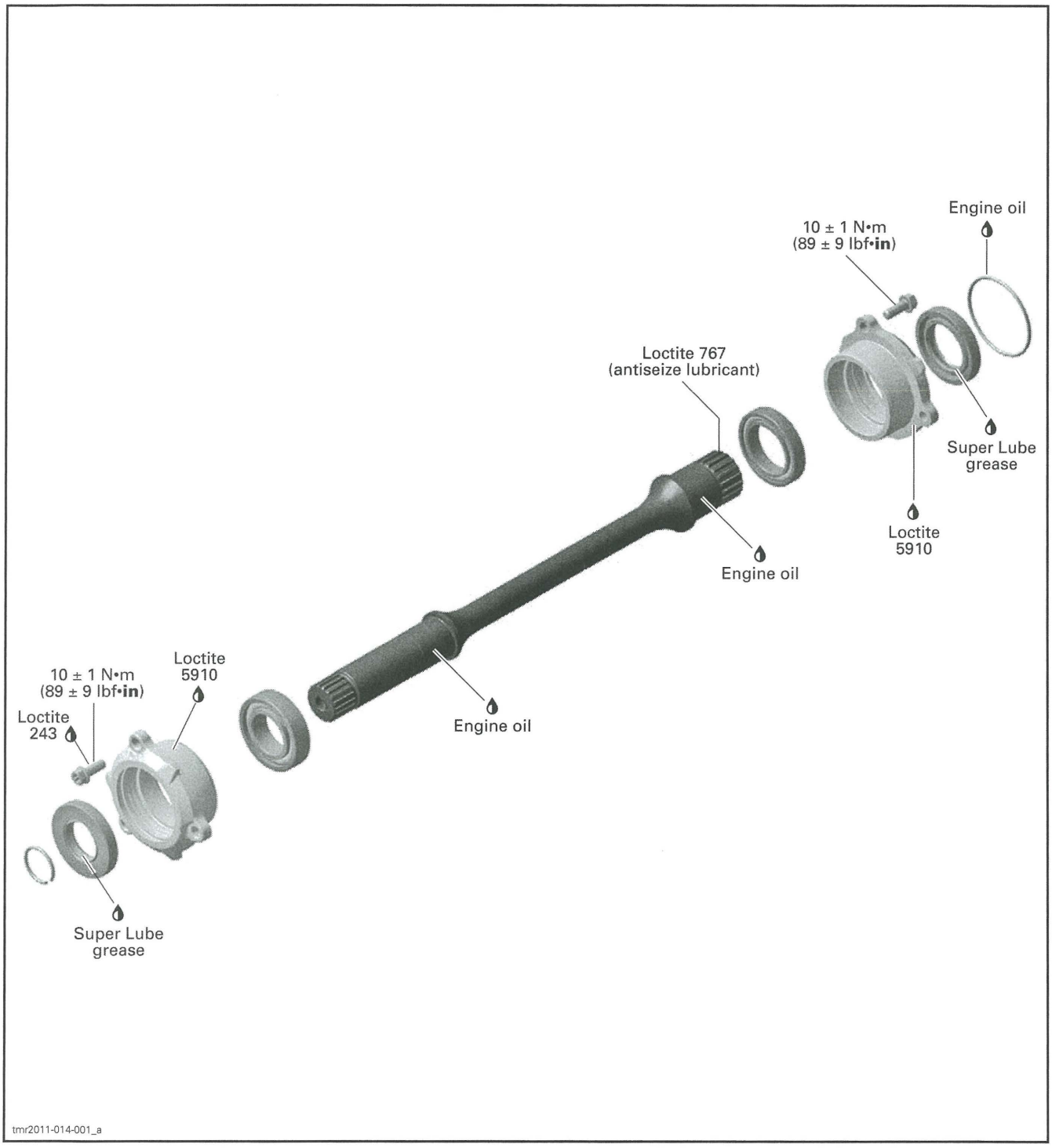

CRANKCASE AND PTO COVER

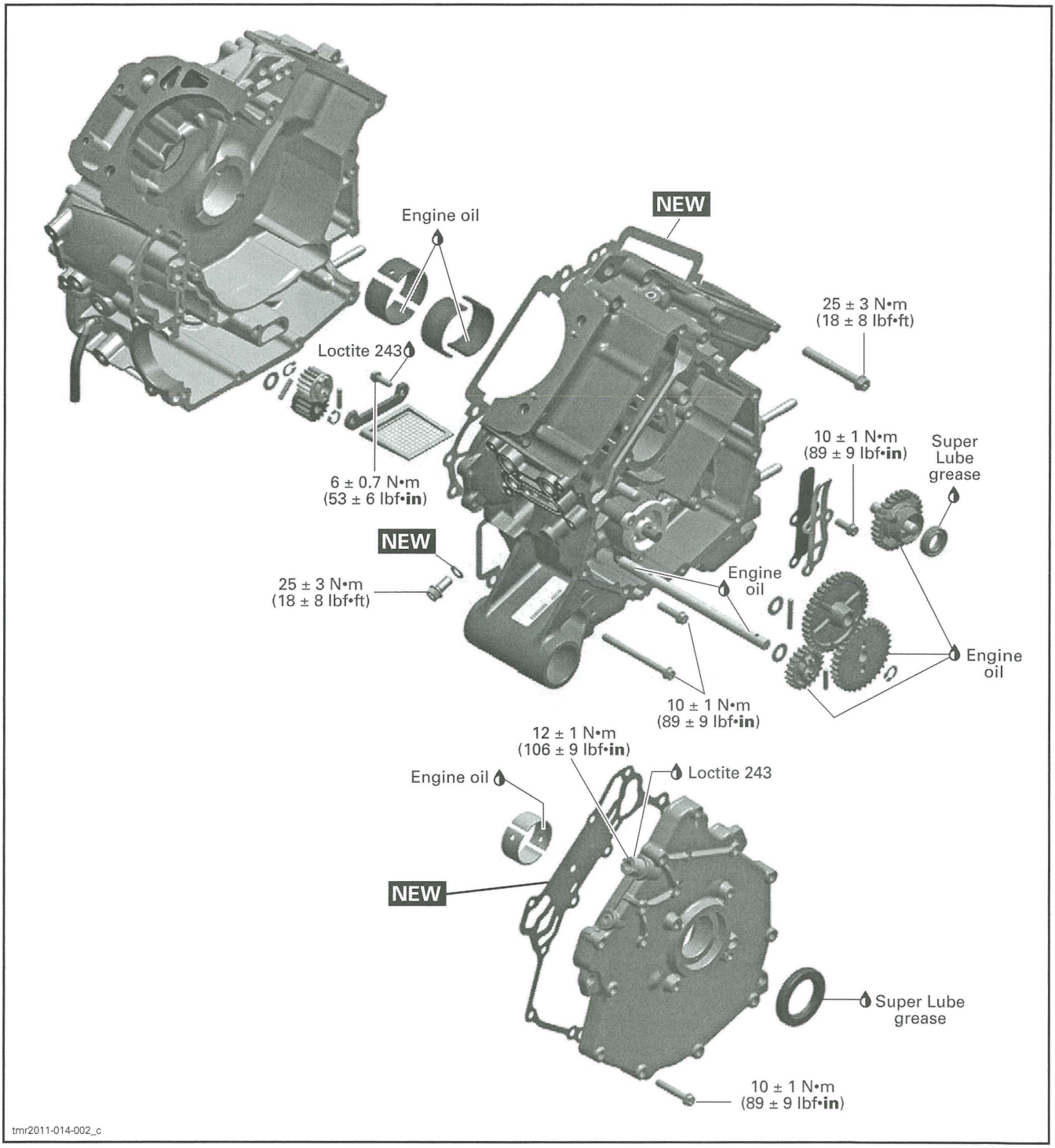

CRANKSHAFT

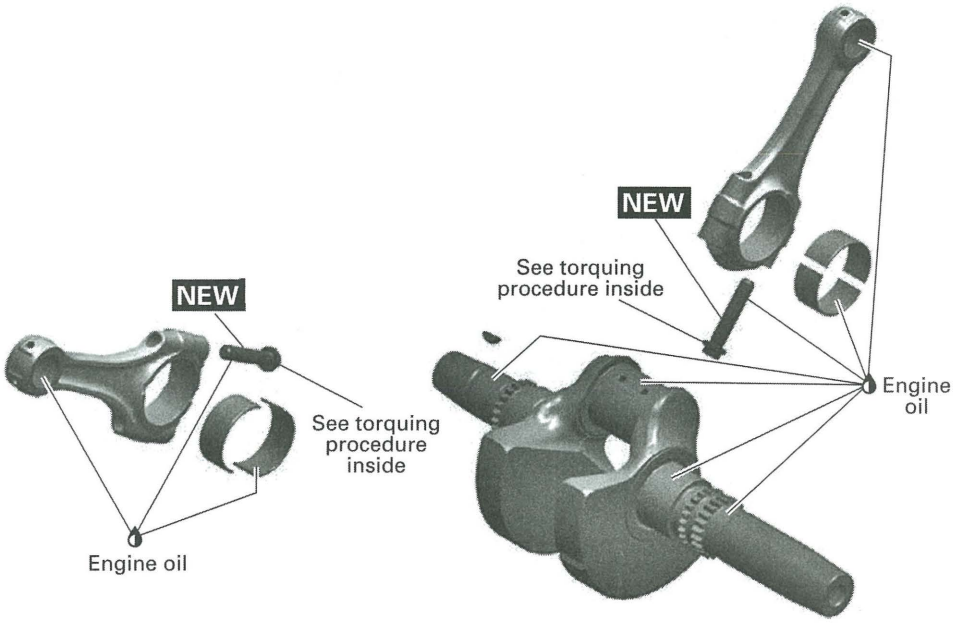

vmr2013-018-001_a

PROCEDURES

IMPORTANT: Note position of parts on disassembly. This may help to find the root cause of a problem. A component that is not replaced should be reinstalled in the same position as originally mounted.

ENGINE DRIVE SHAFT

NOTE: The engine drive shaft transmits the power from the gearbox to the front differential and is located inside the crankcase.

Engine Drive Shaft Removal

Remove the engine. Refer to *ENGINE REMOVAL AND INSTALLATION* subsection.

Rear Bearing Cover Removal

Detach gearbox from engine, refer to *GEARBOX AND 4X4 COUPLING UNIT* subsection.

At rear of engine, remove the bearing cover and its O-ring.

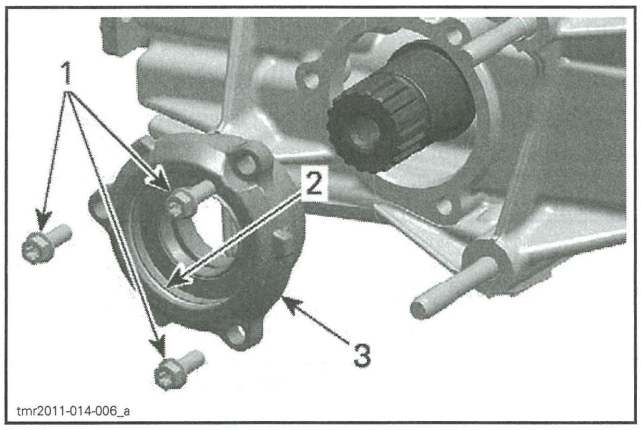

1. *Bearing cover screws*
2. *O-ring*
3. *Bearing cover gearbox side*

Front Bearing Cover Removal

Remove the bearing cover at the front of the engine.

NOTICE **Check ends of the circlip for sharp edges or burrs before removing the drive shaft, to avoid damaging the oil seal.**

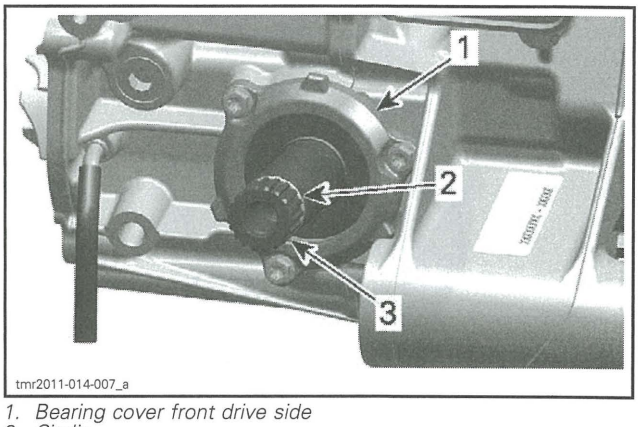

1. *Bearing cover front drive side*
2. *Circlip*
3. *Drive shaft*

Engine Drive Shaft Removal

Split crankcase, refer to *CRANKCASE* in this subsection.

Remove engine drive shaft from the crankcase.

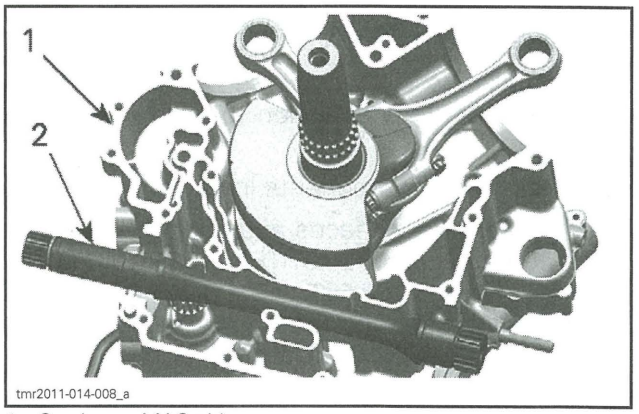

1. *Crankcase MAG side*
2. *Engine drive shaft*

Engine Drive Shaft Inspection

Replace oil seals and/or O-ring (bearing cover gearbox side) if they are brittle, hard or damaged.

Check drive shaft bearings for contamination and/or metal shavings. Check if bearings turn freely and smoothly. Replace if necessary.

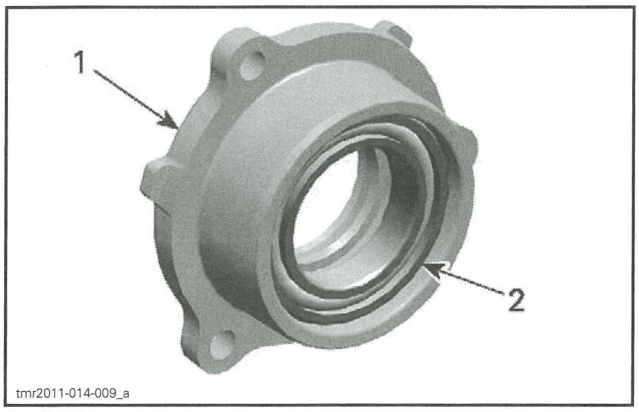

1. Bearing cover
2. Drive shaft bearing

Check drive shaft for cracks, bend, pitting or other visible damages.

Check drive shaft splines for wear or damages.

Check oil seal running surface of the drive shaft for scratches. Replace if necessary.

Engine Drive Shaft Installation

The installation is the reverse of removal procedure however, pay attention to the following details.

Clean all metal components in solvent.

Clean crankcase surfaces and bearing covers using a combination of LOCTITE CHISEL (GASKET REMOVER) (P/N 413 708 500) and a brass brush. First brush in one direction then make the final brushing perpendicularly (90°) to the first pass.

NOTICE **Do not wipe with rags. Use a new clean hand towel only.**

Use a suitable installer for installing bearings.

Use LOCTITE 5910 (P/N 293 800 081) on mating surfaces.

IMPORTANT: When beginning the application of the bearing cover sealant, the assembly and the first torquing should be done within 10 minutes. It is suggested to have all you need on hand to save time.

Use a plexiglass plate and apply some sealant on it. Use a soft rubber roller 50 mm - 75 mm (2 in - 3 in), available in arts products suppliers for printing, and roll the sealant to get a thin uniform coat on the plate (spread as necessary). When ready, apply the sealant on bearing cover surfaces.

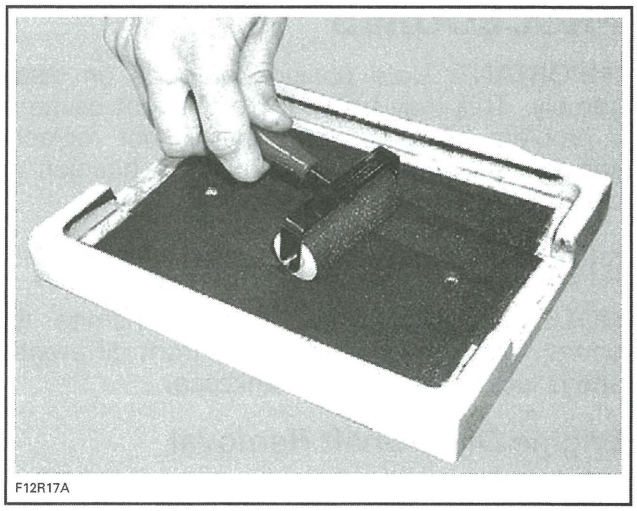

Do not apply in excess as it will spread out inside crankcase.

NOTE: It is recommended to apply this specific sealant as described here to get a uniform application without lumps. If you do not use the roller method, you may use your finger to uniformly distribute the sealant (using a finger will not affect the adhesion).

Rear Bearing Cover Installation

For bearing cover installation on gearbox side, protect the oil seal to avoid damaging the sealing lip.

REQUIRED TOOL	
DRIVE SHAFT OIL SEAL PROTECTOR (P/N 529 036 029)	

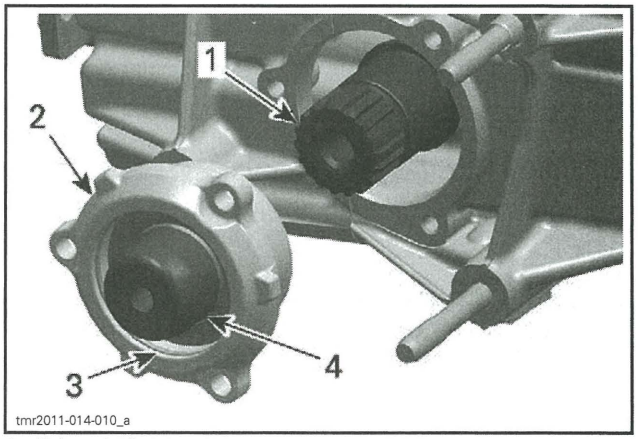

1. Drive shaft
2. Bearing cover gearbox side
3. O-ring
4. Protection sleeve

REAR BEARING COVER SCREWS	
Tightening torque	10 N•m ± 1 N•m (89 lbf•**in** ± 9 lbf•**in**)

Front Bearing Cover Installation

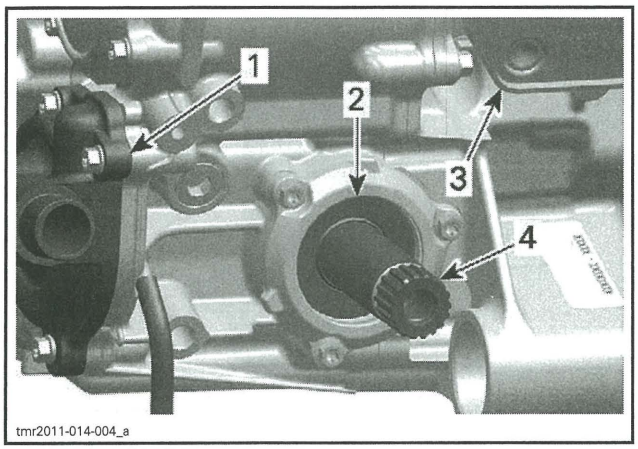

FRONT OF ENGINE
1. *Water pump cover*
2. *Oil seal front side*
3. *Oil cooler*
4. *Drive shaft*

FRONT BEARING COVER SCREWS	
Service product	LOCTITE 243 (BLUE) (P/N 293 800 060)
Tightening torque	10 N•m ± 1 N•m (89 lbf•**in** ± 9 lbf•**in**)

Engine Drive Shaft Installation

Finally check for axial play of the drive shaft.

FRONT OIL SEAL (ENGINE DRIVE SHAFT)

Front Oil Seal Replacement (Engine Drive Shaft)

NOTE: The front oil seal can be replaced with the engine installed.

1. Remove front propeller shaft.
2. Remove adapter sleeve between propeller shaft and front engine drive shaft.
3. Remove the front bearing cover, refer to *ENGINE DRIVE SHAFT REMOVAL/INSTALLATION* in this subsection.
4. Remove drive shaft seal from bearing cover.

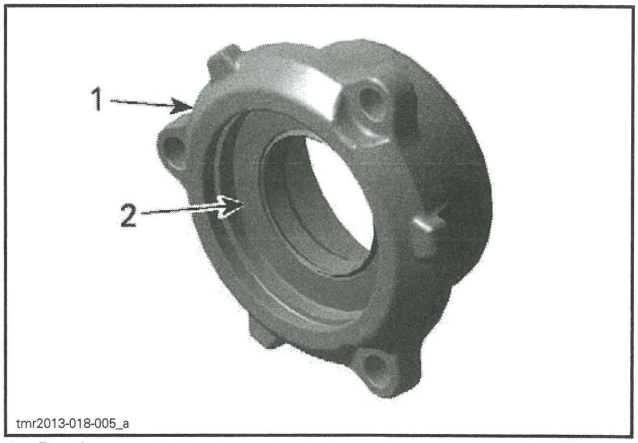

1. *Bearing cover*
2. *Oil seal*

5. Install drive shaft oil seal using the following tool.

REQUIRED TOOL	
DRIVE SHAFT OIL SEAL INSTALLER (P/N 529 036 028)	

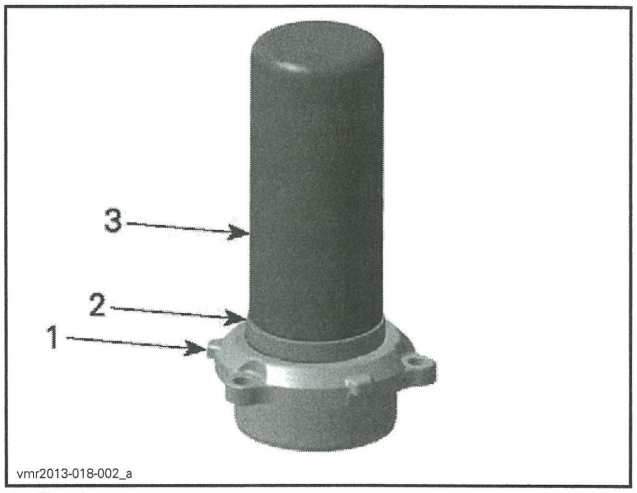

1. *Bearing cover*
2. *Oil seal*
3. *Oil seal installer*

6. Reinstall remaining parts in the reverse order of removal.

REAR OIL SEAL (ENGINE DRIVE SHAFT)

Rear Oil Seal Replacement (Engine Drive Shaft)

1. Remove gearbox from the engine, refer to *GEARBOX AND 4X4 COUPLING UNIT (500/650/800R)* or *GEARBOX AND 4X4 COUPLING UNIT (1000)* subsection.

2. Remove rear bearing cover, refer to *ENGINE DRIVE SHAFT REMOVAL/INSTALLATION* in this subsection.
3. Remove O-ring from bearing cover.

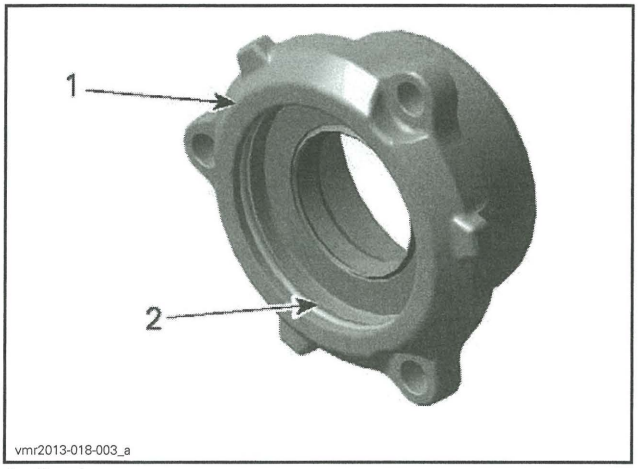

1. Bearing cover
2. O-ring

4. Remove drive shaft seal from bearing cover.

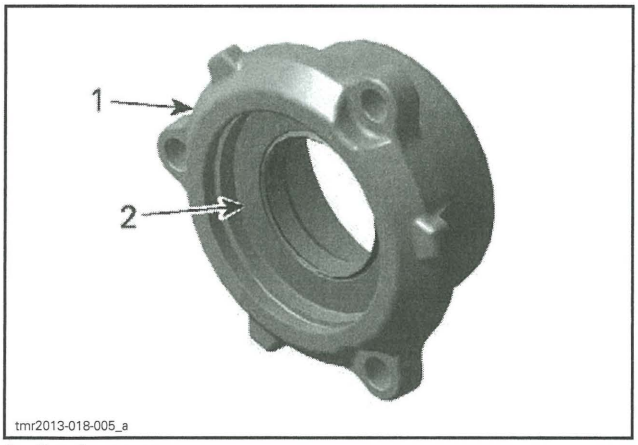

1. Bearing cover
2. Oil seal

5. Install drive shaft oil seal using the following tool.

REQUIRED TOOL	
DRIVE SHAFT OIL SEAL INSTALLER (P/N 529 036 028)	

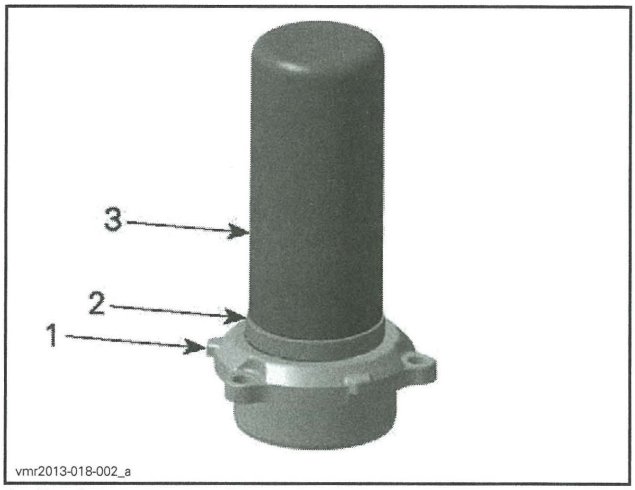

1. Bearing cover
2. Oil seal
3. Oil seal installer

6. Install O-ring in rear bearing cover.

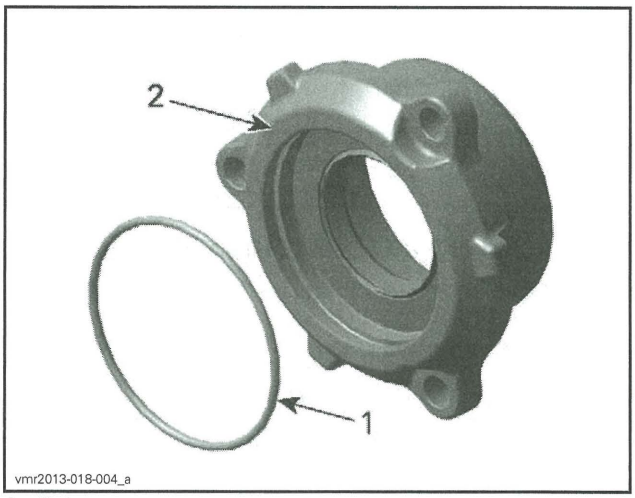

1. O-ring
2. Bearing cover

7. Reinstall remaining parts in the reverse order of removal.

PTO COVER OIL SEAL

NOTE: To replace oil seal it is not necessary to remove engine from vehicle.

PTO Oil Seal Removal

1. Refer to *CONTINUOUSLY VARIABLE TRANSMISSION (CVT)* subsection and remove the following parts:
   - CVT cover
   - Drive pulley
   - Driven pulley
   - CVT air guide.
2. Remove oil seal using a small flat screwdriver.

NOTICE Avoid scoring surfaces with tool.

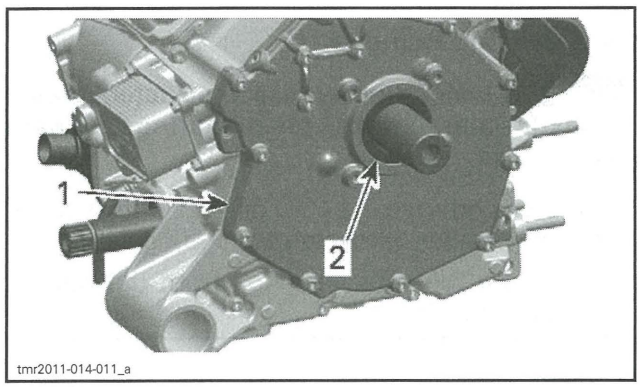

1. *PTO cover*
2. *Oil seal*

PTO Oil Seal Inspection

Check oil seal running surface of crankshaft PTO side for grooves. Replace if necessary.

PTO Oil Seal Installation

The installation is the reverse of the removal procedure however, pay attention to the following details.

NOTICE **Oil seal must be installed with sealing lip toward the engine.**

Push oil seal in place using the following tool.

REQUIRED TOOL	
PTO COVER OIL SEAL INSTALLER (P/N 529 036 033)	

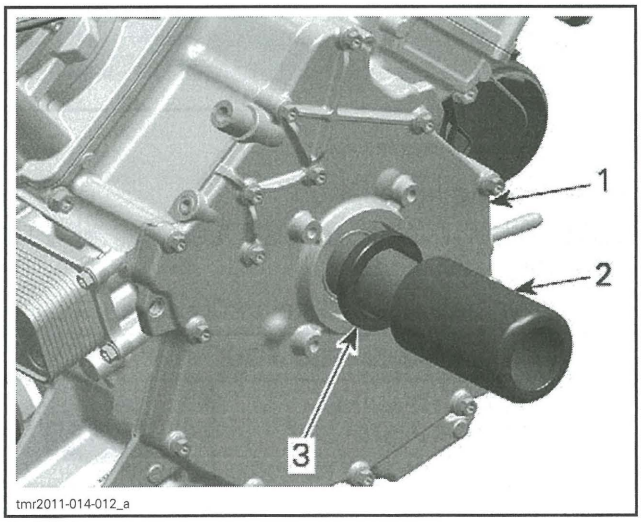

1. *PTO cover*
2. *Oil seal installer*
3. *Oil seal*

PTO COVER

PTO Cover Removal

1. Refer to *CONTINUOUSLY VARIABLE TRANSMISSION (CVT)* subsection to remove the following parts:
   - CVT cover
   - Drive pulley
   - Driven pulley
   - CVT air guide.
2. Disconnect vent hose.
3. Remove PTO cover screws and pull on PTO cover to remove it.

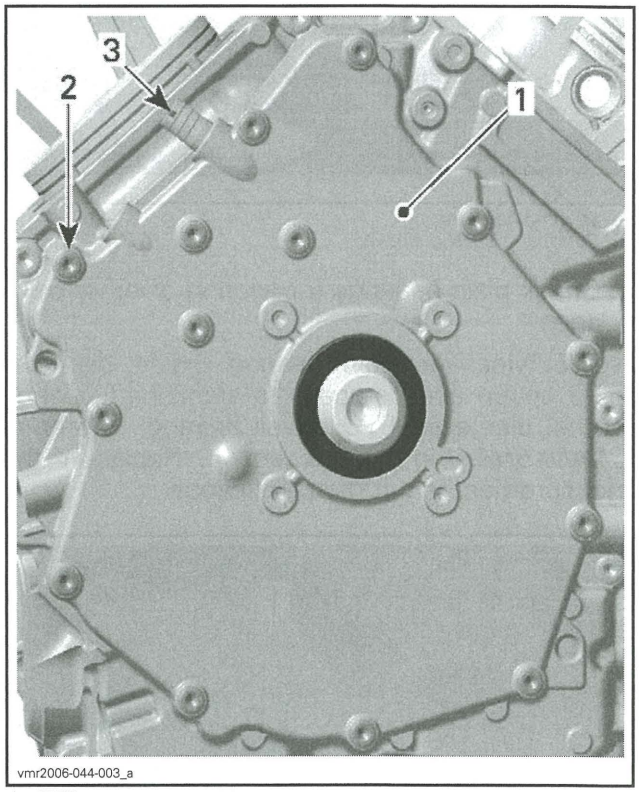

1. *PTO cover*
2. *PTO cover screws*
3. *Vent hose nipple*

PTO Cover Inspection

1. Check the PTO cover for cracks or other damage.
2. Replace PTO cover if damaged.
3. Clean oil breather bore in PTO cover from contaminations with a parts cleaner then use pressurized air to dry it.

⚠ WARNING

Always wear skin and eye protection. Chemicals can cause skin rash, skin burns and severe eye injury.

4. Check surface of sealing sleeve for wear or other damages. Replace PTO cover if damaged.

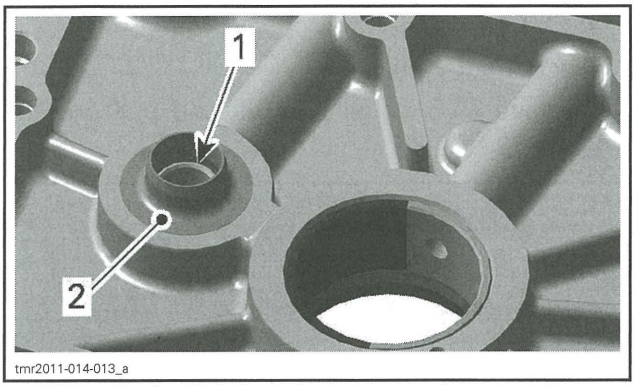

1. Oil breather bore
2. Surface of sealing sleeve

5. Check plain bearings for scoring or other damages.

NOTE: Measure plain bearing inside diameter (PTO cover) and compare to crankshaft bearing journal diameter (PTO cover bearing). Refer to *CRANKSHAFT* in this subsection. Replace if the measurement is out of specification.

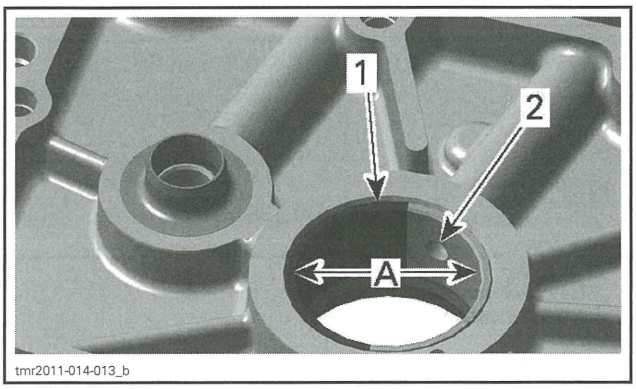

1. Plain bearing
2. Oil bore
A. Measure plain bearing inside diameter

PLAIN BEARING INSIDE DIAMETER (PTO COVER)	
SERVICE LIMIT	33.998 mm (1.3385 in)

Plain Bearing Replacement (PTO Cover)

Plain Bearing Removal

NOTICE Unless otherwise instructed, never use a hammer to install plain bearings. Always use a press.

1. Carefully remove the PTO oil seal with a screwdriver, without damaging the PTO cover.
2. Press out the plain bearings from the outside towards the inside.

REQUIRED TOOL	
PLAIN BEARING REMOVER/INSTALLER (P/N 529 036 032)	

NOTE: The PTO cover has to be supported from below on a suitable support with straight surface in order to prevent damage of the sealing surface.

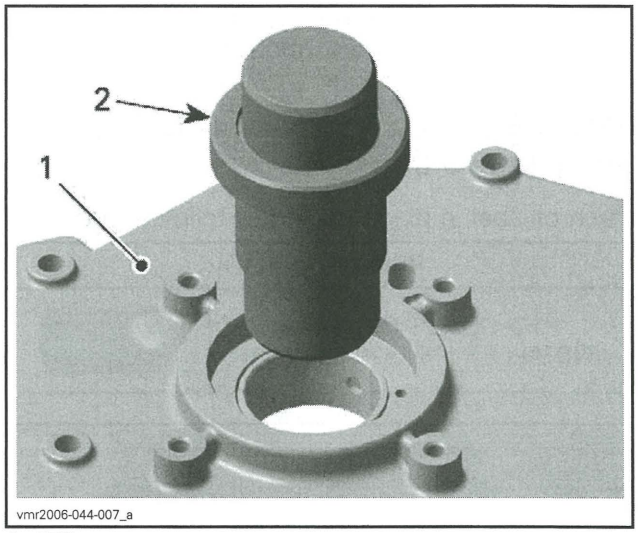

1. PTO cover
2. Plain bearing remover/installer

Plain Bearing Installation

NOTE: Do not lubricate plain bearings or PTO cover for installation.

Install plain bearings in a cold PTO cover.

REQUIRED TOOL	
PLAIN BEARING REMOVER/INSTALLER (P/N 529 036 032)	

1. Mark position of oil bore on PTO cover and on plain bearing remover/installer.
2. Align mark on plain bearing remover/installer with mark on PTO cover.

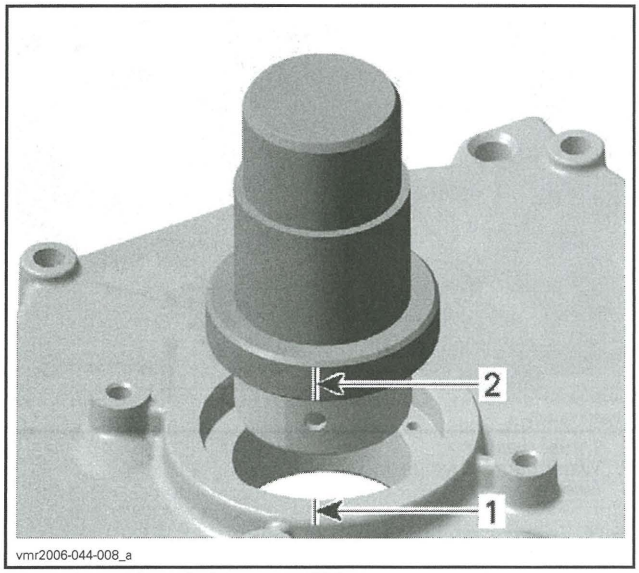

1. *Mark position of oil bore on PTO cover*
2. *Mark position of oil bore on plain bearing remover/installer*

NOTICE **Misalignment of plain bearing and PTO cover oil bores will prevent proper oil supply to plain bearings.**

3. Carefully press in the plain bearings in the same direction as during disassembly, from the outside towards the inside.

NOTE: Support PTO cover using a suitable support with a straight surface to prevent damage of the sealing surface.

NOTICE **The joining surfaces of the plain bearings must be positioned near the oil bore in a counterclockwise direction.**

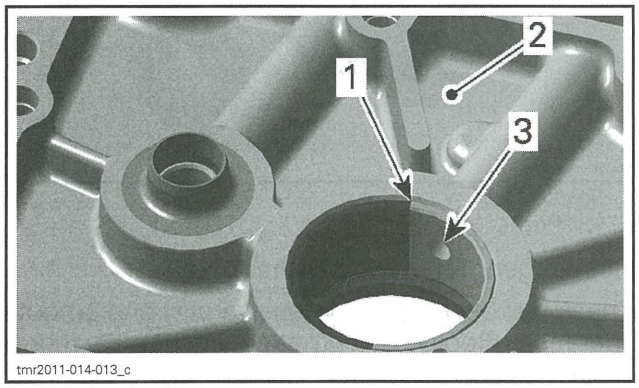

1. *Plain bearing joint*
2. *PTO cover (inside surface)*
3. *Oil bore*

PTO Cover Installation

For installation, reverse the removal procedure however, pay attention to the following details.

NOTE: At installation, replace PTO cover gasket and oil seal.

Tighten PTO cover screws following the sequence illustrated.

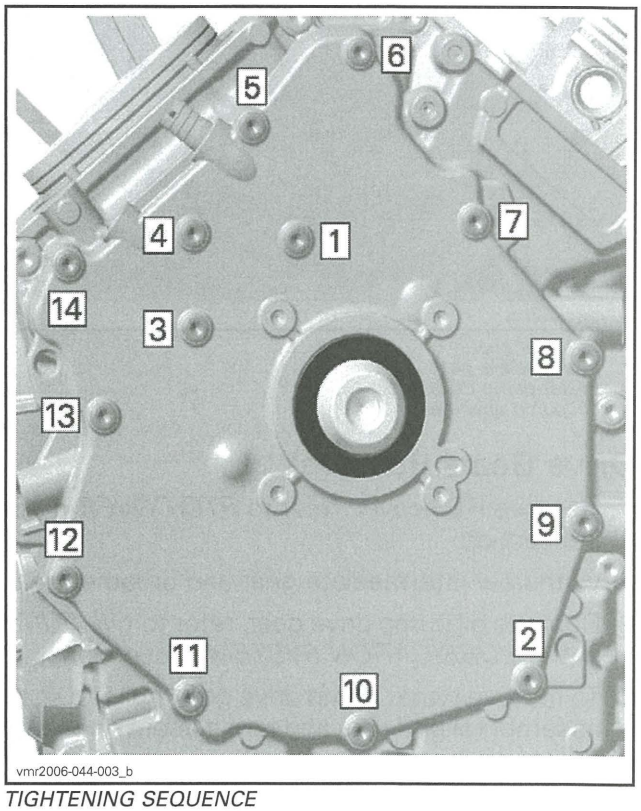

TIGHTENING SEQUENCE

PTO COVER SCREWS	
Tightening torque	10 N•m ± 1 N•m (89 lbf•**in** ± 9 lbf•**in**)

DRIVE GEARS

Drive Gears Location

The engine is equipped with a breather gear which prevents engine oil from seeping out through the breathing system into the air intake system.

The drive gears are located on the engine PTO side behind the PTO cover.

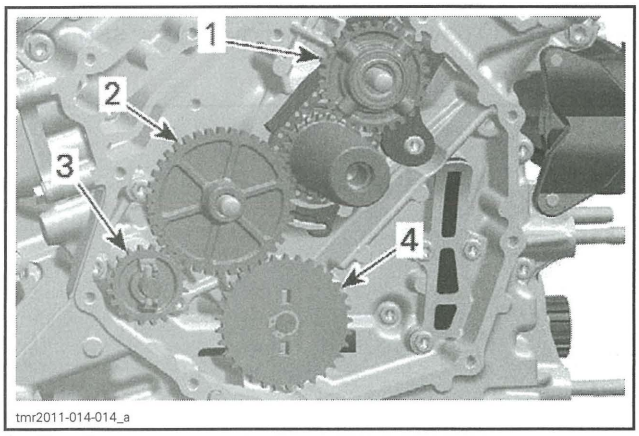

1. Breather gear
2. Intermediate gear
3. Water pump drive gear
4. Oil pump drive gear

Drive Gears Removal

1. Remove PTO cover, refer to *PTO COVER* in this subsection.
2. Withdraw intermediate gear and breather gear.
3. Remove oil pump drive gear, refer to *OIL PUMP* in the *LUBRICATION SYSTEM* subsection.
4. To remove water pump drive gear, pull the shaft assembly slightly out and turn it about one tooth until it stays out.
5. Then push water pump drive gear in.

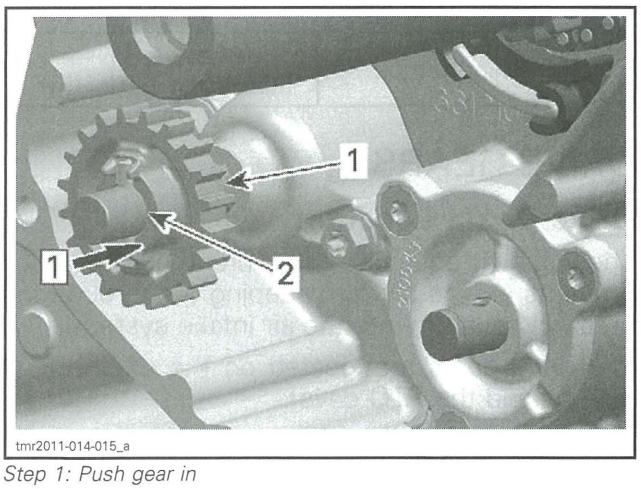

Step 1: Push gear in

1. Water pump drive gear
2. Intermediate shaft

6. Remove needle pin and pull water pump drive gear out.
7. Remove thrust washer from intermediate shaft.

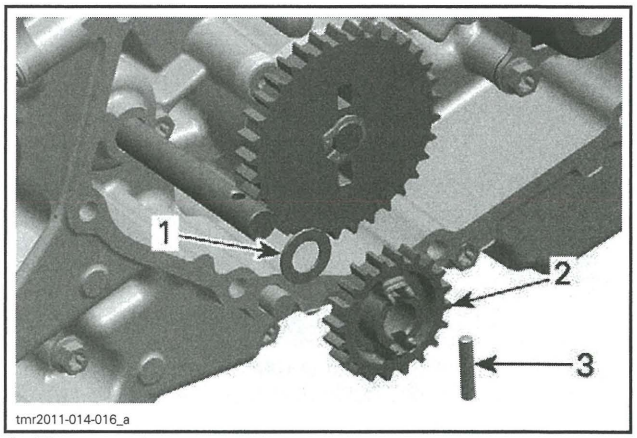

1. Thrust washer
2. Water pump drive gear
3. Needle pin

Drive Gears Inspection

Intermediate Gear/Oil Pump Drive Gear/Water Pump Drive Gear

Inspect gears for wear or other damage. Replace if damaged.

Breather Gear

Check if oil seal is brittle, hard or damaged. Replace if necessary.

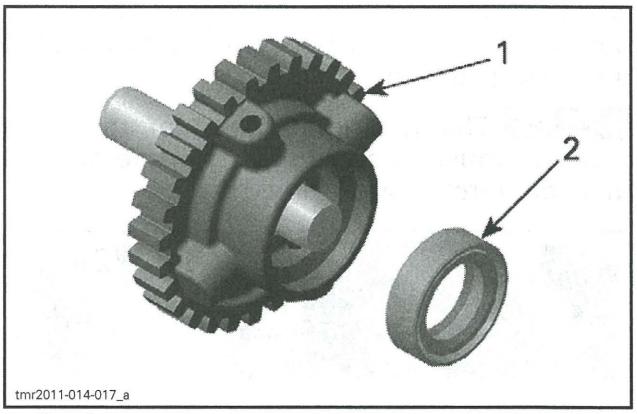

1. Breather gear
2. Oil seal

Inspect gear for wear or other damage.

Check ball bearing for excessive play and smooth operation. Replace breather gear assembly if necessary.

Drive Gears Installation

The installation is essentially the reverse of the removal procedure however, pay attention to the following.

Adequately oil the ball bearing of the breather gear.

CRANKCASE

Crankcase Disassembly

1. Refer to *PERIODIC MAINTENANCE PROCEDURES* subsection and carry out the following:
   1.1 Drain cooling system.
   1.2 Drain engine oil.
   1.3 Drain gearbox oil.
2. Lock crankshaft. Refer to *CRANKSHAFT LOCKING PROCEDURE* in the this subsection.
3. Refer to *CONTINUOUSLY VARIABLE TRANSMISSION (CVT)* subsection and remove the following parts:
   - CVT cover
   - Drive pulley
   - Driven pulley
   - CVT air guide.
4. Remove engine from vehicle. Refer to *ENGINE REMOVAL AND INSTALLATION* subsection.
5. Remove gearbox from engine.
6. Refer to *MAGNETO SYSTEM* subsection and remove the following parts:
   - Magneto cover
   - Rotor with sprag clutch gear
   - Starter drive gears.
7. Refer to applicable procedures in this subsection and remove the following parts:
   - PTO cover
   - Drive gears
   - Bearing covers of engine drive shaft.
8. Refer to *TIMING CHAIN* subsection and remove the following parts:
   - Chain tensioners
   - Camshaft timing gears
   - Timing chains
   - Timing chain guides.
9. Refer to *TOP END* subsection and remove the following parts:
   - Front cylinder head
   - Rear cylinder head
   - Cylinders.
10. Refer to *COOLING SYSTEM* subsection and remove the following parts:
    - Water pump housing.
11. Refer to *LUBRICATION SYSTEM* subsection and remove the following parts:
    - Oil filter
    - Oil cooler
    - Oil pump drive gear.

NOTE: Oil pump removal from crankcase is not necessary, but recommended to see condition of oil pump. Refer to *LUBRICATION SYSTEM* subsection.

12. Remove electric starter.

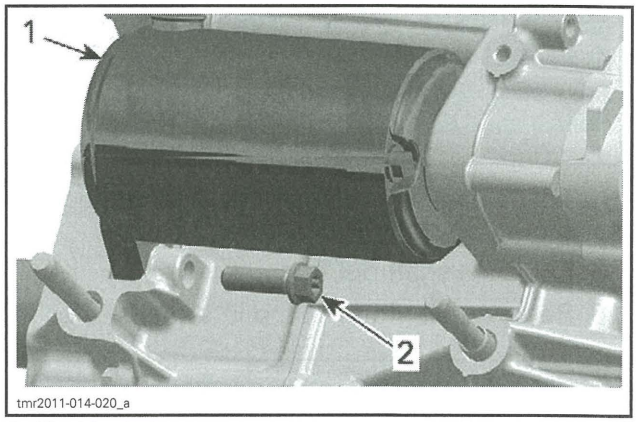

1. Electric starter
2. Screw

NOTE: Before splitting the crankcase, measure crankshaft axial play. Refer to *CRANKSHAFT* in this subsection.

13. Remove crankcase retaining screws.

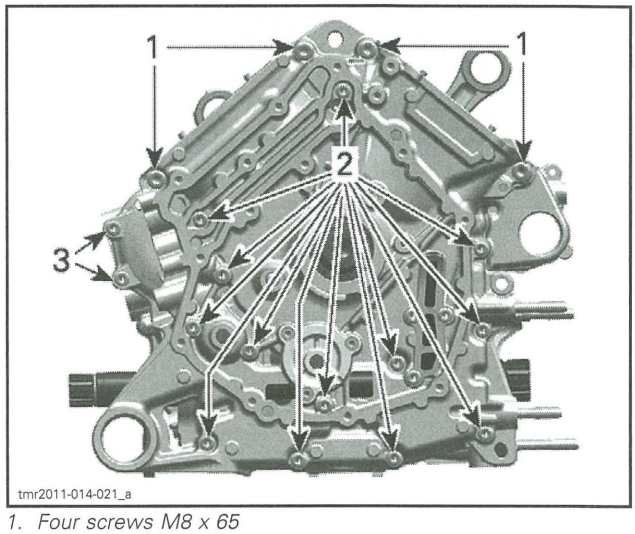

1. Four screws M8 x 65
2. 13 screws M6 x 75
3. Two screws M6 x 25

14. Carefully split crankcase halves using a screwdriver and a soft hammer.

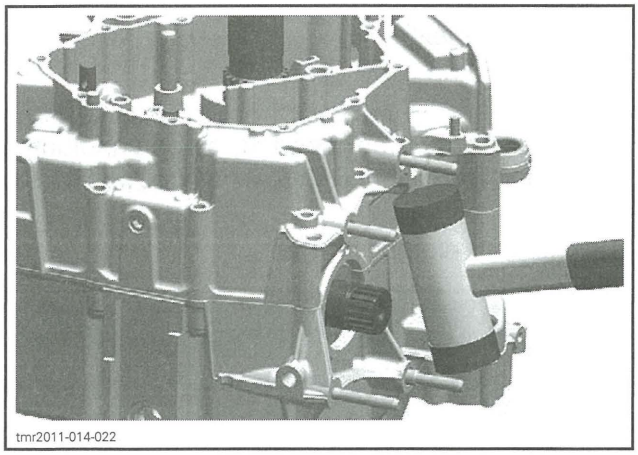
tmr2011-014-022

NOTE: During disassembly, do not damage the sealing surfaces of the crankcase halves.

15. Pull crankshaft out of crankcase.

16. Remove the water pump intermediate shaft.

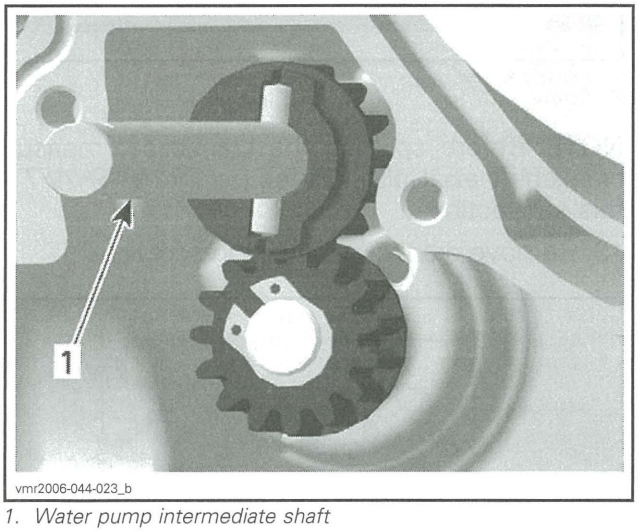

vmr2006-044-023_b

1. Water pump intermediate shaft

17. Remove engine oil strainer.

NOTE: Oil strainer removal for inspection and cleaning is recommended. Refer to *LUBRICATION SYSTEM* subsection.

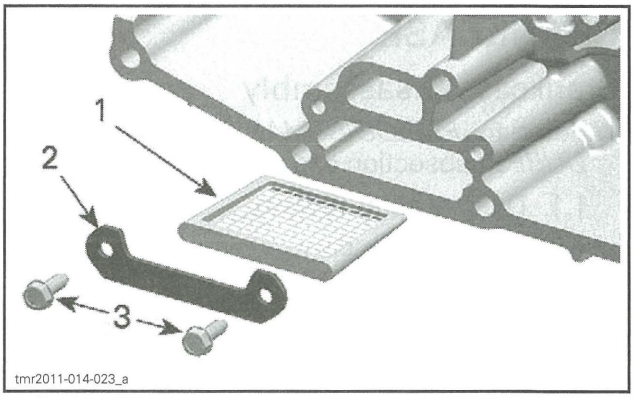

tmr2011-014-023_a

1. Engine oil strainer
2. Retaining plate
3. Screws

Crankcase Cleaning

⚠ WARNING

Use safety goggles to avoid eye injuries.

Clean crankcase using a part cleaner.

Dry crankcase using compressed air.

Blow low pressure filtered air through the oil supply lines.

Crankcase Inspection

Check crankcase halves for cracks or other damage. Replace if damaged.

Check MAG and PTO plain bearings for scoring or other damages.

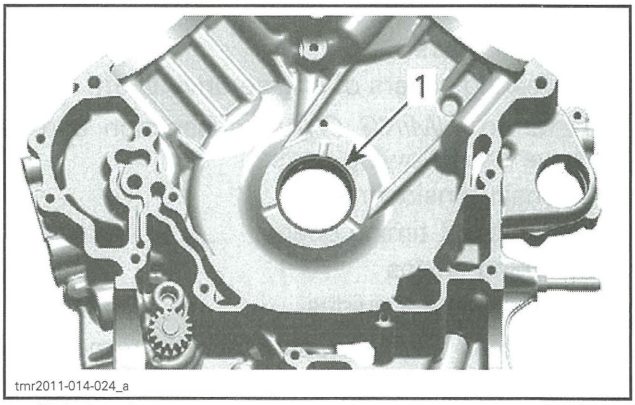

tmr2011-014-024_a

1. Plain bearing

Measure plain bearing inside diameter and compare to PTO/MAG main journal diameters of crankshaft, refer to *CRANKSHAFT* in this subsection. Replace if the measurements are out of specification.

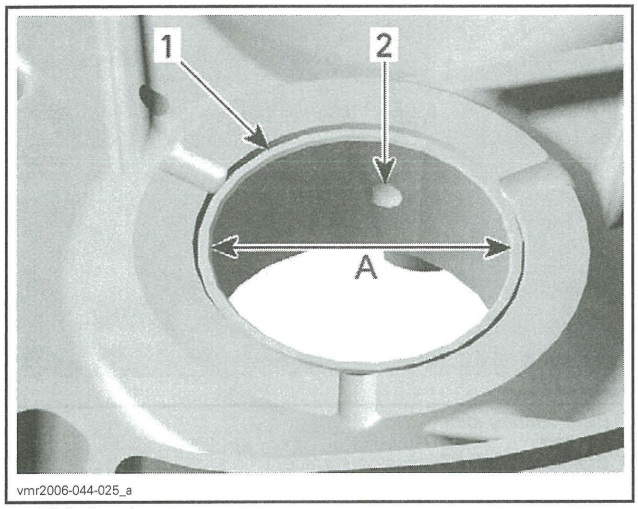

1. *Plain bearing*
2. *Oil bore*

A. Measure plain bearing inside diameter

MAIN BEARING INSIDE DIAMETER (PTO/MAG)	
SERVICE LIMIT	42.100 mm (1.6575 in)

Plain Bearing Replacement (Main)

Plain Bearing Removal

NOTICE **Always properly support crankcase halves when removing plain bearings. Damage to crankcase halves may occur if this procedure is not performed correctly.**

NOTE: Always use a press for removal of plain bearings.

Carefully press the plain bearings out from the crankcase half from the inside towards the outside.

NOTE: Place an appropriate support under crankcase halves before removing plain bearings.

REQUIRED TOOLS	
CRANKCASE SUPPORT MAG/PTO (P/N 529 036 031)	
PLAIN BEARING REMOVER/INSTALLER (P/N 529 035 917)	

NOTE: During disassembly, make sure not to damage the sealing surfaces of the crankcase halves.

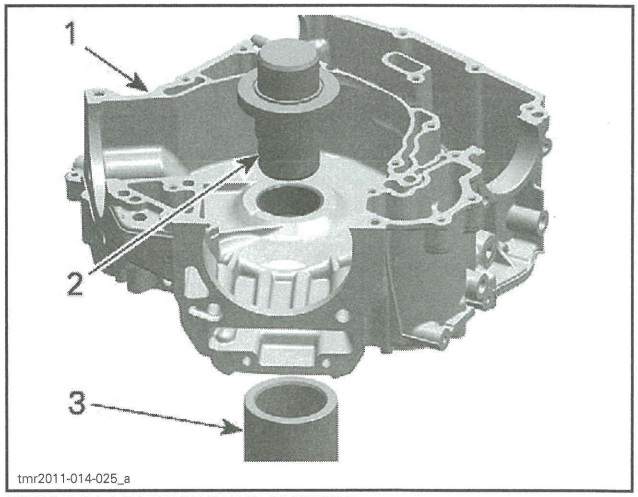

PRESS PLAIN BEARINGS OUTSIDE

1. *Crankcase half*
2. *Plain bearing remover/installer*
3. *Crankcase support sleeve (P/N 529 036 031)*

Plain Bearing Installation (Main)

NOTICE **Unless otherwise instructed, never use a hammer to install plain bearings. Aways use a press.**

During reassembly, make sure not to damage the sealing surfaces of the crankcase halves.

NOTE: Place the proper crankcase support sleeve under crankcase halves before installing the plain bearings, refer to *PLAIN BEARING REMOVAL PROCEDURE* in this subsection.

Install plain bearings in a cold crankcase.

NOTE: Do not lubricate plain bearings and/or crankcase for installation.

REQUIRED TOOL	
PLAIN BEARING REMOVER/INSTALLER (P/N 529 035 917)	

NOTE: Use an O-ring (Ø 42 x 1 mm to 1.5 mm (.04 in to .06 in) thickness) to hold plain bearings in place during installation. The O-ring will disappear in the groove of the plain bearing remover/installer.

1. Mark position of plain bearing oil bore on plain bearing remover/installer.
2. Mark position of oil bore on crankcase half.
3. Align mark on plain bearing remover/installer with mark on crankcase half.

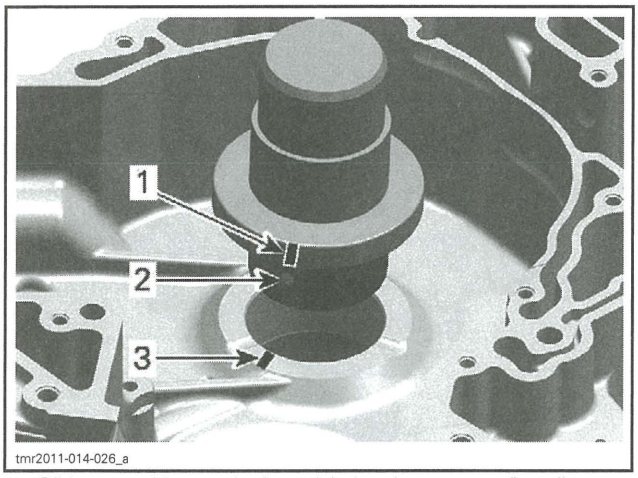

1. *Oil bore position marked on plain bearing remover/installer*
2. *Plain bearing oil bore*
3. *Oil bore position marked on crankcase*

NOTICE **Misalignment of the plain bearing and crankcase oil bores will prevent proper oil supply to plain bearings.**

4. Carefully press in the plain bearings from inside the crankcase towards the outside.

NOTICE **The joint of the plain bearings in crankcase half MAG side must be positioned near the oil bore in a clockwise direction.**

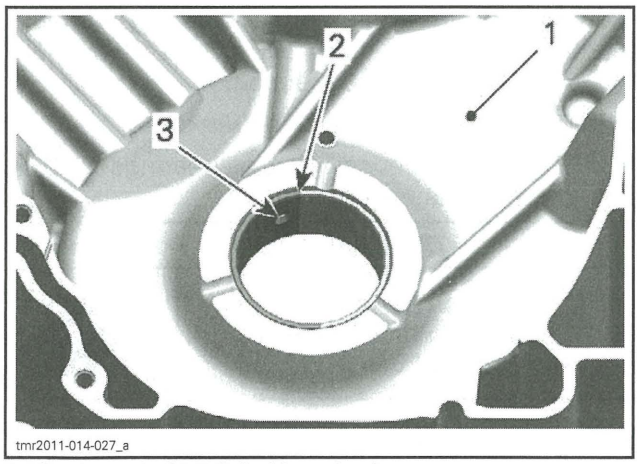

1. *Crankcase half MAG (inside surface)*
2. *Partition*
3. *Oil bore*

NOTICE **The joint of the plain bearings in the crankcase half PTO side must be positioned near the oil bore in the counterclockwise direction.**

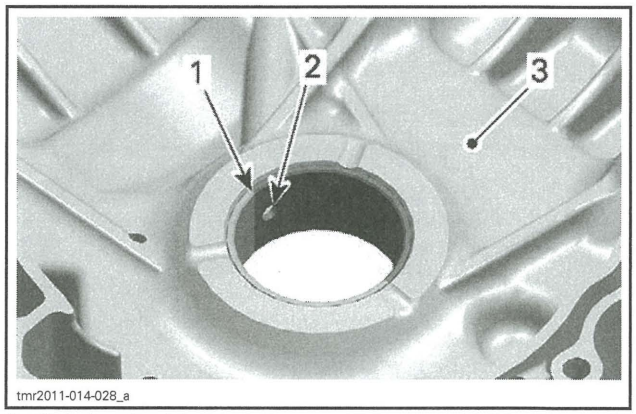

1. *Plain bearing joint*
2. *Oil bore*
3. *Crankcase half PTO (inside surface)*

Crankcase Assembly

The assembly of crankcase is essentially the reverse of removal procedure. However, pay attention to the following details.

Clean oil passages and make sure they are not clogged.

Clean all metal components in a solvent.

Install a **NEW** crankcase gasket.

Oil the plain bearings before mounting the crankshaft.

Reinstall crankshaft, see procedure in this subsection

Properly reinstall engine oil strainer and screws. Refer to *LUBRICATION SYSTEM* subsection.

Reinstall water pump intermediate shaft and gears, refer to *WATER PUMP GEARS* in the *COOLING SYSTEM* subsection.

Tighten crankcase retaining screws as per tightening sequence in following illustration.

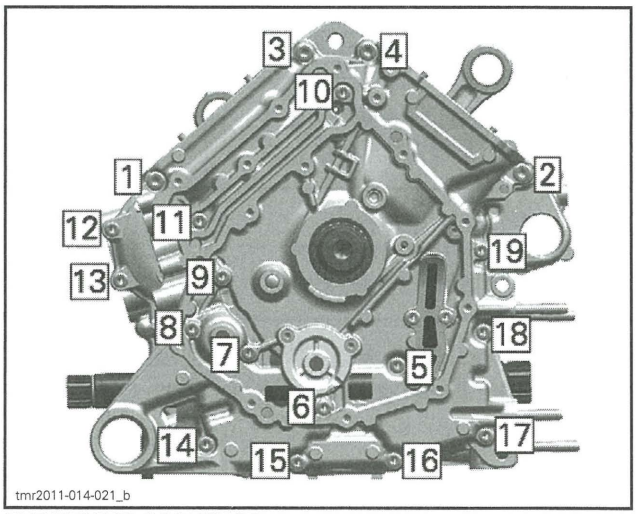

TIGHTENING SEQUENCE

CRANKCASE SCREWS	
Tightening torque - M6	10 N•m ± 1 N•m (89 lbf•**in** ± 9 lbf•**in**)
Tightening torque - M8	25 N•m ± 3 N•m (18 lbf•ft ± 2 lbf•ft)

CRANKSHAFT

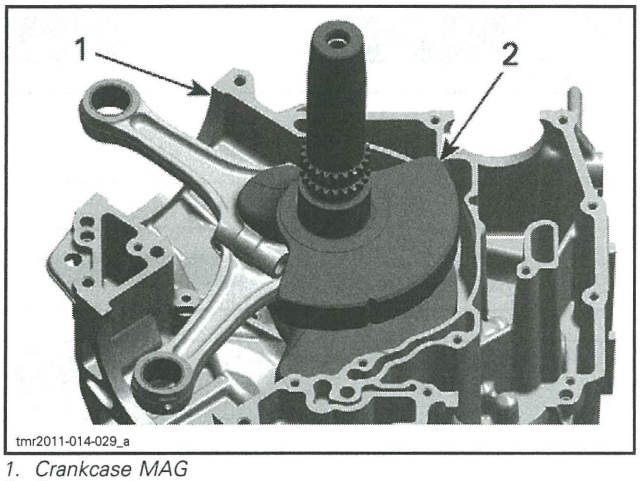

1. Crankcase MAG
2. Crankshaft

Crankshaft Locking Procedure

NOTE: When the crankshaft is locked, the rear piston no. 2 is at TDC (top dead center). The crankshaft cannot be locked with front piston no. 1 at TDC.

NOTICE **To see if the rear piston no. 2 is at TDC ignition, refer to *CAMSHAFT TIMING GEAR* in the *TIMING CHAIN* subsection.**

1. Remove spark plug cables and spark plugs from both cylinders.
2. Remove screw plug and O-ring from magneto cover.

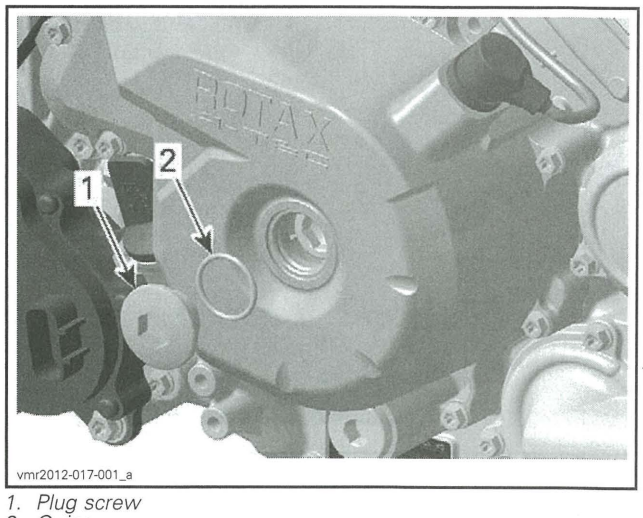

1. Plug screw
2. O-ring

3. Remove crankshaft position sensor.

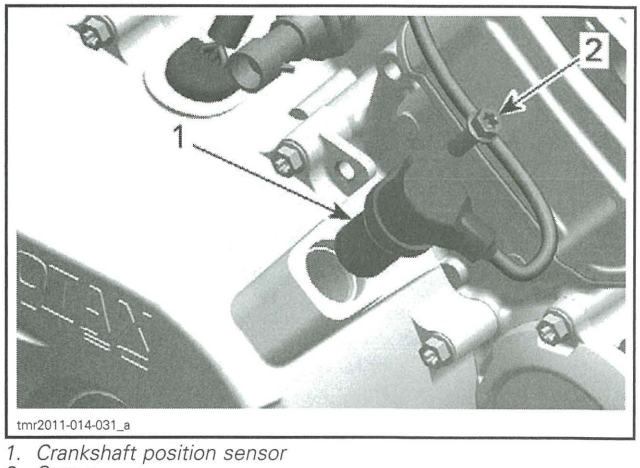

1. Crankshaft position sensor
2. Screw

4. Remove screw plug and discard sealing ring.

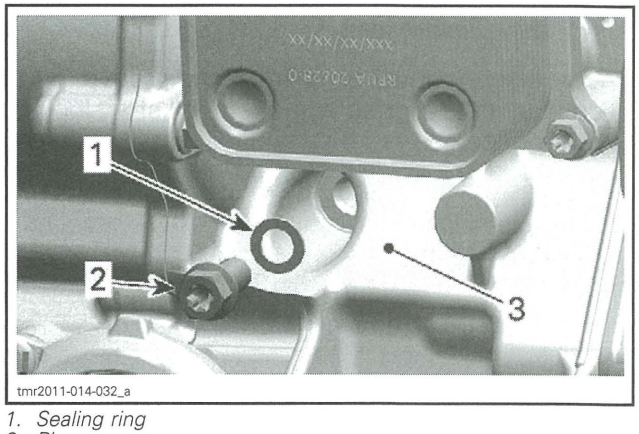

1. Sealing ring
2. Plug screw
3. Crankcase PTO side, front side

5. Use a 14 mm Allen key to turn crankshaft until the rear piston no. 2 is at TDC.

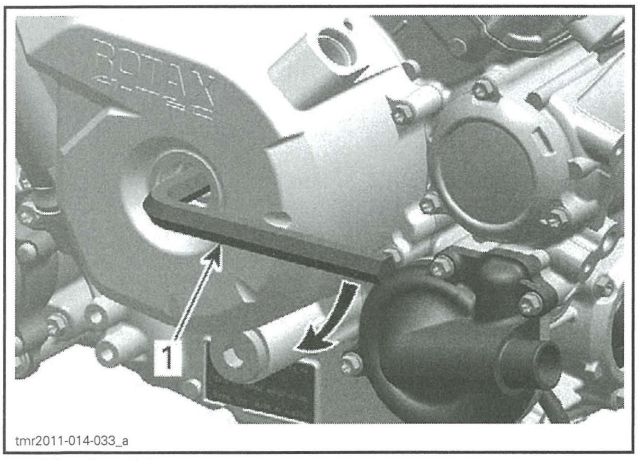

1. Allen key 14 mm

NOTE: When the piston no. 2 is at TDC, the number 2 piston index mark on the magneto flywheel and the notch on the magneto cover are aligned.

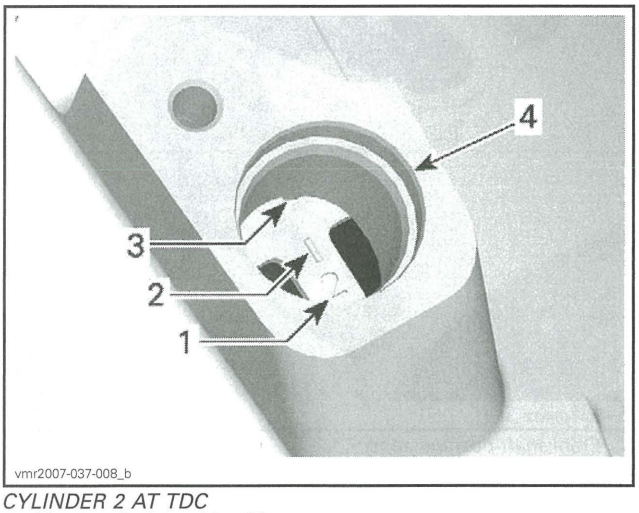

CYLINDER 2 AT TDC
1. Number 2 piston identifier
2. Index mark on magneto flywheel
3. Notch on magneto cover
4. CPS bore in magneto cover

6. Use a screwdriver to check if the groove in the crankshaft is aligned with the crankshaft locking tool orifice.

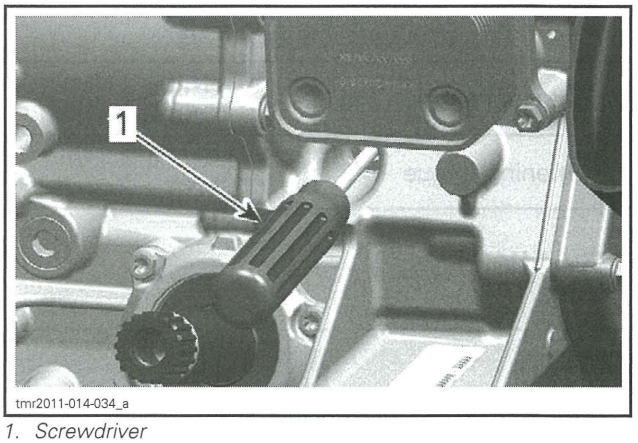

1. Screwdriver

7. Lock crankshaft.

REQUIRED TOOL	
CRANKSHAFT LOCKING BOLT (P/N 529 035 617)	

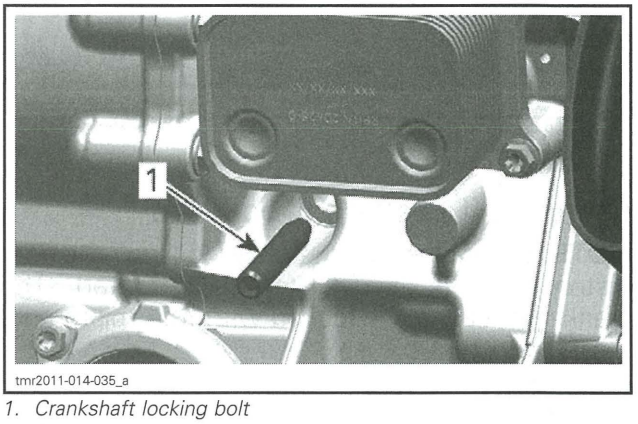

1. Crankshaft locking bolt

8. Gradually insert the tool in the crankshaft groove. Make sure that the tool tip enters the groove and does not jam on the crankshaft balancer surface.

Crankshaft Removal

Refer to *CRANKCASE*.

Crankshaft Inspection

NOTE: Check each crankshaft bearing journal for scoring, scuffing, cracks or other signs of wear.

NOTE: Replace crankshaft if the crankshaft timing gears are worn or otherwise damaged.

NOTICE **Components out of specifications must always be replaced. If this is not observed, severe damage may be caused to the engine.**

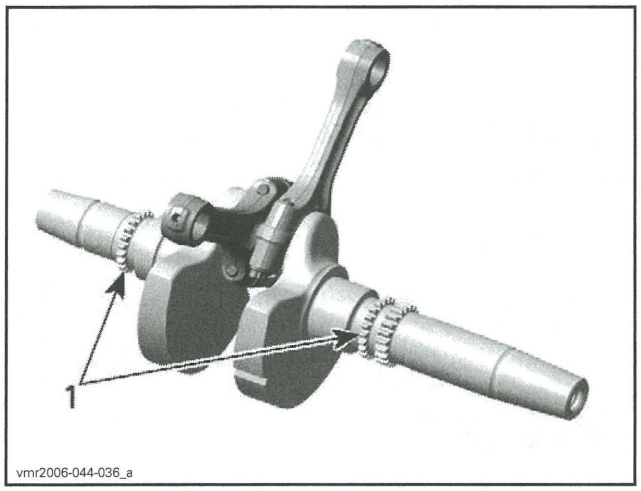

1. Crankshaft timing gears

Crankshaft Axial Play

NOTE: Axial play must be measured before splitting the crankcase.

Measure axial play on PTO end of crankshaft using a dial indicator.

CRANKSHAFT AXIAL PLAY	
NEW	0.200 mm to 0.500 mm (.008 in to .02 in)
SERVICE LIMIT	0.600 mm (.024 in)

If axial play is out of specification, replace crankcase and/or crankshaft.

Connecting Rod Big End Axial Play

Using a feeler gauge, measure between face of connecting rods and crankshaft counterweight. If the measurement exceeds specified tolerance, replace the crankshaft.

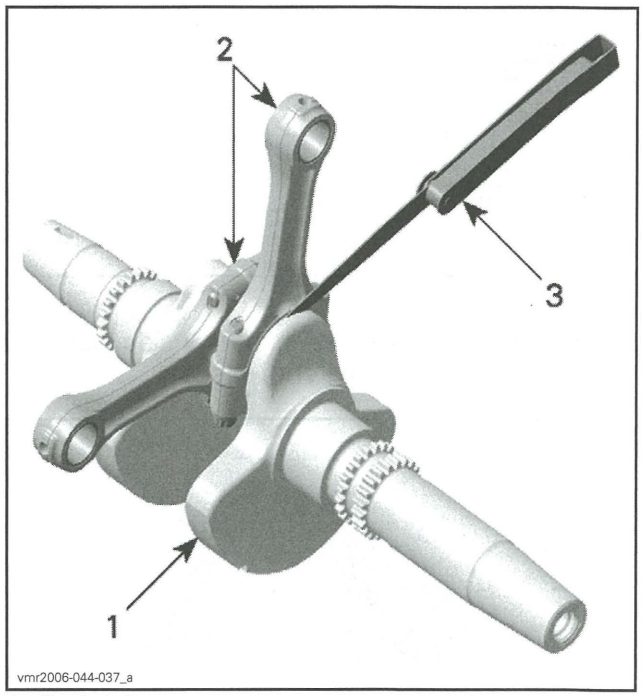

1. Crankshaft
2. Connecting rods
3. Feeler gauge

CONNECTING ROD BIG END AXIAL PLAY	
500/650/800R ENGINES	
NEW	0.200 mm to 0.500 mm (.008 in to .02 in)
SERVICE LIMIT	0.600 mm (.024 in)
1000 ENGINE	
NEW	0.250 mm to 0.550 mm (.01 in to .022 in)
SERVICE LIMIT	0.600 mm (.024 in)

Connecting Rod/Piston Pin Clearance

Refer to *TOP END* subsection.

Connecting Rod Big End Radial Play

NOTE: Prior to removing connecting rod from the crankshaft, mark big end halves together to ensure a correct reinstallation (cracked surface fits in only one position).

1. Remove connecting rods from crankshaft.

NOTICE Connecting rod screws are not reusable. Always discard screws and replace with NEW ones. It is recommended to install new plain bearings when reinstalling connecting rods.

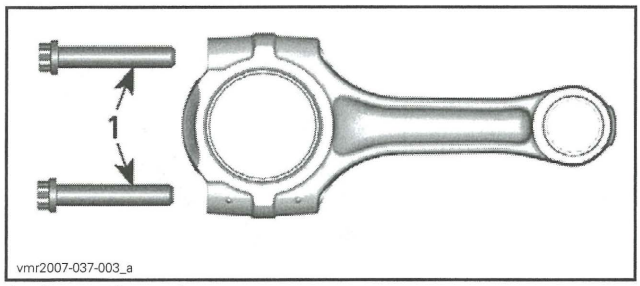

1. Connecting rod screws

2. Measure crankpin. Compare to inside diameter of connecting rod big end.

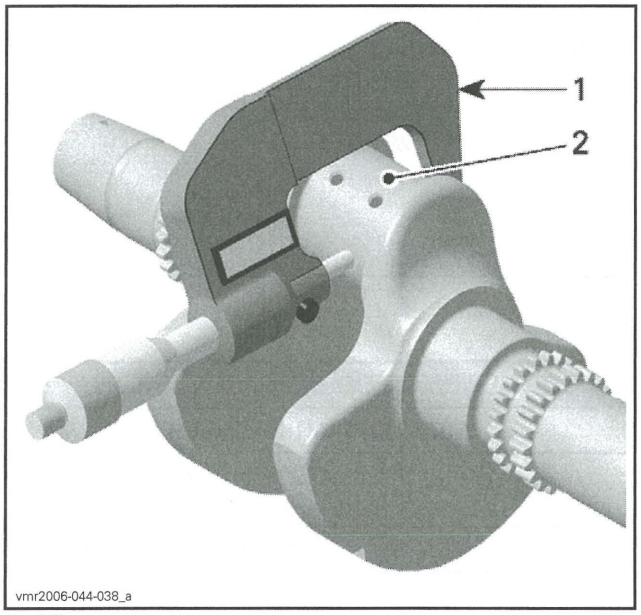

1. Micrometer
2. Crankpin

CRANK PIN DIAMETER	
500 ENGINE	
NEW	35.064 mm to 35.080 mm (1.3805 in to 1.3811 in)
SERVICE LIMIT	35.050 mm (1.3799 in)
650/800R ENGINES	
NEW	40.009 mm to 40.025 mm (1.5752 in to 1.5758 in)
SERVICE LIMIT	39.990 mm (1.5744 in)
1000 ENGINE	
NEW	41.986 mm to 42.010 mm (1.653 in to 1.6539 in)
SERVICE LIMIT	41.967 mm (1.6522 in)

If the crank pin diameter is out of specification, replace crankshaft.

NOTE: To measure the connecting rod big end diameter, use the OLD connecting rod screws.

3. Install the OLD plain bearings as they were mounted initially.
4. Carry out the tightening procedure described in *CRANKSHAFT ASSEMBLY* in this subsection.

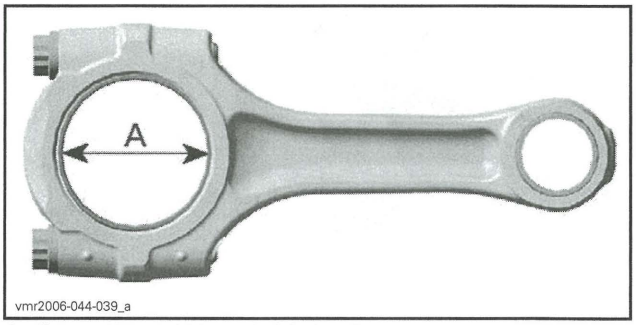

A. Connecting rod big end plain bearing

CONNECTING ROD BIG END DIAMETER	
500 ENGINE	
SERVICE LIMIT	35.150 mm (1.3839 in)
650/800R ENGINES	
SERVICE LIMIT	40.100 mm (1.5787 in)
1000 ENGINE	
SERVICE LIMIT	42.100 mm (1.6575 in)

If connecting rod big end diameter is out of specification, replace plain bearings and recheck.

CONNECTING ROD BIG END RADIAL CLEARANCE	
500/650/800R/1000 ENGINES	
SERVICE LIMIT	0.09 mm (.0035 in)

If connecting rod big end radial clearance is out of specification, replace plain bearings and recheck.

Crankshaft Radial Play MAG/PTO Side

Measure crankshaft main bearing journals on MAG and PTO sides. Compare to inside diameter of MAG and PTO plain bearings, refer to *CRANKCASE* in this subsection.

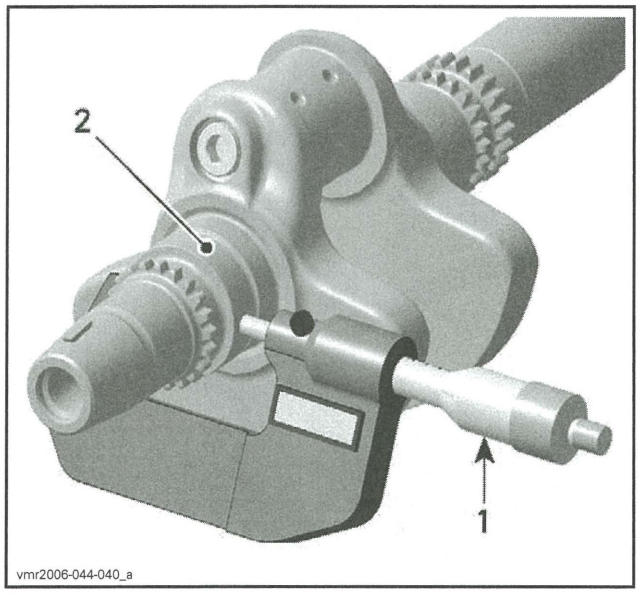

1. *Micrometer*
2. *Crankshaft MAG side main bearing journal*

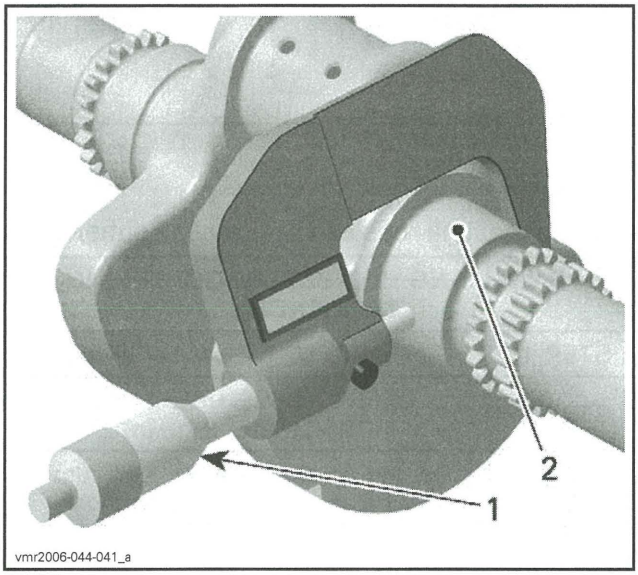

1. *Micrometer*
2. *Crankshaft PTO side main bearing journal*

CRANKSHAFT MAIN BEARING JOURNAL DIAMETER (MAG/PTO SIDE)	
NEW	42.016 mm to 42.040 mm (1.6542 in to 1.6551 in)
SERVICE LIMIT	42.000 mm (1.6535 in)

CRANKSHAFT RADIAL PLAY (MAG/PTO SIDE)	
SERVICE LIMIT	0.07 mm (.0028 in)

Crankshaft Radial Play (PTO Cover Bearing)

Measure crankshaft journal diameter (PTO cover bearing). Compare to plain bearing inside diameter (PTO cover). Refer to *PTO COVER* in this subsection.

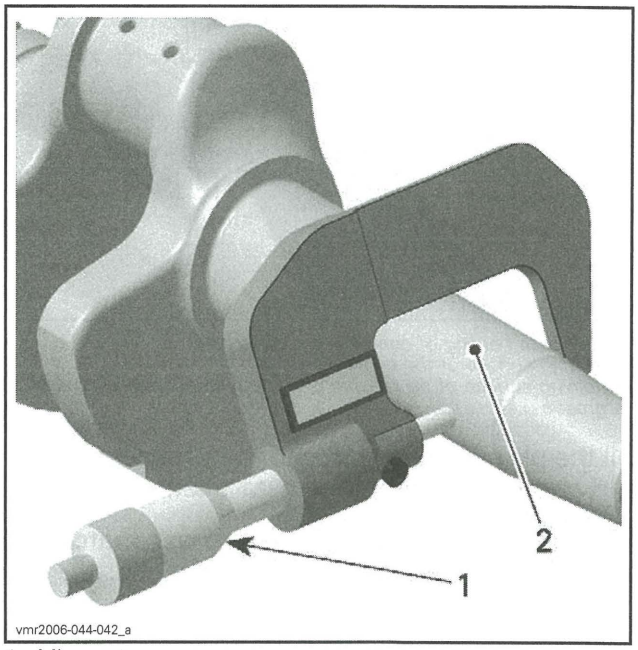

1. *Micrometer*
2. *Crankshaft journal (PTO support bearing)*

CRANKSHAFT JOURNAL DIAMETER (PTO COVER BEARING)	
NEW	34.004 mm to 34.020 mm (1.3387 in to 1.3394 in)
SERVICE LIMIT	33.998 mm (1.3385 in)

CRANKSHAFT RADIAL PLAY (PTO COVER BEARING)	
SERVICE LIMIT	0.10 mm (.0039 in)

If crankshaft journal diameter is out of specification, replace crankshaft.

If crankshaft radial play (PTO cover bearing) is out of specification, replace plain bearings and recheck.

Crankshaft Assembly

For assembly, reverse the disassembly procedure however, pay attention to following details.

Clean the split surface on both sides (cracked area) carefully with compressed air.

Insert plain bearings in the connecting rods as illustrated.

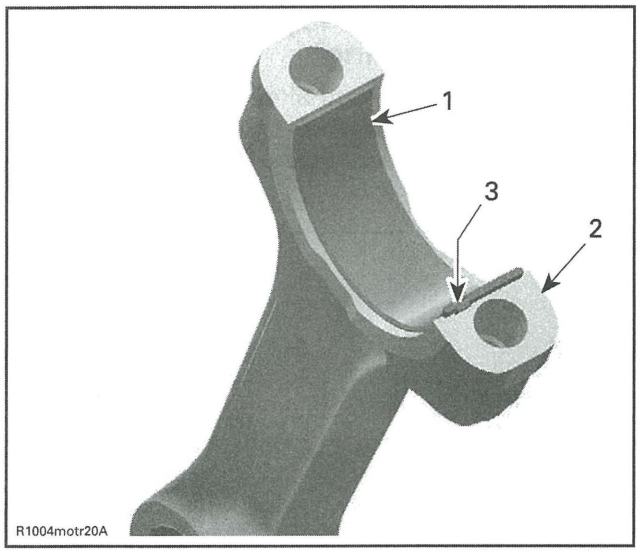

1. *Half plain bearing of connecting rod big end*
2. *Mating surface of the connecting rod*
3. *Joining surface of plain bearing in line with connecting rod groove*

Oil the plain bearing surface of the connecting rod and crankshaft pin before installation.

NOTICE Lower cap and rod must match together since there is a cracked surface.

Oil **NEW** connecting rod screws.

Thread screws in the connecting rods, then tighten as per following procedure.

NOTICE Strictly adhere following instructions:

- Always use **NEW** connecting rod screws at final assembly. They are **not reusable**.
- Do not apply any thread locker.
- The running direction of the big end bearings and of the piston pins must not change.
- Always perform each step on both connecting rod screws before going to the next step.
- Failure to strictly follow procedure may cause connecting rod screws to loosen and lead to severe engine damage.

REQUIRED TOOLS
Torque wrench
Angle torque wrench

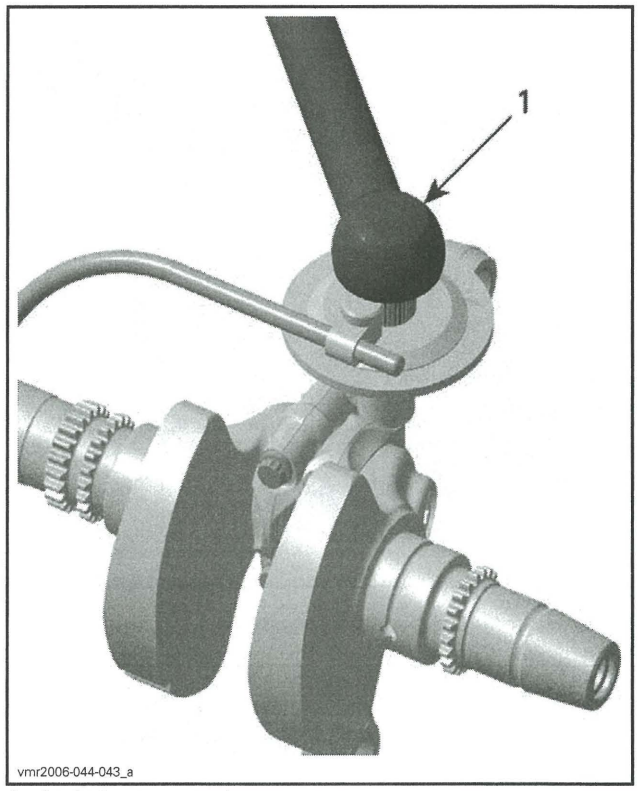

1. *Angle torque wrench*

500 Engine

NEW connecting rods can be installed either way.

CONNECTING ROD SCREW TIGHTENING SEQUENCE	
STEP 1	Tighten to 1/2 of specified torque
STEP 2	Tighten to 12 N•m ± 1 N•m (106 lbf•**in** ± 9 lbf•**in**)
STEP 3	Torque an additional 70 ± 5° turn using an angle torque wrench

650/800R Engine

NEW connecting rods can be installed either way.

CONNECTING ROD SCREW TIGHTENING SEQUENCE	
STEP 1	Tighten to 1/2 of specified torque
STEP 2	Tighten to 20 N•m ± 2 N•m (15 lbf•ft ± 1 lbf•ft)
STEP 3	Torque an additional 60 ± 5° turn using an angle torque wrench

1000 Engine

NOTICE Connecting rods are asymmetrical. There must be no gap between the small ends when they face each other.

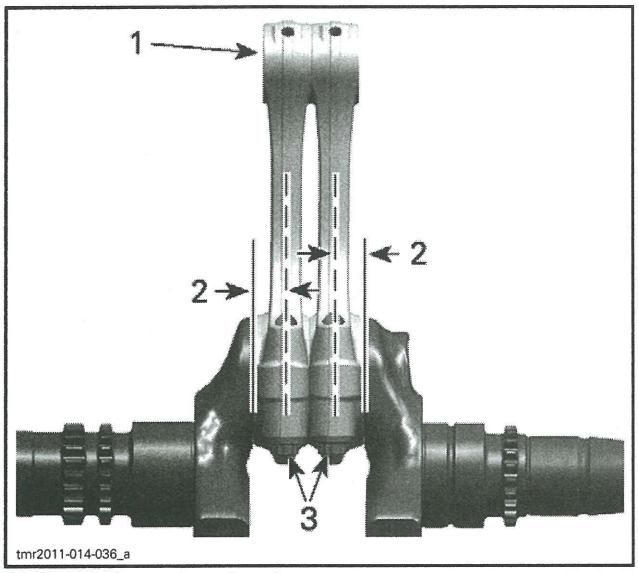

1. *Connecting rod small ends*
2. *Connecting rod offset*
3. *Connecting rod screws*

CONNECTING RODS SCREWS TIGHTENING SEQUENCE	
STEP 1	Tighten to 1/2 of specified torque
STEP 2	Tighten to 30 N•m ± 2 N•m (22 lbf•ft ± 1 lbf•ft)
STEP 3	Torque by an additional 90 ± 5° turn using an angle torque wrench

Crankshaft Installation

For installation of crankshaft in crankcase reverse the removal procedure. However, pay attention to the following details.

Do not interchange the connecting rods of pistons 1 and 2 during installation.

NOTICE **Observe the correct installation position when fitting the crankshaft with the connecting rods. The connecting rod MAG side has to face cylinder no. 1.**

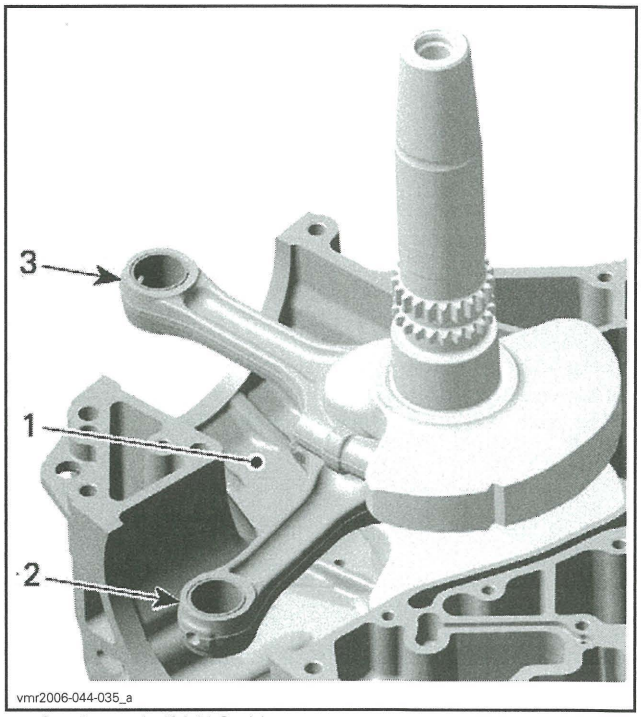

1. *Crankcase half MAG side*
2. *Connecting rod cylinder 1*
3. *Connecting rod cylinder 2*

CONTINUOUSLY VARIABLE TRANSMISSION (CVT)

SERVICE TOOLS

Description	Part Number	Page
CLUTCH HOLDER	529 036 238	178, 186, 192–194
CLUTCH PULLER	529 035 746	178
PULLER/LOCKING TOOL	529 036 098	177, 192, 194

SERVICE PRODUCTS

Description	Part Number	Page
ISOFLEX GREASE TOPAS NB 52	293 550 021	184
LOCTITE 767 (ANTISEIZE LUBRICANT)	293 800 070	191
PULLEY FLANGE CLEANER	413 711 809	181, 188, 191

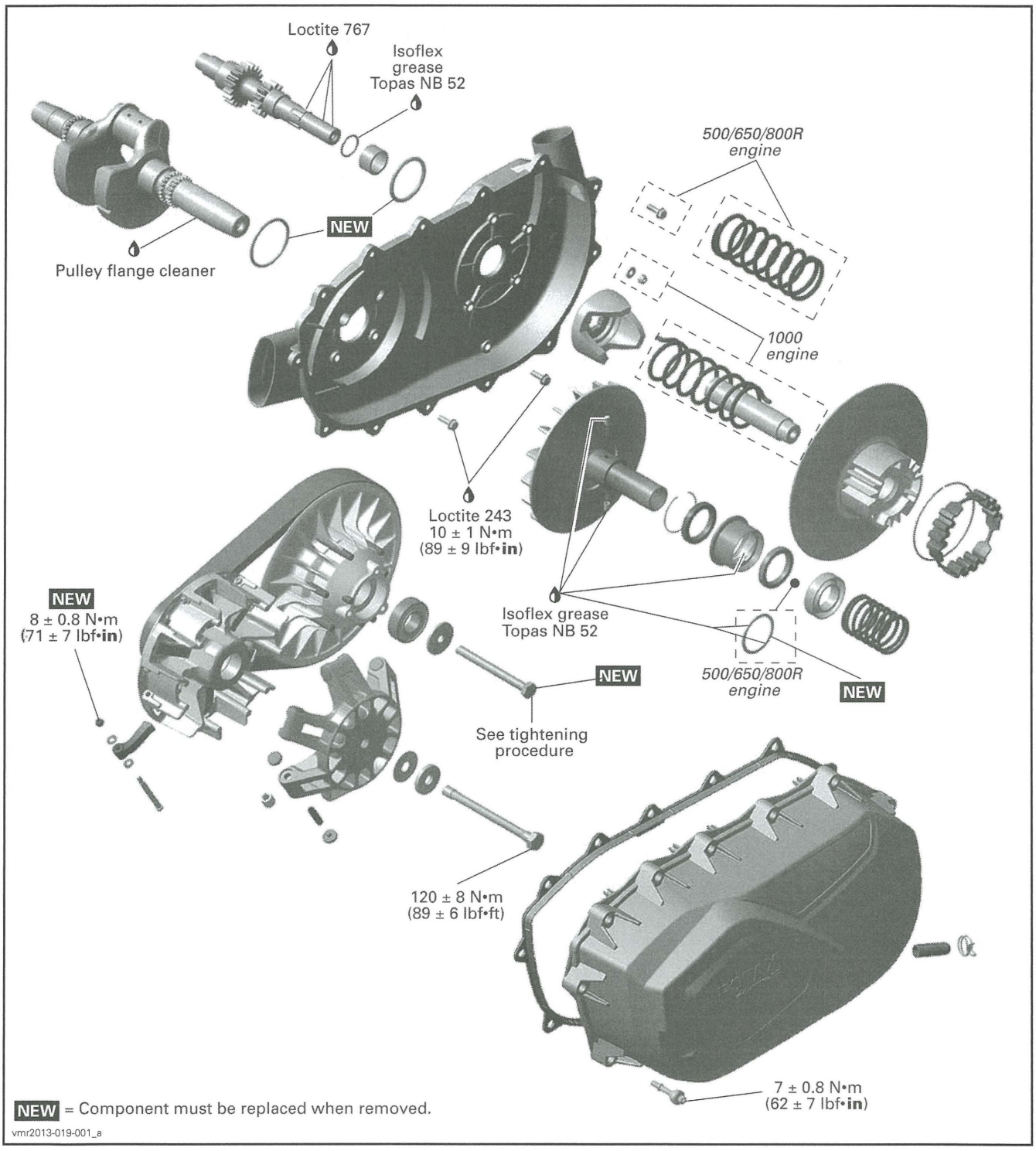
Loctite 767
Isoflex grease Topas NB 52
500/650/800R engine
NEW
Pulley flange cleaner
1000 engine
Loctite 243
10 ± 1 N•m
(89 ± 9 lbf•in)
NEW
8 ± 0.8 N•m
(71 ± 7 lbf•in)
Isoflex grease Topas NB 52
NEW
500/650/800R engine
NEW
See tightening procedure
120 ± 8 N•m
(89 ± 6 lbf•ft)
7 ± 0.8 N•m
(62 ± 7 lbf•in)
NEW = Component must be replaced when removed.
vmr2013-019-001_a

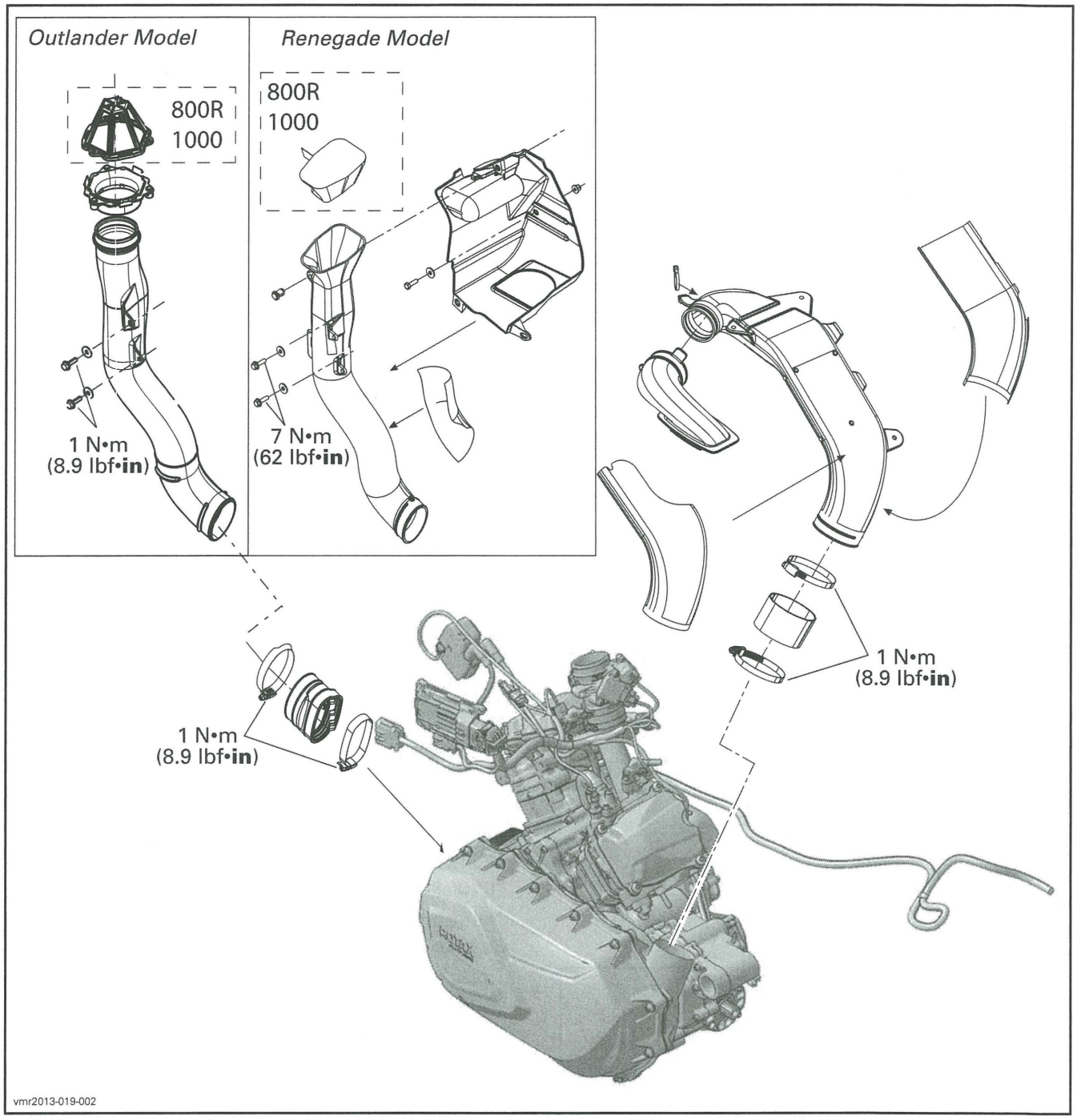
Outlander Model
800R
1000
1 N•m
(8.9 lbf•in)
Renegade Model
800R
1000
7 N•m
(62 lbf•in)
1 N•m
(8.9 lbf•in)
1 N•m
(8.9 lbf•in)
vmr2013-019-002

GENERAL

NOTE: For a better understanding, the following illustrations are taken with engine out of vehicle. To perform the following instructions, it is not necessary to remove engine.

⚠ WARNING

Never touch CVT while engine is running. Never drive vehicle when CVT cover is removed.

⚠ WARNING

Any drive pulley repairs must be performed by an authorized Can-Am dealer. Subcomponent installation and assembly tolerances require strict adherence to procedures detailed.

⚠ WARNING

The clutch assembly is a precisely balanced unit. Never replace parts with used parts from another clutch assembly.

PROCEDURES

CVT COVER

CVT Cover Access

Remove LH footrest panel, refer to *BODY* subsection.

CVT Cover Draining

If water is present in CVT cover, it can be drained as follows:

1. Remove drain reservoir from CVT cover.

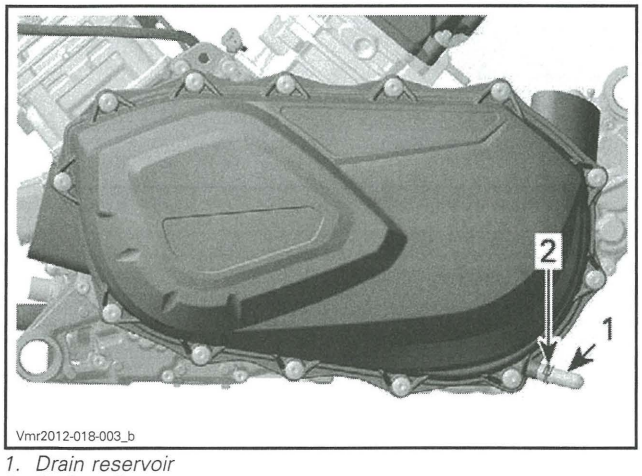

1. Drain reservoir
2. Spring clip

2. Let water drain from CVT cover.

3. Reinstall drain reservoir.

NOTICE **If an appreciable amount of water or any debris entered the CVT cover, CVT must be cleaned and inspected.**

CVT Cover Removal

Remove CVT cover screws.

NOTE: Do not use and impact tool to remove CVT cover screws. To support the CVT cover remove the top center screw last.

Remove the CVT cover and its gasket.

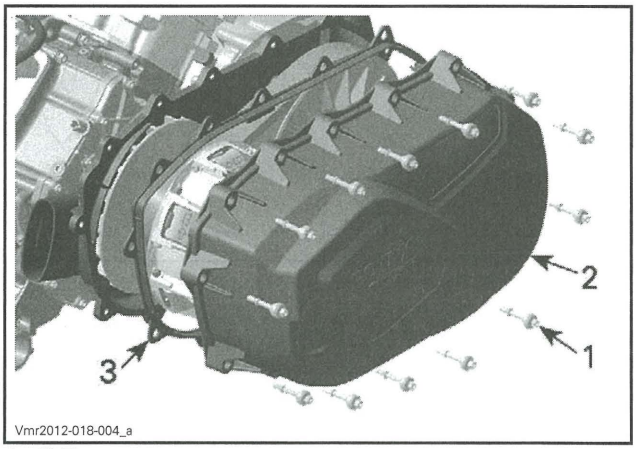

1. CVT cover screw
2. CVT cover
3. Gasket

CVT Cover Installation

Install the top center screw of first.

NOTE: Do not use and impact tool to install CVT cover screws.

Tighten the CVT cover screws as per following sequence.

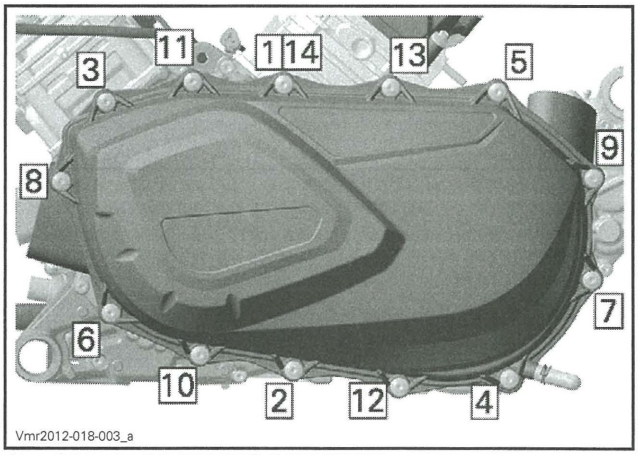

CVT COVER TIGHTENING SEQUENCE

CVT COVER SCREWS	
Tightening torque	7 N•m ± 0.8 N•m (62 lbf•**in** ± 7 lbf•**in**)

DRIVE BELT

Drive Belt Removal

NOTICE In case of a drive belt failure, the CVT, cover, drain reservoir and air outlet must be cleaned and inspected for obstruction.

1. Remove *CVT COVER*.
2. Open driven pulley.

REQUIRED TOOL	
PULLER/LOCKING TOOL (P/N 529 036 098)	

3. Screw tool in the threaded hole of driven pulley and tighten to open the pulley.

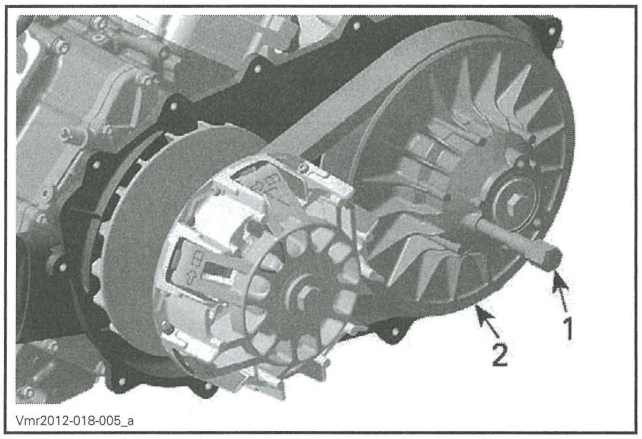

Vmr2012-018-005_a

1. Puller/locking tool
2. Fixed sheave of driven pulley

4. Slide the belt over the top edge of fixed sheave to remove it.

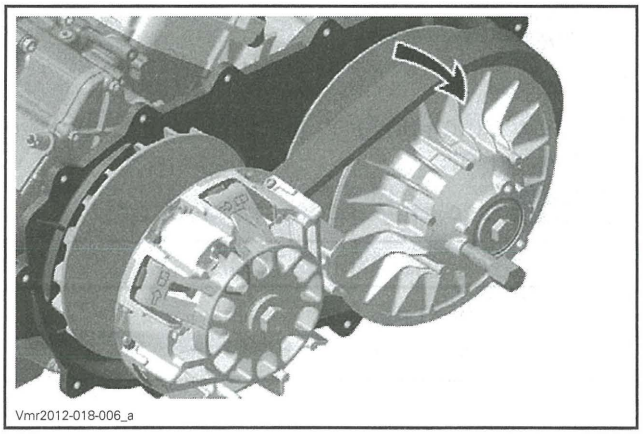
Vmr2012-018-006_a

Drive Belt Inspection

For drive belt inspection refer to *DRIVE BELT INSPECTION* in the *PERIODIC MAINTENANCE PROCEDURES* subsection.

Drive Belt Installation

For installation, reverse the removal procedure. Pay attention to following details.

The maximum drive belt life span is obtained when the drive belt has the proper rotation direction. Install it so that the arrow printed on belt is pointing towards front of the vehicle, viewed from top.

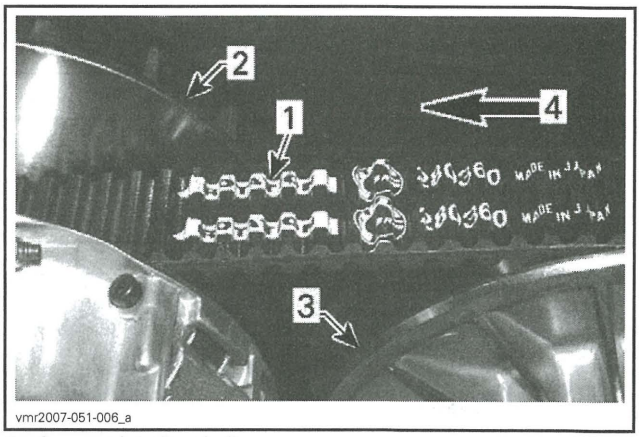

vmr2007-051-006_a

1. Arrow printed on belt
2. Drive pulley (front)
3. Driven pulley (rear)
4. Rotation direction

DRIVE PULLEY

Drive Pulley Removal

1. Remove *DRIVE BELT*, see procedure in this subsection.
2. Prior to removing the drive pulley, mark sliding sheave and governor cup to ensure correct indexation at reinstallation.

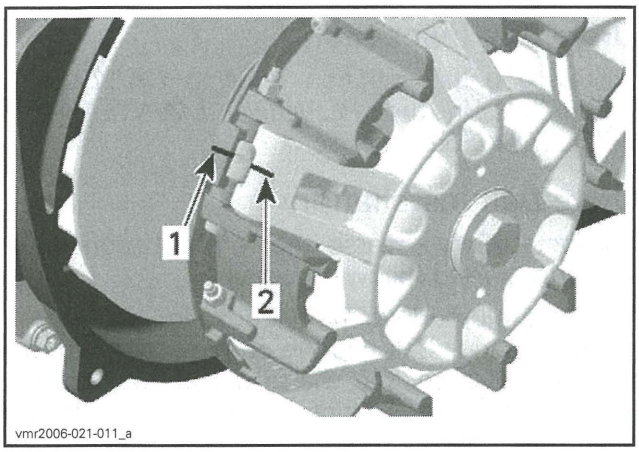

1. Mark on drive pulley sliding sheave
2. Mark on governor cup

3. Lock the drive pulley.

REQUIRED TOOL	
CLUTCH HOLDER (P/N 529 036 238)	

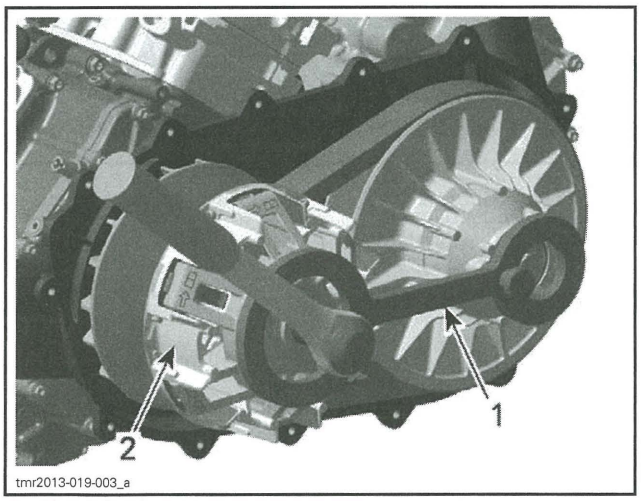

1. Clutch holder
2. Drive pulley sliding sheave

4. Loosen the drive pulley screw.

NOTICE **Never use any type of impact wrench for drive pulley removal.**

NOTE: Do not unscrew the drive pulley screw completely. If governor cup is stuck, hit it using a soft hammer.

5. Remove service tool.
6. Apply axial pressure with your hand on the sliding sheave and governor cup.
7. Remove drive pulley screw with its conical spring washer and thrust washer.

⚠ CAUTION Sliding sheave of drive pulley is spring loaded.

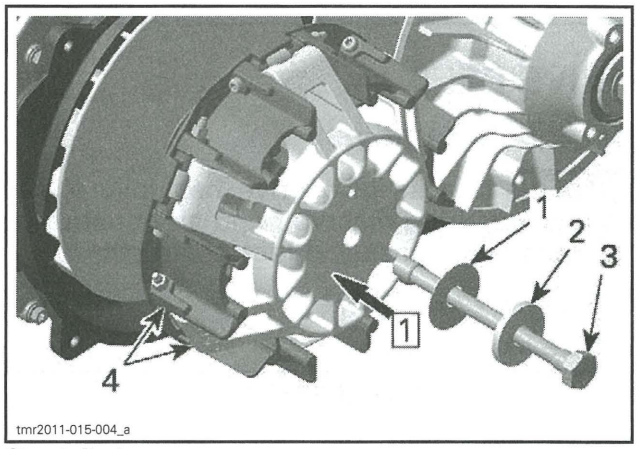

Step 1: Push

1. Thrust washer
2. Conical spring washer
3. Drive pulley screw
4. Sliding sheave with governor cup

8. Slowly release and remove sliding sheave.

500/650/800R Engine

9. Remove friction washer.

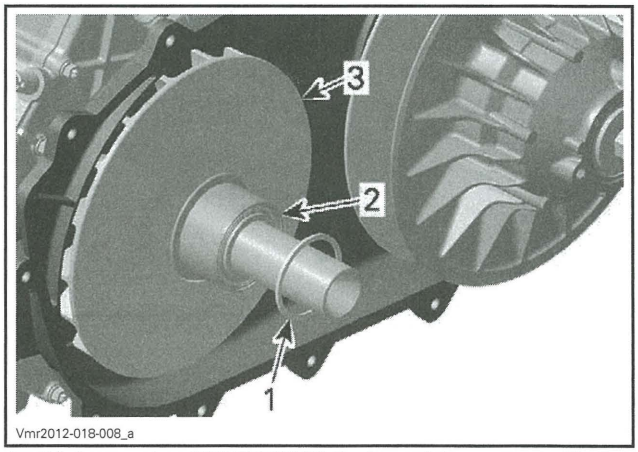

1. Friction washer (500/650/800R Engine only)
2. One way clutch
3. Drive pulley fixed sheave

All Engines

10. Screw clutch puller in fixed sheave to remove fixed pulley.

NOTICE **Use only recommended tool.**

REQUIRED TOOL	
CLUTCH PULLER (P/N 529 035 746)	

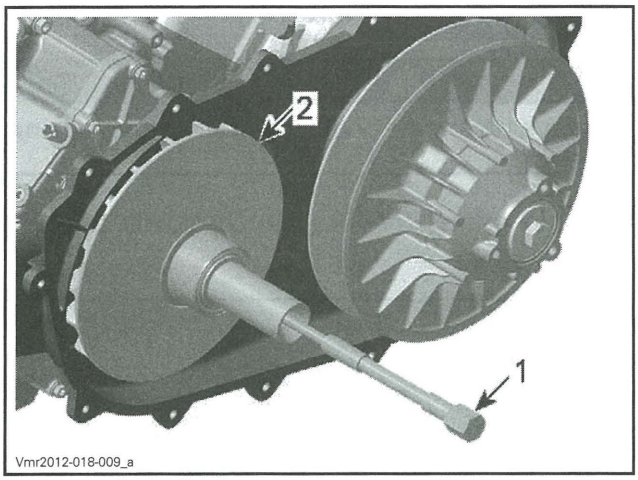

1. *Drive pulley puller*
2. *Fixed sheave*

Drive Pulley Disassembly

Governor Cup

1. Carefully lift governor cup until slider shoes move to their highest position in the guides.

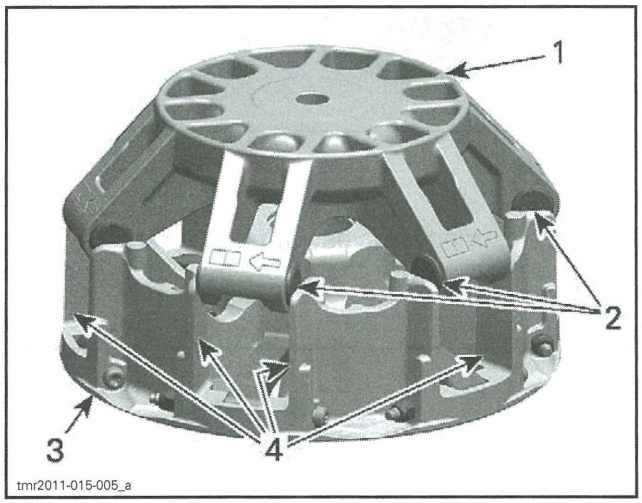

1. *Governor cup*
2. *Slider shoes*
3. *Sliding sheave*
4. *Guides*

NOTE: The following steps are not necessary except if roller must be removed. Refer to *INSPECTION* before proceeding.

2. Remove slider shoes from governor cup arm. Use a flat screwdriver if necessary.

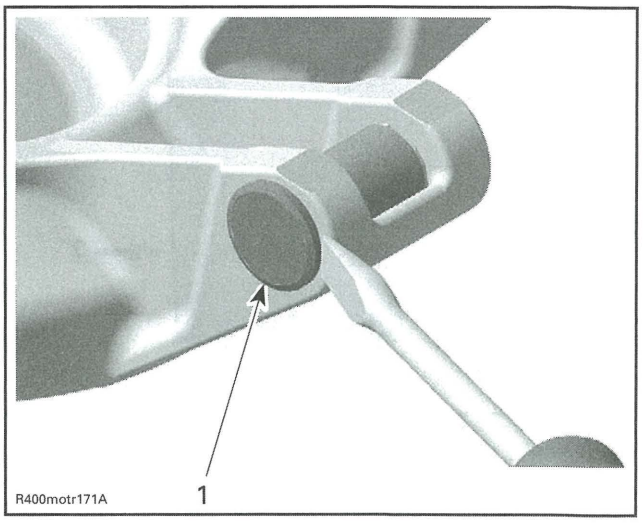

1. *Slider shoe*

3. Place the governor cup on a vice to push out the roller sleeve in the direction illustrated (against insertion arrow marked on governor cup arm). Use an appropriate punch (diameter of punch must be smaller than the diameter of the sleeve bore in the governor cup arm).

NOTICE Do not clamp the governor cup in the vice to push out roller sleeve. Governor cup will be damaged.

NOTE: Use protection plates to avoid marks and/or damages to the governor cup.

NOTICE Always replace all rollers as a set. Partly worn rollers may cause damage to the CVT system.

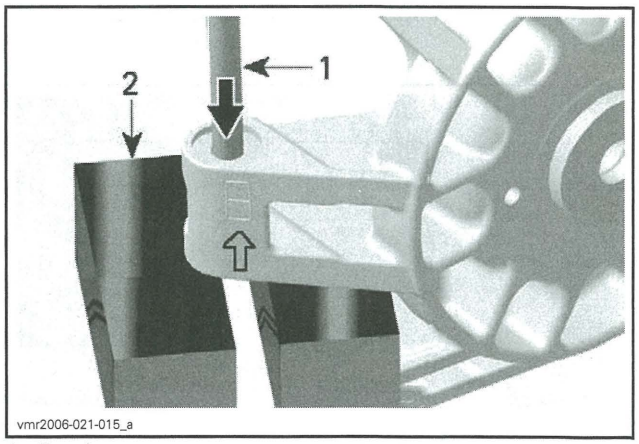

1. *Punch*
2. *Vice*

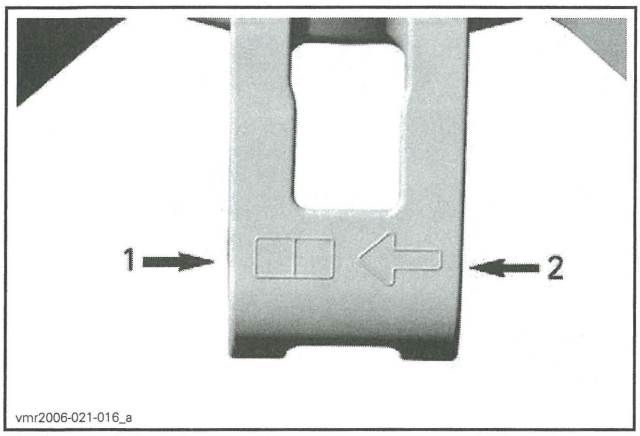

1. Removal direction
2. Assembly direction

NOTE: Whenever removing a governor cup which already has two marked boxes, replace it by a new one.

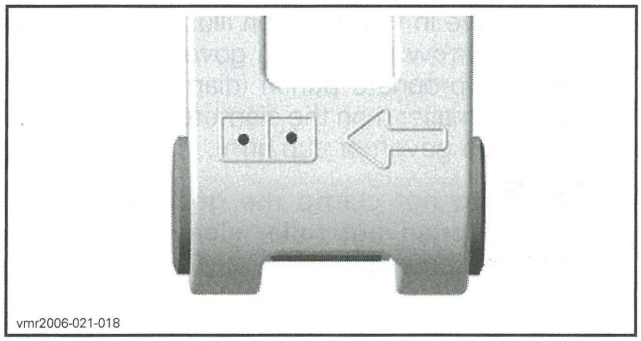

Sliding Sheave

Unscrew lock nut and remove centrifugal lever pivot bolt. This drive pulley is equipped with 6 levers.

Remove centrifugal lever and both thrust washers.

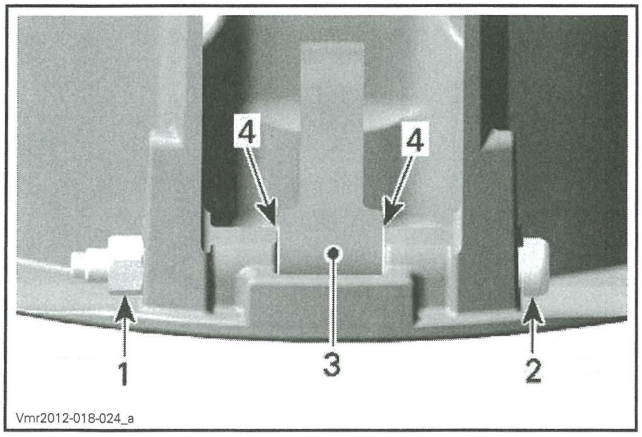

1. Lock nut
2. Centrifugal lever pivot bolt
3. Centrifugal lever
4. Thrust washers

Fixed Sheave

⚠ WARNING

Always wear safety glasses to remove spring sleeves.

Pull and rotate one-way clutch slowly until the spring sleeves are visible.

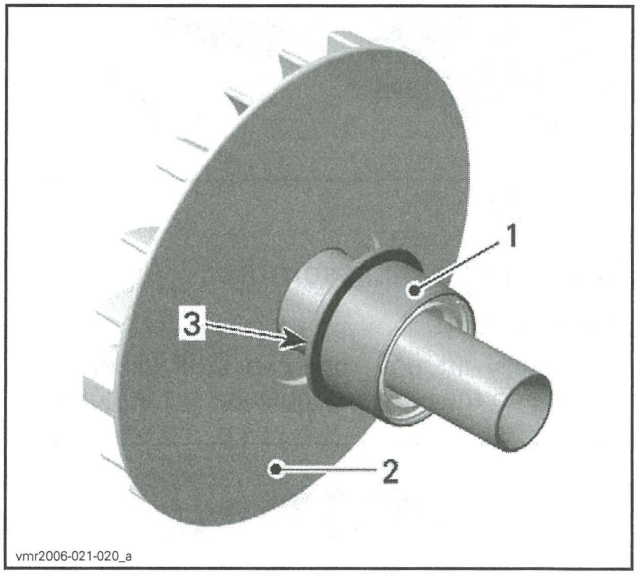

1. One-way clutch
2. Fixed sheave
3. Spring sleeve area

Hold both spring sleeves with fingers and carefully remove them when the one-way clutch is disengaged.

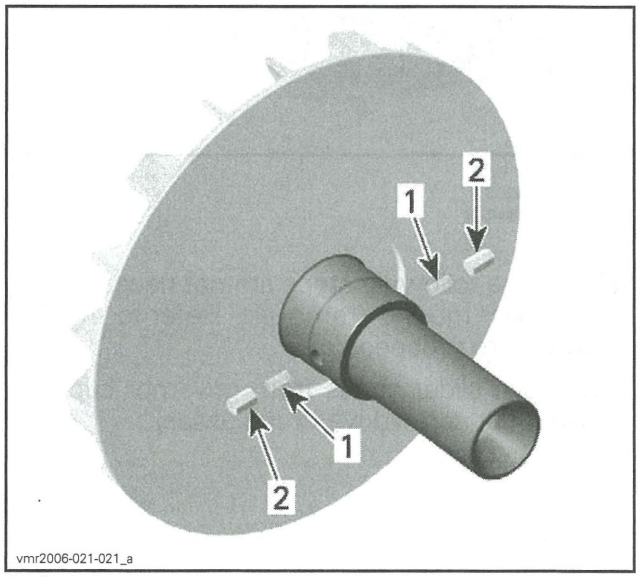

1. Springs
2. Spring sleeves

Drive Pulley Cleaning

Clean pulley faces and shaft with fine steel wool and a dry cloth.

Using a paper towel with the recommended cleaning solvent, clean:
- Crankshaft tapered end
- Taper inside the fixed sheave of the drive pulley
- Crankshaft threads
- Drive pulley screw threads.

REQUIRED PRODUCT
PULLEY FLANGE CLEANER (P/N 413 711 809)

NOTICE **Avoid contact between cleaner and crankshaft seal as damage may occur.**

Remove all hardened oil deposits that have baked on the crankshaft and pulley tapered surfaces using coarse or medium steel wool, and/or sand paper no. 600.

NOTICE **Do not use any other type of abrasive.**

Reclean mounting surfaces with paper towel and PULLEY FLANGE CLEANER (P/N 413 711 809).

Wipe off the mounting surfaces with a clean, dry paper towel.

NOTICE **Mounting surfaces must be free of any oil, cleaner or towel residue.**

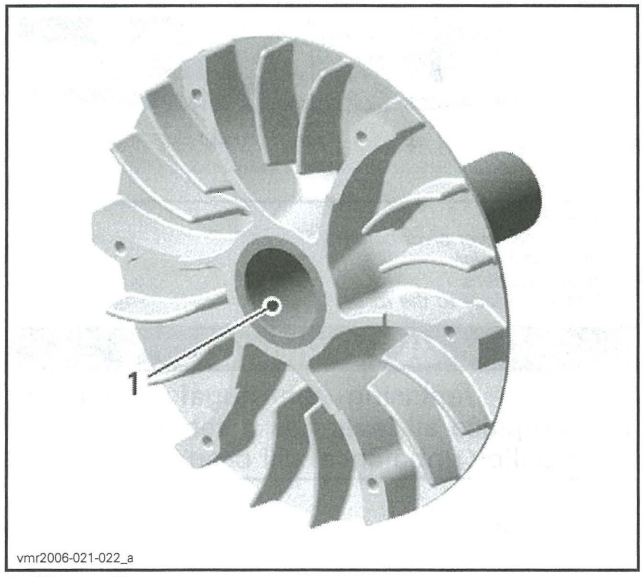

1. Taper of fixed sheave

Only use petrol base cleaner when cleaning sliding sheave bushings.

NOTICE **Do not use acetone to clean bushing.**

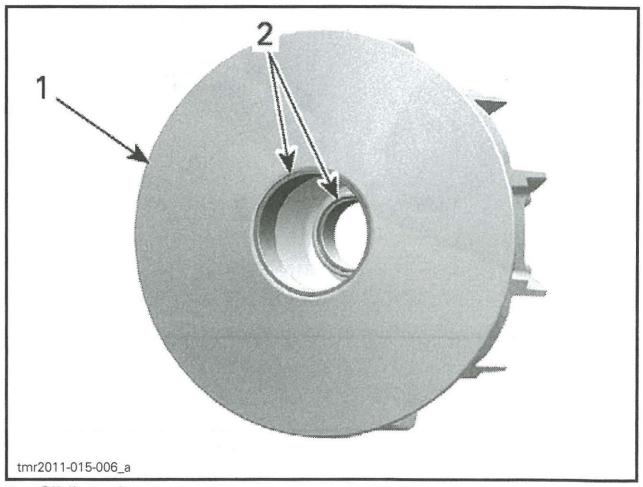

1. Sliding sheave
2. Bushings

Drive Pulley Inspection

Bushings

For bushing inspection, refer to *SLIDING SHEAVE* in this subsection.

Governor Cup

Check governor cup for cracks or other visible damage. Replace if necessary.

Roller and Slider Shoe

Check each roller for roundness of external diameter.

Check if rollers move freely.

NOTICE **Whenever replacing rollers and slider shoes, always replace all rollers and slider shoes as a set.**

Check slider shoes for visible wear and replace if damaged.

NOTE: If necessary, use a screwdriver to remove slider shoes.

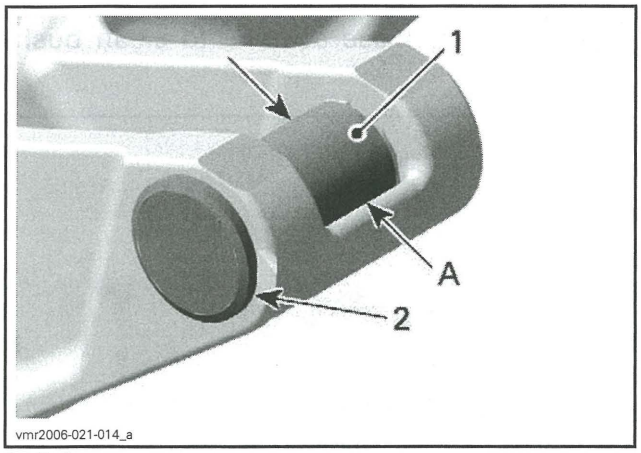

1. Roller
2. Slider shoe
A. Roller outer diameter

ROLLER OUTER DIAMETER	
NEW	13.70 mm to 13.80 mm (.539 in to .543 in)
SERVICE LIMIT	13.20 mm (.519 in)
ROLLER INNER DIAMETER	
NEW	8.05 to 8.15 mm (.317 to .321 in)
SERVICE LIMIT	9 mm (.354 in)

Centrifugal Lever Pivot Bolt

Measure diameter of centrifugal lever pivot bolt; replace if out of specification.

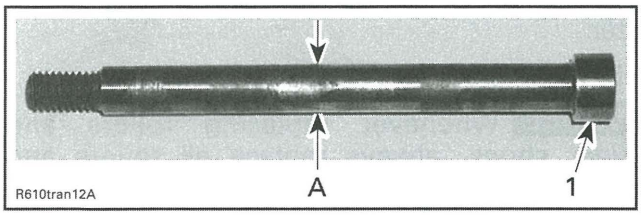

1. Centrifugal lever pivot bolt
A. Measure diameter here

CENTRIFUGAL LEVER PIVOT BOLT DIAMETER	
NEW	6.078 mm to 6.100 mm (.239 in to .24 in)
SERVICE LIMIT	6.00 mm (.236 in)

Centrifugal Lever

Check bushing diameter in the centrifugal lever for wear. Replace centrifugal lever if necessary.

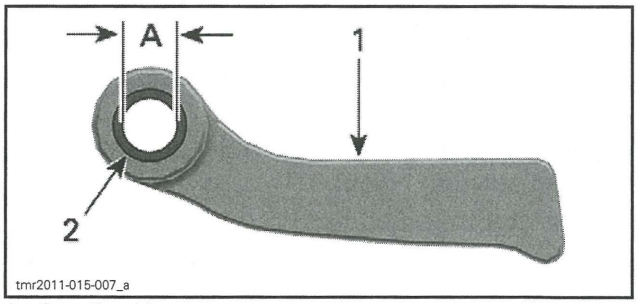

1. Centrifugal lever
2. Bushing
A. Bushing inner diameter

CENTRIFUGAL LEVER BORE DIAMETER	
NEW	6.035 mm to 6.078 mm (.238 in to .239 in)
SERVICE LIMIT	6.200 mm (.244 in)

Inspect and replace as necessary the following items if their contact surfaces are heavy worn:
- Centrifugal lever
- Thrust washers
- Centrifugal lever pivot bolts
- Lock nuts.

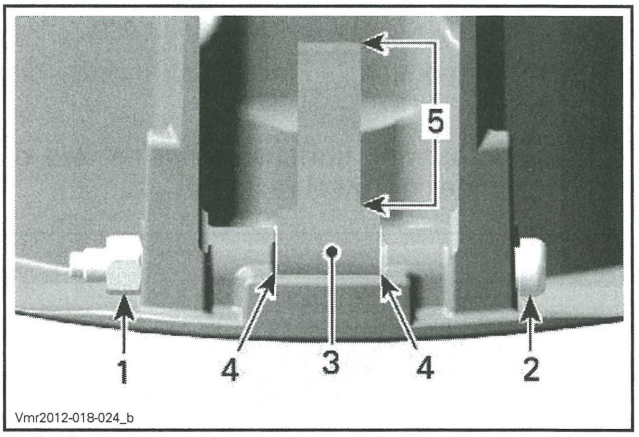

1. Lock nut
2. Centrifugal lever pivot bolt
3. Centrifugal lever
4. Thrust washers
5. Contact surface to the roller

⚠ WARNING

Whenever replacing centrifugal levers, always replace all levers as a set. Otherwise, drive pulley unbalance will occur.

Sliding Sheave

Check sliding sheave for cracks and sliding contact surface for excessive wear. Replace sliding sheave if necessary.

Measure centrifugal lever pivot bolt bores. Replace sliding sheave if bores are out of specification or otherwise damaged.

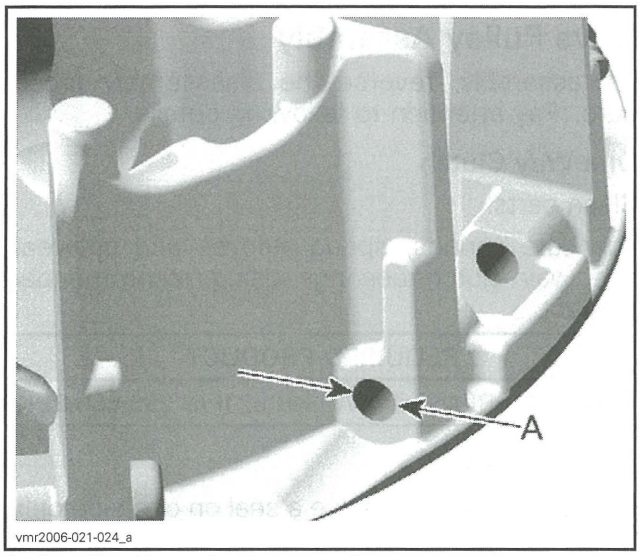

A. Centrifugal lever pivot bolt bore diameter

CENTRIFUGAL LEVER PIVOT BOLT BORE DIAMETER	
NEW	6.113 mm to 6.171 mm (.241 in to .243 in)
SERVICE LIMIT	6.300 mm (.248 in)

Measure bushing diameters of sliding sheave.

REQUIRED TOOL
Dial bore gauge

MEASURING POINT
At least 5 mm (1/4 in) from bushing edge

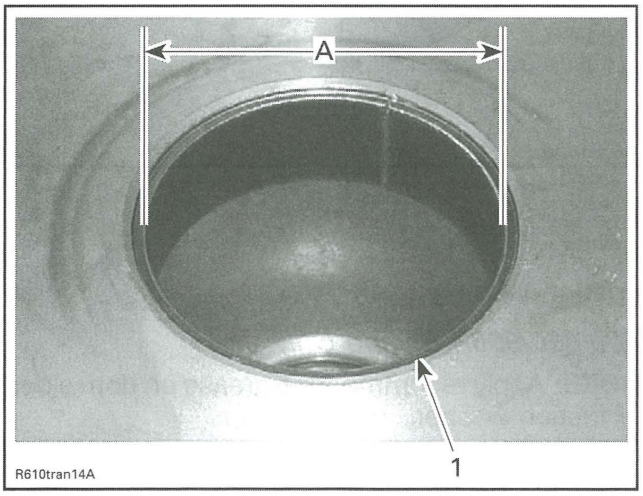

1. Bushing on fixed sheave side
A. Bore diameter of bushing

SLIDING SHEAVE LARGE BUSHING	
NEW	55.000 mm to 55.040 mm (2.165 in to 2.167 in)
SERVICE LIMIT	55.200 mm (2.173 in)

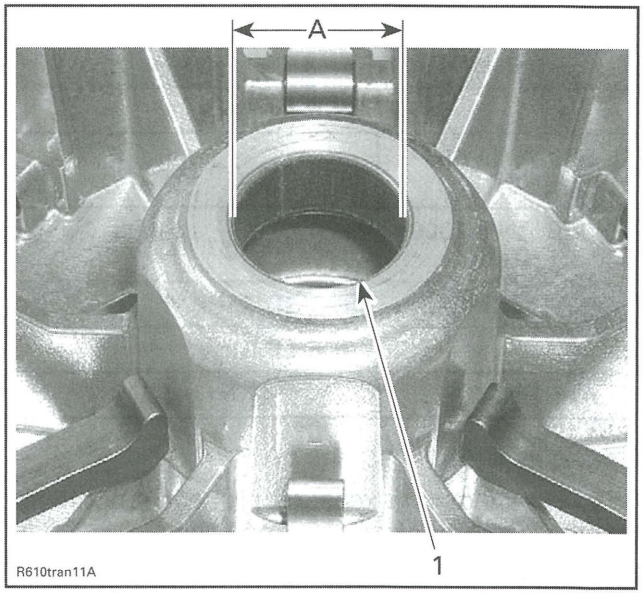

1. Bushing on governor cup side
A. Bore diameter of bushing

SLIDING SHEAVE SMALL BUSHING	
NEW	32.000 mm to 32.040 mm (1.26 in to 1.261 in)
SERVICE LIMIT	32.200 mm (1.268 in)

Replace sliding sheave if one of the bushings is out of specification. Visually inspect coatings for wear.

Fixed Sheave

Check fixed sheave contact surface to the governor cup for scratches or other damages. If damaged, replace fixed sheave.

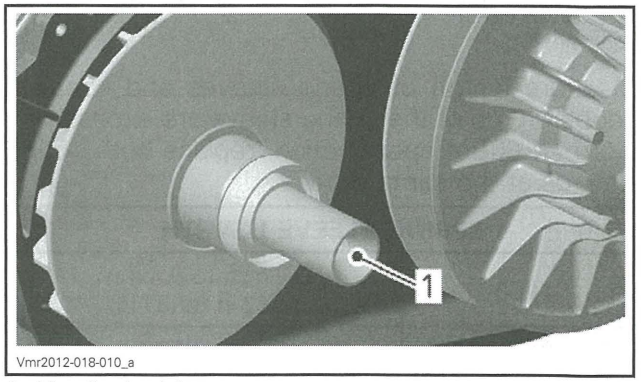

1. Visually check here

Check for any marks on fixed sheave plate. Replace if necessary.

Spring

Measure spring free length and squareness. If spring is out of specification, replace by a new one.

CLUTCH SPRING FREE LENGTH	
SERVICE LIMIT	
500 AND 650 ENGINE	85 mm (3.346 in)
800R AND 1000 ENGINE	105 mm (4.134 in)
CLUTCH SPRING SQUARENESS	
SERVICE LIMIT	
ALL ENGINES	4 mm (.157 in)

One-Way Clutch

Check bearings for excessive play and smooth operation. Replace bearings if necessary.

NOTICE Be careful not to damage the inside of one-way clutch during bearing removal.

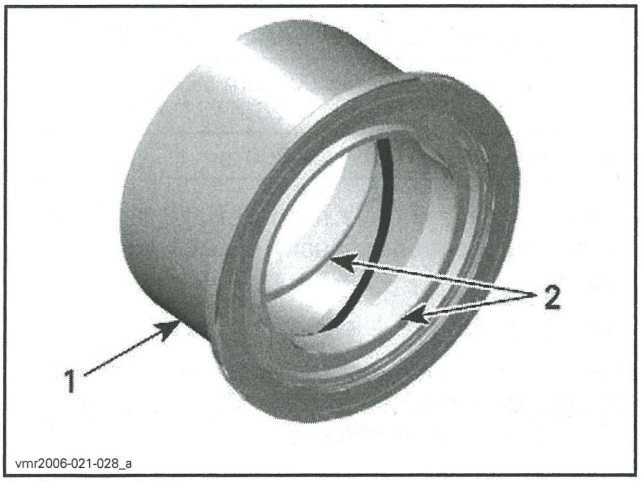

1. One-way clutch
2. Bearings

Measure length of spring sleeves and check if edges on top of the spring sleeve are excessively worn. If out of specification, replace both spring sleeves at the same time.

SPRING SLEEVE LENGTH	
NEW	9.2 mm to 9.4 mm (.362 in to .37 in)
SERVICE LIMIT	9 mm (.354 in)

Drive Pulley Assembly

For assembly, reverse the disassembly procedure. Pay attention to following details.

One-Way Clutch

Clean parts.

Lubricate springs, spring sleeves and between one way clutch bearings using recommended product.

REQUIRED PRODUCT
ISOFLEX GREASE TOPAS NB 52 (P/N 293 550 021)

1000 Engine

NOTE: Ball bearings have a seal on one side only. Install bearings with the seal towards the outside of the one-way clutch.

NOTE: Apply ISOFLEX GREASE TOPAS NB 52 (P/N 293 550 021) inside ball bearings to ensure adequate lubrication.

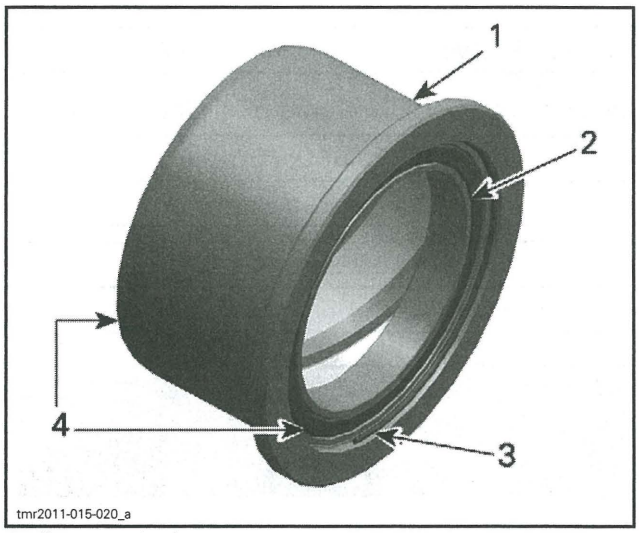

1. One-way clutch
2. Bearing
3. Retaining ring
4. Seal

Friction Washer

500/650/800R Engine Only

NOTE: Apply recommended grease on both sides of friction washer.

REQUIRED PRODUCT
ISOFLEX GREASE TOPAS NB 52 (P/N 293 550 021)

NOTE: Friction washer must be assembled with collar towards one way clutch.

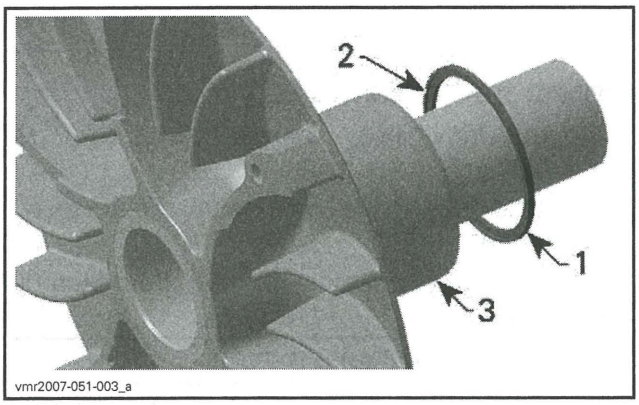

1. *Friction washer*
2. *Collar*
3. *One way clutch*

Sliding Sheave

Install centrifugal levers with their thrust washers.

NOTICE Centrifugal levers must move easily after installation.

Governor Cup

Rebuild governor cup with new roller sleeves, rollers and slider shoes.

NOTICE Final position of roller sleeves must be flush with the sleeve bore in the governor cup arm (no protrusion).

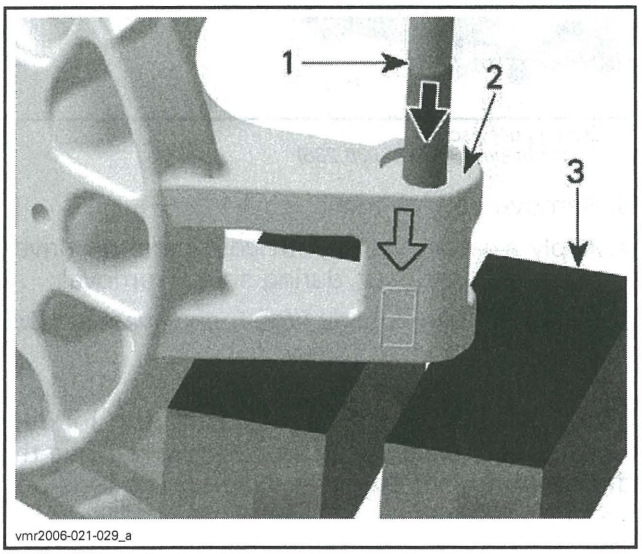

1. *Top edge of roller sleeve*
2. *Mating surface of slider shoes*
3. *Vice*

Whenever replacing the roller sleeves, make a mark in the box on the governor arm using a punch.

NOTICE Do not tap too hard. Severe damage to the governor cup may appear.

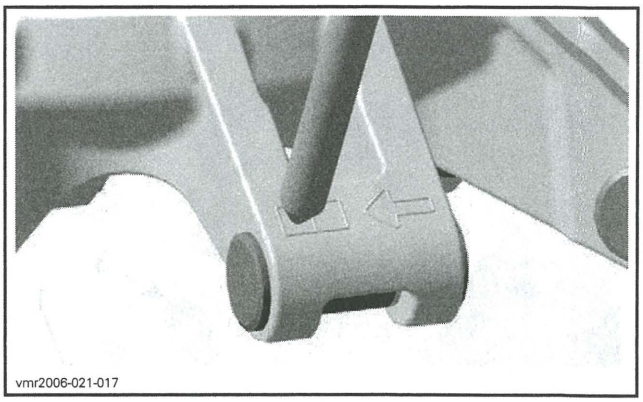

NOTICE Rollers must move easily after installation.

Carefully press slider shoes in the governor cup arm so they **bottom out evenly** in the machined portion of the governor cup arm.

NOTICE Slider shoes must be pressed in evenly to ensure they are centered in the arm and slide properly in the guides.

Drive Pulley Installation

For installation, reverse the removal procedure. Pay attention to the following details.

⚠ WARNING

Do not apply antiseize or any lubricant on crankshaft and drive pulley tapers.

NOTICE Never use any type of impact wrench for drive pulley removal and installation.

Clean mounting surfaces as described in *DRIVE PULLEY CLEANING*.

Install drive pulley on crankshaft extension.

NOTICE Do not forget to install thrust washer and conical spring washer as per illustration that follows.

NOTE: Install conical spring washer with its concave side towards drive pulley.

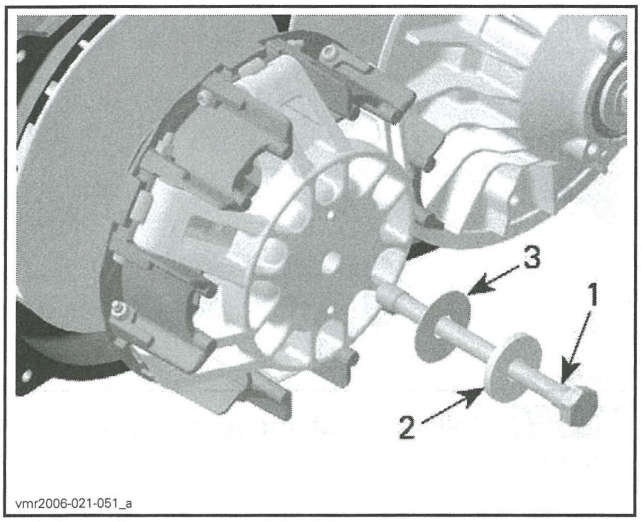

1. *Drive pulley screw*
2. *Conical spring washer*
3. *Thrust washer*

⚠ WARNING

Never substitute conical spring washer and/or screw with aftermarket parts. Always use genuine BRP parts.

Lock the drive pulley as per removal procedure.

Tighten drive pulley screw to specification.

NOTICE **Never use any type of impact wrench for drive pulley installation.**

DRIVE PULLEY SCREW	
Tightening torque	120 N•m ± 8 N•m (89 lbf•ft ± 6 lbf•ft)

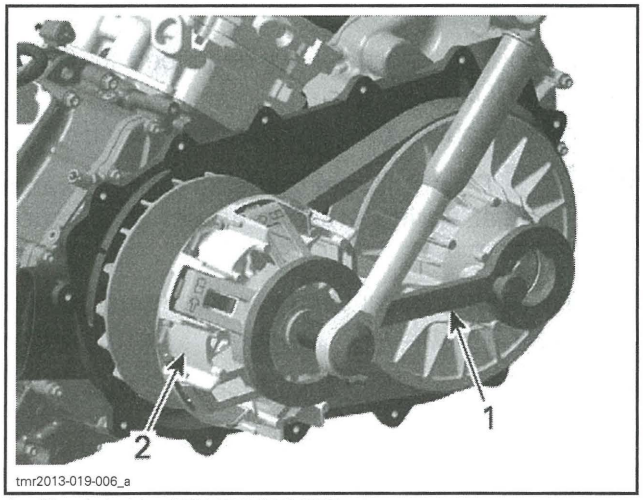

1. *Clutch holder (P/N 529 036 238)*
2. *Drive pulley*

DRIVEN PULLEY

Driven Pulley Removal

1. Remove drive belt, refer to *DRIVE BELT REMOVAL* in this subsection.
2. Hold the driven pulley and loosen the driven pulley screw.

NOTE: Do not completely remove the driven pulley screw.

REQUIRED TOOL	
CLUTCH HOLDER (P/N 529 036 238)	

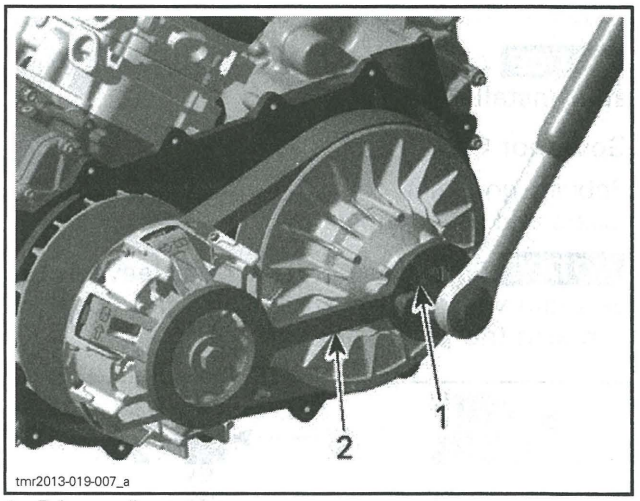

1. *Driven pulley screw*
2. *Clutch holder (P/N 529 036 238)*

3. Remove service tool.
4. Apply axial pressure with your hand on driven pulley and maintain during screw removal.
5. Remove driven pulley screw and washer. Discard driven pulley screw.

⚠ CAUTION Driven pulley is spring loaded. Hold driven pulley tight and slowly remove the driven pulley screw to release spring tension.

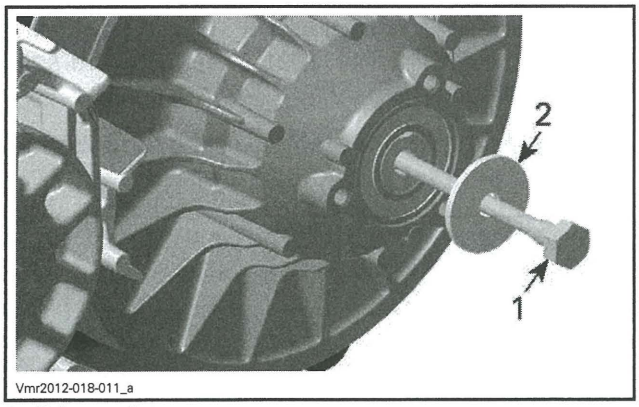

1. *Driven pulley screw*
2. *Thrust washer*

6. Remove the driven pulley with the spring and the cam.

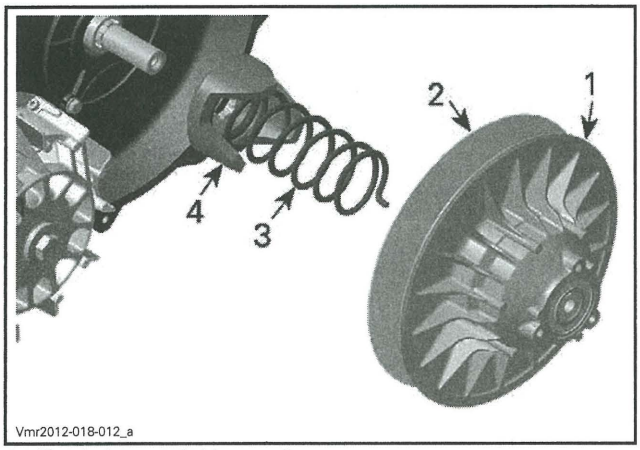

1. *Fixed sheave of driven pulley*
2. *Sliding sheave of driven pulley*
3. *Spring*
4. *Cam*

Driven Pulley Disassembly

Fixed Sheave

1. Remove retaining ring and lift torque gear.

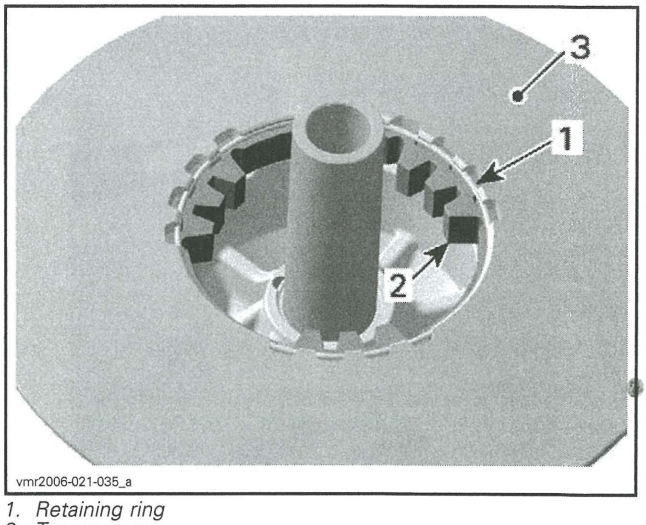

1. *Retaining ring*
2. *Torque gear*
3. *Fixed sheave of driven pulley*

NOTE: The following procedure is not necessary except if ball bearing or shaft must be removed. Refer to *INSPECTION* before proceeding.

2. Heat ball bearing area up to 100°C (212°F) before removing ball bearing.

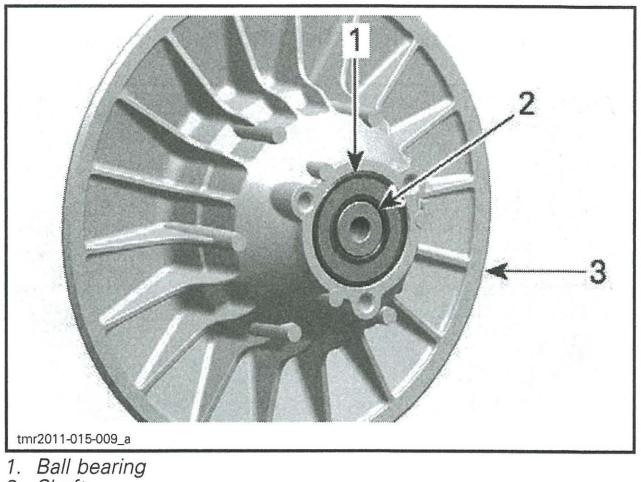

1. *Ball bearing*
2. *Shaft*
3. *Fixed sheave of driven pulley*

3. Use a soft hammer to push shaft and bearing out of fixed sheave.

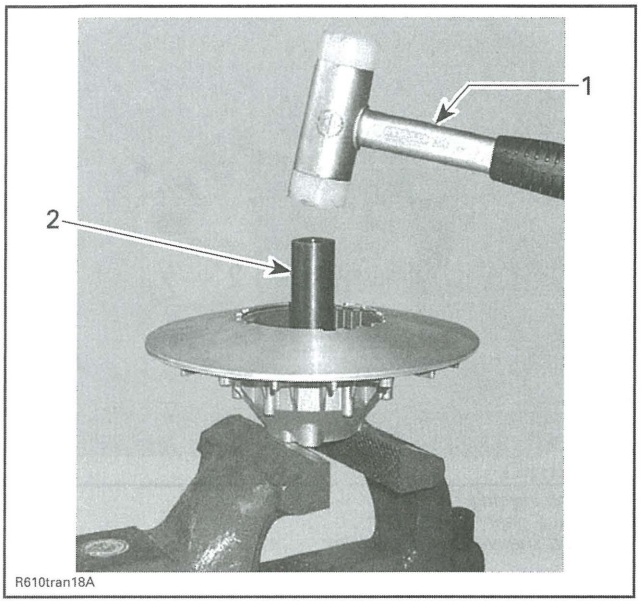

1. Soft hammer
2. Shaft

4. Remove shaft from ball bearing.
5. Remove distance sleeve and O-ring from countershaft.
6. Replace O-ring if brittle, hard or damaged.

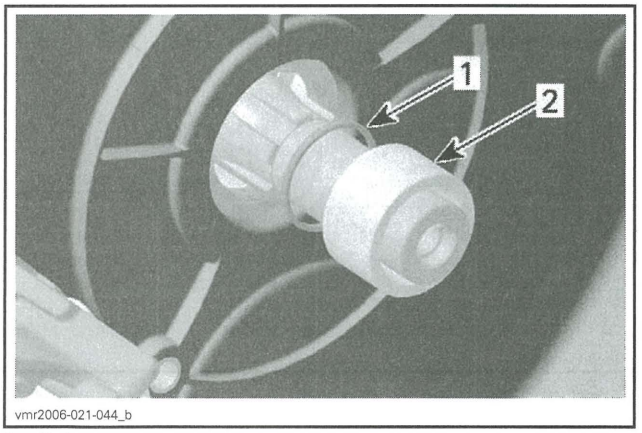

1. O-ring
2. Distance sleeve

Driven Pulley Cleaning

When a dust deposit has to be removed from the cam or the shaft, use a dry cloth.

Clean pulley faces and shaft using fine steel wool and a dry cloth.

Clean driven pulley using the recommended product.

RECOMMENDED PRODUCT
PULLEY FLANGE CLEANER (P/N 413 711 809)

Clean the CVT air guide area from contamination.

Using a paper towel with PULLEY FLANGE CLEANER (P/N 413 711 809), clean countershaft end and shaft bore.

NOTICE To avoid damage, make sure cleaner does not contact the countershaft oil seal.

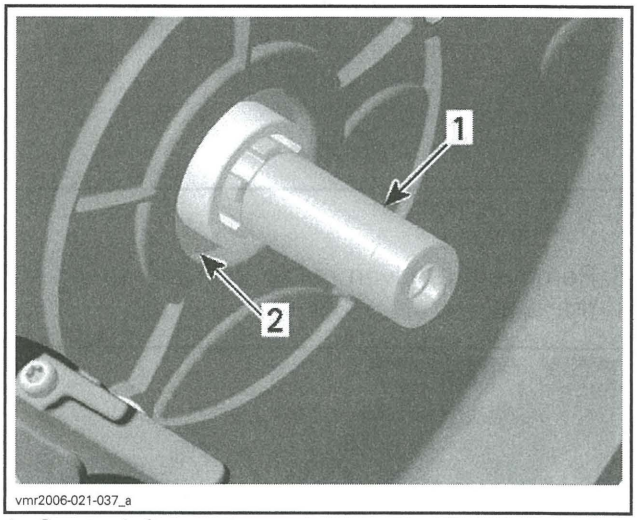

1. Countershaft support
2. Countershaft oil seal

Driven Pulley Inspection

Sliding Sheave

Check sliding sheave for cracks and sliding contact surface for excessive wear. Replace sliding sheave if necessary.

Check bushings for cracks, scratches and for freedom of movement when assembled to sliding sheave.

Measure bushing inner diameter.

NOTE: Bushings cannot be replaced. Replace sliding sheave if bushings are out of specification. Visually inspect coatings.

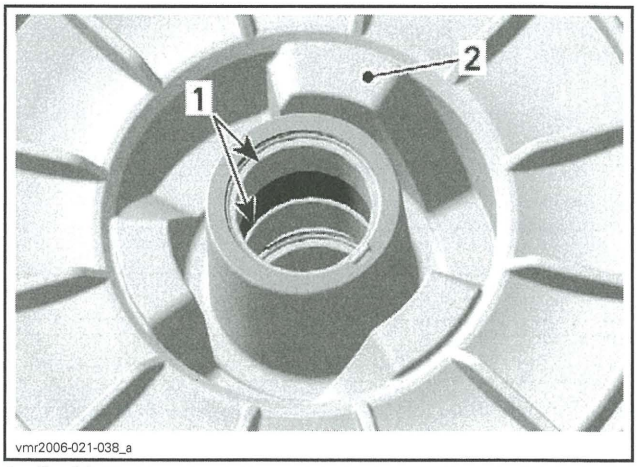

1. Bushings
2. Backside of sliding sheave of driven pulley

REQUIRED TOOL
Dial bore gauge

MEASURING POINT
At least 5 mm (1/4 in) from bushing edge

BUSHING INNER DIAMETER	
NEW	30.060 mm to 30.100 mm (1.183 in to 1.185 in)
SERVICE LIMIT	30.200 mm (1.189 in)

Fixed Sheave

Check fixed sheave for cracks and excessive wear. Replace fixed sheave if necessary.

Check ball bearing for free play and smooth operation. Replace if necessary.

Check shaft for heavy wear or visible damage. Replace if necessary.

If the shaft is removed, measure bushing inner diameter.

NOTE: This bushing cannot be replaced. Replace fixed sheave if bushing is out of specification. Visually inspect coatings.

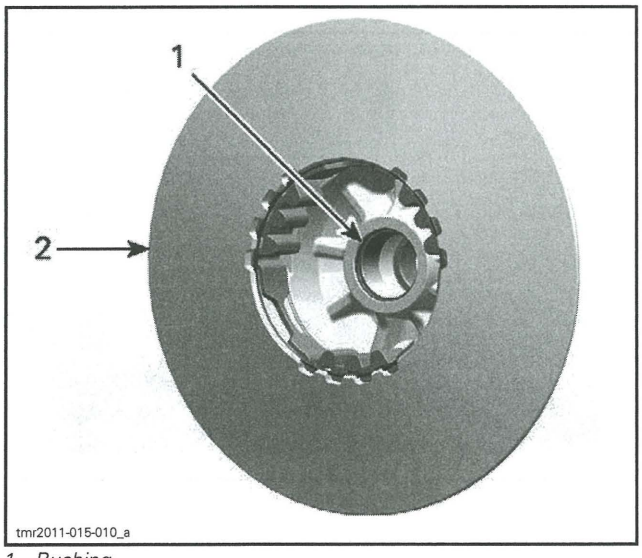

1. Bushing
2. Fixed sheave of driven pulley

REQUIRED TOOL
Dial bore gauge

MEASURING POINT
At least 5 mm (1/4 in) from bushing edge

BUSHING INNER DIAMETER	
NEW	30.060 mm to 30.100 mm (1.183 in to 1.185 in)
SERVICE LIMIT	30.200 mm (1.189 in)

Check torque gear for visible damage and cracks.

Measure for wear limit using a caliper.

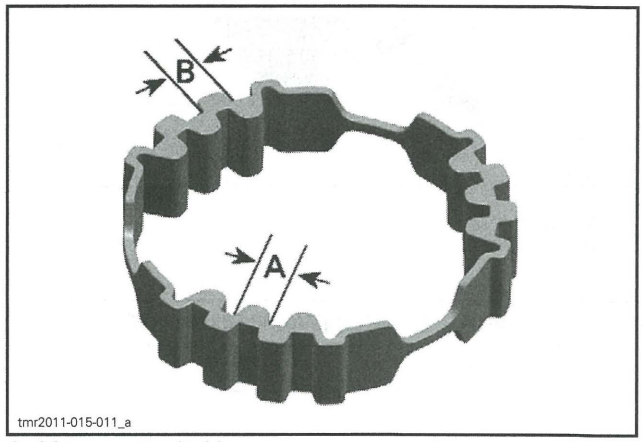

A. Measurement inside
B. Measurement outside

WEAR ON TEETH (BOTH SIDES)	
SERVICE LIMIT	7.500 mm (.295 in)

Cam

Check cam for visible damage and measure for wear using a caliper.

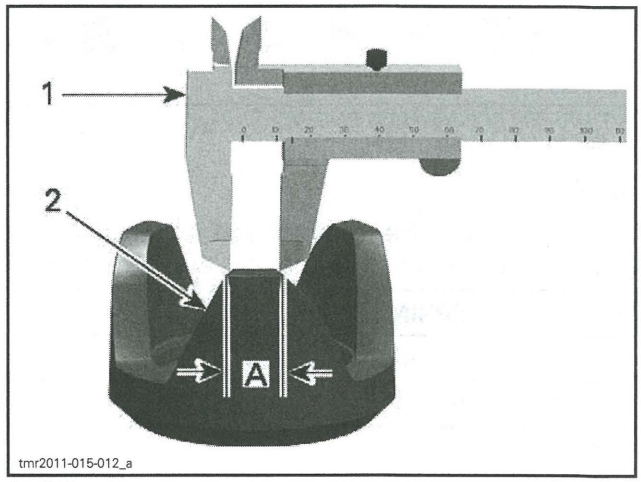

1. Caliper
2. Contact surface
A. Width to be measured due to wear on contact surface

WIDTH ON TOP SURFACE	
SERVICE LIMIT	9.00 mm (.354 in)

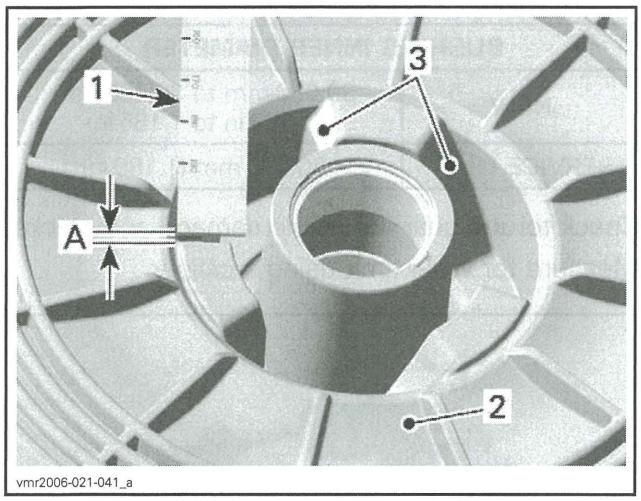

1. Caliper
2. Sliding sheave
3. Contact surface
A. Wear to be measured

WEAR ON CONTACT SURFACE	
SERVICE LIMIT	1.00 mm (.039 in)

Spring

1000 Engine

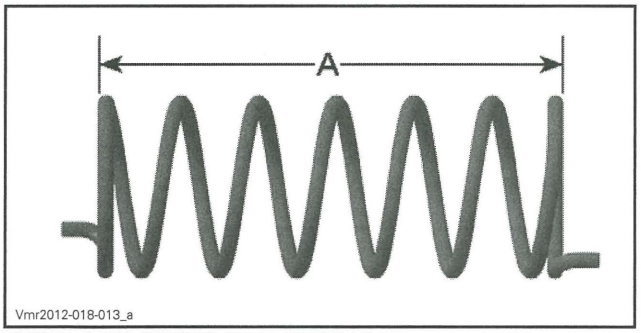

CVT DRIVEN SPRING (1000 ENGINE)
A. Spring free length

All Engines

Measure spring free length and squareness. If spring is out of specification, replace by a new.

SPRING FREE LENGTH	
SERVICE LIMIT	
500 ENGINE	190 mm (7.48 in)
650, 800R AND 1000 ENGINE	125 mm (4.921 in)
CLUTCH SPRING SQUARENESS	
SERVICE LIMIT	
ALL ENGINES	3.8 mm (.15 in)

Driven Pulley Assembly

For installation, reverse the removal procedure. Pay attention to following details.

Heat ball bearing area up to 100°C (212°F) before ball bearing installation.

NOTE: Place new ball bearing in a freezer for 10 minutes before installation.

Install ball bearing with the writing on top and press it in using only the outer race.

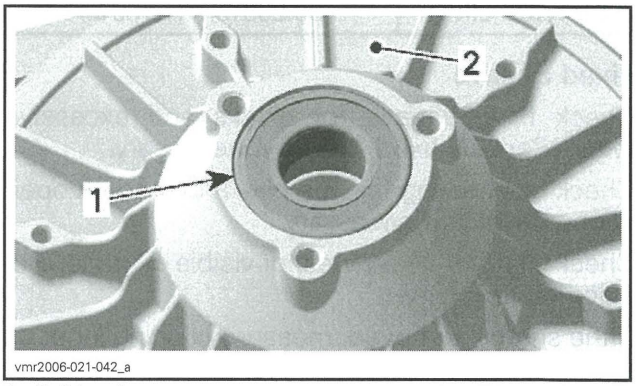

1. Ball bearing
2. Fixed sheave of driven pulley

NOTICE Do not use a hammer, bearing must be pressed in only.

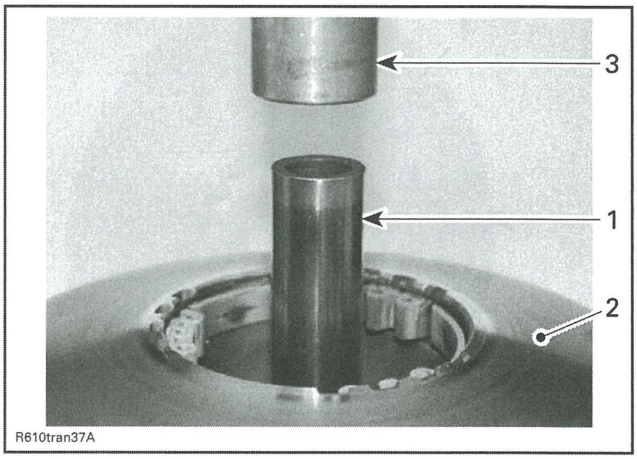

1. Shaft
2. Fixed sheave
3. Press machine

Install torque gear then secure it with the retaining ring.

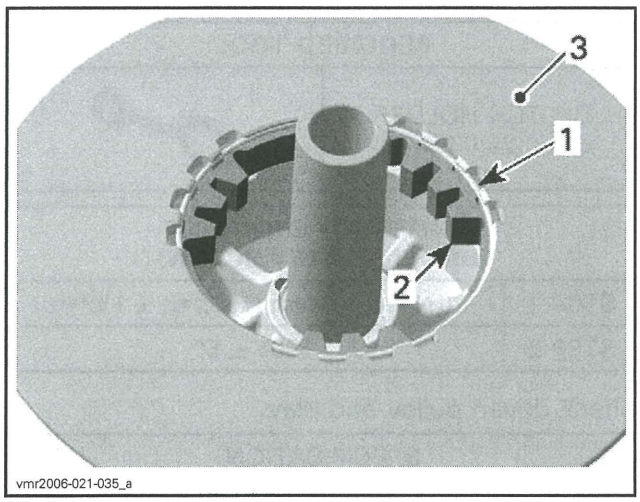

1. *Retaining ring*
2. *Torque gear*
3. *Fixed sheave of driven pulley*

Driven Pulley Installation

For installation, reverse the removal procedure. Pay attention to the following details.

Place O-ring on countershaft splines and move it and the distance sleeve into position.

NOTICE **Chamfer on inside diameter of the distance sleeve must face to gearbox side.**

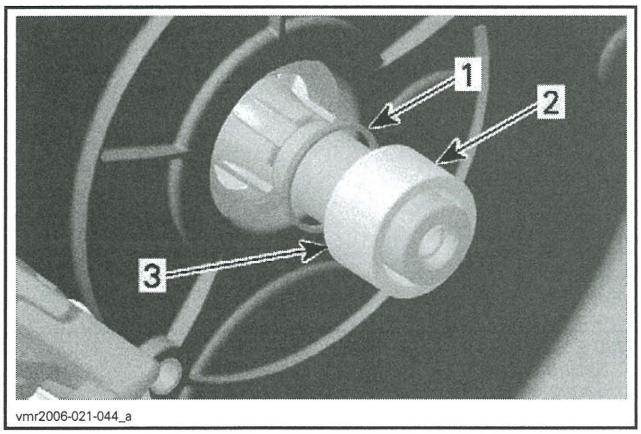

1. *O-ring*
2. *Distance sleeve*
3. *Chamfered area of distance sleeve*

NOTICE **Threads of gearbox countershaft and driven pulley screw must be free of oil and grease. Lubricants in threads will create too high preload to tightened driven pulley screw.**

Clean threads using PULLEY FLANGE CLEANER (P/N 413 711 809).

500/650/800R Engine

Install cam on countershaft.

NOTICE **Cam splines must engage on countershaft splines.**

REQUIRED PRODUCT	
Countershaft splines and countershaft end	LOCTITE 767 (ANTISEIZE LUBRICANT) (P/N 293 800 070)

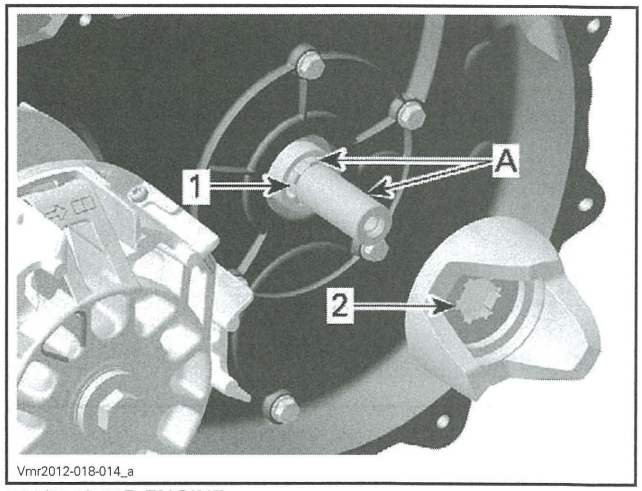

500/650/800R ENGINE
1. *Countershaft splines*
2. *Cam splines*

A. Loctite 767 here

Insert sliding sheave in fixed sheave.

Place spring behind sliding sheave then align driven pulley with cam.

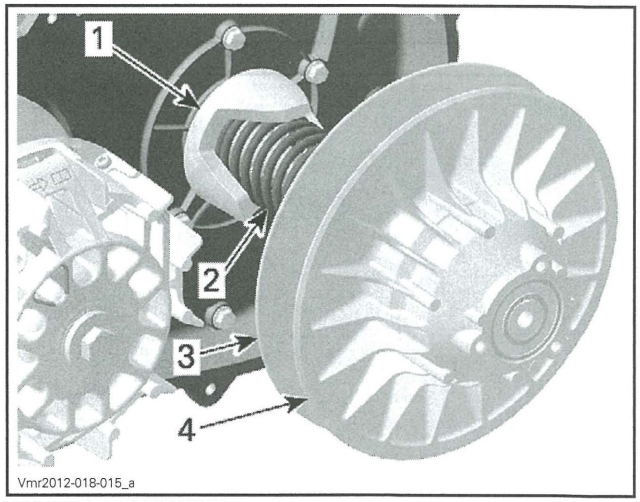

500/650/800R ENGINE
1. *Cam*
2. *Spring*
3. *Sliding sheave*
4. *Fixed sheave*

With your hand, push the driven pulley onto the shaft to compress the spring.

NOTICE **A cam not correctly engaged will cause damage to the driven pulley and cam.**

As you hold the pulley compressed, install a **NEW** driven pulley screw and thrust washer.

NOTICE This assembly uses a stretch screw. Always install a NEW screw.

NOTE: Tighten the screw with your hand sufficiently for the cam to remain engaged.

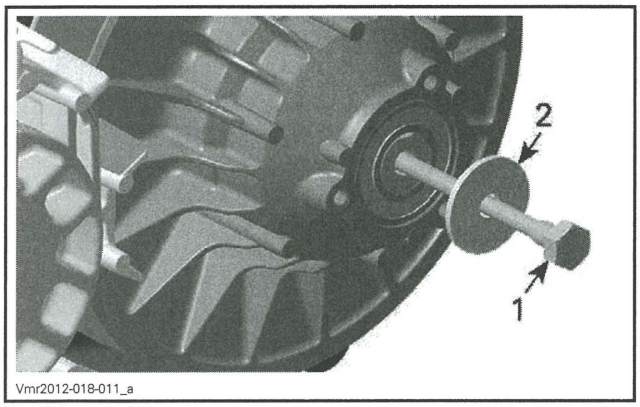

1. Driven pulley screw
2. Thrust washer

Install drive belt. Refer to *DRIVE BELT* in this subsection.

REQUIRED TOOL	
PULLER/LOCKING TOOL (P/N 529 036 098)	

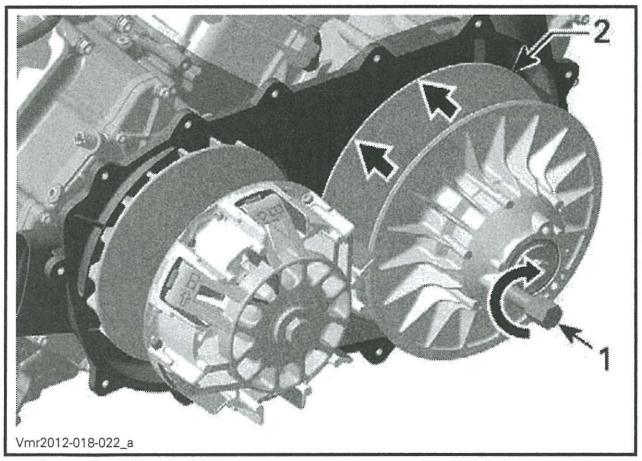

1. Puller/locking tool
2. Sliding sheave

NOTE: If driven pulley sheaves cannot be opened when the service tool is screwed in, the cam is not correctly engaged in the sliding sheave.

Tighten driven pulley screw to specification.

REQUIRED TOOL	
CLUTCH HOLDER (P/N 529 036 238)	

TIGHTENING SEQUENCE (DRIVEN PULLEY SCREW)	
STEP 1	20 N•m ± 1 N•m (15 lbf•ft ± 1 lbf•ft)
STEP 2	180° ± 5°

Check driven pulley end play.

SPECIFICATION	
Driven pulley end play	0 mm (0 in)

1000 Engine

Insert the sliding sheave in the fixed sheave.

Place spring behind sliding sheave and engage spring end in the sliding sheave spring bore.

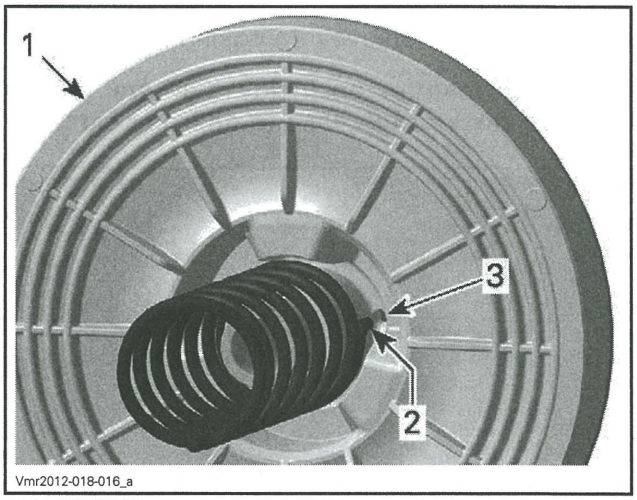

1000 ENGINE
1. Sliding sheave
2. Spring end
3. Spring bore

Place cam on the opposite end of the spring and engage the other spring end in the cam spring bore.

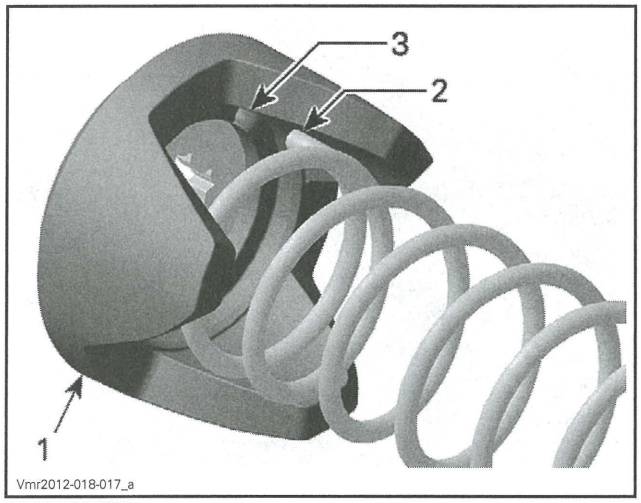

1000 ENGINE
1. *Cam*
2. *Spring end*
3. *Spring bore*

Install pre-assembled cam with spring and driven pulley on countershaft end.

NOTICE **Cam must engage on countershaft splines.**

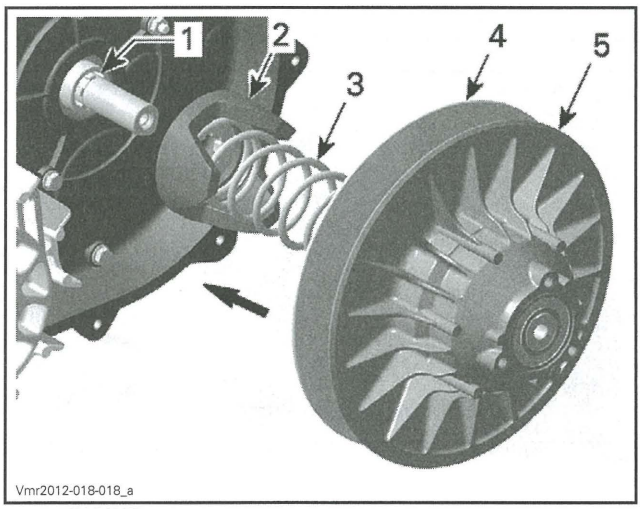

1000 ENGINE
1. *Countershaft splines*
2. *Cam*
3. *Spring*
4. *Sliding sheave*
5. *Fixed sheave*

With your hand, push the driven pulley onto the shaft to compress the spring.

As you hold the pulley in, install a **NEW** driven pulley screw and thrust washer.

NOTICE **This assembly uses a stretch screw. Always install a NEW screw.**

NOTE: Tighten the screw with your hand approximately 3 to 4 turns.

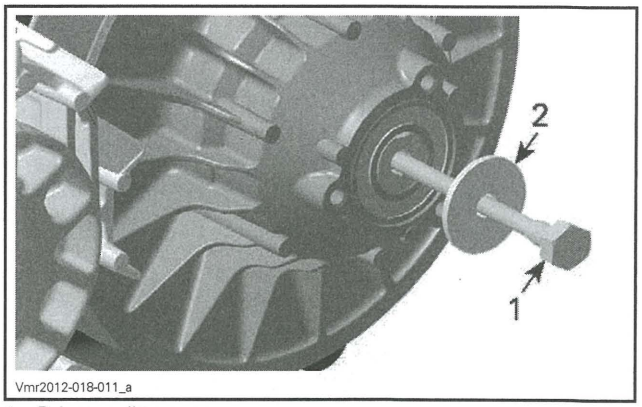

1. *Driven pulley screw*
2. *Thrust washer*

Insert a screwdriver of approximately 5 mm (.197 in) diameter in the cam.

NOTE: For clarity of understanding, some parts not shown in the following illustration.

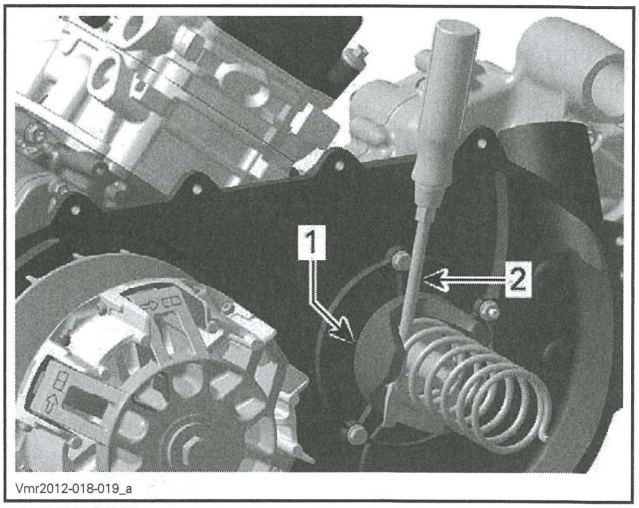

1000 ENGINE
1. *Cam*
2. *Screwdriver, diameter 5 mm (.197 in)*

Hold the driven pulley in a fix position.

REQUIRED TOOL	
CLUTCH HOLDER (P/N 529 036 238)	

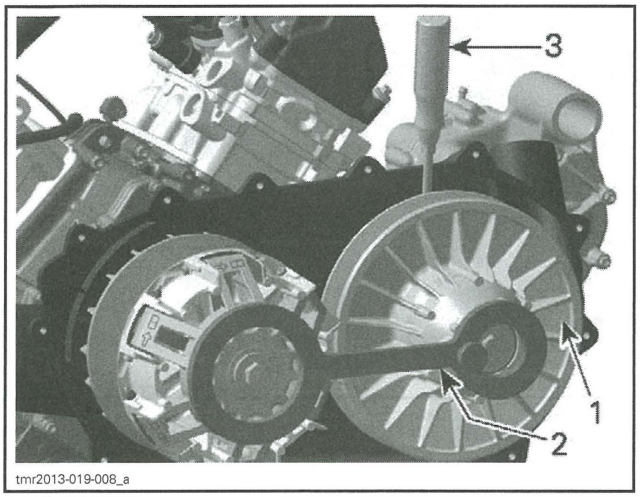

1000 ENGINE
1. *Fixed sheave*
2. *Clutch holder*
3. *Screwdriver*

Turn the screwdriver approximately 20° counterclockwise until cam engages in the driven pulley sliding sheave and hold it in this position (spring preload).

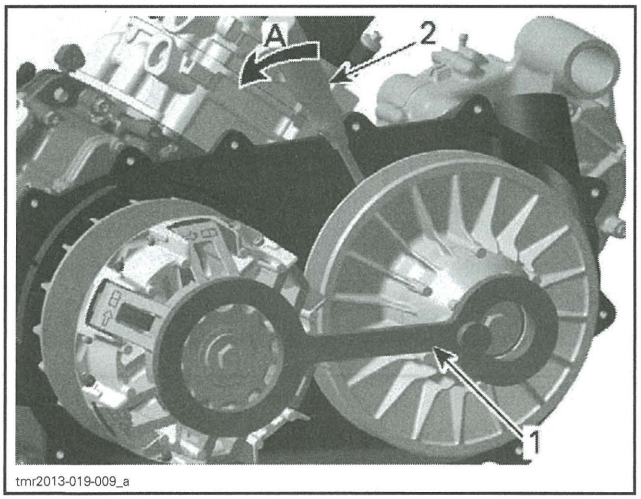

1000 ENGINE
1. *Clutch holder*
2. *Screwdriver*

A. Turn counterclockwise

Using a socket and extension, hand tighten the driven pulley screw.

NOTE: Do not apply specified torque at this time.

Move the screwdriver back and forth to check cam for free movement.

NOTICE **A cam not correctly engaged will cause damage to the driven pulley and cam.**

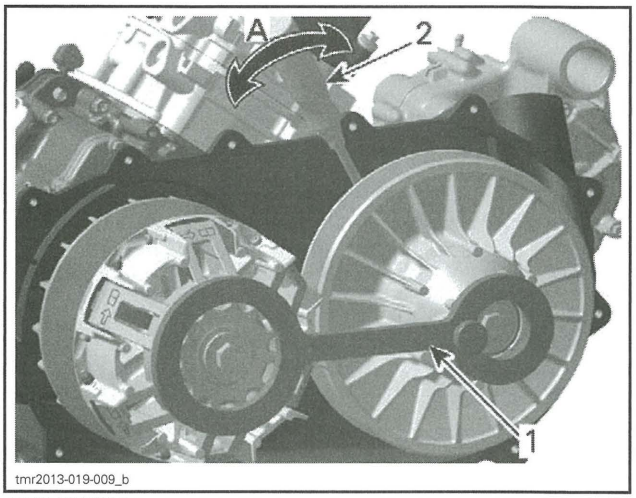

1000 ENGINE
1. *Clutch holder*
2. *Screwdriver*

A. Cam freedom of movement

Install drive belt. Refer to *DRIVE BELT* in this subsection.

REQUIRED TOOL	
PULLER/LOCKING TOOL (P/N 529 036 098)	

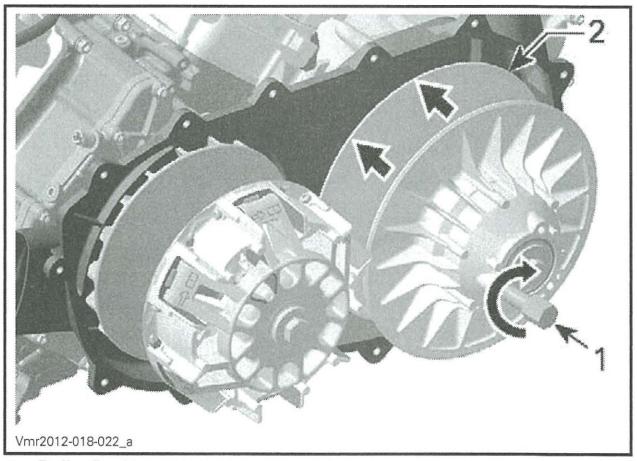

1. *Puller/locking tool*
2. *Sliding sheave*

NOTE: If driven pulley sheaves can to be opened when the service tool is screwed in, the cam is not correctly engaged in the sliding sheave.

Tighten driven pulley screw as specified.

REQUIRED TOOL	
CLUTCH HOLDER (P/N 529 036 238)	

TIGHTENING SEQUENCE (DRIVEN PULLEY SCREW)	
STEP 1	20 N•m ± 1 N•m (15 lbf•ft ± 1 lbf•ft)
STEP 2	180° ± 5°

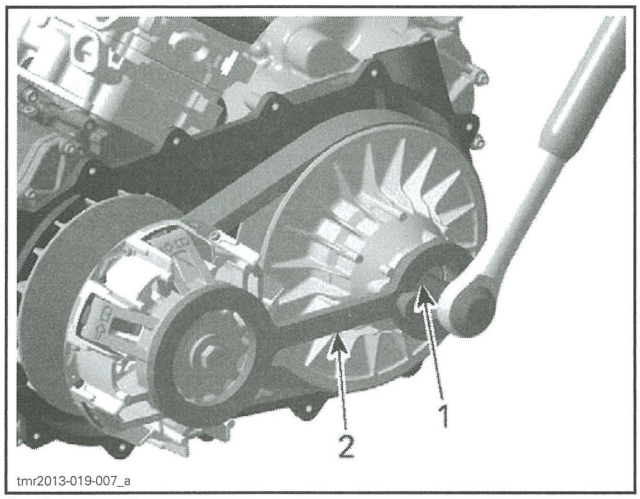

1. Driven pulley screw
2. Clutch holder

Check driven pulley end play.

SPECIFICATION	
Driven pulley end play	0 mm (0 in)

CVT AIR GUIDE

CVT Air Guide Removal

1. Remove the *DRIVE PULLEY* and the *DRIVEN PULLEY*.
2. Unscrew the clamps retaining the CVT air hoses.
3. Remove CVT air guide.

CVT Air Guide Inspection

Clean CVT air guide from contamination

Check O-rings. If brittle, hard or damaged, replace as necessary.

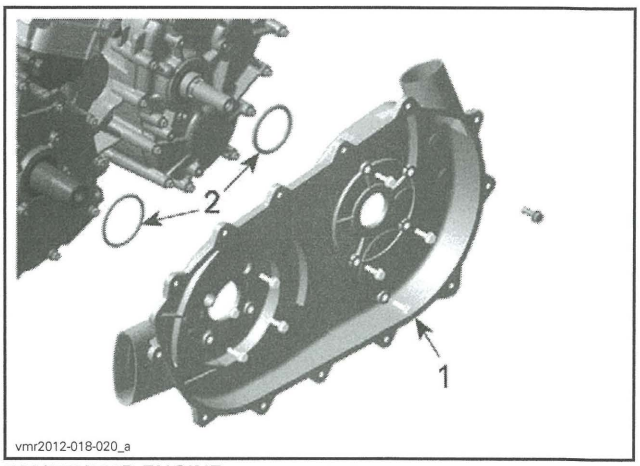

500/650/800R ENGINE
1. CVT air guide
2. O-rings

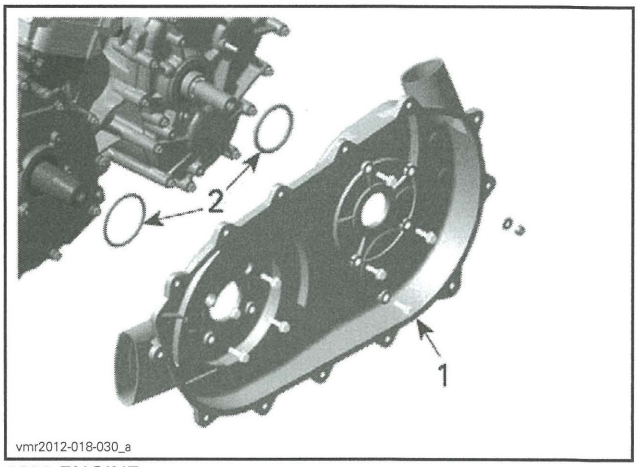

1000 ENGINE
1. CVT air guide
2. O-rings

CVT Air Guide Installation

For installation reverse the removal procedure.

GEARBOX AND 4X4 COUPLING UNIT (500/650/800R)

SERVICE TOOLS

Description	Part Number	Page
BACKLASH MEASUREMENT TOOL	529 036 030	207
BEARING INSTALLER (GEARBOX)	529 035 763	223
BEARING INSTALLER (GEARBOX)	529 035 762	223
BLIND HOLE BEARING PULLER SET	529 036 117	216
COUNTERSHAFT OIL SEAL PUSHER	529 036 222	203
DRIVE SHAFT OIL SEAL INSTALLER	529 036 028	204
FLUKE 115 MULTIMETER	529 035 868	205
HANDLE	420 877 650	204, 223
OIL SEAL INSTALLER (GEARBOX)	529 035 758	204

SERVICE PRODUCTS

Description	Part Number	Page
LOCTITE 5910	293 800 081	201–202, 211–212, 227
LOCTITE CHISEL (GASKET REMOVER)	413 708 500	211, 219, 227
PETAMO GREASE GHY 133N	420 899 271	203
SUPER LUBE GREASE	293 550 030	205, 212

GEARBOX COMPONENTS AND 4X4 COUPLING MECHANISM

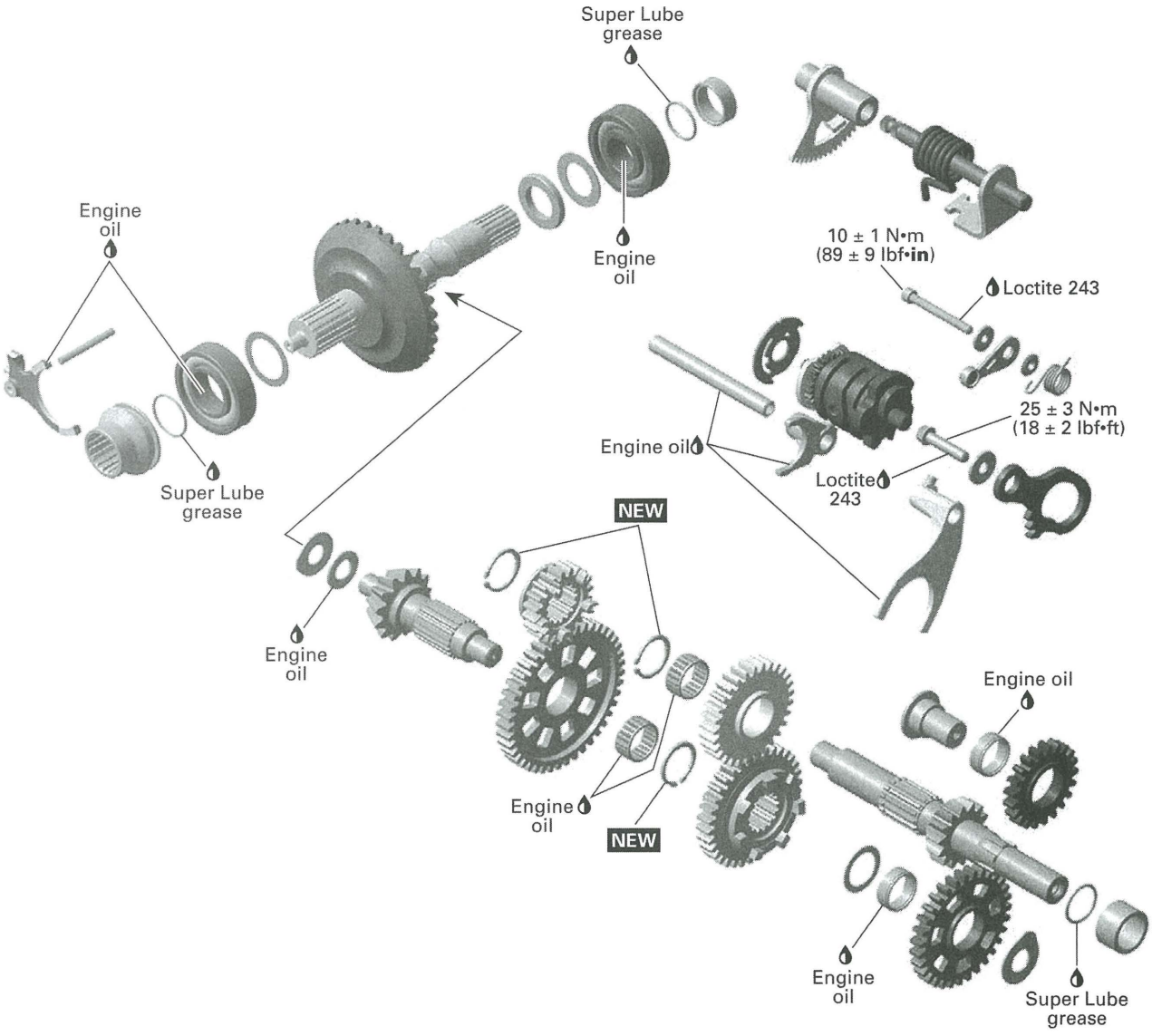

NEW = Component must be replaced when removed.

vmr2012-019-001_a

GEARBOX HOUSING AND 4X4 ACTUATOR UNIT

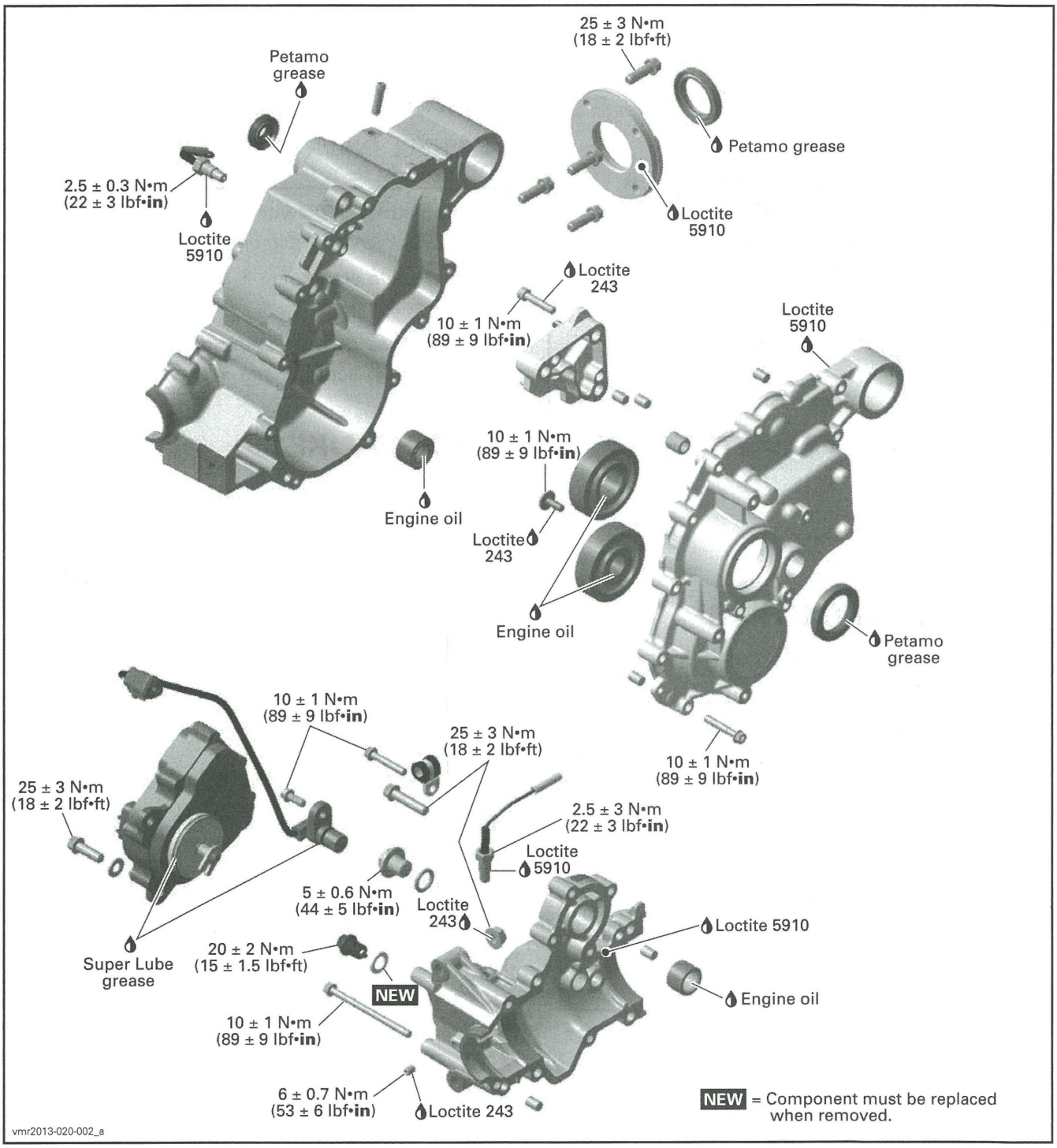

GENERAL

OVERVIEW

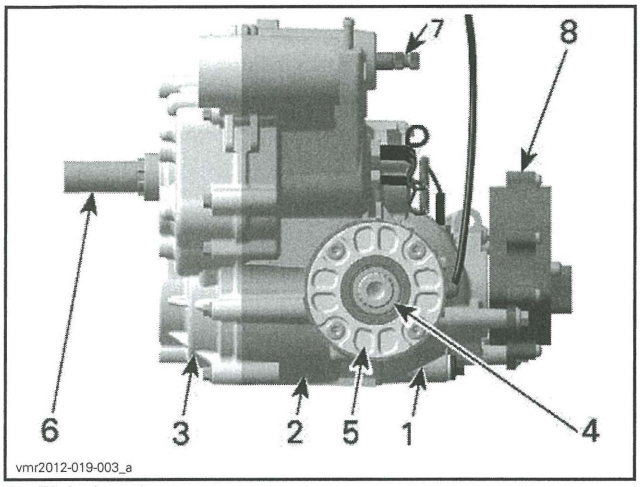

1. *Right housing*
2. *Center housing*
3. *Left housing*
4. *Output shaft*
5. *Bearing cover*
6. *Countershaft*
7. *Shift shaft*
8. *Actuator*

TROUBLESHOOTING

UNUSUAL GEARBOX NOISE AND/OR VIBRATIONS

1. Low oil level in gearbox.
   - *Oil leakage from gearbox. Replace damaged gasket(s) and/or oil seal(s).*
2. Defective bearings.
   - *Bearing(s) do(es) not turn smoothly. Replace bearing(s).*
3. Damaged or worn gears.
   - *Inspect gears for damages or missing teeth. Replace respective gears.*

GEAR INDICATION FAILS

1. Check contact screws on gear housing center.
   - *Contact(s) is (are) corroded and/or connectors to wiring harness got loose.*
   - *Damaged wires. Repair as required.*
   - *Shifting indicator switch(es) pin(s) is (are) worn and/or damaged. Replace shifting indicator switch(es).*

GEAR(S) IS (ARE) HARD TO SHIFT

1. Incorrect shift rod adjustment.
   - *Adjust shift rod (refer to SHIFT ROD in SHIFTER subsection).*

4 WHEEL DRIVE INDICATION FAILS

1. 4WD indicator switch failure.
   - *Test 4WD indicator switch. Replace as required.*
   - *Bad contact. Check for corrosion or loose connector.*
   - *Damaged wires. Repair as required.*

4 WHEEL DRIVE DOES NOT ENGAGE OR DISENGAGE

1. Defective 4WD switch.
   - *Check 4WD switch operation.*
2. Defective actuator.
   - *Test actuator.*
3. Damaged or worn shifting fork or sleeve.
   - *Remove actuator and inspect shifting fork and sleeve.*

PROCEDURES

GEARBOX POSITION INDICATOR SWITCHES

Gearbox Position Indicator Switches Access

To reach the switches, refer to *BODY* and remove the following parts:
- Seat
- Console
- RH side panel
- RH engine panel (Renegade only).

Gearbox Position Indicator Switches Removal

Disconnect indicator switches from engine wiring harness.

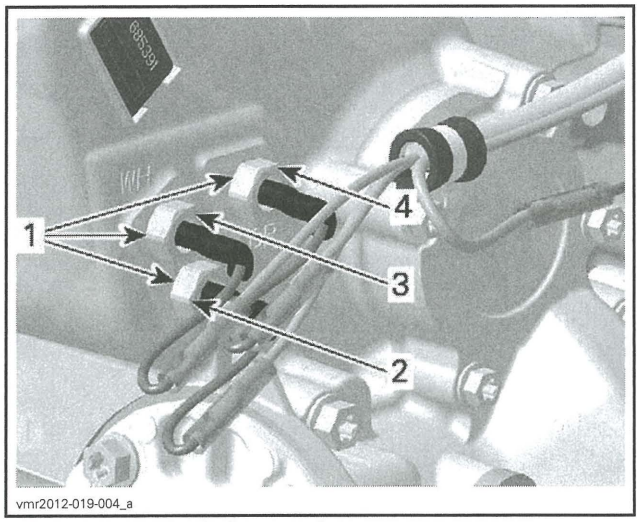

1. *Gearbox position indicator switches*
2. *BROWN/GREY wire*
3. *WHITE/RED wire*
4. *ORANGE/GREY wire*

Unscrew switch.

Gearbox Position Indicator Switches Test

Check if gearbox position indicator switches work properly as per following procedure:

Disconnect wires from switches.

NOTE: Remove insulating paint to obtain correct readings.

Put gearbox in park, reverse, neutral, high and low position.

Use a multimeter to measure the resistance from the indicator switch to engine ground. Compare results with the logic table below.

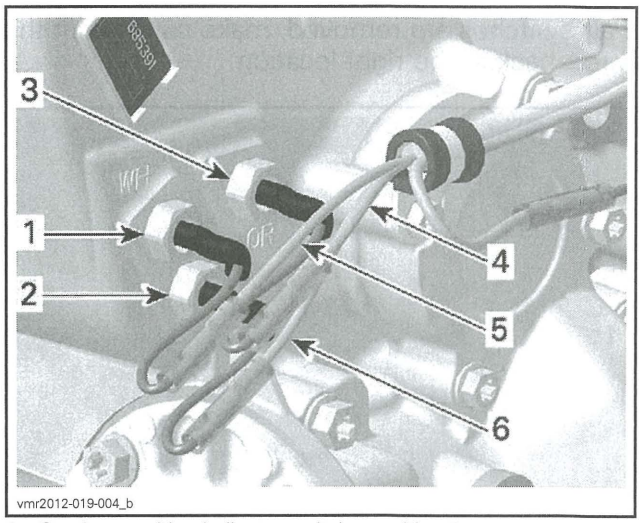

1. *Gearbox position indicator switch - position 1*
2. *Gearbox position indicator switch - position 2*
3. *Gearbox position indicator switch - position 3*
4. *BROWN/GREY wire*
5. *WHITE/RED wire*
6. *ORANGE/GREY wire*

SHIFTER POSITION	CORRESPONDING SWITCH		
	BROWN/ GREY	WHITE/ RED	ORANGE/ GREY
	Position 3	Position 1	Position 2
L	X		X
H			X
N		X	X
R		X	
P	X	X	

An "X" indicates switch is making ground contact, thus there should be continuity (R is close to 0 Ohms).

A blank space indicates switch is not making contact, there should be no continuity (R = infinite).

If the indicator switch is good, check the vehicle harness and/or indicator lights.

Gearbox Position Indicator Switches Installation

For installation, reverse the removal procedure. However, pay attention to the following details.

Take care do not damage shifting indicator switches threads during installation.

Apply carefully some LOCTITE 5910 (P/N 293 800 081) on threads of shifting indicator switches.

NOTICE **Do not apply Loctite 5910 on switch plunger, as it will lead to switch malfunction.**

If all switches are removed, make sure to put the wires back in the right location.

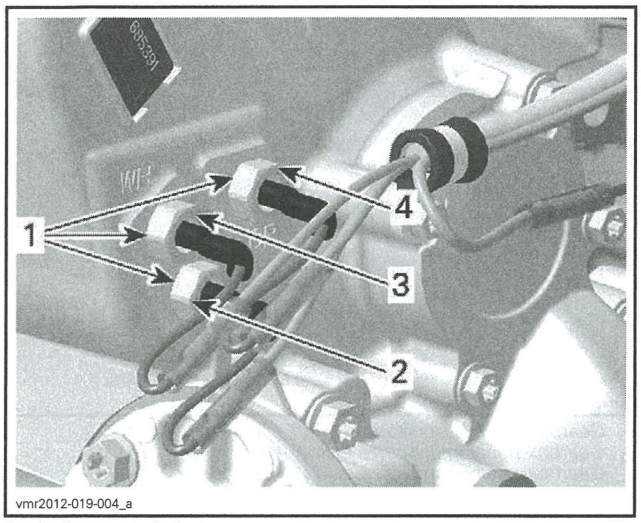

1. Indicator switches
2. BROWN/GREY wire
3. WHITE/RED wire
4. ORANGE/GREY wire

4WD INDICATOR SWITCH

4WD Indicator Switch Access

To reach the 4WD indicator switch, refer to *BODY* and remove the following parts:

- Seat
- Console
- RH side panel
- RH engine panel (Renegade only).

4WD Indicator Switch Removal

Disconnect 4WD indicator switch connector from engine wiring harness.

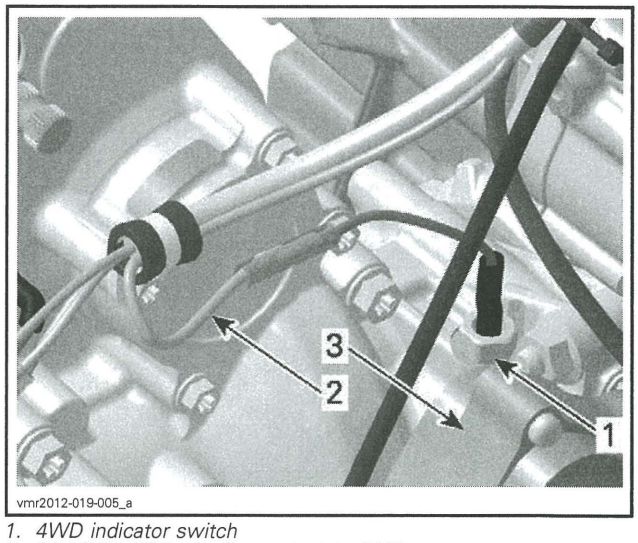

1. 4WD indicator switch
2. BLACK/BEIGE wire for contact to 4WD
3. Actuator

4WD Indicator Switch Test

Measure switch resistance as follows.

SWITCH POSITION	SWITCH WIRE		RESISTANCE
2WD	BLACK/ BEIGE	Engine ground	Infinite (0L)

If the resistance is out of specification, replace the 4WD indicator switch.

4WD Indicator Switch Installation

For installation, reverse the removal procedure. Pay attention to the following details.

Take care do not damage indicator switch threads during installation.

Apply carefully some LOCTITE 5910 (P/N 293 800 081) on threads of indicator switch.

NOTICE Do not apply Loctite 5910 on switch plunger, as it will lead to switch malfunction.

GEARBOX OIL SEALS

Gearbox Oil Seals Replacement

Replace oil seals if they are brittle, hard or damaged.

A small flat screwdriver can be used to remove most of these oil seals.

NOTICE Avoid scoring parts during oil seal removal.

When replacing an oil seal, take this opportunity to inspect the following:

- Check bearings behind each oil seal for contamination and/or metal shavings.
- Check oil seal running surfaces for scratches.

Oil Seal Lubrication

When installing or reinstalling oil seals, use PETAMO GREASE GHY 133N (P/N 420 899 271) to:

- Lubricate sealing lips all around.
- Fill up the room between sealing lips halfway around the perimeter.

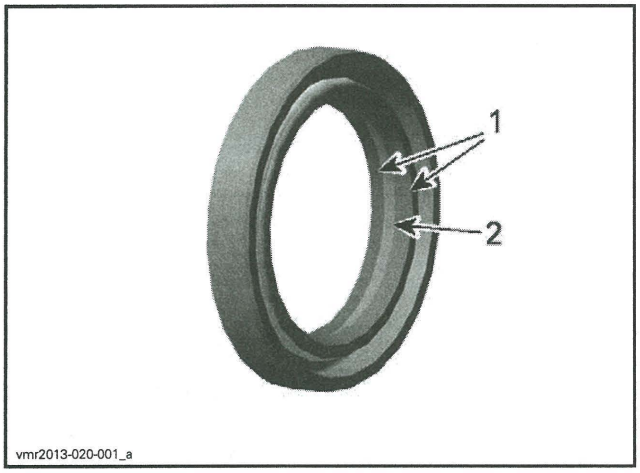

1. Sealing lips
2. Room between sealing lips

Countershaft Oil Seal

The countershaft oil seal can be removed without removing gearbox from vehicle. Remove drive and driven pulley and CVT air guide.

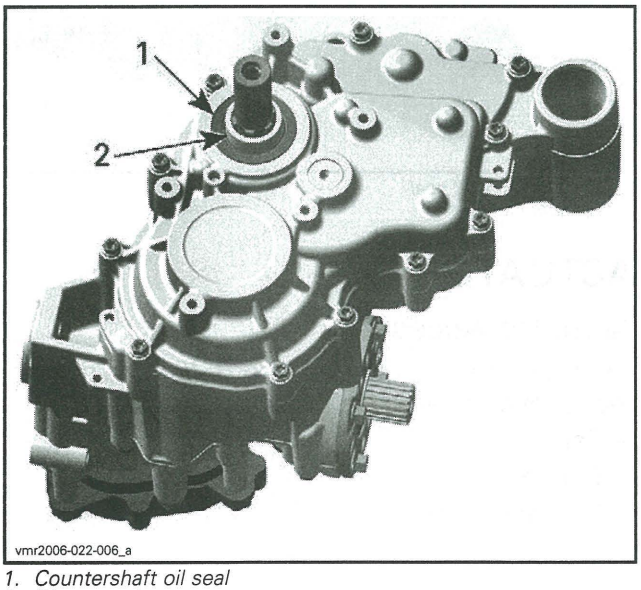

1. Countershaft oil seal
2. Distance sleeve

NOTE: When oil seal is removed also inspect O-ring.

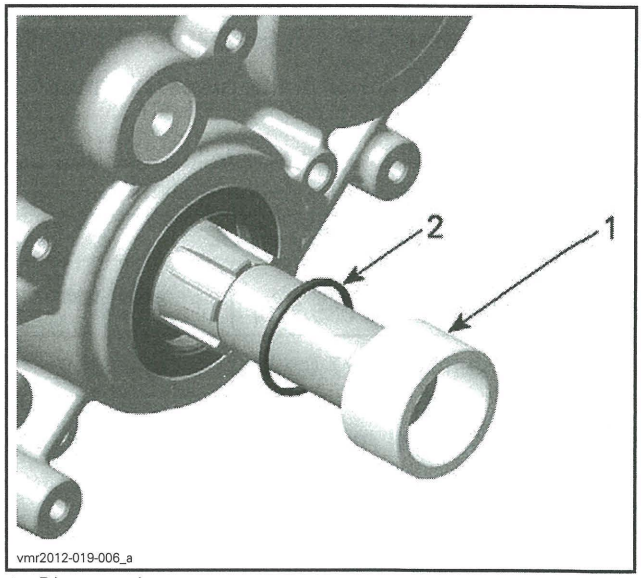

1. Distance sleeve
2. O-ring

For countershaft oil seal installation use the following service tool.

REQUIRED TOOL	
COUNTERSHAFT OIL SEAL PUSHER (P/N 529 036 222)	

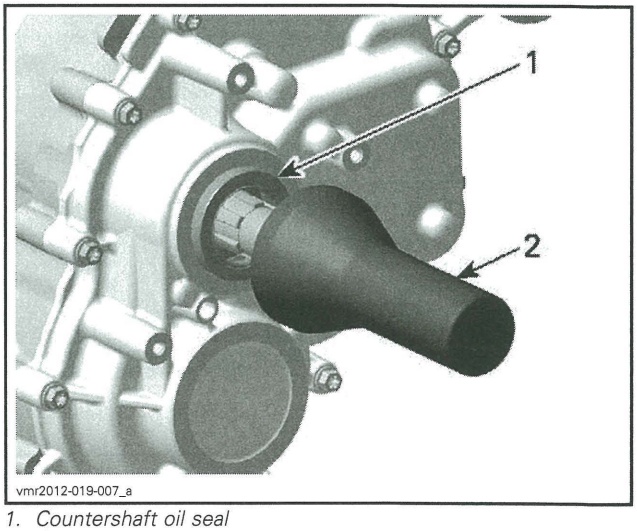

1. Countershaft oil seal
2. Oil seal pusher

Shift Shaft Oil Seal

The shift shaft oil seal can be removed without removing the gearbox from the vehicle.

To replace the shift shaft oil seal, refer to *BODY* and remove:

- Seat

- Console
- RH side panel
- RH footrest panel
- Shift plate from shift shaft (refer to *SHIFTER*.

Using a suitable tube with the proper diameter to install the shift shaft oil seal.

If gearbox housing is apart, the following tools can be used for shift shaft oil seal installation.

REQUIRED TOOL	
OIL SEAL INSTALLER (GEARBOX) (P/N 529 035 758)	
HANDLE (P/N 420 877 650)	

NOTICE **Oil seal must be installed with sealing lip toward gearbox.**

Output Shaft Oil Seal

Remove propeller shaft. Refer to *REAR DRIVE* subsection.

Punch a sharp screwdriver through oil seal for removal.

NOTE: When oil seal is removed also inspect O-ring.

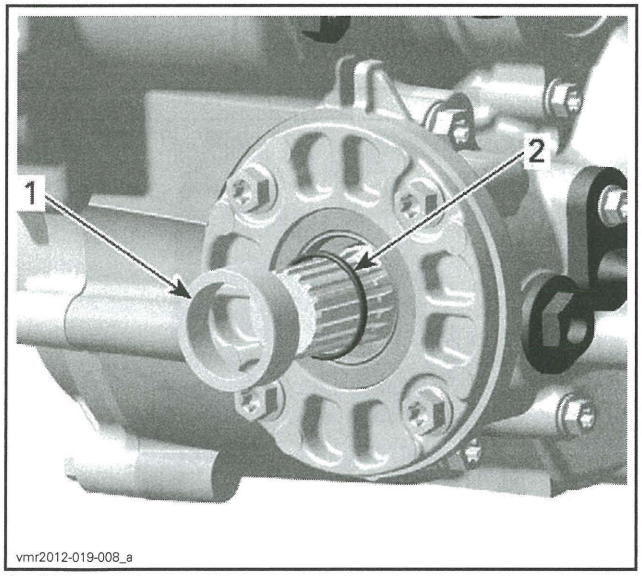

1. Distance sleeve
2. O-ring

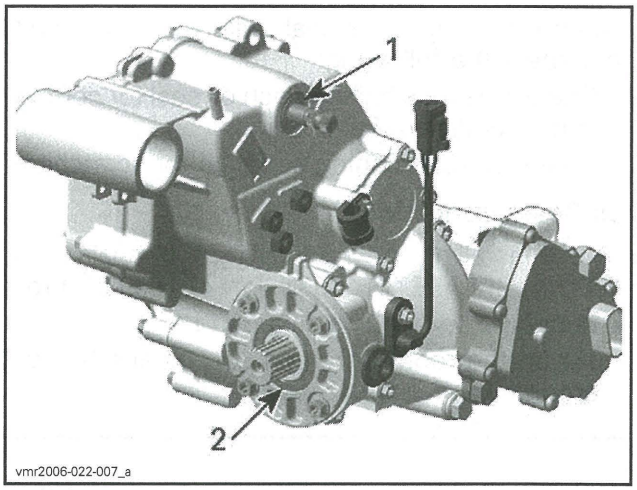

1. Shift shaft oil seal
2. Output shaft oil seal

For output shaft oil seal installation use the following service tool.

REQUIRED TOOL	
DRIVE SHAFT OIL SEAL INSTALLER (P/N 529 036 028)	

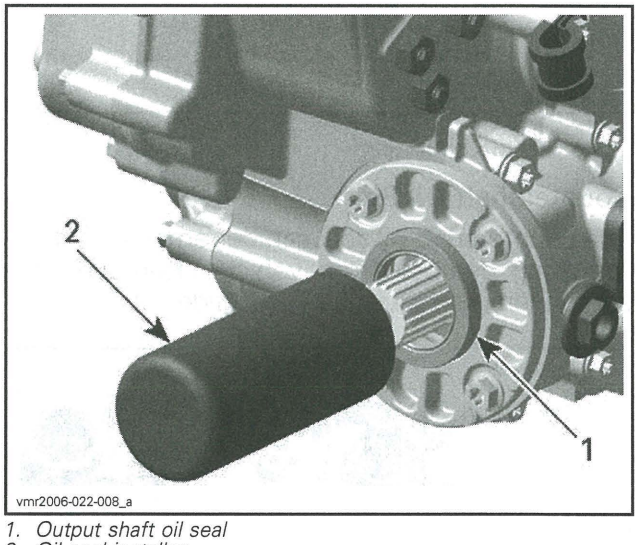

1. Output shaft oil seal
2. Oil seal installer

ACTUATOR

Actuator Access

To access the actuator, refer to *BODY* and remove the following parts:

- Seat
- Console
- RH side panel
- RH footrest panel
- RH engine panel (Renegade only).

Actuator Test

Check if the 2WD/4WD selector works properly.

REQUIRED TOOL	
FLUKE 115 MULTIMETER (P/N 529 035 868)	

Unplug actuator connector.

Turn ignition key ON.

Set emergency engine stop switch to RUN.

Measure voltage as follows

SWITCH POSITION	SWITCH WIRE		VOLTAGE
2WD	WHITE/BLUE	WHITE	Battery voltage
4WD	WHITE/BLACK		

If the selector is out of specifications, check wires, connectors and replace the selector if necessary.

If the selector is good, check the vehicle harness.

If the vehicle harness is good, replace the actuator.

Actuator Removal

NOTE: Before beginning any servicing on the actuator, make sure the vehicle is in 4WD position. No need to remove engine from vehicle.

Detach brake master cylinder from frame (Outlander only).

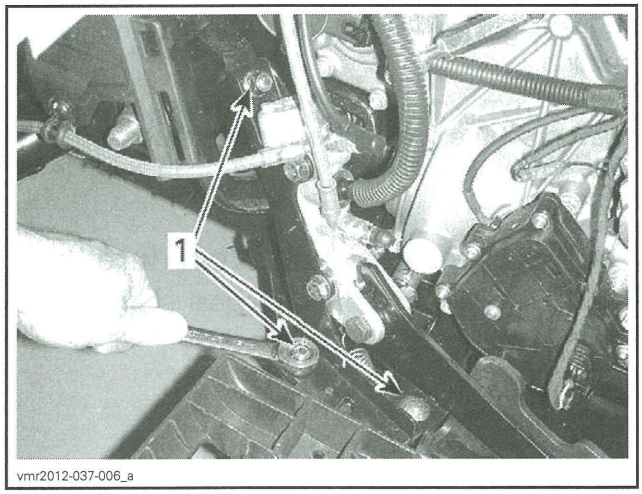

OUTLANDER ONLY
1. Remove retaining screws from master cylinder support

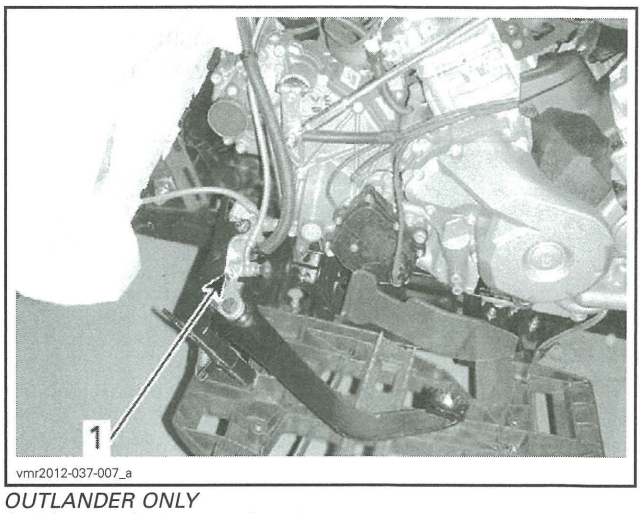

OUTLANDER ONLY
1. Master cylinder moved apart

Unplug actuator connector.

Place a drain pan under actuator.

Unscrew actuator bolts.

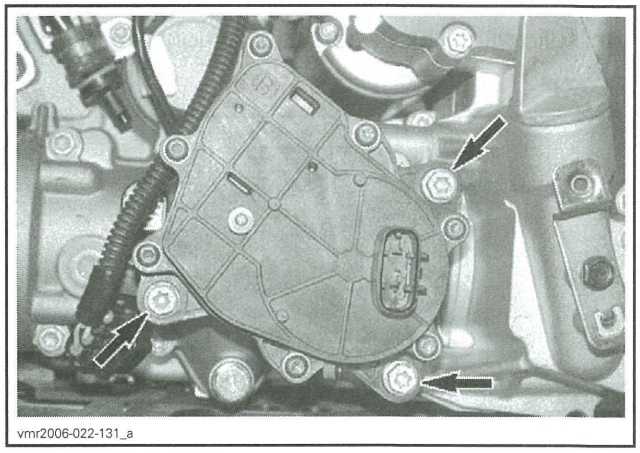

When all actuator bolts are removed, pull the actuator out of housing.

Actuator Installation

Apply a small amount of SUPER LUBE GREASE (P/N 293 550 030) on actuator O-ring.

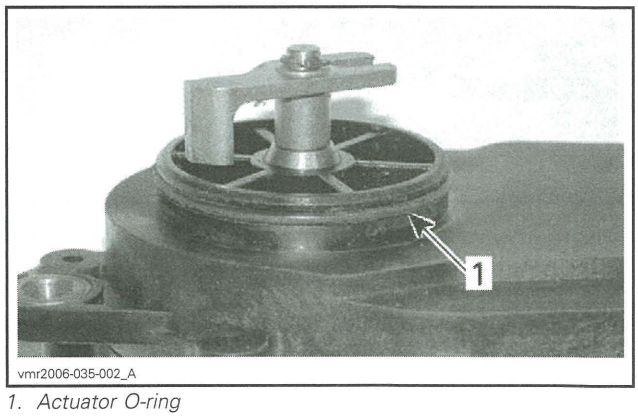

1. Actuator O-ring

Verify if coupling fork is in 4WD position. The coupling fork should be positioned toward the front of vehicle.

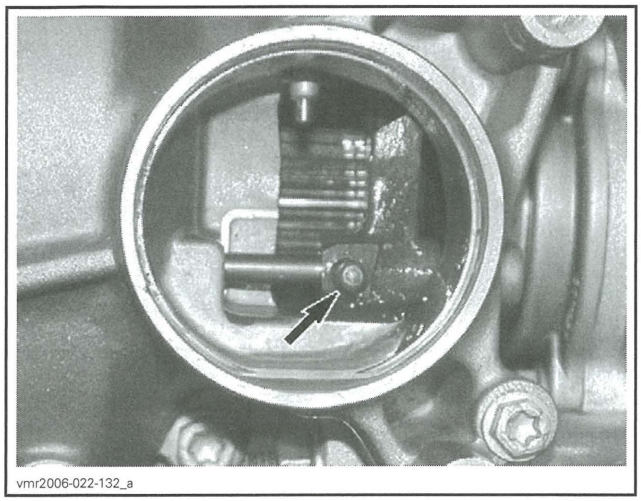
vmr2006-022-132_a

Align the actuator fork with the pin on coupling fork then push the actuator in the housing. See the following illustration to position the actuator correctly.

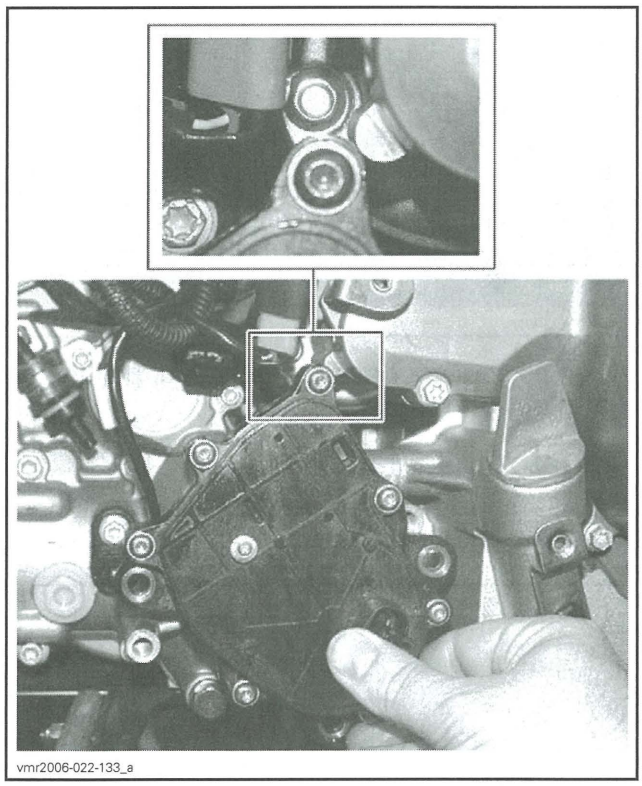
vmr2006-022-133_a

Rotate the actuator counterclockwise until it orients itself to mounting position.

NOTICE Do not cut or break the actuator O-ring.

Install all actuator bolts then torque them to specification.

ACTUATOR SCREWS	
Tightening torque	25 N•m ± 3 N•m (18 lbf•ft ± 2 lbf•ft)

Connect actuator.

Lift the front of vehicle.

Turn front wheels. The front propeller shaft should not turn (the PARK position must be selected).

If the front propeller shaft turns, the actuator is not installed correctly. Remove actuator and reinstall it.

Set ignition switch to ON.

Set emergency engine stop switch to RUN.

Select the 2WD position.

Turn front wheel again. The front propeller shaft. The shaft should turn easily.

If the front propeller shaft does not turn, the actuator is not installed correctly. Remove actuator and reinstall it.

NOTICE Refill missing gearbox oil, refer to *PERIODIC MAINTENANCE PROCEDURES* subsection.

Install all other removed parts.

OUTPUT SHAFT AND COUPLING MECHANISM

Remove gearbox. Refer to *GEARBOX* in this subsection.

Before removing the right housing and output shaft measure the backlash on output shaft. This measure will indicate if output shaft adjustment is necessary.

Output Shaft Backlash Procedure

Engage PARK position on the gear shaft to block gearbox.

Remove:

1. bearing cover with oil seal

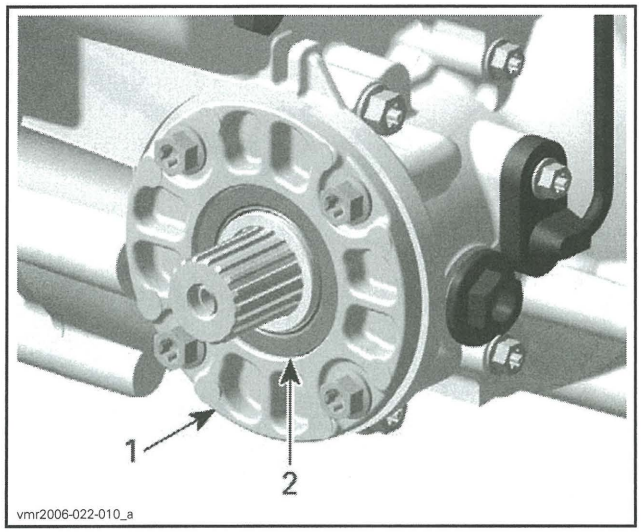

1. Bearing cover
2. Oil seal

2. distance sleeve
3. O-ring.

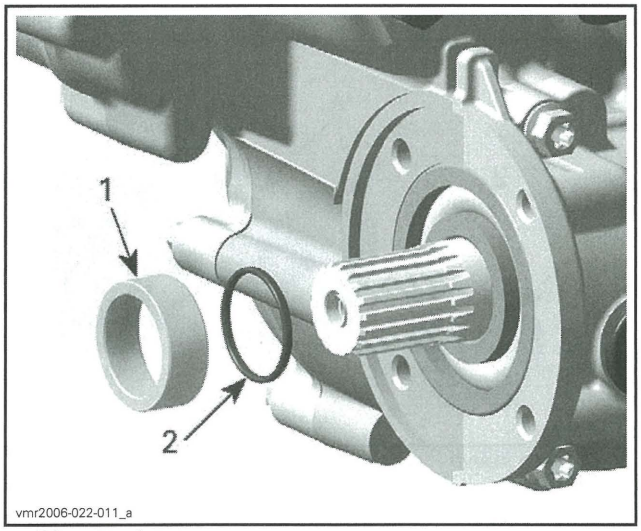

1. Distance sleeve
2. O-ring

Install the measurement tool at the end of output shaft.

REQUIRED TOOL	
BACKLASH MEASUREMENT TOOL (P/N 529 036 030)	

From center of tool bolt, measure 47 mm (1.85 in)and place a mark on the tab.

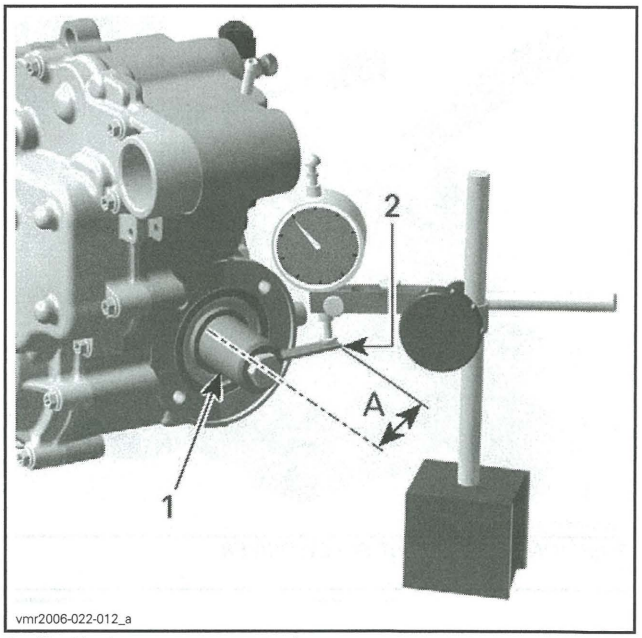

1. Backlash measurement tool
2. Mark on tab
A. 47 mm (1.85 in)

Position the head of the dial indicator, against the tab at a 90° angle and on the line. Then, gently rotate the output shaft.

This reading gives the backlash measurement. Refer to the following table for backlash specifications.

OUTPUT SHAFT BACKLASH	
NEW	0.10 to 0.20 mm (.0039 to .0079 in)
SERVICE LIMIT	0.25 mm (.0098 in)

If backlash is not within the specification, remove the output shaft and select the next thicker or thinner shim to meet the specifications.

NOTE: Use next thicker shim to increase backlash and next thinner shim to reduce backlash.

Output Shaft and Coupling Mechanism Removal

Remove actuator.

Remove the bearing cover with oil seal.

Unscrew all bolts retaining the right housing to the center housing.

To remove right housing, use 2 big screwdrivers.

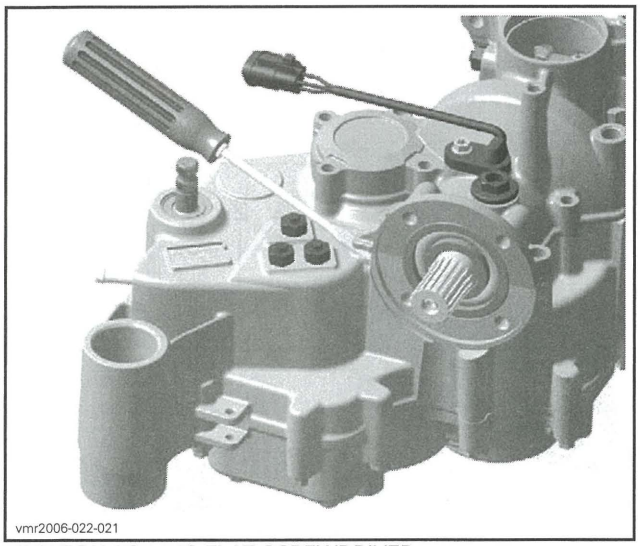

POSITION FOR BIG FLAT SCREWDRIVER

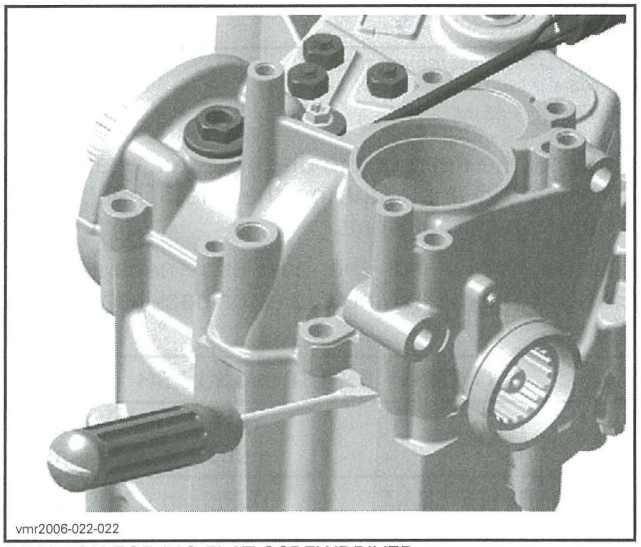

POSITION FOR BIG FLAT SCREWDRIVER

Remove output shaft.

REQUIRED TOOL
Soft hammer

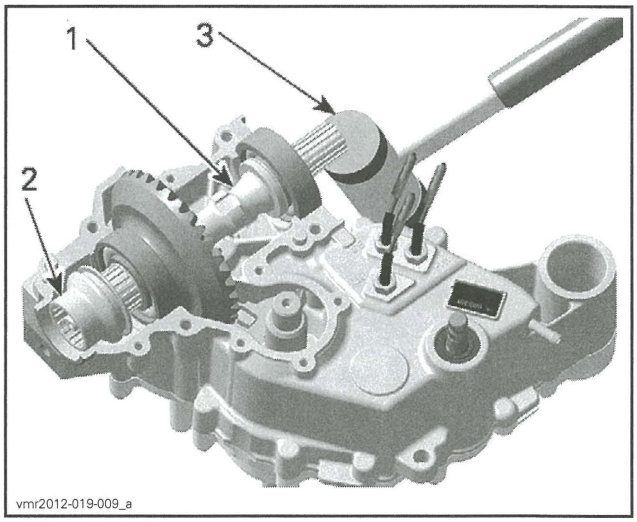

1. *Output shaft*
2. *Coupling sleeve*
3. *Soft hammer*

Continue removal procedure by removing:

1. Coupling sleeve, O-ring, ball bearing and thrust washer.

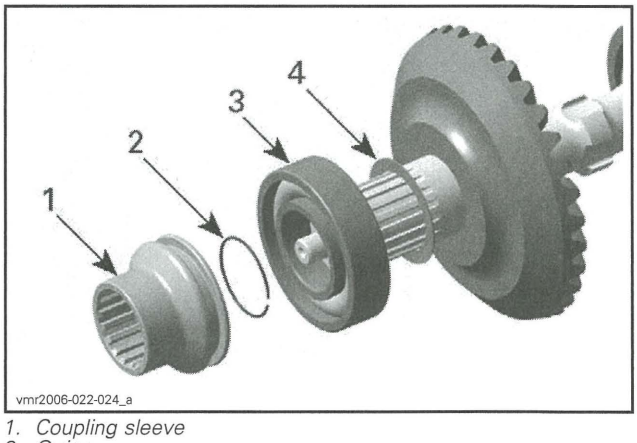

1. *Coupling sleeve*
2. *O-ring*
3. *Ball bearing*
4. *Thrust washer*

2. ball bearing and thrust washer

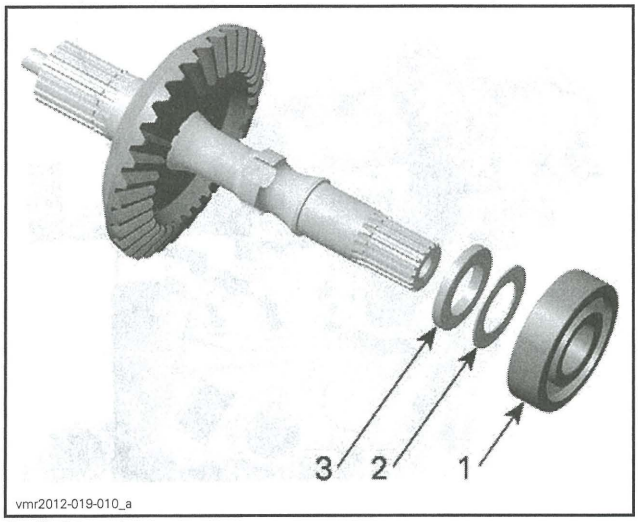

1. *Ball bearing*
2. *Thrust washer*
3. *Distance ring*

3. Set screw, pin and coupling fork.

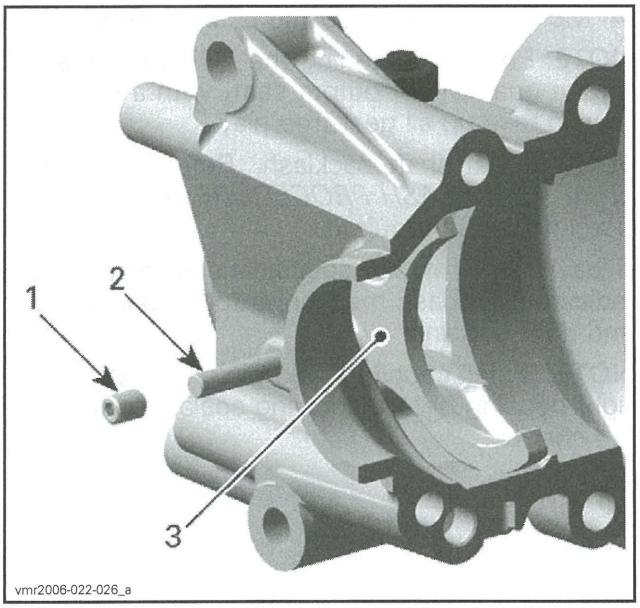

1. *Set screw*
2. *Pin*
3. *Coupling fork*

Output Shaft and Coupling Mechanism Inspection

Check output shaft and its gear for cracks, bend, pitting or other visible damages.

Check output shaft splines for wear or other damages.

NOTICE Always replace output shaft and bevel gear shaft at the same time. Adjust these components upon replacement.

Check if the output shaft ball bearings turn freely and smoothly. Replace if necessary, refer to *GEARBOX ADJUSTMENT* in this subsection.

Replace oil seal if brittle, hard or damaged.

Replace O-rings if brittle, hard or damaged.

Check splines of coupling sleeve for wear or other damages.

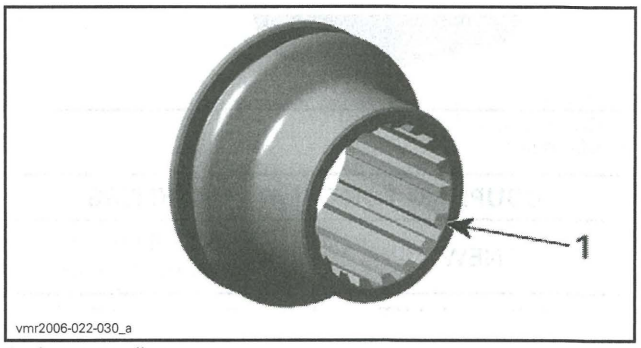

1. *Inspect splines*

Measure the coupling sleeve groove width.

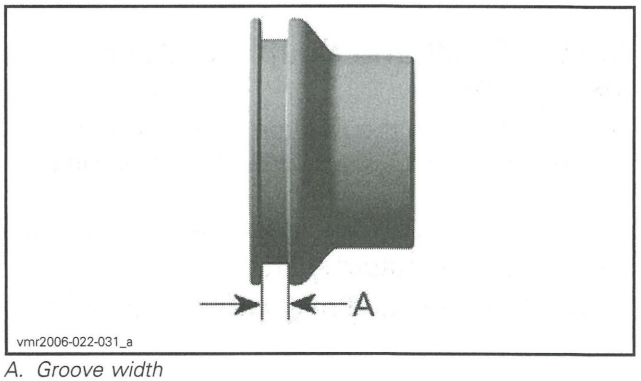

A. *Groove width*

COUPLING SLEEVE GROOVE WIDTH	
NEW	5.25 to 5.35 mm (.207 to .211 in)
SERVICE LIMIT	5.50 mm (.217 in)

Check coupling fork claw thickness.

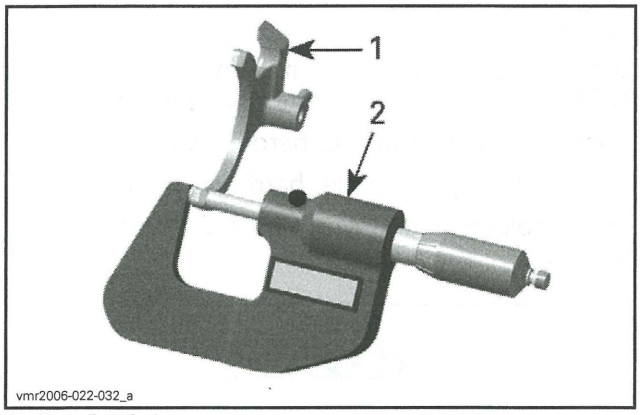

1. Coupling fork
2. Micrometer

COUPLING FORK CLAW THICKNESS	
NEW	4.95 to 5.05 mm (.195 to .199 in)
SERVICE LIMIT	4.80 mm (.189 in)

Clean housing split surface and especially the bearing areas from metal particles or other contamination.

Output Shaft and Coupling Mechanism Installation

The installation is the reverse of the removal procedure. However, pay attention to following details.

Install thrust washer, bearing, O-ring and coupling sleeve onto the output shaft.

Install distance ring, thrust washer and ball bearing.

NOTE: O-ring and distance sleeve are not installed at this time.

Place the output shaft into the center housing.

Use soft hammer to put bearing exactly in place against center housing.

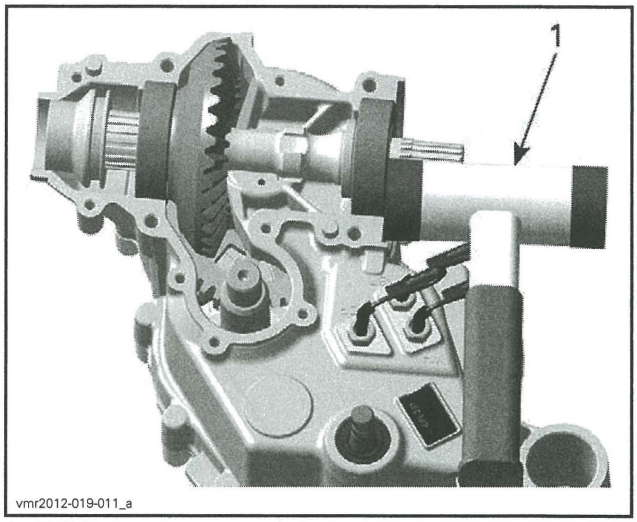

1. Soft hammer

Clean the bearing cover location then attach bearing cover with oil seal to the housing.

Temporarily install the right housing with the four (4) M8 TORX screws beside bearing seats.

NOTE: Prior to tightening the TORX screws, tap on the gear end of output shaft with a soft hammer to take up all gear free play.

Verify output shaft backlash. Refer to *OUTPUT SHAFT BACKLASH PROCEDURE* in this subsection. Adjust as required.

If backlash is within specifications, remove dial indicator, backlash measuring tool, bearing cover and right housing.

NOTE: Install coupling fork, pin and set screw in right housing before applying sealant to the mating surface.

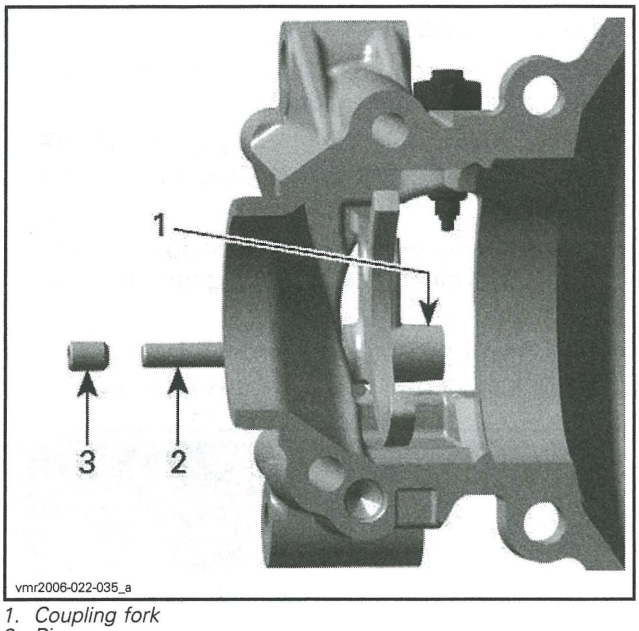

1. Coupling fork
2. Pin
3. Set screw

Clean all metal components in a solvent.

Housing mating surfaces are best cleaned using a combination of LOCTITE CHISEL (GASKET REMOVER) (P/N 413 708 500) and a brass brush. Brush a first pass in one direction then make the final brushing perpendicularly (90°) to the first pass cross (hatch).

NOTICE **Do not wipe with rags. Use a new clean hand towel only.**

IMPORTANT: When beginning the application of sealant, the assembly and the first torquing should be done within 10 minutes. It is suggested to have all you need on hand to save time.

Use LOCTITE 5910 (P/N 293 800 081) on mating surfaces.

Use a plexiglass plate and apply some sealant on it. Use a soft rubber roller (50 - 75 mm (2 - 3 in)), available in arts products suppliers for printing, and roll the sealant to get a thin uniform coat on the plate (spread as necessary). When ready, apply the sealant on housing mating surfaces.

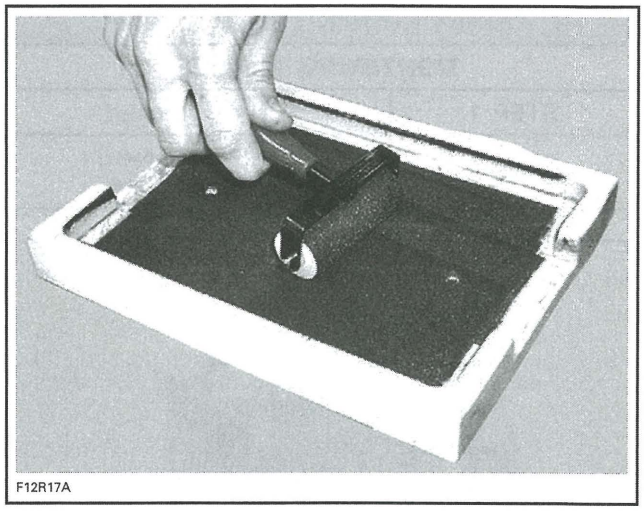

Do not apply in excess as it will spread out inside housings.

NOTE: It is recommended to apply this specific sealant as described here to get a uniform application without lumps. If you do not use the roller method, you may use your finger to uniformly distribute the sealant (using a finger will not affect the adhesion).

Install all other screws on right housing then the O-ring and the distance sleeve on end of output shaft. Chamfered bore of distance sleeve has to face the engine.

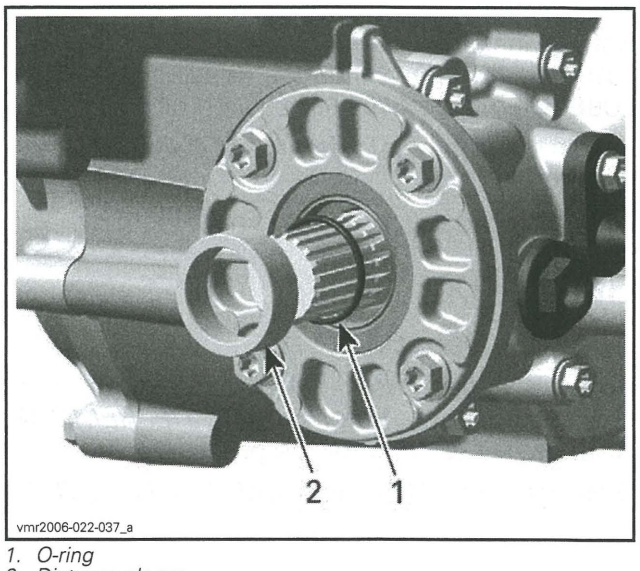

1. O-ring
2. Distance sleeve

NOTE: To install the right housing align the coupling fork with the groove in the coupling sleeve.

Torque the four (4) M8 Torx screws in a crisscross sequence to following specification.

RIGHT HOUSING M8 SCREWS	
TIGHTENING TORQUE	
STEP 1	Hand tightened
STEP 2	25 N•m ± 3 N•m (18 lbf•ft ± 2 lbf•ft)

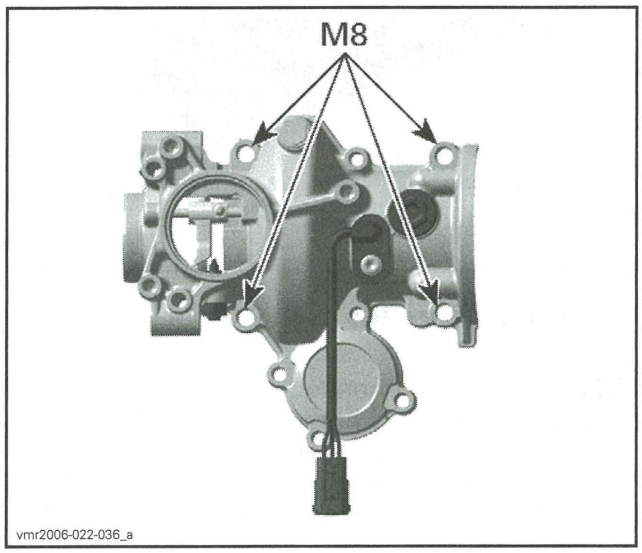

Tighten all M6 Torx screws to specification

RIGHT HOUSING M6 SCREWS	
TIGHTENING TORQUE	10 N•m ± 1 N•m (89 lbf•**in** ± 9 lbf•**in**)

Before installing bearing cover, apply LOCTITE 5910 (P/N 293 800 081) on the housing and SUPER LUBE GREASE (P/N 293 550 030) on oil seal.

Install the actuator, refer to *ACTUATOR* in this subsection.

Once this is done, complete final assembly.

GEARBOX

Gearbox Removal

Remove engine from vehicle and place it on footrest support. Refer to *ENGINE REMOVAL AND INSTALLATION* for the procedure.

Drain gearbox. Refer to *GEARBOX OIL DRAINING PROCEDURE* in *PERIODIC MAINTENANCE PROCEDURES* subsection.

Remove drive and driven pulley and CVT air guide, refer to *CONTINUOUSLY VARIABLE TRANSMISSION (CVT)* subsection.

Unscrew the three (3) nuts that attach the gearbox to the engine.

Pull gearbox to separate it from engine.

Gearbox Disassembly

NOTE: During gearbox disassembly, inspect the condition of each part closely.

Remove the output shaft. Refer to *OUTPUT SHAFT AND COUPLING MECHANISM* in this subsection.

Push bevel gear with a pin slightly down and measure the axial clearance of bevel gear with a feeler gauge.

NOTE: Bevel gear axial clearance must be measured before center and left housings separation.

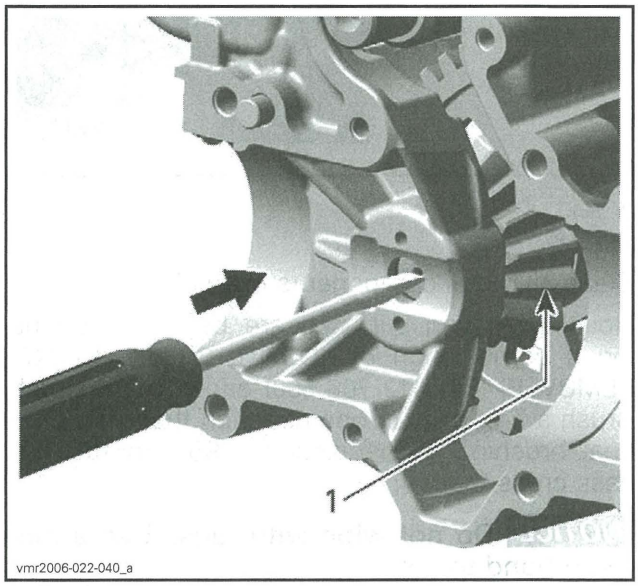

1. Bevel gear

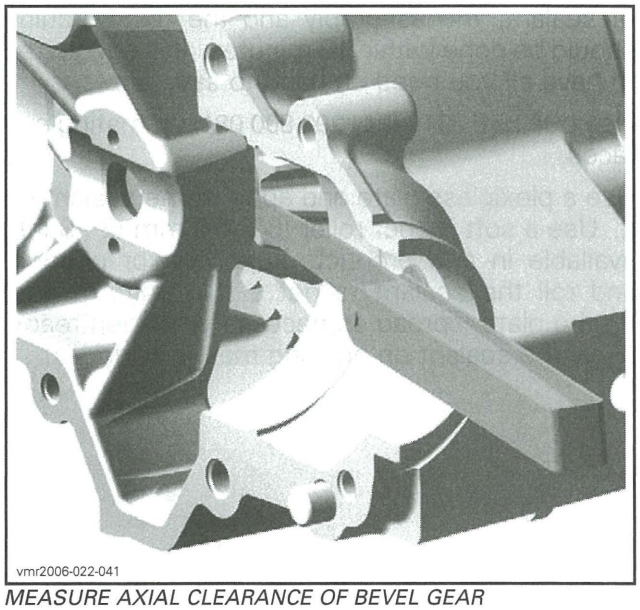

MEASURE AXIAL CLEARANCE OF BEVEL GEAR

BEVEL GEAR AXIAL CLEARANCE	
NEW	0.02 to 0.15 mm (.00079 to .0059 in)
SERVICE LIMIT	0.19 mm (.0075 in)

Unscrew the left housing screws.

Place the left housing on a wood stand, center housing pointing upwards.

Using 2 big flat screwdrivers, lift the center housing.

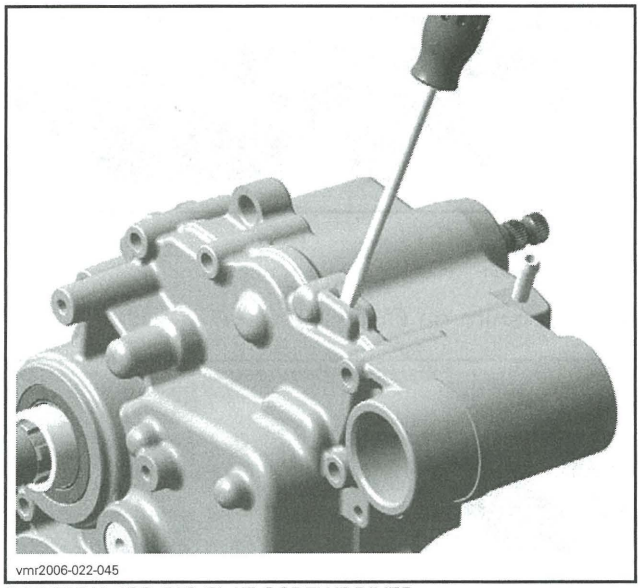

POSITION FOR BIG FLAT SCREWDRIVER

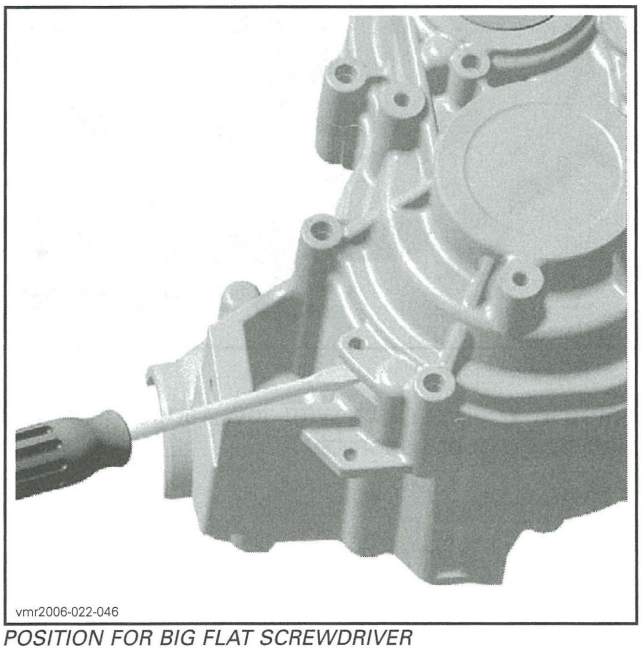

POSITION FOR BIG FLAT SCREWDRIVER

Remove center housing completely.

Remove shift shaft assembly.

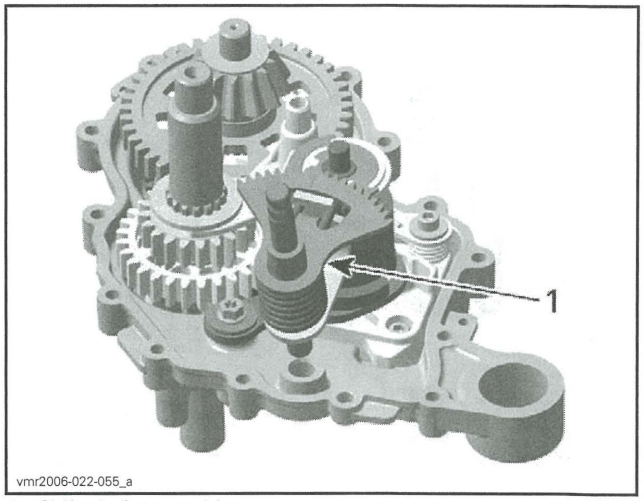

1. Shift shaft assembly

Remove shift fork shaft.

Disengage shift forks from shift drum and remove shift fork.

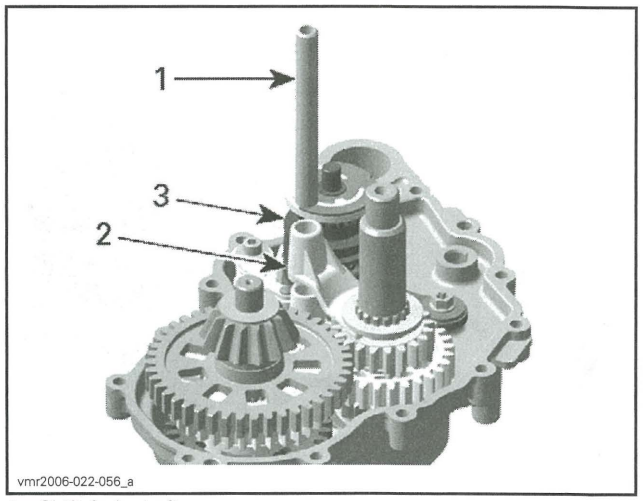

1. Shift fork shaft
2. Shift fork
3. Shift drum

Remove bevel gear shaft with low range gear assembly and shim.

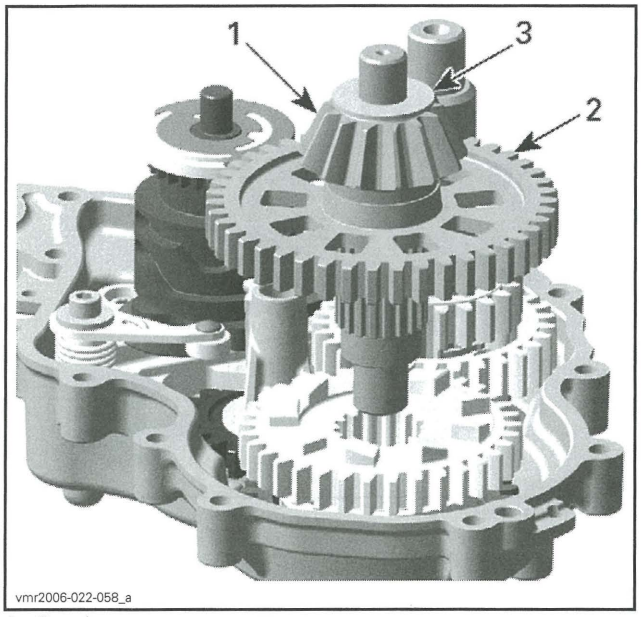

1. *Bevel gear*
2. *Low range gear*
3. *Shim*

Remove sliding gear with shift fork.

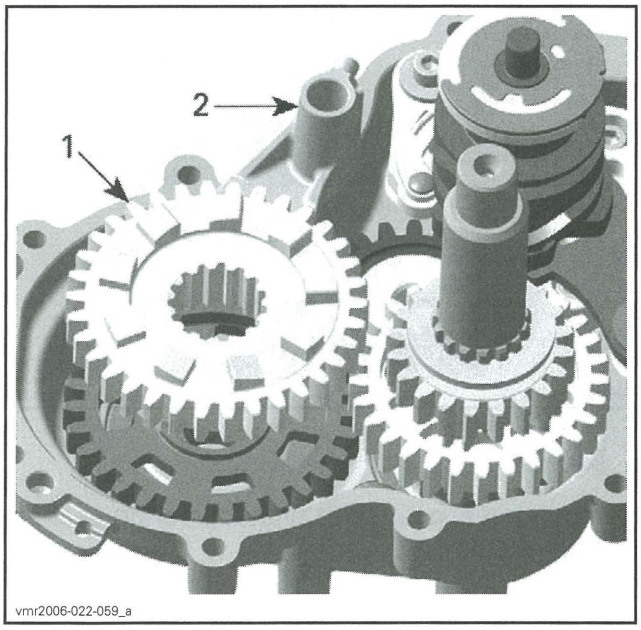

1. *Sliding gear*
2. *Shift fork*

Remove thrust washer, needle bearing and reverse gear.

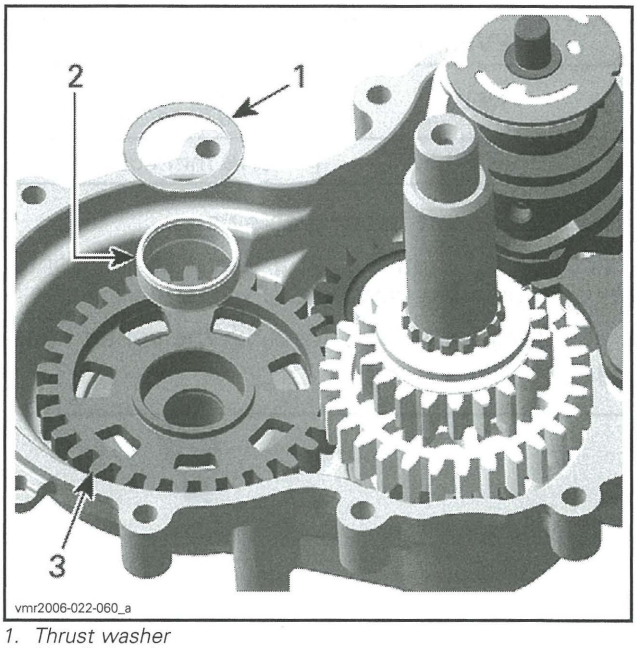

1. *Thrust washer*
2. *Needle bearing*
3. *Reverse gear*

Remove shim on CVT side.

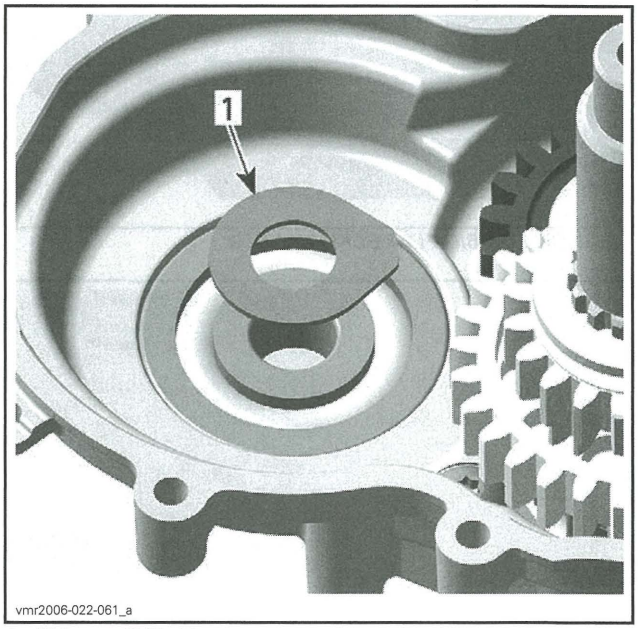

1. *Shim on CVT side*

Remove countershaft with low range gear and high range gear assembly.

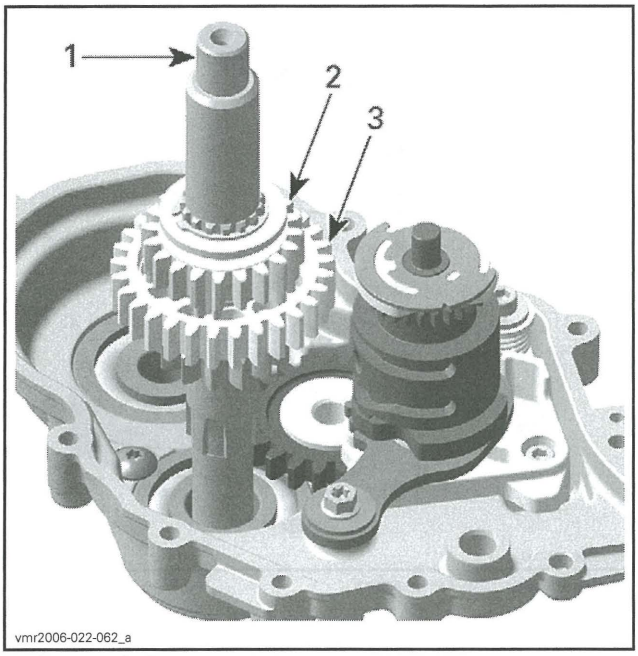

1. Countershaft
2. Low range gear
3. High range gear

Insert a flat screwdriver in the slot of index lever. Turn screwdriver clockwise and remove shift drum.

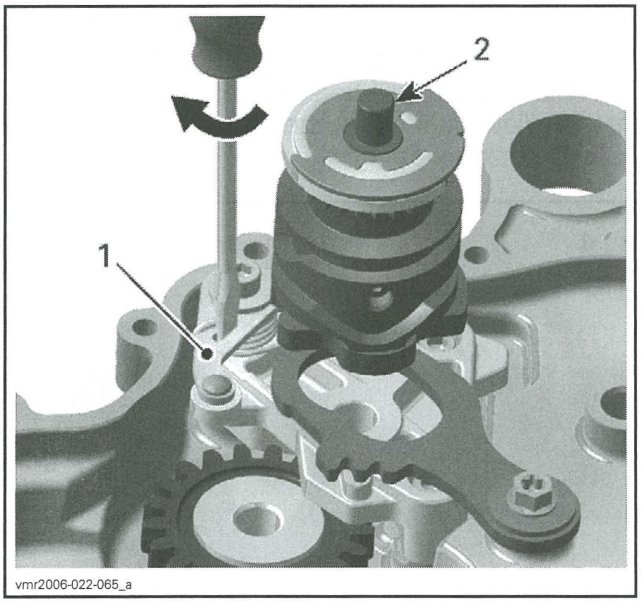

1. Index lever
2. Shift drum

Remove parking lock lever.

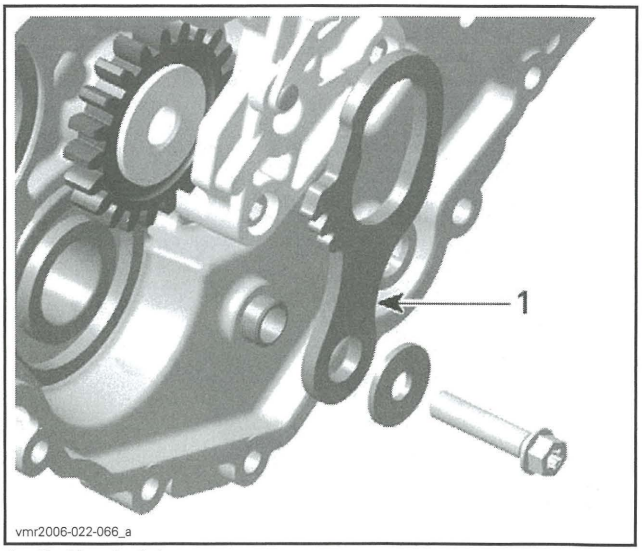

1. Parking lock lever

Remove index lever with washer, step ring and spring.

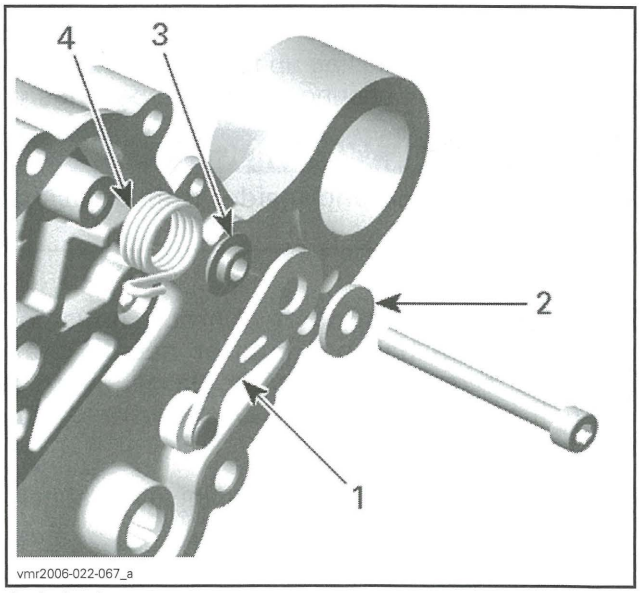

1. Index lever
2. Washer
3. Step ring
4. Index spring

Remove support flange.

To remove intermediate gear and needle bearing, use a press bench to push out the intermediate gear shaft.

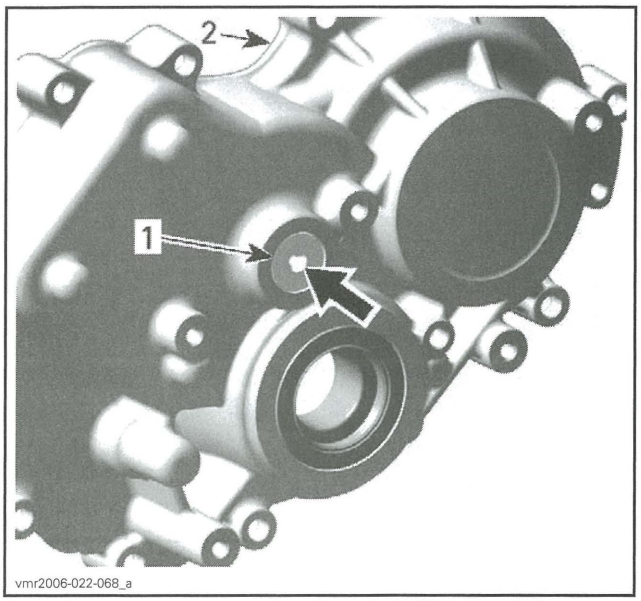

PRESS SHAFT IN THE DIRECTION AS SHOWN BY THE ARROW
1. *Intermediate gear shaft*
2. *Left housing*

Bearing Removal in Housing

If necessary heat housing up to 100°C (212°F) before removing ball bearings or needle bearings.

⚠ WARNING

Clean oil, outside and inside, from housing before heating.

NOTICE **Always support gearbox housings properly when ball bearings or needle bearings are removed. Housing damages may occur if this procedure is not performed correctly.**

To remove bevel gear needle bearing use a punch.

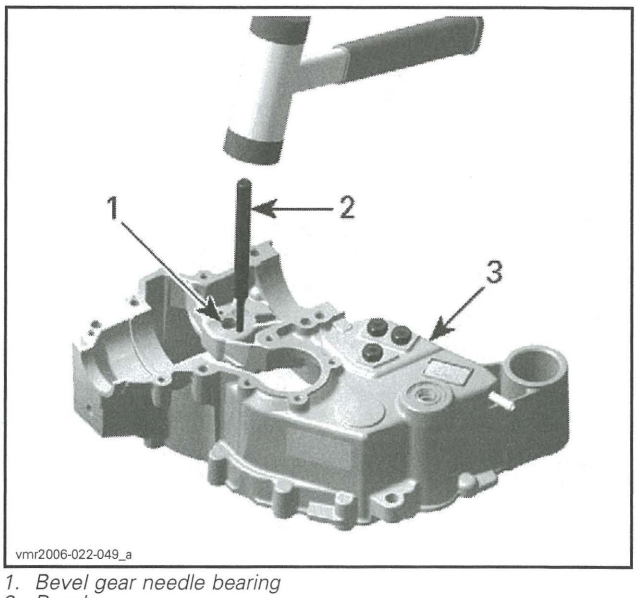

1. *Bevel gear needle bearing*
2. *Punch*
3. *Center housing*

To remove ball bearings of bevel gear and needle bearing of countershaft, use a blind hole bearing puller.

REQUIRED TOOL	
BLIND HOLE BEARING PULLER SET (P/N 529 036 117)	

For countershaft ball bearing, remove screw and intermediate gear shaft, then push with a suitable puller from outside in.

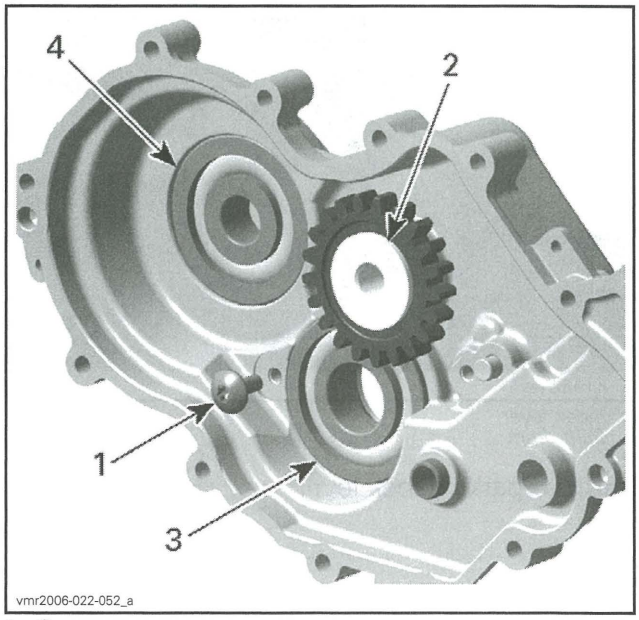

1. *Screw*
2. *Intermediate gear shaft*
3. *Ball bearing countershaft*
4. *Bevel gear ball bearing*

Gearbox Inspection

Always verify for the following when inspecting gearbox components:
- Gear teeth damage
- Worn or scoured bearing surfaces
- Worn or scoured shift fork
- Worn or scoured shift fork shaft
- Rounded engagement dogs and slots
- Bent shift forks
- Bent shift fork shaft
- Worn shift fork engagement pins
- Worn tracks on shift drum
- Worn shift fork engagement groove
- Worn splines on shafts and gears.

Bearings

Check if ball bearings and needle bearings turn freely and smoothly.

Check all bearings, bearing points, tooth flanks, taper grooves and annular grooves. Annular grooves must have sharp edges.

Shift Forks

Check both shift forks for visible damage, wear or bent shift fork claws.

Measure the shift fork claw thickness.

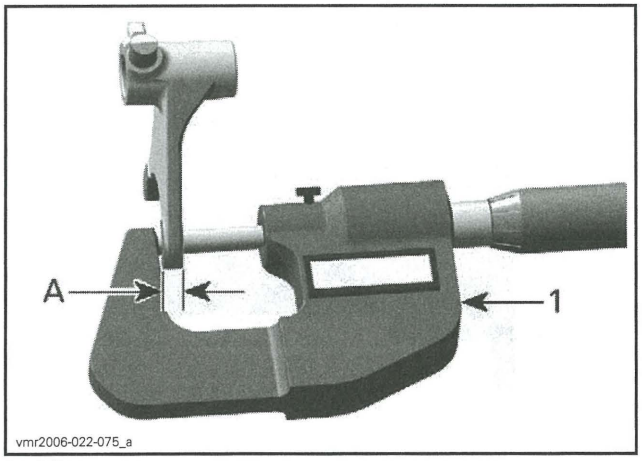

1. Micrometer
A. Shift fork claw thickness

SHIFT FORK CLAW THICKNESS (HIGH GEAR SHIFTING)	
NEW	4.80 to 4.90 mm (.189 to .193 in)
SERVICE LIMIT	4.70 mm (.185 in)

SHIFT FORK CLAW THICKNESS (LOW/REVERSE GEAR SHIFTING)	
NEW	5.10 to 5.20 mm (.200 to .205 in)
SERVICE LIMIT	5.00 mm (.197 in)

Measure shift fork pins.

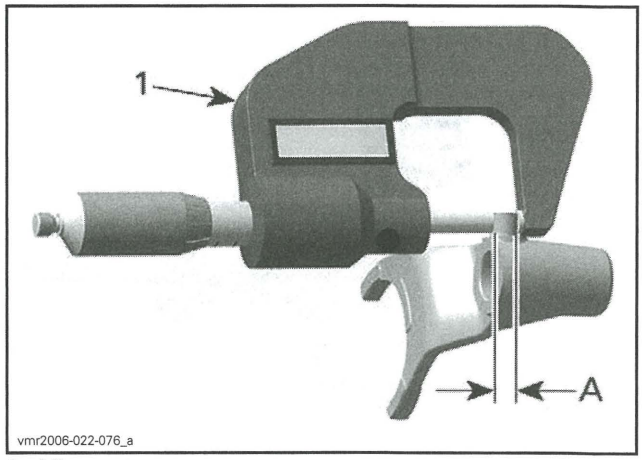

1. Micrometer
A. Shift fork pin diameter

SHIFT FORK PIN DIAMETER	
NEW	6.920 to 6.970 mm (.272 to .274 in)
SERVICE LIMIT	6.850 mm (.270 in)

Shift Drum

Check shift drum tracks for scouring or heavy wear, like rounded engagement slots.

Replace isolating washer if there are signs of wear or visible damages.

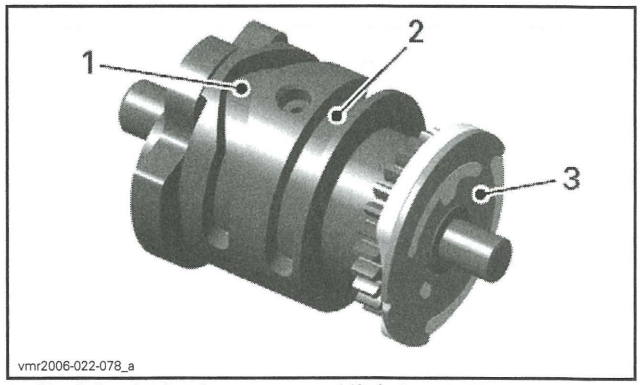

1. Track for the low/reverse gear shift fork
2. Track for the high gear shift fork
3. Isolating washer on the shift drum

Levers

Check parking lever for cracks or other damages.

Index lever with roller must move freely.

Gears

NOTE: Replace gears only together with the corresponding meshing gears. Always replace circlips and use special pliers to install them.

Measure the width of shift fork engagement groove.

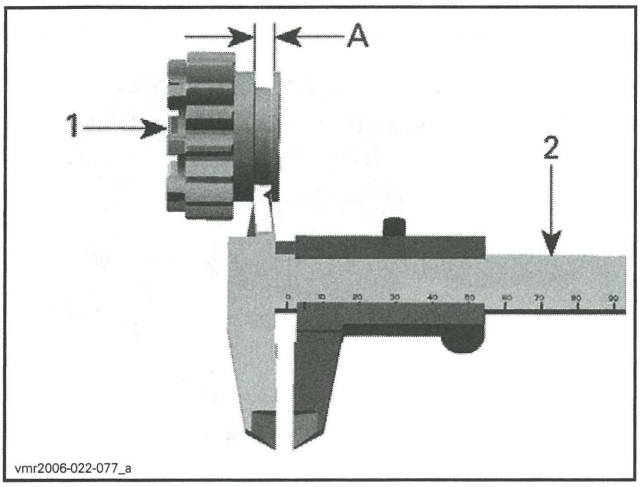

1. Main gear
2. Caliper
A. Width for engagement of shift fork

WIDTH OF SHIFT FORK ENGAGEMENT GROOVE (HIGH GEAR SHIFTING)	
NEW	5.00 to 5.10 mm (.197 to .201 in)
SERVICE LIMIT	5.20 mm (.205 in)

WIDTH OF SHIFT FORK ENGAGEMENT GROOVE (LOW/REVERSE GEAR SHIFTING)	
NEW	5.30 to 5.40 mm (.209 to .213 in)
SERVICE LIMIT	5.50 mm (.217 in)

Check free pinions for wear.

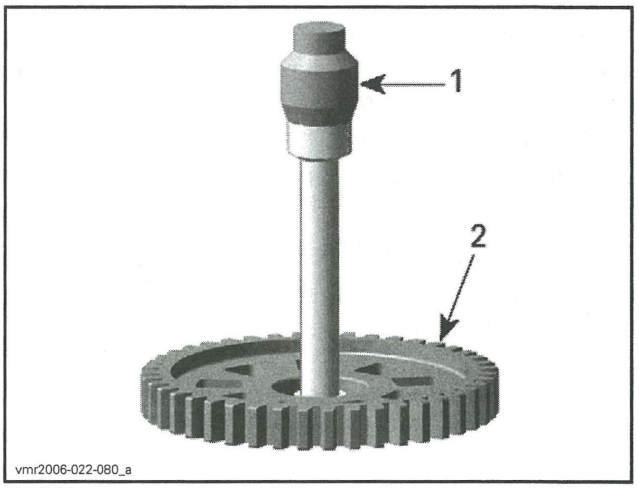

TYPICAL
1. Micrometer
2. Free pinion

DIAMETER FREE PINION	
NEW	29.000 to 29.013 mm (1.1417 to 1.1422 in)
SERVICE LIMIT	29.015 mm (1.1423 in)

Shafts

Check shift shaft for worn splines and gears.

Check intermediate shaft for wear.

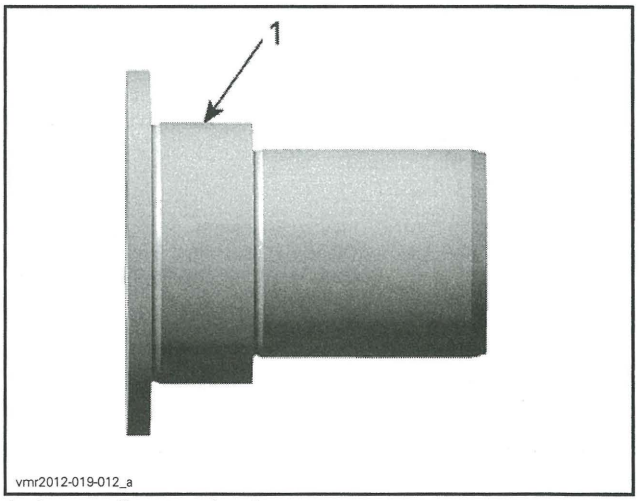

1. Intermediate gear bearing

INTERMEDIATE GEAR SHAFT	
NEW	24.979 to 25.000 mm (.9834 to .9842 in)
SERVICE LIMIT	24.977 mm (.9833 in)

Check countershaft for wear.

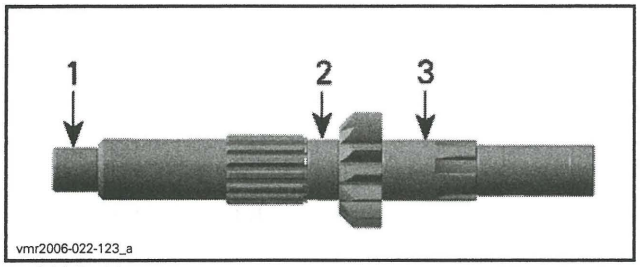

1. *MAG side*
2. *Free pinion bearing*
3. *CVT side*

COUNTERSHAFT	
SERVICE LIMIT	
MAG SIDE	17.990 mm (.708 in)
FREE PINION BEARING	24.970 mm (.983 in)
CVT SIDE	24.970 mm (.983 in)

Check bevel gear shaft.

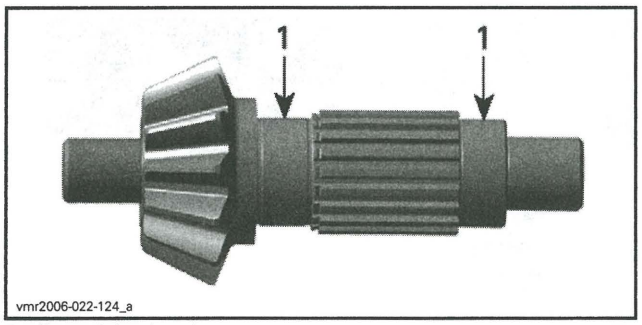

1. *Free pinion bearings*

BEVEL GEAR SHAFT	
SERVICE LIMIT	
FREE PINION BEARING	24.984 mm (.9836 in)

Shims

Always replace shim by a new one with the same thickness, when reassembling the gearbox with existing output shaft and bevel gear shaft.

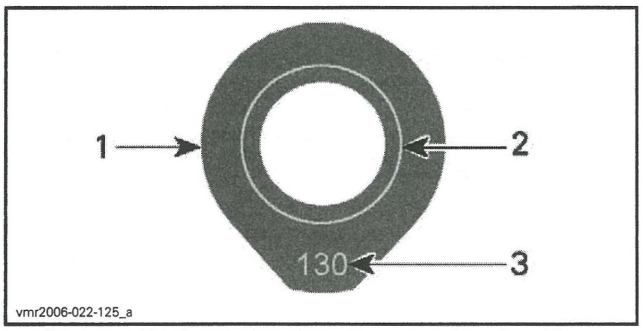

1. *Shim for adjusting the bevel gear on center housing side*
2. *Area where wear signs appear*
3. *Thickness of the shim*

Gearbox Adjustment

Bevel Gear

NOTE: Only necessary if the backlash and axial clearance of the bevel gear is out of specification or if parts are changed (output shaft, bevel gear shaft or housing).

There are 2 adjustments to perform on the bevel gear.

- Bevel gear backlash on center housing
- Bevel gear axial clearance on left housing.

The bevel gear backlash is adjusted by finding the proper shim thickness E as per following illustration.

The bevel gear axial clearance is adjusted by finding the proper shim thickness J as per following illustration.

Clean mating surface of housing before taking measurements using a combination of LOCTITE CHISEL (GASKET REMOVER) (P/N 413 708 500) and a brass brush. Brush a first pass in one direction then make the final brushing perpendicularly (90°) to the first pass cross (hatch).

NOTICE **Do not wipe with rags. Use a new clean hand towel only.**

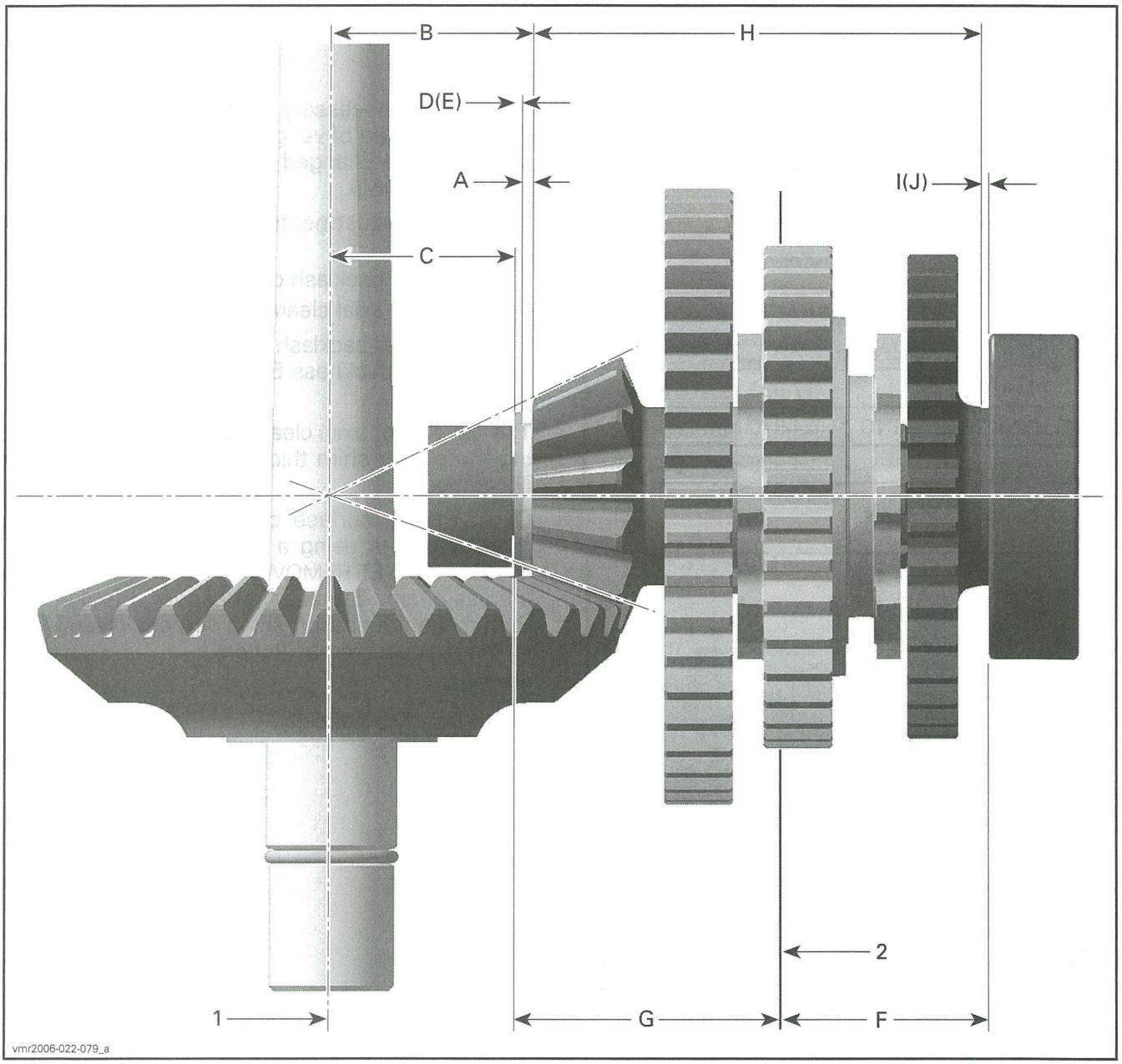

1. *Mating surface — output shaft*
2. *Mating surface — left housing*

Bevel Gear Backlash Procedure

Use the following course of calculation to determine the theoretical shim thickness D:

D = B - C - A

B = The distance between the thrust surface of the bevel gear and the theoretical center of its taper. This is defined by manufacturer and is written on the bevel gear shaft.

This bevel gear reference number could be between - 10 and + 10.

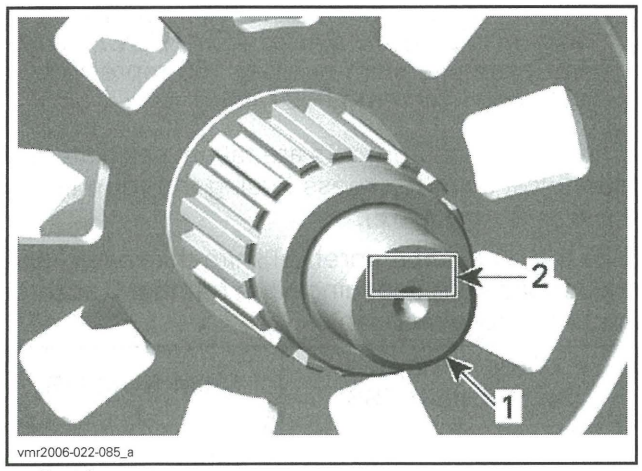

1. Bevel gear
2. Bevel gear reference number

Use following formula to find out value B.

$$B = \left(\frac{\text{Bevel gear reference number}}{100}\right) + 37.8$$

For example: bevel gear reference number = - 3.

B = (- 3/100) + 37.8 = 37.77

C = Distance between the shim thrust surface in the center housing and the mating surface to right housing.

NOTE: For a better understanding following illustration is made as a cutaway.

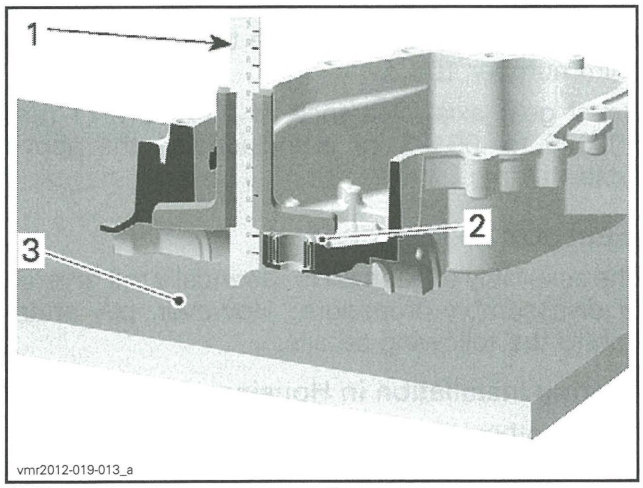

1. Deep gauge — measurement C
2. Shim surface in center housing
3. Mating surface to right housing

A = 2 mm (.0787 in) nominal thickness of axial needle bearing.

When the measurements are taken, calculate the theoretical shim thickness D using the formula: (D = B - C - A).

Take the obtained theoretical shim thickness D and choose the corresponding shim number E according to the following table.

THEORETICAL SHIM THICKNESS -D-	SHIM NUMBER -E-
1.20 mm to 1.29 mm (.0472 to .0508 in)	120
1.30 mm to 1.39 mm (.0512 to .0547 in)	130
1.40 mm to 1.49 mm (.0551 to .0587 in)	140
1.50 mm to 1.59 mm (.0591 to .0626 in)	150
1.60 mm to 1.69 mm (.0630 to .0665 in)	160
1.70 mm to 1.79 mm (.0669 to .0705 in)	170
1.80 mm to 1.89 mm (.0709 to .0744 in)	180

NOTE: For example, if the theoretical shim thickness D is 1.53 mm (.0602 in), choose the corresponding shim number 150 E. The shim number 150 represents a nominal value equal to 1.50 mm (.0591 in).

Bevel Gear Axial Clearance Procedure

Use the following course of calculation to determine the theoretical shim thickness I:

I = F + G - H - A - E

F = Distance between mating surface of left housing to ball bearing inner race.

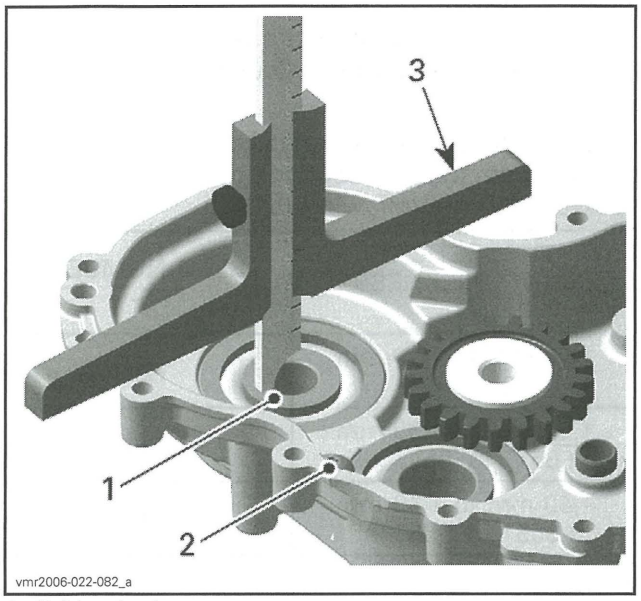

1. *Ball bearing inner race*
2. *Mating surface of left housing*
3. *Depth gauge*

G = Distance between mating surface of center housing and shim surface.

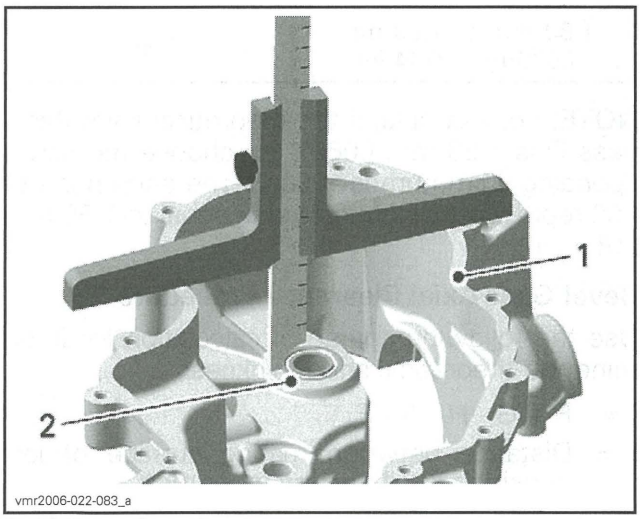

1. *Mating surface of center gear housing*
2. *Shim surface*

H = Distance between thrust surfaces of bevel gear shaft.

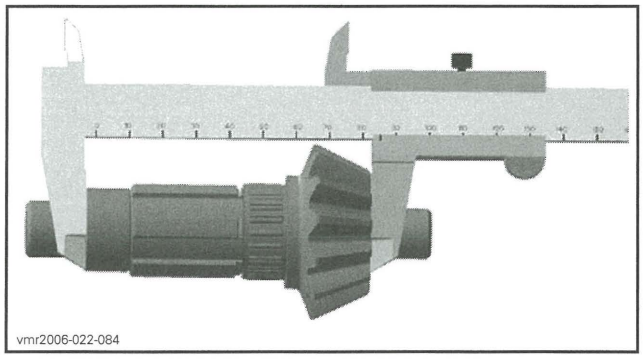

A = 2 mm (.0787 in) nominal thickness of axial needle bearing.

E = The shim number nominal value as found in the *BEVEL GEAR BACKLASH PROCEDURE*. For example, shim number 150 represents a value of 1.50 mm (.0591 in).

When the measurements are taken, calculate the theoretical shim thickness I using the formula: (I = F + G - H - A - E).

Take the obtained theoretical shim thickness I and choose the corresponding shim number J according to the following table.

THEORETICAL SHIM THICKNESS -I-	SHIM NUMBER -J-
1.22 mm to 1.31 mm (.0480 to .0516 in)	120
1.32 mm to 1.41 mm (.0519 to .0555 in)	130
1.42 mm to 1.51 mm (.0559 to .0594 in)	140
1.52 mm to 1.61 mm (.0598 to .0634 in)	150
1.62 mm to 1.71 mm (.0638 to .0673 in)	160
1.72 mm to 1.81 mm (0.677 to .0713 in)	170
1.82 mm to 1.91 mm (0.717 to .0752 in)	180

For example, if the theoretical shim thickness I is 1.53 mm (.0602 in), choose the corresponding shim number 150 J.

Bevel gear axial clearance of 0.02 to 0.11 mm (.00079 to .00433 in) is included in the above table.

Gearbox Assembly

The assembly of gearbox is essentially the reverse of disassembly procedure. However, pay attention to the following details.

Bearing Installation in Housing

Unless otherwise instructed, never use hammer to install ball bearings or needle bearings. Use press machine only.

If necessary heat housings up to 100°C (212°F) before installing ball bearings or needle bearings.

⚠ WARNING

Clean oil, outside and inside, from housing before heating.

Place new bearing in freezer for 10 minutes before installation.

Use a suitable installer for installing ball bearings of countershaft and bevel gear.

NOTE: Place gearbox housings on a wood stand before installing ball bearings.

Install countershaft needle bearing in right housing.

REQUIRED TOOL	
BEARING INSTALLER (GEARBOX) (P/N 529 035 762)	
HANDLE (P/N 420 877 650)	

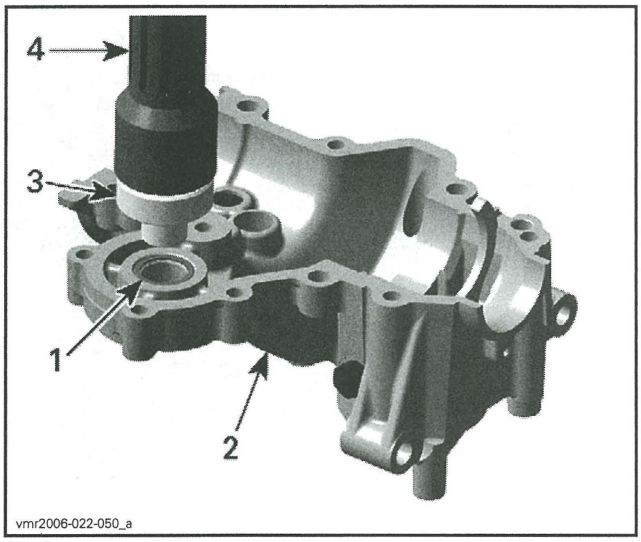

1. *Countershaft needle bearing*
2. *Right housing*
3. *Needle bearing installer*
4. *Installer handle*

Install bevel gear needle bearing.

REQUIRED TOOL	
BEARING INSTALLER (GEARBOX) (P/N 529 035 763)	
HANDLE (P/N 420 877 650)	

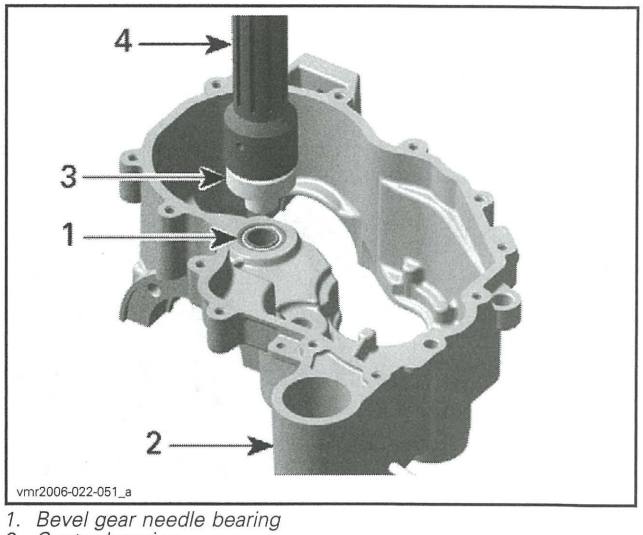

1. *Bevel gear needle bearing*
2. *Center housing*
3. *Needle bearing installer*
4. *Installer handle*

Install new oil seals with the proper installer (refer to *GEARBOX OIL SEALS* in this subsection).

Other Gearbox Components

Fit intermediate gear with needle bearing on intermediate gear shaft.

NOTE: Fit gear with collar facing to housing side on the intermediate shaft.

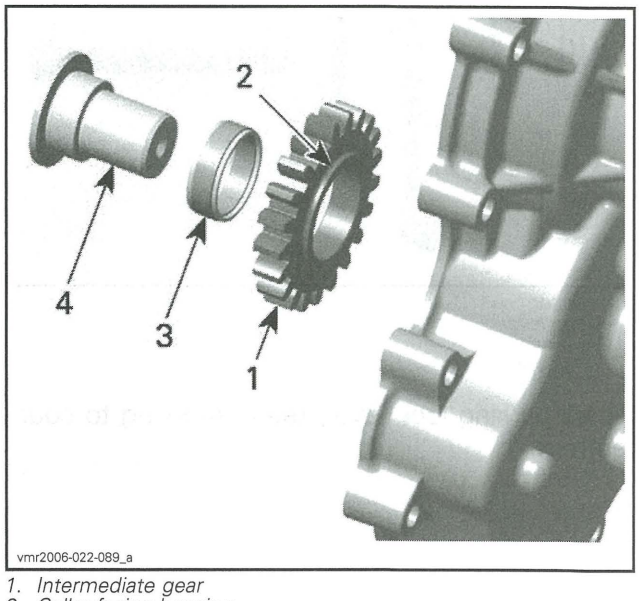

1. *Intermediate gear*
2. *Collar facing housing*
3. *Needle bearing*
4. *Intermediate gear shaft*

Press intermediate gear shaft in the left housing.

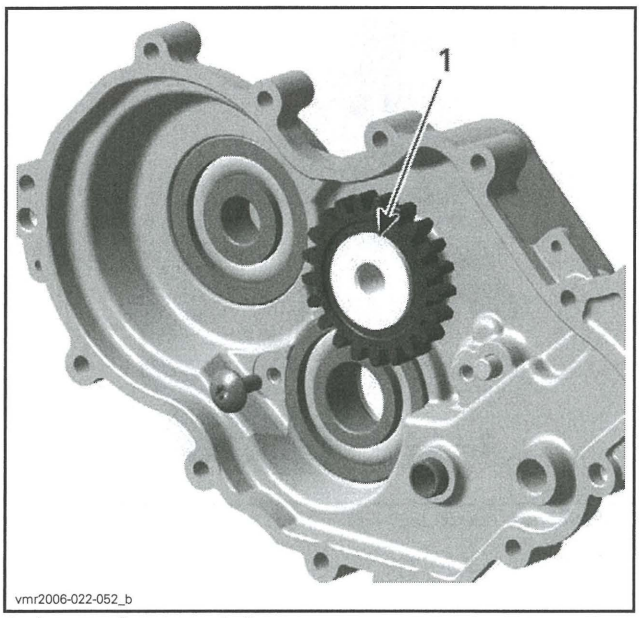

1. Intermediate gear shaft

Fit support flange in the left housing and install index lever.

NOTE: Fit step ring into index lever.

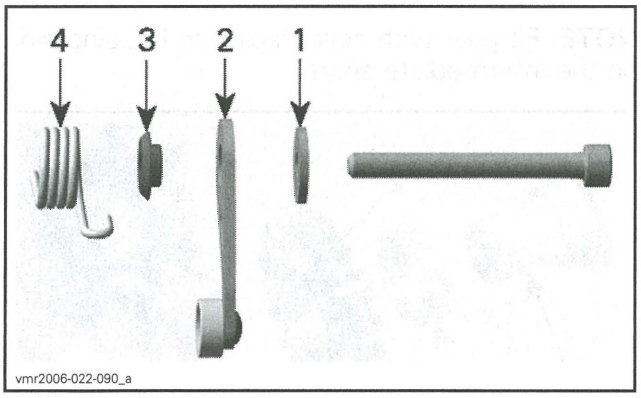

1. Washer
2. Index lever
3. Step ring
4. Index spring

Install parking lock lever, teeth showing to countershaft.

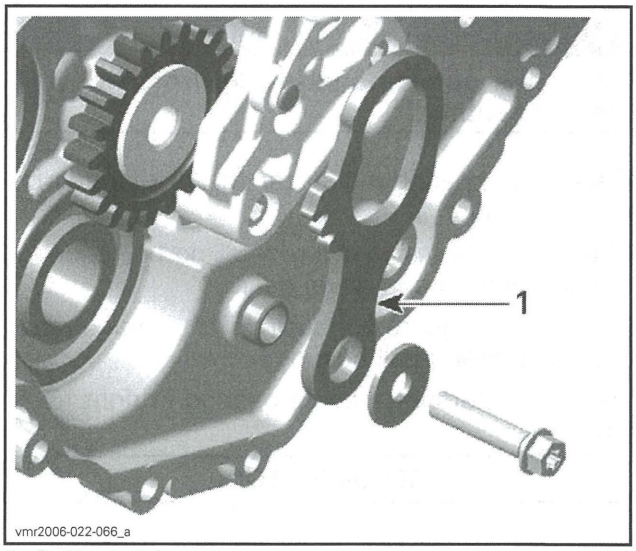

1. Parking lock lever

Place shim of CVT side on bearing.

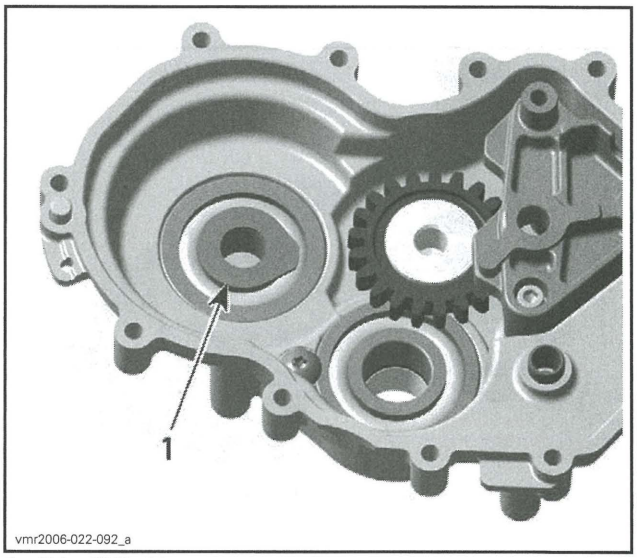

1. Shim CVT side

Place reverse gear with needle bearing and thrust washer.

NOTE: Check if the screw to secure countershaft bearing is installed.

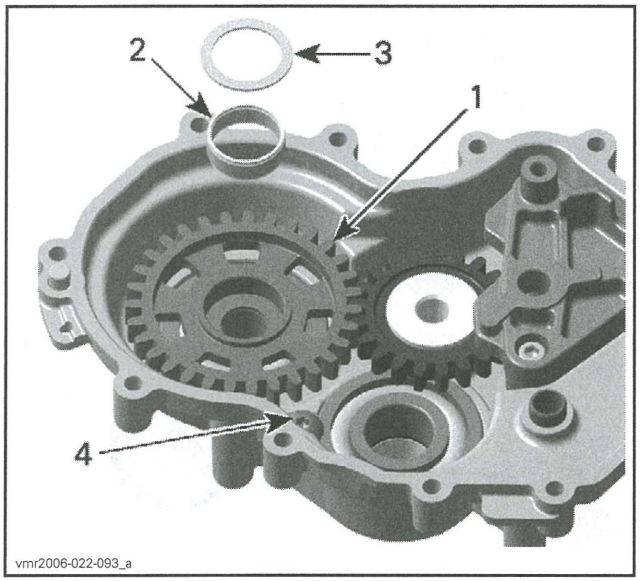

1. *Reverse gear*
2. *Needle bearing*
3. *Thrust washer*
4. *Countershaft bearing screw*

Install countershaft with low gear and high gear assembly.

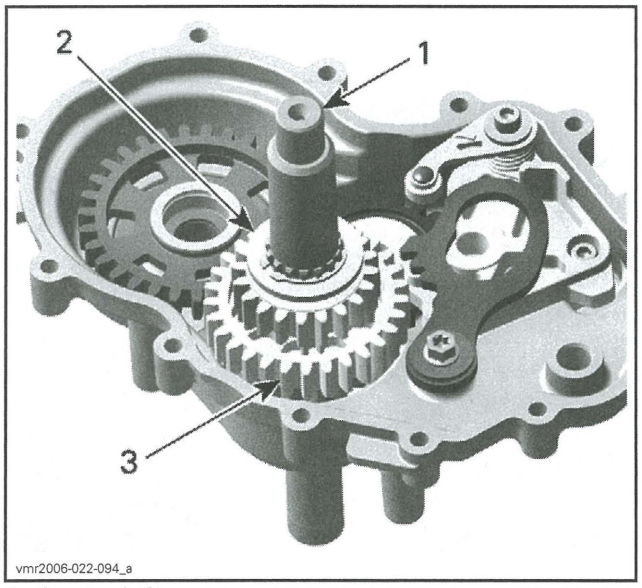

1. *Countershaft*
2. *Low gear*
3. *High gear*

Install a new shim onto bevel gear shaft, fork side.

Install bevel gear with sliding gear assembly together with shift fork.

NOTE: If a new bevel gear and output shaft are used, it is necessary to verify the shim adjustment prior to finalize assembly. Refer to *ADJUSTMENT* in this subsection. If the existing bevel gear is used, it is mandatory to use a new shim with the same thickness, a new needle bearing and shim.

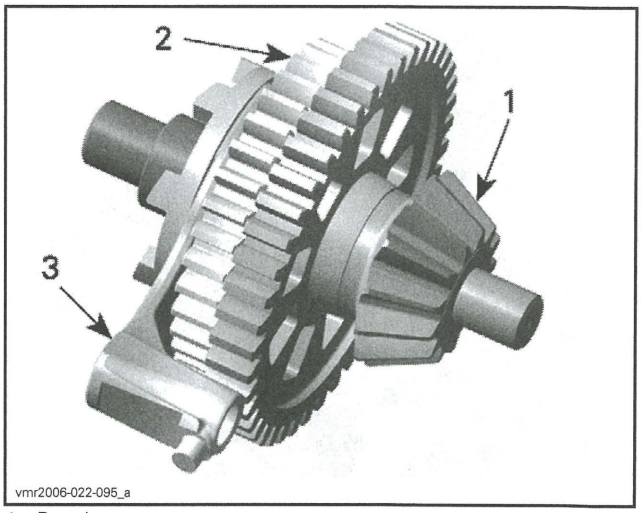

1. *Bevel gear*
2. *Sliding gear*
3. *Shift fork*

Install a new needle bearing and shim.

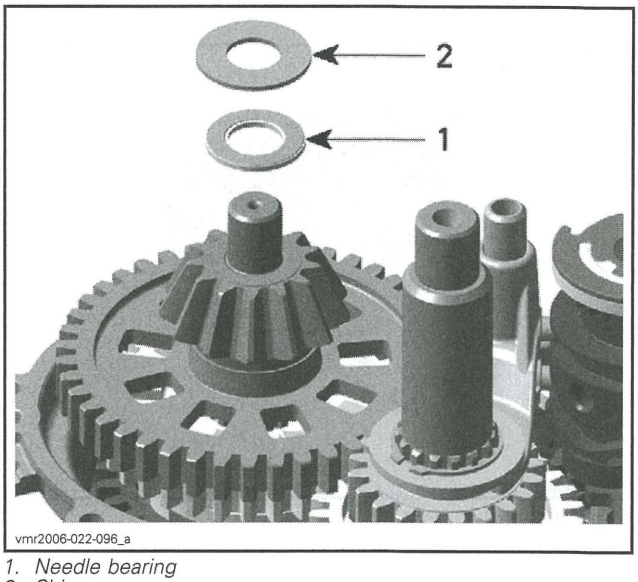

1. *Needle bearing*
2. *Shim*

Insert a flat screwdriver in the slot of the index lever, turn screwdriver clockwise and install shift drum on neutral position as per following illustration.

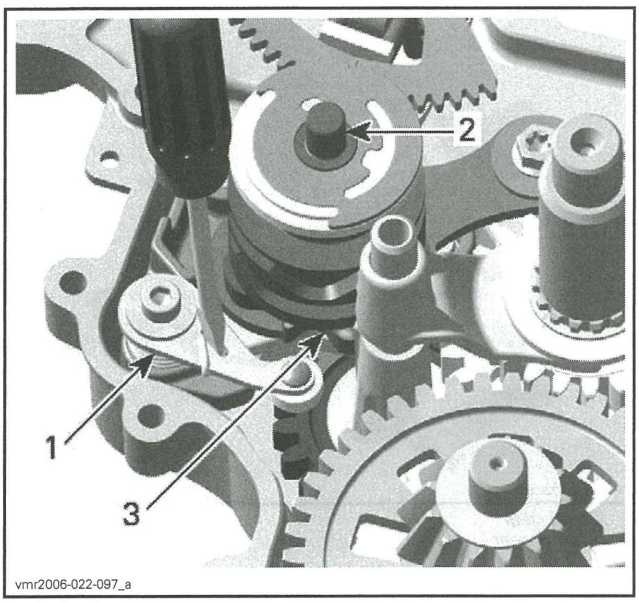

1. *Index lever*
2. *Shift drum*
3. *Neutral position*

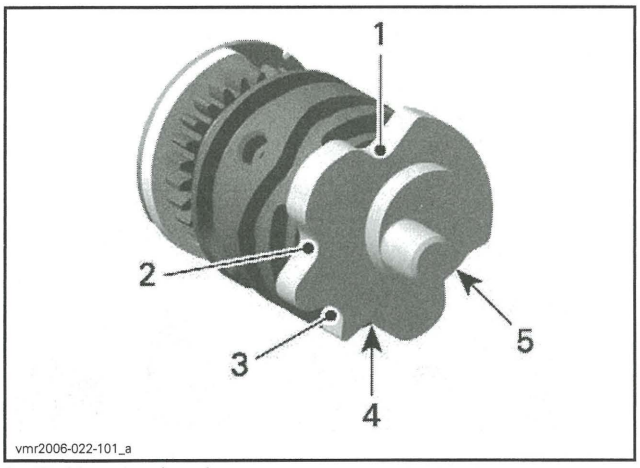

1. *Parking stop location*
2. *Reverse stop location*
3. *Neutral stop location*
4. *High gear stop location*
5. *Low gear stop location*

Install shift shaft assembly.

NOTE: Marks on shift drum/isolating washer and shift shaft must align.

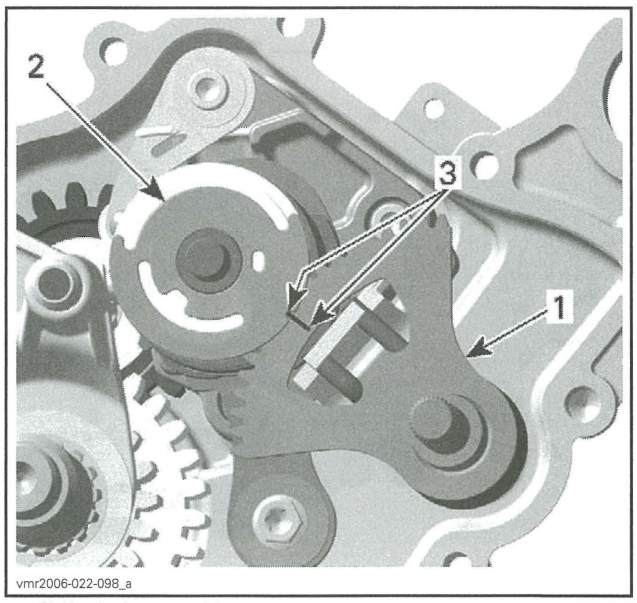

1. *Shift shaft assembly*
2. *Isolating washer*
3. *Marks*

Install shift fork then engage both shift fork pins in their corresponding groove on the shift drum.

NOTE: Move sliding gears to facilitate engagement of pins inside grooves.

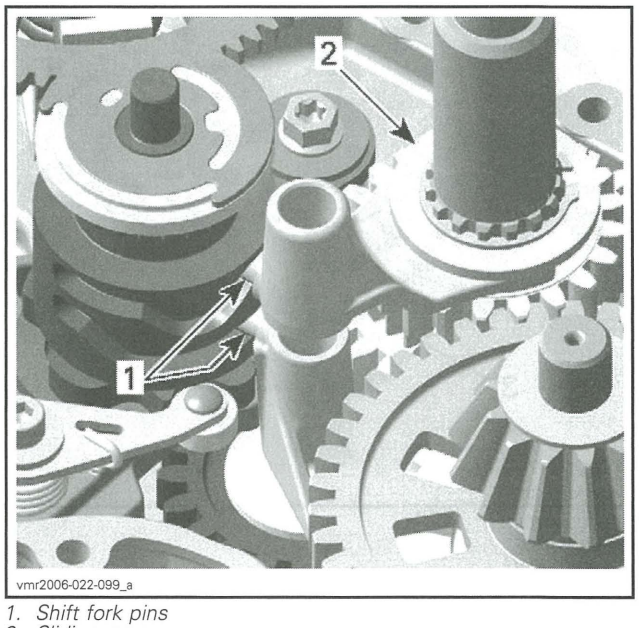

1. *Shift fork pins*
2. *Sliding gear*

Install shift fork shaft.

NOTE: Run all gears as a final function check before installing center housing.

Now, close the housings by doing the following:

Clean all metal components in a solvent.

Gearbox housing mating surfaces are best cleaned using a combination of LOCTITE CHISEL (GASKET REMOVER) (P/N 413 708 500) and a brass brush. Brush a first pass in one direction then make the final brushing perpendicularly (90°) to the first pass cross (hatch).

NOTICE **Do not wipe with rags. Use a new clean hand towel only.**

IMPORTANT: When beginning the application of the gear housing sealant, the assembly and the first torquing should be done within 10 minutes. It is suggested to have all you need on hand to save time.

Use LOCTITE 5910 (P/N 293 800 081) on mating surfaces.

Use a plexiglass plate and apply some sealant on it. Use a soft rubber roller (50 - 75 mm (2 - 3 in)), available in arts products suppliers for printing, and roll the sealant to get a thin uniform coat on the plate (spread as necessary). When ready, apply the sealant on gear housing mating surfaces.

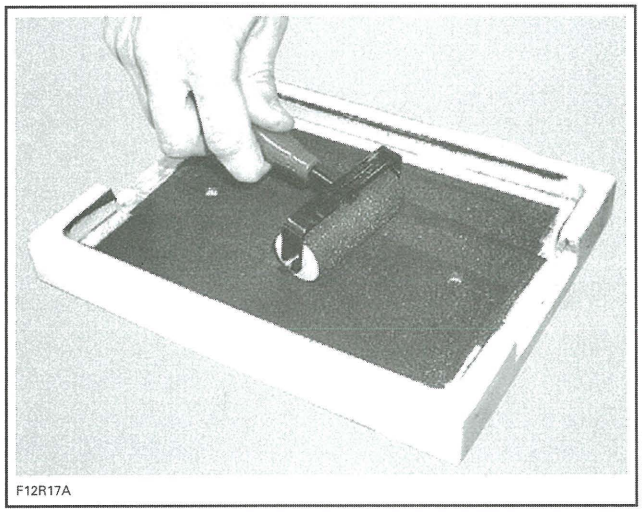
F12R17A

Do not apply in excess as it will spread out inside gear housing.

NOTE: It is recommended to apply this specific sealant as described here to get a uniform application without lumps. If you do not use the roller method, you may use your finger to uniformly distribute the sealant (using a finger will not affect the adhesion).

Tighten gear housing screws in a crisscross sequence.

GEAR HOUSING SCREWS	
TIGHTENING TORQUE	
STEP 1	Hand tightened
STEP 2	10 N•m ± 1 N•m (89 lbf•**in** ± 9 lbf•**in**)

Install O-ring including distance sleeve on countershaft CVT side.

NOTICE **Place O-ring including distance sleeve right away. Chamfered bore of distance sleeve has to face the gearbox.**

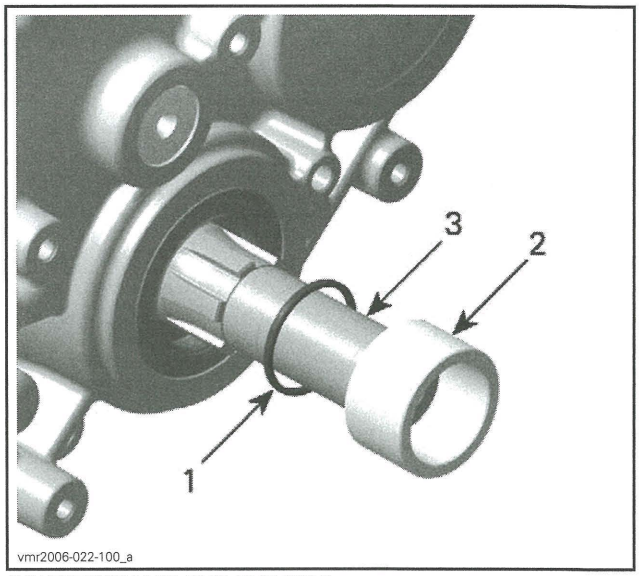

vmr2006-022-100_a

COUNTERSHAFT END CVT SIDE
1. *O-ring*
2. *Distance sleeve*
3. *Countershaft end CVT side*

Refer to *OUTPUT SHAFT AND COUPLING MECHANISM* to install these components. Measure the output shaft backlash.

Gearbox Installation

The installation is the reverse of the removal procedure.

GEARBOX AND 4X4 COUPLING UNIT (1000)

SERVICE TOOLS

Description	Part Number	Page
BLIND HOLE BEARING PULLER SET	529 036 117	246
COUNTERSHAFT OIL SEAL PUSHER	529 036 222	239
ECM ADAPTER TOOL	529 036 166	235
FLUKE 115 MULTIMETER	529 035 868	232, 236
HANDLE	420 877 650	239
OIL SEAL INSTALLER (GEARBOX)	529 035 758	239
OIL SEAL INSTALLER	529 036 204	240

SERVICE TOOLS – OTHER SUPPLIER

Description	Part Number	Page
FLUKE RIGID BACK-PROBE	TP88	232, 234

SERVICE PRODUCTS

Description	Part Number	Page
LOCTITE 5910	293 800 081	236, 252
LOCTITE CHISEL (GASKET REMOVER)	413 708 500	252
PETAMO GREASE GHY 133N	420 899 271	238
SUPER LUBE GREASE	293 550 030	233, 237, 240

GEARBOX COMPONENTS AND 4X4 COUPLING MECHANISM

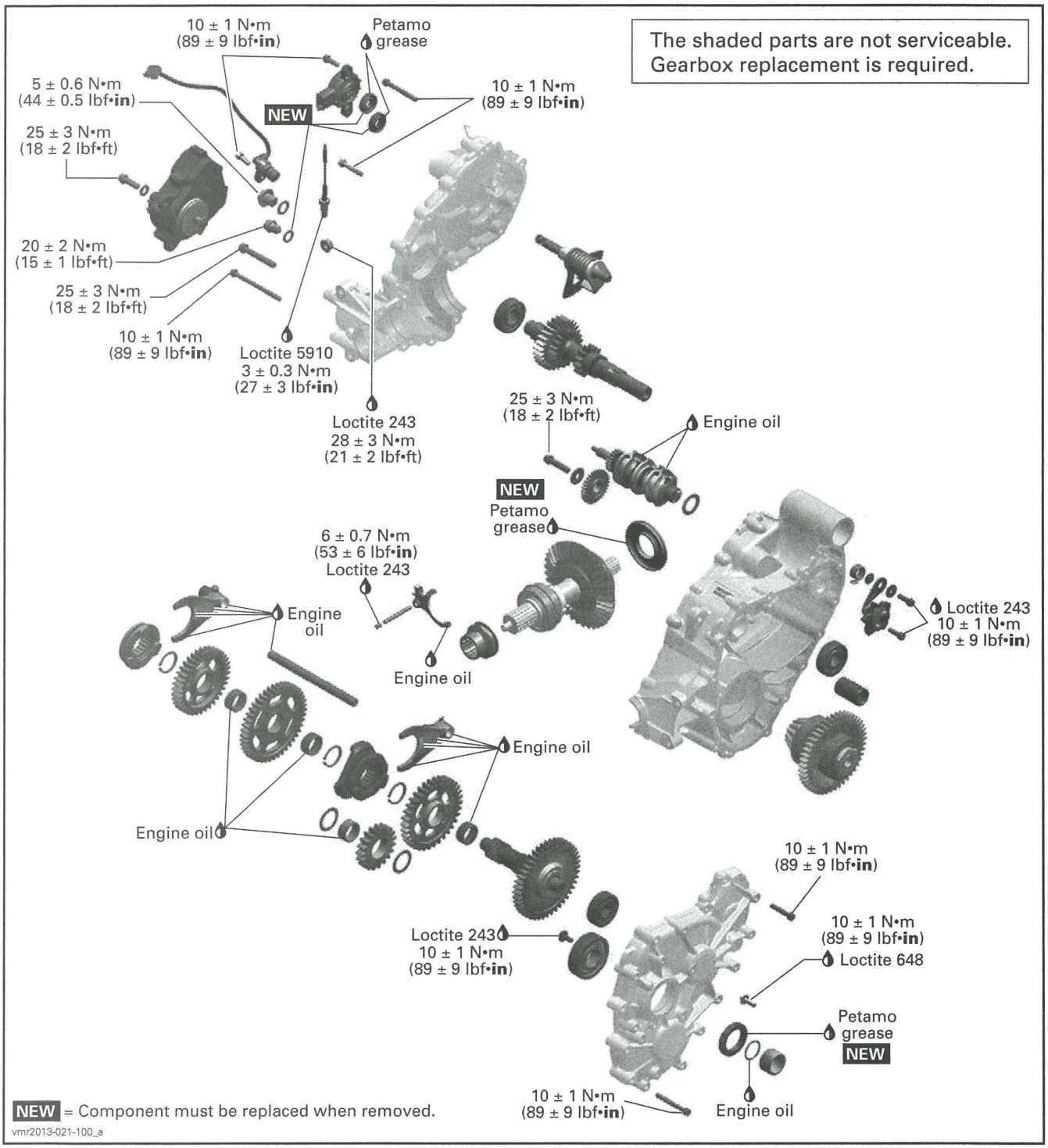

GENERAL

GEARBOX OVERVIEW

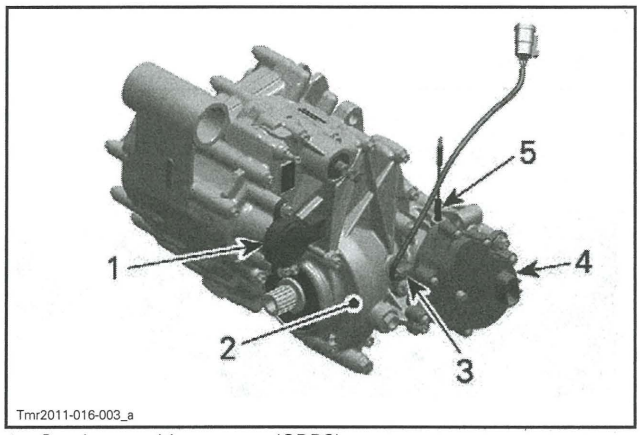

1. *Gearbox position sensor (GBPS)*
2. *Right cover*
3. *Vehicle speed sensor (VSS)*
4. *Actuator*
5. *4WD indicator switch*

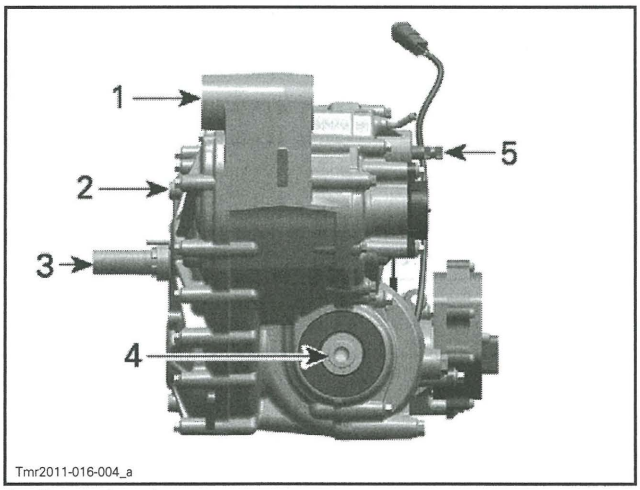

1. *Center housing*
2. *Left cover*
3. *Countershaft*
4. *Output shaft*
5. *Shift shaft*

TROUBLESHOOTING

UNUSUAL GEARBOX NOISE AND/OR VIBRATIONS

1. Low oil level in gearbox.
   - *Oil leakage from gearbox. Replace damaged gasket(s) and/or oil seal(s).*
2. Defective bearings.
   - *Bearing(s) do(es) not turn smoothly. Replace bearing(s).*
3. Damaged or worn gears.
   - *Inspect gears for damages or missing teeth. Replace respective gears.*

GEAR INDICATION FAILS

1. Defective gearbox position sensor (GBPS).
   - *Perform a gearbox position sensor test.*
   - *Damaged wires. Repair as required.*

GEAR(S) IS (ARE) HARD TO SHIFT

1. Incorrect shift rod adjustment.
   - *Adjust shift rod (refer to SHIFT ROD in SHIFTER subsection.*

4 WHEEL DRIVE INDICATION FAILS

1. 4WD indicator switch failure.
   - *Test 4WD indicator switch. Replace as required.*
   - *Bad contact. Check for corrosion or loose connector.*
   - *Damaged wires. Repair as required.*

4 WHEEL DRIVE DOES NOT ENGAGE OR DISENGAGE

1. Defective 4WD switch.
   - *Check 4WD switch operation.*
2. Defective actuator.
   - *Test actuator.*
3. Damaged or worn shifting fork or sleeve.
   - *Remove actuator and inspect shifting fork and sleeve.*

PROCEDURES

VEHICLE SPEED SENSOR (VSS)

VSS Location

The vehicle speed sensor is located on the right housing of the gearbox behind the actuator.

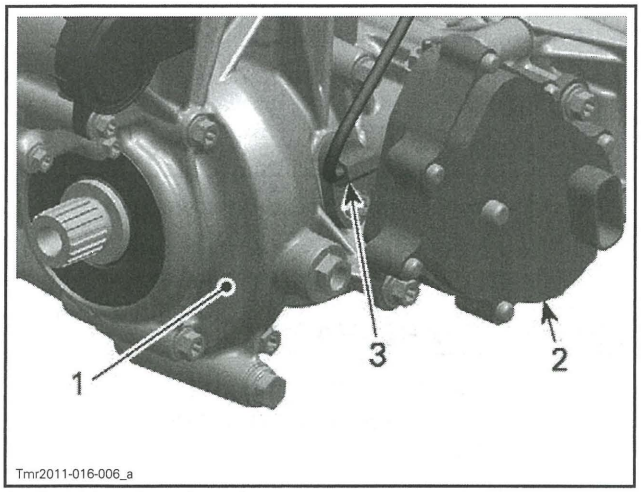

1. Right housing of gearbox
2. Actuator
3. VSS (Vehicle Speed Sensor)

VSS Access

To reach the VSS, refer to *BODY* subsection and remove the following parts:

- Seat
- Console
- RH side panel
- RH engine panel (Renegade only).

VSS Wire Identification

FUNCTION	PIN	COLOR - SENSOR CONNECTOR	COLOR - WIRING HARNESS CONNECTOR
12-volt input from fuse F5	A	RED	VIOLET/BLUE
Speed signal (to cluster pin 9)	B	WHITE	PINK
Ground (to ECM C3)	C	BLACK	GREEN/ BROWN

VSS Circuit Protection

CONDITION	CIRCUIT PROTECTION
Supplied with main relay activated	Fuse 5 of fuse block 1 (from main relay R2)

VSS Input Voltage Test

1. Remove VSS connector cover.
2. Set multimeter to Vdc.

REQUIRED TOOL
FLUKE 115 MULTIMETER (P/N 529 035 868)

3. Turn ignition switch ON.
4. Set emergency engine stop switch to RUN.
5. Back-probe the VSS connector.

REQUIRED TOOL
FLUKE RIGID BACK-PROBE (P/N TP88)

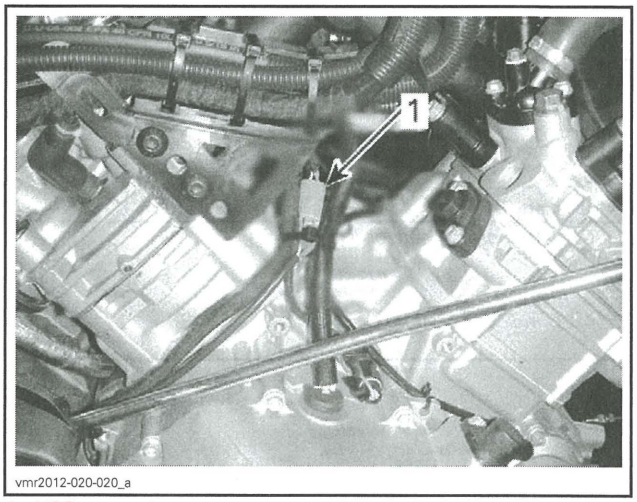

1. VSS connector

6. Measure voltage as per following table.

VEHICLE SPEED SENSOR INPUT VOLTAGE TEST		
TEST PROBES		RESULT (KEY ON)
PIN A VIOLET/BLUE wire	PIN C GREEN/BROWN wire	Battery voltage

If voltage is not as specified, test positive and ground circuits separately.

VSS Signal Test

1. Lift rear of vehicle so that rear wheels are off the ground.
2. Set transmission to 2WD and to NEUTRAL.
3. Back-probe the VSS connector.

REQUIRED TOOL
FLUKE RIGID BACK-PROBE (P/N TP88)

4. Turn ignition switch ON.
5. Set emergency engine stop switch to RUN.
6. Set multimeter to Vdc.
7. Measure voltage while slowly rotating rear wheels by hand.

VEHICLE SPEED SENSOR SIGNAL TEST		
TEST PROBES		RESULT (WHILE ROTATING WHEELS)
PIN B WHITE wire	PIN C BLACK wire	Alternate reading between battery voltage and 0 Vdc

NOTE: Since we measure pulsating voltage, the numeric display will continuously change. The analog display may be easier to follow.

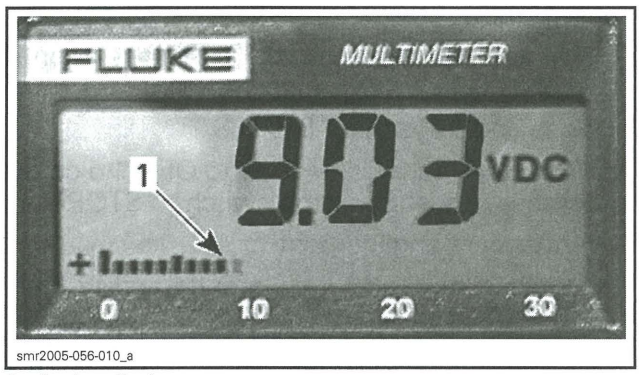

smr2005-056-010_a

1. Analog display

VSS Removal

Remove screw retaining the VSS.

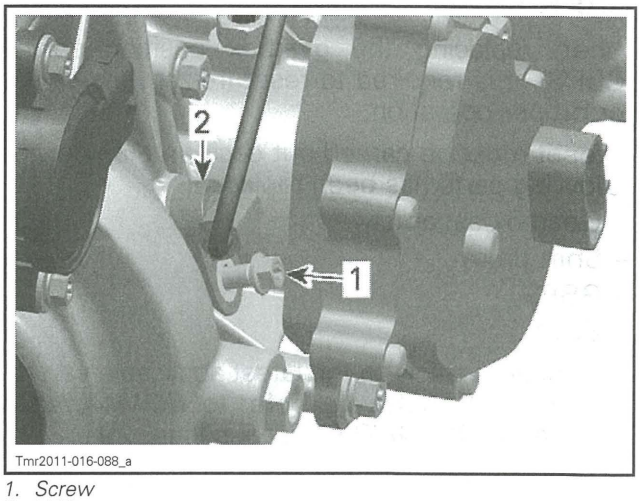

Tmr2011-016-088_a

1. Screw
2. VSS

Turn sensor and weave it out of the gearbox right cover.

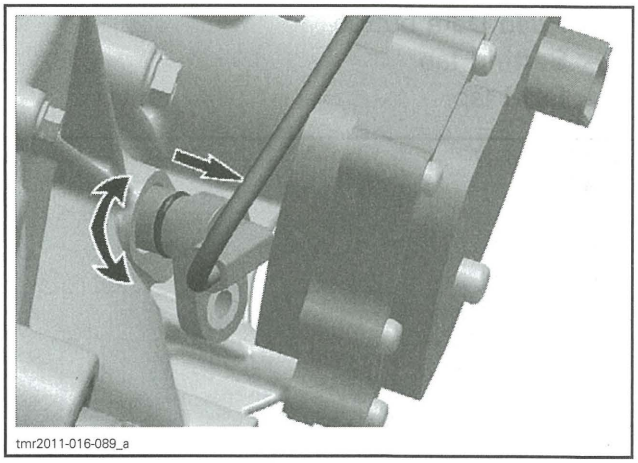
tmr2011-016-089_a

VSS Installation

For installation, reverse the removal procedure. Pay attention to the following.

Apply SUPER LUBE GREASE (P/N 293 550 030) on VSS O-ring.

GEARBOX POSITION SENSOR (GBPS)

GBPS Reset

When replacing the gearbox position sensor (GBPS), it is required to reset (re-zero) its values for proper operation.

A reset must be carried out each time any of the following parts has been replaced:

- Gearbox assembly
- Shift drum
- GBPS
- ECM.

1. Connect vehicle to the latest applicable version of B.U.D.S. software, refer to *COMMUNICATION TOOLS AND B.U.D.S.* subsection.

NOTE: Ignition key must stay ON and emergency engine stop switch must remain to RUN during the reset procedure. Otherwise, the procedure must be carried out again.

2. In B.U.D.S., select the following:
   - **Read Data** button
   - **Setting** tab
   - **ECM** tab.

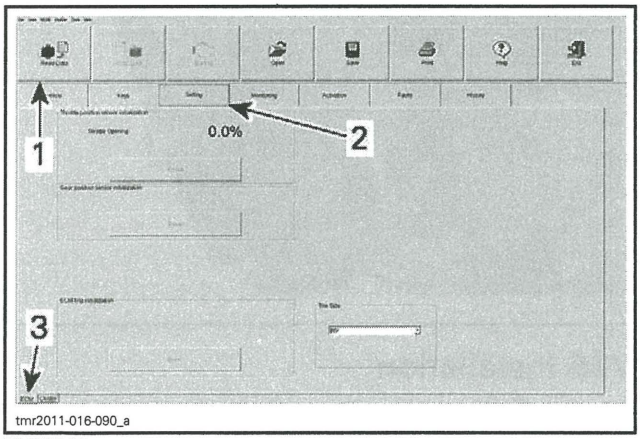

TYPICAL
1. *Read data button*
2. *Setting tab*
3. *ECM tab*

3. Make sure that gearbox is set to NEUTRAL position.
4. In the **Gear Position Sensor Initialization** area, click on the **Reset** button.

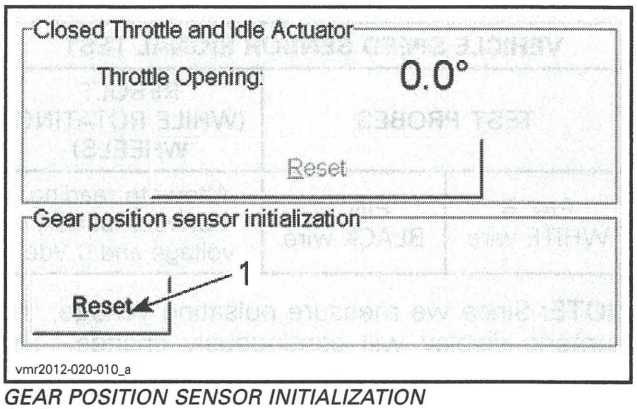

GEAR POSITION SENSOR INITIALIZATION
1. *Reset button*

A message will be displayed if the operation is successful.

5. Close and disconnect B.U.D.S.

NOTE: Do not turn ignition key to OFF and do not set emergency engine stop switch to STOP.

6. Verify gears engagement.
   - 6.1 With the vehicle on ground and in NEUTRAL position, start engine.
   - 6.2 During 4-5 seconds, rev engine to 2500 ± 200 RPM.
   - 6.3 Let engine returns to idle.
   - 6.4 Repeat substeps 6.2 and 6.3 for all other gear positions.

     NOTE: The vehicle must be in movement to complete the procedure on R, H and L positions.

GBPS Access

To reach the GBPS sensor, refer to *BODY* and remove the following parts:

- Seat
- Console
- RH side panel
- RH engine panel (Renegade only).

GBPS Input Voltage Test

NOTE: Prior to conduct testing, check fault codes in B.U.D.S.

Back-probe the GBPS connector using FLUKE RIGID BACK-PROBE (P/N TP88) or equivalent.

Test as follow:

MULTIMETER PROBE POSITIONS	VOLTAGE
PIN 1 and PIN 3 of the GBPS connector 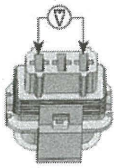	5 volts

If voltage is adequate, check GBPS signal wire.

If there is no voltage, check each GBPS input as follows.

MULTIMETER PROBE POSITIONS	VOLTAGE
GBPS connector (pin 1) and battery ground 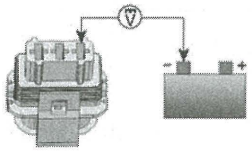	5 volts
GBPS connector (pin 3) and battery + terminal 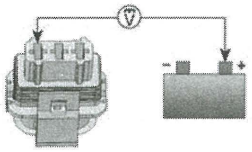	Battery voltage

If there is no voltage, check wires and connector pins. Replace or repair defective parts and reset fault codes.

GBPS Signal Wire Continuity Test

Unplug ECM connector and connect it to the adapter tool.

REQUIRED TOOL
ECM ADAPTER TOOL (P/N 529 036 166)

MULTIMETER PROBE POSITIONS	RESISTANCE @ 20°C (68°F)
GBPS connector (pin 2) and ECM adapter tool (pin D2) 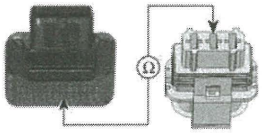	Below 1 Ω

If resistance is out of specification, check wires and connectors. Repair and reset fault codes.

If resistance is good and the other tests succeeded, replace the GBPS and reset fault codes.

NOTE: The GBPS must be reset.

GBPS Removal

Set shift lever in NEUTRAL position.

Unplug GBPS connector.

Remove screws and withdraw GBPS.

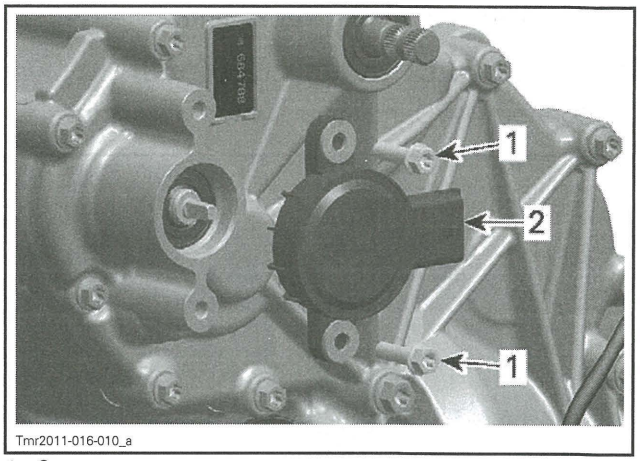

1. Screws
2. Gearbox Position Sensor (GBPS)

GBPS Installation

For installation, reverse the removal procedure. Pay attention to the following details.

Shift lever must be in the NEUTRAL position.

Align GBPS with the flat on the shift drum shaft.

IMPORTANT: Do not force to install GBPS if shaft flat is not properly aligned. If alignment is incorrect, check shift rod adjustment.

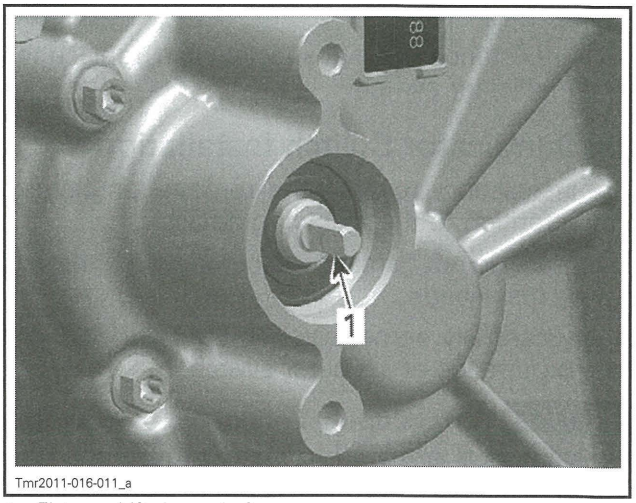

1. Flat on shift drum shaft

Reset the GBPS. Refer to *GBPS RESET* in this subsection.

4WD INDICATOR SWITCH

4WD Indicator Switch Access

To reach the 4WD indicator switch, refer to *BODY* and remove the following parts:
- Seat
- Console
- RH side panel
- RH engine panel (Renegade only).

4WD Indicator Switch Removal

Disconnect 4WD indicator switch connector.

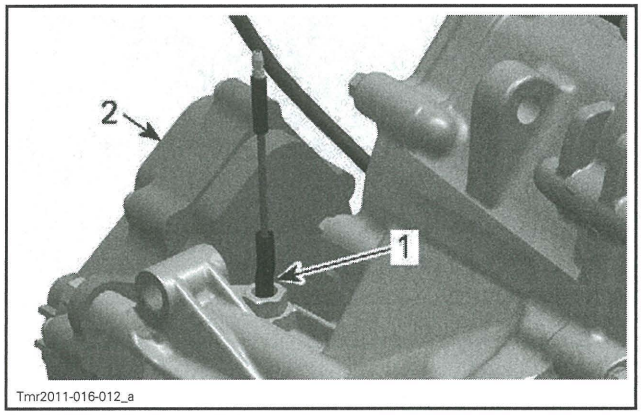

1. 4 WD indicator switch
2. Actuator

4WD Indicator Switch Test

Measure switch resistance as follows.

SWITCH POSITION	SWITCH WIRE		RESISTANCE
2WD	BLACK/ BEIGE	Engine ground	Infinite (OL)

If the resistance is out of specification, replace the 4WD indicator switch.

4WD Indicator Switch Installation

For installation, reverse the removal procedure. Pay attention to the following details.

Take care do not damage indicator switch threads during installation.

Apply carefully some LOCTITE 5910 (P/N 293 800 081) on threads of indicator switch.

NOTICE Do not apply Loctite 5910 on switch plunger, as it will lead to switch malfunction.

ACTUATOR

Actuator Access

To access the actuator, refer to *BODY* and remove the following parts:
- Seat
- Console
- RH side panel
- RH footrest panel
- RH engine panel (Renegade only).

Actuator Test

Check if the 2WD/4WD selector works properly.

REQUIRED TOOL	
FLUKE 115 MULTIMETER (P/N 529 035 868)	

Unplug actuator connector.

Turn ignition key ON.

Set emergency engine stop switch to RUN.

Measure voltage as follows.

SWITCH POSITION	SWITCH WIRE		VOLTAGE
2WD	WHITE/BLUE	WHITE	Battery voltage
4WD	WHITE/BLACK		

If the selector is out of specifications, check wires, connectors and replace the selector if necessary.

If the selector is good, check the vehicle harness.

If the vehicle harness is good, replace the actuator.

Actuator Removal

NOTE: Before beginning any servicing on the actuator, make sure the vehicle is in 4WD position. No need to remove engine from vehicle.

Place a drain pan under actuator.

Detach brake master cylinder from frame (Outlander only).

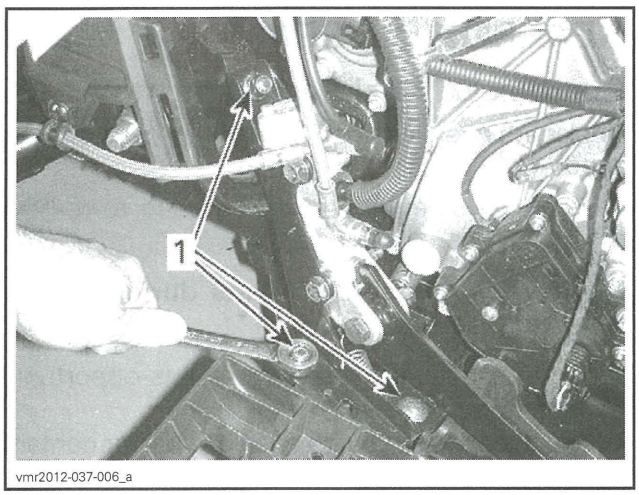

OUTLANDER ONLY
1. *Remove retaining screws from master cylinder support*

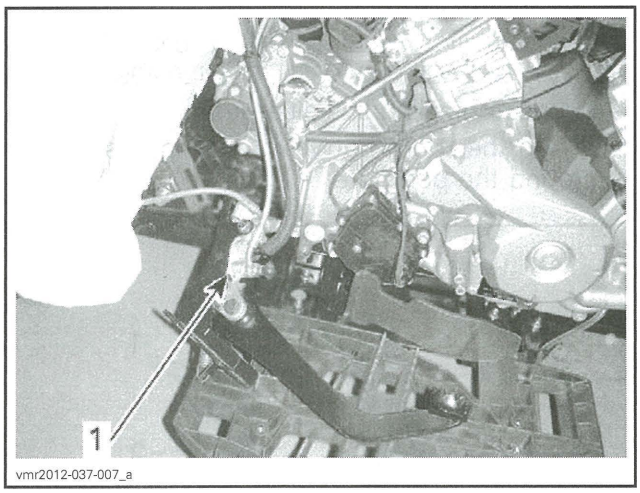

OUTLANDER ONLY
1. *Master cylinder moved apart*

Remove actuator screws.

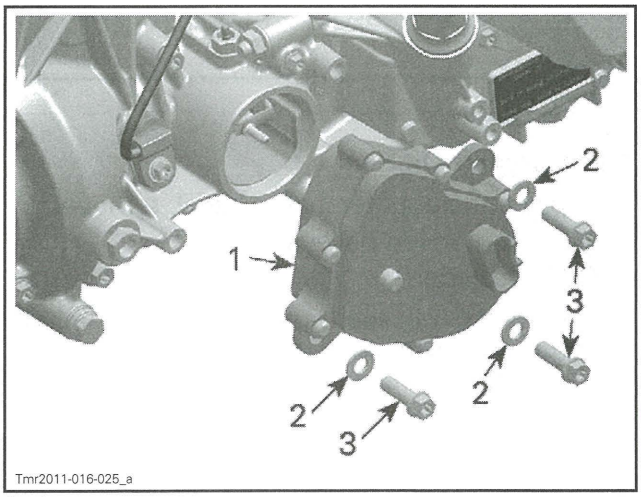

1. *Actuator*
2. *Washer*
3. *Screw*

Pull the actuator out of housing.

Actuator Installation

Apply a small amount of SUPER LUBE GREASE (P/N 293 550 030) on actuator O-ring.

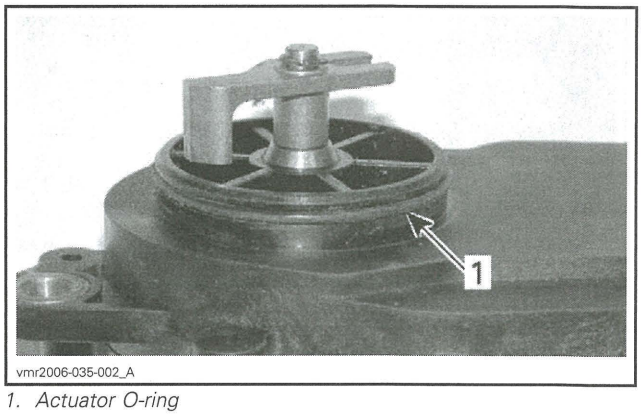

1. *Actuator O-ring*

Ensure coupling fork is in 4WD position (positioned toward the front of vehicle).

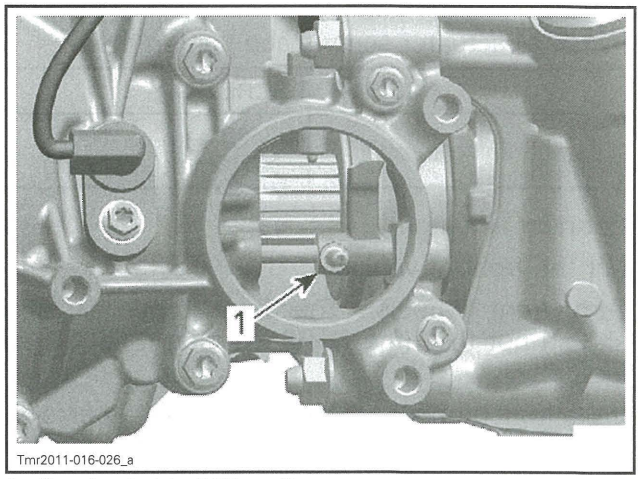

1. *Coupling fork in 4WD position*

Align the actuator fork with the pin on coupling fork then push the actuator in the housing. See the following illustration to position the actuator correctly.

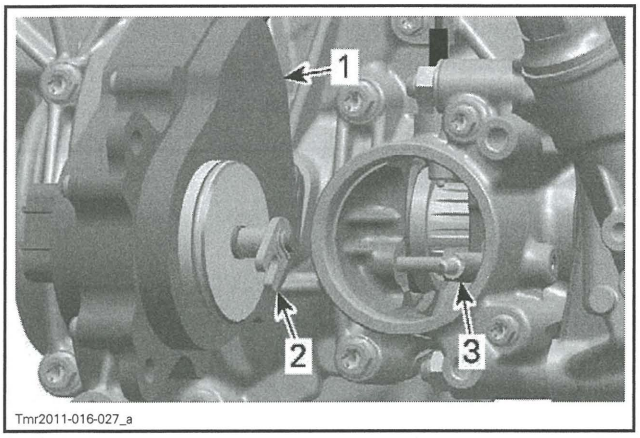

1. Actuator
2. Actuator fork
3. Coupling fork

Rotate the actuator counterclockwise until it orients itself to mounting position.

NOTICE Do not cut or break the actuator O-ring.

Install all actuator screws and tighten them.

ACTUATOR SCREWS	
Tightening torque	25 N•m ± 3 N•m (18 lbf•ft ± 2 lbf•ft)

Connect actuator.

Lift the front of vehicle.

Turn front wheels. The front propeller shaft should not turn (the PARK position must be selected).

If the front propeller shaft turns, the actuator is not installed correctly. Remove actuator and reinstall it.

Set ignition switch to ON.

Set emergency engine stop switch to RUN.

Select the 2WD position.

Turn front wheel again. The front propeller shaft should turn easily.

If the front propeller shaft does not turn, the actuator is not installed correctly. Remove actuator and reinstall it.

NOTICE Refill gearbox, refer to *GEARBOX OIL FILLING PROCEDURE* in *PERIODIC MAINTENANCE PROCEDURES* subsection.

Install all other removed parts.

GEARBOX OIL SEALS

Gearbox Oil Seal Replacement

Replace oil seals if they are brittle, hard or damaged.

A small flat screwdriver can be used to remove most of these oil seals.

NOTICE Avoid scoring parts during oil seal removal.

When replacing an oil seal, take this opportunity to inspect the following:
- Check bearings behind each oil seal for contamination and/or metal shavings.
- Check oil seal running surfaces for scratches.

Oil Seal Lubrication

When installing or reinstalling oil seals, use PETAMO GREASE GHY 133N (P/N 420 899 271) to:
- Lubricate sealing lips all around.
- Fill up the room between sealing lips halfway around the perimeter.

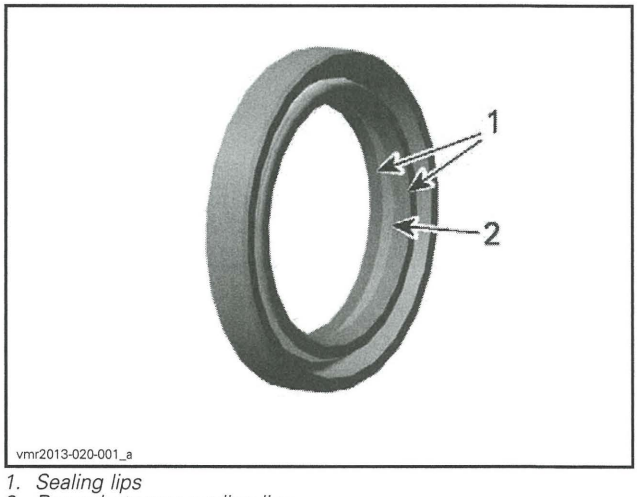

1. Sealing lips
2. Room between sealing lips

Countershaft Oil Seal

To replace the countershaft oil seal, remove:
- Drive and driven pulleys
- CVT air guide.

NOTE: When oil seal is removed also inspect O-ring behind distance sleeve.

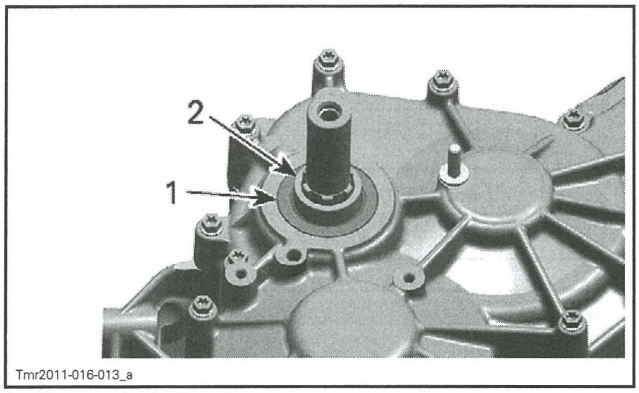

1. *Countershaft oil seal*
2. *Distance sleeve*

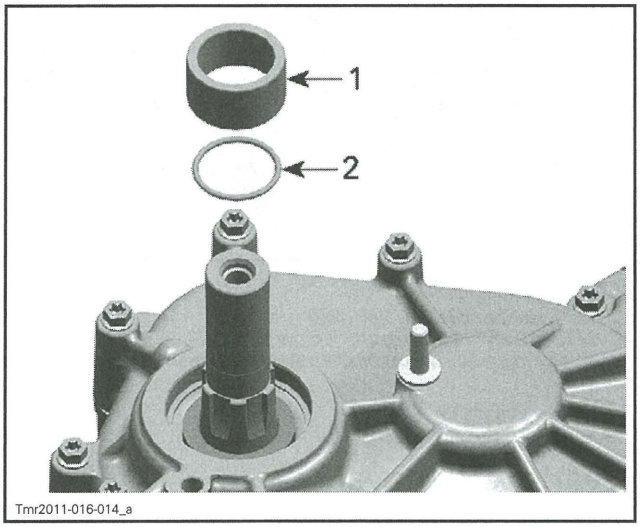

1. *Distance sleeve*
2. *O-ring*

Install countershaft oil seal tool.

REQUIRED TOOL	
COUNTERSHAFT OIL SEAL PUSHER (P/N 529 036 222)	

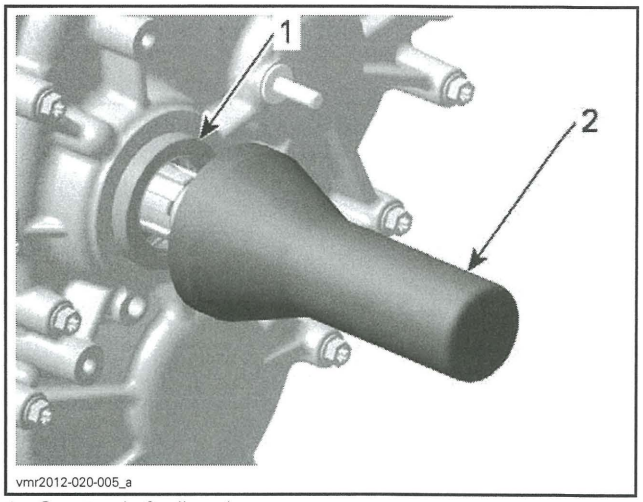

1. *Countershaft oil seal*
2. *Oil seal pusher*

Shift Shaft Oil Seal

The shift shaft oil seal can be removed without removing the gearbox from the vehicle.

To replace the shift shaft oil seal, refer to *BODY* and remove:

- Seat
- Console
- RH side panel
- RH footrest panel
- Shift plate from shift shaft (refer to *SHIFTER*).

Use a suitable tube with the proper diameter to install the oil seal.

If gearbox housing is apart, use following tools for shift shaft oil seal installation.

REQUIRED TOOL	
OIL SEAL INSTALLER (GEARBOX) (P/N 529 035 758)	
HANDLE (P/N 420 877 650)	

NOTICE **Oil seal must be installed with sealing lip toward gearbox.**

Shift Drum Shaft Oil Seal

To replace the shift drum shaft oil seal, remove the *GBPS (GEARBOX POSITION SENSOR)*. See procedure in this subsection.

Use a suitable tube with the proper diameter to install the oil seal.

NOTICE **Oil seal must be installed with sealing lip toward gearbox.**

Output Shaft Oil Seal

To replace the output shaft oil seal, proceed as follows:

Remove propeller shaft. Refer to *REAR DRIVE* subsection.

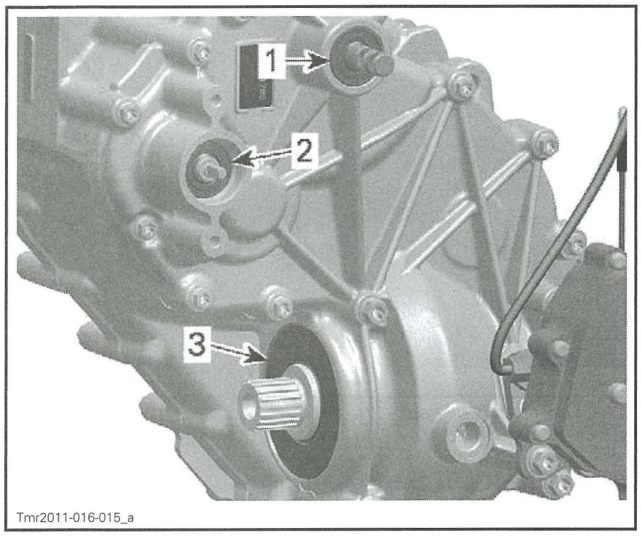

1. *Shift shaft oil seal*
2. *Shift drum shaft oil seal*
3. *Output shaft oil seal*

Punch a sharp screwdriver through oil seal for removal.

NOTE: Position screwdriver only in marked areas to avoid damaging the ball bearing behind oil seal during removal.

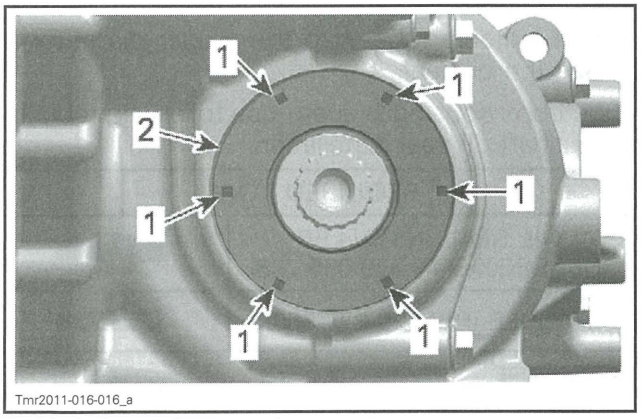

1. *Marked areas for removal*
2. *Output shaft oil seal*

Before beginning the installation ensure gearbox is set to PARK position.

Apply SUPER LUBE GREASE (P/N 293 550 030) on sealing lips.

Apply engine oil on outer diameter of oil seal to avoid damaging it during installation.

Place oil seal on output shaft and install it using the following tools.

REQUIRED TOOL	
OIL SEAL INSTALLER (P/N 529 036 204)	
Flat washer (P/N 250 200 102)	
M12 x 1.25 x 35 hexagonal screw	

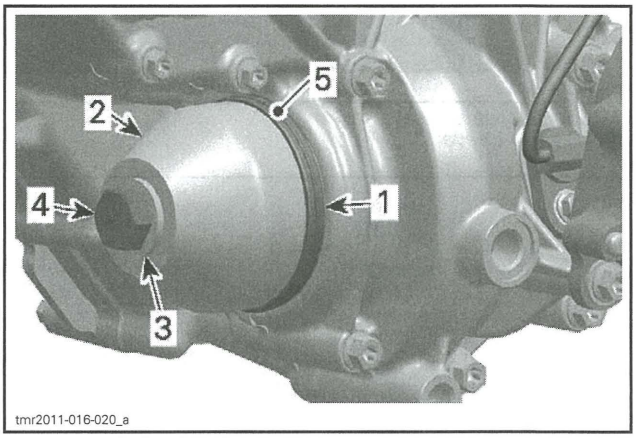

1. *Output shaft oil seal*
2. *Oil seal installer*
3. *Flat washer (P/N 250 200 102)*
4. *M12 x 1.25 x 35 hexagonal screw (P/N 207 683 544)*
5. *Apply engine oil on outer diameter of oil seal*

GEARBOX

Gearbox Removal

Remove engine from vehicle. Refer to *ENGINE REMOVAL AND INSTALLATION* for the procedure.

Refer to *CONTINUOUSLY VARIABLE TRANSMISSION (CVT)* subsection to remove following parts:

- CVT cover
- Drive and driven pulleys
- CVT air guide.

Drain gearbox. Refer to *GEARBOX OIL DRAINING PROCEDURE* in *PERIODIC MAINTENANCE PROCEDURES* subsection.

Remove *ACTUATOR*, see procedure in this subsection.

Unscrew the four (4) nuts that attach the gearbox to the engine.

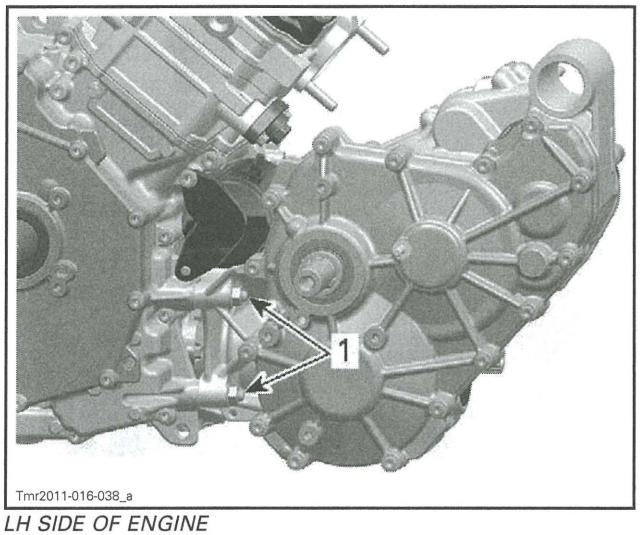

LH SIDE OF ENGINE
1. Nut M8

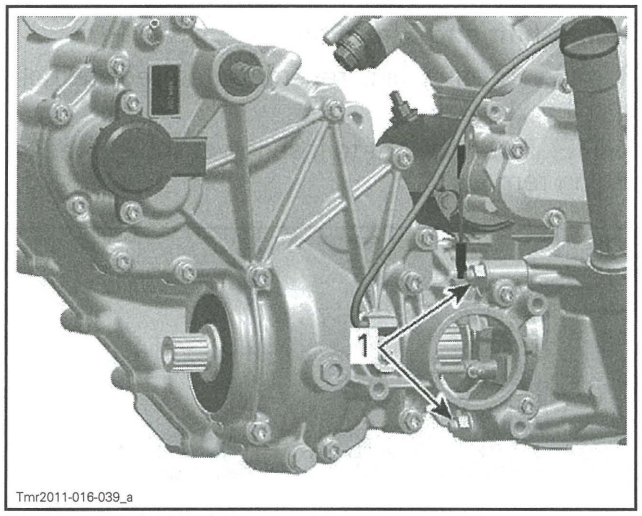

RH SIDE OF ENGINE
1. Nut M8

Pull gearbox to separate it from engine.

Gearbox Disassembly

NOTE: During gearbox disassembly, inspect the condition of each part closely.

Gearbox Left Cover

Set gearbox to NEUTRAL position.

Unscrew all bolts retaining the gearbox left cover.

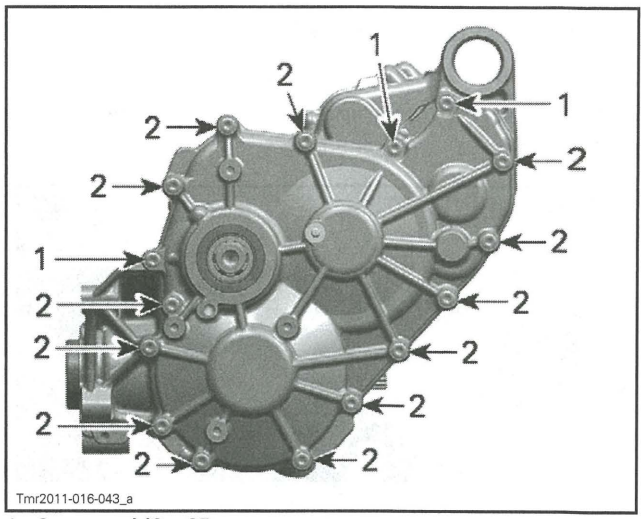

1. 3 screws M6 x 35
2. 13 screws M6 x 55

Place the center housing on a wood stand, left cover pointing upwards.

Using a big flat screwdriver and a soft hammer to lift the left cover.

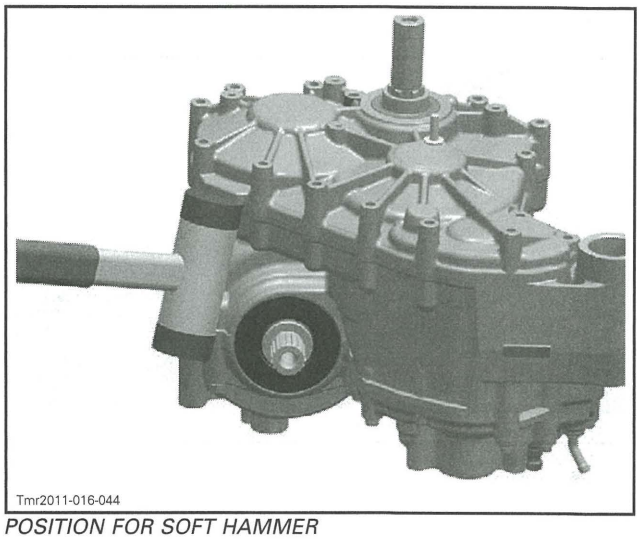

POSITION FOR SOFT HAMMER

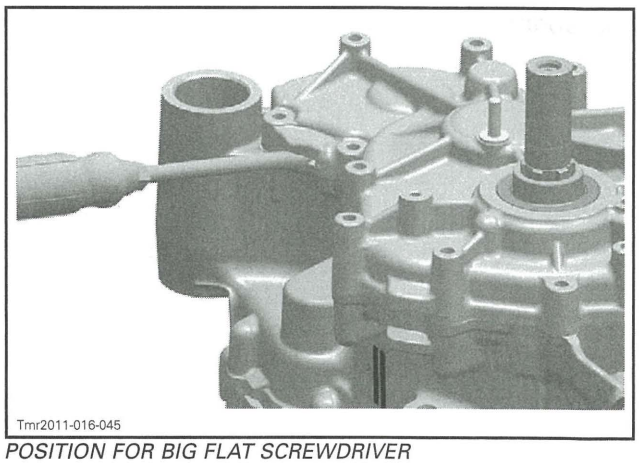

POSITION FOR BIG FLAT SCREWDRIVER

Index Lever and Index Washer

Set gearbox to NEUTRAL position.

Remove screw retaining the index washer to the shift drum.

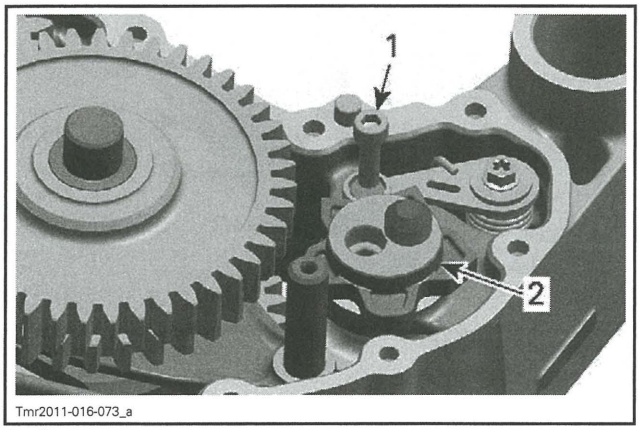

1. Screw
2. Index washer

Insert a flat screwdriver in the slot of index lever. Turn screwdriver clockwise and remove index washer.

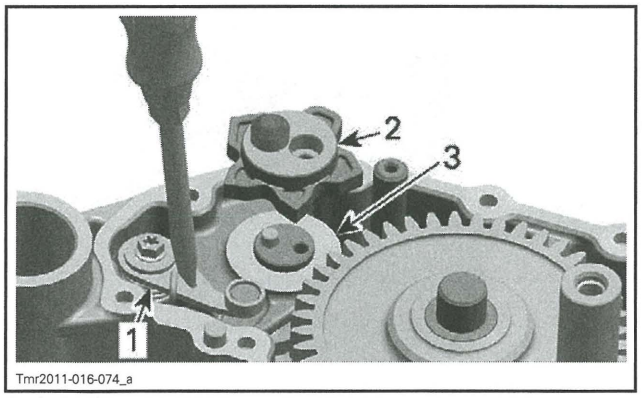

1. Index lever
2. Index washer
3. Shift drum

Remove the index lever with washer, step ring and spring.

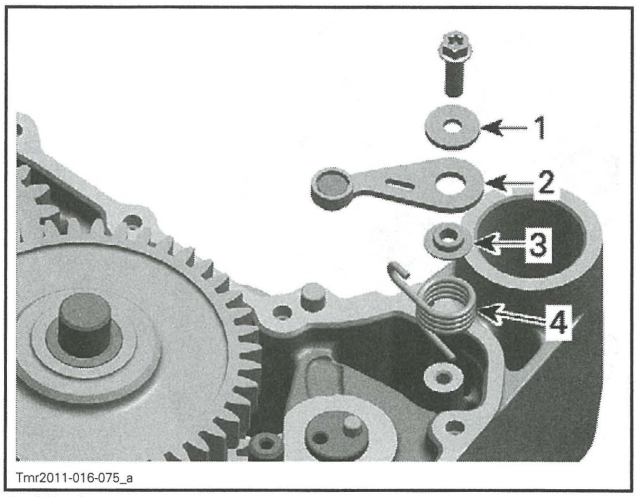

1. Washer
2. Index lever
3. Step ring
4. Index spring

Main Shaft and Shift Forks

Remove bearing pin, reverse intermediate gear and thrust washers.

NOTE: Take care not to lose lower thrust washer during removal.

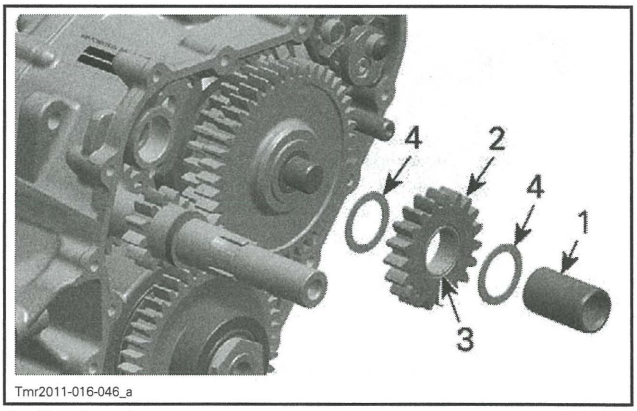

1. Bearing pin
2. Reverse intermediate gear
3. Needle bearing
4. Thrust washers

Remove shift fork shaft.

Disengage shift forks from shift drum.

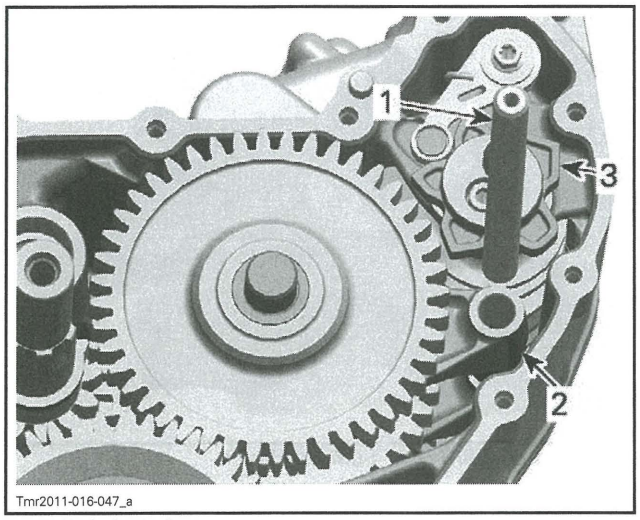

1. *Shift fork shaft*
2. *Shift fork*
3. *Shift drum*

Remove main shaft assembly with shift fork.

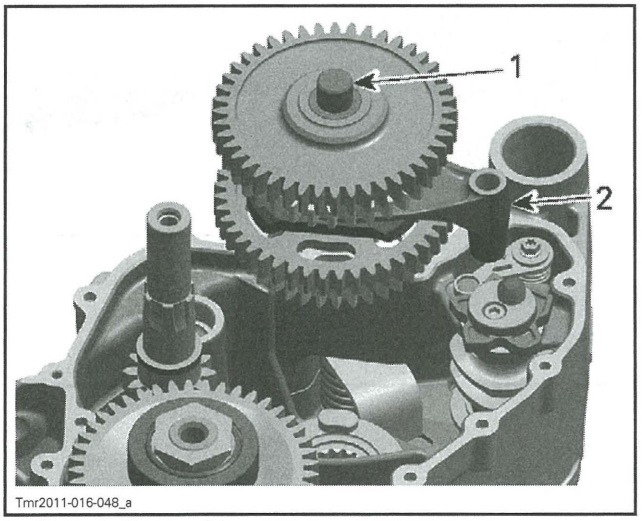

1. *Main shaft assembly*
2. *Shift fork*

Remove shifting sleeve (HIGH range gear) and shift fork.

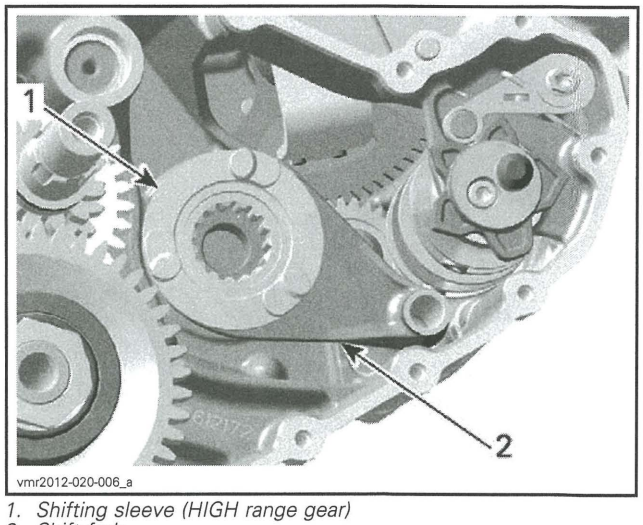

1. *Shifting sleeve (HIGH range gear)*
2. *Shift fork*

When required, remove from main shaft assembly:
- Snap ring (discard)
- HIGH range gear
- LOW range gear
- Needle bearings.

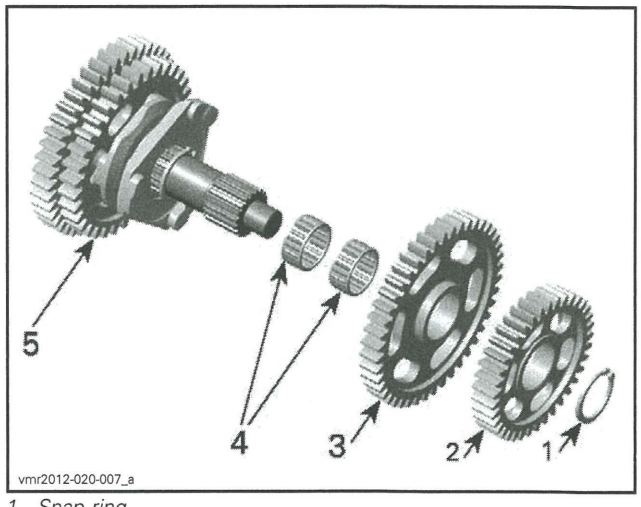

1. *Snap ring*
2. *Free pinion (HIGH range gear)*
3. *Free pinion (LOW range gear)*
4. *Needle bearing*
5. *Main shaft assembly*

Remove from main shaft assembly:
- Snap ring (discard)
- Shifting sleeve (LOW/REVERSE range gear)
- Snap ring (discard)
- REVERSE range gear
- Needle bearing.

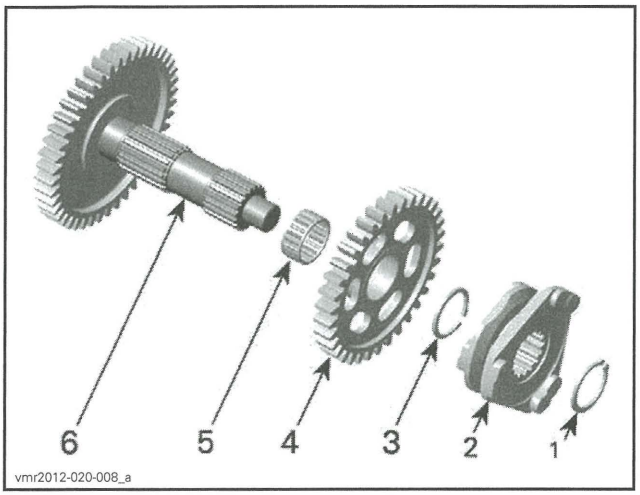

1. *Snap ring*
2. *Shifting sleeve (LOW/REVERSE range gear)*
3. *Snap ring*
4. *Free pinion (REVERSE range gear)*
5. *Needle bearing*
6. *Main shaft assembly*

Gearbox Right Cover

Remove *ACTUATOR* and *GBPS (GEARBOX POSITION SENSOR)*, see procedures in this subsection.

Unscrew all bolts retaining the gearbox right cover.

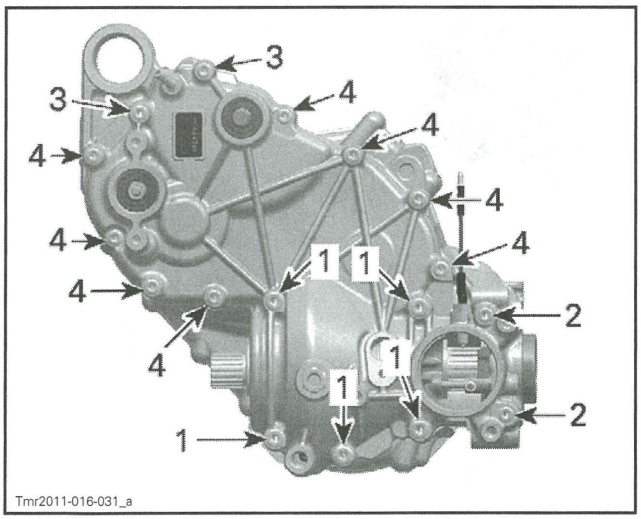

1. *5 screws M8 x 55*
2. *2 screws M6 x 85*
3. *2 screws M6 x 55*
4. *8 screws M6 x 35*

To remove cover, use 2 big screwdrivers.

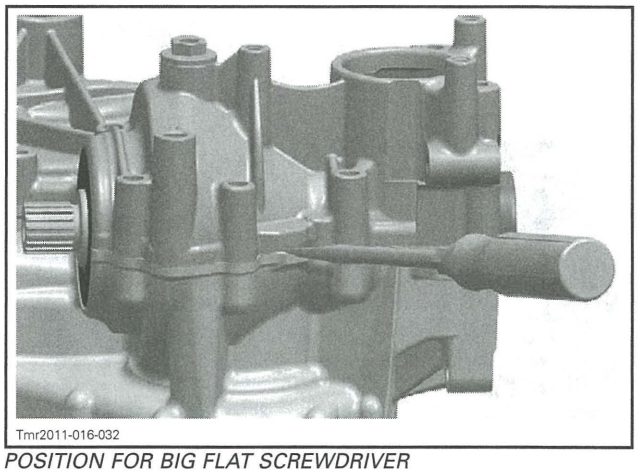

POSITION FOR BIG FLAT SCREWDRIVER

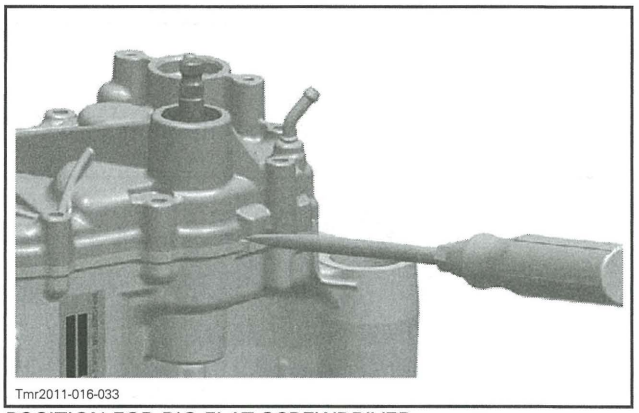

POSITION FOR BIG FLAT SCREWDRIVER

Shift Shaft and Shift Drum

Withdraw shift shaft assembly.

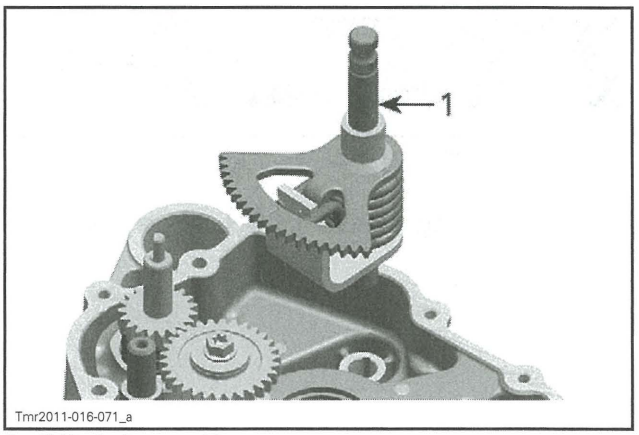

1. *Shift shaft assembly*

Remove screw retaining the shifting intermediate gear.

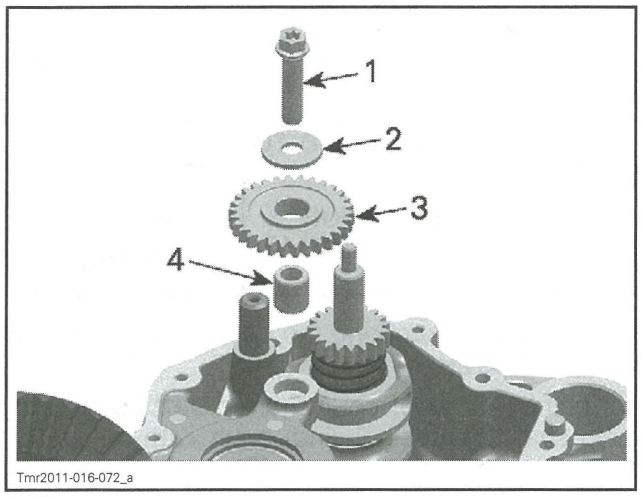

1. *Screw*
2. *Washer*
3. *Intermediate gear*
4. *Dowel pin*

Remove shift fork shaft.

Disengage shift forks from shift drum.

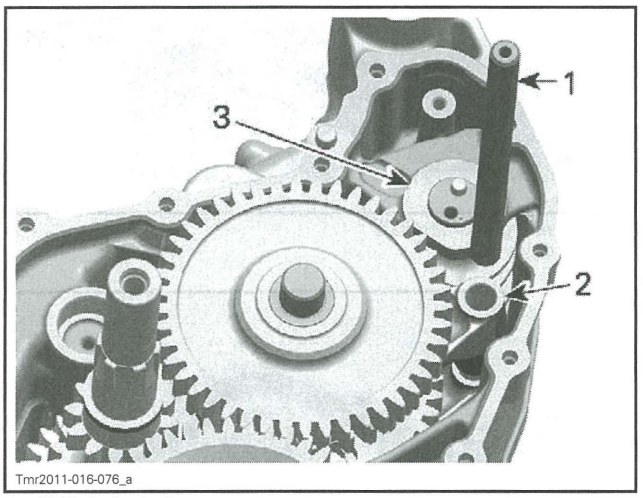

1. *Shift fork shaft*
2. *Shift fork*
3. *Shift drum*

Remove shift drum and thrust washer.

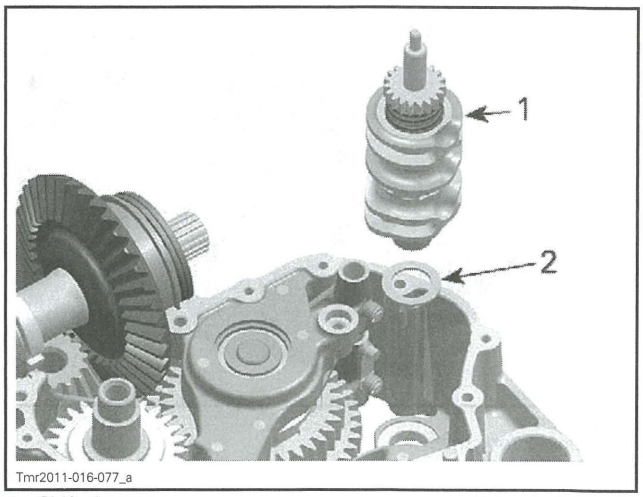

1. *Shift drum*
2. *Thrust washer*

Output Shaft and 4x4 Coupling Mechanism

Remove output shaft from center housing and withdraw 4x4 coupling sleeve.

NOTICE Use a soft hammer to remove output shaft.

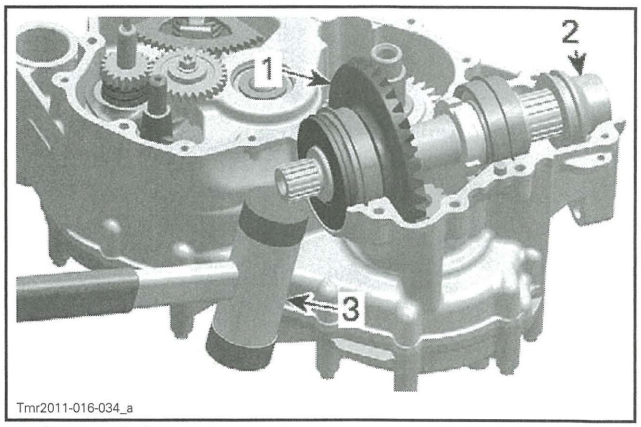

1. *Output shaft*
2. *4x4 coupling sleeve*
3. *Soft hammer*

Remove set screw, coupling fork shaft and coupling fork from right cover.

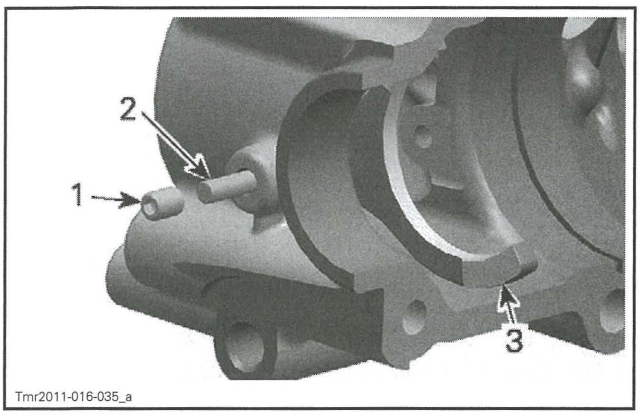

1. *Set screw*
2. *Coupling fork shaft*
3. *Coupling fork*

Countershaft

Use a soft hammer to push out countershaft from gearbox CVT side.

Remove distance sleeve and O-ring.

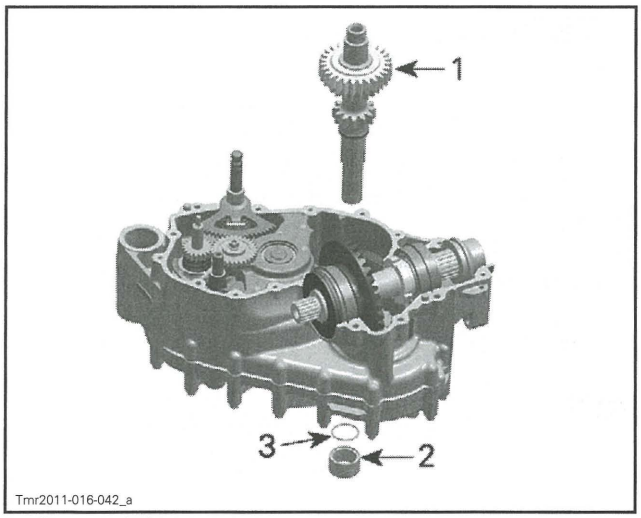

1. *Countershaft*
2. *Distance sleeve*
3. *O-ring*

Gearbox Bearings

If necessary heat housing up to 100°C (212°F) before removing ball bearings.

⚠ WARNING

Clean oil, outside and inside, from housing before heating.

NOTICE **Always support gearbox housings properly when ball bearings are removed. Housing damages may occur if this procedure is not performed correctly.**

To remove ball bearings of countershaft (right cover) and main shaft (left cover) use following tool.

REQUIRED TOOL	
BLIND HOLE BEARING PULLER SET (P/N 529 036 117)	

Remove screw securing the countershaft bearing in the left cover.

For ball bearings of countershaft (left cover) and main shaft (center housing) push with a suitable puller from outside in.

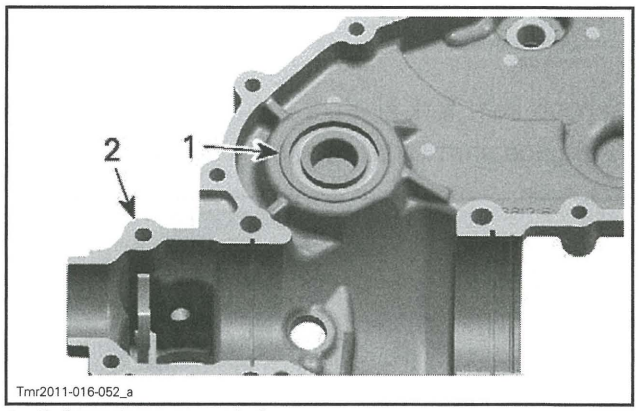

1. *Ball bearing countershaft*
2. *Right cover*

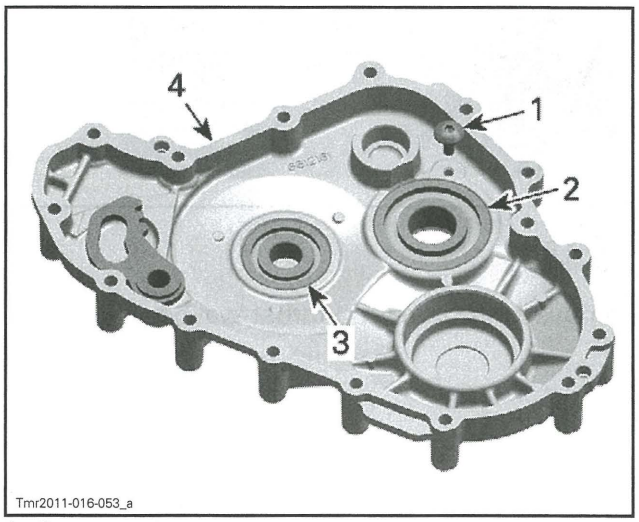

1. *Screw*
2. *Ball bearing countershaft*
3. *Ball bearing main shaft*
4. *Left cover*

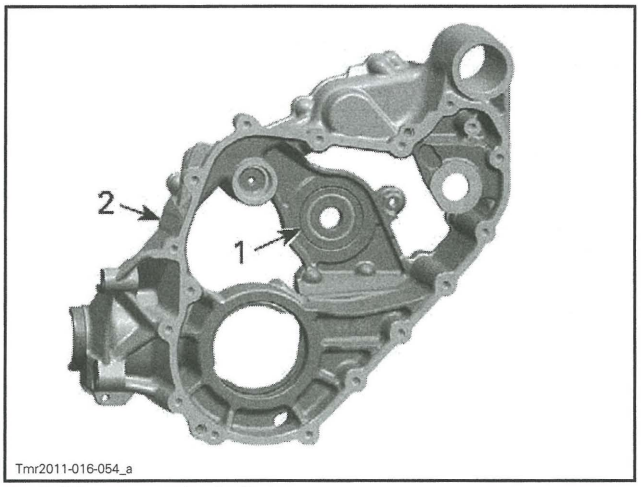

1. Ball bearing main shaft
2. Center housing

Gearbox Inspection

Always verify for the following when inspecting gearbox components:

- Gear teeth damage
- Worn or scoured bearing surfaces
- Rounded engagement dogs and slots
- Worn shift fork engagement groove
- Worn splines on shafts and shifting sleeves.

Bearings

Check if ball bearings turn freely and smoothly.

Check all bearings, bearing points, tooth flanks and taper grooves.

Free Pinions

NOTE: Always replace snap rings and use special pliers to install them.

Check free pinions for wear.

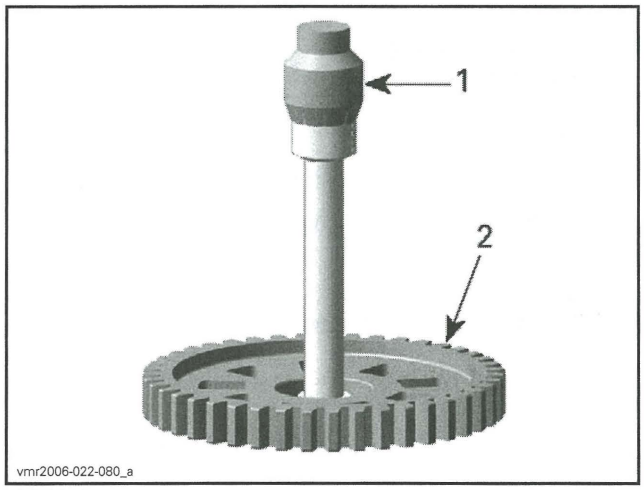

TYPICAL
1. Micrometer
2. Free pinion

DIAMETER FREE PINION	
NEW	29.000 mm to 29.013 mm (1.1417 in to 1.1422 in)
SERVICE LIMIT	29.015 mm (1.1423 in)

Shifting Sleeves

Check shifting sleeves for worn inner splines and rounded or damaged engagement dogs.

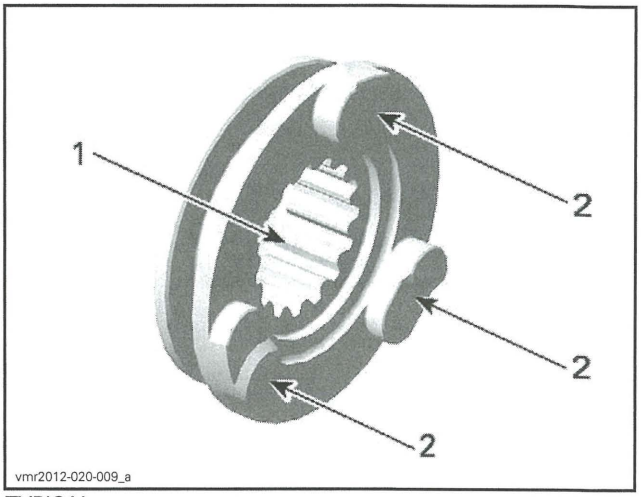

TYPICAL
1. Inner splines
2. Engagement dogs

Measure the width of shift fork engagement groove.

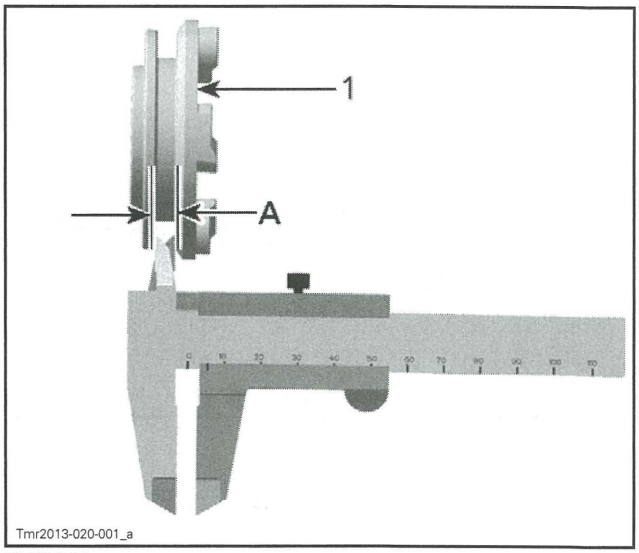

TYPICAL
1. Shifting sleeve
A. Width of shift fork engagement groove

WIDTH OF SHIFT FORK ENGAGEMENT GROOVE	
NEW	5.30 mm to 5.40 mm (.209 in to .213 in)
SERVICE LIMIT	5.50 mm (.217 in)

Shafts

Check bearing pin of reverse intermediate gear for wear.

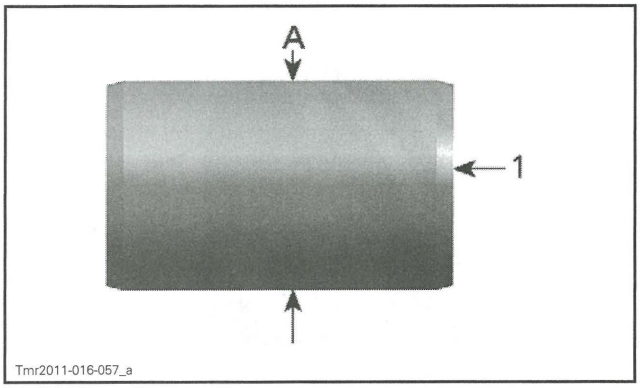

1. Bearing pin
A. Outer diameter

BEARING PIN OUTER DIAMETER	
NEW	24.987 mm to 25.000 mm (.984 in to .984 in)
SERVICE LIMIT	24.977 mm (.9833 in)

Check countershaft bearing journals for wear.

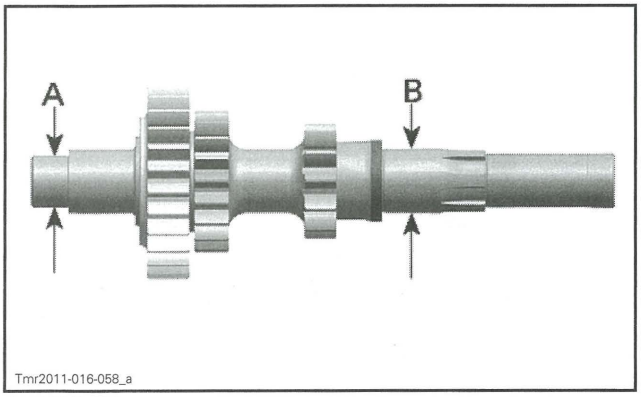

A. MAG side
B. Bearing journal CVT side

COUNTERSHAFT BEARING JOURNALS	
MAG SIDE	
NEW	19.977 mm to 19.990 mm (.786 in to .787 in)
SERVICE LIMIT	19.973 mm (.786 in)

COUNTERSHAFT BEARING JOURNALS	
MAG SIDE	
CVT SIDE	
NEW	24.977 mm to 24.990 mm (.983 in to .984 in)
SERVICE LIMIT	24.970 mm (.983 in)

Check main shaft for wear.

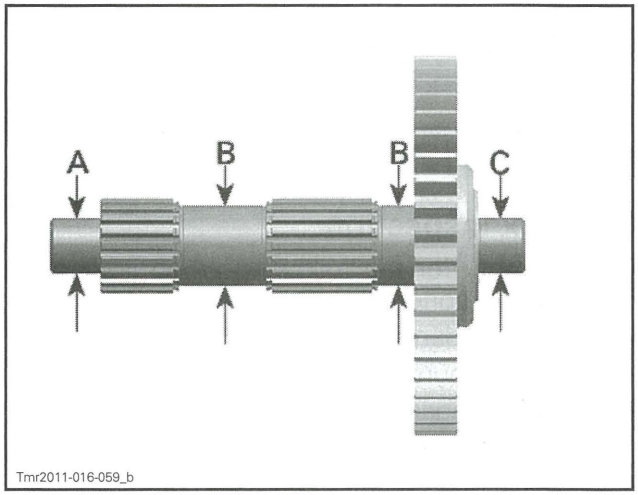

A. Bearing journal MAG side
B. Free pinion bearing
C. Bearing journal CVT side

MAIN SHAFT	
FREE PINION BEARING	
NEW	24.987 mm to 25.000 mm (.984 in to .984 in)
SERVICE LIMIT	24.984 mm (.984 in)
BEARING JOURNAL CVT/MAG SIDE	
NEW	16.980 mm to 16.991 mm (.669 in to .669 in)
SERVICE LIMIT	16.976 mm (.668 in)

Shift Shaft

Check shift shaft for worn splines and gears.

Check shift shaft spring for damages.

Shift Drum

NOTICE Do not disassemble shift drum.

Check if shifting gates move easily on shift drum splines and check condition of springs.

Check shift drum tracks for scouring or heavy wear, like rounded engagement slots.

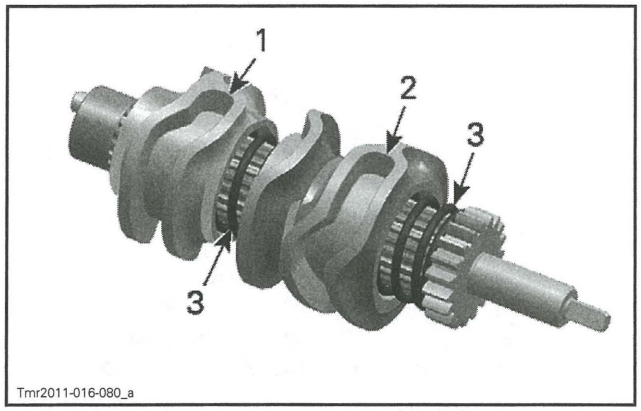

1. Track for the low/reverse range gear shift fork
2. Track for the high range gear shift fork
3. Springs

Shift Forks

Check both shift forks for visible damage, wear or bent shift fork claws.

Check engagement rollers for wear and smooth movement.

Measure the shift fork claw thickness.

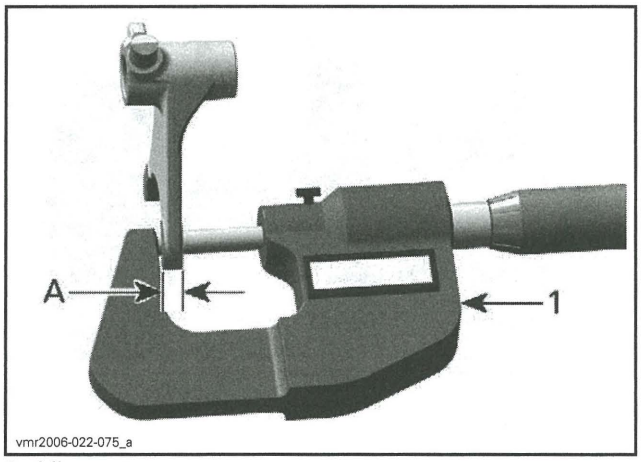

1. Micrometer
A. Shift fork claw thickness

SHIFT FORK CLAW THICKNESS	
NEW	5.10 mm to 5.20 mm (.201 in to .205 in)
SERVICE LIMIT	5.00 mm (.197 in)

Shift Fork Shaft

Check shift fork shaft for visible damage or wear.

Check if shift fork shaft is straight.

Index Lever and Parking Lever

Index lever with roller must move freely.

Check parking lever for cracks or other damages.

Output Shaft

Check output shaft and its gear for cracks, bend, pitting or other visible damages.

Check output shaft splines for wear or other damages.

Check if the output shaft bearings turn freely and smoothly.

Replace oil seal if brittle, hard or damaged.

4x4 Coupling Sleeve

Check splines of coupling sleeve for wear or other damages.

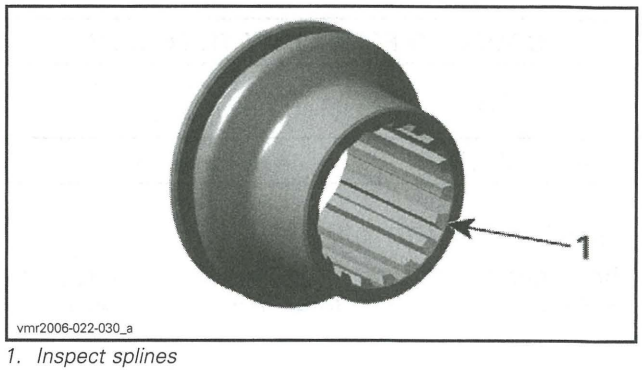

1. Inspect splines

Measure the coupling sleeve groove width.

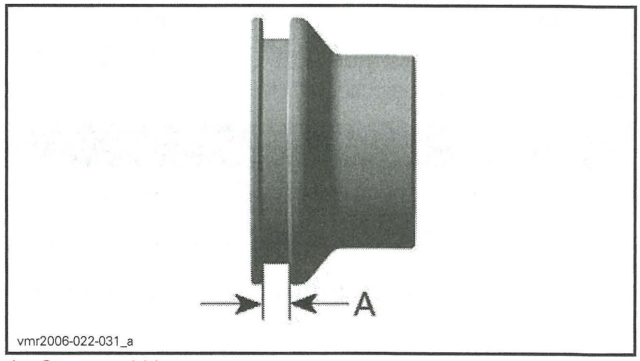

A. Groove width

COUPLING SLEEVE GROOVE WIDTH	
NEW	5.25 mm to 5.35 mm (.207 in to .211 in)
SERVICE LIMIT	5.50 mm (.217 in)

Coupling Fork

Check coupling fork for visible damage, wear or bent coupling fork claws.

Check coupling fork claw thickness.

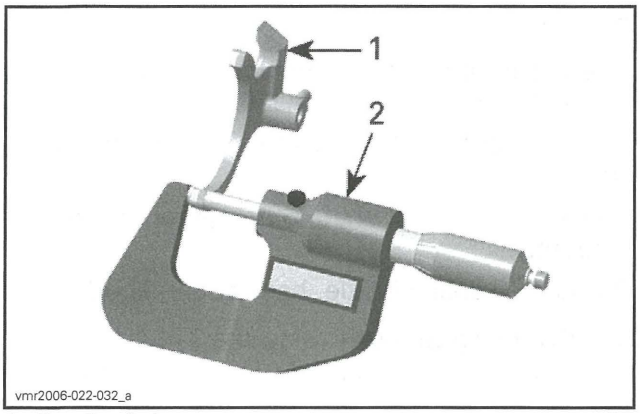

1. Coupling fork
2. Micrometer

COUPLING FORK CLAW THICKNESS	
NEW	4.95 mm to 5.05 mm (.195 in to .199 in)
SERVICE LIMIT	4.80 mm (.189 in)

Gearbox Assembly

The assembly of gearbox is essentially the reverse of disassembly procedure. However, pay attention to the following details.

Gearbox Bearings

Unless otherwise instructed, never use hammer to install ball bearings. Use press machine only.

If necessary heat housings up to 100°C (212°F) before installing ball bearings.

⚠ WARNING

Clean oil, outside and inside, from housing before heating.

Place new bearing in freezer for 10 minutes before installation.

Use a suitable installer for installing ball bearings of countershaft and main shaft.

NOTE: Place gearbox housings on a wood stand before installing ball bearings.

Install new oil seals with the proper installer (refer to *OIL SEALS* in this subsection).

Main Shaft and Shift Forks

Install NEW snap rings.

NOTE: Ensure snap rings are installed in the grooves properly.

Install free pinion (REVERSE range gear) and shifting sleeve (LOW/REVERSE range gear) properly.

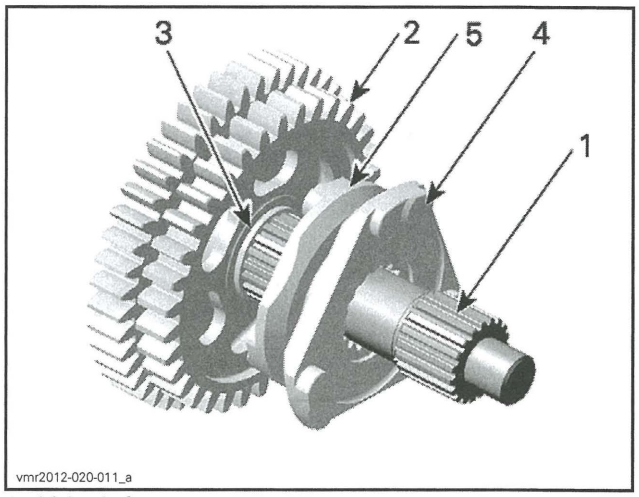

1. Main shaft
2. Free pinion (REVERSE range gear)
3. Snap ring
4. Shifting sleeve (LOW/REVERSE range gear)
5. Shifting dogs (REVERSE range gear)

Collars of free pinion (LOW range gear) and free pinion (HIGH range gear) must point together.

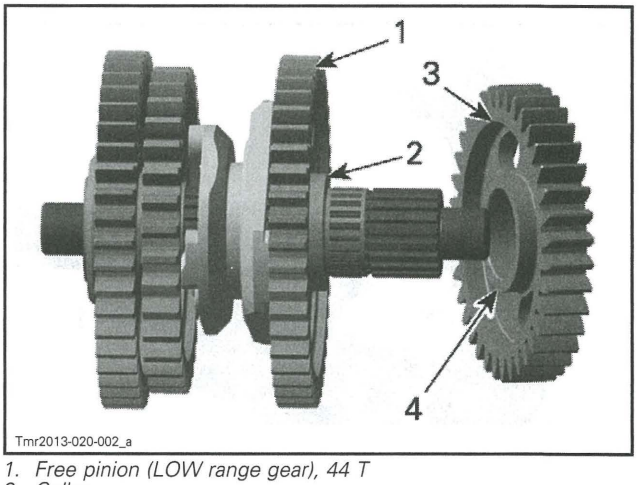

1. Free pinion (LOW range gear), 44 T
2. Collar
3. Free pinion (HIGH range gear), 36 T
4. Collar

Place shifting sleeve (HIGH range gear) with shift fork in the center of on main shaft bearing in center housing.

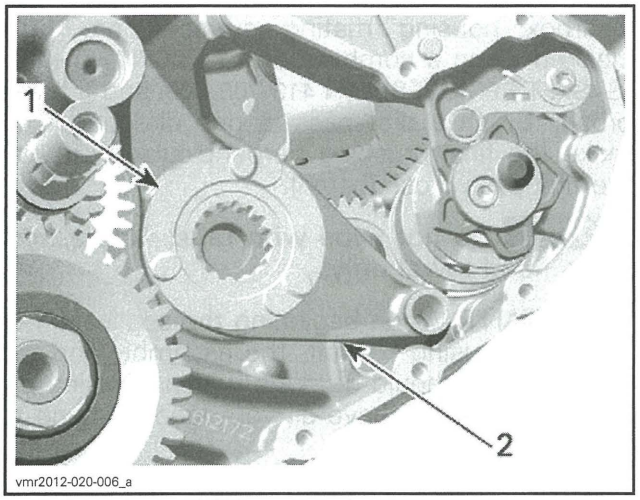

1. *Shifting sleeve (HIGH range gear)*
2. *Shift fork*

Carefully fit main shaft assembly with shift fork (LOW/REVERSE range gear) into inner splines of shifting sleeve (HIGH range gear).

Install reverse intermediate gear.

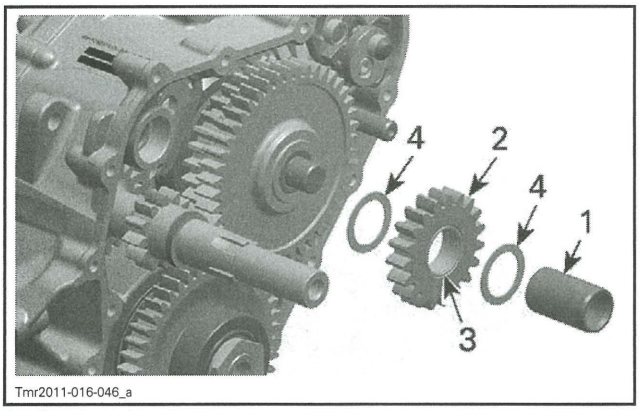

1. *Bearing pin*
2. *Reverse intermediate gear*
3. *Needle bearing*
4. *Thrust washers*

Finally engage shift forks in shift drum and install shift fork shaft.

NOTE: Run all gears as a final function check before installing left housing.

Index Lever and Index Washer

Fit step ring into index lever.

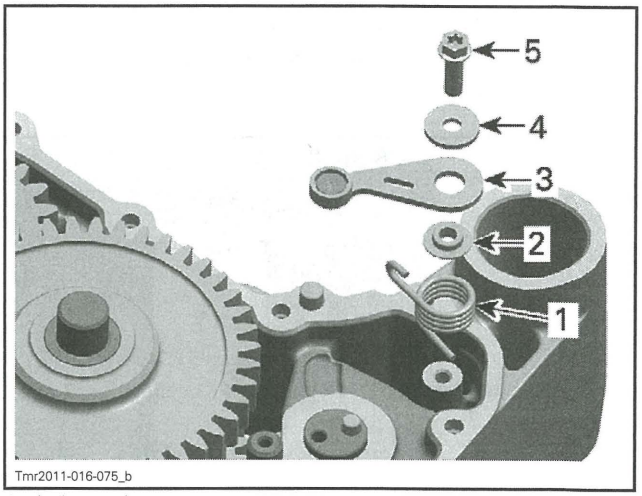

1. *Index spring*
2. *Step ring*
3. *Index lever*
4. *Washer*
5. *Screw*

Install index washer on shift drum.

Insert a flat screwdriver in the slot of the index lever, turn screwdriver clockwise and engage lever in index washer in NEUTRAL position as per following illustration.

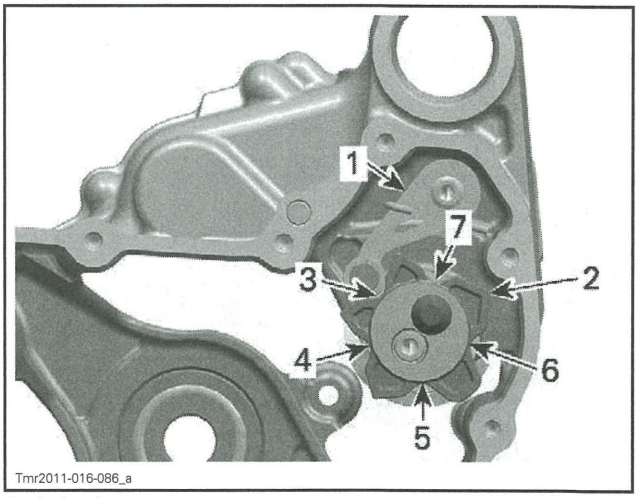

1. *Index lever*
2. *Index washer*
3. *Neutral position*
4. *High range gear position*
5. *Low range gear position*
6. *Parking position*
7. *Reverse range gear position*

Output Shaft and 4x4 Coupling Mechanism

Install coupling sleeve onto the output shaft.

Place the output shaft with oil seal and coupling sleeve into the center housing.

NOTE: If same oil seal is installed, turn oil seal 90° offset to its original position to avoid leakage at housing mating surface.

Install coupling fork, coupling fork shaft and set screw in right cover before applying sealant to the mating surface.

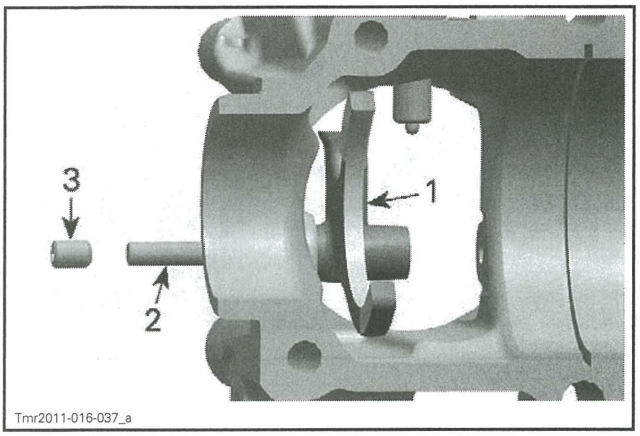

1. *Coupling fork*
2. *Coupling fork shaft*
3. *Set screw*

Shift Shaft and Shift Drum

Install shift drum and shift shaft.

Install shifting intermediate gear. Align its marks with the marks on shift drum gear and shift shaft.

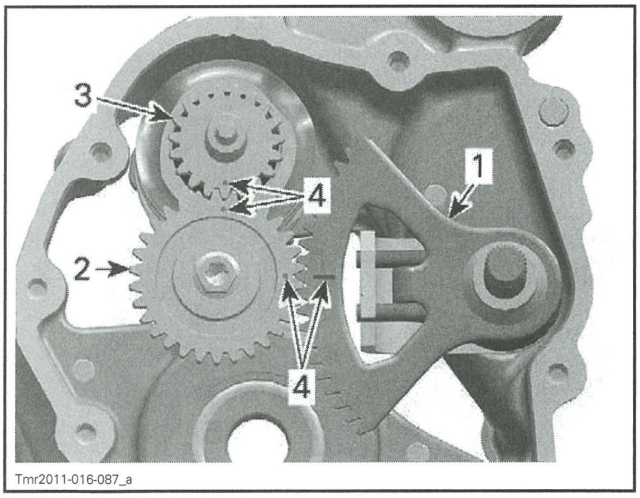

1. *Shift shaft assembly*
2. *Shifting intermediate gear*
3. *Shift drum gear*
4. *Marks*

Engage both shift fork pins in their corresponding groove on the shift drum.

Install shift fork shaft.

NOTE: Turn gears to validate proper operation.

Sealing Compound Application

NOTE: Unless otherwise specify, the procedure to apply the sealant is the same for right or left cover.

Clean all metal components in a solvent.

Gearbox housing mating surfaces are best cleaned using a combination of LOCTITE CHISEL (GASKET REMOVER) (P/N 413 708 500) and a brass brush. Brush a first pass in one direction then make the final brushing perpendicularly (90°) to the first pass cross (hatch).

NOTICE **Do not wipe with rags. Use a new clean hand towel only.**

IMPORTANT: When beginning the application of the gear housing sealant, the assembly and the first torquing should be done within 10 minutes. It is suggested to have all you need on hand to save time.

Use LOCTITE 5910 (P/N 293 800 081) on mating surfaces.

Use a plexiglass plate and apply some sealant on it. Use a soft rubber roller (50 mm - 75 mm (2 in - 3 in)), available in arts products suppliers for printing, and roll the sealant to get a thin uniform coat on the plate (spread as necessary). When ready, apply the sealant on gear housing mating surfaces.

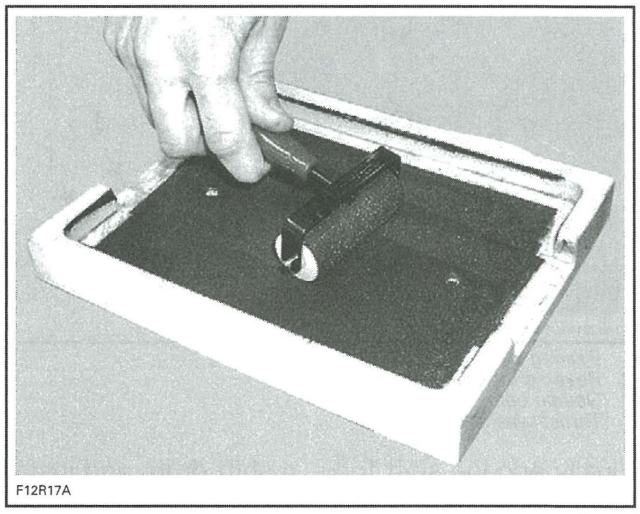

Do not apply in excess as it will spread out inside gear housing.

NOTE: It is recommended to apply this specific sealant as described here to get a uniform application without lumps. If you do not use the roller method, you may use your finger to uniformly distribute the sealant (using a finger will not affect the adhesion).

Left Cover

Apply sealing compound on mating surfaces of central housing. Refer to *SEALING COMPOUND APPLICATION*.

At installation of left cover, engage parking lock lever slot onto index washer pin.

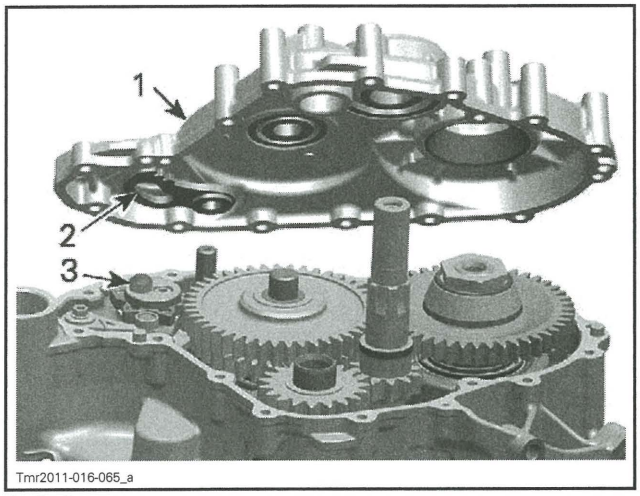

Tmr2011-016-065_a

1. *Left cover*
2. *Parking lock lever slot*
3. *Index washer pin*

Install all screws on left cover and tighten them as per following sequence.

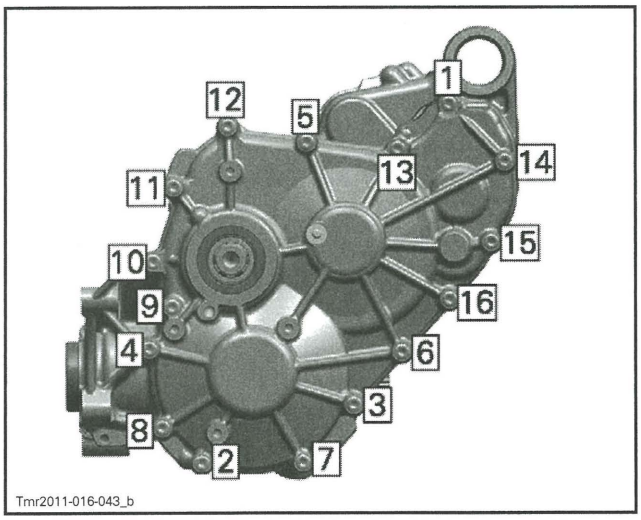

Tmr2011-016-043_b

M6 SCREWS - LEFT COVER	
Tightening torque	10 N•m ± 1 N•m (89 lbf•**in** ± 9 lbf•**in**)

Install O-ring including distance sleeve on countershaft CVT side.

NOTICE **Place O-ring including distance sleeve right away. Chamfered bore of distance sleeve has to face the gearbox.**

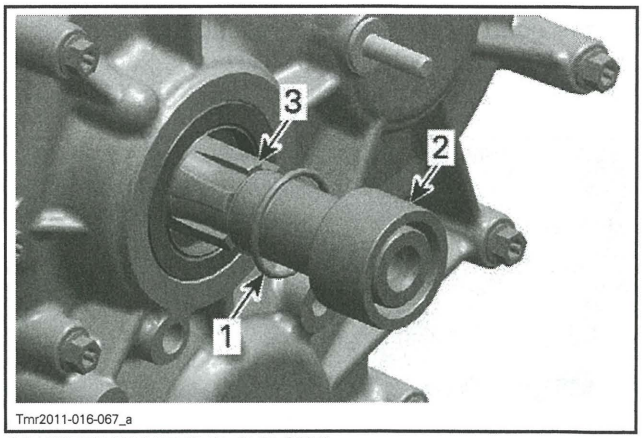

Tmr2011-016-067_a

COUNTERSHAFT END CVT SIDE
1. *O-ring*
2. *Distance sleeve*
3. *Countershaft end CVT side*

Right Cover

Apply sealing compound on mating surfaces of central housing. Refer to *SEALING COMPOUND APPLICATION*.

To install the right cover align the coupling fork with the groove in the coupling sleeve.

Install all screws on right cover and tighten them as per following sequence.

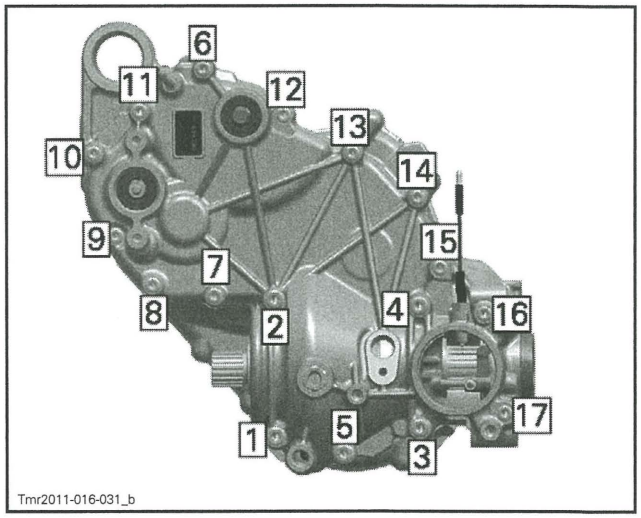

Tmr2011-016-031_b

SCREWS - RIGHT COVER	
Tightening torque - M6	10 N•m ± 1 N•m (89 lbf•**in** ± 9 lbf•**in**)
Tightening torque - M8	25 N•m ± 3 N•m (18 lbf•ft ± 2 lbf•ft)

Install the actuator, refer to *ACTUATOR*.

Gearbox Installation

For installation reverse the removal procedure. Pay attention to following.

Before gearbox installation check O-ring in bearing cover if brittle, hard or damaged. Replace if necessary.

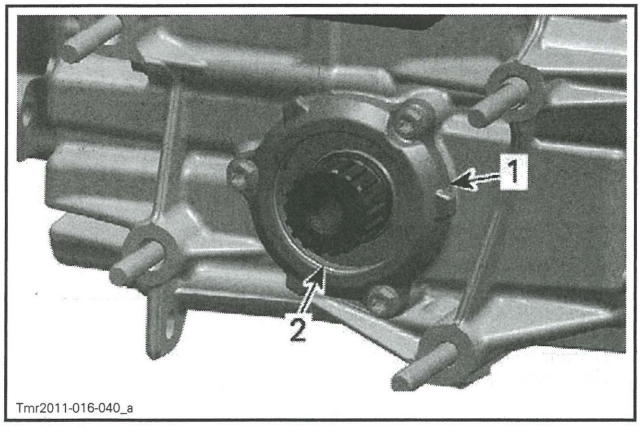

1. Bearing cover
2. O-ring

After installation, refill gearbox oil. Refer to *PERIODIC MAINTENANCE PROCEDURES*.

SHIFTER

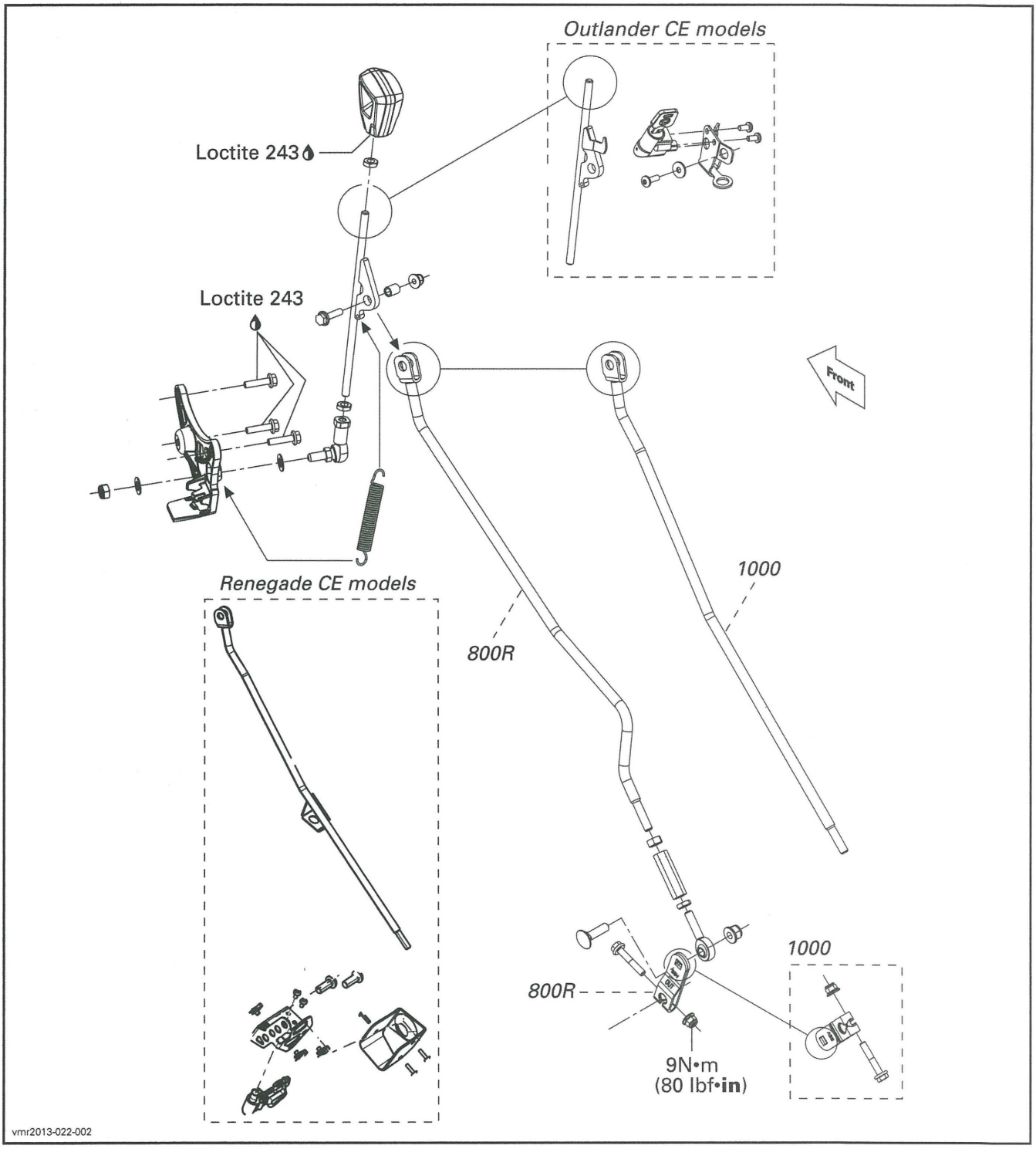
Outlander CE models
Loctite 243
Loctite 243
Front
1000
800R
Renegade CE models
1000
800R
9N•m
(80 lbf•in)
vmr2013-022-002

PROCEDURES

SHIFT LEVER

Shift Lever Access

1. Refer to *BODY* subsection and remove the following components:
   - Seat
   - Console
   - RH side panel.

Shift Lever Removal

1. Remove body parts as required. Refer to *SHIFT LEVER ACCESS* in this subsection.
2. Place shift lever in **NEUTRAL** position.
3. Secure vehicle using wheel blocks.
4. Unscrew shift lever handle.
5. Unhook spring.

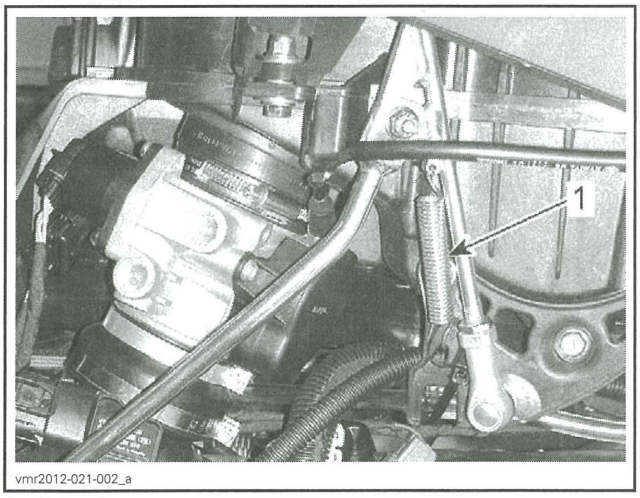

vmr2012-021-002_a

1. Unhook

6. Detach shift rod from shift lever.

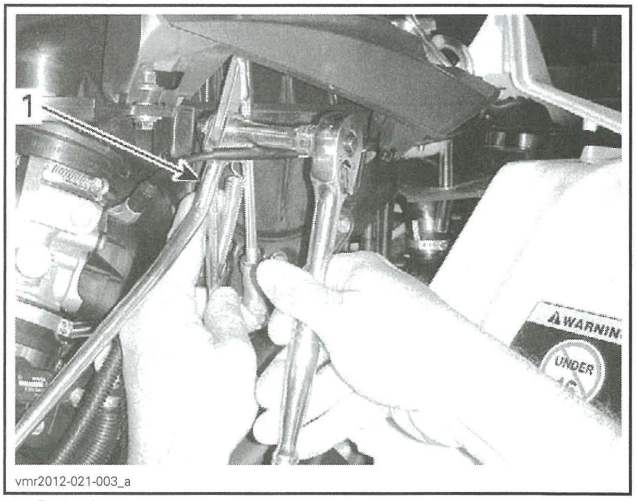

vmr2012-021-003_a

1. Detach

7. Detach shift lever support.

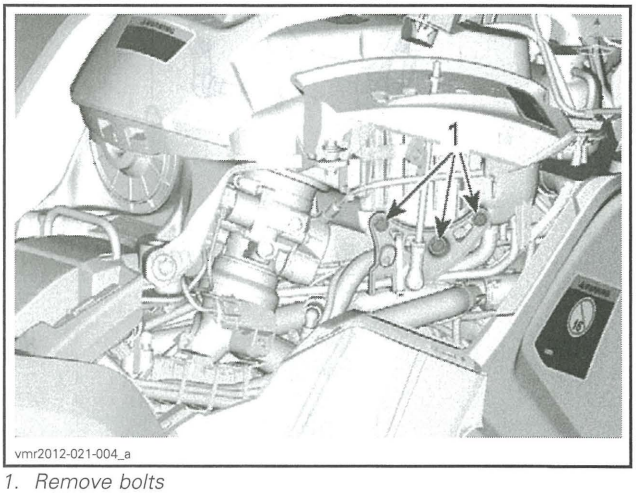

vmr2012-021-004_a

1. Remove bolts

8. Remove shift lever.

Shift Lever Inspection

Check shift lever for bending or cracks.

Check spring and bushing condition.

Check ball joint condition.

Replace all damaged parts.

Shift Lever Installation

The installation is the reverse of the removal procedure. However, pay attention to the following.

Adjust shift lever handle as per the following illustration.

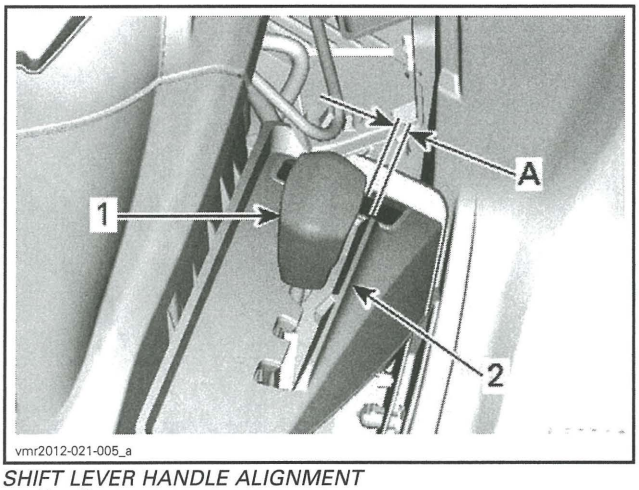

SHIFT LEVER HANDLE ALIGNMENT
1. *Handle*
2. *Ridge*

A. Handle parallel with ridge

Check if shift lever works properly in all positions.

NOTE: Shift lever must be perfectly centered with the neutral mark when transmission is engaged in neutral.

NOTE: If adjustment is required, refer to *SHIFT ROD ADJUSTMENT* in this subsection.

SHIFT ROD

Shift Rod Adjustment

1. Place shift lever in **NEUTRAL** position.

NOTICE **Move vehicle back and forth to ensure gearbox is set in neutral position.**

2. Secure vehicle using wheel blocks.
3. Remove body parts as required. Refer to *SHIFT LEVER ACCESS* in this subsection.
4. Loosen shift rod adjustment nuts.

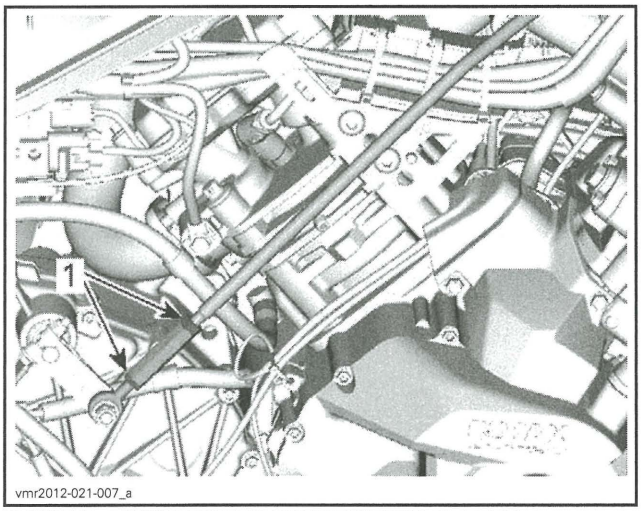

TYPICAL — SOME PARTS REMOVED FOR CLARITY
1. *Adjustment nuts*

5. Turn rod adjuster to center shift lever in neutral notch.

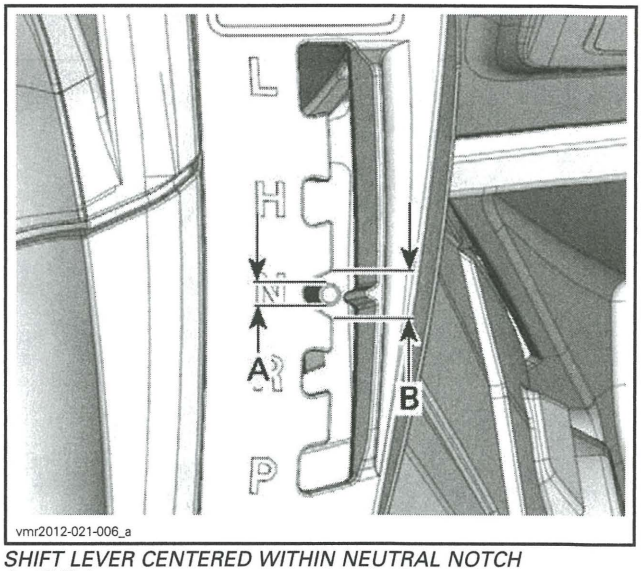

SHIFT LEVER CENTERED WITHIN NEUTRAL NOTCH
A. Shift lever
B. Neutral notch

NOTE: Ensure there is the same threaded length each side of rod adjuster.

NOTE: Be aware that a nut has LH threads.

6. Move shift lever in **R** position then in **H** position identified with a groove on the side of the adjuster.
7. Place shift lever in **NEUTRAL** position.
8. Check if shift lever is properly centered in neutral notch. Readjust as required.
9. Test the shifter to confirm that the system works properly in all positions.

NOTE: Make sure the ball joint is properly aligned with the shift plate. It may be necessary to realign shift rod ball joints to allow easy movement.

⚠ WARNING

After adjustment, make sure that PARK position works properly.

SHIFT PLATE

Shift Plate Removal

NOTE: Do not remove shift plate needlessly.

1. Refer to *BODY* subsection and remove the following components:
   - Seat
   - Console
   - RH side panel

– RH footrest panel (Outlander)
– RH engine cover (Renegade).

2. Remove shift rod from shift plate.

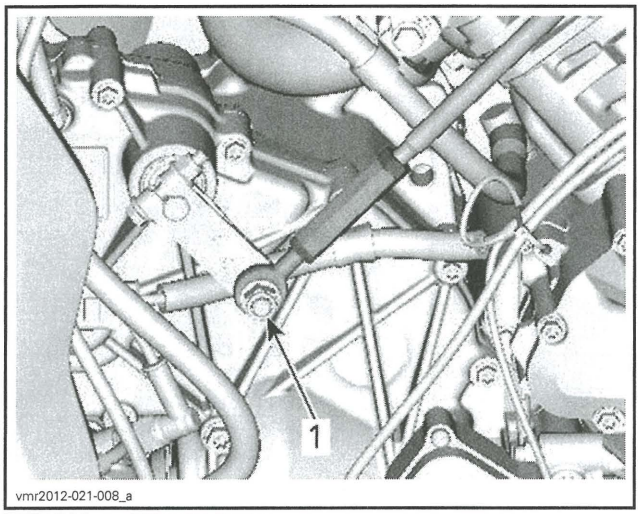

TYPICAL — 1000 SHOWN
1. Remove nut

3. Trace an index mark on shift plate and shift shaft.

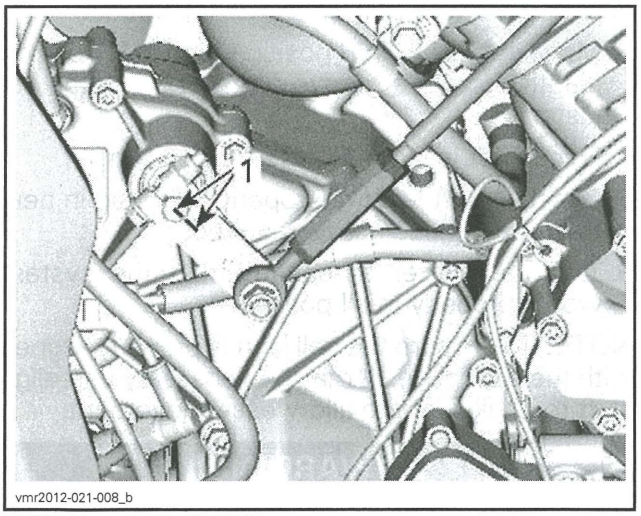

TYPICAL — 1000 SHOWN
1. Trace a mark on both parts

4. Remove shift plate nut and bolt.

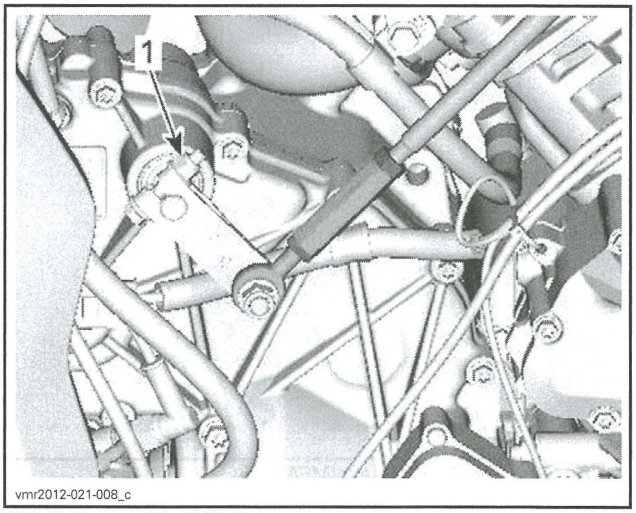

TYPICAL — 1000 SHOWN
1. Shift plate nut

5. Remove shift plate.

Shift Plate Inspection

Check shift plate for:
– Cracks
– Bending
– Spline condition.

Shift Plate Installation

The installation is the reverse of the removal procedure. However, pay attention to the following.

Place gearbox in **NEUTRAL** position before shift plate installation.

Position shift plate with the marking "ATV OUT" visible outward.

Align shift plate using marks previously traced.

If there is no mark, adjust shift plate as per following illustrations.

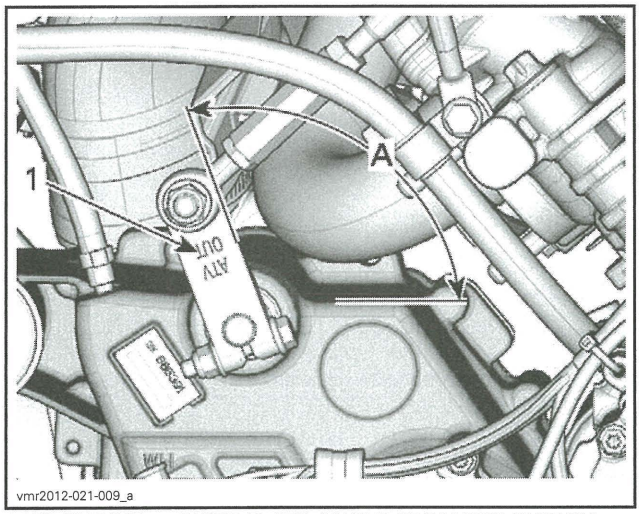

800R ENGINE — SHIFT PLATE ANGLE FROM THE SHOWN EDGE
1. "ATV OUT" marking this side
A. 110°

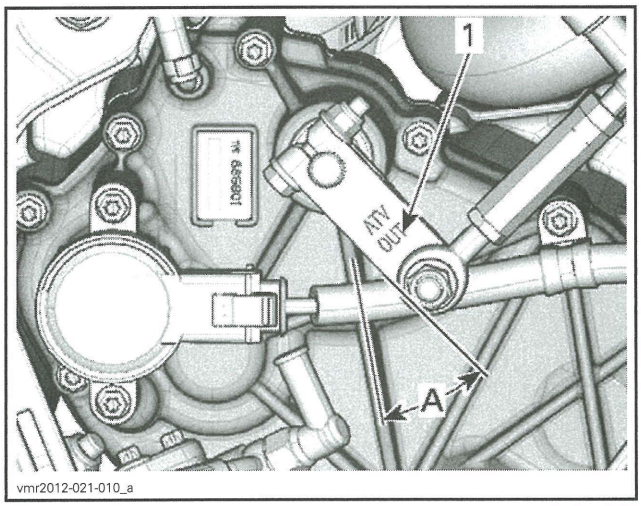

1000 ENGINE — SHIFT PLATE ANGLE FROM THE SHOWN RIB
1. "ATV OUT" marking this side
A. 34°

Ensure that shift shaft protrudes shift plate as per illustration.

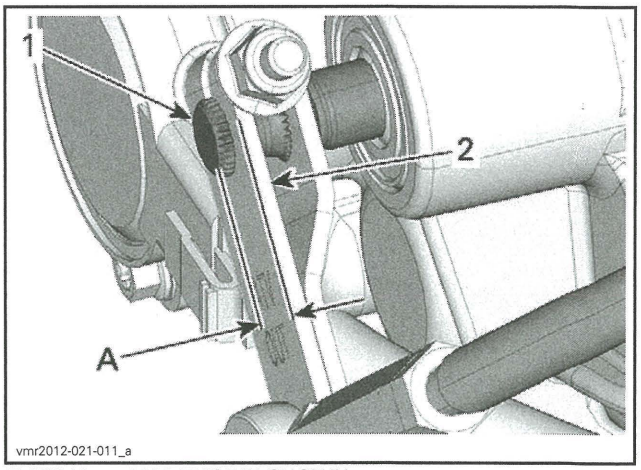

TYPICAL — 1000 ENGINE SHOWN
1. Shift shaft end
2. Shift plate
A. 2.5 mm ± 1 mm (.1 in ± .040 in)

Adjust shift rod, refer to *SHIFT ROD ADJUSTMENT* in this subsection.

Tighten shift plate nut to specification.

SHIFT PLATE NUT TORQUE
9 N•m ± 1 N•m (80 lbf•**in** ± 9 lbf•**in**)

ENGINE MANAGEMENT SYSTEM (EMS)

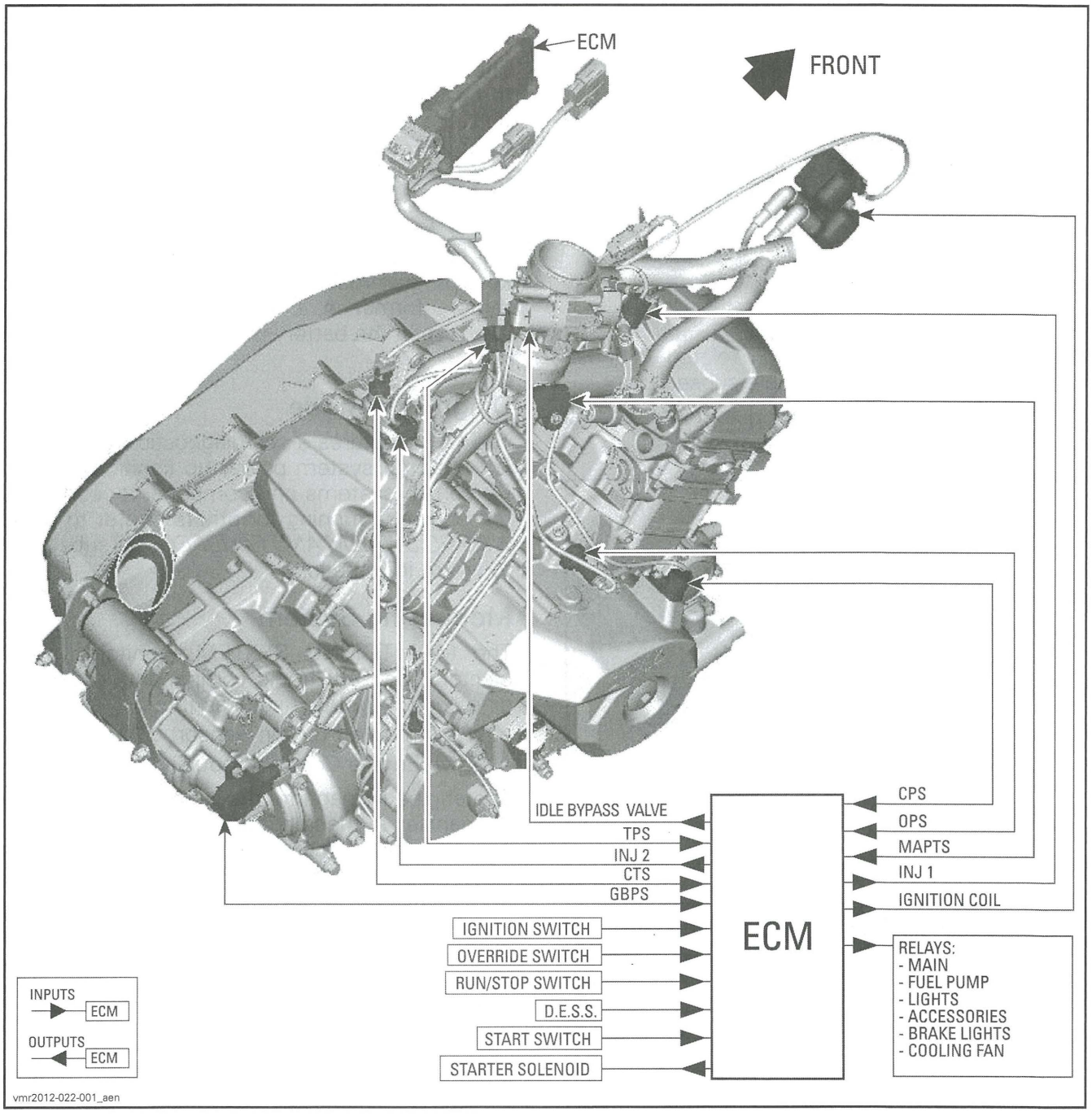

CPS = Crankshaft Position Sensor
CTS = Cooling Temperature Sensor
D.E.S.S. = Digitally Encoded Security System
ECM = Engine Control Module
GBPS = Gear Box Position Sensor
INJ 1 = Injector 1
INJ 2 = Injector 2
MAPTS = Manifold Absolute Pressure/Temperature Sensor
OPS = Oil Pressure Switch
TPS = Throttle Position Sensor

GENERAL

SYSTEM DESCRIPTION

A highly advanced engine management system (EMS) is used to ensure a high power output with cleaner combustion.

There are 6 main systems that are controlled by the engine management system (EMS):

1. Electronic Fuel Injection (EFI)
2. Cooling system (cooling fan)
3. Ignition system
4. Starting system
5. Fuel pump system
6. D.E.S.S. system.

NOTE: For further information related to these systems, refer to the applicable subsection.

The ECM (Engine Control Module) is the central point of the engine management system.

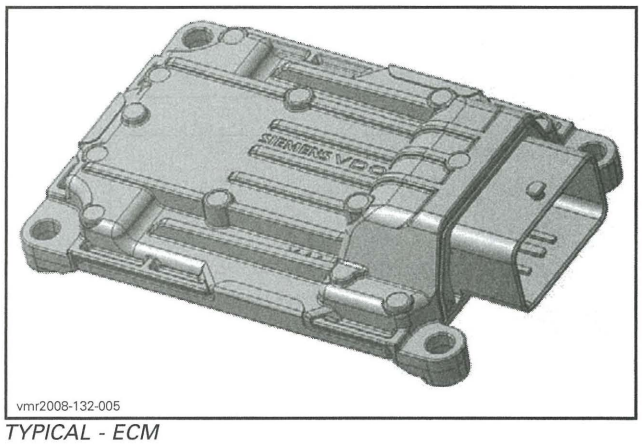

vmr2008-132-005

TYPICAL - ECM

The ECM is located behind the LH panel.

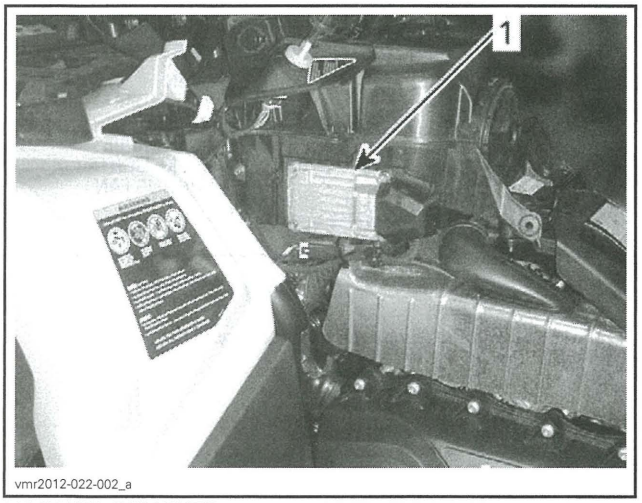

vmr2012-022-002_a

LH PANEL REMOVED
1. ECM location

The ECM reads input signals from various switches, controls, and sensors, that it compares to pre-determined parameters, makes computations, and provides control signal outputs required for proper engine management.

The ECM also interacts through CAN bus with the gauge module for various functions, information exchange and display of messages. Refer to *CONTROLLER AREA NETWORK (CAN)* and *LIGHTS, GAUGE AND ACCESSORIES* subsections.

The ECM also features a permanent memory that will store the information on the various ignition keys programmed to the vehicle, fault codes, customer information, and other engine information, even when the battery is removed from the vehicle.

Diagnostic Mode

The ECM features a self-diagnostic mode that is activated on system power up (ignition key ON) for certain systems and components, and when the engine is running for others. Refer to *DIAGNOSTIC SYSTEM AND FAULT CODES* subsection for more information.

Monitoring System

The MONITORING SYSTEM monitors various electrical and electronic components of the engine control systems such as the:

- TPS (Throttle Position Sensor)
- ECM (Engine Control Module).

The engine management system provides for redundancies in these components should a failure or partial failure occur to which it will adjust system operation to protect the vehicle and most of importantly, the driver.

Should the engine management system not respond (or not respond correctly) to a failure, then the monitoring system will react to ensure vehicle and driver safety.

The monitoring system therefore ensures the engine management system is functioning correctly.

Limp Home Mode

The ECM may automatically put the engine in LIMP HOME MODE using default parameters when certain major faults are detected. LIMP HOME MODE may also be manually engaged under certain fault conditions. For more information, refer to *DIAGNOSTIC SYSTEM AND FAULT CODES*.

CONTROLLER AREA NETWORK (CAN)

GENERAL

SYSTEM DESCRIPTION

The CAN (Controller Area Network) protocol is an ISO standard for serial data communication. The CAN bus links the ECM, multifunction gauge and DPS module together so that they can communicate to each other and interact as required. The components (modules) are connected together by 2 wires and are in constant communication at a rate of about every 20 milliseconds. CAN lines consist of a pair of wires (WHITE/BEIGE and BEIGE/GREEN).

If a component or system malfunction is detected, a module (ECM, multifunction gauge or DPS) may generate a fault code, which it transmits through the CAN bus as a signal. The fault signal may be used for various functions such as triggering the display of an error message in the multifunction gauge cluster, turning on a fault indicator light, limiting or inhibiting vehicle or engine operation, or viewed using the B.U.D.S. software for troubleshooting.

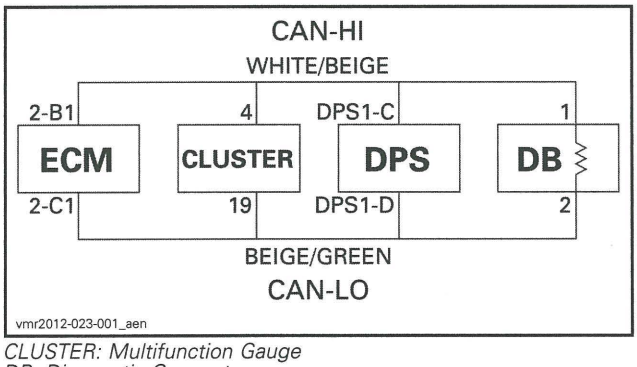

CLUSTER: Multifunction Gauge
DB: Diagnostic Connector
ECM: Engine Control Module
DPS: Dynamic Power Steering
WHITE/BEIGE: (wire color code)
BEIGE/GREEN: (wire color code)

COMMUNICATION TOOLS AND B.U.D.S.

SERVICE TOOLS

Description	Part Number	Page
MPI-2 DIAGNOSTIC CABLE	710 000 851	267
MPI-2 INTERFACE CARD	529 036 018	267

SERVICE TOOLS – OTHER SUPPLIER

Description	Part Number	Page
MALE-FEMALE EXTENSION SERIAL CABLE	DB9	267

GENERAL

Refer to *PROCEDURES* for instructions on the communication tools.

If communication problems occur, refer to *TROUBLESHOOTING* in this subsection.

TROUBLESHOOTING

DIAGNOSTIC TIPS

IMPORTANT: Make sure all connections are made and vehicle is powered up **before starting B.U.D.S.** to allow proper communication between the vehicle and B.U.D.S.

MPI-2 Connection Troubleshooting

MPI-2 Status Lights

The MPI-2 includes 2 status lights that indicate the connection condition: USB and CAN. **Both lights must be GREEN** for the MPI-2 to function properly. Otherwise, refer to the following charts.

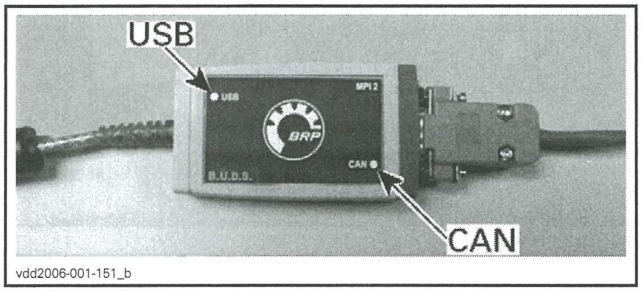

Prerequisite for USB Communication:

- PC Computer turned on.
- MPI-2 connected to PC computer.

USB LIGHT	
STATUS	WHAT TO DO
Light is OFF	Check USB connection between MPI-2 and PC computer. Check USB operation on PC computer (hardware or Windows drivers)
Light is GREEN	Connections are GOOD. Communication can take place on USB side

Prerequisite for CAN Communication:

- MPI-2 connected to diagnostic connector on vehicle.
- ECM turned on (electrical system powered up without engine started).
- Ignition key installed and turned to ON.
- B.U.D.S. started and logged on.

CAN LIGHT	
STATUS	WHAT TO DO
Light is OFF	Check connection between MPI-2 and diagnostic connector on vehicle
Light is RED	Check CAN wires/connectors on vehicle
Light is GREEN	Connections are GOOD. Communication can take place on CAN side

Communication Problems when Using B.U.D.S.

Missing Module

Ensure the appropriate number of modules is shown at the bottom RH side of B.U.D.S. screen.

MODEL	NUMBER OF MODULES
Models without DPS	2 (ECM and multifunction gauge)
Models with DPS	3 (ECM, DPS and multifunction gauge)

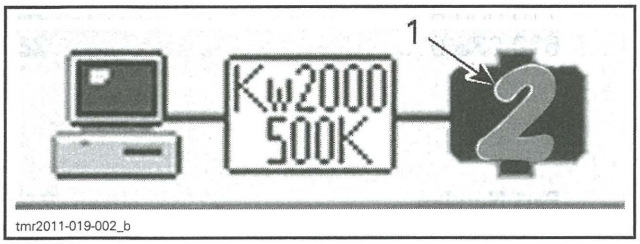

TYPICAL
1. Number of modules

If one or more "ECU" is not communicating with the MPI, refer to *DIAGNOSTIC SYSTEM AND FAULT CODES*.

No Vehicle is Detected

If an "X" is shown in the status bar and the protocol indication is blinking between Kw2000 500K and KW2000, it means that no "ECU" is communicating with the MPI.

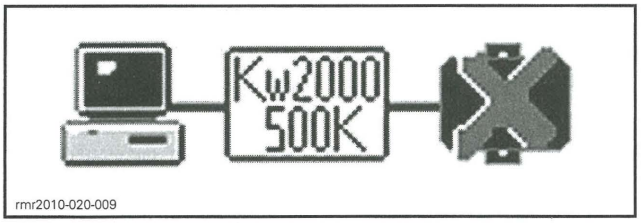

Check the following:
- Connections between the PC computer and the vehicle.
- The multifunction gauge is powered up.

If B.U.D.S. does not automatically exit the following message box, click the **Try active detection mode** button. This will manually establish the communication with the vehicle.

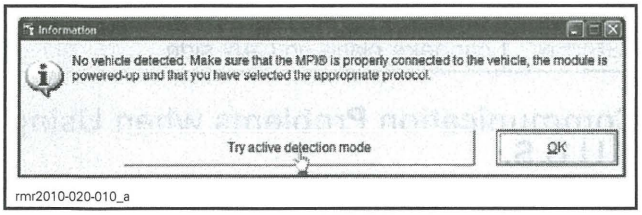

Message Box: "Some of the Information Normally Displayed..."

If the following message box is displayed in B.U.D.S.:

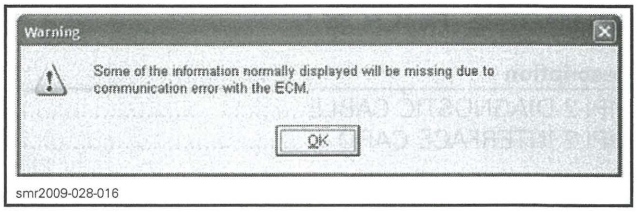

1. Click on the **OK** button in the box.
2. Click on the **Read Data** button in B.U.D.S.

PROCEDURES

MULTI-PURPOSE INTERFACE-2 (MPI-2)

The MPI-2 (Multi-Purpose Interface-2) in conjunction with the MPI-2 diagnostic cable is used with B.U.D.S. to communicate with the ECM (engine control module) and other modules.

MPI-2 Power

The MPI-2 interface card uses the power from the PC computer's USB port.

Diagnostic Connector Location

The 6-pin diagnostic connector is located under the seat, stored in it's protective cap.

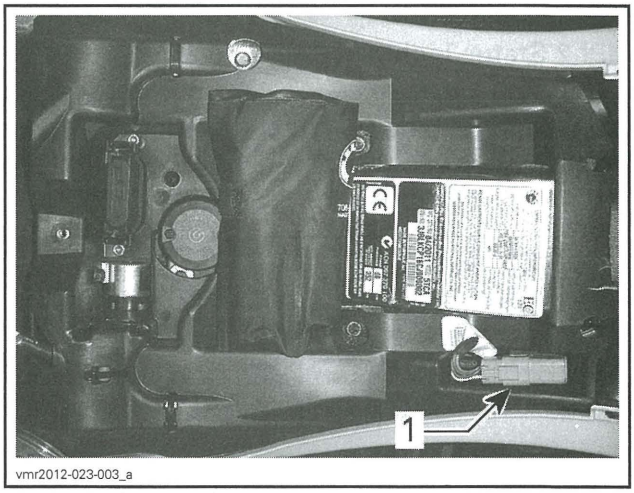

1. Diagnostic connector

Connecting the PC to the Vehicle

⚠ WARNING

If the computer you are using is connected to the 110 Vac power outlet, there is a potential risk of electrocution when working in contact with water. Be careful not to touch water while working with the VCK.

1. Locate the 6-pin diagnostic connector, refer to *DIAGNOSTIC CONNECTOR LOCATION* in this subsection.
2. Disconnect the 6-pin diagnostic connector from it's holder (protective cap).
3. Connect one end of the MPI-2 DIAGNOSTIC CABLE (P/N 710 000 851) to the vehicle connector.

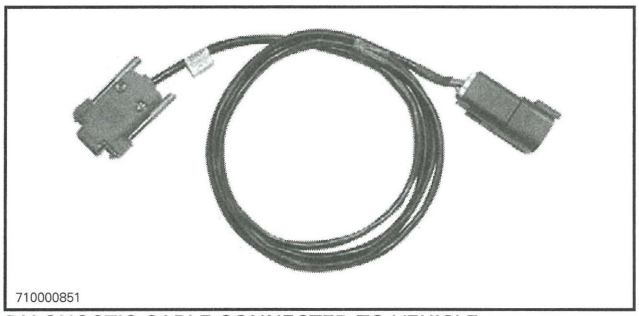

DIAGNOSTIC CABLE CONNECTED TO VEHICLE

4. Connect the other end of diagnostic cable to the MPI-2 INTERFACE CARD (P/N 529 036 018).

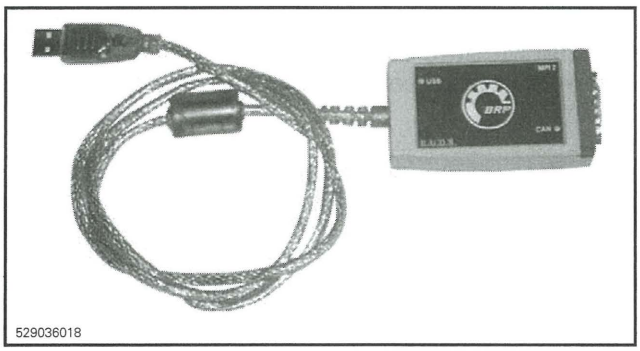

NOTE: An optional MALE-FEMALE EXTENSION SERIAL CABLE (P/N DB9) available at electronic retail outlets can be used between diagnostic cable and MPI-2 interface. Do not exceed 7.6 m (25 ft).

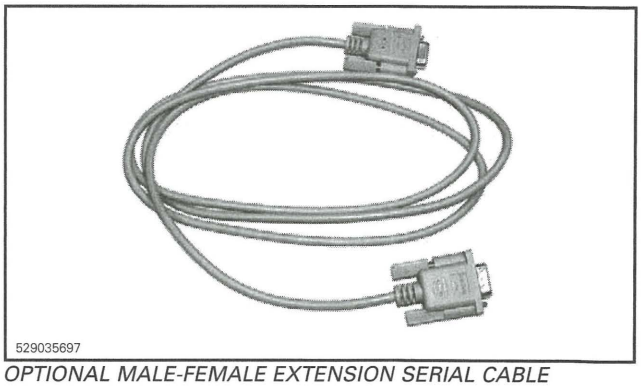

OPTIONAL MALE-FEMALE EXTENSION SERIAL CABLE

5. Connect the MPI-2 INTERFACE CARD (P/N 529 036 018) to the USB port of a PC (personal computer).

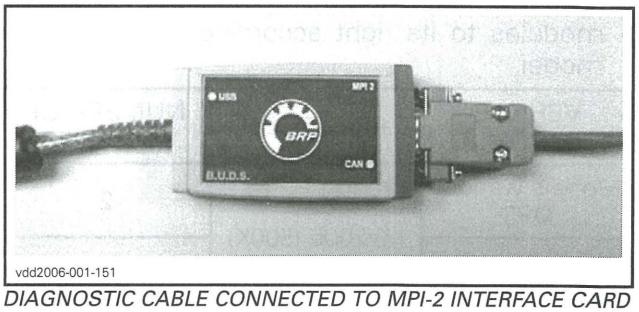

DIAGNOSTIC CABLE CONNECTED TO MPI-2 INTERFACE CARD

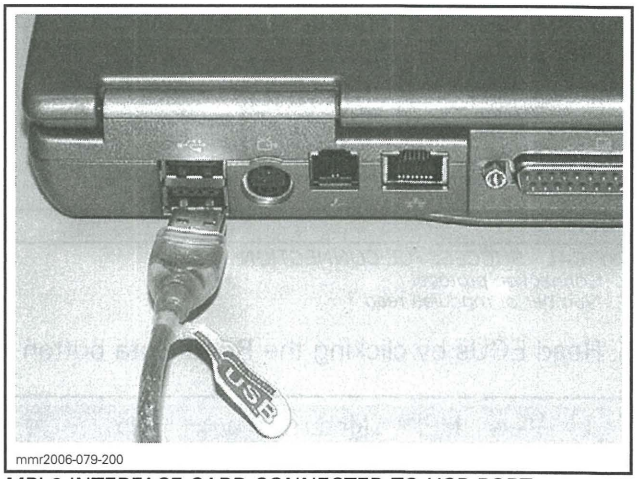

MPI-2 INTERFACE CARD CONNECTED TO USB PORT

6. Use B.U.D.S. as described further in *B.U.D.S.*

B.U.D.S.

B.U.D.S. (Bombardier Utility and Diagnostic Software) is designed to allow programming key(s) to the vehicle, allow electrical and electronic component monitoring, activation of certain components for diagnostic purposes, and to carry out setting changes.

For more information pertaining to the use of the B.U.D.S., use its **Help** menu which contains detailed information on its functions.

Always use the latest applicable B.U.D.S. version available on BOSSWeb.

How to Establish Communication Using B.U.D.S. Software

IMPORTANT: Ensure all connections have been made **before starting B.U.D.S.** to allow proper operation. Refer to *MPI-2* in this subsection.

1. Turn ignition switch to ON using any of the keys provided with the vehicle. Do not start the engine.
2. Set the emergency engine stop switch to RUN.
3. Start B.U.D.S. and logon.
4. Ensure the status bar shows the Kw2000 (500K) protocol and the appropriate number of modules to its right according to the vehicle model.

VEHICLE MODEL	PROTOCOL	NUMBER OF MODULES
Models without DPS	Kw2000 (500K)	2
Models with DPS		3

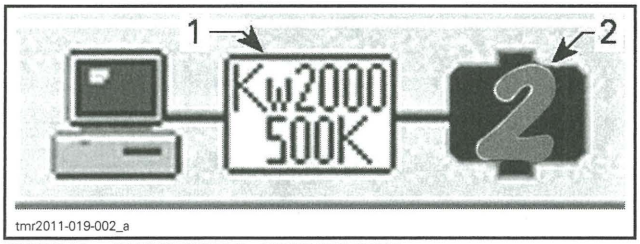

TYPICAL - SUCCESSFUL CONNECTION
1. Connection protocol
2. Number of modules read

5. Read ECUs by clicking the **Read Data** button.

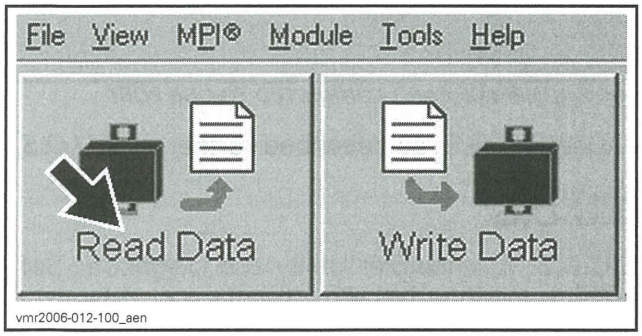

B.U.D.S. is now ready to use.

When clicking on the **Read Data** button, B.U.D.S. will read the cluster and the ECM modules through CAN bus.

Electronic Modules (ECU) Updates

NOTICE **Failure to strictly follow a procedure to update a module may permanently damage the module.**

Whenever B.U.D.S. is started, check for an update icon in the B.U.D.S. status bar.

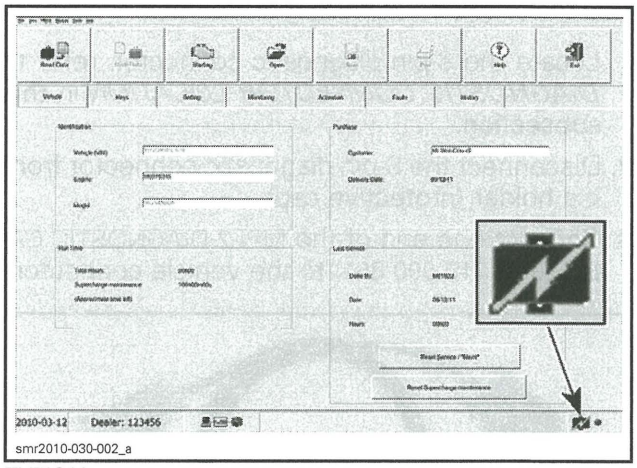

TYPICAL

If the icon is visible, it indicates that a file is available in B.U.D.S. to update at least one of the electronic modules:

NOTE: If an update file is available on BOSSWeb but the B.U.D.S. software being used is not up to date, the update icon will not appear. Refer to the *SERVICE BULLETINS* to see if there is an update available.

Use the **Module** submenu and check all modules one at a time to see which module(s) can be updated.

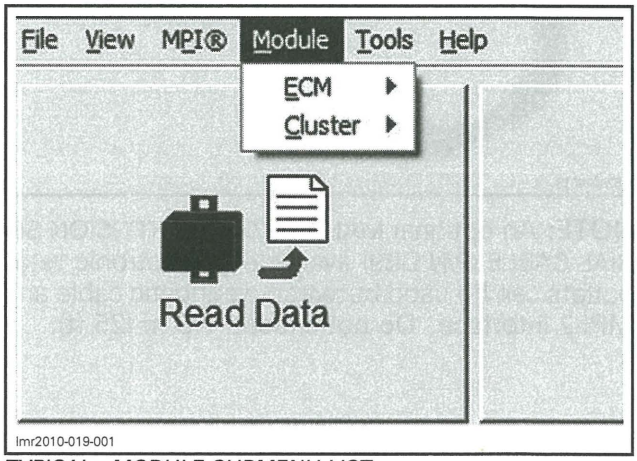

TYPICAL - MODULE SUBMENU LIST

1. If the **Update** option is **greyed out**, no update file is available for this module.

2. If the **Update** option is **black**, an update file is available for this module.

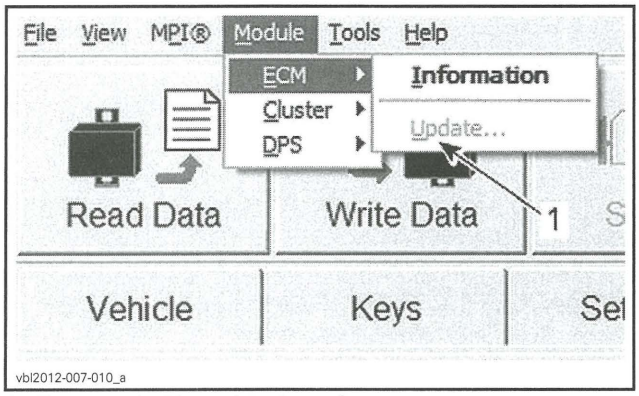

1. *Greyed out: No update to perform*
   Black: Update file available

Before applying an update, log onto BOSSWeb and look in **Service** menu for the **Unit history** to find out if any information or publication related to the vehicle is available. If so, carefully follow the given instructions.

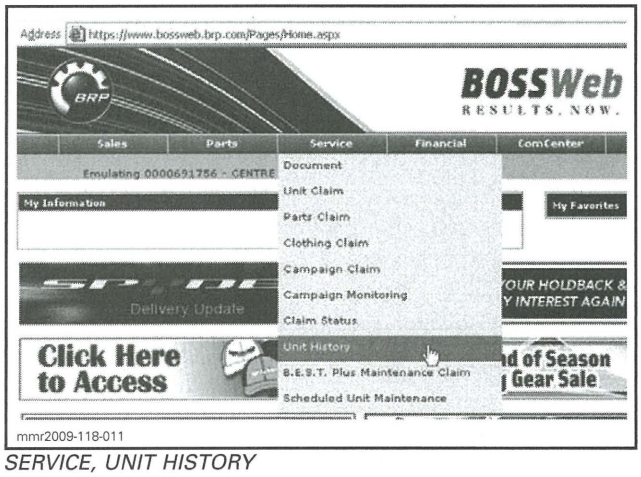

SERVICE, UNIT HISTORY

NOTE: When selecting the update menu in B.U.D.S., a dialog box will appear and the update file description may give some clue to finding the vehicle-related information in BOSSWeb.

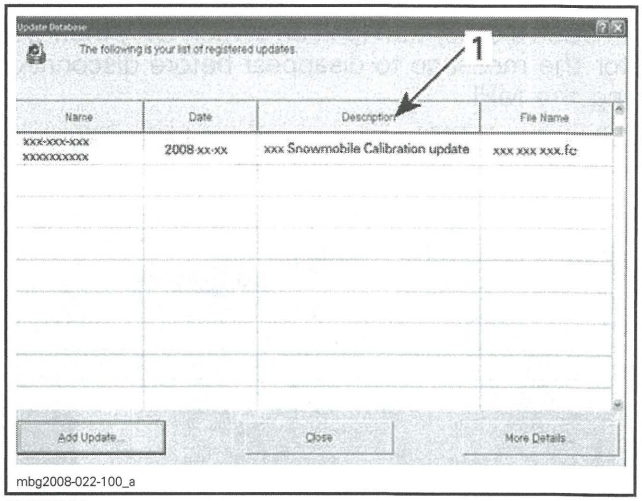

TYPICAL
1. *File description*

Writing Changes (Saving) in a Module

If the word **Modified** appears in the vehicle file identification number at the top of the B.U.D.S. page, then a change has been made that requires selecting the **Write Data** to save the change.

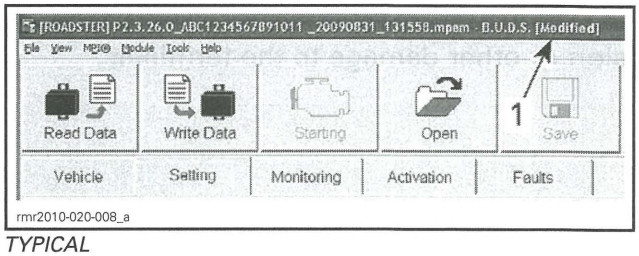

TYPICAL
1. *Indicate setting or data modified; Write Data to save*

Click the **Write Data** button.

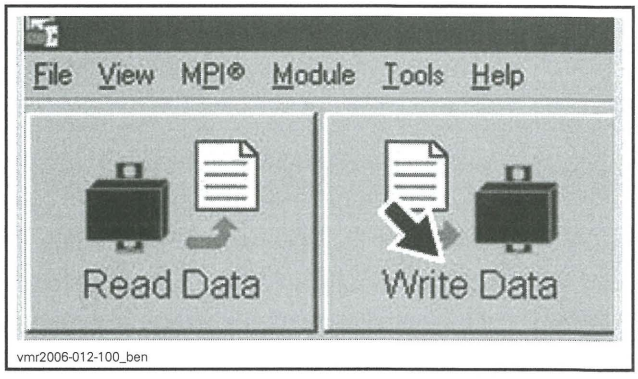

After clicking on **Write Data**, the following message may appear.

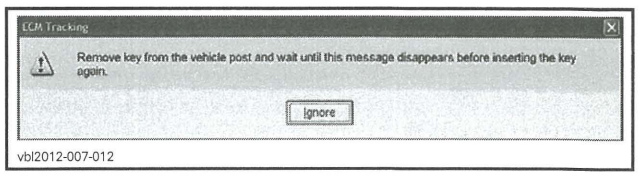

In such a case, turn ignition switch OFF, then wait for the message to disappear before disconnecting the MPI.

Disconnect MPI and store the vehicle diagnostic connector in its protective cap.

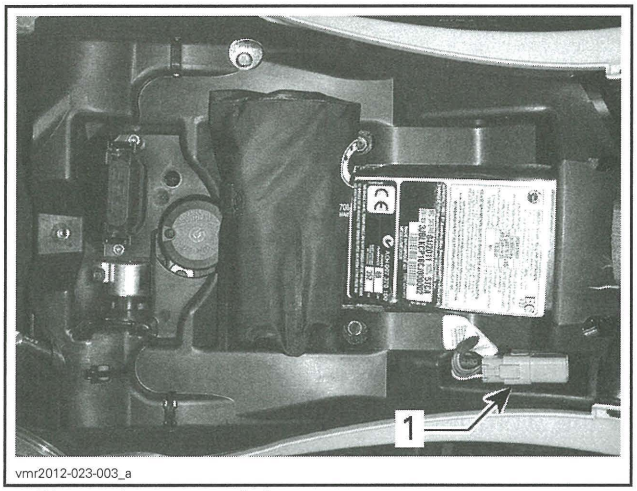

1. Diagnostic connector in its storage cap

NOTICE Failure to secure the diagnostic connector in its protective cap may result in corrosion or other damage to the terminals.

DIAGNOSTIC SYSTEM AND FAULT CODES

GENERAL

MONITORING SYSTEM

The Engine Management System (EMS) features a monitoring system that self-diagnoses various electrical and electronic components. This mode becomes active when the ignition key is turned ON.

NOTE: Some components require the engine to be running to be monitored (fuel injectors for example).

The monitoring system continuously validates that the components (control modules, sensors and actuators) are not faulty or defective. When a malfunction is detected, the related electronic module(s):

- Sets an active fault code.
- Adapts the proper protection strategy according to the failure.
- Sends out signals to the multifunction gauge to inform the rider of a particular condition.

A fault code is an indication that a glitch or malfunction is detected by the monitoring system of the vehicle.

If a minor fault occurs, the engine and vehicle will continue to operate without noticeable loss of performance.

If a more important fault occurs, engine RPM may be limited. The engine/vehicle will continue to operate with reduced performance.

If a major component of the EMS fails, engine RPM will be limited as well as vehicle speed.

These strategies are used to protect engine/electrical system from damage and to maintain safe operation of the vehicle. In extreme cases, the engine may also be completely shut down.

Pilot Lamps for Problematic Conditions

When a problem is detected, a pilot lamp will turn on or blink in the multifunction gauge. If the fault that caused the pilot lamp to come on is momentary, the pilot lamp may turn off automatically, or may need to be reset by powering down the vehicle and then restarting it.

A message may also be displayed to provide additional information related to the fault that turned on the pilot lamp. Refer to the following chart.

NOTE: In some cases, the CHECK ENGINE message can be displayed along with other messages.

PILOT LAMP	MULTI-FUNCTION GAUGE MESSAGE	CAUSE
	DESS KEY NOT RECOGNIZED	Module unable to read the key
	BAD KEY	Key not programmed for the vehicle
	LO BATT VOLT	Low system voltage
	HIGH BATT VOLT	High system voltage
	LOW OIL	Low engine oil pressure
	LIMP HOME MODE	An important engine management component is not working properly. Vehicle performance is purposely limited
	CHECK ENGINE	An engine management component is not functioning properly
	MAINTENANCE REQUIRED	Periodic maintenance required
	ECM NOT RECOGNIZED	Communication error between gauge and ECM
	CHECK DPS	DPS malfunction
	TPS FAULT PRESS OVERRIDE BUTTON TO LIMP HOME	TPS malfunction
	TRANSMISSION SIGNAL FAULT	Gauge receives an invalid gear position data
	PARK BRAKE	Displayed when brake is applied for more than 15 seconds (while riding)
	HI TEMP	High engine temperature

Limp Home Mode

When a major component of the EMS is not operating properly, limp home mode will be set.

Engine RPM will be limited and/or engine behavior and control may be modified depending on the cause of the failure.

This mode allows the rider to return home, which would otherwise not be possible without this advanced system.

LIMP HOME will be displayed in the multifunction gauge and the CHECK ENGINE light symbol will be on in the gauge.

FAULT CODES

Fault Code Categories

A fault code consists of an alphanumeric designator followed by a hexadecimal number of 3 digits. The alphanumeric designator defines the category of the fault code while the hexadecimal number refers to a unique fault.

FAULT CODE CATEGORIES		
ALPHANUMERIC DESIGNATOR	MODULE/ SYSTEM	EXAMPLE OF FAULT CODE
From P0 to P3	Power train, TCM and DPS	P0116
From U0 to U3	Communication between module and sensors	U0073

RELATED MODULE AND FAULTS	
MODULE	FAULT CODE CATEGORY
ECM	P and U
DPS	P and U
Cluster	P and U

Fault Code States

Fault codes have 3 possible states:
- Active
- Occurred
- Inactive.

Click the **Fault** tab then click on the drop-down list on the LH lower corner.

Choose the fault code state you want to display.

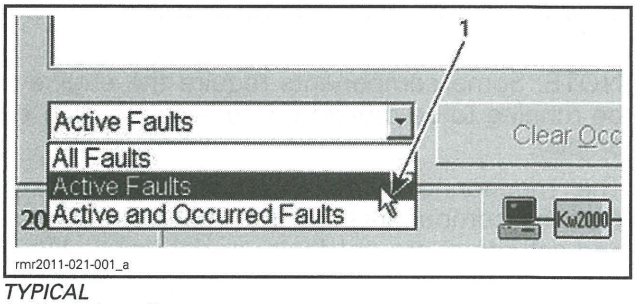

TYPICAL
1. Drop down list

Active Fault Codes

An active fault code is an indication of a fault that is **currently triggered**.

The active fault may or may not compromise normal operation of the system(s). Service action should be taken to correct the problem that caused the fault code.

Once the fault condition(s) of the active fault is no longer present, its state will change to "occurred".

Occurred Fault Codes

An occurred fault code indicates a fault that was active, but **no longer** is.

The occurred fault does not presently affect system or component operation but is retained as a history of the faults that were detected.

The fault may have been generated due to a system or component that was momentarily operating outside normal parameters. Repeated occurred faults of this type should be considered when troubleshooting a problem, and may require that maintenance action be taken.

An occurred fault may also be generated when disconnecting and reconnecting a component, replacing a burnt fuse, when the software update of an electronic module has been carried out, or may be due to a momentary high or low voltage.

Inactive Fault Codes

An inactive fault code represents a fault code that is neither active, nor occurred. It is simply part of a list of all possible faults that can be monitored

by the ECM and multifunction gauge, which may become active or occurred if the monitoring system detects an applicable fault. These codes can be viewed in B.U.D.S.

How to Display Fault Codes in the Multifunction Gauge

NOTE: A fault code must be in an "Active" state to be displayed in the multifunction gauge. B.U.D.S. must be used to read all fault codes states.

1. Use the selector button or mode button and scroll to Engine Hour (EH) on the gauge.

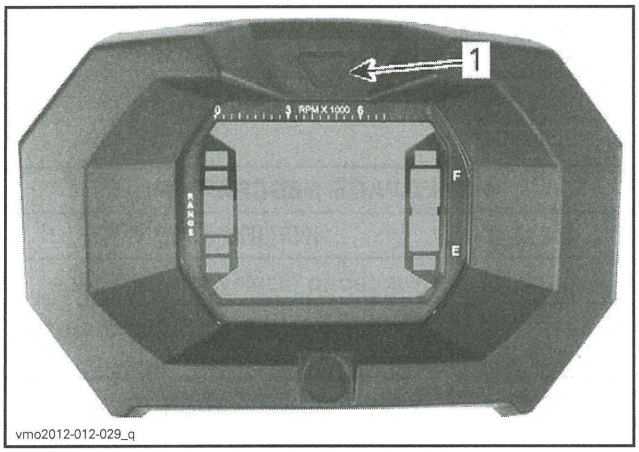

MULTIFUNCTION GAUGE LCD - OUTLANDER
1. Selector button

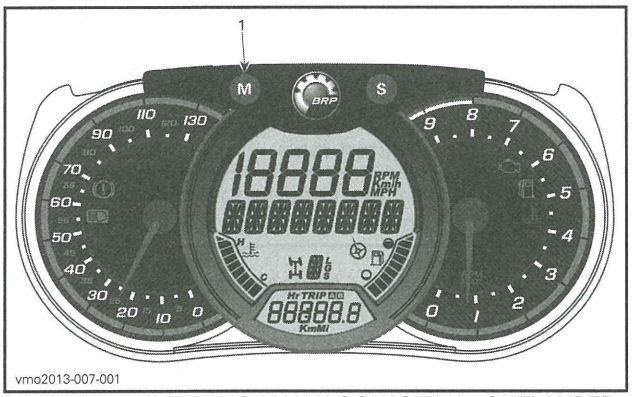

MULTIFUNCTION GAUGE (ANALOG/DIGITAL) - OUTLANDER
1. Mode button

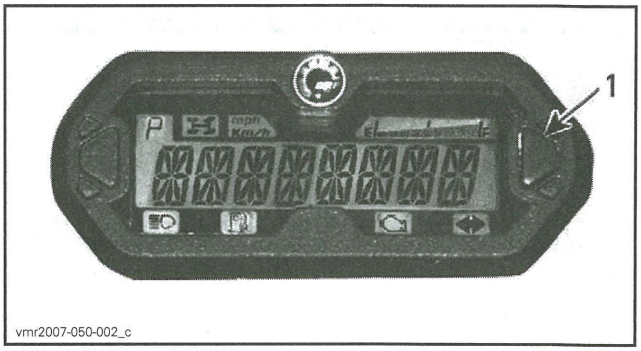

RENEGADE
1. Selector button

2. Press and HOLD mode button while QUICKLY toggling HI - LO beam.

NOTE: A minimum of 3 HI - LO toggles must be completed within 2 seconds.

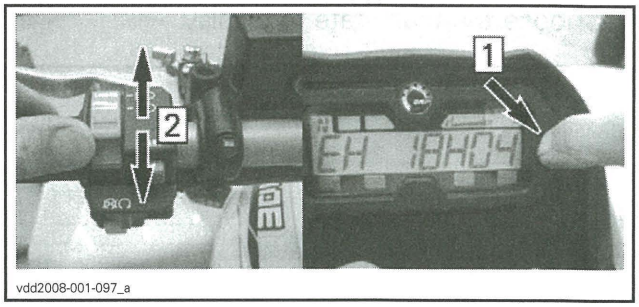

TYPICAL
Step 1: Press and hold
Step 2: Quickly toggle HI - LO beam

How to Read Fault Codes Using B.U.D.S.

NOTE: All fault code (regardless of their state) can be read with B.U.D.S.

1. Connect vehicle to the latest applicable B.U.D.S. Refer to *COMMUNICATION TOOLS AND B.U.D.S.* subsection.
2. Click on the **Read Data** button.
3. Click on the **Faults** tab.

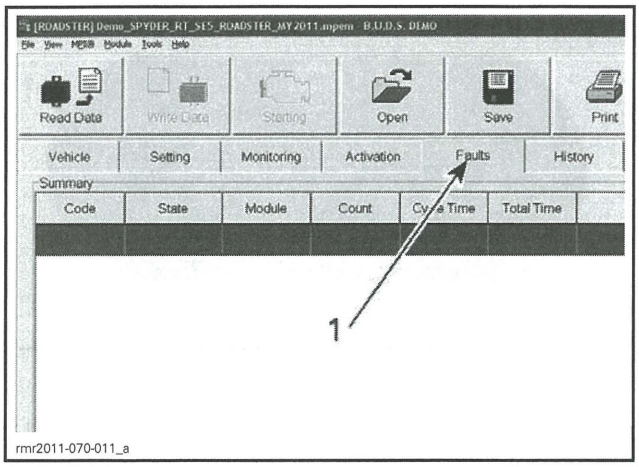

rmr2011-070-011_a

1. Fault tab

4. Click on the drop-down list on the LH lower corner.
5. Choose the fault state to display.

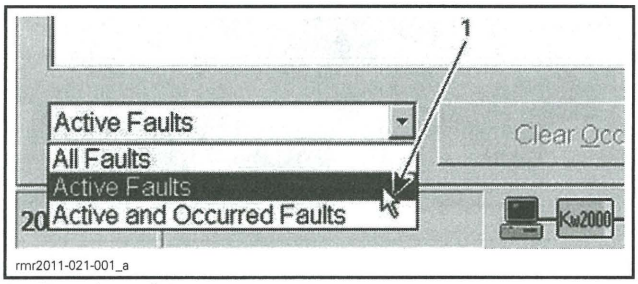

rmr2011-021-001_a

1. Drop down list

FAULT STATE	INFORMATION
All faults	Display all possible faults regardless of state
Active faults	Display only faults matching this state Empty area if there is no active fault
Active and occurred faults	Display only faults that have either state Empty area if there is neither active nor occurred fault

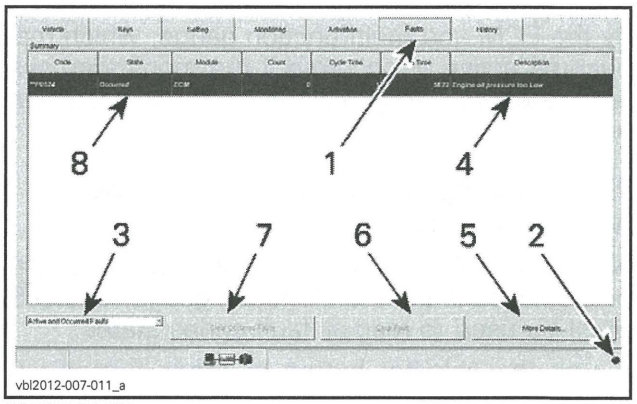

vbl2012-007-011_a

FAULT PAGE
1. **Fault** *tab*
2. *Fault indicator light*
3. *Fault code state drop box*
4. *Fault description*
5. *More Details button*
6. *Clear Fault button*
7. *Clear Occurred Faults button*
8. *Selected fault*

FAULT PAGE DESCRIPTION	
ITEM	INFORMATION
Fault tab	Click tab to display the fault page
Fault indicator light	When flashing, it indicates there is active fault(s)
Fault code state drop box	Click drop box to select the type of faults to display
Fault nomenclature	Display specific information and statistics related to the fault (see fault nomenclature table)
More Details button	To display possible causes and service actions related to the selected fault
Clear Fault button	To clear occurred faults one at a time
Clear Occurred Faults button	To clear all occurred faults in related ECU(s)
Selected fault	When a fault is selected, additional information pertaining to that fault will be displayed when clicking the "More details" button. To select a fault, click on the fault with the mouse or use the cursor up or down to scroll to the desired fault

FAULT NOMENCLATURE	
COLUMN	INFORMATION
Code	Fault code number. When 2 stars (**) precedes the code, detailed conditions when the fault occurred, can be displayed by clicking the "More details" button
State	Display the fault state (active, occurred, inactive)
Module	Displays the module that reports the fault code. This is the module that detects or has received a message of an anomaly and reports it. List of modules: - Cluster (multifunction gauge) - DPS (dynamic power steering) - ECM (engine control module)
Count	Number of times this fault occurred within the driving cycle. Value: From 0 to 255
Cycle time	Not to be used. Value: From 0 to 255 minutes
Total time	Not to be used. Value: From 0 to 64 255 minutes
Description	Provides a short description of the fault

When reading a fault code in B.U.D.S., pay particular attention to which module reports a fault. It is indicated in the **Module** column.

The **Description** column gives a short description of the fault.

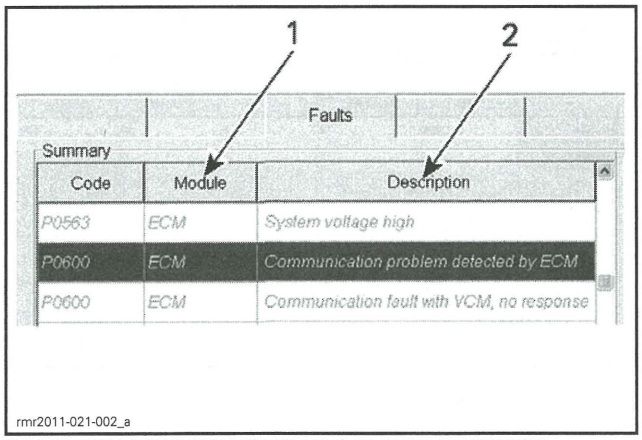

SOME COLUMNS REMOVED FOR CLARITY PURPOSE
1. *Module that reports a fault*
2. *Fault description*

Click on the **More Details** button, on the RH lower corner, to display the "Possible Causes" and the "Service Actions" to step further in the diagnosis.

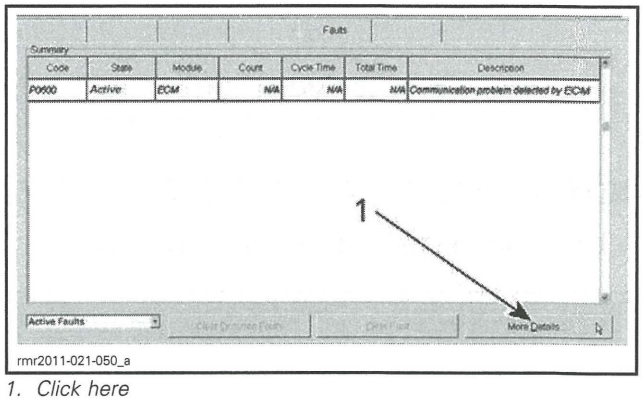

1. *Click here*

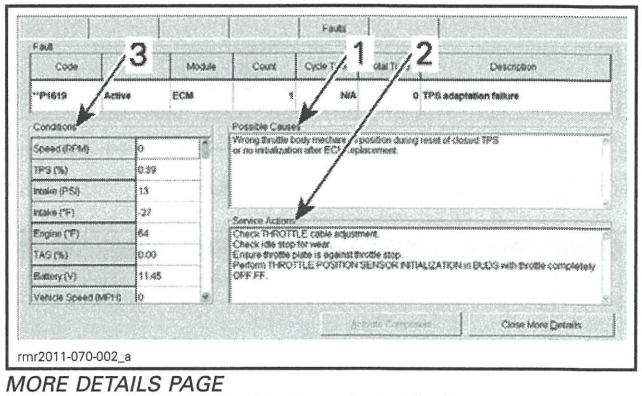

MORE DETAILS PAGE
1. *Possible causes related to the selected fault*
2. *Service actions*
3. *Operating conditions when fault occurred*

MORE DETAILS PAGE DESCRIPTION	
ITEM	INFORMATION
Possible causes	List the possible causes that triggered the fault
Service actions	List the possible actions to perform to solve the fault
Conditions when fault occurred	List the operating conditions of the engine and/or vehicle when the fault was triggered

How to Clear Fault Codes Using B.U.D.S.

1. Connect vehicle to the latest applicable B.U.D.S. software. Refer to *COMMUNICATION TOOLS AND B.U.D.S.* subsection.
2. Click on the **Read Data** button.
3. Click on the **Faults** tab.

The fault(s) (occurred state only) can be cleared by pressing the **Clear Occurred Faults**or **Clear Fault** buttons in B.U.D.S.

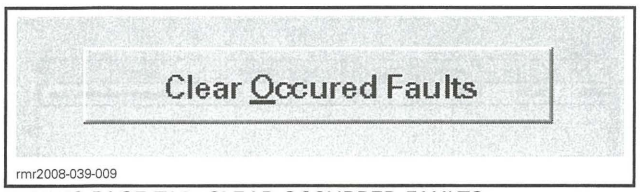

FAULTS PAGE TAB, CLEAR OCCURRED FAULTS

4. Click YES on the following message box.

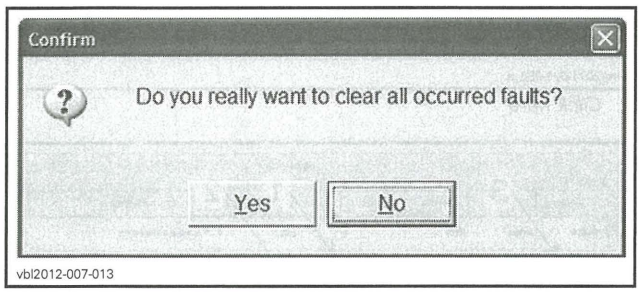

The following message will appear.

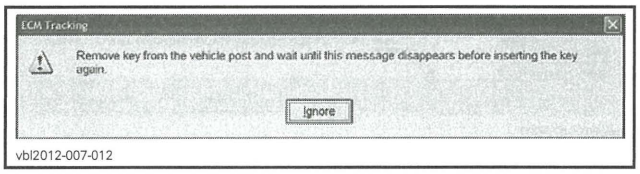

5. Turn ignition OFF and wait until the message disappears.

This will reset the appropriate counter(s) and will also record that the problem has been fixed in the related ECU memory.

NOTE: An active fault code cannot be cleared. In other words, the problem relevant to the fault code must be repaired before the fault can be cleared.

FAULT CODE DIAGNOSTIC

Missing Module

If a module is missing, several fault codes will appear.

To quickly find which module is missing, perform the following:

1. Connect vehicle to the latest applicable B.U.D.S. software. Refer to *COMMUNICATION TOOLS AND B.U.D.S.* subsection.
2. Click on the **Read Data** button.
3. Click **Module** in the menu bar.
4. Look at the list of modules.
5. If a module is not visible, then it is not communicating through the CAN bus (controller area network).

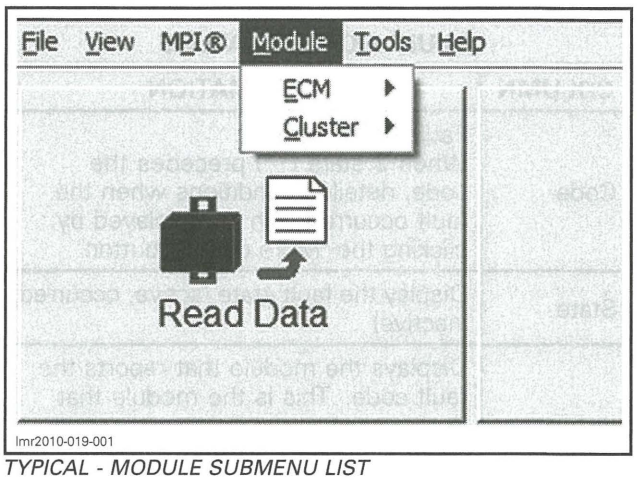

TYPICAL - MODULE SUBMENU LIST

6. Refer to the following table to find the appropriate subsection in this manual to diagnose the missing module.

MISSING MODULE	SECTION TO REFER TO
ECM	*ELECTRONIC FUEL INJECTION (EFI)*
Cluster	*LIGHTS, GAUGE AND ACCESSORIES*
DPS	*STEERING (DPS) AND FRONT WHEELS*

Diagnostic Tips

To see the last minute of operating conditions, click on the **History** tab in B.U.D.S.

NOTE: The page displays data whatever there is fault code(s) or not.

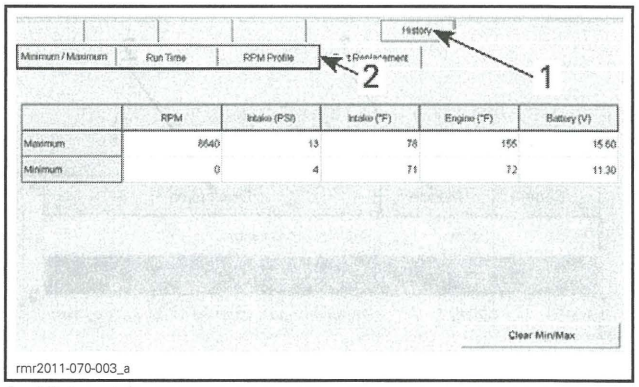

1. History tab
2. Additional history pages

HISTORY PAGE DESCRIPTION	
ITEM	INFORMATION
Minimum/ Maximum	Display the minimum and maximum values encountered. Click "Clear Min/Max" to reset the values
Run time	Display the time proportion in what mode the engine was running in
RPM profile	Display the RPM range proportion in which the engine was running in

When a minor fault occurs:
- Turn ignition key OFF.
- Wait 30 seconds.
- Turn ignition key ON.

This should change the fault state from "Active" to "Occurred".

The vehicle should then operate normally.

If a sensor-related fault persists, you may try disconnecting/reconnecting the sensor.

Read the following for a general approach to troubleshoot fault codes (active or occurred).

GENERAL GUIDELINES TO SOLVE FAULT CODES	
CONDITION	ACTION
Troubleshooting vehicle	Use B.U.D.S. to: Read fault codes. Display "Active" faults to see components currently not operating normally. Display "Occurred" faults to troubleshoot intermittent problems. Monitor system(s), sensor(s), switches and actual conditions. Activate component(s) for troubleshooting. Set components (resets etc). Know the last minute of operating conditions by using the "History" page. Know the operating conditions, if available, when a fault code occurred by using the "More details" button in the fault page.
New fault(s) appear after a vehicle maintenance or repair	Check sensor connections or mixed up connections. **Before** vehicle maintenance: Read the electronic modules with B.U.D.S. Save and print the B.U.D.S. file (keep faults option only). **After** vehicle maintenance: Read the electronic modules with B.U.D.S. Compare the fault code(s) before and after the maintenance using the printed copy and the current B.U.D.S. reading. Investigate only the newly fault codes. Clear all occurred faults in B.U.D.S.
Communication faults displayed as "Occurred" after module flashing	Normal behavior when flashing a module. Clear all occurred faults and check again.
Sensor "Active" fault	Read the fault description in B.U.D.S. Click on the "More Details" button. Look at the "Conditions" when available. Read the "Possible Causes". Apply the "Service Actions".
Low system voltage on one module. Power problem on sensor(s)	Check related fuse(s) and relay. Check related power and ground wires. Check for common power supply to several sensors/modules (refer to *POWER DISTRIBUTION AND GROUNDS)*. **NOTE:** Some sensors are supplied by the battery while others are supplied by a module.
Low system voltage on several modules (several communication faults will also appear)	Check battery condition and connections. Check related fuse(s) and relay. Check voltage regulator/rectifier.
High system voltage on several modules	A battery charger has likely been used to substitute the vehicle battery. Clear all occurred faults and check again. Check voltage regulator/rectifier.
When all modules report that a module is missing	Check the module that is reported as missing. Check related fuse(s) and relay. Check related power and ground wires.
When several modules are in fault	Search for a common problem such as a faulty sensor.
CAN buss OFF	When several modules and sensors report that a module is missing. The missing module may report CAN bus off. Check related CAN wires (continuity, short to ground, short between CAN low and high). Check module pins and wiring terminals. Then, the other modules should stop reporting that module is missing.

GENERAL GUIDELINES TO SOLVE FAULT CODES	
CONDITION	ACTION
Occurred fault(s)	May have been generated due to a system or component that was momentarily operating outside normal parameters.
	May be generated when disconnecting and reconnecting a component, replacing a burnt fuse, or may be due to a momentary high or low voltage.
	Before being "Occurred", a fault has always been "Active" for a certain time, indicating that an unexpected condition or problem has been present during the driving cycle. A frequent momentarily fault or an intermittent fault may never be seen as "Active" in B.U.D.S. while there is still a pending problem. This type of malfunctions can be discovered by looking at the "Occurred" faults and then by evaluating the fault count. As long as a fault is present, it is displayed as "Active".
Fault count (0 - 255)	**Low value:** Suggests handling problems (connections, terminal contact/shape etc.). **High value:** Suggests a frequent and unsolved problem. The problem should be investigated.
Fault conditions (more details button)	Look for abnormal, excessive values.
Hard to find problems	When the basic troubleshooting has been done and the fault code(s) persists, often the problem is related to the wiring harness, connections or electromechanical components. Short to ground, to battery or between wires. Wire splices, chafing, terminal problems (pulled out, bent, out of shape, corroded etc.). Bad contacts in switch or relay.

ECUs share information and their systems may interact with each other. Certain faults may cause more than one ECU to set a fault code or indication (pilot lamp or message) as the failure of some components may affect the operation of several systems.

FAULT CODE TABLE

ACRONYMS USED IN THE FAULT CODE TABLE	
USED IN FAULT CODE TABLE	MEANING
ECM	Engine Control Module
DPS	Dynamic Power Steering
CAN	Controller Area Network
TPS	Throttle Position Sensor
GBPS	Gearbox Position Sensor
SCM	Suspension Control Module

NOTE: The following fault code table was up to date as of printing. For the latest fault codes, use B.U.D.S.

FAULT CODE	MODULE	DESCRIPTION	CAUSE	ACTION
C2109	SCM	Release Valve Activation delay Exceed		
C210A	SCM	Suspension Valve Activation time Exceed		
C210B	SCM	Outlet Valve Activation time Exceed		
C2111	SCM	External pressure sensor signal Invalid		
C21A0	SCM	Air Leak Plausibility check Air Supply		
C21D0	SCM	Pressure threshold not reach outlet adjustment		
C21D1	SCM	Compressor temperature sensor invalid range		
C21D2	SCM	Compressor over temperature condition		
C21D3	SCM	Over pressure detected		
C21E0	SCM	Pressure threshold not reach Rear suspension adjustment		
C21E1	SCM	Air Leak Plausibility check Rear suspension		
C21F0	SCM	Pressure threshold not reach Front suspension adjustment		
C21F3	SCM	Air Leak Plausibility check Front Right suspension		
C21F4	SCM	Air Leak Plausibility check Front left suspension		
P0008	ECM	Lost of Synchronization	Engine Synchronization. Check Failed.	Check for Crankshaft Position Sensor fault. Check for dirty Crankshaft Position Sensor. Check compression on engine.

FAULT CODE	MODULE	DESCRIPTION	CAUSE	ACTION
P0107	ECM	Manifold Air Pressure Sensor voltage too Low	Damaged sensor, damaged circuit wires, damaged connector or damaged ECM pins, ECM voltage supply Low.	Make sure sensor connector is fully inserted. Measure voltage between harness connector pins 1 and 3 (expected value: 4.8 to 5.1 volts). Measure resistance from connector: ECM-F3 to MAPTS-2 (expected value: < 2 ohms). Measure resistance from connector: ECM-A1 to MAPTS-3 (expected value: < 2 ohms). Measure resistance from connector: ECM-G2 to MAPTS-1 (expected value: < 2 ohms). Measure resistance from connector: ECM-F2 to MAPTS-4 (expected value: < 2 ohms).
P0108	ECM	Manifold Air Pressure Sensor voltage too High	Damaged sensor, wires shorted to battery +, ECM voltage supply too High.	Make sure sensor connector is fully inserted. Measure voltage between harness connector pins 1 and 3 (expected value: 4.8 to 5.1 volts). Measure resistance from connector: ECM-F3 to MAPTS-2 (expected value: < 2 ohms). Measure resistance from connector: ECM-A1 to MAPTS-3 (expected value: < 2 ohms). Measure resistance from connector: ECM-G2 to MAPTS-1 (expected value: < 2 ohms). Measure resistance from connector: ECM-F2 to MAPTS-4 (expected value: < 2 ohms).
P0112	ECM	Intake Air Temperature Sensor 1 circuit Low	Damaged sensor, damaged circuit wires, damaged connector or damaged ECM pins, ECM voltage supply Low.	Make sure sensor connector is fully inserted. Measure voltage between harness connector pins 1 and 3 (expected value: 4.8 to 5.1 volts). Measure resistance from connector: ECM-F3 to MAPTS-2 (expected value: < 2 ohms). Measure resistance from connector: ECM-A1 to MAPTS-3 (expected value: < 2 ohms). Measure resistance from connector: ECM-G2 to MAPTS-1 (expected value: < 2 ohms). Measure resistance from connector: ECM-F2 to MAPTS-4 (expected value: < 2 ohms).
P0113	ECM	Intake Air Temperature Sensor 1 circuit High	Damaged sensor, wires shorted to battery +, ECM voltage supply too High.	Make sure sensor connector is fully inserted. Measure voltage between harness connector pins 1 and 3 (expected value: 4.8 to 5.1 volts). Measure resistance from connector: ECM-F3 to MAPTS-2 (expected value: < 2 ohms). Measure resistance from connector: ECM-A1 to MAPTS-3 (expected value: < 2 ohms). Measure resistance from connector: ECM-G2 to MAPTS-1 (expected value: < 2 ohms). Measure resistance from connector: ECM-F2 to MAPTS-4 (expected value: < 2 ohms).
P0114	ECM	Intake Air Temperature Sensor Intermittent	Damaged sensor, damaged circuit wires, damaged connector or damaged ECM pins, ECM voltage supply.	Make sure sensor connector is fully inserted. Measure voltage between harness connector pins 1 and 3 (expected value: 4.8 to 5.1 volts). Measure resistance from connector: ECM-F3 to MAPTS-2 (expected value: < 2 ohms). Measure resistance from connector: ECM-A1 to MAPTS-3 (expected value: < 2 ohms). Measure resistance from connector: ECM-G2 to MAPTS-1 (expected value: < 2 ohms). Measure resistance from connector: ECM-F2 to MAPTS-4 (expected value: < 2 ohms).

FAULT CODE	MODULE	DESCRIPTION	CAUSE	ACTION
P0116	ECM	Engine Coolant Temperature Sensor 1 circuit range/performance	Damaged sensor, wires shorted to battery +, ECM voltage supply.	Disconnect the sensor. Measure resistance from connector: ECM-F4 to CTS-1 (expected value: < 2 ohms). Measure resistance from connector: ECM-C3 to CTS-2 (expected value: < 2 ohms). Measure CTS resistance value (expected value: 2280 to 2736 ohms at 19 to 21°C (66 to 70°F)).
P0117	ECM	Engine Coolant Temperature Sensor 1 circuit Low	Engine temperature sensor or circuit wires shorted to ground.	Disconnect the sensor. Measure resistance from connector: ECM-F4 to CTS-1 (expected value: < 2 ohms). Measure resistance from connector: ECM-C3 to CTS-2 (expected value: < 2 ohms). Measure CTS resistance value (expected value: 2280 to 2736 ohms at 19 to 21°C (66 to 70°F)).
P0118	ECM	Engine Coolant Temperature Sensor 1 circuit High	Disconnected sensor, or sensor resistance too High.	Disconnect the sensor. Measure resistance from connector: ECM-F4 to CTS-1 (expected value: < 2 ohms). Measure resistance from connector: ECM-C3 to CTS-2 (expected value: < 2 ohms). Measure CTS resistance value (expected value: 2280 to 2736 ohms at 19 to 21°C (66 to 70°F)).
P011A	ECM	Engine Coolant Temperature Correlation Check failed	Correlation Check failed.	Check for coolant fluid leak and coolant fluid level. Check radiator condition. Check for other fault, check thermostat.
P0122	ECM	Throttle Position Sensor (TPS) Short circuit to GND	Damaged circuit wires, damaged sensor or damaged ECM pins.	Make sure sensor connector is fully inserted. Measure resistance from connector: ECM-A1 to TPS-1 (expected value: < 2 ohms). Measure resistance from connector: ECM-G3 to TPS-3 (expected value: < 2 ohms). Measure resistance from connector: ECM-G2 to TPS-2 (expected value: < 2 ohms).
P0123	ECM	Throttle Position Sensor (TPS) shorted to battery +	Damaged circuit wires, damaged sensor or damaged ECM pins.	Make sure sensor connector is fully inserted. Measure resistance from connector: ECM-A1 to TPS-1 (expected value: < 2 ohms). Measure resistance from connector: ECM-G3 to TPS-3 (expected value: < 2 ohms). Measure resistance from connector: ECM-G2 to TPS-2 (expected value: < 2 ohms).
P0217	ECM	Engine Coolant over temperature condition	Coolant fluid temperature too high.	Check for coolant fluid leak and coolant fluid level. Check radiator condition. Check for other fault, check thermostat.
P0219	ECM	Engine Over speed Condition detected	Engine speed too high.	

FAULT CODE	MODULE	DESCRIPTION	CAUSE	ACTION
P0231	ECM	Fuel Pump circuit shorted to ground, or open circuit	Blown fuse, damaged or disconnected fuel pump relay, damaged circuit wires, damaged connectors or damaged ECM output pins.	Check fuse. Measure voltage between harness connector PF1-12B and ground (expected value: 11 to 13 volts). Measure voltage between harness connector PF1-11B and ground (expected value: 11 to 13 volts). Measure resistance from harness connector: ECM-J1 to PF1-12A (expected value: < 2 ohms). Measure resistance from harness connector: PF1-11A to FP-3 (expected value: < 2 ohms). Measure resistance from harness connector: FP-4 to ground (expected value: < 2 ohms).
P0232	ECM	Fuel Pump circuit shorted to battery +	Blown fuse, damaged or disconnected fuel pump relay, damaged circuit wires, damaged connectors or damaged ECM output pins.	Check fuse. Measure voltage between harness connector PF1-12B and ground (expected value: 11 to 13 volts). Measure voltage between harness connector PF1-11B and ground (expected value: 11 to 13 volts). Measure resistance from harness connector: ECM-J1 to PF1-12A (expected value: < 2 ohms). Measure resistance from harness connector: PF1-11A to FP-3 (expected value: < 2 ohms). Measure resistance from harness connector: FP-4 to ground (expected value: < 2 ohms).
P0261	ECM	Cylinder 1 injector open circuit or shorted to ground	Blown fuse, damaged or disconnected injector, damaged or disconnected circuit wires, damaged ECM output pins.	Disconnect injector 1. Measure resistance between injector pin 1 and 2 (expected value = 14 to15 ohms). Measure resistance from harness connector: INJ1-1 to INJ1-2 (expected value: > OPEN). Measure voltage between harness connector INJ1-2 and ground (expected value: 11 to 13 volts). Measure resistance from harness connector: ECM-K4 to INJ1-1 (expected value: < 2 ohms).
P0262	ECM	Cylinder 1 injector shorted to battery +	Damaged injector, damaged circuit wires, damaged connector or damaged ECM output pins.	Disconnect injector 1. Measure resistance between injector pin 1 and 2 (expected value = 14 to15 ohms). Measure resistance from harness connector: INJ1-1 to INJ1-2 (expected value: > OPEN). Measure voltage between harness connector INJ1-2 and ground (expected value: 11 to 13 volts). Measure resistance from harness connector: ECM-K4 to INJ1-1 (expected value: < 2 ohms).

FAULT CODE	MODULE	DESCRIPTION	CAUSE	ACTION
P0264	ECM	Cylinder 2 injector open circuit or shorted to ground	Blown fuse, damaged or disconnected injector, damaged or disconnected circuit wires, damaged ECM output pins.	Disconnect injector 2. Measure resistance between injector pin 1 and 2 (expected value = 14 to15 ohms). Measure resistance from harness connector: INJ2-1 to INJ2-2 (expected value: > OPEN). Measure voltage between harness connector INJ2-2 and ground (expected value: 11 to 13 volts). Measure resistance from harness connector: ECM-L4 to INJ2-1 (expected value: < 2 ohms).
P0265	ECM	Cylinder 2 injector shorted to battery +	Damaged injector, damaged circuit wires, damaged connector or damaged ECM output pins.	Disconnect injector 2. Measure resistance between injector pin 1 and 2 (expected value = 14 to15 ohms). Measure resistance from harness connector: INJ2-1 to INJ2-2 (expected value: > OPEN). Measure voltage between harness connector INJ2-2 and ground (expected value: 11 to 13 volts). Measure resistance from harness connector: ECM-L4 to INJ2-1 (expected value: < 2 ohms).
P0338	ECM	Crankshaft Position Sensor Spike detected	Damaged CPS, damaged circuit wires, damaged connector or damaged ECM output pins. Wrong mounting position of sensor.	Make sure sensor connector is fully inserted. Measure resistance from connector: ECM-E1 to CPS-1 (expected value: < 2 ohms). Measure resistance from connector: ECM-D1 to CPS-2 (expected value: < 2 ohms).
P0339	ECM	Crankshaft Position Sensor Intermittent	Incorrect number of tooth detected. Damaged CPS, damaged circuit wires, damaged connector or damaged ECM output pins. Wrong mounting position of sensor.	Make sure sensor connector is fully inserted. Measure resistance from connector: ECM-E1 to CPS-1 (expected value: < 2 ohms). Measure resistance from connector: ECM-D1 to CPS-2 (expected value: < 2 ohms).
P0480	ECM	Radiator cooling fan relay	Blown fuse, damaged or disconnected relay, damaged circuit wires or connectors, damaged ECM output pins, damaged Relay.	Check fuse. Disconnect relay. Measure resistance between terminals 85 and 86 on relay (expected value: 70 to 90 ohms). Measure resistance between harness connector PF-1E and ground (expected value > OPEN). Measure resistance from harness connector: ECM-B3 to PF1-1E (expected value: < 2 ohms).

FAULT CODE	MODULE	DESCRIPTION	CAUSE	ACTION
P0500	DPS	Invalid or missing vehicle speed	No vehicle speed available and vehicle is in (H or L gear) with engine RPM over 4000RPM. Damaged circuit vehicle speed sensor circuit, damaged sensor, wrong mounting position of speed sensor.	Check if vehicle speed is available in Monitoring page in BUDS. Check fuse. Measure voltage between harness connector CV-A and ground (expected value: 11 to 13 volts). Measure resistance from connector: CL-9 to CV-B (expected value: < 2 ohms) on ATV.
P0508	ECM	Idle Air Control System Circuit Low	Damaged IDLE, damaged circuit wires, damaged connector or damaged ECM output pins.	Make sure IDLE connector is fully inserted. Measure resistance from connector: ECM-D4 to IDLE-D (expected value: < 2 ohms). Measure resistance from connector: ECM-D3 to IDLE-A (expected value: < 2 ohms). Measure resistance from connector: ECM-E4 to IDLE-B (expected value: < 2 ohms). Measure resistance from connector: ECM-C4 to IDLE-C (expected value: < 2 ohms).
P0509	ECM	Idle Air Control System Circuit High	Damaged IDLE, damaged circuit wires, damaged connector or damaged ECM output pins.	Make sure IDLE connector is fully inserted. Measure resistance from connector: ECM-D4 to IDLE-D (expected value: < 2 ohms). Measure resistance from connector: ECM-D3 to IDLE-A (expected value: < 2 ohms). Measure resistance from connector: ECM-E4 to IDLE-B (expected value: < 2 ohms). Measure resistance from connector: ECM-C4 to IDLE-C (expected value: < 2 ohms).
P0513	ECM	Invalid Access Key Detected	A non stored access key was detected when key switch was turned to ON.	Use a stored access key to turn key switch. If no stored access keys are available program one and try again.
P0523	ECM	Engine oil pressure sensor sticking	Damaged switch, damaged circuit wires, damaged connector, damaged ECM pins.	Measure resistance between harness connector OPS and ground when engine stopped (expected value < 2 ohms). Measure resistance between harness connector OPS and ground when engine running (expected value = open). Measure resistance from harness connector: OPS to ECM-E2 (expected value: < 2 ohms).
P0524	ECM	Engine oil pressure too Low	Damaged switch, damaged circuit wires, damaged connector, damaged ECM pins.	Measure resistance between harness connector OPS and ground when engine stopped (expected value < 2 ohms). Measure resistance between harness connector OPS and ground when engine running (expected value = open). Measure resistance from harness connector: OPS to ECM-E2 (expected value: < 2 ohms).
P0551	DPS	TORQUE_SENSOR_OPEN	Damaged DPS	External troubleshooting is not possible. Replace the DPS.
P0552	DPS	TORQUE_SENSOR_SHORT_GND	Damaged DPS	External troubleshooting is not possible. Replace the DPS.

FAULT CODE	MODULE	DESCRIPTION	CAUSE	ACTION
P0553	DPS	TORQUE_SENSOR_ SHORT_5V	Damaged DPS	External troubleshooting is not possible. Replace the DPS.
P0562	ECM	System voltage low	Blown fuse FC, battery failure, voltage regulator failure, damaged circuit wires or connection, damaged magneto generator. An external battery charger may have been used.	Measure battery voltage with engine stopped (expected value: 11 to 13 volts). Measure battery voltage with engine running (expected value: 13 to 14.7 volts). Check connections on voltage regulator. Check ground and positive connections on battery. Check ground on vehicle frame.
P0562	DPS	System voltage low	Blown fuse, battery failure, voltage regulator failure, damaged circuit wires or connection, damaged magneto generator.	Check DPS fuse. Measure voltage between harness connector DPS1-A and ground. (expected value = 11 to 13 volts). Measure voltage between harness connector DPS2-A&B and ground (expected value = 11 to 13 volts). Measure battery voltage with engine stopped (expected value: 11 to 13 volts). Check ground and positive connections on battery.
P0563	ECM	System voltage high	Damaged regulator. An external battery charger may have been used.	Measure battery voltage with engine stopped (expected value: 11 to 13 volts). Measure battery voltage with engine running (expected value: 13 to 14.7 volts). Check connections on voltage regulator. Check ground and positive connections on battery. Check ground on vehicle frame.
P0563	DPS	System voltage high	Rectifier failure, damaged circuit wires or connection.	Measure battery voltage with engine stopped (expected value: 11 to 13 volts). Measure battery voltage with engine Running (expected value: 13 to 14.7 volts). Check connections on voltage regulator. Check ground and positive connections on battery.
P0601	DPS	CALIBRATION FAULT	DPS not calibrated or damage DPS.	Try updating the DPS.
P0601	SCM	ACS calibration fault		
P0605	DPS	EEPROM COMMUNICATION FAULT	Internal error or damaged DPS.	External troubleshooting is not possible. Replace the DPS.
P0605	SCM	EEPROM COMMUNICATION FAULT		

FAULT CODE	MODULE	DESCRIPTION	CAUSE	ACTION
P0615	ECM	Starter Relay circuit open	Damaged relay, Damaged start switch, damaged circuit wires, damaged connector, damaged ECM pins.	Check start button, check Run/Stop button, check if free weeling diode is in the good way. Disconnect starter solenoid relay. Measure resistance from harness connector: ECM-L3 to SS2 (expected value: < 2 ohms). Measure resistance from harness connector: MG2-6 to SS1 (expected value: < 2 ohms). Measure resistance between terminals SS1 and SS2 (expected value: 3 to 6 ohms).
P0616	ECM	Starter Relay circuit shorted to ground	Damaged relay, Damaged start switch, damaged circuit wires, damaged connector, damaged ECM pins.	Check start button, check Run/Stop button, check if free wheeling diode is in the good way Disconnect starter solenoid relay. Measure resistance from harness connector: ECM-L3 to SS2 (expected value: < 2 ohms). Measure resistance from harness connector: MG2-6 to SS1 (expected value: < 2 ohms). Measure resistance between terminals SS1 and SS2 (expected value: 3 to 6 ohms).
P0617	ECM	Starter Relay circuit shorted to battery +	Damaged relay, Damaged start switch, damaged circuit wires, damaged connector, damaged ECM pins.	Check start button, check Run/Stop button, check if free wheeling diode is in the good way. Disconnect starter solenoid relay. Measure resistance from harness connector: ECM-L3 to SS2 (expected value: < 2 ohms). Measure resistance from harness connector: MG2-6 to SS1 (expected value: < 2 ohms). Measure resistance between terminals SS1 and SS2 (expected value: 3 to 6 ohms).
P0636	DPS	MOTOR LOW CURRENT FAULT	Blown fuse, damaged circuit wires or connection.	External troubleshooting is not possible. Replace the DPS.
P0637	DPS	MOTOR HIGH CURRENT FAULT	Internal error or damaged DPS.	External troubleshooting is not possible. Replace the DPS.
P0642	ECM	Sensor Reference Voltage Low	Damaged sensor connected to ECM voltage supply, Damaged ECM voltage supply output.	Measure voltage between harness connector ECM-A1 and ground (expected value: 4.8 to 5.1 volts). Check sensor connected to ECM voltage supply output.
P0643	ECM	Sensor Reference Voltage High	Damaged sensor connected to ECM voltage supply, Damaged ECM voltage supply output.	Measure voltage between harness connector ECM-A1 and ground (expected value: 4.8 to 5.1 volts). Check sensor connected to ECM voltage supply output.
P0658	DPS	PHASE A_LOW	DPS motor supply. Damaged DPS.	External troubleshooting is not possible. Replace the DPS.
P0659	DPS	PHASE A_HIGH	DPS motor supply. Damaged DPS.	External troubleshooting is not possible. Replace the DPS.
P0666	DPS	TEMPERATURE SENSING FAULT	Internal temperature error or damaged DPS.	External troubleshooting is not possible. Replace the DPS.

FAULT CODE	MODULE	DESCRIPTION	CAUSE	ACTION
P0685	ECM	Accessory relay circuit	Diagnosis related to accessories or light relay, blown fuse, damaged or disconnected relay, damaged circuit wires, damaged connectors or damaged ECM output pins.	Check fuse. Disconnect Accessory relay and Lights relay and turn key switch (on w/lights). Measure voltage between harness connector PF1-10E and ground (expected value: 11 to 13 volts). Measure voltage between harness connector PF1-6D and ground (expected value: 11 to 13 volts). Measure resistance from harness connector: ECM-K2 to PF1-12D (expected value: < 2 ohms). Measure resistance from harness connector: ECM-K2 to PF1-7C (expected value: < 2 ohms). Measure resistance between terminals 85 and 86 on the 2 relays (expected value: 70 to 90 ohms).
P0686	ECM	Accessory relay circuit shorted to ground or open circuit	Diagnosis related to accessories or light relay, blown fuse, damaged or disconnected relay, damaged circuit wires, damaged connectors or damaged ECM output pins.	Check fuse. Disconnect Accessory relay and Lights relay and turn key switch (on w/lights). Measure voltage between harness connector PF1-10E and ground (expected value: 11 to 13 volts). Measure voltage between harness connector PF1-6D and ground (expected value: 11 to 13 volts). Measure resistance from harness connector: ECM-K2 to PF1-12D (expected value: < 2 ohms). Measure resistance from harness connector: ECM-K2 to PF1-7C (expected value: < 2 ohms). Measure resistance between terminals 85 and 86 on the 2 relays (expected value: 70 to 90 ohms).
P0687	ECM	Accessory relay circuit shorted to battery +	Diagnosis related to accessories or light relay, damaged relay, damaged circuit wires, damaged connector or damaged ECM output pins.	Check fuse. Disconnect Accessory relay and Lights relay and turn key switch (on w/lights). Measure voltage between harness connector PF1-10E and ground (expected value: 11 to 13 volts). Measure voltage between harness connector PF1-6D and ground (expected value: 11 to 13 volts). Measure resistance from harness connector: ECM-K2 to PF1-12D (expected value: < 2 ohms). Measure resistance from harness connector: ECM-K2 to PF1-7C (expected value: < 2 ohms). Measure resistance between terminals 85 and 86 on the 2 relays (expected value: 70 to 90 ohms).

FAULT CODE	MODULE	DESCRIPTION	CAUSE	ACTION
P0691	ECM	Radiator fan circuit shorted to ground or open circuit	Blown fuse, damaged or disconnected fan relay, damaged circuit wires, damaged connectors or damaged ECM output pins.	Check fuse. Disconnect radiator fan relay. Measure voltage between harness connector PF1-3D and ground (expected value: 11 to 13 volts). Measure resistance from harness connector: ECM-B3 to PF1-1E (expected value: < 2 ohms). Measure resistance between terminals 85 and 86 on relay (expected value: 70 to 90 ohms).
P0692	ECM	Radiator fan circuit shorted to battery +	Damaged fan relay, damaged circuit wires, damaged connector or damaged ECM output pins.	Check fuse. Disconnect radiator fan relay. Measure voltage between harness connector PF1-3D and ground (expected value: 11 to 13 volts). Measure resistance from harness connector: ECM-B3 to PF1-1E (expected value: < 2 ohms). Measure resistance between terminals 85 and 86 on relay (expected value: 70 to 90 ohms).
P0705	ECM	Sub-transmission Internal switch Combinations error	Wrong switch combinations. Damaged switch, damaged circuit wires, damaged connectors or damaged ECM pins.	Check for disconnected transmission connector. Check for misplaced terminal on gearbox. Measure resistance form each switch to ground in all position (PR and N) (expected value if switch activated: < 2 ohms). Measure resistance from harness connector: ECM-J3 to PRN-1 (expected value: < 2 ohms). Measure resistance from harness connector: ECM-H2 to PRN-2 (expected value: < 2 ohms). Measure resistance from harness connector: ECM-H4 to PRN-3 (expected value: < 2 ohms).
P0706	ECM	GBPS invalid gear position	GBPS position not plausible.	Verify that gear position information change when you change the position of gear on vehicle. Disconnect GBPS. Measure voltage between harness connector GBPS-1 and GBPS-3 (expected value: 4.8 to 5.1 volts). Measure resistance from connector: ECM-D2 to GBPS-2 (expected value: < 2 ohms). Measure resistance from connector: ECM-C3 to GBPS-3 (expected value: < 2 ohms). Replace GBPS sensor.

FAULT CODE	MODULE	DESCRIPTION	CAUSE	ACTION
P0707	ECM	Gear position sensor shorted to ground, or open circuit		Verify that gear position information change when you change the position of gear on vehicle. Disconnect GBPS. Measure voltage between harness connector GBPS-1 and GBPS-3 (expected value: 4.8 to 5.1 volts). Measure resistance from connector: ECM-D2 to GBPS-2 (expected value: < 2 ohms). Measure resistance from connector: ECM-C3 to GBPS-3 (expected value: < 2 ohms). Replace GBPS sensor.
P0708	ECM	Gear position sensor circuit shorted to battery +		Verify that gear position information change when you change the position of gear on vehicle. Disconnect GBPS. Measure voltage between harness connector GBPS-1 and GBPS-3 (expected value: 4.8 to 5.1 volts). Measure resistance from connector: ECM-D2 to GBPS-2 (expected value: < 2 ohms). Measure resistance from connector: ECM-C3 to GBPS-3 (expected value: < 2 ohms). Replace GBPS sensor.
P1562	ECM	System voltage low (from Key switch)	Blown fuse FC, battery failure, voltage regulator failure, damaged circuit wires or connection, damaged magneto generator. An external battery charger may have been used.	Measure battery voltage with engine stopped (expected value: 11 to 13 volts). Measure battery voltage with engine running (expected value: 13 to 14.7 volts). Check connections on voltage regulator. Check ground and positive connections on battery. Check ground on vehicle frame.
P1563	ECM	System voltage high (from Key switch)	Damaged regulator. An external battery charger may have been used.	Measure battery voltage with engine stopped (expected value: 11 to 13 volts). Measure battery voltage with engine running (expected value: 13 to 14.7 volts). Check connections on voltage regulator. Check ground and positive connections on battery. Check ground on vehicle frame.
P1619	ECM	TPS adaptation failure	Wrong throttle body mechanical position during reset of closed TPS or no initialization after ECM replacement.	Check THROTTLE cable adjustment. Check idle stop for wear. Ensure throttle plate is against throttle stop. Perform THROTTLE POSITION SENSOR INITIALIZATION in BUDS with throttle completely OFF.
P1F01	DPS	Power output overload	Motor short circuit or power output failed.	Reset fault, If fault re-occur, replace DPS unit.

FAULT CODE	MODULE	DESCRIPTION	CAUSE	ACTION
P1F02	DPS	Power output overload (18V)	Motor short circuit or power output failed.	Measure battery voltage with engine stopped (expected value: 11 to 13 volts). Measure battery voltage with engine running (expected value: 13 to 14.7 volts). test charging system as per *SHOP MANUAL*.
P1F03	DPS	Electronic Circuit Overheat	Hi temperature detected by on board temperature sensor.	Fault may become active in extreme use situations. Reset fault and let DPS cool down. If fault reoccur in normal riding conditions, replace DPS unit.
P1F05	DPS	Motor current sensor range/performance	Motor input vs output current correlation check failed.	Check battery condition. Check battery and ground connections. Check all connections related to the DPS. Test charging system as per *SHOP MANUAL* procedures. Ensure the DPS is updated with the latest software.
P2300	ECM	Cylinder 1 Ignition output shorted to ground	Damaged ignition coil, damaged circuit wires, damaged connector or damaged ECM output pins.	Open the ECM Activation page in BUDS. Perform an ignition coil activation and check if ignition coil is reacting as expected. Measure resistance from harness connector: ECM-M2 to BA-3 (expected value: < 2 ohms). Measure voltage between harness connector BA-2 and ground (expected value: 11 to 13 volts). Refer to the *SHOP MANUAL* for detailed ignition coil testing procedure.
P2301	ECM	Cylinder 1 Ignition output short to V +	Damaged ignition coil, damaged circuit wires, damaged connector or damaged ECM output pins.	Open the ECM activation page in BUDS. Perform an ignition coil activation and check if ignition coil is reacting as expected. Measure resistance from harness connector: ECM-M2 to BA-3 (expected value: < 2 ohms). Measure voltage between harness connector BA-2 and ground (expected value: 11 to 13 volts). Refer to the *SHOP MANUAL* for detailed ignition coil testing procedure.
P2303	ECM	Cylinder 2 Ignition output shorted to ground	Damaged ignition coil, damaged circuit wires damaged connector or damaged ECM output pins.	Open the ECM activation page in BUDS. Perform an ignition coil activation and check if ignition coil is reacting as expected. Measure resistance from harness connector: ECM-M1 to BA-1 (expected value: < 2 ohms). Measure voltage between harness connector BA-2 and ground (expected value: 11 to 13 volts). Refer to the *SHOP MANUAL* for detailed ignition coil testing procedure.

FAULT CODE	MODULE	DESCRIPTION	CAUSE	ACTION
P2304	ECM	Cylinder 2 Ignition output short to V +	Damaged ignition coil, damaged circuit wires, damaged connector or damaged ECM output pins.	Open the ECM activation page in BUDS. Perform an ignition coil activation and check if ignition coil is reacting as expected. Measure resistance from harness connector: ECM-M1 to BA-1 (expected value: < 2 ohms). Measure voltage between harness connector BA-2 and ground (expected value: 11 to 13 volts). Refer to the *SHOP MANUAL* for detailed ignition coil testing procedure.
P2670	DPS	PHASE B_LOW	DPS motor supply. Damaged DPS.	Check DPS motor connections.
P2671	DPS	PHASE B_HIGH	DPS motor supply. Damaged DPS.	Check DPS motor connections.
P280A	ECM	Gear position sensor adaptation not plausible	GBPS learning position failure. Wrong transmission mechanical position during GBPS reset. No initialization after ECM replacement.	Using BUDS performed a GBPS initialization.
U0073	ECM	CAN bus OFF, no messages	Damaged circuit wires or damaged CLUSTER pins.	Disconnect MPI2 from DB connector. Measure resistance between DB-1 and DB-2 (expected value = 50 to 70 ohms). Measure resistance between DB-1 and ECM-B1 (expected value < 2 ohms). Measure resistance between DB-2 and ECM-C1 (expected value < 2 ohms).
U0073	DPS	CAN bus OFF, no messages	Damaged circuit wires or damaged DPS pins.	Disconnect MPI2 from DB connector. Measure resistance between DB-1 and DB-2 (expected value = 50 to 70 ohms). Measure resistance between DB-1 and DPS1-C (expected value < 2 ohms). Measure resistance between DB-2 and DPS1-D (expected value < 2 ohms).
U0073	SCM	CAN-Bus failure, CAN-Bus OFF		
U0100	DPS	Lost communication with ECM (lost of CAN ID's)	Damaged circuit wires, damaged ECM or damaged DPS/ECM pins.	Disconnect MPI2 from DB connector. Measure resistance between DB-1 and DB-2 (expected value = 50 to 70 ohms). Measure resistance between DB-1 and ECM B1 (expected value < 2 ohms). Measure resistance between DB-2 and ECM C1 (expected value < 2 ohms).
U0100	SCM	Lost communication with ECM (lost of CAN ID's)		

FAULT CODE	MODULE	DESCRIPTION	CAUSE	ACTION
U0155	ECM	Lost communication with cluster	Missing CLUSTER CAN ID. Module internal error. Damaged circuit wires or damaged module pins.	Measure voltage between harness connector CL-17 and ground (expected value = 11 to 13 volts). Disconnect MPI2 from DB connector. Measure resistance between DB-1 and DB-2 (expected value = 50 to 70 ohms). Measure resistance between DB-1 and ECM-B1 (expected value < 2 ohms). Measure resistance between DB-2 and ECM-C1 (expected value < 2 ohms). Measure resistance between DB-1 and CL-19 (expected value < 2 ohms). Measure resistance between DB-2 and CL-18 (expected value < 2 ohms).
U0155	ECM	Lost communication with cluster (lost of CAN ID's)	Missing CAN ID. Module internal error. Damaged circuit wires or damaged module pins.	Check for cluster fault or ECM fault. Measure voltage between harness connector CL-17 and ground (expected value = 11 to 13 volts). Disconnect MPI2 from DB connector. Measure resistance between DB-1 and DB-2 (expected value = 50 to 70 ohms). Measure resistance between DB-1 and ECMB-C1 (expected value < 2 ohms). Measure resistance between DB-2 and ECMB-C2 (expected value < 2 ohms). Measure resistance between DB-1 and CL-19 (expected value < 2 ohms). Measure resistance between DB-2 and CL-18 (expected value < 2 ohms).
U0155	DPS	Lost communication with cluster	Missing CAN ID. Module internal error. Damaged circuit wires or damaged module pins.	Measure voltage between harness connector CL-17 and ground (expected value = 11 to 13 volts). Disconnect MPI2 from DB connector. Measure resistance between DB-1 and DB-2 (expected value = 50 to 70 ohms). Measure resistance between DB-1 and CL-4 (expected value < 2 ohms). Measure resistance between DB-2 and CL-19 (expected value < 2 ohms).
U0155	SCM	Lost communication with cluster (lost of CAN ID's)		
U0167	ECM	Lost communication with Vehicle Immobilizer Control Module	The vehicle immobilizer is reporting an electrical fault on the communication line.	Check for dirty or oxidized key contact. Clean key contact if needed. Check for broke key contact. Ensure sensor connector is fully inserted. Measure resistance between ECMB-A1 and CC-C (expected value < 2 ohms). Measure resistance between ECMB-C2 and CC-E (expected value < 2 ohms).

FAULT CODE	MODULE	DESCRIPTION	CAUSE	ACTION
U0167	ECM	Lost communication with Vehicle Immobilizer Control Module	The vehicle immobilizer is reporting an electrical fault on the communication line.	Check for dirty or oxidized key contact. Clean key contact if needed. Check for broke key contact. Ensure sensor connector is fully inserted. Measure resistance between ECMB-A1 and CC-C (expected value < 2 ohms). Measure resistance between ECMB-C2 and CC-E (expected value < 2 ohms).
U0300	ECM	Invalid Security Exchange received	Incorrect ECM or CLUSTER. Incorrect software version.	Install the proper ECM or CLUSTER on vehicle. Update security coding using BUDS.
U0400	DPS	Variant Coding failure Software incompatibility	Faulty variant coding. Faulty programming.	Try updating the variant or Calibration.
U0400	SCM	Variant Coding failure Software incompatibility		
U0426	ECM	Invalid Data Received From Vehicle Immobilizer Control Module	The vehicle immobilizer could not read the number of the access key.	Check for dirty or oxidized key contact. Clean key contact if needed. Check for broke key contact. Ensure sensor connector is fully inserted. Measure resistance between ECMB-A1 and CC-C (expected value < 2 ohms). Measure resistance between ECMB-C2 and CC-E (expected value < 2 ohms).
U3001	DPS	Module improper shutdown	Lost of power on DPS. Damaged circuit wires or damaged DPS pins.	Check fuse. Ensure DPS connector is fully inserted. Check for Damaged circuit wires or damaged DPS pins.
U3001	SCM	Module improper shutdown		

ELECTRONIC FUEL INJECTION (EFI)

SERVICE TOOLS

Description	Part Number	Page
DIGITAL INDUCTION TACHOMETER	529 014 500	296
ECM ADAPTER TOOL	529 036 166	299, 304, 311, 313, 315–317
FLUKE 115 MULTIMETER	529 035 868	299–300, 304–305, 311, 315–317
OETIKER PLIERS	295 000 070	306

SERVICE PRODUCTS

Description	Part Number	Page
LOCTITE 243 (BLUE)	293 800 060	312, 317
XPS SYNTHETIC GREASE	293 550 010	314

GENERAL

⚠ WARNING

Fuel is flammable and explosive under certain conditions. Ensure work area is well ventilated. Do not smoke or allow open flames or sparks in the vicinity.

⚠ WARNING

Fuel lines remain under pressure at all times. Always proceed with care and use appropriate safety equipment when working on pressurized fuel system. Wear safety glasses. Wipe off any fuel spillage. Do not allow fuel to spill on hot engine parts and/or on electrical connectors.

⚠ WARNING

Replace any damaged, leaking or deteriorated fuel lines or connections. Always, pressurize the fuel system if any fuel related component was disconnected or removed. Proceed with care when removing/installing high pressure test equipment.

SYSTEM DESCRIPTION

The electronic fuel injection system (EFI) is comprised of various sensors used for detecting ongoing operating conditions of the engine and vehicle, and includes all the components that perform the required adjustments to the engine.

Electrical System

ECM (Electronic Control Module)

The ECM controls the electrical system and the engine management functions, by processing the information given by various sensors.

EFI Sensors

The ECM reads the inputs from the sensors which it compares to predetermined parameters stored in the ECM, makes computations, and activates the outputs accordingly (injectors, ignition coils etc.).

Signals from sensors are used by the ECM to determine the injection and ignition parameters (referenced to fuel maps) as required to maintain the optimum air-fuel ratio.

Air Intake System

Throttle Body

The throttle body is mounted on the intake manifold.

Air for combustion, drawn in by the engine, flows through the air intake system, then through the throttle body where it is regulated by a throttle plate.

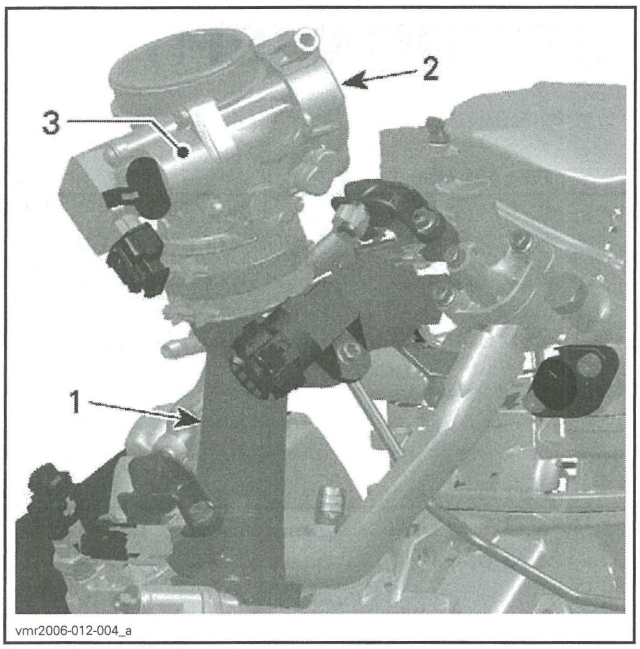

1. *Intake manifold*
2. *Throttle body*
3. *Idle air control valve (IACV)*

Fitted on the throttle body, a throttle plate regulates the amount of air that enters the engine.

A TPS is incorporated on the throttle body. It provides a signal to the ECM of the actual throttle plate position.

An idle air control valve (IACV) is also incorporated on the throttle body, It allows the ECM to control the idle speed while the throttle plate is closed.

Fuel System

Fuel Rail

Two fuel rails, one for each injector, are mounted on the intake manifold. The fuel rails, which are used to secure the injectors to the manifold, also provide to the injectors the fuel pressure that they receive from the fuel pump.

The fuel pressure applied to the fuel rails is regulated by the fuel pressure regulator located in the fuel pump module.

Fuel Injectors

The fuel injectors are used to inject fuel into the intake ports of the cylinder head. One injector is used per cylinder.

Fuel Pump

An electric fuel pump with an integrated pressure regulator and fuel system filters is used. For more details on the fuel pump unit, refer to *FUEL TANK AND FUEL PUMP* subsection.

ADJUSTMENT

IDLE SPEED

Idle speed is not adjustable. The ECM controls the idle speed of the engine primarily through control of the throttle plate position.

NOTICE **Never attempt to adjust the sealed idle stop screw. It is calibrated at the factory. If the screw adjustment is changed, the throttle body must be replaced.**

The vehicle multifunction gauge can provide an accurate digital readout of the engine's idle speed.

If desired, the engine RPM can be verified using a DIGITAL INDUCTION TACHOMETER (P/N 529 014 500).

Install the tachometer wire on a spark plug cable.



VERIFYING ENGINE RPM USING A DIGITAL INDUCTION TACHOMETER

The engine RPM may also be verified using the applicable B.U.D.S. software version, refer to *COMMUNICATION TOOLS AND B.U.D.S.* subsection.

In B.U.D.S., click the following:
- **Read Data** button
- **Monitoring** tab
- **ECM** tab.

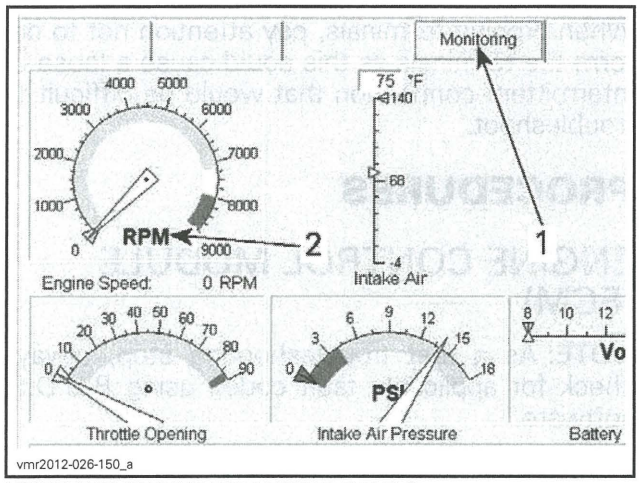

VERIFYING ENGINE RPM USING B.U.D.S.
1. **Monitoring** *tab*
2. *Engine RPM indication*

NOTE: The multifunction gauge and B.U.D.S. use the same signal to provide the engine RPM indication.

CLOSED THROTTLE AND IDLE ACTUATOR RESET

NOTE: This operation performs a reset of the values in the ECM.

This reset is very important. The setting of the TPS will determine the basic parameters for all fuel mapping and several ECM calculations and the setting of the idle air control valve will determine the basic parameters for the idle speed control of the engine.

Closed throttle and idle actuator reset must be done if:

- TPS is loosened, removed or replaced
- Throttle body is replaced
- Idle air control valve is replaced
- ECM is replaced.

NOTICE An improperly set TPS or IACV may lead to poor engine performance and emission compliance could possibly be affected. In addition, improper IACV reset may lead to poor engine starting, improper idle (too low or too high) and engine stop on deceleration.

Remove throttle body cap and ensure the throttle cam of throttle body rests against set screw without any tension in the cable.

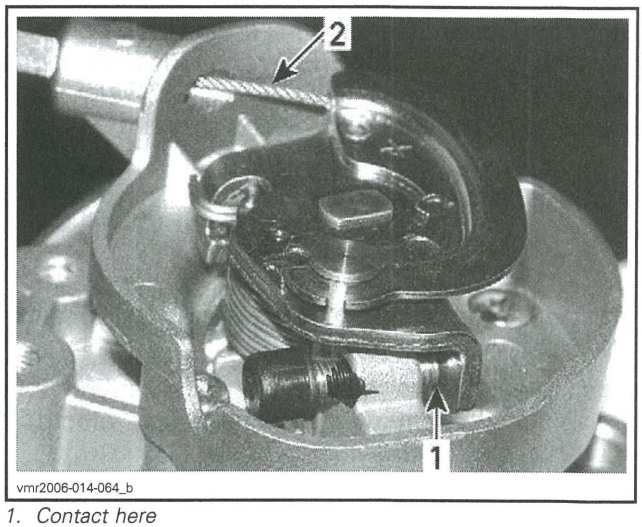

1. *Contact here*
2. *Free-play here*

Open throttle approximately one quarter then quickly release. Repeat 2 - 3 times to settle throttle plate. If stopper does not rest against its stop lever, perform throttle cable adjustment. Refer to *THROTTLE CABLE* in this subsection.

To reset IACV and TPS, perform the following:

1. Connect the vehicle to the latest applicable B.U.D.S. version, refer to *COMMUNICATION TOOLS AND B.U.D.S.* subsection.
2. In B.U.D.S., click the following:
   - **Read Data** button
   - **Setting** tab
   - **ECM** tab

Click on the Reset button in the **Closed Throttle and Idle Actuator** area.

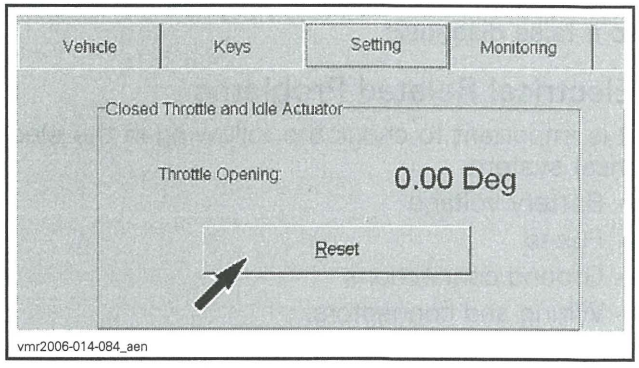

NOTE: No message will be displayed if operation is successful. If operation is wrong, an error message will be displayed.

NOTE: If TPS is not within the allowed range while resetting the Closed Throttle and Idle Actuator, the ECM will generate a fault code and will not accept the setting. Repeat the reset procedure.

Start engine and make sure it operates normally through its full engine RPM range. If fault codes appear, refer to *DIAGNOSTIC SYSTEM AND FAULT CODES* subsection for more information.

TROUBLESHOOTING

DIAGNOSTIC TIPS

Engine problems are not necessarily related to the fuel injection system.

It is important to ensure that the engine and propulsion system, fuel delivery and electrical systems are functioning normally.

For diagnostics purposes, use B.U.D.S. software. See *COMMUNICATION TOOLS AND B.U.D.S.* subsection.

After a problem has been solved, be sure to clear the fault(s) in the ECM using the B.U.D.S. software.

⚠ WARNING

Electrical actuators and electronic modules may be powered up as soon as the ignition switch is set to ON and emergency engine stop switch is set to RUN. Always disconnect the battery prior to disconnecting any electrical or electronic parts.

Never use a battery charger to temporarily substitute the battery as it may cause the ECM to function erratically, or not at all.

Check related-circuit fuse solidity and condition with an ohmmeter. A visual inspection could lead to a false diagnosis.

Electrical Related Problems

It is important to check the following in the electrical system:
- Battery voltage
- Fuses
- Ground connections
- Wiring and connectors.

Ensure that all electronic components are genuine OEM. Any modification to the wiring harness may lead to poor system operation or generate fault codes.

Electrical Connections

Pay particular attention to ensure that terminals and pins are not out of their connectors, corroded, or out of shape.

When probing terminals, pay attention not to deform the terminals as this could cause a loose or intermittent connection that would be difficult to troubleshoot.

PROCEDURES

ENGINE CONTROL MODULE (ECM)

NOTE: As a first troubleshooting step, always check for applicable fault codes using B.U.D.S. software.

Quick Test to Validate ECM Operation

Turn ignition key to ON.

Set emergency engine stop switch to RUN.

NOTE: This wakes up the ECM, which then turns on the following. If the following do not turn on, check ECM fuse (PF1 (F6)).

QUICK INDICATION THAT ECM IS FUNCTIONING (assuming the observed component is in good working order)
Multifunction gauge turns ON.
Fuel pump turns on for approx. 5 seconds.
Rear lights turn on.
Headlamps turn on (ignition key on with lights position).

ECM Access

Refer to *BODY* and remove the LH panel.

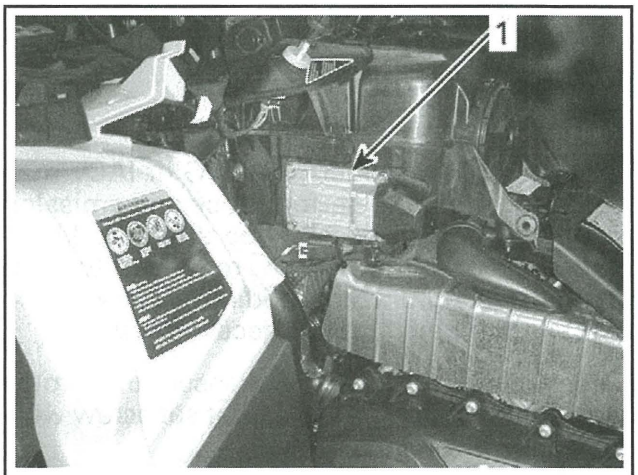

LH PANEL REMOVED
1. ECM location

ECM Connector

There is one connector connected to the ECM. It links:

- Engine harness
- Vehicle system control harness.

NOTE: For connector information, cleaning and probing, refer to *WIRING HARNESS AND CONNECTORS* subsection.

ECM Adapter Tool

To probe ECM connector terminals, use the ECM ADAPTER TOOL (P/N 529 036 166).

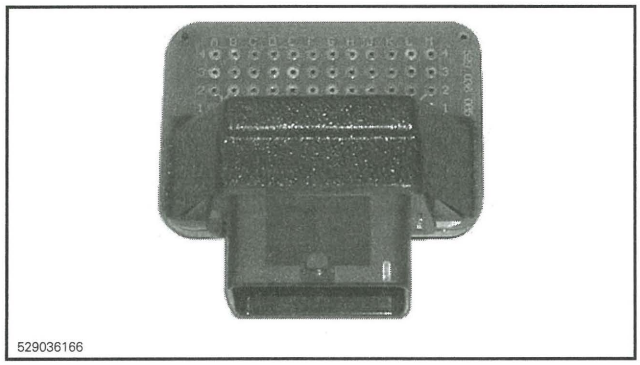

NOTE: This tool will prevent deforming or enlarging terminals which would lead to bad ECM terminal contact creating intermittent or permanent problems.

ECM Power Supply Test

1. Disconnect ECM connector.
2. Install ECM connector on the ECM ADAPTER TOOL (P/N 529 036 166).
3. Install a jumper wire between K1 and M4 on the ECM adapter tool.
4. Turn the ignition switch to ON.
5. Set emergency engine stop switch to RUN.
6. Use the FLUKE 115 MULTIMETER (P/N 529 035 868) and select Vdc.
7. Check for voltage as follows.

ECM ADAPTER	BATTERY	VOLTAGE
L1	Negative post	Battery voltage

If voltage is not measured, check the following:

- ECM fuse
- Main relay
- Wiring and connections, refer to the *WIRING DIAGRAM*.

Continuity Test of ECM Ground Circuits

1. Disconnect ECM connector.
2. Install the ECM ADAPTER TOOL (P/N 529 036 166) on ECM connector.
3. Use the FLUKE 115 MULTIMETER (P/N 529 035 868) and select Ω.
4. Probe adapter terminals as per following table.

ECM ADAPTER	BATTERY POST	RESISTANCE
Pins G1, M3 and M4	Ground	Close to 0 Ω (continuity)

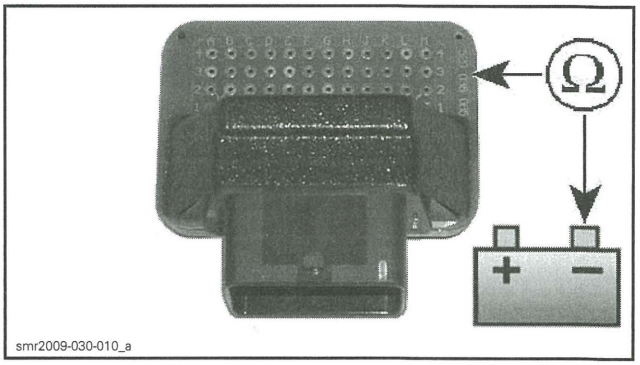

If any measurement is out of specification, refer to *POWER DISTRIBUTION* and check all grounds.

CAN Resistor Test

Remove the DPS1 connector (4-pin connector) from DPS module (if so equipped). Refer to *STEERING SYSTEM* subsection.

1. Remove seat to access the diagnostic link connector (DB).
2. Remove diagnostic link connector from its holder.

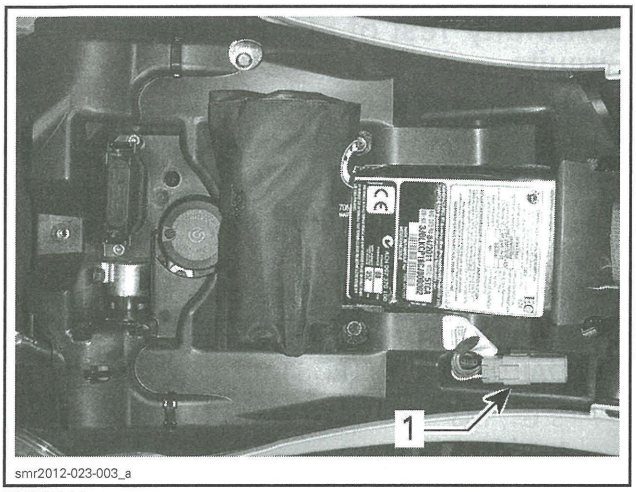

TYPICAL
1. Diagnostic link connector (DB)

3. Set a FLUKE 115 MULTIMETER (P/N 529 035 868) to Ω setting.



4. Measure the resistance of the CAN resistors as per following table.

CAN RESISTOR TEST	
DIAGNOSTIC LINK CONNECTOR	RESISTANCE
Pins 1 and 2	Approximately 60 Ω

TEST RESULT	
READING	RESULT
Approximately 60 Ω	ECM and CLUSTER CAN wires and resistors good
Approximately 120 Ω	ECM CAN resistor open, or CLUSTER CAN resistor open, or CAN wire to CLUSTER or ECM open
Infinite (open circuit)	CAN wire to DB connector open circuit

If 120 ohms is read, isolate the CLUSTER from CAN by disconnecting it and measuring again at the diagnostic link connector.

If 120 ohms is still read, the ECM CAN resistor and wires are good. Check for continuity of the CLUSTER CAN wires, refer to *WIRING DIAGRAM*.

If an open circuit is read, the ECM CAN resistor (or wire) is open. Check for continuity of the ECM CAN wires, refer to *WIRING DIAGRAM* to determine if the wires or the resistor is at fault.

If the CAN resistor of a module is at fault, replace that module.

If a module cannot communicate and the CAN resistor and wires test good, try a new module.

5. Reconnect DPS1 to DPS module,

ECM Removal

NOTE: If a new ECM is to be installed, first read the procedures in *ECM REPLACEMENT* in this subsection.

1. Disconnect battery cables.

NOTICE Always disconnect the BLACK negative (–) battery cable first, then disconnect RED positive (+) cable.

2. Disconnect ECM connector.
3. Unscrew all retaining screws and pull out ECM.

ECM Installation

Reverse removal procedure however, pay attention to the following.

1. Reconnect ECM connector.
2. Reconnect battery cables.

⚠ WARNING

Always reconnect the RED positive (+) battery cable first, then reconnect BLACK negative (–) cable.

3. If a new ECM is installed, refer to *ECM REPLACEMENT* in this subsection.

ECM Replacement

Prior to replacing an ECM, ensure that all the recommendations in the general introduction of this section have been followed.

NOTE: Proceed with the *CLOSED THROTTLE AND IDLE ACTUATOR RESET* as it may resolve the problem.

If the ECM is replaced, data must be entered into the new ECM.

ECM Manual Data Entry

There are 2 possible methods to collect the required information. The 1st being the easiest:

1. Use B.U.D.S. to obtain the data from a saved **.mpem** file on your PC computer.
2. Collect the information from the vehicle and BOSSWeb.

1st Collecting Method: Obtaining the Data from a Saved .mpem File

1. Use the B.U.D.S.

NOTE: It is not necessary to perform any connection. The PC computer can be used alone.

2. In B.U.D.S., click on the **Open** button.

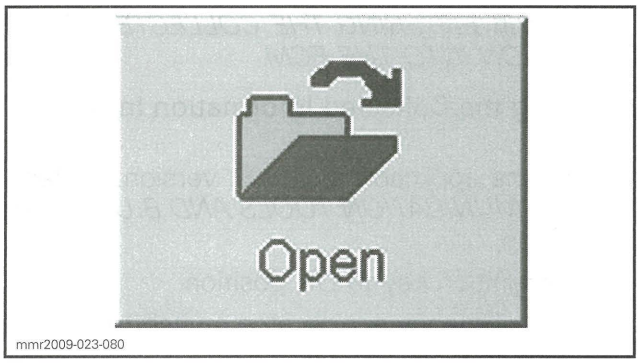

mmr2009-023-080

3. Click once on the **Folder Up** button in the Open box.

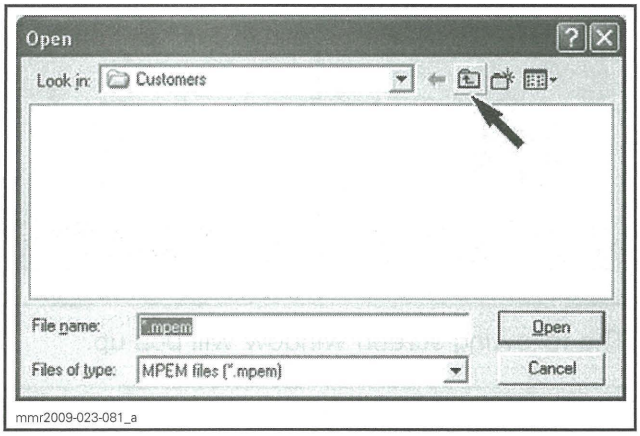

mmr2009-023-081_a

Double click on the **AutoSave** folder.

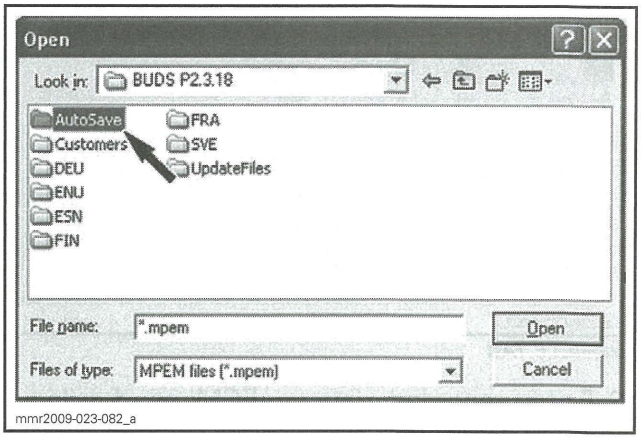

mmr2009-023-082_a

NOTE: You may have to go to another AutoSave folder from a previous version of B.U.D.S.

4. Choose the latest file saved for this specific vehicle.

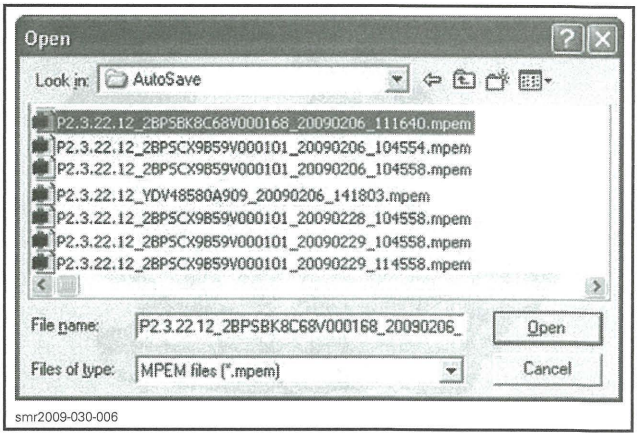

smr2009-030-006

IMPORTANT: Be sure to use the file that specifically matches the vehicle you are servicing.

NOTE: The file name structure is as follows:
B.U.D.S. version_VIN_date read (yyyymmdd)_hour read (hhmmss).mpem
Example: **P2.3.22.12_2BPSBK8C68V000168_20090206_111640.mpem** Hence: B.U.D.S. version: P2.3.22.12 VIN: 2BPSBK8C68V000168 Date: 2009 02 06 Hour: 11h 16m 40s

5. Select the **Vehicle** tab and record (write down) the following information.
   1. Vehicle serial number
   2. Engine serial number (without the leading "M")
   3. Vehicle model number
   4. Customer name.

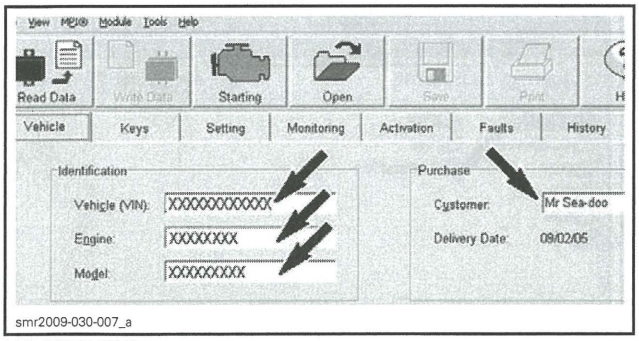

VEHICLE TAB

6. Enter recorded data in ECM as detailed in *ENTERING THE COLLECTED INFORMATION INTO THE ECM.*

2nd Collecting Method: Collect the Information from the Vehicle and BOSSWeb

1. Record engine serial number.

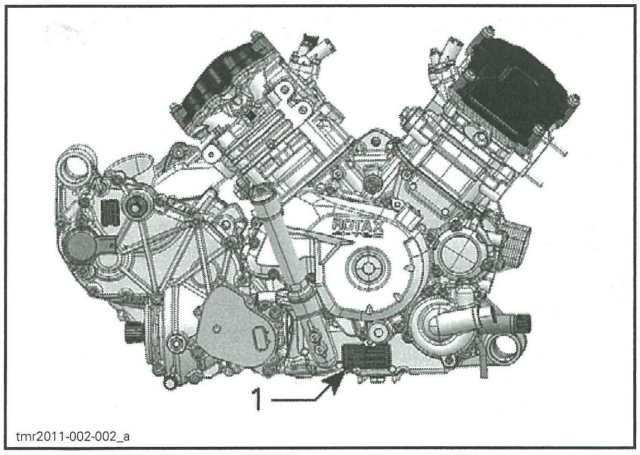

TYPICAL - RH SIDE OF ENGINE
1. Engine serial number

2. Record the following numbers using BOSSWeb. Look in **Service** menu and choose Unit history.
   1. Vehicle serial number
   2. Vehicle model number
   3. Customer name.

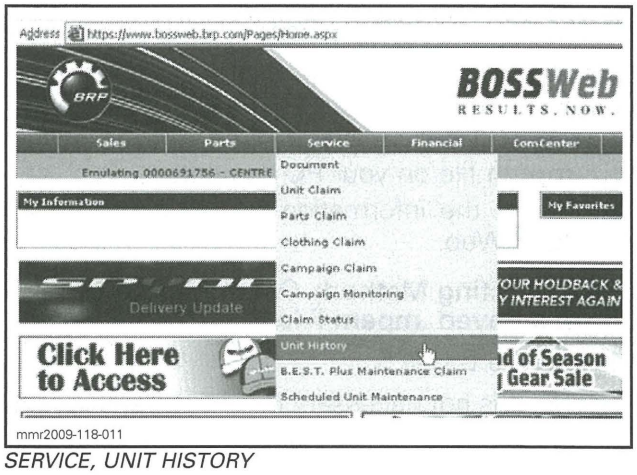

SERVICE, UNIT HISTORY

3. Enter the recorded data in the new ECM as detailed in *ENTERING THE COLLECTED INFORMATION INTO THE ECM.*

Entering the Collected Information Into the ECM

1. Use the applicable B.U.D.S. version. Refer to *COMMUNICATION TOOLS AND B.U.D.S.* subsection.
2. Turn ignition key to ON position.
3. Set emergency engine stop switch to RUN.
4. In B.U.D.S., click the **Read Data** button to read the new ECM.

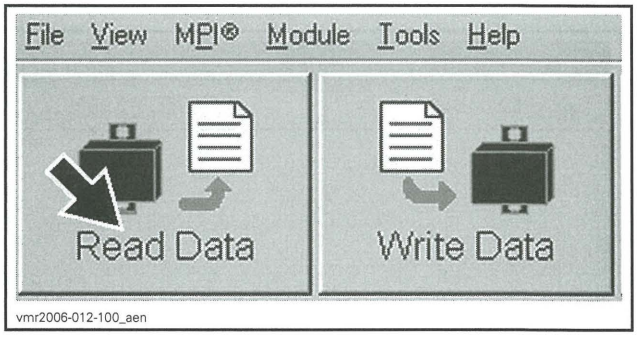

The following screen window will pop up.

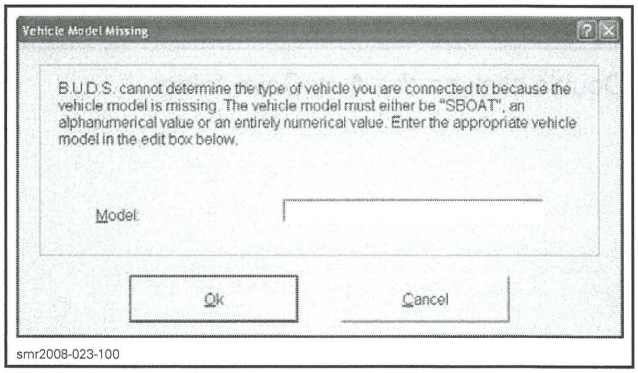

5. Enter the vehicle model number.

NOTICE Enter only the appropriate product model number as obtained when gathering the information.

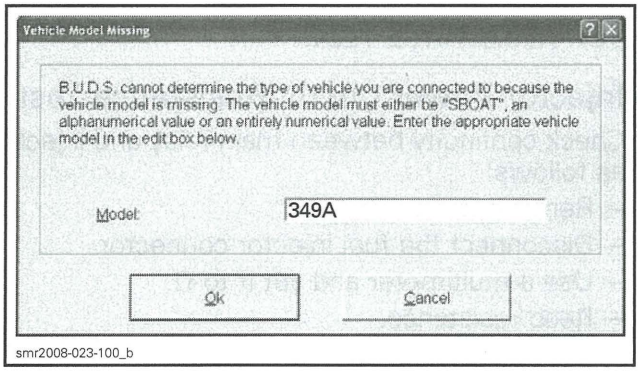

6. Select the **Vehicle** tab and enter the information you recorded previously.
   1. Vehicle serial number
   2. Engine number (do not enter the "M" at the beginning of the engine number)
   3. Customer name.

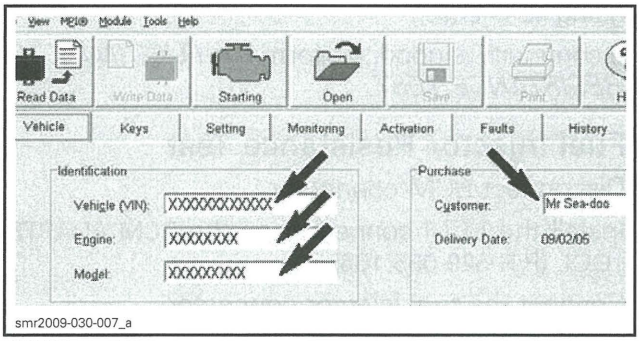

VEHICLE TAB

7. Click on the following tabs:
   - **History**
   - **Part Replacement**
   - **Add Part in History**.
8. Enter the **old** ECM serial number in the Add Part In History window.

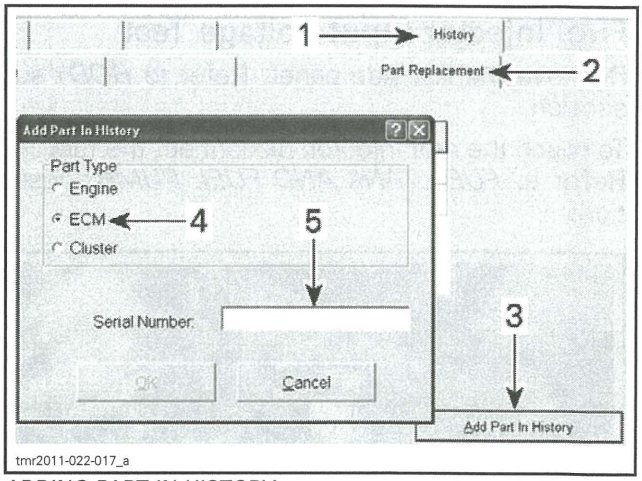

ADDING PART IN HISTORY
1. **History** *tab*
2. **Part Replacement** *tab*
3. **Add part in history** *button*
4. **ECM** *selection*
5. *Add ECM serial number here*

NOTE: The ECM serial number can be found on the ECM sticker that also identifies the part number.

9. Click on the **OK** button.
10. Click on the **Write Data** button.

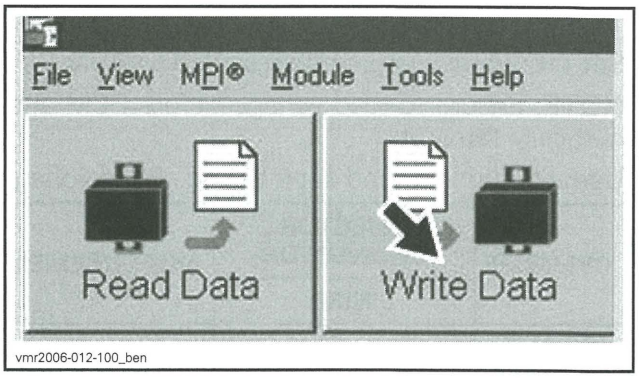

11. Perform the **Closed Throttle and Idle Actuator Reset**. Refer to *CLOSED THROTTLE AND IDLE ACTUATOR RESET* in this subsection.
12. Perform the **GBPS Reset** (1000 engine only). Refer to *GEARBOX AND 4X4 COUPLING UNIT (1000)* subsection.
13. Program the vehicle ignition keys into the new ECM, refer to *DIGITAL ENCODED SECURITY SYSTEM (D.E.S.S.)* subsection.
14. Reinstall any remaining removed parts.

FUEL INJECTOR

Fuel Injector Leak Test

Carry out the *FUEL PUMP PRESSURE TEST* as detailed in the *FUEL TANK AND FUEL PUMP* subsection.

Fuel Injector Input Voltage Test

Remove the RH side panel. Refer to *BODY* subsection.

To reach the rear injector, disconnect the fuel line. Refer to *FUEL TANK AND FUEL PUMP* subsection.

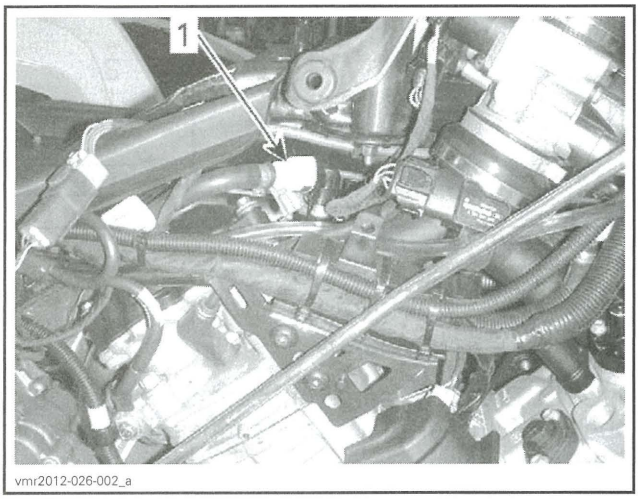

1. Disconnect

Disconnect the fuel injector electrical connector.

Turn on ignition switch.

Set emergency engine stop switch to RUN.

NOTE: Ensure to read voltage before ECM automatically turns off.

Use a multimeter and set it to Vdc. Read voltage.

CYLINDER	INJECTOR CONNECTOR		MEASUREMENT
	WIRE		
FRONT	VIOLET/ BLUE	Battery ground	Battery voltage
REAR			

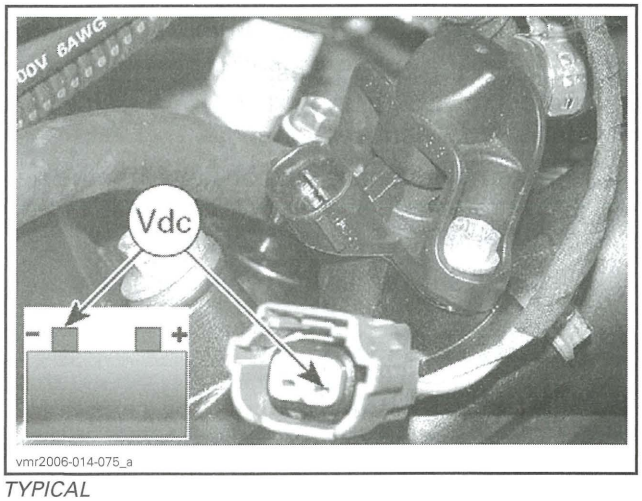

TYPICAL

If supply voltage is not good, check fuse and if good, perform an *INJECTOR POWER CIRCUIT RESISTANCE TEST*.

If supply voltage is good, perform a *FUEL INJECTOR RESISTANCE TEST*.

Injector Power Circuit Resistance Test

Check continuity between main relay and injector as follows:

- Remove main relay.
- Disconnect the fuel injector connector.
- Use a multimeter and set it to Ω.
- Read resistance.

CYLINDER	INJECTOR CIRCUIT		MEASUREMENT
	WIRE		
FRONT	VIOLET/ BLUE	2B	Close to 0 Ω
REAR			

If continuity is not good, repair or replace wiring going to injector.

If continuity is good, perform the *FUEL INJECTOR RESISTANCE TEST*.

Fuel Injector Resistance Test

Disconnect ECM connector.

Install the ECM connector on the ECM ADAPTER TOOL (P/N 529 036 166).

Connect the fuel injector connector.

Using a FLUKE 115 MULTIMETER (P/N 529 035 868), check resistance value between terminals as follows.

FUEL INJECTOR RESISTANCE TEST AT ECM ADAPTER			
INJECTOR	FUSE BOX TERMINAL	ECM ADAPTER	RESISTANCE @ 20°C (68°F)
FRONT	4B	K4	11.4 - 12.6 Ω
REAR		L4	

If resistance value obtained is incorrect, perform an *INJECTOR GROUND CIRCUIT RESISTANCE TEST*.

Injector Ground Circuit Resistance Test

Disconnect the fuel injector connector.

Disconnect ECM connector.

Install ECM connector on the ECM ADAPTER TOOL (P/N 529 036 166).

Using a FLUKE 115 MULTIMETER (P/N 529 035 868), check resistance value between terminals as follows.

CYLINDER	INJECTOR GROUND CIRCUIT		MEASUREMENT
	WIRE	ECM ADAPTER	
FRONT	BK/RD	K4	Close to 0 Ω
REAR	BR/BU	L4	

If continuity is not good, repair or replace wiring going to injector.

If continuity is good, replace the injector.

Fuel Injector Removal

To remove the injector, first remove the fuel rail. Refer to *FUEL RAIL*.

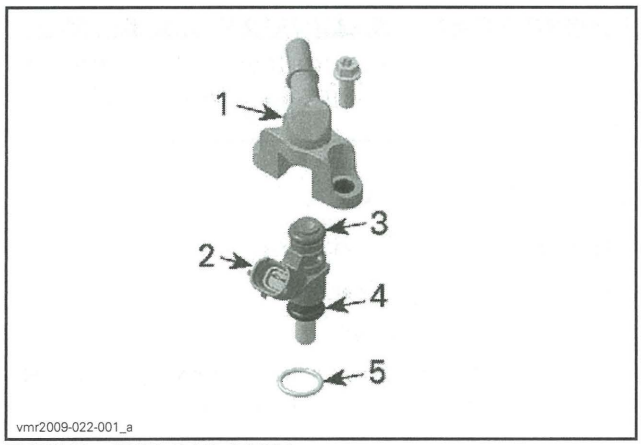

TYPICAL - FUEL RAIL ASS'Y
1. *Fuel rail*
2. *Fuel injector*
3. *Injector top O-ring*
4. *Injector bottom O-ring*
5. *Manifold O-ring*

Then, pull fuel injector out of the fuel rail.

Fuel Injector Installation

For the installation, reverse the removal procedure. Pay attention to the following details.

FUEL INJECTOR IDENTIFICATION	
ENGINE	INJECTOR COLOR CODE
800R	RED
1000	GREEN

Apply a thin film of engine oil to O-rings to ease insertion in rail.

Install fuel injector with your hand. Do not use any tool.

FUEL INJECTOR INSTALLATION		
O-RINGS	New	Lubricate with engine oil

Position the manifold O-ring on injector as in following illustration.

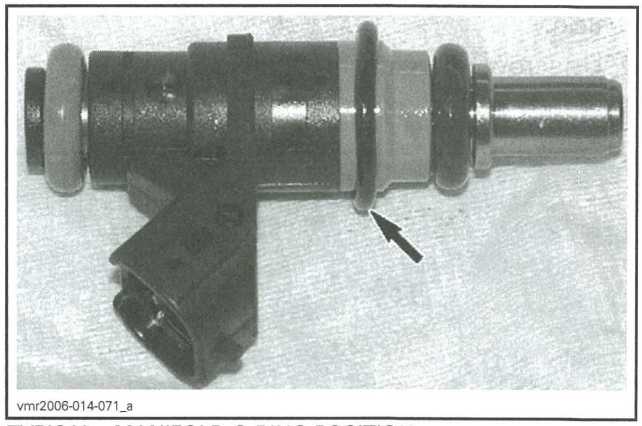

TYPICAL - MANIFOLD O-RING POSITION

Carefully insert injector in manifold paying attention to the manifold O-ring.

NOTICE **Gently push O-ring in evenly all around while inserting injector. O-ring must be completely inserted and not visible, before completing the insertion of the injector.**

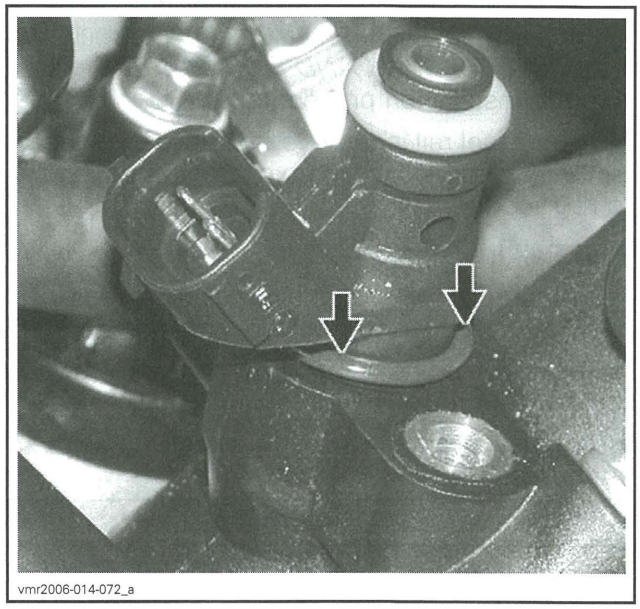

Firmly push injector until it bottoms out.

Reinstall fuel rail.

FUEL RAIL

Fuel Rail Replacement

Fuel Rail Removal

1. Disconnect fuel line to reach the rear injector. Refer to *FUEL TANK AND FUEL PUMP* subsection.
2. Unscrew rail retaining screws.
3. Gently pull rail off by hand.

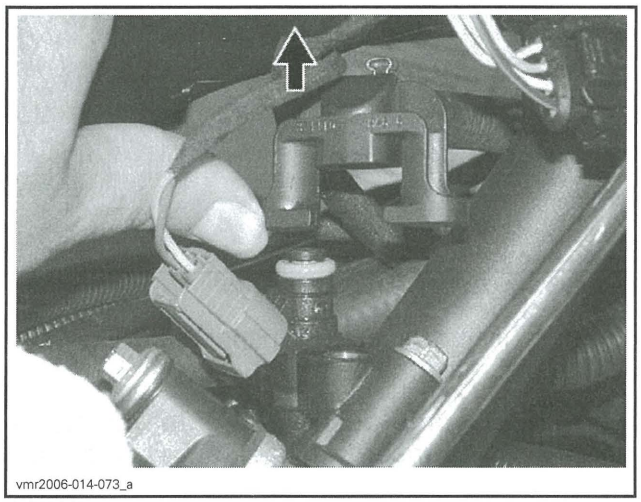

TYPICAL

To disconnect fuel rail from hose, cut clamp on fuel hose using OETIKER PLIERS (P/N 295 000 070). Refer to *FUEL TANK AND FUEL PUMP* for clamp removal/installation procedures.

NOTE: If fuel rail is removed for access to fuel injector, it is not necessary to cut hose clamp. Only to replace fuel rail.

Fuel Rail Installation

For installation, reverse the removal process however, pay attention to the following.

Install new clamps using pliers as per removal (if fuel rail was replaced).

Install fuel rail and evenly tighten screws a little at a time each side.

FUEL RAIL INSTALLATION	
INJECTOR O-RINGS	RETAINING SCREW TORQUE
NEW (Lubricate with engine oil)	10 N•m ± 1 N•m (89 lbf•**in** ± 9 lbf•**in**)

After securing fuel hose quick fitting to injector, ensure fuel pump is enabled using B.U.D.S.

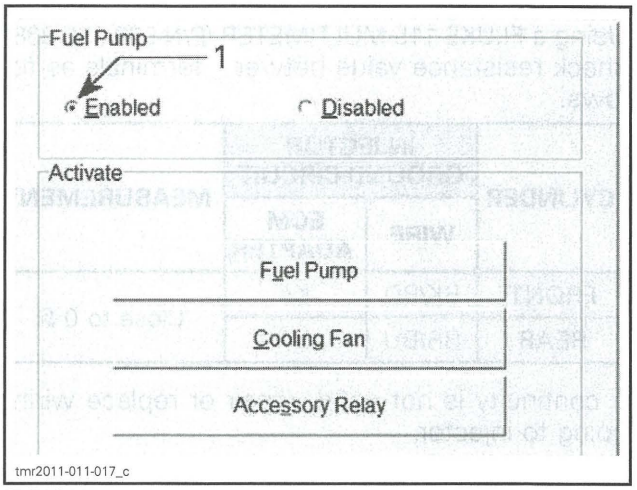

TYPICAL
1. Ensure fuel pump is enabled

NOTE: Activate fuel pump a few times to built fuel pressure.

⚠ WARNING

Perform a fuel pressure test and ensure that there is no leak. Refer to *FUEL TANK AND FUEL PUMP*.

THROTTLE CABLE

Throttle Cable Removal

Remove steering cover.

Remove LH side panel.

Disconnect throttle cable from throttle body. Refer to procedure in this subsection.

Disconnect throttle cable from throttle lever.

Remove throttle cable.

Throttle Cable Installation

Reverse removal procedure.

Proceed with *THROTTLE CABLE ADJUSTMENT* in this subsection.

Throttle Cable Adjustment

Mechanically adjust the throttle cable as follows.

Handlebar and throttle cable must be at their normal position. Throttle cable routing must have been performed before adjusting cable.

Activate throttle lever a few times. Make sure throttle cam of throttle body rests against set screw without any tension in the cable.

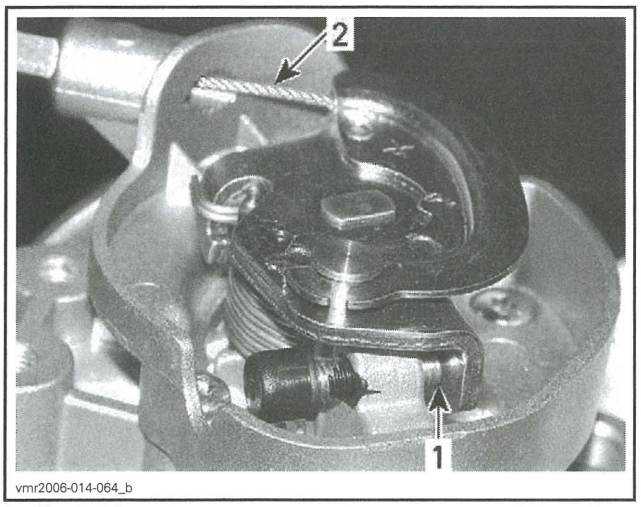

1. *Contact here*
2. *Free-play here*

⚠ CAUTION If there is no free-play at idle position, it may cause poor idling and startability problems. Improper cable adjustment will cause strain on cable and/or damage cable bracket or throttle lever at handlebar.

⚠ WARNING

Make sure idle speed stopper contacts throttle cam when throttle lever is fully released at handlebar.

If adjustment is needed, proceed with adjuster at handlebar. Adjust to have 2 mm (.078 in) free-play at the end of throttle lever. When done, slide back cable protector over adjuster.

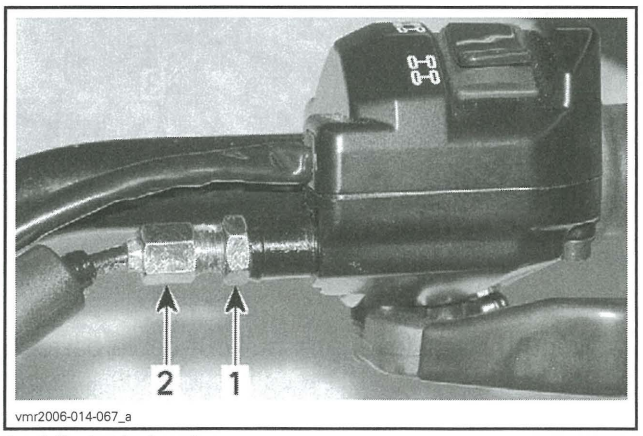

1. *Adjuster lock nut*
2. *Adjuster*

Turn handlebar side to side and ensure there is still free-play in each position.

To ensure there is no strain in the cable at wide open position:

– Fully depress throttle lever and hold.
– Loosen adjuster lock nut/adjuster until it just releases lever.
– Turn adjuster clockwise until it touches lever again.
– From there, tighten adjuster 1/2 turn (to remove strain in cable).
– Tighten lock nut.
– Release throttle lever.

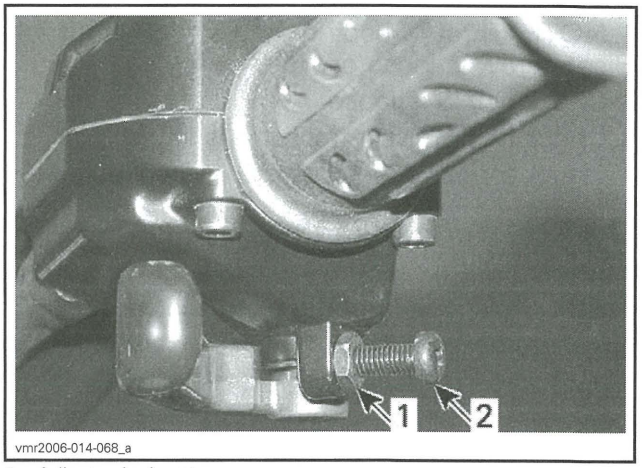

1. *Adjuster lock nut*
2. *Adjuster*

Reinstall throttle cable cover.

THROTTLE BODY

Throttle Body Description

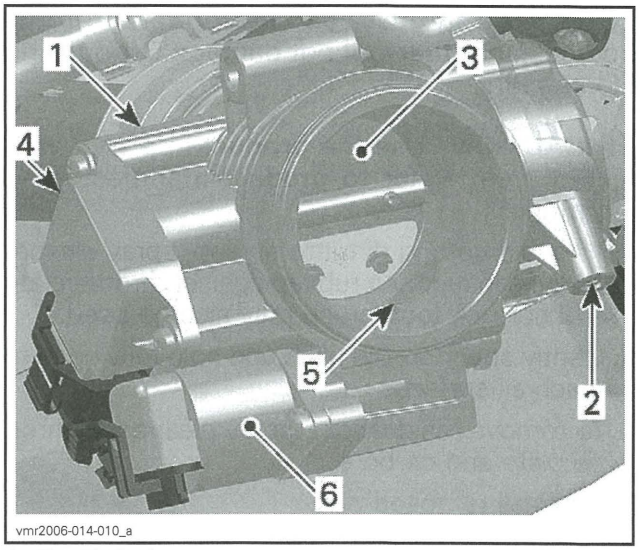

1. *Throttle body*
2. *Throttle cable attachment*
3. *Throttle plate*
4. *TPS*
5. *Idle air bypass channel*
6. *Idle air control valve*

Throttle Body Access

Remove the RH side panel. Refer to *BODY* subsection.

Throttle Body Inspection

Check that the throttle plate moves freely and smoothly when depressing throttle lever.

- Check if throttle body idle set screw is loose or worn.
- **NOTE:** Throttle body must be replaced if idle set screw is loose or worn.
- Check if TPS is loose.
- Check if idle air control valve is loose.
- Check for corroded or damaged connectors.

Throttle Body Cleaning

1. Check throttle body cleanliness using a flashlight. Fully open throttle plate and verify:
   - Throttle body bore
   - Throttle plate edge.

Look for:

- Dirt
- Oily surfaces
- Carbon and salt deposits on throttle plate and the surrounding bore.

2. Clean as necessary.
3. Use a throttle body cleaner such as GUNK INTAKE MEDIC or an equivalent.

NOTICE **Only use an appropriate throttle body cleaner that will not damage O-rings and EFI sensors.**

⚠ CAUTION **Use the product in a well ventilated area. Refer to product manufacturer's warnings.**

4. To avoid getting dirt into engine, spray cleaner on a clean rag then rub rag against throttle plate and bore. A toothbrush may also be used.
5. Gently open throttle plate and hold fully open to reach all surfaces.
6. To remove residual dirt, spray cleaner on throttle plate and on bore.
7. Reinstall removed parts.

Throttle Body Removal

1. Remove the RH side panel. Refer to *BODY* subsection.
2. Remove the air intake silencer retaining screws.

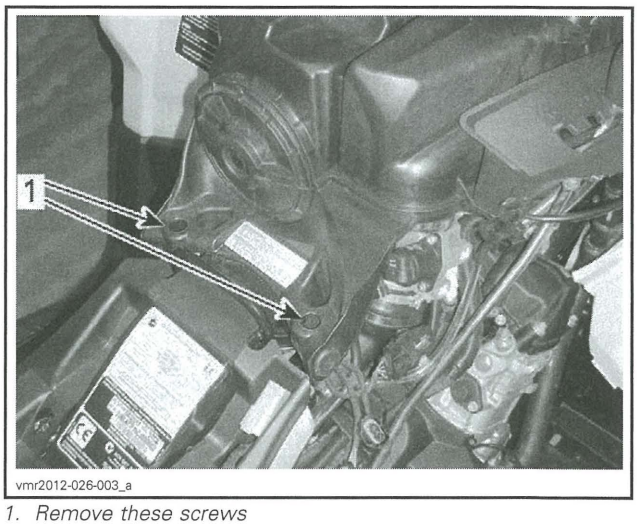

1. Remove these screws

3. Lift rear of air intake silencer as much as possible and block in this position.
4. Unplug connectors from TPS and IACV.
5. Loosen both throttle body clamps.
6. Rotate throttle body to gain access to throttle cable.
7. Remove throttle cable cover.

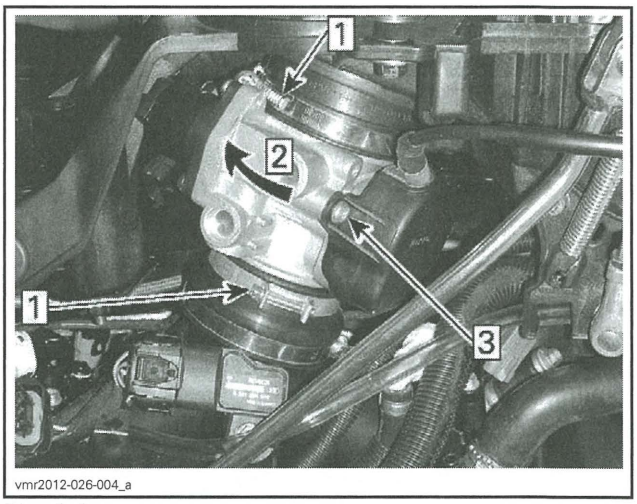

Step 1: Loosen
Step 2: Rotate
Step 3: Remove

8. Rotate throttle lever and pull out cable barrel.

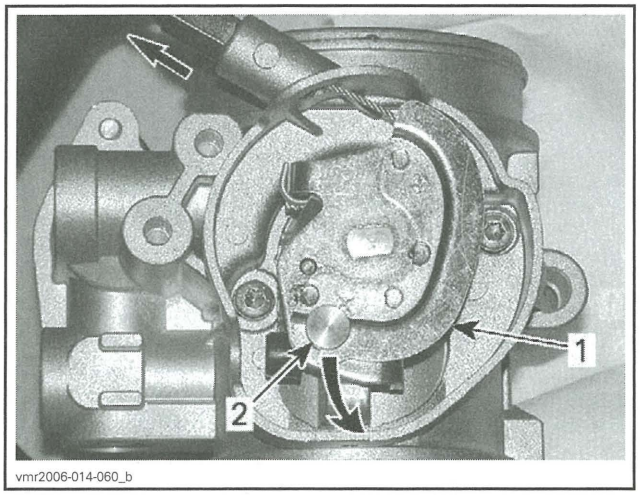

1. Throttle lever
2. Cable barrel

9. Remove barrel from cable.
10. Pull out throttle cable.
11. Pull out throttle body.

Throttle Body Installation

Installation of the throttle body is the reverse of the removal procedure. However, pay attention to the following.

Temporarily install throttle body into position.

Properly install cable barrel to throttle cable end.

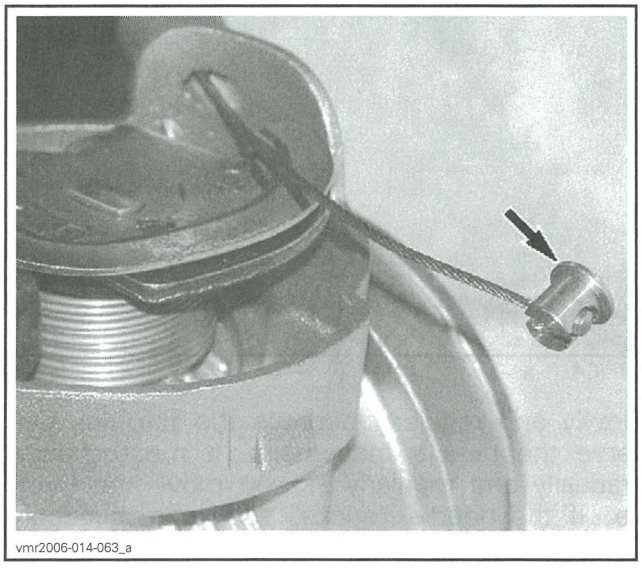

Hook cable to throttle lever.

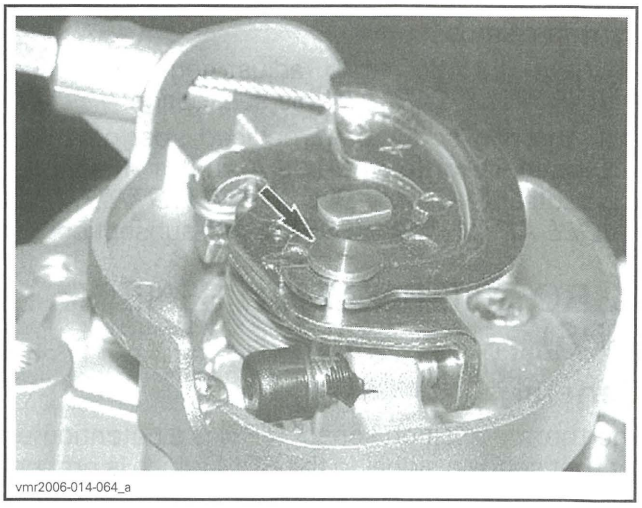

Rotate throttle body into position and ensure to index throttle body tab with boot notch.

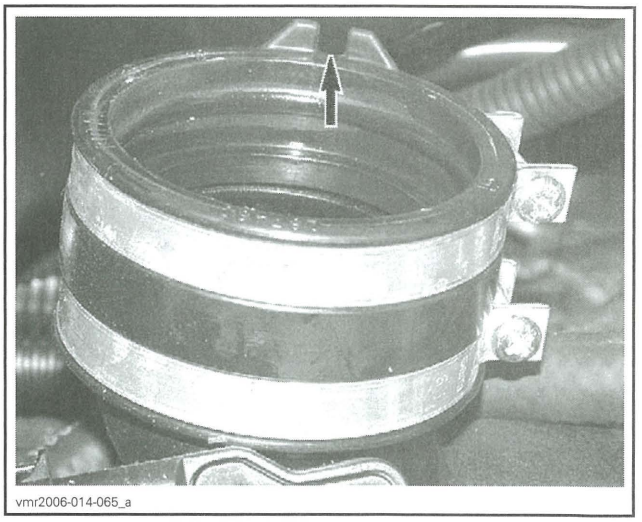

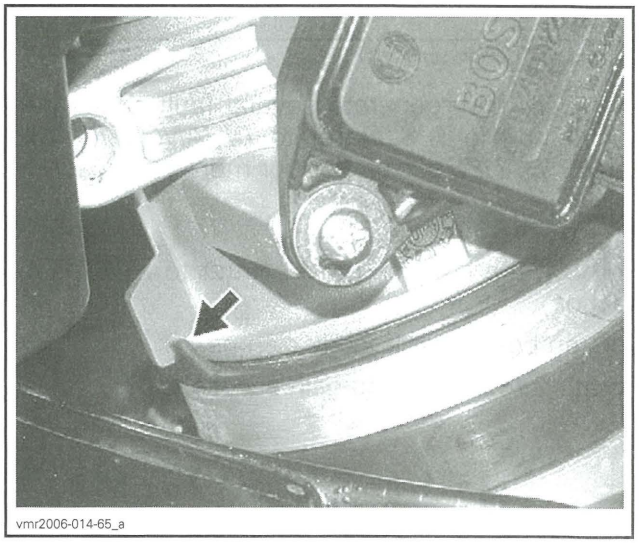

Tighten clamps.

- Check throttle cable adjustment. Refer to *THROTTLE CABLE* in this subsection.
- If throttle body was replaced, perform the **Closed Throttle And Idle Actuator Reset** procedure. Refer to *CLOSED THROTTLE AND IDLE ACTUATOR RESET* in this subsection.

THROTTLE POSITION SENSOR (TPS)

General

The throttle position sensor (TPS) is a potentiometer that sends a signal to the ECM which is proportional to the throttle plate angle.

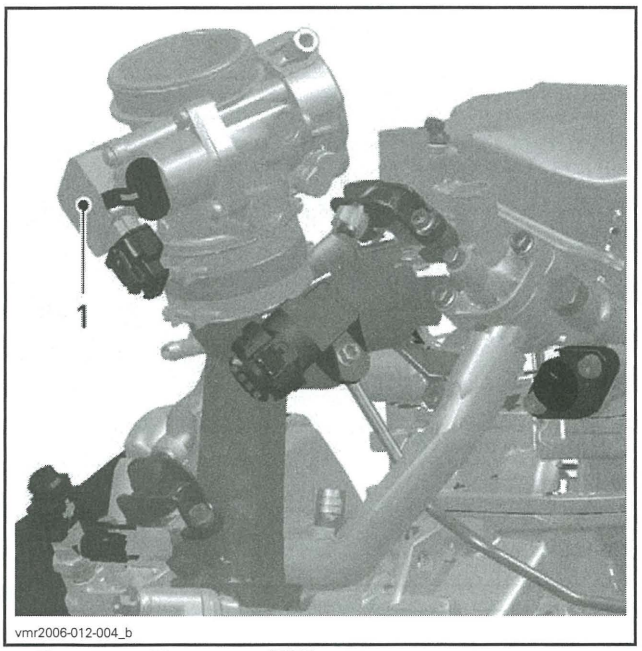

vmr2006-012-004_b

1. Throttle position sensor (TPS)

The ECM may generate several fault codes pertaining to the TPS. Refer to *DIGANOSTIC AND FAULT CODES* subsection for more information.

TPS Access

Remove the RH side panel. Refer to *BODY* subsection.

Loosen both throttle body clamps.

Rotate throttle body to gain access to TPS.

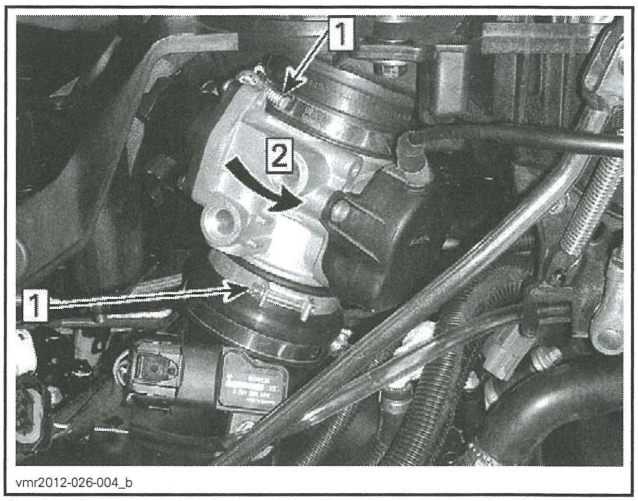

vmr2012-026-004_b

Step 1: Loosen
Step 2: Rotate

TPS Wear Test

IMPORTANT: Prior to testing the TPS, ensure that mechanical components of throttle body are checked.

While engine is not running, activate throttle and pay attention for smooth operation without physical stops of the cable.

Using the B.U.D.S. software, use the Throttle Opening display under Monitoring.

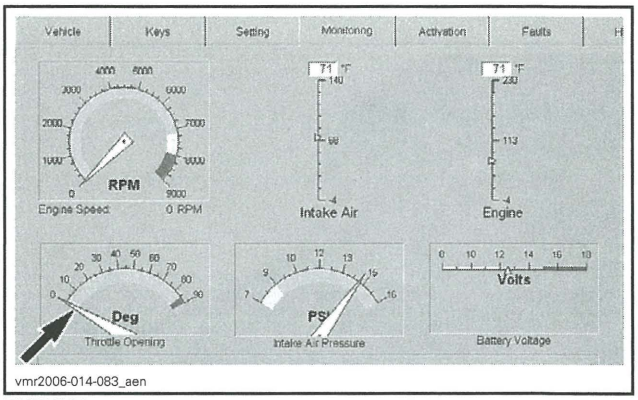

vmr2006-014-083_aen

TYPICAL

Slowly and regularly depress the throttle. Observe the needle movement. It must change gradually and regularly as you move the throttle. If the needle "sticks", bounces, suddenly drops or if any discrepancy between the throttle movement and the needle movement is noticed, it indicates that the TPS needs to be replaced or the computer used may be too slow to transfer data fast enough for real time display.

TPS Resistance Test

Ensure TPS is connected to wiring harness.

Disconnect the ECM connector.

Using the following tools, check resistance values.

REQUIRED TOOL
ECM ADAPTER TOOL (P/N 529 036 166)

REQUIRED TOOL
FLUKE 115 MULTIMETER (P/N 529 035 868)

ECM ADAPTER		THROTTLE IDLE POSITION	WIDE OPEN THROTTLE POSITION
PIN		RESISTANCE (Ω) @ 20°C (68°F)	
G3	G2	710 - 1300 1124	2600 - 2700 2260
G2	A1	1600 - 2400 1504	1600 - 2400 1504
G3	A1	2600 - 2700 2295	710 - 1300 1201

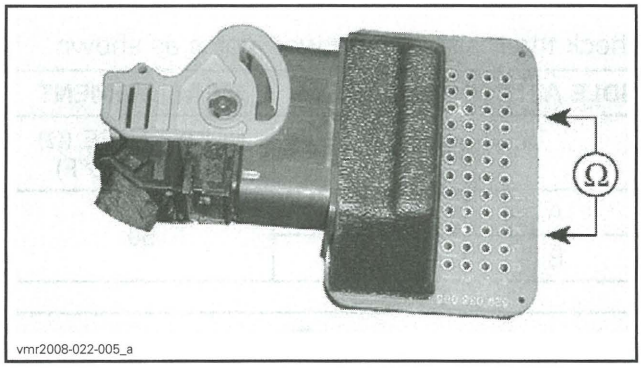

NOTE: The resistance value should change smoothly and proportionally to throttle movement. Otherwise, replace TPS.

If resistance values are correct, perform the *TPS INPUT VOLTAGE TEST* below.

If resistance values are incorrect, check wiring harness. If wiring is faulty, repair/replace. If wiring is good, replace TPS.

Reconnect ECM connector.

TPS Input Voltage Test

Disconnect connector from TPS.

Turn ignition key ON and.

Set emergency engine stop switch to RUN.

Check the voltage readings from harness connector as follows.

CONNECTION	VOLTAGE
Pin 1 with battery ground	5.0 V
Pin 2 with battery ground	0 V
Pin 3 with battery ground: idle	0.5 V
Pin 3 with battery ground: WOT	4.75 - 5 V

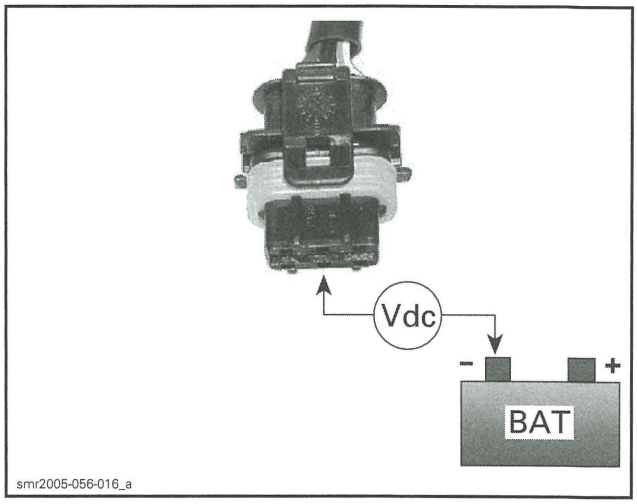

If voltage test is not good, check/repair wiring harness. If wiring tests good, refer to *ECM REPLACEMENT*.

If voltage test is good, everything is in order (assuming resistance test was performed).

TPS Replacement

Refer to *TPS ACCESS* in this subsection to gain access to TPS.

Unplug connector from TPS.

Loosen TPS retaining screws.

Remove TPS.

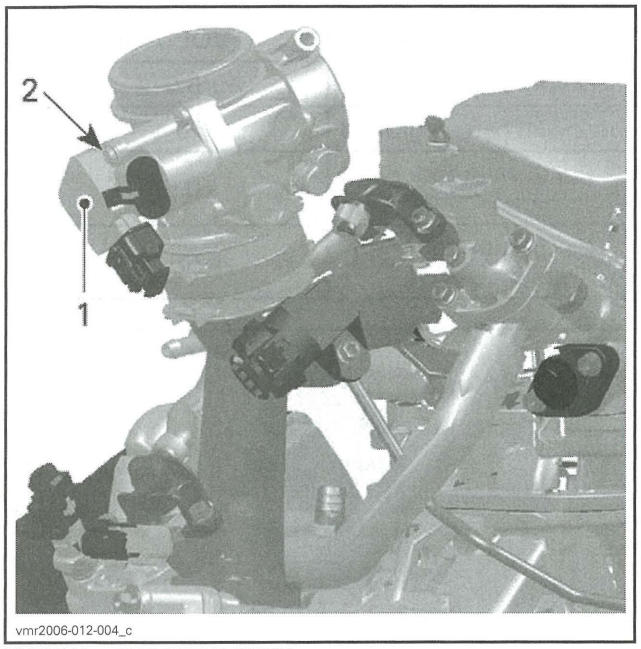

TYPICAL – THROTTLE BODY
1. TPS
2. Screws

Install the new TPS.

Apply LOCTITE 243 (BLUE) (P/N 293 800 060) on the TPS retaining screws, then torque to 3 N•m (27 lbf•**in**).

Perform the **Closed Throttle And Idle Actuator Reset** procedure. Refer to *CLOSED THROTTLE AND IDLE ACTUATOR RESET* in this subsection.

IDLE AIR CONTROL VALVE (IACV)

An idle air control valve with good resistance measurement can still be faulty. It is also possible that a mechanical failure occurs which is not detectable without measuring the air flow. Replacing the IACV may be necessary as a test.

IACV Access

Refer to *TPS ACCESS* in this subsection to gain access to IACV.

IACV Resistance Test

Disconnect IACV from the wiring harness.

Using a multimeter, check the resistance in both windings.

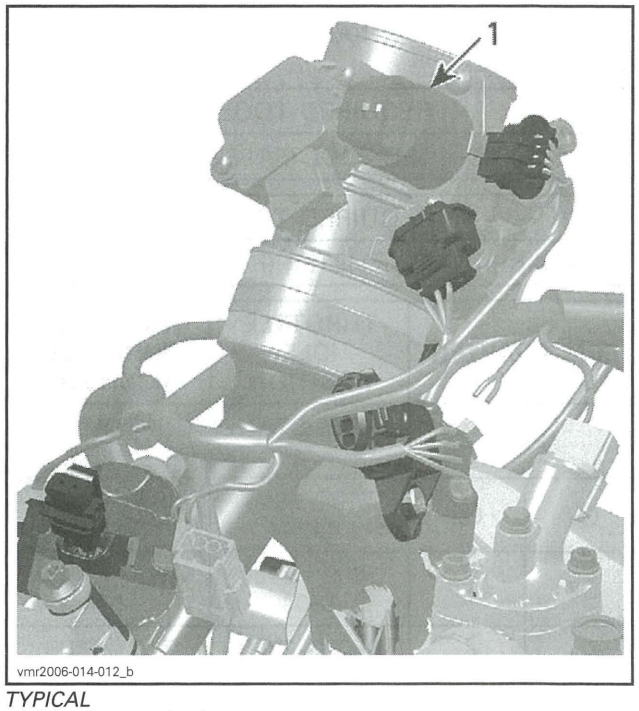

TYPICAL
1. Idle air control valve

Check the resistance between pins as shown.

IDLE AIR CONTROL VALVE		MEASUREMENT
PIN		RESISTANCE (Ω) @ 20°C (68°F)
A	D	50
B	C	

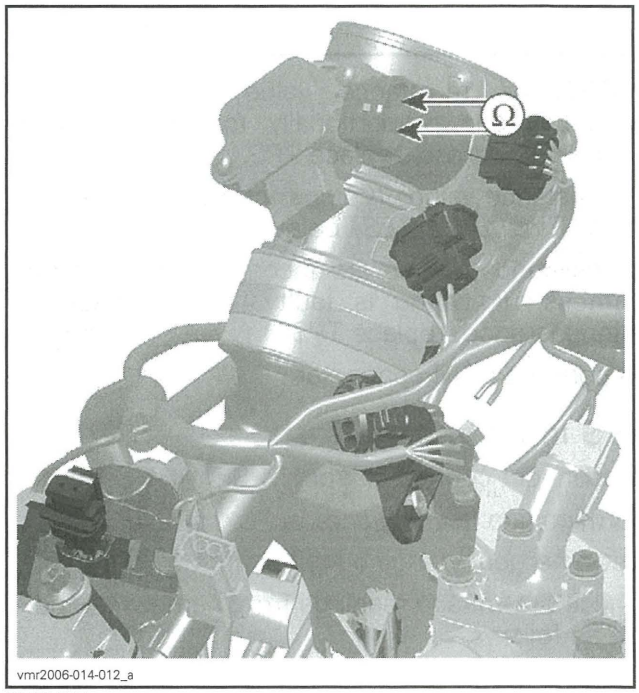

TYPICAL

If the resistance of any winding is not good, replace the idle air control valve.

If resistance test of valve windings is good, check continuity of circuits C4, D3, D4, E4. If not good, check/repair wiring/connectors.

IACV Visual Inspection

NOTE: Make sure the ignition key is turned off during the following procedure.

Remove Idle air control valve from throttle body.

Check the piston and bypass channel for dirt/deposits which can cause a sticking piston.

NOTICE **Always keep the ignition key turned OFF, while the idle air control valve is removed.**

NOTICE **Do not try to operate the piston of the idle air control valve when it is dismounted. Also do not move the piston by hand. The drive screw is very sensitive and may be destroyed.**

Using a part cleaner, clean idle bypass in throttle body from contamination then use an compressed air to dry it.

⚠ WARNING

Always wear eye protector. Chemicals can cause a rash break out and injure your eyes.

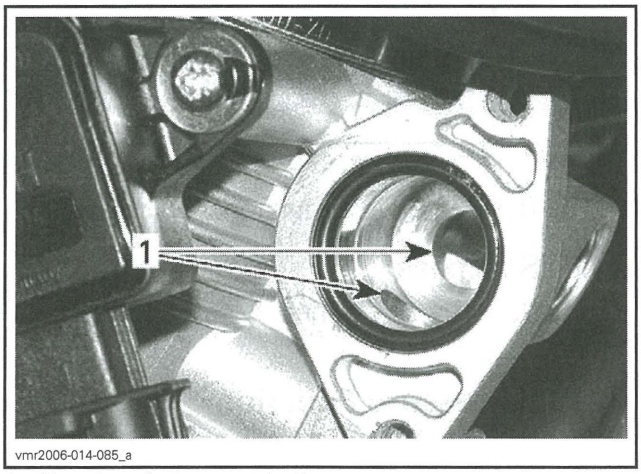

1. Clean bore from contamination

Clean all remaining parts and install the idle air control valve on the throttle body.

Proceed with the **Closed Throttle and Idle Actuator Reset**. See procedure in *CLOSED THROTTLE AN D IDLE ACTUATOR RESET* in this subsection.

CRANKSHAFT POSITION SENSOR (CPS)

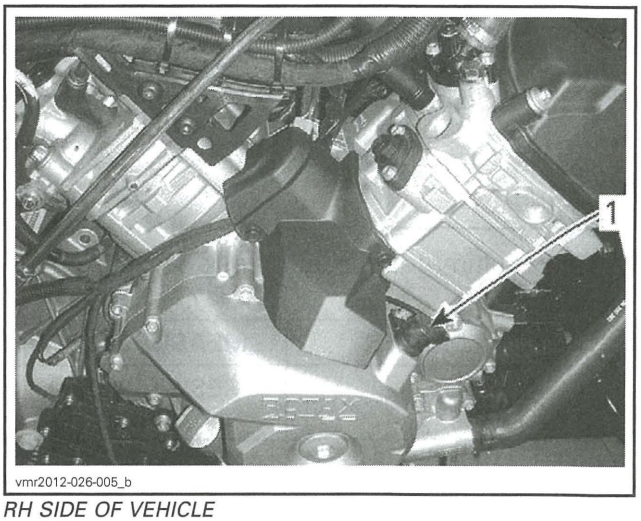

RH SIDE OF VEHICLE
1. CPS

NOTE: Take into account that a CPS fault can be triggered by bent or missing encoder wheel teeth. First check fault codes using B.U.D.S., then check the encoder wheel teeth condition if necessary. Refer to *MAGNETO SYSTEM*.

CPS Access

Remove the RH side panel. Refer to *BODY* subsection.

To reach the CPS connector, remove protector from engine.

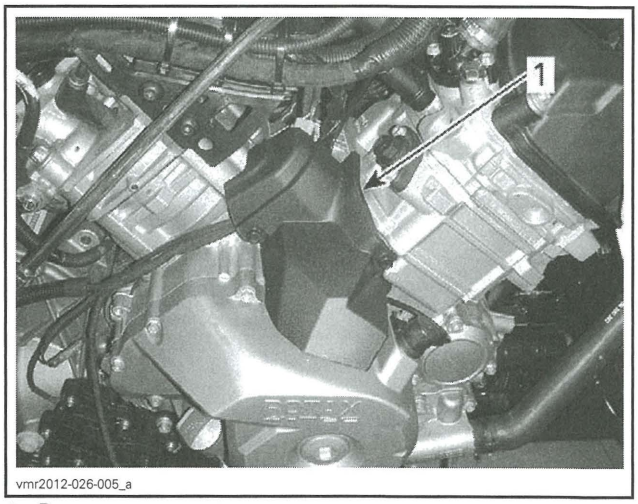

1. Remove

CPS Resistance Test

Disconnect the ECM connector.

Install ECM connector on ECM ADAPTER TOOL (P/N 529 036 166).

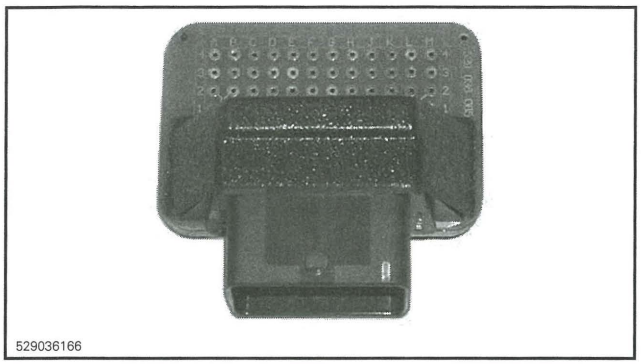
529036166

Using a multimeter, measure resistance as per table.

ECM ADAPTER		MEASUREMENT
PIN		RESISTANCE Ω @ 20°C (68°F)
D1	E1	700 - 900 Ω

If resistance value is incorrect, check or repair the connectors and the wiring harness between ECM connector and the CPS. If resistance value is still incorrect, replace CPS.

CPS Replacement

Refer to *CPS ACCESS* in this subsection to reach CPS.

Disconnect CPS connector and cut harness locking tie (if applicable).

Remove CPS retaining screw and pull up on CPS to remove it.

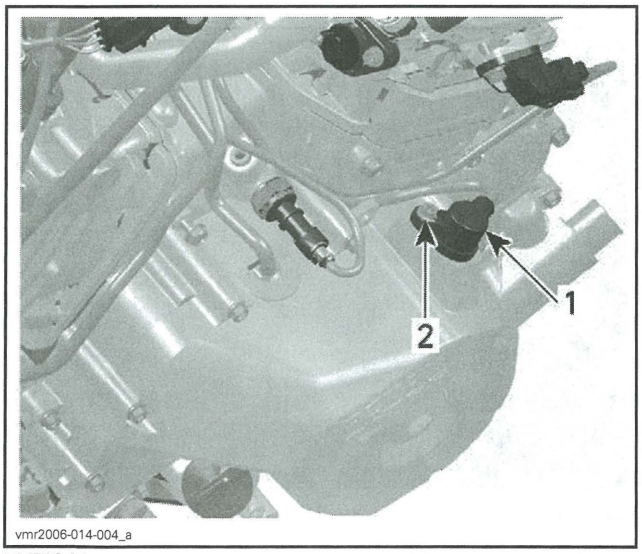

vmr2006-014-004_a

TYPICAL
1. *CPS*
2. *Retaining screw*

Install new CPS and secure harness with a new locking tie (as applicable).

CPS INSTALLATION	
O-RING	PRODUCT
	XPS SYNTHETIC GREASE (P/N 293 550 010)
SENSOR SCREW	TIGHTENING TORQUE
	10 N•m ± 1 N•m (89 lbf•**in** ± 9 lbf•**in**)

MANIFOLD ABSOLUTE PRESSURE AND TEMPERATURE SENSOR (MAPTS)

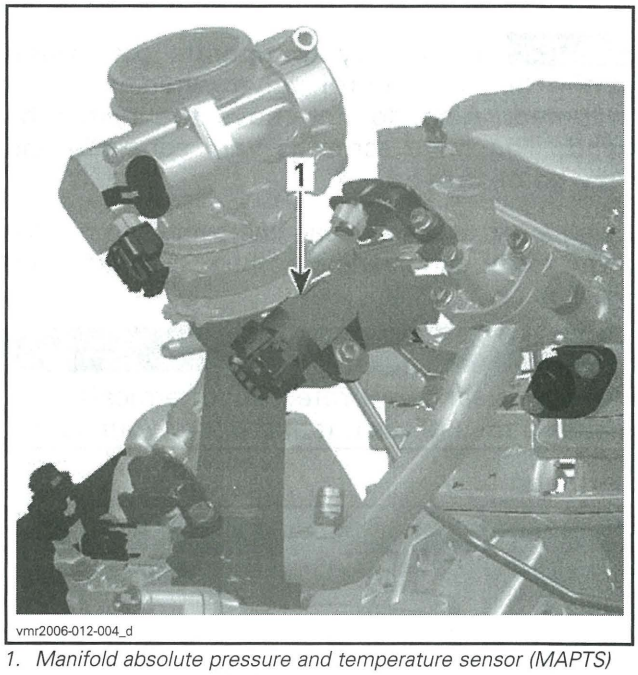

vmr2006-012-004_d

1. *Manifold absolute pressure and temperature sensor (MAPTS)*

NOTE: This sensor is a multifunction device.

MAPTS Access

Remove the RH side panel. Refer to *BODY* subsection.

MAPTS Pressure Function

Before the engine is started, when power is applied to the system, the sensor measures the ambient air atmospheric pressure. The ambient pressure is, at that moment, stored in the ECM. Thereafter, once the engine is started, it measures the air pressure in the intake manifold at operating RPMs.

The sensor must be correctly installed on intake manifold. Otherwise, the MAPTS could generate a fault code for an unexpected sensor range at idle when it reads the atmospheric pressure. If this

is the case, remove sensor and check for oil or dirt on its end and if problem persists, check throttle plate condition/position and the wiring harness. Perform the following tests.

MAPTS Pressure Function Quick Test

1. Connect vehicle to the latest applicable B.U.D.S. software version.
2. In B.U.D.S., click the following:
   - **Read Data**
   - **Monitoring** tab
   - **ECM** tab.

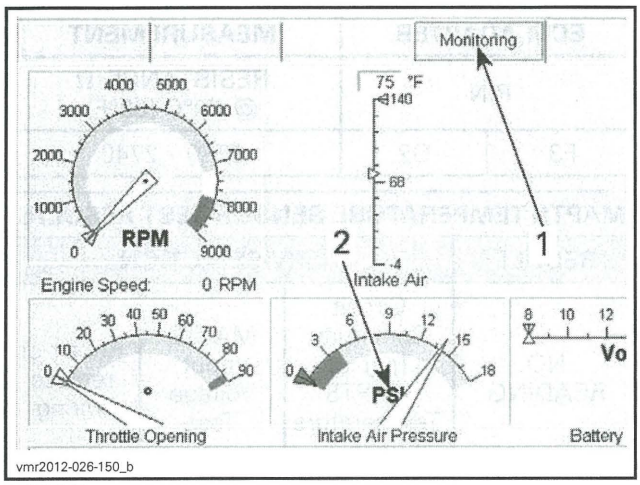

TYPICAL
1. *Monitoring tab*
2. *MAPTS pressure reading*

3. Look for and take note of the MAPTS pressure reading while the engine is stopped.
4. Perform the same test with a new MAPTS and compare both readings.

Values have to be within ± 3.4 kPa (.5 PSI).

MAPTS PRESSURE FUNCTION QUICK TEST			
RESULT	SERVICE ACTION		
NO READING	Circuit continuity test of MAPTS pressure function	MAPTS input voltage test	Repair or replace wiring
VALUE IS OUT OF RANGE	Replace MAPTS		

MAPTS Input Voltage Test

Check the voltage output from ECM to the pressure sensor.

1. Turn ignition key ON.
2. Set emergency engine stop switch to RUN.
3. Remove electrical connector from MAPTS.
4. Using a FLUKE 115 MULTIMETER (P/N 529 035 868), measure for input voltage as per following table.

MAPTS CONNECTOR		MEASUREMENT
PIN		VOLTAGE
1	3	5 Vdc

If voltage test is good, replace the MAPTS.

If voltage test is not good, carry out the *MAPTS CIRCUIT CONTINUITY TEST (PRESSURE FUNCTION)*.

MAPTS Circuit Continuity Test (Pressure Function)

1. Disconnect the ECM connector.
2. Install ECM connector on ECM ADAPTER TOOL (P/N 529 036 166).
3. Using a multimeter, check continuity of the following circuits.

MAPTS CIRCUIT CONTINUITY TEST (PRESSURE FUNCTION)		
ECM ADAPTER	MAPTS CONNECTOR	RESISTANCE VALUE
A1	Pin 3	Close to 0 Ω
F2	Pin 4	
G2	Pin 1	

If resistance is not within specification, repair or replace the wiring harness between ECM connector and the MAPTS.

MAPTS Temperature Function

The sensor monitors the temperature in the intake manifold.

MAPTS Quick Test (Temperature Function)

1. Connect vehicle to the applicable B.U.D.S. software version.
2. In B.U.D.S., click the following:
   - **Read Data**
   - **Monitoring** tab
   - **ECM** tab.
3. Look for the **Intake Air** temperature reading while the engine is stopped.

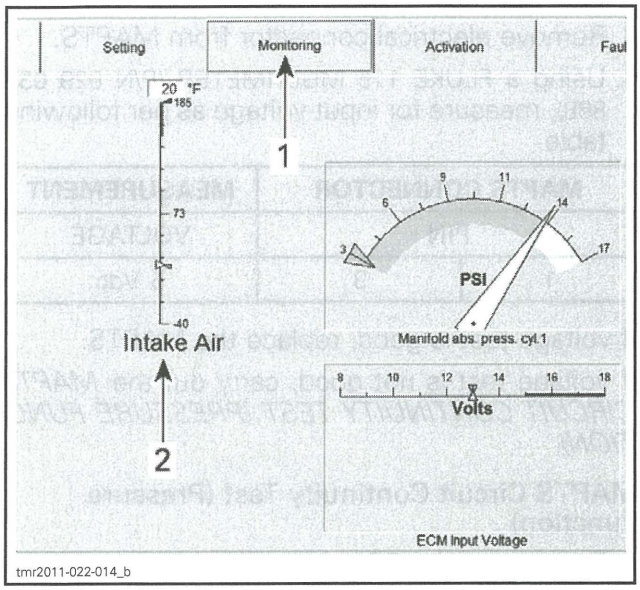

TYPICAL
1. *Monitoring tab*
2. *MAPTS temperature reading*

4. Perform the same test with a new MAPTS and compare both readings.

If the engine MAPTS temperature reading is significantly different than the new MAPTS, replace it.

NOTE: Both sensors must feel the same ambient air temperature.

If there is no reading, carry out a *MAPTS RESISTANCE TEST (TEMPERATURE FUNCTION)*.

MAPTS Resistance Test (Temperature Function)

Disconnect the connector from the MAPTS.

Using the FLUKE 115 MULTIMETER (P/N 529 035 868), check the resistance of the sensor itself as shown.

MAPTS		MEASUREMENT
PIN		RESISTANCE Ω @ 20°C (68°F)
1	2	2280 - 2740

If resistance is not within specification, replace the MAPTS.

If resistance tests good, **reconnect** the MAPTS and disconnect the ECM connector.

Install ECM-A connector on ECM ADAPTER TOOL (P/N 529 036 166).

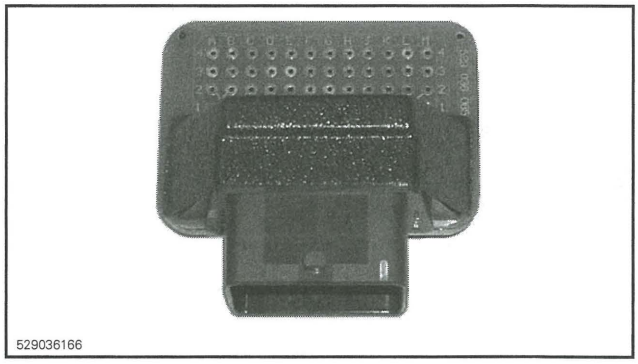

Using a multimeter, recheck resistance value as per following table.

ECM ADAPTER		MEASUREMENT
PIN		RESISTANCE Ω @ 20°C (68°F)
F3	G2	2280 - 2740

MAPTS TEMPERATURE SENSOR TEST RESULTS			
RESULT	SERVICE ACTION		
NO READING	Circuit Continuity Test of MAPTS Temperature Function	MAPTS Input Voltage Test	Repair or replace wiring
INCORRECT RESISTANCE VALUE	Replace MAPTS		

MAPTS Circuit Continuity Test (Temperature Function)

MAPTS CIRCUIT CONTINUITY TEST (TEMPERATURE FUNCTION)		
ECM ADAPTER	MAPTS CONNECTOR	RESISTANCE VALUE
G2	Pin 1	Close to 0 Ω
F3	Pin 2	

MAPTS Replacement

Remove the RH side panel. Refer to *BODY* subsection.

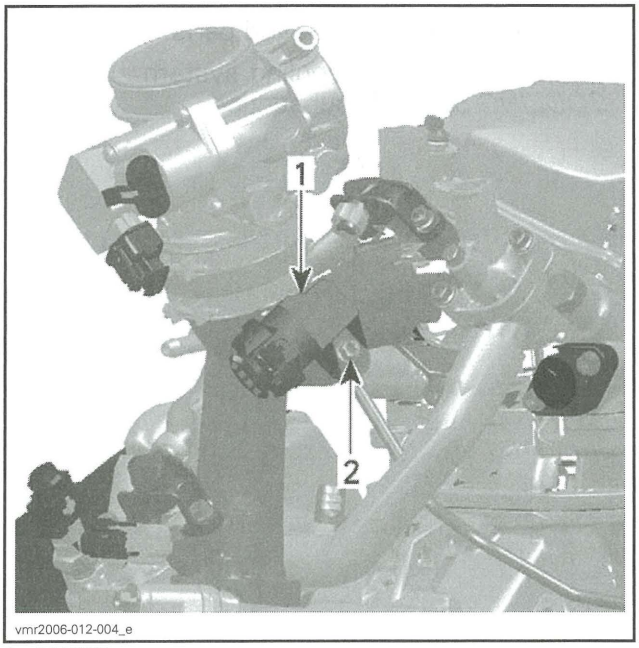

1. MAPTS
2. Retaining screw

Disconnect MAPTS connector and remove the MAPTS.

Install new MAPTS as per following table.

TIGHTENING TORQUE	PRODUCT
6 N•m ± 0.7 N•m (53 lbf•**in** ± 6 lbf•**in**)	LOCTITE 243 (BLUE) (P/N 293 800 060)

CTS (COOLANT TEMPERATURE SENSOR)

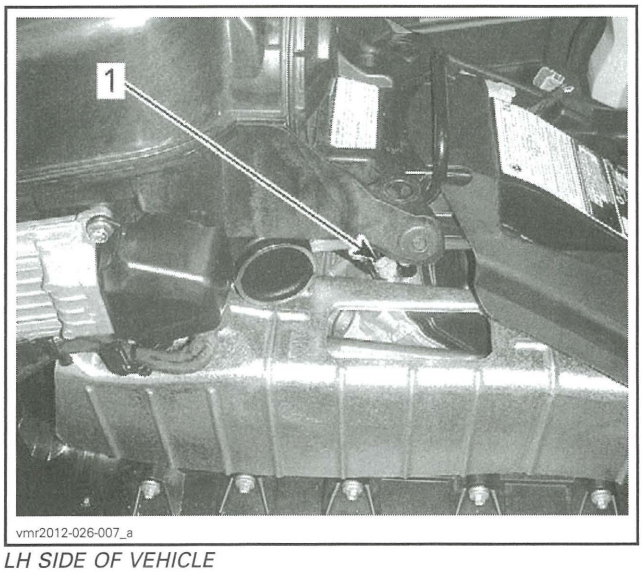

LH SIDE OF VEHICLE
1. CTS

CTS Access

Remove the LH panel. Refer to *BODY* subsection.

Remove the CVT duct.

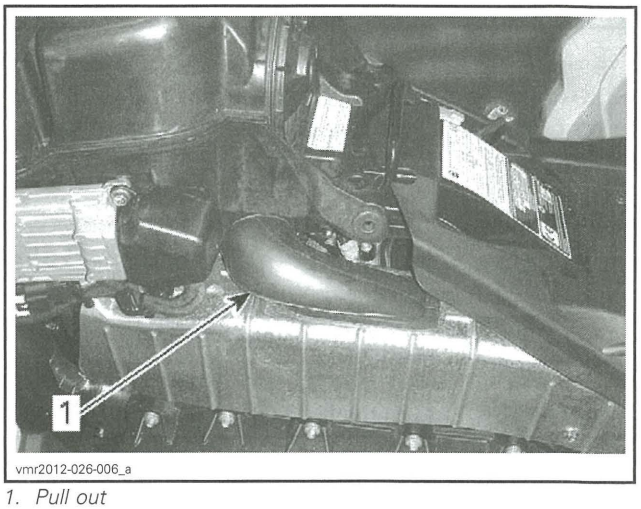

1. Pull out

CTS Resistance Test

1. Disconnect the ECM connector.
2. Using the following tools, check resistance values.

REQUIRED TOOL
ECM ADAPTER TOOL (P/N 529 036 166)

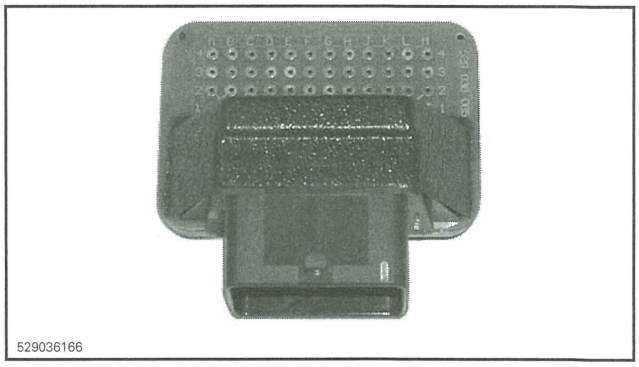

REQUIRED TOOL
FLUKE 115 MULTIMETER (P/N 529 035 868)

3. Install ECM connector on the following tool.

ECM ADAPTER		MEASUREMENT
PIN		RESISTANCE (Ω) @ 20°C (68°F)
C3	F4	2280 - 2736

If resistance value is incorrect, check wiring continuity between ECM connector and the CTS. Refer to *CTS CIRCUIT CONTINUITY TEST* in this subsection.

CTS Circuit Continuity Test

1. Disconnect connector from CTS and check the circuit continuity.

CTS CIRCUIT CONTINUITY TEST		
ECM ADAPTER	CTS CONNECTOR	RESISTANCE VALUE
Pin F4	Pin 1	Close to 0 Ω
Pin C3	Pin 2	

If resistance value is incorrect, repair or replace wiring or connectors/terminals.

If resistance test is good, replace the CTS.

CTS Replacement

1. Refer to *CTS ACCESS* in this subsection to reach CTS.
2. Remove heat shield over exhaust pipe to expose CTS. Refer to *EXHAUST SYSTEM*.

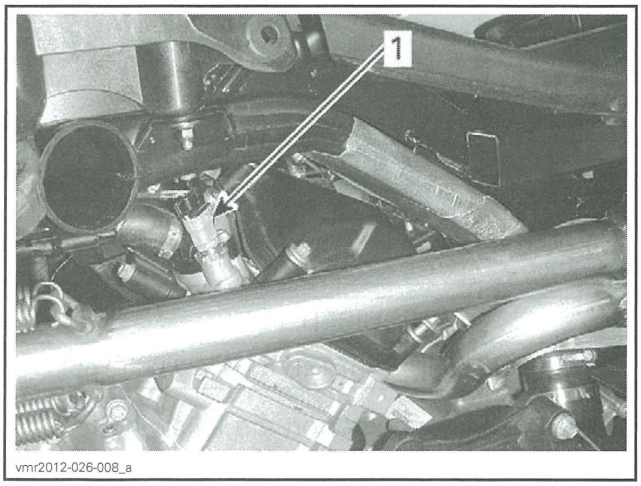

vmr2012-026-008_a

1. CTS

3. Disconnect CTS connector and remove CTS.
4. Install the new CTS and torque as specified.

CTS TORQUE
16 N•m ± 2 N•m (142 lbf•**in** ± 18 lbf•**in**)

5. Reinstall remaining removed parts.
6. Refill and bleed the cooling system. Refer to *COOLING SYSTEM* subsection.

FUEL TANK AND FUEL PUMP

SERVICE TOOLS

Description	Part Number	Page
FLUKE 115 MULTIMETER	529 035 868	331, 335–336
FUEL HOSE ADAPTER	529 036 023	323
FUEL PUMP NUT TOOL	529 035 899	332, 334
OETIKER PLIERS	295 000 070	326
PRESSURE GAUGE	529 035 709	323
SMALL HOSE PINCHER	295 000 076	336
VACUUM/PRESSURE PUMP	529 021 800	322, 336

SERVICE TOOLS – OTHER SUPPLIER

Description	Part Number	Page
FLUKE RIGID BACK PROBE	TP88	331

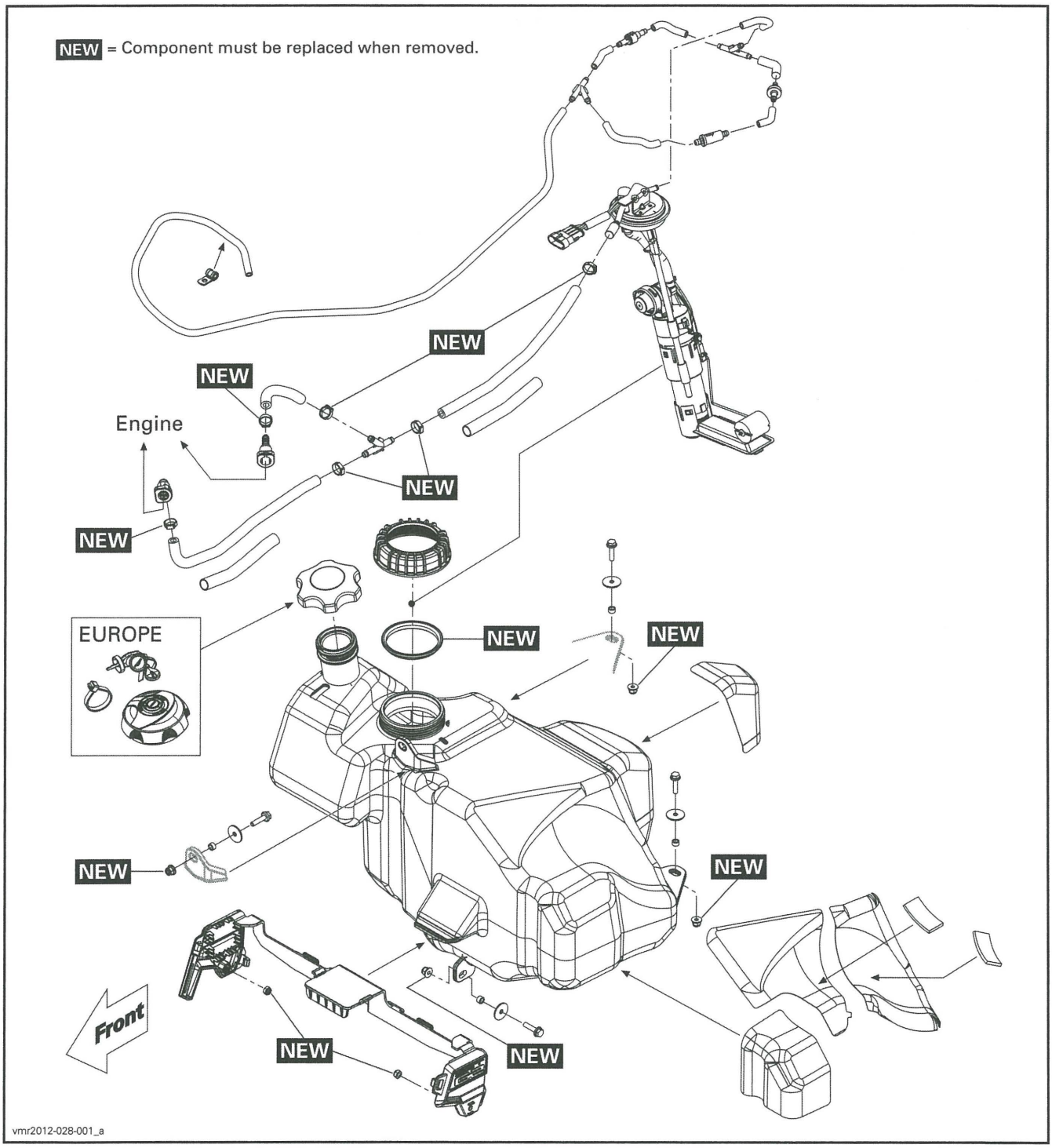
NEW = Component must be replaced when removed.
NEW
NEW
Engine
NEW
NEW
EUROPE
NEW
NEW
NEW
NEW
NEW
Front
vmr2012-028-001_a

GENERAL

⚠ WARNING

Fuel is flammable and explosive under certain conditions. Ensure work area is well ventilated. Do not smoke or allow open flames or sparks in the vicinity.

⚠ WARNING

Always disconnect battery prior to working on the fuel system.

⚠ WARNING

Always proceed with care and use appropriate safety equipment when working on pressurized fuel system. Wear safety glasses.

⚠ WARNING

Do not allow fuel to spill on hot engine parts and/or on electrical connectors.

When the repair is completed, ensure that all hoses are connected and secured. Perform the *FUEL PRESSURE TEST* and the *FUEL TANK LEAK TEST* as explained in this subsection.

Fuel lines remain under pressure at all times. Proceed with care when removing/installing high pressure test equipment.

Use the B.U.D.S. software or disconnect the fuel pump electrical connector to disable fuel pump and crank engine to release fuel pressure prior to disconnecting any fuel hose.

Cover the fuel hose connections with an absorbent shop rag and carefully disconnect them to minimize spilling.

SYSTEM DESCRIPTION

Fuel Tank Vent System

The fuel tank is equipped with a vent system that provides over pressure relief and negative pressure relief of the fuel tank.

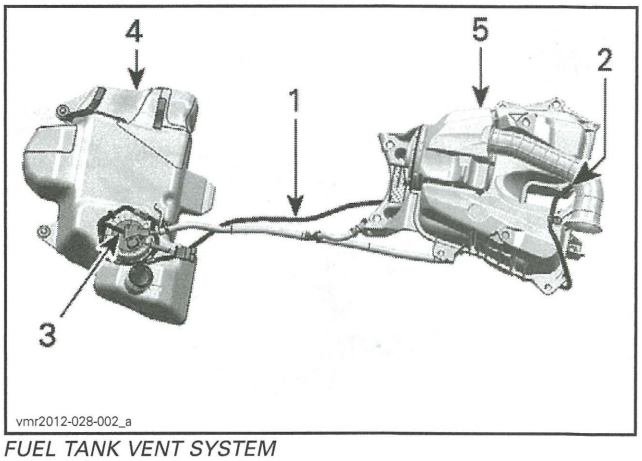

FUEL TANK VENT SYSTEM
1. *Vent hose*
2. *Vent system hose inlet*
3. *Vent system connected to fuel pump*
4. *Fuel tank*
5. *Engine air intake system*

Air can enter the fuel tank at all times through the vent system INLET check valve. This prevents negative pressure within the fuel tank which could cause fuel starvation.

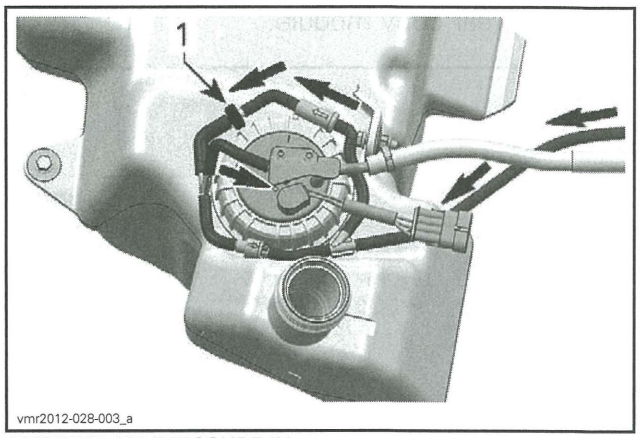

AMBIENT AIR PRESSURE IN
1. *Vent inlet check valve*

The vent inlet check valve also prevents fuel from flowing out through the inlet of the vent system.

If the pressure in the fuel tank builds up and exceeds 2.5 kPa - 7.6 kPa (.36 PSI - 1.1 PSI), the pressure relief valve opens and lets the excess pressure evacuate through the vent system INLET hose.

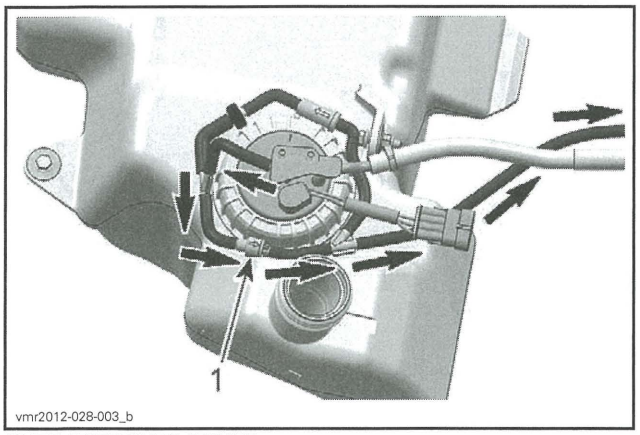

OVER PRESSURE RELIEF
1. Outlet pressure relief valve

Fuel Tank Vent Breather Filter

The vent system is equipped with an in-line breather filter that prevents entry of particles such as dust or small insects. It is located next to the fuel pump between the vent inlet "Y" fitting and the air inlet check valve.

To access the fuel tank vent breather filter, remove the rear body module.

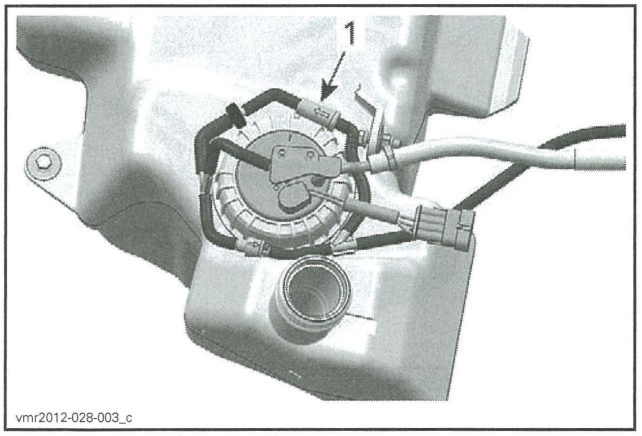

1. Fuel tank vent breather filter

Fuel Pump Module

The fuel pump module is inserted in the fuel tank. It provides fuel delivery for the EFI system and encompasses the following components:

- Electric fuel pump
- Fuel pump prefilter (replaceable)
- Fuel pump filter (integrated)
- Fuel pressure regulator
- Fuel level sender.

Fuel Filters

The system comprises two levels of filtration:

- A replaceable prefilter element attached to the bottom of the fuel pump.
- A non-replaceable fine filter element that is integral to the fuel pump module.

Fuel Pump Pressure Regulator

The fuel pressure regulator is integral to the fuel pump module. The pressure regulator maintains proper fuel pressure for the EFI system.

INSPECTION

FUEL TANK LEAK TEST

⚠ WARNING

Always carry out a fuel tank leak test whenever the fuel tank shows signs of wear or damage which may cause a leak, or when the fuel pump has been removed or replaced, or if you suspect a leak. If the fuel tank is damaged, the fuel tank should be replaced even if no leak is present. Do not attempt to repair the fuel tank.

1. Refill fuel tank and ensure fuel tank cap is in good condition and properly installed.
2. Remove the gauge support for access to the fuel vent inlet hose.
3. Using the VACUUM/PRESSURE PUMP (P/N 529 021 800), pressurize the fuel tank through the vent hose.

REQUIRED TOOL	
VACUUM/PRESSURE PUMP (P/N 529 021 800)	

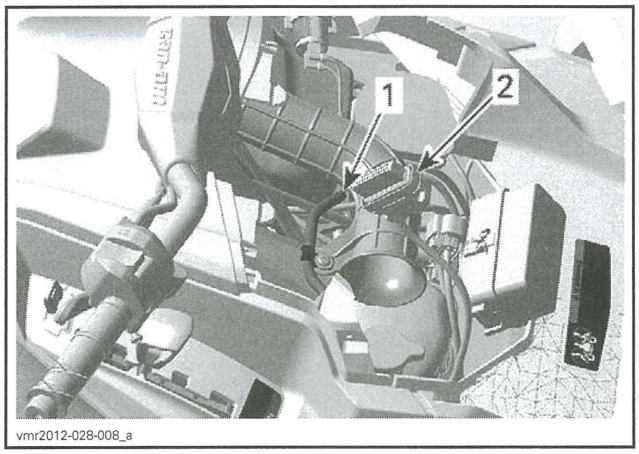

1. *Fuel tank vent inlet hose*
2. *Gauge connector*

PRESSURE	TIME WITHOUT PRESSURE DROP
14 kPa (2 PSI)	3 minutes

If pressure drops, locate fuel leak(s) and repair or replace leaking component(s).

To locate a leak, check for a fuel smell or leaking fuel.

To ease locating leak(s), spray soapy water on all hose connections and components; bubbles will indicate the leak location(s).

NOTE: For access to the fuel tank vent system, refer to *FUEL PUMP ACCESS* in this subsection.

FUEL SYSTEM PRESSURE TEST

The pressure test will show the available pressure in the system. It validates the pressure regulator and the fuel pump, and allows for checking the fuel system for leaks (high pressure side).

NOTE: Refer to the *FUEL SYSTEM DIAGNOSTIC FLOW CHART* in this subsection to help diagnose a fuel system related problem.

1. Ensure the fuel level in the tank is sufficient.
2. Ensure the battery voltage is over 12 volts.
3. Remove seat.
4. Remove RH side body panel, refer to *BODY* subsection.
5. Remove the fuel pump relay fuse (F15) in the front fuse box.

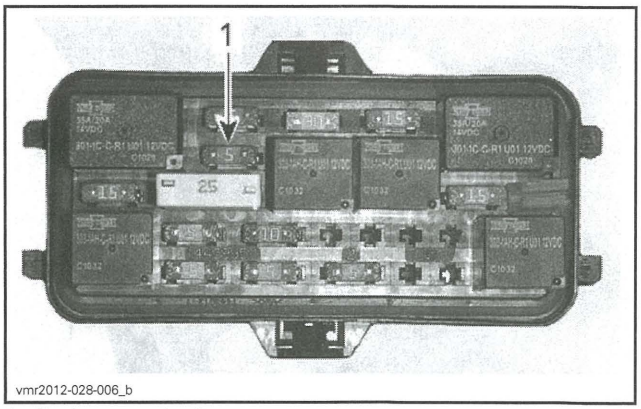

1. *Fuel pump relay fuse*

6. Release fuel pressure by running engine until it runs out of gas.
7. Carefully disconnect the fuel hose fitting from the injector fuel rail by pressing on the release tab of the quick disconnect fitting.
8. Remove the 2 forward most locking ties securing the fuel hose to the upper cable support.

NOTE: This is required to provide more hose length for proper connection to test equipment.

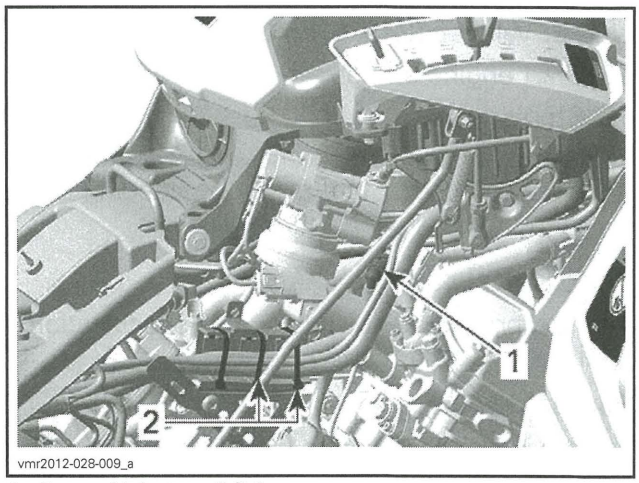

1. *Forward injector rail fitting*
2. *Locking ties*

9. Install the fuel pressure gauge and fuel hose adapter between the disconnected injector hose and fuel rail (in-line installation).

REQUIRED TOOLS	
PRESSURE GAUGE (P/N 529 035 709)	
FUEL HOSE ADAPTER (P/N 529 036 023)	

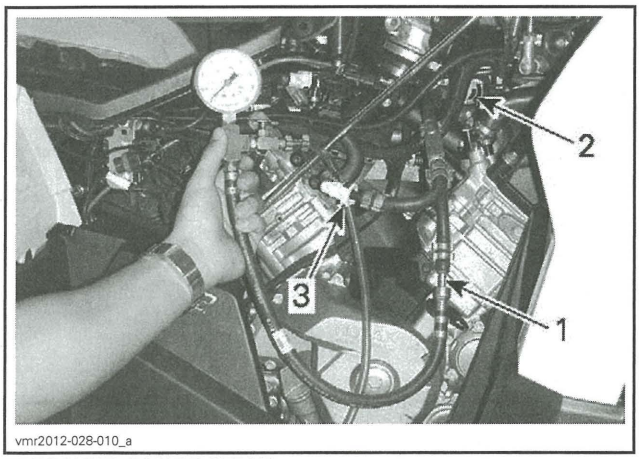

PRESSURE GAUGE SETUP
1. *Pressure gauge to fuel hose adapter*
2. *Fuel hose adapter to fuel rail*
3. *Fuel hose adapter to fuel pump pressure hose*

10. Reinstall the fuel pump relay fuse (F15) in the forward fuse box.
11. Turn ignition key ON and observe fuel pressure.

FUEL PRESSURE	350 kPa ± 10 kPa (51 PSI ± 1 PSI)

NOTE: Valid at 12v ± 0.1v.

12. Start engine and observe fuel pressure.
13. Stop engine.
14. Remove test equipment and reconnect fuel hose to injector fuel rail by proceeding in the same manner as for its installation.

Test Conclusion

The fuel pressure should be within specification in static or dynamic tests.

Rapid Pressure Drop

If there is a rapid pressure drop after the engine is stopped, check for leakage at:

- A fuel hose
- A fuel rail.

NOTE: The fuel pump check valve integral to the fuel pump module may also be at fault.

If no leak is detected, replace fuel pump.

Slow Pressure Drop

If there is a slow pressure drop after the engine is stopped, check for a fuel injector leak. Refer to *ELECTRONIC FUEL INJECTION (EFI)* subsection.

NOTE: The fuel pressure regulator or fuel pump check valve integral to the fuel pump module may also be at fault.

If no leak is detected, replace fuel pump.

TROUBLESHOOTING

FUEL SYSTEM DIAGNOSTIC FLOW CHART

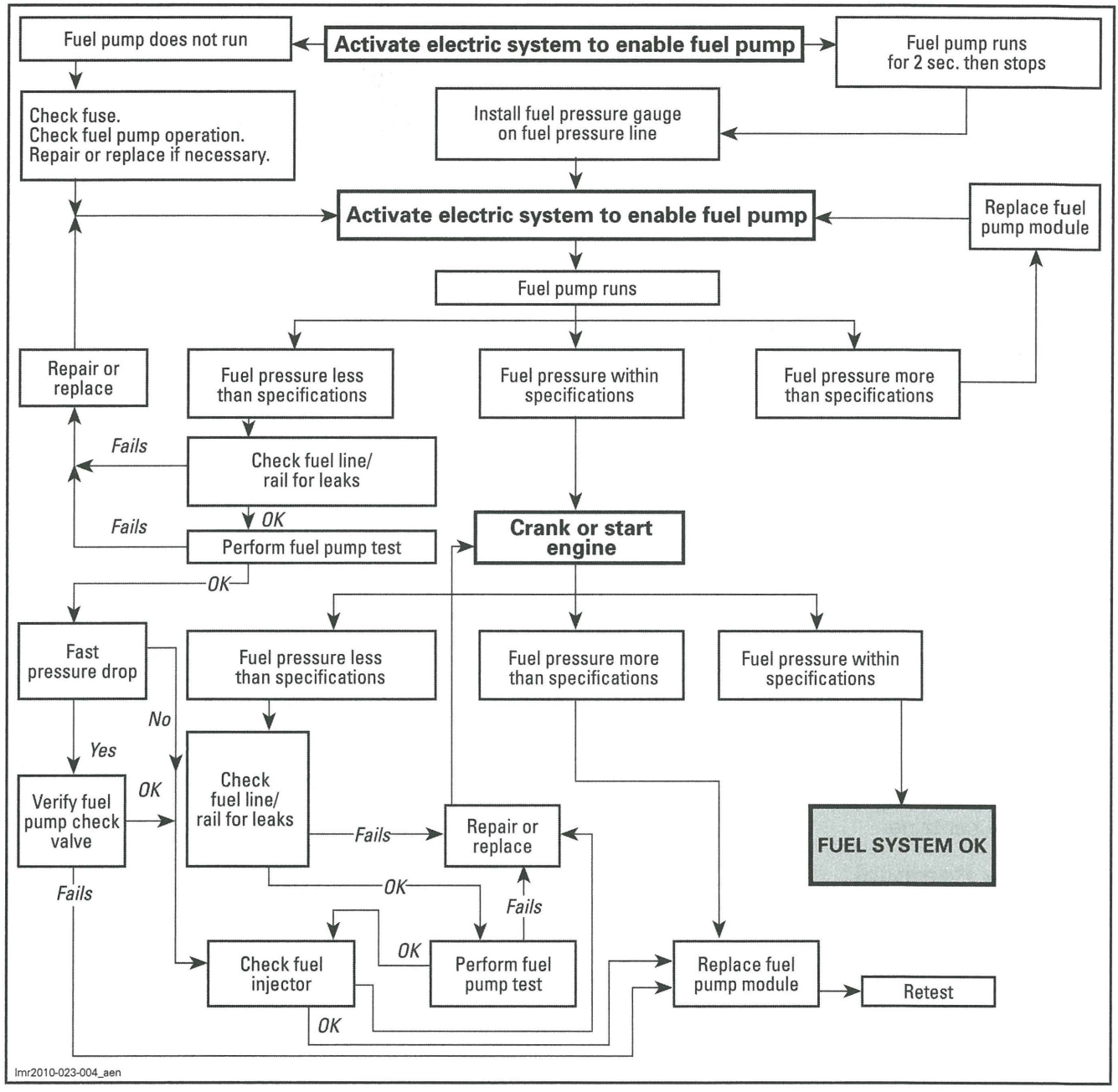

PROCEDURES

FUEL HOSE AND OETIKER CLAMPS

Fuel Hose Replacement

When replacing fuel hoses, be sure to use hoses and clamps as available from BRP parts department. This will ensure continued proper and safe operation.

⚠ WARNING

Use of fuel lines other than those recommended by BRP may compromise fuel system integrity.

⚠ WARNING

Whenever removing a hose in the fuel system, always use new Oetiker clamps at assembly. Then validate fuel system tightness by performing a fuel pressure test.

Oetiker Clamp Replacement

REQUIRED TOOL	
OETIKER PLIERS (P/N 295 000 070)	

FUEL TANK

Fuel Tank Draining

Remove fuel tank cap and siphon gas into an approved fuel container.

Fuel Tank Removal

1. Drain fuel tank. Refer to *FUEL TANK DRAINING* in this subsection.
2. Remove the fuel pump relay fuse (F15) in the front fuse box.

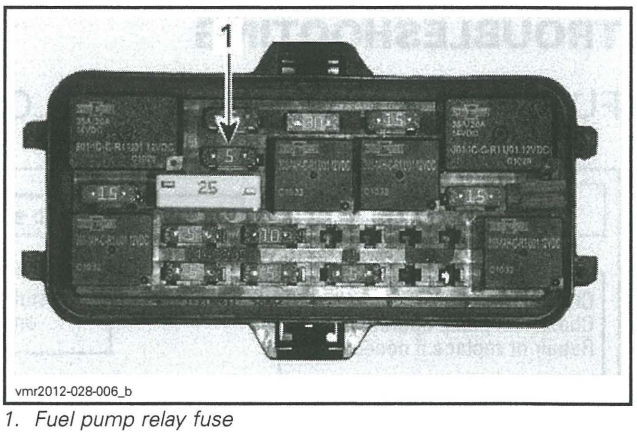

1. Fuel pump relay fuse

3. Release fuel pressure by running engine until it runs out of gas.
4. Disconnect and remove the battery, refer to *CHARGING SYSTEM* subsection.
5. Remove the rear body module, refer to *BODY* subsection.
6. Reinstall fuel tank cap to prevent foreign objects from entering the fuel tank.
7. Disconnect the following from the fuel pump module:
   - Fuel pump electric connector
   - Fuel system vent hose
   - Fuel pump pressure hose.

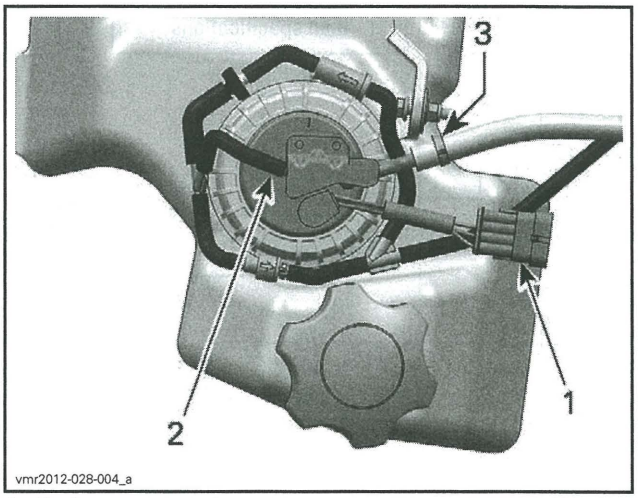

1. Fuel pump connector
2. Vent hose
3. High pressure fuel hose

8. Disconnect the positive (+) battery cable from the starter solenoid.

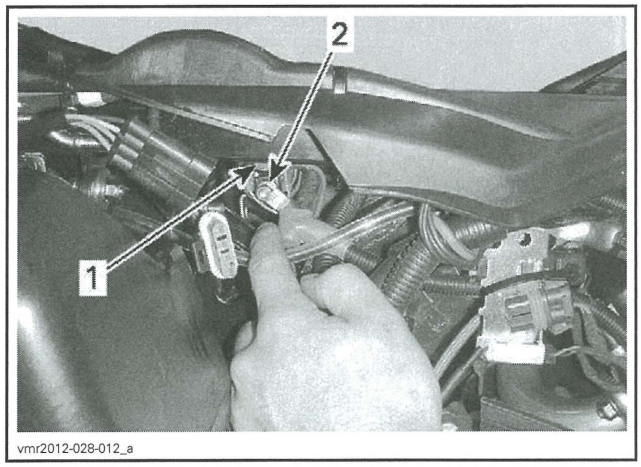

TYPICAL
1. *Starter solenoid*
2. *Positive (+) battery cable to disconnect*

9. Remove the 2 screws that secure the front of the battery support.

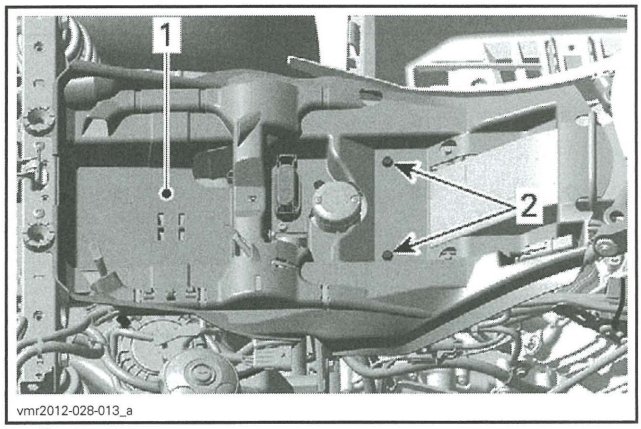

1. *Battery support*
2. *Support retaining screws*

NOTE: It is not necessary to remove the wiring harness or other components from the battery support.

10. Flip the battery support over towards the RH side of the vehicle for access to the rear frame extension.

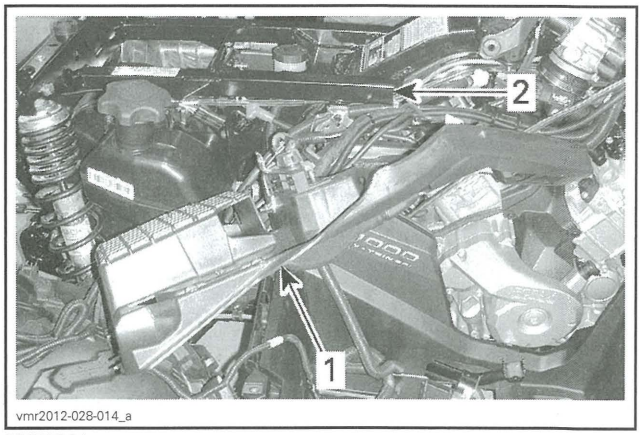

TYPICAL
1. *Battery support*
2. *Rear frame extension*

11. Remove the upper mounting bolt from both rear shock absorbers.

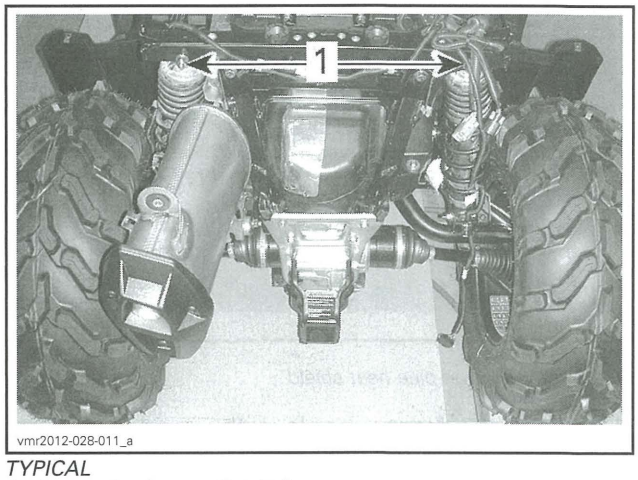

TYPICAL
1. *Upper chock mounting bolt*

12. Refer to *EXHAUST SYSTEM* and remove the following:
    - Muffler assembly
    - Muffler/exhaust pipe heat shield.

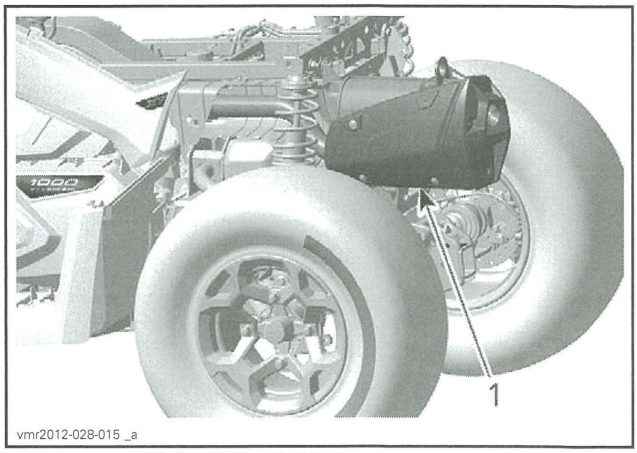

TYPICAL - OUTLANDER MODELS
1. *Muffler*

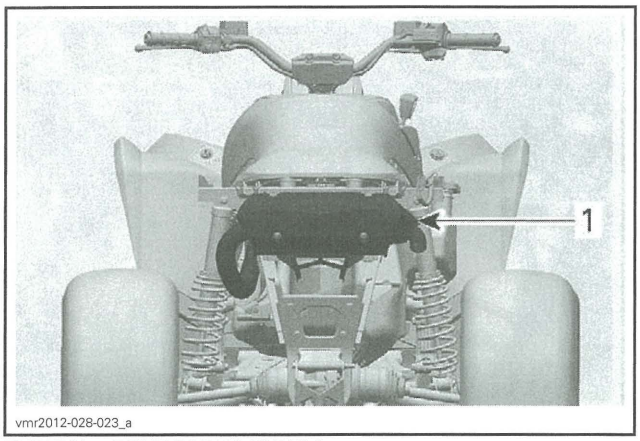

TYPICAL - RENEGADE MODELS
1. *Muffler*

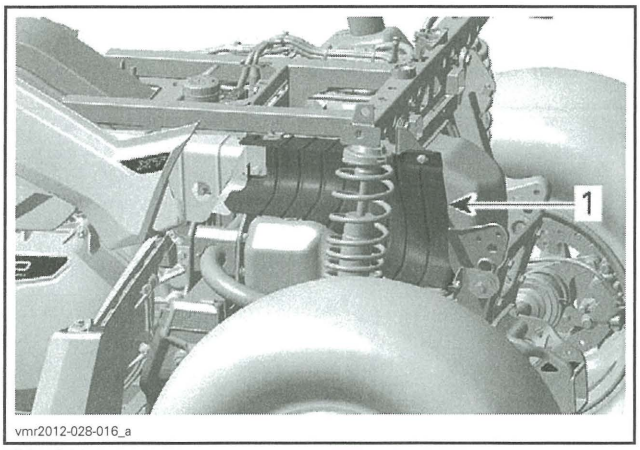

TYPICAL
1. *Muffler/exhaust pipe heat shield*

13. Block the front wheels with wooden blocks.
14. Lift back end of vehicle and properly support under the lower rear portion of the frame, near the final drive.

⚠ CAUTION Before working on vehicle, ensure the vehicle is securely supported.

15. Remove vent tube from final drive.

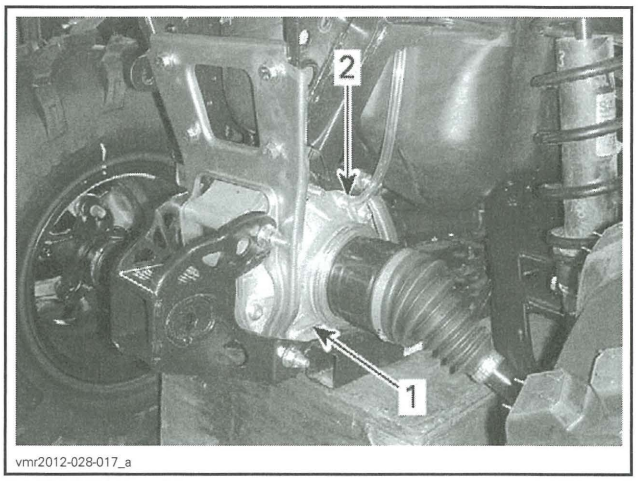

1. *Final drive unit*
2. *Vent tube to remove*

16. Remove fuel tank retaining screws (4).

NOTE: Note position of washers and bushings on each screw.

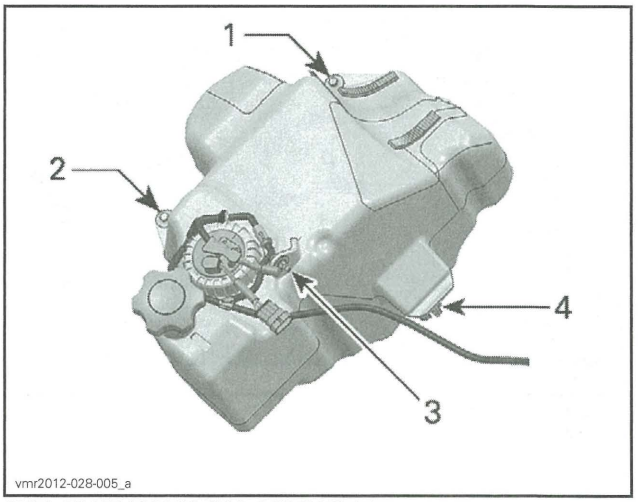

FUEL TANK MOUNTING SCREWS (4)
1. *LH rear*
2. *RH rear*
3. *Forward top*
4. *Forward bottom*

17. Loosen the front 2 nuts and remove the 4 bolts retaining the rear frame extension.

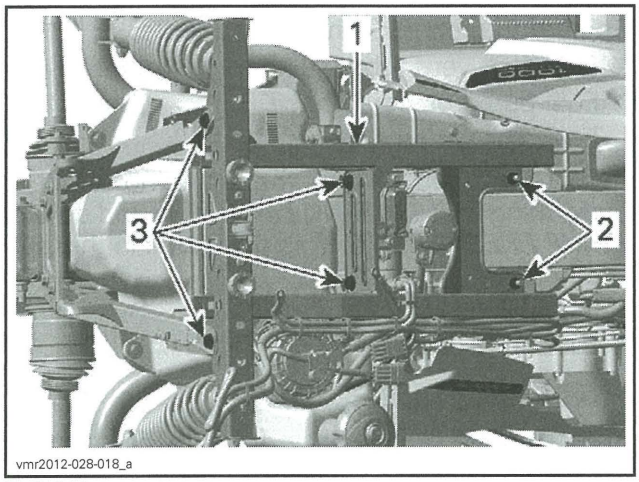

TYPICAL
1. *Rear frame extension*
2. *Loosen these 2 nuts*
3. *Remove these 4 bolts*

Outlander Models

18. Remove trailer hitch.

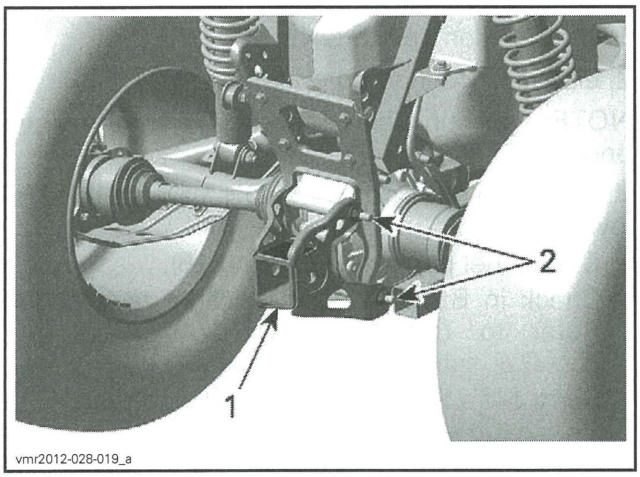

1. *Trailer hitch*
2. *Bolts to remove*

Renegade Models

19. Remove final drive protector.

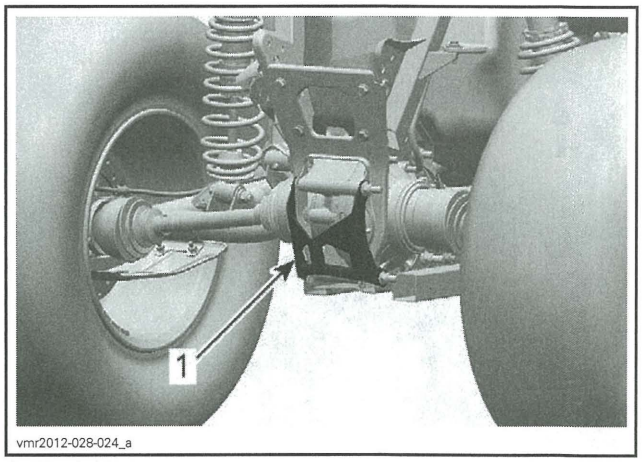

1. *Final drive protector*

All Models

20. Remove rear frame supports as an assembly.

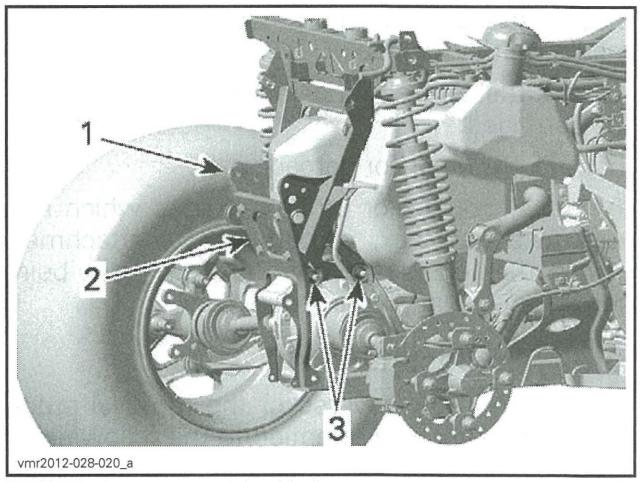

1. *Upper frame support (welded)*
2. *Lower frame support*
3. *Bolts to remove*

21. Lift up on rear frame extension and pull fuel tank out of vehicle.

NOTE: When lifting up on the rear frame extension, the chock absorbers will fall backwards.

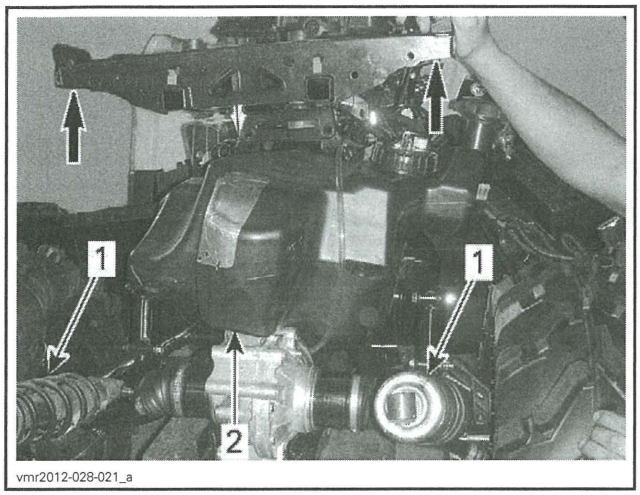

vmr2012-028-021_a

1. *Rear chock absorbers*
2. *Fuel tank*

Fuel Tank Inspection

Inspect fuel tank for any damages or cracks which may result in fuel leaks.

Inspect fuel tank and fuel tank protector on frame for damages.

Inspect protector for damages.

If cracks, gouges or other damages which may lead to a fuel leak, or damages to attachment points that could prevent the tank from being secure are found, replace fuel tank.

Fuel Tank Installation

Installation is the reverse of the removal procedure. However, pay attention to the following.

Install a bushing on each fuel tank mounting screw. The bushing inserts within the fuel tank screw hole cavity.

Be sure to install the washers between the fuel tank and the fastener as noted at removal.

Install **all** fuel tank fasteners loosely.

NOTICE The fuel tank fasteners must not be tightened to specified torque until complete assembly in vehicle.

Install all frame component fasteners loosely, then apply torque as specified in the *FRAME* subsection.

Apply specified torque to fuel tank retaining screws.

TORQUE	
Fuel tank retaining screws	6.5 N•m ± 0.5 N•m (58 lbf•**in** ± 4 lbf•**in**)

Be sure to properly connect and route:
- Fuel tank vent tube
- Fuel pump pressure hose
- Electrical connectors.

Refuel tank and ensure there are no leaks by performing a *FUEL TANK LEAK TEST* and a *FUEL PUMP PRESSURE TEST* as described in this subsection.

FUEL PUMP

Fuel Pressure Release

Remove fuel pump relay fuse (F15), refer to *POWER DISTRIBUTION* subsection.

Start and run engine until it runs out of fuel.

Fuel Pump Pressure Test

Refer to *INSPECTION* in this subsection.

Fuel Pump Quick Test

1. Turn ignition key to ON.
2. Listen for fuel pump operation.

NOTE: Fuel pump should come ON for a few seconds, then stop.

If fuel pump does not come ON, carry out the following:
- Check fuel pump relay fuse (F15).
- Check in B.U.D.S. for applicable fault codes. Refer to *COMMUNICATION TOOLS AND B.U.D.S.* subsection.
- Carry out a fuel pump input voltage test.

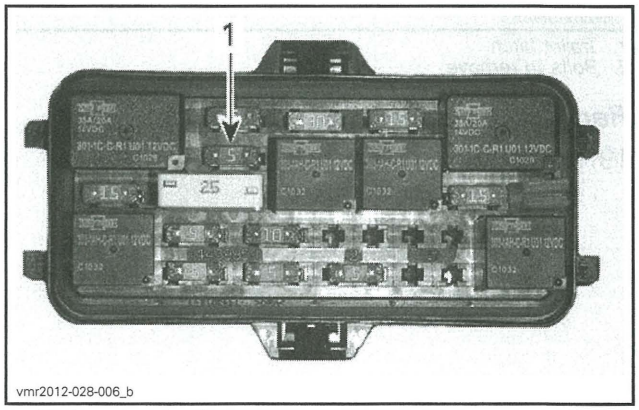

vmr2012-028-006_b

1. *Fuel pump relay fuse*

Fuel Pump Connector Access

The fuel pump connector can be accessed from under the RH rear fender, just above the forward end of the fuel tank.

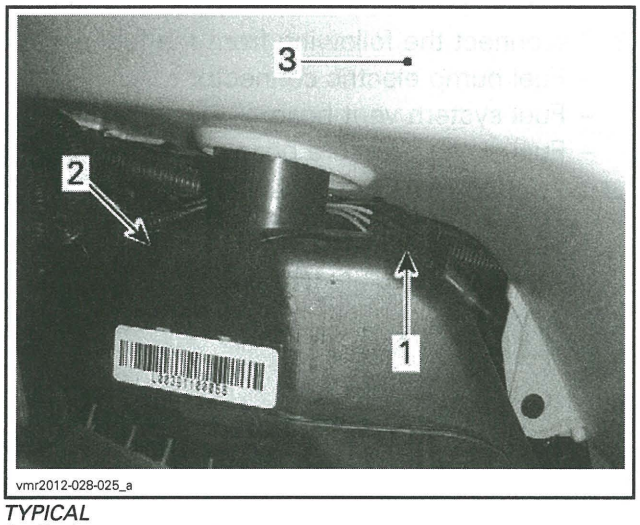

vmr2012-028-025_a

TYPICAL
1. *Fuel pump connector*
2. *Fuel tank*
3. *Underside of RH rear fender*

Fuel Pump Input Voltage Test

1. Disconnect the fuel pump connector.
2. Turn ignition key ON.
3. Read voltage as follows.

REQUIRED TOOLS	
FLUKE 115 MULTIMETER (P/N 529 035 868)	
FLUKE RIGID BACK PROBE (P/N TP88)	

FUEL PUMP INPUT VOLTAGE TEST		
TEST PROBES		VOLTAGE READING
Fuel pump connector Pin 3	Fuel pump connector Pin 4	Battery voltage

If battery voltage is read, carry out a fuel pump resistance test.

If battery voltage is not read, test fuel pump power input as follows.

FUEL PUMP POWER WIRE TEST		
TEST PROBES		VOLTAGE READING
Fuel pump connector Pin 3	Battery ground	Battery voltage

If battery voltage is now read, check fuel pump ground circuit between fuel pump connector 5-FP-4 and battery ground.

If battery voltage is still not read, check fuel pump:
- Fuse (F15)
- Fuel pump relay (R4)
- Fuel pump relay input voltage (control and power circuits)
- Fuel pump relay control circuit continuity to ECM-J1
- Fuel pump power circuit
- Wiring and connectors.

Fuel Pump Resistance Test

1. Ensure fuel pump connector is properly connected.
2. Remove fuel pump relay (R4).

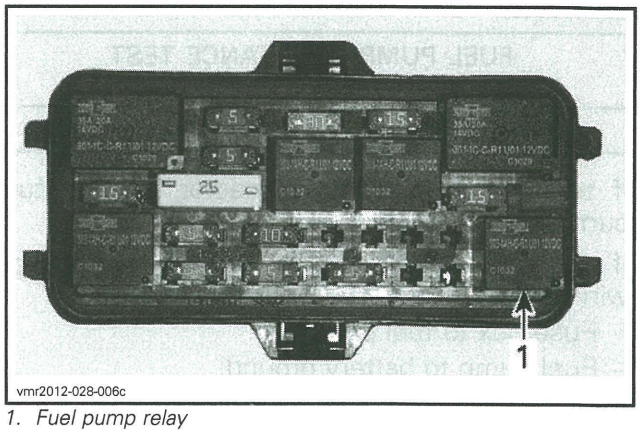

vmr2012-028-006c

1. Fuel pump relay

3. Measure fuel pump resistance as follows.

REQUIRED TOOL	
FLUKE 115 MULTIMETER (P/N 529 035 868)	

FUEL PUMP RESISTANCE TEST (AT FUSE BOX)		
TEST PROBES		RESISTANCE Ω @ 20°C (68°F)
Fuse box contact 11A	Battery ground	Approximately 2 Ω

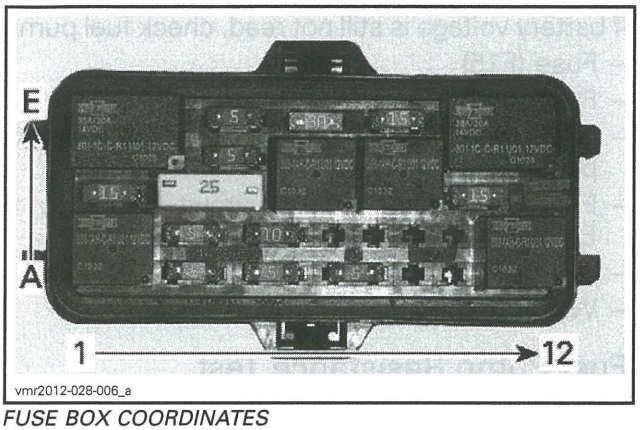

FUSE BOX COORDINATES

If resistance test failed, disconnect fuel pump connector and measure resistance at fuel pump connector.

FUEL PUMP RESISTANCE TEST (AT FUEL PUMP CONNECTOR)	
Pins 3 and 4	Approximately 2 Ω

If test failed at pump connector, replace fuel pump.

If test succeeded at pump connector, check wiring and connectors from:

- Fuse box to fuel pump
- Fuel pump to battery ground.

Repair or replace as necessary.

Fuel Pump Access

Remove rear body module, refer to *BODY* subsection.

Fuel Pump Removal

1. Remove the fuel pump relay fuse (F15) to disable fuel pump:

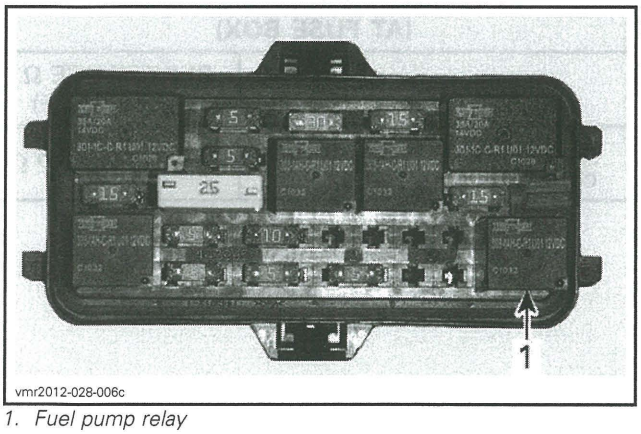

1. Fuel pump relay

2. Release fuel pressure by running engine until it runs out of gas.
3. Disconnect the following from the fuel pump:
   - Fuel pump electric connector
   - Fuel system vent hose
   - Fuel pump pressure hose.

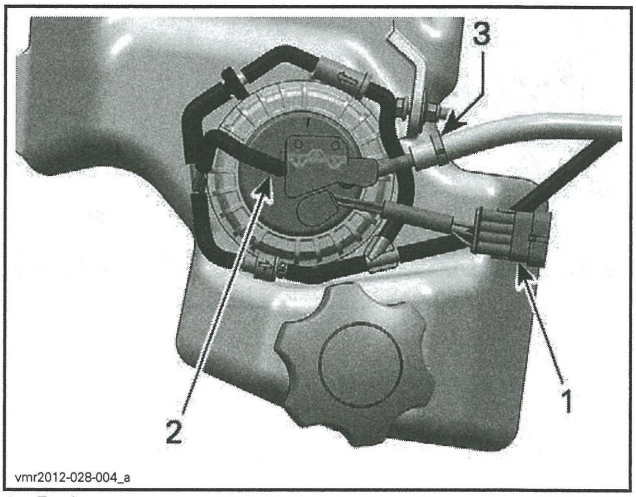

1. Fuel pump connector
2. Vent hose
3. High pressure fuel hose

4. Remove fuel pump retaining nut.

⚠ WARNING

Fuel vapors are flammable and explosive under certain conditions. Use only non-sparking tools.

⚠ CAUTION Replace fuel pump gasket whenever fuel pump retaining nut is loosened.

REQUIRED TOOL	
FUEL PUMP NUT TOOL (P/N 529 035 899)	

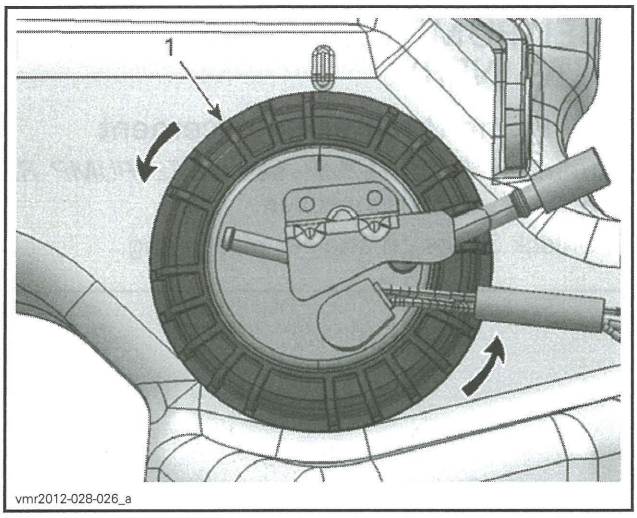

FUEL PUMP REMOVAL
1. *Fuel pump retaining nut*

5. Carefully pull out and rotate fuel pump as required.

NOTICE **Pay attention not to damage fuel sender and fuel pump prefilter.**

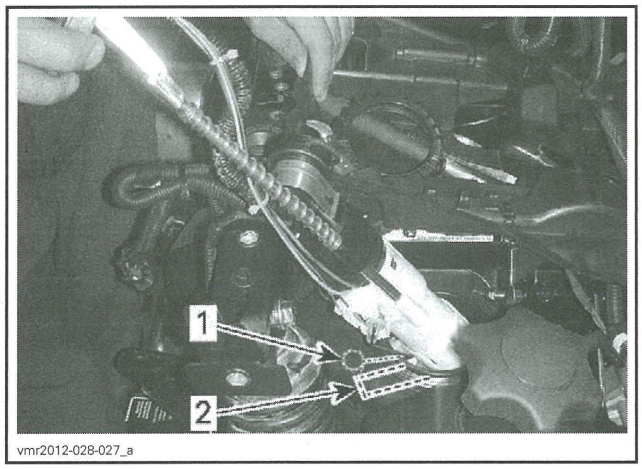

1. *Approximate float orientation*
2. *Approximate prefilter orientation*

6. Discard gasket ring.
7. Wipe off any fuel spillage.

Fuel Pump Installation

For installation, reverse the removal procedure. However, pay attention to the following.

Rotate fuel pump during insertion as per removal procedure.

⚠ CAUTION **Pay attention not to damage fuel sender and fuel pump prefilter.**

1. Install a NEW gasket ring.
2. Place gasket so that it is properly located between fuel pump and fuel pump mounting neck on fuel tank.

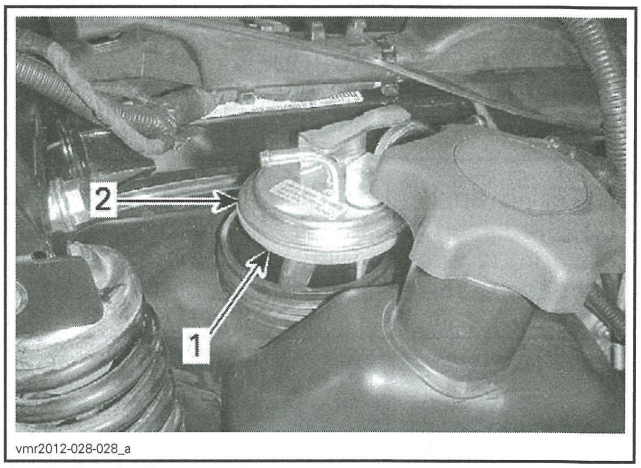

1. *Gasket ring here*
2. *Fuel pump flange*

⚠ WARNING

Ensure gasket ring makes good contact all around fuel pump and fuel pump mounting neck on fuel tank.

3. Ensure proper fuel pump orientation as in following illustration.

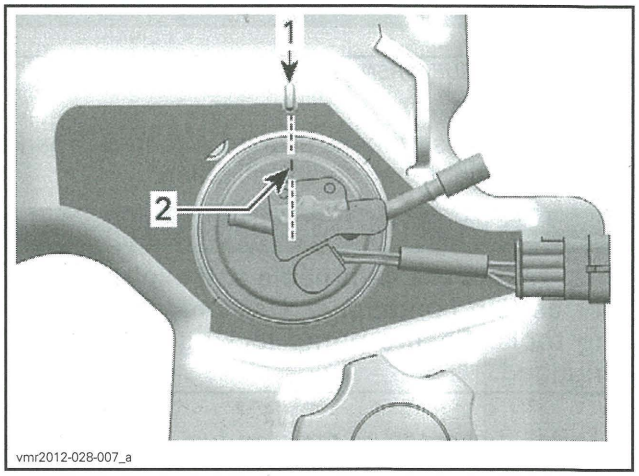

1. *Fuel tank pump index*
2. *Fuel pump index*

4. Insert fuel pump retaining nut over the fuel pressure hose and electrical wiring connector.
5. While firmly holding pump against tank, engage fuel pump retaining nut on fuel tank flange.

NOTE: If necessary, move the pump in order to ensure the flange is sitting completely flat on the tank.

6. Tighten fuel pump retaining nut to specification.

REQUIRED TOOL	
FUEL PUMP NUT TOOL (P/N 529 035 899)	

TORQUE	
Fuel pump retaining nut	29 N•m ± 1 N•m (21 lbf•ft ± 1 lbf•ft)

NOTE: To apply the proper torque to the fuel pump retaining nut, install the fuel pump nut tool on a torque wrench with it's handle perpendicularly (90°) to the torque wrench.

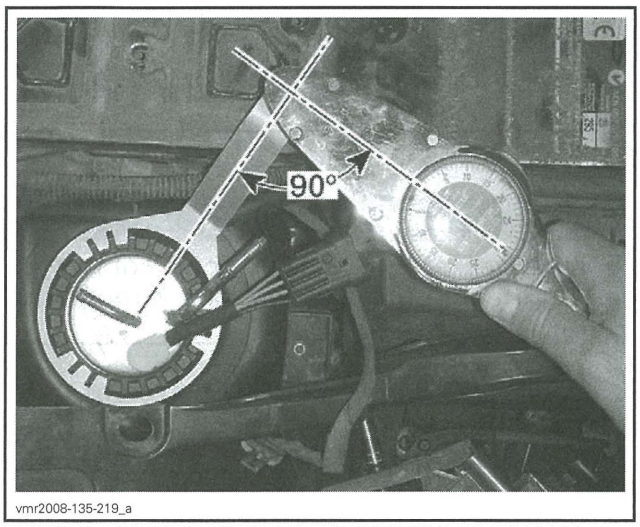

vmr2008-135-219_a

TYPICAL - TORQUE WRENCH PERPENDICULAR TO TOOL HANDLE

Ensure pump is properly aligned with index marks after nut it tightened to specification.

⚠ WARNING

Fuel vapors are flammable and explosive under certain conditions. Use only non-sparking tools. Ensure pump locking ring is fully engaged.

7. Install fuel pressure hose on fuel pump using a new Oetiker clamp.
8. Install fuel vent tube on fuel pump.
9. Install electrical connector on fuel pump.
10. Install fuel pump relay fuse.
11. Refuel tank and ensure there are no leaks by performing a *FUEL TANK LEAK TEST* and a *FUEL PUMP PRESSURE TEST* as described in this subsection.
12. Check fuel level sender operation.

FUEL PUMP PREFILTER (STRAINER)

Fuel Pump Prefilter Replacement

1. Remove *FUEL PUMP*, see *FUEL PUMP REMOVAL* in this subsection.
2. Unlock 3 tabs on strainer plastic ring.

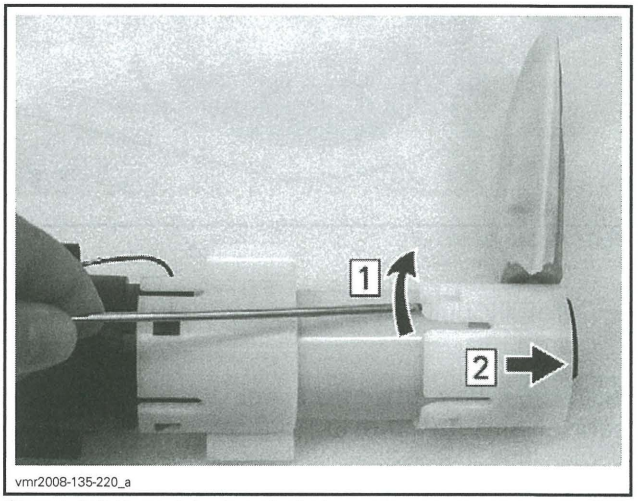

vmr2008-135-220_a

Step 1: Lift these tabs to unlock ring
Step 2: Pull ring off pump inlet

3. Remove rubber pad.

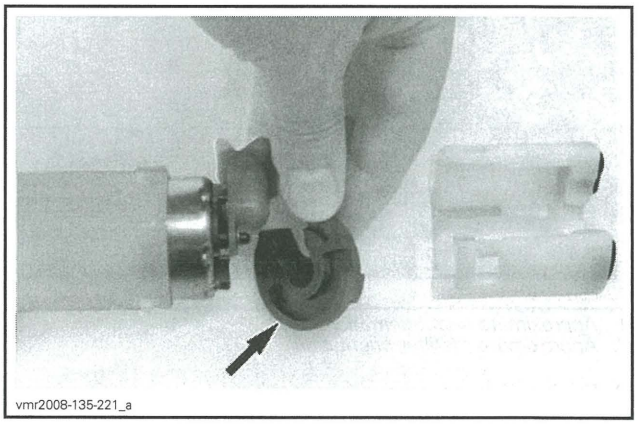
vmr2008-135-221_a

4. Remove push nut securing strainer to fuel pump. Be careful not to break the plastic pin.

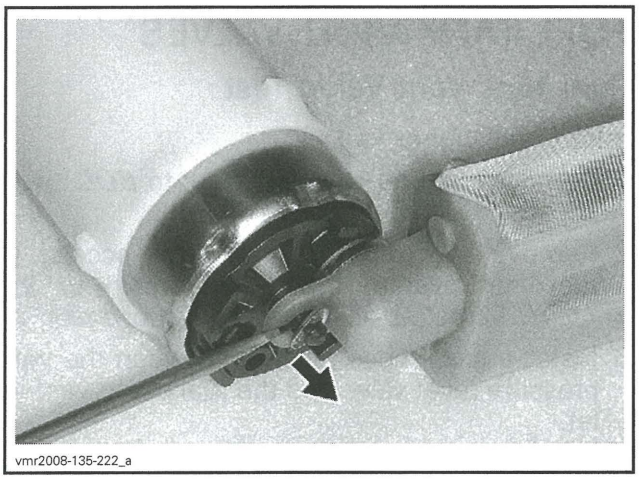
vmr2008-135-222_a

5. Pull strainer off fuel pump.


vmr2008-135-223_a

NOTE: A non-serviceable filter is located within the fuel pump module. If it is clogged, replace fuel pump.

6. Insert the new strainer on fuel pump making sure to press it in tightly against the fuel pump surface.
7. Press in a **NEW** push nut to secure strainer.
8. Reinstall remaining removed parts.

FUEL LEVEL SENDER

The fuel level sender is a float actuated variable resistance type that is part of the fuel pump.

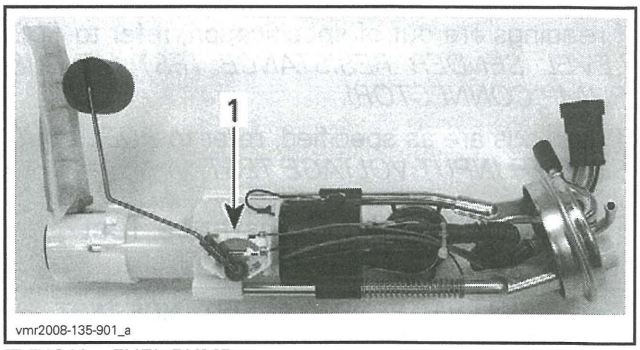

vmr2008-135-901_a

TYPICAL - FUEL PUMP
1. Fuel level sender

Fuel Level Sender Resistance Test (Fuel Pump Module Installed)

1. Disconnect multifunction gauge, refer to the *LIGHTS/GAUGE/ACCESSORIES* subsection.
2. Measure the resistance of the fuel level sender as follows.

REQUIRED TOOL	
FLUKE 115 MULTIMETER (P/N 529 035 868)	

FUEL LEVEL SENDER RESISTANCE TEST		
FUEL LEVEL	GAUGE CONNECTOR	RESISTANCE Ω @ 20°C (68°F)
Full	Pins 4 and 21	5 Ω ± 1
Empty		100 Ω ± 5

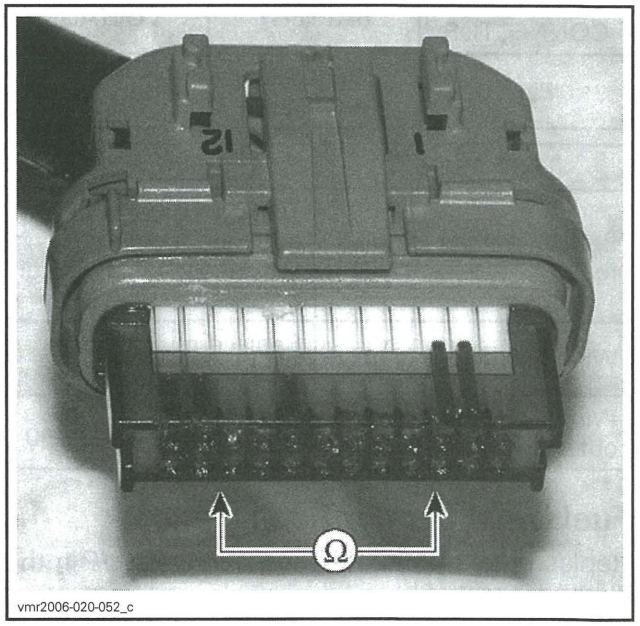

vmr2006-020-052_c

If readings are out of specification, refer to *FUEL LEVEL SENDER RESISTANCE TEST (AT FUEL PUMP CONNECTOR).*

If readings are as specified, refer to *FUEL LEVEL SENDER INPUT VOLTAGE TEST.*

Fuel Level Sender Resistance Test (at Fuel Pump Connector)

FUEL LEVEL SENDER RESISTANCE TEST		
FUEL LEVEL	FUEL PUMP CONNECTOR	RESISTANCE Ω @ 20°C (68°F)
Full	Pins 1 and 2	5 Ω ± 1
Empty		100 Ω ± 5

If resistance test at fuel pump connector is failed, replace fuel pump module.

Fuel Level Sender Input Voltage Test

1. Set ignition switch to ON.
2. Disconnect fuel pump connector, refer to *FUEL PUMP CONNECTOR ACCESS* in this subsection.
3. Measure for input voltage as follows.

REQUIRED TOOL	
FLUKE 115 MULTIMETER (P/N 529 035 868)	

FUEL LEVEL SENDER INPUT VOLTAGE TEST		
FUEL PUMP CONNECTOR	BATTERY	VOLTAGE
Pin 1	Negative terminal	Battery voltage

TEST RESULT	SERVICE ACTION
Battery voltage is not read	Test wiring continuity between fuel level sender and multifunction gauge
Wiring continuity is good	Replace multifunction gauge
Wiring continuity is not obtained	Repair or replace wiring

Fuel Level Sender Replacement

Replace fuel pump. Refer to *FUEL PUMP* in this subsection.

FUEL TANK VENT VALVES

Fuel Tank Vent Valve Test

Inlet Check Valve Test

1. Remove rear body module, refer to *BODY* subsection.
2. Remove multifunction gauge for access to the vent system inlet hose, refer to the *LIGHTS/GAUGE/ACCESSORIES* subsection.
3. Install a small hose pincher between the vent pressure relief valve and the fuel pump vent inlet.

REQUIRED TOOL	
SMALL HOSE PINCHER (P/N 295 000 076)	

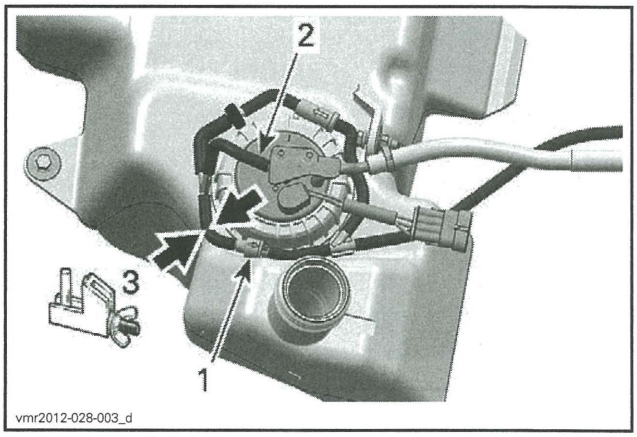

1. Pressure relief valve
2. Fuel pump vent inlet
3. Install small hose pincher here

4. Connect the vacuum/pressure pump to the fuel tank vent hose inlet.

REQUIRED TOOL	
VACUUM/PRESSURE PUMP (P/N 529 021 800)	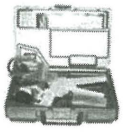

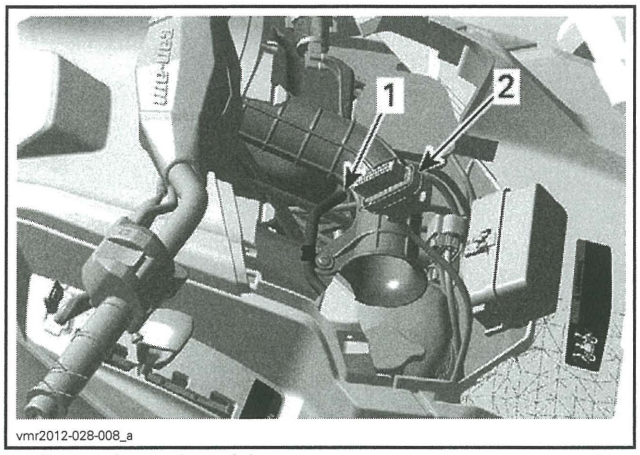

1. *Fuel tank vent hose inlet*
2. *Gauge connector*

5. Remove fuel tank cap.
6. Set vacuum/pressure pump to **PRESSURE** and activate pump. The gauge on the pump **should not change in reading**.
7. Set vacuum/pressure pump to **VACUUM** and activate pump. The **gauge should increase in reading**.

If the test failed, carry out the following:

- Ensure breather filter is properly installed, refer to *PERIODIC MAINTENANCE PROCEDURES*.
- Ensure inlet check valve is properly installed, refer to *FUEL TANK VENT VALVE INSTALLATION* in this subsection.
- Test inlet check valve separately. If good, replace the breather filter, refer to *PERIODIC MAINTENANCE PROCEDURES*.

Pressure Relief Valve Test

1. Install the small hose pincher between the inlet check valve and the fuel pump vent inlet fitting.

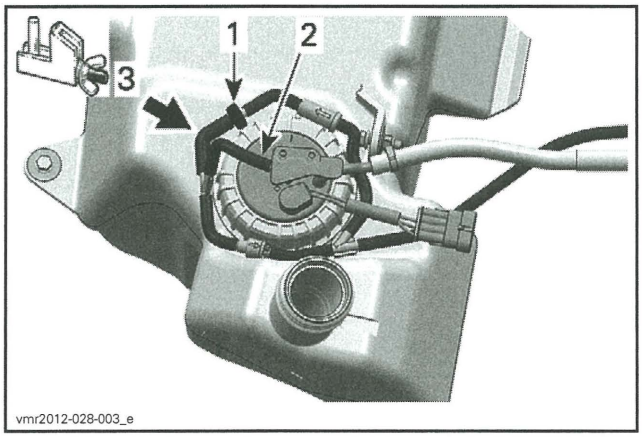

1. *Inlet check valve*
2. *Fuel pump vent inlet fitting*
3. *Install small hose pincher here*

2. Set vacuum/pressure pump to **PRESSURE** and activate pump. The **gauge should increase in reading**.
3. Set vacuum/pressure pump to **VACUUM** and activate pump. The gauge on the pump **should not change in reading**.

If the test failed, carry out the following:

- Ensure pressure relief valve is properly installed, refer to *PRESSURE RELIEF VALVE INSTALLATION* in this subsection.
- Replace pressure relief valve if it fails the test.

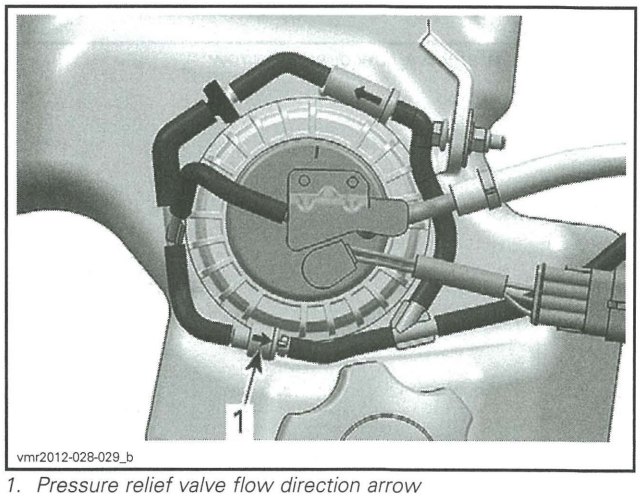

1. *Pressure relief valve flow direction arrow*

Fuel Tank Vent Valve Installation

Inlet Check Valve Installation

Ensure white portion of inlet check valve is towards the vent breather filter.

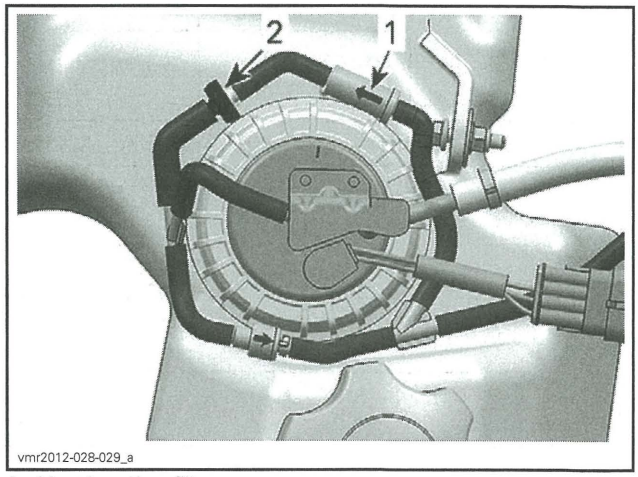

1. *Vent breather filter*
2. *White portion of inlet check valve*

Pressure Relief Valve Installation

Ensure pressure relief valve flow arrow is pointing away from fuel pump vent fitting.

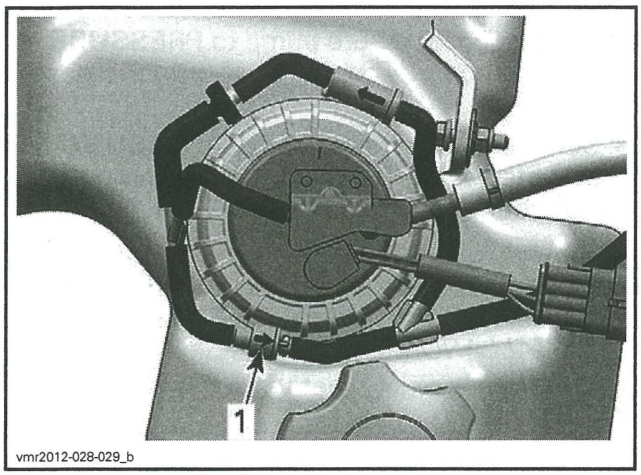

1. Pressure relief valve flow direction arrow

POWER DISTRIBUTION AND GROUNDS

GENERAL

POWER DISTRIBUTION DIAGRAM

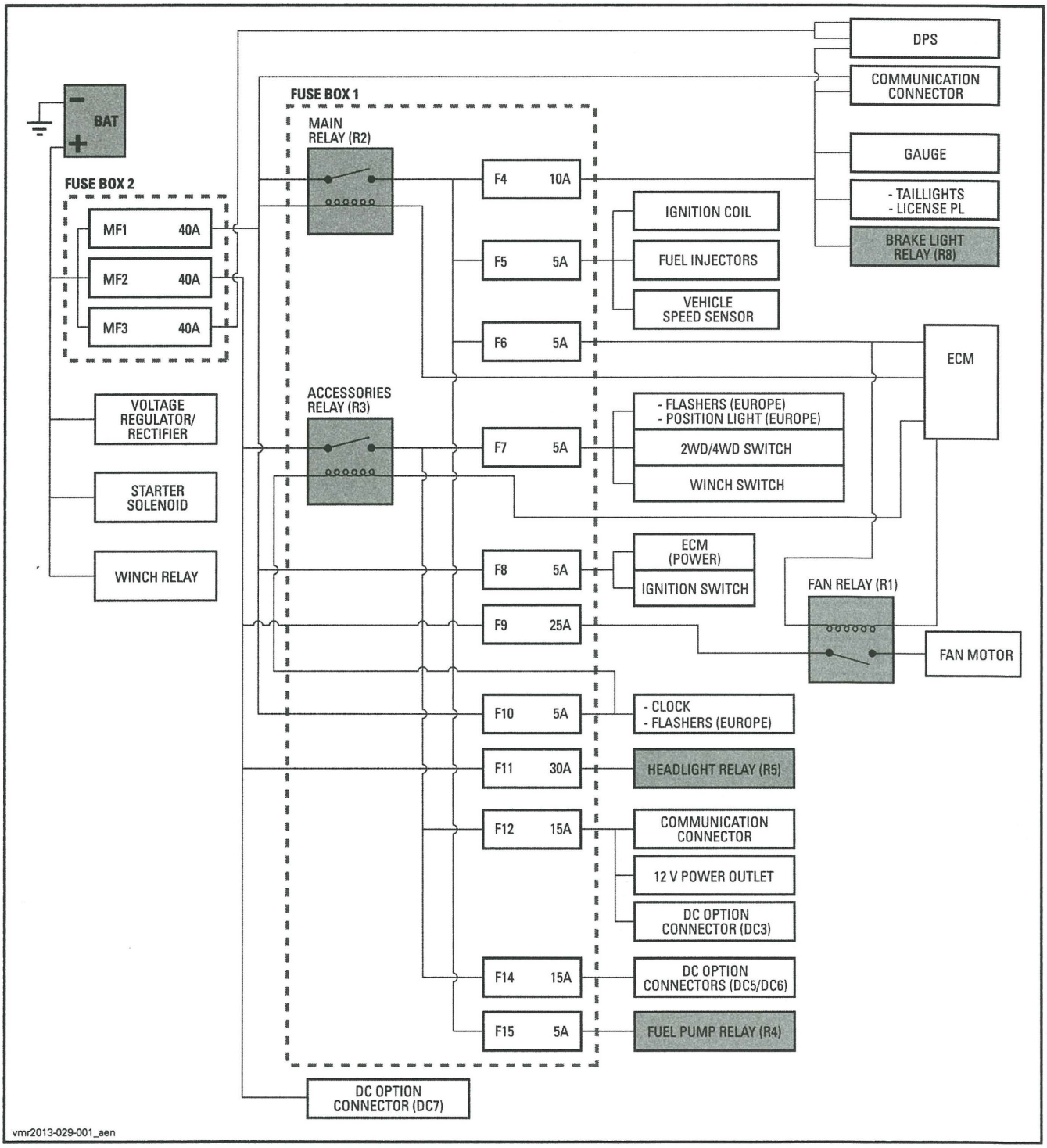

FUSE BOX 1

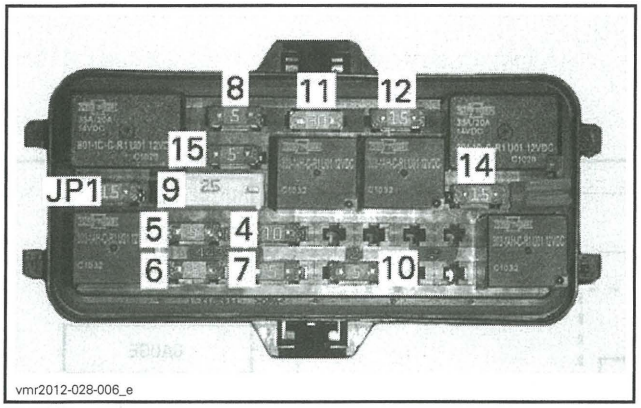

FUSES

FUSE IDENTIFICATION		
Fuse	4	10 A
	5	5 A
	6	5 A
	7	5 A 20 A (Europe)
	8	5 A
	9	25 A
	10	5 A
	11	30 A
	12	15 A
	14	15 A
	15	5 A
	JP1	Jumper 1

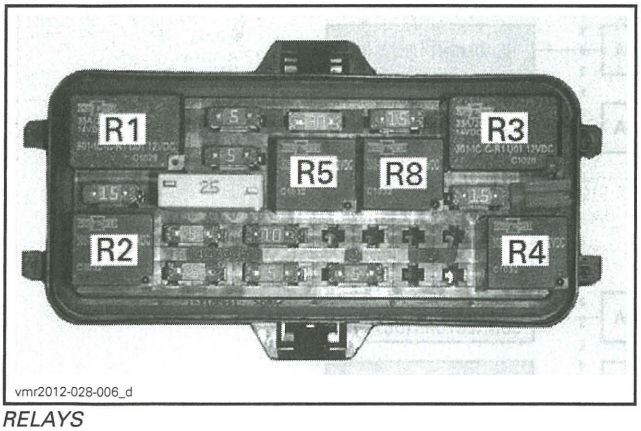

RELAYS

RELAY IDENTIFICATION		RELAY STATE (ON)	RELAY STATE (OFF)
R1	Cooling fan	See *COOLING SYSTEM*	
R2	Main	When ignition key is turned ON **AND** Run/Stop switch is set to RUN	Approximately 30 seconds after ignition key is turned OFF **OR** Approximately 30 minutes if ignition key is left ON
R3	Accessories	Same as main relay	When ignition key is turned OFF **OR** Approximately 30 minutes if ignition key is left ON **OR** When engine speed is less than 1000 RPM for at least 50 minutes
R4	Fuel pump	See *FUEL TANK AND FUEL PUMP*	
R5	Headlights	Same as main relay	When ignition key is turned OFF **OR** When engine speed is less than 1000 RPM for at least 50 minutes
R8	Brake lights	See *BRAKES*	

FUSE BOX 2

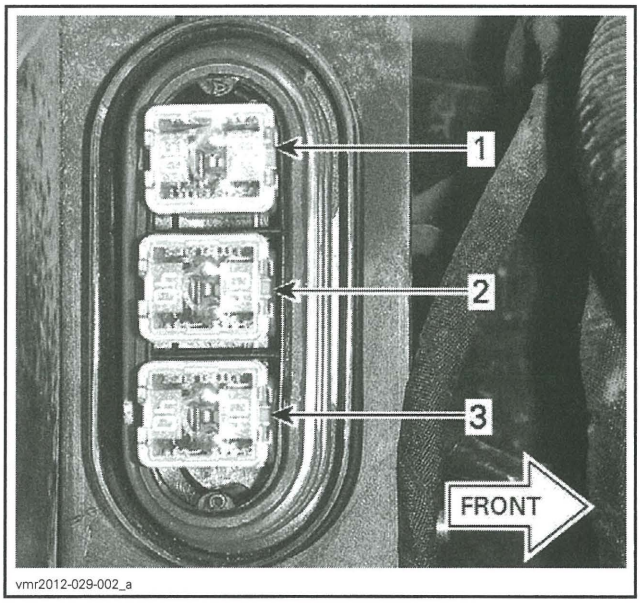

vmr2012-029-002_a

FUSE IDENTIFICATION			
Fuse	1	Main	40 A
	2	Fan/accessories	40 A
	3	DPS (dynamic power steering)	40 A

GROUNDS

All grounds are grouped at the same location on RH side of frame.

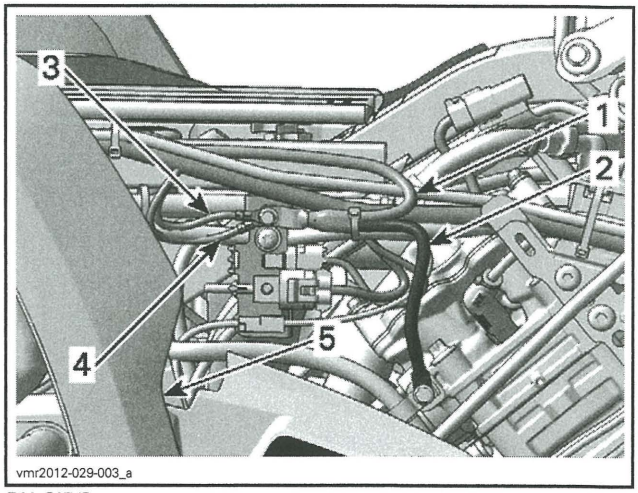

vmr2012-029-003_a

RH SIDE
1. *Battery ground*
2. *Engine ground*
3. *DPS ground (2 wires to ring terminal)*
4. *Wiring harness ground (3 wires to ring terminal)*
5. *RH rear fender*

WIRING HARNESS AND CONNECTORS

SERVICE TOOLS

Description	Part Number	Page
CRIMPING TOOL (HEAVY GAUGE WIRE)	529 035 730	369
ECM ADAPTER TOOL	529 036 166	367
ECM TERMINAL REMOVER 2.25	529 036 175	367
ECM TERMINAL REMOVER 3.36	529 036 174	367

SERVICE TOOLS – OTHER SUPPLIER

Description	Part Number	Page
GM TERMINAL EXTRACTOR	12094430	368
SNAP-ON TERMINAL REMOVER TOOL	TT600-4	364

GENERAL

The illustrations in this subsection are typical. Several variants of the connector types, such as different number of pin cavities, are used on the vehicle.

CONNECTOR ABBREVIATION DESCRIPTION

ABBREVIATION	DESCRIPTION
ACS	Air controlled suspension
BD	RH multifunction switch
BN1	Ground terminal
BN2	Ground terminal
BP1	Positive terminal
CAD	RH front turn light
CAD1	RH front turn light
CAD2	RH front turn light
CAG	LH front turn light
CAG1	LH front turn light
CAG2	LH front turn light
CC	Ignition switch
CL	Cluster
CRD	Rear RH turn light
CRG	Rear LH turn light
DB	Diagnostic connector
DC1	Accessory outlet
DC2	Accessory outlet
DC3	Accessory outlet
DC5	Accessory outlet
DC6	Accessory outlet
DC7	Accessory outlet
DPS1	Dynamic power steering
DPS2	Dynamic power steering
DPS3	Dynamic power steering
FP	Fuel pump
FRR	Rear brake light switch
FRRF	Rear brake light switch (female connector)
FRRF2	Rear brake light switch (female connector)
FRRM	Rear brake light switch (male connector)
FRV	Front brake light switch
FT	Cooling fan
HIC1	Harness interconnect
HIC2	Harness interconnect
HICa	Harness interconnect (CE models)
KX1	Horn
KX2	Horn
MC1	Turn light relay
MC2	Turn light relay
MG1	LH multifunction switch
MG2	LH multifunction switch
MG3	LH multifunction switch
PDB	RH lower headlight
PDH	RH upper headlight
PF1	Front Fuse box
PF2	Rear fuse holder
PGB	LH LO beam headlight
PGH	LH HI beam headlight
PL	License plate light
PPD	RH marker light
PPD1	RH marker light
PPD2	RH marker light
PPG1	LH marker light
PPG2	LH marker light
PRD	Rear RH light
PRG	Rear LH light
RD1	Voltage regulator/rectifier
SS1	Starter solenoid
SS2	Starter solenoid
SW1	Winch relay
SW2	Winch relay
SW4	Winch relay
SWW	Winch remote switch

WIRING HARNESS ARRANGEMENT

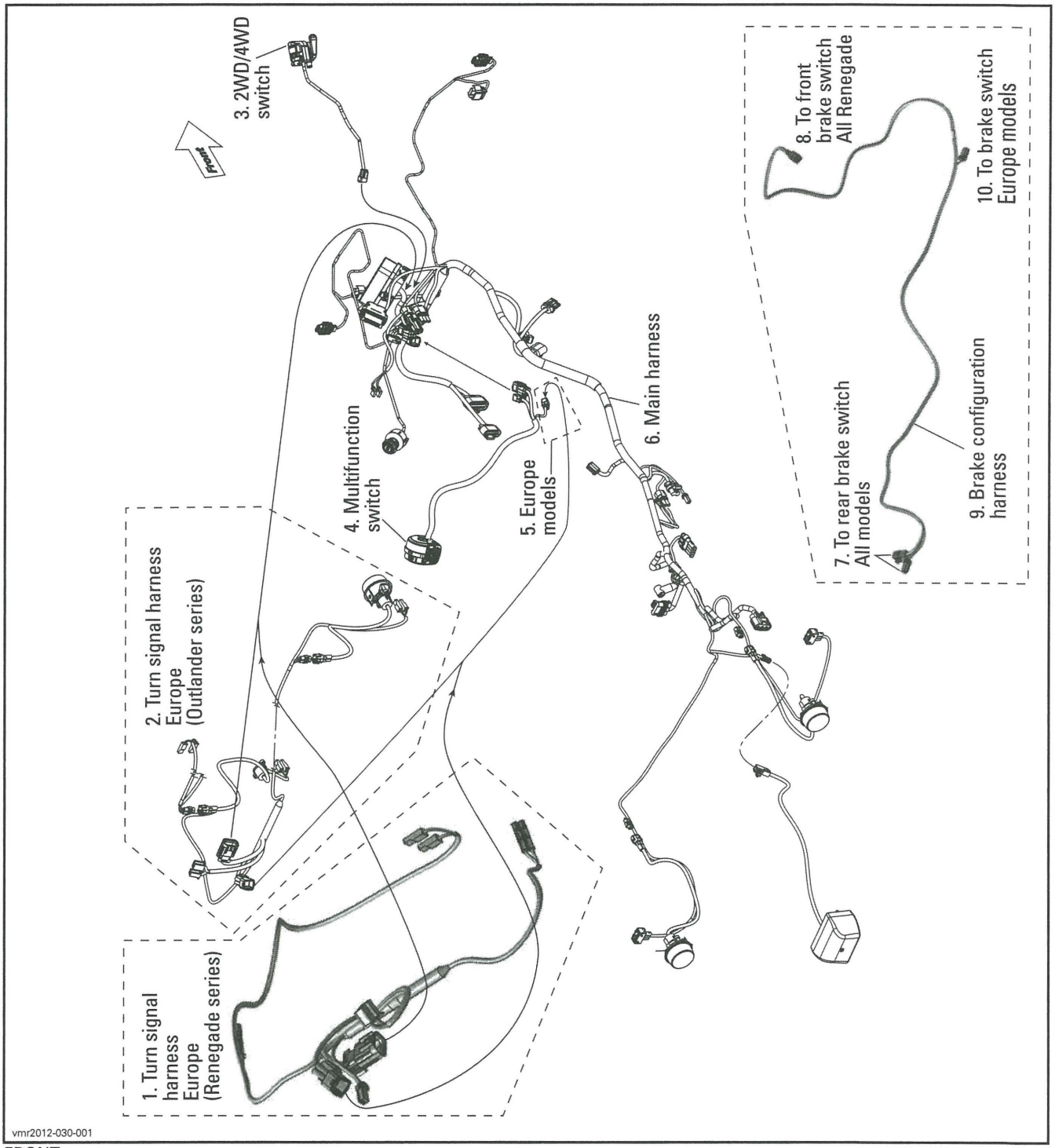

FRONT

1. *Turn signal harness - Europe (Renegade series)*
2. *Turn signal harness - Europe (Outlander series)*
3. *2WD/4WD switch*
4. *Multifunction switch*
5. *Europe models*
6. *Main harness*
7. *To rear brake switch (All models)*
8. *To front brake switch (All Renegade)*
9. *Brake configuration harness*
10. *To brake switch - Europe models*

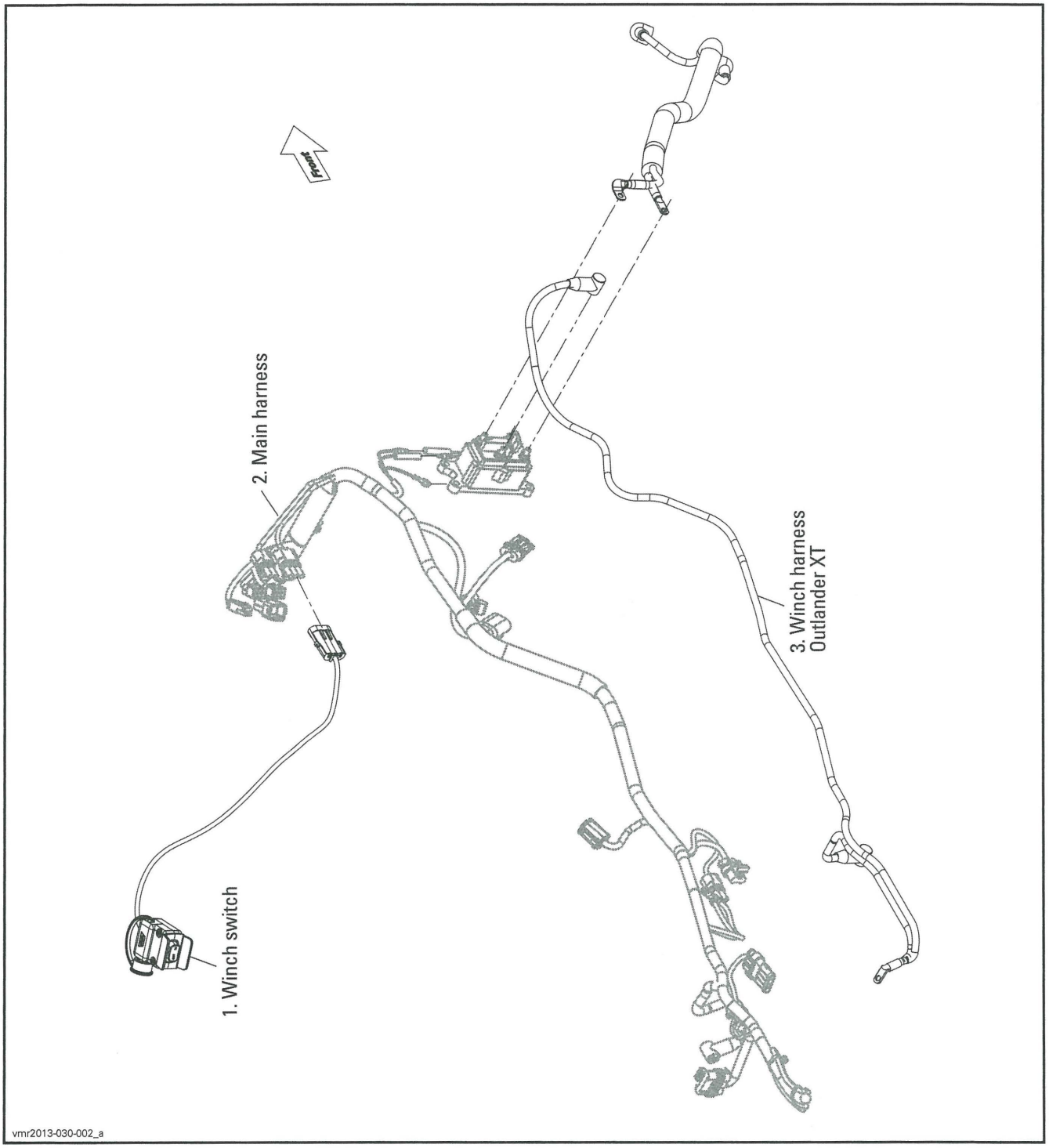

FRONT

1. *Winch switch*
2. *Main harness*
3. *Winch harness (Outlander XT, XT-P and LTD models)*

WIRING HARNESS ROUTING

All Models Except CE

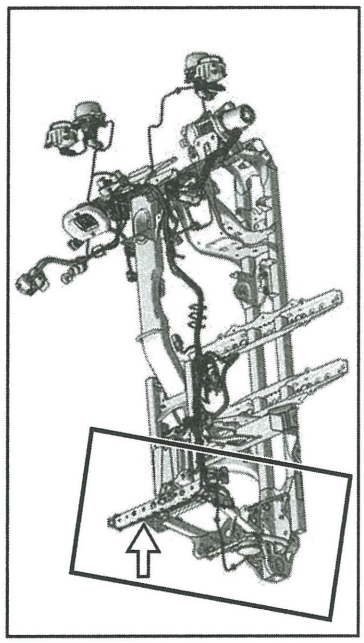

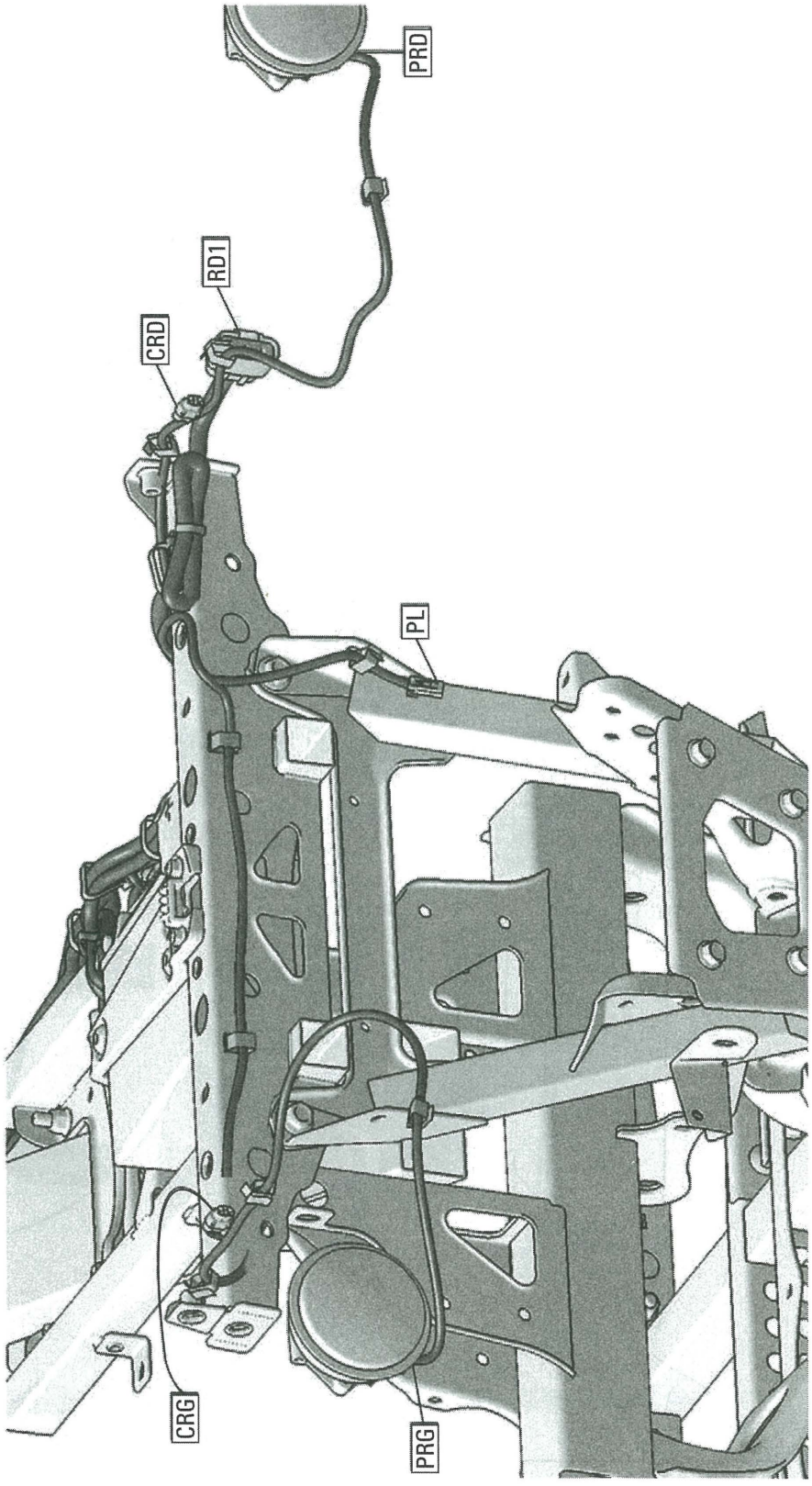

vmr2013-030-001

All Models Except CE

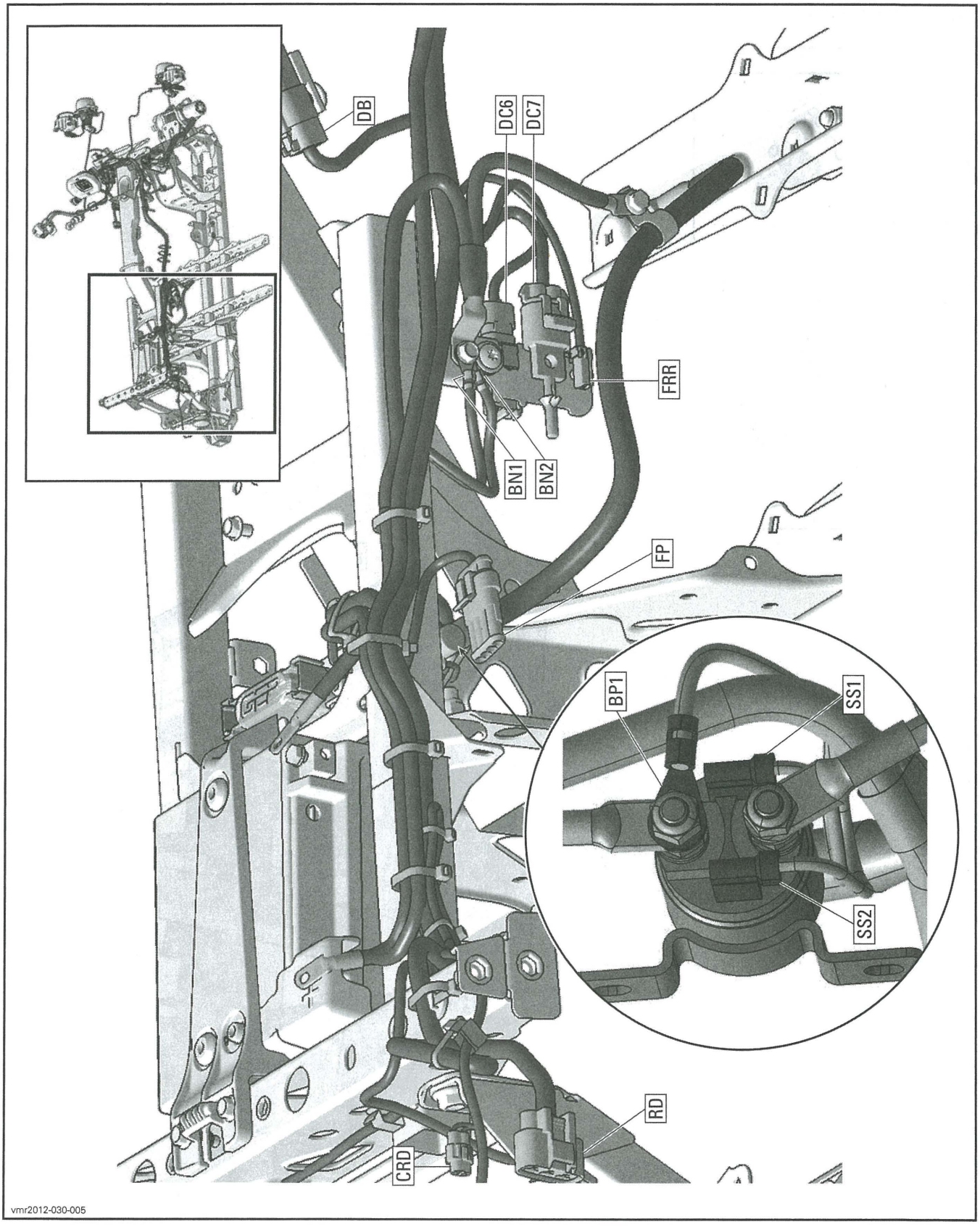

All Models Except CE

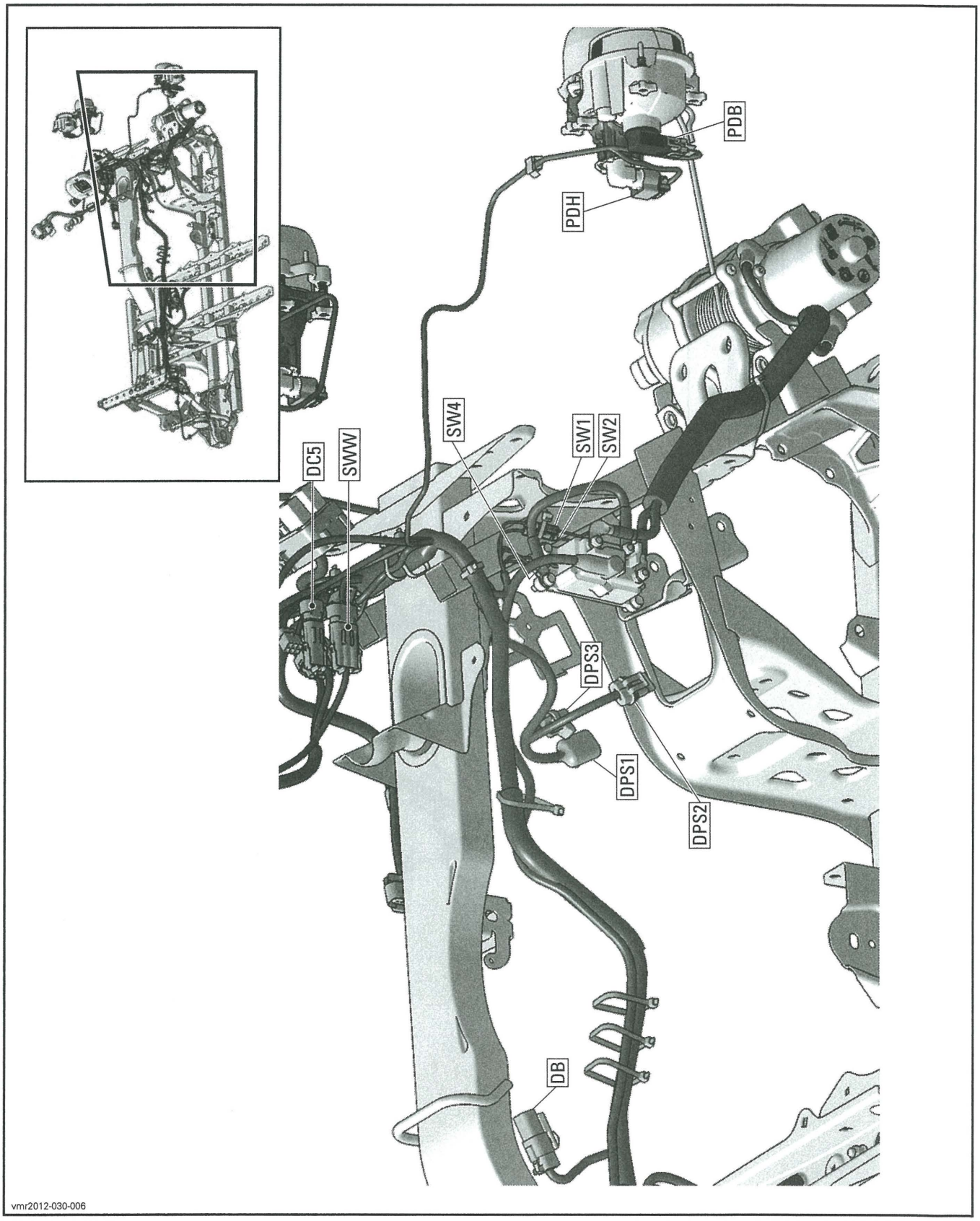

vmr2012-030-006

All Models Except CE

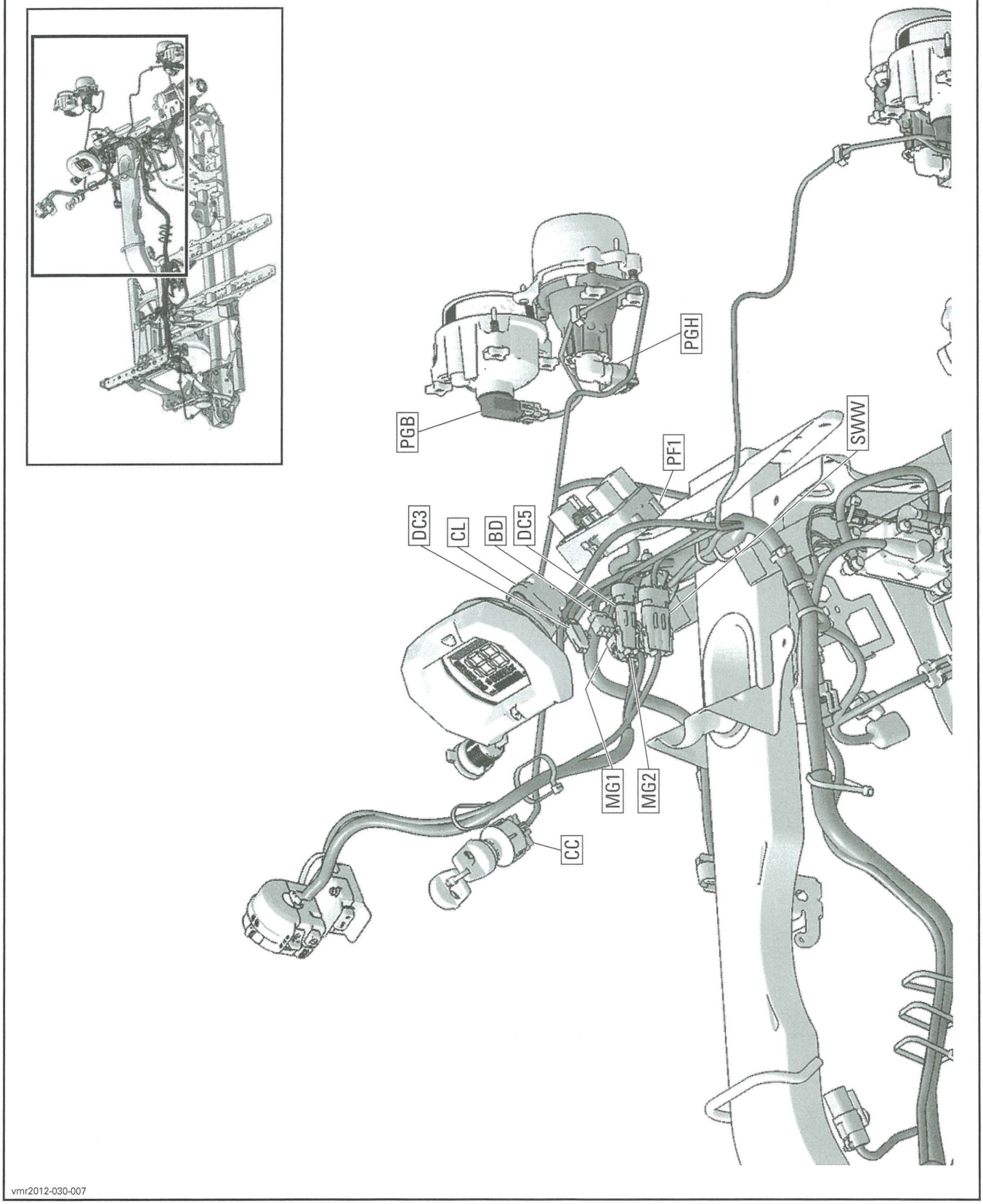

vmr2012-030-007

All Models Except CE

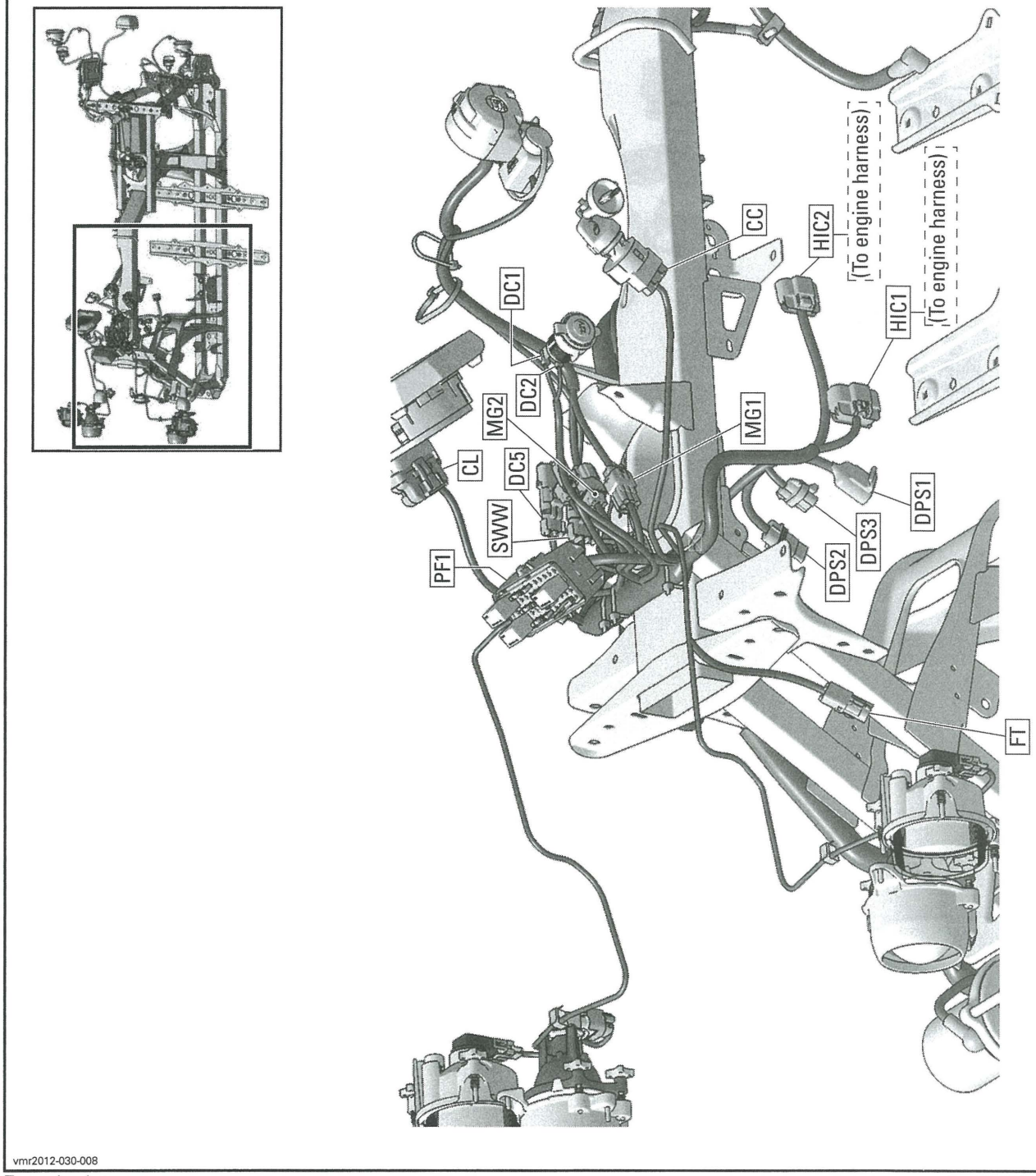

To engine harness

All Models Except CE

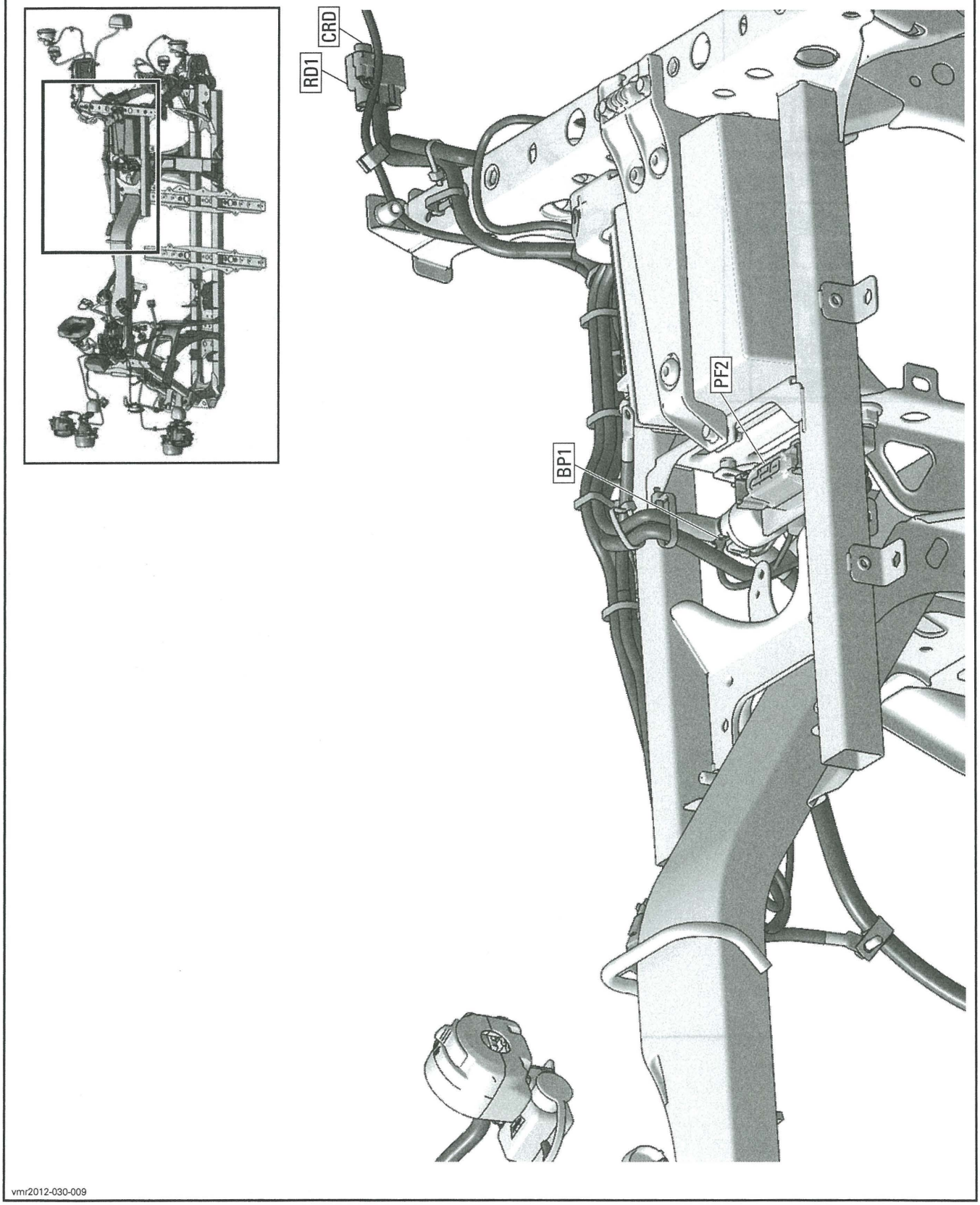

vmr2012-030-009

All Models Except CE

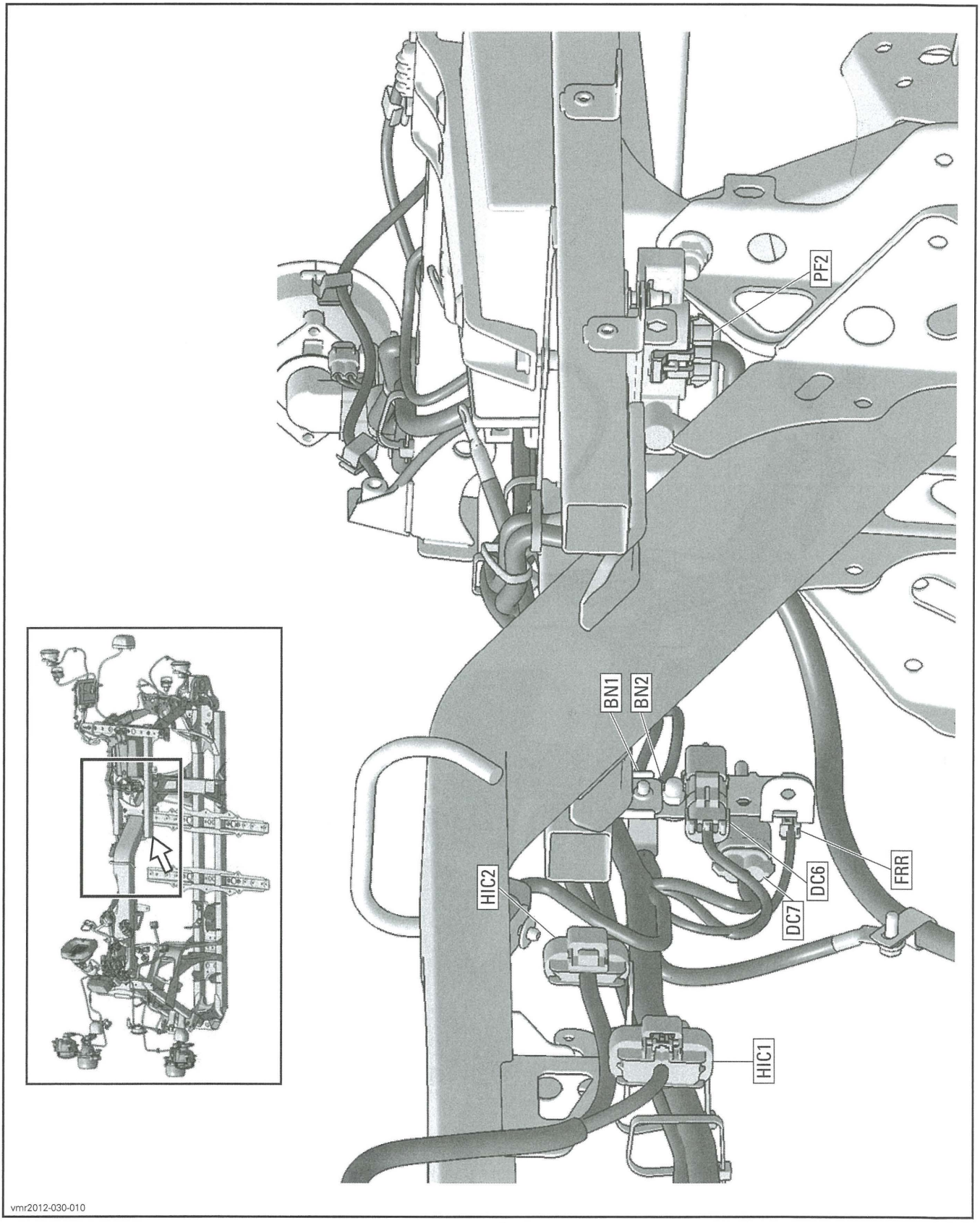

vmr2012-030-010

CE Models

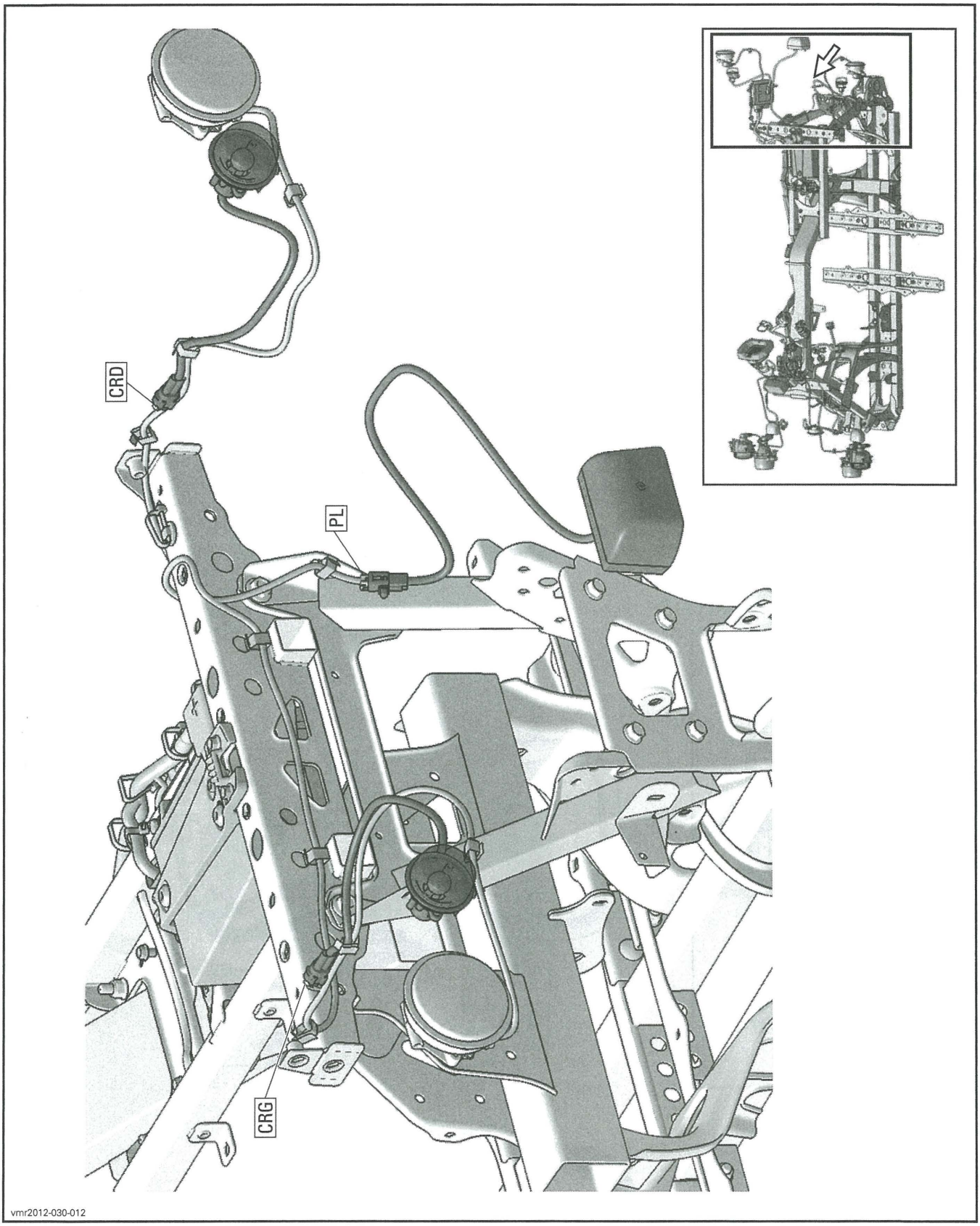

vmr2012-030-012

CE Models

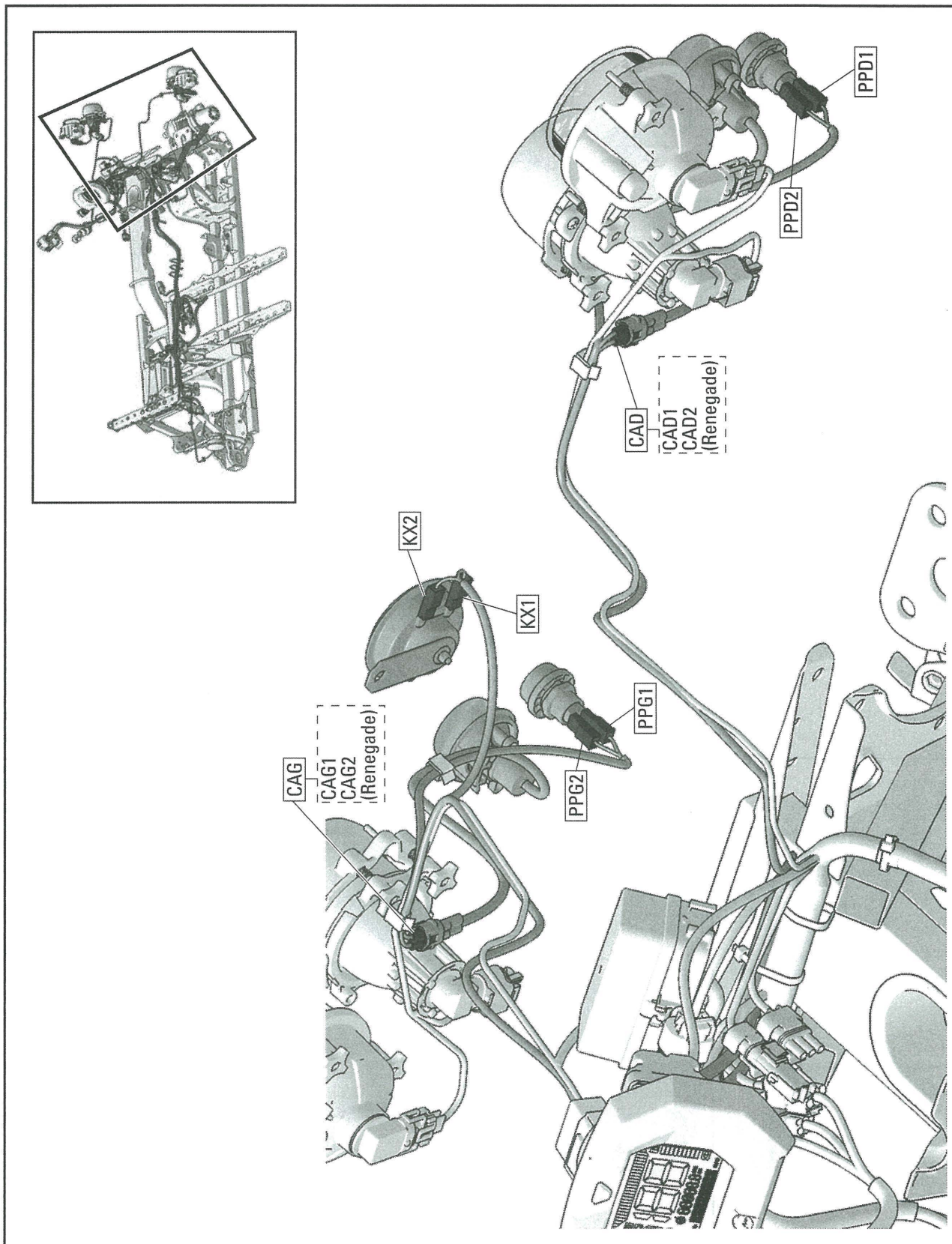

vmr2012-030-013

CE Models

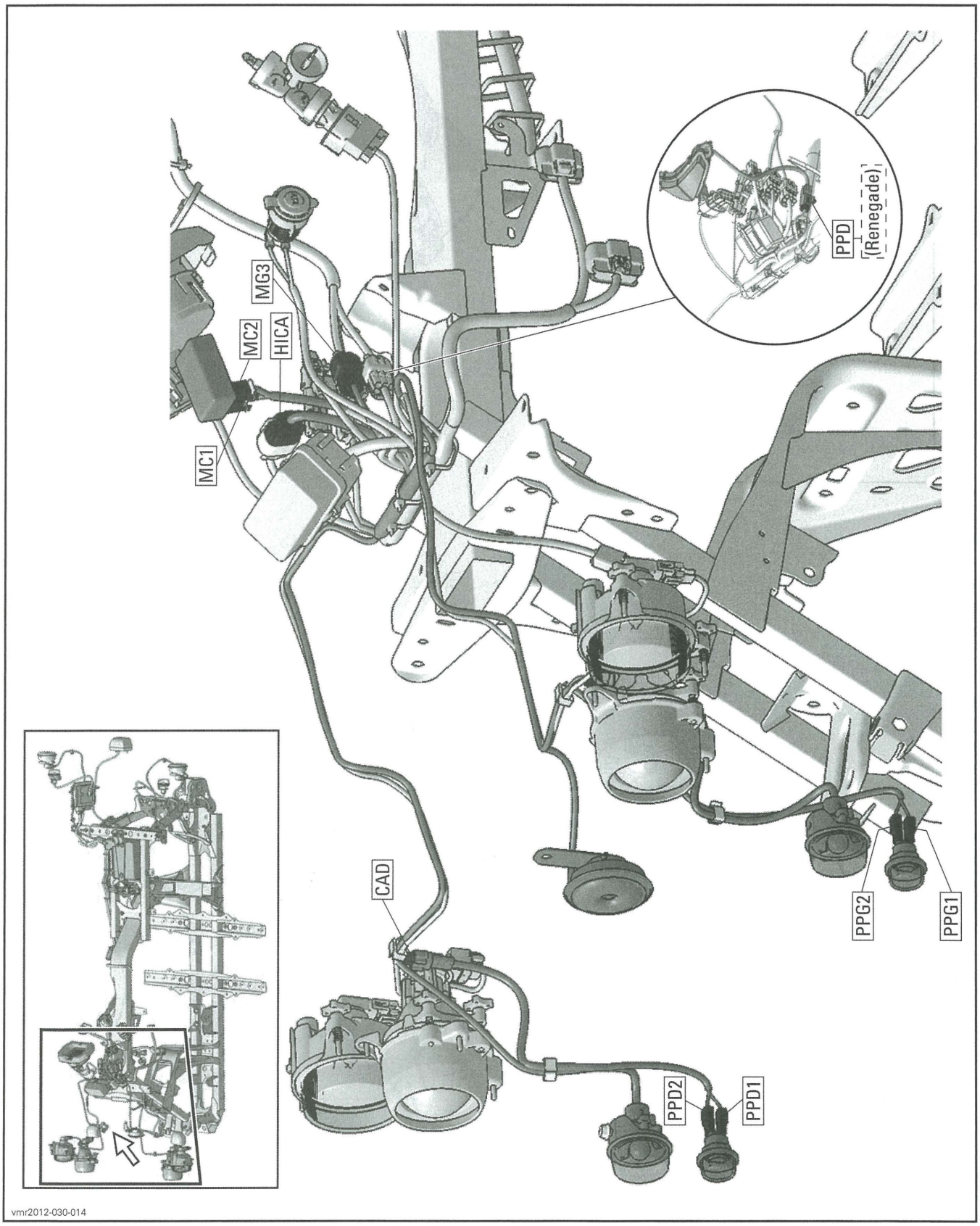
MG3
MC2
HICA
MC1
PPD
(Renegade)
CAD
PPG2
PPG1
PPD2
PPD1
vmr2012-030-014

WIRING HARNESS SPLICE LOCATION

Main Harness (Rear Part) — All Models

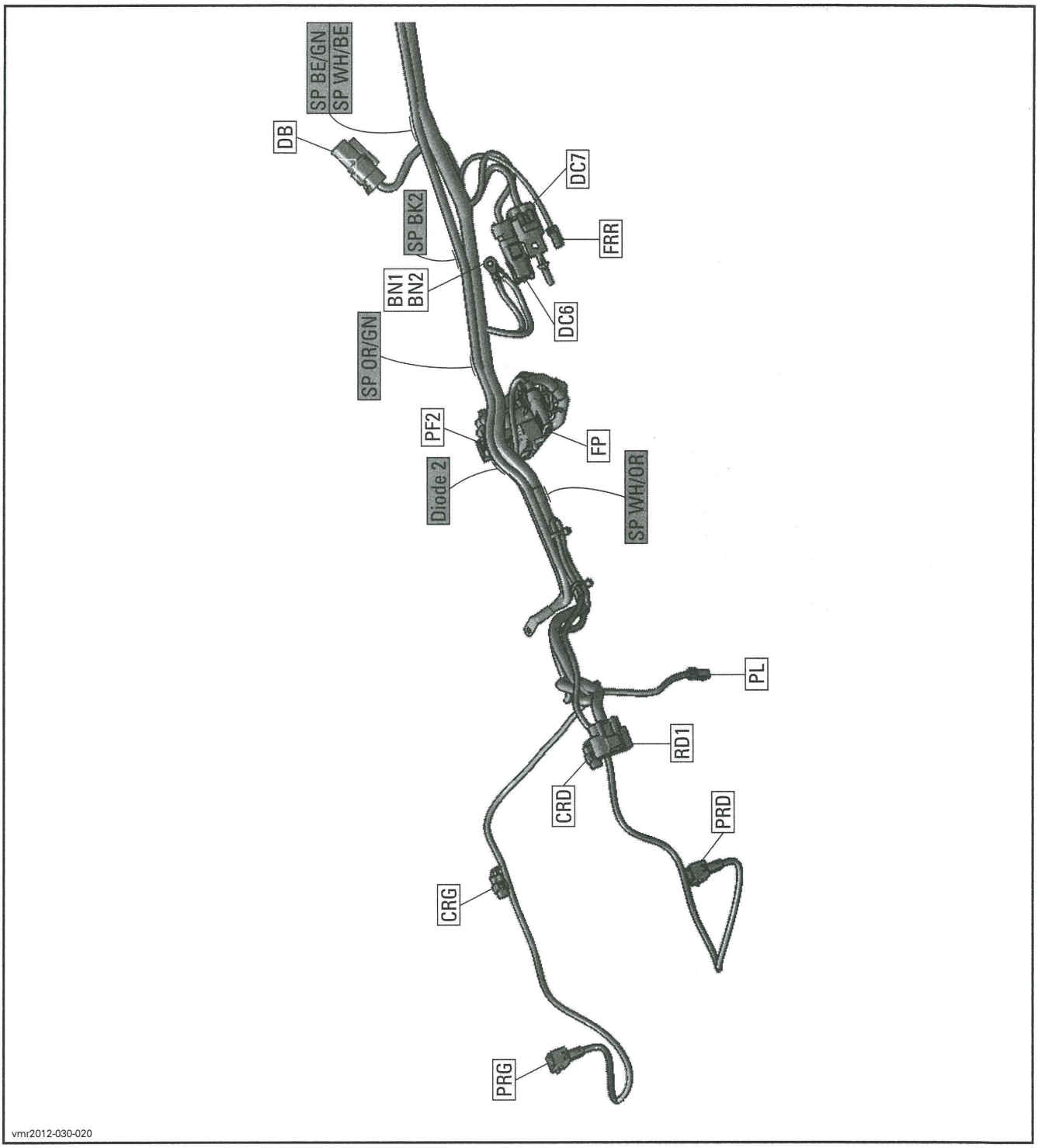

Main Harness (Front Part 1/2) — All Models

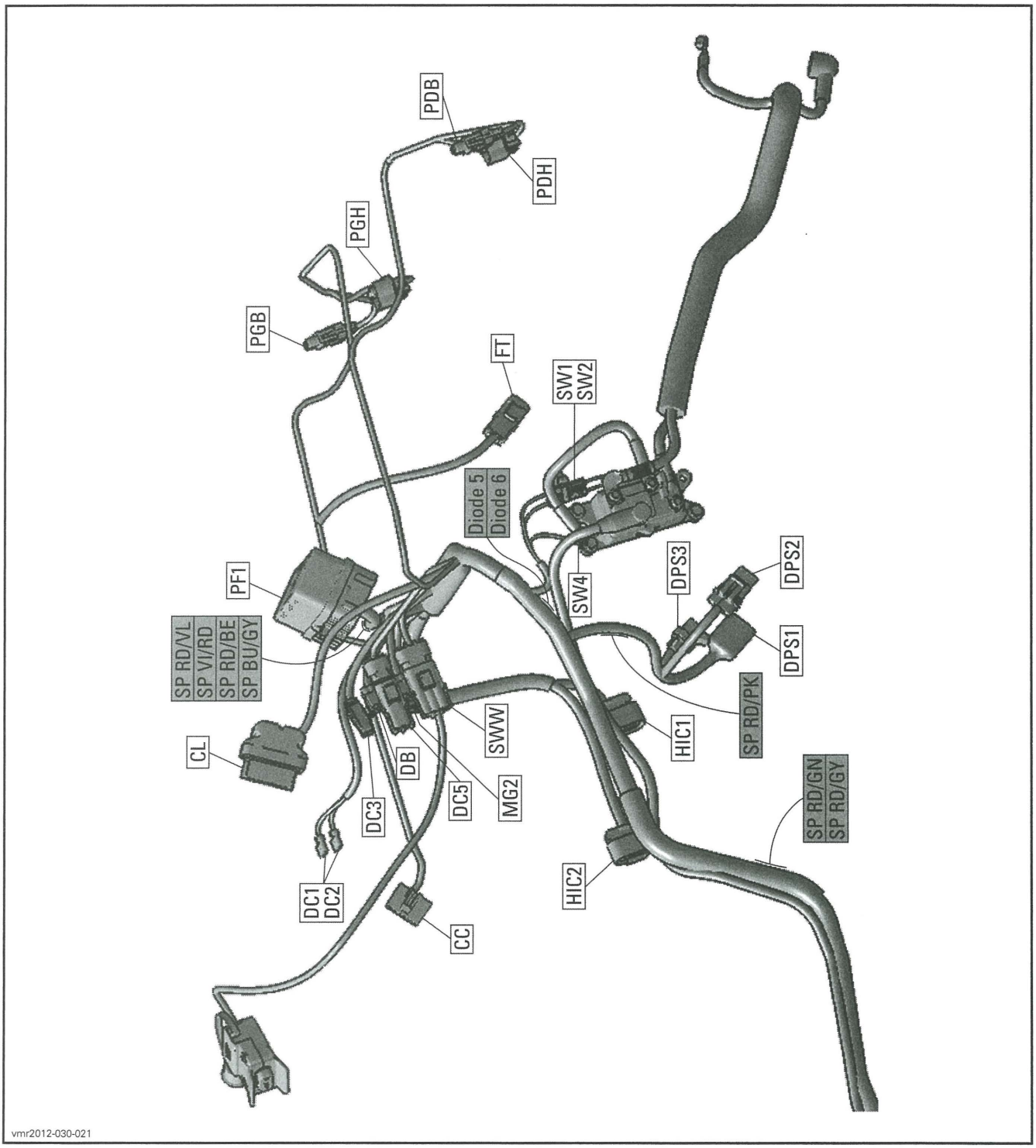

Main Harness (Front Part 2/2) — All Models

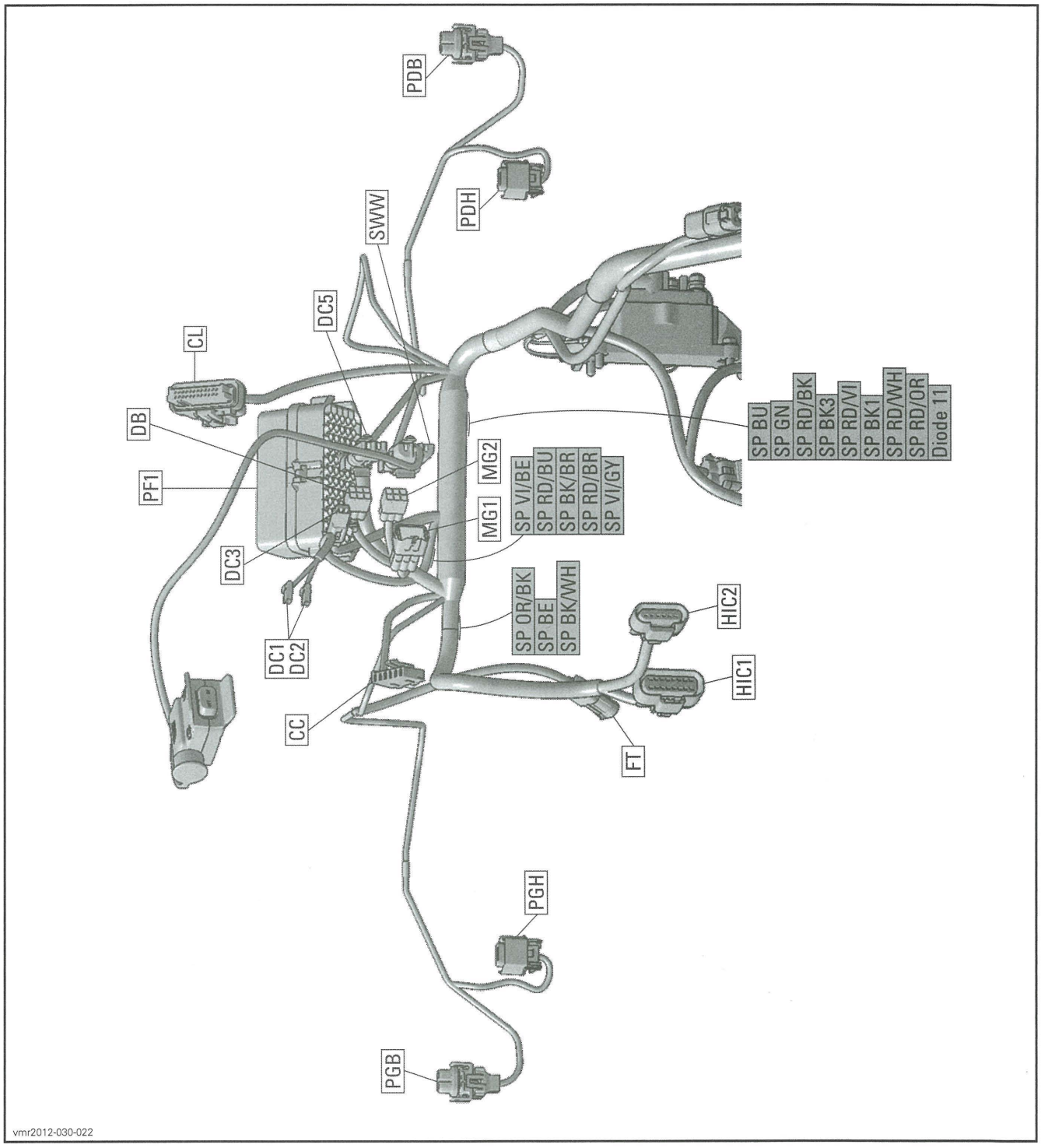

Turn Indicator Light Harness — Outlander CE Models

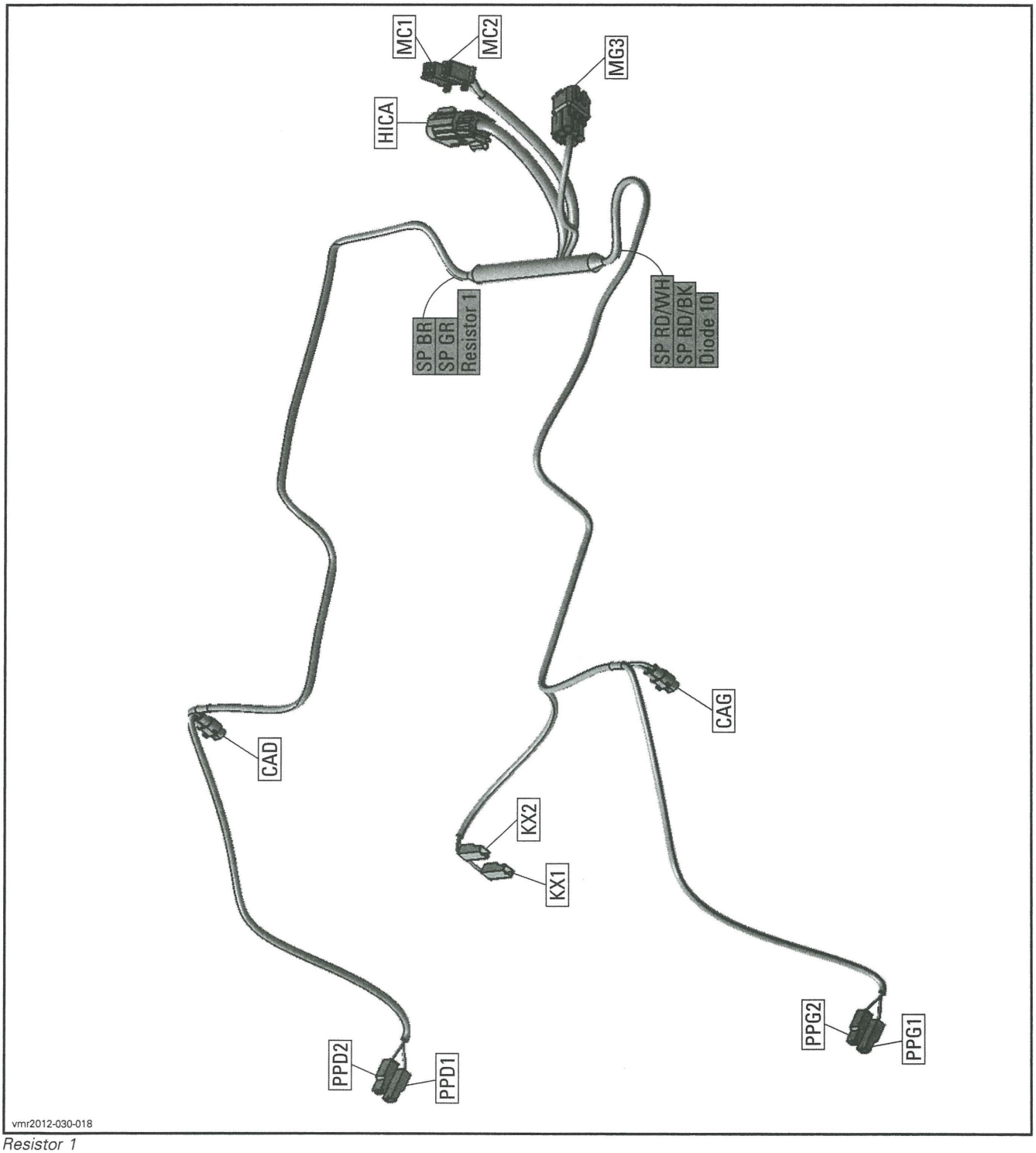

Resistor 1

Turn Indicator Light Harness — Renegade CE Models

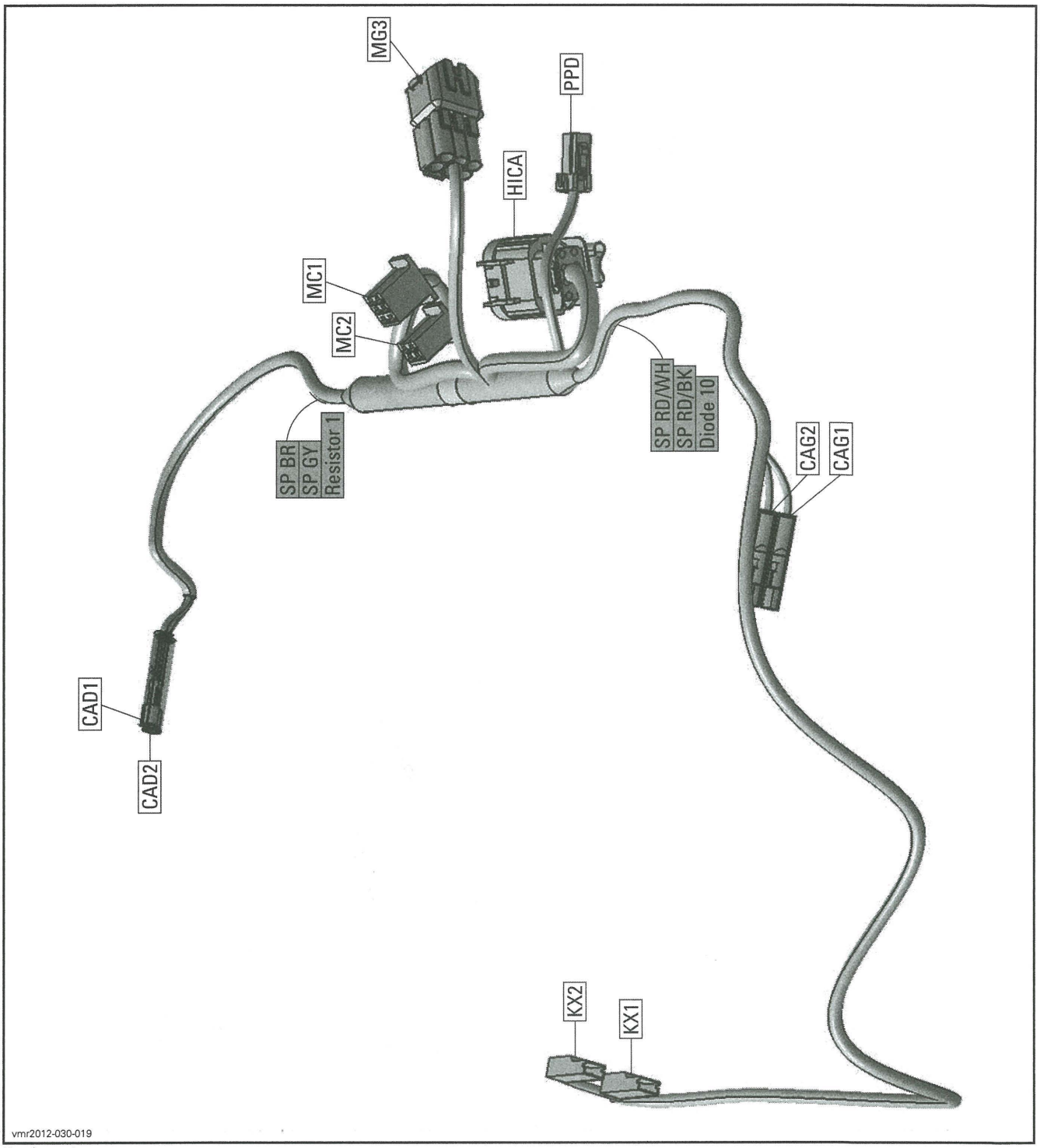

Resistor 1

Brake Harness — All Models

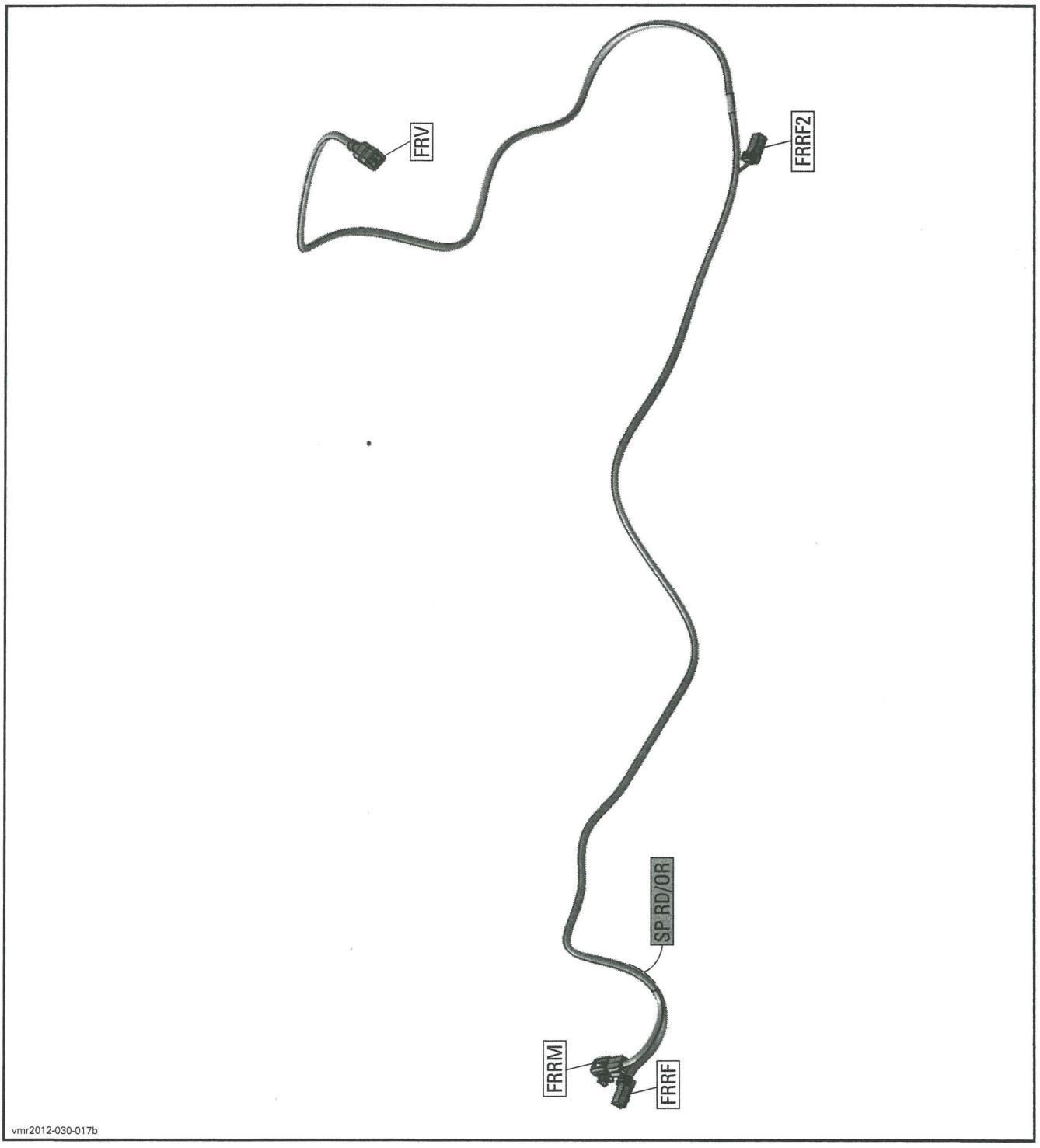

PROCEDURES

DEUTSCH CONNECTORS

Deutsch Connector Application

A variety of Deutsch connectors are used on various systems:

- Diagnostic connector
- Vehicle speed sensor (VSS) connector.

The following procedures may be used on each as they are similar in construction.

Deutsch Connector Disassembly and Reassembly

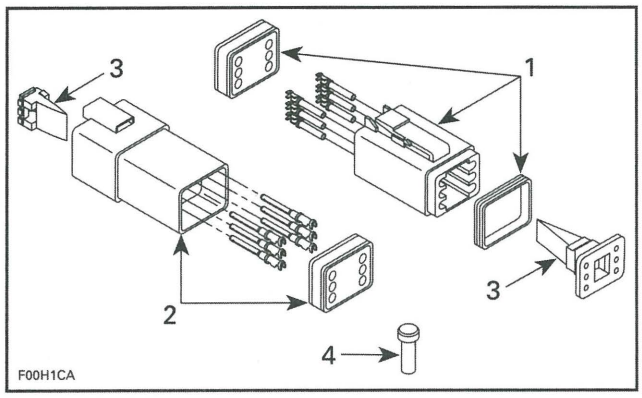

TYPICAL —DEUTSCH CONNECTOR
1. *Male connector*
2. *Female connector*
3. *Secondary lock*
4. *Sealing cap*

NOTICE **Do not apply dielectric grease on terminal inside connector.**

Terminal Removal

To remove terminals from connector, proceed as follows:

1. Using long nose pliers, pull out the secondary plastic lock from between the terminals.

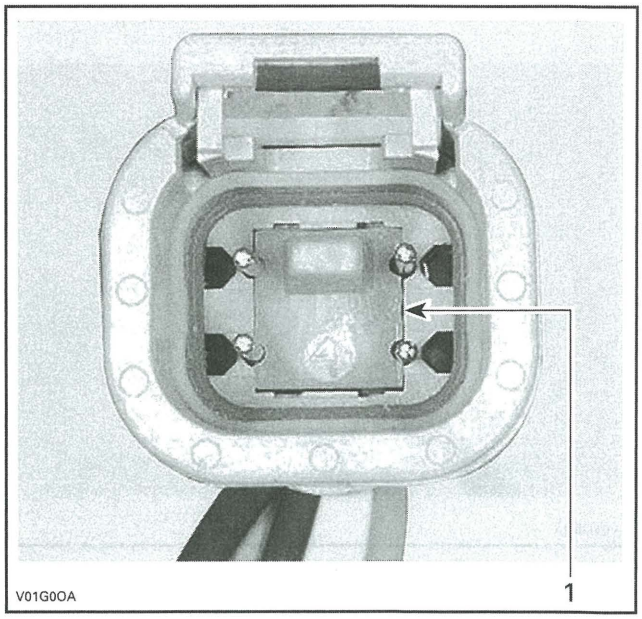

TYPICAL — FEMALE CONNECTOR
1. *Female lock*

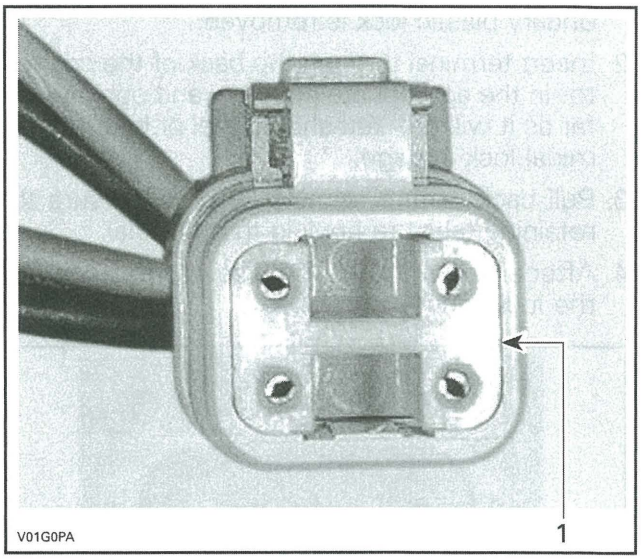

TYPICAL — MALE CONNECTOR
1. *Male lock*

NOTE: Before pin extraction, push wire forward to relieve pressure on retaining tab.

2. Insert a 4.8 mm (.189 in) wide screwdriver blade inside the front of the terminal cavity.
3. Pry the retaining tab away from the terminal while gently pulling the wire and terminal out of the back of the connector.

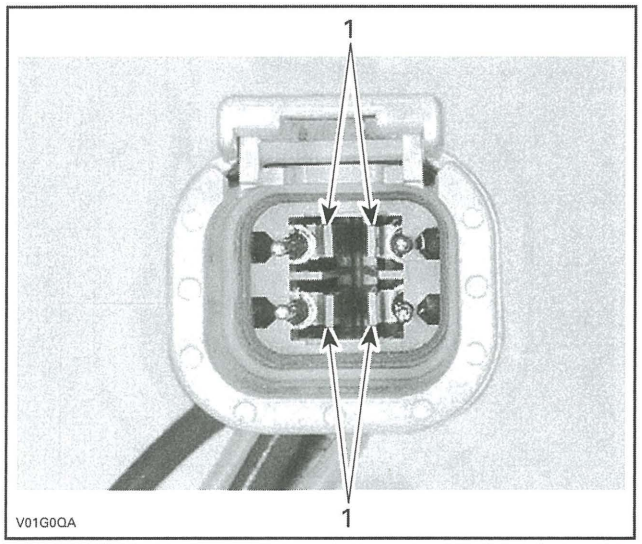

TYPICAL — FEMALE CONNECTOR
1. Retaining tabs

Terminal Insertion

1. For insertion of a terminal, ensure the secondary plastic lock is removed.
2. Insert terminal through the back of the connector in the appropriate position, and push it in as far as it will go. You should feel or hear the terminal lock engage.
3. Pull back on the terminal wire to be sure the retaining tabs are holding the terminal.
4. After all required terminals have been inserted, the lock must be installed.

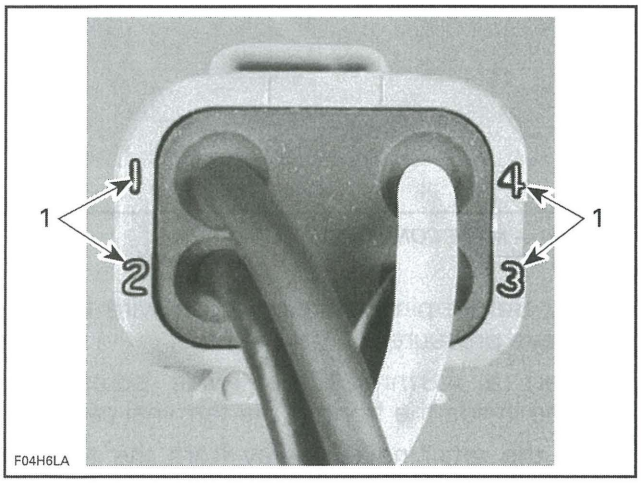

TYPICAL — CONNECTOR PIN-OUT
1. Terminal position identification numbers

PACKARD CONNECTORS

Packard Connector Application

Packard connectors are used to connect:
- Electrical harnesses
- Gauges.

3-Pin Packard Connector

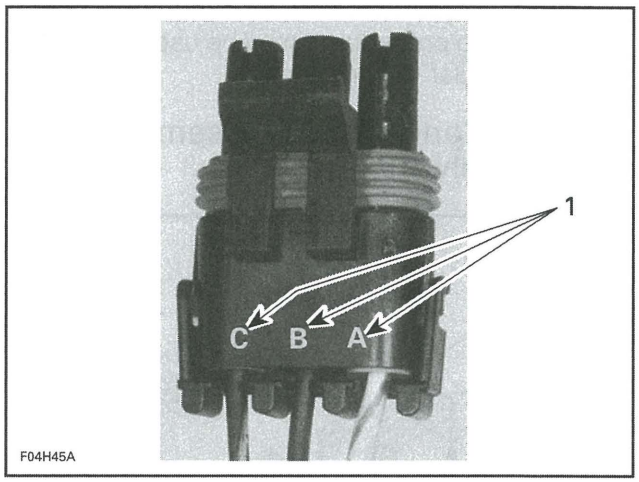

VIEW OF A 3-PIN PACKARD CONNECTOR
1. Identification letters

NOTE: This type of connector also comes in other pin configurations.

To remove a terminal from a 3-pin Packard connector, use the SNAP-ON TERMINAL REMOVER TOOL (P/N TT600-4).

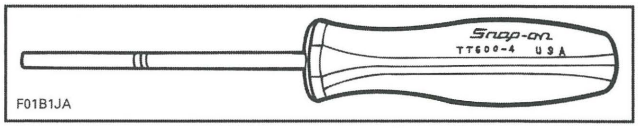

⚠ WARNING

Ensure all terminals are properly crimped on wires and connectors are properly fastened.

PACKARD CONNECTOR (MULTIFUNCTION GAUGE)

Firmly push down tab and hold to unlock connector while pulling it out.

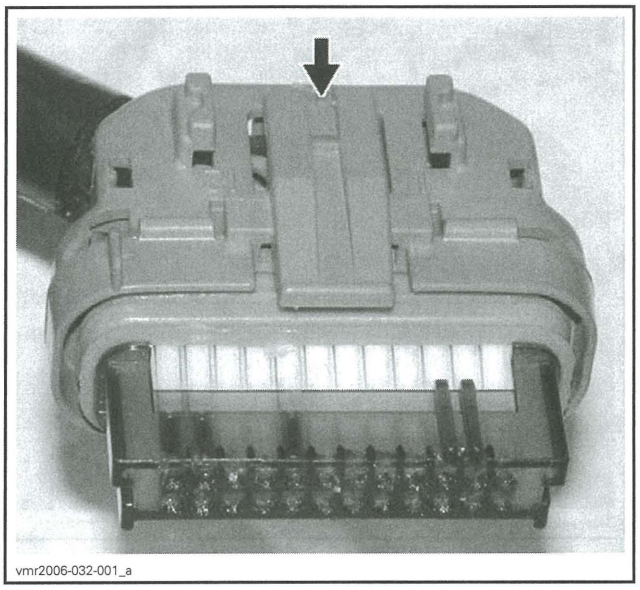
vmr2006-032-001_a

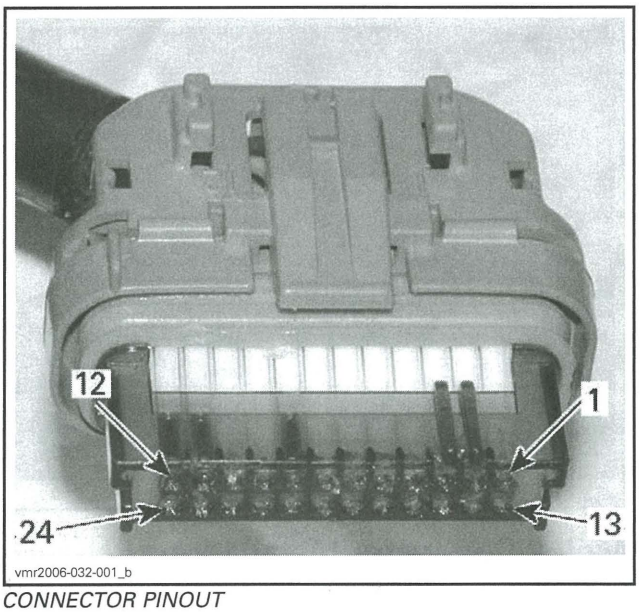

vmr2006-032-001_b

CONNECTOR PINOUT

Push on both tabs to remove retainer.

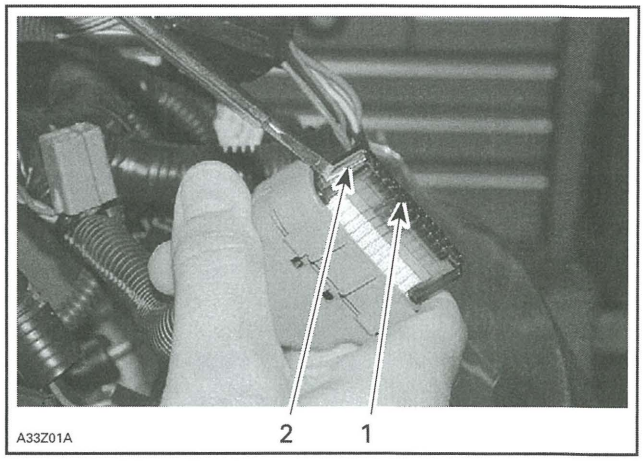

TYPICAL
1. *Retainer*
2. *Tab (one on each side)*

Open housing by lifting 4 tabs.

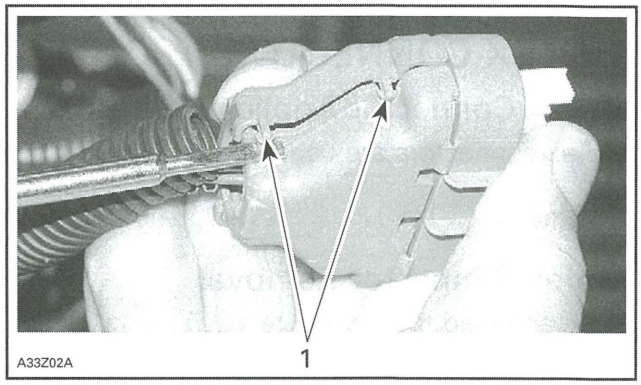

TYPICAL
1. *Tabs (2 on each side)*

Lift the top plastic lock of the female terminal to be removed and hold in position. Lift the female terminal to unlock from the housing and push out of housing.

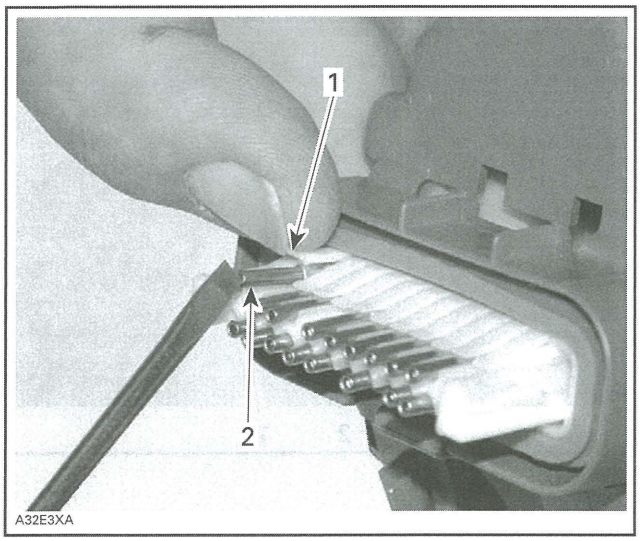

TYPICAL
1. *Lift and hold plastic lock*
2. *Lift to unlock and push out*

MOLEX CONNECTOR

Molex Connector Application

Molex connectors are used on the following system:

– ECM

Molex Connector Removal

Push and hold the locking tab.

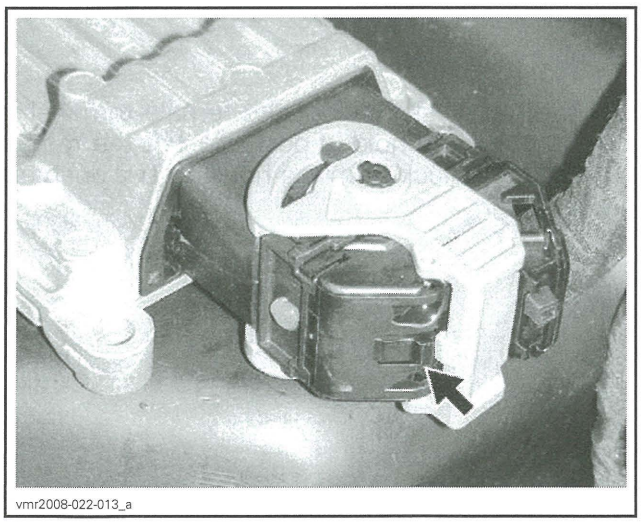

Rotate connector lock until it stops.

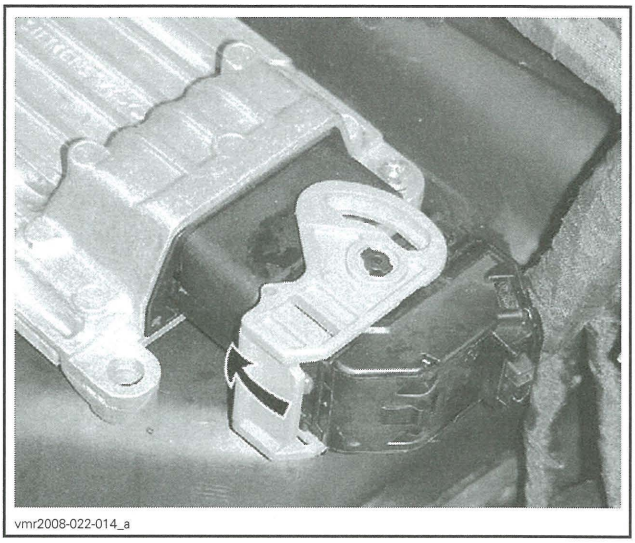

Pull out connector.

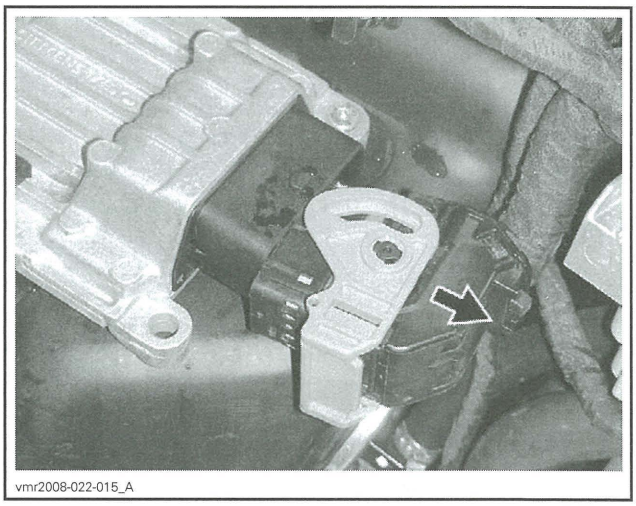

Molex Connector Installation

Fully open connector lock.

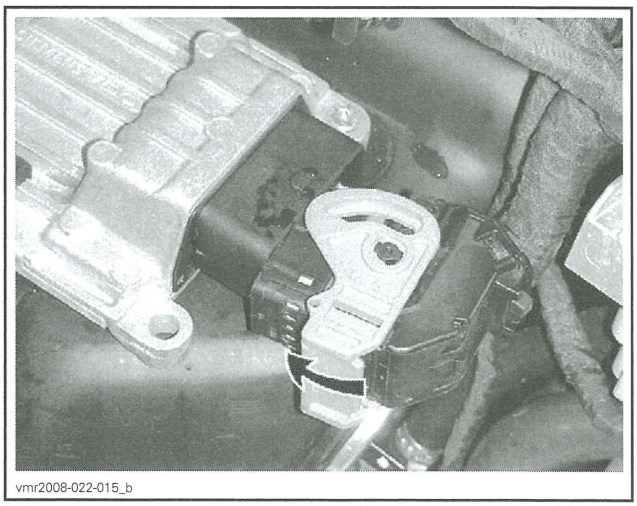

Install connector to ECM.

Rotate connector lock until it snaps locked.

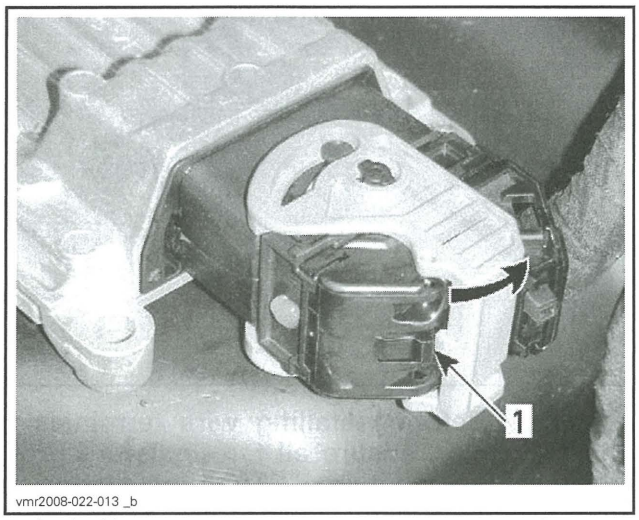

1. Locked here

Molex Connector Probing

The most recommended and safest method to probe ECM connector terminals is to use the ECM ADAPTER TOOL (P/N 529 036 166). This tool will prevent deforming or enlarging terminals which would lead to bad ECM terminal contact creating intermittent or permanent problems.

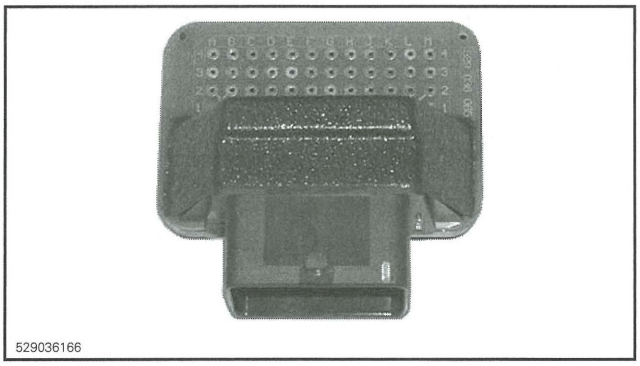

Disconnect the ECM connector and reconnect on the tool connector. Probe required terminals directly in the tool holes.

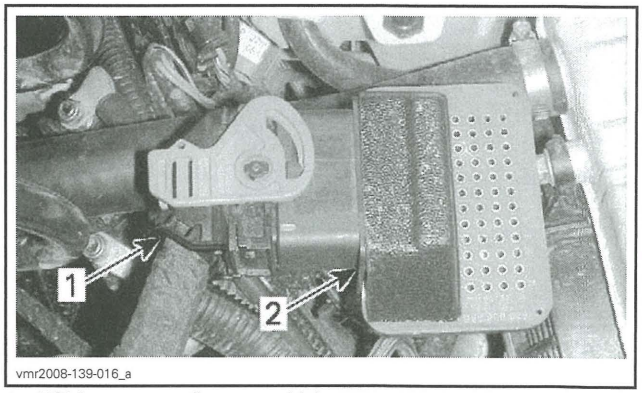

1. ECM connector (harness side)
2. ECM adapter

NOTICE **Never probe directly on ECM harness connector. This could change the shape or enlarge the terminals and create intermittent or permanent contact problems.**

Molex Connector Inspection

Before replacing an ECM, always check electrical connections.

1. Ensure connector locking mechanism is functioning properly.
2. Ensure all wire terminals (pins) are properly locked in the connector.
3. Ensure they are very tight, make good contact with the pins in the ECM.
4. Ensure the pins in the harness connector and the ECM connector are clean, shiny and corrosion-free.
5. Check wiring harness for signs of scoring.

NOTE: A "defective ECM module" could possibly be repaired simply by disconnecting and reconnecting it.

NOTICE **Do not apply any lubricant product to the pins of the ECM connector.**

Molex Connector Terminal Removal (Harness Connector)

To remove a signal terminal from the ECM harness connector, use the ECM TERMINAL REMOVER 2.25 (P/N 529 036 175).

To remove a power terminal, use the ECM TERMINAL REMOVER 3.36 (P/N 529 036 174).

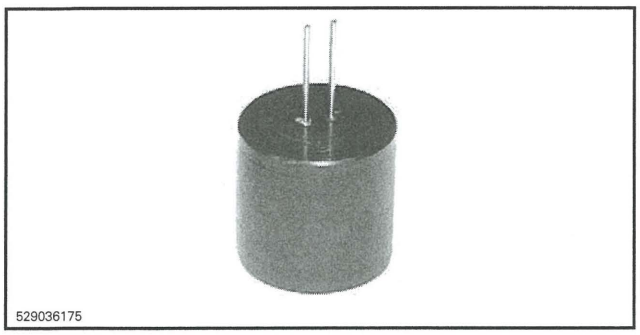
529036175

1. Remove rear protector from connector.
2. Pull out the connector lock.

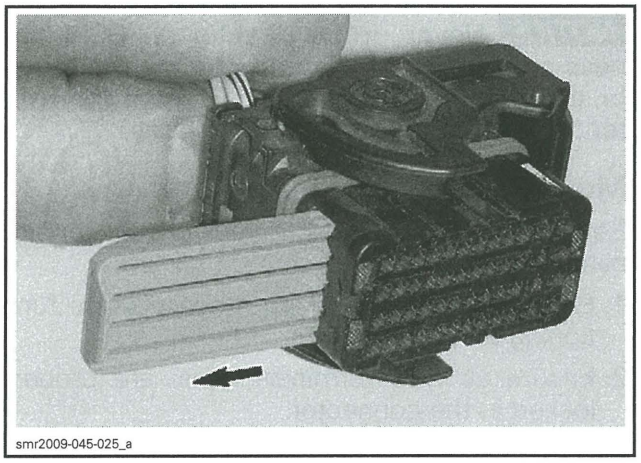
smr2009-045-025_a

3. Insert tool to unlock terminal.

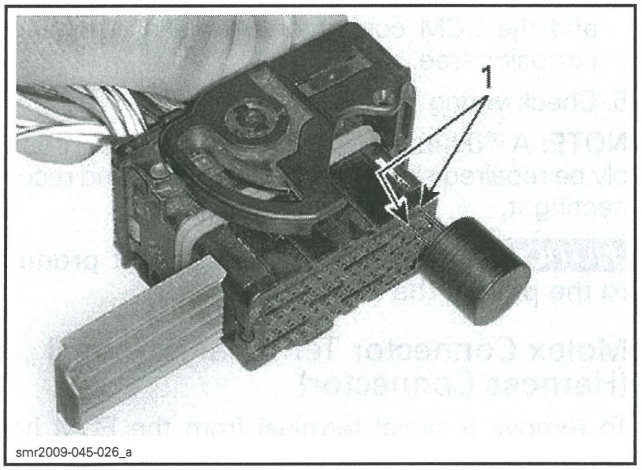

smr2009-045-026_a

1. Unlock here

4. Gently pull on the wire to extract the terminal out the back of the connector.

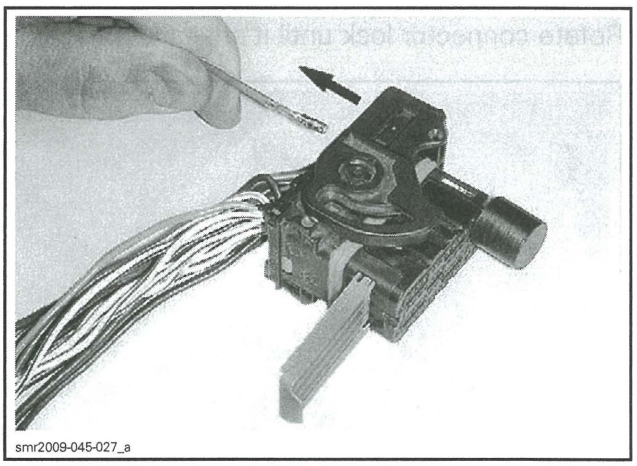
smr2009-045-027_a

NOTICE **Before installing wire terminals in the connector, ensure all terminals are properly crimped on wires. After installation of wire terminals in the connectors, ensure they are properly locked by gently pulling on them as if to extract them.**

FURUKAWA CONNECTOR

Furukawa Connector Application

Voltage regulator/rectifier.

Terminal Removal

1. Remove the secondary lock (plastic insert).

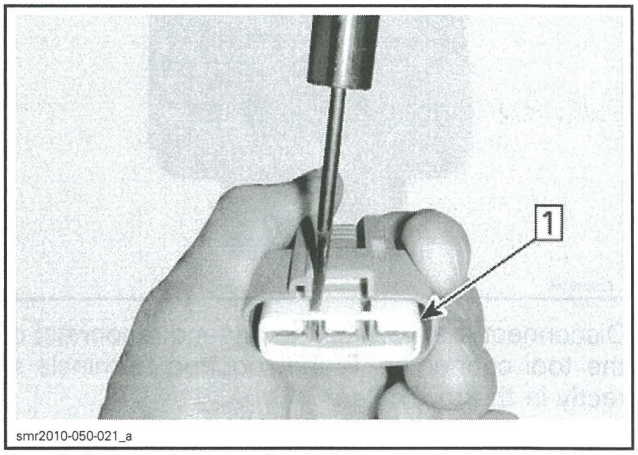

smr2010-050-021_a

Step 1: Remove the secondary lock

2. Carefully insert the GM TERMINAL EXTRACTOR (P/N 12094430) between the lock and the pin to release the pin.

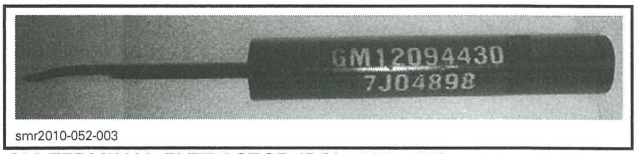

smr2010-052-003

GM TERMINAL EXTRACTOR (P/N 12094430)

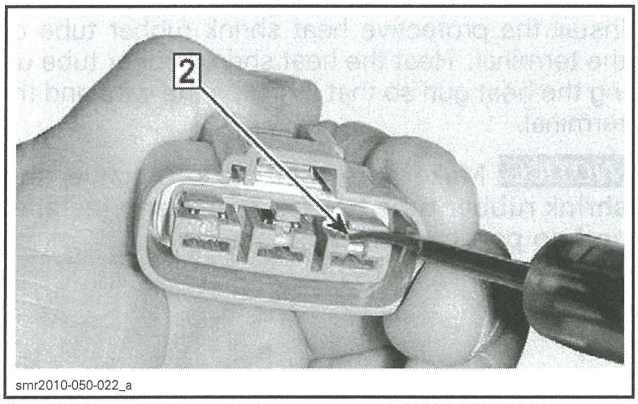

Step 2: Insert GM terminal extractor tool (P/N 12094430)

3. Gently pull on the wire to extract the pin out the back of the connector.

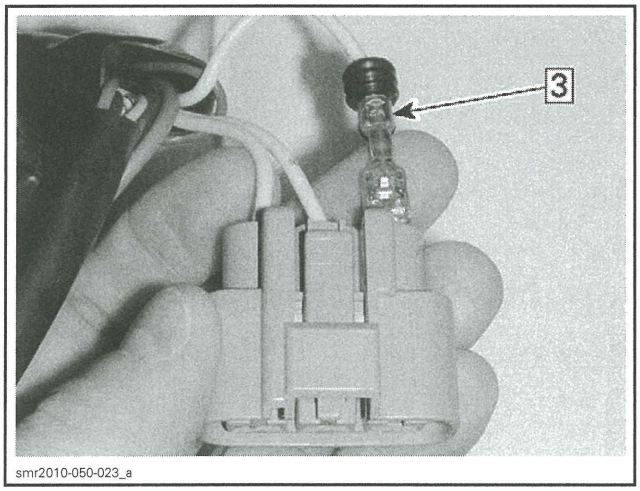

Step 3: Pull wire to extract pin

NOTICE **Before installing terminals in the connectors, ensure all terminals are properly crimped on the wires. After installation of the wire terminals in the connectors, ensure they are properly locked by gently pushing on them as if to extract them.**

BATTERY AND STARTER CABLE TERMINALS

Cable Crimping

Carefully strip the wire approximately to 10 mm (3/8 in) in length, using a wire stripping tool or sharp blade/knife.

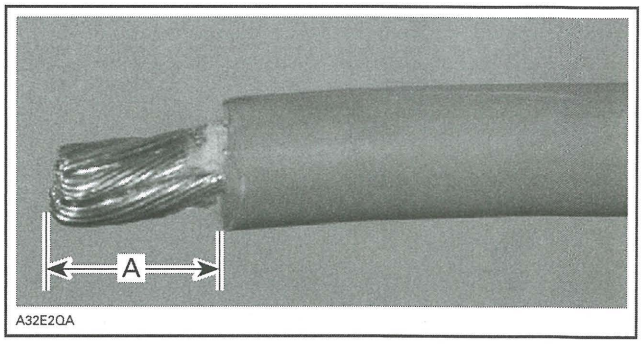

A. 10 mm (3/8 in)

NOTE: Make sure not to cut wire strands while stripping the wire.

Install the appropriate terminal on the wire according to the requirement. Refer to appropriate *PARTS CATALOG*.

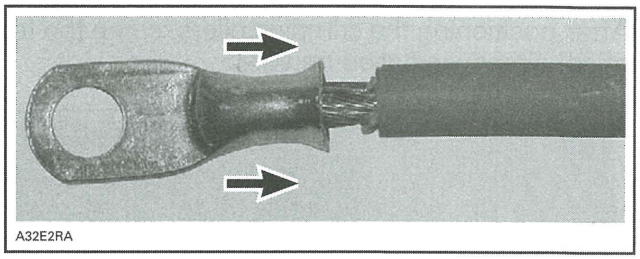

INSTALLATION OF TERMINAL

Follow the instructions provided with the CRIMPING TOOL (HEAVY GAUGE WIRE) (P/N 529 035 730) to select the proper position of the tool.

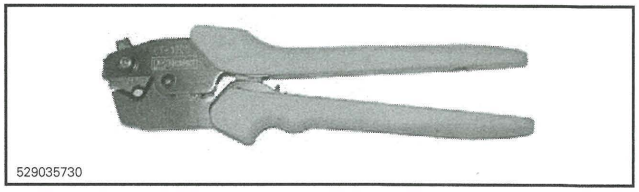

NOTE: Different wires require different crimping pliers settings.

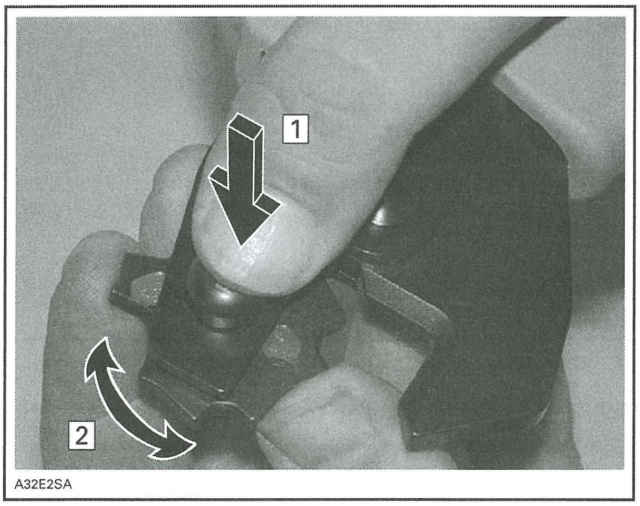

POSITIONING THE CRIMPING PLIERS
Step 1: Press
Step 2: Rotate

After positioning the crimping pliers, crimp the terminal already installed on wire.

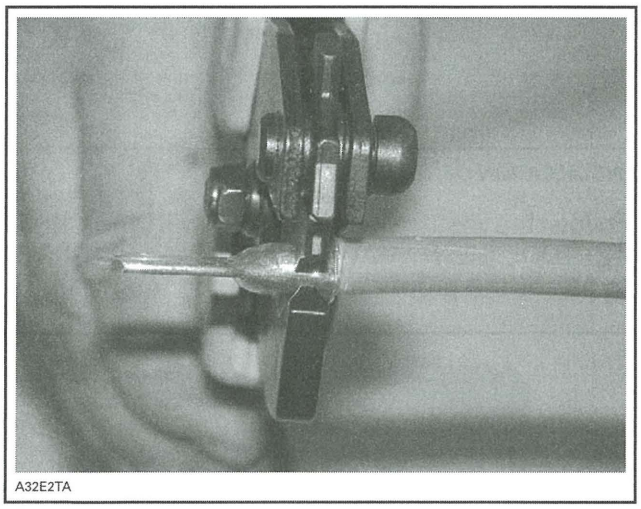

CRIMPING OF WIRE

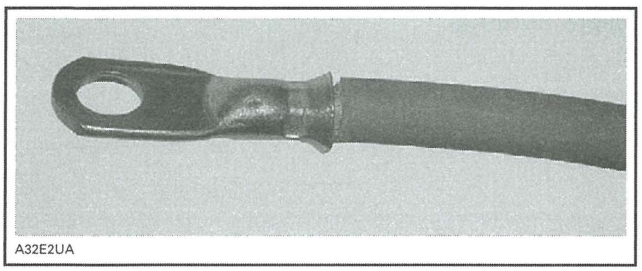

PROPERLY CRIMPED WIRE

To verify, if the wire is properly crimped, apply some pulling force on wire and the terminal at the same time from both directions.

NOTICE **Never weld the wire to the terminal. Welding can change the property of the wire and it can become brittle and break.**

Install the protective heat shrink rubber tube on the terminal. Heat the heat shrink rubber tube using the heat gun so that it grasps the wire and the terminal.

NOTICE **Make sure that the protective heat shrink rubber tube has been properly installed and no part of wire is exposed.**

IGNITION SYSTEM

SERVICE TOOLS

Description	Part Number	Page
ECM ADAPTER TOOL	529 036 166	372, 375–376
FLUKE 115 MULTIMETER	529 035 868	375

GENERAL

SYSTEM DESCRIPTION

The battery supplies the primary side of ignition coil through the main relay (R2) while the ECM completes the circuit for each cylinder by switching it to ground at the right moment. The ECM can detect an open and short circuit in the primary winding but it does not check the secondary winding.

The EMS controls the ignition system. For more information, refer to *ENGINE MANAGEMENT* subsection.

Ignition Timing

Ignition timing is not adjustable.

TROUBLESHOOTING

It is good practice to check for fault codes using the B.U.D.S. software as a first troubleshooting step. Refer to *DIAGNOSTIC SYSTEM AND FAULT CODES* subsection.

Always refer to the *WIRING DIAGRAM* when troubleshooting an electrical circuit.

Refer to *POWER DISTRIBUTION AND GROUNDS* for fuse and relay information.

DIAGNOSTIC GUIDELINES

The following is provided to help in diagnosing the probable cause of a problem. It is a guideline and should not be assumed to list all possible causes.

ENGINE WILL NOT START (ENGINE TURNS OVER)

1. Fouled or defective spark plug
   - *Replace.*
2. Defective CPS
   - *Check operation of CPS and replace if necessary. Refer to ELECTRONIC FUEL INJECTION (EFI) subsection.*
3. Defective trigger wheel
   - *Inspect trigger wheel. Refer to MAGNETO SYSTEM subsection.*
4. Defective ignition circuit
   - *Check fuse 5 of fuse box 1, ignition coil and wiring condition.*
5. Defective fuel pump
   - *Check fuel pump, refer to FUEL SYSTEM subsection.*
6. Defective fuel injectors or circuit
   - *Check fuel injectors, refer to ENGINE MANAGEMENT subsection.*

ENGINE HARD TO START

1. Spark plug faulty, fouled or worn out
   - *Check spark plug condition. Replace if necessary.*
2. Low fuel pressure
   - *Test fuel pressure, refer to FUEL SYSTEM subsection.*

ENGINE MISFIRES, RUNS IRREGULARLY

1. Fouled, defective, worn spark plugs
   - *Check/verify heat range/gap/replace.*
2. Damaged trigger wheel/loose CPS
   - *Inspect trigger wheel. Refer to MAGNETO SYSTEM subsection.*
3. Defective ignition circuit
   - *Check ignition coil, fuse 5, and wiring condition.*
4. Poor engine grounds
   - *Check/clean/repair.*

ENGINE CONTINUALLY BACKFIRES

1. Fouled, defective spark plugs
   - *Clean/replace spark plugs.*
2. Damaged trigger wheel/defective or loose CPS
   - *Inspect trigger wheel and CPS, refer to MAGNETO SYSTEM and ELECTRONIC FUEL INJECTION (EFI) subsections.*

PROCEDURES

IGNITION SWITCH

Ignition Switch Quick Test

Turn ignition switch to ON position.

If multifunction gauge turns on (assuming it works), the ignition switch is good.

If multifunction gauge does not turn on, check the following in this order:

- Battery
- Fuses 1 of fuse box 2
- Fuse 4 and 8 of fuse box 1
- ECM is properly powered (refer to *ELECTRONIC FUEL INJECTION (EFI)* subsection)
- Ignition switch
- Emergency engine stop switch.

Ignition Switch Access

Refer to *BODY* subsection and remove the LH side panel.

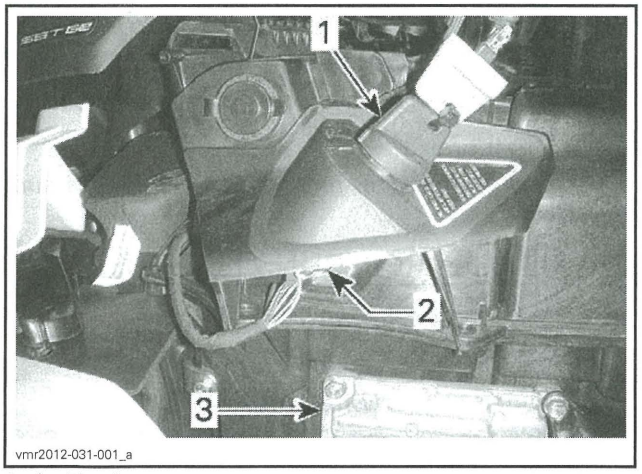

1. *Ignition key*
2. *Ignition switch connector*
3. *ECM*

Ignition Switch Wire Identification

FUNCTION	PIN	WIRE COLOR
12 Vdc output (lights)	A	YELLOW/BLUE
12 Vdc input	B	BEIGE/WHITE
Ground (through ECM)	C	BLACK/BROWN
Ground signal to ECM in OFF position	D	BLACK/WHITE
D.E.S.S. signal	E	ORANGE/RED
12 Vdc output to ECM (through emergency engine stop switch) 12 Vdc output to starter solenoid (through emergency engine stop switch and start switch)	F	ORANGE/VIOLET

EMERGENCY ENGINE STOP SWITCH

Emergency Engine Stop Switch Test at ECM

1. Disconnect ECM connector and install it on the ECM adapter tool, refer to *ELECTRONIC FUEL INJECTION (EFI)* subsection.

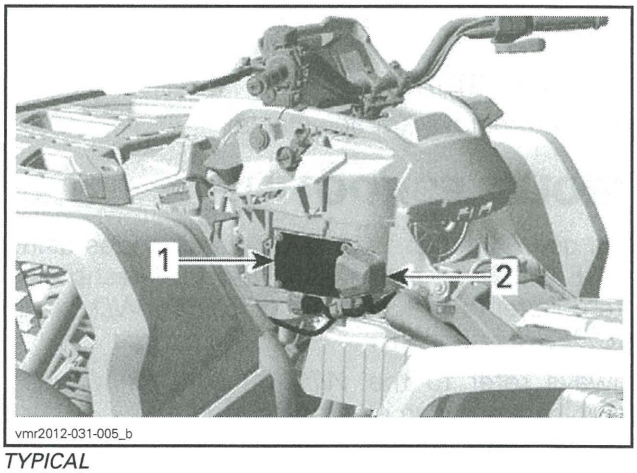

TYPICAL
1. *ECM*
2. *ECM connector cover*

REQUIRED TOOL	
ECM ADAPTER TOOL (P/N 529 036 166)	

2. Remove Key switch fuse (F8), refer to *POWER DISTRIBUTION AND GROUNDS* subsection.
3. Turn ignition key to ON position.
4. Test for continuity as per following table.

EMERGENCY ENGINE STOP SWITCH TEST AT ECM			
FUNCTION	FUSE BOX CONTACT	ECM ADAPTER	RESULT
RUN position	5E	A4	Close to 0 Ω
	—	G2 to K3	Open circuit
STOP position	5E	A4	
	—	G2 to K3	Close to 0 Ω

If switch fails the test, refer to *EMERGENCY ENGINE STOP SWITCH TEST AT MULTIFUNCTION SWITCH CONNECTORS*.

Emergency Engine Stop Switch Test at Multifunction Switch Connectors

The emergency engine stop switch is wired into the LH multifunction switch connectors (MG1 and MG2).

1. Remove gauge support, refer to *LIGHTS, GAUGE AND ACCESSORIES* subsection.
2. Refer to *BODY* subsection and remove:
   - Console panel
   - Front body module.

Outlander Models

3. Remove dashboard support.

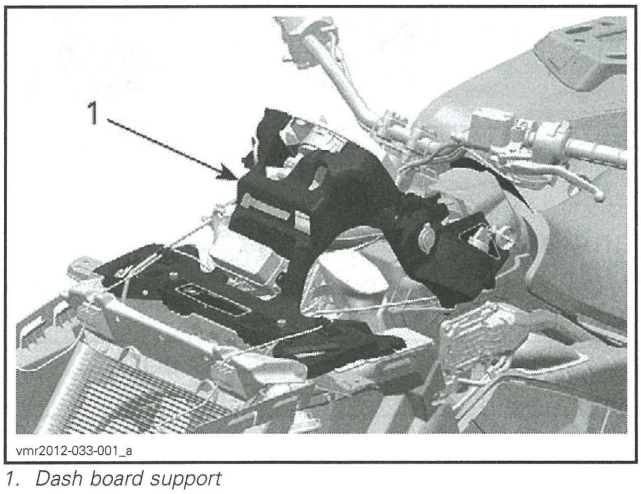

1. Dash board support

All Models

4. Disconnect MG1 and MG2 connectors.

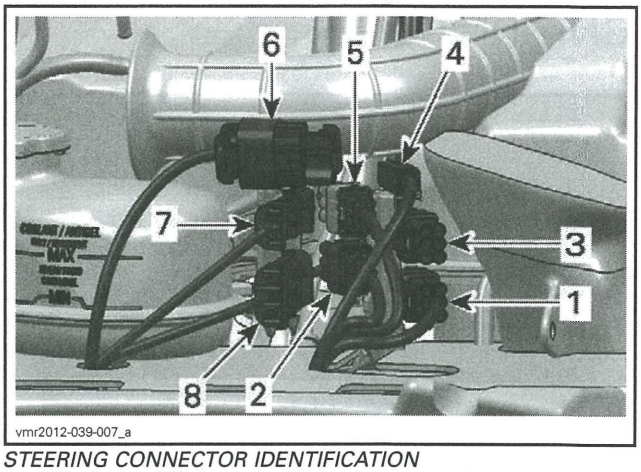

STEERING CONNECTOR IDENTIFICATION
1. MG1 (LH multifunction switch)
2. MG2 (LH multifunction switch)
3. MG3 (LH multifunction switch)
4. DC3 (DC power connector)
5. HIC1 (Engine interconnect)
6. HICA (Accessory interconnect)
7. SWW 2 (Switch winch)
8. SWW 1 (Switch winch)

5. Test switch continuity as per following table.

EMERGENCY ENGINE STOP SWITCH PIN-OUT		
FUNCTION	PROBE	RESULT
RUN position	MG1-3 to MG2-3	Open circuit
	MG1-1 to MG1-2	Close to 0 Ω
STOP position	MG1-3 to MG2-3	
	MG1-1 to MG1-2	Open circuit

If switch tests good, test continuity of wiring. Refer to *WIRING DIAGRAM*.

IGNITION COIL

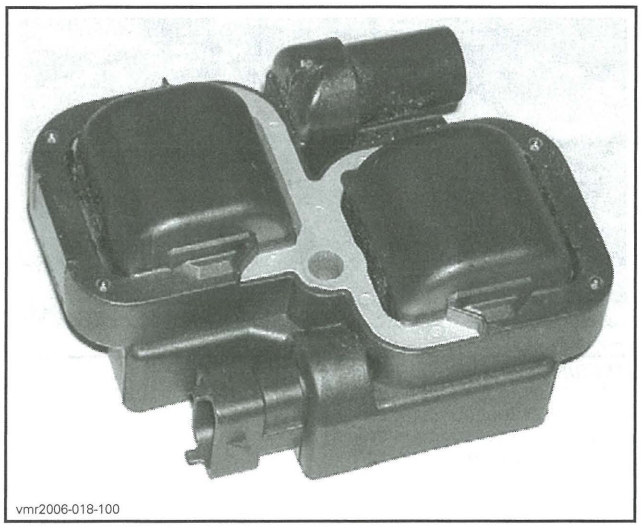
vmr2006-018-100

Ignition Coil Access

Refer to *BODY* subsection and remove RH inner fender panel(s) for access to the ignition coil.

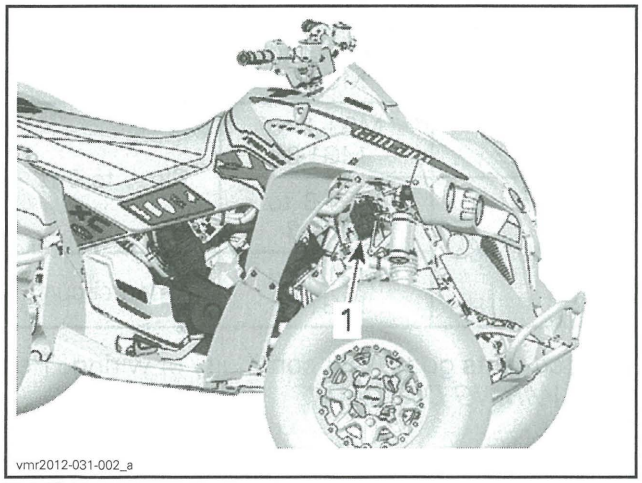

vmr2012-031-002_a

TYPICAL
1. *Ignition coil location*

Ignition Coil Connector Access

800R Models Without a DPS or Winch

Ignition coil connector is accessible from the RH side.

All Other Models

Ignition coil connector is accessible from the LH side.

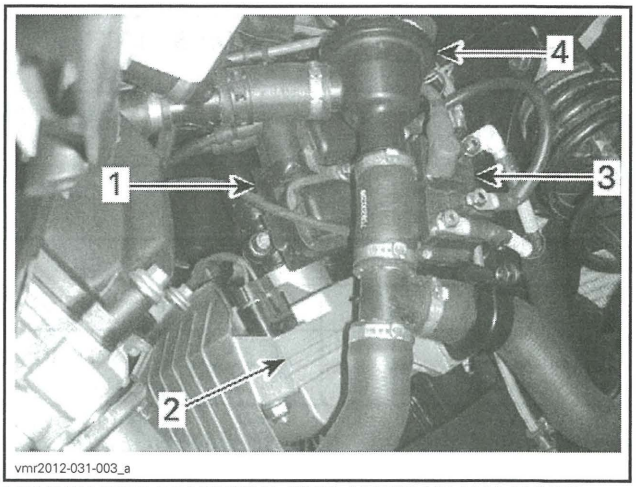

vmr2012-031-003_a

VIEW RH SIDE OF VEHICLE, OUTLANDER XT 1000 MODEL
1. *Ignition coil*
2. *DPS*
3. *Winch relay*
4. *Cooling system thermostat (1000 engine)*

Remove the LH inner fender panel(s) for access to the ignition coil connector.

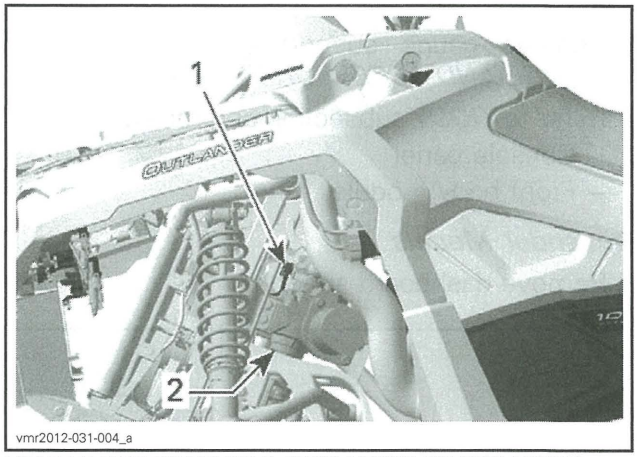

vmr2012-031-004_a

VIEW LH SIDE OF VEHICLE, OUTLANDER XT 1000 MODEL
1. *Ignition coil connector*
2. *DPS*

Ignition Coil Installation

Install a new elastic nut and tighten to the specified torque.

IGNITION COIL RETAINING BOLT TIGHTENING TORQUE
8 N•m ± 1 N•m (71 lbf•**in** ± 9 lbf•**in**)

Ignition Coil Input Voltage Test

1. Disconnect the 3-pin connector from the ignition coil. Refer to *IGNITION COIL CONNECTOR ACCESS*.

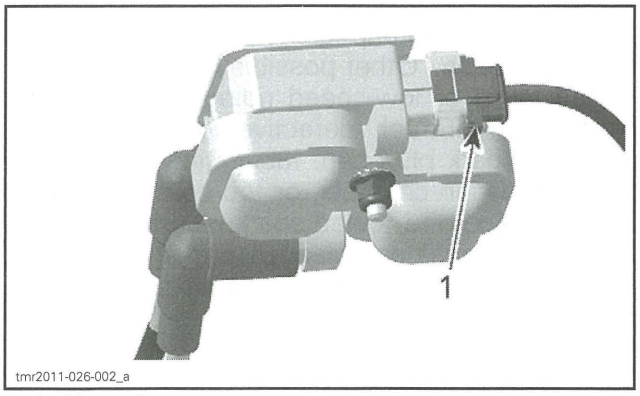

1. Ignition coil connector

2. Set emergency engine stop switch to RUN.
3. Turn ignition switch to ON.
4. Read voltage as per following table.

REQUIRED TOOL
FLUKE 115 MULTIMETER (P/N 529 035 868)

IGNITION COIL INPUT VOLTAGE TEST	
IGNITION COIL CONNECTOR	VOLTAGE
Pin 2 with battery ground	Battery voltage

Battery voltage should be read.

If Battery voltage is NOT read, check continuity of ignition coil supply circuit. Refer to *WIRING DIAGRAM*.

Ignition Coil Ground Circuit Continuity Test

1. Disconnect the ECM connector and connect it to the ECM adapter tool. Refer to *ELECTRONIC FUEL INJECTION (EFI)* subsection.

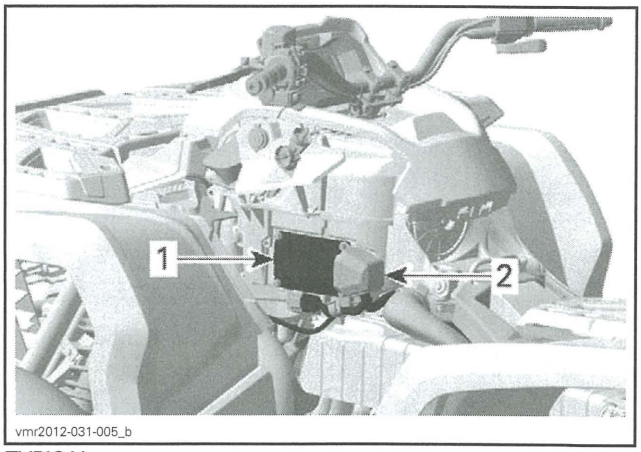

TYPICAL
1. ECM
2. ECM connector cover

REQUIRED TOOLS
ECM ADAPTER TOOL (P/N 529 036 166)
FLUKE 115 MULTIMETER (P/N 529 035 868)

2. Check wiring continuity as per following table.

IGNITION COIL GROUND CIRCUIT CONTINUITY TEST		
COMPONENT	PIN (IGNITION COIL CONNECTOR)	PIN (ECM CONNECTOR)
Cylinder 1 (front)	1	M1
Cylinder 2 (rear)	3	M2

Ignition Coil Resistance Test

An ignition coil with good resistance measurement can still be faulty. Voltage leakage can occur at high voltage levels which is not detectable with an ohmmeter. Replacing the ignition coil may be necessary as a test.

Primary Windings

1. Disconnect HIC2 connector.

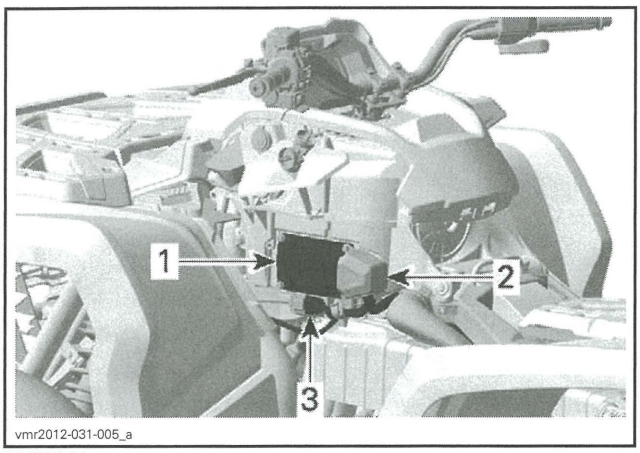

TYPICAL
1. *ECM*
2. *ECM connector cover*
3. *HIC2 connector*

2. Disconnect ECM connector and connect it to the ECM adapter tool.

REQUIRED TOOL	
ECM ADAPTER TOOL (P/N 529 036 166)	

3. Using a multimeter set to Ω, check resistance in primary windings as follows.

IGNITION COIL RESISTANCE TEST			
PRIMARY CIRCUIT	ENGINE CONNECTOR (HIC)	ECM CONNECTOR	RESISTANCE @ 20°C (68°F)
Cylinder 1 (front)	Pin C	M1	.3 - .6 Ω
Cylinder 2 (rear)		M2	

If any resistance is not good, measure resistance directly on coil. If second test is ok, check wiring.

Secondary Windings

Due to the integrated diode, it is not possible to take any resistance measurement of the secondary winding.

SPARK PLUG

For spark plug replacement procedure, refer to *PERIODIC MAINTENANCE PROCEDURES* subsection.

Troubleshooting Fouled Spark Plug

Fouling of the spark plug is indicated by irregular running of the engine, decreased engine speed due to misfiring, reduced performance, and increased fuel consumption. This is due to a loss of compression. Other possible causes are: prolonged idling or low-speed riding, a clogged air filter, incorrect fuel, defective ignition system, incorrect spark plug gap, lubricating oil entering the combustion chamber, or too cold spark plug. The plug face of a fouled spark plug has either a wet black deposit or a black carbon fouling. Such coatings form a conductive connection between the center electrode and ground.

Spark Plug Analysis

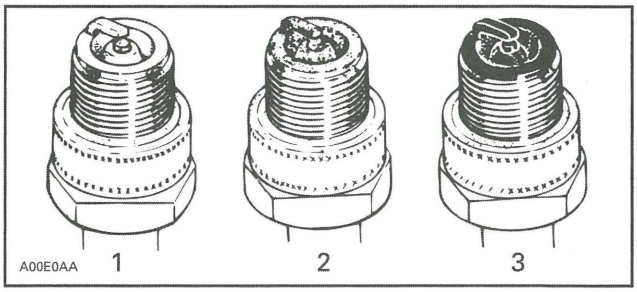

TYPICAL
1. *Overheated (light grey, white)*
2. *Normal (light brown, brown)*
3. *Fouled (black, wet or dry, dark deposits, grey, melted coating)*

The plug face reveals the condition of the engine, operating condition, method of driving and fuel mixture. For this reason it is advisable to inspect the spark plug at regular intervals, examining the plug face (i.e. the part of the plug projecting into the combustion chamber).

CHARGING SYSTEM

SERVICE TOOLS

Description	Part Number	Page
FLUKE 115 MULTIMETER	529 035 868	378

SERVICE TOOLS – OTHER SUPPLIER

Description	Part Number	Page
NAPA ULTRA PRO BATTERY LOAD TESTER	95260	379

SERVICE PRODUCTS

Description	Part Number	Page
DIELECTRIC GREASE	293 550 004	380

GENERAL

SYSTEM DESCRIPTION

The purpose of the charging system is to keep the battery at a full state of charge and to provide the electrical system with the required electrical power for normal vehicle operation.

Magneto

The magneto is the primary source of electrical energy. It transforms magnetic field into electric current (AC).

The magneto has a 3 phase delta wound stator.

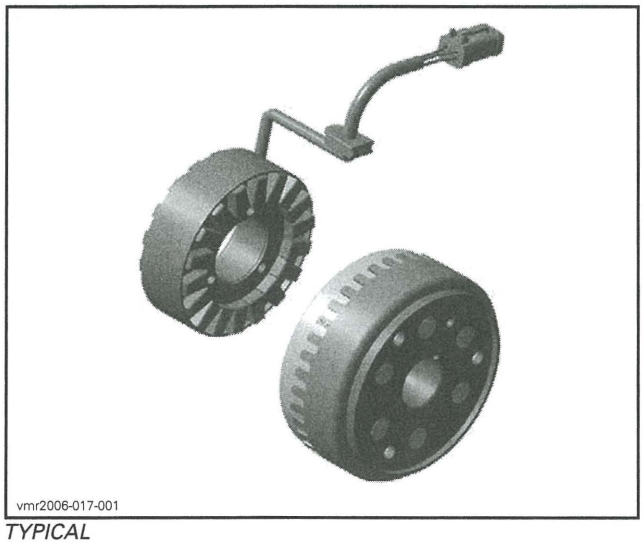

TYPICAL

Voltage Regulator/Rectifier

The rectifier receives AC current from the magneto and transforms it into direct current (DC).

The voltage regulator, included in the same unit, limits voltage to prevent any damage to electrical components.

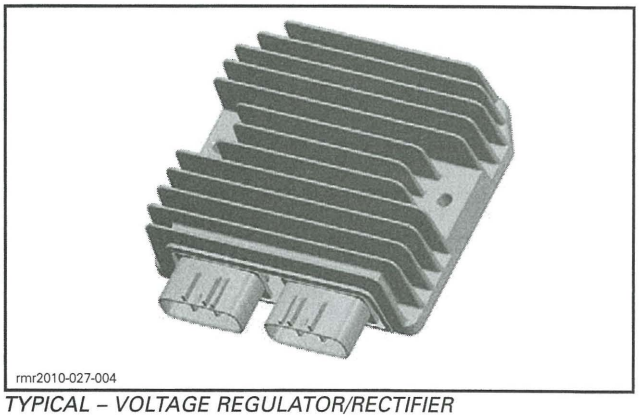

TYPICAL – VOLTAGE REGULATOR/RECTIFIER

Battery

The battery supplies DC power to the electric starter for cranking the engine. During engine starting, it also supplies DC power to the entire electrical system.

At low engine RPM operation and high current load conditions, it supplements the magneto output and helps to maintain a steady system voltage.

INSPECTION

CHARGING SYSTEM OUTPUT

First ensure that battery is in good condition prior to performing the following tests.

Output Voltage Test Using B.U.D.S.

1. Connect vehicle to the latest applicable B.U.D.S. software version. Refer to *COMMUNICATION TOOLS AND B.U.D.S.* subsection.
2. In B.U.D.S., select:
   - **Read Data**
   - **Monitoring** page tab
   - **ECM** tab.
3. Start engine.
4. Increase engine RPM as specified in the following table and read voltage in the **Battery Voltage** field.

OUTPUT VOLTAGE TEST USING B.U.D.S.	
ENGINE SPEED	VOLTAGE (DC)
4000 RPM	14.5 ± .3 Vdc

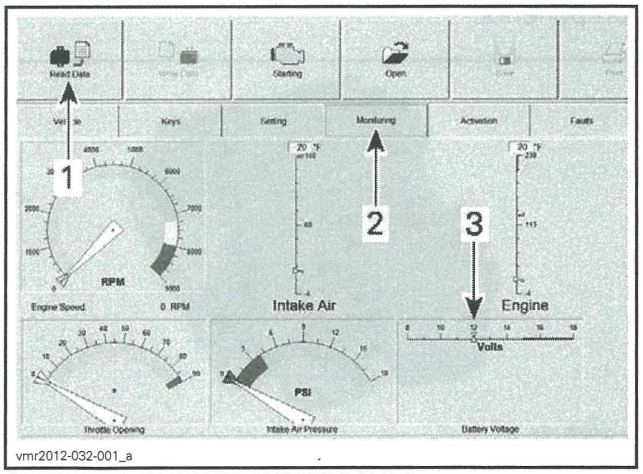

OUTPUT VOLTAGE TEST USING B.U.D.S.
1. **Read Data** *button*
2. **Monitoring** *page tab*
3. **Battery Voltage** *field*

If voltage is above specification, replace voltage regulator/rectifier.

If voltage is below specification, check stator output and wiring harness prior to concluding that voltage regulator/rectifier is defective. Refer to *MAGNETO SYSTEM* subsection.

Output Voltage Test Using a Multimeter

REQUIRED TOOL	
FLUKE 115 MULTIMETER (P/N 529 035 868)	

1. Connect multimeter to battery posts.
2. Start engine.
3. Increase engine RPM as specified in the following table and read voltage with the multimeter.

OUTPUT VOLTAGE TEST USING MULTIMETER	
TEST ENGINE SPEED	VOLTAGE (DC)
4000 RPM	14.5 ± .3 Vdc

If voltage is above specification, replace voltage regulator/rectifier.

If voltage is below specification, check stator and wiring harness prior to concluding that voltage regulator/rectifier is defective. Refer to *MAGNETO SYSTEM* subsection.

TROUBLESHOOTING

It is good practice to check for fault codes using the B.U.D.S. software as a first troubleshooting step. Refer to *DIAGNOSTIC SYSTEM AND FAULT CODES* subsection.

BATTERY REGULARLY DISCHARGED OR WEAK

1. **Loose or corroded battery cable connections.**
   - *Tighten or repair battery cable connections.*
2. **Worn or defective battery.**
   - *Charge and test battery.*
3. **Defective magneto stator.**
   - *Test stator, refer to MAGNETO SYSTEM subsection.*
4. **Defective regulator/rectifier.**
   - *Test system voltage.*
5. **Damaged magneto rotor or Woodruff key.**
   - *Replace magneto rotor or Woodruff key, refer to MAGNETO SYSTEM subsection.*

PROCEDURES

VOLTAGE REGULATOR/ RECTIFIER

Voltage Regulator/Rectifier Static Test

Due to internal circuitry, there is no static test available.

Voltage Regulator/Rectifier Access

The voltage regulator/rectifier is accessible on the RH rear side of the vehicle.

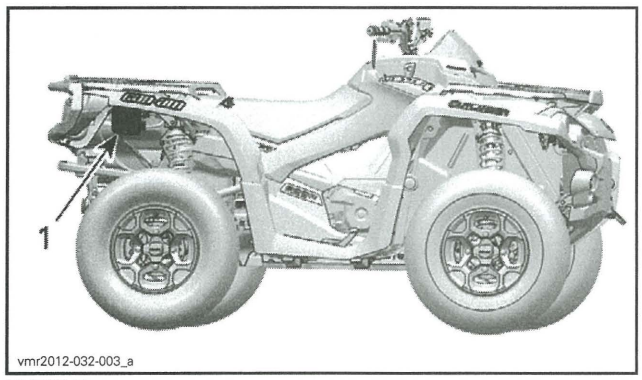

TYPICAL
1. Voltage regulator/rectifier location

Voltage Regulator/Rectifier Wire Identification

FUNCTION	PIN	COLOR
12 Vdc output	RD1-1	RED
12 Vdc ground	RD1-3	BLACK
12 Vac input	RD2-1	YELLOW
12 Vac input	RD2-2	YELLOW
12 Vac input	RD2-3	YELLOW

BATTERY

Battery Information

These vehicles are equipped with a VRLA battery (Valve Regulated Lead Acid). **It is a maintenance-free type battery.**

Refer to battery manufacturer's instructions for proper filling, activation and routine charging procedures.

Battery Voltage Test (No Load Applied)

NOTE: A voltage test is carried out on a battery without discharging current. It is the simplest and most commonly used. However, be aware that the voltage test can be good, while the battery does not have enough power to crank the engine.

A voltage reading provides an instant indication of the state of charge of the battery, not of it's current output capacity. A load test provides a more accurate indication of the battery's condition.

If the battery has just received a charge, allow it to rest for 1 - 2 hours before taking a voltage reading.

Set multimeter to Vdc and connect to battery terminals. Always respect polarity.

FULLY CHARGED BATTERY VOLTAGE
12.6 Vdc minimum

NOTE: A battery with a voltage reading of 12.0 Vdc is considered completely discharged and needs to be recharged.

Battery Load Test

This is the best test to indicate a battery's condition. Use a load testing device such as the NAPA ULTRA PRO BATTERY LOAD TESTER (P/N 95260). It has a 500 Amp adjustable load.

Apply a load of 3 times the ampere-hour rating of the battery. At 14 seconds into the test, check battery voltage.

TIME TO MEASURE INTO TEST	VOLTAGE
14 seconds	Min. 10.5 Vdc @ 20°C (68°F)

Battery Removal

1. Remove seat.
2. Disconnect BLACK (-) cable first, then the RED (+) cable.

NOTICE **Always respect this order for removal; disconnect BLACK (-) cable first.**

3. Remove battery retaining plate.

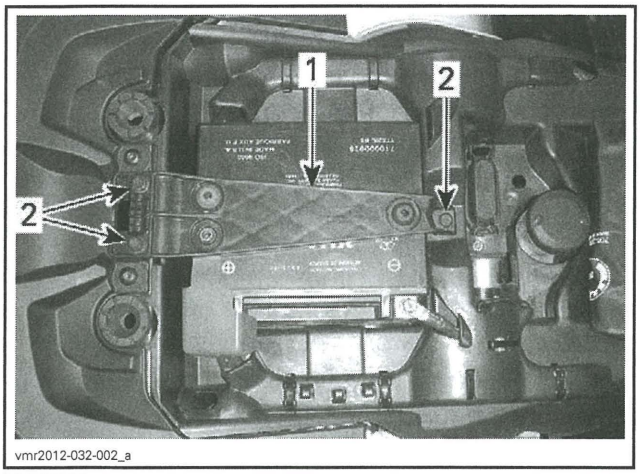

TYPICAL
1. *Battery retaining plate*
2. *Retaining plate screws (3)*

TIGHTENING TORQUE	
Battery retaining plate screws	4 N•m to 5 N•m (35 lbf•**in** to 44 lbf•**in**)

4. Remove battery.

Battery Cleaning

Clean the battery support, cables and battery posts using a solution of baking soda and water.

Remove corrosion (if so) from battery cable terminals and battery posts using a firm wire brush. Rinse with clear water and dry well.

Battery Storage

If the battery is in storage or used infrequently, disconnect the battery cables to eliminate drain from electrical equipment.

For extended storage, remove the battery from vehicle.

Clean battery terminals and cable connections using a wire brush. Apply a light coat of DIELECTRIC GREASE (P/N 293 550 004) on terminals.

Clean battery casing using a solution of baking soda and water. Rinse battery with clear water and dry well using a clean cloth.

Regularly charge battery as per manufacturer's recommendations.

For other recommendations during storage, refer to battery manufacturer's instructions.

⚠ WARNING

Ensure to store battery in a safe place, out of reach for children.

Battery Installation

NOTICE **Always connect RED (+) cable first then BLACK (-) cable.**

Installation is the reverse of removal procedure, however pay attention to the following.

STARTING SYSTEM

SERVICE TOOLS

Description	Part Number	Page
ECM ADAPTER TOOL	529 036 166	382
FLUKE 115 MULTIMETER	529 035 868	383, 385

SERVICE PRODUCTS

Description	Part Number	Page
DIELECTRIC GREASE	293 550 004	388

GENERAL

SYSTEM DESCRIPTION

The starting system is composed of an electric starter supplied in current by the battery through a solenoid.

The starter solenoid receives a 12 volt input from the ignition switch through the emergency engine stop switch and the engine start switch.

The ground signal is provided by the ECM when the following engine cranking conditions are met.

- Ignition switch ON
- Emergency engine stop switch set to RUN position
- Transmission in Park or Neutral position, or transmission in gear with brake pedal or lever held
- Start button held.

TROUBLESHOOTING

It is good practice to check for fault codes using the B.U.D.S. software as a first troubleshooting step. Refer to *DIAGNOSTIC SYSTEM AND FAULT CODES* subsection.

NOTE: Clear any fault code after solving a problem.

Always refer to the *WIRING DIAGRAM* when troubleshooting an electrical circuit.

Refer to *POWER DISTRIBUTION AND GROUNDS* for fuse and relay information.

Check all connections, cables and wires. Tighten any loose connections. Replace any chafed or corroded wires/cables.

DIAGNOSTIC GUIDELINES

FUSE 8 INFUSE BOX 1 BURNS WHILE ATTEMPTING TO CRANK ENGINE

1. Defective D2 Diode
   - *Test diode, see procedure in this subsection.*
2. Defective starter solenoid
   - *Test starter solenoid, see procedure in this subsection.*
3. Wiring short to ground
   - *Check wiring.*

ENGINE DOES NOT CRANK AND GAUGE DOES NOT TURN ON

1. Burnt main fuse (F1) in fuse box 2
   - *Check fuse.*
2. Burnt fuse F8 in fuse box 1
   - *Check fuse.*
3. Defective or discharged battery
   - *Refer to CHARGING SYSTEM subsection.*
4. Defective ignition switch or circuit
   - *Refer to IGNITION SYSTEM subsection.*
5. Defective emergency engine stop switch or circuit
   - *Refer to IGNITION SYSTEM subsection.*

ENGINE DOES NOT CRANK BUT GAUGE TURNS ON

1. Defective brake light switch
   - *Refer to BRAKES subsection.*
2. Defective gearbox position sensor (GPBS)
   - *Refer to GEARBOX AND 4X4 COUPLING UNIT (800R) or GEARBOX AND 4X4 COUPLING UNIT (1000) subsection.*

3. Defective start button or circuit
   - *Test start button and wiring, see procedure in this subsection.*
4. Defective starter solenoid or circuit
   - *Test starter solenoid and wiring, see procedure in this subsection.*
5. Defective starter
   - *Test starter and wiring, see procedure in this subsection.*

PROCEDURES

D2 DIODE (STARTER SOLENOID)

Diode Location

The diode is located in the main harness, near starter solenoid.

Diode Test

1. Make sure ignition switch is set to OFF position.
2. Disconnect pins SS1 or SS2 from starter solenoid.
3. Disconnect ECM connector.
4. Connect ECM ADAPTER TOOL (P/N 529 036 166) to the ECM connector.

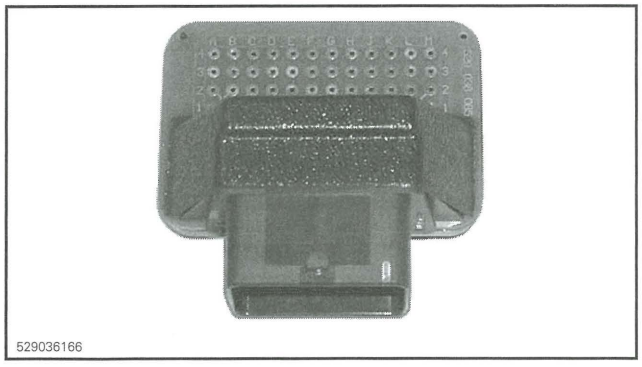

5. Set multimeter to "diode check".

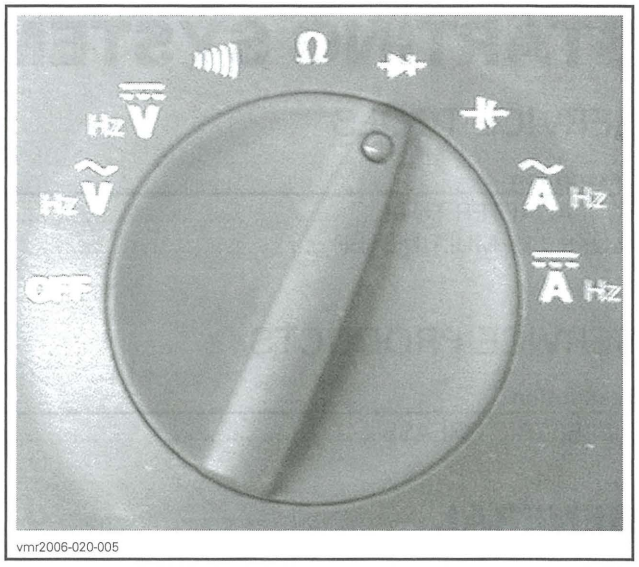

vmr2006-020-005

6. As you press and hold the start button, test diode as per following table.

D2 DIODE TEST		
MULTIMETER POSITIVE PROBE	MULTIMETER NEGATIVE PROBE	RESULT
ECM pin A4	ECM pin L2	Overload (open)
ECM pin L2	ECM pin A4	Approximately 0.5 volts

If diode fails any test, replace it.

START BUTTON

Start Button Connector Access

NOTE: The start button is wired trough one of the LH multifunction switch connectors (MG2).

1. Refer to body subsection and remove the following:
   - Console
   - Front body module.
2. Remove gauge support, refer to *LIGHTS, GAUGE AND ACCESSORIES* subsection.

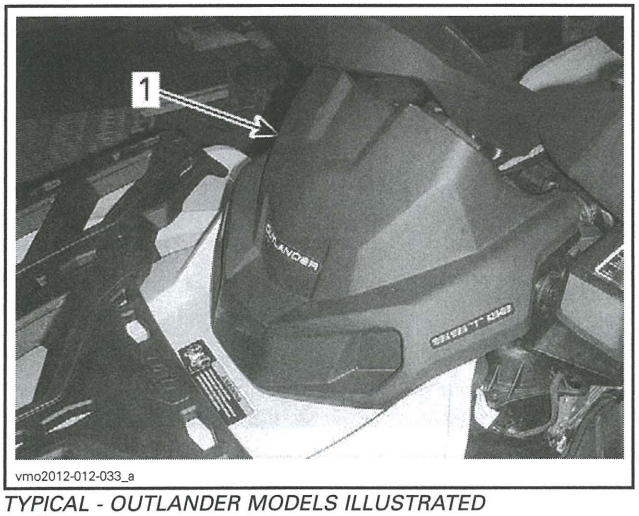

TYPICAL - OUTLANDER MODELS ILLUSTRATED
1. Gauge support

Outlander Models

3. Remove dashboard support.

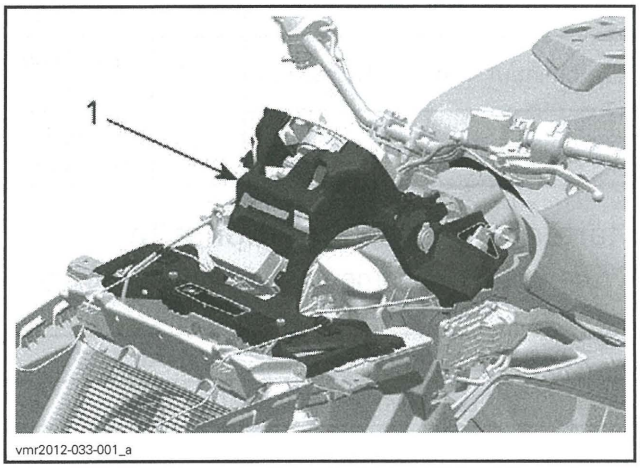

1. Dash board support

All Models

4. Disconnect the LH multifunction switch steering connector (MG2) and refer to *START BUTTON WIRE IDENTIFICATION* that follows.

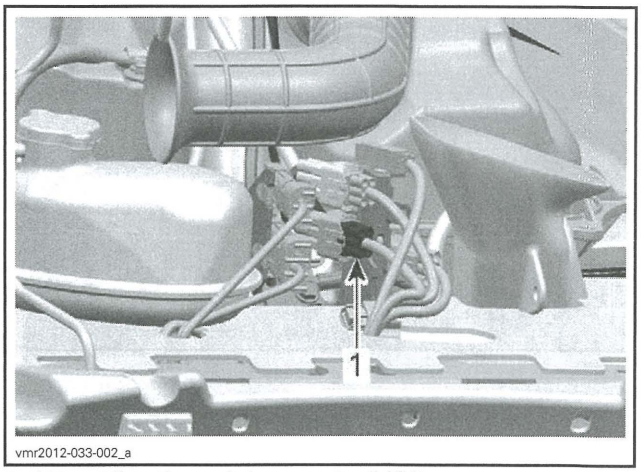

1. LH multifunction switch connector (MG2)

Start Button Wire Identification

LH MULTIFUNCTION SWITCH CONNECTOR (MG2)		
FUNCTION	PIN	COLOR
12 volt input from emergency engine stop switch	1	VIOLET/BEIGE
12 volt output to starter solenoid pin SS1	6	YELLOW/RED

Start Button Resistance Test

1. Disconnect the MG2 connector, refer to *START BUTTON CONNECTOR ACCESS* in this subsection.
2. Using the FLUKE 115 MULTIMETER (P/N 529 035 868), measure resistance as per the following table.

POSITION	START BUTTON CONNECTOR PIN		RESISTANCE
Switch released	1	6	Infinite (OL)
Switch depressed and held			0.6 Ω max.

3. If start button is defective, replace LH multifunction switch assembly.

STARTER SOLENOID

Starter Solenoid Access

Remove seat.

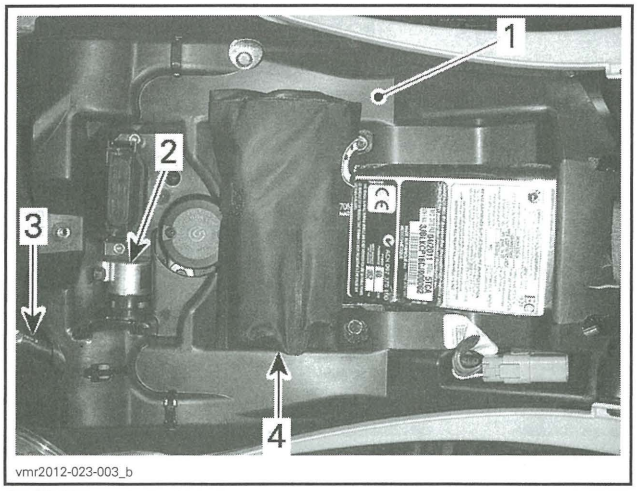

vmr2012-023-003_b

1. *Battery support*
2. *Starter solenoid*
3. *Battery cable*
4. *Tool kit*

Starter Solenoid Access for Electrical Testing

For electrical testing, the small starter solenoid connectors (SS1 and SS2) are accessible through the battery support.

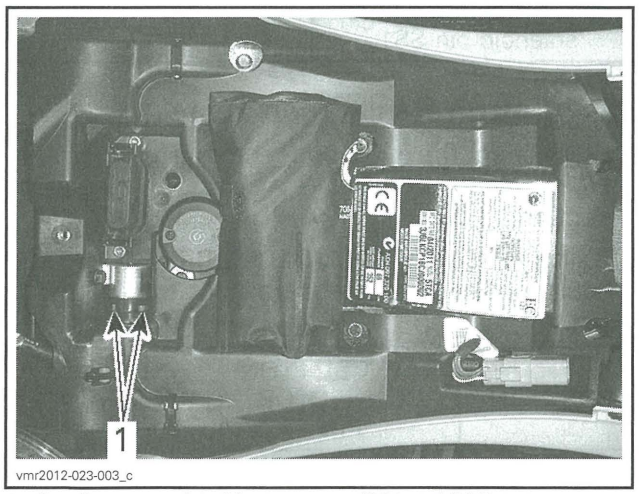

vmr2012-023-003_c

1. *Small starter solenoid connectors (SS1 and SS2)*

The larger starter solenoid cables are accessible from under the RH rear fender.

NOTE: For easier access, detach the fender from the footrest, refer to *BODY* subsection.

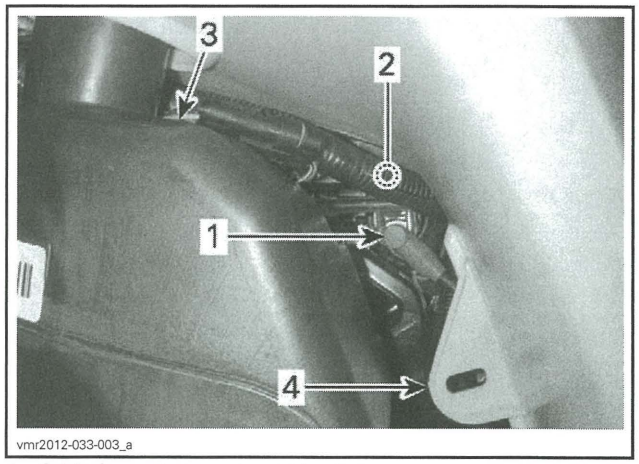

vmr2012-033-003_a

1. *Cable from starter solenoid to starter*
2. *Battery cable to starter solenoid (not visible)*
3. *Fuel tank*
4. *RH rear fender*

Starter Solenoid Wire Identification

FUNCTION	PIN	WIRE COLOR
12 volt input from START switch	SS1	YELLOW/ RED
Ground from ECM pin L13	SS2	ORANGE/ BROWN

Starter Solenoid Operational Test

1. Connect 2 wire jumpers to the starter solenoid as per following table.

STARTER SOLENOID OPERATIONAL TEST
WIRE JUMPER CONNECTIONS
Solenoid contact SS1 to battery (+) terminal (RED)
Solenoid contact SS2 **momentarily** connected to chassis ground

If starter runs, carry out the *STARTER SOLENOID INPUT VOLTAGE TEST.*

If starter does not run, carry out the *STARTER SOLENOID WINDING RESISTANCE TEST.*

Starter Solenoid Input Voltage Test

1. Set emergency engine stop switch to RUN position.
2. Turn ignition switch to ON.
3. Press and hold START button.
4. Measure voltage as per following table.

REQUIRED TOOL
FLUKE 115 MULTIMETER (P/N 529 035 868) 

STARTER SOLENOID INPUT VOLTAGE TEST		
TEST PROBES		RESULT (START BUTTON PRESSED IN)
YELLOW/RED wire (SS1)	Battery ground	Battery voltage

If input voltage test is good, refer to *STARTER SOLENOID GROUND SIGNAL TEST*.

If input voltage failed, refer to *WIRING DIAGRAM* and check the following:
- Key switch fuse (F8)
- Emergency engine stop switch (refer to *IGNITION SYSTEM* subsection)
- Ignition switch (refer to *IGNITION SYSTEM* subsection)
- Wiring and connectors.

Starter Solenoid Ground Signal Test

1. Disconnect SS2 connector (ORANGE/BROWN wire) from solenoid.
2. Set emergency engine stop switch to RUN position.
3. Turn ignition switch ON.
4. Measure voltage as per following table.

STARTER SOLENOID GROUND SIGNAL TEST		
TEST PROBES		RESULT (START BUTTON PRESSED IN)
ORANGE/ BROWN wire (SS2)	Battery positive post	Battery voltage

If battery voltage is measured, refer to *STARTER SOLENOID WINDING RESISTANCE TEST*.

Starter Solenoid Winding Resistance Test

Disconnect small connectors (SS1 and SS2) from solenoid.

Using a multimeter set to Ω, check primary winding resistance as follows.

STARTER SOLENOID WINDING RESISTANCE TEST		
TEST PROBES		RESULT @ 20°C (68°F)
Starter solenoid SS1 pin	Starter solenoid SS2 pin	Approximately 5 Ω

If measurement is out of specification, replace solenoid.

Starter Solenoid Voltage Drop Test

1. Set emergency engine stop switch to RUN position.
2. Turn ignition key ON.
3. Press and hold START button.
4. Measure voltage as per following table while cranking engine in **drowned mode** (to prevent engine starting).

NOTE: For drowned mode, refer to *ENGINE MANAGEMENT* subsection.

STARTER SOLENOID VOLTAGE DROP TEST		
TEST PROBES		RESULT (WHILE CRANKING)
Positive battery post	Starter post	0.2 Vdc max.

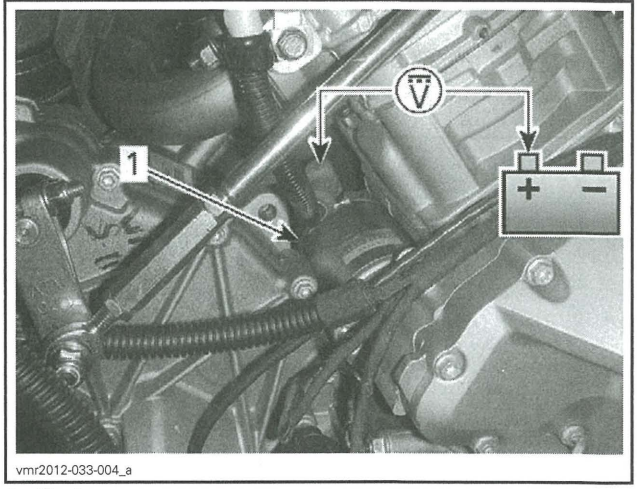

vmr2012-033-004_a

1. Starter

If voltage is out of specification:
- Check battery connections.
- Check starter connection.
- Check power cable connections to starter solenoid.
- Check power cable condition from battery to solenoid.

- Check power cable condition from solenoid to starter.
- Replace solenoid.

Starter Solenoid Removal

1. Remove the following:
   - Seat
   - Tool kit
   - Battery (refer to *CHARGING SYSTEM* subsection).
2. Disconnect starter power cable at starter solenoid terminal.

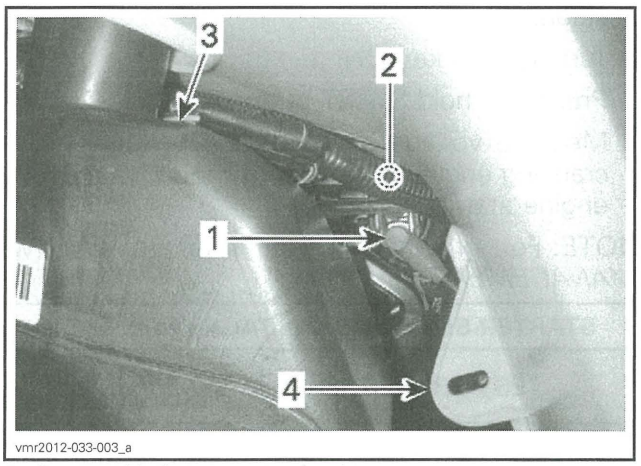

vmr2012-033-003_a

1. *Power cable from starter solenoid to starter*
2. *Power cable from battery to starter solenoid (not visible)*
3. *Fuel tank*
4. *RH rear fender*

3. Remove the 2 screws retaining forward portion of battery support.

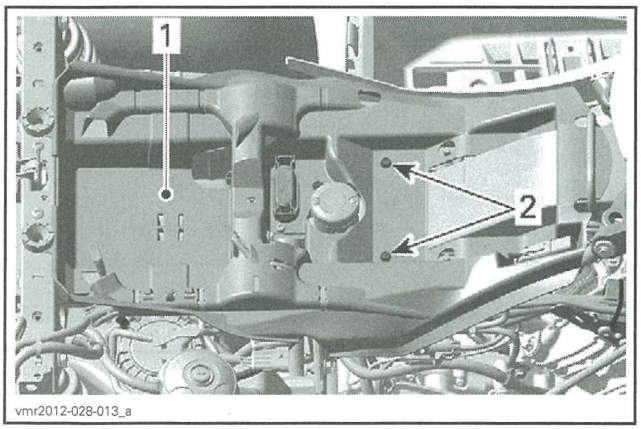

vmr2012-028-013_a

1. *Battery support*
2. *Support retaining screws (2)*

4. Flip the battery support over to the RH side without removing the wire cables attached to it.

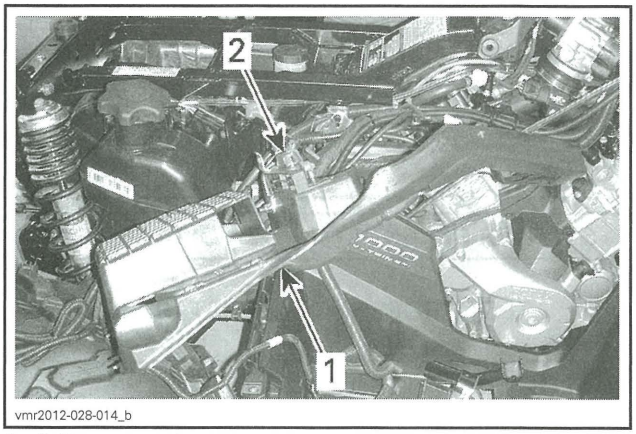

vmr2012-028-014_b

1. *Battery support*
2. *Starter solenoid*

5. Disconnect electrical connectors and cables from solenoid.
6. Remove screw retaining solenoid to battery support.

Starter Solenoid Installation

Installation is the reverse of removal however, pay attention to the following:

SCREW TORQUE	
Solenoid mounting screw	4.5 N•m ± 0.5 N•m (40 lbf•**in** ± 4 lbf•**in**)
Main terminal hex nut torque	

ELECTRIC STARTER

Starter Access

To access starter electrical terminal, refer to *BODY* subsection and remove the RH side panel.

Starter Operational Test

1. Disconnect starter power cable from starter solenoid and pull starter cable out to the ride side of the vehicle.

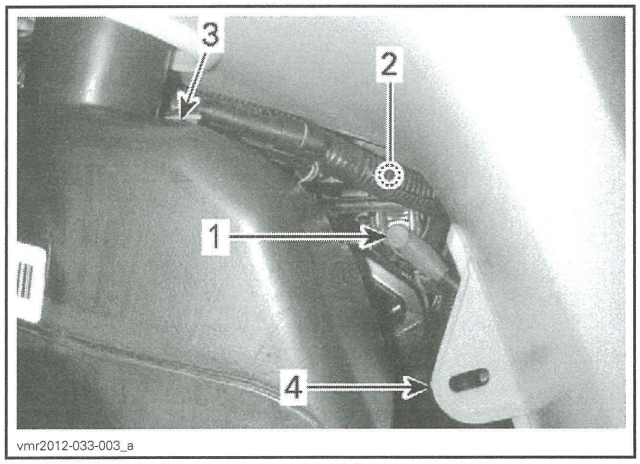

1. *Power cable from starter solenoid to starter*
2. *Power cable from battery to starter solenoid (not visible)*
3. *Fuel tank*
4. *RH rear fender*

2. Using booster cables, carefully supply current from a 12 volt battery directly to the starter power cable.

NOTICE **First connect the red jumper cable from the booster battery to the starter cable. Momentarily connect the BLACK (-) cable from the booster battery to engine ground last.**

If the starter turns, test other starting system components.

Starter Removal

1. Turn OFF ignition switch.
2. Disconnect BLACK (-) cable from battery.

⚠ WARNING

Always disconnect BLACK (-) cable first and reconnect last.

3. Refer to *BODY* subsection and remove:
   - LH side panel
   - RH side panel.
4. Refer to *CONTINUOUSLY VARIABLE TRANSMISSION (CVT)* subsection and remove:
   - Drive pulley
   - Driven pulley
   - CVT back cover.
5. Disconnect RED (+) cable from starter.
6. Clean starter area.
7. Remove starter retaining screw (RH side of engine).

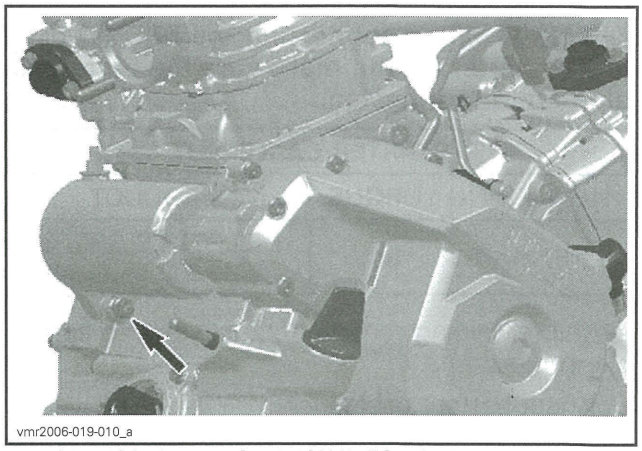

TYPICAL - SOME PARTS REMOVED FOR CLARITY PURPOSE ONLY

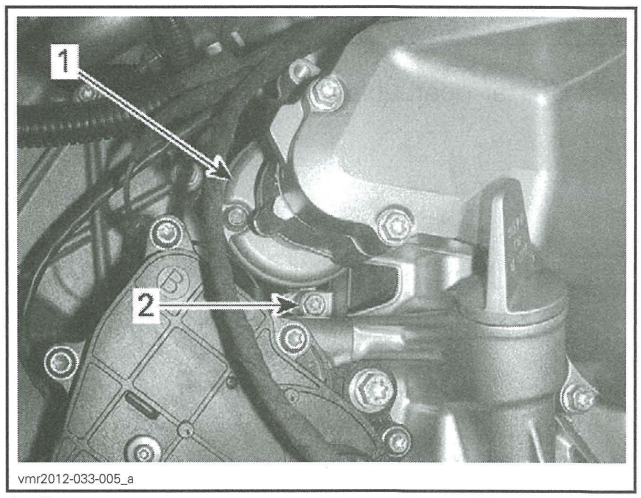

1. *Starter*
2. *Starter retaining screw*

Carefully pry starter out of the engine crankcase.

Starter Installation

Installation is the reverse of removal procedure. However, pay particular attention to the following.

Make sure the starter and engine mating surfaces are free of debris. Serious problems may arise if the starter is not properly aligned.

Bring starter close to its location. Rotate it so that its mounting ear allows installation in engine crankcase and on its alignment pin.

Push starter in place and align mounting ear to install screw. Tighten to the specified torque.

STARTER MOUNTING SCREW TIGHTENING TORQUE	
Starter mounting screw	25 N•m (18 lbf•ft)

Connect the RED (+) cable to the starter; tighten nut to specified torque and apply specified product.

NOTICE When connecting the RED (+) cable to the starter motor, make sure the battery cables are disconnected.

STARTER CABLE NUT	
TIGHTENING TORQUE	PRODUCT
6 N•m (53 lbf•**in**)	DIELECTRIC GREASE (P/N 293 550 004)

Install remaining removed parts, refer to applicable subsections.

Connect battery cables.

⚠ WARNING

Always connect RED (+) cable first then BLACK (-) cable last.

Test starter operation.

DIGITALLY ENCODED SECURITY SYSTEM (D.E.S.S.)

GENERAL

SYSTEM DESCRIPTION

The ignition key contains a ROM chip with a unique digital code that is the equivalent of a unique teeth pattern on a conventional key.

When the ignition key is turned ON, the ECM reads the ignition key and, if it is not recognized, no engine starting will be possible.

NOTE: When a key is not recognized by the ECM, INVALID KEY will be displayed in the multifunction speedometer.

NOTE: All ignition keys have the same teeth pattern. Therefore, they can be used and turned in the switch of any D.E.S.S.-equipped vehicle. However, unless the D.E.S.S. system recognizes (in the ECM) a valid programmed key, the engine starting will not be allowed.

NOTE: Actually, it is the memory of the ECM that is programmed to recognize the digital code of the ignition key.

Up to 10 ignition keys may be programmed in the memory of the ECM. They can also be erased individually or all at once.

Note that the D.E.S.S. circuitry is already activated on all new ECM.

TROUBLESHOOTING

DIAGNOSTIC TIPS

NOTE: It is a good practice to check for fault codes using B.U.D.S. as a first troubleshooting step.

If D.E.S.S. key is not recognized by the ECM, key is defective or there is a wiring problem, CHECK ENGINE light will turn on and a message will be displayed in the multifunction speedometer.

PROCEDURES

KEY PROGRAMMING

1. Connect to the latest applicable B.U.D.S. version. Refer to *COMMUNICATION TOOLS AND B.U.D.S.* subsection.
2. Turn ignition switch to ON using any of the key provided with the vehicle. DO NOT start the engine.
3. Click the **Read Data** button in B.U.D.S.

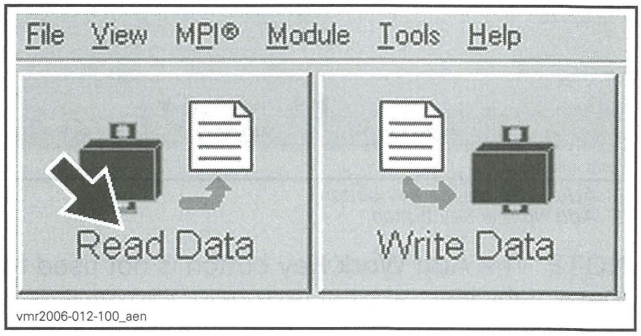

4. Click on **Keys** tab.

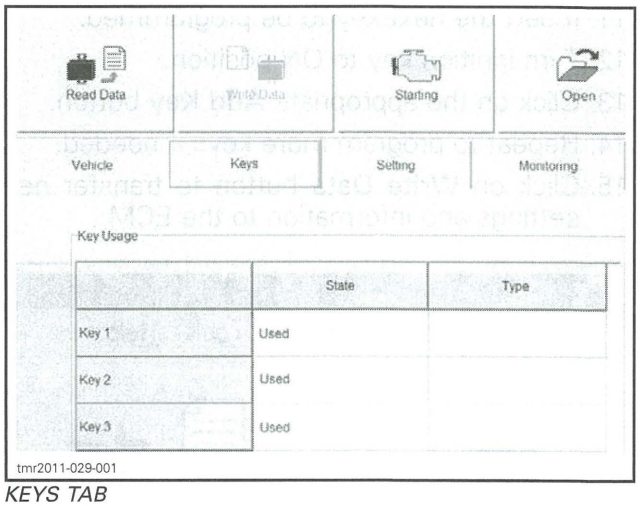

KEYS TAB

5. Click on **Erase All Keys** button.

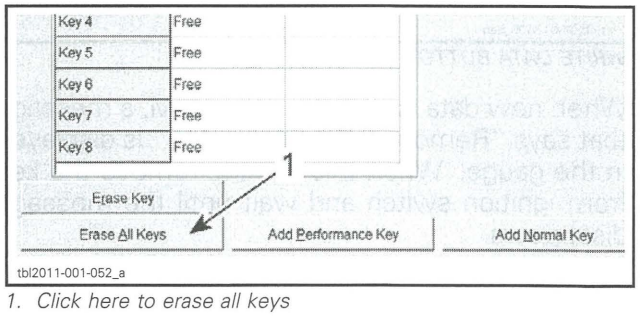

1. Click here to erase all keys

6. Click "YES" to confirm the action.
7. Check the color of the key to be programmed.

KEY	KEY TYPE
BLACK key	Performance key
GRAY key	Normal key

8. Click on the appropriate **Add Key** button.

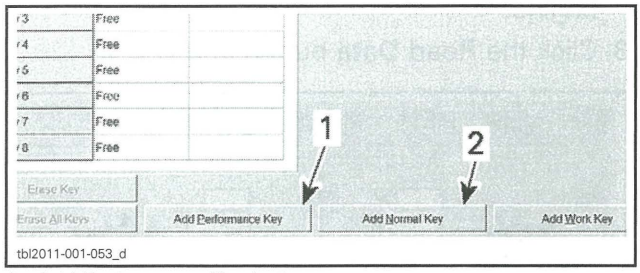

1. Add Performance Key button
2. Add Normal Key button

NOTE: The **Add Work Key** button is not used for these vehicles.

9. Turn ignition switch to OFF.
10. Remove the key.
11. Insert the next key to be programmed.
12. Turn ignition key to ON position.
13. Click on the appropriate **Add Key** button.
14. Repeat to program more keys if needed.
15. Click on **Write Data** button to transfer new settings and information to the ECM.

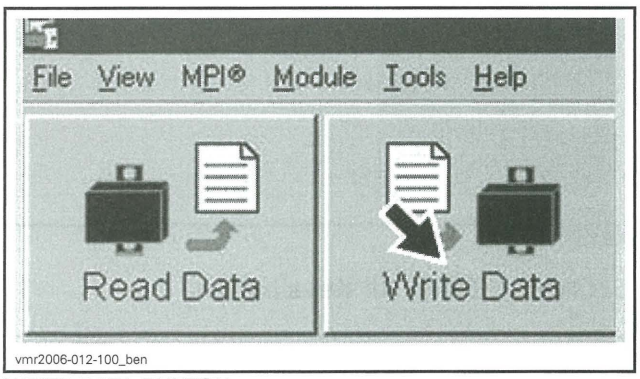

WRITE DATA BUTTON

When new data is written in the ECM, a message that says "Remove key from vehicle" is displayed in the gauge. When this occurs, remove the key from ignition switch and wait until the message disappears.

16. Click on EXIT button to end session.
17. Disconnect all cables and hardware from vehicle.
18. Ensure to reinstall the connector into its housing.

LIGHTS, GAUGE AND ACCESSORIES

SERVICE TOOLS

Description	Part Number	Page
FLUKE 115 MULTIMETER	529 035 868	405, 407

SERVICE PRODUCTS

Description	Part Number	Page
DIELECTRIC GREASE	293 550 004	400

GENERAL

NOTICE It is recommended to always disconnect the battery when replacing any electric or electronic parts. Always disconnect battery exactly in the specified order, BLACK (-) cable first.

MULTIFUNCTION GAUGE - LCD (OUTLANDER)

Multifunction Gauge Description

The multifunction gauge is located in the middle of the handlebar.

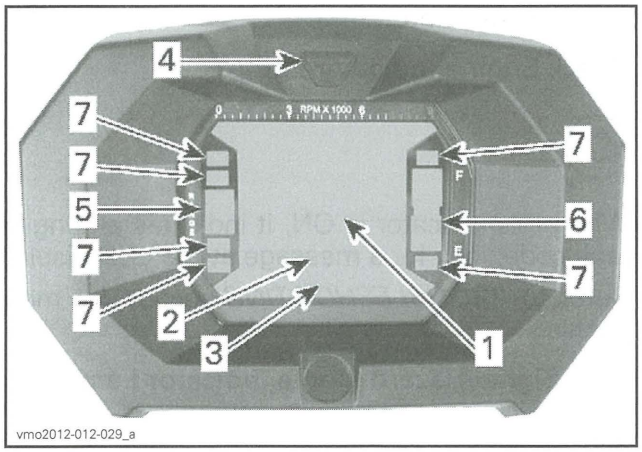

vmo2012-012-029_a

1. *Display 1*
2. *Display 2*
3. *Display 3*
4. *Selector button*
5. *Transmission position display*
6. *Fuel level display*
7. *Indicator lamps*

Speedometer

This display will show vehicle speed.

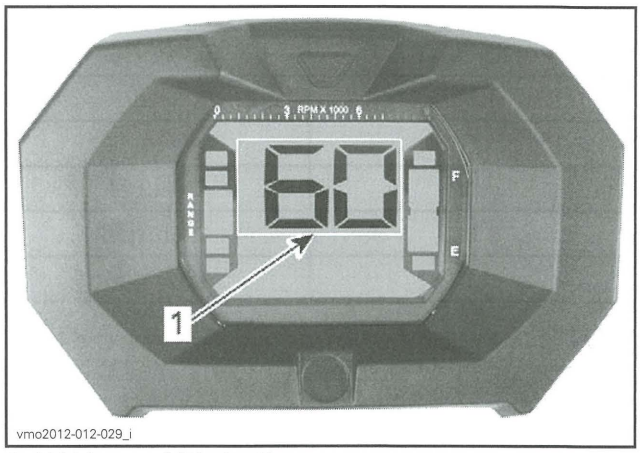

vmo2012-012-029_i

1. *Vehicle speed (Display 1)*

Tachometer

Measures engine revolutions per minute (RPM). Multiply by 1000 to obtain the actual revolutions.

NOTE: RPM may also be displayed via Display 2 (mode) display.

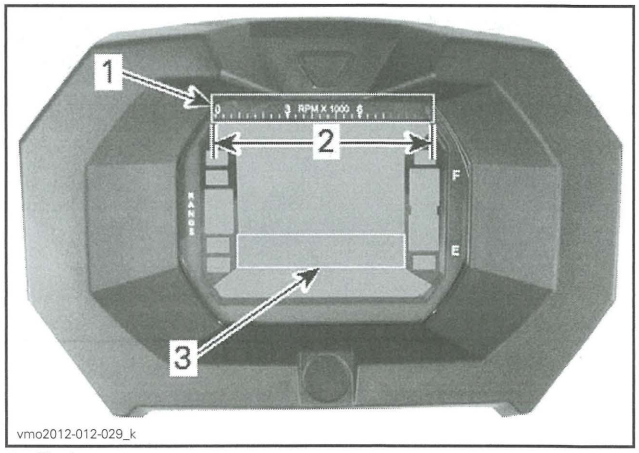

vmo2012-012-029_k

1. *Tachometer*
2. *Operating range*
3. *Tachometer via Display 2 (mode)*

Transmission Position Display

This display will show transmission position.

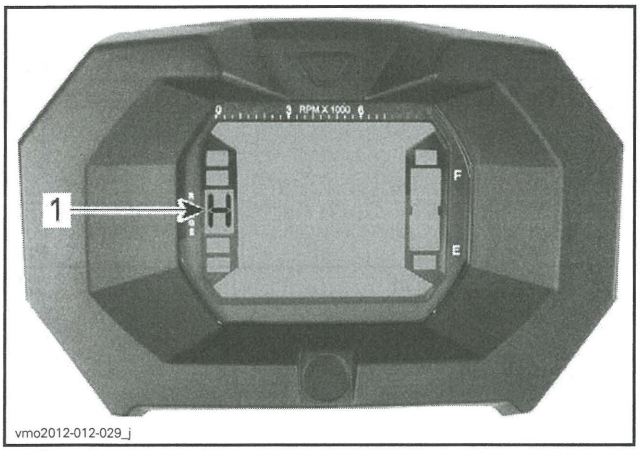

1. Transmission position

DISPLAY	FUNCTION
P	Park
R	Reverse
N	Neutral
H	High gear
L	Low gear

NOTE: If the letter "E" is displayed in the transmission position display, it means that there is a electrical communication error. Contact an authorized Can-Am dealer.

Fuel Level Display

Bar gauge continuously indicates the fuel level in the fuel tank.

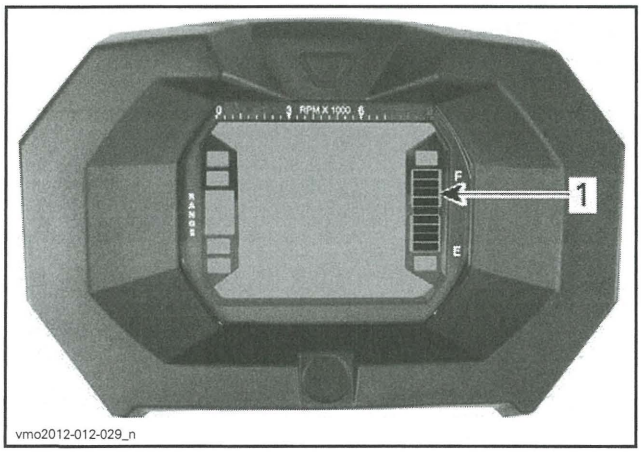

1. Fuel level display

Low fuel level Indicator Lamp



When this indicator turns ON, it indicates that there is approximately 5 L (1.3 U.S. gal.) of fuel left in fuel tank.

4WD Indicator Lamp



When this indicator is ON, it indicates the **4WD** system is activated.

Brake Lock Indicator Lamp



When this indicator is ON, it indicates the brake is activated for more than 15 seconds (while riding).

High Beam Indicator Lamp



When this indicator is ON, it indicates that **high beam** is selected.

Check Engine Indicator Lamp



When this indicator is ON, it indicates an engine fault code, look for a message at the LCD display.

Refer to *TROUBLESHOOTING* section for more details.

Turn Signal/Hazard Lights Indicator Lamp

CE Models



When this indicator is ON, it indicates:
- A turn signal is activated, or
- Hazard lights are activated.

Multifunction Display Modes

⚠ WARNING

Never adjust or set functions on the multi-function gauge while riding the vehicle.

The available modes may be displayed by pressing the selector button.

NOTE: An abbreviation of the mode selected will also be displayed in Display 3.

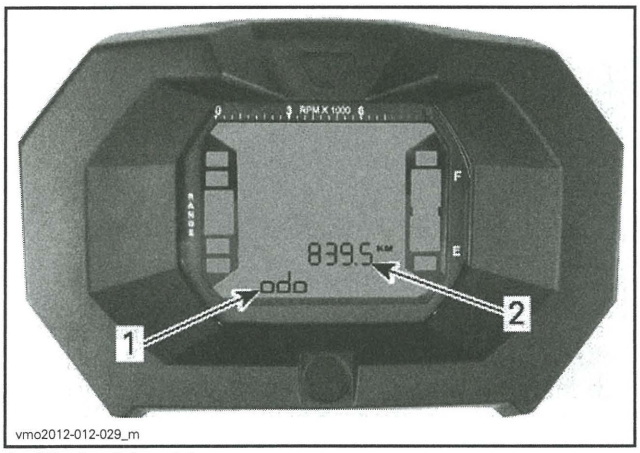

1. *Display 2 (mode)*
2. *Display 3 (mode/message)*

A) Odometer

Records the total distance travelled.

B) Clock

Shows current time.

Press and HOLD selector button to set clock.

C) Trip Meter

Records the distance travelled since it has been reset.

Press and HOLD display selection button to reset.

D) Hour Meter (Trip Time)

Records the vehicle running time when the electrical system is activated since it has been reset.

Press and HOLD display selection button to reset.

E) Engine Hour Meter

Records engine running time.

F) Engine RPM

Measures engine revolutions per minute (RPM).

MULTIFUNCTION GAUGE (ANALOG/DIGITAL)

Multifunction Gauge Description

The Multifunction Gauge (Analog/digital) is located on the steering column.

The Multifunction Gauge (Analog/digital) is comprised of a digital gauge and two analog gauges (speedometer and tachometer).

The engine temperature and fuel level bar graphs are comprised in the digital gauge.

The indicators lamps are comprised in both analog gauges.

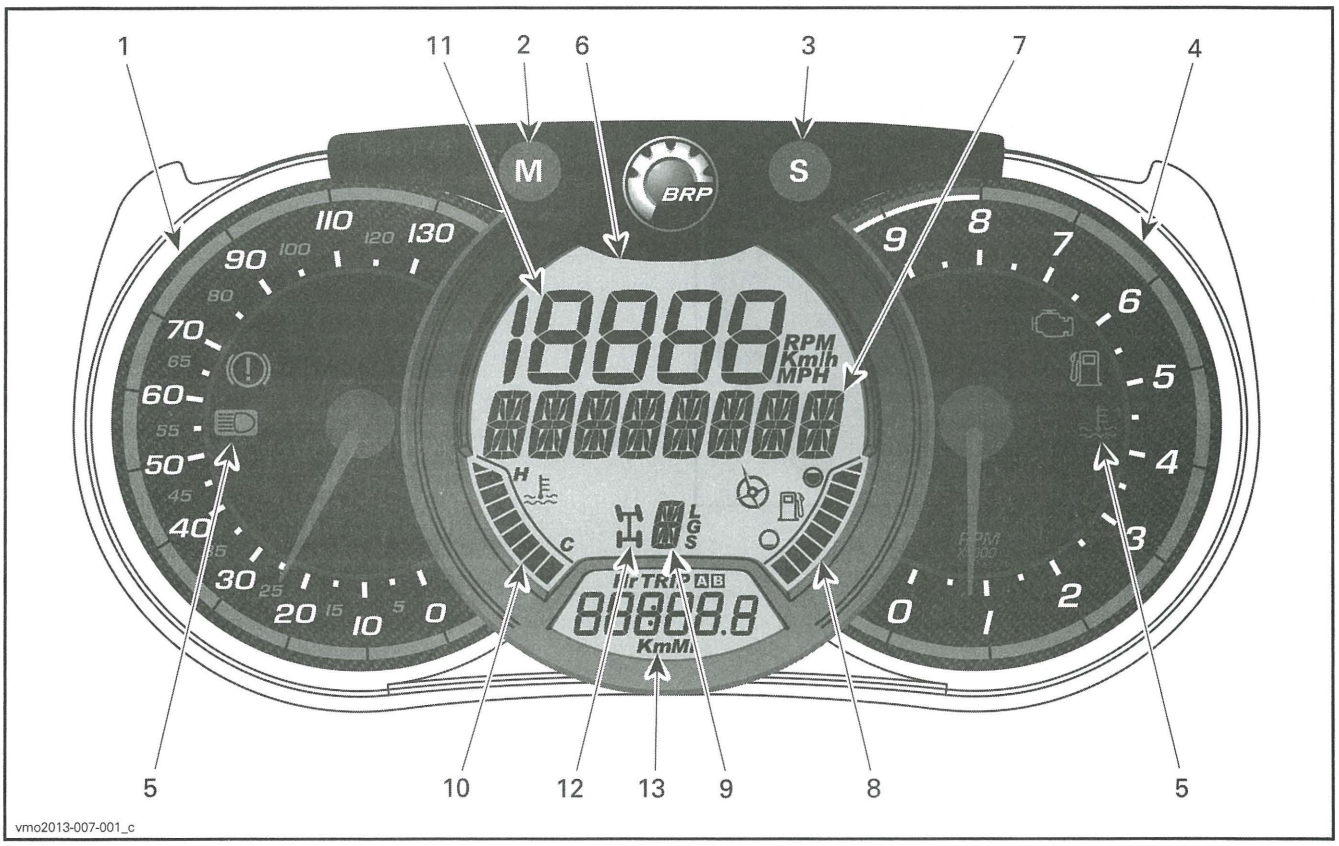

1. *Analog speedometer*
2. *MODE (M) button*
3. *SET (S) button*
4. *Analog tachometer (RPM)*
5. *Indicator lamps*
6. *Main digital display*
7. *Multifunction display*
8. *Fuel level indicator*
9. *Gearbox position indicator*
10. *Engine temperature indicator*
11. *Numerical display*
12. *2WD/4WD indicator*
13. *Secondary digital display*

⚠ WARNING

Do not adjust the display while riding. You could lose control.

1) ANALOG SPEEDOMETER

Measures vehicle speed in km/h or mph.

2) MODE (M) BUTTON

Pressing the MODE (M) button will scroll through the functions of the main digital display.

FUNCTION SEQUENCE	OPTIONS
Air Suspension (LTD model only)	Press ACS button to change setting (1 to 6)
Numerical Display is flashing	Press SET (S) to scroll and select desired function and press MODE (M) to confirm
Multifunction display is flashing	Press SET (S) to scroll and select desired function and press MODE (M) to confirm

3) SET (S) BUTTON

Pressing the SET (S) button will scroll through the functions of the secondary digital display.

FUNCTION SEQUENCE	INFORMATION DISPLAYED
Clock	XX:XX (24:00 time base) XX:XX A or P (12:00 AM/PM time base)
Cumulative distance odometer	XXXXX.X km or mi
Trip distance — odometer A (TRIP A)	XXXXX.X km or mi
Trip distance — odometer B (TRIP B)	XXXXX.X km or mi
Engine time chronometer (Hr)	XXXXX.X
Trip time chronometer (HrTRIP)	XXXXX.X

To reset any trip functions, push and hold the MODE (M) button for three seconds.

4) ANALOG TACHOMETER (RPM)

Measures engine revolutions per minute (RPM). Multiply by 1000 to obtain actual revolutions.

5) INDICATOR LAMPS

Indicator lamps will inform you of various conditions or problems.

An indicator lamp can flash alone or in combination with another lamp.

INDICATOR LAMP(S)		DESCRIPTION
All indicator lamps	On	All indicator lamps are activated when ignition switch is ON and the engine is not started
	On	Low Fuel
	On	Check Engine
	On	High Engine Temperature
	On	Headlights in the HIGH beam position
	On	Brake is pressed for more than 15 seconds while riding

6) MAIN DIGITAL DISPLAY

Displays useful real-time information to the rider.

7) MULTIFUNCTION DISPLAY

The vehicle speed or the engine revolutions (RPM) can be displayed. See *MODE (M) BUTTON* in this section.

Important messages can also be displayed. Refer to table below.

MESSAGE	DESCRIPTION
BRAKE	Message displayed when the brakes are applied continuously for 15 seconds.
PERFORMANCE KEY	Displayed at power up when a the performance key is used.
OVERRIDE	Override is displayed when the override switch is pressed and the shift lever is set to reverse gear.
MAINTENANCE REQUIRED	Displayed in gauge when vehicle will soon require periodic maintenance. Message can be erased by pressing alternately the override switch and the brake pedal 3 times, or can be erased by dealer.

If an abnormal engine condition occurs, a message can be combined with a pilot lamp. Refer to *TROUBLESHOOTING* section for details.

8) FUEL LEVEL INDICATOR

Bar graph that continuously indicates the level of fuel left in the fuel tank.

9) GEARBOX POSITION INDICATOR

Displays the selected gearbox position.

As a second function, will indicate the current ACS position setting.

10) ENGINE TEMPERATURE INDICATOR

Bar graph that continuously indicates the engine coolant temperature.

11) NUMERICAL DISPLAY

The vehicle speed or the engine revolutions (RPM) can be displayed. See *MODE (M) BUTTON* in this section.

12) 2WD/4WD INDICATOR

When this indicator is ON, the 4WD system is activated.

13) SECONDARY DIGITAL DISPLAY

Displays useful real time information to the rider. For display function informations, refer to *SET (S) BUTTON*.

GAUGE SETUP

Setting Metric/Imperial Units

See a Can-Am dealer for adjustments.

Setting Clock

1. Press SET (S) button to select clock display.
2. Push and hold SET (S) button for three seconds.
3. Press SET (S) button to select 12:00 AM PM or 24:00 time base.
4. If 12:00 AM PM time base is selected, A or P flashes. Press SET (S) button to select A (AM) or P (PM).
5. Press SET (S) to select the first digit of the hour.
6. Press SET (S) to select the second digit of the hour.
7. Press SET (S) to select first digit of the minutes.
8. Press SET (S) to select second digit of the minutes.

Setting Language

The gauge display language can be changed. Refer to an authorized Can-Am dealer for language availability and setup the gauge to your preference.

MULTIFUNCTION GAUGE (RENEGADE)

Multifunction Gauge Description

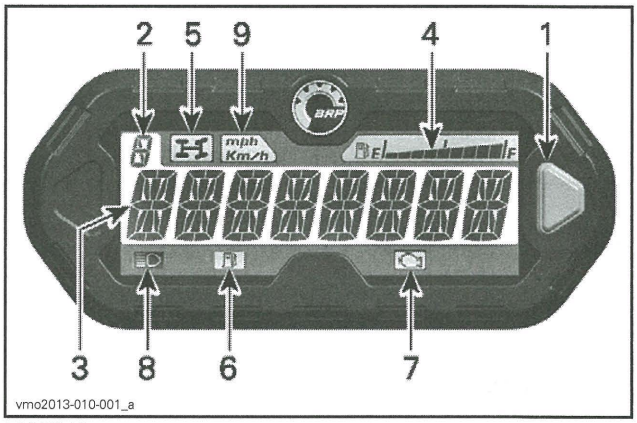

TYPICAL
1. *Selector button*
2. *Transmission position display*
3. *Main screen*
4. *Fuel level display*
5. *4WD indicator lamp*
6. *Low fuel level indicator lamp*
7. *Check engine indicator lamp*
8. *High beam indicator lamp*
9. *MPH, Km/h indicator lamp*
10. *Signal lights/hazard lights indicator lamp (CE models)*

1) Selector Button

The selector button is used to navigate or change settings in the multifunction gauge.

2) Transmission Position Display

This display will show transmission position.

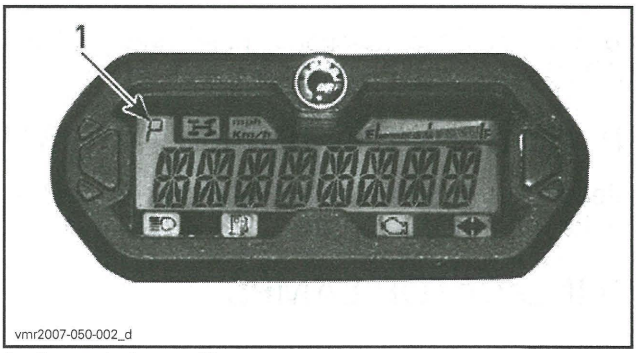

1. *Transmission position*

DISPLAY	FUNCTION
P	Park
R	Reverse
N	Neutral
H	High range
L	Low range

3) Main Screen

The main screen is used to display numerous functions of the multifunction gauge.

Refer to *MULTIFUNCTION GAUGE MODES* for the available display modes.

4) Fuel Level Display

Bar gauge continuously indicates the level of fuel in the fuel tank while riding.

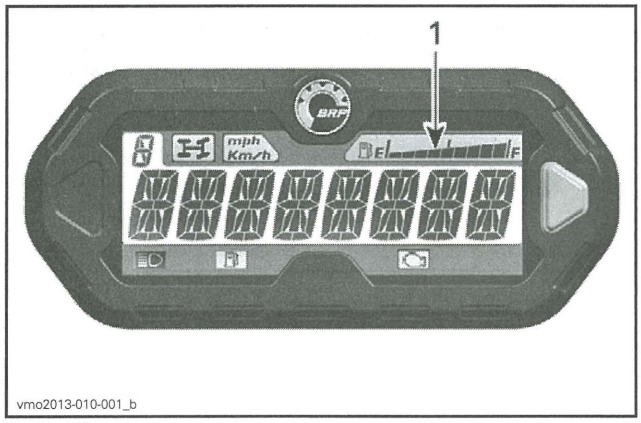

1. Fuel level display

5) 4WD Indicator Lamp

When this indicator is ON, it indicates the **4WD** system is activated.

6) Low Fuel Level Indicator Lamp

When this indicator is ON, it indicates that there is approximately 5 L (1.3 U.S. gal.) of fuel left in fuel tank.

7) Check Engine Indicator Lamp

When this indicator is ON, it indicates an engine fault code, look for a message in the main screen display.

When this indicator blinks, it indicates that **LIMP HOME** mode is activated.

8) High Beam Indicator Lamp

When this indicator is ON, it indicates that **high beam** is selected on the headlights switch and that the ignition key is in the "ON with lights" position.

9) KM/H or MPH Indicator Lamp

mph
Km/h

The applicable lamp turns on to indicate the active speedometer unit of display.

10) Turn signal/Hazard lights Indicator Lamp

When this indicator is ON, it indicates:
- A turn signal is activated, or
- The hazard lights are activated.

Multifunction Display Modes

Speed Mode

In this mode, the display shows the speed of the vehicle either in km/h or in MPH.



RPM Mode

In this mode, the display shows the engine RPM.

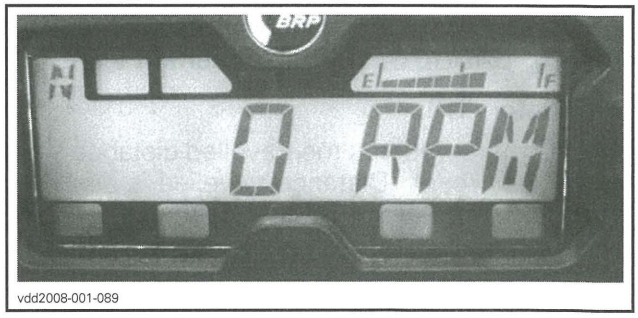

Combined Mode

In this mode, the display shows the speed of the vehicle and the engine RPM.

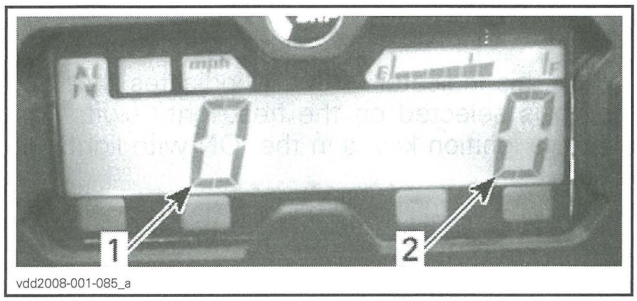

vdd2008-001-085_a

1. *Vehicle speed*
2. *Engine RPM*

Odometer (OD)

Odometer records the total distance travelled either in miles or kilometers.


vsi2009-018-030

Clock

Shows current time.

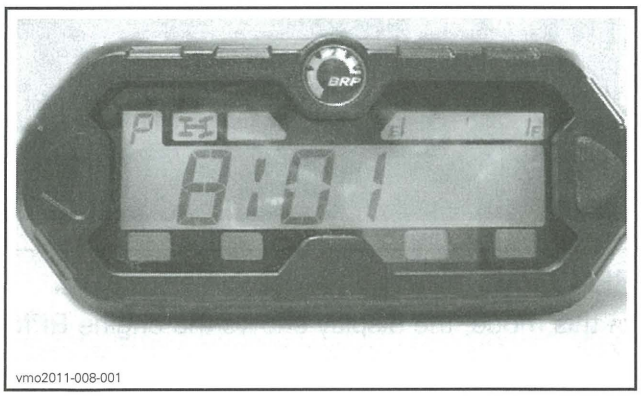
vmo2011-008-001

Refer to *GAUGE SETUP* to set current time.

Trip Meter (TP)

The trip meter records the travelled distance since it has been reset. Distance travelled is displayed either in kilometers or miles.

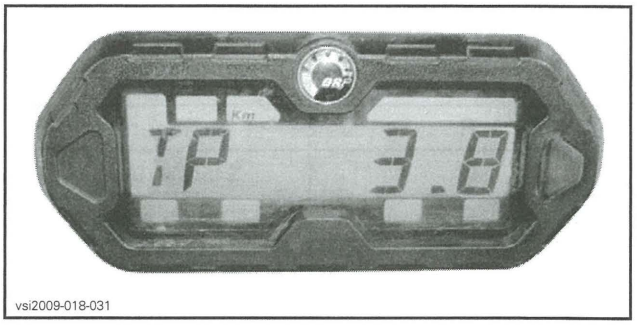
vsi2009-018-031

Press and HOLD the selector button for 2 seconds to reset the trip meter.

Trip Hour Meter (TH)

The trip hour meter records vehicle running time when the electrical system is activated. It can be used to establish traveling time between 2 places.


vsi2009-018-032

Press and HOLD the selector button for 2 seconds to reset the hour meter.

Engine Hour Meter (EH)

The engine hour meter records engine running time.


vsi2009-018-033

Message Display Mode

If an abnormal engine condition occurs, a message may scroll across the main screen in conjunction with a pilot lamp.

Refer to *DIAGNOSTIC SYSTEM AND FAULT CODES* subsection.

Navigating the LCD Gauge

⚠ WARNING

Never adjust or set functions on the multi-function gauge while riding the vehicle.

Default Display Mode

After vehicle startup, the default display mode is either:

- Vehicle speed
- Engine revolutions per minute (RPM)
- Both parameters simultaneously (combined mode).

To change from one display to the other, proceed as follows.

1. Turn ignition key to ON to power-up the system.
2. Wait until the "greeting message" has been displayed.
3. Press and release selector button once to display OD (odometer).
4. Press the selector button again, this time for 2 seconds.

This will change the Mode to either Speed, RPM or Combined.

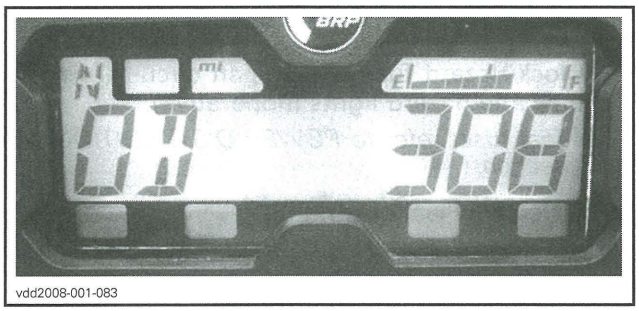

vdd2008-001-083

5. To select another mode, repeat steps 3 and 4 until the desired mode is displayed.

Temporary Display Mode

In the temporary display mode, the following functions are available:

- Odometer
- Clock
- Trip meter (resettable)
- Trip Hour meter (resettable)
- Engine hour meter.

Press and release selector button to change the default display mode to the temporary mode.

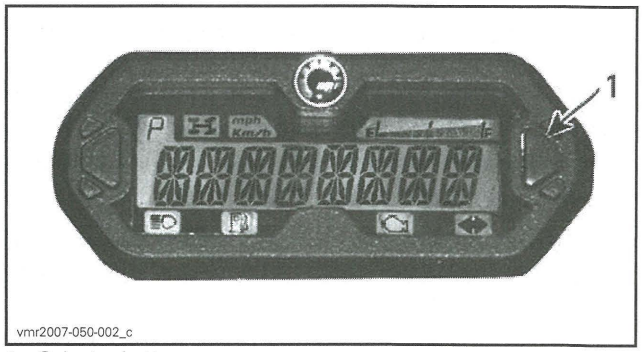

vmr2007-050-002_c

1. Selector button

The gauge will display the selected mode for 10 seconds then will return to the normal display mode.

While in a resettable mode, push and HOLD selector button for 2 seconds to reset it.

TROUBLESHOOTING

DIAGNOSTIC TIPS

NOTE: It is a good practice to check for fault codes using B.U.D.S. software as a first troubleshooting step. Refer to *COMMUNICATION TOOLS AND B.U.D.S.* subsection.

IMPORTANT: When troubleshooting an electrical system fault, check battery condition, cables and connections first.

Circuit Testing

Check the related-circuit fuse condition with a fuse tester or test lamp (a visual inspection could lead to a wrong conclusion).

NOTE: If the ignition switch is left ON for more than 50 minutes, the accessory relay will shut down.

Electrical Connection Inspection

When replacing an electric or electronic component, always check electrical connections. Make sure they are tight, make good contact, and are corrosion-free. Dirty, loose or corroded contacts are poor conductors and are often the source of a system or component malfunction.

Pay particular attention to ensure that pins are not bent or pushed out of their connectors.

Ensure all wire terminals are properly crimped on wires, and connector housings are properly fastened.

Check for signs of moisture, corrosion or dullness. Clean pins properly and coat them with DIELECTRIC GREASE (P/N 293 550 004) or other appropriate lubricant when reassembling them, except if otherwise specified such as for the ECM connector.

Pay attention to ground wires.

For wiring harness connector locations, refer to *WIRING HARNESS AND CONNECTORS* subsection.

DIAGNOSTIC GUIDELINES (GAUGE)

MULTIFUNCTION GAUGE WILL NOT COME ON

1. **Multifunction gauge not powered up.**
   - *Check fuse (F4), refer to POWER DISTRIBUTION subsection.*
   - *Test diode D11, refer to WIRING DIAGRAM.*
   - *Test multifunction gauge 12 Vdc input and ground circuits as per MULTIFUNCTION GAUGE WIRE IDENTIFICATION in this subsection. Refer to WIRING DIAGRAM.*
2. **Defective Multifunction Gauge.**
   - *Replace multifunction gauge.*

RELAYS/SPEEDO FUSE (F4) BURNS OUT REPEATEDLY

1. **Taillight/Brake light system short circuit.**
   - *Check taillight/brake light bulbs and circuit*

MULTIFUNCTION GAUGE COMMUNICATION ERROR

1. **Multifunction gauge CAN circuit open.**
   - *Ensure multifunction gauge is properly connected and powered up.*
   - *Check for applicable fault code using B.U.D.S., refer to MONITORING SYSTEM AND FAULT CODES subsection.*
   - *Carry out a MULTIFUNCTION GAUGE CAN RESISTOR TEST in this subsection.*
   - *Carry out a continuity test of the multifunction gauge CAN wires, refer to WIRING DIAGRAM.*

NO FUEL QUANTITY INDICATION

1. **Defective fuel level sender or wiring.**
   - *Refer to FUEL TANK AND FUEL PUMP subsection.*
2. **Defective Multifunction Gauge.**
   - *Replace multifunction gauge, refer to MULTIFUNCTION GAUGE in this subsection.*

DIAGNOSTIC GUIDELINES (LIGHTS)

LOW AND HIGH BEAM HEADLIGHTS WILL NOT COME ON SIMULTANEOUSLY

1. **Jumper JP1 is open circuit or missing.**
   - *Check jumper (fuse) JP1 in front fuse box, refer to POWER DISTRIBUTION subsection.*

BRAKE LIGHTS WILL NOT COME ON WHEN BRAKES APPLIED

1. **Defective brake relay.**
   - *Test brake relay (R8), refer to POWER DISTRIBUTION subsection.*
2. **Defective brake light switch(es).**
   - *Refer to BRAKE LIGHT SWITCHES in the BRAKE subsection.*
3. **Defective wiring/connectors.**
   - *Test wiring continuity, refer to applicable WIRING DIAGRAM.*

TURN SIGNAL LIGHTS WILL NOT COME ON WHEN SELECTED (CE MODELS)

1. **Accessories fuse (F7) open circuit (turn signals inoperative only).**
   - *Test fuse, refer to POWER DISTRIBUTION subsection.*
2. **Clock/Hazard fuse (F10) open circuit (turn signals and hazard lights inoperative).**
   - *Test fuse, refer to POWER DISTRIBUTION subsection.*
3. **Defective Flasher Module.**
   - *Replace flasher module, refer to FLASHER MODULE in this subsection.*
4. **Defective wiring/connectors.**
   - *Test wiring continuity, refer to applicable WIRING DIAGRAM.*

HAZARD LIGHTS WILL NOT COME ON WHEN SELECTED (CE MODELS ONLY)

1. Clock/Hazard fuse (F10) open circuit.
   - *Check fuse, refer to POWER DISTRIBUTION subsection.*
2. Hazard lights 12 Vdc input circuit open.
   - *Check wiring and connectors as per TURN SIGNAL/HAZARD LIGHTS WIRE IDENTIFICATION in this subsection. Refer to WIRING DIAGRAM.*
3. Hazard lights selector switch defective.
   - *Test switch as per TURN SIGNAL/HAZARD LIGHTS WIRE IDENTIFICATION in this subsection. Refer to WIRING DIAGRAM.*
4. Defective wiring/connector between hazard lights selector switch and flasher module.
   - *Refer to WIRING DIAGRAM.*
5. Flasher module ground circuit open.
   - *Test wiring and connectors, refer to WIRING DIAGRAM.*
6. Defective flasher module.
   - *Replace flasher module, refer to FLASHER MODULE in this subsection.*

HAZARD LIGHTS COME ON WITHOUT BEING SELECTED (CE MODELS ONLY)

1. Hazard lights switch or wiring short circuit.
   - *Check for water in LH multifunction switch.*
   - *Test hazard light switch and wiring, refer to WIRING DIAGRAM.*
2. Resistor R1 in flasher module input circuit is open.
   - *Test resistor R1, refer to WIRING DIAGRAM.*

TURN SIGNAL/HAZARD LIGHTS INDICATOR IN MULTIFUNCTION GAUGE WILL NOT COME ON WITH TURN SIGNAL OR HAZARD LIGHTS SELECTED ON, IGNITION SWITCH ON (CE MODELS ONLY)

1. Signal wire from flasher module to multifunction gauge open circuit.
   - *Test circuit continuity from flasher module (3–MC2–4) to multifunction gauge (1–C1–8).*
2. Defective flasher module.
   - *Replace flasher module, refer to FLASHER MODULE in this subsection.*
3. Defective multifunction gauge.
   - *Replace multifunction gauge.*

HAZARD LIGHTS INDICATOR NOT WORKING WITH IGNITION SWITCH OFF (CE MODELS ONLY)

1. Diode D10 open circuit.
   - *Test diode, refer to WIRING DIAGRAM.*

POSITION LIGHTS WILL NOT COME ON (CE MODELS ONLY)

1. Accessories fuse F7 open circuit.
   - *Test fuse, refer to POWER DISTRIBUTION subsection.*
2. Power or ground circuit wiring.
   - *Check wiring continuity, refer to WIRING DIAGRAM.*
3. Defective light bulbs
   - *Test/replace light bulbs.*

HORN WILL NOT FUNCTION (CE MODELS ONLY)

1. Burnt Clock/Hazard fuse (F10)
   - *Check fuse*
2. Defective horn.
   - *Test horn by applying 12 Vdc and ground jumper to horn.*
3. Defective horn switch.
   - *Test horn switch as per HORN WIRE IDENTIFICATION in this subsection. Refer to WIRING DIAGRAM.*
4. Defective wiring.
   - *Check wiring continuity as per HORN WIRE IDENTIFICATION in this subsection. Refer to WIRING DIAGRAM.*

PROCEDURES

MULTIFUNCTION GAUGE (OUTLANDER AND RENEGADE MODELS)

Maintenance Required Message Reset

Connect to the latest applicable B.U.D.S. software version. Refer to *COMMUNICATION TOOLS AND B.U.D.S.* subsection.

Select **Vehicle** tab.

Click on the **Reset Service** button.

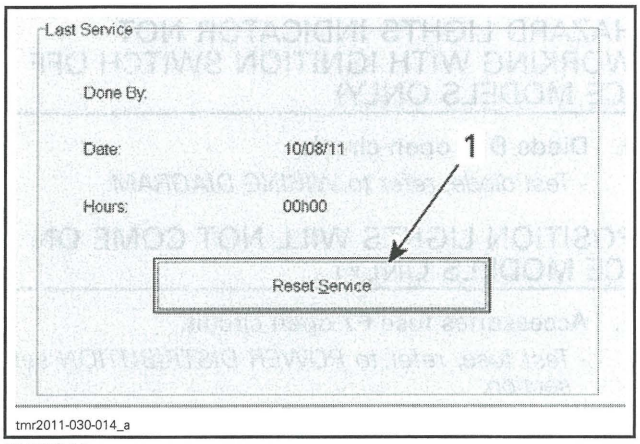

TYPICAL
1. *Reset Service button*

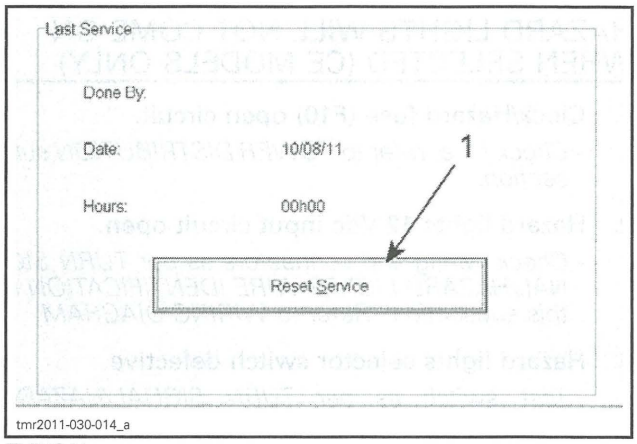

TYPICAL
1. *Reset Service button*

Multifunction Gauge Wire Identification

FUNCTION	PIN	COLOR
12 volt input from fuse F4	17	ORANGE/YELLOW
12 volt input from fuse F10 (Clock)	16	RED/WHITE
Ground	20	BLACK
CAN LO	18	BEIGE/GREEN
CAN HI	19	WHITE/BEIGE
Fuel level gauge supply	4	BROWN/PINK
Fuel level gauge ground	21	VIOLET/PINK
2WD/4WD switch signal (-)	7	BLACK/BEIGE
HI beam signal (+)	5	BLUE
Vehicle speed sensor signal (VSS)	9	PINK

Multifunction Gauge Circuit Protection

CONDITION	CIRCUIT PROTECTION
Supplied at all times	Fuse 10 of fuse block 1 (from fuse 1 of fuse block 2)
Supplied with main relay activated	Fuse 4 of fuse block 1 (from main relay R2)

Maintenance Required Message Reset

Connect to the latest applicable B.U.D.S. software version. Refer to *COMMUNICATION TOOLS AND B.U.D.S.* subsection.

Select **Vehicle** tab.

Click on the **Reset Service** button.

Clock Setting Using Gauge Selector Button

To set current time, proceed as follows:

1. Select the clock display.

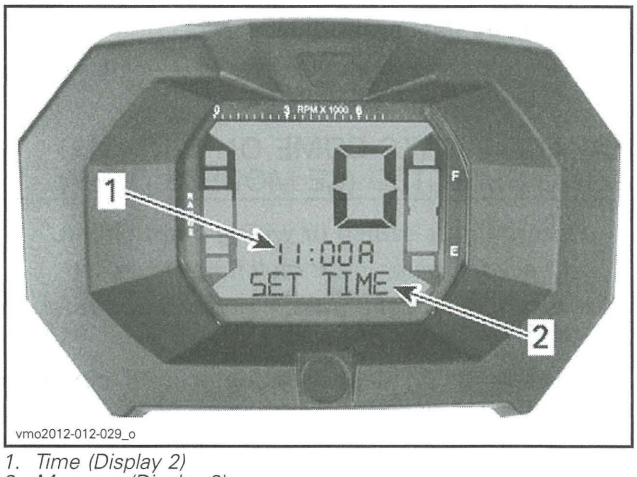

1. *Time (Display 2)*
2. *Message (Display 3)*

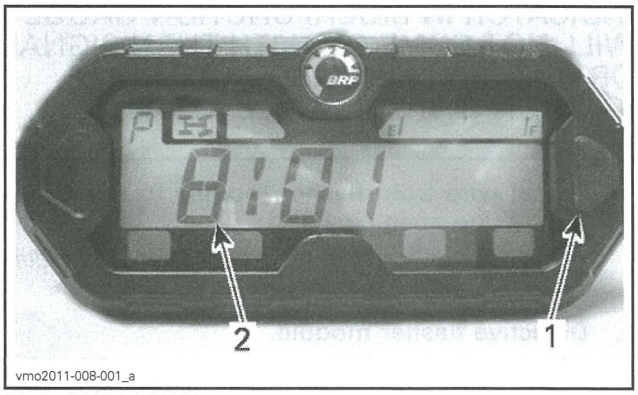

RENEGADE GAUGE
1. *Selector button*
2. *Time*

2. Press and HOLD selector button.

Outlander Models

NOTE: SET TIME will appear on display 3.

Renegade Models

NOTE: The display will flash.

Outlander and Renegade Models

3. Choose the 12-hour (12H) or 24-hour (24H) format by pressing button.
4. If the 12-hour format was selected, choose Am (A) or Pm (P) by pressing button.
5. Press and HOLD button.
6. Choose hour first digit by pressing button.
7. Press and HOLD button.
8. Choose hour second digit by pressing button.
9. Press and HOLD button.
10. Choose minutes first digit by pressing button.
11. Press and HOLD button.
12. Choose minutes second digit by pressing button.
13. Press button to enter settings (CLOCK will appear on display).

NOTE: The gauge will display the current time for 10 seconds then will return to the normal display mode.

Multifunction Gauge Set-Up Using B.U.D.S.

Connect to the applicable B.U.D.S. software. Refer to *COMMUNICATION TOOLS AND B.U.D.S.* subsection.

Language Selection

In B.U.D.S., select the:
- **Setting** page tab
- **Cluster** page tab.

Scroll and select the desired display language in the **Cluster Language** box.

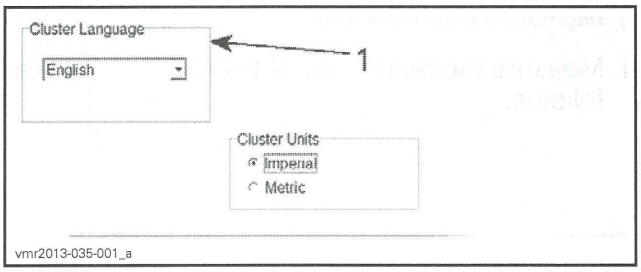

TYPICAL
1. Cluster Language box

Units of Display Selection

In B.U.D.S., select the:
- **Setting** page tab
- **Cluster** page tab.

Select **Imperial** or **Metric** in the **Cluster Units** box.

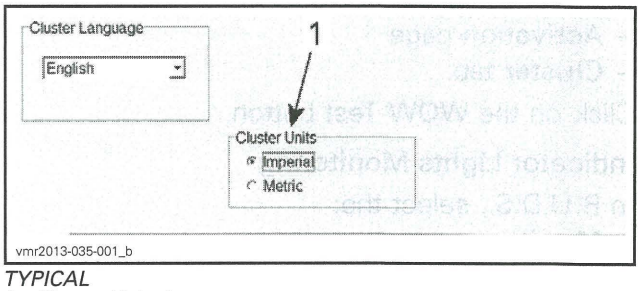

TYPICAL
1. Cluster Units box

Clock Setting

In B.U.D.S., select the:
- **Setting** page tab
- **Cluster** page tab.

To set clock to the 24-hour format, check the **24 H** box. To set it to the 12-hour format, leave the box empty.

If 12-hour format was selected, check the **PM** box if required.

Set hour and minutes using the up or down arrows.

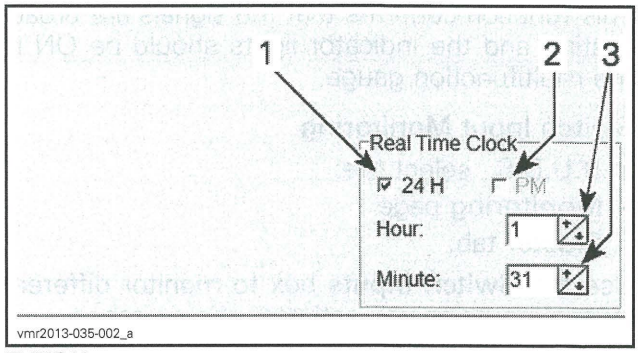

TYPICAL
1. 24 H box
2. PM box
3. Arrows

Multifunction Gauge Test Using B.U.D.S.

Connect to the latest applicable B.U.D.S. software version. Refer to *COMMUNICATION TOOLS AND B.U.D.S.* subsection.

Wow Test

This function is used to check if the indicator lights, display and analog indicators (if applicable) are functional.

NOTE: This function does not test the signals or external circuits.

In B.U.D.S., select the:
- **Activation** page
- **Cluster** tab.

Click on the **WOW Test** button.

Indicator Lights Monitoring

In B.U.D.S., select the:
- **Monitoring** page
- **Cluster** tab.

Use the **Cluster Lamp Active** box to monitor different indicator lights outputs.

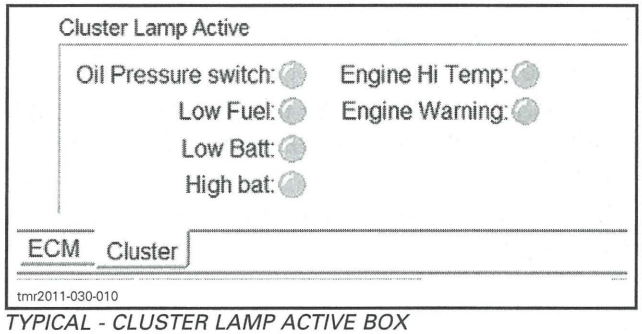

TYPICAL - CLUSTER LAMP ACTIVE BOX

This function confirms that the signals are broadcasting and the indicator lights should be ON in the multifunction gauge.

Switch Input Monitoring

In B.U.D.S., select the:
- **Monitoring** page
- **Cluster** tab.

Use the **Switch Inputs** box to monitor different switch inputs as you activates the switches.

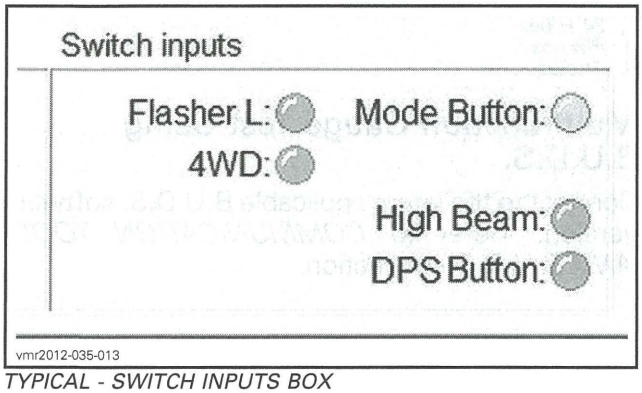

TYPICAL - SWITCH INPUTS BOX

This function confirms that the ECM receives the inputs.

Vehicle Parameters Monitoring

In B.U.D.S., select the:
- **Monitoring** page
- **Cluster** tab.

In the upper area of the B.U.D.S. cluster page, the following indications are displayed.
- Engine speed (RPM)
- Vehicle speed
- Fuel level
- Gear position.

These indications confirm that the applicable signals are transmitted and the information should be displayed in the multifunction gauge.

Multifunction Gauge CAN Resistor Test

1. Disconnect DPS1 connector (control) from the DPS module, refer to *STEERING SYSTEM* subsection.
2. Remove seat to access diagnostic link connector (DB).
3. Remove diagnostic link connector from its holder.

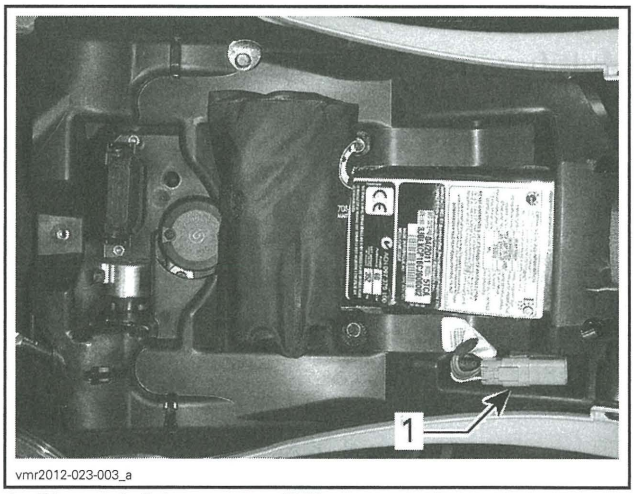

1. Diagnostic link connector (DB)

4. Measure the resistance of the CAN resistors as follows.

REQUIRED TOOL	
FLUKE 115 MULTIMETER (P/N 529 035 868)	

CAN RESISTOR TEST	
DIAGNOSTIC LINK CONNECTOR	RESISTANCE
Pins 1 and 2	Approximately 60 Ω

NOTE: This tests both the ECM and the Cluster CAN resistors and wires.

TEST RESULT	
READING	POSSIBLE CAUSE
Approximately 60 Ω	ECM and CLUSTER CAN wires and resistors good
Approximately 120 Ω	CAN wire to CLUSTER CAN wire to ECM open CLUSTER CAN resistor open ECM CAN resistor open
Infinite (open circuit)	CAN wire to DB connector open circuit

Multifunction Gauge Removal

Outlander Models

1. Remove gauge support.
   - 1.1 Push in on both sides of its leading edge to disengage it.
   - 1.2 Lift up and pull forward to remove.

NOTE: There are a total of 6 tabs that retain the gauge support.

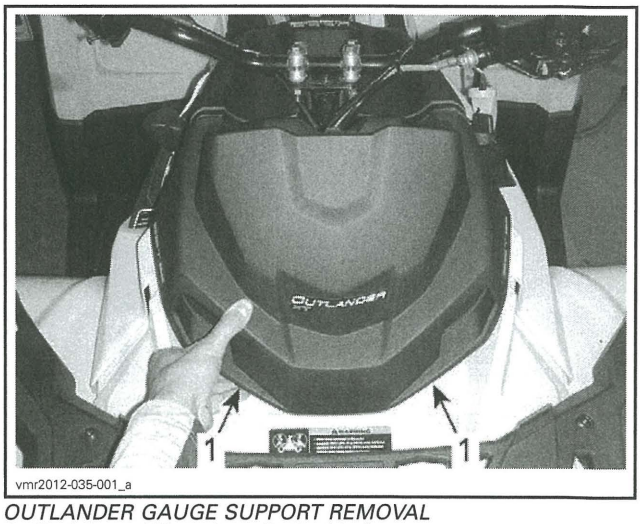

OUTLANDER GAUGE SUPPORT REMOVAL
1. Push in and lift up here (both sides)

2. Disconnect gauge connector.
3. From the back of the gauge support, release the bezel retaining tabs and remove the bezel.

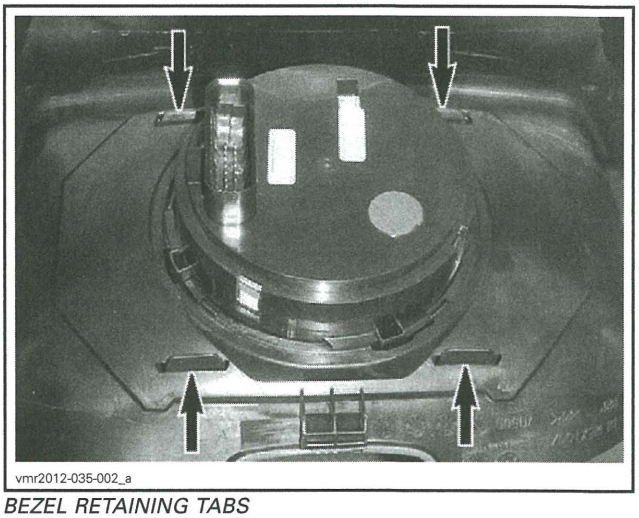

BEZEL RETAINING TABS

4. From back of gauge support, rotate the gauge clockwise to release it from its support.

Renegade Models

1. Remove console panel, refer to *BODY* subsection.
2. Pull gauge support from vehicle.
3. From the back of the gauge support, release the gauge retaining tabs and remove the gauge from its support.

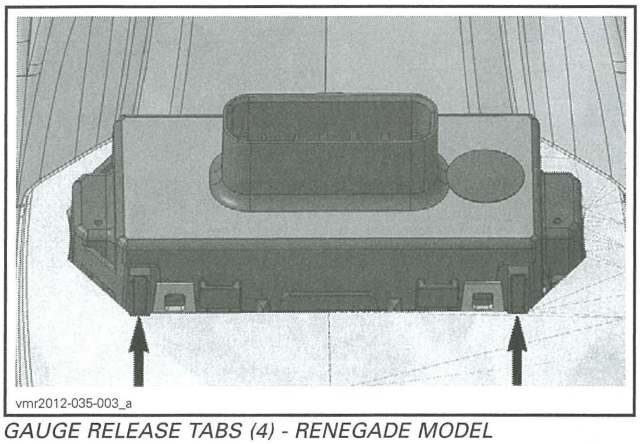
vmr2012-035-003_a

GAUGE RELEASE TABS (4) - RENEGADE MODEL

Multifunction Gauge Installation

For the installation, reverse the removal procedure.

New Multifunction Gauge Registration (coding)

Whenever the multifunction gauge is replaced, B.U.D.S. must be used to register it in the ECM. Simply click **Yes** when the following message appears.

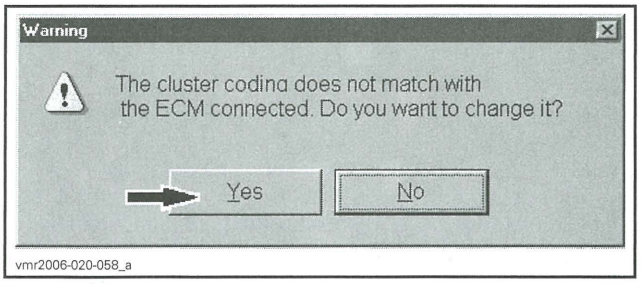

vmr2006-020-058_a

IMPORTANT: If a multifunction gauge from another vehicle model is installed and is not registered in the ECM through B.U.D.S., **engine starting will not be allowed until the gauge is registered with the proper coding.**

12 VOLT POWER OUTLET

12 Volt Power Outlet Removal and Installation

Outlander Models

Remove the gauge support, refer to *MULTIFUNCTION GAUGE REMOVAL* in this subsection.

Renegade Models

Refer to *BODY* subsection and remove the RH inner fender panel.

All Models

Unplug the connectors of the power outlet.

Unscrew the retaining nut.

Reverse procedure for installation.

12 Volt Power Outlet Wire Identification

FUNCTION	PIN	COLOR
12 volt input from fuse F12	2	RED/BROWN
Ground (to ground terminal BK3)	1	BLACK

12 Volt Power Outlet Circuit Protection

CONDITION	CIRCUIT PROTECTION
Supplied with accessories relay activated	Fuse 12 of fuse block 1 (from accessories relay R3)

HEADLIGHTS

Headlight Wire Identification

HEADLIGHTS RELAY (R5)		
FUNCTION	PIN	COLOR
12 volt input from fuse F11 (headlights power)	C6	YELLOW/BLACK
12 volt input from ignition switch pin A (relay winding input)	D6	YELLOW/BLUE
12 volt output to headlights low beam and low/high beam switch	D7	RED/BLUE
Relay winding ground (from ECM K2)	C7	ORANGE/BLACK

HEADLIGHT LOW/HIGH BEAM SWITCH		
FUNCTION	PIN	COLOR
12 volt input from headlights relay	MG2-4	RED/YELLOW
12 volt output to high beam headlights	MG3-5	BLUE
12 volt output to low beam headlights	MG2-2	GREEN

Headlights Circuit Protection

CONDITION	CIRCUIT PROTECTION
Supplied when headlights relay (R5) activated	Fuse 11 of fuse block 1 (from fuse 2 of fuse block 2)

Headlight Test

1. Disconnect LOW beam and HIGH beam headlight connectors. Refer to *BULB REPLACEMENT*.
2. Set ignition switch to ON (with lights).
3. Measure the voltage on headlight connector as follows.

REQUIRED TOOL	
FLUKE 115 MULTIMETER (P/N 529 035 868)	

SWITCH POSITION	WIRE COLOR		VOLTAGE
LO beam or HI beam	GREEN (Low beam connector)	BLACK	Battery voltage
HI beam	BLUE (Hi beam connector)		

4. Remove the JP1 jumper/fuse in fuse box 1, refer to *POWER DISTRIBUTION* subsection.
5. Measure the voltage on headlight connector as follows.

SWITCH POSITION	WIRE COLOR		VOLTAGE
LO beam	GREEN (Low beam connector)	BLACK	Battery voltage
HI beam			No voltage
HI beam	BLUE (Hi beam connector)		Battery voltage

Headlight Bulb Replacement

NOTICE **Never touch glass portion of a halogen bulb with bare fingers, it shortens its operating life. If glass is touched, clean it with isopropyl alcohol which will not leave a film on the bulb.**

1. Unplug connector from bulb.
2. Rotate bulb.

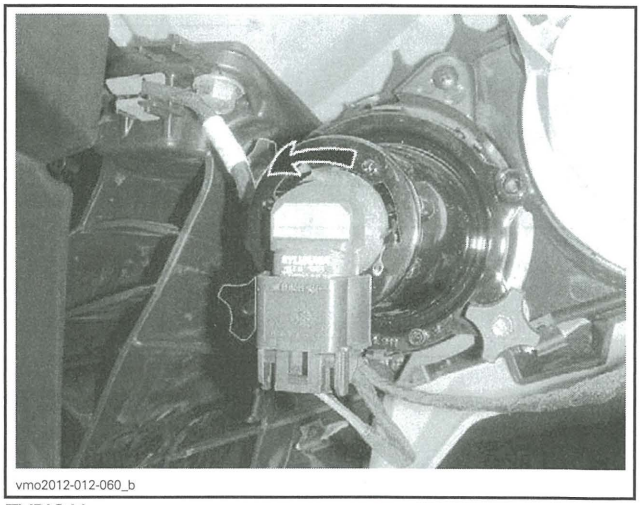

TYPICAL

3. Pull bulb out.
4. Properly reinstall removed parts in the reverse order of their removal.
5. Validate headlight operation.

Headlamp Beam Aiming

NOTE: Load vehicle as per normal use.

1. Position vehicle on a level surface 5 m (16 ft) in front of a test surface (wall or screen) as in first illustration.
2. Measure the distance from the center of each headlight to the ground (high beam and low beam).
3. Trace a line on the test surface parallel to the ground at each measured height (one for high beam and one for low beam).

Low beam aiming is correct when the crest of the low beam is **below** the applicable horizontal center line traced on the test surface as per specification.

High beam aiming is correct when the center of the high beam (focus point) is **below** the applicable horizontal center line traced on the test surface as per specification.

SPECIFICATION	
Low beam crest (top of low beam)	25 mm to 125 mm (1 in to 5 in) **below** applicable line
High beam center (focus point)	

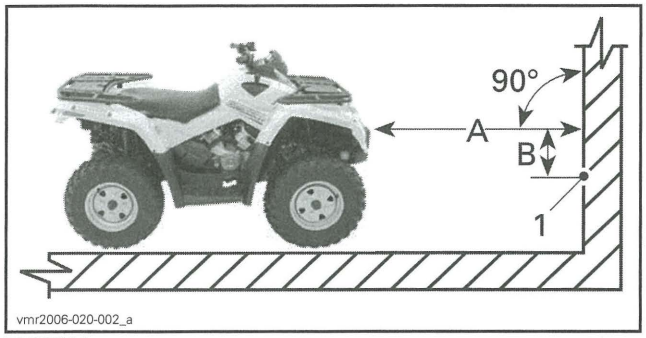

TYPICAL
1. Light beam center
A. 5 m (17 ft)
B. Beam aiming specification

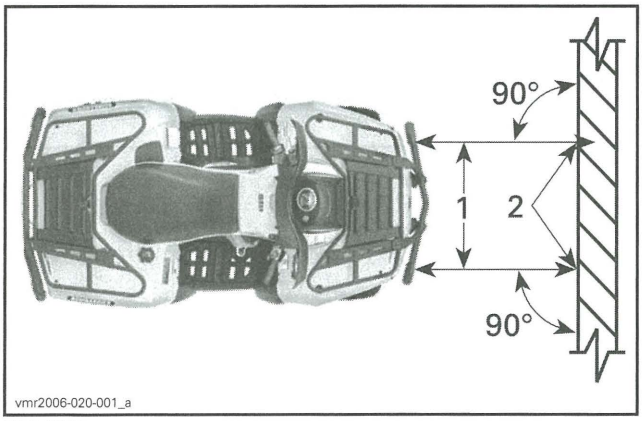

TYPICAL
1. Headlight center lines
2. Light beam center

Beam Aiming Adjustment (Outlander)

Turn adjustment knobs to adjust beam height and side orientation to specification.

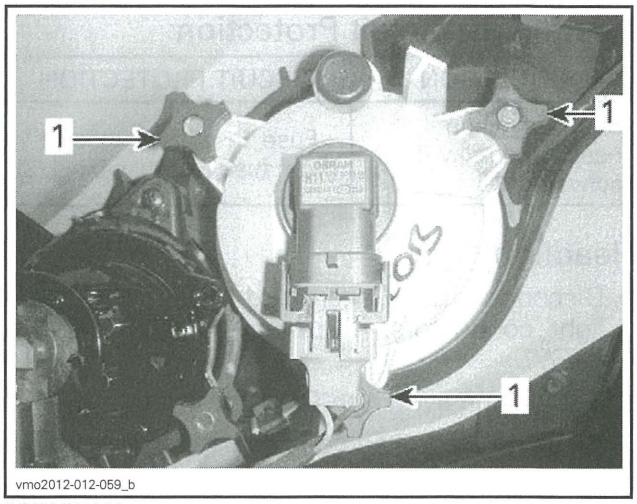

LOW BEAM
1. Adjustment knobs

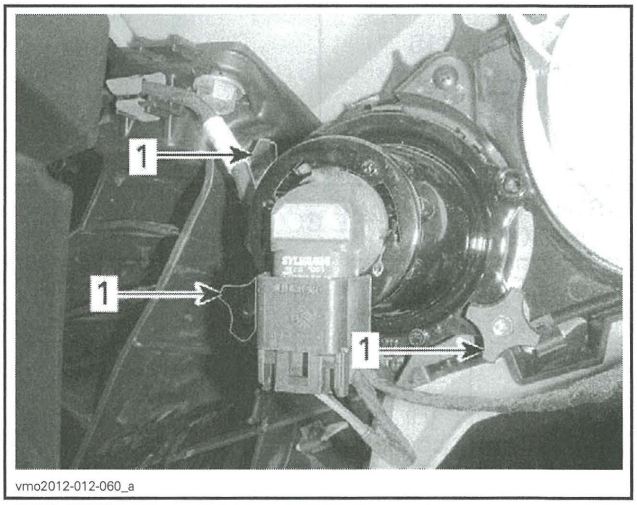

HIGH BEAM
1. Adjustment knobs

Beam Aiming Adjustment (Renegade)

Turn adjustment knobs to adjust beam height and side orientation to specification.

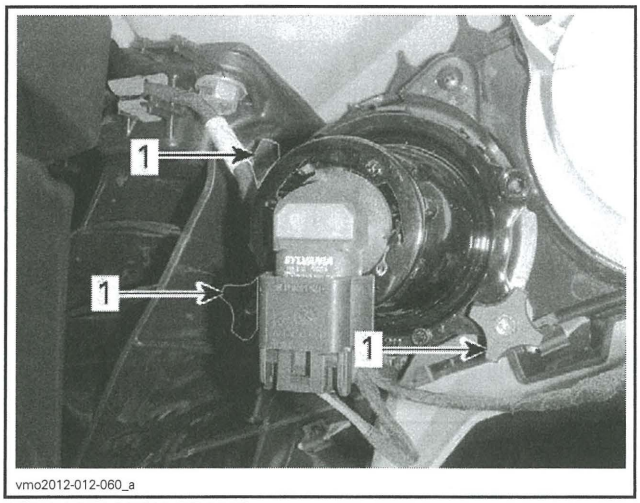

LOW AND HIGH BEAMS
1. Adjustment knobs

TAILLIGHTS/BRAKE LIGHTS

Brake Light Switch

For brake light switch location and testing, refer to *BRAKES* subsection.

Brake Light Wire Identification

BRAKE LIGHT RELAY (R8)		
FUNCTION	PIN	COLOR
12 volt input from fuse F4 (brake light power)	C8	ORANGE/GREEN
12 volt input from F4 (relay winding input)	D8	ORANGE/GREEN
12 volt output to LH and RH brake lights	D9	WHITE/ORANGE
Relay winding ground (from brake light switch(es))	C9	RED/ORANGE

Brake Light Circuit Protection

CONDITION	CIRCUIT PROTECTION
Supplied when: Main relay R2 activated Brake relay R8 activated	Fuse 4 of fuse block 1 (from main relay R2)

Taillight Wire Identification

FUNCTION	PIN	CIRCUIT PROTECTION
Supplied when main relay R2 activated	3	ORANGE/GREEN
Ground from BK2	2	BLACK

Taillight Circuit Protection

CONDITION	CIRCUIT PROTECTION
Supplied when main relay R2 activated	Fuse 4 of fuse block 1 (from main relay R2)

Taillight/Brake Light Bulb Replacement

1. Unplug connector from bulb.
2. Rotate light bulb counterclockwise to remove it from taillight.

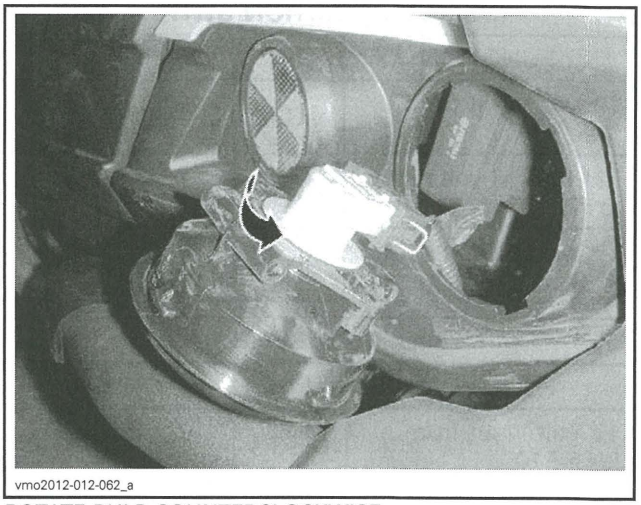

ROTATE BULB COUNTERCLOCKWISE

3. Remove bulb socket from taillight.

Installation is the reverse of the removal procedure.

TURN SIGNALS/HAZARD (CE MODELS ONLY)

Turn Signal/Hazard Lights Wire Identification

FLASHER MODULE		
FUNCTION	PIN	COLOR
12 volt input from fuse F10	MC2-1	RED/WHITE
12 volt input from fuse F7	MC1-5	RED/BLACK
RH turn 12 volt input from turn signal switch	MC1-1	BEIGE/BROWN
LH turn 12 volt input from turn signal switch	MC1-2	BEIGE/GRAY
Output to RH turn signal lights	MC2-2	BROWN
Output to LH turn signal lights	MC2-3	GRAY

FLASHER MODULE		
FUNCTION	PIN	COLOR
Output to multifunction gauge (turn signal indicator)	MC2-4	ORANGE
Ground	MC1-4	BLACK
Hazard 12 volt input from hazard switch	MC1-6	BEIGE/RED

TURN SIGNAL SWITCH (IN MULTIFUNCTION SWITCH)		
FUNCTION	PIN	COLOR
12 volt input from fuse F10	MG3-3	RED/BLACK
RH turn 12 volt output to flasher module	MG3-1	BEIGE/BROWN
LH turn 12 volt output to flasher module	MG3-2	BEIGE/GRAY

HAZARD SWITCH		
FUNCTION	PIN	COLOR
12 volt input from fuse F10	MG3-3	RED/BLACK
12 volt output to flasher module	MG3-5	BEIGE/RED
12 volt output to wake up gauge		

Turn Signal/Hazard Circuit Protection

TURN SIGNAL CIRCUIT	
CONDITION	CIRCUIT PROTECTION
Supplied with main relay (R3) activated	Fuse 7 of fuse block 1 (from main relay R3)
Battery power (continuous)	Fuse 10 of fuse block 1

HAZARD CIRCUIT	
CONDITION	CIRCUIT PROTECTION
Battery power (continuous)	Fuse 10 of fuse block 1

Flasher Module Access

Remove multifunction gauge.

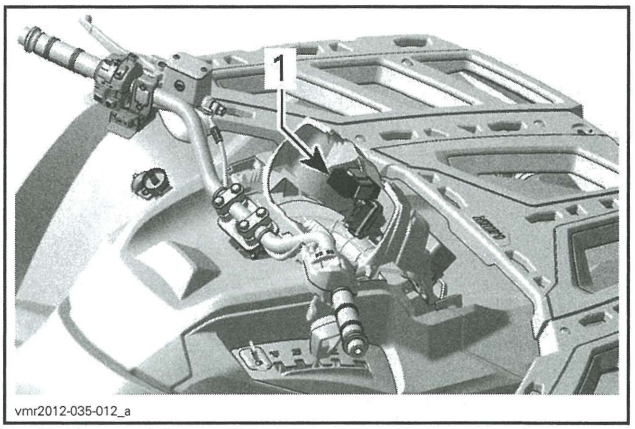

1. Flasher module location

HORN (CE MODELS ONLY)

Horn Wire Identification

HORN SWITCH (IN MULTIFUNCTION SWITCH)		
FUNCTION	PIN	COLOR
12 volt input from fuse F10	MG3-3	RED/BLACK
12 volt output to horn	MG3-4	BEIGE/BLACK

HORN		
FUNCTION	PIN	COLOR
12 volt input from horn switch	2	BEIGE/BLACK
Ground	1	BLACK

Horn Circuit Protection

CONDITION	CIRCUIT PROTECTION
Supplied with main relay (R2) activated	Fuse 4 of fuse block 1 (from main relay R2)

WINCH

Outlander XT, XT-P and LTD Models Only

Winch Wire Identification

WINCH RELAY		
FUNCTION	PIN	COLOR
12 volt input from battery (winch power)	BP4	RED
Ground	BN4	BLACK
12 volt input from switch (IN)	SW1	GREEN/BLUE

WINCH RELAY		
FUNCTION	PIN	COLOR
12 volt input from switch (OUT)	SW2	LIGHT BLUE
Motor power (switches polarity depending on rotation direction)	SW3	RED (with blue sleeve)
Motor power (switches polarity depending on rotation direction)	SW5	RED (with yellow sleeve)

NOTE: The small black wire at terminal BN4 connected to the diodes are used to prevent electric arcs in the switch.

WINCH SWITCH		
FUNCTION	PIN	COLOR
12 volt input from fuse 7	A	RED/BLACK
12 volt output to relay winding (IN)	C	GREEN/BLUE
12 volt output to relay winding (OUT)	B	LIGHT BLUE

⚠ WARNING

Before testing, make sure the winch is in FREESPOOL mode (Freespool clutch disengaged).

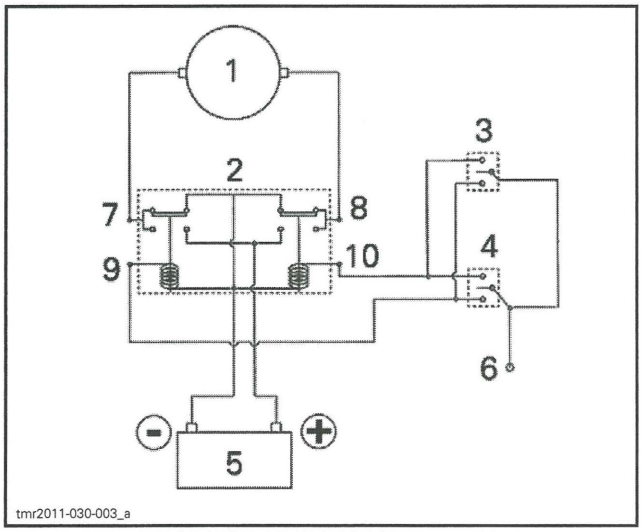

SIMPLIFIED WINCH WIRING DIAGRAM
1. *Winch motor*
2. *Winch relay*
3. *Winch remote control*
4. *Winch switch*
5. *Battery*
6. *12 volt input to switch (switch pin 2 - from fuse 7)*
7. *Winch motor power (SW3)*
8. *Winch motor power (SW5)*
9. *12 volt input to relay winding (IN - SW1)*
10. *12 volt input to relay winding (OUT - SW2)*

Winch Switch Circuit Protection

CONDITION	CIRCUIT PROTECTION
Supplied when accessories relay activated	Fuse 7 of fuse block 1 (from accessories relay R3)

Winch Removal

1. Disconnect, the battery BLACK (-) cable first, then the RED (+) cable.

⚠ WARNING

Always respect this order for disassembly; disconnect BLACK (-) cable first.

2. Remove the hook.
   2.1 Remove and discard the cotter pin.
   2.2 Remove the hook pin.

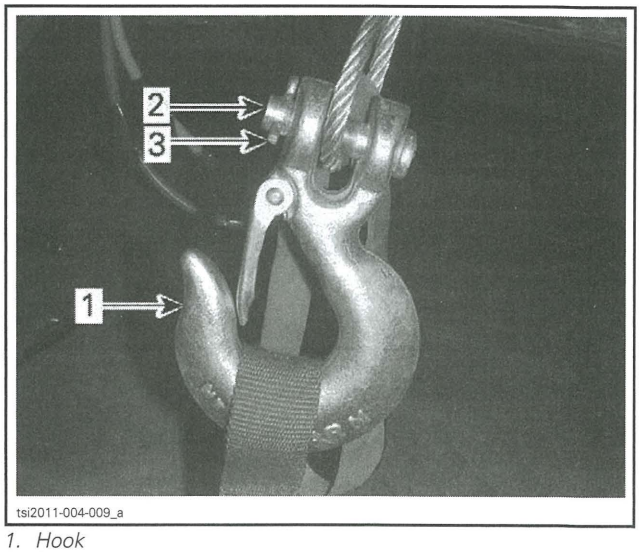

1. *Hook*
2. *Hook pin*
3. *Cotter pin*

CE Models

3. Disconnect turn signal lights and front marker lights.

All Models

4. Remove the winch cable fairlead.

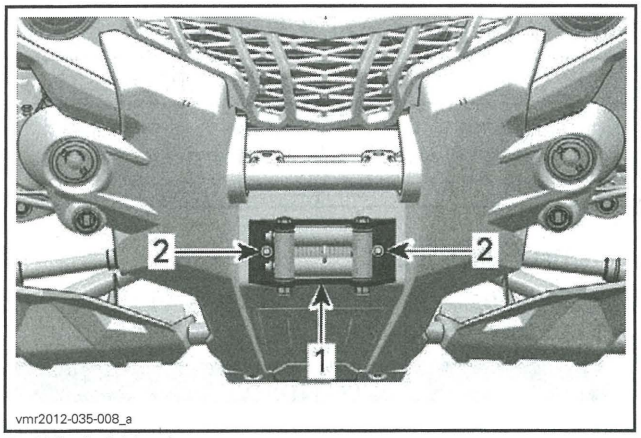

1. Winch fairlead
2. Fairlead retaining screws

5. Remove the front skid plate.

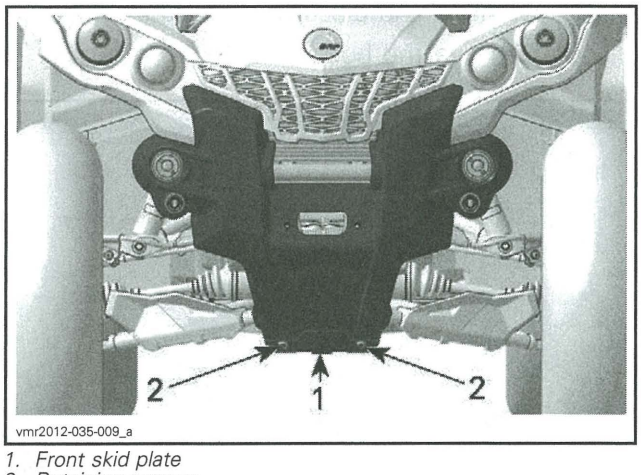

1. Front skid plate
2. Retaining screws

6. Disconnect both winch power cables.

NOTE: Note the position of the power cables for reinstallation.

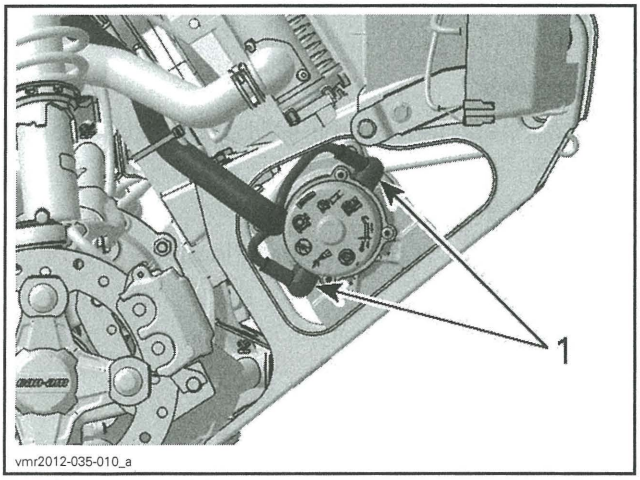

1. Winch power cables

7. Remove the four winch retaining screws from the front bumper support.

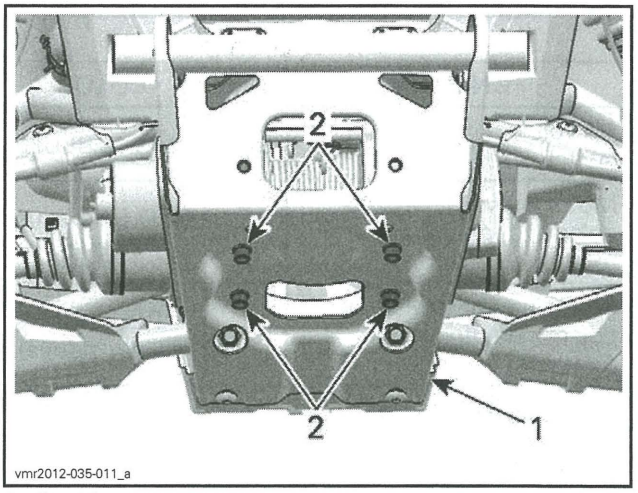

1. Front bumper support
2. Winch retaining screws

8. Remove winch.

Winch Installation

For the installation, reverse the removal procedure, however pay attention to the following.

Connect winch power cables as noted at removal.

NOTE: If the winch power cables are not connected correctly, the winch motor will operate in the reverse direction of selection.

TIGHTENING TORQUE	
WINCH RETAINING SCREWS	16 N•m ± 2 N•m (142 lbf•**in** ± 18 lbf•**in**)
WINCH POWER CABLES	7 N•m ± .5 N•m (62 lbf•**in** ± 4 lbf•**in**)
WINCH FAIRLEAD ELASTIC NUTS	4.5 N•m ± .5 N•m (40 lbf•**in** ± 4 lbf•**in**)

Install a **new** cotter pin on the hook pin.

FRONT DRIVE

SERVICE TOOLS

Description	Part Number	Page
BACKLASH MEASUREMENT TOOL	529 035 665	421
CV BOOT CLAMP PLIER	529 036 120	417
CV JOINT EXTRACTOR	529 036 005	417
SPANNER SOCKET	529 035 649	420

SERVICE PRODUCTS

Description	Part Number	Page
LOCTITE 277	293 800 073	422
LOCTITE 648 (GREEN)	619 600 012	423
XPS SYNTHETIC GREASE	293 550 010	417, 423
XPS SYNTHETIC GREASE	293 550 010	422

FRONT DRIVE SHAFTS AND FRONT PROPELLER SHAFT

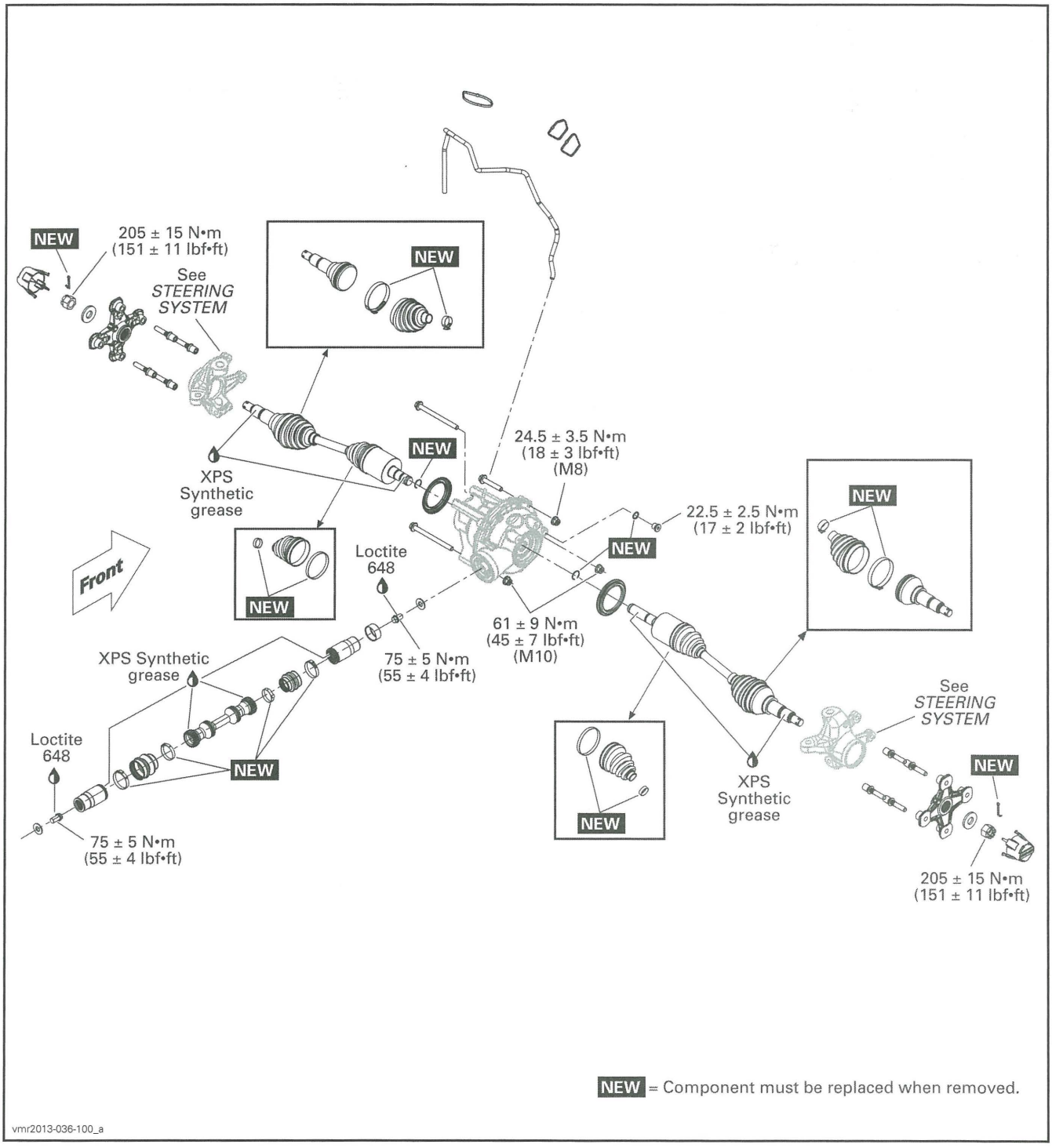

FRONT DIFFERENTIAL

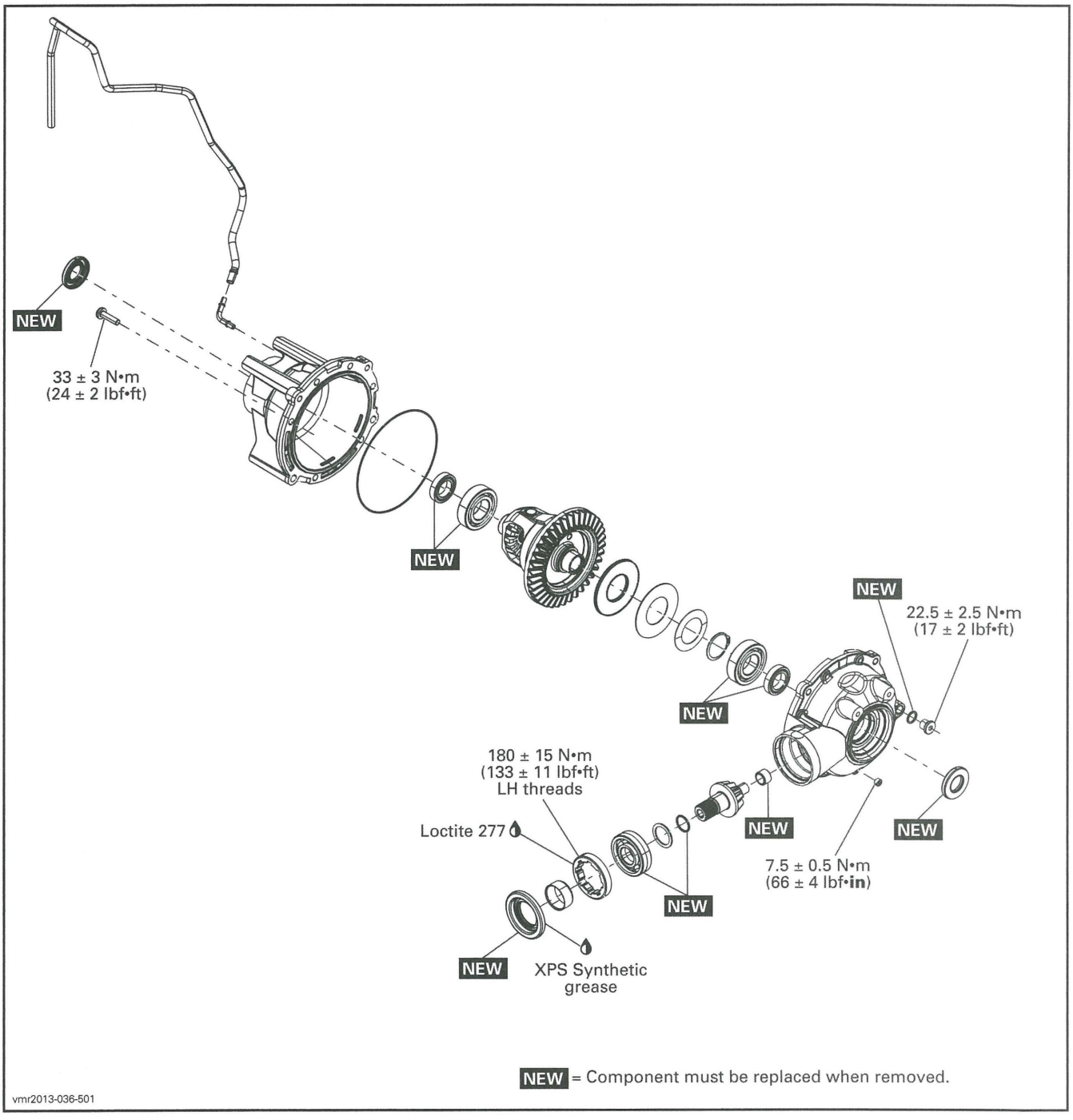

GENERAL

The procedure explained below is the same for the RH and LH sides unless otherwise instructed.

SYSTEM DESCRIPTION

The Visco-Lok® system constantly monitors front wheel speed and, if it detects one wheel spinning faster than its mate, it progressively sends more power to the wheel with the better traction.

The Visco-Lok system is comprised of two principal components, a shear pump and the controlled multi-plate clutch.

A unique feature of the shear pump is that it is self-contained and independent. It does not require an external source of hydraulic fluid. The self-contained viscous shear pump generates a pressure proportional to wheel speed differential - meaning the difference in rotational speed between the two wheels. This pressure engages the friction clutch via a piston to transmit the torque.

In the event of a failure, the Visco-Lok carrier/ring gear and pinion gear will have to be replaced.

NOTE: The Visco-Lok shear pump is not serviceable. If the pump is disassembled, the viscous fluid contained inside will be lost and it cannot be replaced.

PROCEDURES

WHEEL HUB

Wheel Hub Removal

Lift and support vehicle.

Select the 4WD position and place the transmission lever on "P".

Remove caliper from knuckle. Refer to *BRAKES* subsection.

Remove the following parts:
- Wheel cap
- Cotter pin
- Castellated nut
- Belleville washer.

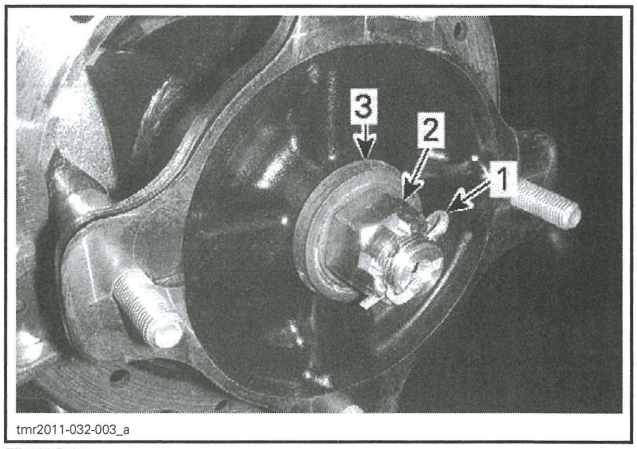

tmr2011-032-003_a

TYPICAL
1. *Cotter pin*
2. *Castellated nut*
3. *Belleville washer*

Remove wheel hub.

Wheel Hub Inspection

Check wheel hub for cracks or other damages.

Check inner splines for wear or other damages.

If any damage is detected on wheel hub, replace it with a new one.

Wheel Hub Installation

The installation is the reverse of removal procedure. However, pay attention to the following.

Install Belleville washer with its convex side outwards.

Tighten castellated nut to specification.

PART	TORQUE
Castellated nut	205 N•m ± 15 N•m (151 lbf•ft ± 11 lbf•ft)

NOTE: Tighten further castellated nut if required to align grooves with drive shaft hole.

Install a NEW cotter pin.

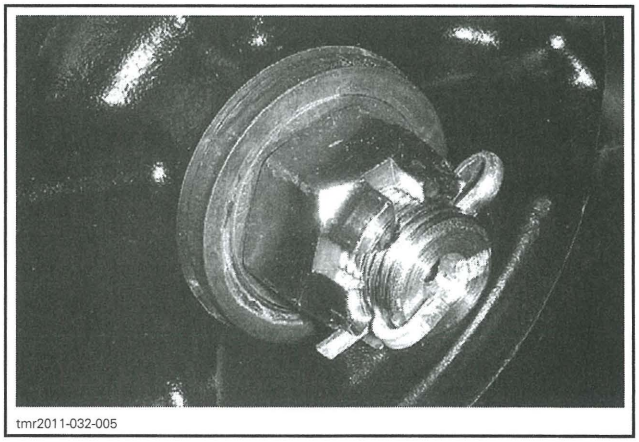
tmr2011-032-005

FRONT DRIVE SHAFT

Front Drive Shaft Removal

Lift and support vehicle.

Remove inner fender panel(s). Refer to *BODY* subsection.

Remove the *KNUCKLE*. Refer to *STEERING SYSTEM* subsection.

Remove shock absorber lower bolt.

Lift and attach the following parts to make room.

- Shock absorber
- Upper suspension arm.

Strongly pull drive shaft out of differential.

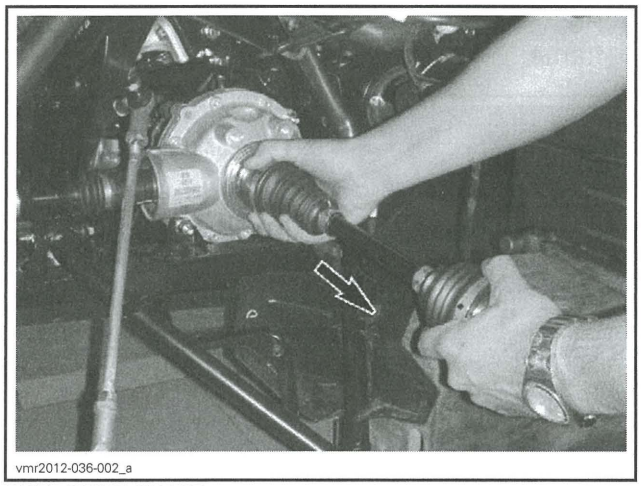

PULL DRIVE SHAFT

Discard the stop ring at the end of the shaft.

Front Drive Shaft Inspection

Inspect the condition of boots. If there is any damage or evidence of leaking lubricant, replace them. Refer to *DRIVE SHAFT BOOT* in this subsection.

Check splines for excessive wear. Replace if necessary.

NOTE: If the splines on plunging joint are worn, a check of differential inner splines should be done.

Front Drive Shaft Installation

The installation is the reverse of the removal procedure. However, pay attention to the following.

Install a **NEW** stop ring.

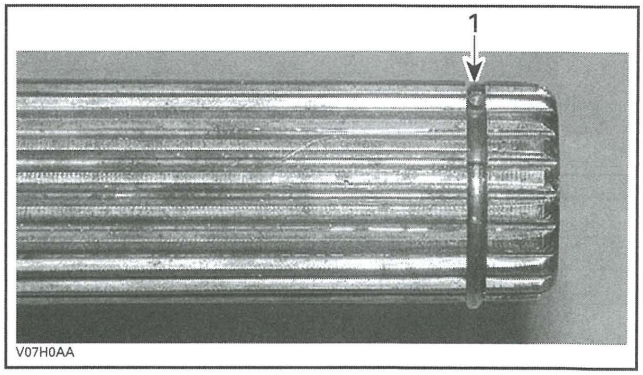

TYPICAL
1. Stop ring

Apply XPS SYNTHETIC GREASE (P/N 293 550 010) on the splines.

Ensure that wear ring is close to the differential.

DRIVE SHAFT BOOT

Drive Shaft Boot Removal

Remove *FRONT DRIVE SHAFT*. See procedure in this subsection.

Remove drive shaft boot clamps.

REQUIRED TOOL
CV BOOT CLAMP PLIER (P/N 529 036 120)

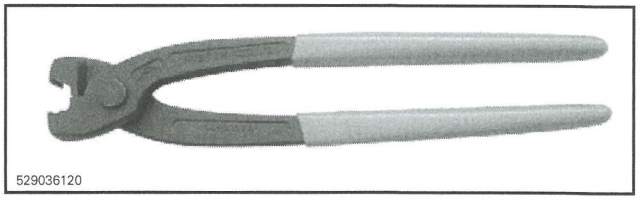

Dislodge the large end of the boot.

Separate the joint from the shaft. Two procedures can be done.

Without the Special Tool

Clamp joint housing in a vise.

Align shaft with joint.

Pull hard on shaft to remove from joint.

Remove boot from drive shaft.

Remove and discard the circlip. A new one is included in the boot kit.

With the Special Tool

Place drive shaft in vice with the joint downward.

Install the tool on bearing.

REQUIRED TOOL
CV JOINT EXTRACTOR (P/N 529 036 005)

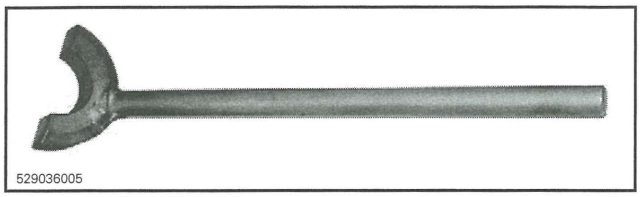
529036005

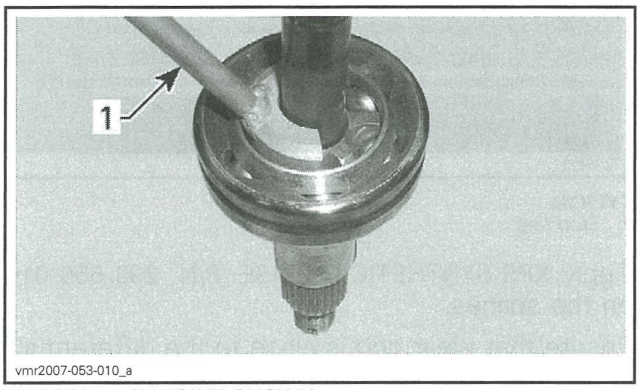

TYPICAL — CV JOINT SHOWN
1. Joint extractor tool

With an hammer, hit on the tool to separate joint from shaft.

When joint and shaft are separated, remove boot from drive shaft.

Remove and discard the circlip. A new one is included in the boot kit.

Drive Shaft Boot Installation

For installation, reverse the removal procedure. However, pay attention to the following.

Install the NEW circlip.

Pack bearing area with grease (included with the new boot kit).

NOTE: Do not use or add other grease.

Install NEW drive shaft boot clamps.

FRONT DIFFERENTIAL

Front Differential Removal

1. Drain front differential. Refer to *PERIODIC MAINTENANCE PROCEDURES* subsection.
2. Remove both front drive shafts. Refer to *FRONT DRIVE SHAFT* in this subsection.
3. Detach vent hose from front differential.

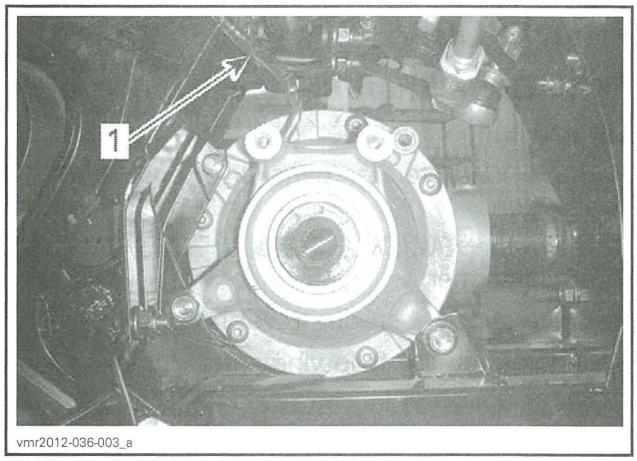

FROM LH SIDE
1. Vent hose

4. Remove bolts securing front differential to frame.

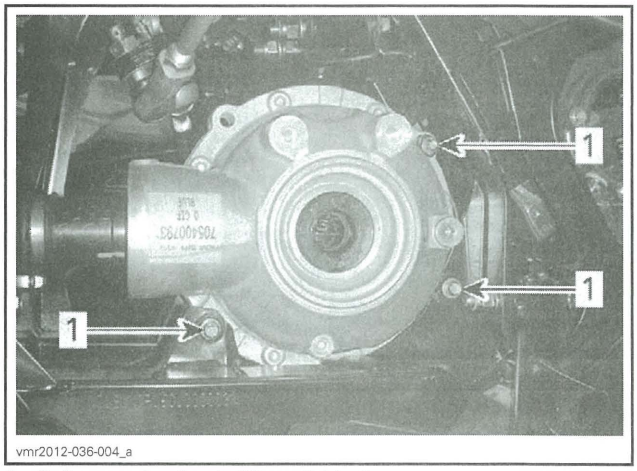

1. Bolts securing front differential to frame

5. Remove the following Oetiker clamps from front propeller shaft.

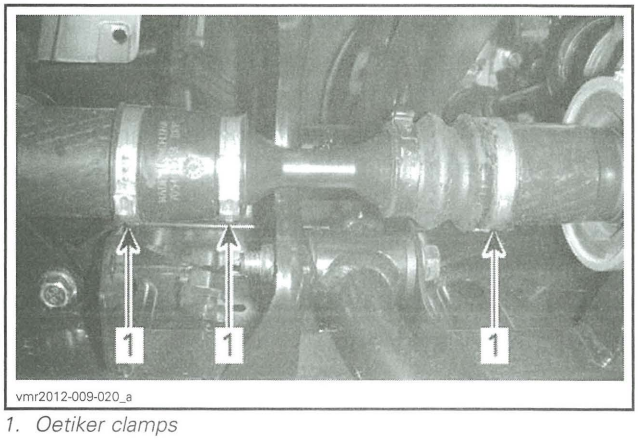

1. Oetiker clamps

6. Detach front propeller shaft from front differential by moving it rearward.

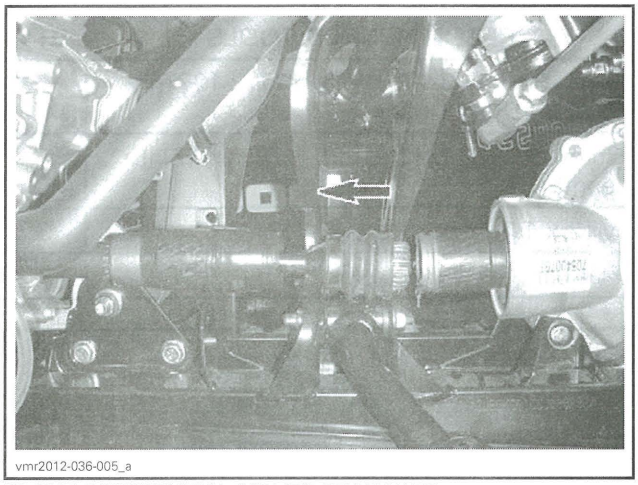
vmr2012-036-005_a

FRONT DIFFERENTIAL MOVED REARWARD

7. Remove front differential by pulling it from LH side.

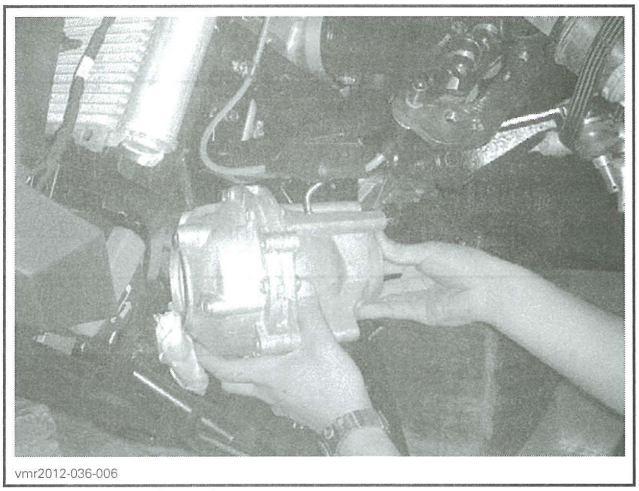
vmr2012-036-006

REMOVE FROM LH SIDE

NOTICE Be careful not to knock or to bend vent hose fitting while removing front differential.

Front Differential Inspection (Assembled)

Check backlash and drag torque, see *FRONT DIFFERENTIAL ADJUSTMENT* in this subsection.

Check if oil seals are brittle, hard or damaged. Replace if necessary.

Front Differential Disassembly

Differential Housing

Remove front differential housing screws **no. 1**.

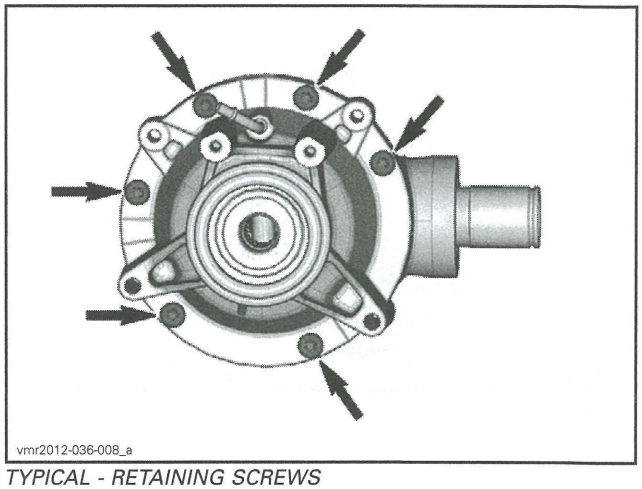
vmr2012-036-008_a

TYPICAL - RETAINING SCREWS

Separate half housings.

Remove oil seals **no. 12**.

Visco-Lok Carrier/Ring Gear

Remove Visco-Lok carrier/ring gear out of half housing.

NOTE: Be careful to keep track of shims **no. 2** on each end of the Visco-Lok carrier/ring gear **no. 3**.

Pinion Gear

Remove screw retaining front propeller shaft adapter.

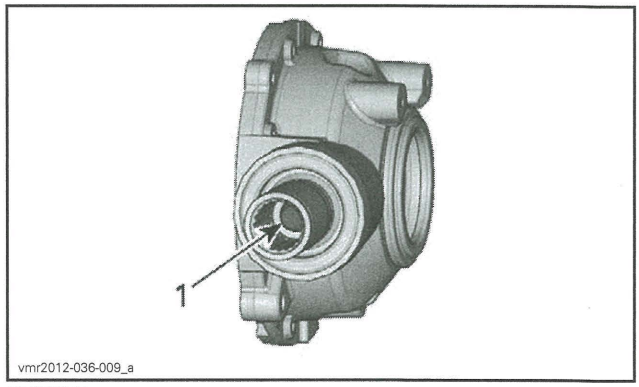

vmr2012-036-009_a

TYPICAL
1. Retaining screw

Remove and discard oil seal **no. 4**.

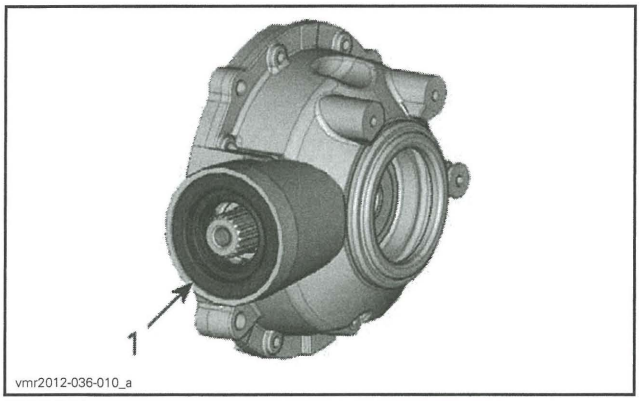

TYPICAL
1. Oil seal

Unscrew the pinion nut **no. 5**.

REQUIRED TOOL
SPANNER SOCKET (P/N 529 035 649)

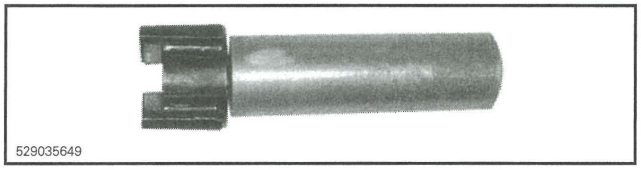

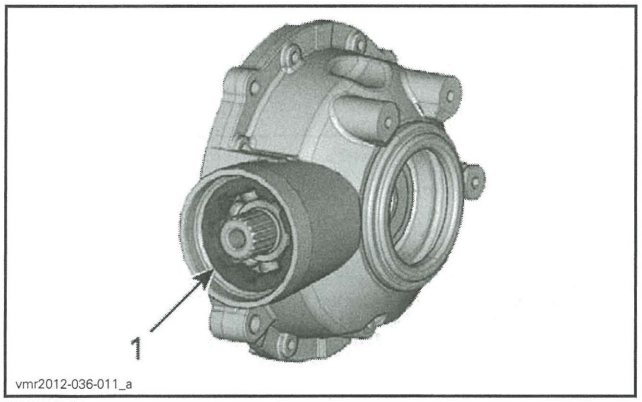

TYPICAL
1. Pinion nut

NOTE: The pinion nut is left hand threaded. Unscrew by turning clockwise.

Remove bearing **no. 6** and pinion gear **no. 7** together.

NOTE: Be careful to keep track of shims **no. 8**.

RECOMMENDED TOOLS	QTY
Pipe: 89 mm (3-1/2 in) diameter x 127 mm (5 in) in length	1
Screwed rod: M12 x 1.25, 178 mm (7 in) length	1
M12 x 1.25 nut	3
Flat bar	1

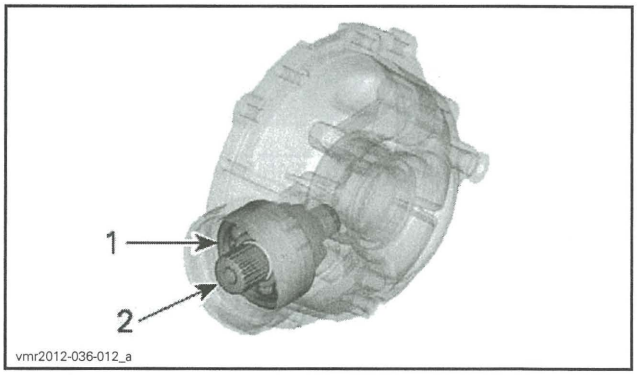

TYPICAL
1. Bearing
2. Pinion gear

Remove and discard O-ring **no. 13**.

Remove bearing **no. 6** from pinion gear **no. 7**.

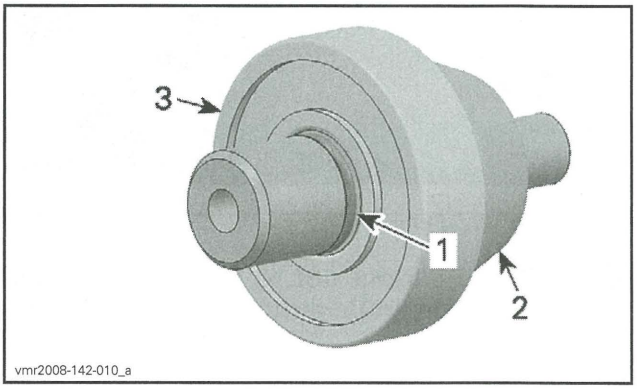

TYPICAL
1. O-ring
2. Pinion gear
3. Bearing

Remove and discard the needle bearing **no. 9**.

Front Differential Adjustment

A shimming procedure must be done when Visco-Lok carrier/ring gear, pinion gear or housing is (are) changed.

Install recommended shims accordingly with the following table.

RECOMMENDED SHIMS	
PINION GEAR	1.67 mm ± 0.04 mm (.066 in ± .002 in)
BACKLASH	0.5 mm (.02 in) (for preliminary adjustment)
PRELOAD	

NOTE: The procedure above sets the pinion shim thickness and should not be modified thereafter. Any changes should be done on the preload and/or backlash side(s).

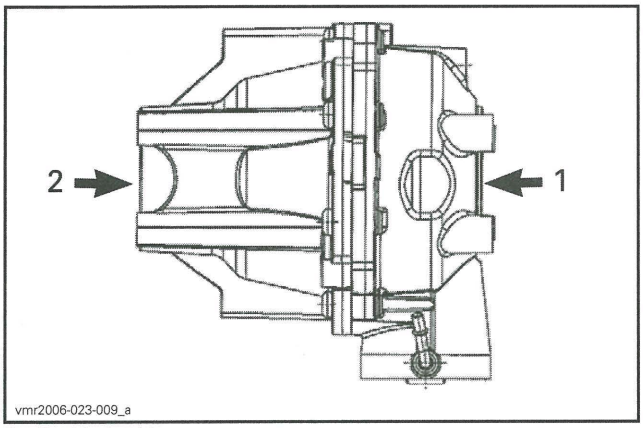

1. *Backlash side*
2. *Preload side*

Temporarily assemble the front differential. See procedure in *FRONT DIFFERENTIAL ASSEMBLY* below in this subsection.

Backlash

Using a dial indicator and the BACKLASH MEASUREMENT TOOL (P/N 529 035 665), measure the backlash. Place the backlash measurement tool at the end of pinion gear.

From center of bolt, measure 25.4 mm (1 in) and scribe a mark on the tab.

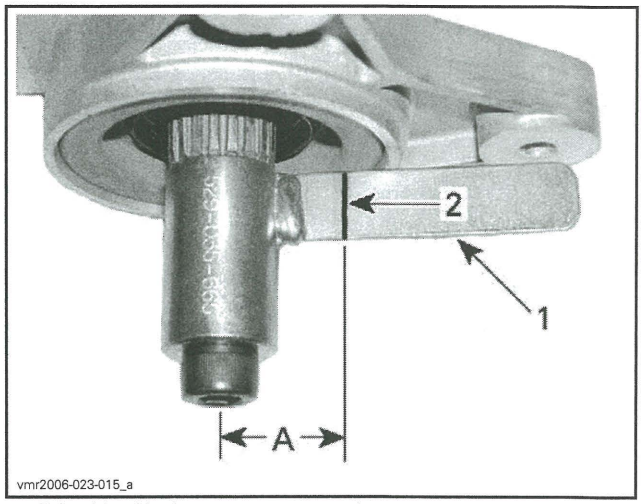

1. *Tab of backlash measurement tool*
2. *Mark on tab*

A. 25.4 mm (1 in)

Position the dial indicator tip against the tab at a 90° angle and right on the previously scribed mark.

Gently, move the tab back and forth. Note the result.

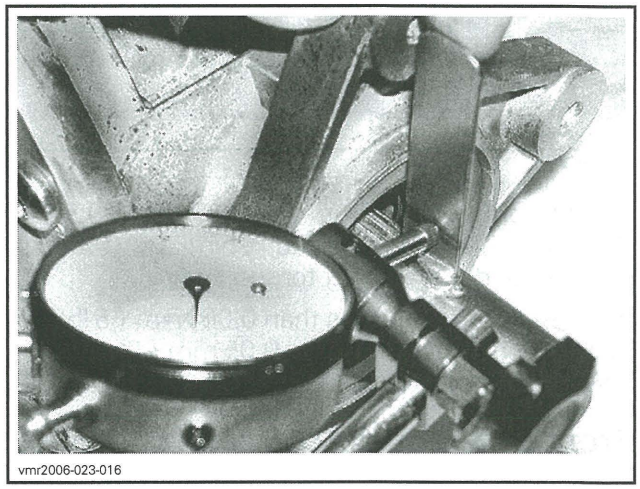

Rotate pinion gear 1/2 turn and check backlash again. Note the result.

Rotate pinion gear 1 turn and check backlash again.

If backlash is below 0.05 mm (.002 in), increase backlash shim and check the backlash again.

If backlash is greater than 0.356 mm (.014 in), decrease backlash shim and check the backlash again.

Measure preload.

Preload

Screw the propeller shaft adaptor bolt in pinion gear.

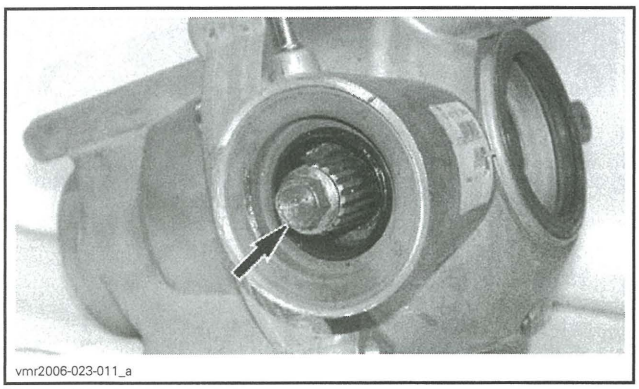
vmr2006-023-011_a
TYPICAL

Using a needle torque wrench, measure the drag torque.

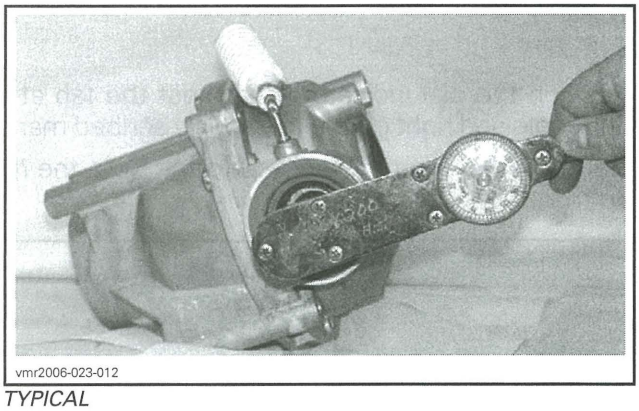
vmr2006-023-012
TYPICAL

If the drag torque is greater than 0.5 N•m (5 lbf•**in**), reduce preload shim by 0.05 mm (.002 in) and check drag torque again.

If the drag torque is less than 0.06 N•m (.5 lbf•**in**), increase preload shim by 0.05 mm (.002 in) and check drag torque again.

Front Differential Assembly

The assembly is the reverse of the disassembly procedure. However, pay attention to the following.

Visco-Lok Carrier/Ring Gear

Check condition of seal **no. 10**. Replace if damaged.

Check bearings **no. 11**. Replace with **new** bearings if necessary.

Install **new** oil seals **no. 12**.

Tighten differential housing screws **no. 1** to specification.

TORQUE	
Differential housing screws	33 N•m ± 3 N•m (24 lbf•ft ± 2 lbf•ft)

Pinion Gear

Install a **new** O-ring **no. 13**.

Install the shims **no. 8** then a **new** ball bearing **no. 6**.

Install a **new** needle bearing **no. 9**.

Apply LOCTITE 277 (P/N 293 800 073) to pinion nut **no. 5**.

NOTE: If a new pinion nut is used, a self-locking product is already applied, do not use Loctite 277.

Install and tighten the pinion nut to specification.

TORQUE	
Pinion nut (LEFT HAND THREADED)	180 N•m ± 15 N•m (133 lbf•ft ± 11 lbf•ft)

Apply XPS SYNTHETIC GREASE (P/N 293 550 010) on **new** oil seal **no. 4**.

Tighten front propeller shaft adapter retaining screw to specification.

TORQUE	
Front propeller shaft adapter retaining screw	75 N•m ± 5 N•m (55 lbf•ft ± 4 lbf•ft)

Front Differential Installation

The installation is the reverse of the removal procedure. However, pay attention to the following.

When inserting the small portion of propeller shaft into propeller shaft boot, make sure both parts of propeller shaft are well indexed.

TORQUE	
M8 nut securing front differential to frame	24.5 N•m ± 3.5 N•m (18 lbf•ft ± 3 lbf•ft)
M10 nuts securing front differential to frame	61 N•m ± 9 N•m (45 lbf•ft ± 7 lbf•ft)

Install **new** Oetiker clamps.

Refill front differential with recommended oil. Refer to *PERIODIC MAINTENANCE PROCEDURES* subsection.

FRONT PROPELLER SHAFT

Front Propeller Shaft Removal

1. Lift and support vehicle.
2. Remove front wheel. Refer to *WHEELS AND TIRES* subsection.
3. Remove inner fender panel(s). Refer to *BODY* subsection.

4. Remove bolts securing front differential to frame.

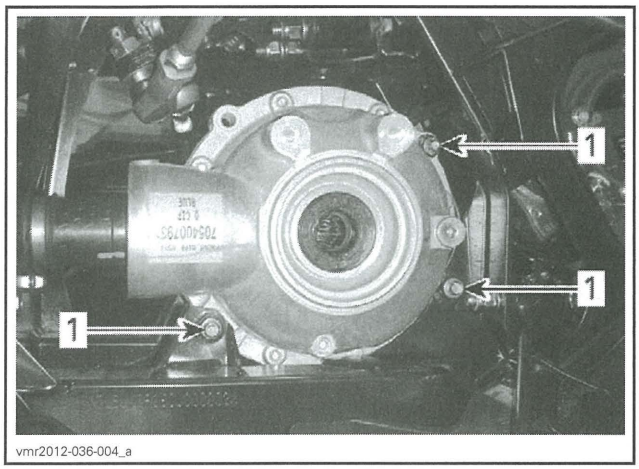

vmr2012-036-004_a

1. Bolts securing front differential to frame

5. Remove the following Oetiker clamps from front propeller shaft.

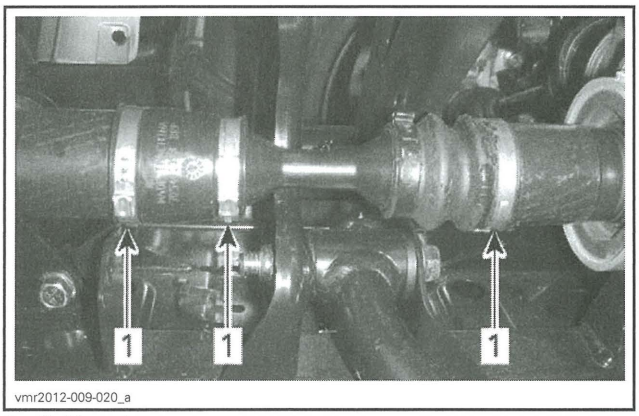

vmr2012-009-020_a

1. Oetiker clamps

6. Detach front propeller shaft from front differential by moving it rearward.

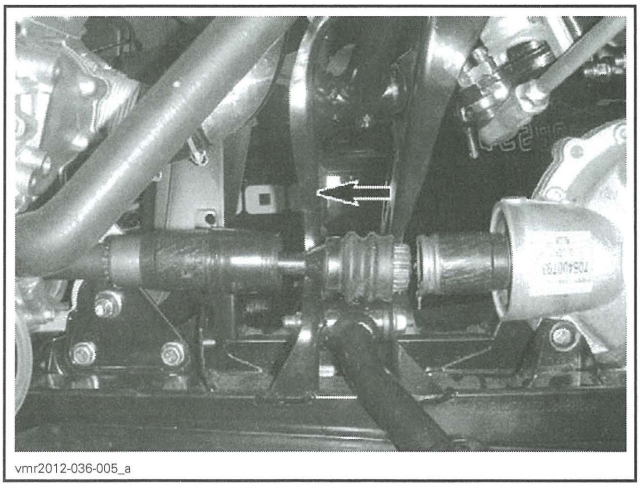
vmr2012-036-005_a

FRONT DIFFERENTIAL MOVED REARWARD

7. Pry front differential upwards to make room.

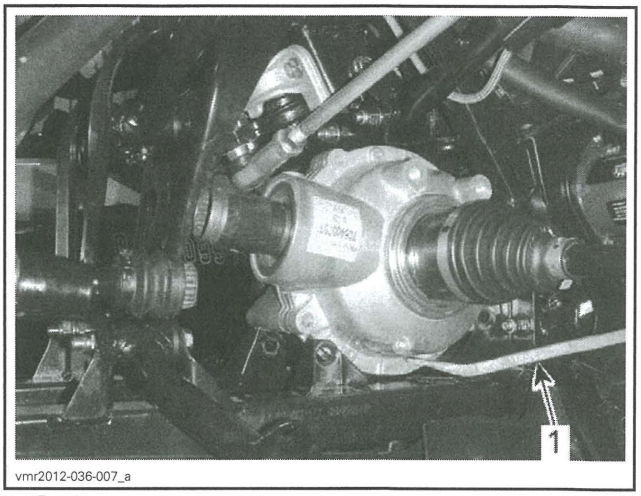

vmr2012-036-007_a

1. Pry bar

8. Remove front propeller shaft by pulling it forward.
9. Remove front propeller shaft adapters from engine and from front differential.

Front Propeller Shaft Inspection

Inspect if propeller shaft is not bent or twisted.

Check propeller shaft splines for wear or damage.

Check if propeller shaft bellows is pierced or brittle.

Front Propeller Shaft Installation

Installation is the reverse of removal procedure. However, pay attention to the following.

Apply XPS SYNTHETIC GREASE (P/N 293 550 010) on splines.

TORQUE	
Propeller shaft adapter screw **(differential side: M12x16)**	75 N•m ± 5 N•m (55 lbf•ft ± 4 lbf•ft)
Propeller shaft adapter screw **(engine side: M12x20)**	75 N•m ± 5 N•m (55 lbf•ft ± 4 lbf•ft)
	LOCTITE 648 (GREEN) (P/N 619 600 012)

REAR DRIVE

SERVICE TOOLS

Description	Part Number	Page
BACKLASH MEASUREMENT TOOL	529 035 665	433
CV BOOT CLAMP PLIER	529 036 120	429
CV JOINT EXTRACTOR	529 036 005	430
SPANNER SOCKET	529 035 649	435

SERVICE PRODUCTS

Description	Part Number	Page
LOCTITE 277	293 800 073	437
LOCTITE 648 (GREEN)	619 600 012	432
XPS SYNTHETIC GREASE	293 550 010	428, 432

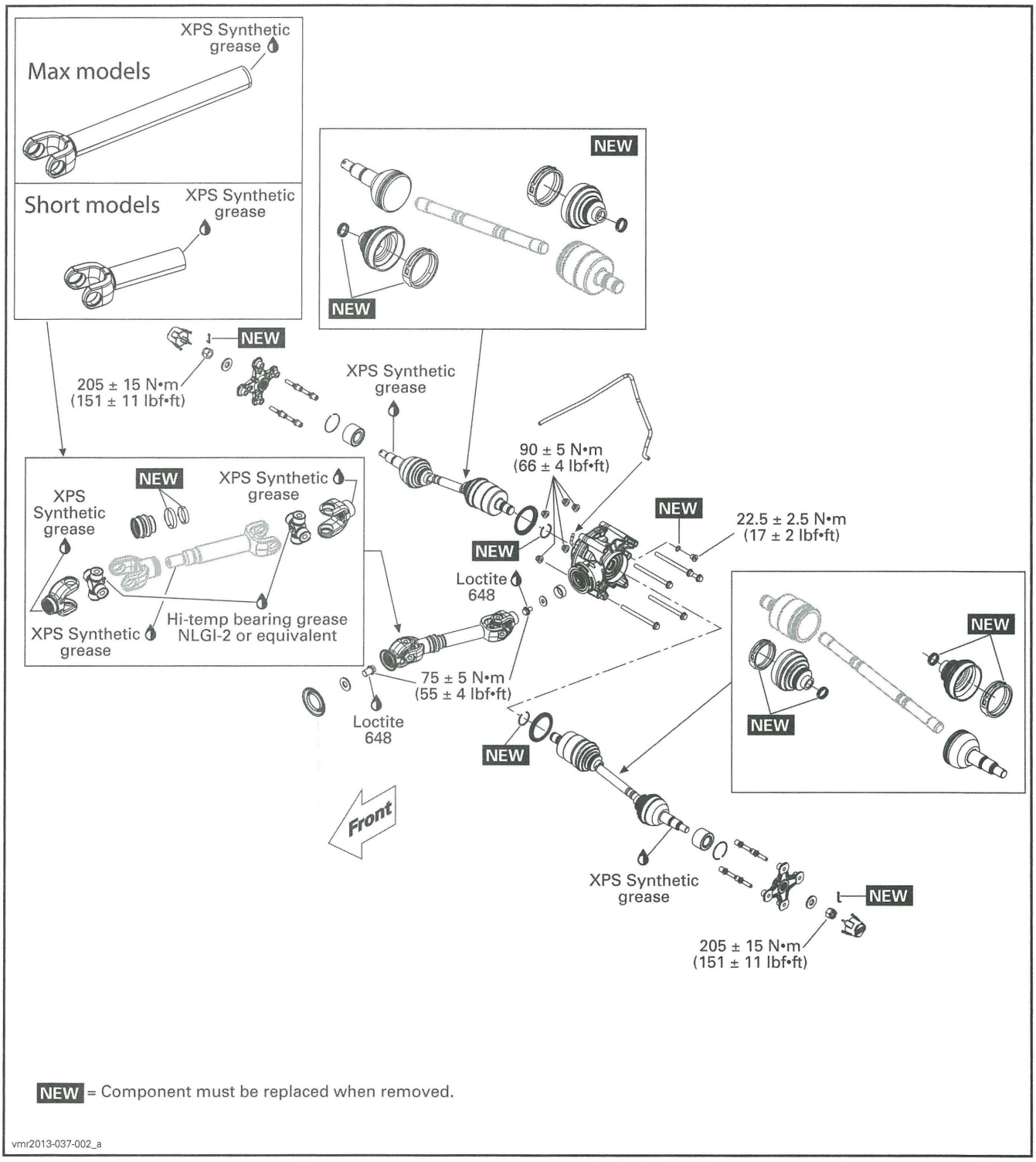

NEW = Component must be replaced when removed.

vmr2013-037-002_a

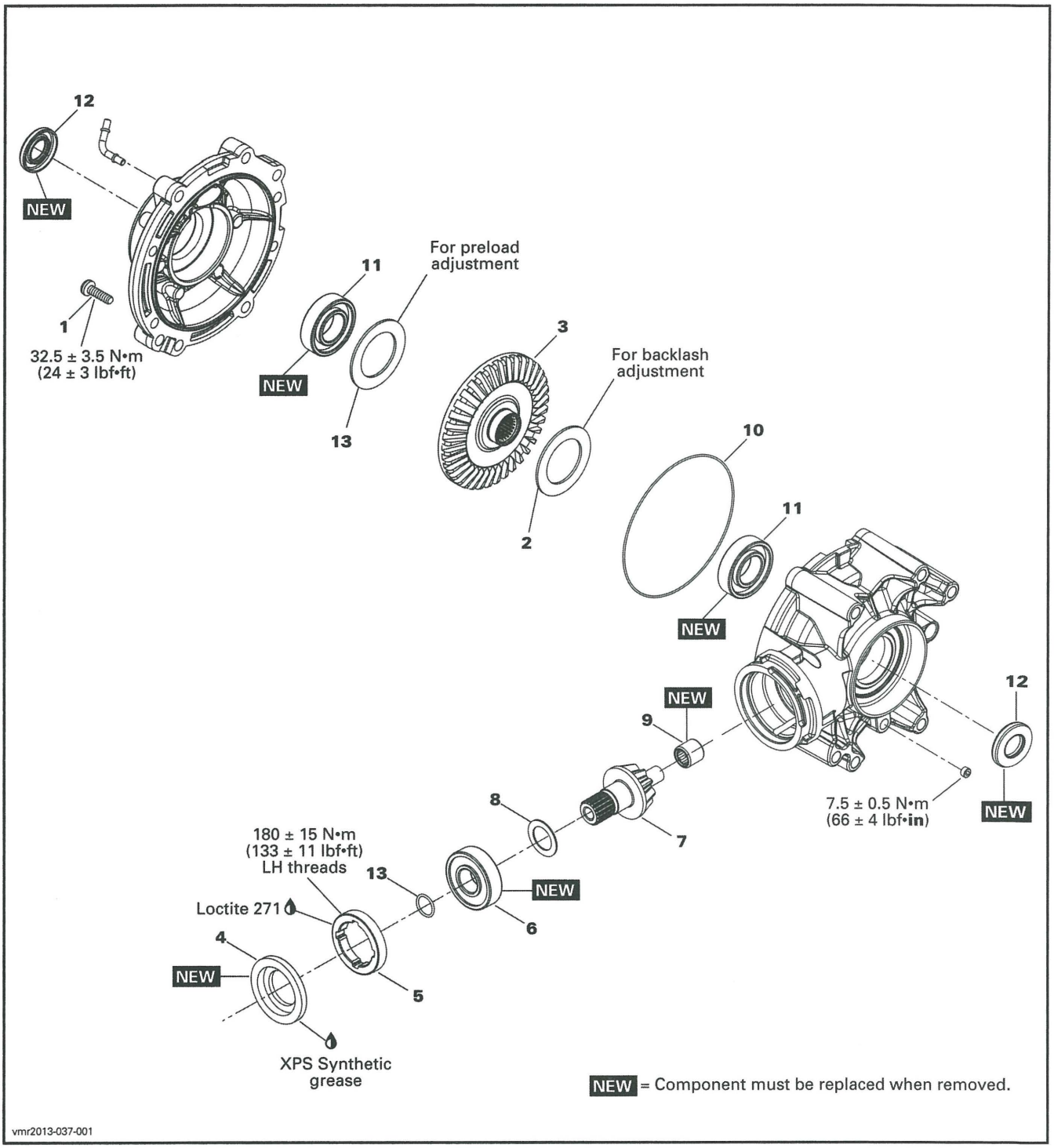

vmr2013-037-001

PROCEDURES

WHEEL HUB

Wheel Hub Removal

Lift and support vehicle.

Remove the wheel.

Remove the following parts:

- Caliper mounting bolts (if applicable), refer to *BRAKES* subsection
- Hub cap
- Cotter pin
- Wheel hub nut
- Belleville washer.

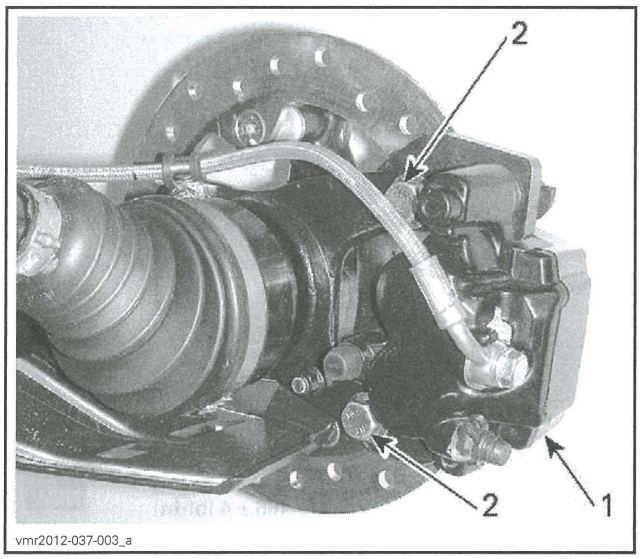

1. *Caliper*
2. *Remove bolts*

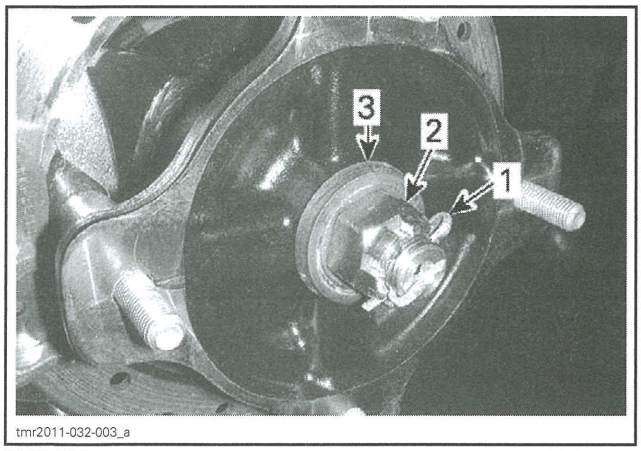

TYPICAL
1. *Cotter pin*
2. *Wheel hub nut*
3. *Belleville washer*

Remove wheel hub.

Wheel Hub Inspection

Remove disk from RH wheel hub as necessary.

Check wheel hub for cracks or other damages.

Check inner splines for wear or other damages.

If any damage is detected on wheel hub, replace it with a new one.

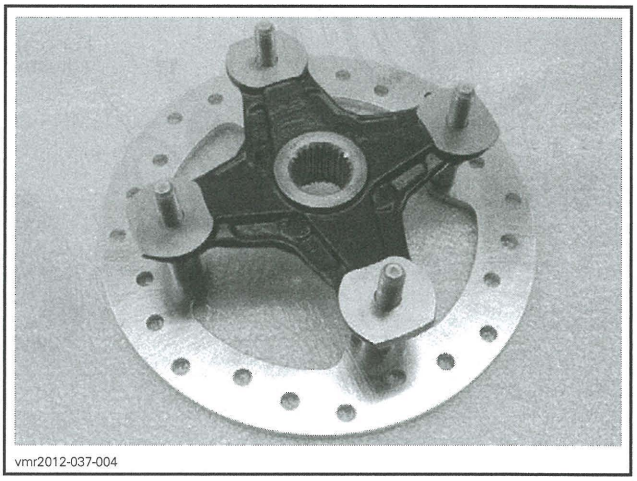

Wheel Hub Installation

The installation is the reverse of removal procedure. Pay attention to the following.

Apply XPS SYNTHETIC GREASE (P/N 293 550 010) on drive shaft splines.

Install Belleville washer with its convex side outward.

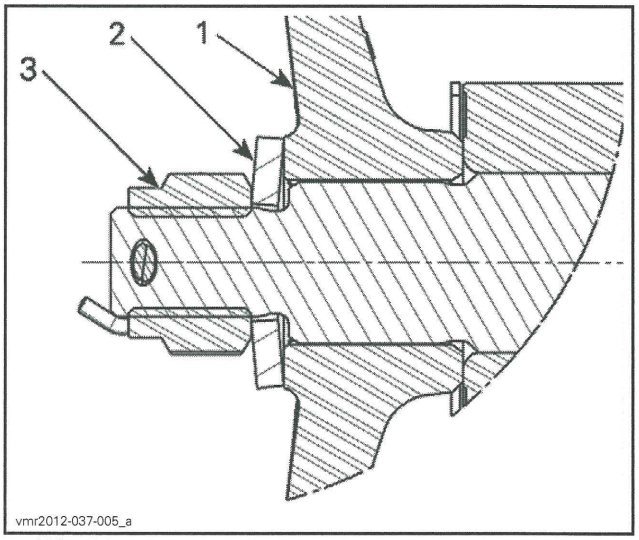

1. *Wheel hub*
2. *Washer — Convex side here*
3. *Nut*

PART	TORQUE
Wheel hub nut	205 N•m ± 15 N•m (151 lbf•ft ± 11 lbf•ft)

NOTE: If required, tighten castellated nut further to align grooves with drive shaft hole.

Install a **NEW** cotter pin.

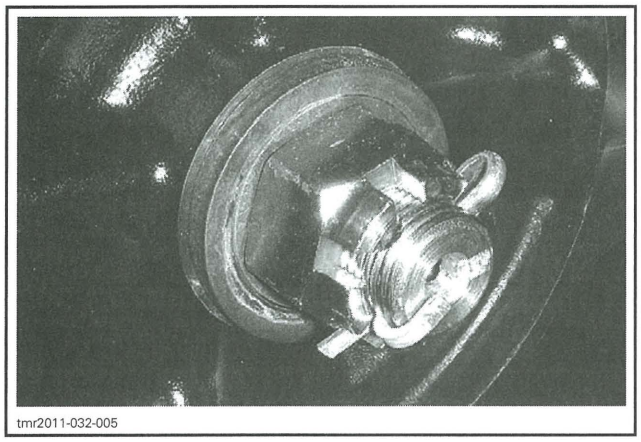
tmr2011-032-005

DRIVE SHAFT

Drive Shaft Removal

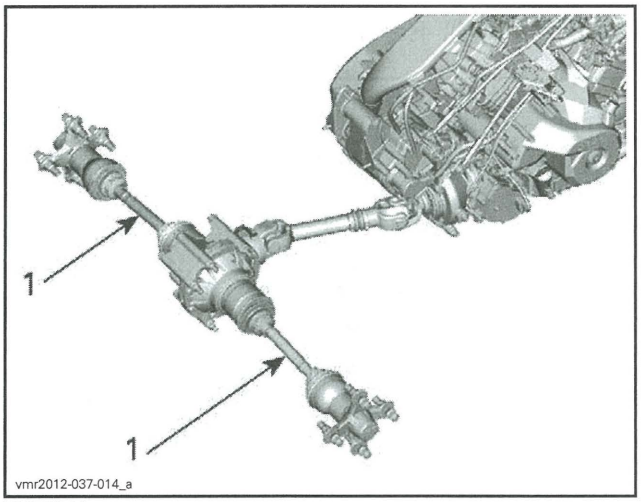

TYPICAL
1. Drive shafts

Lift and support vehicle.

Remove the wheel hub. See procedure in this subsection.

Remove trailing arm. Refer to *REAR SUSPENSION*.

Strongly pull drive shaft out of final drive.

Drive Shaft Inspection

Inspect the condition of boots. If there is any damage or evidence of leaking lubricant, replace them. Refer to *DRIVE SHAFT BOOT*.

Check shaft splines. Replace drive shaft if necessary.

Check dust shield on drive shaft end. Replace if necessary.

Drive Shaft Installation

The installation is the reverse of the removal procedure. However, pay attention to the following.

Install a NEW stop ring.

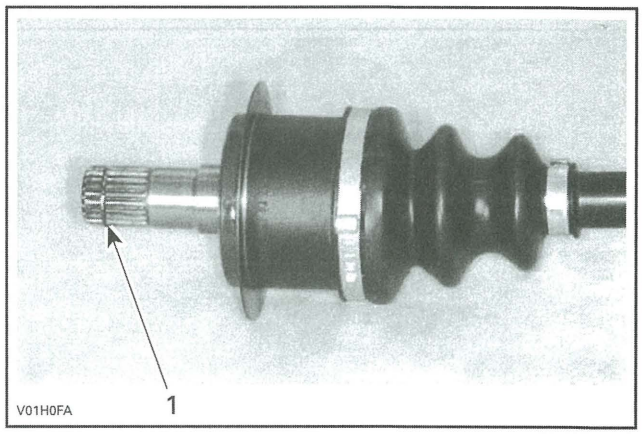

TYPICAL
1. NEW stop ring

After drive shaft insertion in rear final drive, validate if properly locked.

DRIVE SHAFT BOOT

Drive Shaft Boot Removal

Remove the drive shaft from vehicle. See procedure in this subsection.

Remove drive shaft boot clamps using the following tool:

TOOL	
CV BOOT CLAMP PLIER (P/N 529 036 120)	

Dislodge the large boot end.

Separate the joint from the shaft. Two procedures can be done.

Without the Special Tool

Clamp joint housing in a vise.

Align shaft with joint.

Pull hard on shaft to remove from joint.

Remove boot from drive shaft.

Remove and discard the circlip. A new one is included in the boot kit.

With the Special Tool

Place drive shaft in vice with the joint downward.

Install the CV JOINT EXTRACTOR (P/N 529 036 005) on bearing.

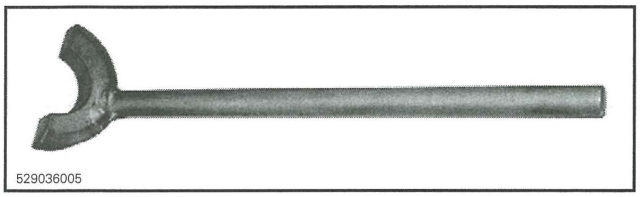

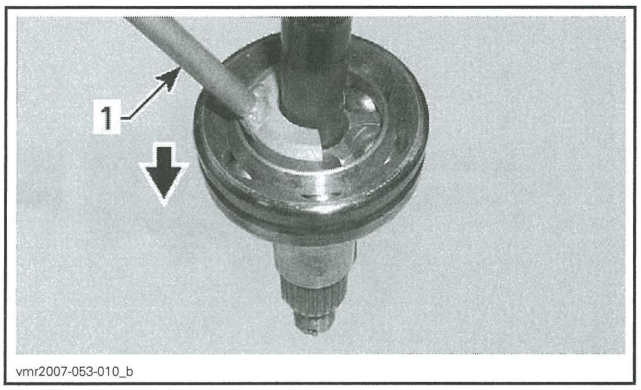

TYPICAL — CV JOINT SHOWN
1. Joint extractor tool

With an hammer, hit on the tool to separate joint from shaft.

When joint and shaft are separated, remove boot from drive shaft.

Remove and discard the circlip. A new one is included in the boot kit.

Remove drive shaft boot.

Drive Shaft Boot Installation

For installation, reverse the removal procedure. Pay attention to the following.

Pack bearing area with grease (included with the new boot kit).

NOTE: Do not use any other grease.

PROPELLER SHAFT

Propeller Shaft Removal

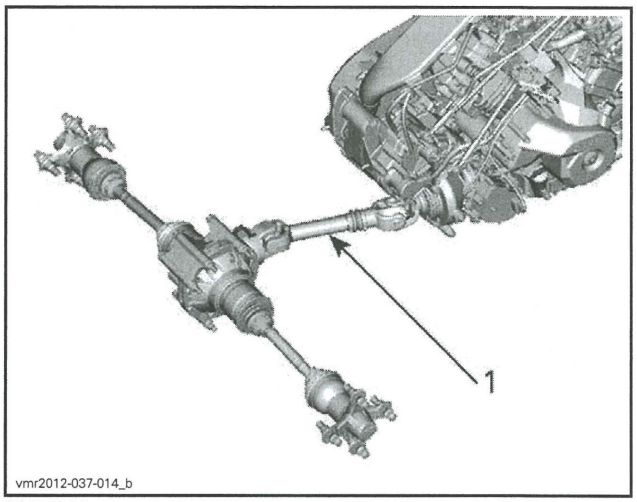

TYPICAL
1. Propeller shaft

1. Remove wheels. Refer to *WHEELS AND TIRES* subsection.
2. Drain oil from rear final drive. Refer to *PERIODIC MAINTENANCE PROCEDURES*.
3. Detach brake master cylinder from frame (Outlander only). Refer to *BRAKES* subsection.

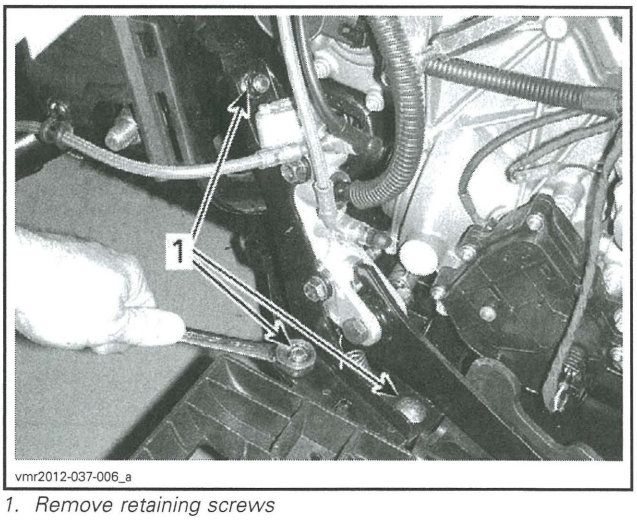

1. Remove retaining screws

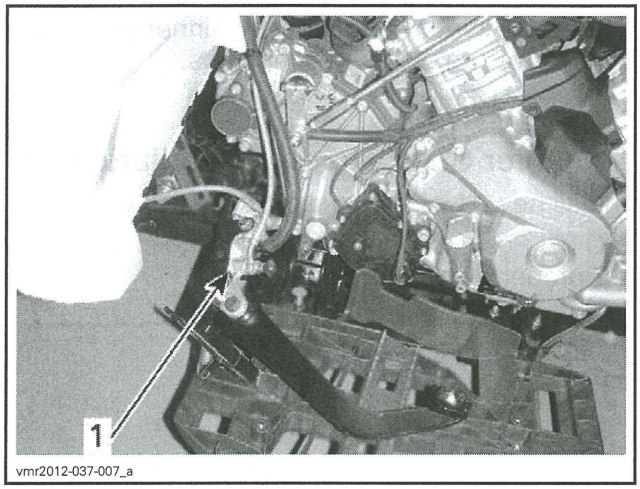

1. Master cylinder moved apart

4. Lift and support vehicle.
5. From RH side of vehicle, remove propeller shaft screw from gearbox output shaft.

NOTE: Heat screw to break the threadlocker bond prior to removal.

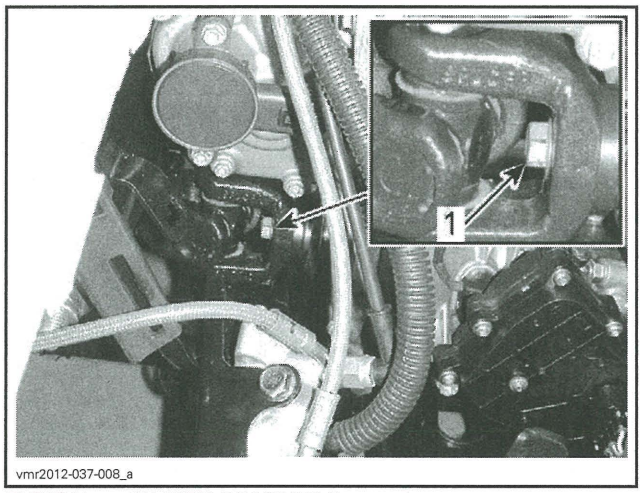

TYPICAL — RH SIDE OF VEHICLE
1. Remove screw

6. From LH side of vehicle, remove propeller shaft screw from rear final drive yoke.

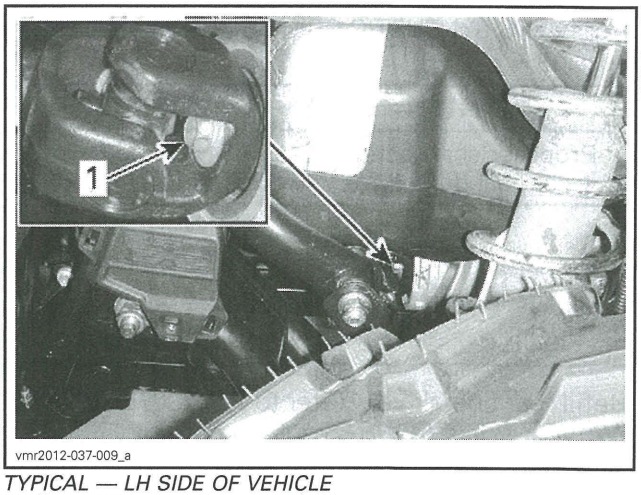

TYPICAL — LH SIDE OF VEHICLE
1. Remove screw

7. Remove rear final drive retaining bolts. Refer to *REAR FINAL DRIVE* in this subsection.
8. Remove bolts from rear retaining plate. Refer to *REAR FINAL DRIVE* in this subsection.
9. Move the rear final drive rearward to allow dislodging the propeller shaft.
10. Dislodge the propeller shaft from the gearbox.
11. Remove the propeller shaft.

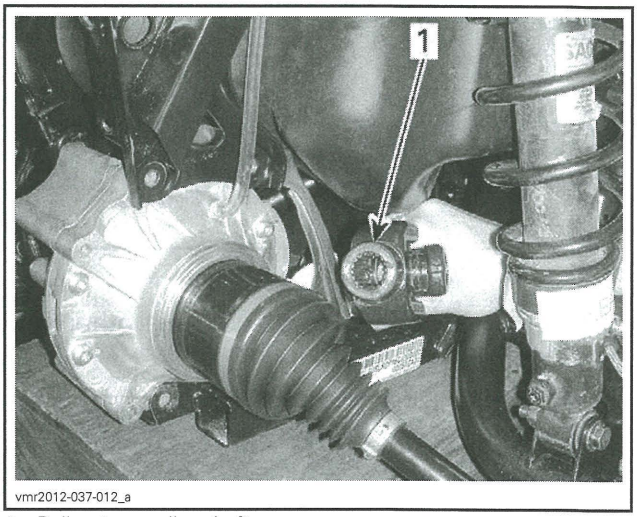

1. Pull out propeller shaft

Propeller Shaft Inspection

Inspect if propeller shaft is not bent or twisted.

Check propeller shaft splines for wear or damage.

Check if propeller shaft bellow is cracked, pierced or brittle.

Propeller Shaft Installation

Installation is essentially the reverse of removal procedure. Pay attention to the following details.

Apply XPS SYNTHETIC GREASE (P/N 293 550 010) to splines.

PARTS	TORQUE
Propeller shaft screw (rear final drive side)	75 N•m ± 5 N•m (55 lbf•ft ± 4 lbf•ft)
Propeller shaft screw (gearbox side)	75 N•m ± 5 N•m (55 lbf•ft ± 4 lbf•ft) + LOCTITE 648 (GREEN) (P/N 619 600 012)

Refill rear final drive. Refer to *PERIODIC MAINTENANCE PROCEDURES* subsection.

PROPELLER SHAFT U-JOINTS

Propeller Shaft U-Joint Removal

Remove internal snap ring from bearing caps.

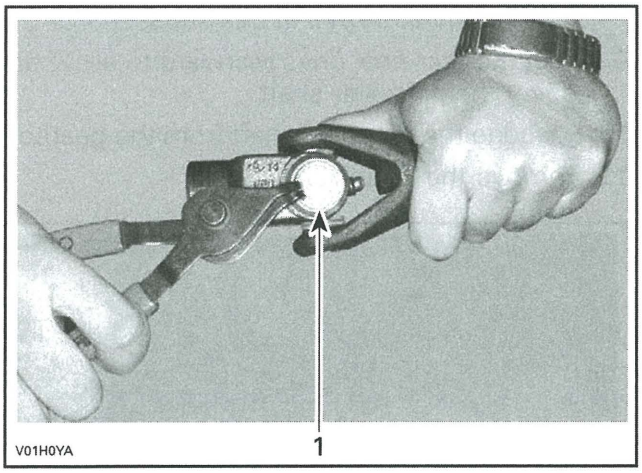

1. Snap ring

Support inner yoke in vice and drive other yoke down with a soft hammer.

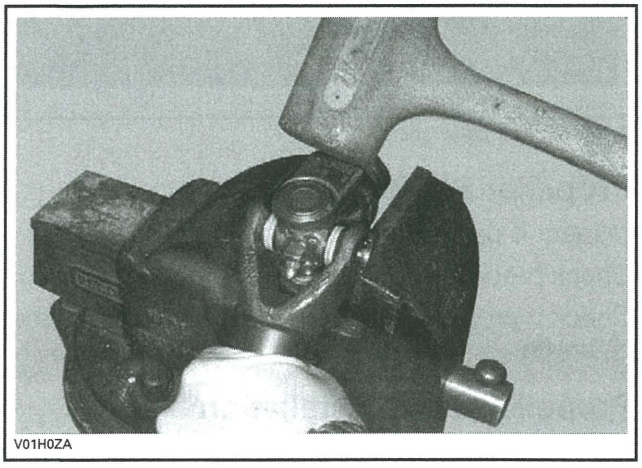

Support U-joint in vice and drive inner yoke down to remove remaining bearing caps.

Remove U-joint cross.

Propeller Shaft U-Joint Installation

Install new U-joint in inner yoke.

NOTE: Position propeller shaft U-joint as shown for proper grease fitting location.

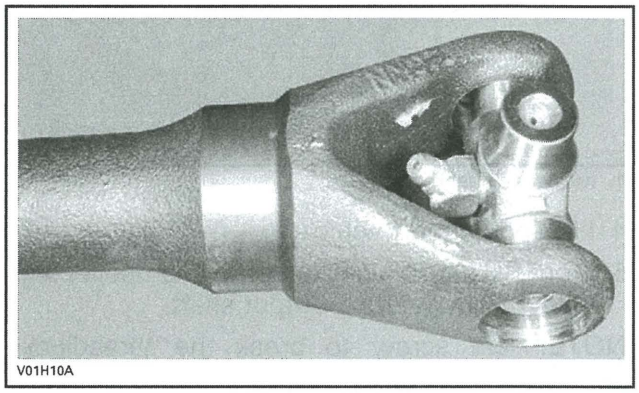

Install bearing caps. Use a vise to push bearing caps.

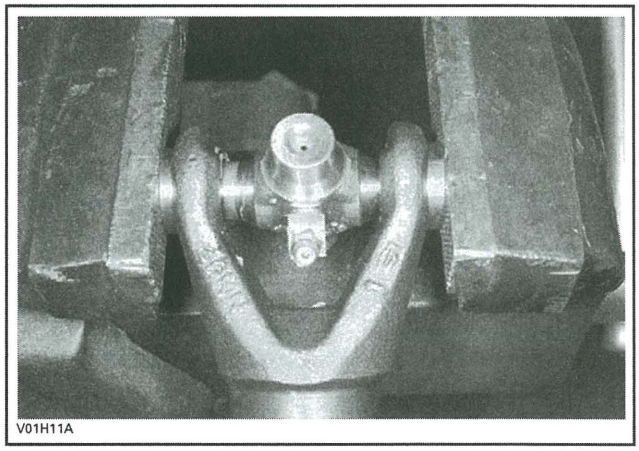

Using a suitable pusher, fully seat bearing cap on one side.

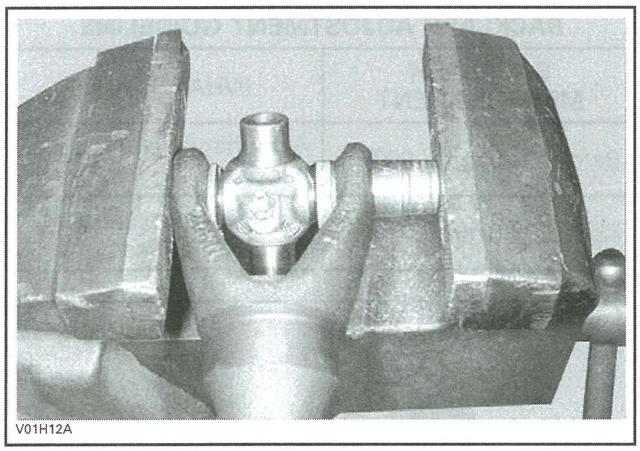
V01H12A

Install snap ring.

Complete installation for the other bearing caps.

Grease U-joint. Refer to *PERIODIC MAINTENANCE PROCEDURES* subsection.

REAR FINAL DRIVE

Rear Final Drive Removal

Drain oil. Refer to *PERIODIC MAINTENANCE PROCEDURES* subsection.

Lift and support vehicle.

Support rear bottom end of frame.

Remove drive shafts. See procedure in this subsection.

Remove rear propeller shaft screw from the rear final drive yoke. Refer to *PROPELLER SHAFT* in this subsection.

Remove rear final drive bolts.

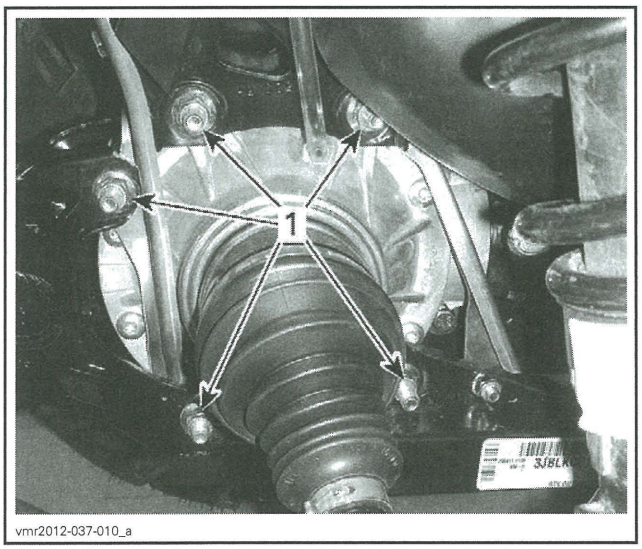

vmr2012-037-010_a

1. Remove bolts

Remove bolts from rear retaining plate.

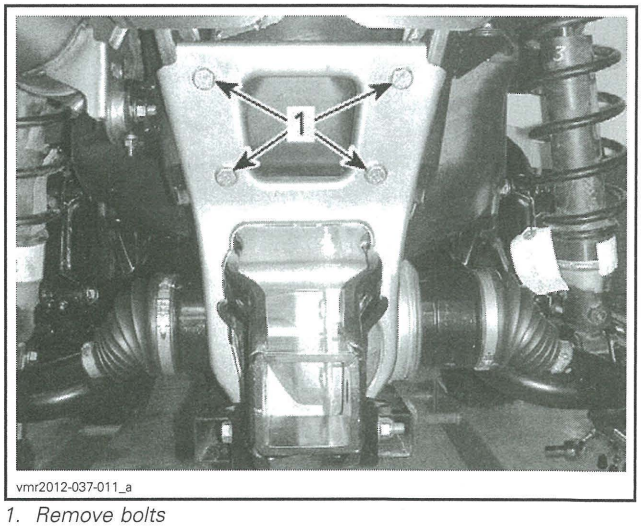

vmr2012-037-011_a

1. Remove bolts

Unplug the vent hose from final drive.

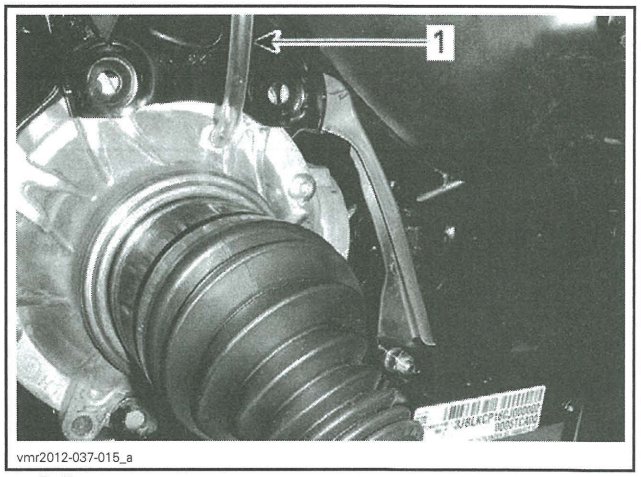

vmr2012-037-015_a

1. Pull out

Remove the final drive.

Rear Final Drive Inspection (Assembled)

Manually turn rear final drive gear; it should turn smoothly. Repair if necessary.

Check if oil seals are brittle, hard or damaged. Replace if necessary.

Backlash Inspection

Using a dial indicator and the BACKLASH MEASUREMENT TOOL (P/N 529 035 665), measure the backlash.

Place the backlash measurement tool at the end of pinion gear.

From center of tool bolt, measure 25.4 mm (1 in) and scribe a mark on the tab.

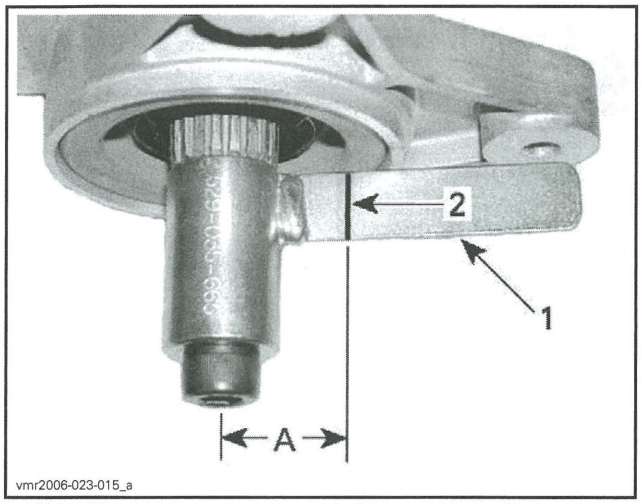

1. *Tab of backlash measurement tool*
2. *Mark on tab*

A. 25.4 mm (1 in)

Position the dial indicator tip against the tab at a 90° angle and right on the previously scribed mark.

Gently, move the tool tab back and forth. Note the backlash result.

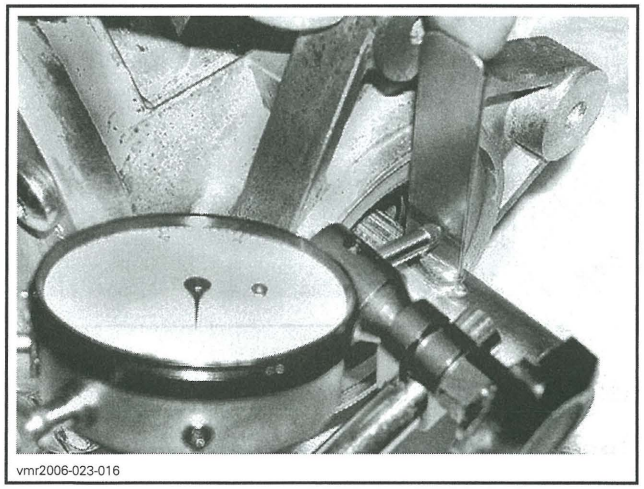

Rotate pinion gear 1/2 turn and recheck backlash. Note the result.

Rotate pinion gear 1 turn and recheck backlash.

BACKLASH SPECIFICATION
0.05 mm (.002 in) to 0.36 mm (.014 in)

If backlash is out of specification, split final drive housing and adjust shim thickness as per following guideline.

BACKLASH ADJUSTMENT GUIDELINE	
BACKLASH MEASUREMENT	WHAT TO DO
Below 0.05 mm (.002 in)	Add shim(s) and recheck backlash
Above 0.36 mm (.014 in)	Remove shim(s) and recheck backlash

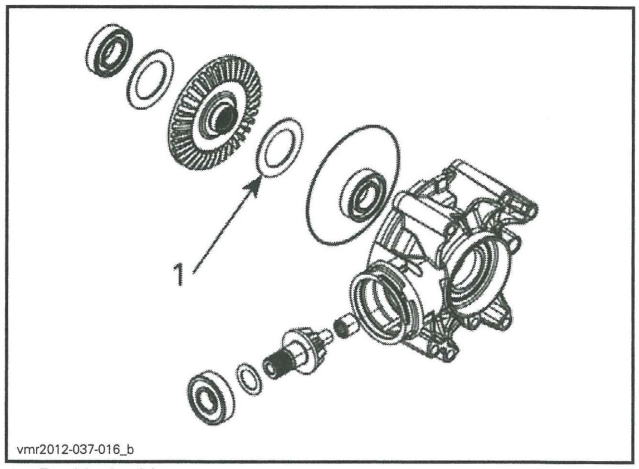

1. *Backlash shim*

Preload Inspection

Screw the propeller shaft screw in pinion gear.

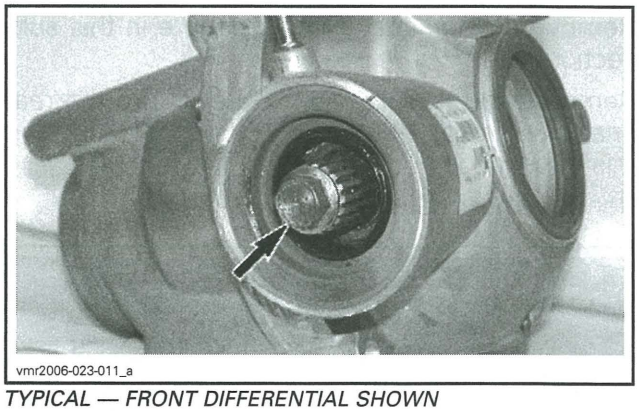

TYPICAL — FRONT DIFFERENTIAL SHOWN

Using a needle torque wrench, measure the preload.

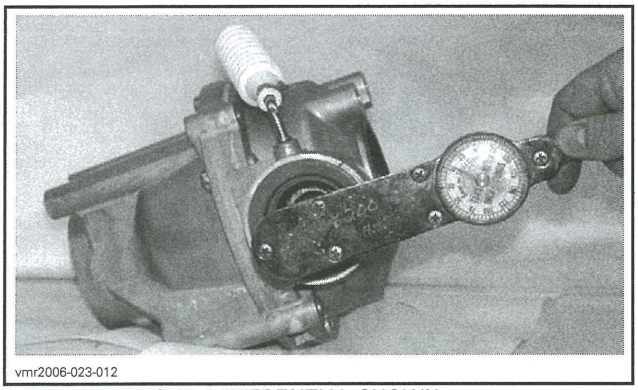
vmr2006-023-012

TYPICAL — FRONT DIFFERENTIAL SHOWN

PRELOAD SPECIFICATION
0.06 N•m (.5 lbf•**in**) to 0.50 N•m (4 lbf•**in**)

If preload is out of specification, split final drive housing and adjust shim thickness as per following guideline.

PRELOAD GUIDELINE	
PRELOAD MEASUREMENT	WHAT TO DO
Below 0.06 N•m (.5 lbf•**in**)	Add shim(s) and recheck preload
Above 0.50 N•m (4 lbf•**in**)	Remove shim(s) and recheck preload

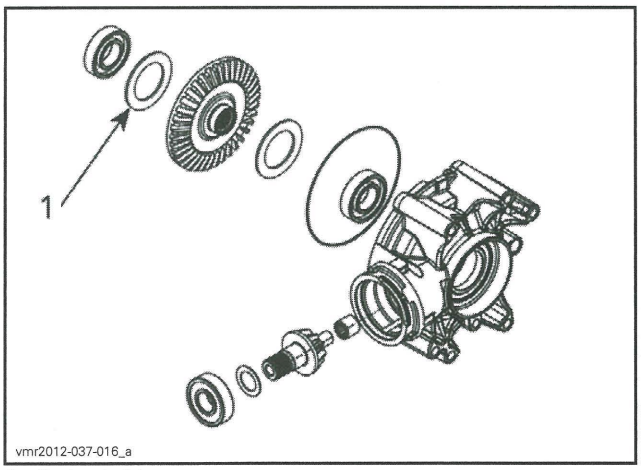

vmr2012-037-016_a

1. Preload shim

Rear Final Drive Disassembly

Ring Gear

Unscrew the final drive housing screws **no. 1**.

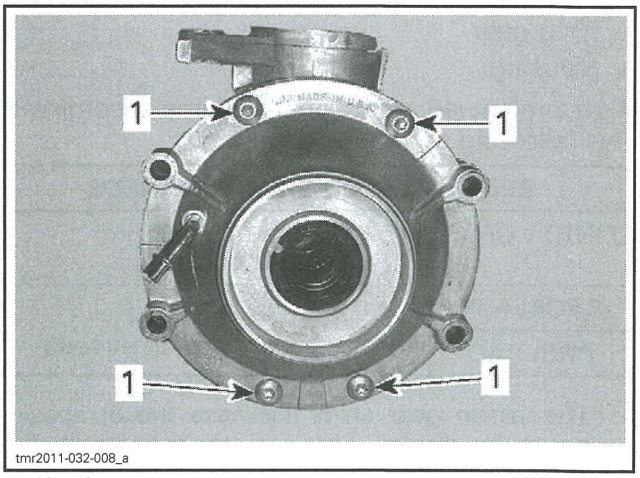

tmr2011-032-008_a

1. Housing screws

Split final drive housings.

NOTE: Be careful to keep track of shims **no. 2** and **no. 13** on ring gear **no. 3**.

Extract ring gear out of half housing.

Pinion Gear

Remove and discard oil seal **no. 4**.

Unscrew the pinion nut **no. 5**. Use the SPANNER SOCKET (P/N 529 035 649).

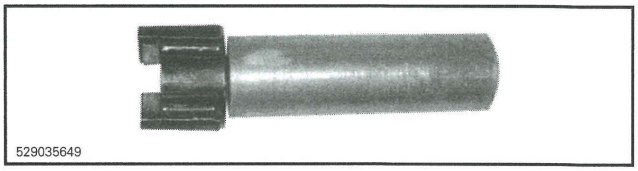
529035649

NOTE: The pinion nut is left hand threaded. Unscrew by turning clockwise.

Remove the bearing **no. 6** along with the pinion gear **no. 7**. Be careful to keep track of shims **no. 8**. Discard bearing.

The pinion gear and bearing can be easily removed using the following suggested tool:

PART	QTY
Pipe: 89 mm (3-1/2 in) diameter x 127 mm (5 in)	1
Threaded rod: M12 x 1.25 x 178 mm (7 in)	1
M12 x 1.25 nut	3
Flat bar	1

Remove and discard the needle bearing **no. 9**.

Rear Final Drive Assembly

Adjustment is required when any of the following part is changed.

– Pinion gear

– Ring gear
– Housing.

As a preliminary setup, install shims according to the following table.

RECOMMENDED SHIM THICKNESS	
PINION GEAR (1)	1.67 mm ± 0.04 mm (.066 in ± .002 in)
BACKLASH	0.5 mm (.02 in) (as a preliminary adjustment)
PRELOAD	

(1) The pinion gear shim thickness (**no. 8**) should never be altered. Any adjustment should be done on preload and/or backlash shims (**no. 8** and **no. 13**).

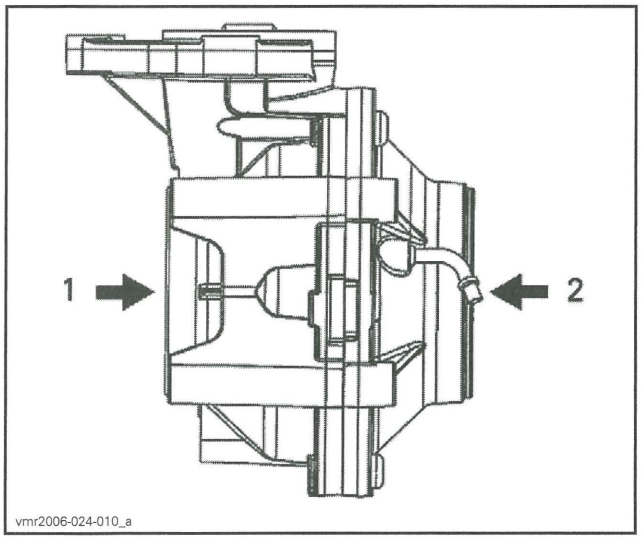

1. Backlash side
2. Preload side

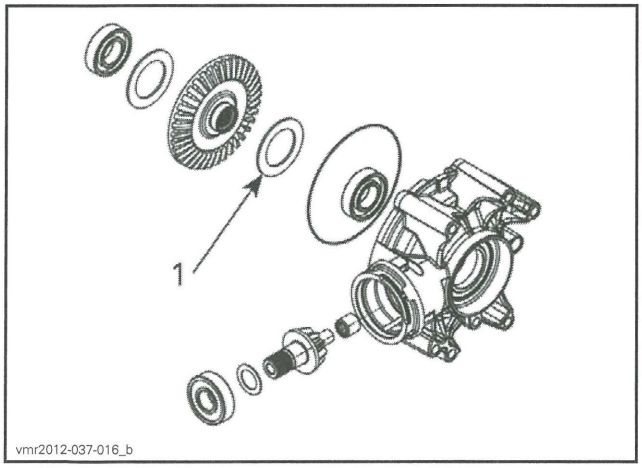

1. Backlash shim

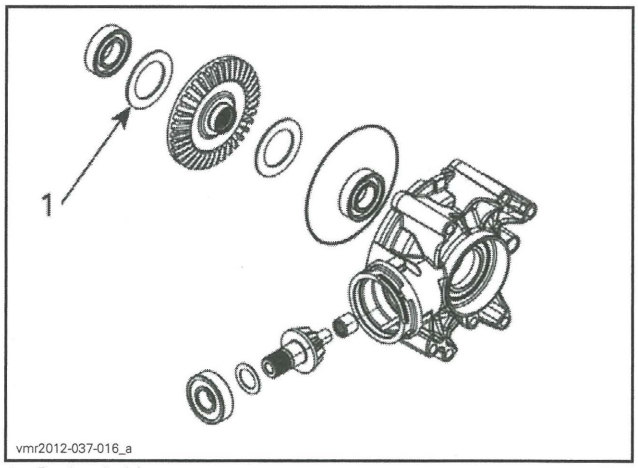

1. Preload shim

Prior to finalizing assembly, proceed in this order:
– Temporarily assemble final drive using recommended torques.
– Do not apply thread locker product.
– Do not install a new pinion nut.
– Check backlash.
– Check preload.

Ring Gear

For the assembly, reverse the removal procedure. Pay attention to the following.

Check condition of seal **no. 10**. Replace if damaged.

Install new bearings **no. 11**.

Tighten final drive housing screws **no. 1**.

PART	TORQUE
Final drive housing screws	32.5 N•m ± 3.5 N•m (24 lbf•ft ± 3 lbf•ft)

Pinion Gear

To install, reverse the removal procedure. Pay attention to the following.

Replace the O-ring **no. 13**.

Install the shim(s) **no. 8** then a new ball bearing **no. 6**.

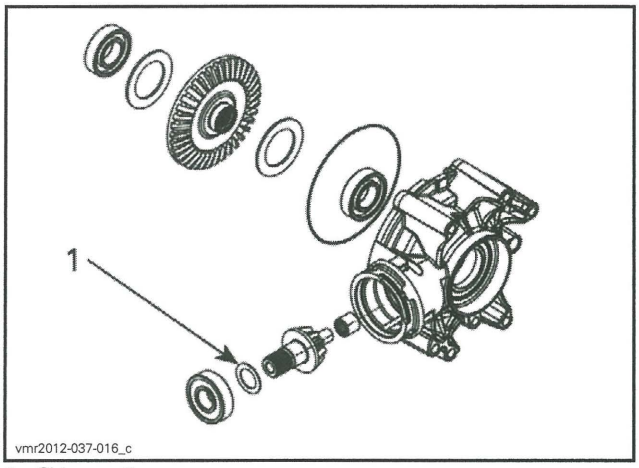

1. Shim **no. 8**

Install a new needle bearing **no. 9**.

Apply LOCTITE 277 (P/N 293 800 073) to pinion nut **no. 5**.

NOTE: If a new pinion nut is used, a self-locking product is already applied, do not use Loctite 277.

Install and tighten the pinion nut.

PART	TORQUE
Pinion nut (LH THREADS)	180 N•m ± 15 N•m (133 lbf•ft ± 11 lbf•ft)

Lubricate oil seal **no. 4**.

Finalize assembly:
- Apply thread locker products where applicable.
- Torque fasteners as per tables.

Rear Final Drive Installation

The installation is the reverse of the removal procedure.

INSTALLATION TIPS
Begin by installing the lowest rear final drive retaining bolt. Pay attention to inserting rear final drive retaining bolts through all the bracket holes. At some places there is 2 brackets thick. Loosely install all bolts prior to tightening bolts.

PART	TORQUE
Final drive retaining nuts	90 N•m ± 5 N•m (66 lbf•ft ± 4 lbf•ft)

Refill the final drive with recommended oil. Refer to *PERIODIC MAINTENANCE PROCEDURES* subsection.

WHEELS AND TIRES

SERVICE PRODUCTS

Description	Part Number	Page
LOCTITE 767 (ANTISEIZE LUBRICANT)	293 800 070	440–441

PROCEDURES

TIRES

⚠ WARNING

Do not rotate tires. The front and rear tires have a different size. Respect direction of rotation when applicable.

Tire Pressure

⚠ WARNING

Tire pressure greatly affects vehicle handling and stability. Insufficient pressure may cause tire to deflate and rotate on wheel. Excessive pressure may burst the tire. Always follow recommended pressure.

Check pressure when tires are **cold** before using the vehicle. Tire pressure changes with temperature and altitude. Recheck pressure if one of these conditions has changed.

MODEL	TIRE PRESSURE	FRONT	REAR
ALL OUTLANDER MODELS	MIN.	41.4 kPa (6 PSI)	41.4 kPa (6 PSI)
	MAX. Use when total load is greater than 131.5 kg (290 lb)	48.3 kPa (7 PSI)	68.9 kPa (10 PSI)
RENEGADE MODELS	MIN.	41.4 kPa (6 PSI)	41.4 kPa (6 PSI)
	MAX.	41.4 kPa (6 PSI)	41.4 kPa (6 PSI)

Tire Inspection

Check tire for presence of slits, bulges, wear or other damage. Replace if necessary.

Tire Replacement

Use an automotive tire changer to replace tires.

⚠ WARNING

- Replace tires only with the same type and size as original tires.
- For unidirectional tread pattern, ensure that the tires are installed in the correct direction of rotation.

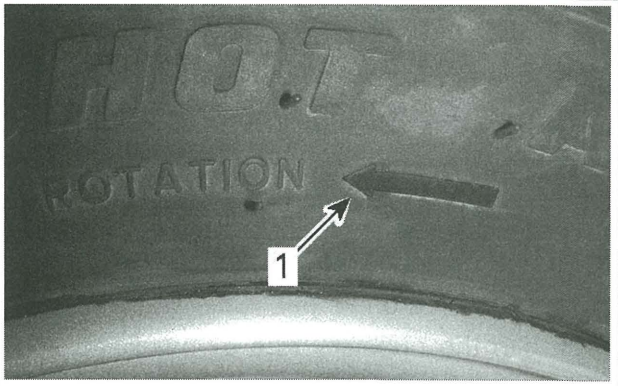

tmr2011-033-002_a

TYPICAL
1. Direction of rotation

Tire Removal (Beadlock Wheels)

1. Remove wheel from the vehicle.
2. Completely deflate tire.
3. Loosen all beadlock screws a few turns at a time in a criss-cross pattern.
4. Remove beadlock screws.
5. Remove beadlock clamp ring.

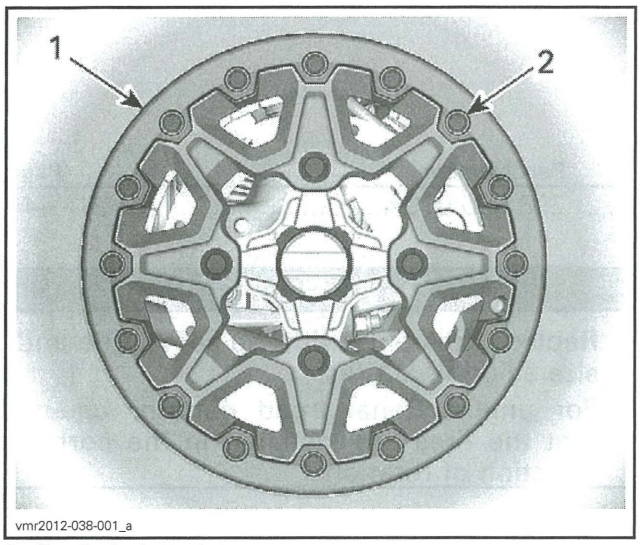

1. Beadlock clamp ring
2. Beadlock screws (16 x)

6. Remove tire from the beadlock side.

Tire Installation (Beadlock Wheels)

NOTE: Tires should be mounted, by an experienced person, in accordance to good tire mounting practices using acceptable tire mounting equipment designed for the tire industry.

1. Mount the tire on wheel.
   1.1 On the opposite side of beadlock, apply the tire mounting lube on inner bead of tire and wheel to ensure proper seating when inflating.
   1.2 Mount the inner bead over the wheel.

   NOTICE **Mount tire from beadlock side only.**

   1.3 Seat the tire outer bead on the wheel outer shoulder.
   1.4 Center the tire outer bead over the beadlock inner ring.

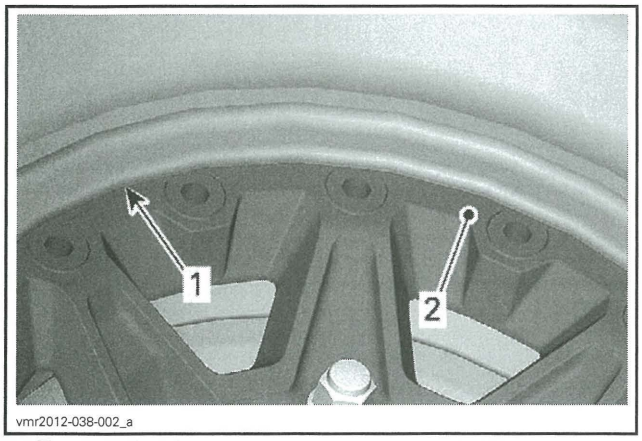

1. Tire outer bead
2. Beadlock inner ring shoulder

2. Place the beadlock clamp ring on the tire.
3. Apply LOCTITE 767 (ANTISEIZE LUBRICANT) (P/N 293 800 070) or an equivalent product to the screw threads.
4. Install all beadlock screws. To avoid cross threading, start all screws by hand.
5. Tighten beadlock bolts as per following procedure.

NOTICE **Do not use an impact wrench for installing beadlock screws. The risk of screw breaking or screw stripping is high when using an impact wrench.**

NOTE: To ensure even pressure on the beadlock clamp ring, tighten screws **a few turns at a time**.

During tightening, the beadlock clamp ring will flex slightly and should pull down to meet the inner ring.

BEADLOCK TIGHTENING TORQUE	
STEP 1	3 N•m ± 1 N•m (27 lbf•**in** ± 9 lbf•**in**)
STEP 2	8 N•m ± 1 N•m (71 lbf•**in** ± 9 lbf•**in**)

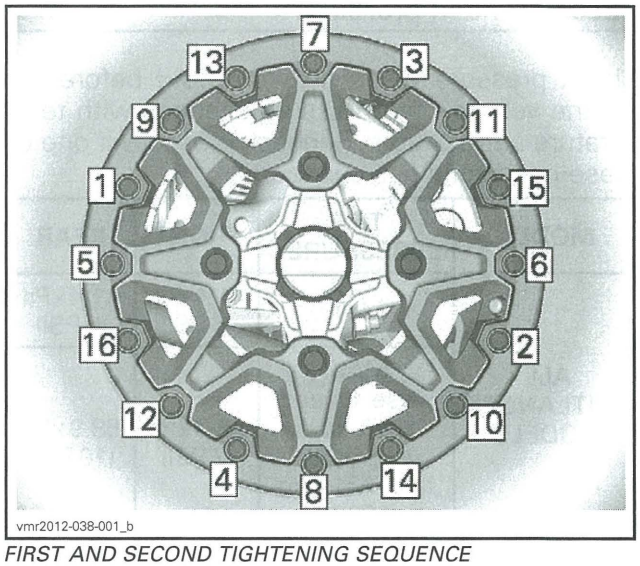

FIRST AND SECOND TIGHTENING SEQUENCE

The beadlock clamp ring should be in contact the beadlock inner ring.

6. Verify the gap between tire and beadlock clamp ring, it should be practically equal all around the ring.

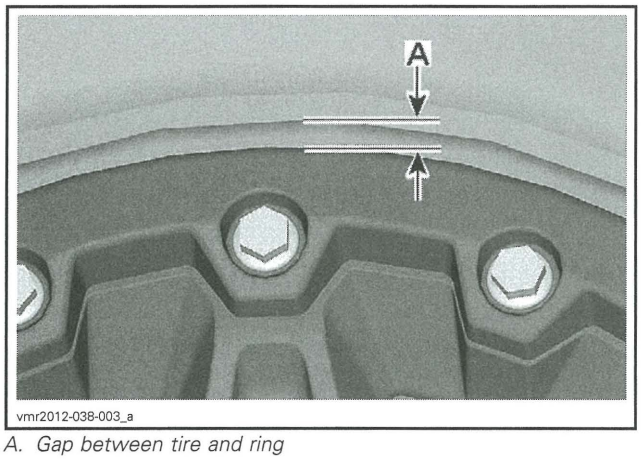

A. Gap between tire and ring

If the gap is uneven:
- Loosen all screws.
- Check tire position on wheel and reposition it if necessary.
- Restart the tightening sequence from the beginning.

BEADLOCK TIGHTENING TORQUE	
FINAL STEP	10.5 N•m ± 1 N•m (93 lbf•**in** ± 9 lbf•**in**)

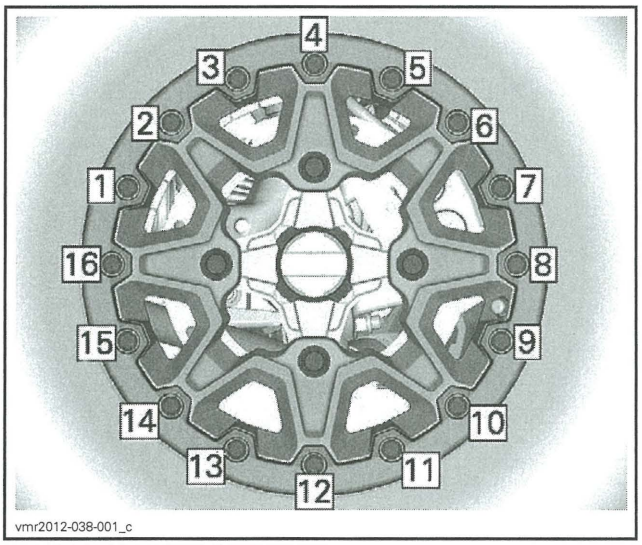

FINAL TIGHTENING SEQUENCE

7. Inflate tire to seat the inner bead on wheel. Always use safe practices, such as a tire safety cage.

⚠ WARNING

Never exceed tire's recommended maximum pressure for seating beads.

8. Adjust tire pressure to specification. Refer to *TIRE PRESSURE* in this subsection.

WHEELS

Wheel Removal

Loosen nuts just enough to be able to unscrew them once the vehicle will be off the ground.

Lift and support the vehicle.

Remove nuts, then remove wheel.

Wheel Inspection

Inspect wheel for wear or damage especially at the mounting holes.

Wheel Installation

At installation, it is recommended to apply LOCTITE 767 (ANTISEIZE LUBRICANT) (P/N 293 800 070) on threads.

Check if tires are unidirectional.

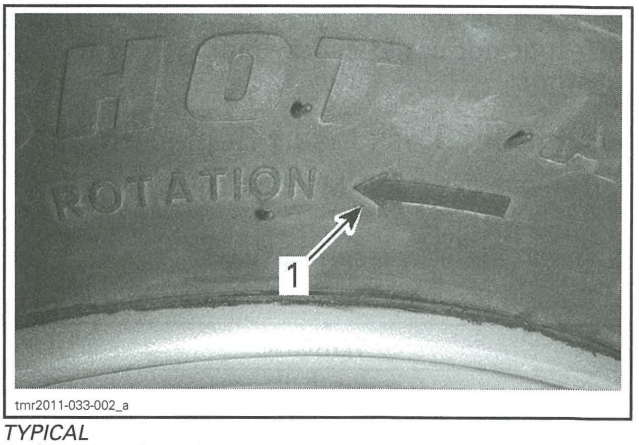

TYPICAL
1. Direction of rotation

Install wheel with the tire in the right direction of rotation.

Tighten wheel lug nuts to the specified torque using the illustrated sequence.

WHEEL LUG NUTS	
TORQUE	100 N•m ± 10 N•m (74 lbf•ft ± 7 lbf•ft)

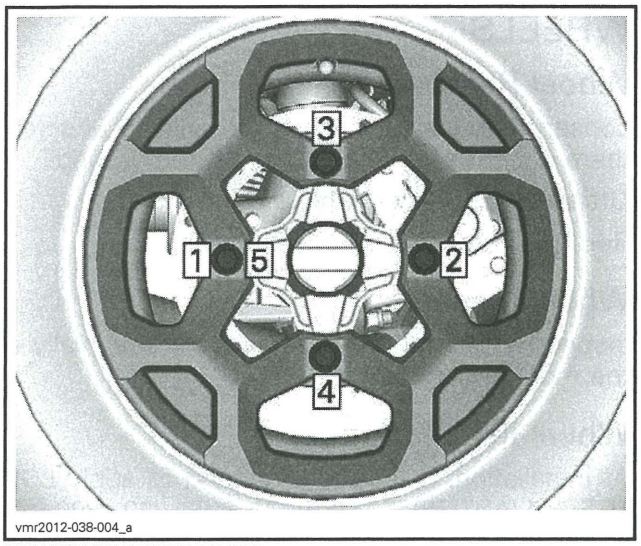

TIGHTENING SEQUENCE

NOTICE **Always use the recommended wheel nuts for the type of wheel. Using a different nut could cause damages to the rim or studs.**

Wheel Beadlock Insert Replacement

1. Remove damaged threaded insert using an M6 Allen key.
2. Screw the new insert by hand.
3. Tighten the insert to the specified torque.

TORQUE	
Threaded insert	8.5 N•m ± 1.5 N•m (75 lbf•**in** ± 13 lbf•**in**)

NOTE: The insert must not protrude the wheel surface.

STEERING SYSTEM

SERVICE TOOLS

Description	Part Number	Page
STEERING ALIGNMENT TOOL	529 036 059	447

SERVICE TOOLS – OTHER SUPPLIER

Description	Part Number	Page
SMOOTHFLOW™ TAPERED TIP	16 ga #511 rtt-b	448

SERVICE PRODUCTS

Description	Part Number	Page
LOCTITE 406 (GLUE)	293 800 100	448
LOCTITE 767 (ANTISEIZE LUBRICANT)	293 800 070	454
PULLEY FLANGE CLEANER	413 711 809	448
XPS SYNTHETIC GREASE	293 550 010	454

Outlander 500/650/800R/1000 and Renegade 800R/1000 (Without a DPS)

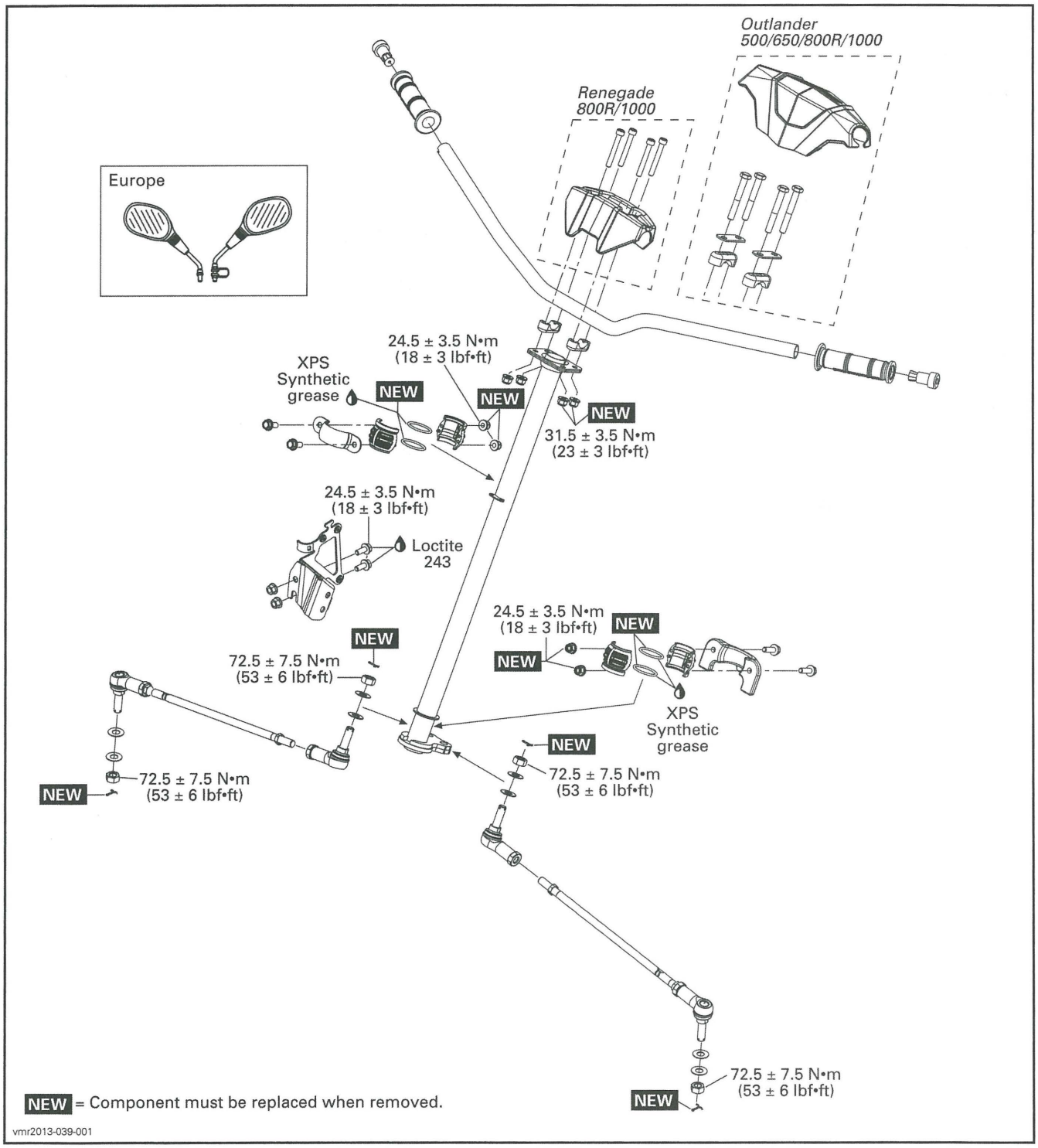

Outlander XT and LTD Models (with a DPS)

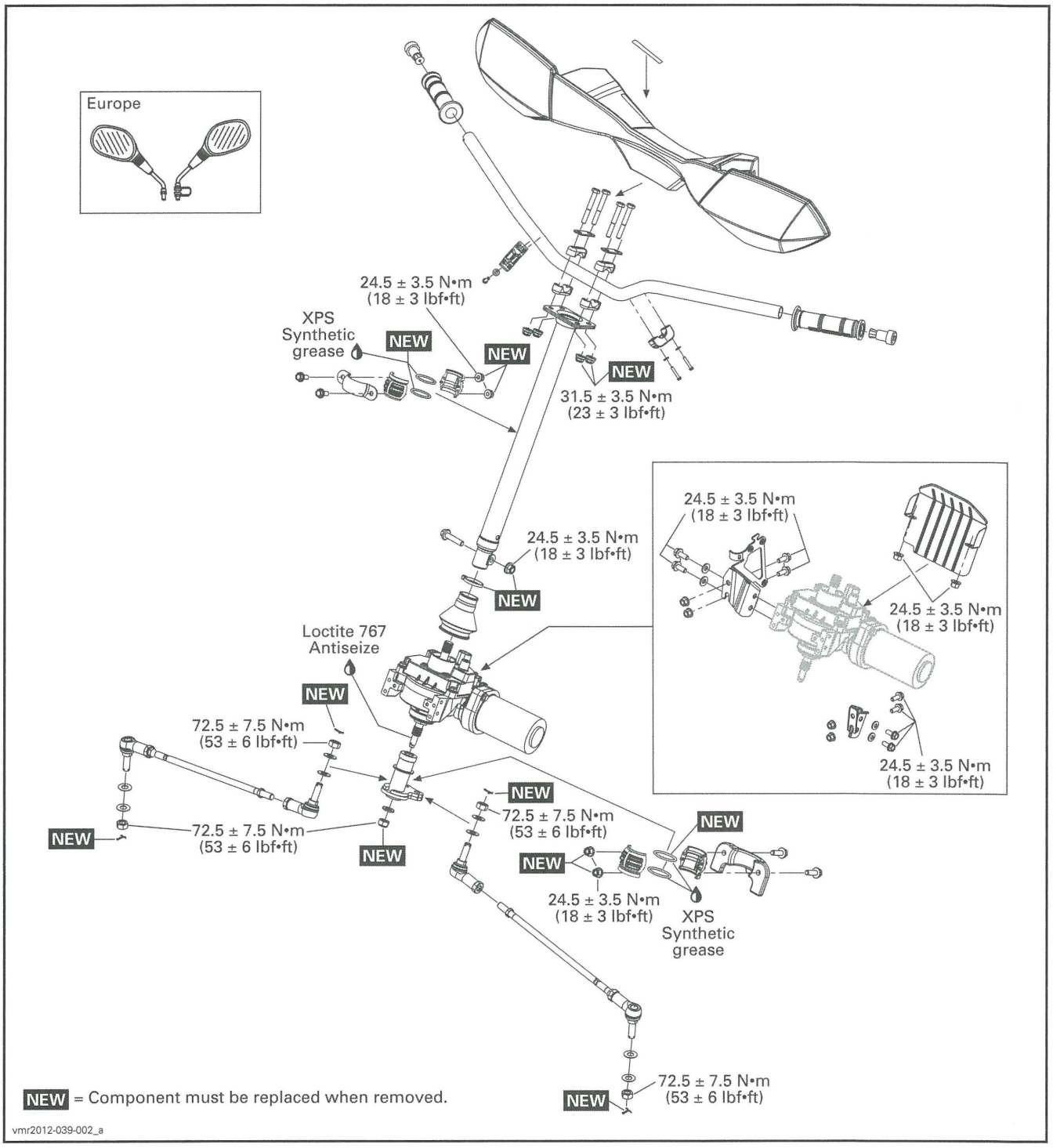

Renegade X xc and XT-P 800R/1000

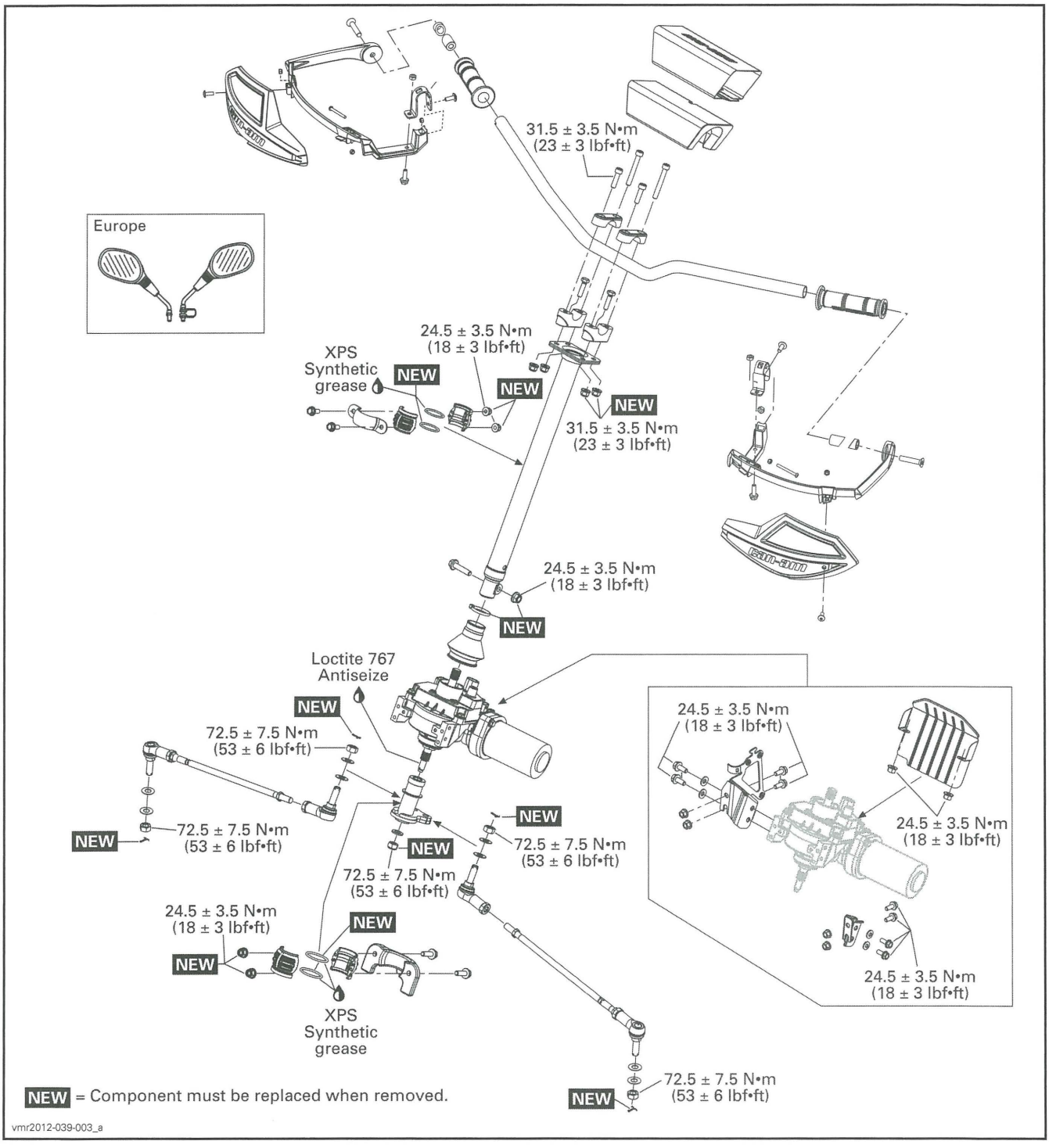

GENERAL

The procedures described below are the same for the RH and LH sides, unless otherwise instructed.

ADJUSTMENT

STEERING ALIGNMENT

1. Place vehicle on a level surface.
2. Check pressure in each tire. Adjust to recommended pressure.
3. Position and secure handlebar in the straight ahead position.
4. Remove two wheel nuts on the LH rear wheel and install the steering alignment tool.

REQUIRED TOOL	
STEERING ALIGNMENT TOOL (P/N 529 036 059)	

5. Place a rope around all four tires using an elastic, link both ends together.

NOTE: The rope must be placed at the center of the wheels.

6. Lift and secure vehicle off the ground so that the suspension is fully extended.
7. Rotate the front wheel to position the alignment tool level with the rope. Ensure rope passes over the spacer blocks on the alignment tool.

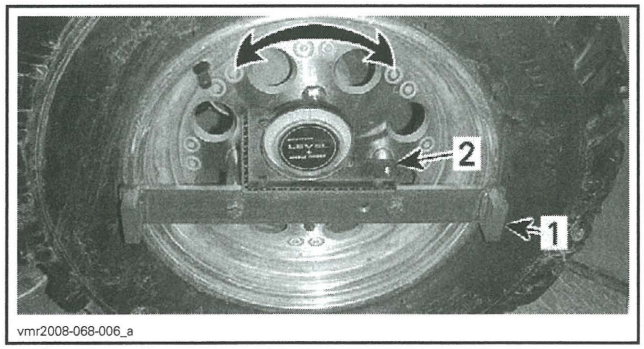

vmr2008-068-006_a

1. Steering adjustment tool
2. Angle gauge or level

8. At the LH front of wheel, near the front of the rim, pull on the rope so that it does not touch the first spacer block on the alignment tool.

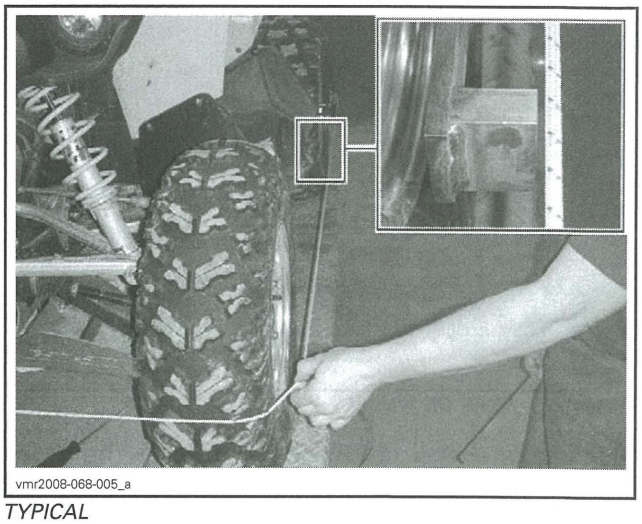
vmr2008-068-005_a

TYPICAL

9. Slowly move rope back until it just makes contact with both spacers.

NOTE: Ensure rope remains in this position as you carry out the following steps.

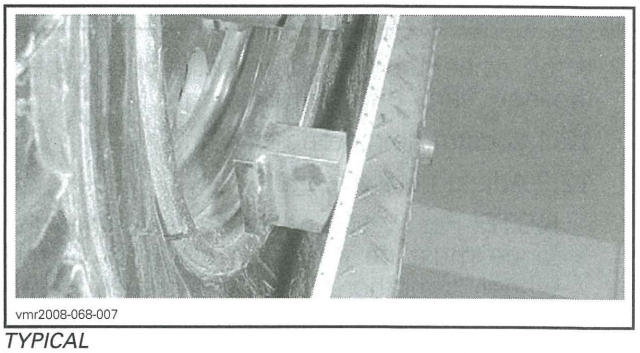
vmr2008-068-007

TYPICAL

10. Measure the distance between the rope and the rim, at the front and at the rear of the wheel rim.

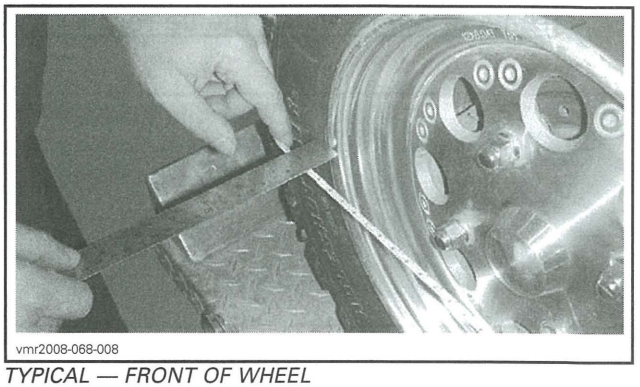
vmr2008-068-008

TYPICAL — FRONT OF WHEEL

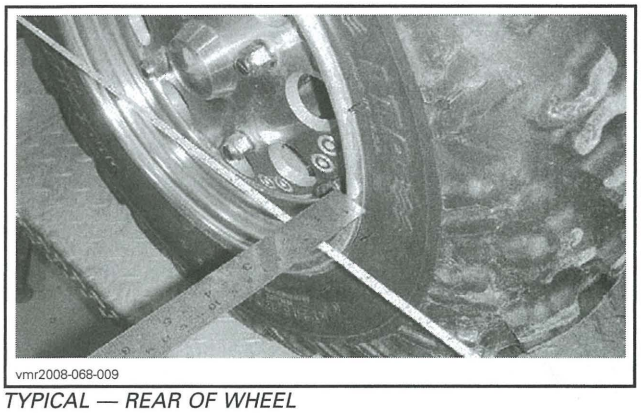
vmr2008-068-009

TYPICAL — REAR OF WHEEL

11. Calculate the difference between the front and rear measurements and compare with following specifications.

MODELS	SPECIFICATION
All Outlanders	0 mm to 3 mm (0 in to .118 in) **toe-in**
All Renegades	3 mm to 5.6 mm (.118 in to .22 in) **toe-in**

12. If the wheel toe measurement is out of specification, carry out the following:

    12.1 Loosen tie-rod end lock nuts.

    12.2 Adjust tie-rod length.

    NOTE: For a toe-in adjustment, the distance must be longer at the front of the wheel. Lengthen tie-rod to increase toe-in, and vise-versa.

⚠ WARNING

The maximum unengaged tie-rod length must not exceed 32 mm (1.26 in) Tie rod unengaged length must be the same at both ends of the tie-rod.

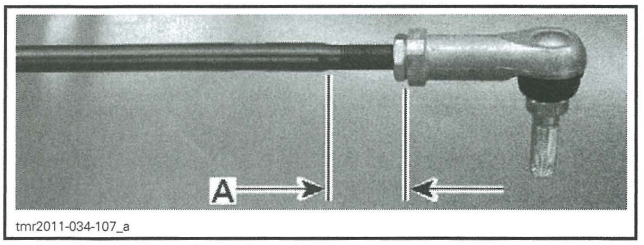

tmr2011-034-107_a

A. Maximum tie-rod end length

    12.3 Tighten tie-rod end lock nuts to specification.

TIGHTENING TORQUE	
Tie-rod end locking nut	34 N•m ± 2 N•m (25 lbf•ft ± 1 lbf•ft)

13. Repeat procedure for other front wheel.

PROCEDURES

HANDLEBAR GRIP

Handlebar Grip Removal

1. Loosen the screw at the end of handlebar grip.
2. Remove the handlebar grip cap.
3. Cut and remove the handlebar grip.

Handlebar Grip Installation

1. Remove all rubber residues of the old grip before installing the new.
2. Clean the handlebar with PULLEY FLANGE CLEANER (P/N 413 711 809) or alcohol to remove any greasy matter on it.
3. Install handlebar grip by blowing compressed air between handle grip and handlebar.
4. Install a SMOOTHFLOW™ TAPERED TIP (P/N 16 GA #511 RTT-B) from EFD Inc on a bottle of LOCTITE 406 (GLUE) (P/N 293 800 100).
5. Lift a part of the grip using a small screwdriver and inject glue (about 4 spots per side).

NOTE: The glue dries quickly. Do not apply it before installing grip.

6. Apply pressure on the grip for approximately 30 seconds to set the glue.
7. Install the handlebar grip cap and torque screw 0.4 N•m (3.5 lbf•**in**).

HANDLEBAR COVER

Handlebar Cover Removal

Outlander

Pull on plastic handlebar cover to remove it from the handlebar.

Outlander XT

Unscrew both plastic U-clamps that attach handlebar cover to the handlebar.

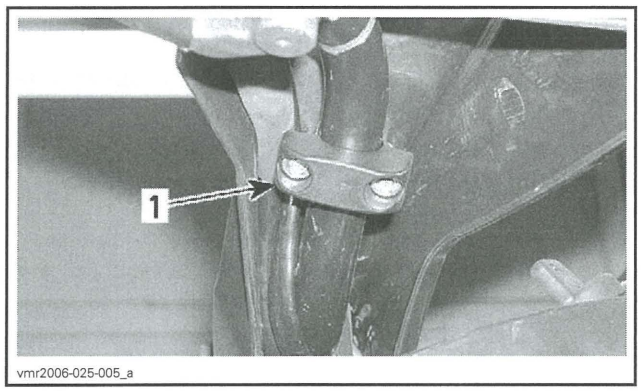

TYPICAL
1. Plastic U-clamp

Renegade

Remove the 4 screws that secure the steering cover and handlebar to the steering head.

Renegade X xc

Remove the fabric steering cover, then pull the protective foam from the handlebar.

Handlebar Cover Inspection

Check covers for cracks or other damages. Replace if necessary.

Handlebar Cover Installation

The installation is the reverse of removal procedure.

Renegade X xc 800R/1000

NOTE: Ensure handlebar "U" clamps in handlebar cover are tightened equally (equal distance on each side of clamps).

HANDLEBAR

Handlebar Removal

All Outlander Models

1. Remove handlebar cover.

NOTE: Remove handlebar grips, throttle handle, brake handle and multifunction switch only if the handlebar is defective and requires replacement.

2. Remove handlebar mounting bolts, stiffener and handlebar clamps.

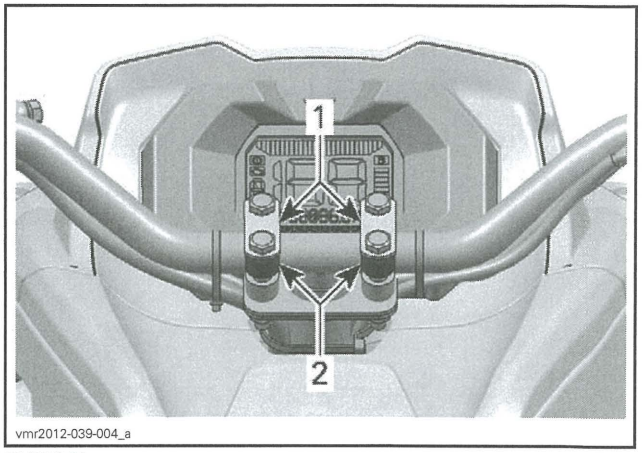

TYPICAL
1. Stiffeners
2. Handlebar clamps

3. Remove the handlebar.

Renegade Model

NOTE: Handlebar grips, throttle and brake levers as well as the multifunction switch should be removed only if the handlebar is defective and requires replacement.

1. Unscrew the four socket screws securing the moulded handlebar support.

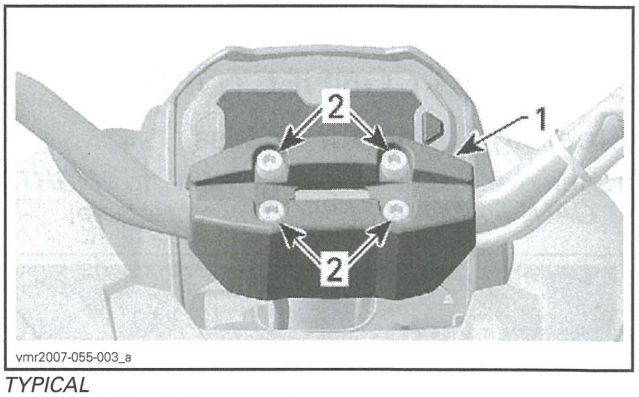

TYPICAL
1. Moulded handlebar support
2. Socket screws

2. Remove handlebar.

Renegade Models (X xc Model)

1. Remove fabric steering cover.
2. Pull foam protector from handlebar.
3. Remove the four socket screws, then remove the handlebar clamps.

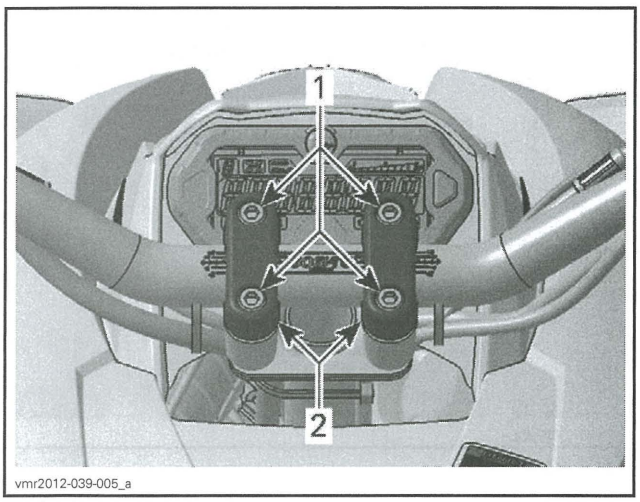

1. Socket screws
2. Handlebar clamps

Handlebar Inspection

Inspect the handlebar for damage, cracks or bending. Replace if any of these problems is detected.

Handlebar Installation

For the installation, reverse the removal procedure.

NOTE: Ensure handlebar "U" clamps are tightened equally (equal distance on each side of clamps).

STEERING CONNECTORS

Steering Connector Access

1. Remove gauge support, refer to *LIGHTS, GAUGE AND ACCESSORIES* subsection.



1. Gauge support

2. Remove front body module, refer to body subsection.
3. Remove dash board support.

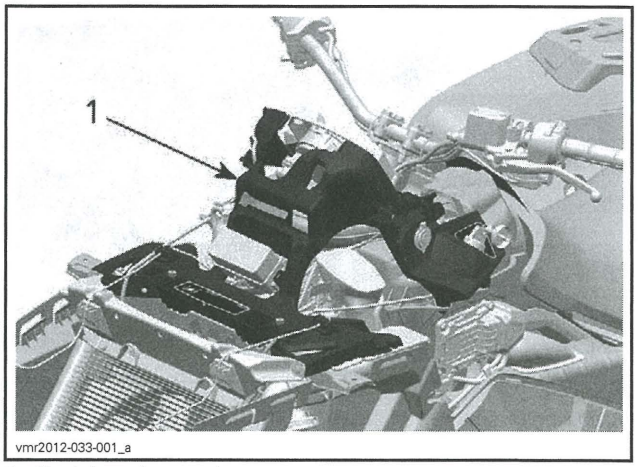

1. Dash board support

Steering Connector Identification

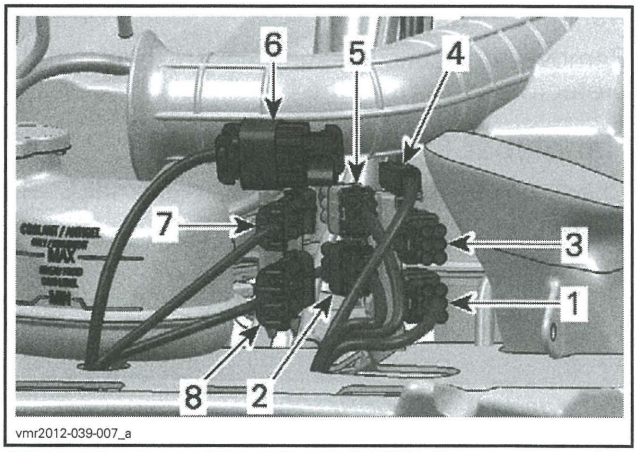

STEERING CONNECTOR IDENTIFICATION
1. MG1 (LH multifunction switch)
2. MG2 (LH multifunction switch)
3. MG3 (LH multifunction switch)
4. DC3 (DC power connector)
5. HIC1 (Engine interconnect)
6. HICA (Accessory interconnect)
7. SWW 2 (Switch winch)
8. SWW 1 (Switch winch)

MULTIFUNCTION SWITCH

Multifunction Switch Removal (From Vehicle)

Remove gauge support. Refer to *LIGHTS, GAUGE AND ACCESSORIES* subsection.

Carry out steps in *MULTIFUNCTION SWITCH REMOVAL (AT HANDLEBAR).*

Multifunction Switch Removal (At Handlebar)

1. Remove multifunction switch screws.

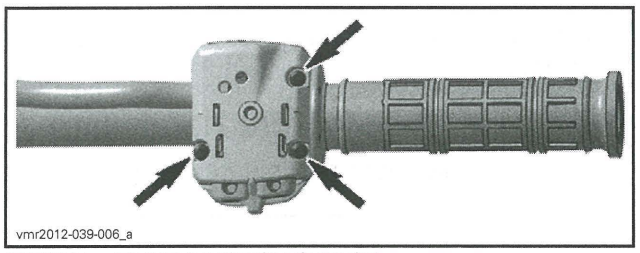

TYPICAL - MULTIFUNCTION SWITCH

2. Separate multifunction switch from handlebar.
3. Disconnect multifunction switch steering connectors, refer to *STEERING CONNECTOR IDENTIFICATION* in this subsection:
   - MG1
   - MG2
   - MG3.
4. Take note of the positions of the locking ties securing the steering harness, then cut them and remove the multifunction switch steering harness from the vehicle.

Multifunction Switch Installation

For installation, reverse the removal procedure.

NOTICE Be sure to route and secure the multifunction switch steering harness as noted prior to removal.

THROTTLE LEVER

Throttle Lever Removal

1. Disconnect the HIC1 connector (2/4WD switch), refer to *STEERING CONNECTORS* in this subsection.
2. Remove throttle lever housing retaining screws.

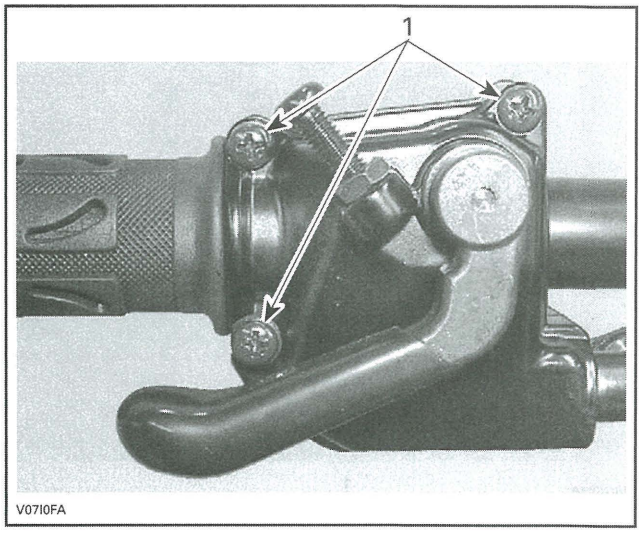

TYPICAL - THROTTLE LEVER HOUSING
1. Remove retaining screws

3. Separate throttle lever housing from handlebar.
4. Slide rubber protector back to expose throttle cable adjuster.

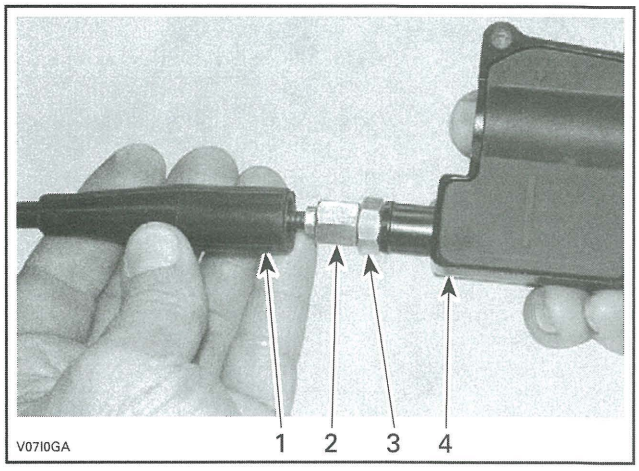

1. Cable protector
2. Throttle cable adjuster
3. Lock nut
4. Throttle lever housing

5. Loosen lock nut and screw in the throttle cable adjuster.
6. Remove inner housing protector.

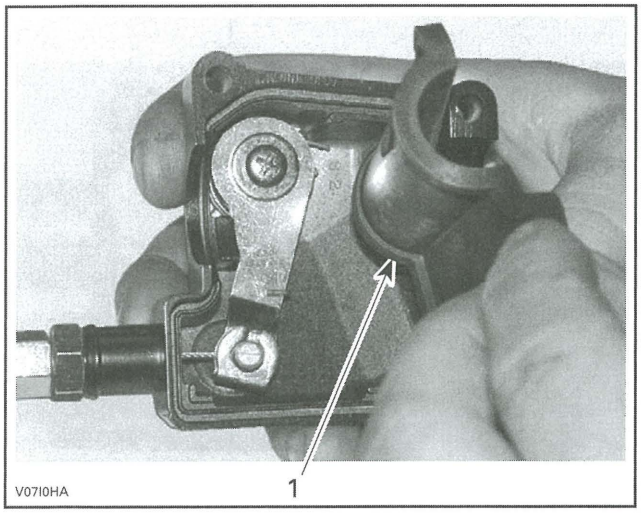

1. Inner housing protector

7. Slide cable in clip slot and remove the end of the cable from clip.

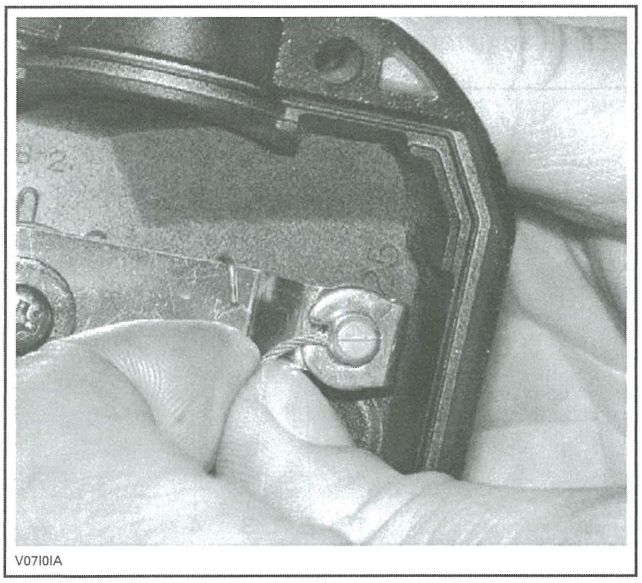

8. Remove throttle cable from housing.

Throttle Lever Installation

For installation, reverse the removal procedure.

Adjust throttle cable. Refer to *THROTTLE CABLE ADJUSTMENT.*

BRAKE LEVER

Brake Lever Removal (From Vehicle)

1. Carry out steps in *BRAKE LEVER REMOVAL (FROM HANDLEBAR).*

NOTICE **Avoid spilling brake fluid on plastic, rubber or painted parts.**

2. Disconnect brake hose, refer to *BRAKES* subsection.

Brake Lever Removal (At Handlebar)

1. Remove brake lever retaining screws.

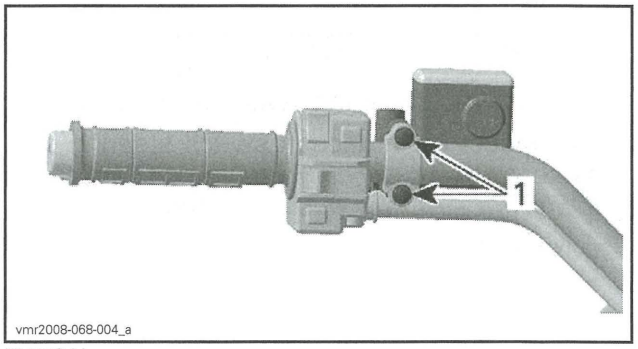

TYPICAL
1. Remove these retaining screws

2. Separate brake lever from handlebar.

Brake Lever Installation

For installation, reverse the removal procedure however, pay attention to the following.

TIGHTENING TORQUE	
Brake lever mounting screw	9 N•m ± 1 N•m (80 lbf•**in** ± 9 lbf•**in**)

⚠ WARNING

If brake hose was disconnected, bleed brake system. Refer to *BRAKES* subsection.

STEERING COLUMN BEARING

The steering column bearing(s) used on these vehicles are half bushings.

For inspection and replacement of steering column half bushings, refer to *STEERING COLUMN* in this subsection.

STEERING COLUMN

Steering Column Removal (Without a DPS)

1. Remove gauge support, refer to *LIGHTS, GAUGE AND ACCESSORIES* subsection.
2. Remove the front body module, refer to *BODY* subsection.

Outlander Models

3. Remove dash board support.

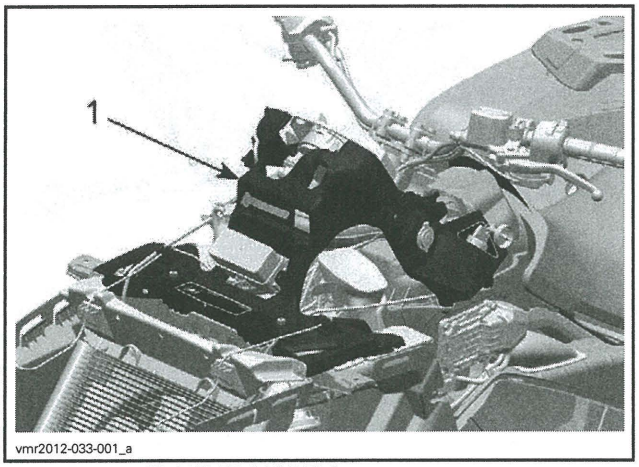

TYPICAL - OUTLANDER MODELS
1. *Dash board support*

All Models (Without a DPS)

4. Remove the air intake silencer. Refer to *AIR INTAKE SYSTEM* subsection.
5. Remove handlebar, refer to *HANDLEBAR REMOVAL* in this subsection. Also remove locking ties and separate wiring harnesses and hoses from the steering column.
6. Disconnect the tie-rods from the pitman arm at the bottom of the steering column. Refer to *TIE-ROD*, further in this section.

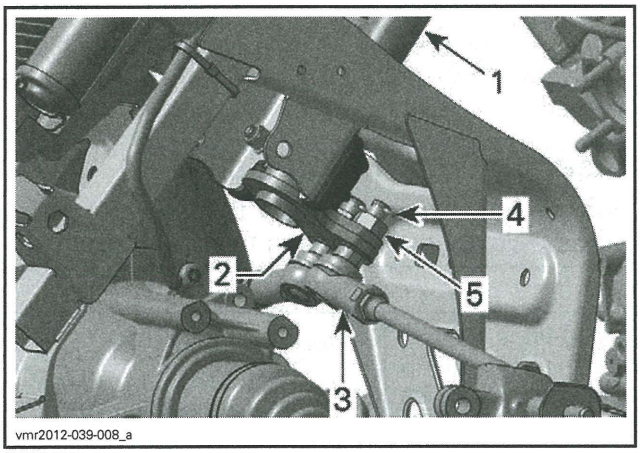

TYPICAL
1. *Steering column*
2. *Pitman arm*
3. *Tie-rod end*
4. *Cotter pin*
5. *Tie-rod retaining nut*

NOTE: When removing tie-rods from pitman arm, take note of positions of flat washers for installation.

7. Remove lower half bushing retaining bolts and pull retainer off of half bushings.

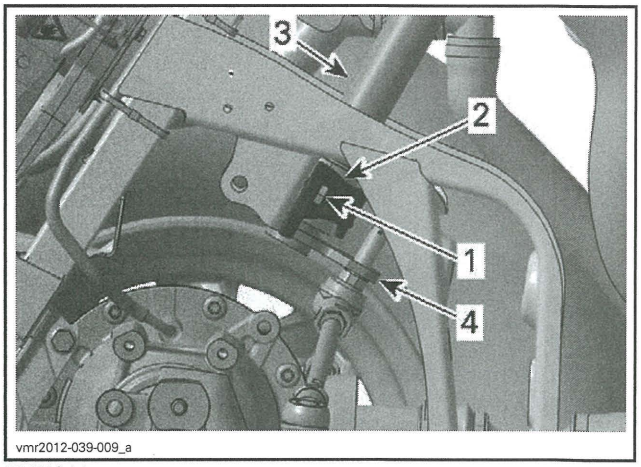

TYPICAL
1. *Lower retainer mounting screws (2)*
2. *Lower half bushing retainer*
3. *Steering column*
4. *Pitman arm*

8. Remove upper half bushing retaining bolts and pull retainer off of half bushings.

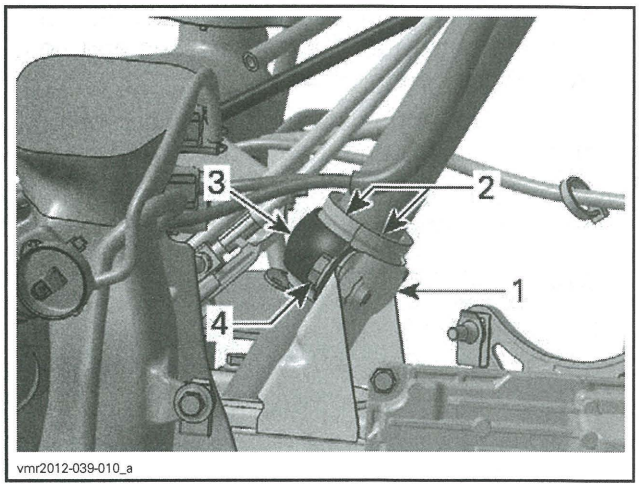

TYPICAL
1. *Upper steering column support*
2. *Half bushings*
3. *Half bushing retainer*
4. *Retainer mounting screws (2)*

9. Pull steering column from vehicle.

Steering Column Removal (With a DPS)

1. Remove gauge support, refer to *LIGHTS, GAUGE AND ACCESSORIES* subsection.
2. Remove the front body module, refer to *BODY* subsection.

Outlander Models

3. Remove dash board support.

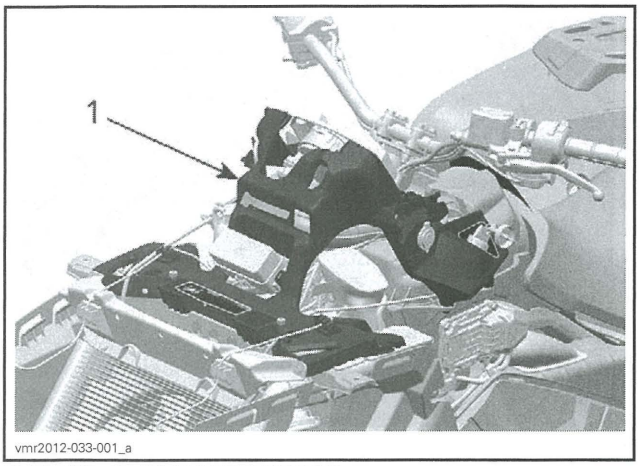

TYPICAL - OUTLANDER MODELS
1. Dash board support

All Models (With a DPS)

4. Remove the air intake silencer. Refer to *AIR INTAKE SYSTEM* subsection.
5. Remove handlebar, refer to *HANDLEBAR REMOVAL* in this subsection. Also remove locking ties and separate wiring harnesses and hoses from the steering column.
6. Remove steering column lower pinch bolt, just above the DPS unit.

NOTE: Some parts in following illustration not shown for clarity of illustration.

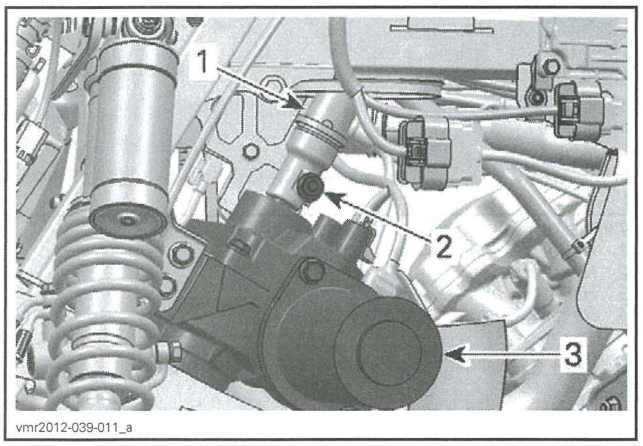

1. Steering column
2. Steering column lower pinch bolt
3. DPS unit

7. Remove upper half bushing retaining bolts and pull retainer off of half bushings.

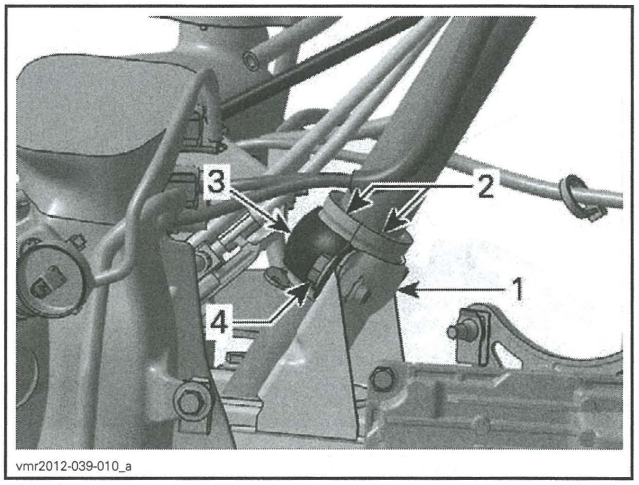

TYPICAL
1. Upper steering column support
2. Half bushings
3. Half bushing retainer
4. Retainer mounting screws (2)

8. Pull steering column from vehicle.

Steering Column Inspection

1. Inspect steering column for wear, cracks or bending. Replace if any of these problems is detected.
2. Check steering column O-rings for brittleness, hardness, wear or other damage. Replace if necessary.
3. Clean and check steering column half bushings. If they show signs of wear or cracking, replace them.

Steering Column Installation

For the installation, reverse the removal procedure however, pay attention to the following.

PRODUCT	
O-rings, half bushings and DPS input shaft splines	XPS SYNTHETIC GREASE (P/N 293 550 010)
DPS output shaft splines	LOCTITE 767 (ANTISEIZE LUBRICANT) (P/N 293 800 070)

Install **NEW** cotter pins (as applicable per model). Both ends of cotter pins must be folded.

Install **NEW** elastic nuts where used.

Torque all fasteners as specified in the applicable exploded view.

Carry out a *STEERING ALIGNMENT* procedure as detailed in this subsection.

Carry out a *TORQUE OFFSET RESET* procedure as detailed in this subsection.

TIE-ROD

NOTE: Use the same procedure for RH and LH side.

Tie-Rod Removal

1. Place vehicle on jack stands and remove the applicable wheel.
2. Remove tie-rod end from steering knuckle by removing:
   - Cotter pin (discard)
   - Retaining nut
   - Hardened washers (note position).

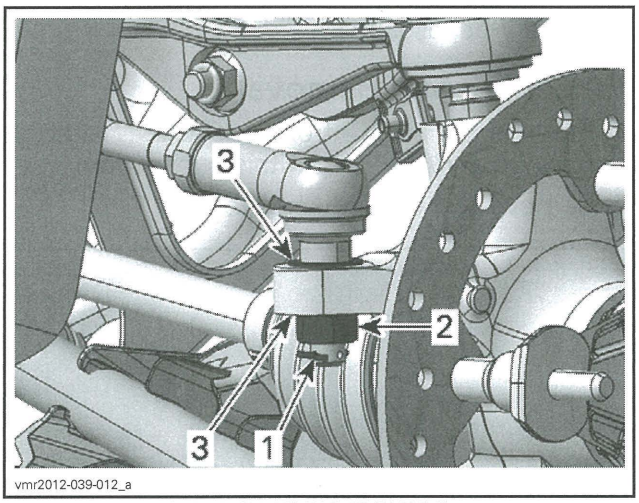

TYPICAL - TIE ROD AT STEERING KNUCKLE
1. *Cotter pin*
2. *Elastic nut*
3. *Hardened washers*

3. If completely removing tie-rod from vehicle, repeat previous step at pitman arm.

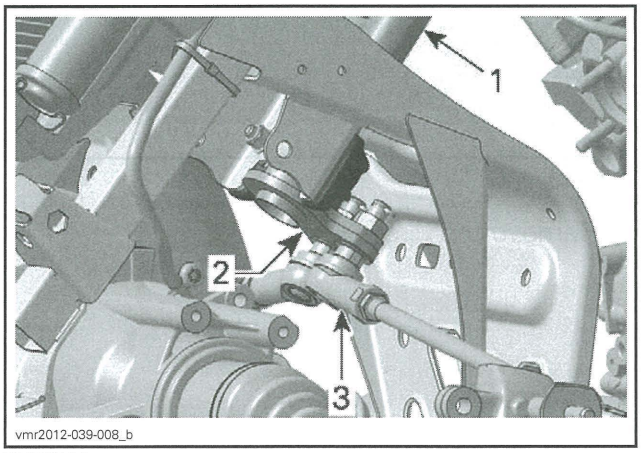

TYPICAL
1. *Steering column*
2. *Pitman arm*
3. *Tie-rod end*

Tie-Rod Inspection

Inspect tie-rod for straightness, cracks and other damages. Replace as required.

Inspect tie-rod ends for wear or excessive play. If excessive, replace the tie-rod end.

Tie-Rod Installation

For the installation, reverse the removal procedure. Pay attention to the following details.

When installing a new tie-rod or tie-rod end, adjust tie-rod to nominal length.

TIE-ROD NOMINAL LENGTH	
Dimension "A" - center to center	416.4 mm (16.394 in)

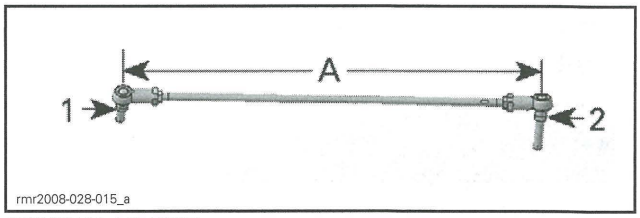

NOMINAL LENGTH
1. *Pitman arm side*
2. *Knuckle side*

A. 416.4 mm (16.394 in)

TIE-ROD MAXIMUM UNENGAGED LENGTH	
Dimension "A" - Shoulder to tie rod end face	32 mm (1.26 in)

⚠ WARNING

Maximum tie-rod unengaged length must not exceed specification. Both tie-rod ends must be engaged equally.

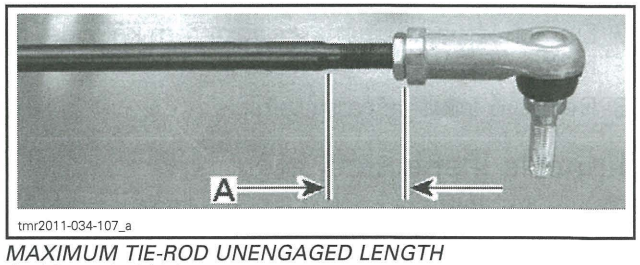

MAXIMUM TIE-ROD UNENGAGED LENGTH
A. 32 mm (1.26 in)

Install **NEW** cotter pins. Both ends of cotter pins must be folded.

Check the steering alignment, refer to *STEERING ALIGNMENT* in this subsection.

Apply specified torques.

TIGHTENING TORQUE	
Tie-rod lock nut	34 N•m ± 2 N•m (25 lbf•ft ± 1 lbf•ft)
Tie rod end retaining nut	72 N•m ± 7 N•m (53 lbf•ft ± 5 lbf•ft)

KNUCKLE

Knuckle Removal

1. Safely lift and support the front of vehicle.
2. Remove front wheel.
3. Detach tie-rod end from knuckle, refer to *TIE-ROD END* in this subsection.
4. Remove brake caliper, refer to *BRAKES* subsection.
5. Remove wheel hub, refer to *FRONT DRIVE* subsection.

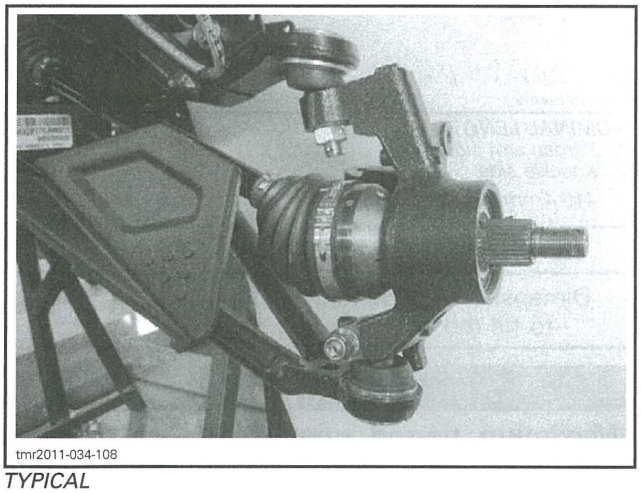

tmr2011-034-108

TYPICAL

6. Detach upper suspension arm from knuckle, refer to *FRONT SUSPENSION*.
7. Detach lower suspension arm from knuckle, refer to *FRONT SUSPENSION*.
8. Remove knuckle from vehicle.

Knuckle Inspection

Check knuckle for cracks or other damages. Replace if necessary.

Check if wheel bearing turns freely and smoothly. See *WHEEL BEARING* in this subsection.

Knuckle Installation

The installation is the reverse of removal procedure.

WHEEL BEARINGS

Wheel Bearing Inspection (Maintenance)

Refer to *PERIODIC MAINTENANCE PROCEDURES* subsection.

Wheel Bearing Inspection (During Component Removal)

Whenever the drive axle or knuckle is removed, check wheel bearing as follows:

- Check if wheel bearing turns freely and smoothly.
- Check seal condition.

Replace if necessary.

Wheel Bearing Removal

1. Remove knuckle from vehicle, refer to *KNUCKLE REMOVAL* in this subsection.
2. Remove and discard knuckle seal.

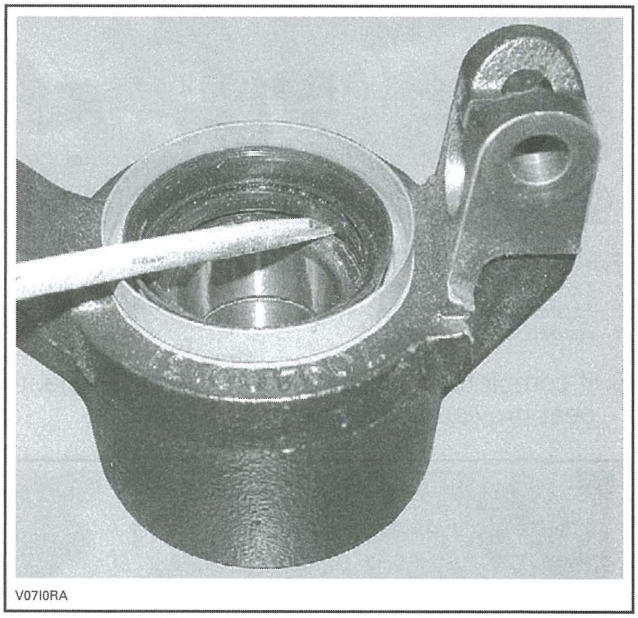

V07I0RA

TYPICAL

3. Remove the circlip.

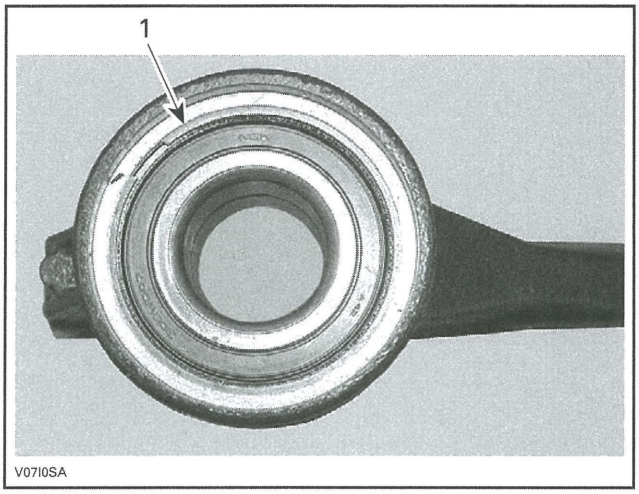

TYPICAL
1. Circlip

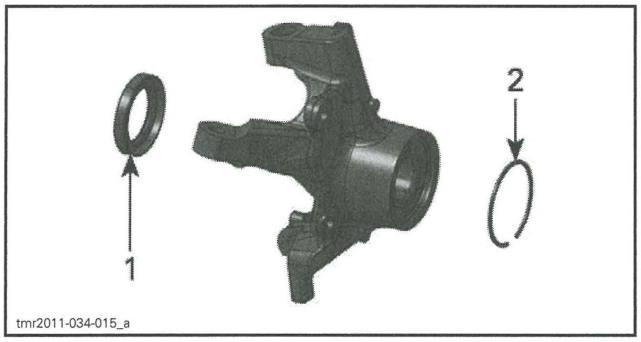

TYPICAL
1. Seal
2. Circlip

4. Install knuckle on a press.
5. Remove bearing from knuckle using an appropriate bearing remover.

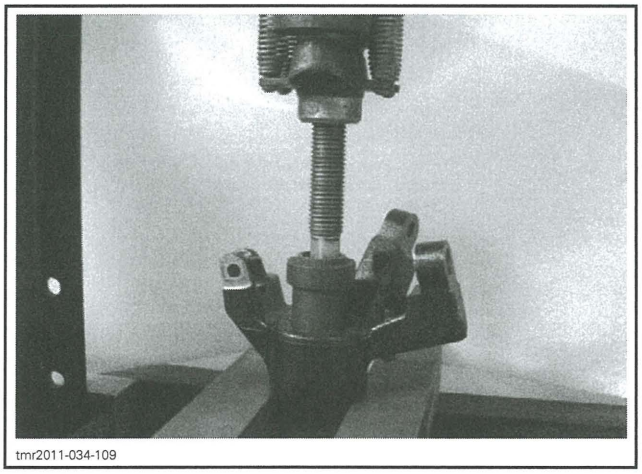

NOTE: It may be necessary to heat the knuckle to remove bearing.

⚠ WARNING

Clean all grease from outside and inside of knuckle before heating it.

Wheel Bearing Installation

The installation is the reverse of the removal procedure. However, pay attention to the following.

To ease wheel bearing installation:

- Place bearing in a freezer for 10 minutes.
- Place knuckle in oven to 100°C (212°F) for 30 minutes maximum.

When knuckle is cooled down, install **NEW** circlip and **NEW** seal.

PITMAN ARM (WITHOUT A DPS)

The pitman arm is replaced with the steering column. Refer to *STEERING COLUMN* in this subsection.

PITMAN ARM (WITH A DPS)

Refer to *DYNAMIC POWER STEERING (DPS)* subsection.

DYNAMIC POWER STEERING (DPS)

SERVICE TOOLS

Description	Part Number	Page
FLUKE 115 MULTIMETER	529 035 868	469, 471
PITMAN ARM JIG	529 036 225	481, 483
PITMAN ARM PULLER	529 036 227	482
POSITIONING ADAPTOR	529 036 230	481

SERVICE PRODUCTS

Description	Part Number	Page
LOCTITE 767 (ANTISEIZE LUBRICANT)	293 800 070	483
XPS SYNTHETIC GREASE	293 550 010	476

GENERAL

SYSTEM DESCRIPTION (FEATURES)

The Dynamic Power Steering (DPS) provides a computer controlled, variable power assist, achieved by an electric motor to optimize the amount of steering input required by the rider.

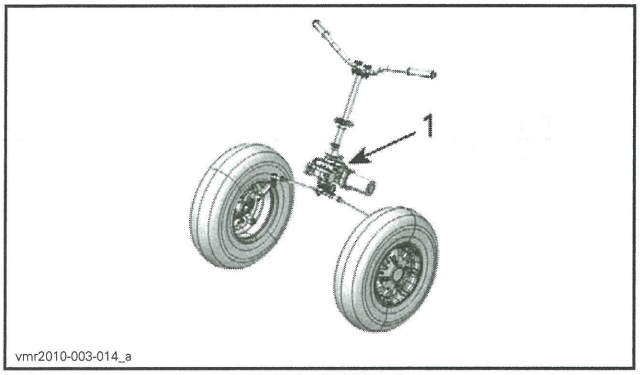

1. Dynamic power steering unit (DPS)

The DPS system uses the following parameters to determine how much steering assist it provides:
- Engine RPM
- Battery/electrical system voltage
- Vehicle speed
- DPS shaft torque sensor input.

The amount of steering assist provided is dependent on the handlebar effort (steering torque), electrical power available, and vehicle speed.

The greater the handlebar effort (torque), the greater the assist will be.

The slower the vehicle speed, the greater the assist will be.

If the electrical system is activated but the engine is **not** running, there is **no** power assist provided.

When the handlebar is in the straight ahead position, there is no steering assist.

Steering torque may also come from the wheels due to rough terrain. Steering kickback is reduced while providing feedback to the driver.

The greater the power steering assist, the greater the load on the electrical system.

When the electrical system is under high load (battery not at full charge, operating the vehicle for prolonged periods of time at slow speed and low RPM which, requires higher power steering assist), the battery power reserve will gradually decrease. This further increases the load on the charging system and the electrical system voltage will drop. As system voltage drops, so does power steering assist.

NOTE: It is important to maintain the battery at a full state of charge to ensure proper DPS operation. The magneto output is 650 watts to minimize battery drain and system voltage drop.

DPS Assist Mode

The DPS system provides three rider selectable modes of operation.

DPS MAX provides maximum steering assist for technical low speed riding in rough or muddy terrain, or for touring.

DPS MED provides normal (medium) steering assist for general all purpose riding.

DPS MIN provides less steering assist for increased feedback and aggressive trail riding.

A fourth mode of operation is available as an accessory to adjust the steering assist level for operation with an approved BRP track kit.

Derating Explanation

Derating is an internal protection system integrated in the DPS electronic module.

This system protects the electronic components when DPS works too hard and the internal temperature reaches a critical level.

It also protects electronics when current ripples in the system are too high. These current ripples can be caused by:
- Loose battery connections
- Low battery voltage
- Bad grounds
- Defective stator or bad stator output wires connection
- Failed regulator
- High electrical loads.

The internal protection system decreases the assistance level available to protect its electronic board. The normal assistance level will return when riding conditions are back to normal and the internal temperature decrease and/or when the ripples in the electric circuit decreases.

NOTE: This reaction is a normal protective behavior of the unit and it does not necessarily raise a fault in the cluster.

DPS SYSTEM DESCRIPTION (COMPONENTS)

DPS Unit

The DPS unit is a self contained unit that includes the steering gear, the DPS module, the DPS motor, and the torque sensor.

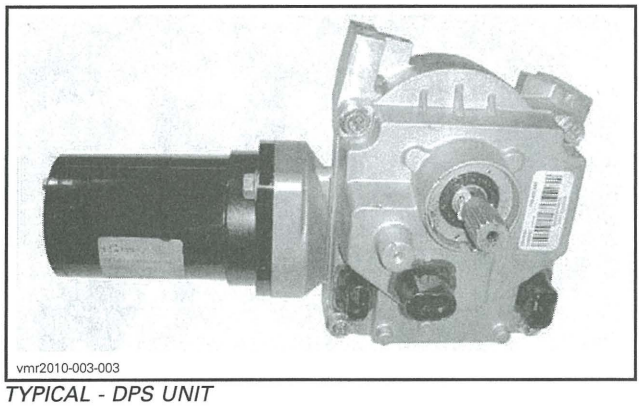

TYPICAL - DPS UNIT

The DPS module provides DC power to the motor. The amount and duration of that DC power is determined by the inputs to the DPS module. The direction in which the motor turns is changed by reversing the polarity of the circuit current.

The DPS motor does not "spin", but rather turns in very small increments based on the amount, duration, and direction of DC power delivered by the DPS module.

DPS Unit Protection

To protect the DPS electronic components, the steering assist behavior will change as follows.

CONDITION	DPS BEHAVIOR
When motor internal temperature reaches a certain temperature (DPS continuously estimates it)	Steering assist will gradually decrease
DPS **internal board temperature** is above 85°C (185°F)	
DPS **internal board temperature** is above 100°C (212°F)	Steering assist is stopped

When the DPS unit temperature is back within normal operating range, normal steering assist will resume.

Steering Torque Sensor

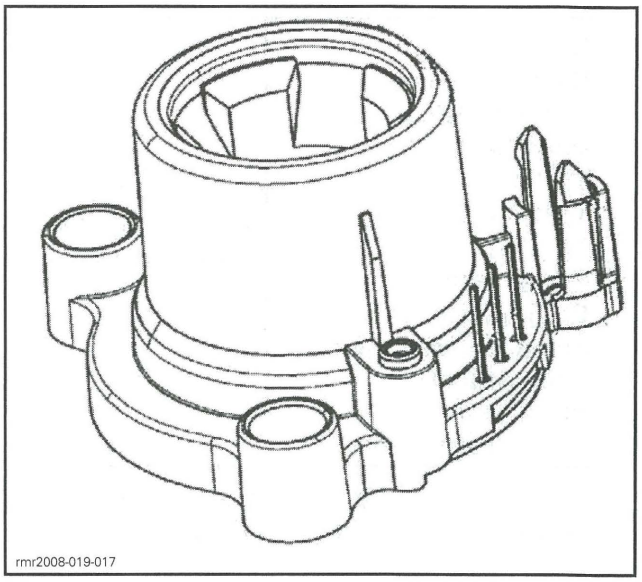

The steering column is connected to the shaft on the DPS unit. A small area of the DPS shaft is magnetized. Inside the DPS unit, a torque sensor surrounds the magnetized area of the DPS shaft.

When the handlebar is turned, torque is applied to the shaft which tends to twist the shaft slightly, deforming the magnetic field in the shaft. The sensor detects the torque by measuring the deviation of the magnetic field.

The torque sensor is very sensitive and can detect very small changes in the magnetic field. The harder the handlebar is turned, the greater the magnetic deviation, the greater the power steering assist.

ADJUSTMENT

TORQUE OFFSET RESET

When replacing the following parts or adjusting steering alignment, the sensor torque offset must be reset to zero) for proper system operation.

PART ADJUSTED OR REPLACED	WHAT TO DO
– DPS unit – Steering column half bushings – Steering column – Tie rod – Tie rod end – Knuckle – Wheel bearing – Ball joint – Front suspension arm (lower/upper) – Pitman arm – Steering alignment	Reset Torque Offset in **Setting, DPS**

1. Ensure proper *STEERING ALIGNMENT*, see procedure in this subsection.
2. Connect vehicle to the latest applicable B.U.D.S. software version.
3. In B.U.D.S., select **Read Data**.
4. Choose the **Setting** page tab.
5. At the bottom LH corner of the **Setting** page, choose the **DPS** tab.

NOTICE **Ensure handlebar is free and centered within ±10 degrees of center position. There MUST NOT be any effort applied to the steering column.**

6. Press **Reset Torque Offset** button.

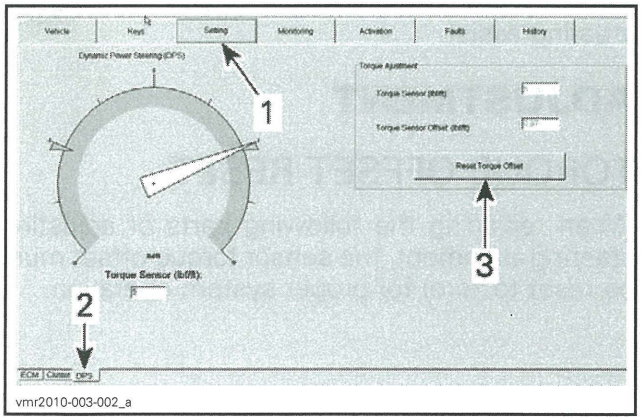

DPS TORQUE OFFSET RESET
1. *Setting page tab*
2. *DPS tab*
3. *Reset Torque Offset button*

DPS ASSIST MODE

1. **To view** the active DPS ASSIST mode, momentarily press and release the OVERRIDE/DPS/ACS button on the LH multifunction switch assembly.

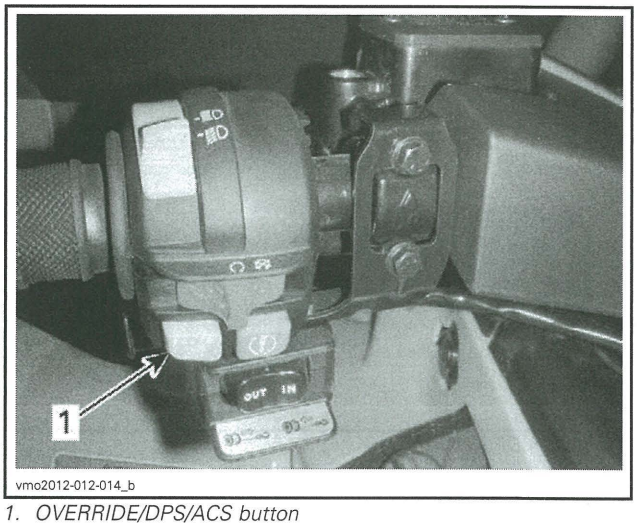

1. OVERRIDE/DPS/ACS button

The active DPS mode will be displayed in the lower portion of multifunction gauge.

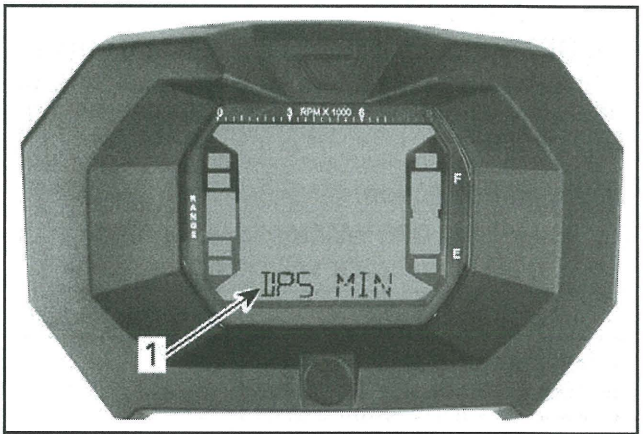

LCD gauge
1. DPS mode indication

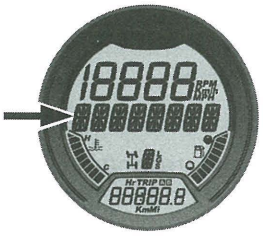

ANALOG/DIGITAL GAUGE
DPS mode display

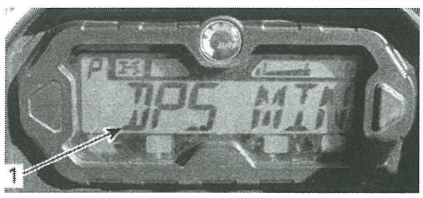

RENEGADE GAUGE

1. DPS mode display

2. **To change** DPS ASSIST mode, press and hold the OVERRIDE/DPS/ACS button for approximately 2 seconds to go to the next setting.

The DPS system will toggle to the following available mode. The newly activated DPS mode will be briefly displayed in the multifunction gauge.

3. Repeat previous step to toggle through the available mode.

NOTE: The DPS mode of operation cannot be changed if the vehicle is in reverse, of if the ACS mode is displayed in the multifunction gauge. The DPS/Override switch must be released between each DPS mode selection.

TROUBLESHOOTING

TROUBLESHOOTING FLOW CHARTS

Use the troubleshooting flow charts to diagnose a problem. If a problem cannot be solved, contact a service representative for support before replacing a DPS.

Here is the list of provided flow charts:

- Flow chart A: No Assistance From DPS
- Flow chart B: DPS Intermittent Assistance
- Flow chart C: Derating or Limited Assistance
- Flow chart D: Free Play Felt in Steering System
- Flow chart E: Steering Turn Easier on One Side than the Other.

Flow Chart A

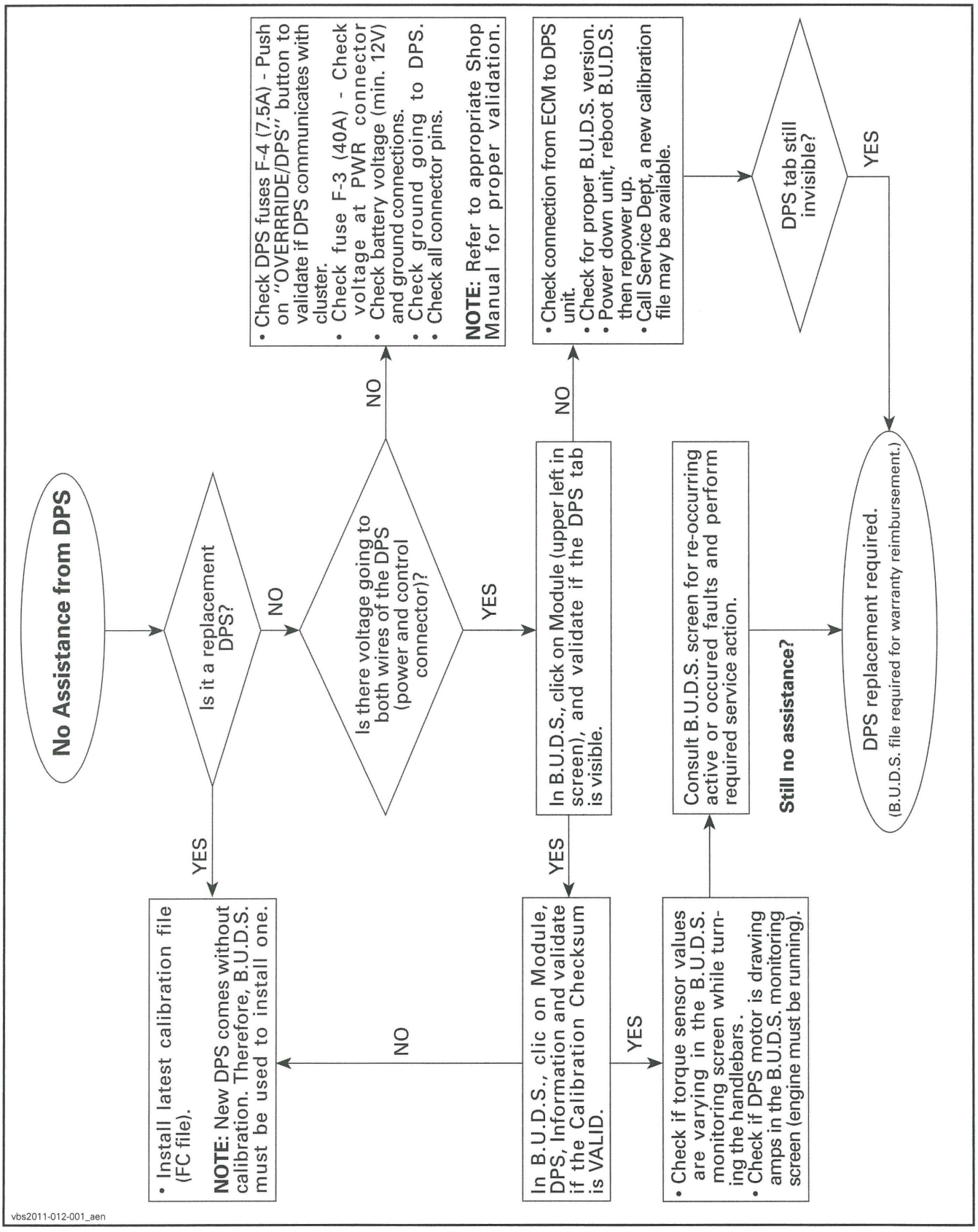
No Assistance from DPS
Is it a replacement DPS?
YES
NO
Is there voltage going to both wires of the DPS (power and control connector)?
YES
NO
• Check DPS fuses F-4 (7.5A) - Push on "OVERRRIDE/DPS" button to validate if DPS communicates with cluster.
• Check fuse F-3 (40A) - Check voltage at PWR connector
• Check battery voltage (min. 12V) and ground connections.
• Check ground going to DPS.
• Check all connector pins.
NOTE: Refer to appropriate Shop Manual for proper validation.
In B.U.D.S., click on Module (upper left in screen), and validate if the DPS tab is visible.
YES
NO
• Check connection from ECM to DPS unit.
• Check for proper B.U.D.S. version.
• Power down unit, reboot B.U.D.S. then repower up.
• Call Service Dept, a new calibration file may be available.
DPS tab still invisible?
YES
• Install latest calibration file (FC file).
NOTE: New DPS comes without calibration. Therefore, B.U.D.S. must be used to install one.
In B.U.D.S., clic on Module, DPS, Information and validate if the Calibration Checksum is VALID.
NO
YES
• Check if torque sensor values are varying in the B.U.D.S. monitoring screen while turning the handlebars.
• Check if DPS motor is drawing amps in the B.U.D.S. monitoring screen (engine must be running).
Consult B.U.D.S. screen for re-occurring active or occured faults and perform required service action.
Still no assistance?
DPS replacement required.
(B.U.D.S. file required for warranty reimbursement.)
vbs2011-012-001_aen

Flow Chart B

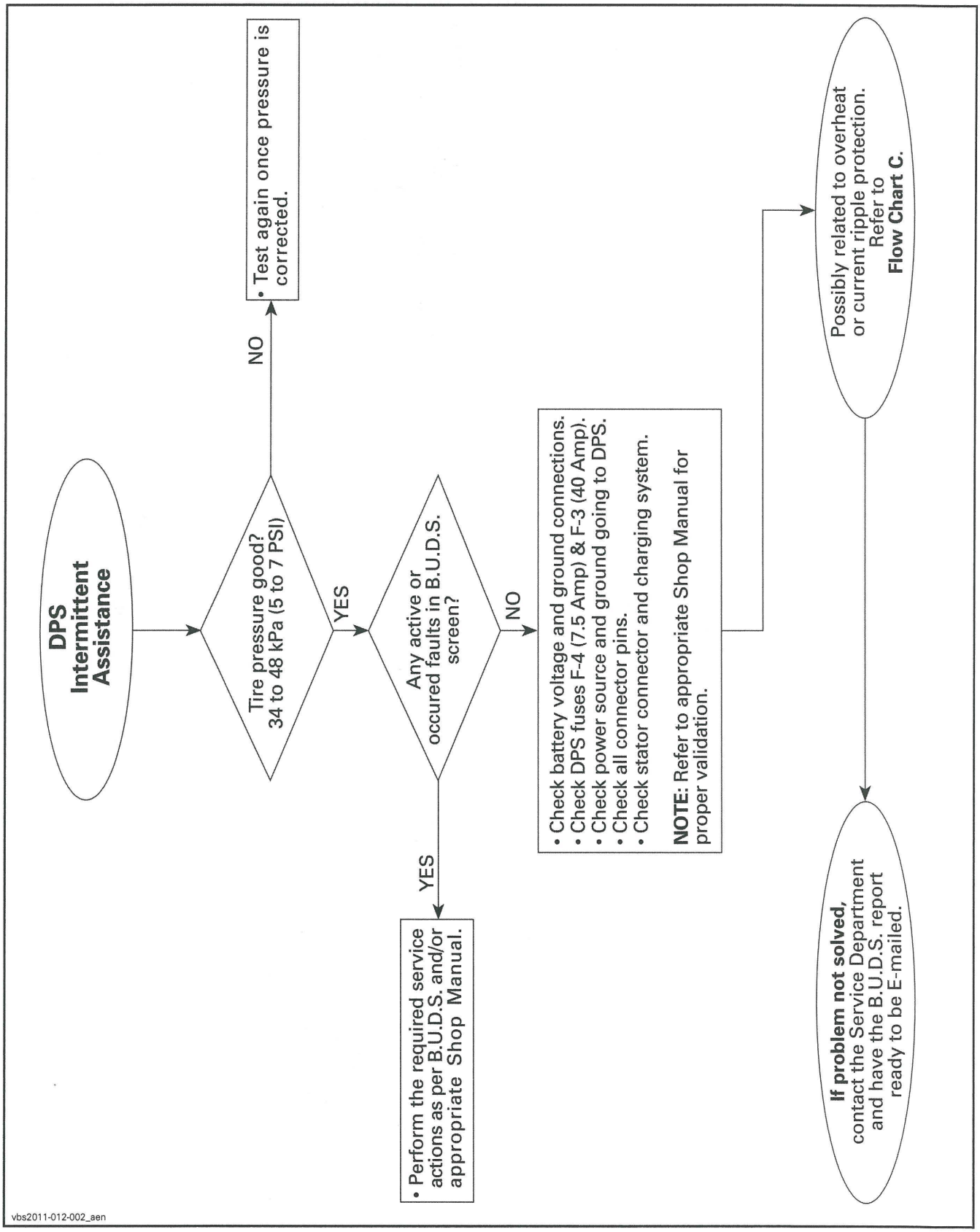
DPS Intermittent Assistance
Tire pressure good? 34 to 48 kPa (5 to 7 PSI)
NO
• Test again once pressure is corrected.
YES
Any active or occured faults in B.U.D.S. screen?
YES
• Perform the required service actions as per B.U.D.S. and/or appropriate Shop Manual.
NO
• Check battery voltage and ground connections.
• Check DPS fuses F-4 (7.5 Amp) & F-3 (40 Amp).
• Check power source and ground going to DPS.
• Check all connector pins.
• Check stator connector and charging system.
NOTE: Refer to appropriate Shop Manual for proper validation.
Possibly related to overheat or current ripple protection. Refer to Flow Chart C.
If problem not solved, contact the Service Department and have the B.U.D.S. report ready to be E-mailed.
vbs2011-012-002_aen

Flow Chart C

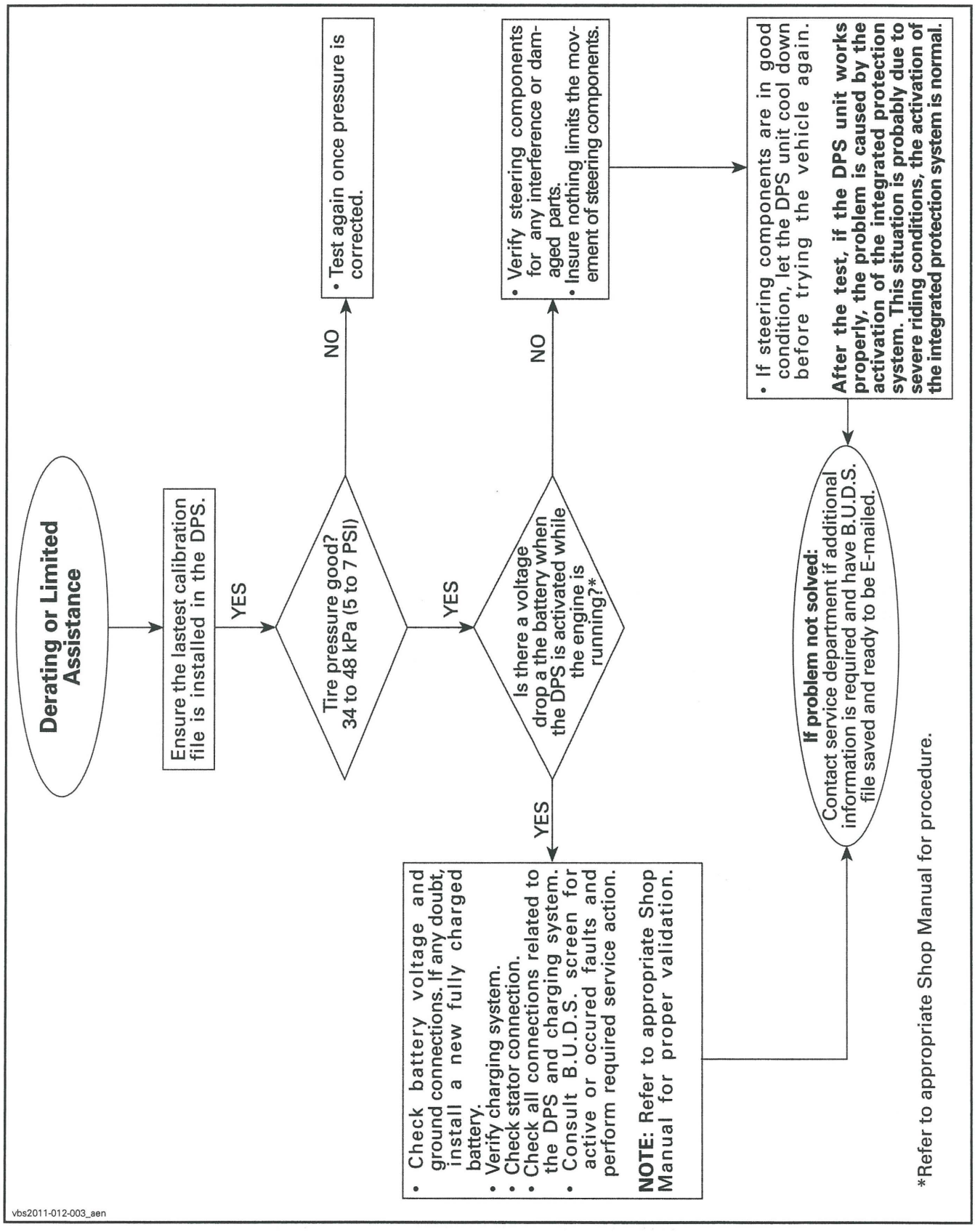
Derating or Limited Assistance
Ensure the lastest calibration file is installed in the DPS.
YES
Tire pressure good? 34 to 48 kPa (5 to 7 PSI)
NO
• Test again once pressure is corrected.
YES
Is there a voltage drop a the battery when the DPS is activated while the engine is running?*
NO
• Verify steering components for any interference or damaged parts.
• Insure nothing limits the movement of steering components.
• If steering components are in good condition, let the DPS unit cool down before trying the vehicle again.
After the test, if the DPS unit works properly, the problem is caused by the activation of the integrated protection system. This situation is probably due to severe riding conditions, the activation of the integrated protection system is normal.
YES
• Check battery voltage and ground connections. If any doubt, install a new fully charged battery.
• Verify charging system.
• Check stator connection.
• Check all connections related to the DPS and charging system.
• Consult B.U.D.S. screen for active or occured faults and perform required service action.
NOTE: Refer to appropriate Shop Manual for proper validation.
If problem not solved:
Contact service department if additional information is required and have B.U.D.S. file saved and ready to be E-mailed.
*Refer to appropriate Shop Manual for procedure.
vbs2011-012-003_aen

Flow Chart D

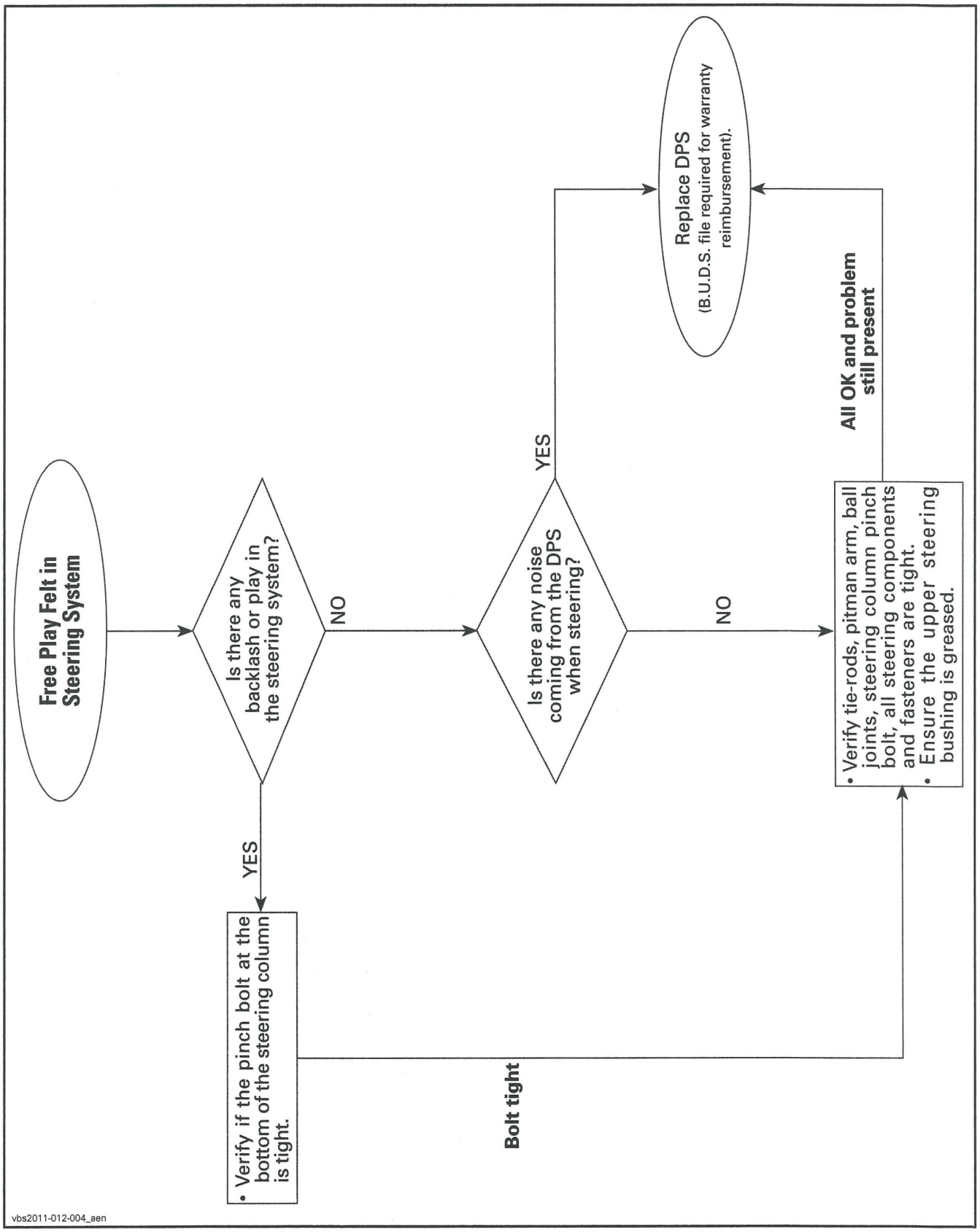
Free Play Felt in Steering System
Is there any backlash or play in the steering system?
NO
YES
Is there any noise coming from the DPS when steering?
YES
NO
Replace DPS
(B.U.D.S. file required for warranty reimbursement).
All OK and problem still present
• Verify tie-rods, pitman arm, ball joints, steering column pinch bolt, all steering components and fasteners are tight.
• Ensure the upper steering bushing is greased.
• Verify if the pinch bolt at the bottom of the steering column is tight.
Bolt tight
vbs2011-012-004_aen

Flow Chart E

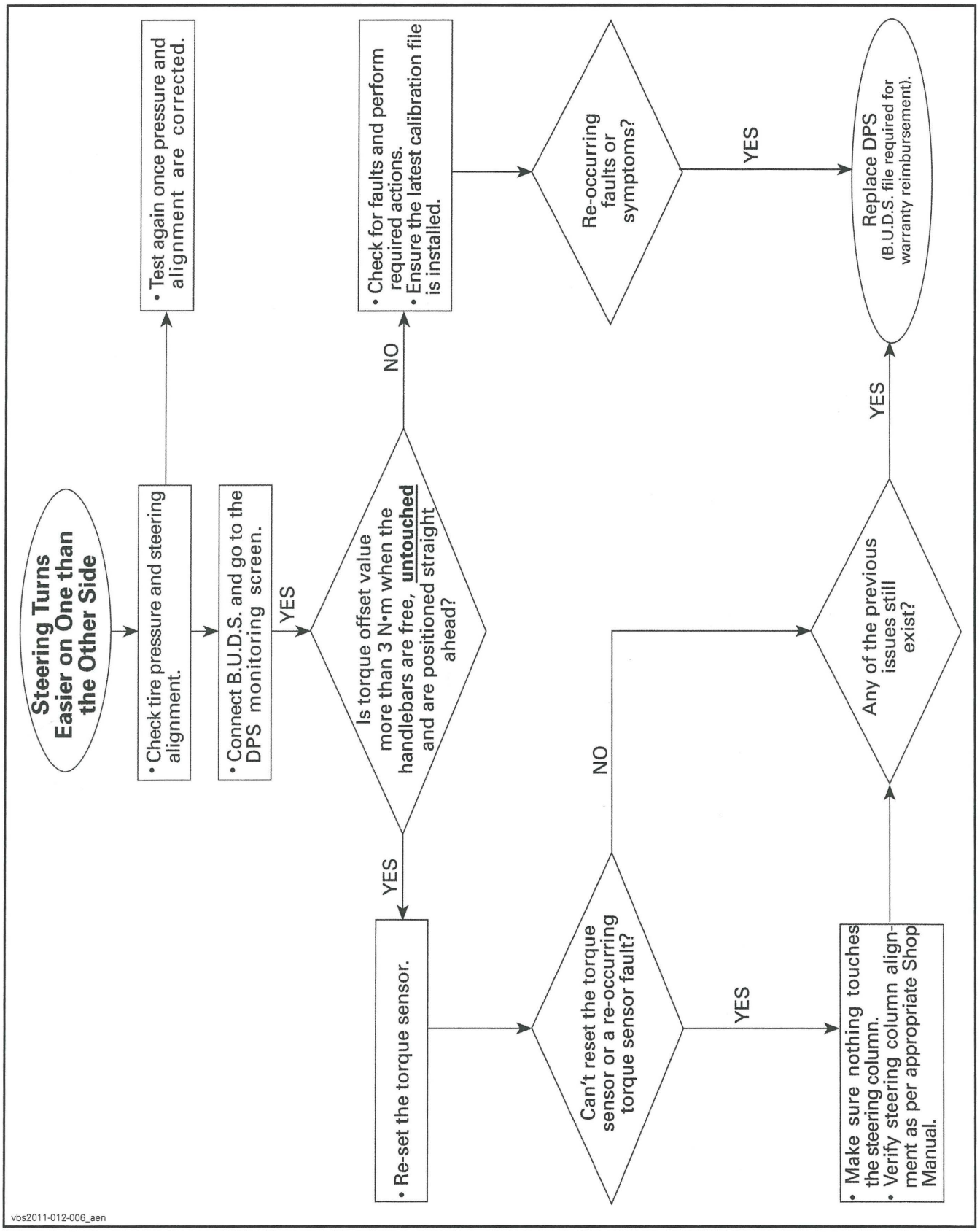
Steering Turns Easier on One than the Other Side
• Check tire pressure and steering alignment.
• Test again once pressure and alignment are corrected.
• Connect B.U.D.S. and go to the DPS monitoring screen.
Is torque offset value more than 3 N•m when the handlebars are free, untouched and are positioned straight ahead?
YES
NO
• Re-set the torque sensor.
• Check for faults and perform required actions.
• Ensure the latest calibration file is installed.
Can't reset the torque sensor or a re-occurring torque sensor fault?
YES
NO
• Make sure nothing touches the steering column.
• Verify steering column alignment as per appropriate Shop Manual.
Re-occurring faults or symptoms?
YES
Any of the previous issues still exist?
YES
Replace DPS
(B.U.D.S. file required for warranty reimbursement).
vbs2011-012-006_aen

PROCEDURES

DPS UNIT

DPS Unit Fuse Test

A 40 A DPS fuse located in the rear fuse box (PF2-F3) under the seat provides power for the DPS motor.

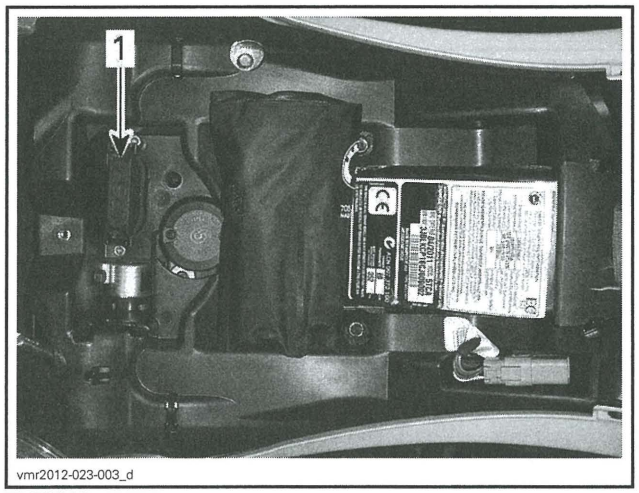

TYPICAL
1. Rear fuse box (PF2)

1. Test DPS fuse (PF2-F3) using a multimeter.

REQUIRED TOOL	
FLUKE 115 MULTIMETER (P/N 529 035 868)	

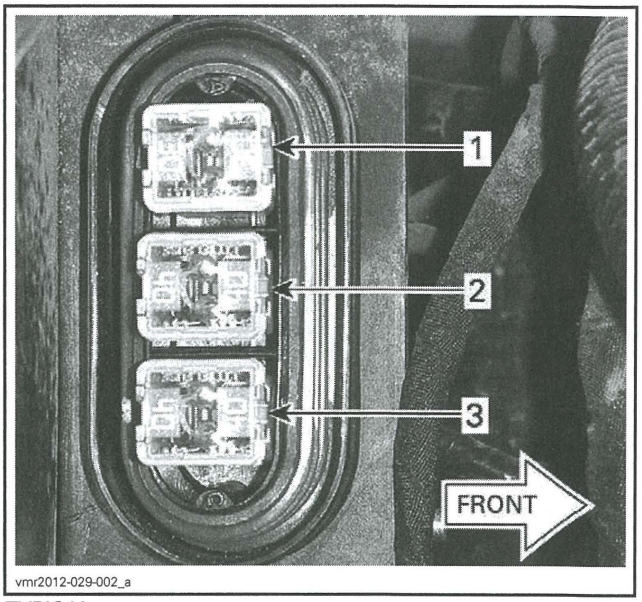

TYPICAL
1. 30 A Main
2. 40 A Fan/accessories
3. 40 amp DPS fuse

2. Replace fuse as required.

DPS Unit Input Voltage Test (Power Side)

1. Disconnect the DPS PWR (power) connector.

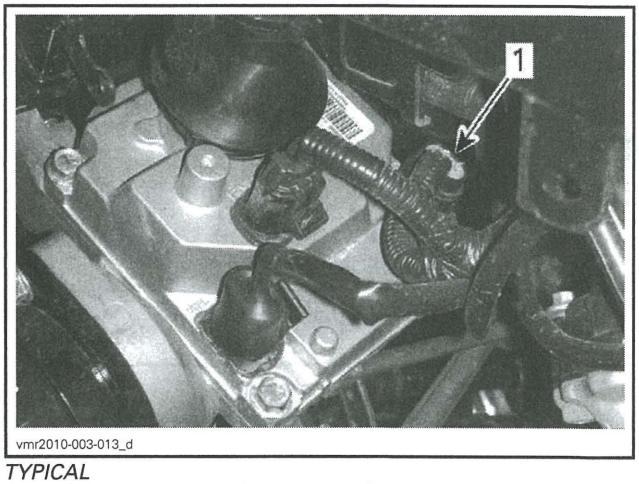

TYPICAL
1. DPS PWR connector (motor power)

2. Test for 12 Vdc DPS motor power at DPS2-A and DPS2-B as per following table.

MULTIMETER PROBE POSITIONS		VOLTAGE
DPS2 power connector pin A	Battery ground	Battery voltage
DPS2 power connector pin B		
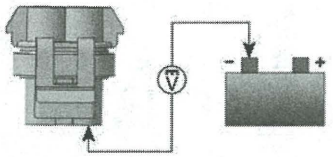 rmr2008-028-091_a		

If NO voltage is measured, test the 40 A DPS fuse in the rear fuse box (PF2-F3). If good, check wires and connector pins. Replace or repair defective parts and reset fault codes.

If battery voltage is measured, carry out the following *DPS UNIT INPUT VOLTAGE TEST (CONTROL SIDE).*

NOTE: This test may also be carried out by connecting a 12 Vdc test light between each DPS PWR connector pins (A and B), and the battery (-) negative terminal. The test light must come on bright.

DPS Unit Input Voltage Test (Control Side)

1. Disconnect DPS CTRL (control) connector.
2. Set the ignition switch to ON.
3. Set the engine RUN/STOP switch to RUN.
4. Test for 12 Vdc power to the DPS module at DPS1-A as per following table.

MULTIMETER PROBE POSITIONS	VOLTAGE
DPS control connector (pin A) and battery ground	Battery voltage
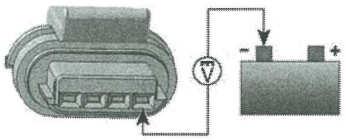 rmr2008-028-093_a	

If NO voltage is measured, check wires and connector pins from DPS unit to the Relays/Speedo fuse in front fuse box (PF1-F4). Replace or repair defective parts and reset fault codes.

If battery voltage is measured, carry out the following *DPS UNIT GROUND CIRCUIT TEST.*

NOTE: This test may also be carried out by connecting a 12 Vdc test light between the DPS control connector (pin A), and the battery (-) negative terminal. The test light must come on bright.

DPS Unit Ground Circuit Test

1. Disconnect the DPS ground connector (GDN).

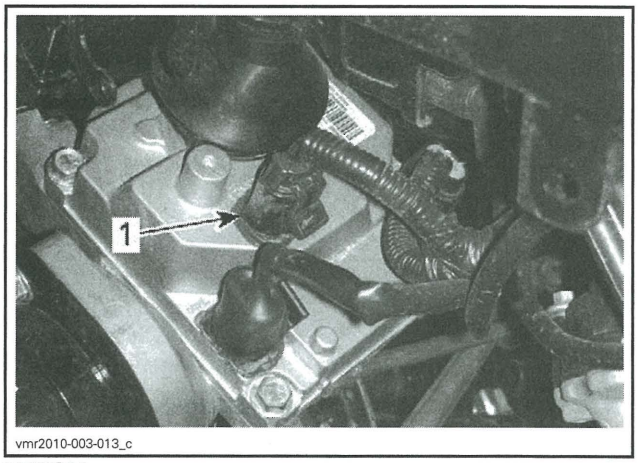

vmr2010-003-013_c

TYPICAL
1. DPS ground connector (GDN)

2. Test for continuity between DPS3-A and DPS3-B to battery ground.

MULTIMETER PROBE POSITIONS		READING
DPS GDN connector pin A	Battery ground	Continuity (close to 0 Ω)
DPS GDN connector pin B		

If there is NO continuity or a high resistance is measured, check wires and connector pins from DPS unit to chassis ground post. Replace or repair defective parts and reset fault codes.

If there is good continuity, carry out the following *DPS UNIT COMMUNICATION LINK (CAN) CONTINUITY TEST.*

NOTE: This test may also be carried out by connecting a 12 Vdc test light between each GDN connector pin and the battery (+) positive terminal. The test light must come on bright.

DPS Unit Communication Link (CAN) Continuity Test

NOTE: DPS unit must receive an RPM signal to provide power steering assist.

1. Disconnect the DPS control connector and the diagnostic connector.
2. Test continuity of CAN Bus Wires at DPS1-C and DPS1-D.

MULTIMETER PROBE POSITIONS	RESISTANCE @ 20°C (68°F)
DPS control connector (pin C) and diagnostic connector (pin 1)	Below 1 Ω
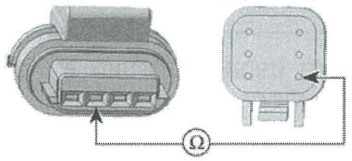 rmr2008-028-094_a	
DPS control connector (pin D) and diagnostic connector (pin 2)	
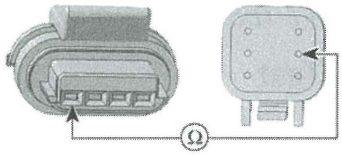 rmr2008-028-094_b	

If resistance measured is out of specification, check wires and connector pins. Carry out repairs as required and reset fault codes using B.U.D.S software.

If resistance measured is good, replace the DPS unit and reset fault codes using B.U.D.S software.

DPS System Load Test

If the charging system cannot sustain normal voltage when the DPS is operating, DPS ASSIST may be greatly reduced or nonexistent. Carry out the following steps.

1. Measure the battery voltage.

NOTE: If battery voltage is low, recharge battery.

REQUIRED TOOL	
FLUKE 115 MULTIMETER (P/N 529 035 868)	

2. Ensure the vehicle transmission is set to PARK.
3. Start the engine.
4. Note the voltage on the multimeter with the engine running (charging system voltage).
5. Press the **RANGE** button repeatedly to select **Manual Range 6 0**.

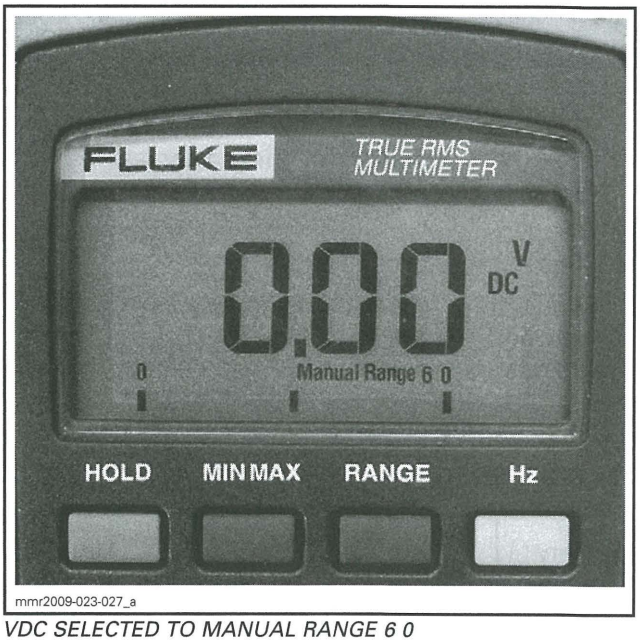

mmr2009-023-027_a

VDC SELECTED TO MANUAL RANGE 6 0

6. Press the **MIN MAX** button on the multimeter to engage the MIN function.

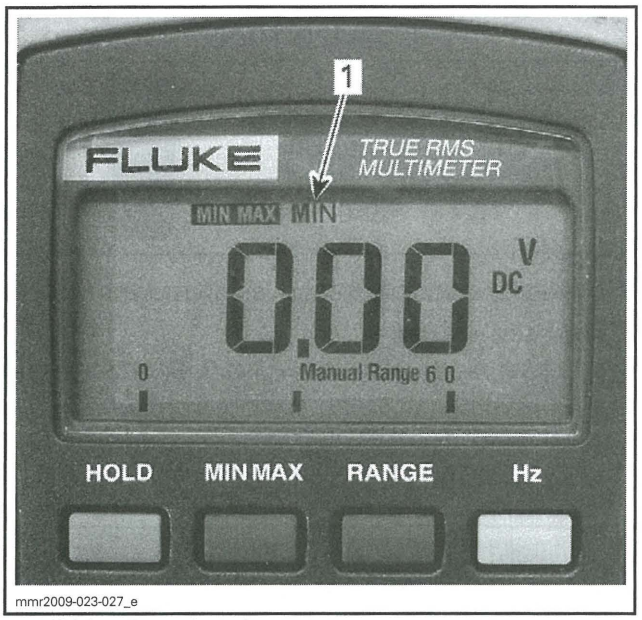

mmr2009-023-027_e

1. MIN function selected

7. Turn the handlebar **momentarily** against the steering frame stops to each side.

NOTE: Do not hold steering against frame stops for and extended period of time.

8. Read the MIN charging system voltage recorded while the handlebar was turned against each stop.

DPS SYSTEM LOAD TEST			
PROBE POSITIONS		STEERING POSITION	VOLTAGE READING
Battery (-) terminal	Rear fuse box battery terminal	LH stop	At least 12 Vdc
		RH stop	

NOTE: Turning the handlebar momentarily against the frame stops generates maximum DPS load (maximum current draw on electrical system). Electrical system must sustain at least 12 Vdc for proper DPS operation.

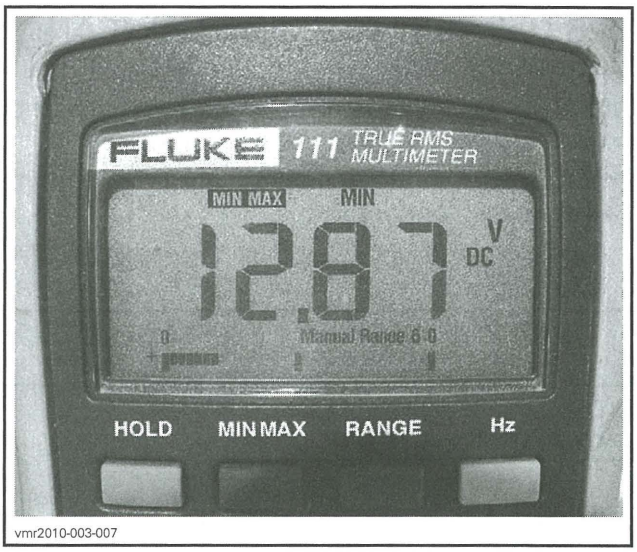

vmr2010-003-007

If the electrical system cannot sustain at least 12 Vdc, check the following:

- Battery
- Battery connections
- DPS unit power and ground connections
- Charging system
- Frame and engine ground studs.

If the previously listed items, carry out the following *DPS UNIT CURRENT TEST.*

DPS Unit Current Test

1. Connect vehicle to the latest applicable B.U.D.S. software version.
2. Click on the **Read Data** button.
3. Choose the **Monitoring** page tab.
4. At the bottom of the **Monitoring** page, choose the **DPS** tab.

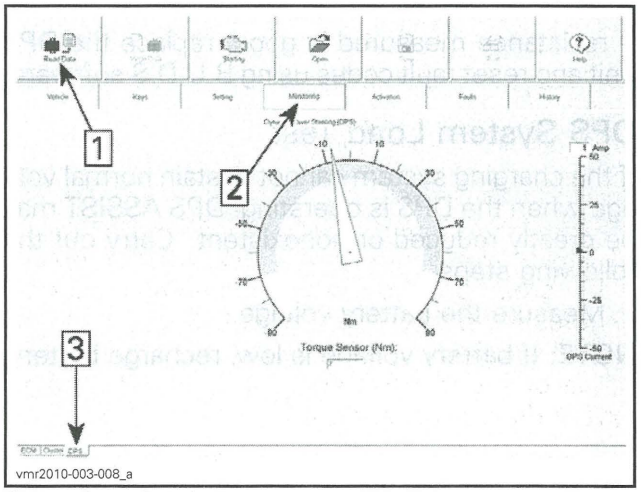

vmr2010-003-008_a

Step 1: Press Data button
Step 2: Select Monitoring page tab
Step 3: Select DPS tab

5. With the vehicle engine running in PARK, turn the handlebar side to side, momentarily against each stop and observe the indications on the B.U.D.S. DPS **Monitoring** page.

The DPS **Torque Sensor Nm** increase with torque applied to handlebar.

The **DPS Current** ammeter should increase proportionately to the torque applied, and decrease with the torque as steering assist is provided.

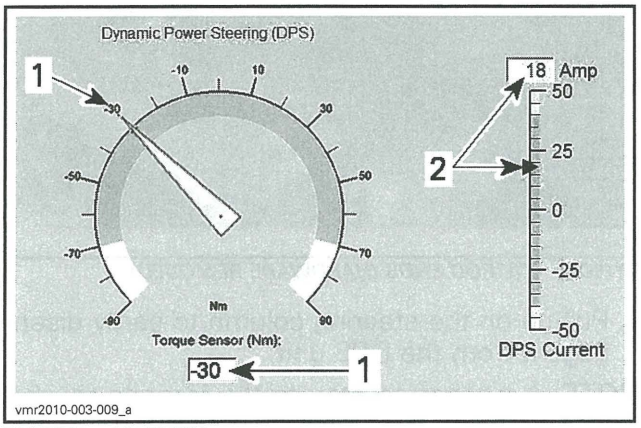

TYPICAL - LH TURN
1. *Torque sensor indication (negative)*
2. *DPS current indication (positive)*

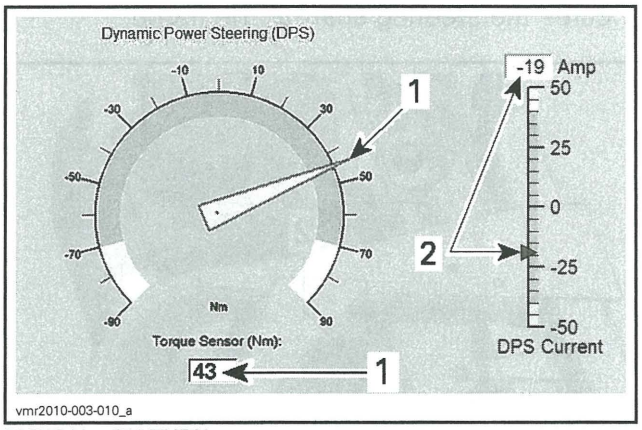

TYPICAL - RH TURN
1. *Torque sensor indication (positive)*
2. *DPS current indication (negative)*

NOTE: Increase and decrease in torque and current readings is very brief as steering assist is quickly provided. Current draw should remain within green scale but may momentarily peak to 60 amps, then drop off close to 0 amps as torque applied is nulled out by steering assist. A residual torque of 2 N•m (18 lbf•**in**) with a corresponding current draw is acceptable.

If current draw tends to remain high, carry out the following:

– Steering alignment check.
– Steering column shim adjustment at half bushings as described in the *DPS UNIT INSTALLATION* procedure detailed in this section.
– *TORQUE OFFSET RESET* procedure detailed in this section.
– Replace DPS unit.

DPS Unit Removal

1. Remove the front body module, refer to *BODY* subsection.
2. Remove the CVT air inlet duct assembly, refer to *AIR INTAKE SYSTEM* subsection.

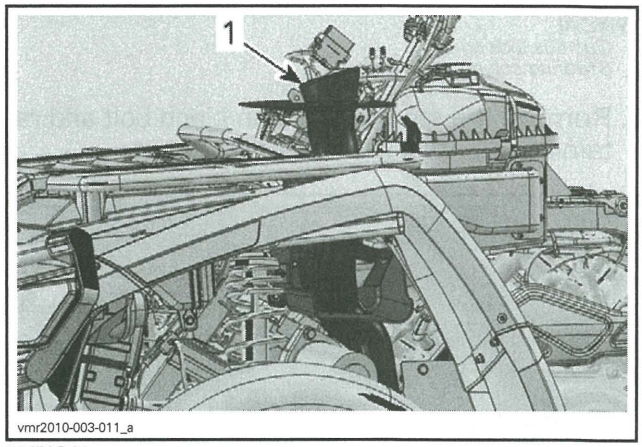

TYPICAL
1. *CVT air inlet duct*

3. Disconnect the 3 electrical connectors from the DPS unit.

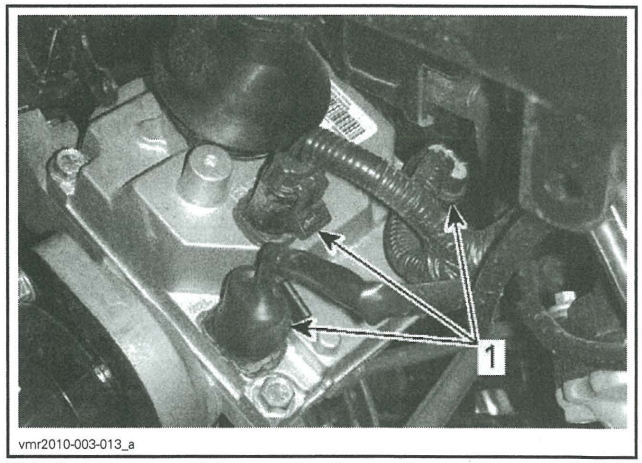

TYPICAL
1. *DPS connectors (3x)*

4. Cut the locking tie securing the bellows at the bottom of steering column near the DPS unit, and pull the bellows upwards sufficiently to access the steering column pinch bolt.

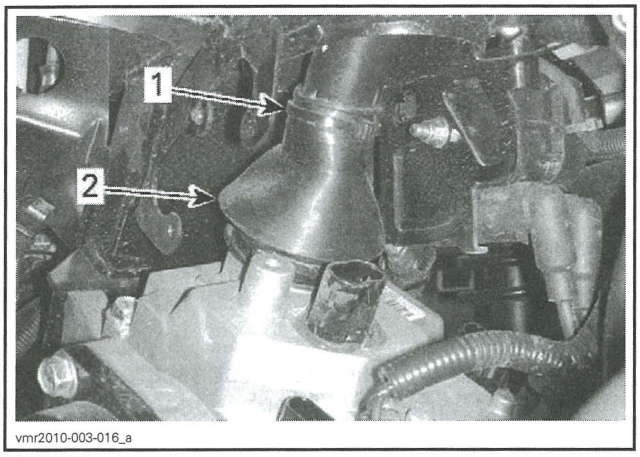

TYPICAL
1. *Cut this locking tie*
2. *Steering column bellows*

5. Remove the steering column pinch bolt and retaining nut. Discard the retaining nut.

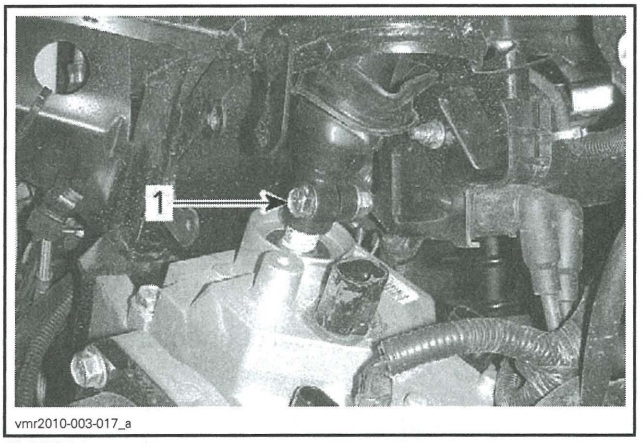

TYPICAL
1. *Steering column pinch bolt*

6. Remove the hardware that secures both tie-rod ends to the pitman arm (steering lever). Discard cotter pins.

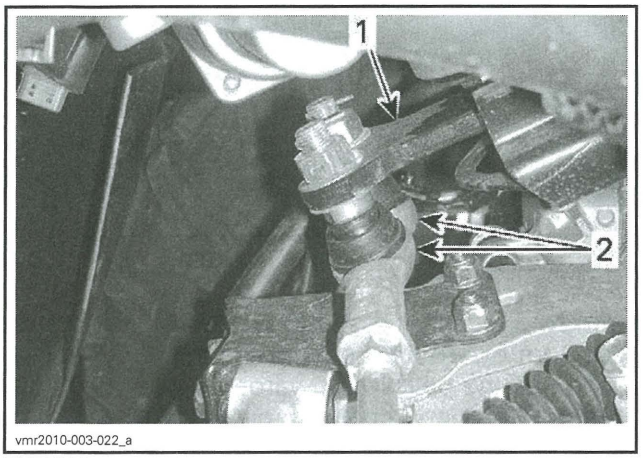

TYPICAL
1. *Pitman arm*
2. *Tie rod ends*

7. Turn the steering to each side and disengage each tie-rod end from the pitman arm.

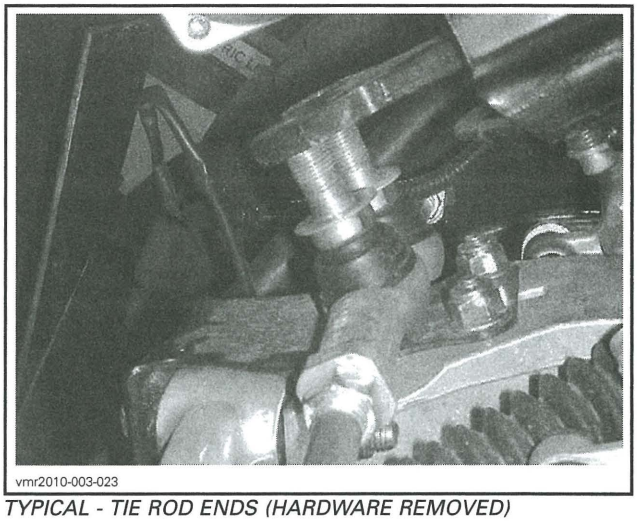

TYPICAL - TIE ROD ENDS (HARDWARE REMOVED)

8. Pull up on the steering column to partly disengage it from the DPS unit.

NOTE: A mechanical stop on the steering column will prevent you from fully disengaging the steering column.

9. Remove the lower half bushing retainer that secures the steering shaft to the frame.

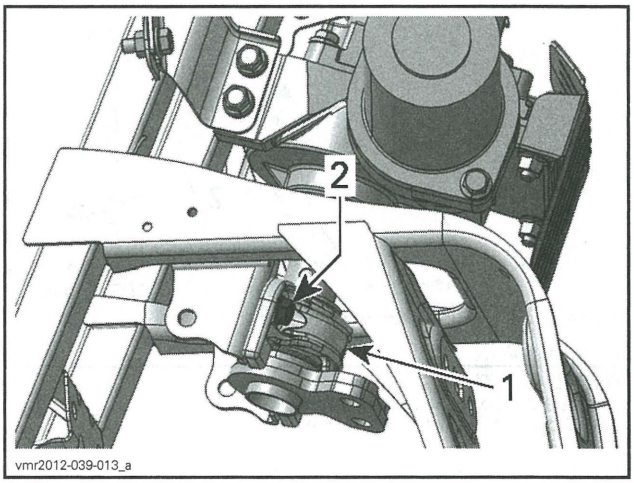

1. *Lower half bushing retainer*
2. *Bolts to remove (2)*

10. Remove the 2 hexagonal flanged screws securing the DPS unit to the RH support bracket.

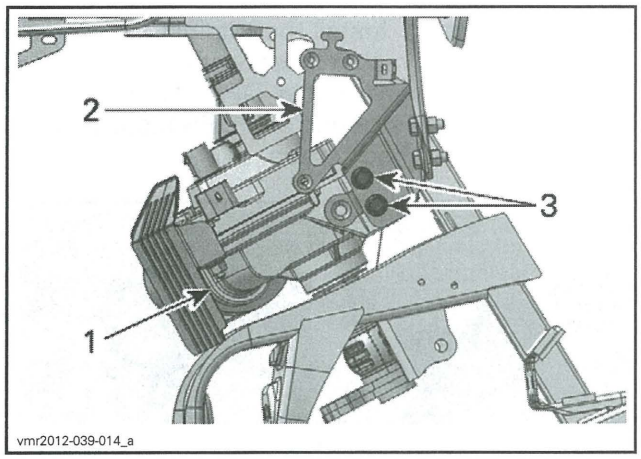

DPS REMOVAL - RH SIDE
1. *DPS*
2. *RH DPS support bracket*
3. *Remove these screws (2)*

NOTE: Discard the conical spring washers on the DPS retaining screws.

11. On the LH side of the DPS unit, remove the DPS support bracket from the frame in the following manner:

    11.1 Remove the top retaining screw.

    11.2 Loosen the lower retaining screw sufficiently for the bracket to become loose on the frame.

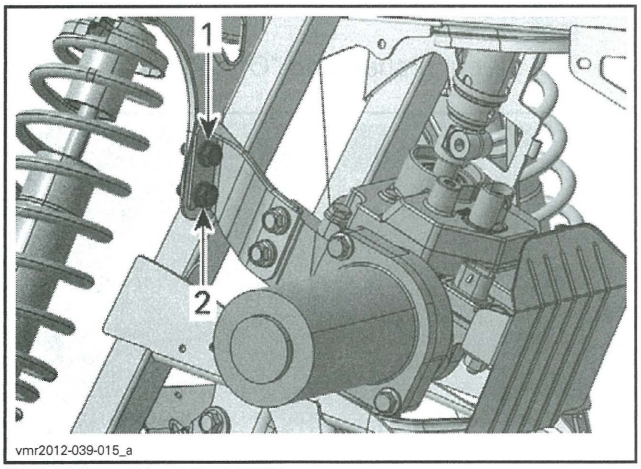

DPS REMOVAL - LEFT SIDE
Step 1: Remove DPS retaining screws (2 each side)
Step 2: Discard conical washers under screw head

12. Pull up on DPS unit to remove the DPS unit and support bracket from the frame.

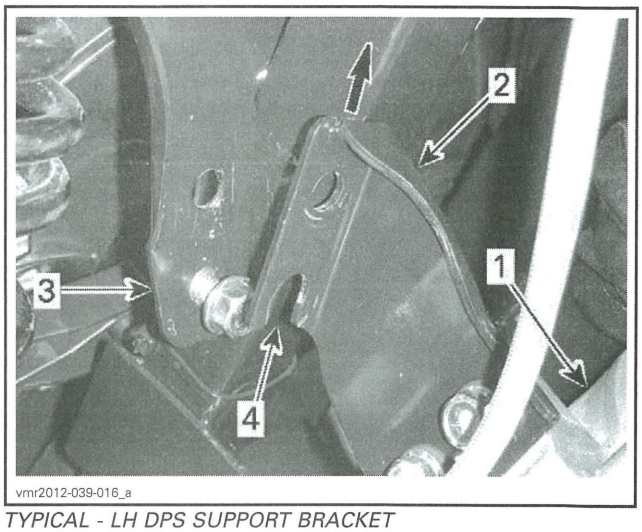

TYPICAL - LH DPS SUPPORT BRACKET
1. *DPS unit*
2. *DPS support bracket*
3. *Vehicle frame*
4. *Slotted hole in DPS support bracket*

13. If replacing DPS unit, remove the following from the DPS unit:
    - LH DPS support bracket
    - DPS heat shield.

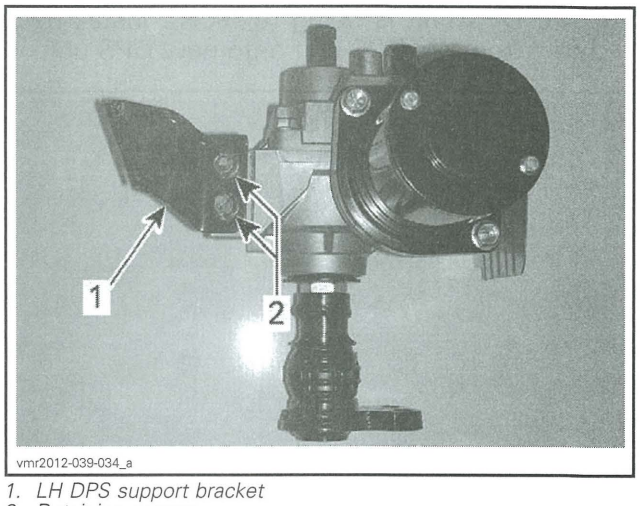

1. *LH DPS support bracket*
2. *Retaining screws*

NOTE: When removing the DPS heat shield, hold the DPS housing screws steady using a wrench to as you remove the 2 heat shield retaining nuts.

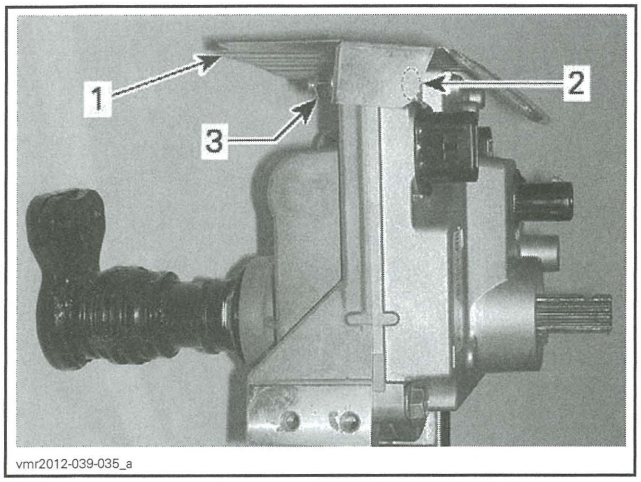

1. *DPS heat shield*
2. *Retaining screws to hold steady (2 not visible)*
3. *Retaining nuts to remove*

DPS Unit Installation

IMPORTANT: The following hardware **must all be replaced with new ones**:

- Hexagonal forming screws with threadlocker
- Conical spring washers
- Elastic nuts.

1. If the DPS unit is being replaced, install heat shield from old DPS unit onto new DPS unit.

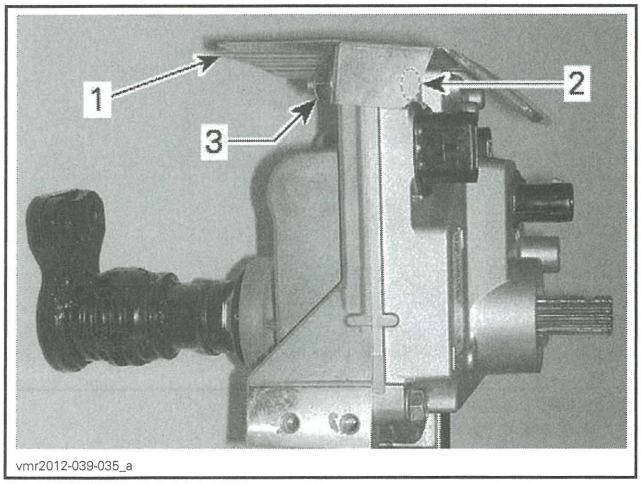

1. *DPS heat shield*
2. *Retaining screws to hold steady (2 not visible)*
3. *Retaining nuts to remove (2)*

NOTE: **Important:** Hold DPS housing screws steady using a wrench as you apply specified torque to heat shield retaining nuts.

TIGHTENING TORQUE	
Retaining nuts, DPS heat shield	24.5 N•m ± 3.5 N•m (18 lbf•ft ± 3 lbf•ft)

2. Install LH DPS support bracket loosely using NEW fasteners.

NOTE: **Important:** Install the retaining screws to the DPS support bracket loosely at this time. This is required to ensure proper DPS alignment at a later step when all steering and DPS fasteners are tightened to specified torque.

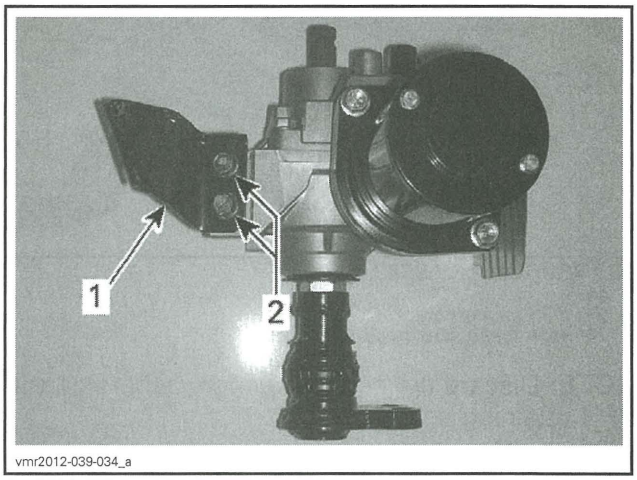

1. *LH DPS support bracket*
2. *Retaining screws*

3. Ensure "O" rings on steering shaft are in good condition.
4. Apply XPS SYNTHETIC GREASE (P/N 293 550 010) to:
   - The inside of both steering shaft half bushings
   - The steering shaft and "O" rings.

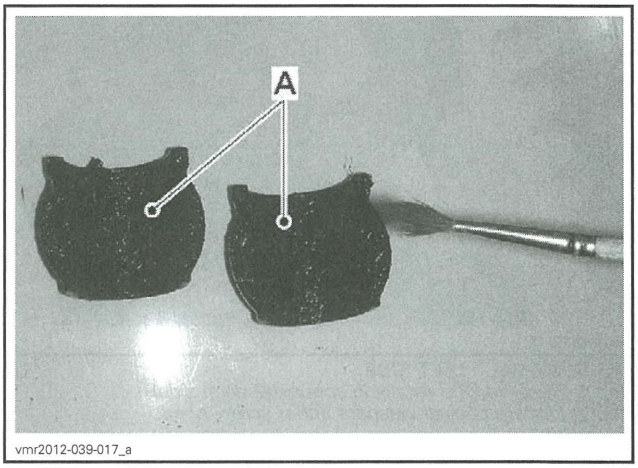

A. XPS synthetic grease (P/N 293 550 010) here

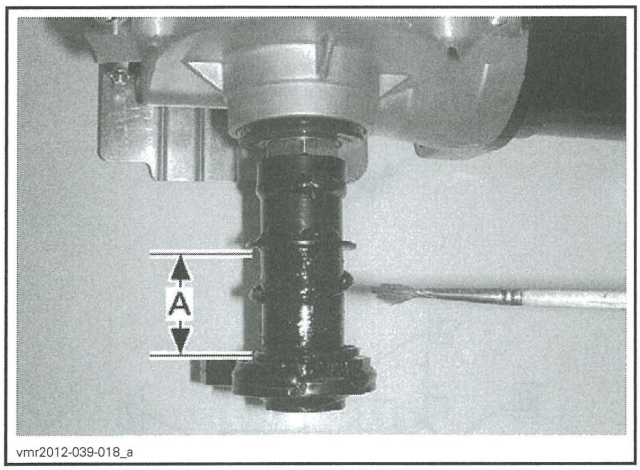

A. XPS synthetic grease (P/N 293 550 010) here

5. Insert the steering column onto the DPS input shaft
6. Position the LH DPS support bracket onto the hexagonal forming screw that was left on the frame DPS mount.

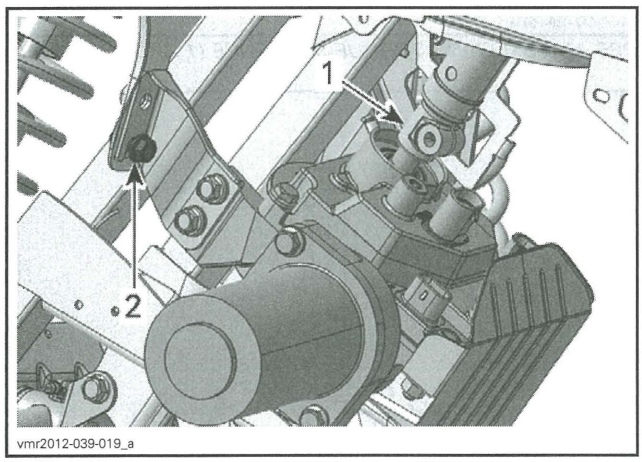

1. Steering column onto the DPS input shaft here
2. LH DPS support bracket onto the hexagonal forming screw here

NOTE: The DPS shaft splines have a key which **must be aligned** with the keyway in the steering column.



TYPICAL - STEERING COLUMN INDEXED TO DPS SHAFT SPLINES

7. Ensure the following are properly positioned on the lower steering shaft and lower steering shaft mount.
   - O-rings
   - Steering shaft half bushings.

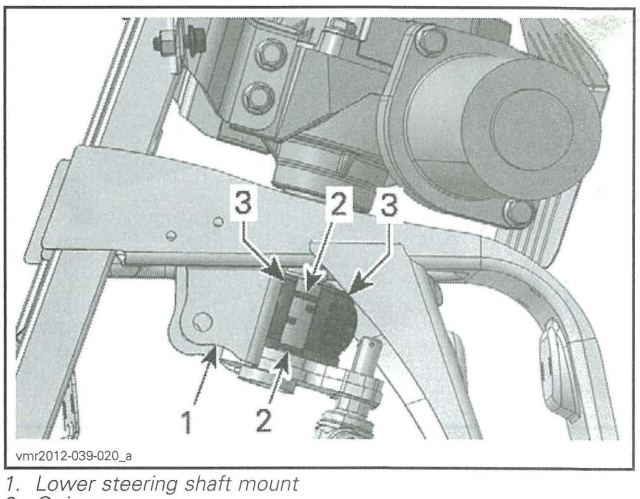

1. Lower steering shaft mount
2. O-rings
3. Steering shaft half bushings

8. Install the 3 remaining hexagonal forming screws that secure the DPS unit **loosely** using **NEW** fasteners.

NOTE: Ensure the support bracket retaining screws have a **NEW** conical spring washer between the screw head and the DPS frame support.

Ensure both tie rod ends have a hardened steel washer on them, then insert the tie-rod ends onto the pitman arm.

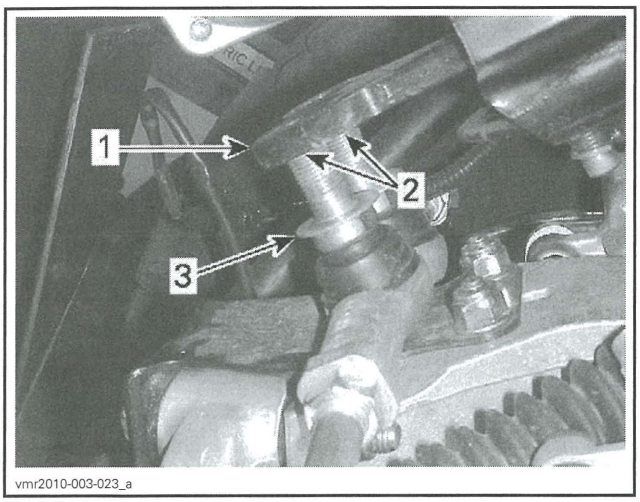

TYPICAL
1. *Pitman arm*
2. *Tie rod ends inserted in pitman arm*
3. *Hardened steel washer on tie rod end*

9. Install the lower half bushing retainer **loosely** using **NEW** fasteners.

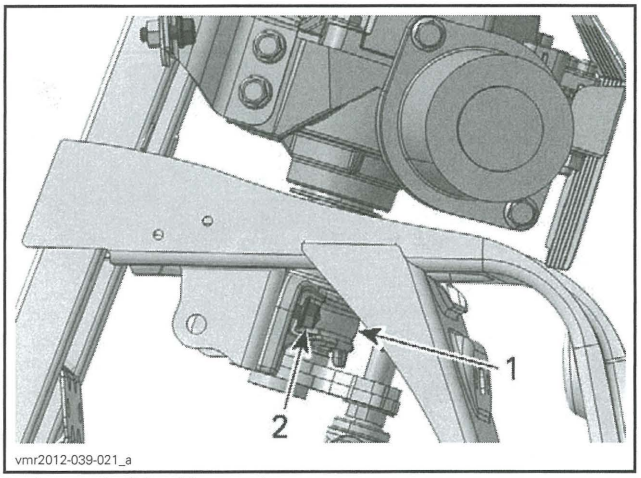

1. *Lower half bushing retainer*
2. *Hexagonal forming screws installed loosely*

10. Install steering column pinch bolt and a **NEW** elastic nut **loosely**.
11. Tighten the steering and DPS fasteners to specified torque using the torque sequence specified in the following 3 illustrations.

TIGHTENING TORQUE	
DPS retaining screws	24.5 N•m ± 3.5 N•m (18 lbf•ft ± 3 lbf•ft)
DPS bracket retaining screws	
Steering column retainer	
Steering column pinch bolt	

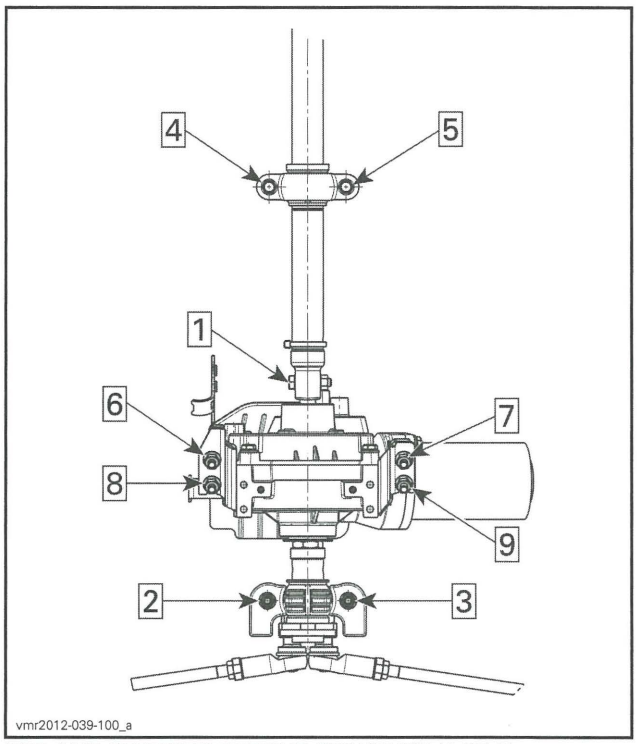

DPS AND STEERING TORQUE SEQUENCE (1 OF 3)

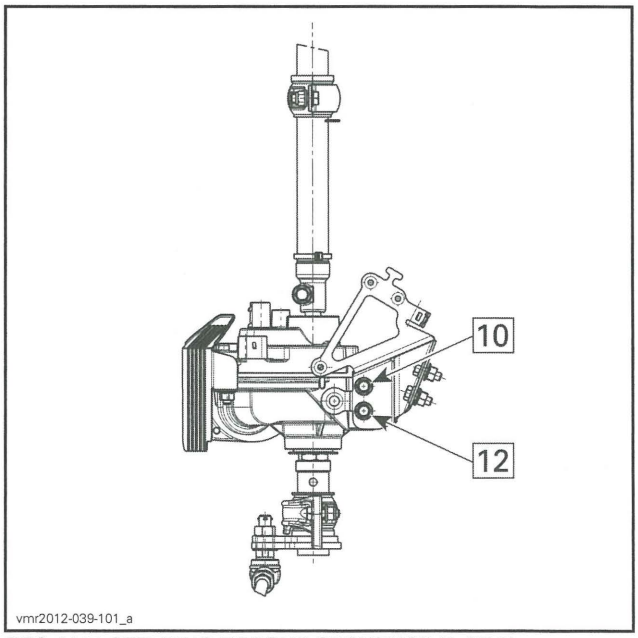

DPS AND STEERING TORQUE SEQUENCE (2 OF 3)

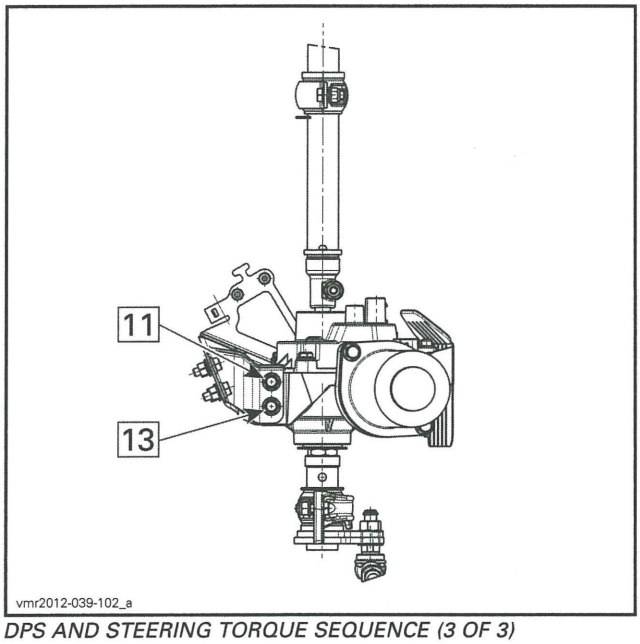

DPS AND STEERING TORQUE SEQUENCE (3 OF 3)

12. Install the second hardened steel washer and nut on each tie-rod end. Tighten retaining nuts as specified.

TIGHTENING TORQUE	
Tie-rod end to pitman arm	72.5 N•m ± 7.5 N•m (53 lbf•ft ± 6 lbf•ft)

13. Install **NEW** cotter pins on the tie-rod ends.

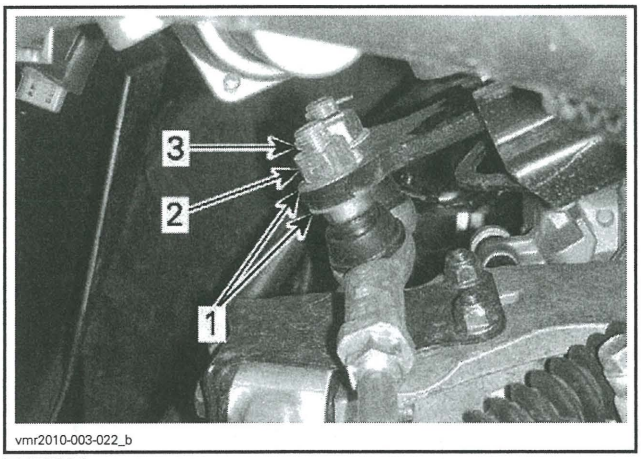

TYPICAL
1. *Hardened steel washers (one each side of pitman arm)*
2. *Tie rod end retaining nut (torque applied)*
3. *NEW cotter pin installed*

14. Pull bellows down over steering column pinch bolt and edge of DPS unit housing extension. Secure bellows using the appropriate locking tie.

NOTE: Ensure the locking tie is on the tube part of the steering column, **not** on the forged end. Bellows should cover end of ring flange on DPS unit but **not** cover the drainage hole at the bottom of the ring flange. **Do not** install a locking tie on the DPS end of the bellows. Lower portion of bellows **MUST** remain floating over the DPS housing.

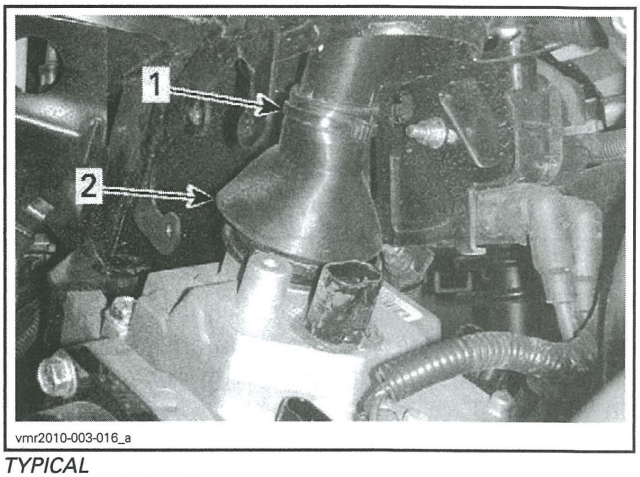

TYPICAL
1. *Locking tie location*
2. *Steering column bellows*

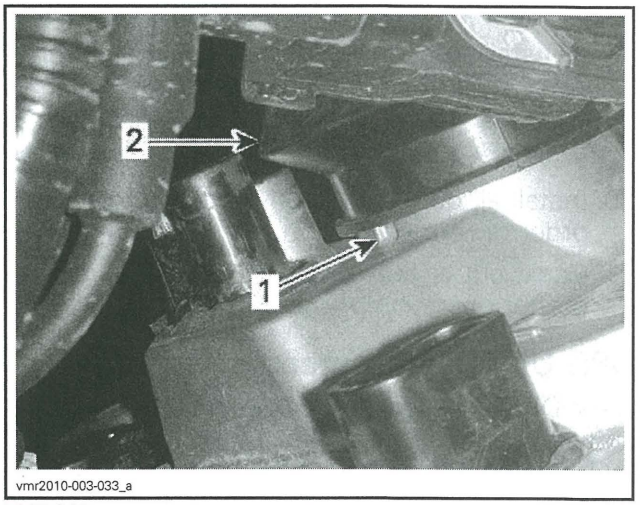

TYPICAL
1. *Drainage hole in DPS ring flange*
2. *Steering column bellows*

15. Turn handlebar fully to each side and check for proper contact between pitman arm and pitman arm frame stops (both sides).

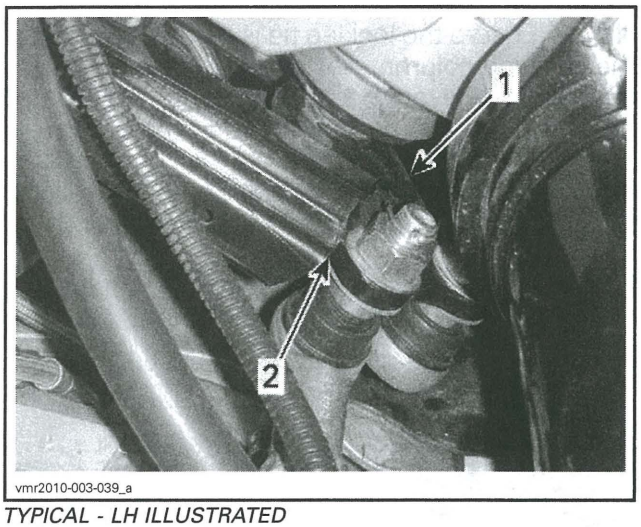

TYPICAL - LH ILLUSTRATED
1. *Pitman arm*
2. *Contact point with frame stop*

NOTE: Contact between pitman arm and pitman arm stops must be checked with vehicle weight on wheels.

16. Reconnect DPS electrical connectors.
17. Perform a *STEERING ALIGNMENT* as described in the applicable Shop Manual subsection.
18. If installing a replacement DPS unit, refer to *DPS REPLACEMENT* in this subsection.
19. Perform the torque offset reset. Refer to *TORQUE OFFSET RESET* in this subsection.
20. Install all other removed parts in the reverse order of removal.
21. Carry out a test ride of the ATV to ensure proper operation of the DPS unit.

DPS Unit Replacement

New DPS units **do not** come with the required software programmed into the unit. A DPS unit fault will be generated when the vehicle is powered up. The check engine light will come on and a DPS FAULT message will appear in the multifunction gauge.

When DPS unit installation is complete, carry out the following steps.

1. Connect the ATV to the latest applicable B.U.D.S. software version.
2. Select the **Read Data** button.
3. In the **Module** menu, choose the **DPS** submenu and install the latest DPS software **Update** file as applicable to the type ATV (Outlander or Renegade).

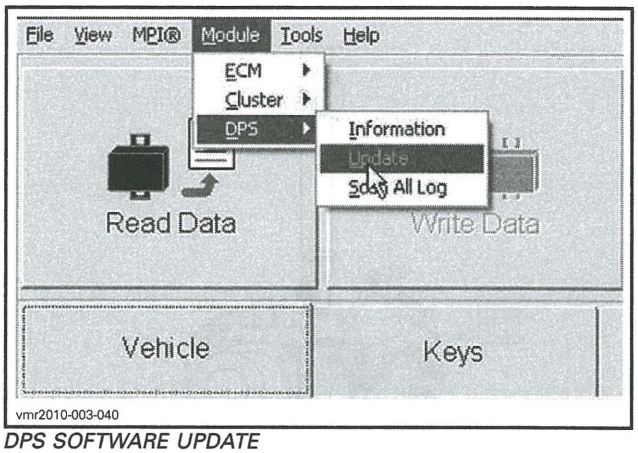

DPS SOFTWARE UPDATE

4. Once the correct DPS software file is installed, go to the **Faults** page and clear the fault codes.
5. Carry out the *TORQUE OFFSET RESET* procedure as described in this subsection.
6. Test drive the ATV to ensure proper DPS operation.

PITMAN ARM

NOTE: On models without a DPS, the pitman arm is replaced with the steering column. Refer to STEERING COLUMN in this subsection.

Pitman Arm Removal

1. Remove DPS unit from vehicle, refer to *DPS REMOVAL* in this subsection.
2. Remove Pitman arm retaining nut and washer.

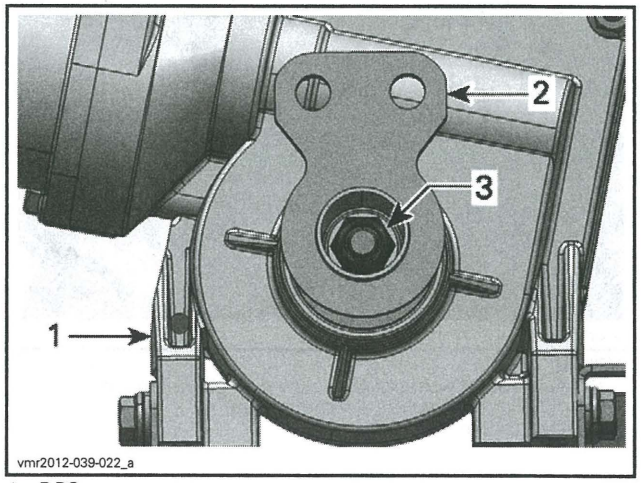

1. *DPS*
2. *Pitman arm*
3. *Pitman arm nut and washer*

3. Install the pitman arm jig in a vise with the positioning screw upward.

REQUIRED TOOLS	
PITMAN ARM JIG (P/N 529 036 225)	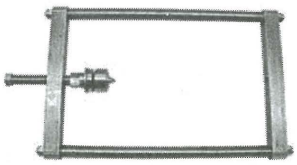

4. Insert the DPS input shaft in the Pitman arm jig receptacle with the Pitman arm facing up.

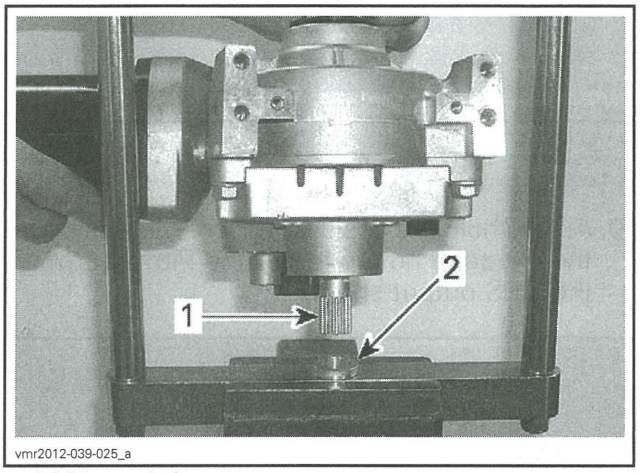

1. DPS input shaft
2. Shaft receptacle in Pitman arm jig

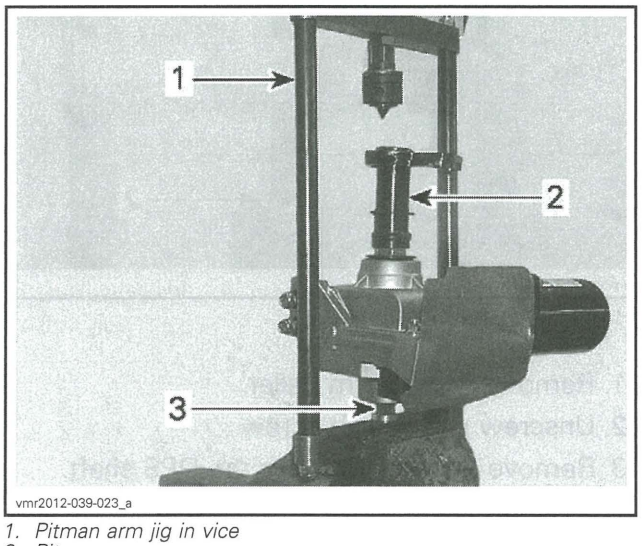

1. Pitman arm jig in vice
2. Pitman arm up
3. DPS input shaft inserted in jig

5. Insert the positioning adapter in the Pitman arm so its point rests in the DPS output shaft.

NOTE: A countersunk hole is machined in tip of the DPS output shaft to accept and center the positioning adapter point.

REQUIRED TOOL	
POSITIONING ADAPTOR (P/N 529 036 230)	

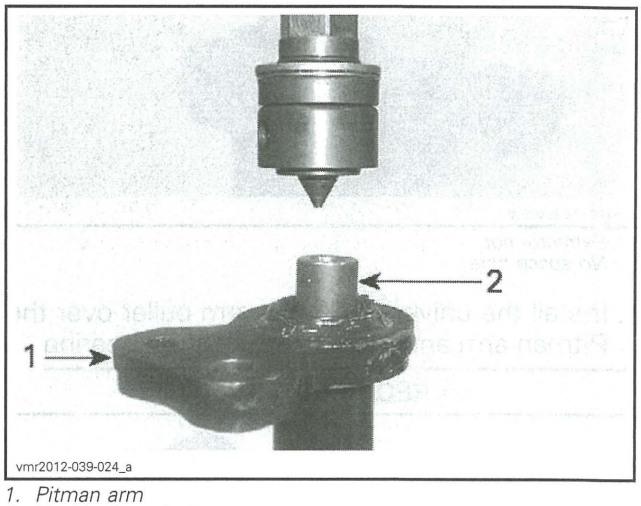

1. Pitman arm
2. Positioning adapter

6. Turn the jig positioning screw until the screw tip rests snugly in the positioning adapter.

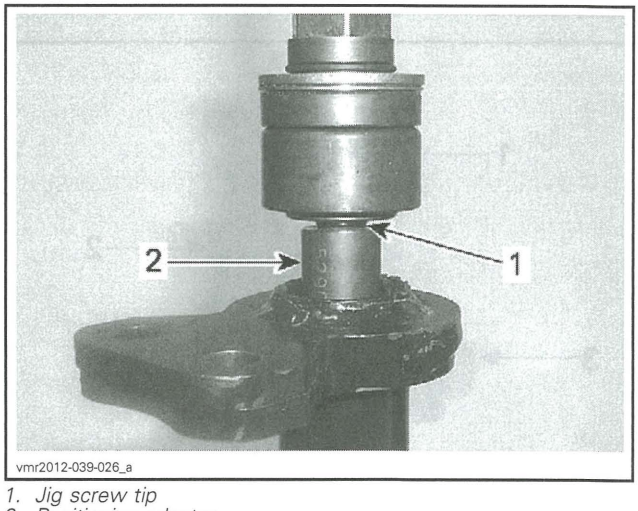

1. Jig screw tip
2. Positioning adapter

7. Turn the extractor nut down until their is no space between the extractor and the positioning tip.

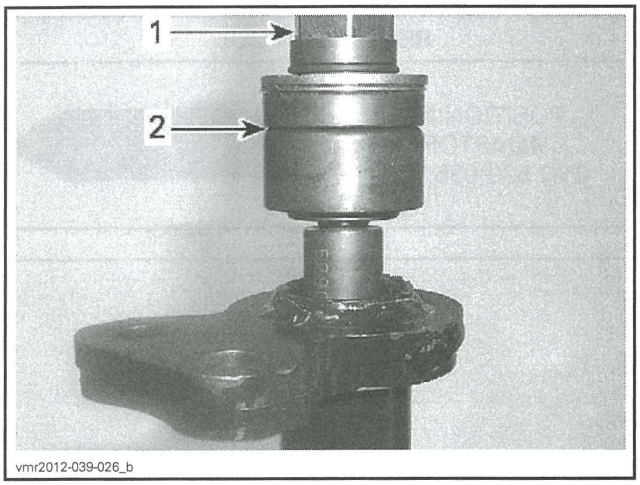

1. Extractor nut
2. No space here

8. Install the universal Pitman arm puller over the Pitman arm and the extractor thrust bearing.

REQUIRED TOOL	
PITMAN ARM PULLER (P/N 529 036 227)	

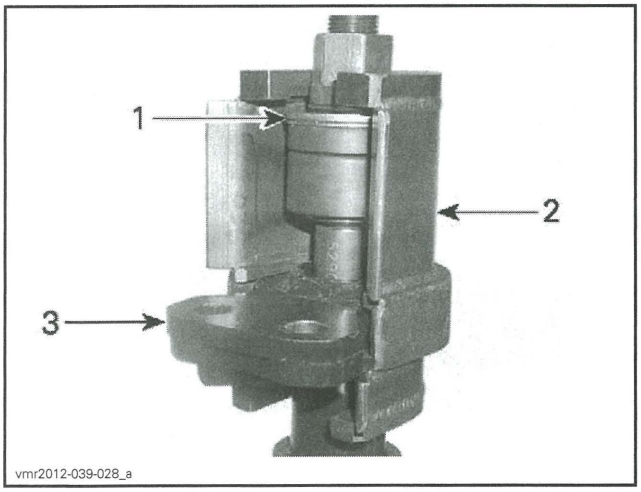

1. Extractor thrust bearing
2. Pitman arm puller
3. Pitman arm

9. Lock the positioning screw by screwing the lock nut tightly against jig upper bar.

NOTE: Be sure to hold the position screw steady to prevent its tip from backing off the positioning adapter.

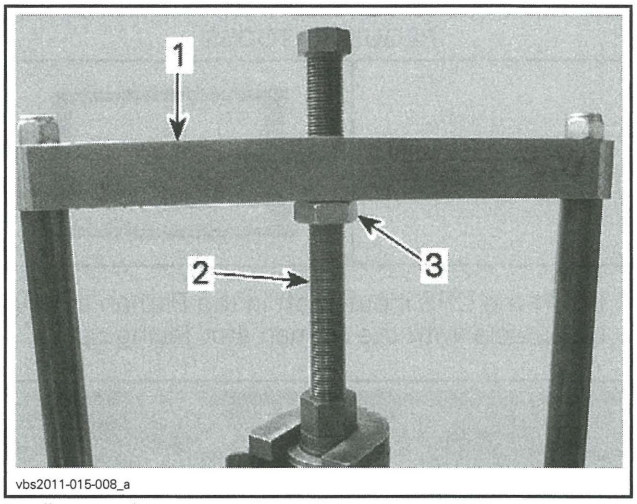

1. Jig upper bar
2. Positioning screw
3. Lock nut

10. As you hold the positioning screw steady, turn the extractor nut up to pull the Pitman arm off the DPS output shaft.

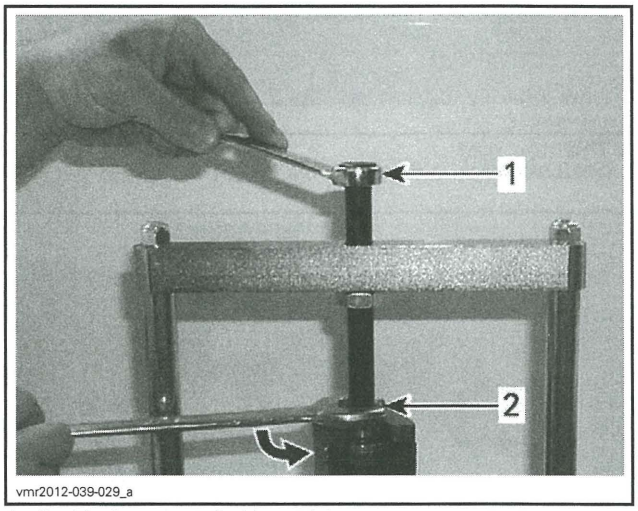

1. Positioning screw (held steady)
2. Extractor nut (turned up)

11. Remove Pitman arm puller.
12. Unscrew positioning screw.
13. Remove Pitman arm from the DPS shaft.

Pitman Arm Installation

1. Install Pitman arm jig in a vise with positioning screw upward.

REQUIRED TOOL	
PITMAN ARM JIG (P/N 529 036 225)	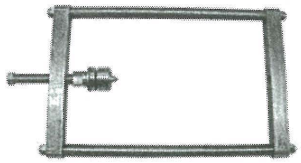

2. Apply antizeize lubricant on DPS output shaft splines; completely cover all the splines with a light coat.

PRODUCT	
DPS output shaft splines	LOCTITE 767 (ANTISEIZE LUBRICANT) (P/N 293 800 070)

3. Place Pitman arm on DPS shaft as per following illustration.

NOTE: Be sure to correctly align the Pitman arm shaft key with the keyway (ground off splines) on the DPS output shaft.

4. Insert the DPS input shaft in the Pitman arm jig receptacle with the Pitman arm facing up.

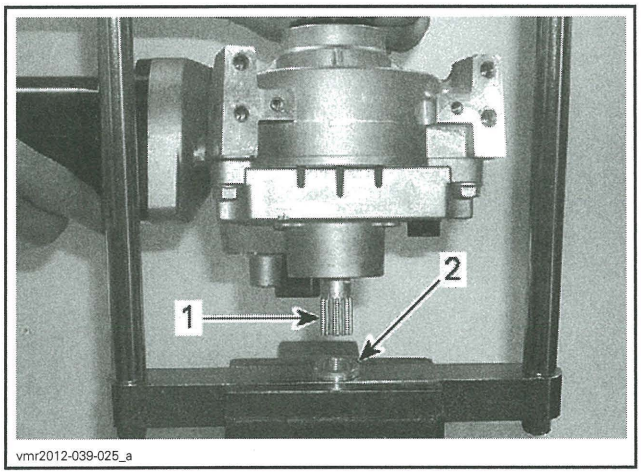

1. DPS input shaft
2. Shaft receptacle in Pitman arm jig

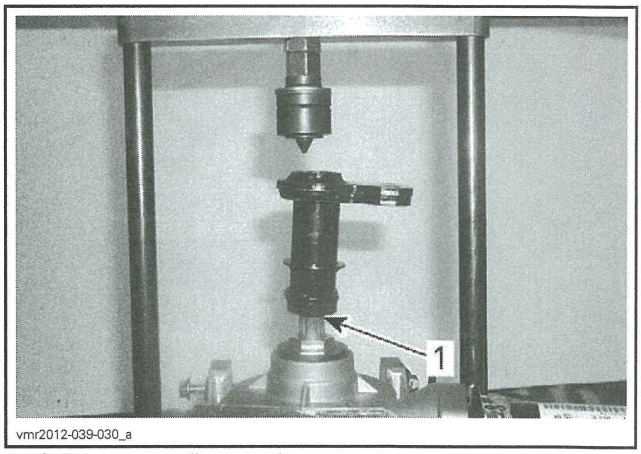

1. Spline keyway alignment here

5. Turn the jig positioning screw until the alignment point makes proper contact with the Pitman arm.

NOTE: Ensure positioning screw is centered in Pitman arm tube.

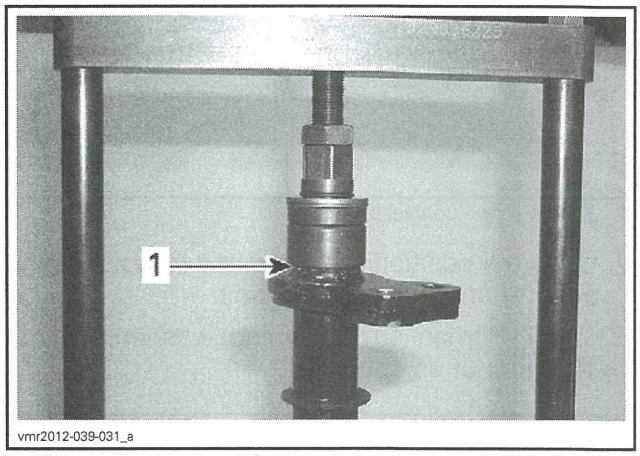

1. Ensure proper contact here

6. Turn the positioning screw to push the Pitman arm on the DPS output shaft until it bottoms out on the DPS output shaft nut.

NOTE: Ensure specified torque is applied.

TIGHTENING TORQUE	
Positioning screw torque	50 N•m (37 lbf•ft)

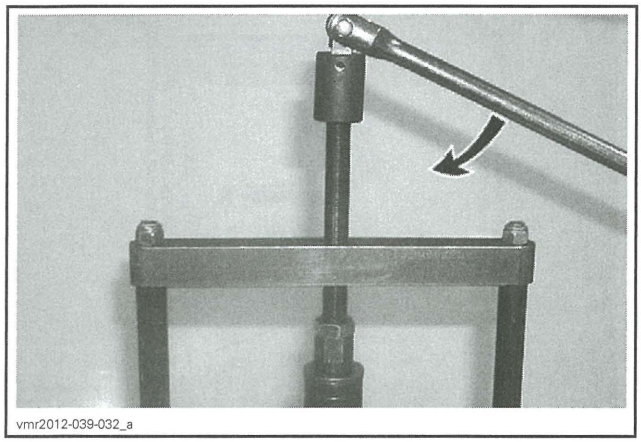
vmr2012-039-032_a

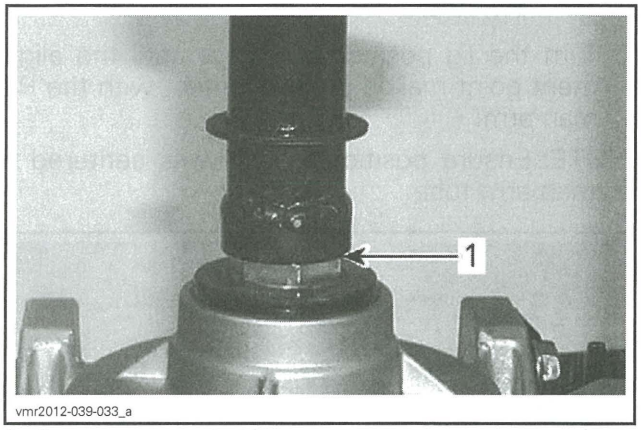

vmr2012-039-033_a

1. Ensure proper contact here

7. Unscrew positioning screw and remove pusher adapter and pull out DPS unit.
8. Install Pitman arm retaining washer and nut. Tighten nut as specified.

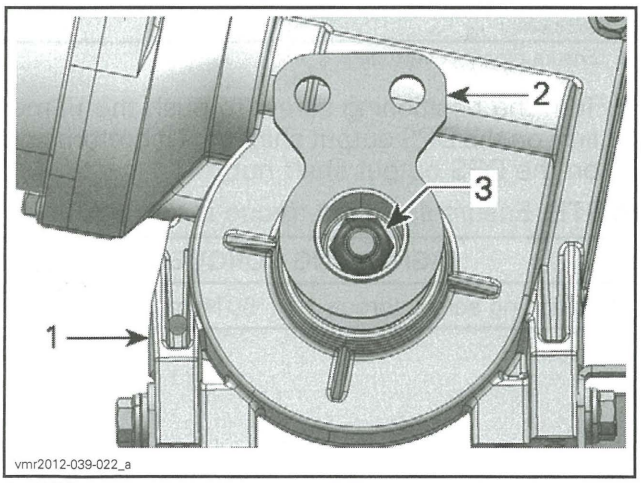

vmr2012-039-022_a

1. DPS
2. Pitman arm
3. Pitman arm nut and washer

TIGHTENING TORQUE	
Pitman arm retaining nut	72.5 N•m ± 7.5 N•m (53 lbf•ft ± 6 lbf•ft)

9. Carry out a steering alignment as described in this subsection.

FRONT SUSPENSION

UPPER SUSPENSION ARMS AND COMPONENTS

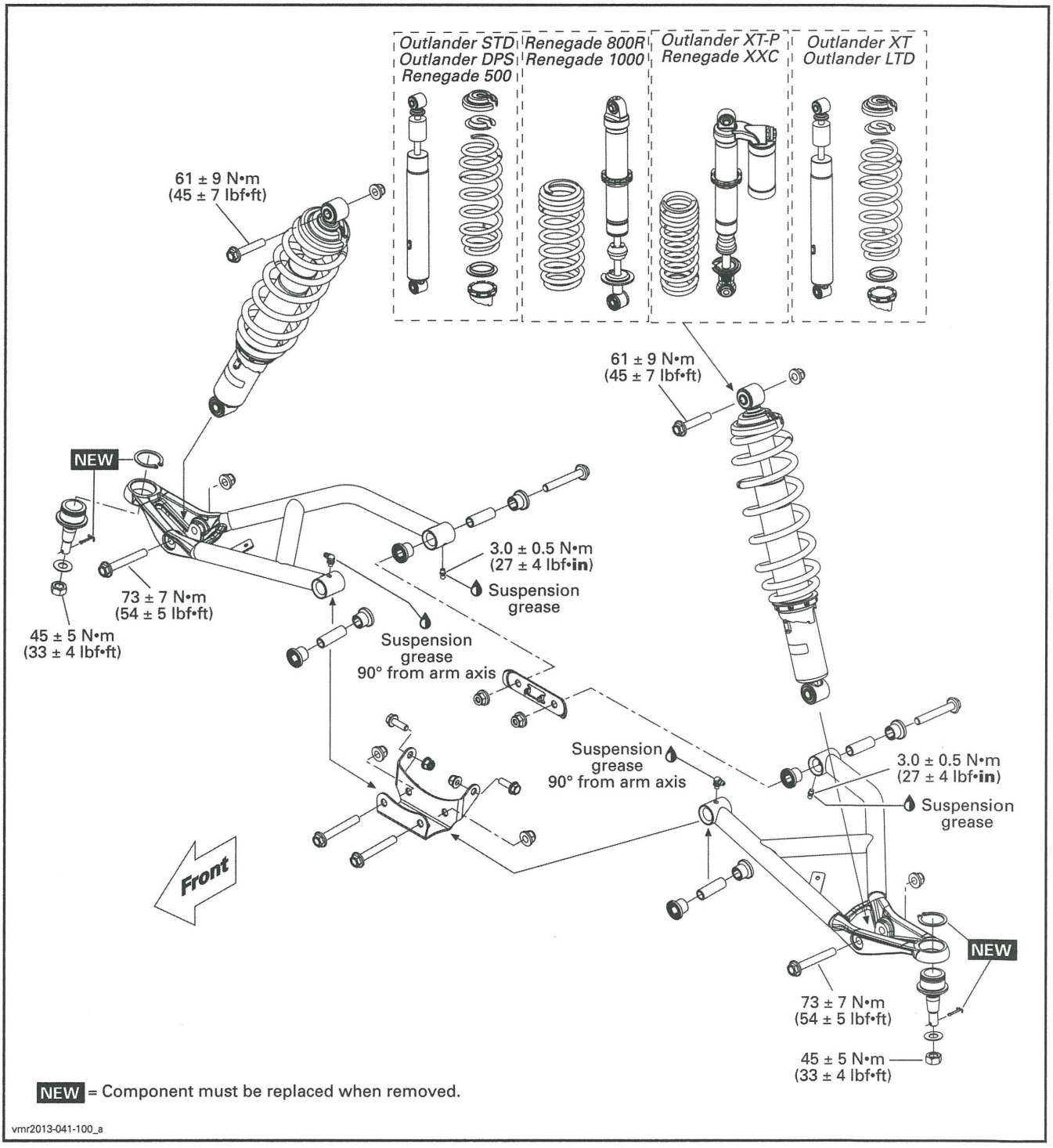

LOWER SUSPENSION ARMS AND COMPONENTS

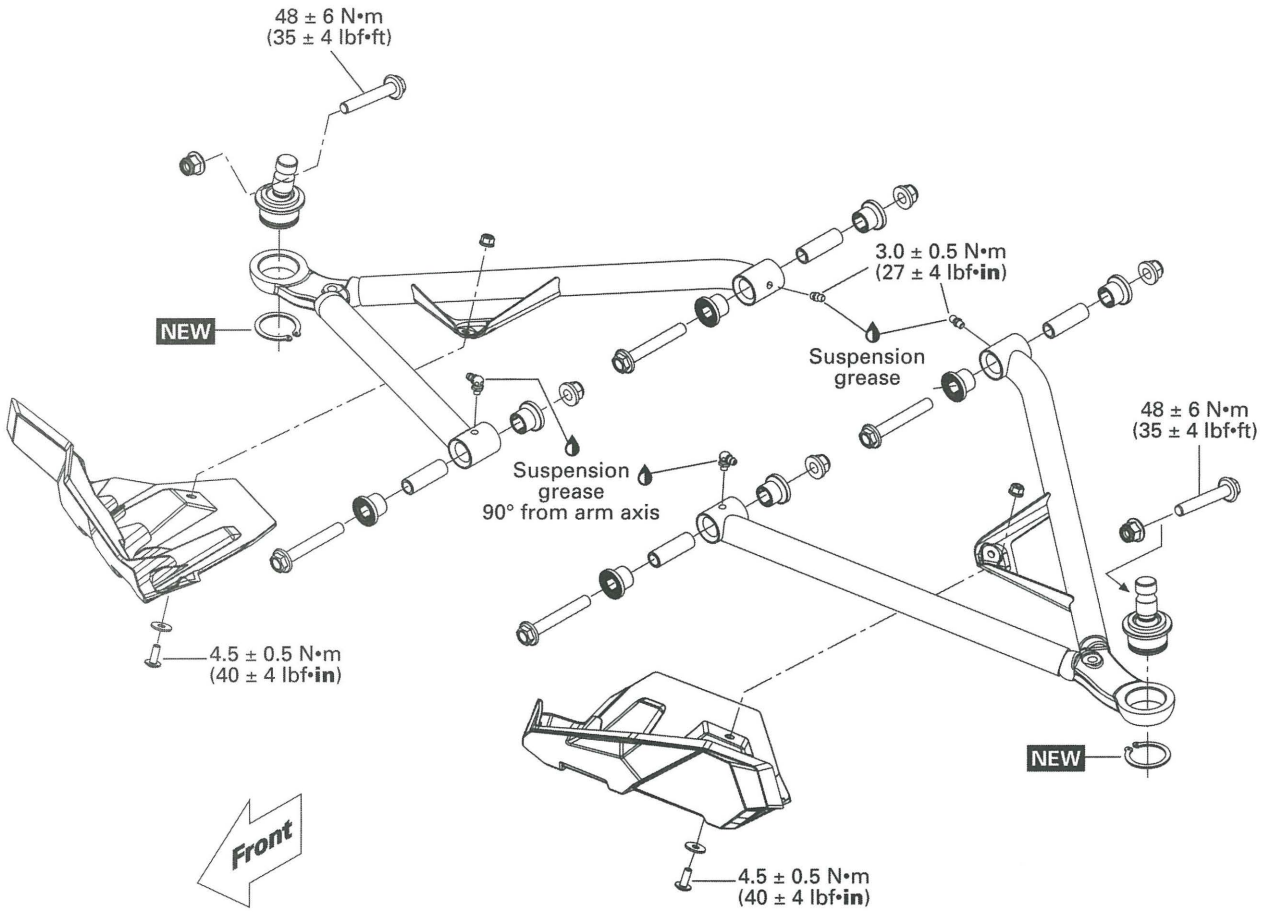

NEW = Component must be replaced when removed.

vmr2012-040-101_a

GENERAL

The procedure explained below is the same for the RH and LH sides unless otherwise noted.

PROCEDURES

SHOCK ABSORBER

Shock Absorber Removal

1. Safely lift and support the vehicle of the ground.
2. Remove bolts and nuts retaining shock absorber.

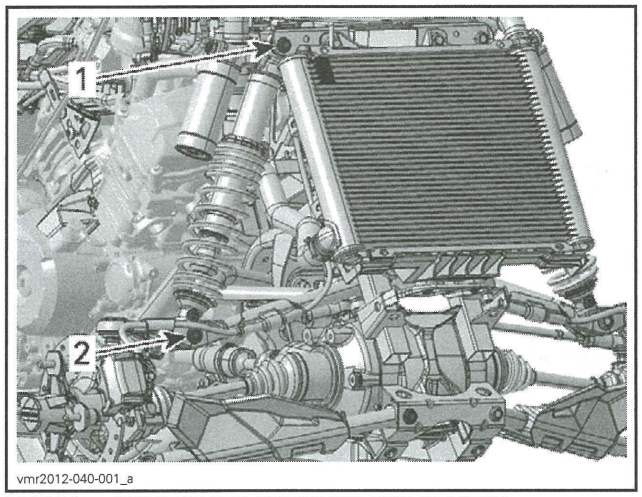

TYPICAL - SOME PARTS REMOVED FOR CLARITY
1. Upper bolt
2. Lower bolt

3. Remove shock absorber.

Shock Absorber Inspection

Remove spring from shock absorber. Refer to *SPRINGS* in this subsection.

Secure the end of shock body in a vise with its rod upward.

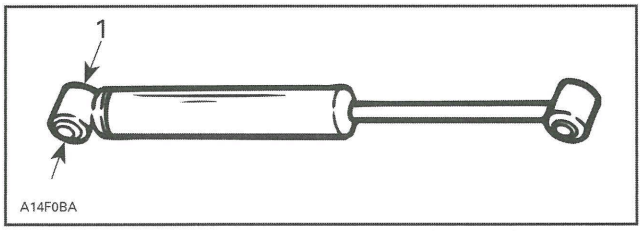

TYPICAL
1. Clamp here

NOTICE Do not clamp directly on shock body.

Extend and compress the piston several times over its entire stroke. Check that it moves smoothly and with uniform resistance with its rod upward.

Check the following conditions that will denote a defective shock:

- A skip or a hang back when reversing stroke at mid travel.
- Seizing or binding condition except at extreme end of either stroke.
- Oil leakage.
- A gurgling noise, after completing one full compression and extension stroke.

Replace if any faults are present.

Shock Absorber Installation

The installation is the reverse of the removal procedure. However, pay attention to the following.

Install shock absorber bolts from front towards rear of vehicle.

Tighten shock absorber bolts to specification.

TORQUE	
Upper shock absorber bolt	61 N•m ± 9 N•m (45 lbf•ft ± 7 lbf•ft)
Lower shock absorber bolt	73 N•m ± 7 N•m (54 lbf•ft ± 5 lbf•ft)

SHOCK ABSORBER BUSHINGS

Refer to *SHOCK ABSORBER BUSHINGS* in *REAR SUSPENSION* subsection for complete procedures.

SPRINGS

Refer to *SPRINGS* in *REAR SUSPENSION* subsection for complete procedures.

LOWER SUSPENSION ARM

Lower Suspension Arm Removal

1. Safely lift and support the vehicle off the ground.
2. Remove wheel, refer to *WHEELS AND TIRES* subsection.
3. Remove bolt and nut securing lower ball joint to knuckle.

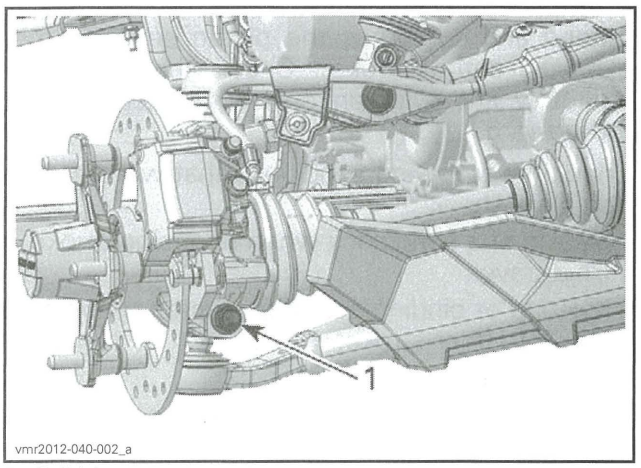

1. Ball joint nut

4. Remove bolts and nuts securing suspension arm to frame.

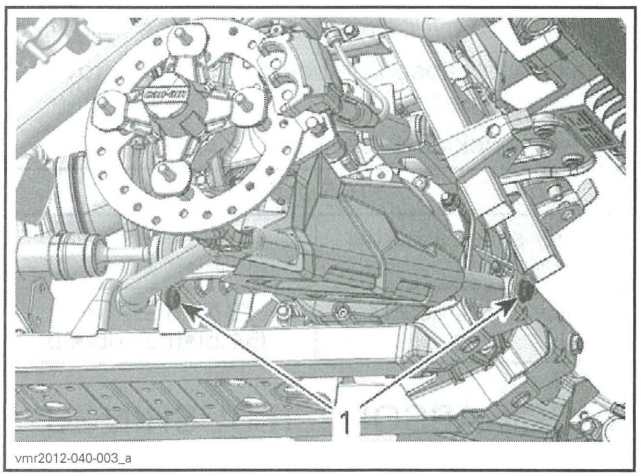

1. Suspension arm bolts

5. Remove suspension arm.

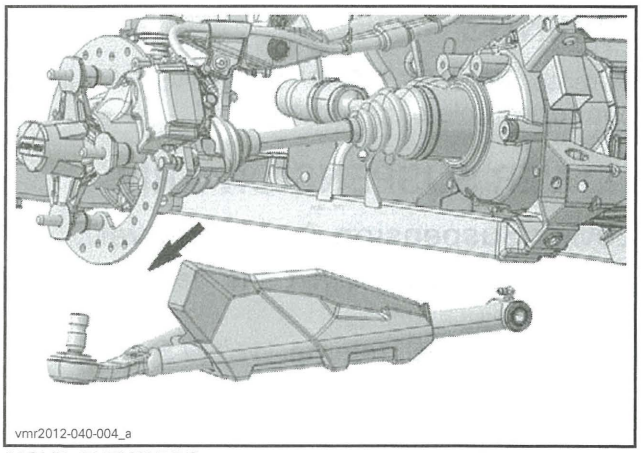

MOVE OUTWARDS

Lower Suspension Arm Installation

The installation is the reverse of the removal procedure. However, pay attention to the following.

Lubricate suspension arm. Refer to *PERIODIC MAINTENANCE PROCEDURES* subsection.

Tighten ball joint nut to specification.

TORQUE	
Nut securing ball joint to knuckle	48 N•m ± 6 N•m (35 lbf•ft ± 4 lbf•ft)

Perform steering alignment procedure. Refer to *STEERING ALIGNMENT* subsection.

UPPER SUSPENSION ARM

Upper Suspension Arm Removal

1. Safely lift and support the vehicle off the ground.
2. Remove wheel, refer to *WHEELS AND TIRES* subsection.
3. Remove fasteners retaining brake hose to vehicle.

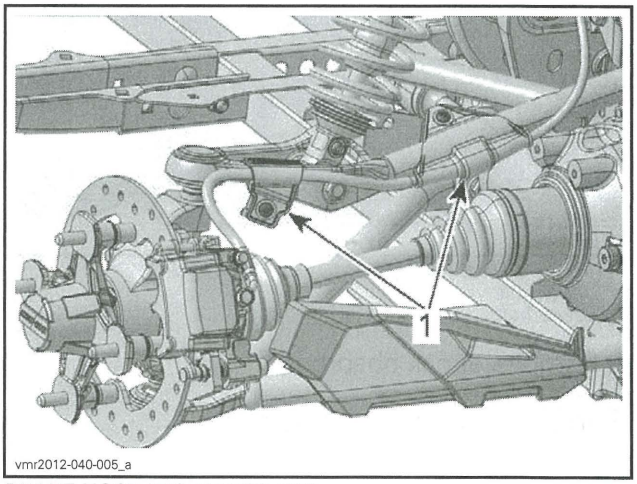

BRAKE HOSE FASTENERS (2X)

4. Remove and discard cotter pin retaining ball joint.

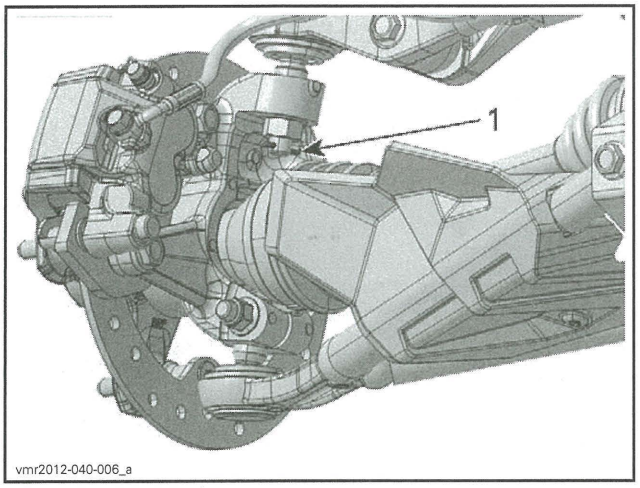

1. Ball joint cotter pin

5. Remove ball joint nut and washer.

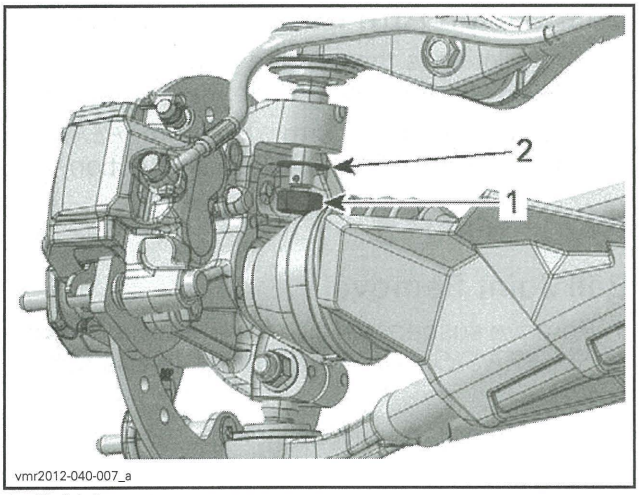

1. Ball joint nut
2. Ball joint hardened washer

6. Carefully move brake hose aside.
7. Using a plastic hammer, carefully hit on the knuckle side to separate ball joint from knuckle.

NOTE: A ball joint remover can be used if the ball joint is jammed into knuckle.

NOTICE **Never hit on suspension arm to avoid damaging it permanently.**

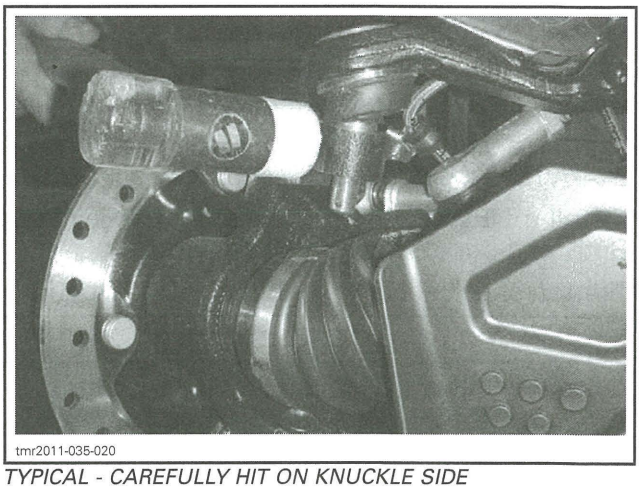

TYPICAL - CAREFULLY HIT ON KNUCKLE SIDE

8. Remove bolt and nut securing suspension arm to shock absorber.

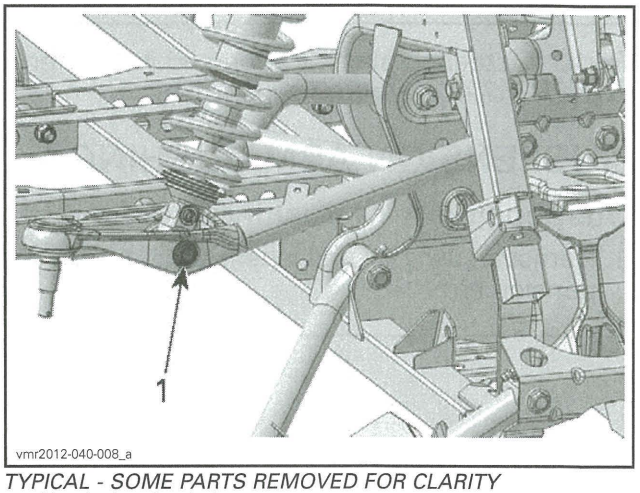

TYPICAL - SOME PARTS REMOVED FOR CLARITY
1. Shock absorber bolt

9. Remove bolts and nuts securing suspension arm to frame.

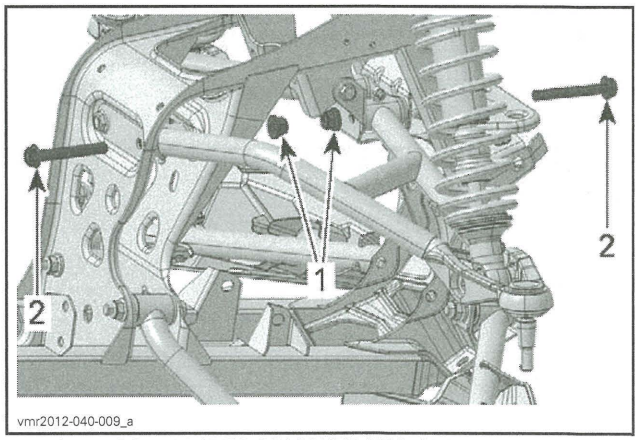

TYPICAL - SOME PARTS REMOVED FOR CLARITY
1. Suspension arm pivot nuts
2. Suspension arm pivot bolts

10. Remove suspension arm.

Upper Suspension Arm Installation

The installation is the reverse of the removal procedure. However, pay attention to the following.

Lubricate suspension arm. Refer to *PERIODIC MAINTENANCE PROCEDURES* subsection.

Install a **NEW** cotter pin to secure ball joint nut. Both end of cotter pin must be folded.

Tighten shock absorber bolt to specification.

TORQUE	
Lower shock absorber bolt	73 N•m ± 7 N•m (54 lbf•ft ± 5 lbf•ft)

Tighten ball joint nut to specification.

TORQUE	
Ball joint nut	45 N•m ± 5 N•m (33 lbf•ft ± 4 lbf•ft)

Perform steering alignment procedure. Refer to *STEERING ALIGNMENT* subsection.

SUSPENSION ARM BUSHINGS

Suspension Arm Bushings Removal

1. Remove cushions and inner bushing from suspension arm.

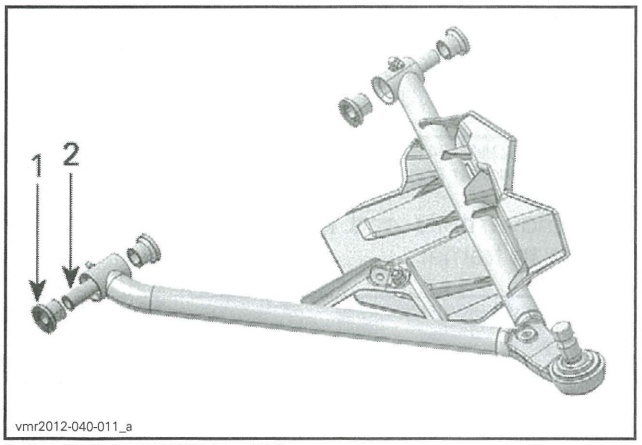

LOWER SUSPENSION ARM
1. *Cushion*
2. *Inner bushing*

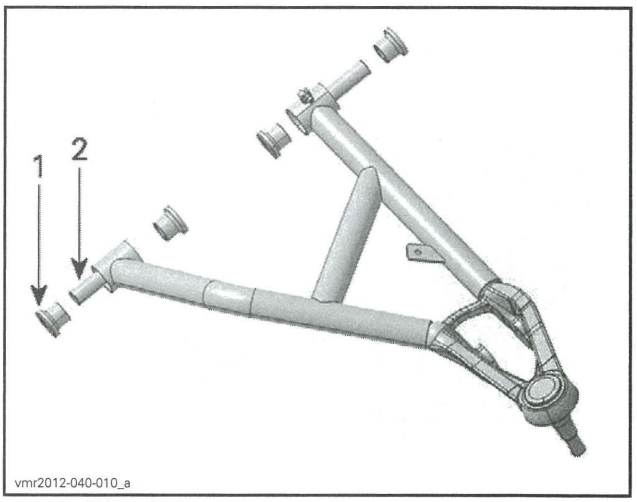

UPPER SUSPENSION ARM
1. *Cushion*
2. *Inner bushing*

Suspension Arm Bushings Installation

The installation is the reverse of the removal procedure. However, pay attention to the following.

Lubricate suspension arm. Refer to *PERIODIC MAINTENANCE PROCEDURES* subsection.

BALL JOINTS

Ball Joint Removal

1. Remove suspension arm from vehicle. Refer to *SUSPENSION ARM REMOVAL* in this subsection.
2. Remove circlip from ball joint.

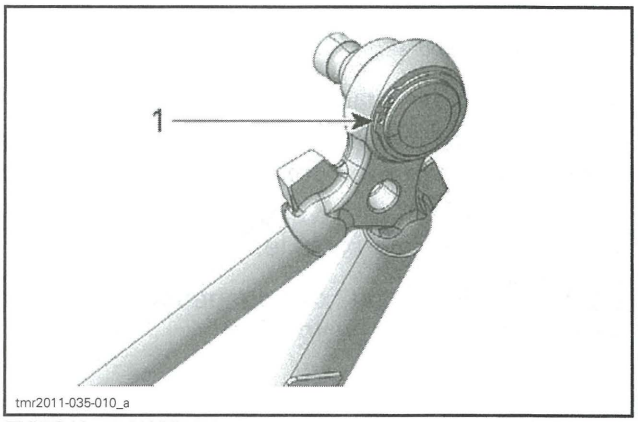

TYPICAL - LOWER BALL JOINT
1. *Circlip*

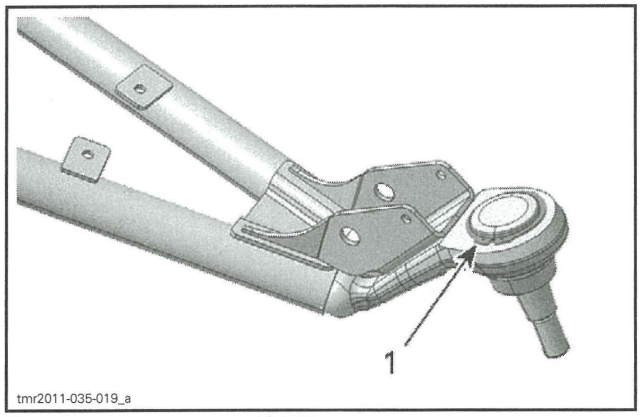

TYPICAL - UPPER BALL JOINT
1. Circlip

3. Install suspension arm on a press.
4. Use an appropriate ball joint remover.

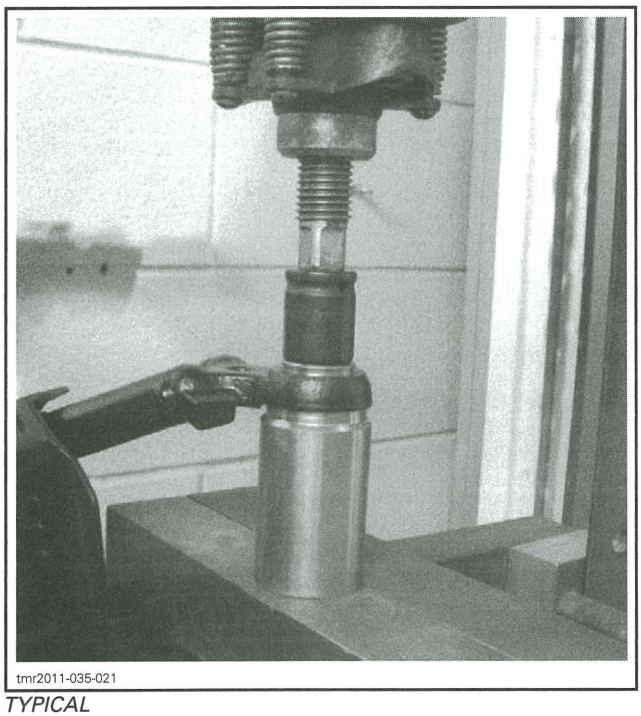

TYPICAL

5. Remove ball joint from suspension arm.

NOTICE **Make sure that suspension arm is properly supported on the press during ball joint removal.**

Ball Joint Installation

The installation is the reverse of the removal procedure. However, pay attention to the following.

Install a **NEW** circlip to secure ball joint.

REAR SUSPENSION

SERVICE TOOLS

Description	Part Number	Page
SPRING COMPRESSOR	529 036 184	497

SERVICE PRODUCTS

Description	Part Number	Page
SUSPENSION GREASE	293 550 033	501

TRAILING ARMS AND ANTI-SWAY BAR

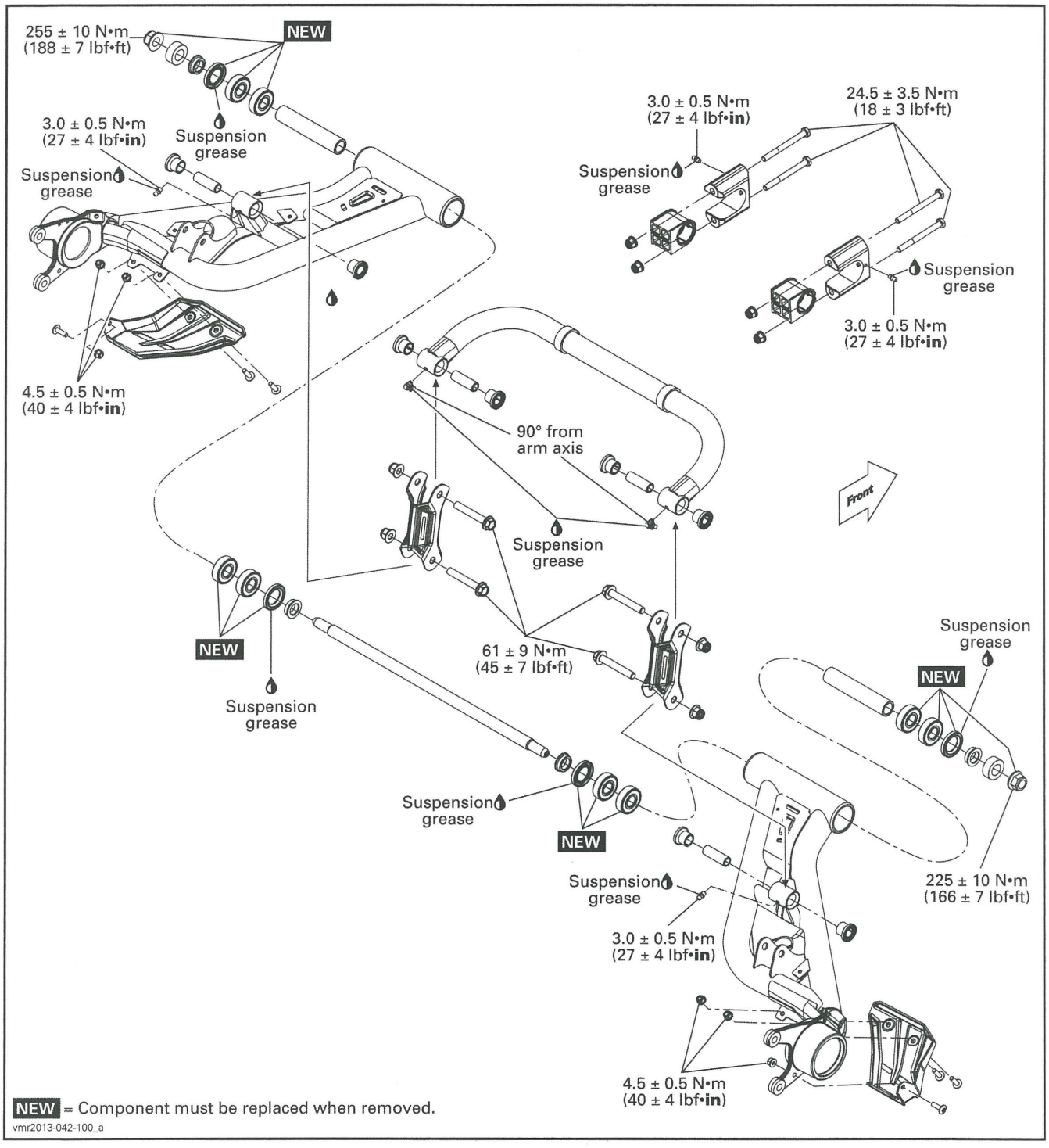

SHOCK ABSORBERS

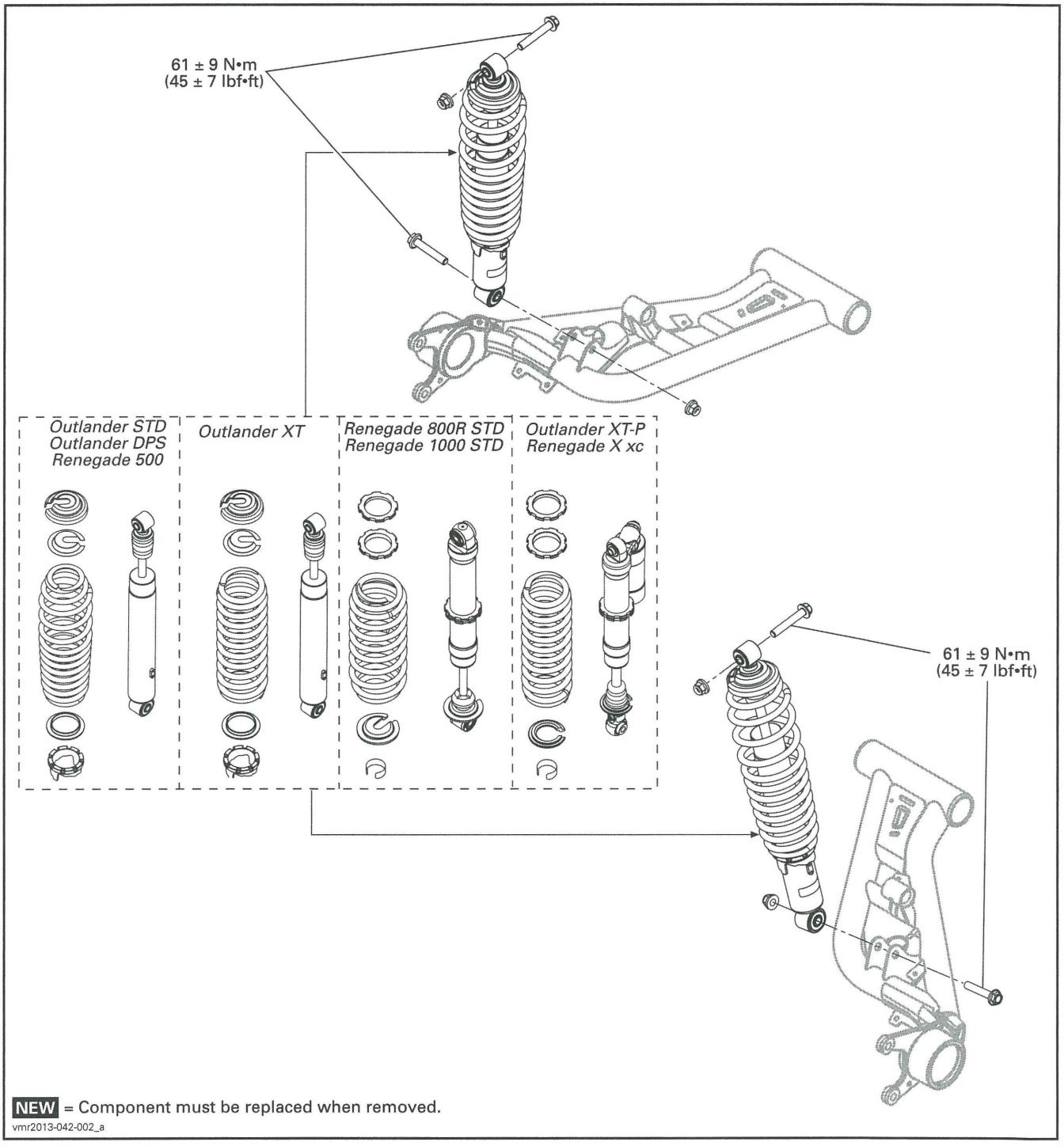

NEW = Component must be replaced when removed.

vmr2013-042-002_a

GENERAL

The procedure described below is the same for the RH and LH sides, unless otherwise instructed.

PROCEDURES

SHOCK ABSORBERS

Shock Absorber Removal

1. Safely lift and support the vehicle off the ground.
2. Remove bolts and nuts retaining shock absorber.

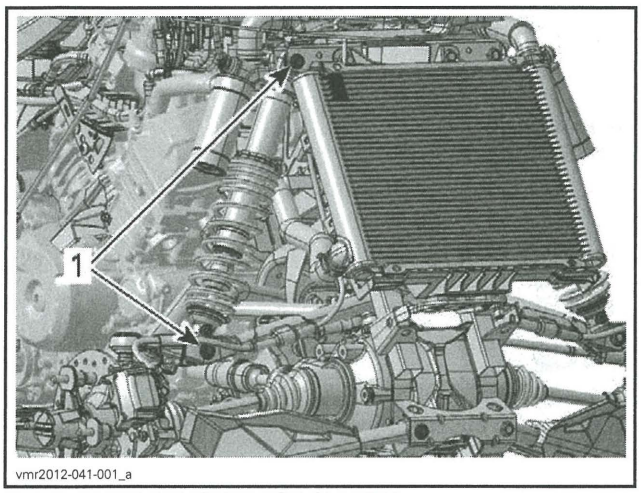

SOME PARTS REMOVED FOR CLARITY
1. Shock absorber bolts

3. Remove shock absorber.

Shock Absorber Inspection

Remove spring from shock absorber. Refer to *SPRINGS* in this subsection.

Secure the end of shock body in a vise with its rod upward.

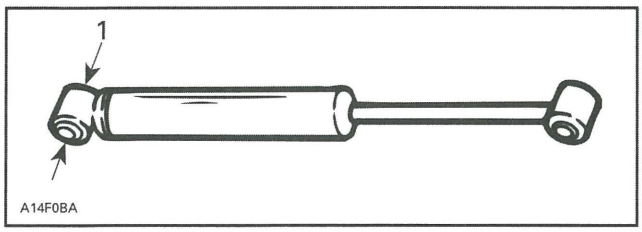

TYPICAL
1. Clamp here

NOTICE Do not clamp directly on shock body.

Extend and compress the piston several times over its entire stroke. Check that it moves smoothly and with uniform resistance with its rod upward.

Check the following conditions that will denote a defective shock:

- A skip or a hang back when reversing stroke at mid travel
- Seizing or binding condition except at extreme end of either stroke
- Oil leakage
- A gurgling noise, after completing one full compression and extension stroke.

Replace if any faults are present.

Shock Absorber Installation

The installation is the reverse of the removal procedure. However, pay attention to the following.

For shock absorber with remote reservoir, position damping adjuster as illustrated.

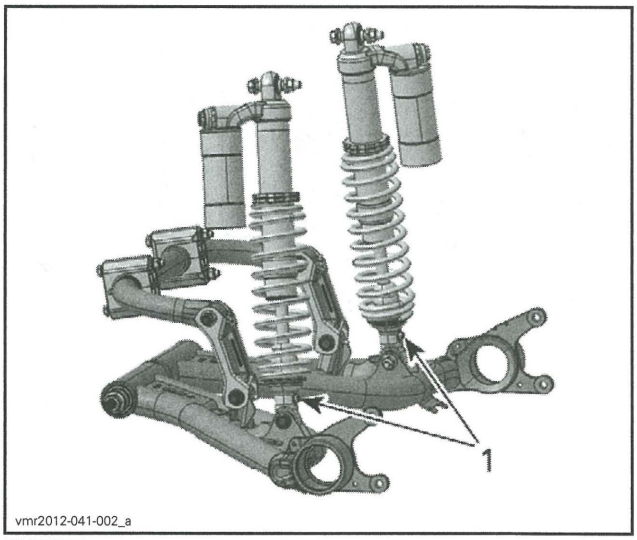

TYPICAL
1. Damping adjuster

Tighten shock absorber nuts to specification.

TORQUE	
Shock absorber nuts	61 N•m ± 9 N•m (45 lbf•ft ± 7 lbf•ft)

SHOCK ABSORBER BUSHINGS

Shock Absorber Bushing Replacement

All Shock Absorbers Except HPG

1. Remove shock absorber from vehicle. Refer to *SHOCK ABSORBERS* in this subsection.
2. Install shock absorber on a press.

3. Use an appropriate socket to push bushing.

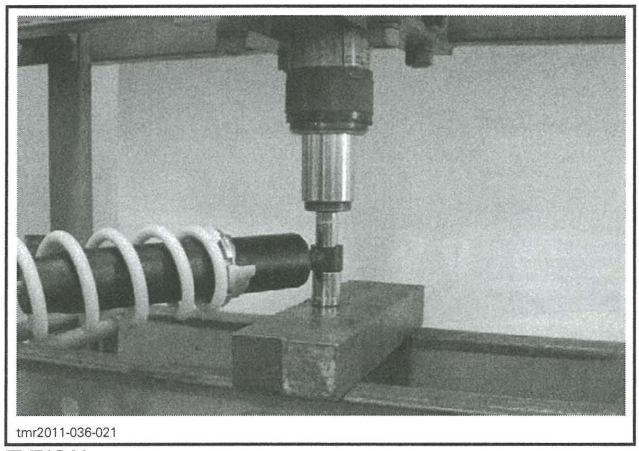
tmr2011-036-021

TYPICAL

4. Remove bushing from shock absorber.

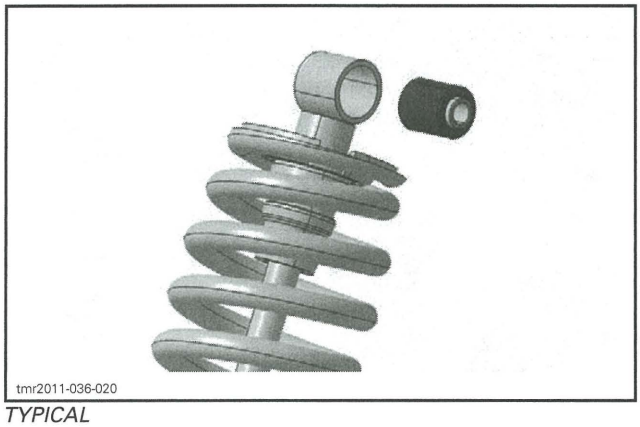
tmr2011-036-020

TYPICAL

5. Install a **NEW** bushing as the reverse of removal.
6. Install shock absorber on vehicle.

HPG Shock Absorber (without Remote Reservoir)

1. Remove shock absorber from vehicle. Refer to *SHOCK ABSORBERS* in this subsection.
2. Install shock absorber on a press.
3. Use an appropriate socket to push inner bushing.
4. Remove outer bushings.

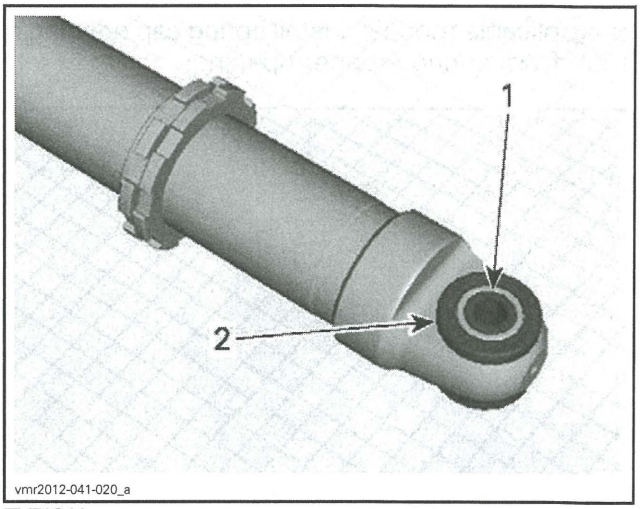

vmr2012-041-020_a

TYPICAL
1. Inner bushing
2. Outer bushing

5. Install **NEW** bushings as the reverse of removal.
6. Install shock absorber on vehicle.

SPRINGS

Spring Removal

1. Remove shock absorber from vehicle. Refer to *SHOCK ABSORBERS* in this subsection.
2. Use SPRING COMPRESSOR (P/N 529 036 184).

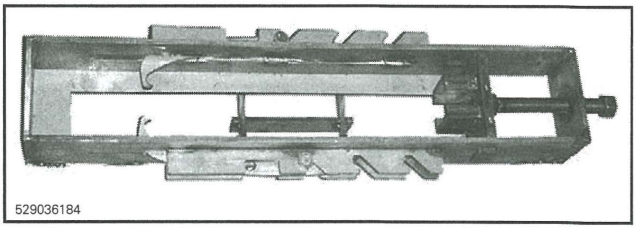
529036184

3. Place the tool in a vise.
4. Position the shock absorber in the tool.
5. Install the spring compressor pins.
6. Tighten spring remover screw until the spring is sufficiently compressed to remove spring cap.
7. Remove spring cap from shock absorber.
8. Release spring remover screw.
9. Remove spring from shock absorber.

Spring Inspection

Inspect the spring for damage.

Replace if necessary.

Spring Installation

The installation is the reverse of the removal procedure. However, pay attention to the following.

on applicable models, install spring cap opening at 180° from spring stopper opening.

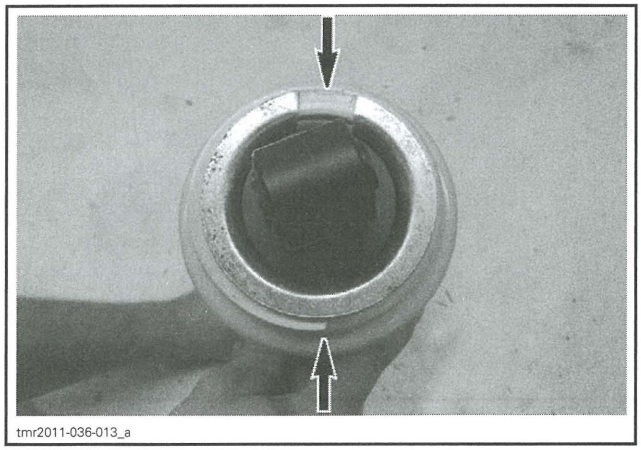
tmr2011-036-013_a

CAP OPENING AT 180°

ANTI-SWAY BAR

Anti-Sway Bar Removal

1. Safely lift and support the vehicle off the ground.
2. Remove rear wheels, refer to *WHEELS AND TIRES* subsection.
3. Refer to *EXHAUST SYSTEM* and remove:
   - Muffler
   - Y-Exhaust pipe.
4. Remove the following inner heat shield.

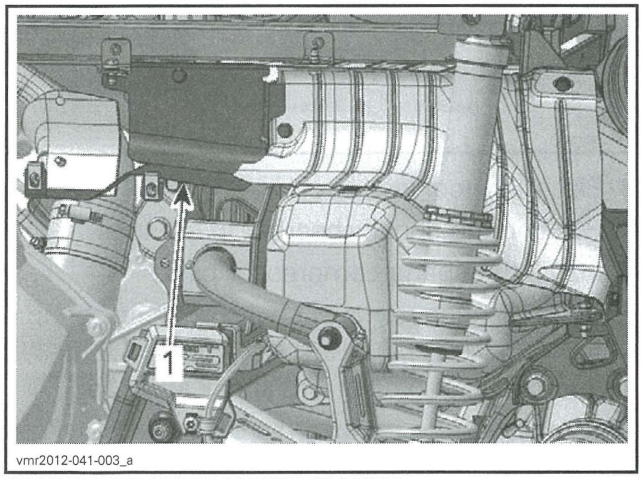

vmr2012-041-003_a

SOME PARTS REMOVED FOR CLARITY
1. Inner heat shield

5. Detach anti-sway bar from link arm (both sides).

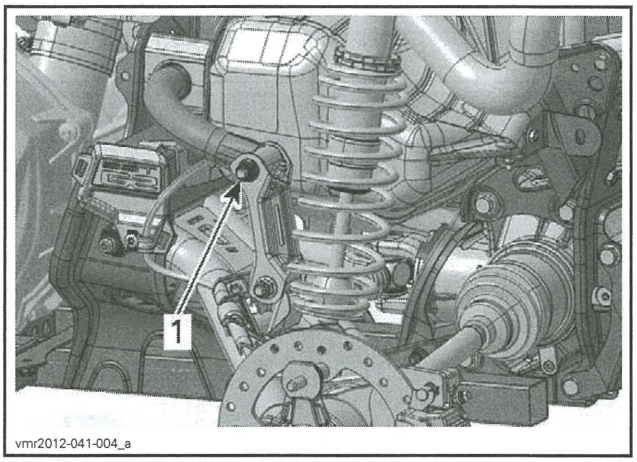

vmr2012-041-004_a

SOME PARTS REMOVED FOR CLARITY
1. Bolt securing anti-sway bar

6. Remove bolts and nuts securing anti-sway bar to frame (both sides).

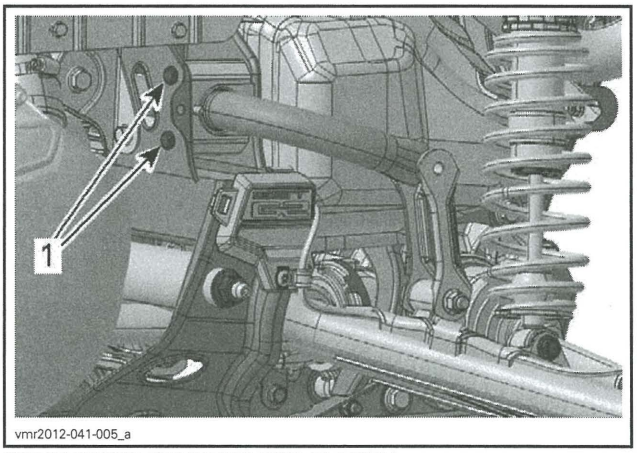

vmr2012-041-005_a

SOME PARTS REMOVED FOR CLARITY
1. Bolts securing anti-sway bar

7. Remove anti-sway bar bushing holders (both sides).

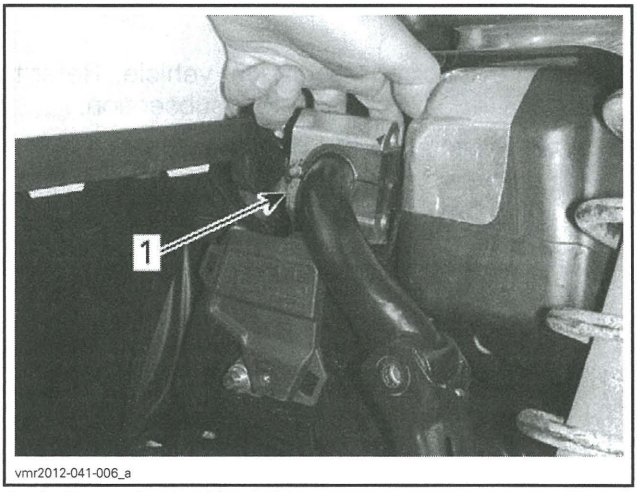

vmr2012-041-006_a

1. Anti-sway bar bushing holder

8. Remove anti-sway bar.

Anti-Sway Bar Inspection

Check anti-sway bar for cracks, bending or other damages.

Replace if necessary.

Anti-Sway Bar Installation

The installation is the reverse of the removal procedure. However, pay attention to the following.

Install all retaining bolts of anti-sway bar loosely first.

Position link arm bolts with their heads towards inside.

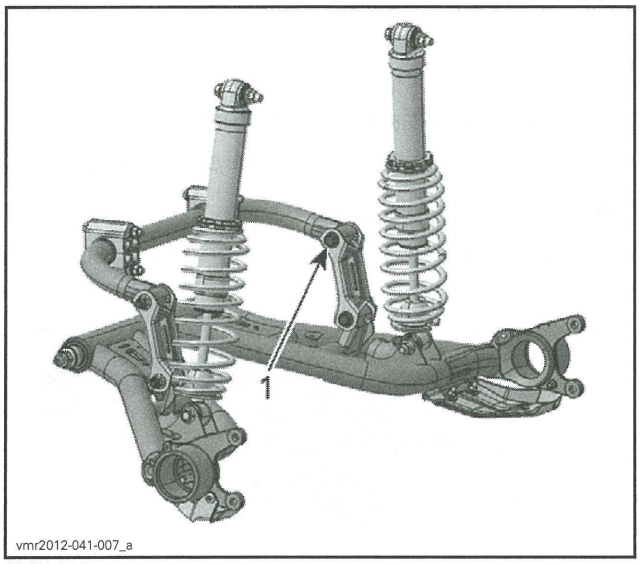

TYPICAL
1. Head towards inside

Tighten anti-sway bar retaining bolts to specification.

TORQUE	
Bolts securing anti-sway bar to frame	24.5 N•m ± 3.5 N•m (18 lbf•ft ± 3 lbf•ft)
Bolts securing anti-sway bar to link arm	61 N•m ± 9 N•m (45 lbf•ft ± 7 lbf•ft)

Lubricate anti-sway bar. Refer to *PERIODIC MAINTENANCE PROCEDURES* subsection.

TRAILING ARM

Trailing Arm Removal

1. Safely lift and support the vehicle off the ground.
2. Remove wheel hub, refer to *REAR DRIVE* subsection.
3. Remove protective plate from trailing arm.

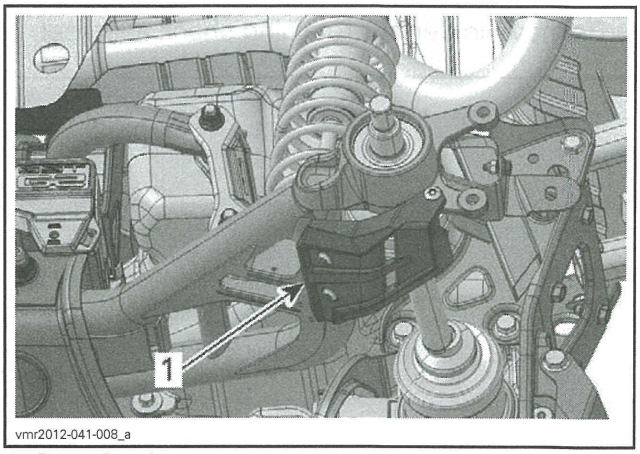

1. Protective plate

NOTE: If applicable, remove fasteners retaining brake hose to vehicle.

4. Remove nut and washer securing trailing arm pivot shaft.

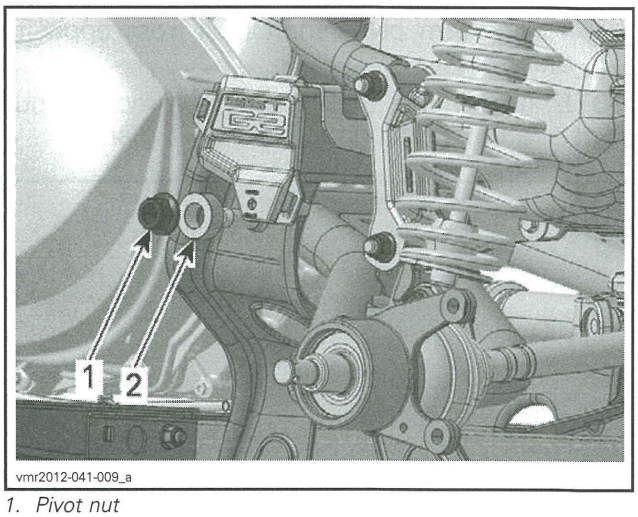

1. Pivot nut
2. Pivot washer

5. Detach trailing arm from link arm (both sides).

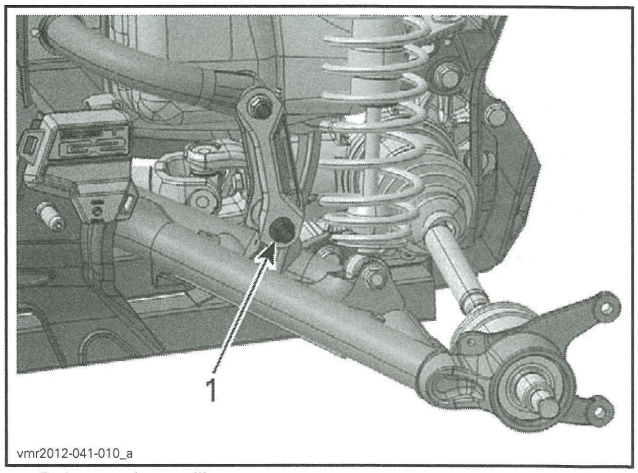

1. Bolt securing trailing arm

6. Remove lower nut retaining shock absorber.

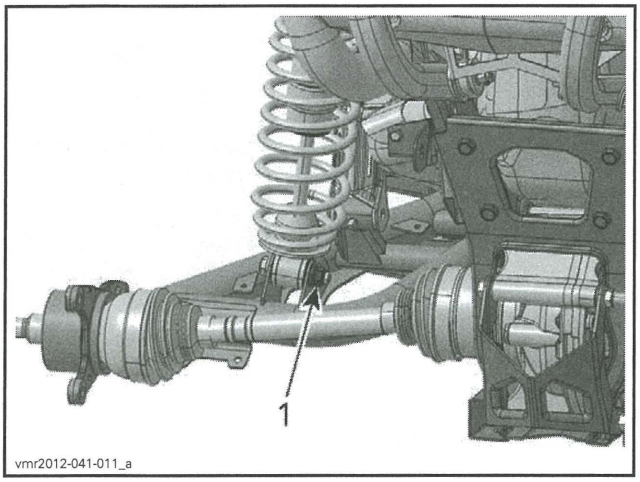

1. Lower nut

7. Firmly hold trailing arm then remove:
   - Shock absorber lower bolt
   - Trailing arm pivot shaft (pull from opposite side).

NOTE: If only one trailing arm is removed, pull pivot shaft just enough to clear trailing arm.

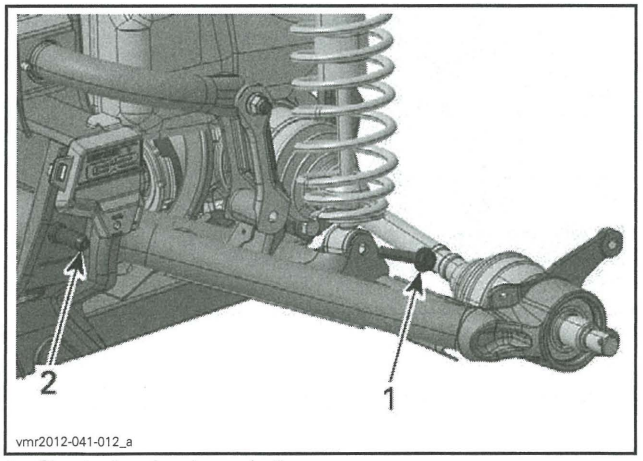

1. Shock absorber lower bolt
2. Trailing arm pivot shaft

8. Remove trailing arm from vehicle.

Trailing Arm Disassembly

Drive Shaft Bearing Removal

1. Remove circlip securing bearing into trailing arm.

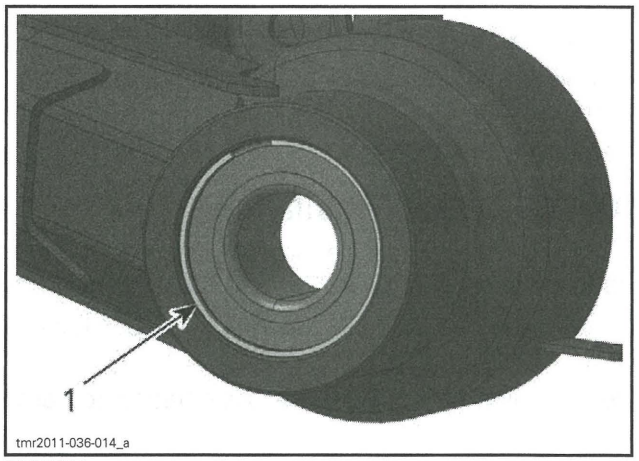

TYPICAL
1. Circlip

2. Install trailing arm on a press.
3. Use an appropriate bearing remover.
4. Remove drive shaft bearing from trailing arm.

Link Arm Inner Bushing Removal

Remove both cushions and inner bushing from trailing arm.

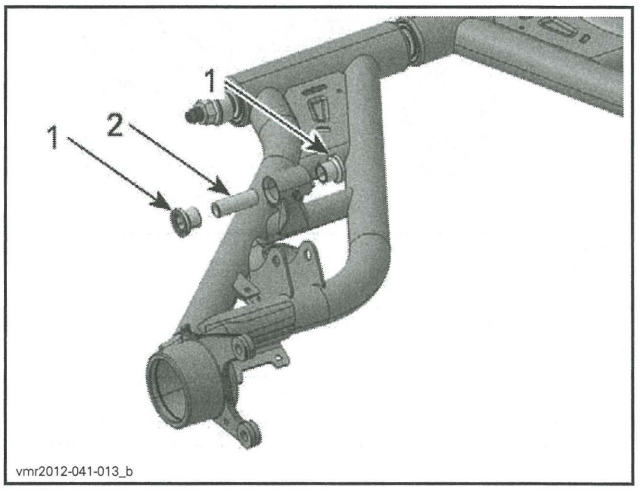

1. Cushions
2. Inner bushing

Trailing Arm Pivot Bearing Removal

1. Remove both spacers and seals from trailing arm pivot.

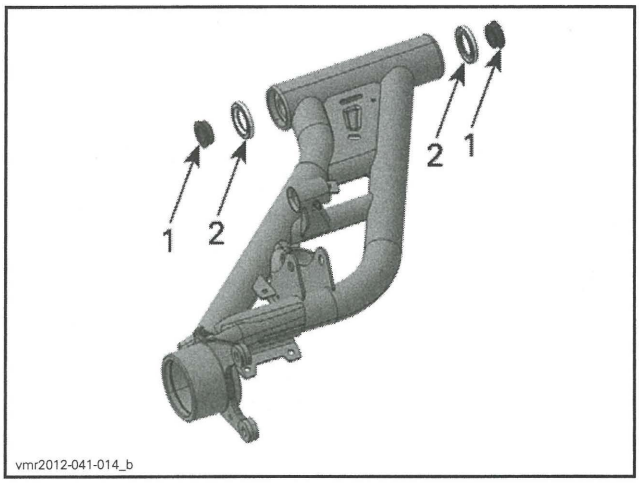

1. *Spacers*
2. *Seals*

2. Use an appropriate bearing remover.
3. Remove pivot bearings by pulling it outwards.

NOTE: Remove one bearing at a time.

4. Remove inner spacer from trailing arm.

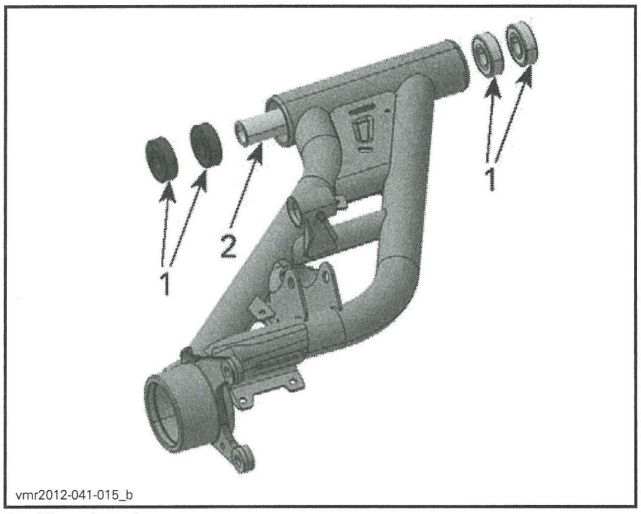

1. *Pivot bearings*
2. *Inner spacer*

Trailing Arm Inspection

Check trailing arms for:
- Cracks
- Bending.

Check seals condition.

Check inner race of each pivot bearing with your finger:
- Bearings should turn smoothly and quietly.

Replace all damaged parts.

Trailing Arm Assembly and Installation

The installation is the reverse of the removal procedure. However, pay attention to the following.

Install the following **NEW** parts:
- Trailing arm pivot nuts
- Pivot bearings
- Pivot seals
- Circlip.

Use an appropriate shaft to center trailing arm inner spacer during pivot bearings installation.

Install pivot bearings and inner spacer as per the following sequence.

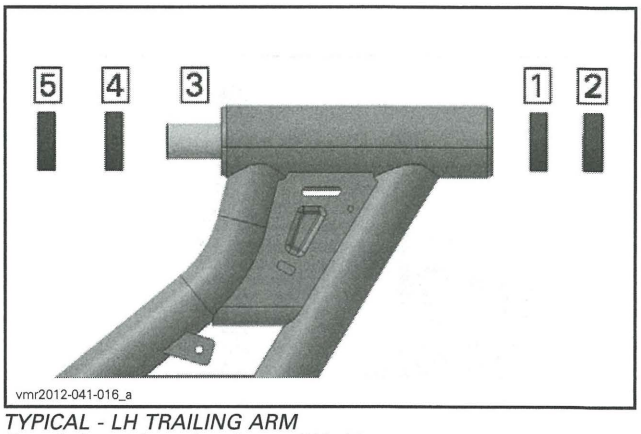

TYPICAL - LH TRAILING ARM
Step 1: Insert inner bearing on RH side
Step 2: Insert outer bearing on RH side
Step 3: Center inner spacer with RH side bearings using a shaft
Step 4: Insert inner bearing on LH side
Step 5: Insert outer bearing on LH side

Lubricate trailing arm pivot seals.

LUBRICATION	
Pivot seals	SUSPENSION GREASE (P/N 293 550 033)

Install trailing arm pivot seal with its taper face outwards.

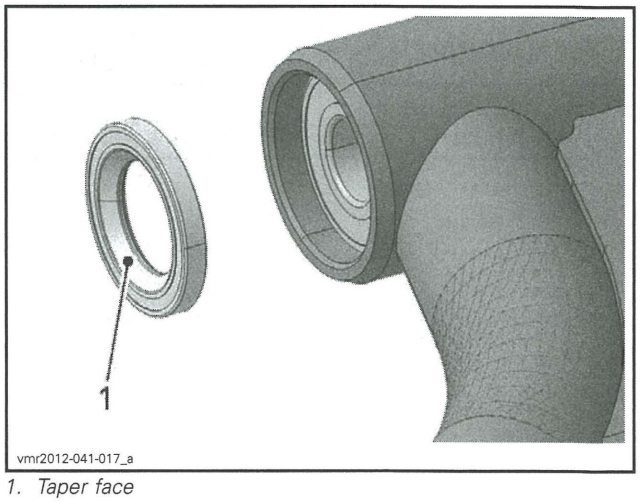

1. *Taper face*

Center trailing arm pivot shaft.

Tighten trailing arm pivot nuts as per the following sequence.

TIGHTENING SEQUENCE		
Trailing arm pivot nuts	RH side nut	Tighten nut until it reaches end of threads
	LH side nut	255 N•m ± 10 N•m (188 lbf•ft ± 7 lbf•ft)

Position link arm bolts with their heads towards inside.

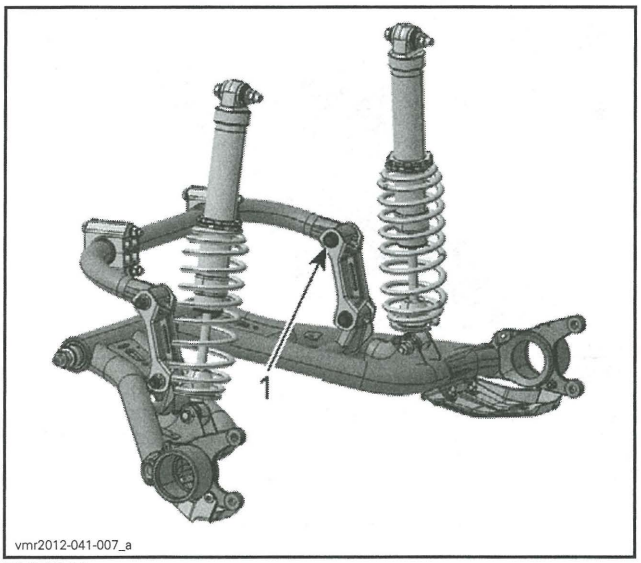

TYPICAL
1. Head towards inside

Tighten trailing arm fasteners to specification.

TORQUE	
Bolts securing trailing arm to link arm	61 N•m ± 9 N•m (45 lbf•ft ± 7 lbf•ft)
Shock absorber nuts	61 N•m ± 9 N•m (45 lbf•ft ± 7 lbf•ft)
Protective plate retaining nuts	4.5 N•m ± 0.5 N•m (40 lbf•**in** ± 4 lbf•**in**)

AIR CONTROLLED SUSPENSION (ACS)

SERVICE TOOLS

Description	Part Number	Page
FLUKE 115 MULTIMETER	529 035 868	510, 513–516, 519–520
OETIKER PLIERS	295 000 070	521
SPRING REMOVER	529 036 007	522

SERVICE PRODUCTS

Description	Part Number	Page
LOCTITE 592 (PIPE SEALANT)	293 800 018	511, 513, 518, 524

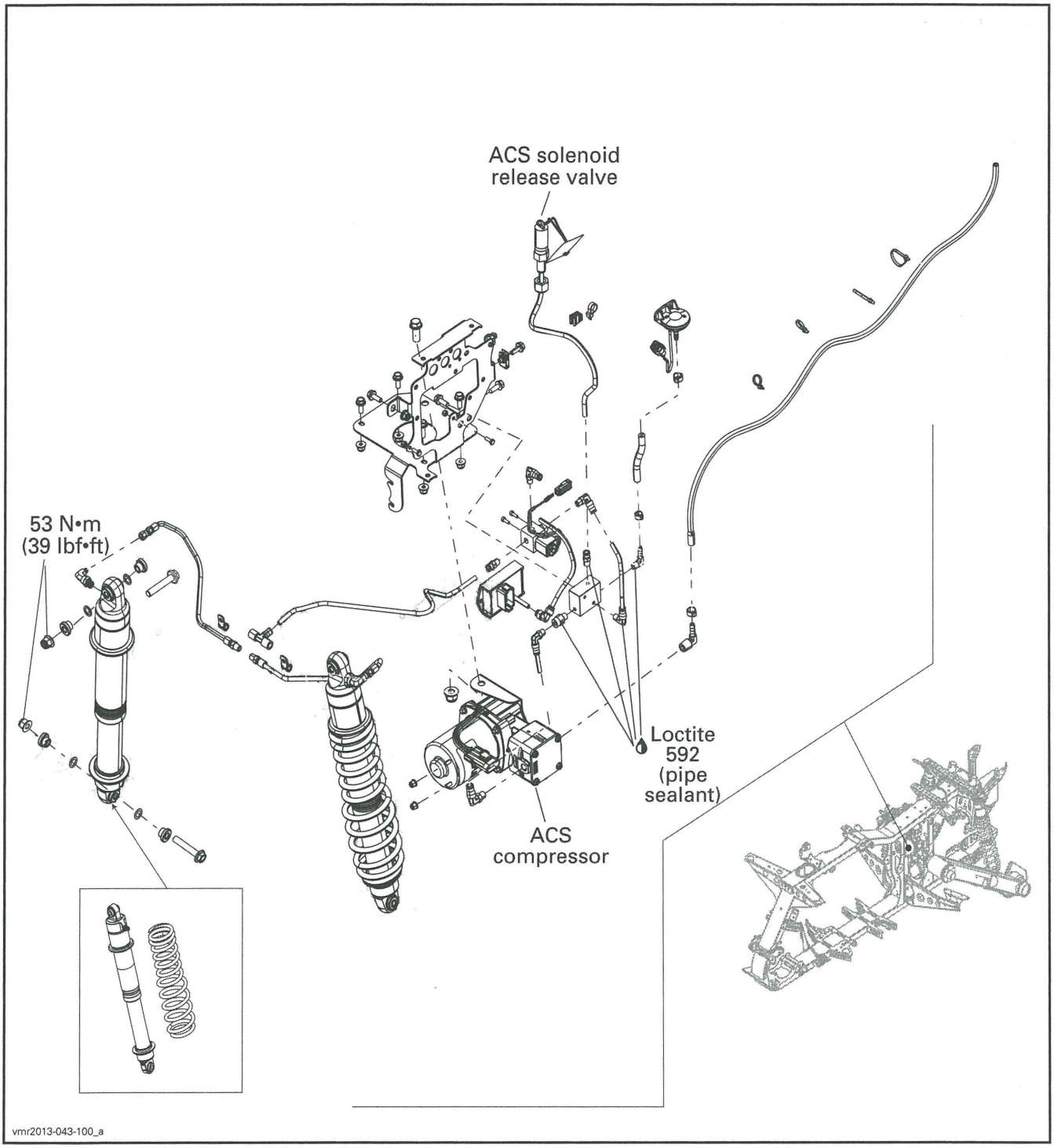
ACS solenoid release valve
53 N•m (39 lbf•ft)
Loctite 592 (pipe sealant)
ACS compressor
vmr2013-043-100_a

GENERAL

Be careful while manipulating nylon hoses, they must not be kinked.

⚠ CAUTION Always wear safety goggles when working with pressurized air system.

⚠ CAUTION The ACS suspension system may be under high pressure (up to 6 bar (85 PSI)). Release air pressure prior to working on the system. Refer to *RELEASING AIR PRESSURE IN SYSTEM FOR SERVICING*.

SYSTEM DESCRIPTION (FEATURES)

The ACS suspension automatically keeps air pressure constant with changing rider weights or loads applied. The system can be adjusted on the fly to suit rider's preferences.

The multifunction gauge indicates suspension setting as follows.

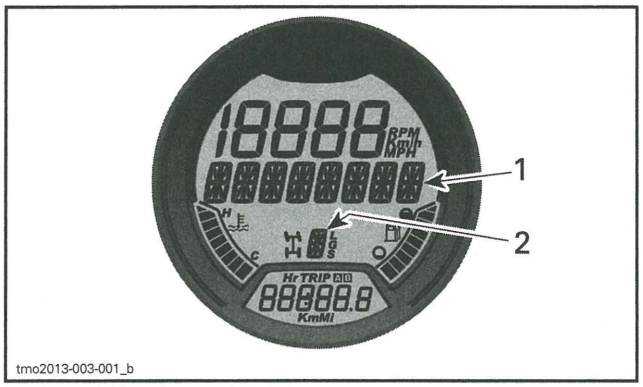

1. **AIR_SUSP** *displayed*
2. *Actual setting*

Refer to the following table to know the ACS pressure related to multifunction gauge setting.

ACS SUSPENSION SETTINGS			
SETTING	PRESSURE	RIDING COMFORT	RECOMMENDED LOAD
ACS 1	0.5 bar (8 PSI)	Softest	Operator only
ACS 2	1 bar (15 PSI)	Soft	
ACS 3	2 bar (30 PSI)	Semi-soft	Transporting a passenger **OR** a cargo
ACS 4	4 bar (55 PSI)	Semi-firm	
ACS 5	5 bar (70 PSI)	Firm	Transporting a passenger **AND** a cargo
ACS 6	6 bar (85 PSI)	Firmest	

Changing ACS Setting

To change the ACS setting proceed as follows:

Press MODE (M) button to display **AIR_SUSP**.

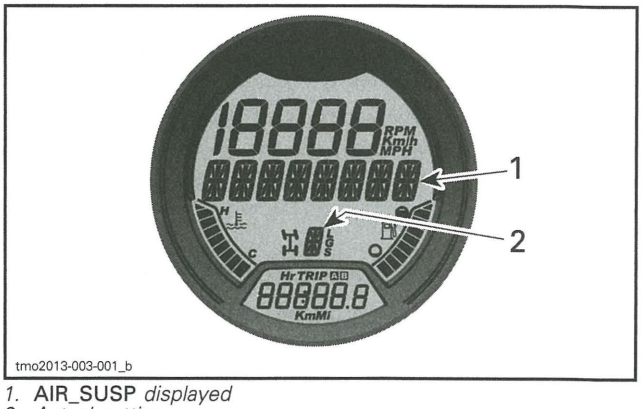

1. **AIR_SUSP** *displayed*
2. *Actual setting*

Press and release **ACS** button until the requested setting is displayed.

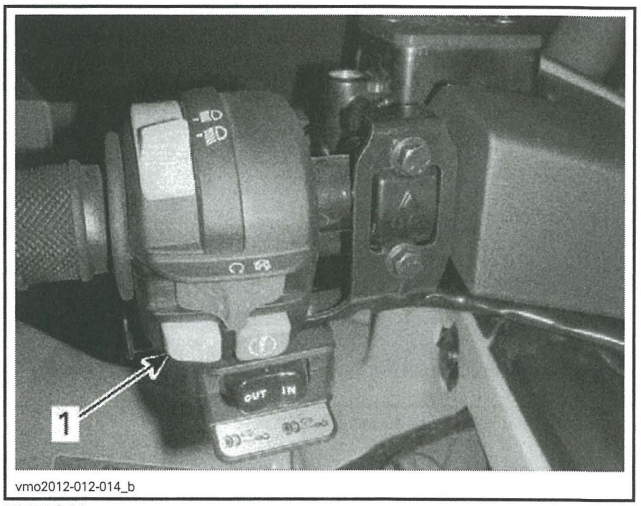

TYPICAL
1. *ACS button*

The requested setting is controlled by the ACS electronic module. The module is equipped with a pressure transducer to keep air pressure constant in the system. Depending on the rider adjustment, the module will increase pressure using the compressor or release pressure using the solenoid release valve.

ACS Setting Acknowledgement

If ACS suspension was set to *ACS 5* or *ACS 6* before shutting down the vehicle, the multifunction gauge will scroll an acknowledgement message at startup.

To acknowledge the ACS suspension setting, press and release **ACS** button while message appears.

NOTE: If the message is not acknowledged, the suspension will automatically return to setting *ACS 3*.

NOTE: If the MODE (M) button in the multi-function gauge is pressed while the acknowledgement message appears, the suspension will directly return to setting *ACS 3*.

NOTE: If the vehicle transmission is set to REVERSE position at startup, the override message will be displayed instead of acknowledgement message.

Using the Auxiliary Line to Inflate Tires

The ACS system is equipped with an auxiliary line specially designed to inflate tires. The air pressure in this auxiliary line is controlled by a second pressure transducer connected to the ACS module.

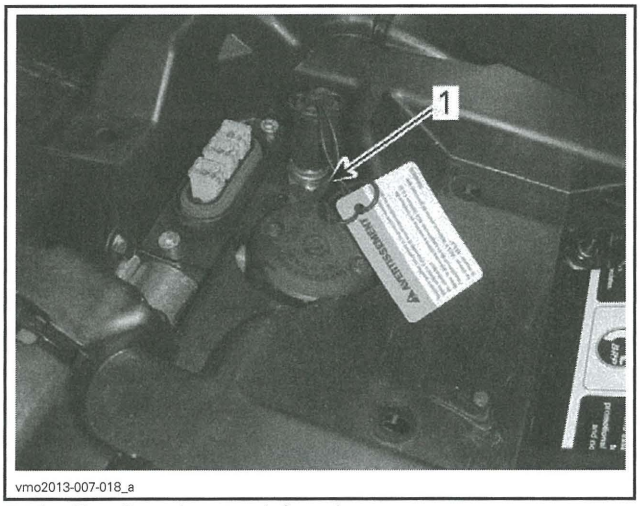

1. Auxiliary line adaptor to inflate tire

To ensure that the use of the auxiliary line will not change the pressure setting inside shock absorber, the system has been divided in two zones using check valves. With this layout, both pressure zones are independent to eliminate any air pressure variation.

NOTE: The auxiliary line output pressure will vary according to the ACS suspension setting. The *ACS 1* adjustment will provide less pressure than the *ACS 6* adjustment.

NOTICE **Never inflate tires above the recommended pressure.**

ACS SYSTEM		
ZONE	LINK WITH	PRESSURE TRANSDUCER LOCATION
High-pressure zone	Shock absorbers	Inside ACS module
Low-pressure zone	Auxiliary line	In line between solenoid release valve and compressor

Releasing Air Pressure in System for Servicing

Put ACS setting to 1 before servicing ACS system. Refer to *CHANGING ACS SETTING* subsection.

SYSTEM DESCRIPTION (COMPONENTS)

Fuse and Relay

ACS Fuse (F14)

1. ACS fuse (F14) is located in the front fuse box.

FRONT FUSES BOX		
NO	DESCRIPTION	RATING
MF3	DPS/ACS	40 A

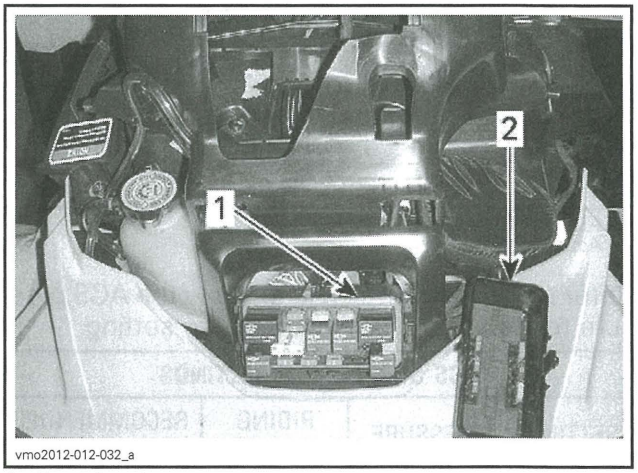

1. Front fuse box
2. Front fuse box cover

ACS Compressor Relay (R5)

Compressor relay is located above the ACS module. Refer to the following table.

RELAY (R5) TERMINAL	FRONT FUSE BOX PIN
	1000 LTD
86	11B
85	12A
30	12B
87	11A

ACS Main Components

ACS COMPONENTS	MAIN FUNCTION
Filter (air intake)	To filter air intake of the compressor
Compressor	To pressurize the system
Solenoid release valve	To release air from the system
Electronic module	To control the compressor or the solenoid release valve
Manifold	To split the air hoses and allows to manually release air in the system
Pressure transducer (Low-pressure zone)	To monitor the air pressure of the auxiliary line
Pressure transducer (High-pressure zone)	To monitor the air pressure of the shock absorbers
Check valve (compressor)	To protect the compressor
Check valve (between both zones)	To eliminate air pressure variation between low and high pressure zone
Auxiliary line	To inflate tire
Cluster	To monitor the air pressure setting

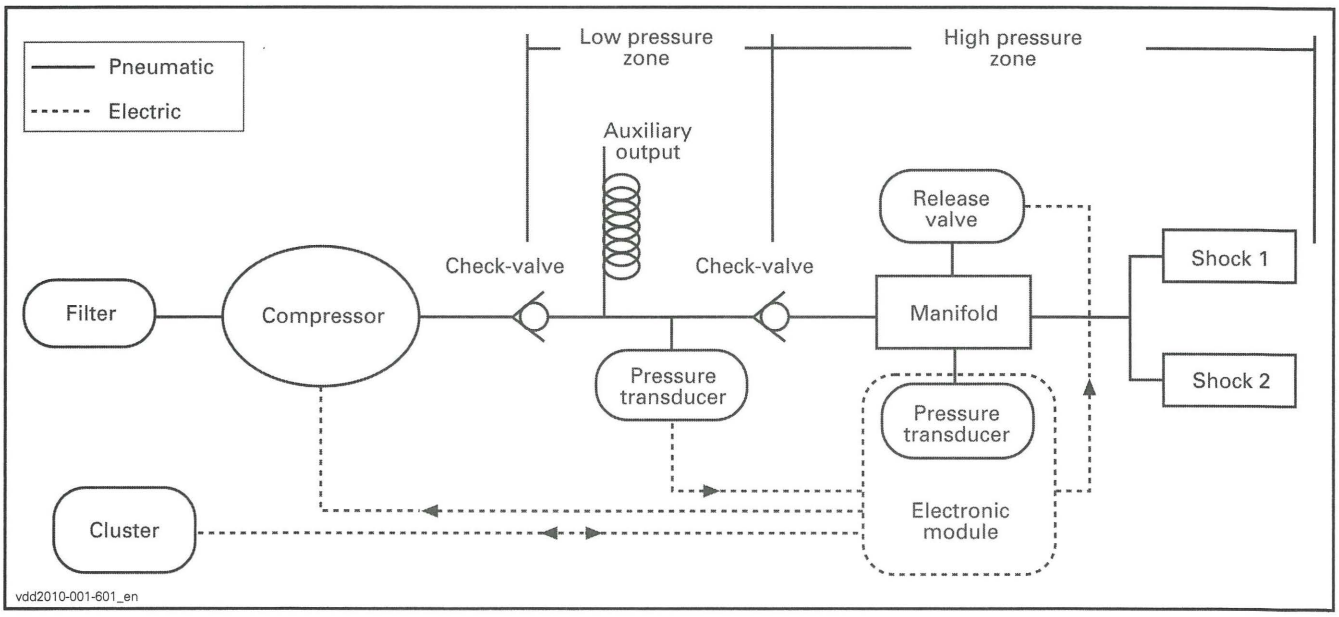

TROUBLESHOOTING

DIAGNOSTIC TIPS

Error Code (AIR FAULT) Displayed in Gauge

The error code **AIR FAULT** can appear on the multifunction gauge for different reasons that are not necessarily related to a failure of the ACS system.

If the error code appears on the multifunction gauge, it indicates a disparity between the requested and the actual suspension settings. The system should react to correct this situation and the error code will disappear.

If the error code remains active for a long period, it may indicates a major leak in the system. In this case, the module will automatically shut down the compressor to prevent it from overheating. The shut down procedure of the compressor will stay active until the next restart of the vehicle (key OFF, key ON).

If there is a major leak in the system, check the system for leakage, refer to *ACS SYSTEM LEAK TEST (TROUBLESHOOTING WITH B.U.D.S.)* subsection.

Error Code Displayed and Suspension Setting Can Not Be Adjusted

If there is no leak, it is probably an electrical problem. In this case, an electrical failure of the compressor or the solenoid valve will result the impossibility to change the actual suspension setting.

After multiple attempts to change suspension setting, the module will activate error code **AIR FAULT**. Refer to *TROUBLESHOOTING GUIDELINES* for further troubleshooting procedure.

TROUBLESHOOTING GUIDELINES

Requested Setting Display Does Not Change in Gauge

1. Check the override/**ACS** button as detailed in *OVERRIDE SWITCH* in the *LIGHTS GAUGE AND ACCESSORIES* subsection of the appropriate Shop Manual.

Suspension Setting Can Not Be Changed

1. Check the override/**ACS** button as detailed in *OVERRIDE SWITCH* in the *LIGHTS GAUGE AND ACCESSORIES* subsection of the appropriate Shop Manual.
2. Check fuse (F14).
3. Check ACS module signal continuity.
4. Check ACS module input voltage.
5. Check ACS module ground.

Refer to *ACS MODULE* to see the complete testing procedures.

Suspension Setting Can Be Reached to Decrease Pressure Only

1. Check relay (R5).
2. Check ACS compressor operation.
3. Check ACS compressor input voltage.

Refer to *ACS COMPRESSOR* to see the complete testing procedures.

Suspension Setting Can Be Reached To Increase Pressure Only

1. Check ACS solenoid valve operation.
2. Check ACS solenoid valve input voltage.

Refer to *ACS SOLENOID VALVE* to see the complete testing procedures.

No Pressure Output from the Auxiliary Line

1. Ensure that ACS suspension setting is adjusted to *ACS 6* to provide the maximum air pressure in the auxiliary line.
2. Check pressure transducer for air leakage.
3. Check signal continuity of the auxiliary line pressure transducer.
4. Check input voltage of the auxiliary line pressure transducer.
5. Check ground of the auxiliary line pressure transducer.
6. Check compressor operation.

Multifunction Gauge Display Flickers OFF and Back ON

1. Check diode (D7) of the solenoid valve.

NOTE: The diode (D7) is located on the main harness near the ACS sub-harness junction. Refer to the appropriate *WIRING DIAGRAM* for location.

TROUBLESHOOTING WITH B.U.D.S.

ACS System Leak Test

1. Connect vehicle to B.U.D.S. Refer to *COMMUNICATION TOOLS AND B.U.D.S. SOFTWARE* subsection of the appropriate Shop Manual.
2. Select **Activation** page.
3. Select **ACS** folder.
4. Press **Test START** button to proceed.

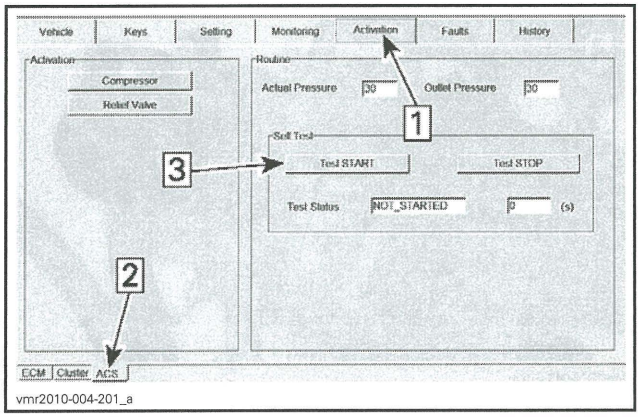

Step 1: Activation page
Step 2: ACS folder
Step 3: Leak Test START button

After pressing **Test START** button, the compressor will pressurize the air system at 6.5 bar (90 PSI) for approximately 2 minutes and B.U.D.S. will monitor the system for any leakage. The result will be indicated in the TEST STATUS box.

If a leak is detected, pressurize the system again and inspect hoses and fittings with soapy water to locate the faulty component.

If no leak is detected from hoses or fittings, inspect the compressor check valve and the auxiliary line check valve with soapy water.

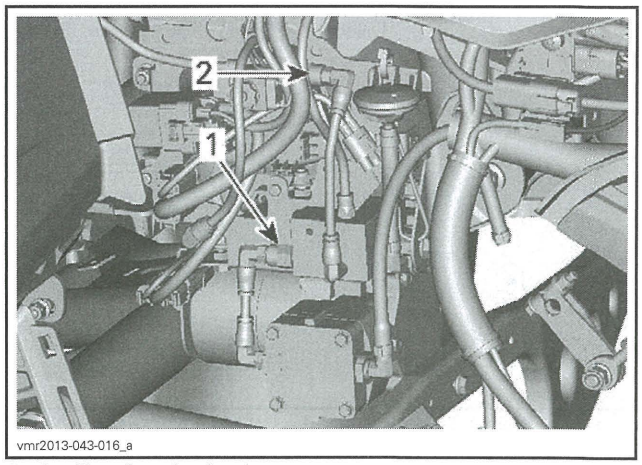

1. Auxiliary line check valve
2. Compressor check valve

ACS Air Pressure Monitoring

To monitor air pressure in the system during troubleshooting operation, proceed as follows:

1. Connect vehicle to B.U.D.S. Refer to *COMMUNICATION TOOLS AND B.U.D.S. SOFTWARE* subsection of the appropriate Shop Manual.
2. Select **Monitoring** page.
3. Select **ACS** folder.

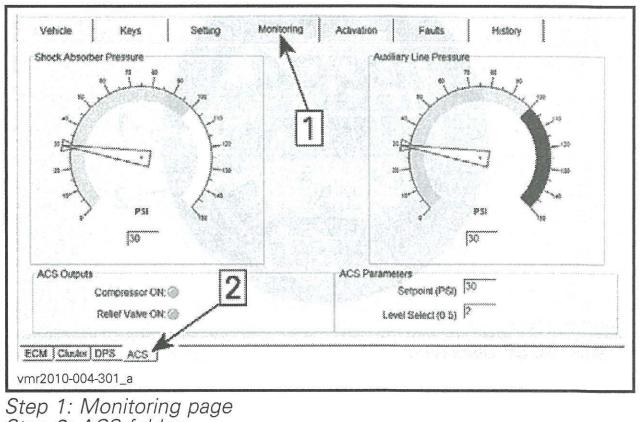

Step 1: Monitoring page
Step 2: ACS folder

PROCEDURES

ACS SOLENOID VALVE

ACS Solenoid Valve Operation Test

1. Connect vehicle to B.U.D.S. Refer to *COMMUNICATION TOOLS AND B.U.D.S. SOFTWARE* subsection of the appropriate Shop Manual.
2. Select **Activation** page.
3. Select **ACS** folder.
4. Press **Relief Valve** button to proceed.

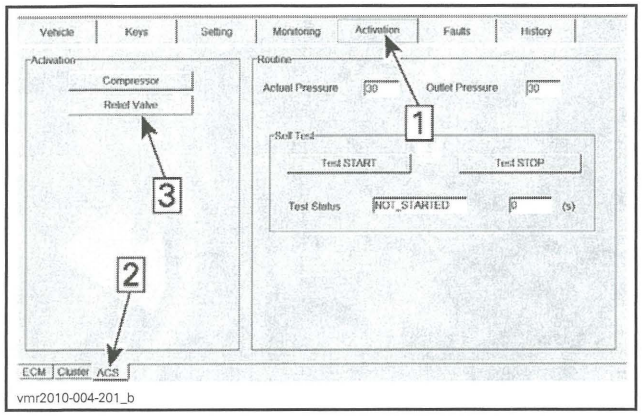

Step 1: Activation page
Step 2: ACS folder
Step 3: Solenoid valve operation test button

ACS Solenoid Valve Input Voltage Test

1. Remove seats and RH side panel.
2. Place ignition switch to ON position.
3. Press MODE (M) button to display **AIR_SUSP**.
4. Set suspension mode to **ACS 2** using the **ACS** button.
5. Wait until the actual setting shows 2.

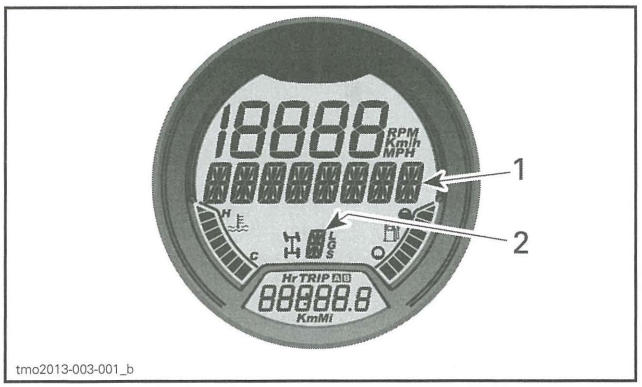

1. **AIR_SUSP** *displayed*
2. *Actual setting*

NOTE: Make sure to wait enough time in order to let the system adjust the air pressure.

6. Set the FLUKE 115 MULTIMETER (P/N 529 035 868) to Vdc.
7. Back probe solenoid connector (without disconnecting).
8. Set suspension mode to **ACS 1** using the **ACS** button.
9. Measure voltage between solenoid connector terminals as per the following table.

TEST PROBES	VOLTAGE
Pin 2 (YL/GN)	Battery voltage (± 12 Vdc)
Pin 1 (BK)	

ACS Solenoid Valve Removal

1. Release air pressure, refer to *RELEASING AIR PRESSURE IN SYSTEM FOR SERVICING* in this subsection.
2. Disconnect the following hoses and connector from solenoid valve air fittings.
   - Manifold air inlet hose (from manifold)
   - Module hose
   - Rear suspension shocks hose
   - Solenoid connector.

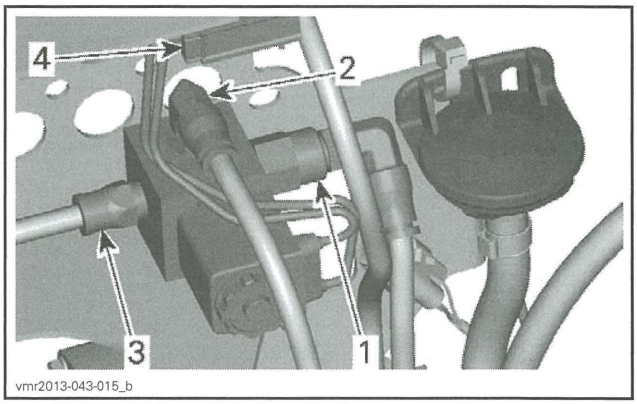

1. *Manifold air inlet hose (from compressor)*
2. *Module hose*
3. *Rear suspension Shocks hose*
4. *Solenoid connector*

3. To disconnect hoses, proceed as follows:
   3.1 Push fitting ring toward manifold.
   3.2 Hold ring in place.
   3.3 Pull air hose.

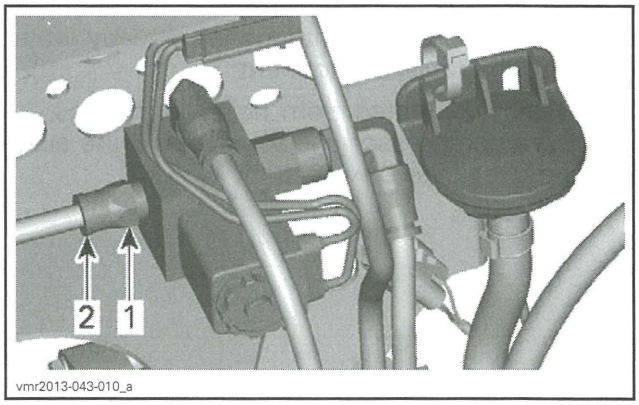

1. *Fitting*
2. *Fitting ring*

4. Remove solenoid retaining screws.

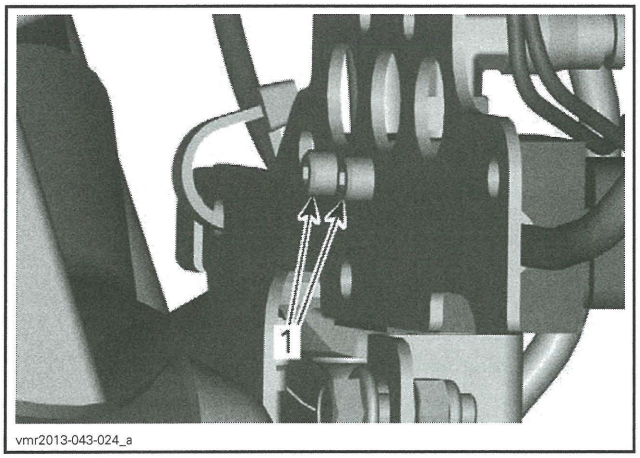

1. Retaining screws

5. Unscrew air fittings and check valve.

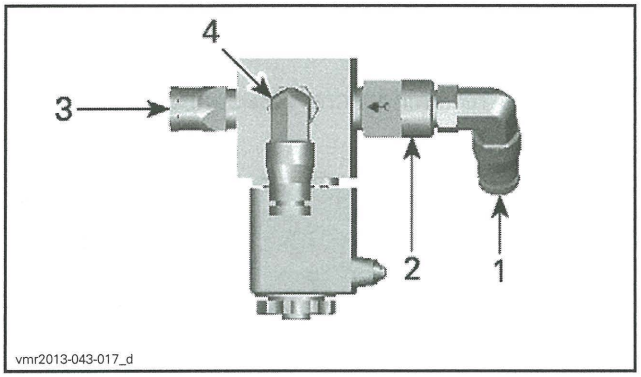

1. Manifold air inlet fitting (from manifold)
2. Manifold inlet check valve
3. Shocks fitting
4. Module fitting

ACS Solenoid Valve Installation

The installation procedure is the reverse of removal procedure, however pay attention to the following.

If fitting is the one previously removed (old one), apply LOCTITE 592 (PIPE SEALANT) (P/N 293 800 018) on all male fittings.

If fitting is a new one, do not apply sealant, it should be already applied on male threads.

On check valve apply LOCTITE 592 (PIPE SEALANT) (P/N 293 800 018) on male threads.

Install air fittings and check valve as follows with arrows pointing toward solenoid.

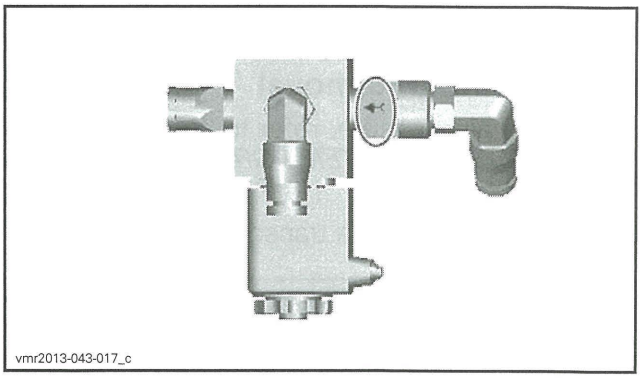

Install air fittings and check valve as follows.

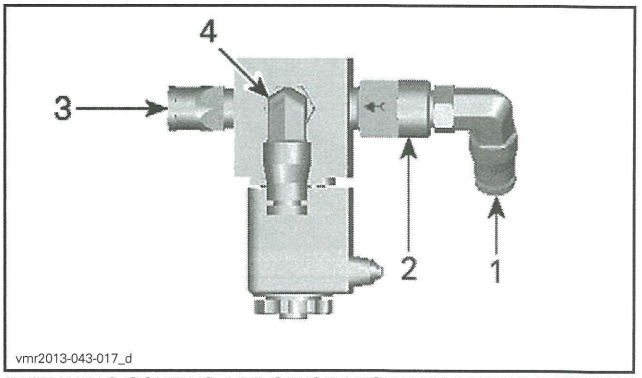

RETAINING SCREWS ARE OFFSET TOWARD MODULE FITTING
1. Manifold air inlet fitting (from manifold)
2. Auxiliary line check valve
3. Shocks fitting
4. Module fitting

Ensure that air hoses are properly inserted into fittings, refer to the following illustrations.

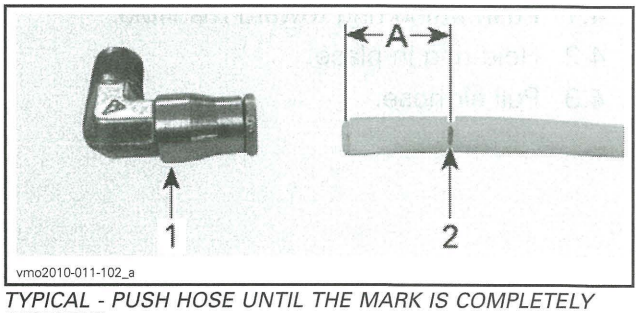

TYPICAL - PUSH HOSE UNTIL THE MARK IS COMPLETELY INSERTED
1. Fitting
2. Mark
A. Must be inserted into fitting

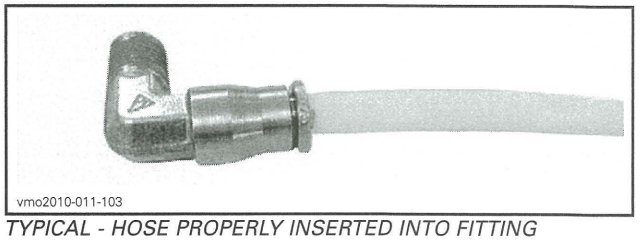

TYPICAL - HOSE PROPERLY INSERTED INTO FITTING

ACS MANIFOLD

ACS Manifold Removal

1. Release air pressure, refer to *RELEASING AIR PRESSURE IN SYSTEM FOR SERVICING* in this subsection.
2. Disconnect pressure transducer connector.

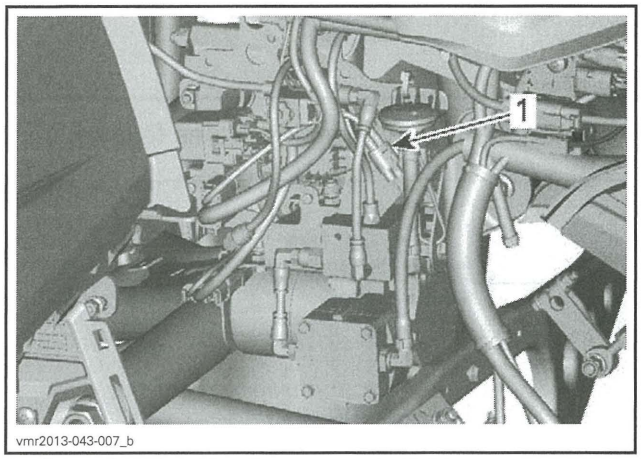

1. Connector of auxiliary line pressure transducer

3. Disconnect the following hoses and connector from solenoid valve air fittings.
   - Air inlet hose (from compressor)
   - Solenoid valve hose
   - Auxiliary line hose
   - Pressure transducer.
4. To disconnect hoses, proceed as follows:
   - 4.1 Push fitting ring toward manifold.
   - 4.2 Hold ring in place.
   - 4.3 Pull air hose.

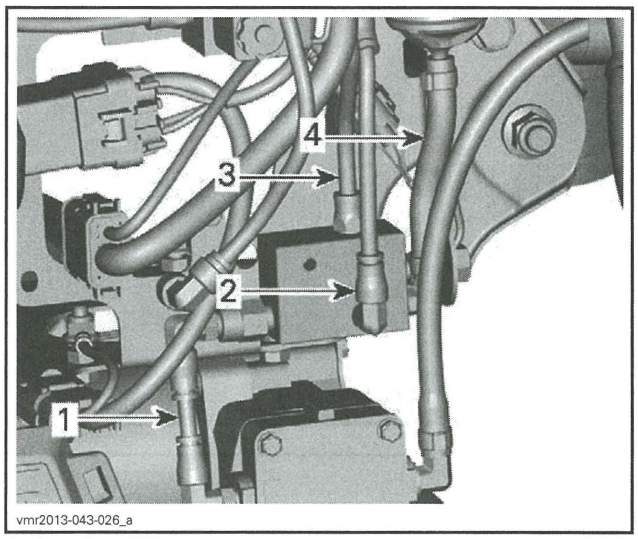

1. Inlet hose (from compressor)
2. Solenoid valve hose
3. Auxiliary valve hose
4. Pressure transducer hose

5. Remove retaining screw securing manifold to support.

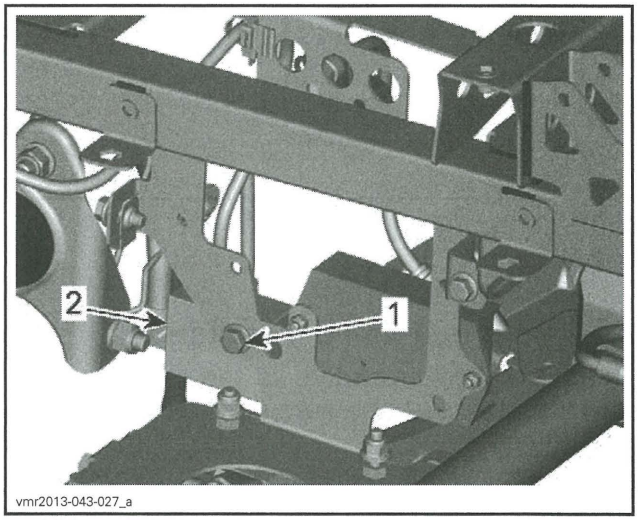

1. ACS manifold retaining screw
2. ACS manifold

6. Unscrew air fittings and check valve.

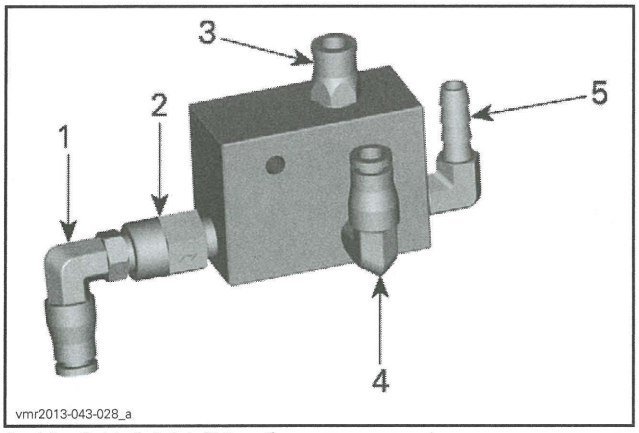

1. *Manifold air inlet fitting (from compressor)*
2. *Compressor line check valve*
3. *Auxiliary line fitting*
4. *Solenoid line fitting*
5. *Pressure transducer fitting*

ACS Manifold Installation

The installation procedure is the reverse of removal procedure, however pay attention to the following.

Apply LOCTITE 592 (PIPE SEALANT) (P/N 293 800 018) on male fittings.

ACS MODULE

ACS Module Signal Circuit Continuity Test

1. Remove seats and RH side panel.
2. Disconnect multifunction gauge from vehicle. Refer to *LIGHTS, GAUGE AND ACCESSORIES* subsection of the appropriate Shop Manual.
3. Disconnect ACS module connector.

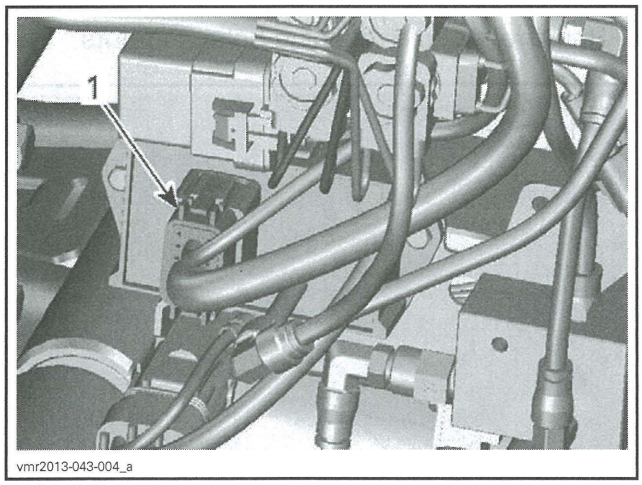

1. *Module connector*

4. Set the FLUKE 115 MULTIMETER (P/N 529 035 868) to Ω.
5. Measure resistance as per the following tables.

TEST PROBES	RESISTANCE
Gauge pin 18 (WH/BK)	Close to 0 Ω
Module pin 5 (WH/BK)	

TEST PROBES	RESISTANCE
Gauge pin 19 (WH/BE)	Close to 0 Ω
Module pin 6 (WH/BE)	

ACS Module Input Voltage Test

1. Remove seats and RH side panel.
2. Disconnect module connector.

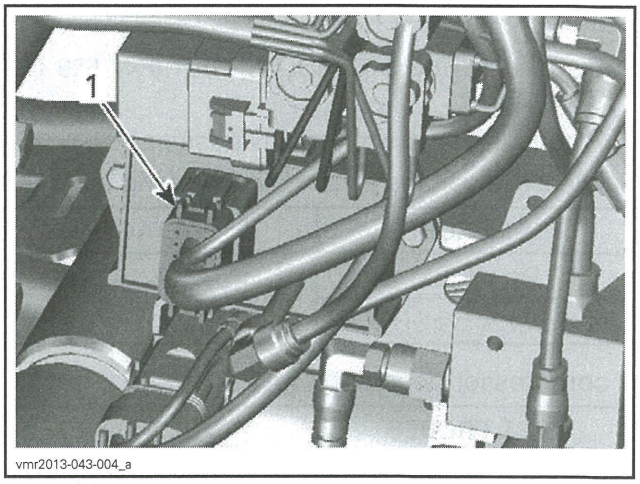

1. *Module connector*

3. Set the FLUKE 115 MULTIMETER (P/N 529 035 868) to Vdc.
4. Place ignition switch to ON position.
5. Measure voltage as per the following table.

TEST PROBES	VOLTAGE
Pin 12 (OR/GN)	Battery voltage (± 12 Vdc)
Battery negative (-) post	

ACS Module Ground Test

1. Remove seats and RH side panel.
2. Disconnect module connector.

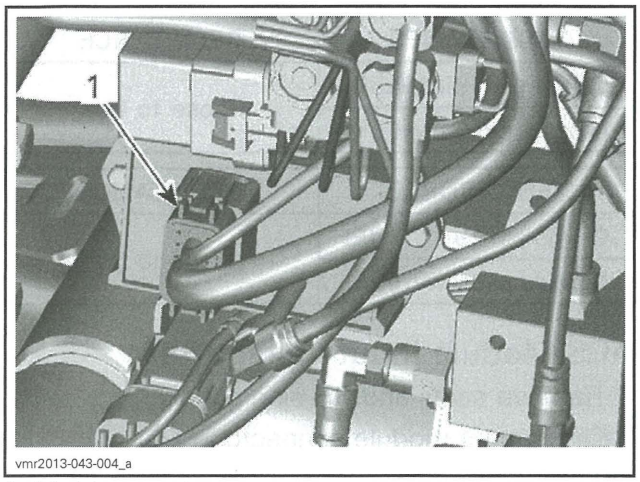

1. Module connector

3. Set the FLUKE 115 MULTIMETER (P/N 529 035 868) to Vdc.
4. Place ignition switch to ON position.
5. Measure voltage as per the following table.

TEST PROBES	VOLTAGE
Pin 7 (BK)	Battery voltage (± 12 Vdc)
Battery positive (+) post	

If compressor does not work:

TEST PROBES	VOLTAGE
HIC8 (RD/PK)	Battery voltage (± 12 Vdc)
Battery positive (+) post	

If valves do not work:

TEST PROBES	VOLTAGE
DB1-6 (RD/BR)	Battery voltage (± 12 Vdc)
Battery positive (+) post	

NOTE: Verify compressor is properly grounded to frame.

ACS Module Removal

1. Release air pressure, refer to *RELEASING AIR PRESSURE IN SYSTEM FOR SERVICING* in this subsection.
2. Disconnect module hose from solenoid valve air fitting as follows:
   2.1 Push fitting ring toward manifold.
   2.2 Hold ring in place.
   2.3 Pull air hose.

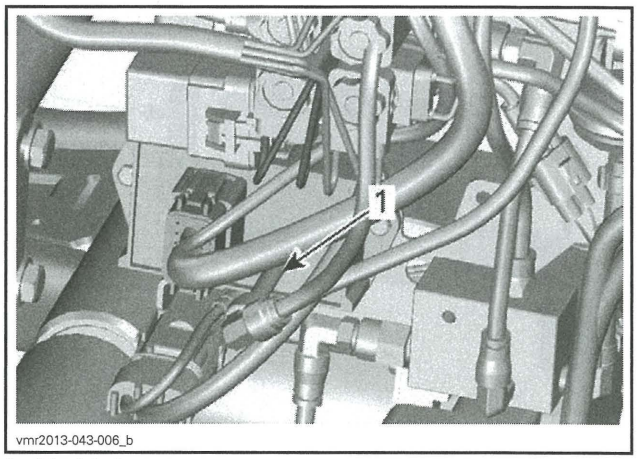

1. Module hose

NOTICE **Do not attempt to disconnect hose from module.**

3. Disconnect module connector.

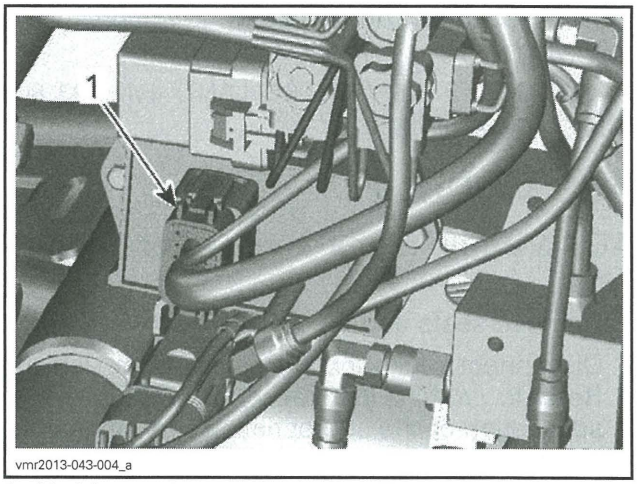

1. Module connector

4. Remove module retaining bolts and nuts.

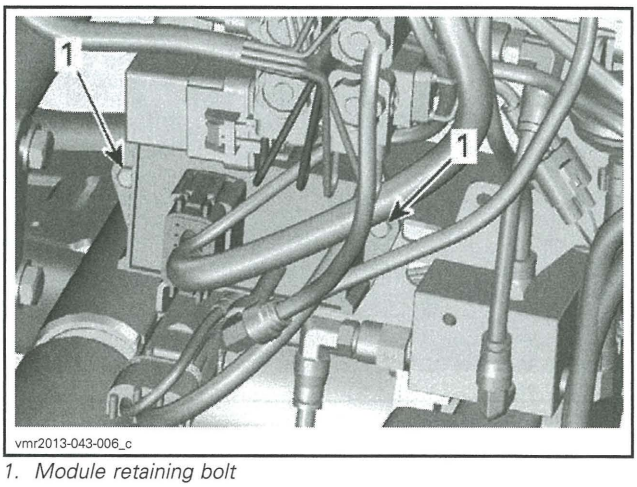

1. Module retaining bolt

5. Remove module from vehicle.

ACS Module Installation

The installation procedure is the reverse of removal procedure, however pay attention to the following.

If a new ACS module is installed, check diode (D7) of the solenoid valve to ensure that it is not defective as it can damage the ACS module. The diode (D7) is located on the main harness near the ACS sub-harness junction. Refer to the appropriate *WIRING DIAGRAM* for diode location.

Ensure that air hoses are properly inserted into fittings, refer to the following illustrations.

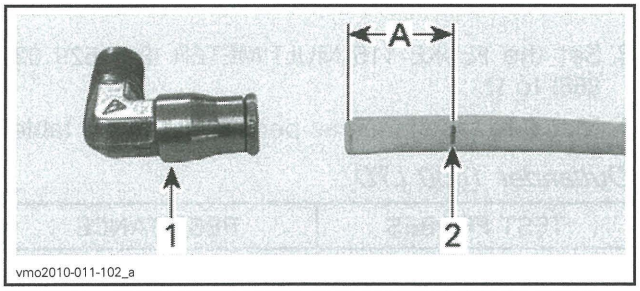

TYPICAL - PUSH HOSE UNTIL THE MARK IS COMPLETELY INSERTED
1. *Fitting*
2. *Mark*

A. Must be inserted into fitting

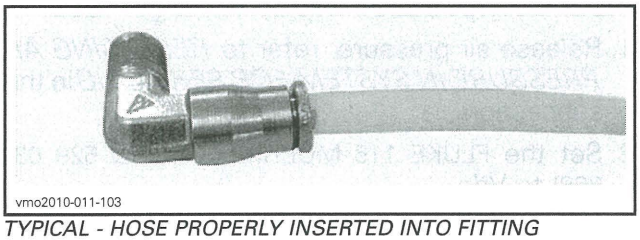

TYPICAL - HOSE PROPERLY INSERTED INTO FITTING

ACS COMPRESSOR RELAY (R5)

ACS Relay Continuity Test

1. Remove relay (R5) at the beginning of this section.
2. Set the FLUKE 115 MULTIMETER (P/N 529 035 868) to Ω.
3. Measure resistance as per the following table.

TEST PROBES	RESISTANCE
Terminal 30	Open (OL)
Terminal 87	

4. Apply 12 volts on terminals 86 and 85.
5. Measure resistance again as per the following table.

TEST PROBES	RESISTANCE
Terminal 30	Close to 0 Ω
Terminal 87	

If results are not as per the above tables, replace relay.

ACS Relay Input Voltage Test

1. Remove relay (R5) at the beginning of this section.
2. Set the FLUKE 115 MULTIMETER (P/N 529 035 868) to Vdc.
3. Place ignition switch to ON position.
4. Measure voltage as per the following tables.

Outlander 1000 LTD

TEST PROBES	VOLTAGE
Fuse box 6B (OG/GN)	Battery voltage (± 12 Vdc)
Battery negative (-) post	

TEST PROBES	VOLTAGE
Fuse box 5B (RD/BE)	Battery voltage (± 12 Vdc)
Battery negative (-) post	

If voltage is not as specified, check wiring, connector and terminal condition.

ACS Relay Ground Wire Continuity Test

1. Remove relay (R5), refer to *FUSE AND RELAY* at the beginning of this section.
2. Disconnect module connector.

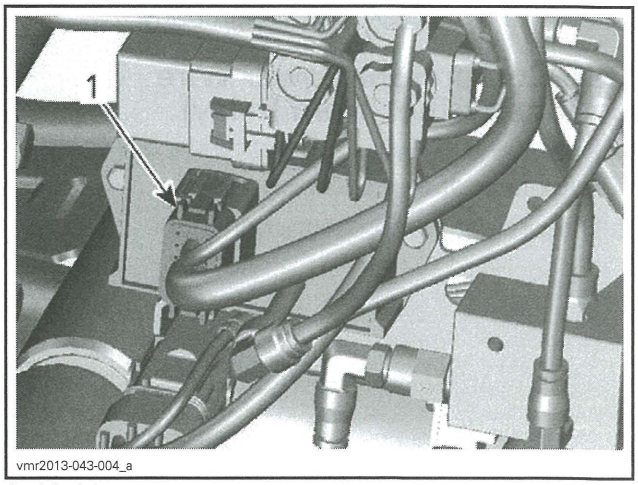

1. *Module connector*

3. Set the FLUKE 115 MULTIMETER (P/N 529 035 868) to Ω.
4. Measure resistance as per the following table.

Outlander 1000 LTD

TEST PROBES	RESISTANCE
Module pin 8 (OR/PK)	Close to 0 Ω
Relay ground wire (OR/PK)	

ACS COMPRESSOR

ACS Compressor Operation Test

1. Connect vehicle to B.U.D.S. Refer to *COMMUNICATION TOOLS AND B.U.D.S. SOFTWARE* subsection of the appropriate Shop Manual.
2. Select **Activation** page.
3. Select **ACS** folder.
4. Press **Compressor** button to proceed.

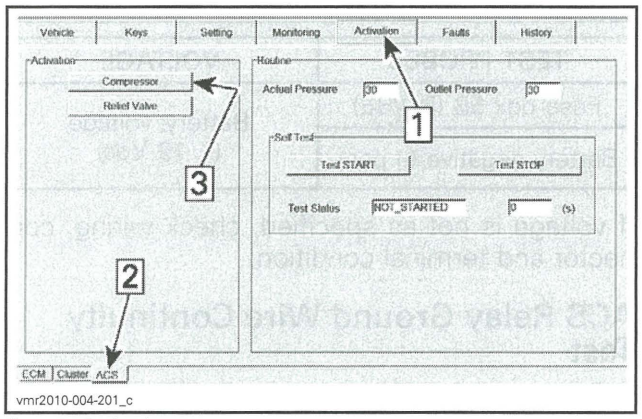

Step 1: Activation page
Step 2: ACS folder
Step 3: Compressor operation test button

5. Verify if compressor works properly.

ACS Compressor Power Wire Continuity Test (from Relay)

1. Remove relay, refer to *FUSE AND RELAY* at the beginning of this section.
2. Disconnect compressor connector.

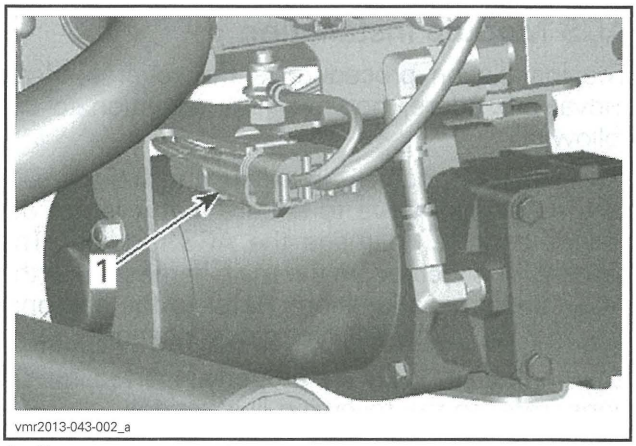

1. Compressor connector

3. Set the FLUKE 115 MULTIMETER (P/N 529 035 868) to Ω.
4. Measure resistance as per the following table.

Outlander 1000 LTD

TEST PROBES	RESISTANCE
Compressor pin C (RD/WH)	Close to 0 Ω
Terminal 87 (RD/WH)	

ACS Compressor Input Voltage Test

1. Release air pressure, refer to *RELEASING AIR PRESSURE IN SYSTEM FOR SERVICING* in this subsection.
2. Set the FLUKE 115 MULTIMETER (P/N 529 035 868) to Vdc.
3. Disconnect compressor connector.

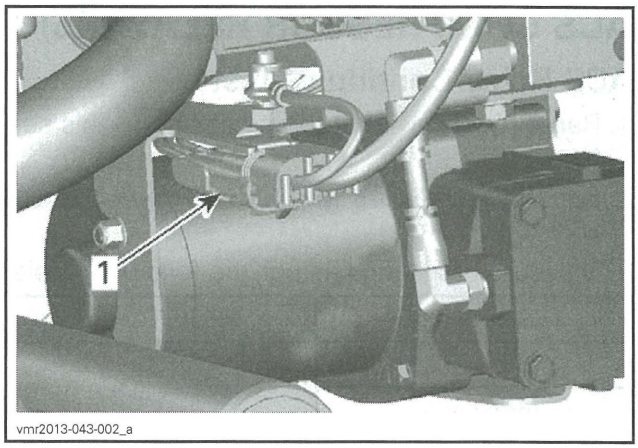

1. Compressor connector

4. Place ignition switch to ON position.
5. Probe compressor connector.
6. Press MODE (M) button to display **AIR_SUSP**.

7. Set suspension mode to **ACS 2** using the **ACS** button.

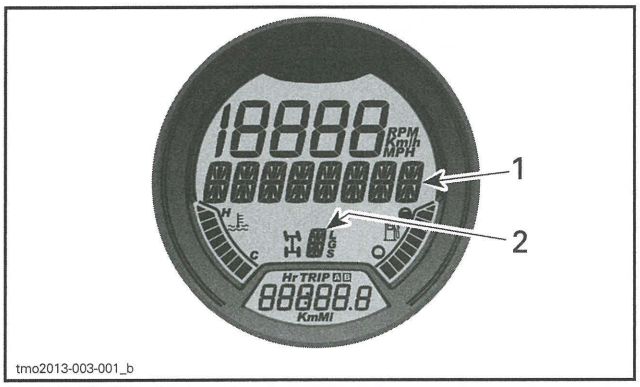

1. **AIR_SUSP** *displayed*
2. *Actual setting*

8. Measure voltage between compressor connector terminals as per the following table.

TEST PROBES	VOLTAGE
Pin C (RD/WH)	Battery voltage (± 12 Vdc)
Pin A (BK)	

ACS Compressor Removal

1. Release air pressure, refer to *RELEASING AIR PRESSURE IN SYSTEM FOR SERVICING* in this subsection.
2. Refer to the *BODY* section and remove the following:
   - RH side panel
   - RH footrest.
3. Remove solenoid valve. Refer to *ACS SOLENOID VALVE REMOVAL*.
4. Remove manifold. Refer to *ACS MANIFOLD REMOVAL*.
5. Remove module. Refer to *ACS MODULE REMOVAL*.
6. Remove connector of auxiliary line pressure transducer from support.

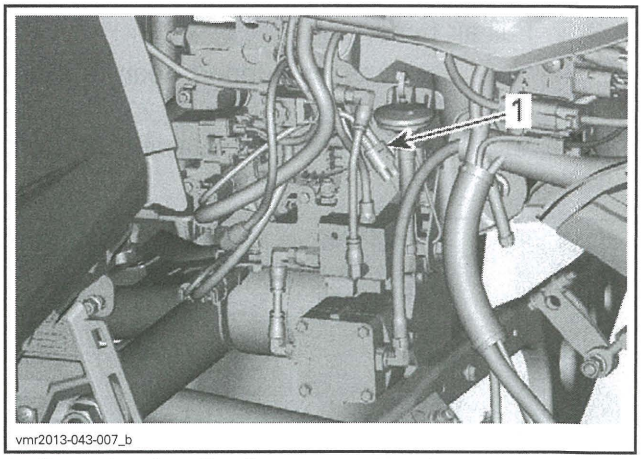

1. *Connector of auxiliary line pressure transducer*

7. Disconnect compressor connector.

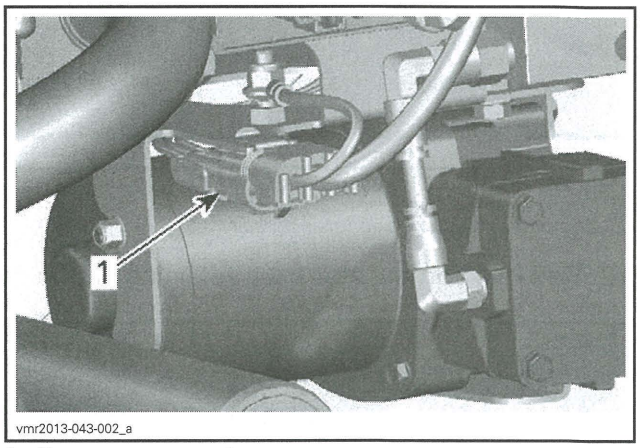

1. *Compressor connector*

8. Disconnect the following hoses from compressor air fittings.
   - Compressor air inlet hose
   - Compressor air outlet hose.

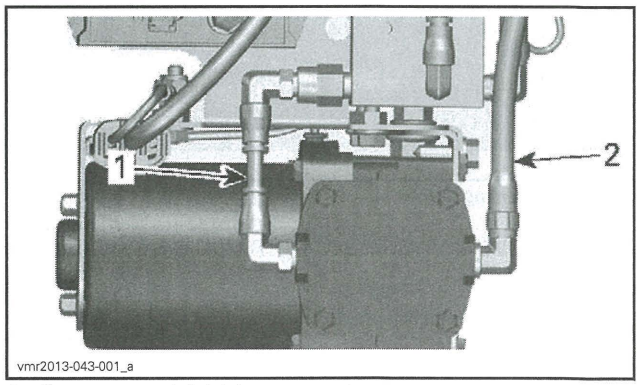

1. *Compressor air inlet hose*
2. *Compressor air outlet hose*

9. To disconnect hoses, proceed as follows:
   9.1 Push fitting ring toward manifold.
   9.2 Hold ring in place.

9.3 Pull air hose.

10. Remove compressor support rear retaining bolts and nuts.
11. Remove compressor side retaining bolt and nut.

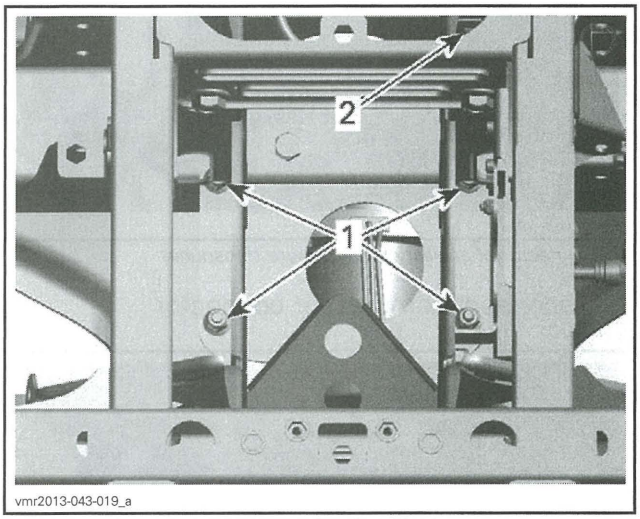

TYPICAL - PARTS REMOVED FOR CLARITY
1. *Compressor support rear retaining bolts*
2. *Compressor support side retaining bolt*

12. Remove compressor front retaining screw.

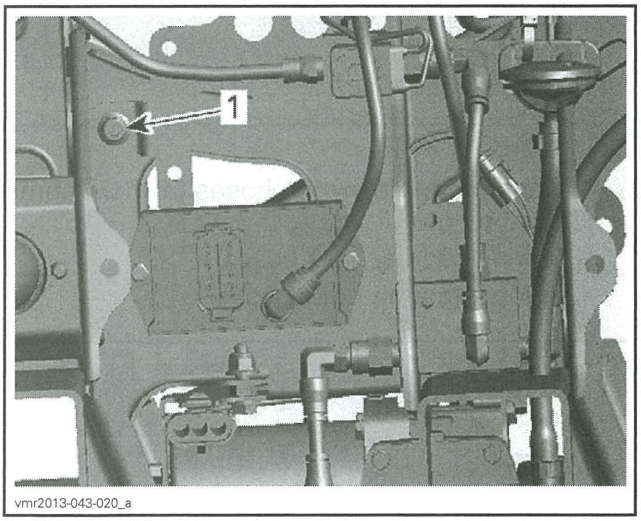

1. *Front retaining screw*

13. Remove compressor from vehicle by pulling it upwards.
14. Detach compressor connector from compressor support.
15. Remove mounting nuts from compressor support.
16. Remove rear compressor support from compressor.

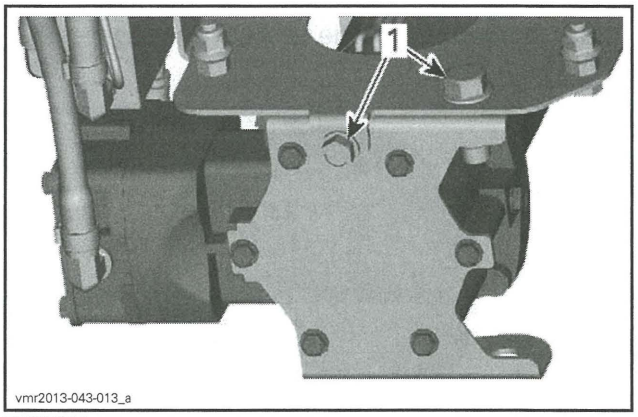

TYPICAL
1. *Compressor front support mounting bolts*

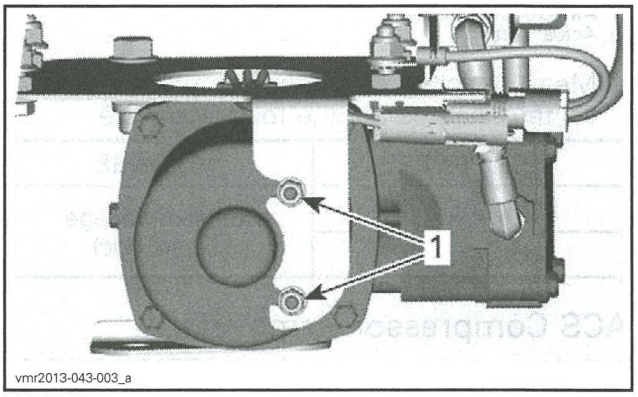

TYPICAL
1. *Compressor rear support mounting nuts*

NOTICE **Do not remove front support from compressor.**

17. Remove the following fittings from compressor.
    - Compressor air inlet fitting
    - Compressor air outlet fitting.

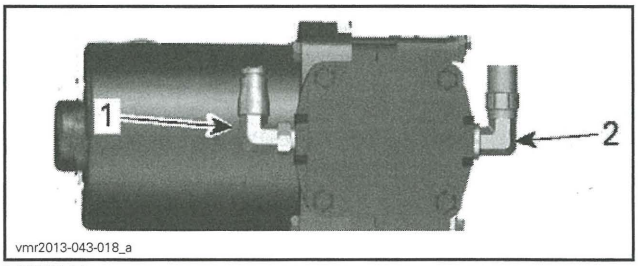

TYPICAL
1. *Compressor air inlet fitting*
2. *Compressor air outlet fitting*

ACS Compressor Installation

The installation procedure is the reverse of removal procedure, however pay attention to the following.

If fitting or valve is the one previously removed (old one), apply LOCTITE 592 (PIPE SEALANT) (P/N 293 800 018) on all male threads.

If fitting or valve is a new one, do not apply sealant, it should be already applied on male threads.

Ensure that check valve is installed with arrows pointing toward the manifold.

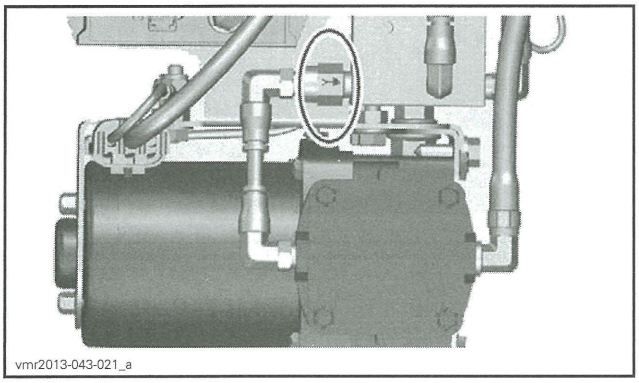
vmr2013-043-021_a

Ensure that air hoses are properly inserted into fittings, refer to the following illustrations.

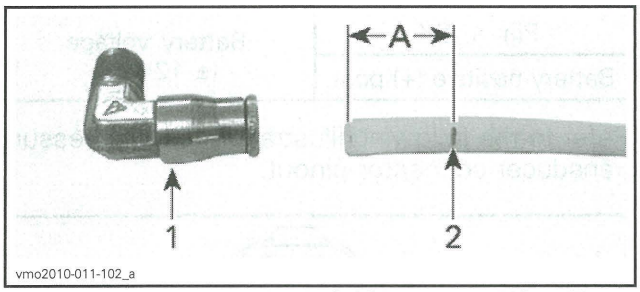

vmo2010-011-102_a

PUSH HOSE UNTIL THE MARK IS COMPLETELY INSERTED
1. *Fitting*
2. *Mark*

A. Must be inserted into fitting

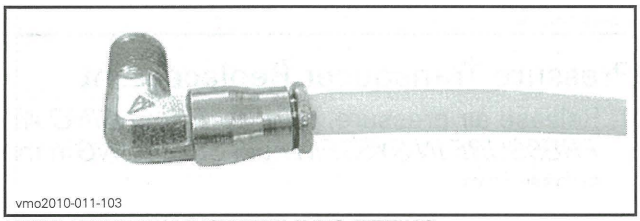
vmo2010-011-103

HOSE PROPERLY INSERTED INTO FITTING

ACS AIR FILTER

ACS compressor picks up air from air box.

PRESSURE TRANSDUCER

Pressure Transducer Signal Circuit Continuity Test

1. Remove seats and RH side panel.
2. Disconnect module connector.

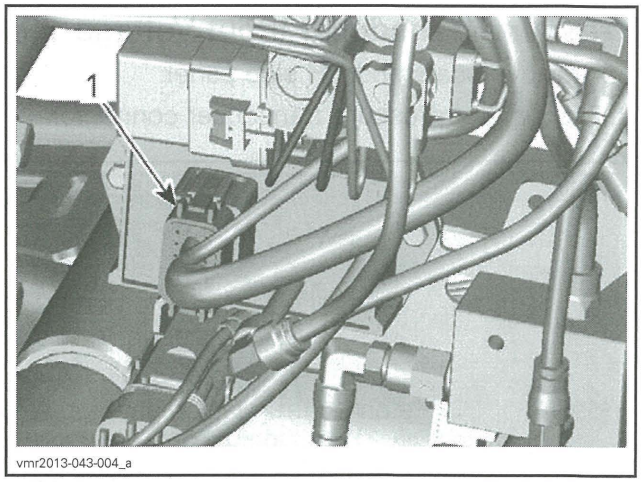

vmr2013-043-004_a

1. Module connector

3. Disconnect pressure transducer connector.

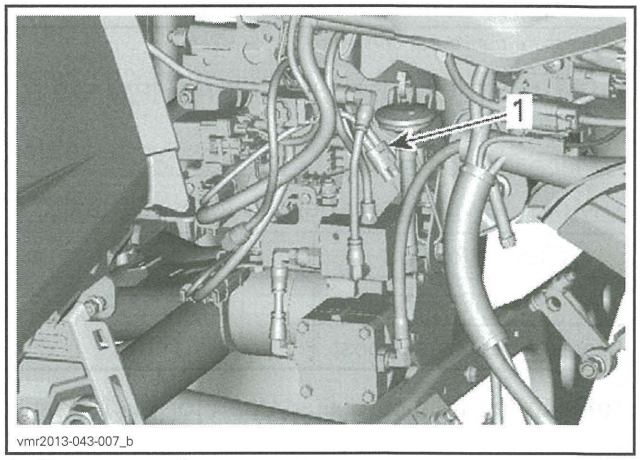

vmr2013-043-007_b

1. Pressure transducer connector

4. Set the FLUKE 115 MULTIMETER (P/N 529 035 868) to Ω.
5. Measure resistance as per the following table.

TEST PROBES	RESISTANCE
Pressure transducer pin 2 (PK/BR)	Close to 0 Ω
Module pin 3 (PK/BR)	

Refer to the following illustration for the pressure transducer connector pinout.

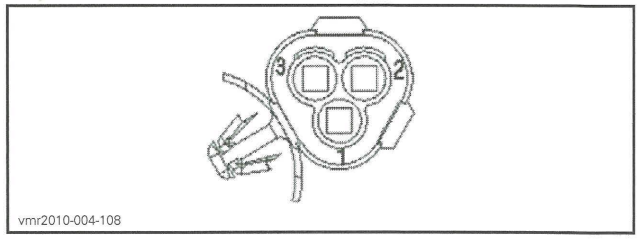

vmr2010-004-108

Pressure Transducer Input Voltage Test

1. Remove seats and RH side panel.
2. Disconnect pressure transducer connector.

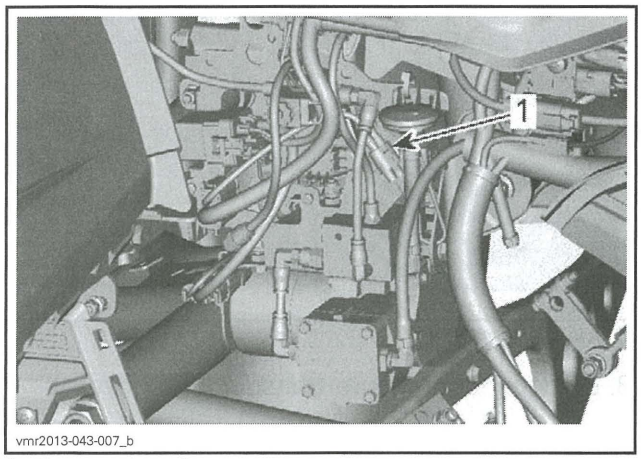

1. Pressure transducer connector

3. Set the FLUKE 115 MULTIMETER (P/N 529 035 868) to Vdc.
4. Place ignition switch to ON position.
5. Measure voltage as per the following table.

TEST PROBES	VOLTAGE
Pin 3 (PK/OR)	Battery voltage (± 12 Vdc)
Battery negative (-) post	

Refer to the following illustration for the pressure transducer connector pinout.

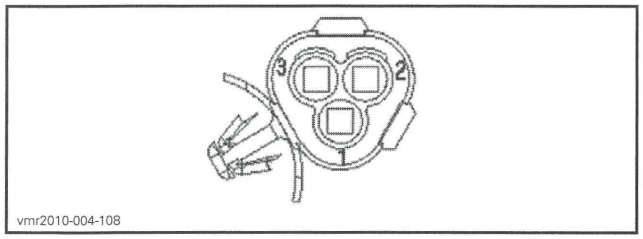

Pressure Transducer Ground Test

1. Remove seats and RH side panel.
2. Disconnect pressure transducer connector.

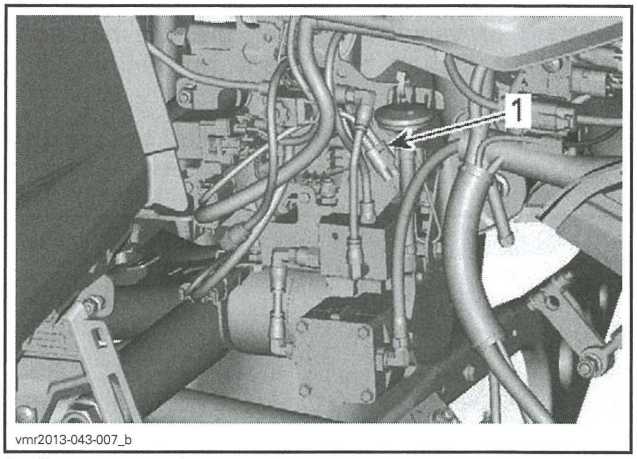

1. Pressure transducer connector

3. Set the FLUKE 115 MULTIMETER (P/N 529 035 868) to Vdc.
4. Place ignition switch to ON position.
5. Measure voltage as per the following table.

TEST PROBES	VOLTAGE
Pin 1 (BK)	Battery voltage (± 12 Vdc)
Battery positive (+) post	

Refer to the following illustration for the pressure transducer connector pinout.

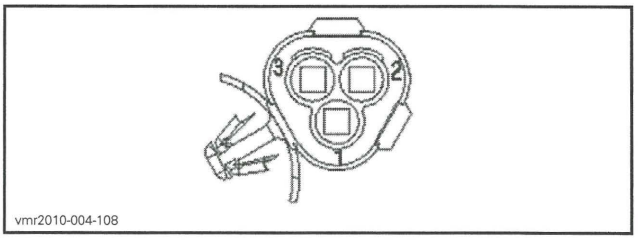

Pressure Transducer Replacement

1. Release air pressure, refer to *RELEASING AIR PRESSURE IN SYSTEM FOR SERVICING* in this subsection.
2. Disconnect pressure transducer connector.
3. Remove Oetiker clamp.
4. Remove pressure transducer from hose.

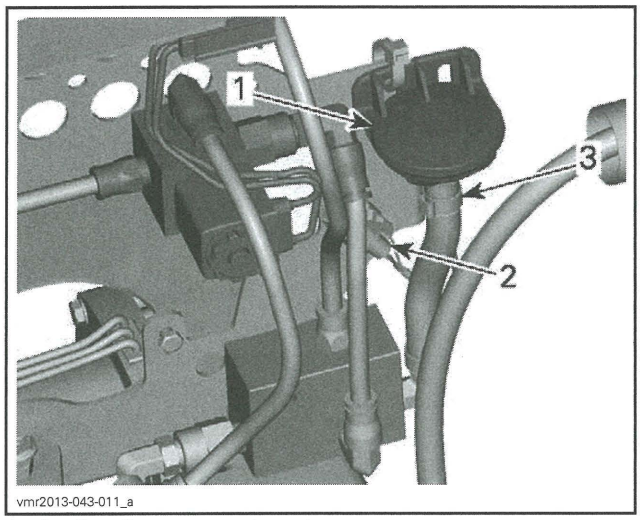

1. *Auxiliary line pressure transducer*
2. *Connector*
3. *Oetiker clamp*

5. Install a new pressure transducer on hose.
6. Install a new Oetiker clamp using OETIKER PLIERS (P/N 295 000 070).
7. Connect pressure transducer connector.
8. Ensure that there is no air leaks from pressure transducer hose. Refer to *ACS SYSTEM LEAK TEST (WITH B.U.D.S.)*.

ACS HOSES

ACS Hose and Fitting Replacement

1. Release air pressure, refer to *RELEASING AIR PRESSURE IN SYSTEM FOR SERVICING* in this subsection.
2. Locate hose or fitting to be replaced.
3. Remove it from vehicle.
4. Install the new hose or fitting.
5. Perform a *ACS SYSTEM LEAK TEST (WITH B.U.D.S.)*.

Auxiliary Line Adapter Replacement

1. Release air pressure, refer to *RELEASING AIR PRESSURE IN SYSTEM FOR SERVICING* in this subsection.
2. Disconnect auxiliary line hose from adapter as follows:
   - 2.1 Push fitting ring toward adapter.
   - 2.2 Hold ring in place.
   - 2.3 Pull air hose.

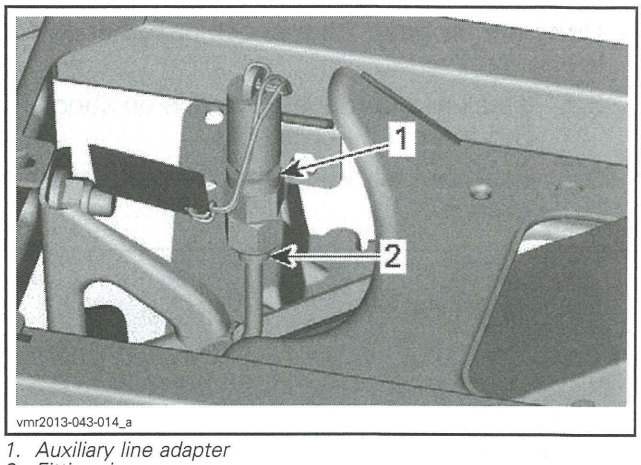

1. *Auxiliary line adapter*
2. *Fitting ring*

3. Install new adapter.
4. Secure adapter support using rivets.
5. Connect auxiliary line hose into adapter.

Ensure that air hoses are properly inserted into fittings, refer to the following illustrations.

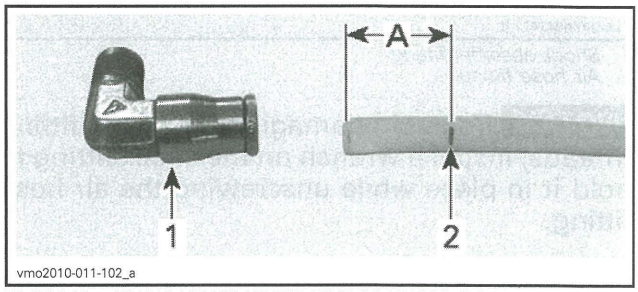

TYPICAL - PUSH HOSE UNTIL THE MARK IS COMPLETELY INSERTED
1. *Fitting*
2. *Mark*

A. Must be inserted into fitting

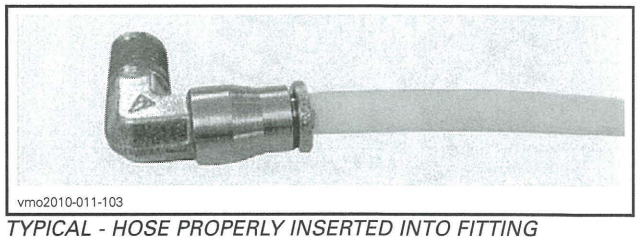

TYPICAL - HOSE PROPERLY INSERTED INTO FITTING

SHOCK ABSORBERS

Shock Absorber Removal

1. Lift rear of vehicle until rear shock absorbers are fully extended.
2. Install jack stands or blocks under the frame to support the vehicle.

3. Unscrew air hose from shock absorber as follows:
   3.1 Install an appropriate wrench on shock fitting to hold it in place.
   3.2 Unscrew air hose fitting using another wrench.

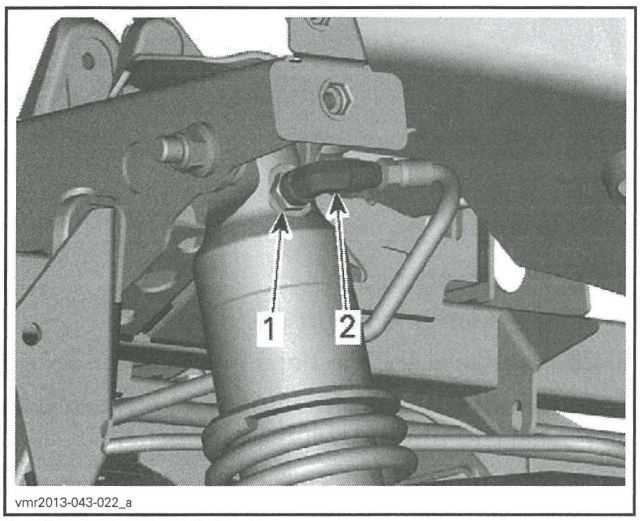

1. Shock absorber fitting
2. Air hose fitting

NOTICE **To avoid damaging the shock fitting threads, install a wrench on the shock fitting to hold it in place while unscrewing the air hose fitting.**

4. Remove the shock absorber lower bolt and nut.

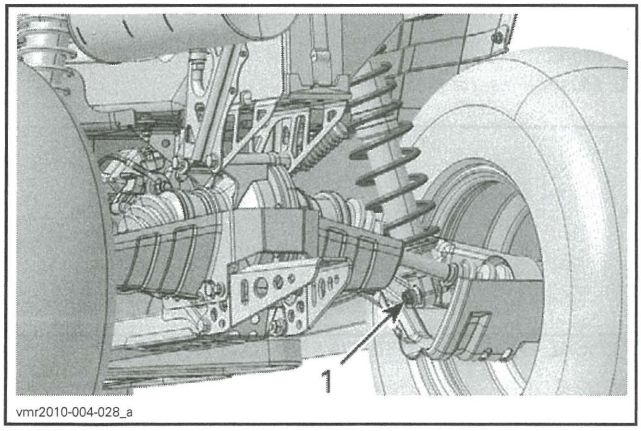

TYPICAL
1. Shock absorber lower bolt

5. Remove the shock absorber upper bolt and nut.

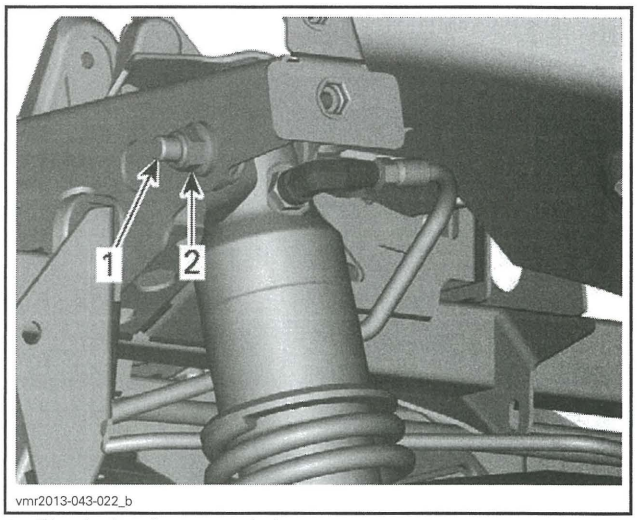

1. Shock absorber upper bolt
2. Shock absorber upper nut

6. Remove shock absorber from vehicle.

Shock Absorber Disassembly

NOTICE **Be careful while manipulating or installing the shock absorber in the spring remover tool. The shock absorber body must not be scratched or damaged to avoid air leakage.**

1. Use the SPRING REMOVER (P/N 529 036 007).

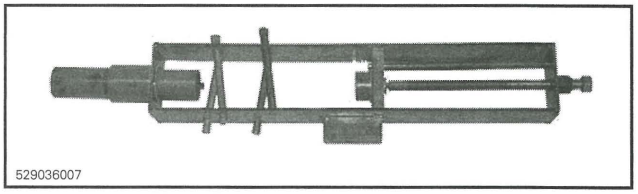

2. Place the tool in a vise.
3. Position the shock absorber in the tool and install the spring compressor pins.
4. Tighten the spring remover screw until the spring is sufficiently compressed to remove spring locking devices.
5. Remove spring stopper and its cap then loosen the spring remover screw.
6. Remove circlip.
7. Remove spring retainer.

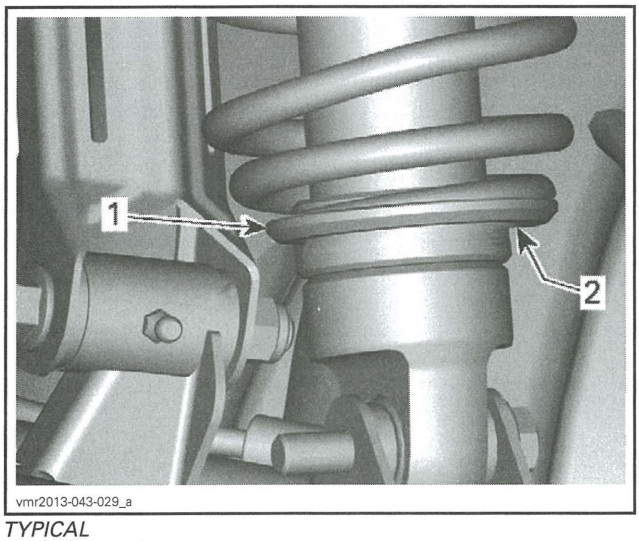

TYPICAL
1. *Spring retainer*
2. *Circlip*

8. Remove spring from shock.

Shock Absorber Inspection

Inspect the spring for damage. Replace if necessary.

Secure the end of shock body in a vise with its rod upward.

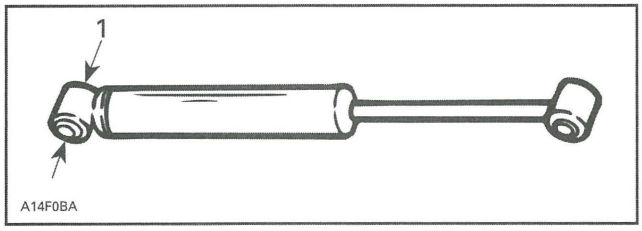

TYPICAL
1. *Clamp here*

NOTICE Do not clamp directly on shock body.

Inspect shock absorber as following:

1. Examine the shock absorber for leaks.
2. Extend and compress the shock absorber shaft several times over its entire stroke.
3. Check that the shock absorber shaft moves smoothly and with uniform resistance with its rod upward.

Any of the following conditions will denote a defective shock absorber:

- A skip or a hang back when reversing stroke at mid travel.
- Seizing or binding condition except at extreme end of either stroke.
- A gurgling noise, after completing one full compression and extension stroke.

Replace shock absorber if any faults are present.

Shock Absorber Assembly and Installation

Assembly and installation are the reverse of disassembly and removal procedures, however pay attention to the following.

Assemble shock absorber as per the following illustrations.

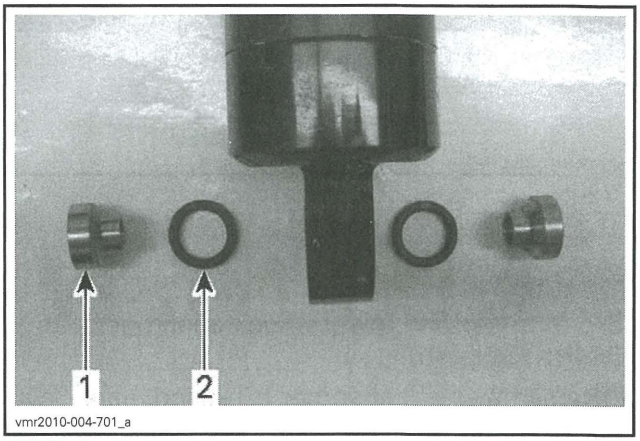

TYPICAL
1. *Sleeve*
2. *O-ring*

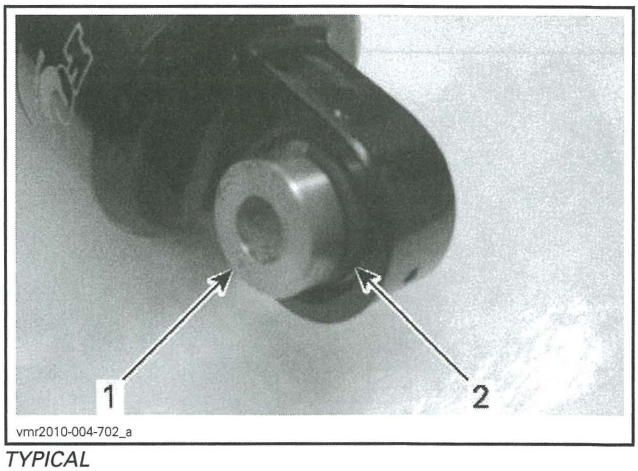

TYPICAL
1. *Sleeve*
2. *O-ring*

Midwest Manuals
Green Manuals
Paperless Manuals
For a Better Tomorrow
If you bought this manual from any other seller please leave them NEGATIVE feedback and notify me at bestshopmanuals@gmail.com

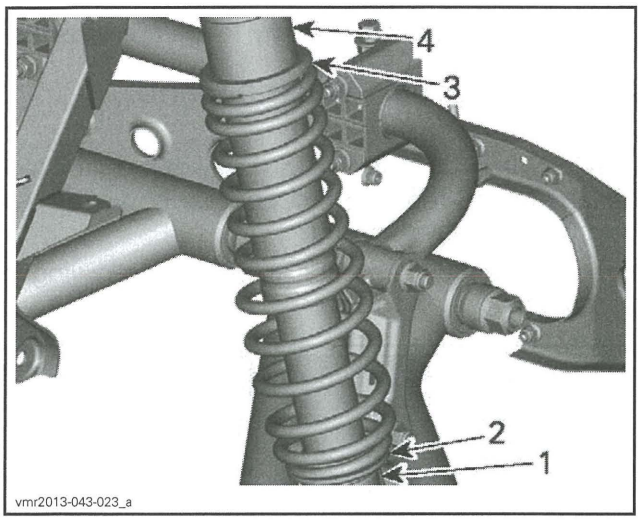

TYPICAL
1. *Small sleeve*
2. *Lower cap*
3. *Upper cap*
4. *Large sleeve*

Torque upper and lower shock absorber bolts to 53 N•m (39 lbf•ft).

If the same shock absorber is reused, apply LOCTITE 592 (PIPE SEALANT) (P/N 293 800 018) on air hose sleeve male threads.

While holding shock fitting with a wrench, tighten air hose fitting to 19 N•m (168 lbf•**in**).

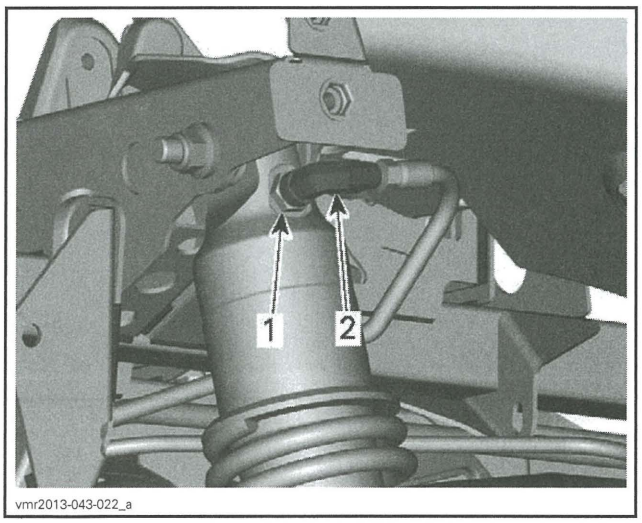

1. *Shock absorber fitting*
2. *Air hose fitting*

Ensure that there is no air leaks from shock absorber fitting and air hose. Refer to *ACS SYSTEM LEAK TEST (WITH B.U.D.S.)*.

NOTICE Never screw shock absorber air hose by using the air hose fitting only. To avoid damaging the shock fitting threads, install a wrench on the shock fitting to hold it in place while screwing the air hose fitting.

BRAKES

SERVICE TOOLS

Description	Part Number	Page
ECM ADAPTER TOOL	529 036 166	537

SERVICE PRODUCTS

Description	Part Number	Page
XPS BRAKES AND PARTS CLEANER	219 701 705	540
XPS SYNTHETIC GREASE	293 550 010	539

OUTLANDER (FRONT CIRCUIT)

All Except CE Models

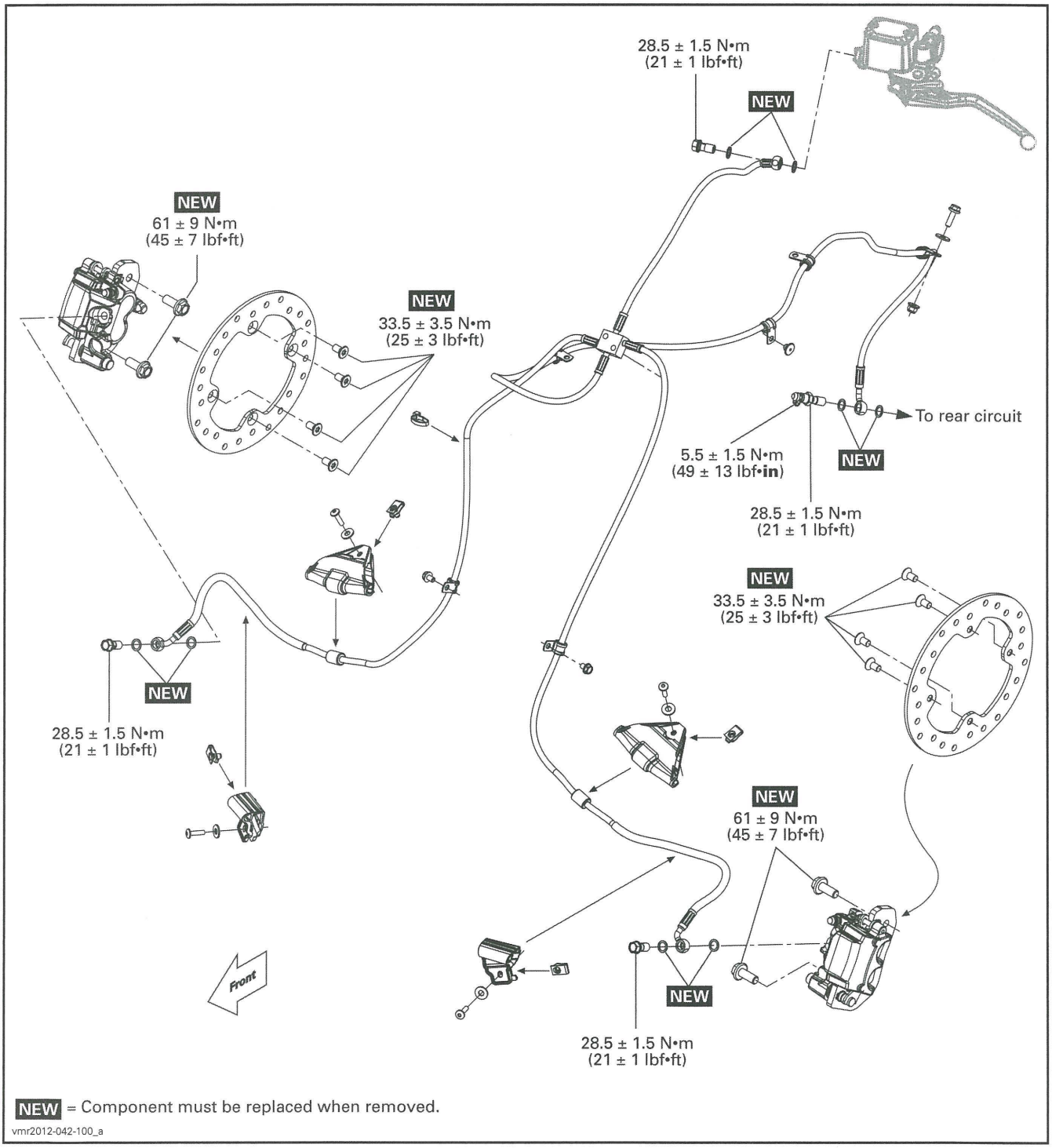

NEW = Component must be replaced when removed.

vmr2012-042-100_a

OUTLANDER (REAR CIRCUIT)

All Except CE Models

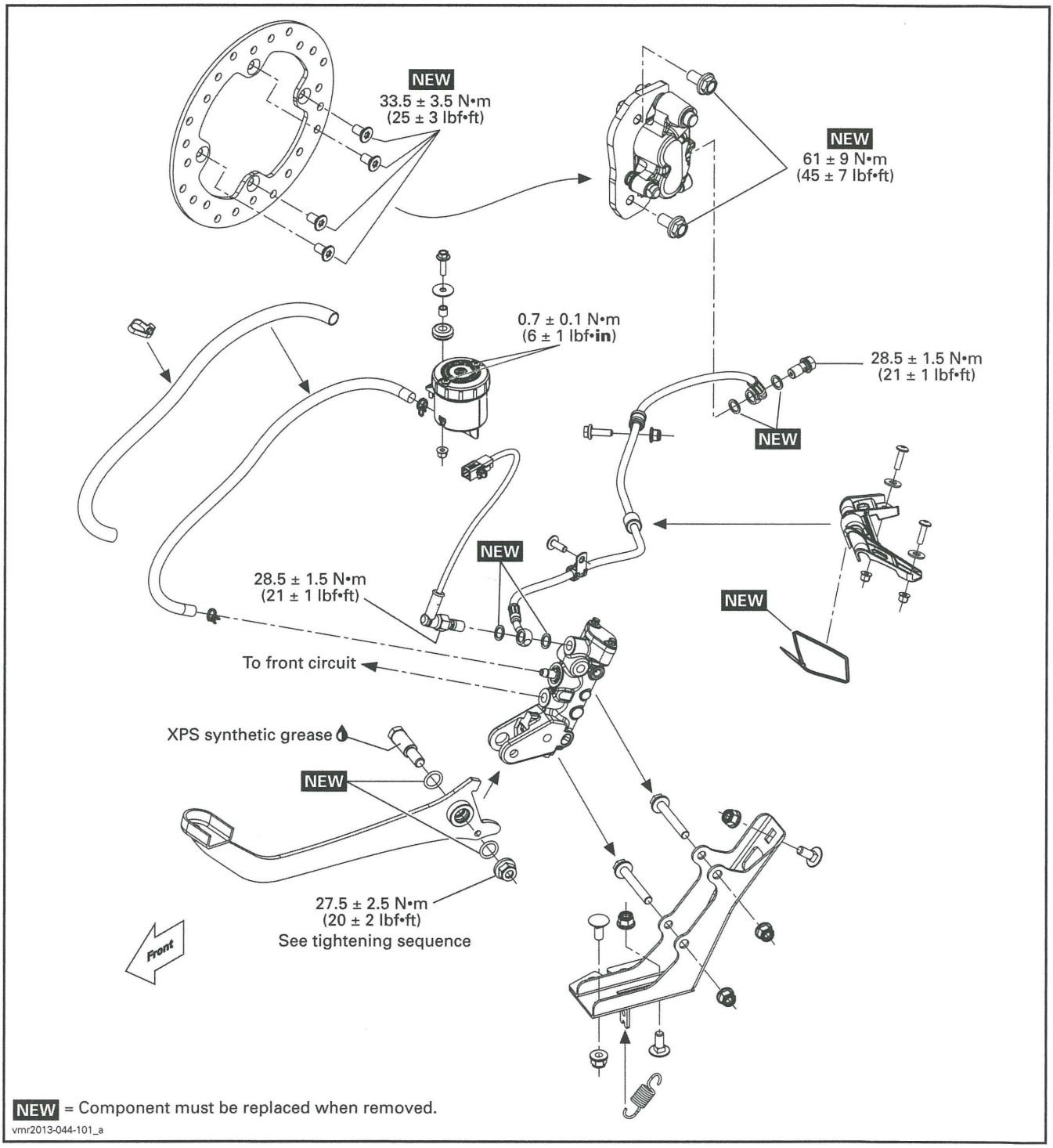

OUTLANDER (FRONT CIRCUIT)

CE Models

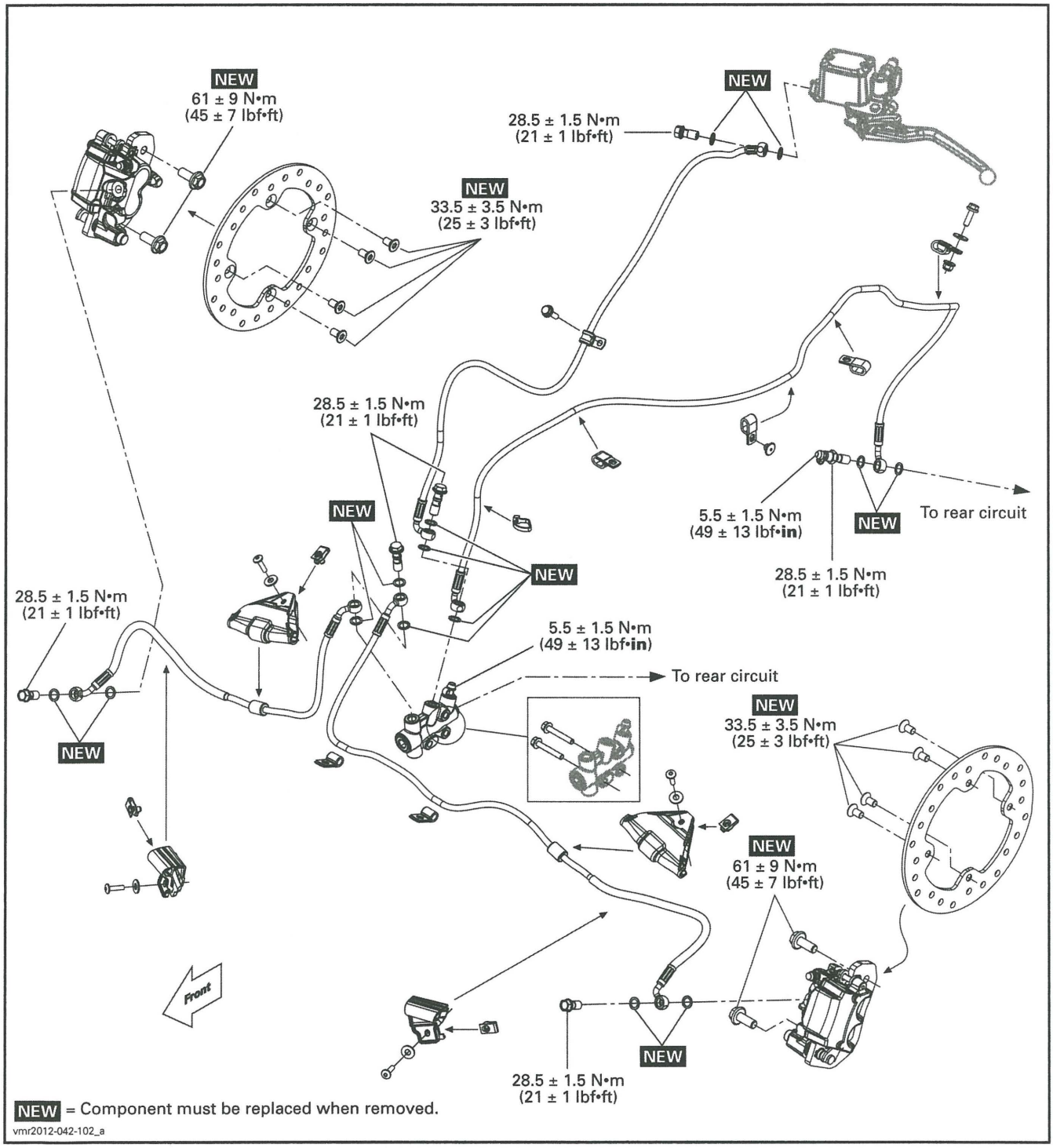

OUTLANDER (REAR CIRCUIT)

CE Models

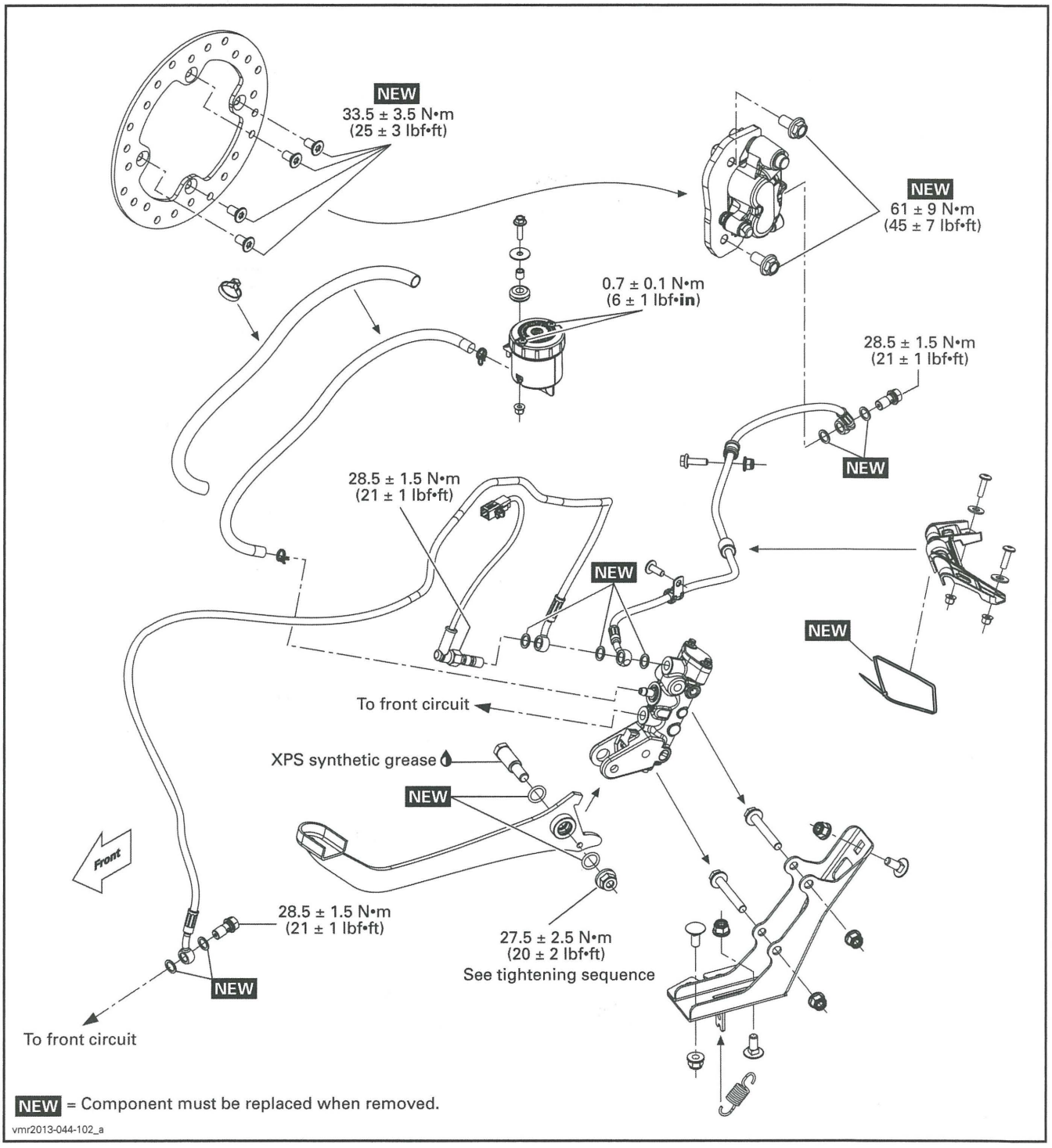

RENEGADE (FRONT CIRCUIT)

All Except CE Models

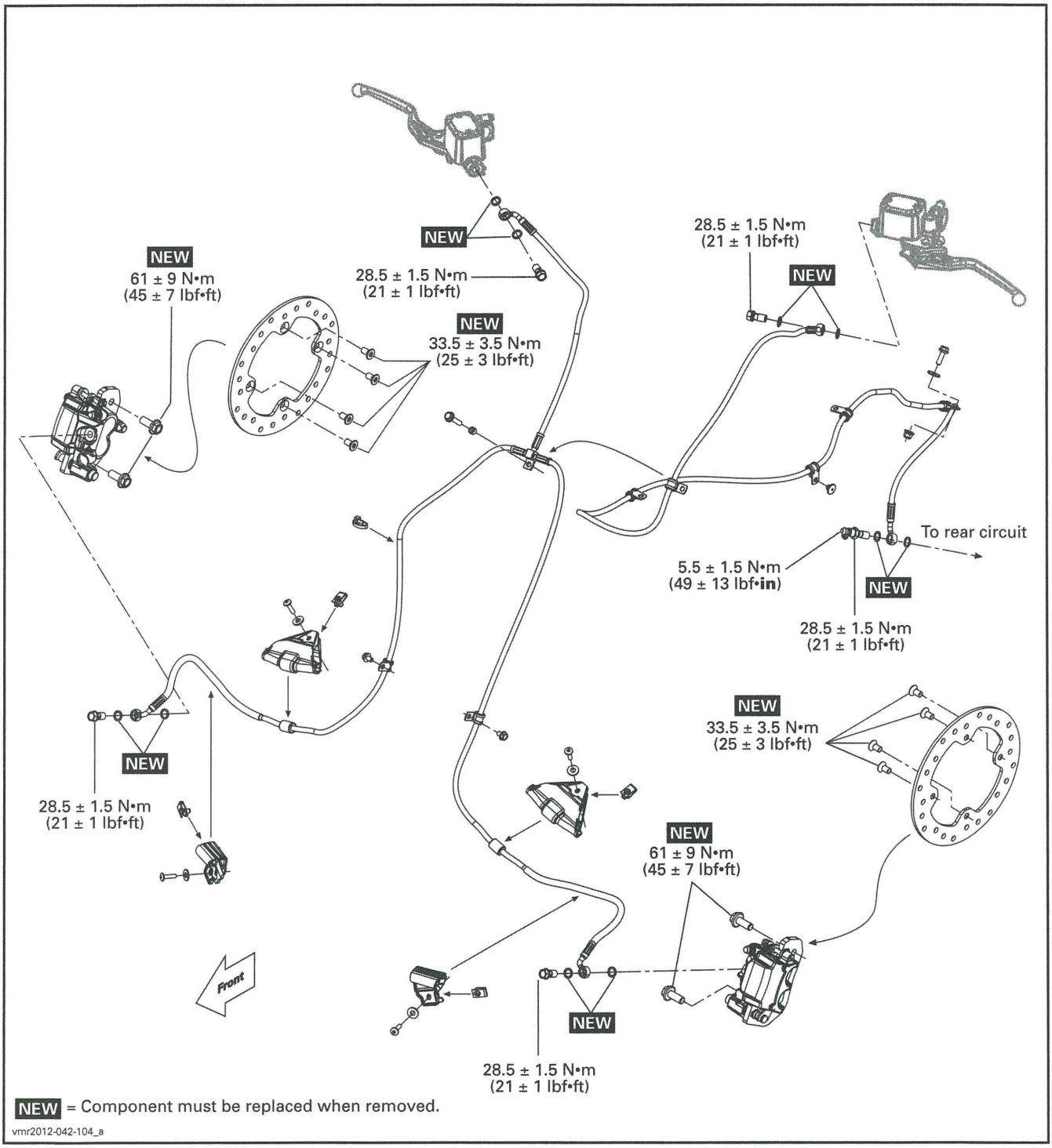

RENEGADE (REAR CIRCUIT)

All Except CE Models

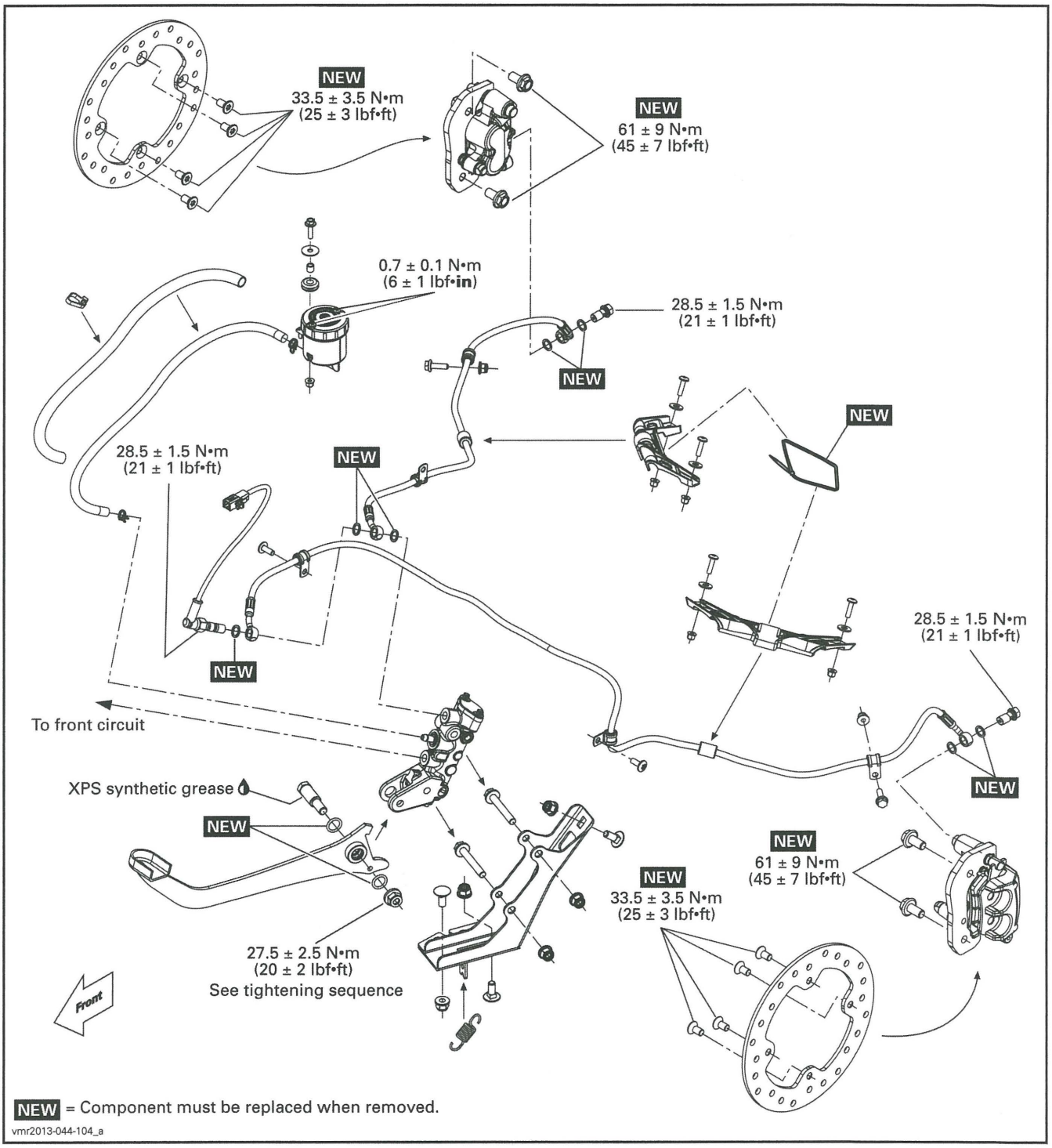

RENEGADE (FRONT CIRCUIT)

CE Models

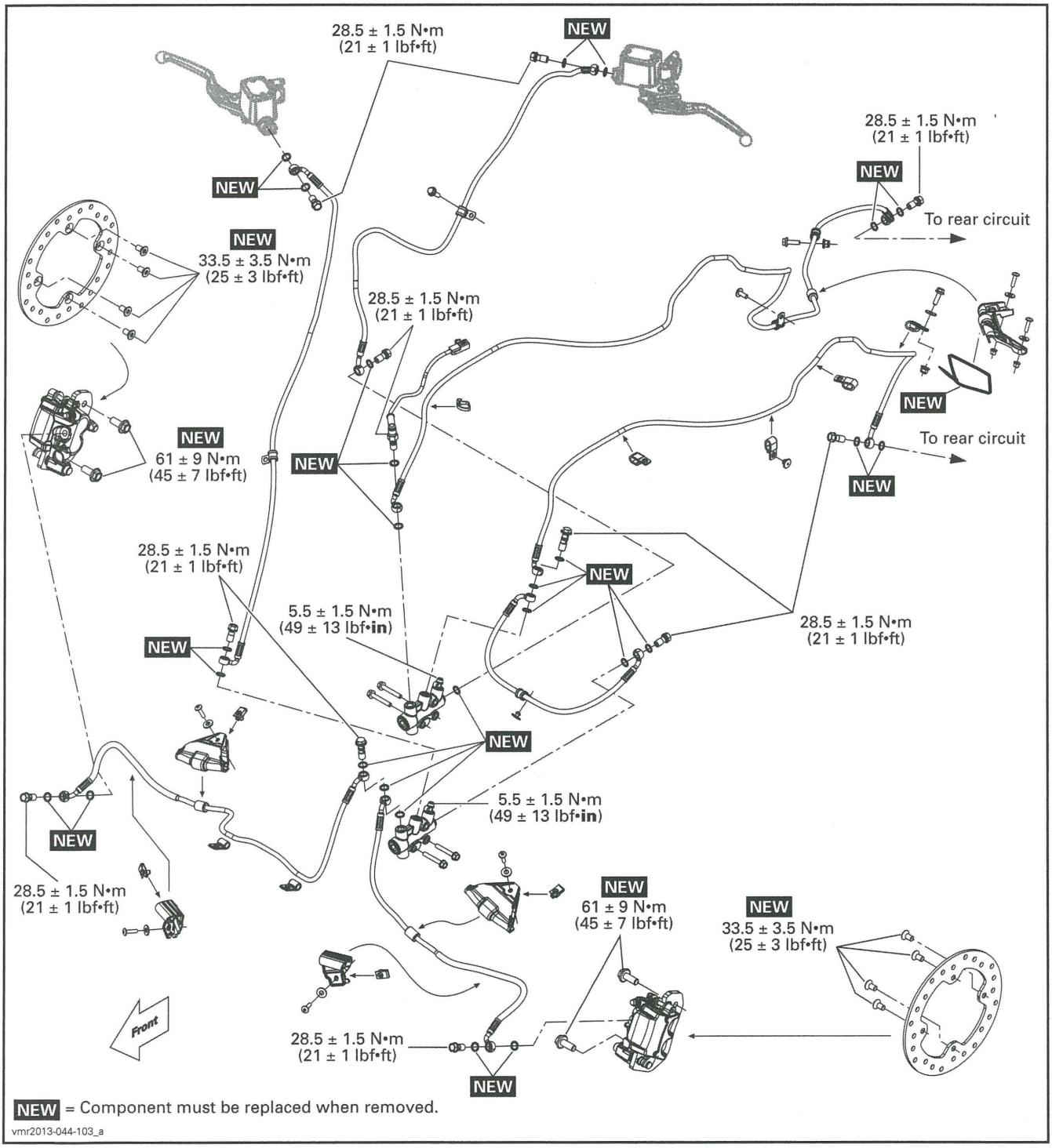

RENEGADE (REAR CIRCUIT)

CE Models

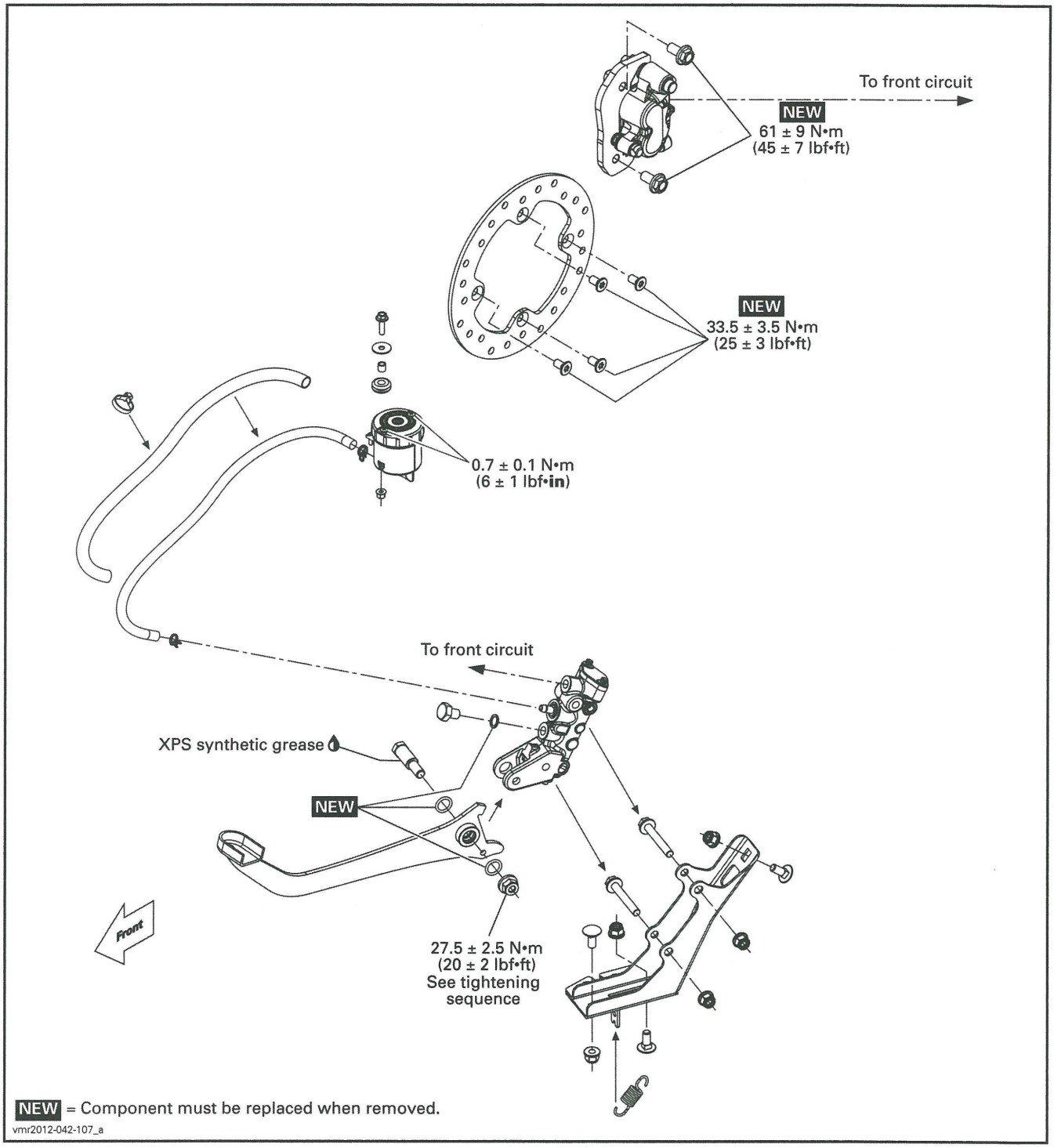

CALIPERS AND BRAKE LEVERS

All Models

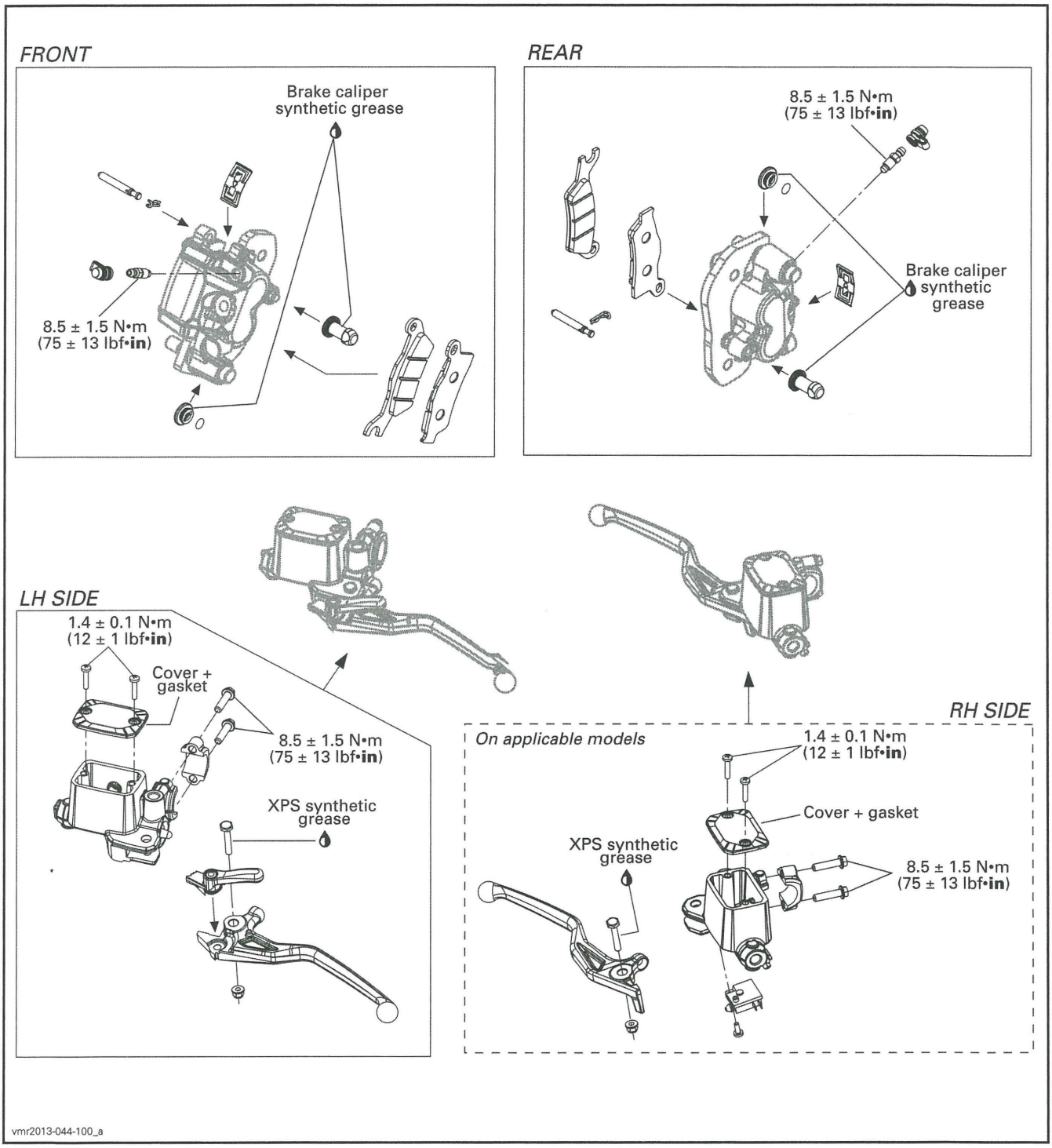

GENERAL

⚠ WARNING

Always check brake system operation after removing or servicing a brake component.

NOTICE **Avoid spilling brake fluid on plastic, rubber or painted parts. Protect these parts with a rag when servicing brake system.**

NOTE: Sealing washers must be discarded and replaced with new ones every time a Banjo bolt is unscrewed.

NOTE: Always clean the area around a brake component before servicing.

SYSTEM DESCRIPTION

A disc brake system with twin-piston sliding calipers is used.

Disc Brake Configurations

OUTLANDER		
MODELS	NUMBER OF DISC BRAKES	
	FRONT	REAR
All models	2	1

RENEGADE		
MODELS	NUMBER OF DISC BRAKES	
	FRONT	REAR
All except CE models	2	2
CE models	2	1

Brake Controls and Circuit Configurations

OUTLANDER		
MODELS	LH BRAKE LEVER	BRAKE PEDAL
All except CE models	Controls front and rear brakes	Controls rear brakes
CE models	Controls front and rear brakes	Controls front and rear brakes

RENEGADE			
MODELS	LH BRAKE LEVER	RH BRAKE LEVER	BRAKE PEDAL
All except CE models	Controls rear brakes	Controls front brakes	Controls rear brakes
CE models	Controls rear brakes	Controls front brakes	Controls front and rear brakes

INSPECTION

BRAKE SYSTEM PRESSURE VALIDATION

Required Tools

Use an appropriate compression force gauge such as *MARK-10 EG-200* and a ruler.

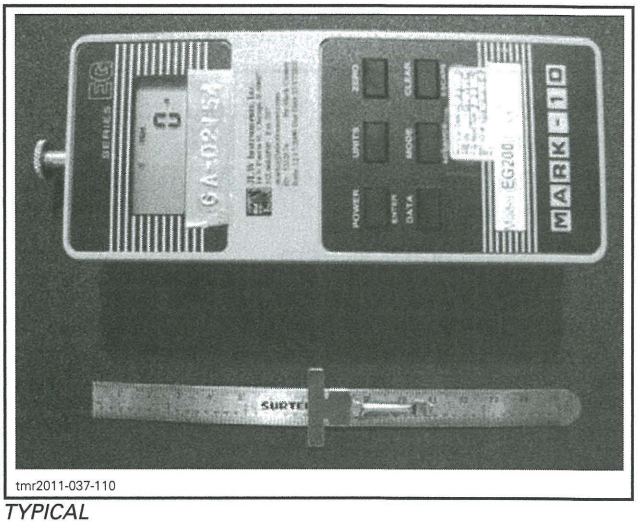

tmr2011-037-110

TYPICAL

Brake Lever Verification

NOTE: Do not pump up the brakes repeatedly before doing the validation.

1. Position force gauge perpendicularly on brake lever edge.
2. Position a ruler perpendicularly to handlebar grip.
3. Push brake lever at distance A from handlebar grip using force gauge.

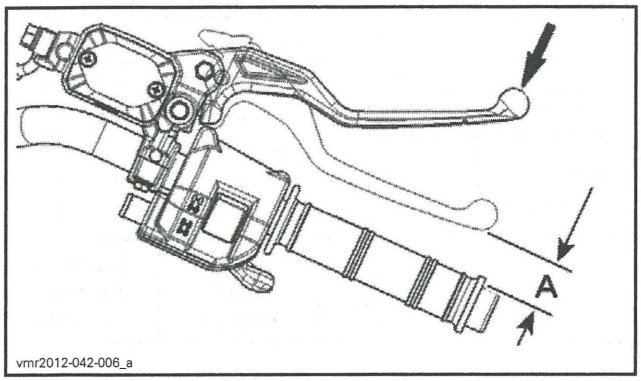

A. Distance from handlebar (refer to table)

4. Read load recorded by the force gauge.
5. Load reading must be as per the following table.

BRAKE LEVER VERIFICATION		
LEVER	DISTANCE A	MINIMUM LOAD
LH side lever	25 mm (1 in)	160 N (36 lbf)
RH side lever (if applicable)	25 mm (1 in)	140 N (31 lbf)

6. If load reading is not in accordance with the specification:
   6.1 Perform a brake system inspection and cleaning.
   6.2 Bleed brake system.

   NOTE: Refer to *PERIODIC MAINTENANCE PROCEDURES* subsection.

Brake Pedal Verification

NOTE: Do not pump up the brakes repeatedly before doing the validation.

1. Position force gauge perpendicularly on brake pedal edge.
2. Position a ruler perpendicularly to brake pedal.
3. Push brake pedal from distance A using force gauge.

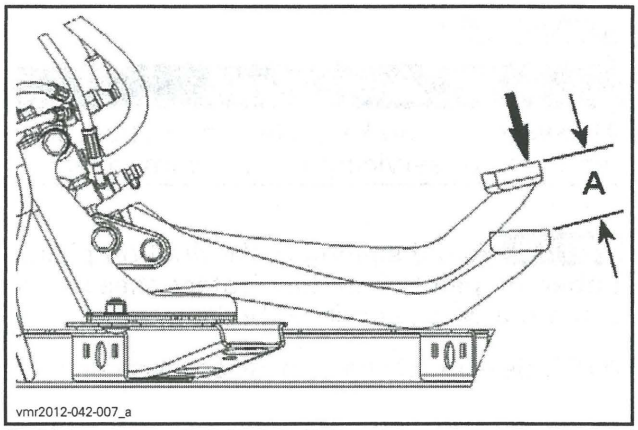

A. Distance to push (refer to table)

4. Read load recorded by the force gauge.
5. Load reading must be as per the following table.

BRAKE PEDAL VERIFICATION		
MODELS	DISTANCE A	MINIMUM LOAD
All Outlander except CE	35 mm (1-3/8 in)	220 N (49 lbf)
Outlander CE	55 mm (2-5/32 in)	220 N (49 lbf)
All Renegade except CE	55 mm (2-5/32 in)	220 N (49 lbf)
Renegade CE	55 mm (2-5/32 in)	180 N (40 lbf)

6. If load reading is not in accordance with the specification:
   6.1 Perform a brake system inspection and cleaning.
   6.2 Bleed brake system.

   NOTE: Refer to *PERIODIC MAINTENANCE PROCEDURES* subsection.

PROCEDURES

BRAKE LIGHT SWITCHES

Brake Light Switch Location

Outlander Models

MODELS	BRAKE SWITCH LOCATION
All Outlander	Brake pedal master cylinder

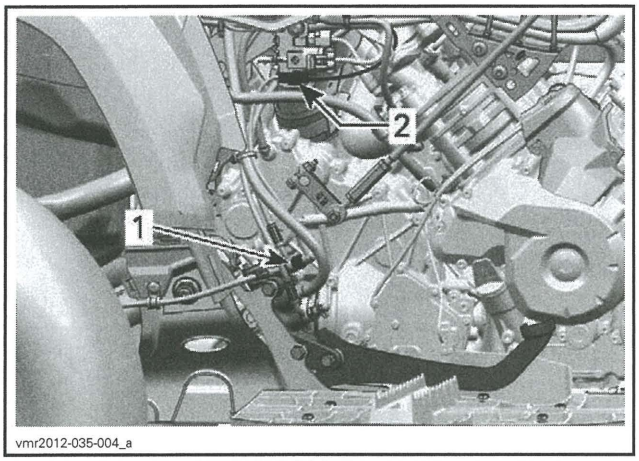

BRAKE PEDAL MASTER CYLINDER
1. *Brake light switch*
2. *Brake light switch connector*

Renegade Models

MODELS	BRAKE SWITCH LOCATIONS		
	BRAKE PEDAL MASTER CYLINDER	RH BRAKE LEVER	FRONT BRAKE MANIFOLD
All except CE models	X	X	
CE models		X	X

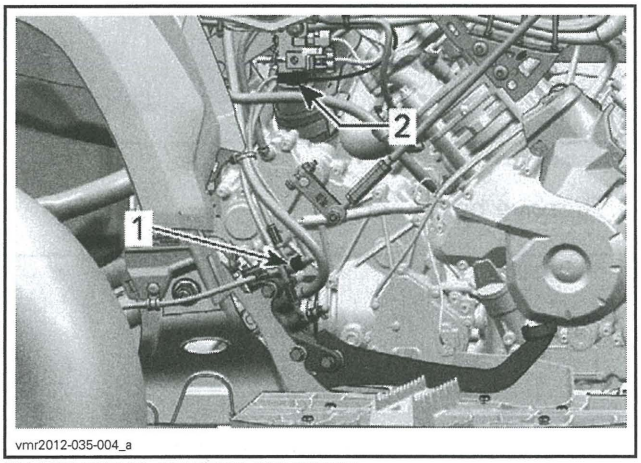

BRAKE PEDAL MASTER CYLINDER
1. *Brake light switch*
2. *Brake light switch connector*

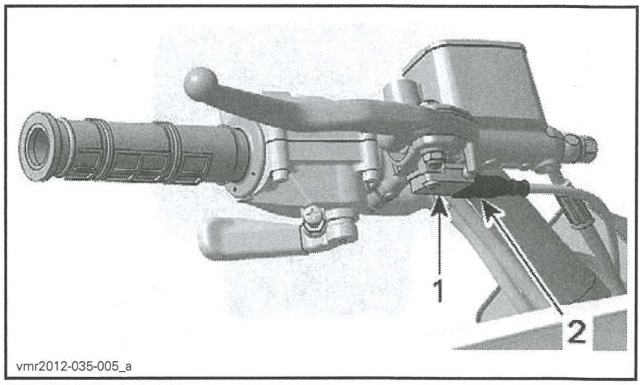

RH BRAKE LEVER
1. *Brake light switch*
2. *Brake light switch connector*

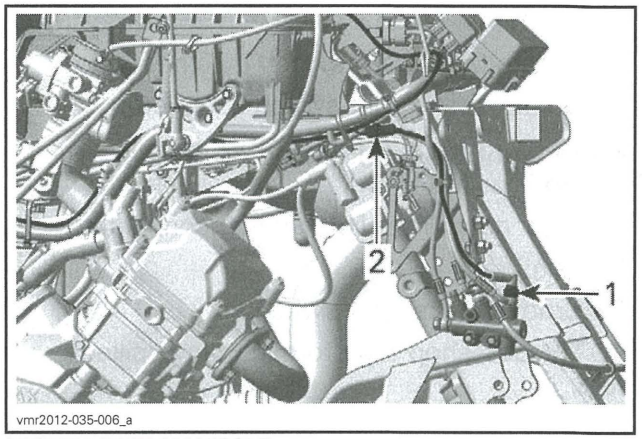

FRONT BRAKE MANIFOLD
1. *Brake light switch*
2. *Brake light switch connector*

Brake Light Switch Resistance Test

1. Disconnect brake light switch connector.
2. Check switch operation as follows.

BRAKE LIGHT SWITCH POSITION	PIN		RESISTANCE
Firmly pushed	1	2	Close to 0 Ω
Released			Infinite (OL)

If switch is defective, replace with a new one.

If the switch tests good, verify wire continuity between harness connector and ECM connector. Refer to *BRAKE SYSTEMS WIRING DIAGRAM*.

REQUIRED TOOL
ECM ADAPTER TOOL (P/N 529 036 166)


529036166

Brake Light Switch Replacement

Brake Light Switch Located on Brake Lever

1. Disconnect brake light switch connector.
2. Replace brake light switch by a new one.
3. Connect brake light switch connector.

Brake Light Switch Located on Master Cylinder or Manifold

1. Disconnect brake light switch connector.
2. Drain brake line.
3. Remove brake light switch.

NOTE: Use shop rags to catch any spilled brake fluid.

4. Install **NEW** sealing washers.
5. Install brake light switch.

TORQUE	
Brake light switch	28.5 N•m ± 1.5 N•m (21 lbf•ft ± 1 lbf•ft)

6. Connect brake light switch connector.
7. Refill and bleed brake system, refer to *PERIODIC MAINTENANCE PROCEDURES* subsection.

BRAKE PEDAL

Brake Pedal Removal

1. Drain brake system, refer to *PERIODIC MAINTENANCE PROCEDURES* subsection.
2. Remove RH footrest panel. Refer to *BODY* subsection.
3. On Renegade models, remove engine panel. Refer to *BODY* subsection.

NOTE: Loosen brake pedal bolt before removing support from frame.

4. Remove master cylinder support from frame.

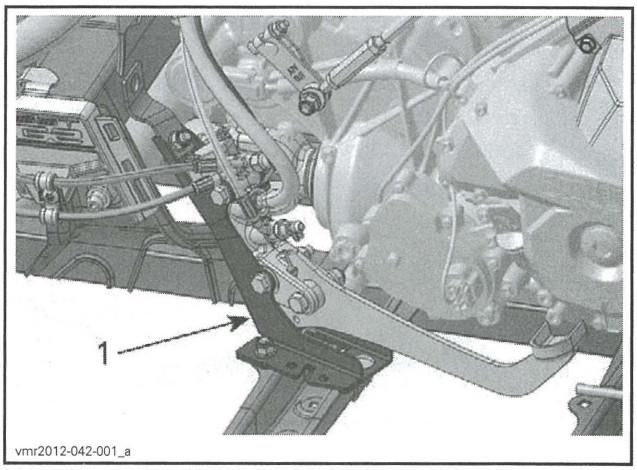

TYPICAL - SOME PARTS REMOVED FOR CLARITY
1. Master cylinder support

5. Remove brake pedal spring.

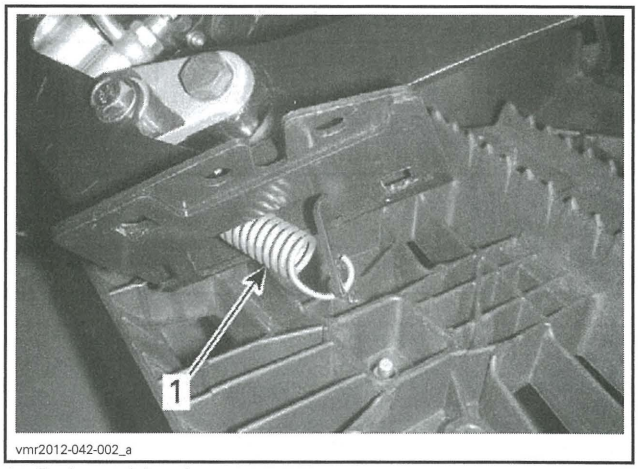

1. Brake pedal spring

6. Remove brake pedal.

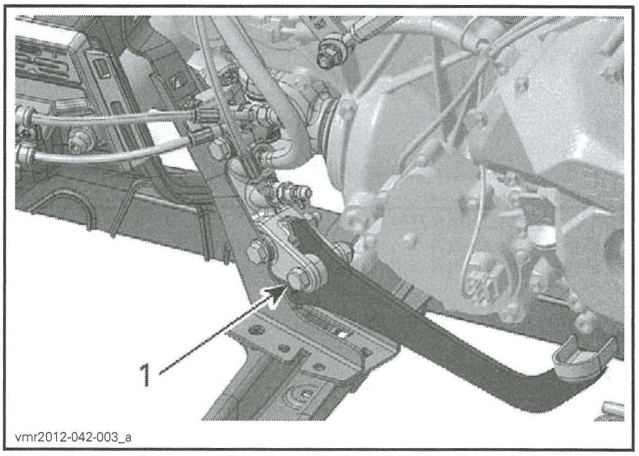

1. Brake pedal pivot bolt

Brake Pedal Installation

The installation is the reverse of the removal procedure. However, pay attention to the following.

Install **NEW** brake pedal O-ring.

Lubricate brake pedal pivot.

LUBRICATION	
Brake pedal pivot	XPS SYNTHETIC GREASE (P/N 293 550 010)

Tighten brake pedal nut as per the following sequence.

TIGHTENING SEQUENCE		
STEP 1	Brake pedal bolt (pivot)	10 N•m ± 2 N•m (89 lbf•**in** ± 18 lbf•**in**)
STEP 2	Brake pedal nut	27.5 N•m ± 2.5 N•m (20 lbf•ft ± 2 lbf•ft)

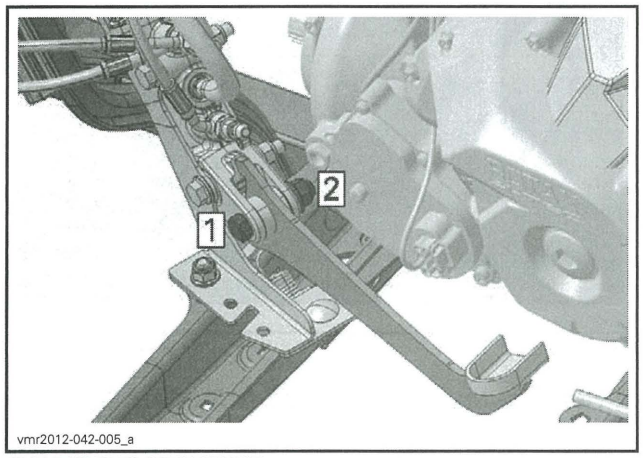

TIGHTENING SEQUENCE
Step 1: Tighten bolt
Step 2: Hold bolt then tighten nut

MASTER CYLINDER

Master Cylinder Removal

1. Remove *BRAKE PEDAL*. See procedure in this subsection.
2. Remove master cylinder from support.

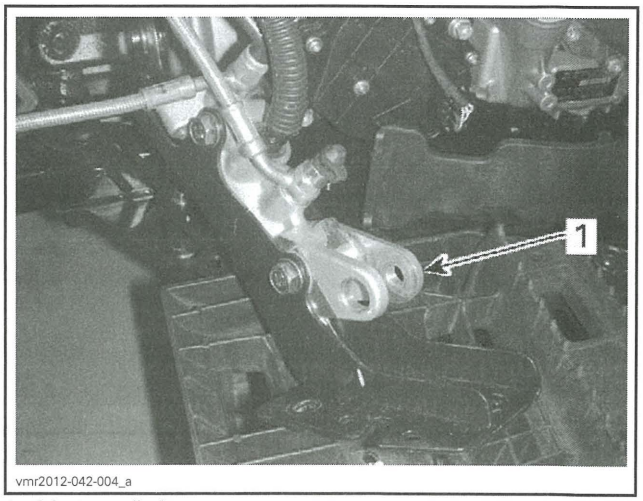

1. Master cylinder

3. Remove hoses and bleeder from master cylinder.

Master Cylinder Inspection

Check boot for crack.

Check rod for wear and scratch.

Check master cylinder housing for leak or damage.

Master Cylinder Installation

The installation is the reverse of the removal procedure. However, pay attention to the following.

Tighten brake hoses and bleeder to specification.

TORQUE	
Brake hose screw (banjo fitting)	28.5 N•m ± 1.5 N•m (21 lbf•ft ± 1 lbf•ft)
Bleeder	8.5 N•m ± 1.5 N•m (75 lbf•**in** ± 13 lbf•**in**)

Install **NEW** sealing washers.

Refill and bleed brake system, refer to *PERIODIC MAINTENANCE PROCEDURES* subsection.

CALIPER

Caliper Removal

1. Safely lift and support the vehicle.
2. Remove wheel, refer to *WHEELS AND TIRES* subsection.
3. If caliper is removed from vehicle for replacement:
   - 3.1 Drain brake system, refer to *PERIODIC MAINTENANCE PROCEDURES* subsection.
   - 3.2 Unscrew brake hose from caliper.

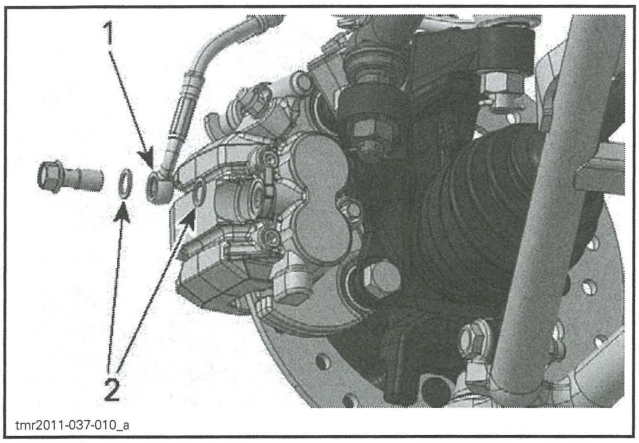

TYPICAL
1. Brake hose
2. Sealing washers

4. Remove fasteners retaining brake hose.
5. Remove screws securing caliper support.

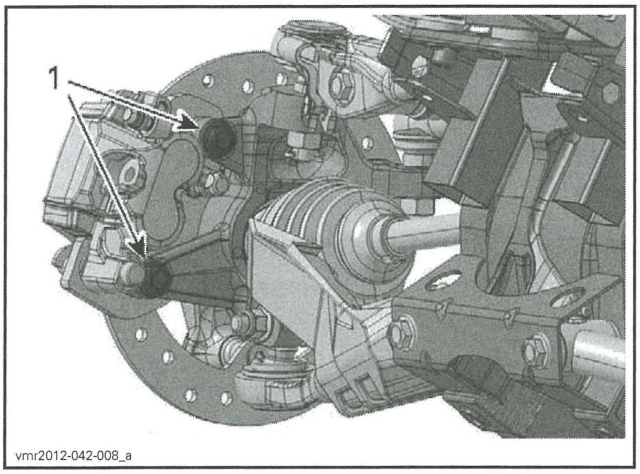

TYPICAL
1. Caliper screws

6. Place caliper assembly onto a support.

NOTICE Do not let caliper hangs by the hose and do not stretch or twist hose.

Caliper Installation

The installation is the reverse of the removal procedure. However, pay attention to the following.

If caliper was removed for replacement:

- Refill and bleed brake system, refer to *PERIODIC MAINTENANCE PROCEDURES* subsection.
- Install **NEW** sealing washers.

Install **NEW** caliper retaining screws.

Tighten caliper retaining screws to specification.

TORQUE	
Caliper retaining screws	61 N•m ± 9 N•m (45 lbf•ft ± 7 lbf•ft)

BRAKE PADS

Brake Pads Replacement

1. Remove caliper, refer to *CALIPER REMOVAL* in this subsection.
2. Remove pin retainer securing brake pad pin.

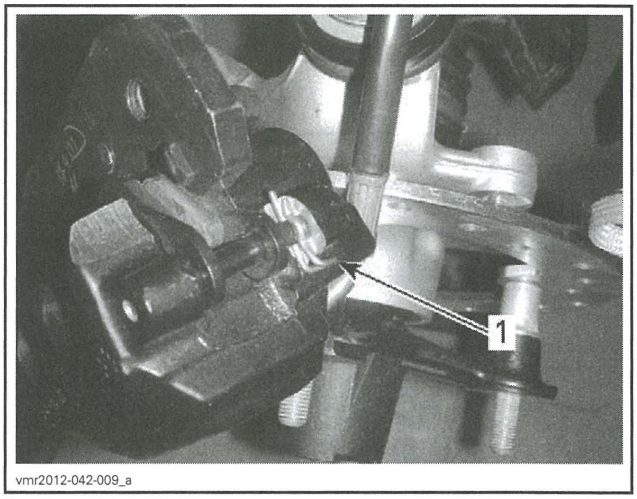

1. Pin retainer

3. Remove brake pad pin from caliper.

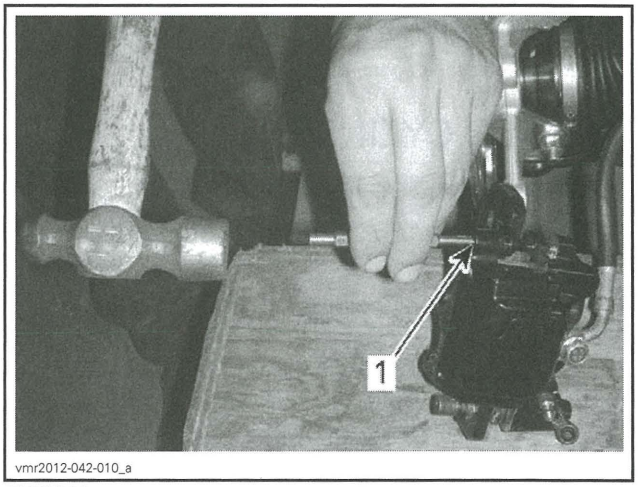

TYPICAL
1. Brake pad pin

4. Carefully remove brake pads.
5. Clean pistons end using XPS BRAKES AND PARTS CLEANER (P/N 219 701 705).
6. Push caliper pistons inward.

NOTE: To avoid damaging pistons, use an old pad to push it into the caliper using a C-clamp.

7. Ensure brake pad spring is properly positioned onto caliper and not damaged.

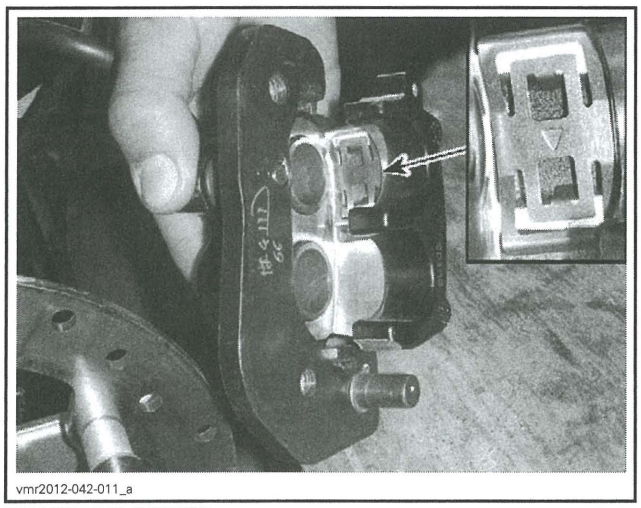
vmr2012-042-011_a

BRAKE PAD SPRING

8. Ensure pad stopper is properly aligned with caliper support protrusion.

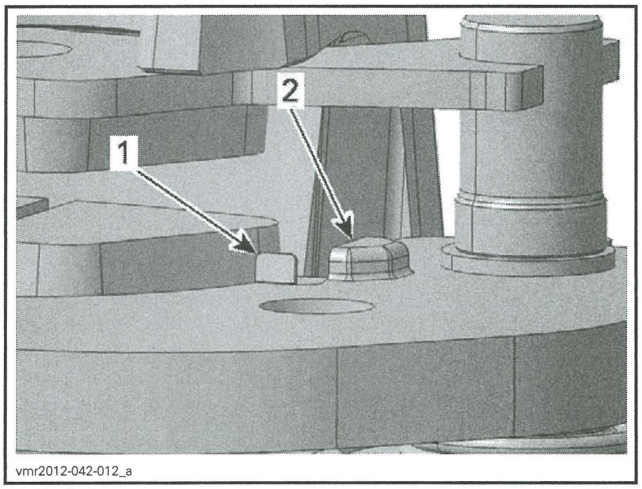

vmr2012-042-012_a

1. *Pad stopper*
2. *Caliper support protrusion*

NOTICE **Prior to installing brake pads, pad stopper must be properly positioned and not damaged.**

9. Install **NEW** brake pads.
10. Clean and install brake pad pin on caliper.
11. Install pin retainer to secure brake pad pin.
12. Slide caliper support completely into caliper.

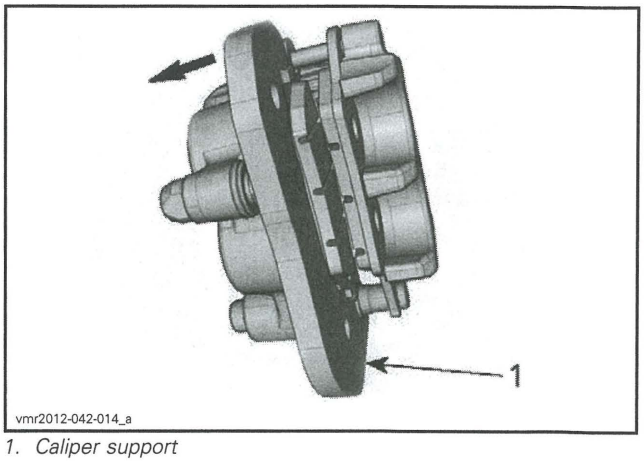

vmr2012-042-014_a

1. *Caliper support*

13. Install caliper, refer to *CALIPER INSTALLATION* in this subsection.

BRAKE DISC

Brake Disc Inspection

1. Check disc surfaces for scratches or grooves on both sides.
2. Measure thickness of the disc.

DISC MINIMUM THICKNESS	
FRONT	4.0 mm (.157 in)
REAR	4.0 mm (.157 in)

NOTICE **Brake discs must never be machined.**

3. Check warpage of the disc.

MAXIMUM DISC WARPAGE	
FRONT	0.2 mm (.01 in)
REAR	

Brake Disc Replacement

1. Remove caliper, refer to *CALIPER REMOVAL* in this subsection.
2. Remove wheel hub, refer to *FRONT DRIVE* or *REAR DRIVE* subsection.
3. Remove screws securing brake disc to wheel hub.

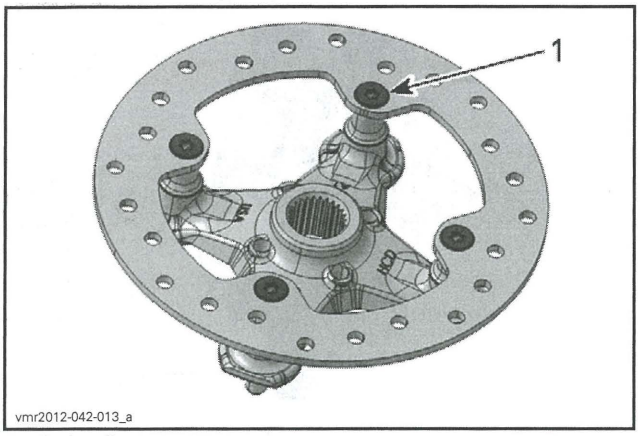

1. Brake disc screw

4. Replace brake disc.
5. Install **NEW** brake disc screws.
6. Tighten brake disc screws to specification.

TORQUE	
Brake disc screws	33.5 N•m ± 3.5 N•m (25 lbf•ft ± 3 lbf•ft)

7. Install wheel hub then caliper.
8. Install **NEW** cotter pin to secure wheel hub nut.

BODY (OUTLANDER)

SERVICE TOOLS

Description	Part Number	Page
OETIKER PLIERS	295 000 070	554

BODY PARTS NOMENCLATURE (SHORT MODEL)

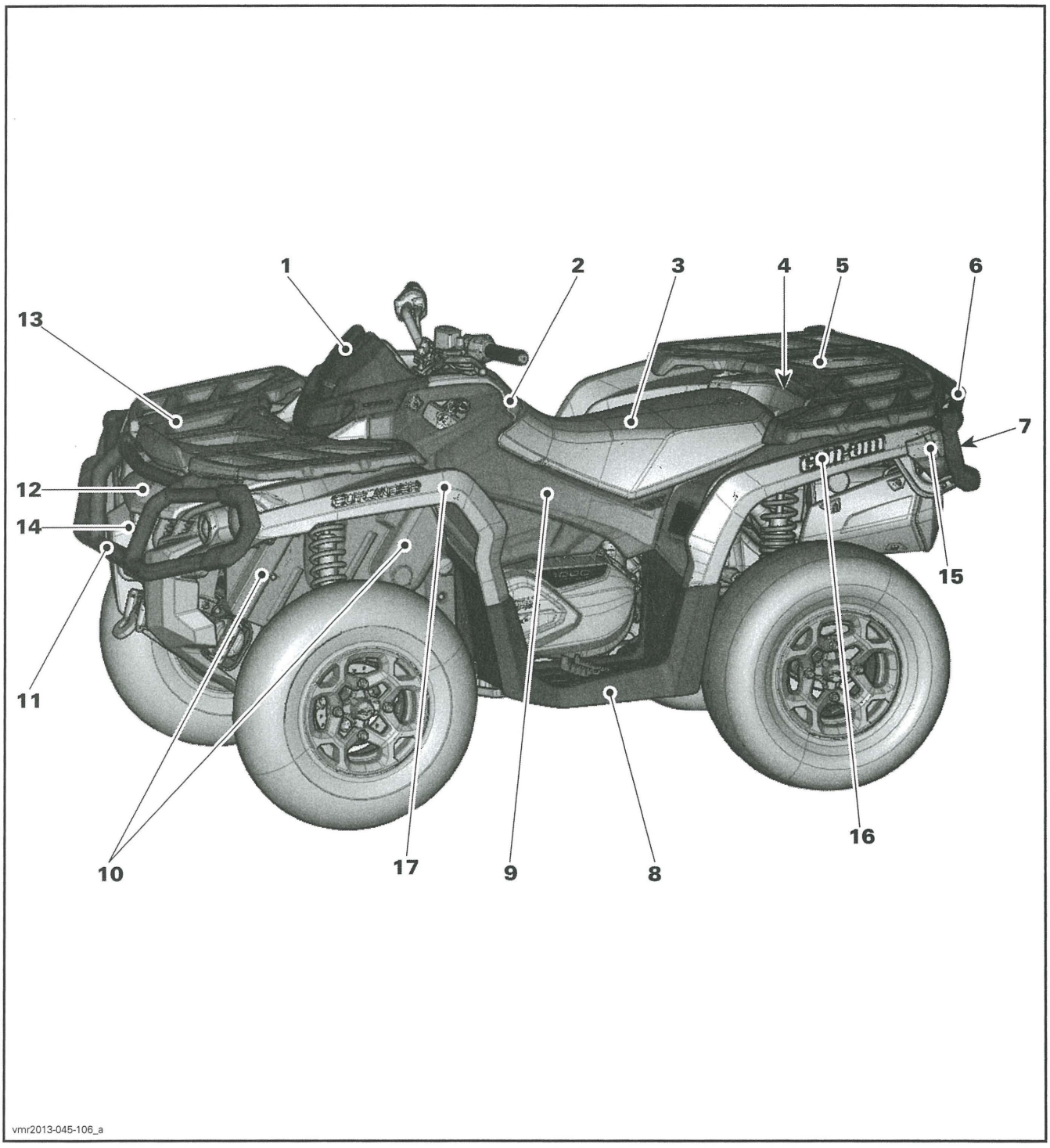

1. *Gauge support*
2. *Console*
3. *Seat*
4. *Rear top panel (under rear rack)*
5. *Rear rack*
6. *Rear bumper*
7. *Rear storage compartment*
8. *Footrest panel*
9. *Side panel*
10. *Inner fender panels*
11. *Front bumper*
12. *Hood*
13. *Front rack*
14. *Front fascia*
15. *Rear fascia*
16. *Rear fender*
17. *Front fender*

BODY PARTS NOMENCLATURE (MAX MODEL)

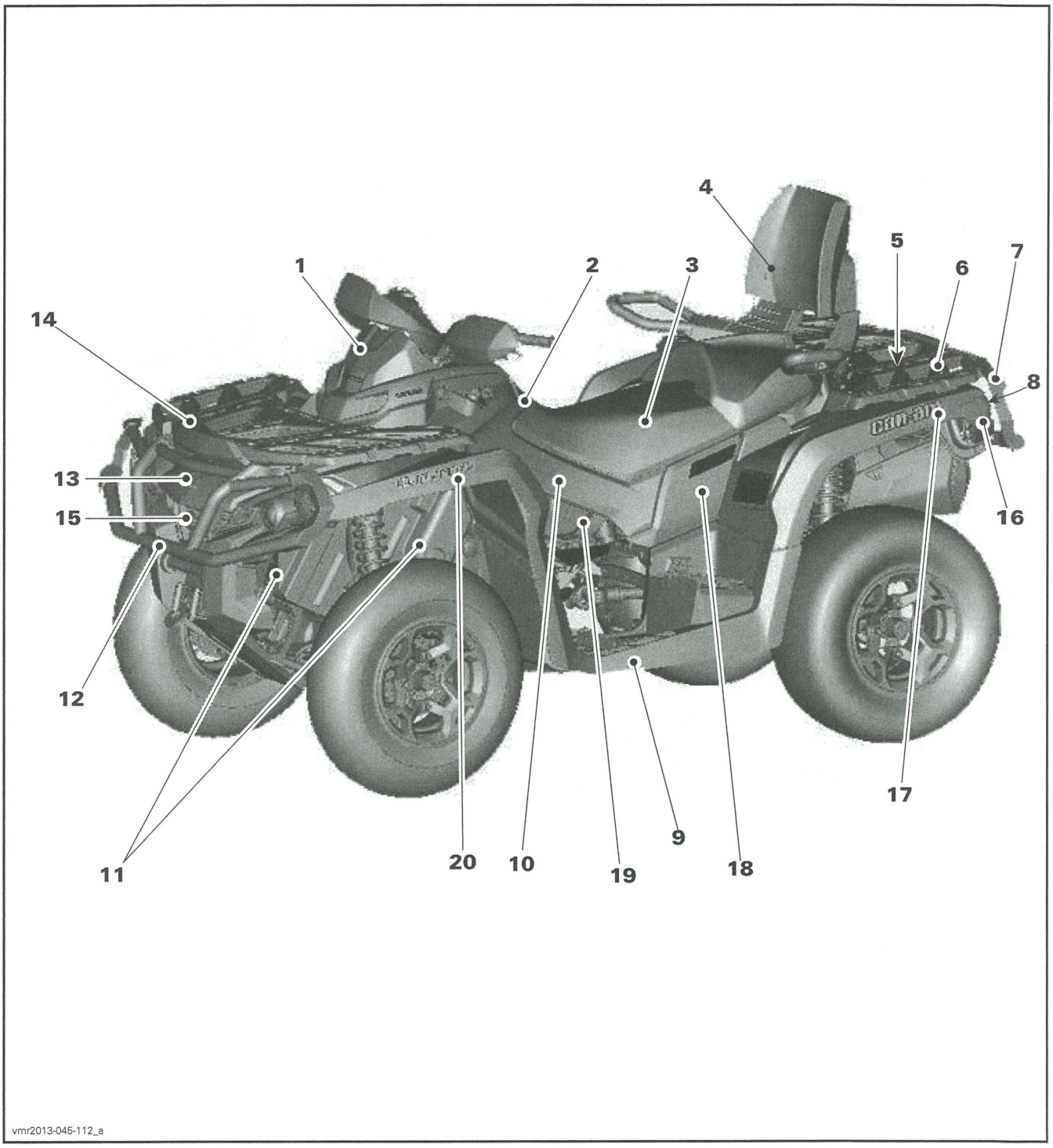

1. *Gauge support*
2. *Console*
3. *Seat*
4. *Passenger seat*
5. *Rear top panel (under rear rack)*
6. *Rear rack*
7. *Rear bumper*
8. *Rear storage compartment*
9. *Footrest panel*
10. *Side panel*
11. *Inner fender panels*
12. *Front bumper*
13. *Hood*
14. *Front rack*
15. *Front fascia*
16. *Rear fascia*
17. *Rear Fender*
18. *Rear side panel extension*
19. *Panel extension*
20. *Front fender*

FRONT AND REAR BODY MODULES (SHORT MODEL)

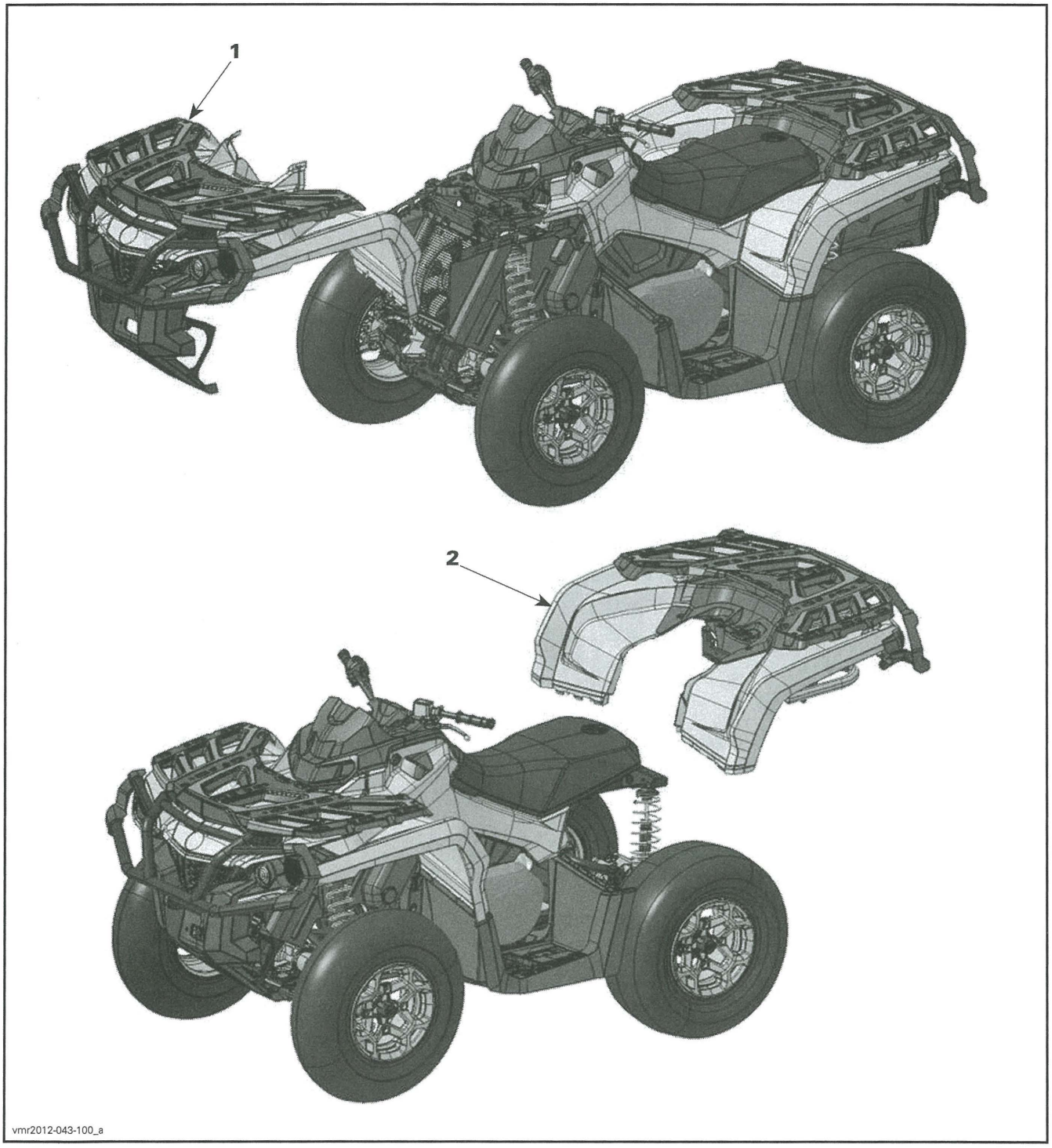

1. *Front body module (TYPICAL)*
2. *Rear body module (TYPICAL)*

FRONT AND REAR BODY MODULES (MAX MODEL)

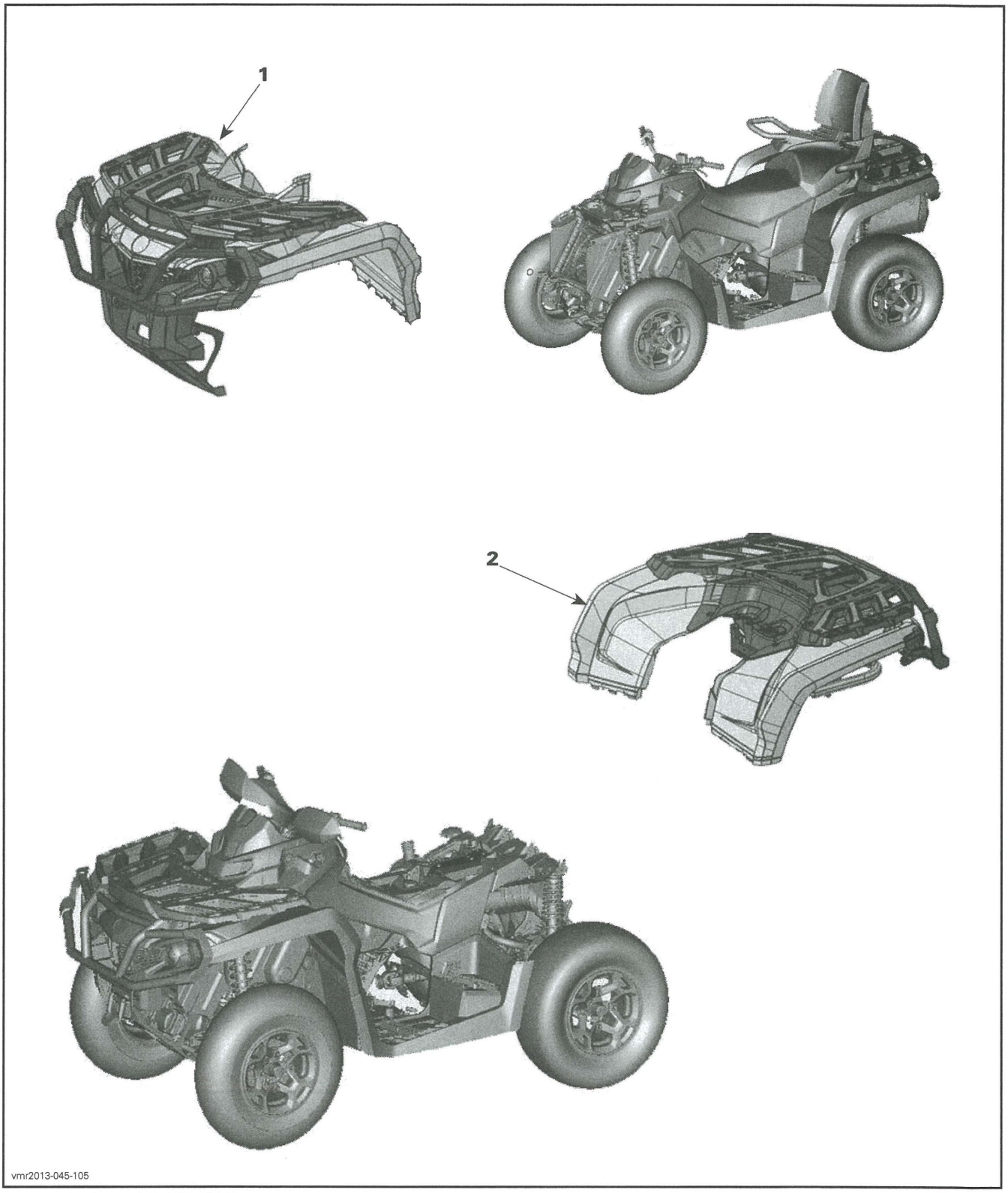

1. *Front body module (TYPICAL)*
2. *Rear body module (TYPICAL)*

BODY PARTS (SHORT MODEL)

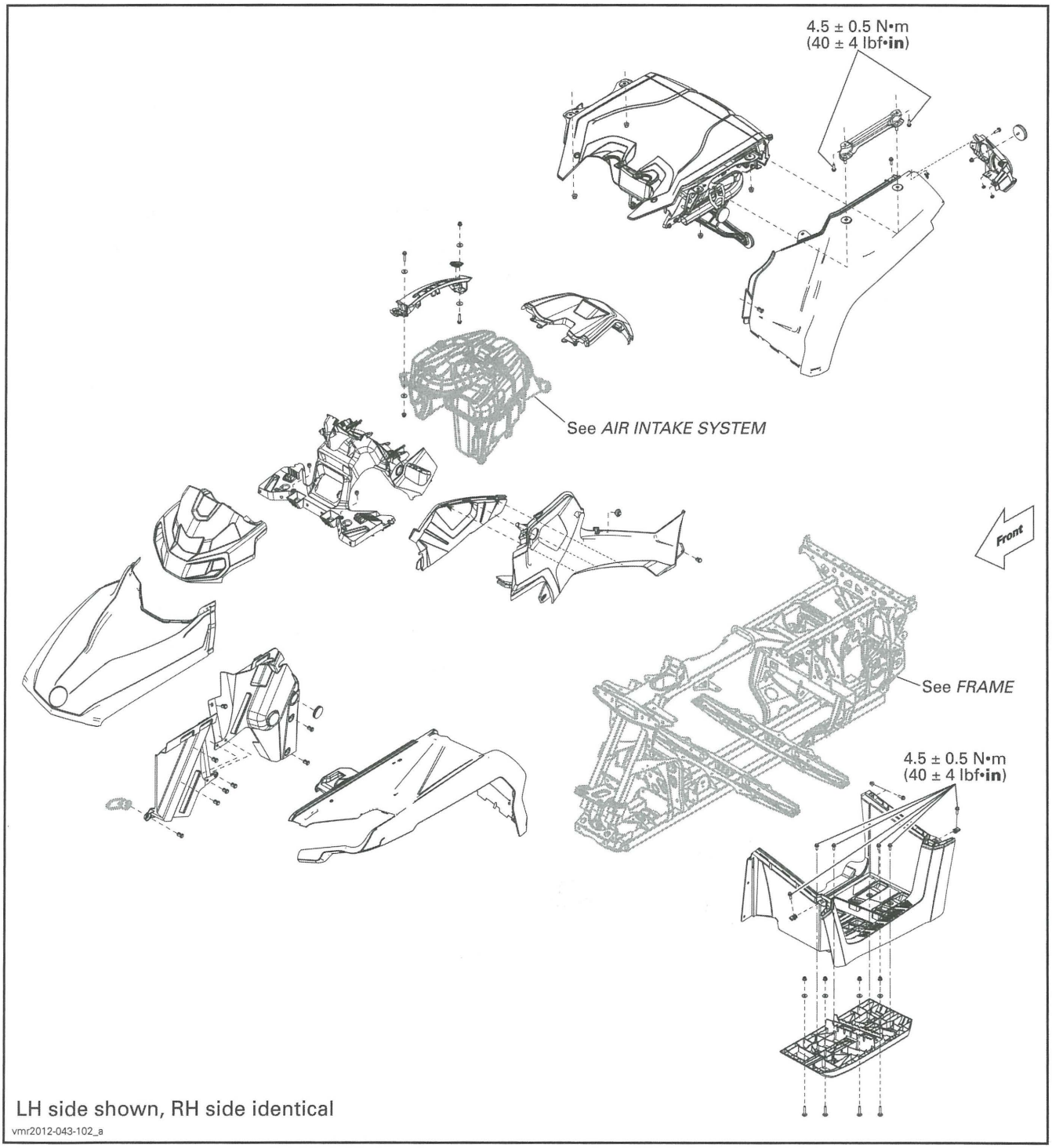

BODY PARTS (MAX MODEL)

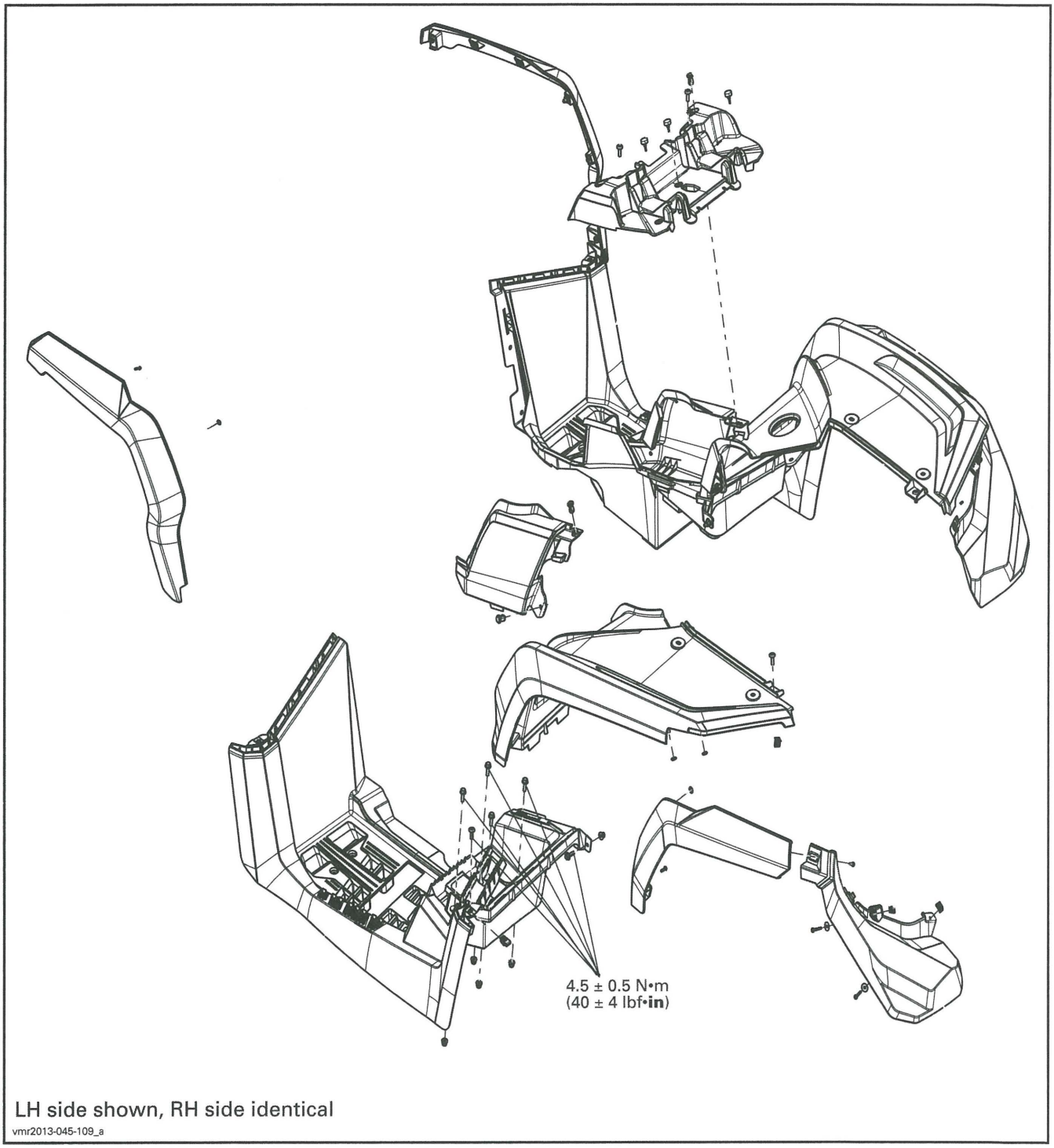

LH side shown, RH side identical

vmr2013-045-109_a

RACKS AND BODY PARTS

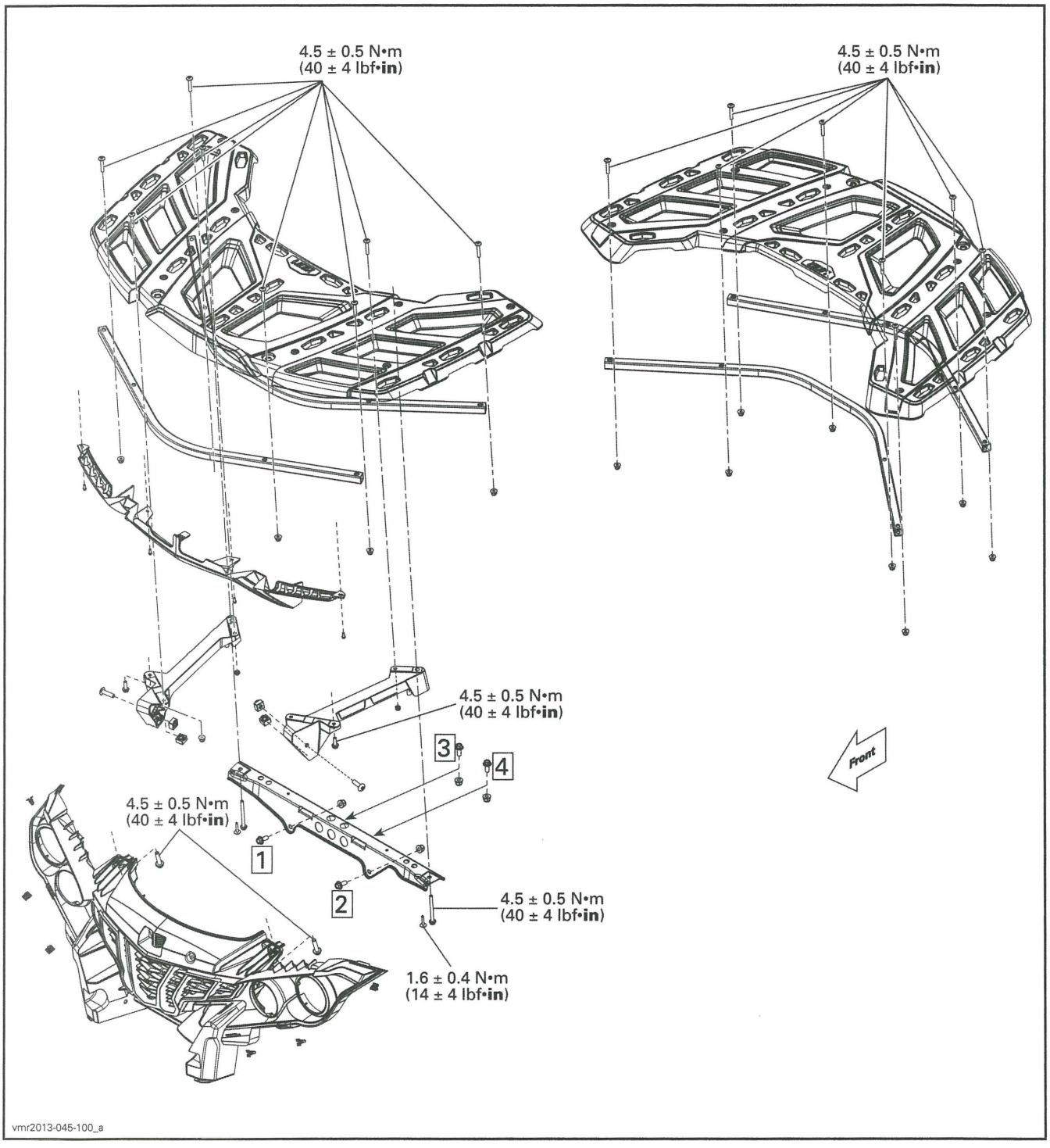

BUMPERS AND BODY PARTS

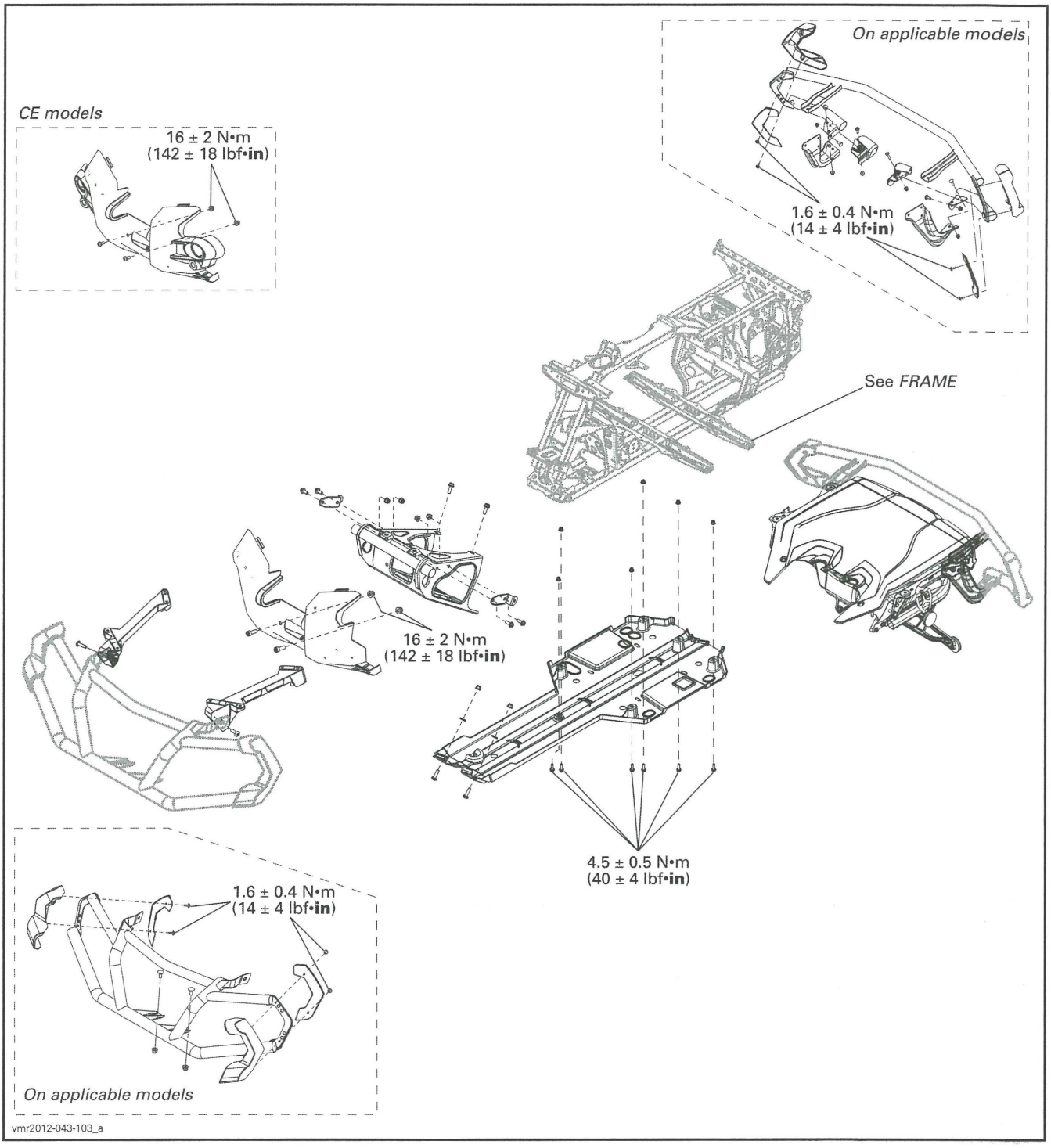

REAR STORAGE COMPARTMENT

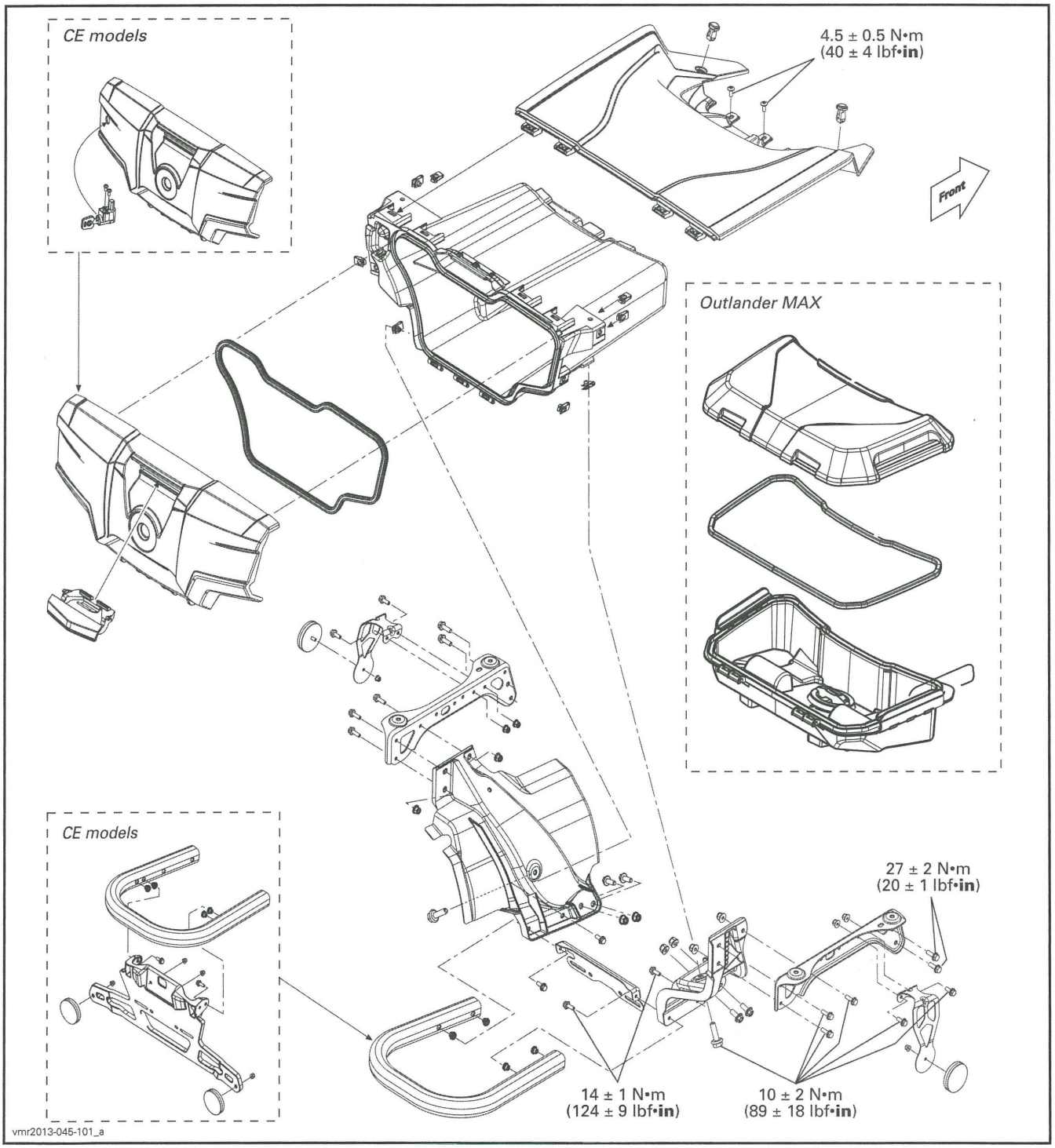

PASSENGER SEAT

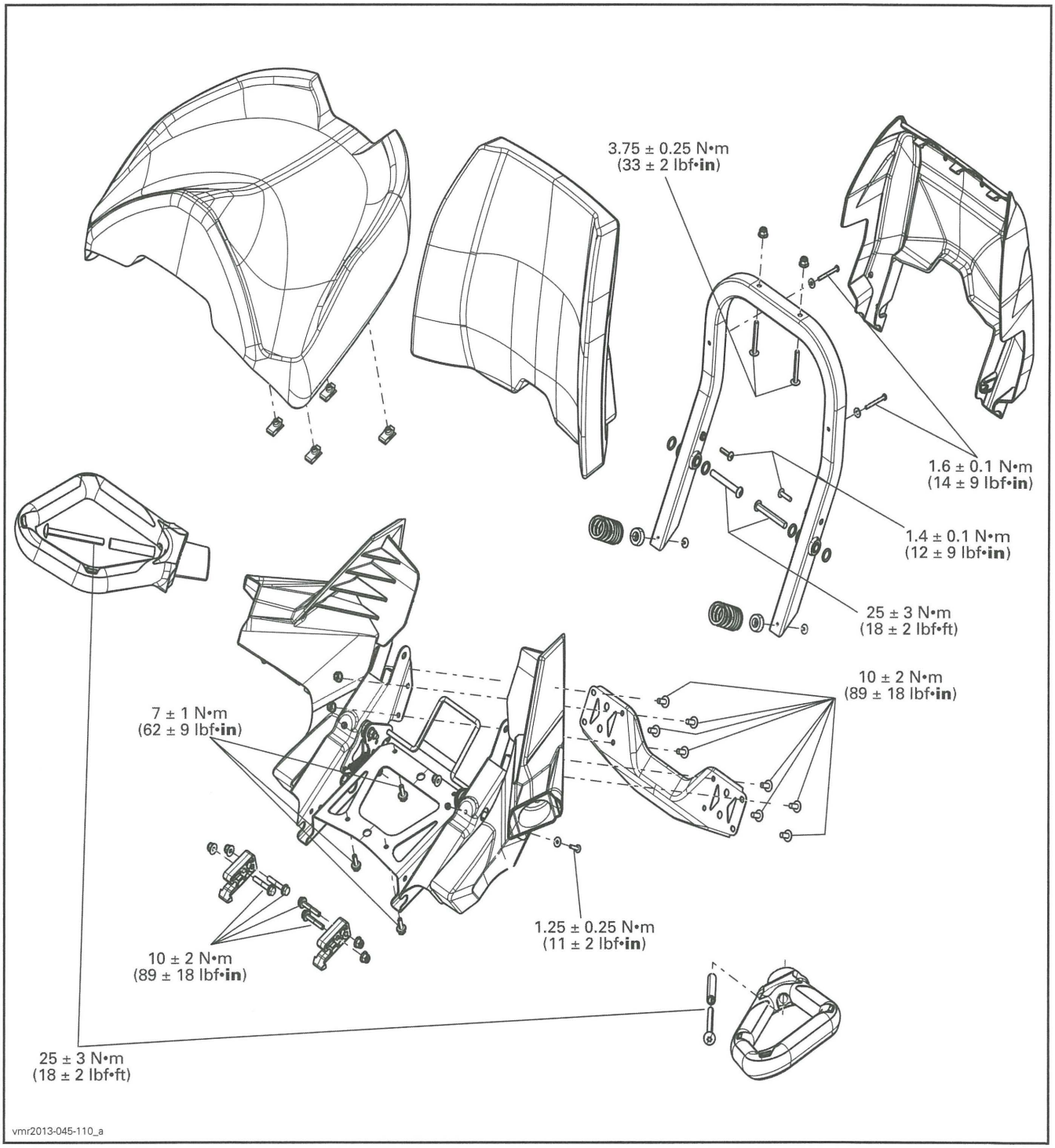

PROCEDURES

PLASTIC RIVET

Plastic rivets are used in the riveting of the various body parts. Plastic rivets can be reused many times. Use the OETIKER PLIERS (P/N 295 000 070) to remove them.

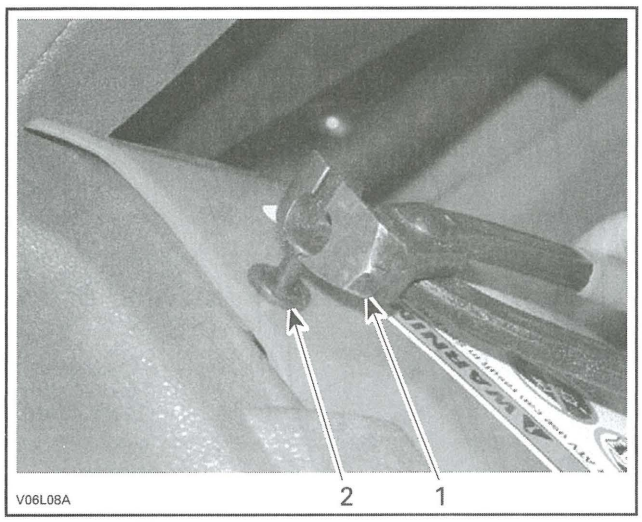

TYPICAL
1. *Pliers*
2. *Plastic rivet*

DECALS

Decal Removal

Using a heat gun warm up one end of decal for a few seconds until decal can roll off when rubbing with your finger.

Pull decal slowly and when necessary apply more heat to ease removal on the area that has to be peeled off.

If decal tears while pulling off, it has to be heated for a few seconds longer. If decal tends to stretch while pulling off, stop heating and wait a few seconds to let it cool, then peel it off.

Decal Installation

Using isopropyl alcohol, clean the surface and dry thoroughly.

Apply liquid soap to new decal and carefully position it. Using a sponge or a squeegee, remove the air bubbles and surplus water working from the center toward the edges. Allow to air dry.

NOTICE **Do not apply isopropyl alcohol or solvent directly on decals. Use these products in a well ventilated area.**

FRONT BODY MODULE

Front Body Module Removal

1. Disconnect battery negative (-) cable.
2. Remove the following panels, see procedure in this subsection.
   - *SIDE PANELS*
   - *INNER FENDER PANELS*.
3. Remove front skid plate retaining screws.

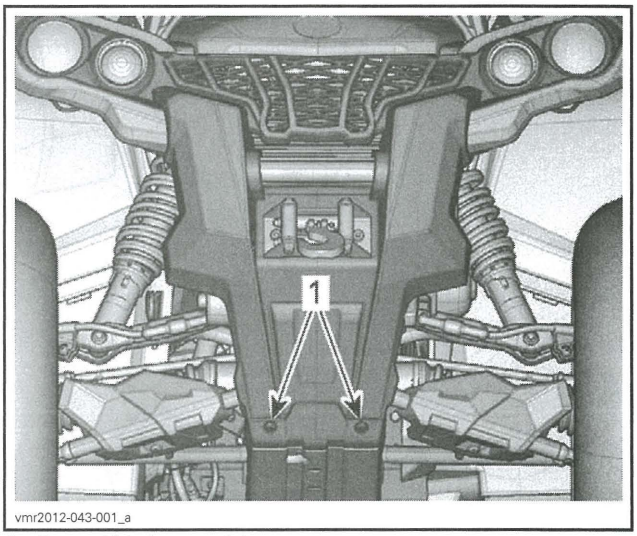

1. *Front skid plate retaining screws*

4. On applicable models, disconnect winch connectors.

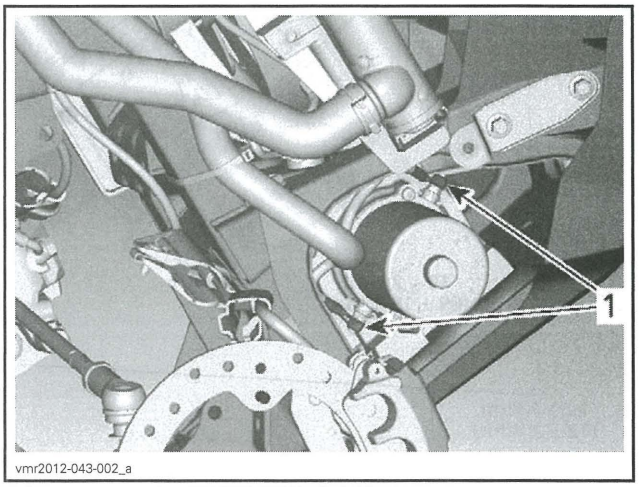

SOME PARTS REMOVED FOR CLARITY
1. *Winch connectors*

5. Disconnect headlights connectors.

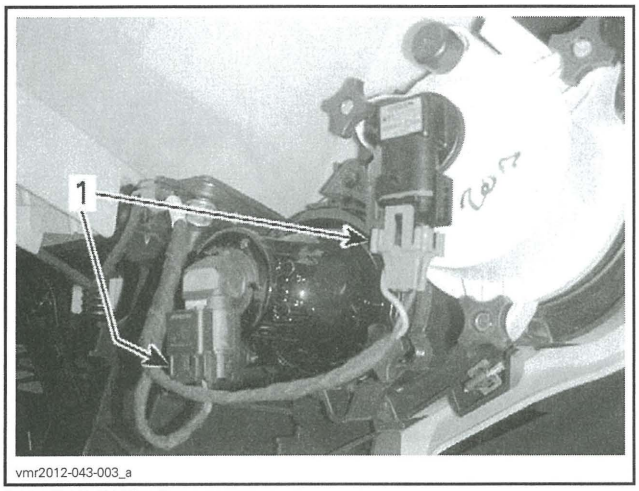

RH SIDE SHOWN
1. *Headlight connectors*

6. Remove screw securing front fender to footrest panel (on both sides).

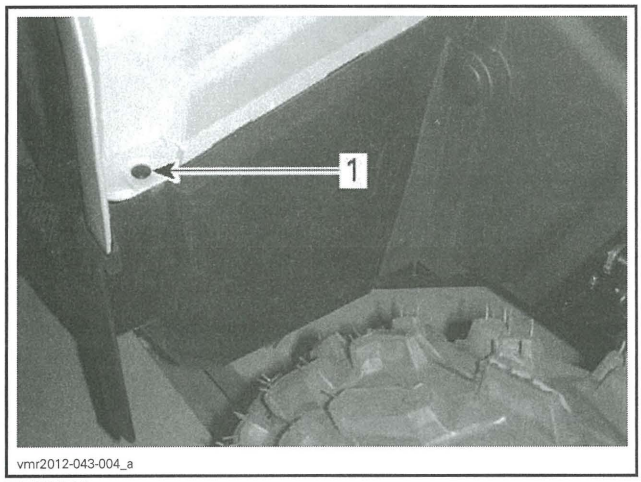

TYPICAL
1. *Screw securing front fender*

7. Detach front fender from footrest panel by releasing retaining tabs (on both sides).

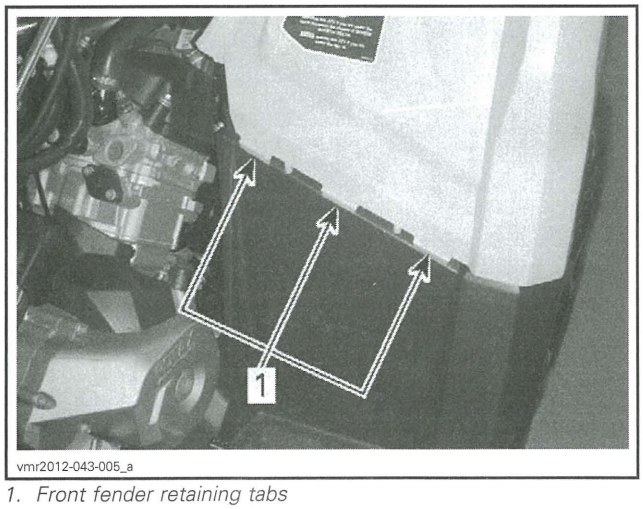

1. *Front fender retaining tabs*

8. Remove screws securing front body module to frame.

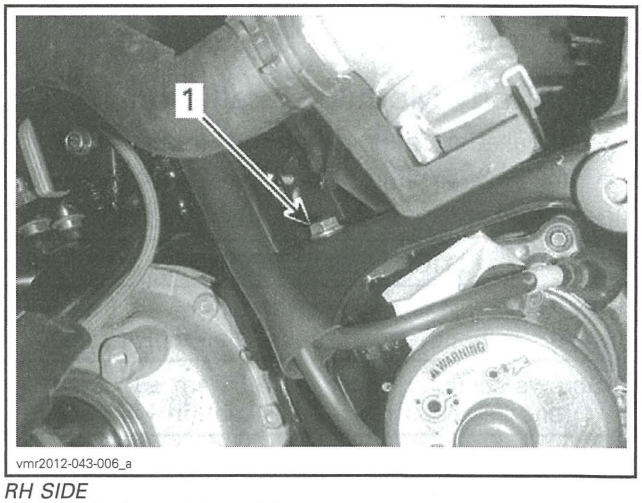

RH SIDE
1. *Front body module retaining screw*

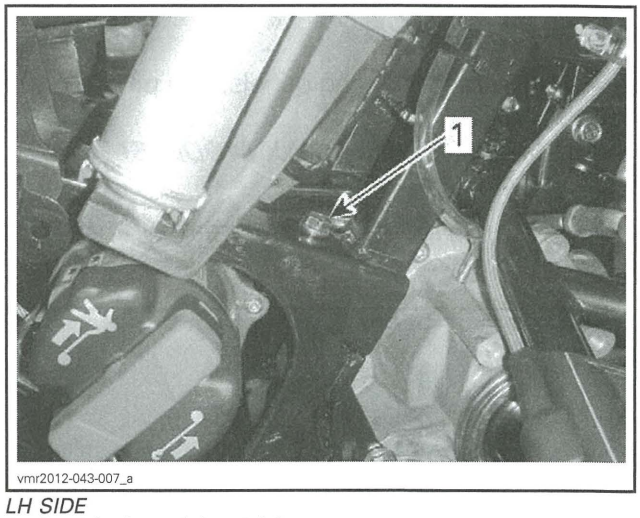

LH SIDE
1. *Front body module retaining screw*

9. Remove screws securing front fenders to frame.

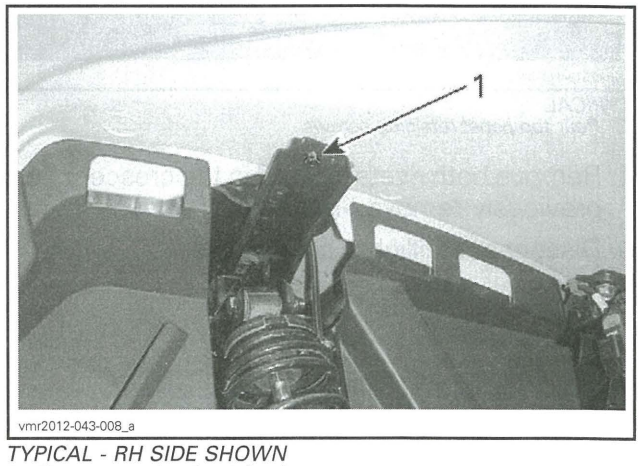

TYPICAL - RH SIDE SHOWN
1. *Screw securing front fender*

10. With the assistance of a person, pull front body module forward.
11. Install front body module on a stable and clean support.

Front Body Module Installation

The installation is the reverse of the removal procedure. However, pay attention to the following.

Tighten front fender screws to specification.

TIGHTENING TORQUE	
Screws securing footrest panels to front fenders	4.5 N•m ± 0.5 N•m (40 lbf•**in** ± 4 lbf•**in**)
Screws securing front fenders to frame	4.5 N•m ± 0.5 N•m (40 lbf•**in** ± 4 lbf•**in**)

REAR BODY MODULE

Rear Body Module Removal

1. Remove seat.
2. Remove the following panels, see procedure in this section.
   - *LUGGAGE TRAY (MAX MODELS)*
   - *SIDE PANEL.*
3. On **Short Models**, remove rear top panel retaining screws.

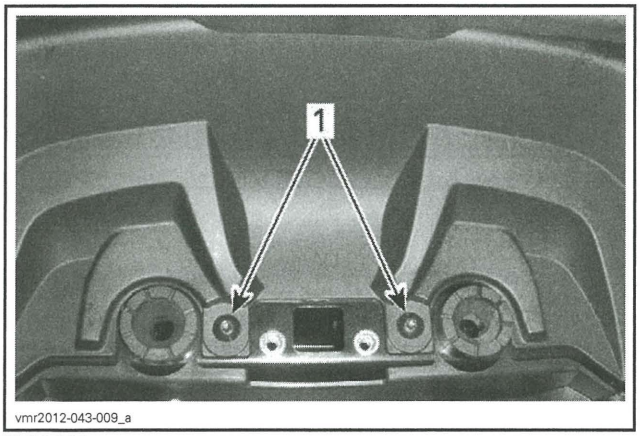

TYPICAL
1. Rear top panel retaining screws

4. Remove both rivets located in the crescent near previously removed retaining screws.
5. Disconnect taillights connectors.

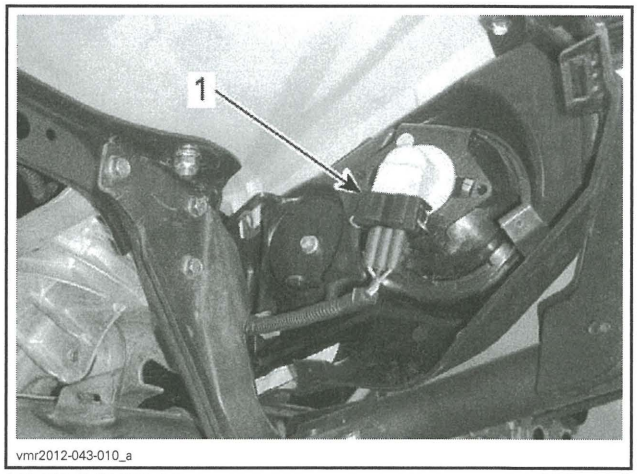

LH SIDE SHOWN
1. Taillight connector

6. Move aside taillight harness from rear body module (on both sides).

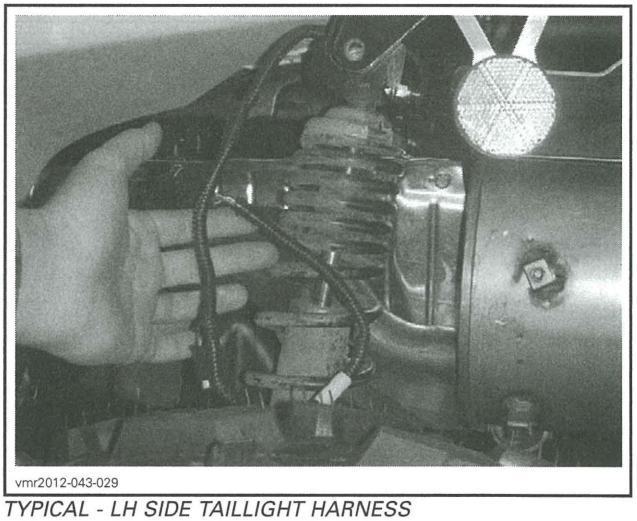

TYPICAL - LH SIDE TAILLIGHT HARNESS

7. Disconnect connectors from voltage regulator rectifier.

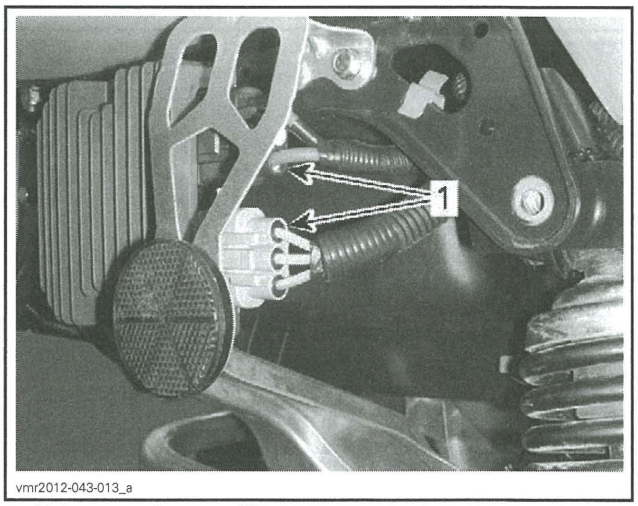

1. Voltage regulator rectifier connectors

8. Remove muffler upper retaining bolt.

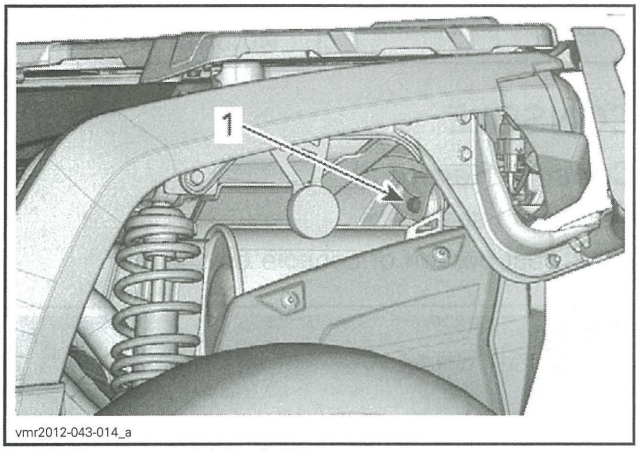

1. Muffler upper retaining bolt

9. Remove rear body module upper retaining bolts.

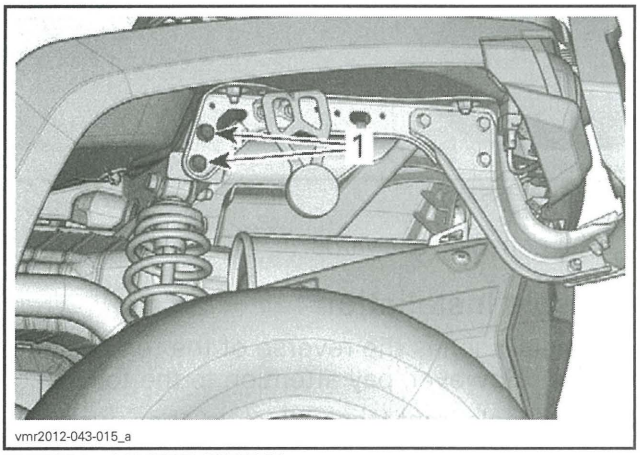

TYPICAL - LH SIDE SHOWN
1. Rear body module upper retaining bolts

10. Remove rear body module lower retaining bolts.

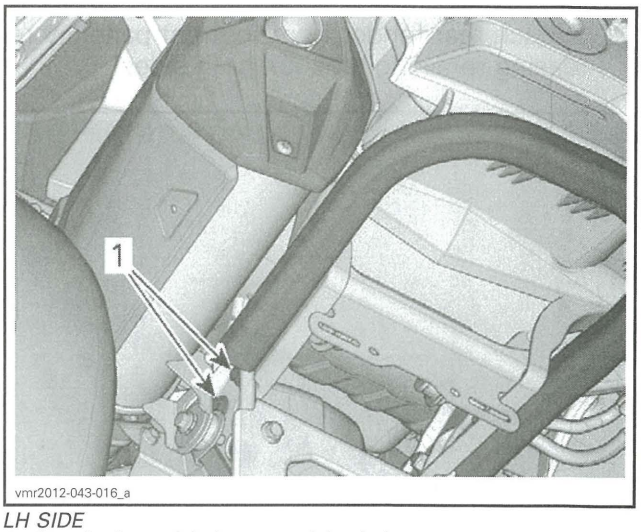

LH SIDE
1. Rear body module lower retaining bolts

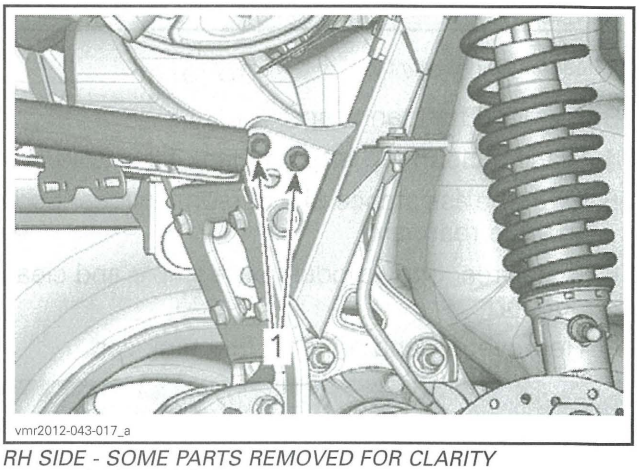

RH SIDE - SOME PARTS REMOVED FOR CLARITY
1. Rear body module lower retaining bolts

11. Remove screw securing rear fender to footrest panel (on both sides).

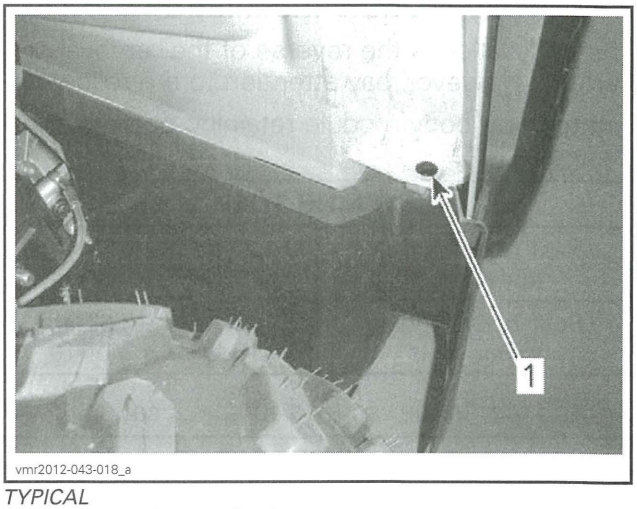

TYPICAL
1. Screw securing rear fender

12. Detach rear fender from footrest panel by releasing retaining tabs (on both sides).

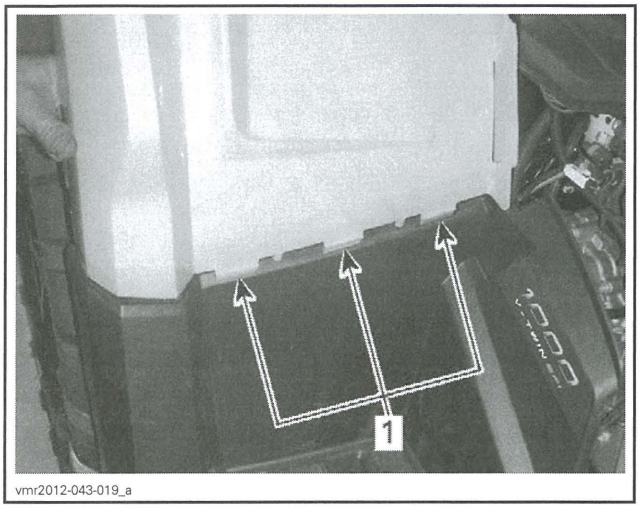

TYPICAL
1. Rear fender retaining tabs

13. Remove fuel tank cap.
14. Place a **clean** rag into fuel tank filler tube.
15. With the assistance of a person, pull rear body module rearward.
16. Install rear body module on a stable and clean support.
17. Remove rag and reinstall fuel tank cap.

⚠ WARNING

Fuel vapors are flammable and explosive under certain conditions. Unless otherwise noted, the fuel tank cap must always be installed on vehicle.

Rear Body Module Installation

The installation is the reverse of the removal procedure. However, pay attention to the following.

Tighten rear body module retaining bolts to specification.

TIGHTENING TORQUE	
Rear body module **upper** bolts	27 N•m ± 2 N•m (20 lbf•ft ± 1 lbf•ft)
Rear body module **lower** bolts	24.5 N•m ± 3.5 N•m (18 lbf•ft ± 3 lbf•ft)

Tighten rear fender screws to specification.

TIGHTENING TORQUE	
Screws securing footrest panels to rear fenders	4.5 N•m ± 0.5 N•m (40 lbf•**in** ± 4 lbf•**in**)

Tighten rear top panel screws to specification.

TIGHTENING TORQUE	
Rear top panel screws	4.5 N•m ± 0.5 N•m (40 lbf•**in** ± 4 lbf•**in**)

CONSOLE

Console Removal

1. Remove seat.
2. Lift rear portion of console upwards.

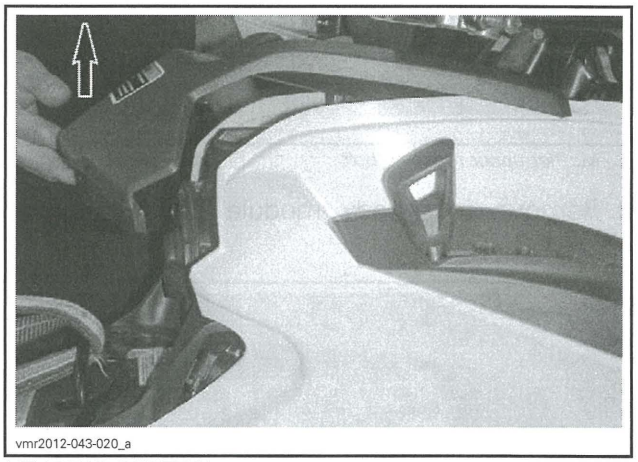

LIFT REAR PORTION

3. Pull console rearwards.

Console Installation

The installation is the reverse of the removal procedure. However, pay attention to the following.

Align console front tabs with slots, then push console forward.

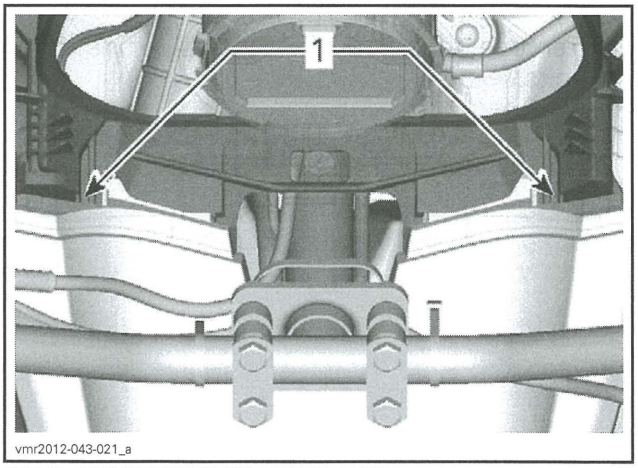

SOME PARTS REMOVED FOR CLARITY
1. Console front tabs

GAUGE SUPPORT

Refer to *LIGHTS, GAUGE AND ACCESSORIES* subsection.

INNER FENDER PANELS

Inner Fender Removal and Installation

Remove the following plastic rivets from inner fender panels.

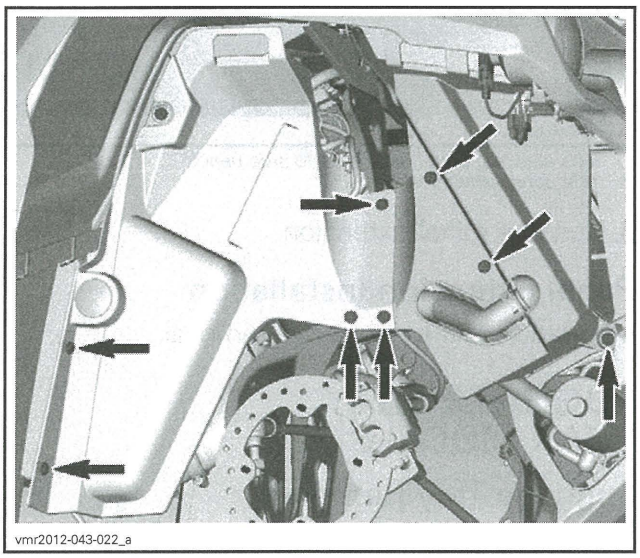

SOME PARTS REMOVED FOR CLARITY

The installation is the reverse of the removal procedure.

SIDE PANELS

Side Panel Removal

1. Remove *CONSOLE*. See procedure in this subsection.
2. Remove plastic rivet securing side panel to inner fender panel.

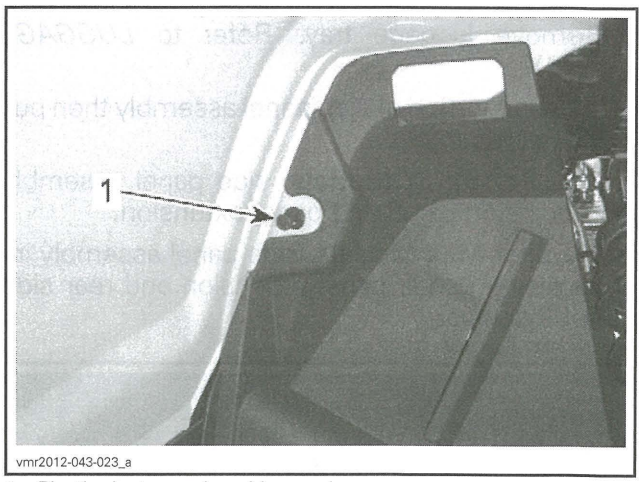

1. Plastic rivet securing side panel

3. Remove plastic rivet securing side panel to air filter housing.

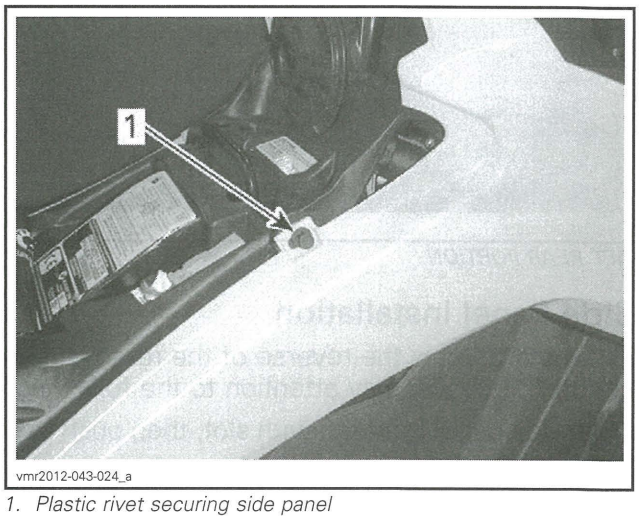

1. Plastic rivet securing side panel

4. Remove plastic rivet securing side panel **(Short Models)** or rear side panel extension **(Max Models)** to rear fender.

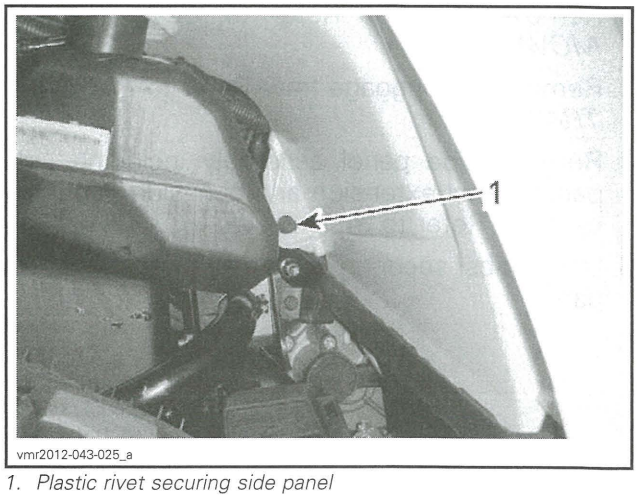

1. Plastic rivet securing side panel

5. Remove luggage tray. Refer to *LUGGAGE TRAY*.
6. Lift rear portion of side panel assembly then pull it towards outside.

NOTE: For **Short Models**, side panel assembly includes side panel and panel extension.

NOTE: For **Max Models**, side panel assembly includes side panel, panel extension and rear side panel extension.

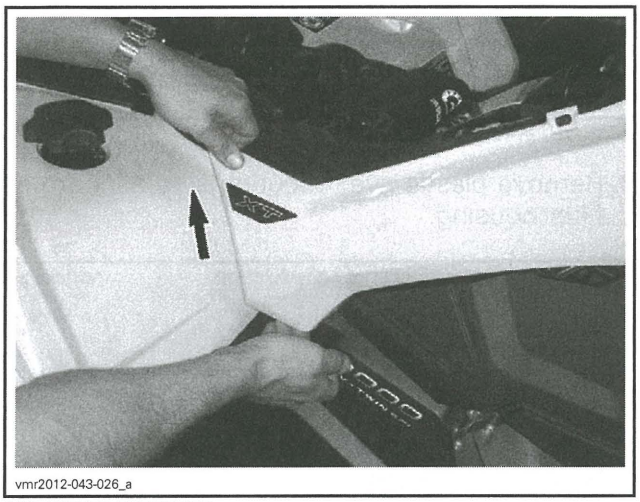
vmr2012-043-026_a

LIFT REAR PORTION

Side Panel Installation

The installation is the reverse of the removal procedure. However, pay attention to the following.

Align side panel front tab with slot, then push side panel forward.

PANEL EXTENSIONS

Panel Extension Removal

1. Remove seat.
2. Remove console. Refer to *CONSOLE REMOVAL*.
3. Remove rear luggage tray. Refer to *LUGGAGE TRAY*.
4. Remove side panel assembly including side panel, panel extension and rear side panel extension. Refer to *SIDE PANEL REMOVAL*.
5. Undo tabs securing panel extension to side panel.

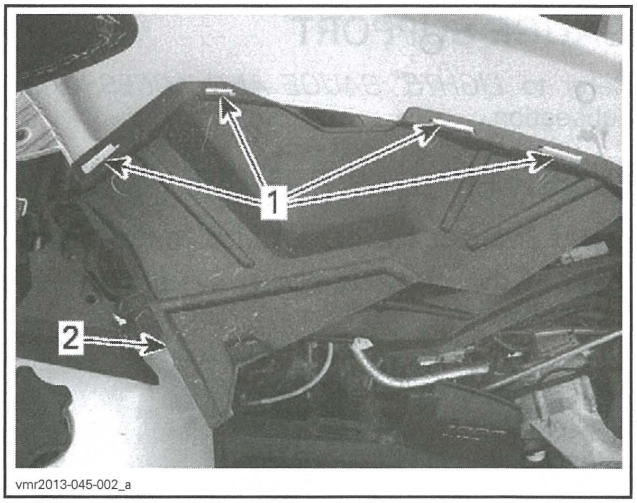

vmr2013-045-002_a

1. *Tabs securing panel extension to side panel*
2. *Side panel extension*

6. Remove panel extension.

Panel Extension Installation

Installation is the reverse of removal.

LUGGAGE TRAY (MAX MODELS)

Luggage Tray Removal

1. Remove seat.
2. Remove retaining screws securing luggage tray and rear top panel to frame.

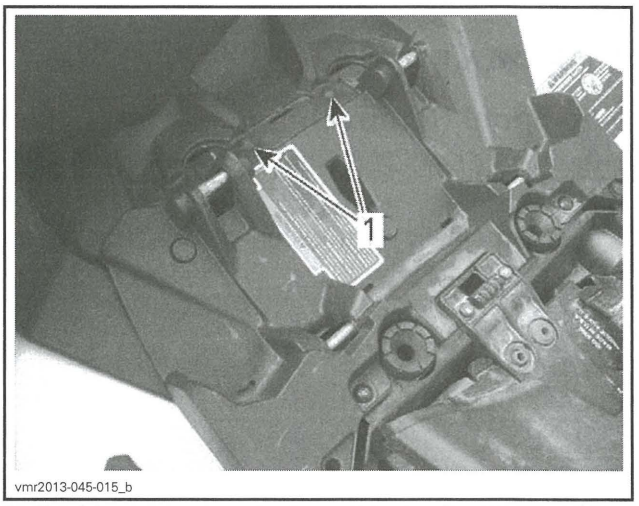

vmr2013-045-015_b

1. *Retaining screws securing luggage tray and rear top panel to frame*

3. Remove retaining screws securing luggage tray to frame.
4. Remove rivets securing luggage tray to side panels.

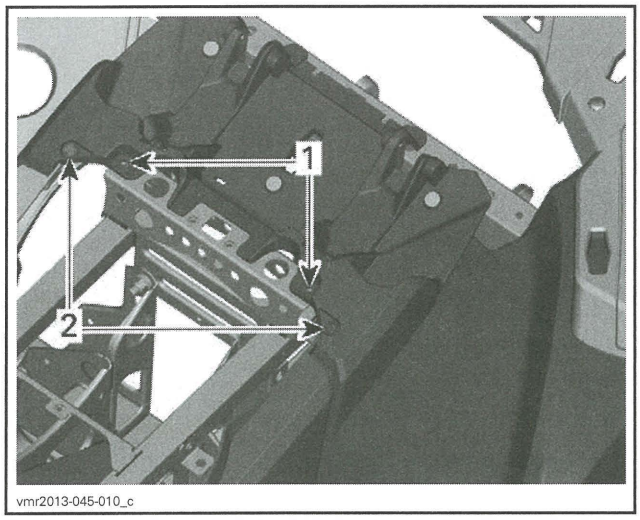

1. *Retaining screws securing luggage tray to frame*
2. *Rivets securing luggage tray to rear side panel extension*

Luggage Tray Installation

Installation is the reverse of removal. However pay attention to the following:

TIGHTENING TORQUE	
Luggage tray retaining screws	4.5 N•m ± 0.5 N•m (40 lbf•**in** ± 4 lbf•**in**)

REAR SIDE PANEL EXTENSIONS (MAX MODEL)

Rear Side Panel Extension Removal

1. Remove seat.
2. Refer to the appropriate sections and remove the following:
   - *LUGGAGE TRAY*
   - *SIDE PANEL.*
3. Remove side panel assembly including side panel, panel extension and rear side panel extension. Refer to *SIDE PANEL REMOVAL.*
4. Unclip retaining tabs securing rear side panel extension to side panel.

Rear Side Panel Extension Installation

Installation is the reverse of removal.

REAR TOP PANEL

Rear Top Panel Removal

1. Remove seat.
2. Remove rear body module. Refer to *REAR BODY MODULE.*
3. Remove rear rack. Refer to *REAR RACK REMOVAL.*
4. Using a screwdriver, unclip retaining tabs securing rear top panel to rear storage compartment.

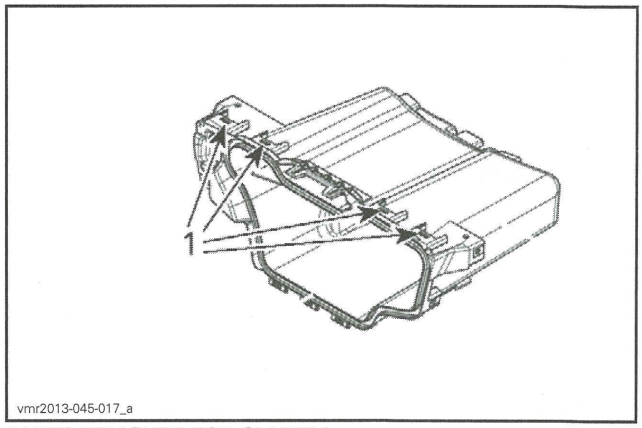

PARTS REMOVED FOR CLARITY
1. *Retaining tab locations*

5. Slide rear top panel forward to free it from rear storage compartment retaining tab.

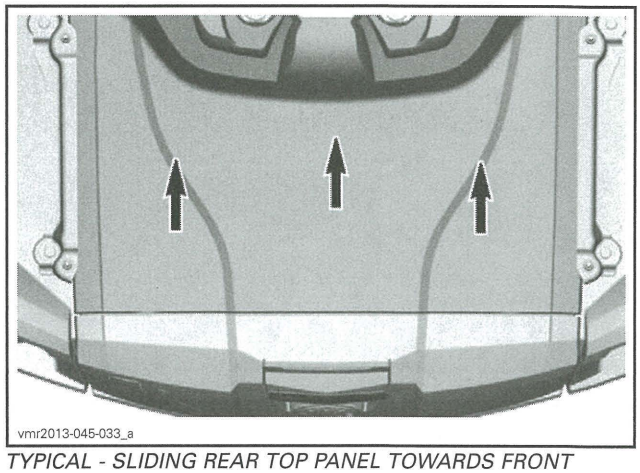

TYPICAL - SLIDING REAR TOP PANEL TOWARDS FRONT

Rear Top Panel Installation

Installation is the reverse of removal. However pay attention to the following:

TIGHTENING TORQUE	
Rear top panel screws	4.5 N•m ± 0.5 N•m (40 lbf•**in** ± 4 lbf•**in**)

FOOTREST PANELS

Footrest Panel Removal

Short Models

1. Remove footrest panel retaining screws.

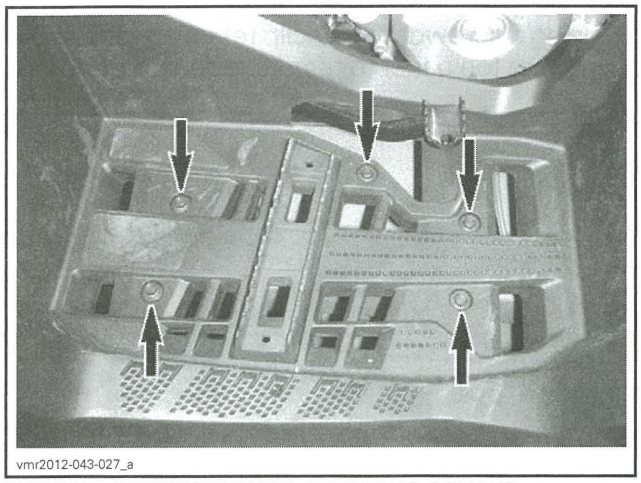
vmr2012-043-027_a

TYPICAL - FOOTREST PANEL RETAINING SCREWS

2. Remove screw securing front fender to footrest panel.

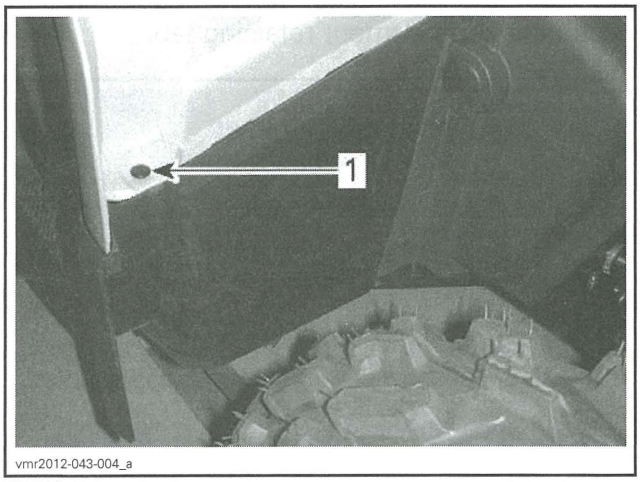

vmr2012-043-004_a

TYPICAL
1. Screw securing front fender

3. Remove both plastic rivet securing inner fender panel to footrest panel.

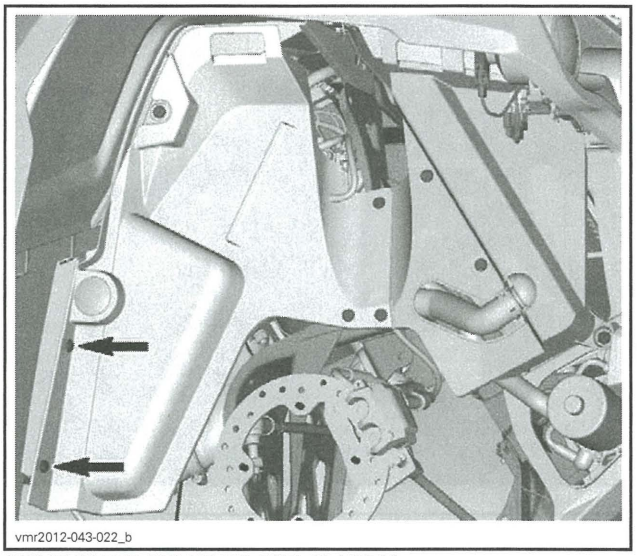
vmr2012-043-022_b

SOME PARTS REMOVED FOR CLARITY

4. Remove screw securing rear fender to footrest panel.



vmr2012-043-018_a

TYPICAL
1. Screw securing rear fender

5. Remove screw securing footrest panel to frame.

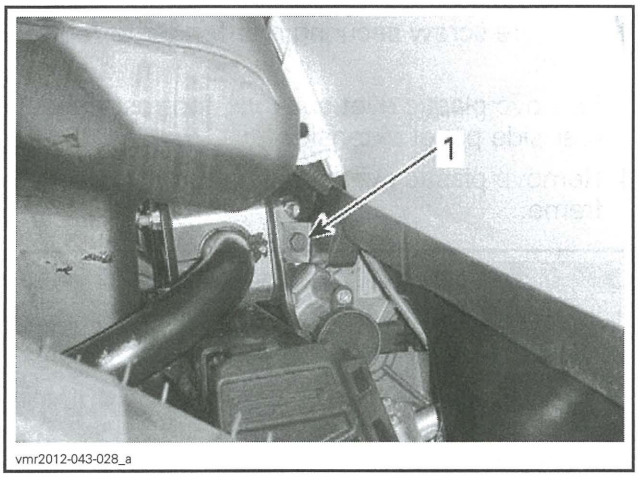

TYPICAL
1. Screw securing footrest panel

6. Detach front fender from footrest panel by releasing retaining tabs.

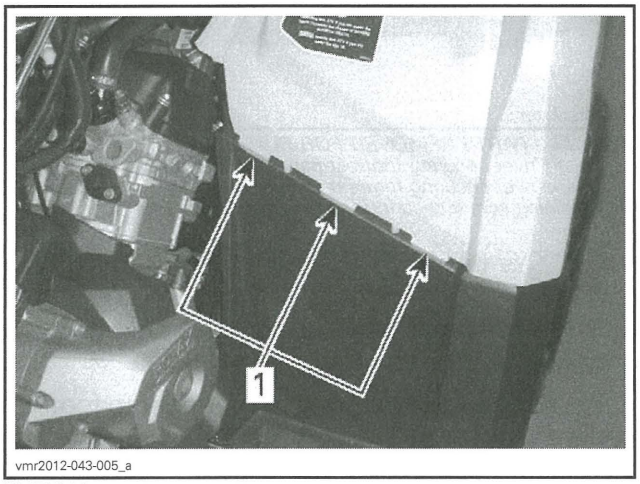

TYPICAL
1. Front fender retaining tabs

7. Detach rear fender from footrest panel by releasing retaining tabs.

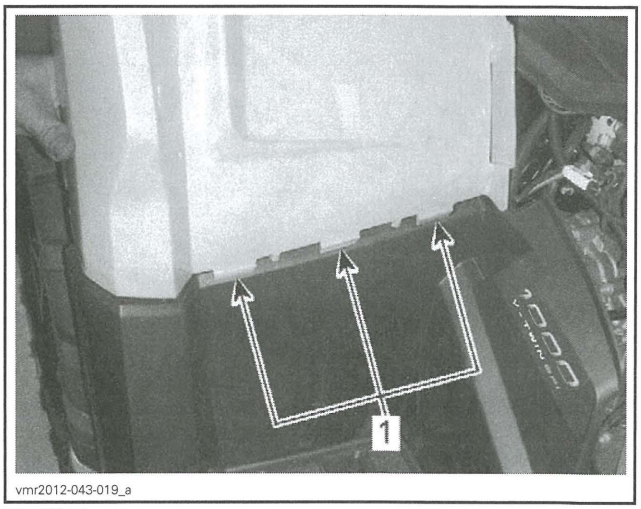

TYPICAL
1. Rear fender retaining tabs

8. Remove footrest panel from vehicle.

Max Models

1. Remove footrest panel retaining screws.

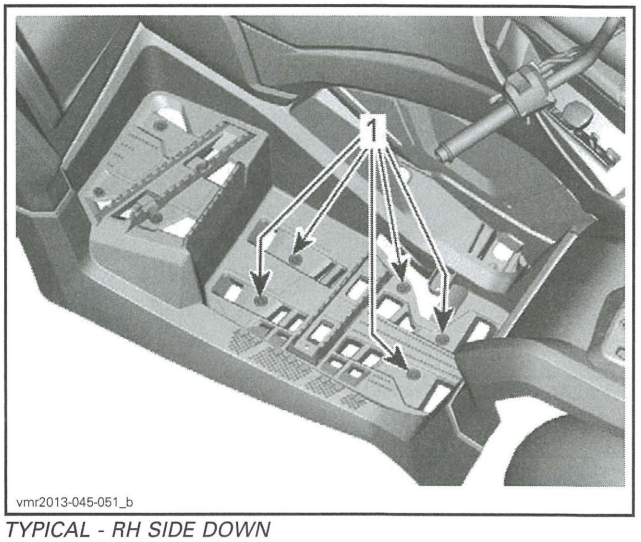

TYPICAL - RH SIDE DOWN
1. Footrest panel retaining screws

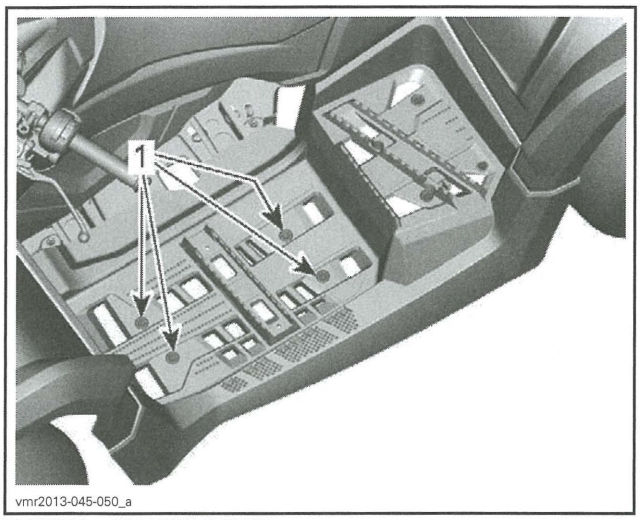

TYPICAL - RH SIDE DOWN
1. *Footrest panel retaining screws*

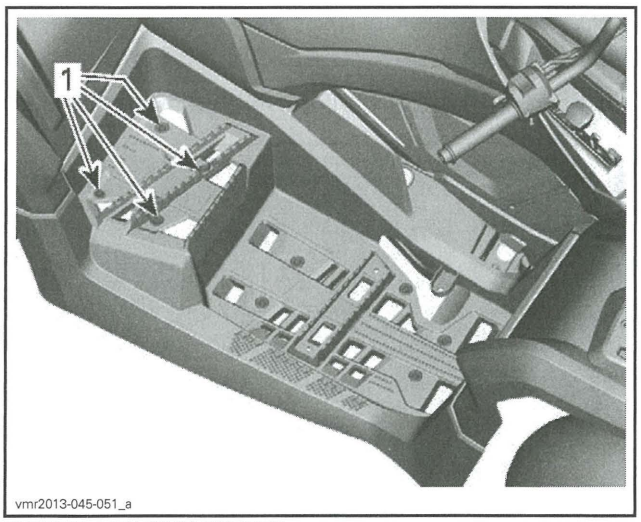

TYPICAL - LH SIDE SHOWN
1. *Footrest panel retaining screws*

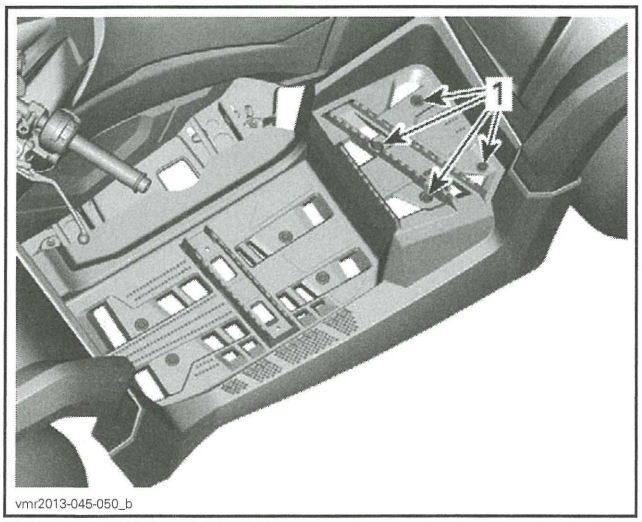

TYPICAL - LH SIDE SHOWN
1. *Footrest panel retaining screws*

2. Remove screw securing rear fender to footrest panel.
3. Remove plastic rivet securing footrest panel to rear side panel extension.
4. Remove plastic rivet securing footrest panel to frame.

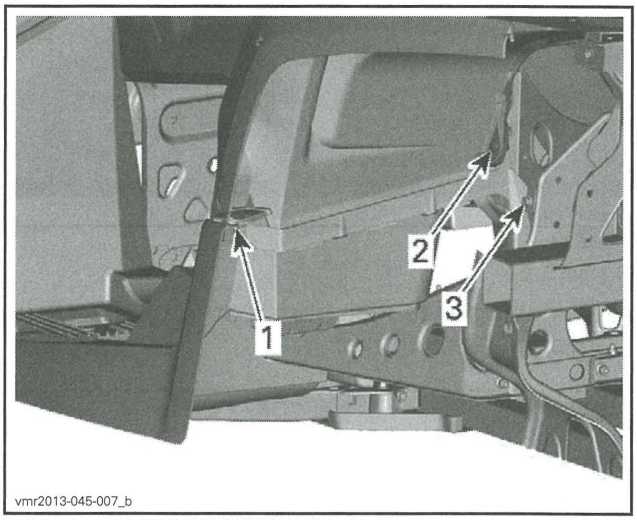

TYPICAL - PARTS REMOVED FOR CLARITY
1. *Plastic rivet securing footrest panel to inner fender*
2. *Plastic rivet securing footrest panel to rear side panel extension*
3. *Retaining screw securing footrest panel to frame*

5. Remove plastic rivet securing footrest panel to panel extension.
6. Remove plastic rivet securing footrest panel to frame.
7. Remove screw securing front fender to footrest panel.

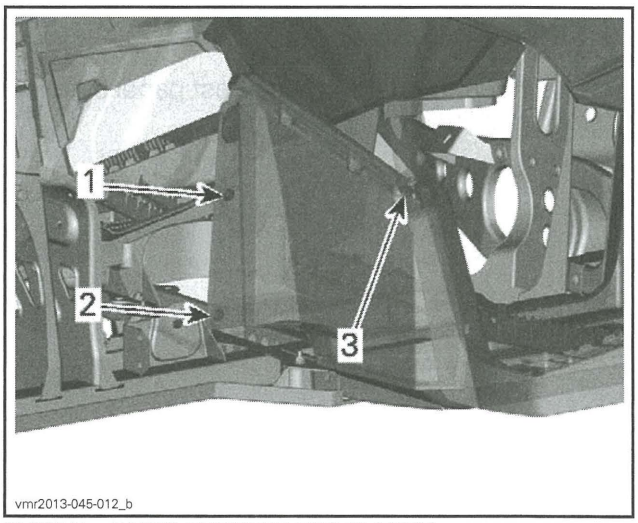

TYPICAL - PARTS REMOVED FOR CLARITY
1. *Plastic rivet securing footrest panel to panel extension*
2. *Plastic rivet securing footrest panel to frame*
3. *Retaining screw securing footrest panel to front fender*

8. Detach front fender from footrest panel by releasing retaining tabs.

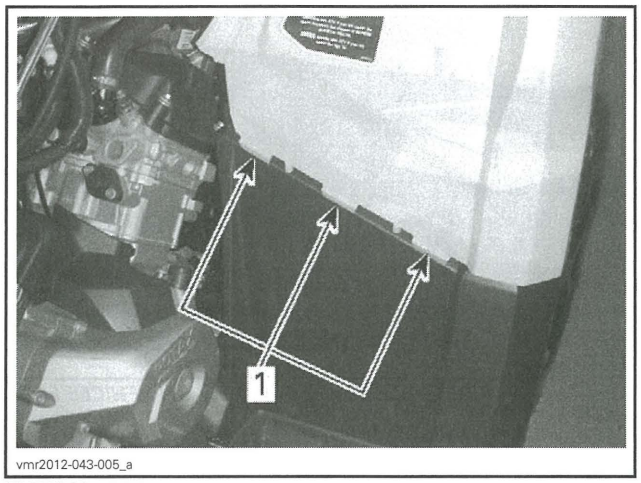

TYPICAL
1. Front fender retaining tabs

9. Detach rear fender from footrest panel by releasing retaining tabs.

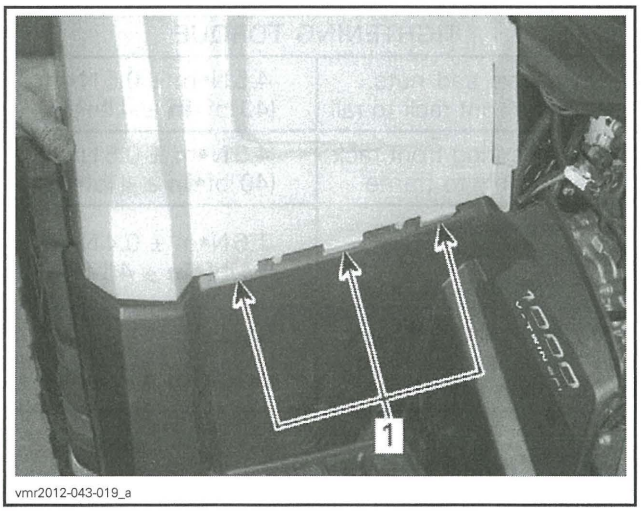

TYPICAL
1. Rear fender retaining tabs

10. Remove footrest panel from vehicle.

Footrest Panel Installation

The installation is the reverse of the removal procedure. However, pay attention to the following.

Tighten footrest panel screws to specification.

TIGHTENING TORQUE	
Footrest panel retaining screws	4.5 N•m ± 0.5 N•m (40 lbf•**in** ± 4 lbf•**in**)
Screws securing footrest panel to fenders	4.5 N•m ± 0.5 N•m (40 lbf•**in** ± 4 lbf•**in**)

PASSENGER GRIPS

Passenger Grips Removal

1. Remove retaining screw securing passenger grips and remove passenger grips.

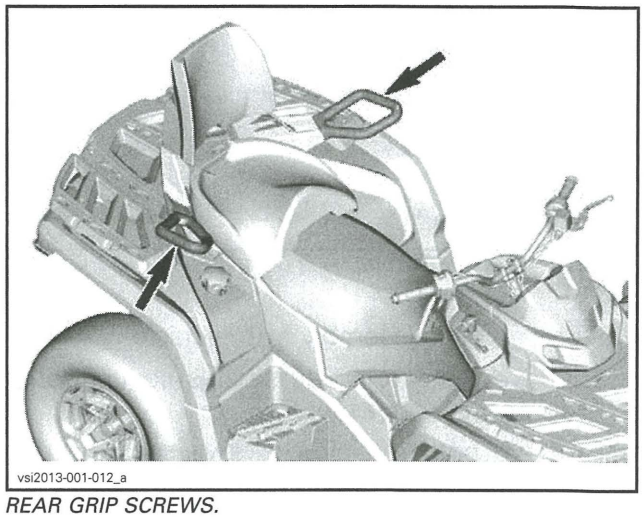

REAR GRIP SCREWS.

Passenger Grips Installation

Installation is the reverse of removal. However pay attention to the following:

TIGHTENING TORQUE	
Passenger grips retaining screw	25 N•m ± 3 N•m (18 lbf•ft ± 2 lbf•ft)

RACK (FRONT AND REAR)

Front Rack Removal

1. Remove retaining bolts securing rack assembly to frame.

NOTE: A small wrench will be needed to remove the retaining screw located between the rack support and fender.

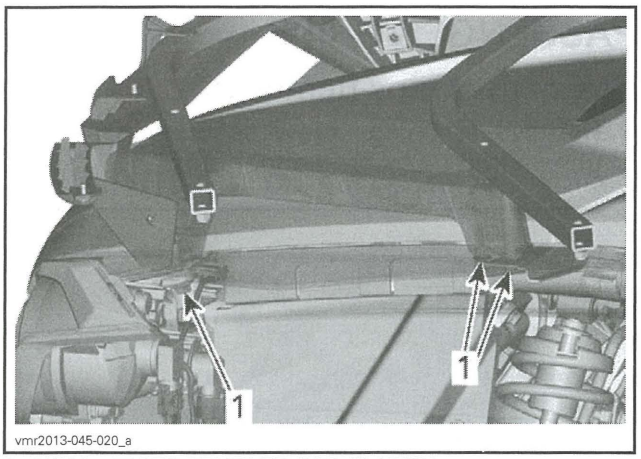

TYPICAL - PARTS REMOVED FOR CLARITY
1. Retaining bolts locations

2. Remove rack assembly from vehicle.
3. Remove the 4 retaining screws securing rack moulding to rack assembly.
4. Remove both retaining screws securing rack moulding to rack supports.

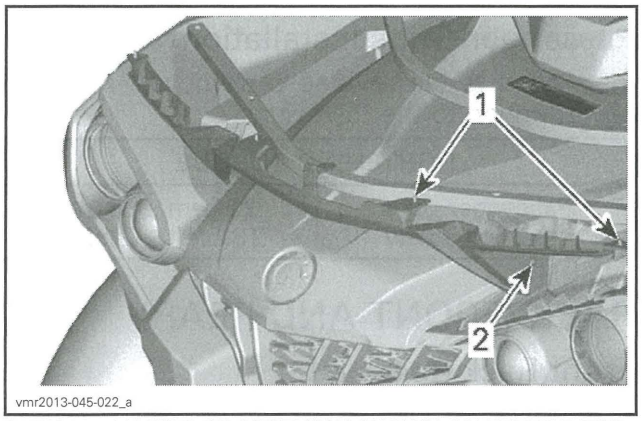

TYPICAL - LH SIDE OF ASSEMBLY SHOWN ON VEHICLE FOR CLARITY
1. LH side retaining screws securing rack moulding to rack assembly
2. LH side retaining screw securing rack moulding to rack support

5. Remove both retaining bolts securing rack supports to rails.

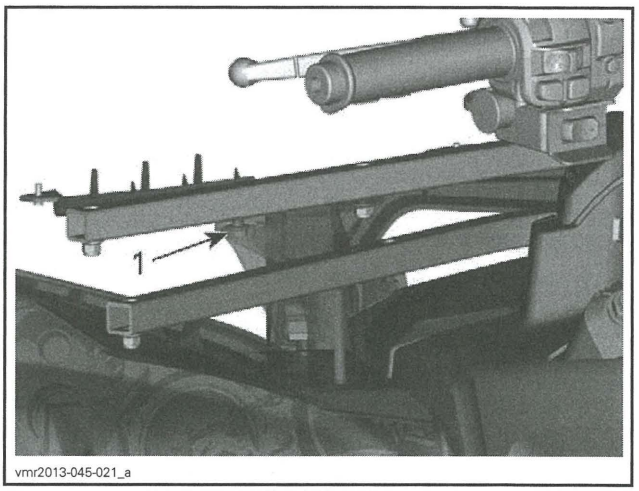

TYPICAL - LH SIDE OF ASSEMBLY SHOWN ON VEHICLE FOR CLARITY
1. Retaining bolt securing rack support to rail

6. Remove retaining screws securing rack to rails.

Front Rack Installation

The installation is the reverse of the removal procedure. However, pay attention to the following.

TIGHTENING TORQUE	
Screws and nuts securing front rack to rail	4.5 N•m ± 0.5 N•m (40 lbf•**in** ± 4 lbf•**in**)
Bolts securing front rack assembly to frame	4.5 N•m ± 0.5 N•m (40 lbf•**in** ± 4 lbf•**in**)
Retaining screws securing fender to front rack assembly	1.6 N•m ± 0.4 N•m (14 lbf•**in** ± 4 lbf•**in**)
Screws securing rack moulding to rack assembly	4.5 N•m ± 0.5 N•m (40 lbf•**in** ± 4 lbf•**in**)

Rear Rack Removal

1. Remove retaining bolts and nuts securing rack assembly to frame.

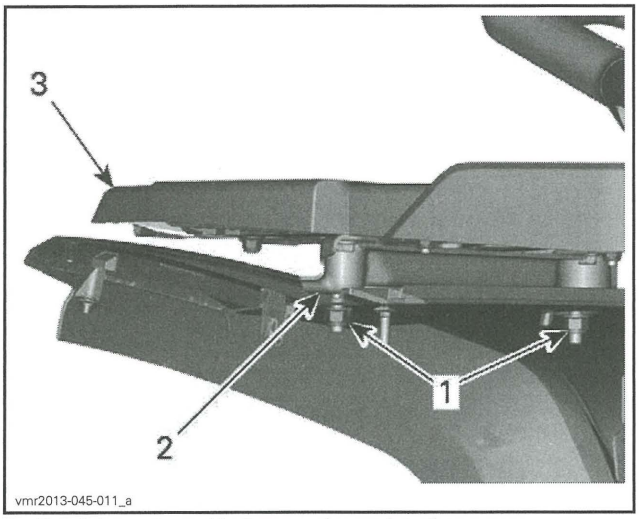

1. *Retaining nuts and bolts securing rack to frame*
2. *Frame*
3. *Rack assembly*

2. Remove rack from vehicle.
3. Remove retaining screws securing rack to rail.

Rear Rack Installation

The installation is the reverse of the removal procedure. However, pay attention to the following.

TIGHTENING TORQUE	
Screws and nuts securing rear rack to rail	4.5 N•m ± 0.5 N•m (40 lbf•**in** ± 4 lbf•**in**)
Screws an nuts securing rear rack assembly to frame	4.5 N•m ± 0.5 N•m (40 lbf•**in** ± 4 lbf•**in**)

REAR STORAGE COMPARTMENT

REAR STORAGE COMPARTMENT COVER

Rear Storage Compartment Cover Replacement

1. Open rear storage compartment cover.
2. Push rear storage compartment cover forward to release it from hinges.

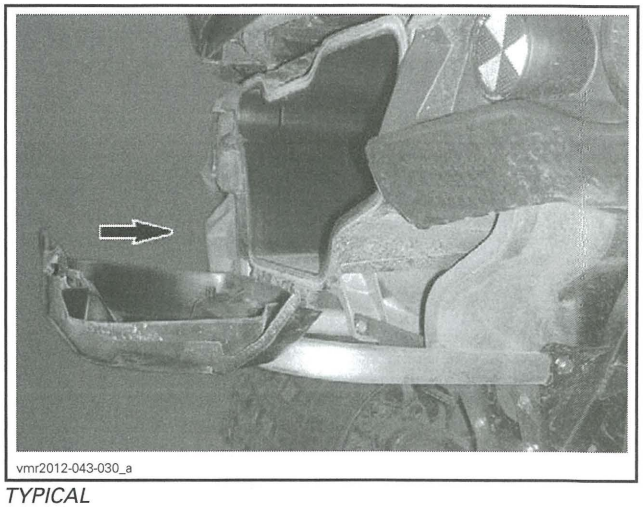

TYPICAL

3. Install a new rear storage compartment cover as the reverse of removal.

Rear Storage Compartment

Rear storage Compartment Removal

1. Remove rear body module. Refer to *REAR BODY MODULE*.
2. Remove rear rack. Refer to *REAR RACK REMOVAL*.
3. Remove rear storage compartment cover. Refer to *REAR STORAGE COMPARTMENT COVER*.
4. Remove retaining screws securing bottom of RH rear storage compartment support.

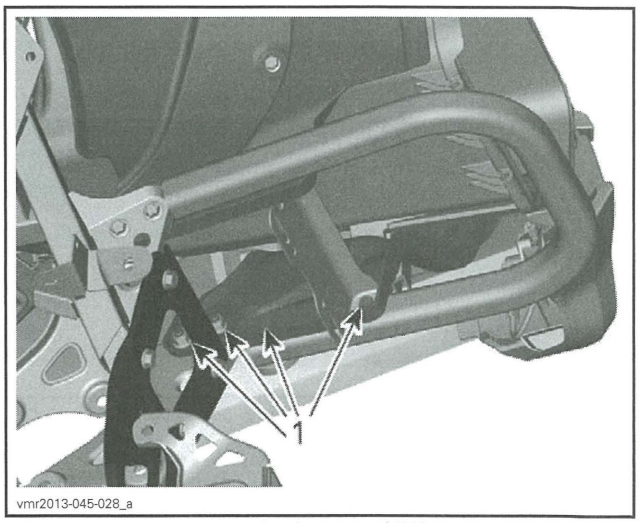

1. *Retaining screws securing bottom of RH rear storage compartment support*

5. Remove retaining screws securing RH rear storage compartment support to RH support.
6. Remove retaining screw securing RH fender to rear storage compartment.

7. Remove retaining screw securing RH rear storage compartment support to rear storage compartment.

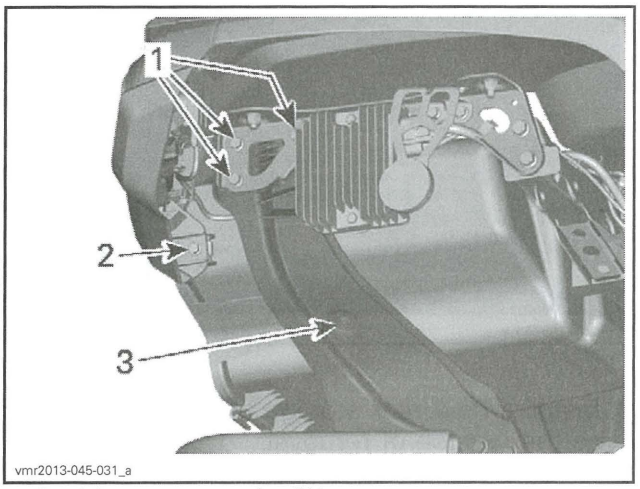

vmr2013-045-031_a

1. *Retaining screws securing RH rear storage compartment support to RH support*
2. *Retaining screw securing RH fender to rear storage compartment*
3. *Retaining screw securing RH rear storage compartment support to rear storage compartment*

8. Remove RH rear storage compartment support.
9. Remove retaining screw securing top of RH fender to top of rear storage compartment.

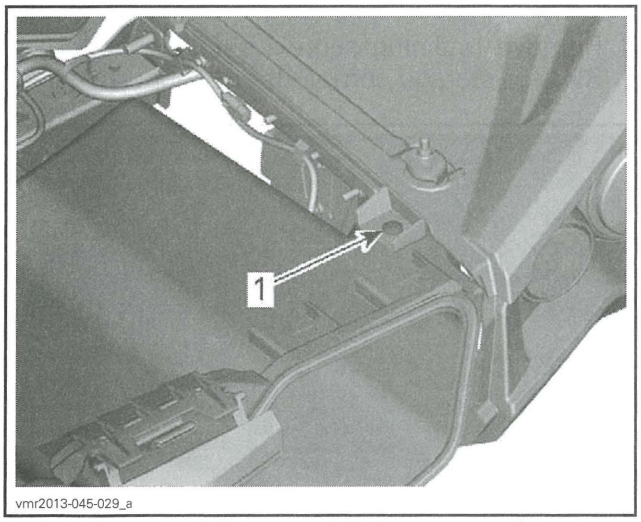

vmr2013-045-029_a

1. *Retaining screw securing top of RH fender to top of rear storage compartment*

10. Remove retaining screw securing LH rear storage compartment support to rear storage compartment.
11. Remove retaining screw securing LH support and LH rear storage compartment support to rear storage compartment.

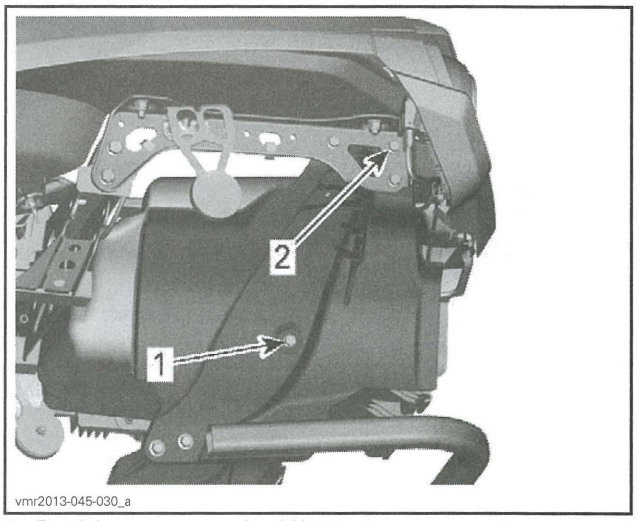

vmr2013-045-030_a

1. *Retaining screw securing LH rear storage compartment support to rear storage compartment*
2. *Retaining screw securing LH support and LH rear storage compartment support to rear storage compartment*

12. Remove both retaining screws securing LH fender to rear storage compartment.

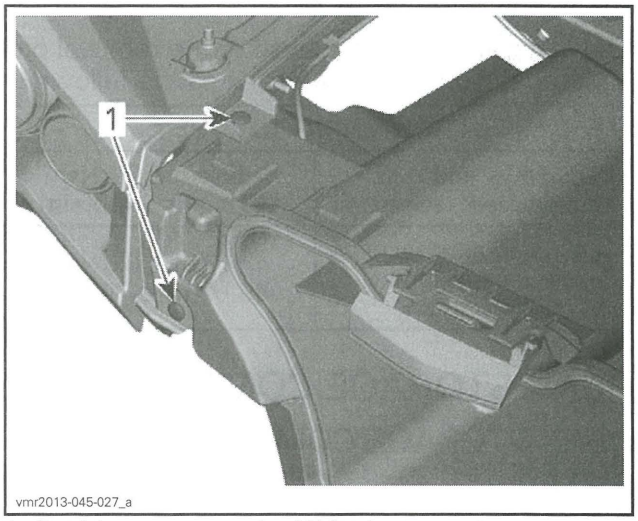

vmr2013-045-027_a

1. *Retaining screws securing LH fender to rear storage compartment*

13. Remove rear storage compartment.

Rear Storage Compartment Installation

Installation is the reverse of removal. However pay attention to the following:

TIGHTENING TORQUE	
Rear top panel screws	4.5 N•m ± 0.5 N•m (40 lbf•**in** ± 4 lbf•**in**)
Rear storage compartment retaining screws	10 N•m ± 2 N•m (89 lbf•**in** ± 18 lbf•**in**)

BODY (RENEGADE)

SERVICE TOOLS

Description	Part Number	Page
OETIKER PLIERS	295 000 070	575

BODY PARTS NOMENCLATURE

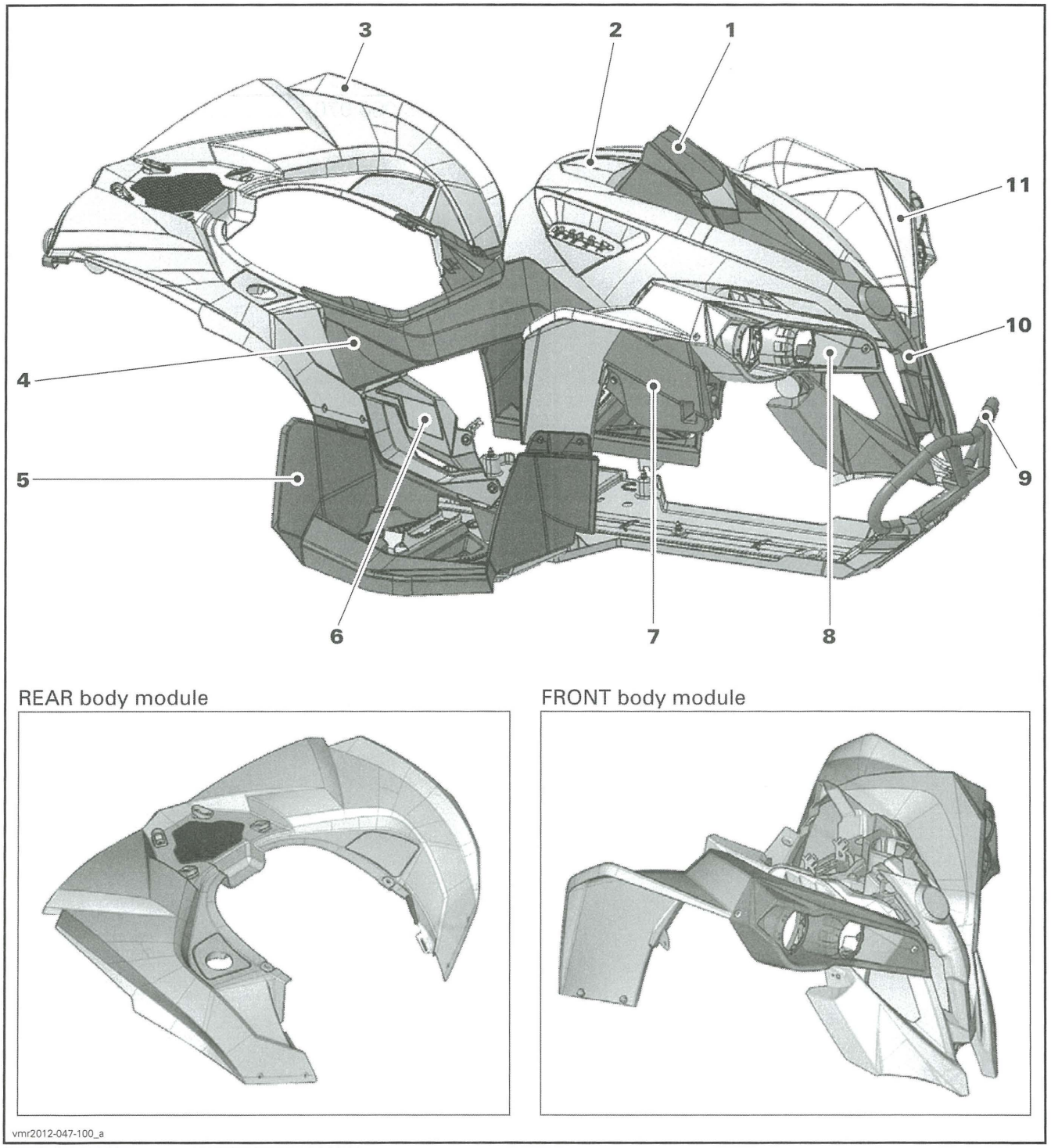

REAR BODY MODULE - FRONT BODY MODULE

1. *Gauge support*
2. *Console*
3. *Rear fender*
4. *Side panel*
5. *Footrest panel*
6. *Engine panel (RH side only)*
7. *Inner fender panel*
8. *Headlight trim*
9. *Front bumper*
10. *Front fascia*
11. *Front fender*

BODY PARTS

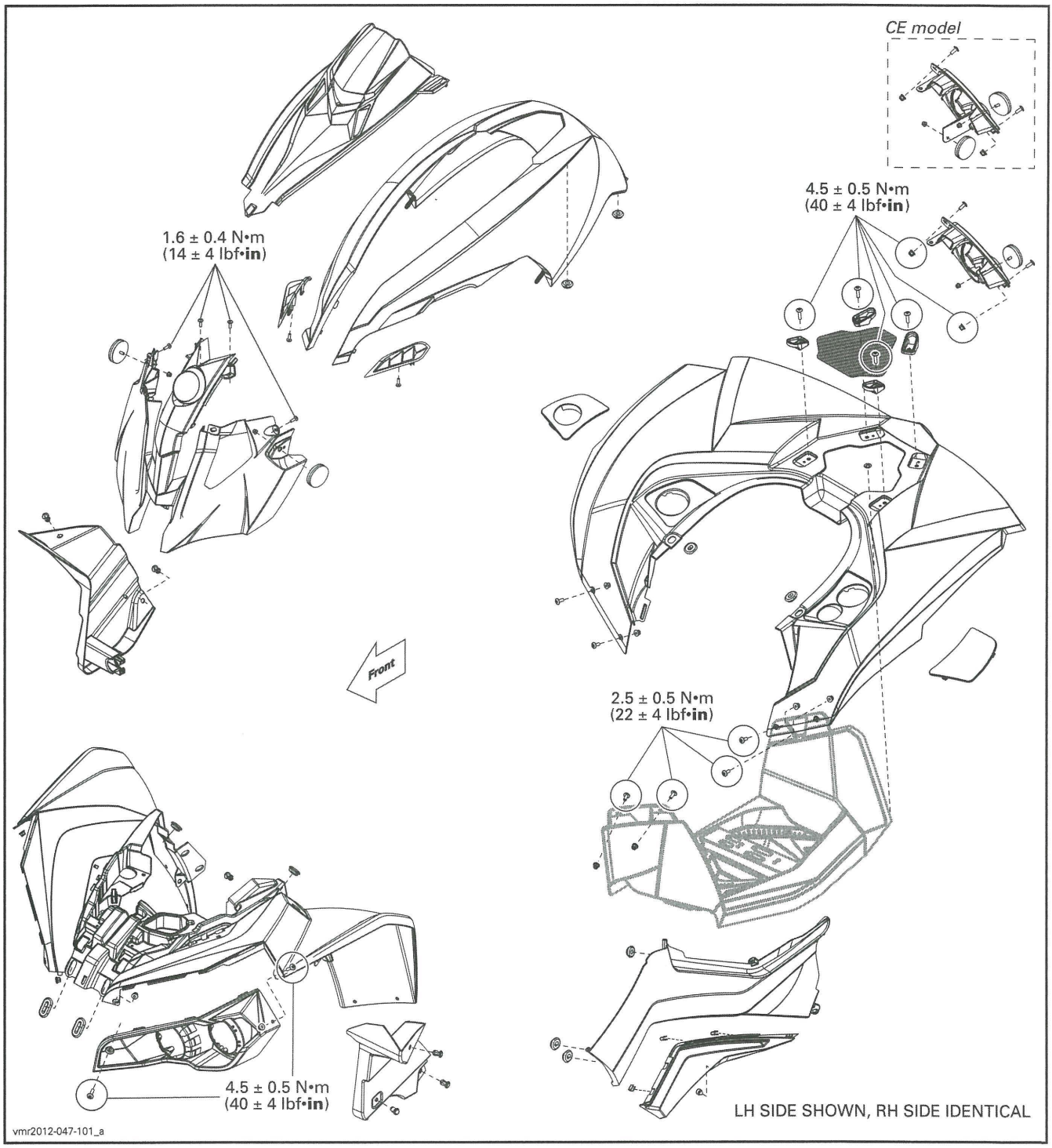
CE model
4.5 ± 0.5 N•m
(40 ± 4 lbf•in)
1.6 ± 0.4 N•m
(14 ± 4 lbf•in)
Front
2.5 ± 0.5 N•m
(22 ± 4 lbf•in)
4.5 ± 0.5 N•m
(40 ± 4 lbf•in)
LH SIDE SHOWN, RH SIDE IDENTICAL
vmr2012-047-101_a

BODY PARTS

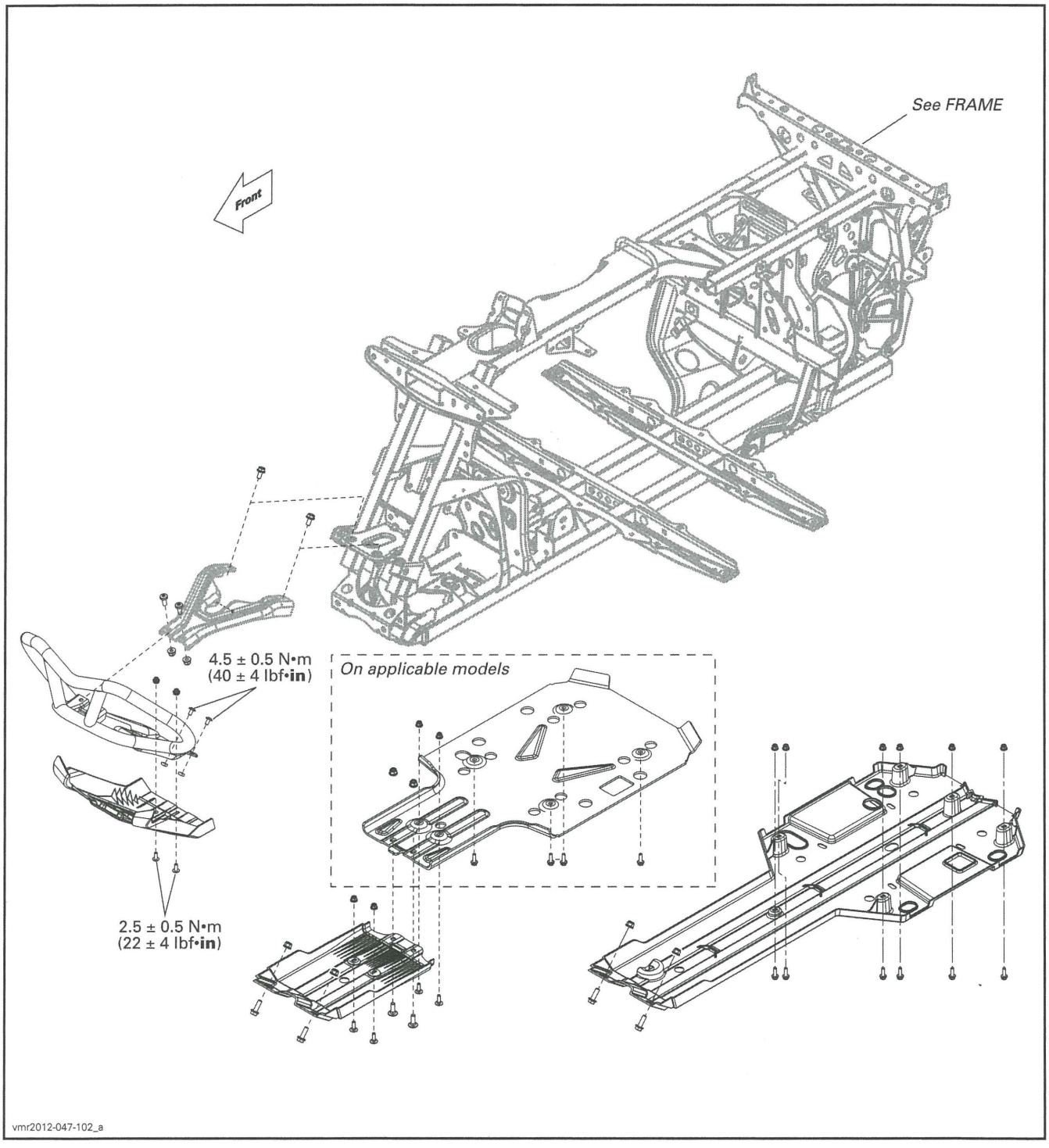
See FRAME
Front
4.5 ± 0.5 N•m
(40 ± 4 lbf•in)
On applicable models
2.5 ± 0.5 N•m
(22 ± 4 lbf•in)
vmr2012-047-102_a

BODY PARTS

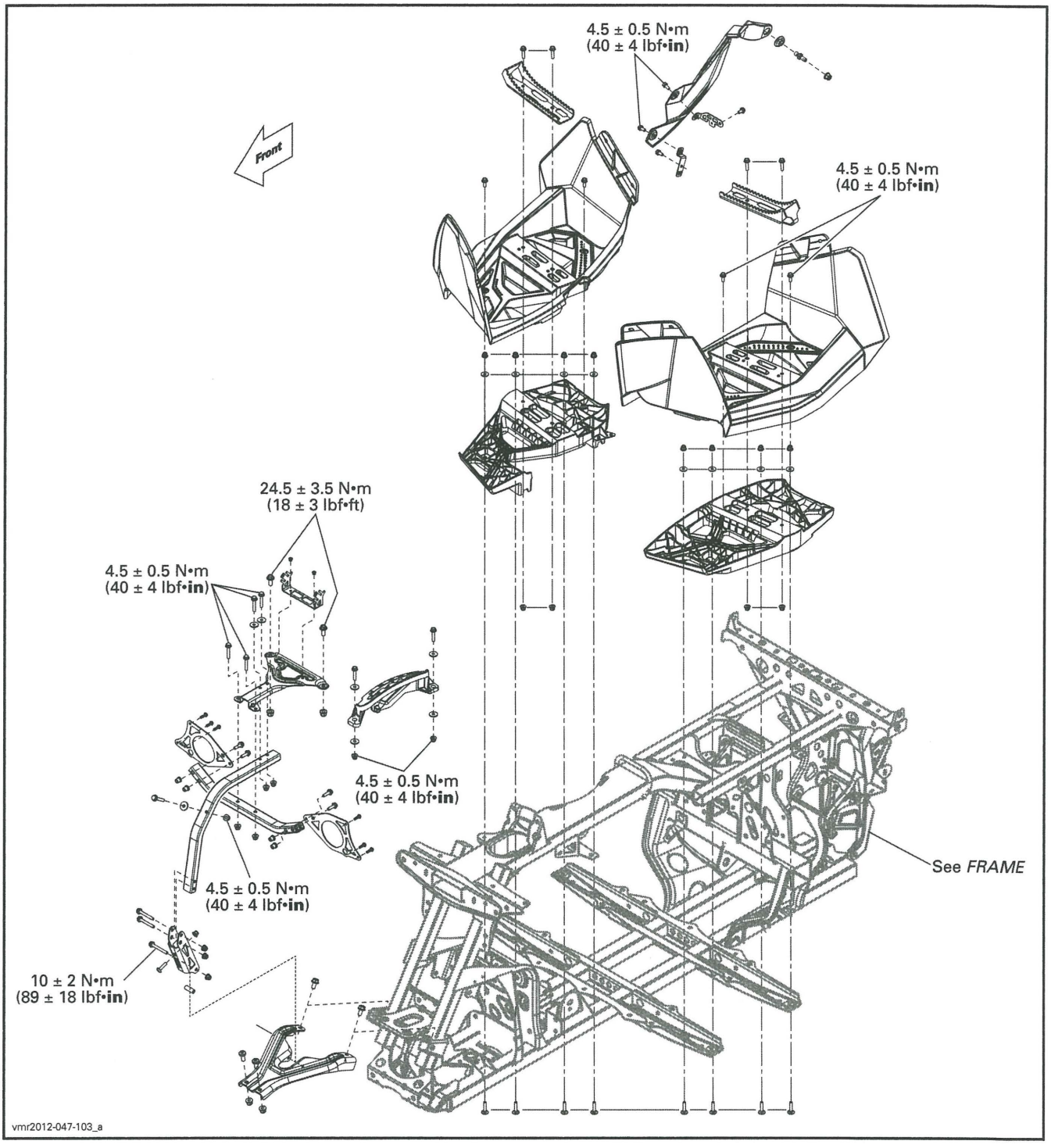
4.5 ± 0.5 N•m
(40 ± 4 lbf•in)
Front
4.5 ± 0.5 N•m
(40 ± 4 lbf•in)
24.5 ± 3.5 N•m
(18 ± 3 lbf•ft)
4.5 ± 0.5 N•m
(40 ± 4 lbf•in)
4.5 ± 0.5 N•m
(40 ± 4 lbf•in)
4.5 ± 0.5 N•m
(40 ± 4 lbf•in)
10 ± 2 N•m
(89 ± 18 lbf•in)
See FRAME
vmr2012-047-103_a

REAR BUMPER

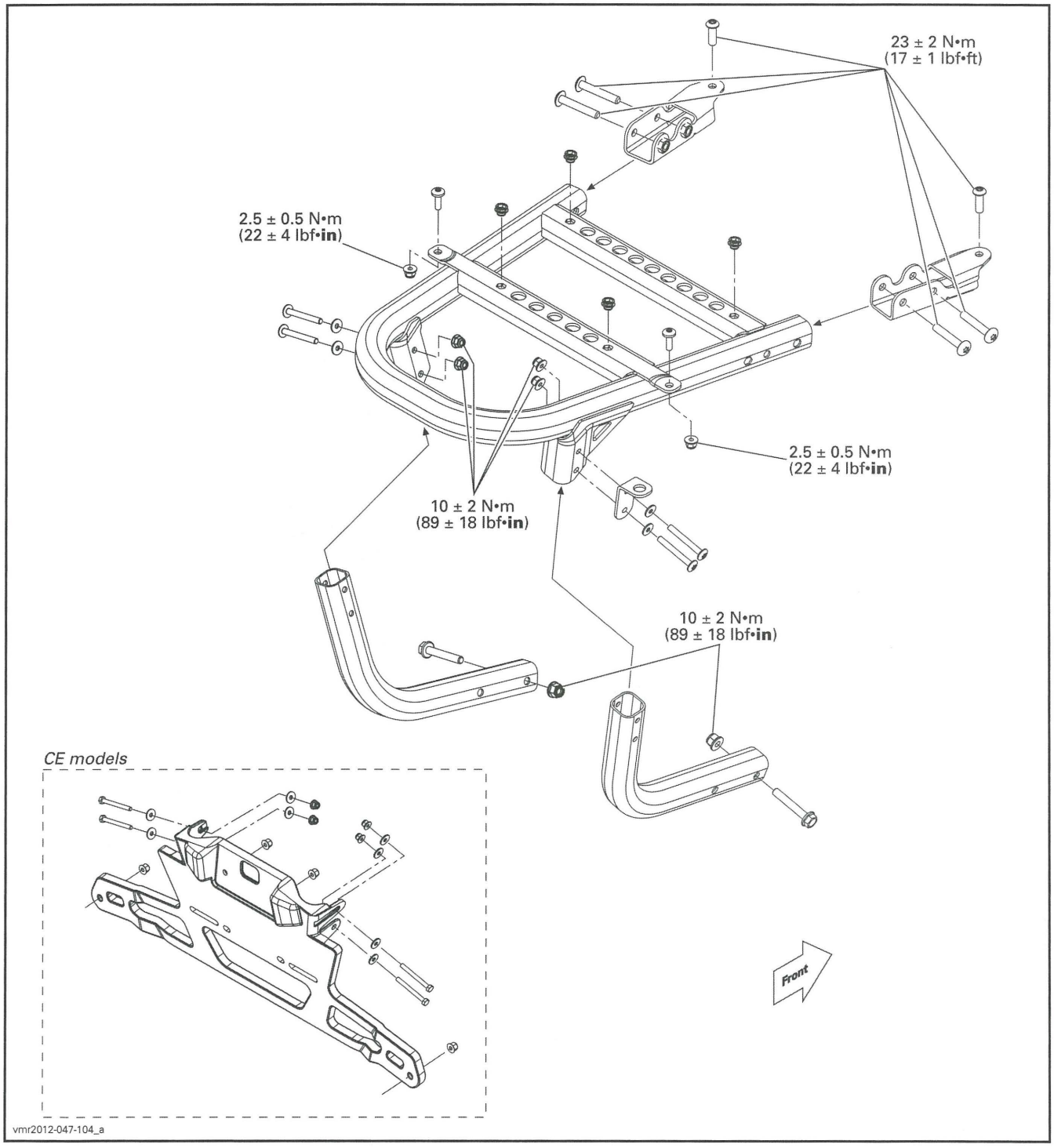
23 ± 2 N•m
(17 ± 1 lbf•ft)
2.5 ± 0.5 N•m
(22 ± 4 lbf•in)
2.5 ± 0.5 N•m
(22 ± 4 lbf•in)
10 ± 2 N•m
(89 ± 18 lbf•in)
10 ± 2 N•m
(89 ± 18 lbf•in)
CE models
Front
vmr2012-047-104_a

PROCEDURES

PLASTIC RIVET

Plastic rivets are used in the riveting of the various body parts. Plastic rivets can be reused many times. Use the OETIKER PLIERS (P/N 295 000 070) to remove them.

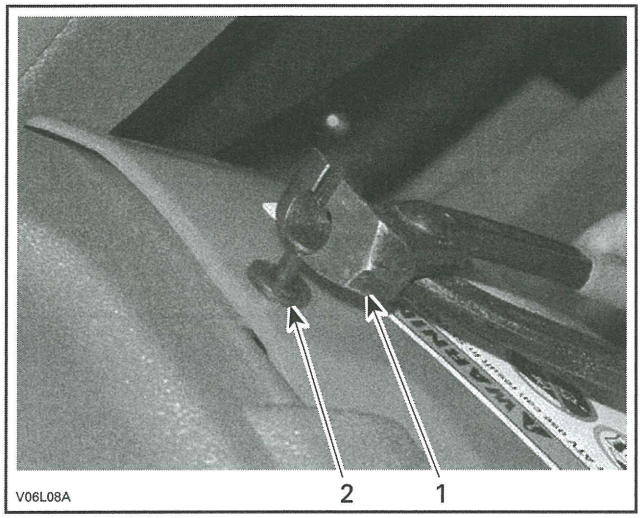

TYPICAL
1. *Pliers*
2. *Plastic rivet*

DECALS

Decal Removal

Using a heat gun warm up one end of decal for a few seconds until decal can roll off when rubbing with your finger.

Pull decal slowly and when necessary apply more heat to ease removal on the area that has to be peeled off.

If decal tears while pulling off, it has to be heated for a few seconds longer. If decal tends to stretch while pulling off, stop heating and wait a few seconds to let it cool, then peel it off.

Decal Installation

Using isopropyl alcohol, clean the surface and dry thoroughly.

Apply liquid soap to new decal and carefully position it. Using a sponge or a squeegee, remove the air bubbles and surplus water working from the center toward the edges. Allow to air dry.

NOTICE **Do not apply isopropyl alcohol or solvent directly on decals. Use these products in a well ventilated area.**

FRONT BODY MODULE

Front Body Module Removal

1. Remove *CONSOLE*. See procedure in this subsection.
2. Remove *GAUGE SUPPORT*. Refer to *LIGHTS, GAUGE AND ACCESSORIES* subsection.
3. Remove *SIDE PANELS*. See procedure in this subsection.
4. Remove *INNER FENDER PANELS*. See procedure in this subsection.
5. Disconnect headlights connectors (on both sides).

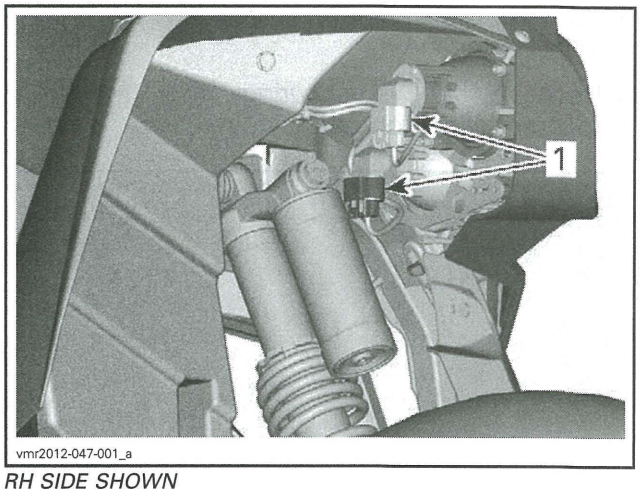

RH SIDE SHOWN
1. *Headlight connectors*

6. Disconnect 12-volt power outlet connector.

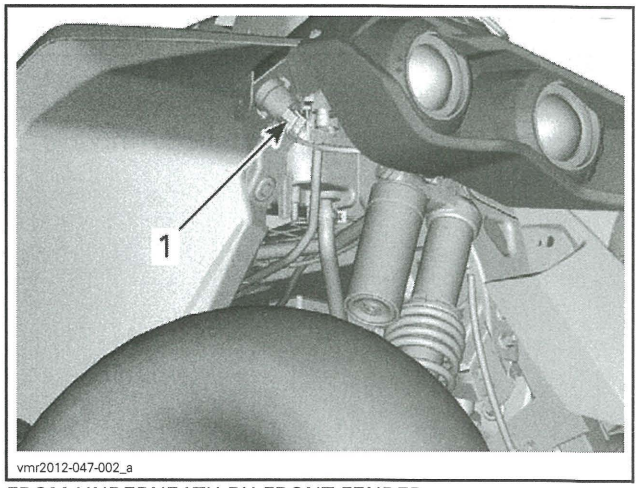

FROM UNDERNEATH RH FRONT FENDER
1. *12-volt power outlet connector*

7. Disconnect ignition switch connector.

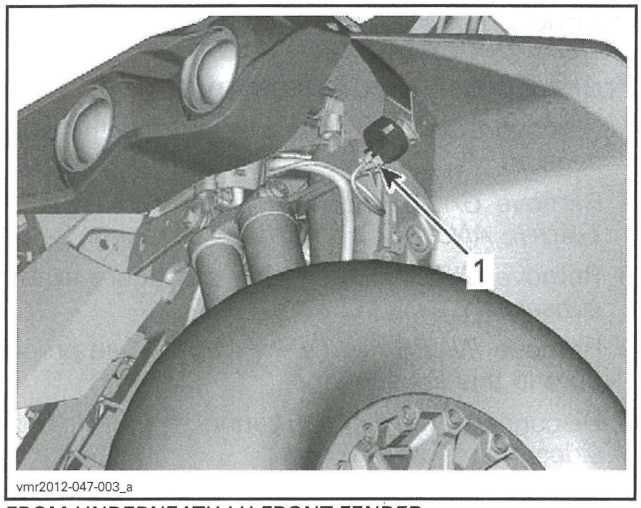

FROM UNDERNEATH LH FRONT FENDER
1. Ignition switch connector

8. Remove screws securing front fender to footrest panel (on both sides).

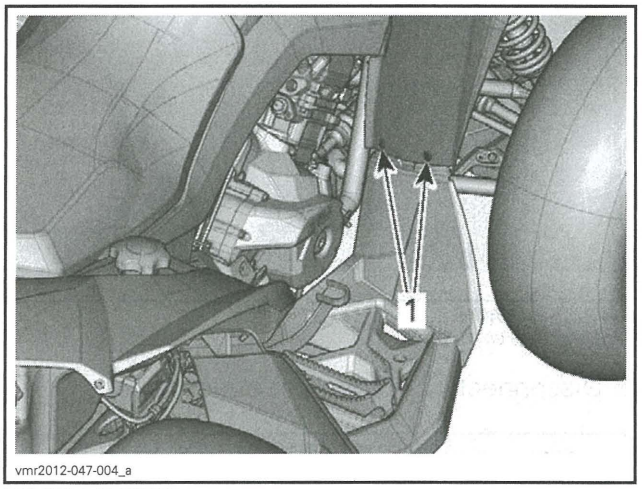

RH SIDE SHOWN
1. Screws securing front fender to footrest panel

9. Remove bolt securing front body module to bumper.

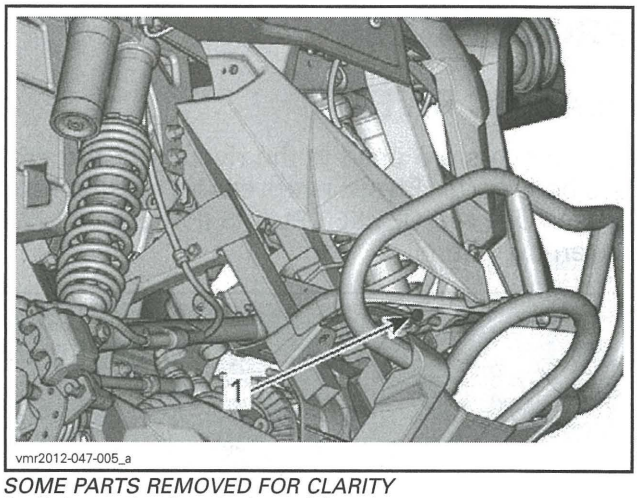

SOME PARTS REMOVED FOR CLARITY
1. Bolt securing front body module to bumper

10. Remove front fuse box from its support.

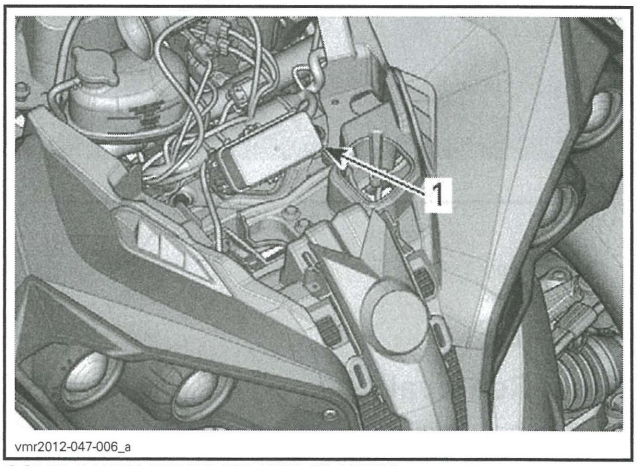

SOME PARTS REMOVED FOR CLARITY
1. Front fuse box

11. Remove bolts securing front body module to frame.

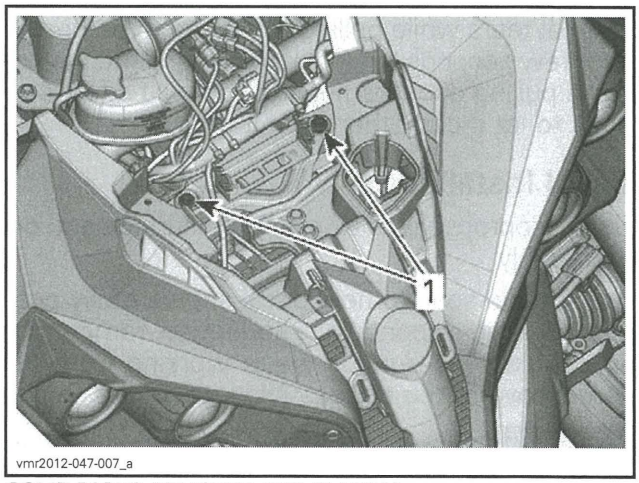

SOME PARTS REMOVED FOR CLARITY
1. Bolts securing front body module to frame

12. Remove front body module by pulling it forwards.
13. Install front body module on an appropriate support.

Front Body Module Installation

The installation is the reverse of the removal procedure. However, pay attention to the following.

Tighten front body module fasteners to specification.

TIGHTENING TORQUE	
Bolt securing front body module to bumper	10.0 N•m ± 2.0 N•m (89 lbf•**in** ± 18 lbf•**in**)
Bolts securing front body module to frame	24.5 N•m ± 3.5 N•m (18 lbf•ft ± 3 lbf•ft)
Screws securing front fender to footrest panel	2.5 N•m ± 0.5 N•m (22 lbf•**in** ± 4 lbf•**in**)

REAR BODY MODULE

Rear Body Module Removal

1. Remove seat.
2. Remove *SIDE PANELS*. See procedure in this subsection.
3. Disconnect taillights connector (on both sides).

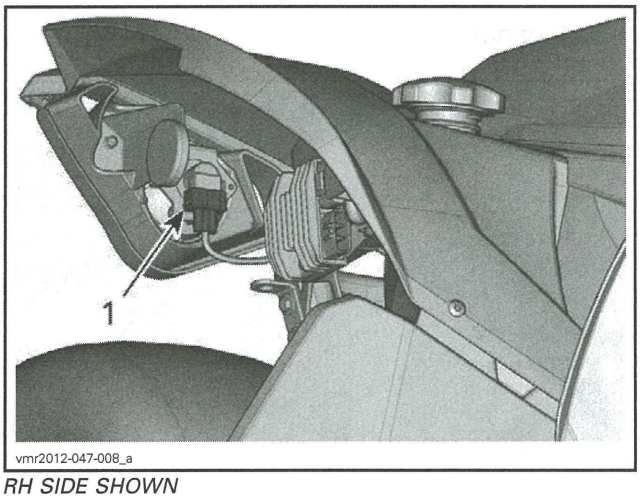

RH SIDE SHOWN
1. Headlight connector

4. Remove screws securing rear fender to footrest panel (on both sides).

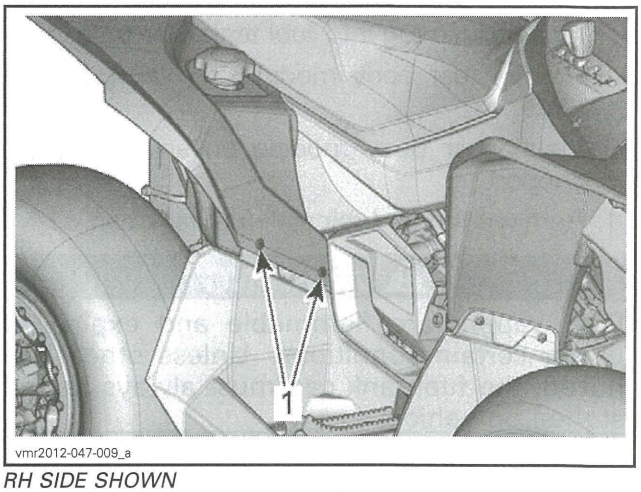

RH SIDE SHOWN
1. Screws securing rear fender to footrest panel

5. Remove rear anchors retaining screws.

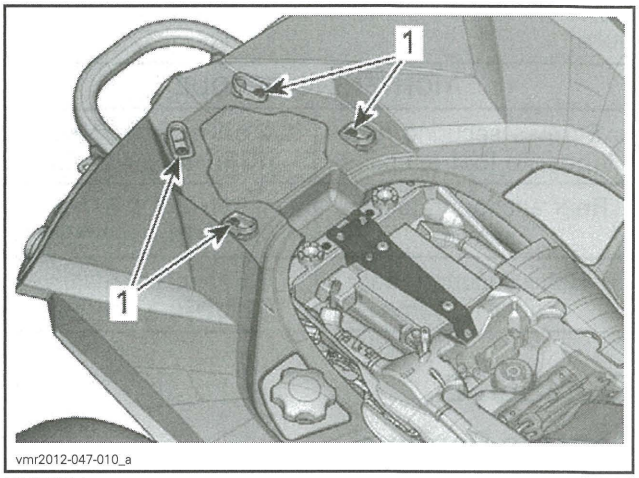

TYPICAL
1. Rear anchors retaining screws

6. Remove bolts securing rear fender to frame.

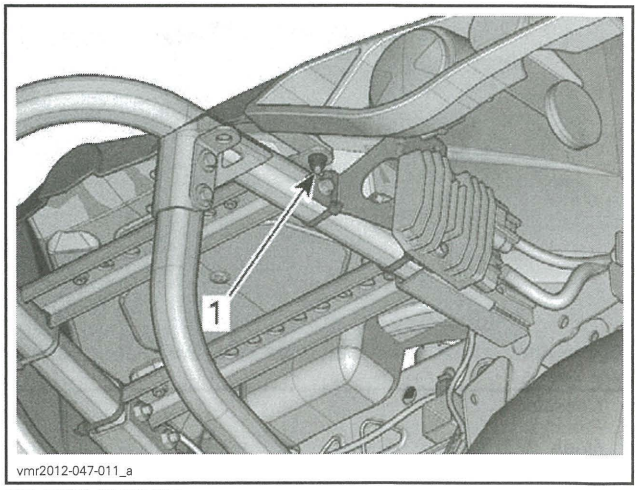

RH SIDE SHOWN
1. Bolt securing rear fender to frame

7. Remove fuel tank cap.

8. Place a clean rag into fuel tank filler tube.
9. Remove rear body module by pulling it rearwards.
10. Install rear body module on an appropriate support.
11. Remove rag and reinstall fuel tank cap.

⚠ WARNING

Fuel vapors are flammable and explosive under certain conditions. Unless otherwise noted, the fuel tank cap must always be installed on vehicle.

Rear Body Module Installation

The installation is the reverse of the removal procedure. However, pay attention to the following.

Tighten rear body module fasteners to specification.

TIGHTENING TORQUE	
Screws securing rear fender to footrest panel	2.5 N•m ± 0.5 N•m (22 lbf•**in** ± 4 lbf•**in**)
Rear anchors retaining screws	4.5 N•m ± 0.5 N•m (40 lbf•**in** ± 4 lbf•**in**)
Bolts securing rear fender to frame	2.5 N•m ± 0.5 N•m (22 lbf•**in** ± 4 lbf•**in**)

CONSOLE

Console Removal

1. Remove seat.
2. Pull both front pins out of their grommets.
3. Pull both front hooks out of their slots.

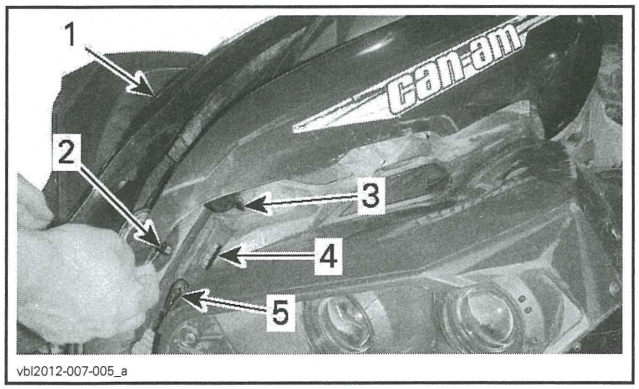

vbl2012-007-005_a

1. *Console*
2. *Pin*
3. *Hook*
4. *Slot*
5. *Grommet*

4. Pull rear portion of the console up to pull the pins of their grommets.
5. Remove console by pulling it rearwards.

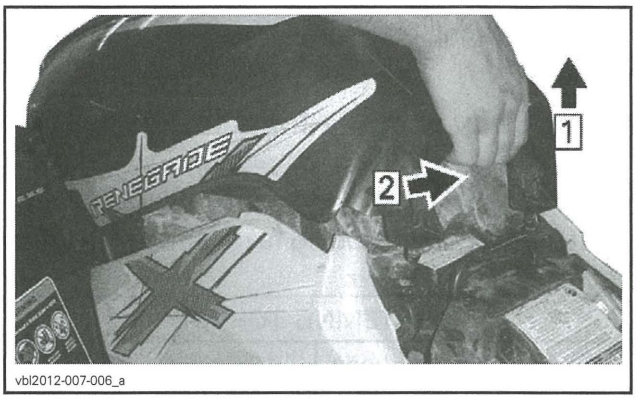

vbl2012-007-006_a

Step 1: Pull upwards
Step 2: Pull rearwards

Console Installation

The installation is the reverse of the removal procedure.

GAUGE SUPPORT

Refer to *LIGHTS, GAUGE AND ACCESSORIES* subsection.

INNER FENDER PANELS

Inner Fender Panel Removal

Remove the following plastic rivets from inner fender panel.

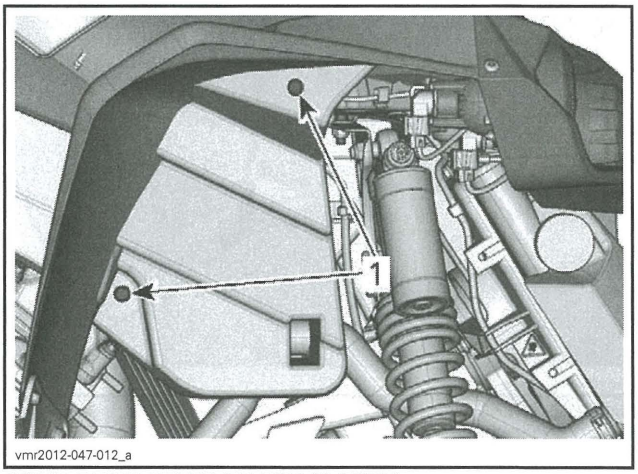

vmr2012-047-012_a

SOME PARTS REMOVED FOR CLARITY
1. *Plastic rivets (2 on RH side)*

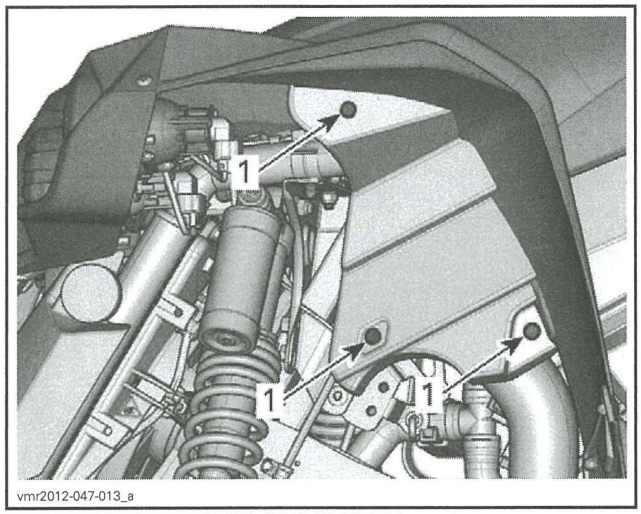

SOME PARTS REMOVED FOR CLARITY
1. Plastic rivets (3 on LH side)

Inner Fender Panel Installation

The installation is the reverse of the removal procedure.

SIDE PANELS

Side Panel Removal

1. Remove *CONSOLE*. See procedure in this subsection.
2. Pull side panel outwards to release the following tabs.

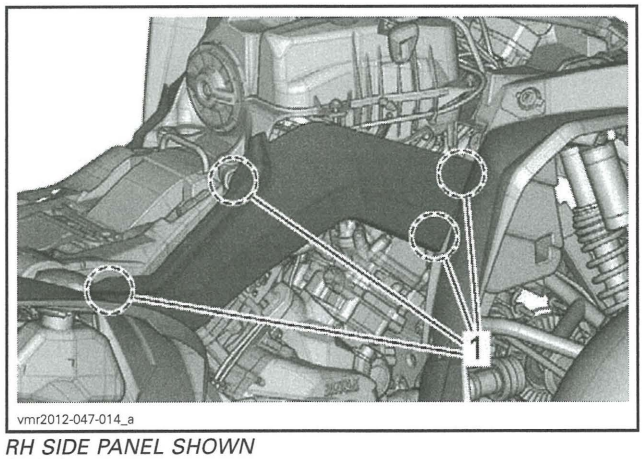

RH SIDE PANEL SHOWN
1. Tabs

3. Lift front portion of side panel to release lower tab from rear fender.

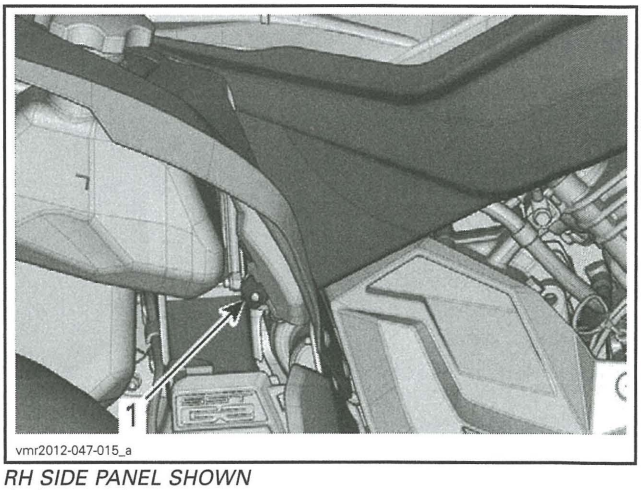

RH SIDE PANEL SHOWN
1. Lower tab

4. Remove side panel by pulling it outwards.

Side Panel Installation

The installation is the reverse of the removal procedure.

FOOTREST PANELS

Footrest Panel Removal

1. Remove footpeg retaining screws.
2. Remove footrest panel retaining screws.

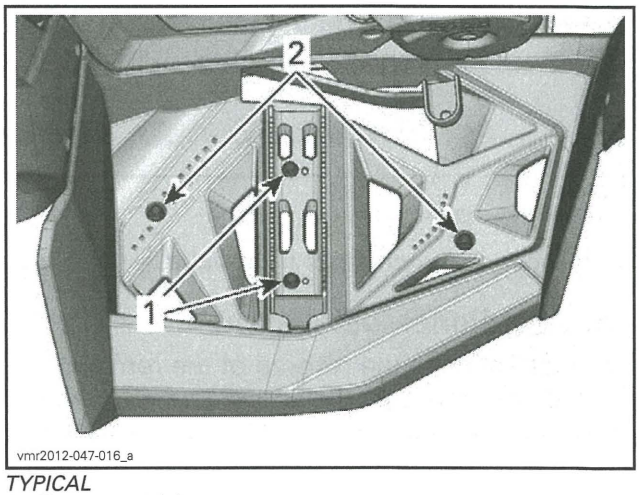

TYPICAL
1. Footpeg retaining screws
2. Footrest panel retaining screws

3. Remove screws securing front fender to footrest panel.

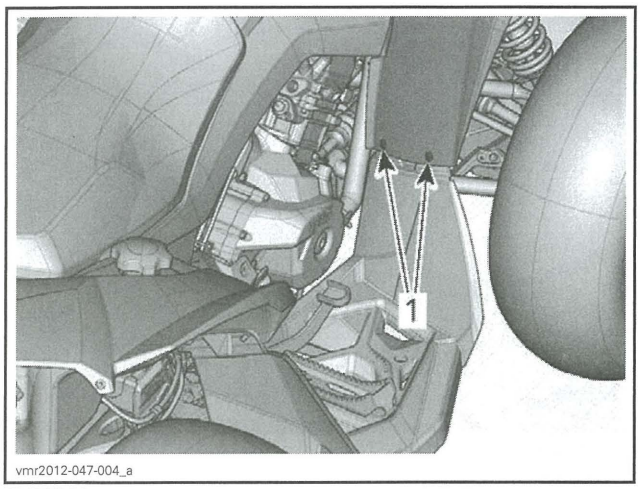

TYPICAL
1. Screw securing front fender

4. Remove screw securing rear fender to footrest panel.

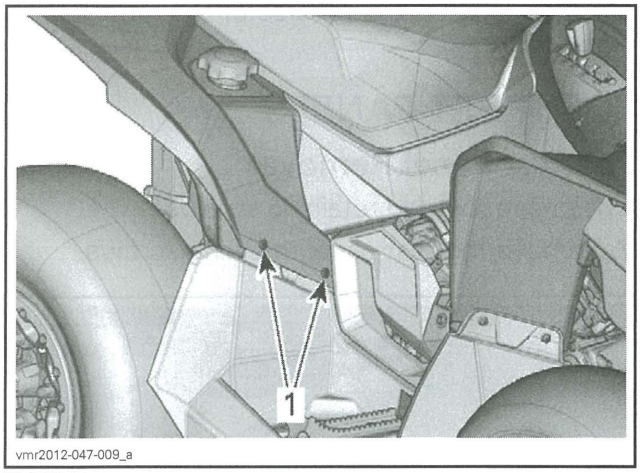

TYPICAL
1. Screw securing rear fender

5. Remove footrest panel from vehicle.

Footrest Panel Installation

The installation is the reverse of the removal procedure. However, pay attention to the following.

Tighten footrest panel screws to specification.

TIGHTENING TORQUE	
Footrest panel retaining screws	4.5 N•m ± 0.5 N•m (40 lbf•**in** ± 4 lbf•**in**)
Screws securing footrest panel to fenders	2.5 N•m ± 0.5 N•m (22 lbf•**in** ± 4 lbf•**in**)

FRAME

SERVICE TOOLS – OTHER SUPPLIER

Description	Part Number	Page
BLIND THREADED INSERT INSTALLER	model 9600	583

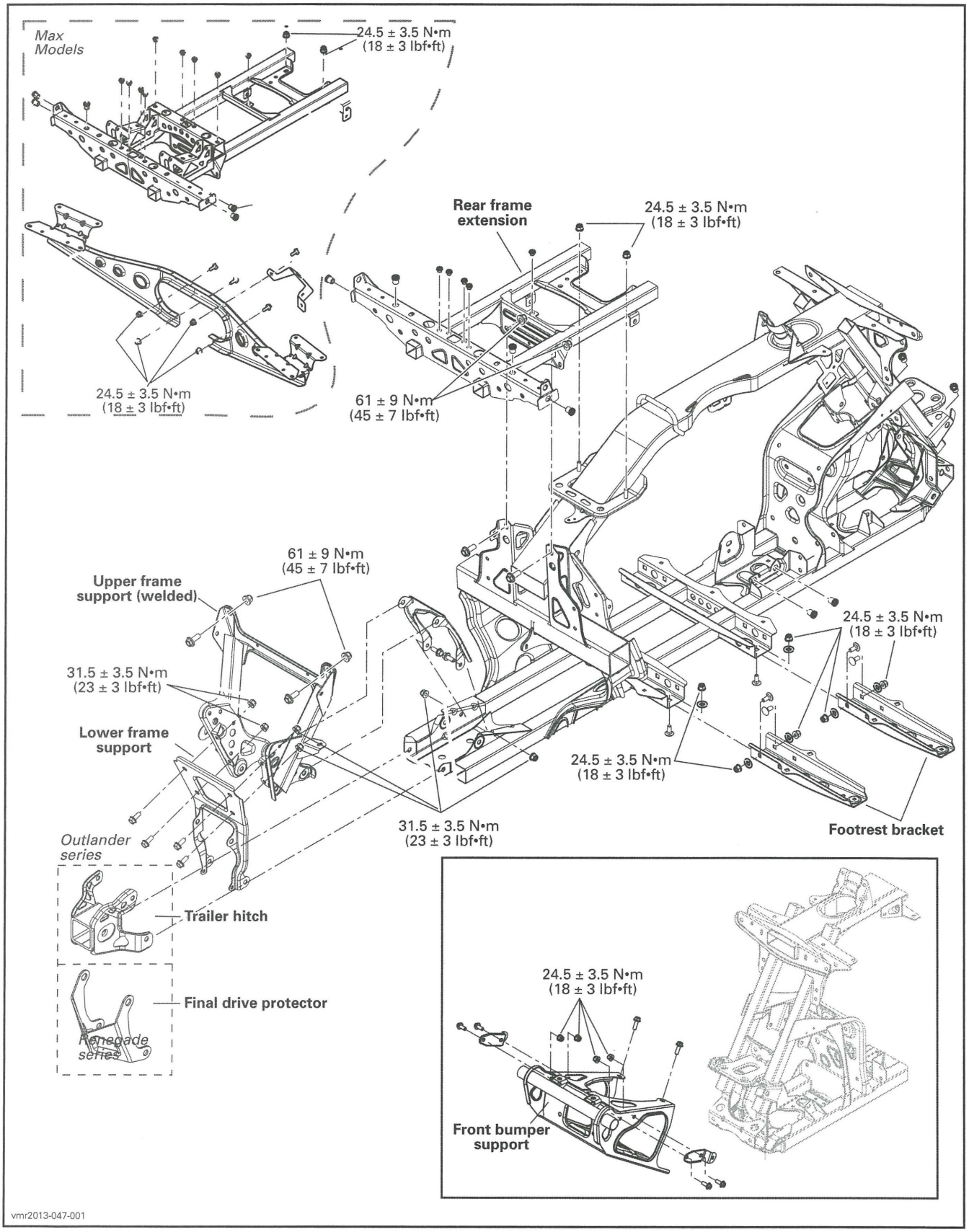
Max Models
24.5 ± 3.5 N•m (18 ± 3 lbf•ft)
Rear frame extension
24.5 ± 3.5 N•m (18 ± 3 lbf•ft)
24.5 ± 3.5 N•m (18 ± 3 lbf•ft)
61 ± 9 N•m (45 ± 7 lbf•ft)
61 ± 9 N•m (45 ± 7 lbf•ft)
Upper frame support (welded)
31.5 ± 3.5 N•m (23 ± 3 lbf•ft)
Lower frame support
24.5 ± 3.5 N•m (18 ± 3 lbf•ft)
24.5 ± 3.5 N•m (18 ± 3 lbf•ft)
31.5 ± 3.5 N•m (23 ± 3 lbf•ft)
Footrest bracket
Outlander series
Trailer hitch
Final drive protector
Renegade series
24.5 ± 3.5 N•m (18 ± 3 lbf•ft)
Front bumper support
vmr2013-047-001

PROCEDURES

FRAME

Frame Inspection

Check frame for bending, cracks, weld damages or any other damage. Replace frame as necessary.

Frame Welding

No welding should be done on frame except if mentioned or required on an approved BRP Bulletin.

Frame Insert Replacement

To install a new blind threaded insert, use the following tool: BLIND THREADED INSERT INSTALLER (P/N MODEL 9600) from Textron. See their web site at: **www.textronfasteningsystems.com**.

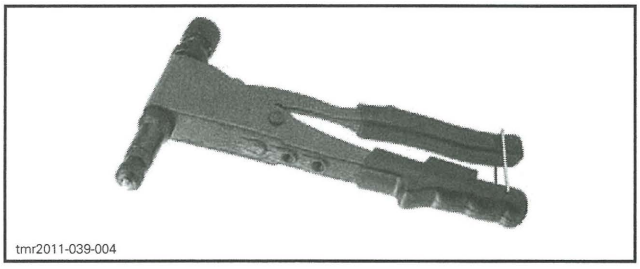
tmr2011-039-004

After insert installation, ensure insert can hold the torque applied to the screw it retains and measure the compressed length of the frame insert. Otherwise, install a new insert.

INSERT	COMPRESSED LENGTH
Insert for M6 bolt	9 mm ± 0.5 mm (.354 in ± .02 in)
Insert for M8 bolt	11.5 mm ± 0.5 mm (.453 in ± .02 in)

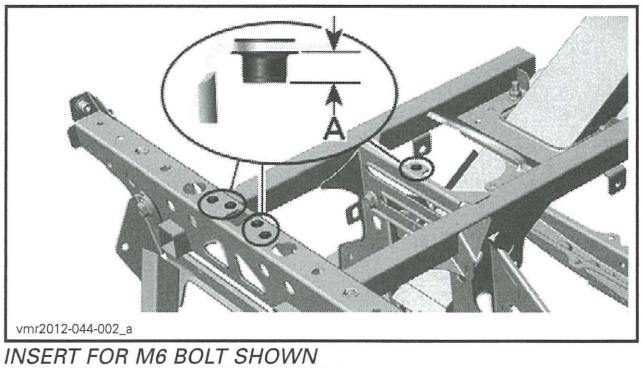

vmr2012-044-002_a

INSERT FOR M6 BOLT SHOWN
A. 9 mm ± 0.5 mm (.354 in ± .02 in)

Frame Replacement

Blind threaded inserts are not installed on replacement frames. Make sure to order enough inserts when replacing frame. Refer to *ELECTRONIC PARTS CATALOG*.

OUTLANDER SERIES (500/650/800R/1000)

SERVICE PRODUCTS

Description	Part Number	Page
CV GREASE	293 550 019	594
XPS 4-STROKE SYNTH. BLEND OIL (SUMMER)	293 600 121	589
XPS 4-STROKE SYNTHETIC OIL (ALL CLIMATE)	293 600 112	589
XPS SYNTHETIC GEAR OIL (75W 140)	293 600 140	590, 594
XPS SYNTHETIC GEAR OIL (75W 90)	293 600 043	594

ENGINE		
Engine type	500	ROTAX® 490, 4-stroke, 2 cylinders (V-twin), liquid cooled
	650	ROTAX 660, 4-stroke, 2 cylinders (V-twin), liquid cooled
	800R	ROTAX 810, 4-stroke, 2 cylinders (V-twin), liquid cooled
	1000	ROTAX 1010, 4-stroke, 2 cylinders (V-twin), liquid cooled
Valve train		4 valves/cylinder (mechanical adjustment), single over head camshaft (SOHC) with timing chain
Bore	500 650	82 mm (3.23 in)
	800R 1000	91 mm (3.58 in)
Stroke	500	47.3 mm (1.86 in)
	650 800R	61.5 mm (2.42 in)
	1000	75 mm (2.95 in)
Displacement	500	500 cm^3 (30.5 in^3)
	650	650 cm^3 (39.7 in^3)
	800R	799 cm^3 (48.8 in^3)
	1000	976 cm^3 (59.6 in^3)
Compression ratio	500	10.6:1
	650 800R	10.3:1
	1000	10.5:1
Maximum HP RPM	500 650	8000 rpm
	800R 1000	7000 rpm
Exhaust system		Spark arrestor approved by USDA Forest Service
Air filter		Synthetic paper filter with foam
Intake valve opening	500	3° BTDC
	650 800R 1000	5° BTDC

ENGINE (CONT'D)			
Intake valve closing		500	34° ABDC
		650 800R	45° ABDC
		1000	60° ABDC
Exhaust valve opening		500	39° BBDC
		650	50° BBDC
		800R 1000	55° BBDC
Exhaust valve closing		500	2° ATDC
		650	0° ATDC
		800R 1000	5° ATDC
Valve clearance		Intake	0.06 mm to 0.14 mm (.0024 in to .0055 in)
		Exhaust	0.11 mm to 0.19 mm (.0043 in to .0075 in)
Valve stem diameter	Intake	New	4.966 mm to 4.980 mm (.1955 in to .1961 in)
		Service limit	4.930 mm (.1941 in)
	Exhaust	New	4.956 mm to 4.970 mm (.1951 in to .1957 in)
		Service limit	4.930 mm (.1941 in)
Valve out of round	Intake and exhaust	New	0.005 mm (.0002 in)
		Service limit	0.06 mm (.0024 in)
Valve guide diameter		New	4.998 mm to 5.018 mm (.1968 in to .1976 in)
		Service limit	5.050 mm (.1988 in)
Valve spring free length		New	40.81 mm (1.607 in)
		Service limit	39.00 mm (1.535 in)
Valve seat contact width	Intake	New	1.05 mm to 1.35 mm (.041 in to .053 in)
		Service limit	1.8 mm (.071 in)
	Exhaust	New	1.25 mm to 1.55 mm (.049 in to .061 in)
		Service limit	2 mm (.079 in)
Rocker arm bore diameter		New	12.036 mm to 12.050 mm (.4739 in to .4744 in)
		Service limit	12.060 mm (.4748 in)
Rocker arm shaft diameter		New	12.000 mm to 12.018 mm (.4724 in to .4731 in)
		Service limit	11.990 mm (.472 in)
Piston diameter	500 650	New	81.950 mm to 81.966 mm (3.2264 in to 3.227 in)
		Service limit	81.850 mm (3.2224 in)
	800R 1000	New	90.950 mm to 90.966 mm (3.5807 in to 3.5813 in)
		Service limit	90.900 mm (3.5787 in)
Piston/cylinder clearance	500 650	New	0.057 mm to 0.087 mm (.0022 in to .0034 in)
		Service limit	0.100 mm (.0039 in)
	800R 1000	New	0.027 mm to 0.057 mm (.0011 in to .0022 in)
		Service limit	0.100 mm (.0039 in)
Piston ring type		1st	Upper compression ring, rectangular
		2nd	Lower compression ring, tapered face
		3rd	Oil scraper ring

ENGINE (CONT'D)				
Ring end gap		Rectangular	New	0.20 mm to 0.40 mm (.008 in to .016 in)
			Service limit	0.60 mm (.024 in)
		Tapered face	New	0.20 mm to 0.40 mm (.008 in to .016 in)
			Service limit	0.70 mm (.028 in)
		Oil scraper ring	New	0.20 mm to 0.70 mm (.008 in to .028 in)
			Service limit	1.00 mm (.039 in)
Ring/piston groove clearance		Rectangular	New	0.03 mm to 0.07 mm (.0012 in to .0028 in)
			Service limit	0.15 mm (.0059 in)
		Tapered face	New	0.02 mm to 0.06 mm (.0008 in to .0024 in)
			Service limit	0.15 mm (.0059 in)
		Oil scraper ring	New	0.01 mm to 0.18 mm (.0004 in to .0071 in)
			Service limit	0.25 mm (.0098 in)
Cylinder bore		500 650	New	82.023 mm to 82.037 mm (3.2293 in to 3.2298 in)
		800R 1000		90.993 mm to 91.007 mm (3.5824 in to 3.583 in)
Cylinder taper			Maximum New	0.038 mm (.0015 in)
			Service limit	0.090 mm (.0035 in)
Cylinder out of round			Maximum New	0.015 mm (.0006 in)
			Service limit	0.020 mm (.0008 in)
Camshaft main bearing journal		Timing chain side	New	34.959 mm to 34.975 mm (1.3763 in to 1.377 in)
			Service limit	34.950 mm (1.376 in)
		Spark plug side	New	21.959 mm to 21.980 mm (.8645 in to .8654 in)
			Service limit	21.950 mm (.8642 in)
Camshaft main bearing journal bore		Timing chain side	New	35.000 mm to 35.025 mm (1.378 in to 1.3789 in)
			Service limit	35.040 mm (1.3795 in)
		Spark plug side	New	22.000 mm to 22.021 mm (.8661 in to .867 in)
			Wear limit	22.040 mm (.8677 in)
Camshaft lobe	Intake valve	500	New	31.830 mm to 32.030 mm (1.2531 in to 1.261 in)
			Service limit	31.810 mm (1.2524 in)
		650	New	32.11 mm to 32.31 mm (1.2642 in to 1.272 in)
			Service limit	32.09 mm (1.2634 in)
		800R	New	32.890 mm to 33.090 mm (1.2949 in to 1.3028 in)
			Service limit	32.870 mm (1.2941 in)
		1000	New	32.960 mm to 33.160 mm (1.2976 in to 1.3055 in)
			Service limit	32.940 mm (1.2969 in)
	Exhaust valve	500	New	31.830 mm to 32.030 mm (1.2531 in to 1.261 in)
			Service limit	31.810 mm (1.2524 in)
		650	New	31.940 mm to 32.140 mm (1.257 in to 1.265 in)
			Service limit	32.090 mm (1.2634 in)
		800R	New	32.950 mm to 33.150 mm (1.2972 in to 1.3051 in)
			Service limit	32.930 mm (1.2965 in)
		1000	New	32.860 mm to 33.060 mm (1.2937 in to 1.3016 in)
			Service limit	32.840 mm (1.2929 in)

ENGINE (CONT'D)			
Crankshaft main bearing journal diameter (MAG/PTO side)		New	42.016 mm to 42.040 mm (1.6542 in to 1.6551 in)
		Service limit	42.000 mm (1.6535 in)
Crankshaft radial play (MAG/PTO side)		Service limit	0.07 mm (.0028 in)
Crankshaft bearing journal diameter (in PTO cover)		New	34.004 mm to 34.020 mm (1.3387 in to 1.3394 in)
		Service limit	33.998 mm (1.3385 in)
Crankshaft radial play (PTO cover bearing)		Service limit	0.10 mm (.0039 in)
Crankshaft axial play		New	0.200 mm to 0.500 mm (.0079 in to .0197 in)
		Service limit	0.600 mm (.0236 in)
Crankshaft pin diameter	500	New	35.064 mm to 35.080 mm (1.3805 in to 1.3811 in)
		Service limit	35.050 mm (1.3799 in)
	650 800R	New	40.009 mm to 40.025 mm (1.5752 in to 1.5758 in)
		Service limit	39.990 mm (1.5744 in)
	1000	New	41.986 mm to 42.010 mm (1.653 in to 1.6539 in)
		Service limit	41.967 mm (1.6522 in)
Crankshaft deflection	MAG/PTO side	New	0.050 mm (.002 in)
Crankcase plain bearing	MAG/PTO side	Service limit	42.100 mm (1.6575 in)
PTO cover plain bearing		Service limit	34.120 mm (1.3433 in)
Connecting rod big end diameter	500	Service limit	35.150 mm (1.384 in)
	650 800R		40.100 mm (1.579 in)
	1000		42.100 mm (1.6575 in)
Connecting rod big end radial play		Service limit	0.09 mm (.0035 in)
Connecting rod big end axial play	500 650 800R	New	0.200 mm to 0.500 mm (.008 in to .02 in)
	1000		0.250 mm to 0.550 mm (.0098 in to .0217 in)
	500 650 800R 1000	Service limit	0.600 mm (.024 in)
Connecting rod small end diameter	500	New	18.010 mm to 18.020 mm (.7091 in to .7094 in)
		Service limit	18.060 mm (.711 in)
	650 800R	New	20.010 mm to 20.020 mm (.7878 in to .7882 in)
		Service limit	20.060 mm (.7898 in)
	1000	New	22.010 mm to 22.020 mm (.8665 in to .8669 in)
		Service limit	22.050 mm (.8681 in)
Piston pin diameter	500	New	17.996 mm to 18.000 mm (.7085 in to .7087 in)
		Service limit	17.980 mm (.708 in)
	650 800R	New	19.996 mm to 20.000 mm (.7872 in to .7874 in)
		Service limit	19.980 mm (.787 in)
	1000	New	21.996 mm to 22.000 mm (.866 in to .866 in)
		Service limit	21.980 mm (.8654 in)
Connecting rod/piston pin clearance (radial play)		Service limit	0.080 mm (.0031 in)

LUBRICATION SYSTEM			
Type			Wet sump. Replaceable cartridge oil filter
Oil filter			BRP Rotax paper type, replaceable
Engine oil pressure		Minimum	300 kPa (44 PSI) at 6000 RPM
Engine oil	Capacity (oil change with filter)		2.0 L (2.1 qt (U.S. liq.))
	Recommended		For the summer season, use XPS 4-STROKE SYNTH. BLEND OIL (SUMMER) (P/N 293 600 121). For the winter season, use XPS 4-STROKE SYNTHETIC OIL (ALL CLIMATE) (P/N 293 600 112). If not available, use a 5W40 motor oil that meets the requirements for API service classification SG, SH or SJ
COOLING SYSTEM			
Coolant	Type		Ethyl glycol/water mix (50% coolant, 50% water). Use premixed coolant sold by BRP (P/N 219 700 362) or coolant specifically designed for aluminum engines
	Capacity	500 650 800R	3.4 L (.9 U.S. gal.)
		1000	3.5 L (.9 U.S. gal.)
Thermostat		Starts to open	65°C (149°F)
		Fully open	75°C (167°F)
Radiator cap opening pressure			110 kPa (16 PSI)
TRANSMISSION			
Type			CVT (Continuously Variable Transmission)
Engagement RPM			1650 ± 100 RPM
Drive belt width		Service limit	30.00 mm (1.181 in)
Governor cup roller outer diameter		New	13.70 mm to 13.80 mm (.539 in to .543 in)
		Service limit	13.20 mm (.52 in)
Governor cup roller inner diameter		New	8.05 mm to 8.15 mm (.317 in to .321 in)
		Service limit	9.00 mm (.354 in)
Centrifugal lever pivot bolt diameter		New	6.078 mm to 6.100 mm (.239 in to .24 in)
		Service limit	6.000 mm (.236 in)
Centrifugal lever bore diameter		New	6.035 mm to 6.078 mm (.2376 in to .2393 in)
		Service limit	6.200 mm (.244 in)
Drive pulley sliding half centrifugal lever pivot bolt bore diameter		New	6.113 mm to 6.171 mm (.241 in to .243 in)
		Service limit	6.300 mm (.248 in)
Drive pulley sliding half large bushing		New	55.000 mm to 55.040 mm (2.165 in to 2.167 in)
		Service limit	55.200 mm (2.173 in)
Drive pulley sliding half small bushing		New	32.000 mm to 32.040 mm (1.26 in to 1.261 in)
		Service limit	32.200 mm (1.268 in)
Drive pulley spring free length	500 650	Service limit	85 mm (3.346 in)
	800R 1000		105 mm (4.134 in)
Drive pulley spring free squareness		Service limit	4 mm (.157 in)
Spring sleeve length		New	9.2 mm to 9.4 mm (.362 in to .37 in)
		Service limit	9.0 mm (.354 in)

TRANSMISSION (CONT'D)			
Driven pulley sliding half bushing		New	30.060 mm to 30.100 mm (1.183 in to 1.185 in)
		Service limit	30.200 mm (1.189 in)
Driven pulley sliding fixed bushing		New	30.060 mm to 30.100 mm (1.183 in to 1.185 in)
		Service limit	30.200 mm (1.189 in)
Torque gear on driven pulley		Service limit	7.500 mm (.295 in)
Driven pulley spring free length	500	Service limit	190 mm (7.48 in)
	650 800R 1000		125 mm (4.921 in)
Driven pulley spring free squareness		Service limit	3.8 mm (.15 in)
GEARBOX			
Type			Dual range (HI-LO) with park, neutral and reverse
Gear ratios	500 650	Angle drive sub-transmission	32/13 = 2.462
		High	35/28 = 1.250
		Low	43/20 = 2.150
		Reverse	31/14 = 2.214
	800R	Angle drive sub-transmission	32/13 = 2.462
		High	34/29 = 1.173
		Low	43/20 = 2.150
		Reverse	31/14 = 2.214
	1000	Angle drive sub-transmission	37/15 = 2.467
		Intermediate	45/44 = 1.023
		High	37/33 = 1.121
		Low	44/19 = 2.316
		Reverse	34/12 = 2.833
Overall gear ratios	500 650	High	3,078
		Low	5,293
		Reverse	5,545
	800R	High	2,886
		Low	5.292
		Reverse	5,541
	1000	High	2,829
		Low	5,842
		Reverse	7,148
Gearbox oil	500 650 800R	Capacity	400 ml (13.5 U.S. oz)
	1000		450 ml (15.22 U.S. oz)
	500 650 800R 1000	Recommended	XPS SYNTHETIC GEAR OIL (75W 140) (P/N 293 600 140) or a 75W140 API GL-5 synthetic gear oil

GEARBOX (CONT'D)				
Output shaft backlash	500 650 800R		New	0.10 mm to 0.20 mm (.004 in to .008 in)
			Service limit	0.25 mm (.01 in)
	1000		New	N.A.
			Service limit	N.A.
Coupling sleeve groove width			New	5.25 mm to 5.35 mm (.207 in to .211 in)
			Service limit	5.50 mm (.217 in)
Coupling fork claw thickness			New	4.95 mm to 5.05 mm (.195 in to .199 in)
			Service limit	4.80 mm (.189 in)
Shift fork claw thickness (high gear shift fork)	500 650 800R		New	4.80 mm to 4.90 mm (.189 in to .193 in)
			Service limit	4.70 mm (.185 in)
	1000		New	5.10 mm to 5.20 mm (.201 in to .205 in)
			Service limit	5.0 mm (.197 in)
Shift fork claw thickness (low and reverse gear shift fork)			New	5.10 mm to 5.20 mm (.201 in to .205 in)
			Service limit	5.0 mm (.197 in)
Shift fork pin diameter	500 650 800R		New	6.92 mm to 6.97 mm (.272 in to .274 in)
			Service limit	6.85 mm (.27 in)
	1000		New	N.A.
			Service limit	N.A.
Width of shift fork engagement groove (low and reverse gear)			New	5.30 mm to 5.40 mm (.209 in to .213 in)
			Service limit	5.50 mm (.217 in)
Width of shift fork engagement groove (high gear)	500 650 800R		New	5.00 mm to 5.10 mm (.197 in to .201 in)
			Service limit	5.20 mm (.205 in)
	1000		New	5.30 mm to 5.40 mm (.209 in to .213 in)
			Service limit	5.50 mm (.217 in)
Diameter free pinions			New	29.000 mm to 29.013 mm (1.1417 in to 1.1422 in)
			Service limit	29.015 mm (1.1423 in)
Intermediate gear shaft			New	24.979 mm to 25.000 mm (.9834 in to .9843 in)
			Service limit	24.977 mm (.983 in)
Countershaft	500 650 800R	MAG side	New	N.A.
			Service limit	17.990 mm (.7083 in)
	1000		New	19.977 mm to 19.990 mm (.7865 in to .787 in)
			Service limit	19.973 mm (.7863 in)
	500 650 800R	CVT side	New	N.A.
			Service limit	24.970 mm (.9831 in)
	1000		New	24.977 mm to 24.990 mm (.9833 in to .9839 in)
			Service limit	24.970 mm (.9831 in)
	500 650 800R	Free pinion bearing	New	N.A.
			Service limit	24.970 mm (.9831 in)
	1000		New	N.A.
			Service limit	N.A.

GEARBOX (CONT'D)				
Bevel gear shaft	500 650 800R	Free pinion bearing	Service limit	24.984 mm (.9836 in)
	1000			N.A.
Main shaft	500 650 800R	Free pinion bearing	New	N.A.
			Service limit	N.A.
	1000		New	24.987 mm to 25.000 mm (.9837 in to .9843 in)
			Service limit	24.984 mm (.9836 in)
	500 650 800R	Bearing journal MAG/CVT side	New	N.A.
			Service limit	N.A.
	1000		New	16.980 mm to 16.991 mm (.6685 in to .6689 in)
			Service limit	16.976 mm (.6683 in)
ELECTRICAL SYSTEM				
Magneto generator output			Without DPS	400 W @ 6000 RPM
			With DPS	625 W @ 6000 RPM
Stator resistance (20°C (68°F))				0.15 to 0.30 Ω
Ignition system type				IDI (Inductive Discharge Ignition)
Ignition timing				Not adjustable
Spark plug			Quantity	2
			Make and type	NGK DCPR8E
			Gap	0.6 mm to 0.7 mm (.024 in to .028 in)
Engine RPM limiter setting		All models	Forward	8000 rpm
			Reverse	15 km/h (9 MPH) (without override)
Battery			Type	Maintenance free
			Voltage	12 volts
			Nominal rating	18 A•h
			Power starter output	0.7 KW
Headlights			High	2 x 60 W
			Low	2 x 55 W
Taillights				2 x 8/27 W
Turn signal lights (CE models only)				4 x 10 W
Position lights (CE models only)				2 x 5 W
Licence plate light (CE models only)				1 x 10 W

ELECTRICAL SYSTEM (CONT'D)			
Fuses	-Main	MF1	30 A
	-Fan -Main accessories power	MF2	40 A
	-DPS motor -ACS (if equipped)	MF3	40 A
	-Brake lights relay control -Gauge -Taillights -Brake relay -DPS control	F4	10 A
	-Ignition coils -Fuel injectors -Speed sensor	F5	5 A
	-Engine control module (ECM) -Fan relay control	F6	5 A
	-Winch control -2W/4W control	F7	5 A
	-ECM -Ignition switch	F8	5 A
	-Fan motor	F9	25 A
	-Clock -Signal/hazard lights -Accessories relay control	F10	5 A
	-Headlights	F11	30 A
	-Connector DC3 -12 V power outlet -Communication connector	F12	15 A
	-Connectosr DC5 and DC6	F14	15 A
	-Fuel pump relay	F15	5 A

FUEL SYSTEM			
Fuel delivery		Type	Electronic Fuel Injection (EFI), 46 mm throttle body, 1 injector per cylinder
Fuel pump		Type	Electrical (in fuel tank)
		Operating pressure	350 kPa ± 10 kPa (51 PSI ± 1 PSI)
Idle speed			1250 rpm ± 50 (not adjustable)
Fuel	Type		Regular unleaded gasoline
	Minimum octane rating	Inside North America	87 (R+M)/2 or higher
		Outside North America	92 RON or higher
Fuel tank capacity			20.5 L (5.4 U.S. gal.)
Fuel remaining when low fuel light turns ON			± 5 L (1.3 U.S. gal.)

DRIVE SYSTEM				
Drive system type				Selectable 2WD/4WD
Front drive				Visco-lok† front differential
Front drive ratio				3.6:1
Rear drive				Shaft driven final drive
Rear drive ratio				3.6:1
Front differential oil			Capacity	500 ml (17 U.S. oz)
			Type	XPS SYNTHETIC GEAR OIL (75W 90) (P/N 293 600 043) or synthetic gear oil 75W90 API GL-5
Rear final drive oil			Capacity	300 ml (10.2 U.S. oz)
			Type	XPS SYNTHETIC GEAR OIL (75W 140) (P/N 293 600 140) or synthetic gear oil 75W140 API GL-5
CV joint grease				CV GREASE (P/N 293 550 019)
Propeller shaft grease				Hi-temp bearing grease NLGI-2 or an equivalent
STEERING				
Turning radius			1-UP	205.7 cm (81 in)
			2-UP	233.68 cm (92 in)
Total toe (front wheels off ground)				0 mm to 3 mm (0 in to .118 in) **toe-in**
Camber angle (vehicle on ground)				0°
Tie-rod maximum length unengaged threads				348.5 mm (13.72 in)
FRONT SUSPENSION				
Suspension type				Double suspension-arm with dive-control geometry
Suspension travel				226 mm (8.9 in)
Shock absorber	1-UP	All models	Qty	2
			Type	Oil
	2-UP	Standard models Models with DPS XT models 1000 LTD	Qty	2
			Type	Oil
		XT-P models	Qty	2
			Type	FOX Racing Shox HPG piggyback shocks (gas) with dual-speed compression, rebound
Spring free length		1-UP	STD DPS	340 mm (13.39 in)
			XT	350 mm (13.78 in)
			XT-P	387 mm (15.24 in)
		2-UP	STD DPS	354 mm (13.94 in)
			XT XT-P 1000 LTD	362 mm (14.25 in)
Preload adjustment type			Standard models Models with DPS XT models	5 positions cam
			XT-P models	Variable positions
			1000 LTD	6 Presets

REAR SUSPENSION				
Suspension type				Torsional Trailing arm Independant (TTI) with external sway bar
Suspension travel				236 mm (9.3 in)
Shock absorber	1-UP	All models	Qty	2
			Type	Oil
	2-UP	Standard models Models with DPS XT models	Qty	2
			Type	Oil
		XT-P models	Qty	2
			Type	FOX Racing Shox HPG piggyback shocks (gas) with dual-speed compression, rebound
		1000 LTD	Qty	2
			Type	Gas
Spring free length		1-UP	STD DPS XT	355.9 mm (14.01 in)
			XT-P	306 mm (12.05 in)
		2-UP	STD	354 mm (13.94 in)
			DPS XT	366.4 mm (14.43 in)
			XT-P	306 mm (12.05 in)
			1000 LTD	370 mm (14.57 in)
ACS pneumatic pressure range			1000 LTD	0.35 bar to 6.90 bar (5 PSI to 100 PSI)
Preload adjustment type			Standard models Models with DPS XT models	5 position cam
			XT-P models	Variable positions
			1000 LTD	6 Presets
BRAKES				
Front brake			Qty	2
			Type	214 mm cross drilled disc brakes with hydraulic twin-piston calipers
Rear brake			Qty	1
			Type	214 mm cross drilled disc brake with hydraulic twin-piston caliper
Brake fluid			Capacity	260 ml (8.8 U.S. oz)
			Type	DOT 4
Caliper				Floating twin pistons (2 x 26 mm)
Brake pad material				Organic
Minimum brake pad thickness				1 mm (.04 in)
Minimum brake disc thickness				4.0 mm (.157 in)
Maximum brake disc warpage				0.2 mm (.01 in)

TIRES				
Pressure	Front	1-UP	UP TO 164 kg (360 lb)	41.4 kPa (6 PSI)
			FROM 164 kg (360 lb) TO 235 kg (517 lb)	48.2 kPa (7 PSI)
		2-UP	UP TO 132 kg (290 lb)	41.4 kPa (6 PSI)
			FROM 132 kg (290 lb) TO 272 kg (600 lb)	48.2 kPa (7 PSI)
	Rear	1-UP	UP TO 164 kg (360 lb)	41.4 kPa (6 PSI)
			FROM 164 kg (360 lb) TO 235 kg (517 lb)	68.9 kPa (10 PSI)
		2-UP	UP TO 132 kg (290 lb)	41.4 kPa (6 PSI)
			FROM 132 kg (290 lb) TO 272 kg (600 lb)	68.9 kPa (10 PSI)
Minimum tire thread depth				3 mm (.118 in)
Size	Front			660 x 203 x 305 mm (26 x 8 x 12 in)
	Rear			660 x 254 x 305 mm (26 x 10 x 12 in)
WHEELS				
Type		Standard models		Steel
		Models with DPS XT models 1000 LTD		Cast aluminum
		XT-P models		Aluminium beadlocks
Rim size	Front			305 x 152 mm (12 x 6 in)
	Rear			305 x 191 (12 x 7.5 in)
Wheel nut torque				100 N•m ± 10 N•m (74 lbf•ft ± 7 lbf•ft)
CHASSIS				
SST G2				Steel
DIMENSIONS				
Overall length		1-UP	Standard models Models with DPS	218.4 cm (86 in)
			XT models XT-P models	226.3 cm (89.1 in)
		2-UP	Standard models Models with DPS	238.8 cm (94 in)
			XT models XT-P models	246.6 cm (97.1 in)
Overall width				1 168 mm (46 in)
Overall height				111.8 cm (44 in)
Wheelbase		1-UP		129.5 cm (51 in)
		2-UP		149.9 cm (59 in)
Wheel track			Front	96.5 cm (38 in)
			Rear	91.4 cm (36 in)

DIMENSIONS (CONT'D)			
Ground clearance	1-UP	Outlander models	27.9 cm (11 in)
	2-UP	500 650 800R Models with DPS 800R XT-P 1000 XT-P	27.5 cm (10.8 in)
		XT models 1000 LTD	27.9 cm (11 in)
WEIGHT AND LOADING CAPACITY			
Dry weight	1-UP	500	331 kg (729 lb)
		500 with DPS	338 kg (743 lb)
		500 XT	365 kg (802 lb)
		650/800R	337 kg (740 lb)
		650 with DPS 800R with DPS	344 kg (756 lb)
		650 XT 800 XT 800R XT-P	369 kg (811 lb)
		1000 with DPS	352 kg (774 lb)
		1000 XT 1000 XT-P	380 kg (835 lb)
	2-UP	500	360 kg (791 lb)
		500 with DPS	367 kg (806 lb)
		500 XT	394 kg (866 lb)
		650/800R	363 kg (798 lb)
		650 with DPS 800R with DPS	369 kg (811 lb)
		650 XT 800R XT 800R XT-P	398 kg (875 lb)
		1000 with DPS	378 kg (831 lb)
		1000 XT 1000 XT-P	406 kg (893 lb)
		1000 LTD	431 kg (948 lb)
Weight distribution (front/rear)	Outlander 500 650 800R		48/52
	Outlander 500 XT		49/51
	Outlander 1000		50/50
	Outlander MAX Standard models		49/51
	Outlander MAX Models with DPS XT models XT-P models 1000 LTD		50/50
Front rack			45 kg (100 lb)
Rear rack			90 kg (200 lb)
Rear storage compartment loading capacity			10 kg (22 lb)

WEIGHT AND LOADING CAPACITY (CONT'D)			
Total vehicle load allowed (including driver, passenger, all other loads and added accessories)	1-UP		235 kg (517 lb)
	2-UP		272 kg (600 lb)
Gross vehicle weight rating	1-UP	500	581 kg (1,277 lb)
		500 with DPS	588 kg (1,293 lb)
		500 XT	615 kg (1,352 lb)
		650	587 kg (1,290 lb)
		650 with DPS 800R with DPS	594 kg (1,306 lb)
		650 XT 800R XT 800R XT-P	619 kg (1,361 lb)
		800R	587 kg (1,290 lb)
		1000 with DPS	602 kg (1,324 lb)
		1000 XT 1000 XT-P	630 kg (1,385 lb)
	2-UP	500	647 kg (1,424 lb)
		500 with DPS	654 kg (1,439 lb)
		500 XT	681 kg (1,499 lb)
		650 800R	650 kg (1,431 lb)
		650 with DPS 800R with DPS	656 kg (1,444 lb)
		650 XT 800R XT 800R XT-P	685 kg (1,508 lb)
		1000 with DPS	666 kg (1,485 lb)
		1000 XT 1000 XT-P	693 kg (1,526 lb)
		1000 LTD	718 kg (1,581 lb)
Towing capacity		Except CE version	590 kg (1,300 lb)
		CE version	135 kg (300 lb)
Tongue capacity		Except CE version	23 kg (50 lb)
		CE version	14 kg (30 lb)

RENEGADE SERIES (500/800R/1000)

SERVICE PRODUCTS

Description	Part Number	Page
CV GREASE	293 550 019	608
XPS 4-STROKE SYNTH. BLEND OIL (SUMMER)	293 600 121	602
XPS 4-STROKE SYNTHETIC OIL (ALL CLIMATE)	293 600 112	602
XPS SYNTHETIC GEAR OIL (75W 140)	293 600 140	604, 608
XPS SYNTHETIC GEAR OIL (75W 90)	293 600 043	608

ENGINE		
Engine type	500	ROTAX® 490, 4-stroke, 2 cylinders (V-twin), liquid cooled
	800R	ROTAX 810, 4-stroke, 2 cylinders (V-twin), liquid cooled
	1000	ROTAX 1010, 4-stroke, 2 cylinders (V-twin), liquid cooled
Valve train		4 valves/cylinder (mechanical adjustment), single over head camshaft (SOHC) with timing chain
Bore	500	82 mm (3.23 in)
	800R 1000	91 mm (3.58 in)
Stroke	500	47.3 mm (1.86 in)
	800R	61.5 mm (2.42 in)
	1000	75 mm (2.95 in)
Displacement	500	500 cm^3 (30.5 in^3)
	800R	799 cm^3 (48.8 in^3)
	1000	976 cm^3 (59.6 in^3)
Compression ratio	500	10.6:1
	800R	10.3:1
	1000	10.5:1
Maximum HP RPM	500	8000 rpm
	800R 1000	7000 rpm
Exhaust system		Spark arrestor approved by USDA Forest Service
Air filter		Corrugated composite fiber
Intake valve opening	500	3° BTDC
	800R 1000	5° BTDC
Intake valve closing	500	34 ABDC
	800R	45° ABDC
	1000	60° ABDC
Exhaust valve opening	500	39° BBDC
	800R 1000	55° BBDC
Exhaust valve closing	500	2° ATDC
	800R 1000	5° ATDC

ENGINE (CONT'D)			
Valve clearance		Intake	0.06 mm to 0.14 mm (.0024 in to .0055 in)
		Exhaust	0.11 mm to 0.19 mm (.0043 in to .0075 in)
Valve stem diameter	Intake	New	4.966 mm to 4.980 mm (.1955 in to .1961 in)
		Service limit	4.930 mm (.1941 in)
	Exhaust	New	4.956 mm to 4.970 mm (.1951 in to .1957 in)
		Service limit	4.930 mm (.1941 in)
Valve out of round	Intake and exhaust	New	0.005 mm (.0002 in)
		Service limit	0.06 mm (.0024 in)
Valve guide diameter		New	4.998 mm to 5.018 mm (.1968 in to .1976 in)
		Service limit	5.050 mm (.1988 in)
Valve spring free length		New	40.81 mm (1.607 in)
		Service limit	39.00 mm (1.535 in)
Valve seat contact width	Intake	New	1.05 mm to 1.35 mm (.041 in to .053 in)
		Service limit	1.8 mm (.071 in)
	Exhaust	New	1.25 mm to 1.55 mm (.049 in to .061 in)
		Service limit	2 mm (.079 in)
Rocker arm bore diameter		New	12.036 mm to 12.050 mm (.4739 in to .4744 in)
		Service limit	12.060 mm (.4748 in)
Rocker arm shaft diameter		New	12.000 mm to 12.018 mm (.4724 in to .4731 in)
		Service limit	11.990 mm (.472 in)
Piston diameter	500	New	81.950 mm to 81.966 mm (3.2264 in to 3.227 in)
		Service limit	81.850 mm (3.2224 in)
	800R 1000	New	90.950 mm to 90.966 mm (3.5807 in to 3.5813 in)
		Service limit	90.900 mm (3.5787 in)
Piston/cylinder clearance	500	New	0.057 mm to 0.087 mm (.0022 in to .0034 in)
		Service limit	0.100 mm (.0039 in)
	800R 1000	New	0.027 mm to 0.057 mm (.0011 in to .0022 in)
		Service limit	0.100 mm (.0039 in)
Piston ring type		1st	Upper compression ring, rectangular
		2nd	Lower compression ring, tapered face
		3rd	Oil scraper ring
Ring end gap	Rectangular	New	0.20 mm to 0.40 mm (.008 in to .016 in)
		Service limit	0.60 mm (.024 in)
	Tapered face	New	0.20 mm to 0.40 mm (.008 in to .016 in)
		Service limit	0.70 mm (.028 in)
	Oil scraper ring	New	0.20 mm to 0.70 mm (.008 in to .028 in)
		Service limit	1.00 mm (.039 in)
Ring/piston groove clearance	Rectangular	New	0.03 mm to 0.07 mm (.0012 in to .0028 in)
		Service limit	0.15 mm (.0059 in)
	Tapered face	New	0.02 mm to 0.06 mm (.0008 in to .0024 in)
		Service limit	0.15 mm (.0059 in)
	Oil scraper ring	New	0.01 mm to 0.18 mm (.0004 in to .0071 in)
		Service limit	0.25 mm (.0098 in)

ENGINE (CONT'D)				
Cylinder bore		500	New	82.023 mm to 82.037 mm (3.2293 in to 3.2298 in)
		800R 1000		90.993 mm to 91.007 mm (3.5824 in to 3.583 in)
Cylinder taper			Maximum new	0.038 mm (.0015 in)
			Service limit	0.090 mm (.0035 in)
Cylinder out of round			Maximum new	0.015 mm (.0006 in)
			Service limit	0.020 mm (.0008 in)
Camshaft main bearing journal		Timing chain side	New	34.959 mm to 34.975 mm (1.3763 in to 1.377 in)
			Service limit	34.950 mm (1.376 in)
		Spark plug side	New	21.959 mm to 21.980 mm (.8645 in to .8654 in)
			Service limit	21.950 mm (.8642 in)
Camshaft main bearing journal bore		Timing chain side	New	35.000 mm to 35.025 mm (1.378 in to 1.3789 in)
			Service limit	35.040 mm (1.3795 in)
		Spark plug side	New	22.000 mm to 22.021 mm (.8661 in to .867 in)
			Wear limit	22.040 mm (.8677 in)
Camshaft lobe	Intake valve	500	New	31.830 mm to 32.030 mm (1.2531 in to 1.261 in)
			Service limit	31.810 mm (1.2524 in)
		800R	New	32.890 mm to 33.090 mm (1.2949 in to 1.3028 in)
			Service limit	32.870 mm (1.2941 in)
		1000	New	32.960 mm to 33.160 mm (1.2976 in to 1.3055 in)
			Service limit	32.940 mm (1.2969 in)
	Exhaust valve	500	New	31.830 mm to 32.030 mm (1.2531 in to 1.261 in)
			Service limit	31.810 mm (1.2524 in)
		800R	New	32.950 mm to 33.150 mm (1.2972 in to 1.3051 in)
			Service limit	32.930 mm (1.2965 in)
		1000	New	32.860 mm to 33.060 mm (1.2937 in to 1.3016 in)
			Service limit	32.840 mm (1.2929 in)
Crankshaft main bearing journal diameter (MAG/PTO side)			New	42.016 mm to 42.040 mm (1.6542 in to 1.6551 in)
			Service limit	42.000 mm (1.6535 in)
Crankshaft radial play (MAG/PTO side)			Service limit	0.07 mm (.0028 in)
Crankshaft bearing journal diameter (in PTO cover)			New	34.004 mm to 34.020 mm (1.3387 in to 1.3394 in)
			Service limit	33.998 mm (1.3385 in)
Crankshaft radial play (PTO cover bearing)			Service limit	0.10 mm (.0039 in)
Crankshaft axial play			New	0.200 mm to 0.500 mm (.0079 in to .0197 in)
			Service limit	0.600 mm (.0236 in)
Crankshaft pin diameter		500	New	35.064 mm to 35.080 mm (1.3805 in to 1.3811 in)
			Service limit	35.050 mm (1.3799 in)
		800R	New	40.009 mm to 40.025 mm (1.5752 in to 1.5758 in)
			Service limit	39.990 mm (1.5744 in)
		1000	New	41.986 mm to 42.010 mm (1.653 in to 1.6539 in)
			Service limit	41.967 mm (1.6522 in)

ENGINE (CONT'D)			
Crankshaft deflection	MAG/PTO side	New	0.050 mm (.002 in)
Crankcase plain bearing	MAG/PTO side	Service limit	42.100 mm (1.6575 in)
PTO cover plain bearing		Service limit	34.120 mm (1.3433 in)
Connecting rod big end diameter	500	Service limit	35.150 mm (1.384 in)
	800R		40.100 mm (1.579 in)
	1000		42.100 mm (1.6575 in)
Connecting rod big end radial play		Service limit	0.09 mm (.0035 in)
Connecting rod big end axial play	500 800R	New	0.200 mm to 0.500 mm (.008 in to .02 in)
	1000		0.250 mm to 0.550 mm (.0098 in to .0217 in)
	500 800R 1000	Service limit	0.600 mm (.024 in)
Connecting rod small end diameter	500	New	18.010 mm to 18.020 mm (.7091 in to .7094 in)
		Service limit	18.060 mm (.711 in)
	800R	New	20.010 mm to 20.020 mm (.7878 in to .7882 in)
		Service limit	20.060 mm (.7898 in)
	1000	New	22.010 mm to 22.020 mm (.8665 in to .8669 in)
		Service limit	22.050 mm (.8681 in)
Piston pin diameter	500	New	17.996 mm to 18.000 mm (.7085 in to .7087 in)
		Service limit	17.980 mm (.708 in)
	800R	New	19.996 mm to 20.000 mm (.7872 in to .7874 in)
		Service limit	19.980 mm (.787 in)
	1000	New	21.996 mm to 22.000 mm (.866 in to .866 in)
		Service limit	21.980 mm (.8654 in)
Connecting rod/piston pin clearance (radial play)		Service limit	0.080 mm (.0031 in)
LUBRICATION SYSTEM			
Type			Wet sump. Replaceable cartridge oil filter
Oil filter			BRP Rotax paper type, replaceable
Engine oil pressure		Minimum	300 kPa (44 PSI) at 6000 RPM
Engine oil	Capacity (oil change with filter)		2.0 L (2.1 qt (U.S. liq.))
	Recommended		For the summer season, use XPS 4-STROKE SYNTH. BLEND OIL (SUMMER) (P/N 293 600 121). For the winter season, use XPS 4-STROKE SYNTHETIC OIL (ALL CLIMATE) (P/N 293 600 112). If not available, use a 5W40 motor oil that meets the requirements for API service classification SG, SH or SJ
COOLING SYSTEM			
Coolant	Type		Ethyl glycol/water mix (50% coolant, 50% water). Use premixed coolant sold by BRP (P/N 219 700 362) or coolant specifically designed for aluminum engines
	Capacity	500 800R	3.4 L (.9 U.S. gal.)
		1000	3.5 L (.9 U.S. gal.)
Thermostat		Starts to open	65°C (149°F)
		Fully open	75°C (167°F)
Radiator cap opening pressure			110 kPa (16 PSI)

TRANSMISSION			
Type			CVT (Continuously Variable Transmission)
Engagement RPM			1650 ± 100 RPM
Drive belt width		Service limit	30.00 mm (1.181 in)
Governor cup roller outer diameter		New	13.70 mm to 13.80 mm (.539 in to .543 in)
		Service limit	13.20 mm (.52 in)
Governor cup roller inner diameter		New	8.05 mm to 8.15 mm (.317 in to .321 in)
		Service limit	9.00 mm (.354 in)
Centrifugal lever pivot bolt diameter		New	6.078 mm to 6.100 mm (.239 in to .24 in)
		Service limit	6.000 mm (.236 in)
Centrifugal lever bore diameter		New	6.035 mm to 6.078 mm (.2376 in to .2393 in)
		Service limit	6.200 mm (.244 in)
Drive pulley sliding half centrifugal lever pivot bolt bore diameter		New	6.113 mm to 6.171 mm (.241 in to .243 in)
		Service limit	6.300 mm (.248 in)
Drive pulley sliding half large bushing		New	55.000 mm to 55.040 mm (2.165 in to 2.167 in)
		Service limit	55.200 mm (2.173 in)
Drive pulley sliding half small bushing		New	32.000 mm to 32.040 mm (1.26 in to 1.261 in)
		Service limit	32.200 mm (1.268 in)
Drive pulley spring free length	500	Service limit	85 mm (3.346 in)
	800R 1000		105 mm (4.134 in)
Drive pulley spring free squareness		Service limit	4 mm (.157 in)
Spring sleeve length		New	9.2 mm to 9.4 mm (.362 in to .37 in)
		Service limit	9.0 mm (.354 in)
Driven pulley sliding half bushing		New	30.060 mm to 30.100 mm (1.183 in to 1.185 in)
		Service limit	30.200 mm (1.189 in)
Driven pulley sliding fixed bushing		New	30.060 mm to 30.100 mm (1.183 in to 1.185 in)
		Service limit	30.200 mm (1.189 in)
Torque gear on driven pulley		Service limit	7.500 mm (.295 in)
Driven pulley spring free length	500	Service limit	190 mm (7.48 in)
	800R 1000		125 mm (4.921 in)
Driven pulley spring free squareness		Service limit	3.8 mm (.15 in)

GEARBOX				
Type				Dual range (HI-LO) with park, neutral and reverse
Gear ratios	500	Angle drive sub-transmission		32/13 = 2.462
		High		35/28 = 1.250
		Low		43/20 = 2.150
		Reverse		31/14 = 2.214
	800R	Angle drive sub-transmission		32/13 = 2.462
		High		34/29 = 1.173
		Low		43/20 = 2.150
		Reverse		31/14 = 2.214
	1000	Angle drive sub-transmission		37/15 = 2.467
		Intermediate		45/44 = 1.023
		High		37/33 = 1.121
		Low		44/19 = 2.316
		Reverse		34/12 = 2.833
Overall gear ratio		500	High	3,078
			Low	5,293
			Reverse	5,545
		800R	High	2.886
			Low	5,292
			Reverse	5,541
		1000	High	2.829
			Low	5,842
			Reverse	7,148
Gearbox oil		500 800R 1000	Capacity	400 ml (13.5 U.S. oz)
				450 ml (15.22 U.S. oz)
		500 800R 1000	Recommended	XPS SYNTHETIC GEAR OIL (75W 140) (P/N 293 600 140) or a 75W140 API GL-5 synthetic gear oil

GEARBOX (CONT'D)				
Output shaft backlash		500 800R	New	0.10 mm to 0.20 mm (.004 in to .008 in)
			Service limit	0.25 mm (.01 in)
		1000	New	N.A.
			Service limit	N.A.
Coupling sleeve groove width			New	5.25 mm to 5.35 mm (.207 in to .211 in)
			Service limit	5.50 mm (.217 in)
Coupling fork claw thickness			New	4.95 mm to 5.05 mm (.195 in to .199 in)
			Service limit	4.80 mm (.189 in)
Shift fork claw thickness (high gear shift fork)		500 800R	New	4.80 mm to 4.90 mm (.189 in to .193 in)
			Service limit	4.70 mm (.185 in)
		1000	New	5.10 mm to 5.20 mm (.201 in to .205 in)
			Service limit	5.0 mm (.197 in)
Shift fork claw thickness (low and reverse gear shift fork)			New	5.10 mm to 5.20 mm (.201 in to .205 in)
			Service limit	5.0 mm (.197 in)
Shift fork pin diameter		500 800R	New	6.92 mm to 6.97 mm (.272 in to .274 in)
			Service limit	6.85 mm (.27 in)
		1000	New	N.A.
			Service limit	N.A.
Width of shift fork engagement groove (low and reverse gear)			New	5.30 mm to 5.40 mm (.209 in to .213 in)
			Service limit	5.50 mm (.217 in)
Width of shift fork engagement groove (high gear)		500 800R	New	5.00 mm to 5.10 mm (.197 in to .201 in)
			Service limit	5.20 mm (.205 in)
		1000	New	5.30 mm to 5.40 mm (.209 in to .213 in)
			Service limit	5.50 mm (.217 in)
Diameter free pinions			New	29.000 mm to 29.013 mm (1.1417 in to 1.1422 in)
			Service limit	29.015 mm (1.1423 in)
Intermediate gear shaft			New	24.979 mm to 25.000 mm (.9834 in to .9843 in)
			Service limit	24.977 mm (.983 in)
Countershaft	500 800R	MAG side	New	N.A.
			Service limit	17.990 mm (.7083 in)
	1000		New	19.977 mm to 19.990 mm (.7865 in to .787 in)
			Service limit	19.973 mm (.7863 in)
	500 800R	CVT side	New	N.A.
			Service limit	24.970 mm (.9831 in)
	1000		New	24.977 mm to 24.990 mm (.9833 in to .9839 in)
			Service limit	24.970 mm (.9831 in)
	500 800R	Free pinion bearing	New	N.A.
			Service limit	24.970 mm (.9831 in)
	1000		New	N.A.
			Service limit	N.A.
Bevel gear shaft	500 800R	Free pinion bearing	Service limit	24.984 mm (.9836 in)
	1000			N.A.

GEARBOX (CONT'D)				
Main shaft	500 800R	Free pinion bearing	New	N.A.
			Service limit	N.A.
	1000		New	24.987 mm to 25.000 mm (.9837 in to .9843 in)
			Service limit	24.984 mm (.9836 in)
	500 800R	Bearing journal MAG/CVT side	New	N.A.
			Service limit	N.A.
	1000		New	16.980 mm to 16.991 mm (.6685 in to .6689 in)
			Service limit	16.976 mm (.6683 in)
ELECTRICAL SYSTEM				
Magneto generator output			Without DPS	400 W @ 6000 RPM
			With DPS	625 W @ 6000 RPM
Stator resistance (20°C (68°F))				0.15 to 0.30 Ω
Ignition system type				IDI (Inductive Discharge Ignition)
Ignition timing				Not adjustable
Spark plug			Quantity	2
			Make and type	NGK DCPR8E
			Gap	0.6 mm to 0.7 mm (.024 in to .028 in)
Engine RPM limiter setting		All models	Forward	8000 rpm
			Reverse	15 km/h (9 MPH) without Override)
Battery	Type			Maintenance free
	Voltage			12 volts
	Nominal rating			18 A•h
	Power starter output			0.7 KW
Headlights		High		2 x 60 W
		Low		2 x 60 W
Taillights				2 x 8/27 W
Turn signal lights (CE models only)				4 x 10 W
Position light (CE models only)				2 x 5 W
Licence plate light (CE models only)				1 x 10 W

ELECTRICAL SYSTEM (CONT'D)			
Fuses	-Main	MF1	30 A
	-Fan -Main accessories power	MF2	40 A
	-DPS motor	MF3	40 A
	-Brake lights relay control -Gauge -Taillights -Brake relay -DPS control	F4	10 A
	-Ignition coils -Fuel injectors -Speed sensor	F5	5 A
	-Engine control module (ECM) -Fan relay control	F6	5 A
	-ECM -Ignition switch	F8	5 A
	-Fan motor	F9	25 A
	-Clock -Signal/Hazard lights -Accessories relay control	F10	5 A
	-Headlights	F11	30 A
	-Connector DC3 -12 V power outlet -Communication connector	F12	15 A
	-Connectosr DC5 and DC6	F14	15 A
	-Fuel pump relay	F15	5 A

FUEL SYSTEM			
Fuel delivery		Type	Electronic Fuel Injection (EFI), 46 mm throttle body, 1 injector per cylinder
Fuel pump		Type	Electrical (in fuel tank)
		Operating pressure	350 kPa ± 10 kPa (51 PSI ± 1 PSI)
Idle speed			1250 rpm ± 50 (not adjustable)
Fuel	Type		Regular unleaded gasoline
	Minimum octane rating	Inside North America	87 (R+M)/2 or higher
		Outside North America	92 RON or higher
Fuel tank capacity			20.5 L (5.4 U.S. gal.)
Fuel remaining when low fuel light turns ON			± 5 L (1.3 U.S. gal.)

DRIVE SYSTEM			
Drive system type			Selectable 2WD/4WD
Front drive			Visco-lok† front differential
Front drive ratio			3.6:1
Rear drive			Shaft driven final drive
Rear drive ratio			3.6:1
Front differential oil		Capacity	500 ml (17 U.S. oz)
		Type	XPS SYNTHETIC GEAR OIL (75W 90) (P/N 293 600 043) or synthetic gear oil 75W90 API GL-5
Rear final drive oil		Capacity	300 ml (10.2 U.S. oz)
		Type	XPS SYNTHETIC GEAR OIL (75W 140) (P/N 293 600 140) or synthetic gear oil 75W140 API GL-5
CV joint grease			CV GREASE (P/N 293 550 019)
Propeller shaft grease			Hi-temp bearing grease NLGI-2 or an equivalent
STEERING			
Turning radius		1-UP	205.7 cm (81 in)
Total toe (front wheels off ground)			3 mm to 5.6 mm (.118 in to .22 in) **toe-in**
Camber angle (vehicle on ground)			0°
Tie-rod maximum length unengaged threads			348.5 mm (13.72 in)
FRONT SUSPENSION			
Suspension type			Double suspension-arm with dive-control geometry
Suspension travel			226 mm (8.9 in)
Shock absorber	Qty	Renegade Renegade X xc	2
	Type	Renegade	FOX Racing Shox HPG shocks (gas)
		Renegade X xc	FOX Racing Shox HPG piggyback shocks (gas) with dual-speed compression, rebound
Spring free length		Renegade 500	350 mm (13.78 in)
		Renegade 800R Renegade 1000 Renegade X xc	320 mm (12.6 in)
Spring P/N		Renegade	706 000 955 (BK/RD)
		Renegade X xc	706 000 950 (BK/GN)
Preload adjustment type		Renegade Renegade X xc	Screw type adjustment ring

REAR SUSPENSION			
Suspension type			Torsional Trailing arm Independant (TTI) with external sway bar
Suspension travel			236 mm (9.3 in)
Shock absorber	Qty	Renegade Renegade X xc	2
	Type	Renegade	FOX Racing Shox HPG shocks (gas)
		Renegade X xc	FOX Racing Shox HPG piggyback shocks (gas) with dual-speed compression, rebound
Spring free length		Renegade 500	355.9 mm (14.01 in)
		Renegade 800R Renegade 1000	311 mm (12.24 in)
		Renegade X xc	306 mm (12.05 in)
Spring P/N		Renegade	706 201 268 (BK/BU)
		Renegade X xc	706 201 258 (BK/WH)
Preload adjustment type		Renegade Renegade X xc	Screw type adjustment ring
BRAKES			
Front brake		Qty	2
		Type	214 mm cross drilled disc brakes with hydraulic twin-piston calipers
Rear brake	N.A. models	Qty	2
		Type	214 mm cross drilled disc brake with hydraulic twin-piston calipers
	CE models	Qty	2
		Type	214 mm cross drilled disc brake with hydraulic twin-piston calipers
Brake fluid		Capacity	340 ml (11.5 U.S. oz)
		Type	DOT 4
Caliper			Floating twin pistons (2 x 26 mm)
Brake pad material			Organic
Minimum brake pad thickness			1 mm (.04 in)
Minimum brake disc thickness			4.0 mm (.157 in)
Maximum brake disc warpage			0.2 mm (.01 in)
TIRES			
Pressure		Front	Recommended: 41.4 kPa (6 PSI)
		Rear	Recommended: 41.4 kPa (6 PSI)
Minimum tire thread depth			3 mm (.118 in)
Size		Front	635 x 203 x 305 mm (25 x 8 x 12 in)
		Rear	635 x 254 x 305 mm (25 x 10 x 12 in)

WHEELS			
Type		Renegade	Cast aluminum
		Renegade X xc	Aluminum beadlock wheels
Rim size	Front	Renegade Renegade X xc	305 x 152 mm (12 x 6 in)
	Rear	Renegade Renegade X xc	305 x 191 (12 x 7.5 in)
Wheel nut torque			100 N•m ± 10 N•m (74 lbf•ft ± 7 lbf•ft)
CHASSIS			
SST G2			Steel
DIMENSIONS			
Overall length			2 184 mm (86 in)
Overall width			1 168 mm (46 in)
Overall height			1 143 mm (45 in)
Wheelbase			129.5 cm (51 in)
Wheel track		Front	96.5 cm (38 in)
		Rear	91.4 cm (36 in)
Ground clearance		Renegade	30 cm (10.5 in)
		Renegade X xc	30 cm (10.3 in)
WEIGHT AND LOADING CAPACITY			
Dry weight	Renegade	500	286 kg (628 lb)
		800R	310 kg (684 lb)
		1000	318 kg (702 lb)
	Renegade X xc	800R	329 kg (726 lb)
		1000	337 kg (744 lb)
Weight distribution (front/rear)			49/51
Rear storage compartment loading capacity			16 kg (35 lb)
Total vehicle load allowed (including driver, passenger, all other loads and added accessories)			141 kg (311 lb)
Towing capacity		Except CE version	590 kg (1,300 lb)
		CE version	135 kg (300 lb)
Tongue capacity		Except CE version	23 kg (50 lb)
		CE version	14 kg (30 lb)

WIRING DIAGRAM INFORMATION

GENERAL

WIRING DIAGRAM LOCATION

The wiring diagram are located in the back cover pocket.

WIRING DIAGRAM CODES

Fuse Identification

Front Fuse Box

The fuses are identified on the *WIRING DIAGRAM* as per the following example:

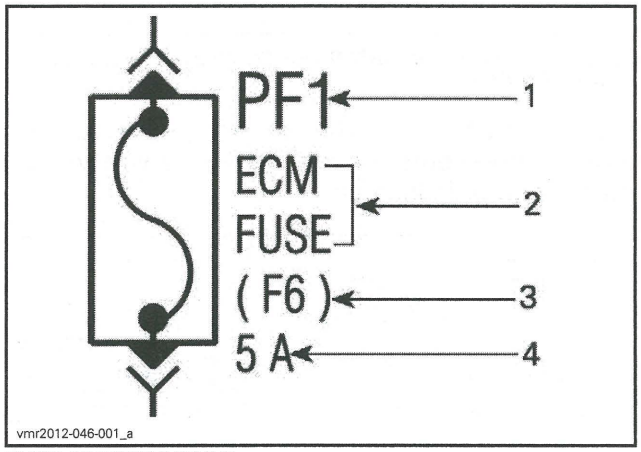

FUSE IDENTIFICATION
1. *Fuse location (PF1: front fuse box)*
2. *Fuse identification*
3. *Fuse number (F6)*
4. *Fuse amperage rating*

Rear Fuse Holder

The fuses are identified on the *WIRING DIAGRAM* as per the following example:

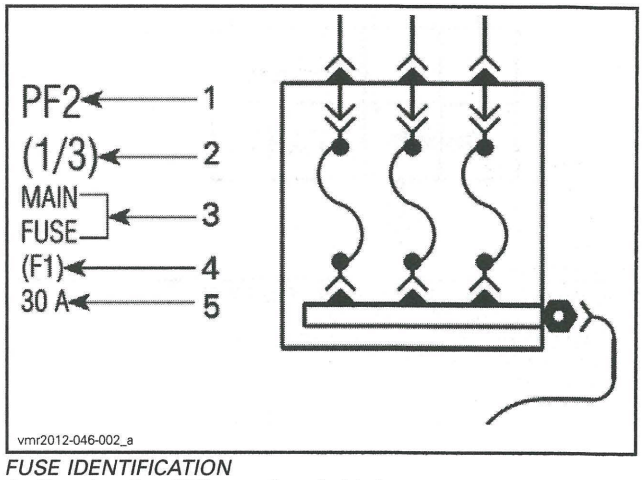

FUSE IDENTIFICATION
1. *Fuse location (PF2: rear fuse holder)*
2. *Fuse trio identification (fuse 1 of 3*
3. *Fuse identification*
4. *Fuse number (F1)*
5. *Fuse amperage rating*

Relay Identification

The relays are identified on the *WIRING DIAGRAM* as per the following example:

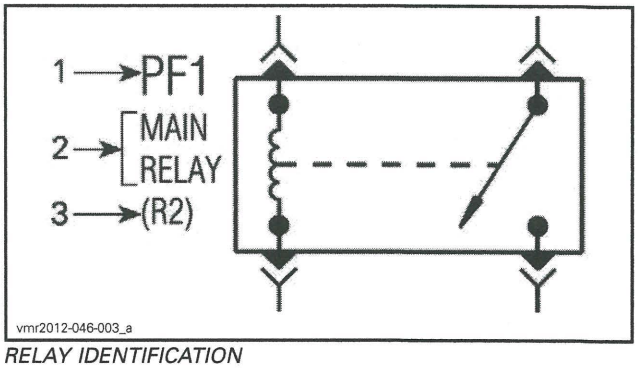

RELAY IDENTIFICATION
1. *Relay location (PF1: front fuse box)*
2. *Relay identification*
3. *Relay number*

Multifunction Switch Identification

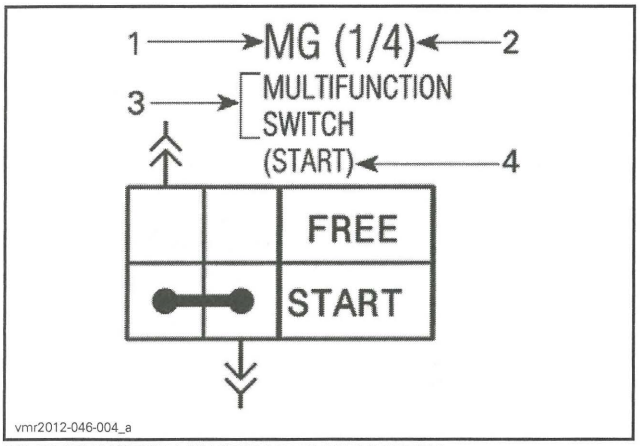

MULTIFUNCTION SWITCH IDENTIFICATION
1. *Switch location (MG: left side)*
2. *Switch combo identification (part 1 of 4)*
3. *Switch identification*
4. *Switch function*

Wiring and Connector Information

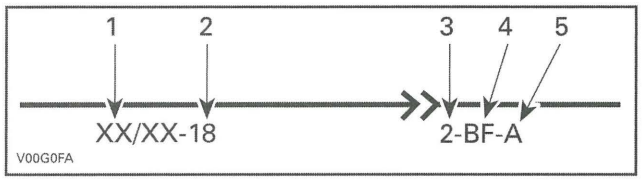

1. *Wire colors*
2. *Wire gauge*
3. *Connector housing area*
4. *Connector identification*
5. *Wire location in connector*

Wire Colors

It identifies the color of a wire. When a 2-color scheme is used, the first color is the main color while the second color is the tracer color.

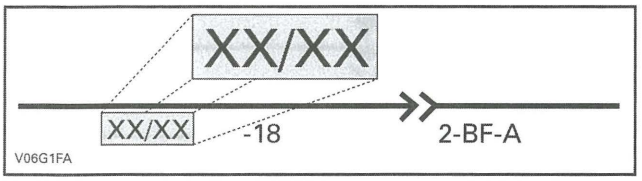

THE SHADED PART INDICATES THE WIRE COLOR

Example: YL/BK is a YELLOW wire with a BLACK stripe.

Wire Gauge

The number after wire color indicates the gauge of a wire.

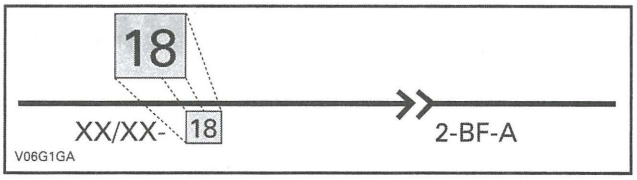

THE SHADED PART INDICATES THE WIRE GAUGE

Example: The number that follows the wire color indicates the wire size used, in this case 18 gauge wire.

Connector Housing Location Area

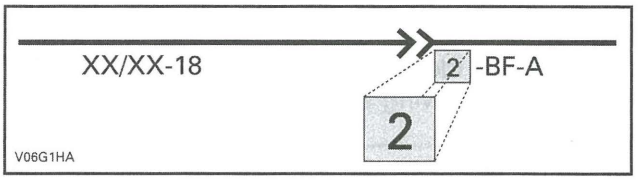

THE SHADED PART INDICATES THE CONNECTOR HOUSING LOCATION AREA

The first number in the connector/pin contact number represents the area in the vehicle where the connector is located.

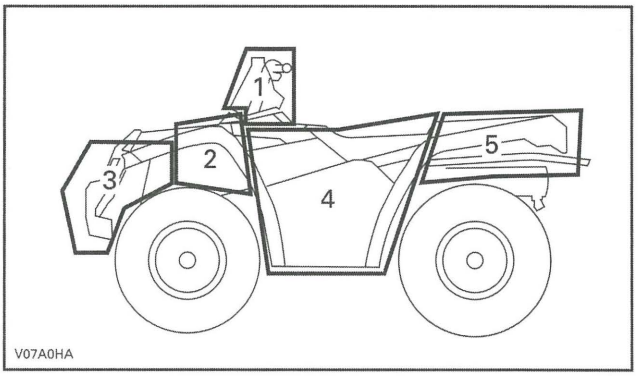

AREA	LOCATION
1	Steering area
2	Service compartment
3	Front of vehicle
4	Engine area
5	Rear of vehicle

Connector Identification

The letters in the middle of the connector/pin contact number Indicates the connector's function. If there are many connectors in the same area, this helps to identify which wire is in which connector.

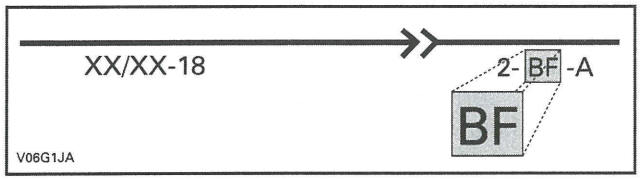

THE SHADED PART INDICATES A CONNECTOR

NOTE: For a complete list of the connector identification, refer to *WIRING HARNESS AND CONNECTORS*.

Wire Location in Connector

This is the wire position in the connector. The number or letter given refers to the physical identification stamped or molded on the connector.

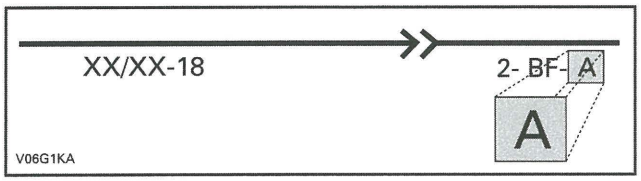

THE SHADED PART INDICATES THE CONNECTOR LOCATION IN HOUSING

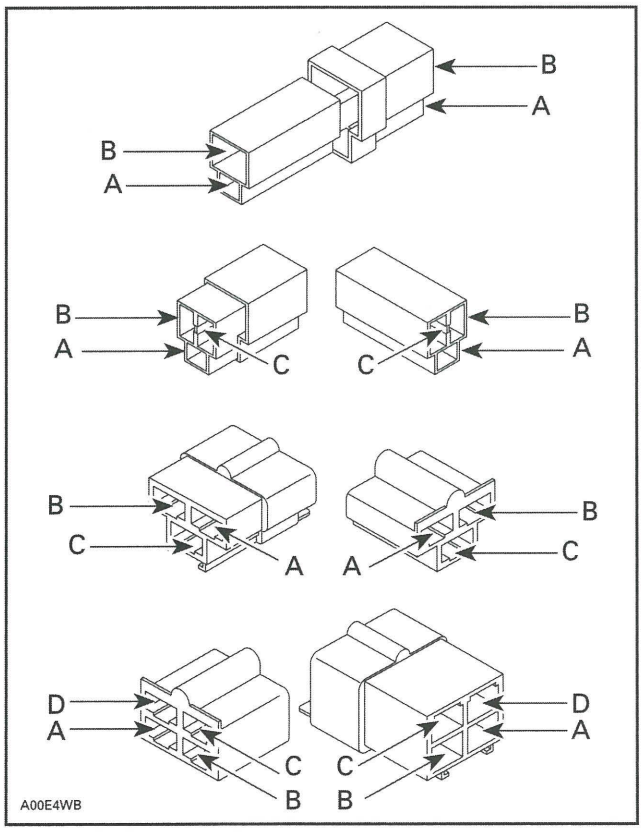

TYPICAL

TROUBLESHOOTING

DIAGNOSTIC TIPS

IMPORTANT: When trying to solve an electrical problem, check the following:

- The ignition switch is turned ON.
- The engine RUN/STOP switch is in RUN position.
- The battery condition as well as its cables and connections.
- The system fuse condition of the related circuit using an ohmmeter.
- Ensure a positive electrical connection of the fuse to the fuse holder contacts.
- Examine related circuit harness and connections.

Install a battery charger before any tests that involve prolonged "key ON". If system voltage is too low, some accessories will be shut off and test results can be altered.

Pay particular attention to electrical connectors and ensure that pins are not out of their housings, loose, or damaged. The troubleshooting procedures may not cover problems resulting from one of these causes.

NOTE: Ensure all terminals are properly crimped on wires and connector housings are properly fastened. When replacing any electric or electronic part(s), always check electrical connections. Make sure that they are clean, corrosion-free, tight and make good contact. The voltage and current might be too weak to go through dirty or corroded connector pins or terminals.

If a fault is intermittent and cannot be found through static continuity checks, it may indicate:

- A loose connection
- A bad splice in a harness
- A pin that is unlocked in a connector and barely making contact
- An intermittent electronic component within a module.

Do the following:

- Try moving the harness and connectors to simulate vehicle vibration as you carry out your checks with the multimeter.
- Try spraying water to the harness, connectors or sensors to simulate riding under the rain or high humidity as you carry out your checks with the multimeter.

IMPORTANT: In an electrical circuit, the battery usually provides power to a switch, which then supplies the electric component when the switch contacts are closed (low power circuits). Therefore the switch opens and closes the positive side of the circuit. In circuits controlled by the ECM and other modules, the battery supplies the electric component, and the ECM/module acts as the switch which completes the circuit to ground. A relay acts as a remote switching device for higher power components or for supplying multiple circuits. Take this into account when troubleshooting the electrical system.

Pay attention to ground wires. They could become loose or corroded which causes them to act as an additional load in a circuit, dropping voltage and reducing current to components. Some components may be grounded through their outer casing and mounting hardware. This should also be considered.

Simplifying Electrical System Tests

For complex systems where there are electronic modules, sensors, actuators, relays etc., it is often beneficial for diagnosing problems to divide up the system into some basic smaller subsystems, to help narrow down where the problem lies.

Use B.U.D.S. to check for fault codes, refer to *COMMUNICATION TOOLS AND B.U.D.S.* and also *DIAGNOSTIC SYSTEM AND FAULT CODES* subsections. Follow **Service Actions** listed in B.U.D.S.

COMMON SUBSYSTEM		GUIDELINE
POWER AND GROUNDS	– Battery – Fuses – Relays – Connections	– Check if a group of components or systems stopped working or if nothing works (lights, gauge, etc.). – Start from the power source (battery) and move outwards towards the modules, checking for voltage at each connection. – Check grounds and battery (+) using a voltmeter. – Disconnect and test wiring.
INPUTS AND OUTPUTS	– Sensors – Gauges – Actuators – Motors	– View monitoring functions in B.U.D.S. – Activate all possible items and monitor response. – Disconnect and test wiring.
COMMUNICATION	– Between Modules and with B.U.D.S.	– View monitoring functions in B.U.D.S. – Disconnect and test wiring.

For ALL wiring tests, you need to check for:

POSSIBLE PROBLEM	COMMON CAUSE
– Open circuit – Shorts to ground (battery -) – Shorts to battery (+) – Shorts to other circuits – Higher resistance than desired	– Loose terminals, broken wires. – Wires rubbed through, water in connectors. – Corroded wires and terminals.

OUTLANDER / RENEGADE 2013 (G2)

GENERAL SYSTEM

NOTE :
HICA CONNECTOR : SEE EUROPE WIRING DIAGRAM
DPS CONNECTOR : SEE DPS WIRING DIAGRAM
FRR CONNECTOR : SEE BRAKE WIRING DIAGRAM

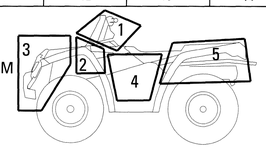

TERMINAL IDENTIFICATION						
	NAME	ZONE-	CONNECTOR NAME-	TERMINAL #/A
EX:	CI	1 -	CI	-	15
EX:	CV	4 -	CV	-	A
EX:	ME	2 -	ME		

AWG	MAX. CURRENT	MAX. FUSE CURRENT	MAX. WATT
# 6	100 amps	125 amps	1450 watts
# 8	65 amps	80 amps	930 watts
# 10	40 amps	50 amps	580 watts
# 12	25 amps	30 amps	365 watts
# 14	16 amps	20 amps	230 watts
# 16	10 amps	15 amps	145 watts
# 18	6 amps	7.5 amps	85 watts
* AT	50°C MAX		

ZONE #	ZONE DESCRIPTION
1	STEERING AREA
2	MODULE AREA
3	FRONT OF VEHICLE
4	ENGINE AREA
5	REAR OF VEHICLE

	WELDED JOINT
	SHRINKED JOINT
	CROSSED WIRE
	WIRE BUS
	SIMPLE CONDUCTOR WIRE
	FEMALE TERMINAL
	MALE TERMINAL
	STEEL LINK (FRAME)
	TERMINAL

	FRAME GROUND
	EGINE GROUND
	PHILLIPS SCREW
	NUT CONNECTION
	SPLICE CONNECTION
	COMPONENT CONNECTION
	SECTION OF MODULE
	SLOTTED SCREW
	OPTIONAL

COLOR CODE	
BE	BEIGE
BK	BLACK
BU	BLUE
BR	BROWN
GN	GREEN
GY	GREY
OR	ORANGE
RD	RED
VI	VIOLET
WH	WHITE
YL	YELLOW
PK	PINK
LT BU	LIGHT BLUE

JT RD/GN
JT RD/GY
DPS2
MG (1/4) MULTIFUNCTION SWITCH (START)
FREE
START
PF2 (1/3) MAIN FUSE (F1) 30 A
PF2 (2/3) FAN / ACCES. FUSE (F2) 40 A
PF2 (3/3) DPS FUSE (F3) 40 A
PF1 KEY SWITCH (F8) 5 A
JT BE
CC IGNITION KEY (ON & DESS)
OFF
ON W/LIGHT
ON WO/LIGHT
PF1 FREE WEELING DIODE (D2)
SS STARTER SOLENOID
BAT BATTERY 12 VDC 18 AH
SM STARTER MOTOR
MG (3/4) MULTIFUNCTION SWITCH (STOP)
RUN
STOP
MG (2/4) MULTIFUNCTION SWITCH (OVERRIDE)
FREE
OVER RIDE
OPS OIL PRESSURE SWITCH
CA MAGNETO
RD RECTIFIER
U V W I
DPS3
JT BK1
JT BK2
JT BK3
JT BK4
ECM ENGINE CONTROL MODULE
PF1 FAN FUSE (F9) 25 A
PF1 FAN RELAY (R1)
FT COOLING FAN
PF1 FUEL PUMP RELAY (F15) 5 A
PF1 FUEL PUMP RELAY (R4) 10 A
FP (1/2) FUEL PUMP
VSS SPEED SENSOR
CTS COOLANT TEMP SENSOR
JT BU/GY
JT OR/GN
PF1 RELAYS SPEEDO FUSE (F4) 10 A
PF1 MAIN RELAY (R2)
DPS1
PF1 CLOCK/ HAZARD FUSE (F10) 5 A
JT RD/WH
PF1 ECM FUSE (F6) 5 A
JT VI/RD
PF1 INJECTORS & IGNITION FUSE (F5) 5 A
JT VI/BU
BA IGNITION COIL
INJ1 FUEL INJECTOR (FRONT)
INJ2 FUEL INJECTOR (REAR)
SPK2 SPARK PLUG (REAR)
GBPS GEAR BOX POSITION SENSOR 1000 ENGINE
ECM MODULE
GBPS GEAR BOX POSITION SENSOR 800R ENGINE
TPS TROTTLE POSITION SENSOR
MAPTS MANIFOLD AIR PRESSURE / TEMP SENSOR
IDLE IDLE BYPASS VALVE
CPS CRANK SHAFT POSITION SENSOR
CI SPEEDOMETER & PILOT LAMPS
FUEL
ENGINE
4WD
HI BEAM
FP (2/2) FUEL LEVEL SENSOR
SD 2WD/4WD INDICATOR SWITCH
DB DIAGNOSTIC CONNECTOR
CAN HI
CAN LO
JT WH/BK
JT WH/BE
D11 DIODE
BD 2WD/4WD SWITCH
2WD
4WD
MD 2WD/4WD ACTUATOR
SW WINCH RELAY
WM WINCH MOTOR
PF1 WINCH 2WD/4WD FUSE (F7) 5 A
SWW WINCH SWITCH
OUT
FREE
IN
D6 ONE-WAY DIODE
D5 ONE-WAY DIODE
JT RD/BK
JT RD/YL
PF1 ACCESSORIES RELAY (R3)
PF1 LIGHT FUSE (F11) 30 A
PF1 LIGHTS RELAY (R5)
PF1 DC OUTLETS FUSE (F12) 15 A
PF1 BRAKE RELAY (R8)
JT RD/BU
JT OR/BK
JT RD/VI
PF1 ACC 2 FUSE (F14) 15 A
DC3 DC OPTION
DC DC OUTLET
DC6 DC OPTION
DC5 DC OPTION
MG (4/4) MULTIFUNCTION SWITCH (LIGHTS)
LO
HI
JP1 JUMPER FUSE 15 A
JT BU
JT GN
JT WH/OR
JT RD/OR
PRG LEFT TAIL LIGHT
PRD RIGHT TAIL LIGHT
PL LICENSE PLATE
FRR BRAKE LIGHT SWITCH
CRG LEFT TURN SIGNAL
CRD RIGHT TURN SIGNAL
PGH LEFT HEAD LIGHT (HI) 55 W
PDH RIGHT HEAD LIGHT (HI) 55 W
PGB LEFT HEAD LIGHT (LO) 55 W
PDB RIGHT HEAD LIGHT (LO) 55 W

vmr2013-049-011

710002937F1

OUTLANDER / RENEGADE 2013 (G2)

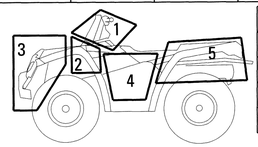

TERMINAL IDENTIFICATION				
	NAME	ZONE-	CONNECTOR NAME-	TERMINAL #/A
EX:	CI	1 -	CI -	15
EX:	CV	4 -	CV -	A
EX:	ME	2 -	ME	

AWG	MAX. CURRENT	MAX. FUSE CURRENT	MAX. WATT
# 6	100 amps	125 amps	1450 watts
# 8	65 amps	80 amps	930 watts
# 10	40 amps	50 amps	580 watts
# 12	25 amps	30 amps	365 watts
# 14	16 amps	20 amps	230 watts
# 16	10 amps	15 amps	145 watts
# 18	6 amps	7.5 amps	85 watts
* AT	50°C MAX		

ZONE #	ZONE DESCRIPTION
1	STEERING AREA
2	MODULE AREA
3	FRONT OF VEHICLE
4	ENGINE AREA
5	REAR OF VEHICLE

- WELDED JOINT
- SHRINKED JOINT
- CROSSED WIRE
- WIRE BUS
- SIMPLE CONDUCTOR WIRE
- FEMALE TERMINAL
- MALE TERMINAL
- STEEL LINK (FRAME)
- TERMINAL

- FRAME GROUND
- EGINE GROUND
- PHILLIPS SCREW
- NUT CONNECTION
- SPLICE CONNECTION
- COMPONENT CONNECTION
- SECTION OF MODULE
- SLOTTED SCREW
- OPTIONAL

COLOR CODE	
BE	BEIGE
BK	BLACK
BU	BLUE
BR	BROWN
GN	GREEN
GY	GREY
OR	ORANGE
RD	RED
VI	VIOLET
WH	WHITE
YL	YELLOW
PK	PINK
LT BU	LIGHT BLUE

DPS SYSTEM

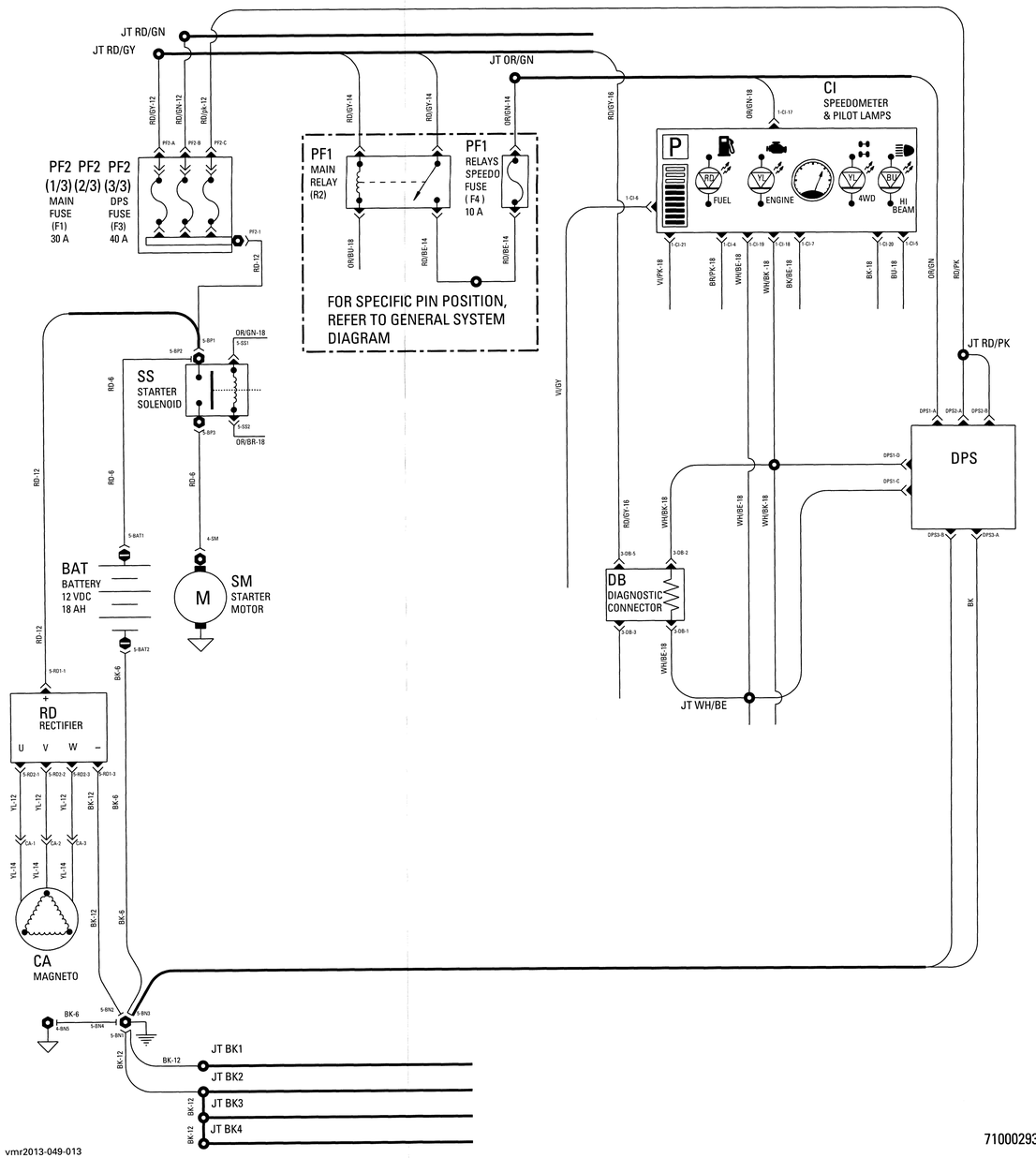

710002937F3

vmr2013-049-013

BRAKE SYSTEM

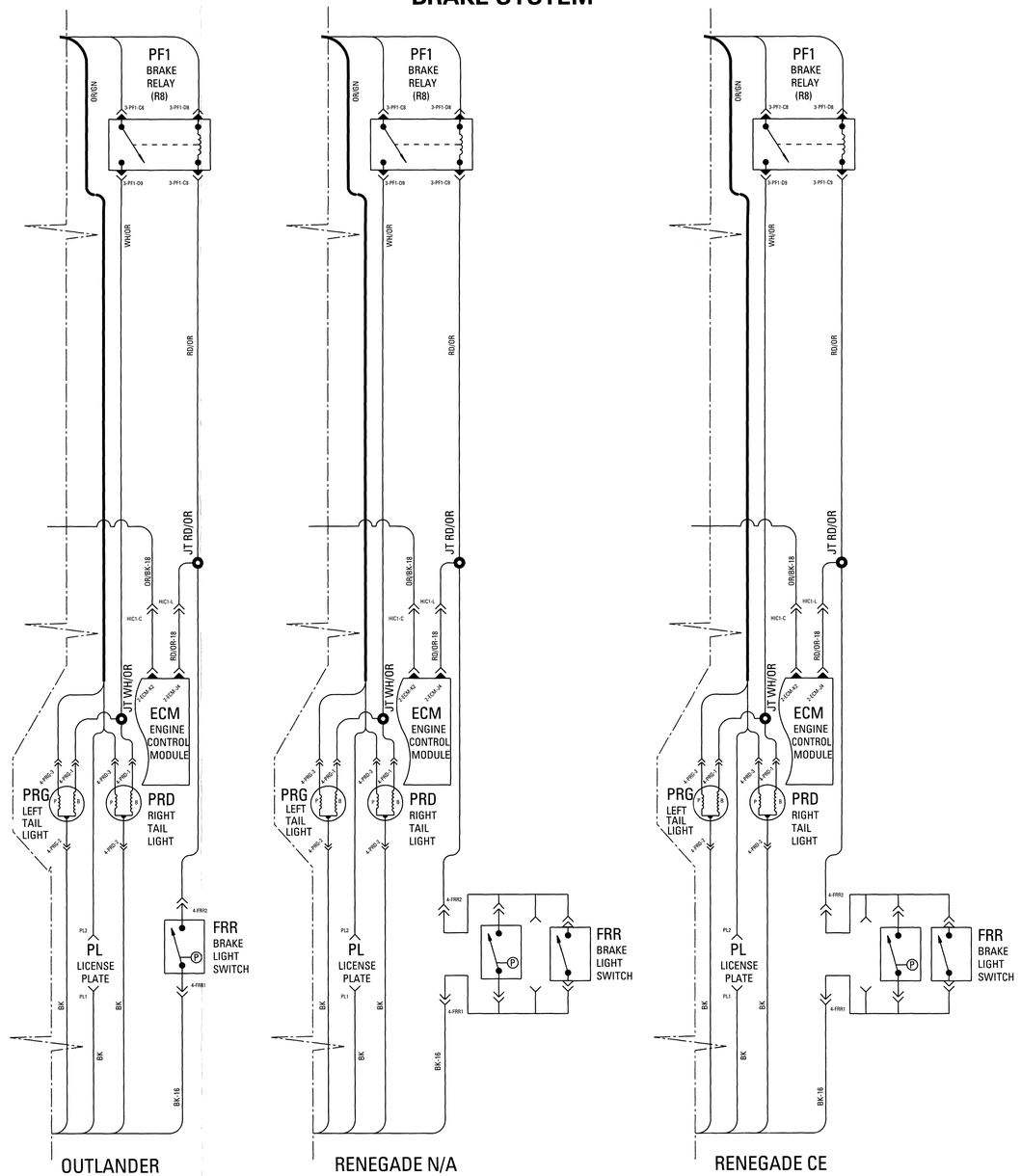

710001569F5

OUTLANDER 2013

ACS SYSTEM (LTD)

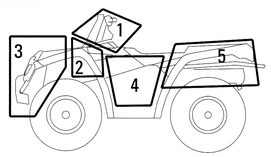

TERMINAL IDENTIFICATION						
	NAME	ZONE-	CONNECTOR NAME-		TERMINAL #/A	
EX:	CI	1	-	CI	-	15
EX:	CV	4	-	CV	-	A
EX:	ME	2	-	ME		

AWG	MAX. CURRENT	MAX. FUSE CURRENT	MAX. WATT
# 6	100 amps	125 amps	1450 watts
# 8	65 amps	80 amps	930 watts
# 10	40 amps	50 amps	580 watts
# 12	25 amps	30 amps	365 watts
# 14	16 amps	20 amps	230 watts
# 16	10 amps	15 amps	145 watts
# 18	6 amps	7.5 amps	85 watts
* AT	50°C MAX		

ZONE #	ZONE DESCRIPTION
1	STEERING AREA
2	MODULE AREA
3	FRONT OF VEHICLE
4	ENGINE AREA
5	REAR OF VEHICLE

●	WELDED JOINT
⊸	SHRINKED JOINT
⊸	CROSSED WIRE
◢	WIRE BUS
—	SIMPLE CONDUCTOR WIRE
⊱	FEMALE TERMINAL
→	MALE TERMINAL
⊸	STEEL LINK (FRAME)
⊣	TERMINAL

⏚	FRAME GROUND
⏚	EGINE GROUND
✪	PHILLIPS SCREW
✪	NUT CONNECTION
✪	SPLICE CONNECTION
◬	COMPONENT CONNECTION
⬠	SECTION OF MODULE
⛔	SLOTTED SCREW
- -	OPTIONAL

COLOR CODE	
BE	BEIGE
BK	BLACK
BU	BLUE
BR	BROWN
GN	GREEN
GY	GREY
OR	ORANGE
RD	RED
VI	VIOLET
WH	WHITE
YL	YELLOW
PK	PINK
LT BU	LIGHT BLUE

MAIN HARNESS SIDE

LTD HARNESS SIDE

SEE MAIN HARNESS

2- DB1- 6

2- DB2- 6

RD/PK

JT RD/GY

JT OR/GN

HIC8

RD/BR

PF2 (1/3) MAIN FUSE (F1) 40 A

PF2 (2/3) ACCES. FUSE (F2) 40 A

PF2 (3/3) DPS / ACS (F3) 40 A

RD/GY-12

RD/GN-12

RD-12

CI SPEEDOMETER & PILOT LAMPS

OR/GN-18

I-CI-17

I-CI-21

I-CI-4

I-CI-19

I-CI-18

I-CI-7

I-CI-20

I-CI-5

FUEL

ENGINE

4WD

HI BEAM

VI/PK-18

BR/PK-18

WH/BE-18

WH/BK

BK/BE-18

BK-18

BU-18

R5

4-R5-30

4-R5-85

4-R5-87

4-R5-86

RD/WH

OR/PK

4- M1- C

AIR COMPRESSOR

4- M1- A

RD/GY

BK

2- DB1- 5

2- DB2- 5

4-PCM-8

LTD CONFIGURATION

RD/BR

BK/GN

4-PCM-9

A

D7

C

4-BV1-2

4-BV1-1

(VENT VALVE)

SS STARTER SOLENOID

5-BP2

5-BP1

5-SS1

5-BP3

5-SS2

OR/BR-18

RD-6

BAT BATTERY 12 VDC 18 AH

5-BAT1

4-SM

SM STARTER MOTOR

5-BAT2

BK-6

RD-12

5-RD1-1

RD RECTIFIER

U V W –

5-RD2-1

5-RD2-2

5-RD2-3

5-RD1-3

YL-12

BK-12

CA-1

CA-2

CA-3

YL-14

CA MAGNETO

5-BN4

5-BN3

5-BN1

4-BN5

OR/GN

2- DB1- 4

JT OR/GN

4-PCM-12

2- DB2- 4

JT WH/BK

CAN LOW

WH/BK

2- DB1- 2

4-PCM-5

PCM PRESSURE CONTROL MODULE

JT WH/BK

2- DB2- 2

JT WH/BE

CAN HI

WH/BE

2- DB1-

4-PCM-6

JT WH/BE

2- DB2- 1

4-PCM-7

4-PCM-10

4-PCM-3

4-PCM-2

PK/OR

PK/BR

4-PS-3

4-PS-2

+

P

U

P

BK

4- PS- 1

SEE MAIN HARNESS

2- DB1- 3

JT BK

2- DB2- 3

JT BK1

JT BK2

JT BK3

JT BK4

vmr2013-049-015

710003188F3

OUTLANDER 2013 (G2)

EUROPE SYSTEM

NOTE: MUST BE USED IN CONJUNCTION WITH NORTH AMERICA WIRING DIAGRAM.

MAIN HARNESS SIDE

CE HARNESS SIDE

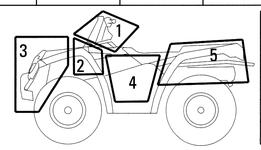

ZONE #	ZONE DESCRIPTION
1	STEERING AREA
2	MODULE AREA
3	FRONT OF VEHICLE
4	ENGINE AREA
5	REAR OF VEHICLE

COLOR CODE	
BE	BEIGE
BK	BLACK
BU	BLUE
BR	BROWN
GN	GREEN
GY	GREY
OR	ORANGE
RD	RED
VI	VIOLET
WH	WHITE
YL	YELLOW
PK	PINK
LT BU	LIGHT BLUE

JT RD/GN

JT RD/GY

JT OR/GN2

JT OR/GN1

PF2 (1/2) MAIN FUSE (F1) 30 A

PF2 (2/2) FAN / ACCES. FUSE (F2) 30 A

PF1 MAIN RELAY (R2) 10 A

PF1 RELAYS SPEEDO FUSE (F4) 7.5 A

PF1 ACCESSORIES RELAY (R3) 30 A

CI SPEEDOMETER & PILOT LAMPS

HI BEAM

FLASHER

POSITION

PF1 CLOCK/ HAZARD FUSE (F10) 5A

D11 DIODE

JT RD/BE

RD-10

SS STARTING SOLENOID

PF1 ACCESSORIES FUSE (F7) 20 A

JT RD/BK

BAT BATTERY 12 VDC 18 AH

F12 ACC FUSE 15 A

RENEGADE ONLY

POSITION LIGHT 10 W

CRD REAR RIGHT FLASHER 10 W

CRG REAR LEFT FLASHER 10 W

HICA HARNESS INTERCONNECT

JT BK1

JT BK2

JT BK3

JT BK

JT BR

JT GY

JT RD/BK

OR/YL

RD-WH

OR

RD/BK

FLASHER

FREE

RH

LH

HASARD SWITCH

FREE

RUN

HORN

FREE

RUN

MC1 FLASHER UNIT

CAD FRONT RIGHT FLASHER 10 W

CAG FRONT LEFT FLASHER 10 W

D10 DIODE

R1

HORN

PPG LEFT POSITION LIGHT 5 W

PPD RIGHT POSITION LIGHT 5 W

OUTLANDER ONLY

vmr2013-049-012

710002481F2

NOTES

NOTES

NOTES

NOTES

INTRODUCTION

This publication governs all warranty labor allowances for 2013 Can-Am ATV OUTLANDER/RENEGADE models.

1. HOW DOES IT WORK

We follow the procedures detailed in the *Can-Am ATV Shop Manual*. The flat rate time is the maximum time allowed for a repair involving any given part. FLAT RATE TIME IS NOT CUMULATIVE. You must use the flat rate time given for the longest lasting operation.

NOTE: The *Flat Rate Time Schedule* was prepared by skilled mechanics using the hand tool usually found in workshops and all the special tools mentioned in the *Shop Manual*.

2. COMPILATION

The *Flat Rate Time Schedule* is compiled as follows:

The actual required time to perform the repair plus (+) 30% correction factor up to 3.0 hours or (+) 15% over 3.0 hours time to take into account, among others:

- Vehicle handling
- Obtaining the parts
- Diagnosis
- Cleaning
- Special compensation (rusted bolts).

3. HOW TO USE IT

Refer to the system you need, locate part of series of parts replaced. List JOB CODE in the appropriate column on claim.

SYSTEM		PAGE
01	ENGINE SYSTEM	5
02	CARBURETOR AND FUEL SYSTEM	19
03	IGNITION SYSTEM	22
04	STARTER SYSTEM	24
05	TRANSMISSION AND LINKAGE SYSTEM	25
06	BRAKE SYSTEM	31

SYSTEM		PAGE
07	STEERING - FRONT DRIVE SYSTEM AND SUSPENSION	33
08	REAR DRIVE SYSTEM AND SUSPENSION	38
09	BODY AND ACCESSORIES	43
10	ELECTRICAL SYSTEM	53

NOTE: Unless otherwise specified, dismantling order is: top to bottom, exterior to interior, front to rear.

All fractions of hours are in tenths:

0.1 = 6 minutes
0.2 = 12 minutes, and so on

LEGEND:

* REQUIRES PRIOR AUTHORIZATION BY DISTRIBUTOR.
** INDICATE LABOUR TIME ON LINE "LABOUR ONLY" OF CLAIM.
*** INDICATE $$$ AMOUNT ON "SUB-CONTRACTED LABOUR" OF CLAIM.

IMPORTANT: Always use the longuest flat rate time applicable to the repair performed.

4. JOB REQUIREMENTS

All the flat rate times mentioned in the following pages include the required operations such as: engine timing (piston clearance/ring end gap measurement, crankshaft to crankcase measurement, cylinder honing, engine leak test.

5. ILLUSTRATIONS

The illustrations contained in this manual do not necessarily show every components of a given system as *Parts Catalog* do. Their purpose is to facilitate recognition of parts related to a flat rate time. Item numbers on illustrations correspond to the four or five digit Job Code.

6. SUGGESTION (FORM REQUEST)

INTRODUCTION

Cette publication détermine le temps de MAIN-D'OEUVRE couvert par la garantie pour les VTT Can-Am 2013 modèle OUTLANDER/RENEGADE.

1. UTILISATION DU MANUEL

En procédant de la façon indiquée dans le *Manuel de réparation Can-Am VTT*, chaque temps donné représente le maximum permis pour une réparation portant sur cette pièce. LES TEMPS NE SONT PAS CUMULATIFS. On doit inscrire le temps donné pour l'opération qui prend le plus de temps.

REMARQUE: Le *Barème de temps à taux fixe* a été préparé par des mécaniciens compétents utilisant les outils que l'on retrouve normalement dans les ateliers de réparation, en plus de tous les outils spéciaux mentionnés dans le *Manuel de réparation*.

2. COMPILATION

Le *Barème de temps à taux fixe* a été établi en compilant le temps nécessaire pour faire la réparation plus (+) un facteur de correction de 30% lorsqu'un travail dure 3.0 heures et moins, ou (+) 15% lorsqu'un travail dure plus de 3.0 heures. Cette compilation comprends, entre autres les étapes suivantes:

- Manutention du véhicule
- Nettoyage
- Aller chercher les pièces, essais physique
- Compensation spéciale (boulons rouillés)
- Diagnostic.

3. UTILISATION DU BARÈME

Se reporter à la section désirée, repérer la pièce ou l'ensemble de pièces remplacées et inscrire le CODE DE TRAVAIL dans la colonne appropriée sur la formule de réclamation.

SYSTÈME		PAGE
01	SYSTÈME MOTEUR	5
02	CARBURATEUR ET SYSTÈME D'ALIMENTATION D'ESSENCE	19
03	SYSTÈME D'ALLUMAGE	22
04	SYSTÈME DE DÉMARREUR	24
05	SYSTÈME DE TRANSMISSION ET DE TRINGLERIE	25

SYSTÈME		PAGE
06	SYSTÈME DE FREIN	31
07	DIRECTION - SYSTÈME D'ENTRAÎNEMENT AVANT ET SUSPENSION	33
08	SYSTÈME D'ENTRAÎNEMENT ARRIÈRE ET SUSPENSION	38
09	CARROSSERIE ET ACCESSOIRES	43
10	SYSTÈME ÉLECTRIQUE	53

REMARQUE: Sauf indication contraire, le démontage doit s'effectuer de haut en bas, de l'extérieur vers l'intérieur, de l'avant vers l'arrière.

Toutes les fractions d'heures sont exprimées en dixièmes:

0.1 = 6 minutes
0.2 = 12 minutes, et ainsi de suite

LÉGENDE:

* AUTORISATION REQUISE AVANT LE REMPLACEMENT.
** INSCRIRE LE TEMPS À LA LIGNE «MAIN-D'OEUVRE SEULEMENT».
*** INSCRIRE LE MONTANT $$$ À LA LIGNE «OUVRAGE SOUS-CONTRACTÉE».

IMPORTANT: Toujours utiliser le temps donné à l'opération qui nécessite le plus de temps.

4. TRAVAUX REQUIS

Tous les temps mentionnés dans les pages suivantes incluent les opérations telles que: réglage du moteur (mesure du jet des pistons/jeu en bout des segments, mesure de l'écart entre le vilebrequin et le carter, rectification du cylindre, vérification de fuite du moteur.

5. ILLUSTRATIONS

Contrairement aux *Catalogues de pièces*, les illustrations de ce manuel ne montrent pas nécessairement chacune des pièces qu'elles représentent, leur raison d'être étant plutôt de faciliter la reconnaissance des pièces reliées à un barème de temps à taux fixe. Les numéros d'items sur les illustrations correspondent aux quatre ou cinq derniers chiffres du code de travail.

6. SUGGESTION (FORMULAIRE)

2013
ATV / VTT

TABLE	DESCRIPTION	MODEL/ MODÈLE	ENGINE TYPE/ TYPE DE MOTEUR	DPS
3	OUTLANDER 500	2TDA/2TDD	500 CVT	N/A
	OUTLANDER DPS 500	2CDA/2CDB/2CDC		DPS
	OUTLANDER XT 500	2UDF/2UDG/2UDH		
	OUTLANDER 650	2NDA	650 CVT	N/A
	OUTLANDER DPS 650	2BDA		DPS
	OUTLANDER XT 650	2PDA/2PDB/2PDC/ 2PDD/2PDE/2PDF		
	OUTLANDER 800	2HDA	800 CVT	N/A
	OUTLANDER DPS 800	2ADA		DPS
	OUTLANDER XT 800	2JDA/2JDB/2JDC/ 2JDD/2JDE/2JDF		
	OUTLANDER XTP 800	5RDA		
	OUTLANDER DPS 1000	5LDA	1000 CVT	DPS
	OUTLANDER XT 1000	5TDA/5TDC/5TDD/ 5TDE/5TDF/5TDG		
	OUTLANDER XTP 1000	5XDA/5XDB/5XDC		
4	OUTLANDER MAX 500	2EDA	500 CVT	N/A
	OUTLANDER MAX DPS 500	2FDA/2FDB/2FDC		DPS
	OUTLANDER MAX XT 500	2GDA/2GDB		
	OUTLANDER MAX 650	2RDA/2RDB	650 CVT	N/A
	OUTLANDER MAX DPS 650	2DDA/2DDB		DPS
	OUTLANDER MAX XT 650	2SDA/2SDB/2SDC/ 2SDD/2SDE/2SDF/2SDG		
	OUTLANDER MAX DPS 800	2KDB/2KDC/2KDD	800 CVT	DPS
	OUTLANDER MAX XT 800	2LDB/2LDC/ 2LDD/2LDE		
	OUTLANDER MAX XTP 800	5FDB/5FDC/5FDD		
	OUTLANDER MAX DPS 1000	5MDB	1000 CVT	DPS
	OUTLANDER MAX XT 1000	5UDB/5UDD/5UDE		
	OUTLANDER MAX LTD 1000	5WDB/5WDC/ 5WDD/5WDE		
	OUTLANDER MAX XTP 1000	5JDA/5JDB/5JDC		

TABLE	DESCRIPTION	MODEL/ MODÈLE	ENGINE TYPE/ TYPE DE MOTEUR	DPS
5	OUTLANDER XMR 650	5EDA/5EDB	650 CVT	DPS
	OUTLANDER XMR 1000	5KDE/5KDF/ 5KDG/5KDH	1000 CVT	
6	RENEGADE 500	4EDA/4EDF/4EDG	500 CVT	N/A
	RENEGADE 800	4BDA/4BDB/4BDC	800 CVT	N/A
	RENEGADE XXc 800	4DDA		DPS
	RENEGADE 1000	4GDA	1000 CVT	N/A
	RENEGADE XXc 1000	5VDA/5VDB/5VDC		DPS

SYSTEM SYSTÈME	CODE	DESCRIPTION	OUTLANDER 3	OUTLANDER MAX 4	OUTLANDER X MR 5	RENEGADE 6
01	**00**	**NO LABOR INVOLVED AUCUNE MAIN D'OEUVRE**	**0**	**0**	**0**	**0**
01 *	01	REMOVE AND REPLACE ENGINE (ASS'Y) REMPLACEMENT DU MOTEUR (COMPLET)	4.7	4.7	5.0	4.4
01	03	OIL PRESSURE SWITCH INTERRUPTEUR DE PRESSION D'HUILE	0.3	0.3	0.3	0.3
01	04	HEAT SHIELD AND/OR RUBBER MOUNT DÉFLECTEUR DE CHALEUR ET/OU BUTÉE DE CAOUTCHOUC	0.4	0.4	0.4	0.4
01	08	FAN AND/OR FAN SUPPORT VENTILATEUR ET/OU SUPPORT DE VENTILATEUR	1.3	1.3	0.6	1.1
01	18	SENDER TEMPERATURE (ENGINE) CAPTEUR DE TEMPÉRATURE (MOTEUR)	0.9	0.9	0.9	0.9
01	19	THERMOSTAT THERMOSTAT	0.5	0.5	0.5	0.5
01	37	RADIATOR INLET HOSE BOYAU D'ENTRÉ DU RADIATEUR	0.5	0.5	0.5	0.5
01	38	WATER PUMP SHAFT (ALL PARTS) ARBRE DE POMPE À L'EAU (TOUTES LES PIÈCES)	5.5	5.5	5.5	5.2
01	45	ENGINE RUBBER MOUNT TAMPONS D'ANCRAGE DU MOTEUR	4.0	4.0	4.0	3.8
01	46	RADIATOR AND/OR GROMMMET RADIATEUR ET/OU PASSE-FILS	1.6	1.6	1.0	1.4
01	50	CRANKSHAFT AND/OR BEARINGS (FRONT/REAR) VILEBREQUIN ET/OU ROULEMENTS (AVANT/ARRIÈRE)	7.0	7.0	7.3	6.7
01	56	CRANKCASE COVER GASKET JOINT DE COUVERCLE DE CARTER	1.3	1.3	1.3	1.3
01	57	PTO CRANKCASE COVER COUVERCLE DE CARTER PDM	1.3	1.3	1.3	1.3
01	58	INTAKE OR EXHAUST VALVE GUIDE (1) GUIDE DE SOUPAPE D'ADMISSION OU D'ÉCHAPPEMENT (1)	2.8	2.8	2.8	2.8
01	59	INTAKE OR EXHAUST VALVE GUIDES (2) GUIDES DE SOUPAPE D'ADMISSION OU D'ÉCHAPPEMENT (2)	2.9	2.9	2.9	2.9
01	70	MUFFLER AND/OR EXHAUST GASKET AND/OR CLAMP SILENCIEUX D'ÉCHAPPEMENT ET/OU JOINT D'ÉCHAPPEMENT ET/OU BRIDE DE SERRAGE	0.3	0.3	0.3	0.3
01	73	EXHAUST MANIFOLD (REAR) CONNECTEUR D'ÉCHAPPEMENT (ARRIÈRE)	0.5	0.5	0.5	0.5
01	77	ANTI-VIBRATION RUBBER MOUNT (1 OR 2) (TOP) TAMPON D'ANCRAGE ANTI-VIBRATION (1 OU 2) (HAUT)	1.0	1.0	1.0	1.0
01	79	COOLANT HOSE (ENGINE TO TANK) BOYAU DU SYSTÈME DE REFROIDISSEMENT (RÉSERVOIR AU MOTEUR)	0.4	0.4	0.4	0.4

ENGINE SYSTEM
SYSTÈME MOTEUR

SYSTEM SYSTÈME	CODE	DESCRIPTION	OUTLANDER	OUTLANDER MAX	OUTLANDER X MR	RENEGADE
			3	4	5	6
01	83	EXHAUST MANIFOLD (FRONT) CONNECTEUR D'ÉCHAPPEMENT (AVANT)	0.5	0.5	0.5	0.5
01	84	TUNE PIPE HEAT SHIELD (1) DÉFLECTEUR DE CHALEUR TUYAU D'ÉCHAPPEMENT (1)	0.3	0.3	0.3	0.3
01	85	TUNE PIPE HEAT SHIELD (2) DÉFLECTEUR DE CHALEUR TUYAU D'ÉCHAPPEMENT (2)	0.4	0.4	0.4	0.4
01	86	TUNE PIPE HEAT SHIELD (3) DÉFLECTEUR DE CHALEUR TUYAU D'ÉCHAPPEMENT (3)	0.4	0.4	0.4	0.4
01	88	RUBBER MOUNT (MUFFLER) TAMPON D'ANCRAGE (SILENCIEUX)	0.3	0.3	0.3	0.3
01	90	ENGINE OIL FILTER FILTRE À HUILE DU MOTEUR	0.3	0.3	0.3	0.3
01	96	OIL SIEVE AND/OR O-RING AND/OR COLLECTOR AND/OR RUBBER RING AND/OR COVER CRIBLE D'HUILE ET/OU JOINT TORIQUE ET/OU COLLECTEUR ET/OU ANNEAU DE CAOUTCHOUC ET/OU COUVERCLE	6.7	6.7	7.0	6.4
01	98	COOLING RESERVOIR RÉSERVOIR D'ANTIGEL	1.0	1.0	1.0	1.0
01	100	RADIATOR OUTLET HOSE BOYAU DE SORTIE DU RADIATEUR	0.4	0.4	0.4	0.4
01	101	PISTON, PIN, CIRCLIP, RINGS (1) PISTON, GOUPILLE, CIRCLIP, SEGMENTS (1)	3.0	3.0	3.0	3.0
01	102	PISTONS, PINS, CIRCLIPS, RINGS (2) PISTONS, GOUPILLES, CIRCLIPS, SEGMENTS (2)	4.7	4.7	4.7	4.7
01	109	VALVE COVER AND/OR GASKET COUVERCLE DE SOUPAPE ET/OU JOINT D'ÉTANCHÉITÉ	0.5	0.5	0.5	0.5
01	111	TIMING GEAR PIGNON DE DISTRIBUTION	1.2	1.2	1.2	1.2
01	113	ROCKER ARM AND/OR PUSH ROD AND/OR ROCKER ARM SHAFT CULBUTEUR ET/OU TIGE POUSSOIR ET/OU ARBRE DE CULBUTEUR	1.3	1.3	1.3	1.3
01	114	CYLINDER HEAD CULASSE	3.5	3.5	3.5	3.5
01	116	EXHAUST AND/OR INLET VALVE AND/OR SPRING AND/OR SEAL VALVE ADMISSION ET/OU ÉCHAPPEMENT ET/OU RESSORT ET/OU ANNEAU D'ÉTANCHÉITÉ	2.7	2.7	2.7	2.7
01	117	CYLINDER AND/OR GASKET CYLINDRE ET/OU JOINT D'ÉTANCHÉITÉ	2.8	2.8	2.8	2.8
01	119	WATER PUMP HOUSING AND/OR IMPELLER CARTER DE LA POMPE À EAU ET/OU ROUE À AILETTES	0.4	0.4	0.4	0.4
01	132	OIL PUMP GEAR ENGRENAGE DE LA POMPE À HUILE	1.5	1.5	1.5	1.5
01	134	CAMSHAFT ARBRE À CAME	2.3	2.3	2.3	2.3

SYSTEM SYSTÈME	CODE	DESCRIPTION	OUTLANDER 3	OUTLANDER MAX 4	OUTLANDER X MR 5	RENEGADE 6
01	137	OIL PUMP COVER AND/OR SHAFT AND/OR ROTOR COUVERCLE DE LA POMPE À HUILE ET/OU ARBRE ET/OU ROTOR	1.5	1.5	1.5	1.5
01	138	CRANKCASE RESEAL OR GASKET RECELLEMENT DU CARTER ET/OU JOINT D'ÉTANCHÉITÉ	6.9	6.9	7.2	6.6
01	139	CRANKCASE REPLACEMENT REMPLACEMENT DU CARTER	7.2	7.2	7.5	6.9
01	152	DRIVE SHAFT AND/OR BEARINGS AND/OR SEALS ARBRE D'ENTRAÎNEMENT ET/OU ROULEMENT À BILLES ET/OU ANNEAUX D'ÉTANCHÉITÉ	6.9	6.9	7.2	6.6
01	154	TIMING CHAIN CHAÎNE D'ENGRENAGE	3.1	3.1	3.1	3.1
01	179	CHAIN GUIDE GUIDE DE CHAÎNE	1.0	1.0	1.0	1.0
01	191	CHAIN TENSION GUIDE GUIDE DE TENSION DE CHAÎNE	3.1	3.1	3.1	3.1
01	192	CHAIN TENSIONER (ASS'Y) TENDEUR DE CHAÎNE (COMPLET)	0.3	0.3	0.3	0.3
01	196	HEAT SHIELD (RH OR LH) DÉFLECTEUR DE CHALEUR (DR OU GA)		0.5	0.5	
01	200	WATER PUMP GEAR ENGRENAGE DE LA POMPE À EAU	1.6	1.6	1.6	1.6
01	205	REAR OUTPUT SHAFT SEAL ANNEAU D'ÉTANCHÉITÉ DE L'ARBRE DE SORTIE ARRIÈRE	5.2	5.2	5.5	4.9
01	215	OIL DIPSTICK JAUGE À HUILE	0.3	0.3	0.3	0.3
01	216	PRESSURE CAP BOUCHON À PRESSION	0.3	0.3	0.3	0.3
01	217	ENGINE BRACKET AND/OR RUBBER MOUNT ATTACHE MOTEUR ET/OU TAMPON D'ANCRAGE	0.3	0.3	0.3	0.3
01	220	MAIN DRIVE GEAR AND/OR PIN ROUAGE D'ENTRAÎNEMENT PRINCIPALE ET/OU GOUPILLE	1.6	1.6	1.6	1.6
01	221	INTERMEDIATE GEAR AND/OR PIN AND/OR THRUST WASHER ROUAGE INTERMEDIAIRE ET/OU GOUPILLE ET/OU RONDELLE D'APPUI	1.6	1.6	1.6	1.6
01	223	FRONT OUTPUT SHAFT SEAL ANNEAU ÉTANCHÉITÉ ARBRE SORTIE AVANT	2.7	2.7	2.7	2.7
01	245	OUTPUT CRANKSHAFT SEAL (PTO SIDE) ANNEAU ÉTANCHÉITÉ SORTIE VILBREQUIN (CÔTÉ PDM)	0.6	0.6	0.6	0.6
01	246	WATER PUMP GEAR AND/OR SEAL ARBRE POMPE À EAU ET/OU JOINT ÉTANCHÉITÉ	5.5	5.5	5.8	5.2
01	247	REED VALVE AND/OR STOPPER SOUPAPE À CLAPET ET/OU BUTOIR	1.6	1.6	1.6	1.6
01	248	BREATHER GEAR AND/OR V-RING RENIFLARD ET/OU ANNEAU ÉTANCHÉITÉ EN «V»	1.6	1.6	1.6	1.6

ENGINE SYSTEM
SYSTÈME MOTEUR

SYSTEM SYSTÈME	CODE	DESCRIPTION	OUTLANDER	OUTLANDER MAX	OUTLANDER X MR	RENEGADE
			3	4	5	6
01	249	CAMSHAFT POSITION SENSOR CAPTEUR DE POSITION DE L'ARBRE À CAME	0.3	0.3	0.3	0.3
01	250	CRANKSHAFT POSITION SENSOR (CPS) CAPTEUR DE POSITION DU VILEBREQUIN (CPV)	0.3	0.3	0.3	0.3
01	255	EXHAUST AND/OR INLET VALVES AND/OR SPRINGS AND/OR SEALS (4) ÉCHAPPEMENT ET/OU VALVES ADMISSION ET/OU RESSORTS ET/OU ANNEAUX D'ÉTANCHÉITÉ (4)	3.3	3.3	3.3	3.3
01	256	EXHAUST AND/OR INLET VALVES AND/OR SPRINGS AND/OR SEALS (8) ÉCHAPPEMENT ET/OU VALVES ADMISSION ET/OU RESSORTS ET/OU ANNEAUX D'ÉTANCHÉITÉ (8)	6.4	6.4	6.1	6.1
01	261	TIMING CHAIN (MAG SIDE) CHAÎNE D'ENGRENAGE (CÔTÉ MAG)	2.8	2.8	2.8	2.8
01	264	LONG BLOCK ENSEMBLE CARTER - CYLINDRE - CULASSE	6.7	6.7	7.0	6.4
01	301	WATER PUMP DYNAMIC SEAL AND/OR OIL SEAL ANNEAU D'ÉTANCHÉITÉ DYNAMIQUE DE LA POMPE À EAU	2.1	2.1	2.1	2.1
01	303	TIMING CHAINS (ALL) CHAÎNES D'ENGRENAGE (TOUTES)	5.3	5.3	5.3	5.3
01	304	CHAINS TENSION GUIDE (ALL) GUIDE DE TENSION DE CHAÎNES (TOUS)	5.3	5.3	5.3	5.3
01	305	CHAINS GUIDE (ALL) GUIDE DE CHAÎNES (TOUS)	1.8	1.8	1.8	1.8
01	307	VALVE COVERS AND/OR GASKETS (2) COUVERCLES SOUPAPE ET/OU JOINTS D'ÉTANCHÉITÉ (2)	0.6	0.6	0.6	0.6
01	308	CYLINDER HEAD GASKET (1) JOINT D'ÉTANCHÉITÉ DE LA CULASSE (1)	1.4	1.4	1.4	1.4
01	309	CYLINDER HEAD GASKETS (2) JOINTS D'ÉTANCHÉITÉ DE LA CULASSE (2)	2.3	2.3	2.3	2.3
01	316	MUFFLER END CAP EMBOUT DE SILENCIEUX	0.3	0.3	0.3	0.3
01	318	RADIATOR SUPPORT SUPPORT DE RADIATEUR			0.4	
01	324	FAN SUPPORT SUPPORT DU VENTILATEUR			0.5	
01	333	RADIATOR COVER COUVERCLE DE RADIATEUR			0.3	
01	334	FILLER NECK AND/OR HOSE GOULOT REMPLISSAGE ET/OU BOYAU			1.1	
01	336	COOLANT HOSE (ENGINE INLET) BOYAU DE REFROIDISSEMENT (ENTRÉE DU MOTEUR)	0.4	0.4	0.4	0.4
01	340	PLUG SCREW BOUCHON FILETÉ	0.5	0.5	0.5	0.5

V800/1000

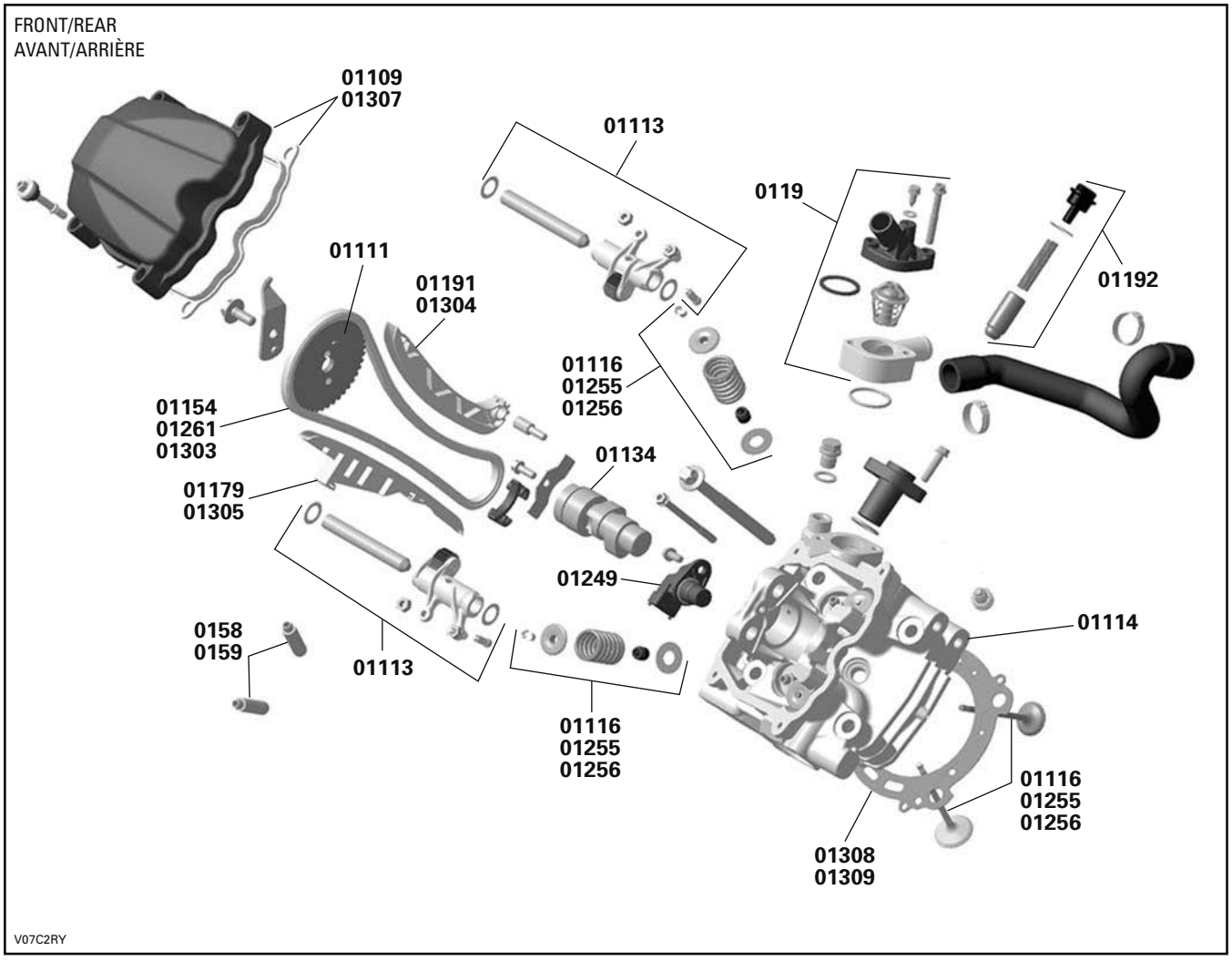
FRONT/REAR
AVANT/ARRIÈRE
01109
01307
01113
0119
01192
01111
01191
01304
01116
01255
01256
01154
01261
01303
01134
01179
01305
01249
01114
0158
0159
01113
01116
01255
01256
01116
01255
01256
01308
01309
V07C2RY

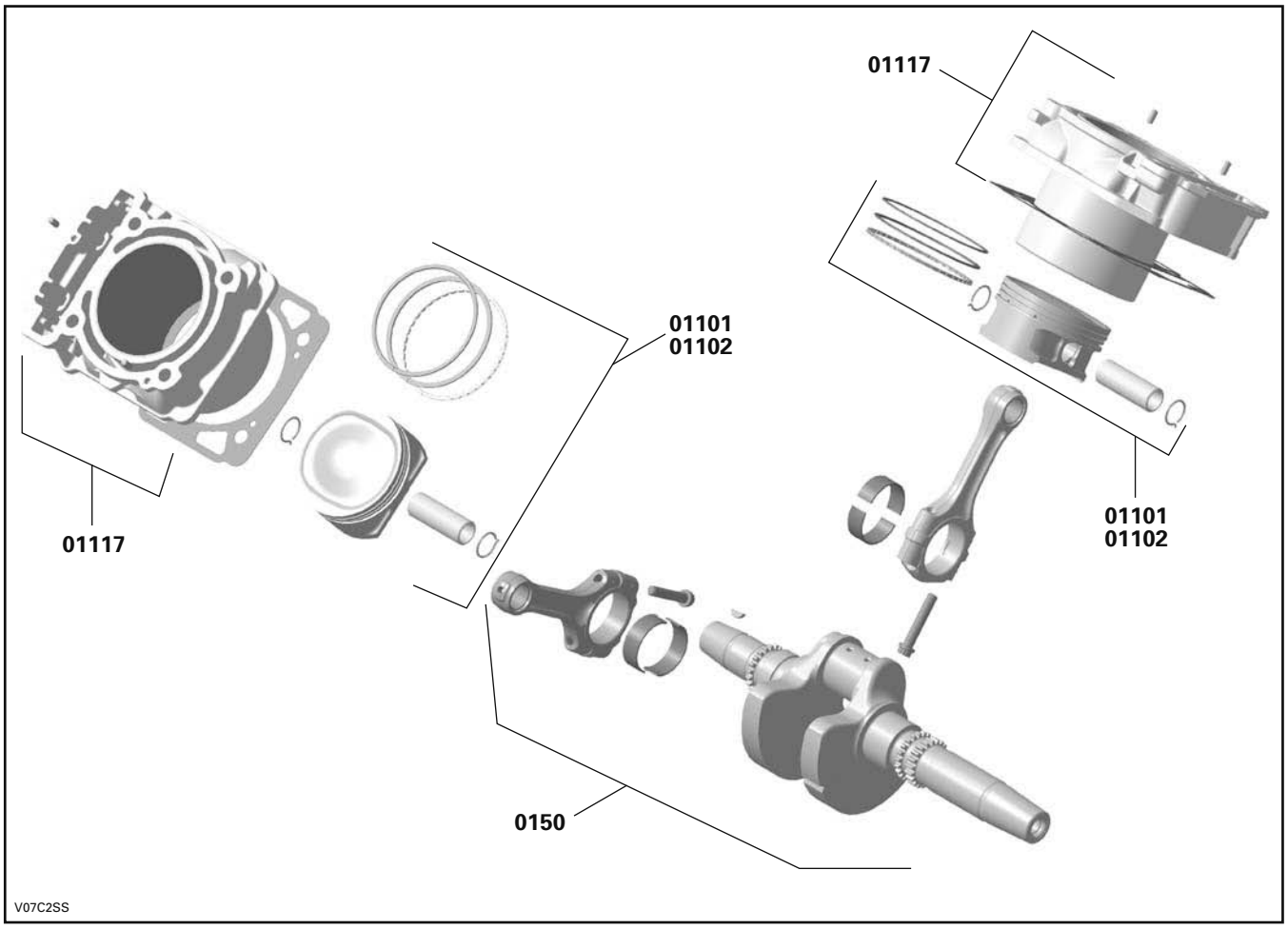
01117
01101
01102
01117
01101
01102
0150
V07C2SS

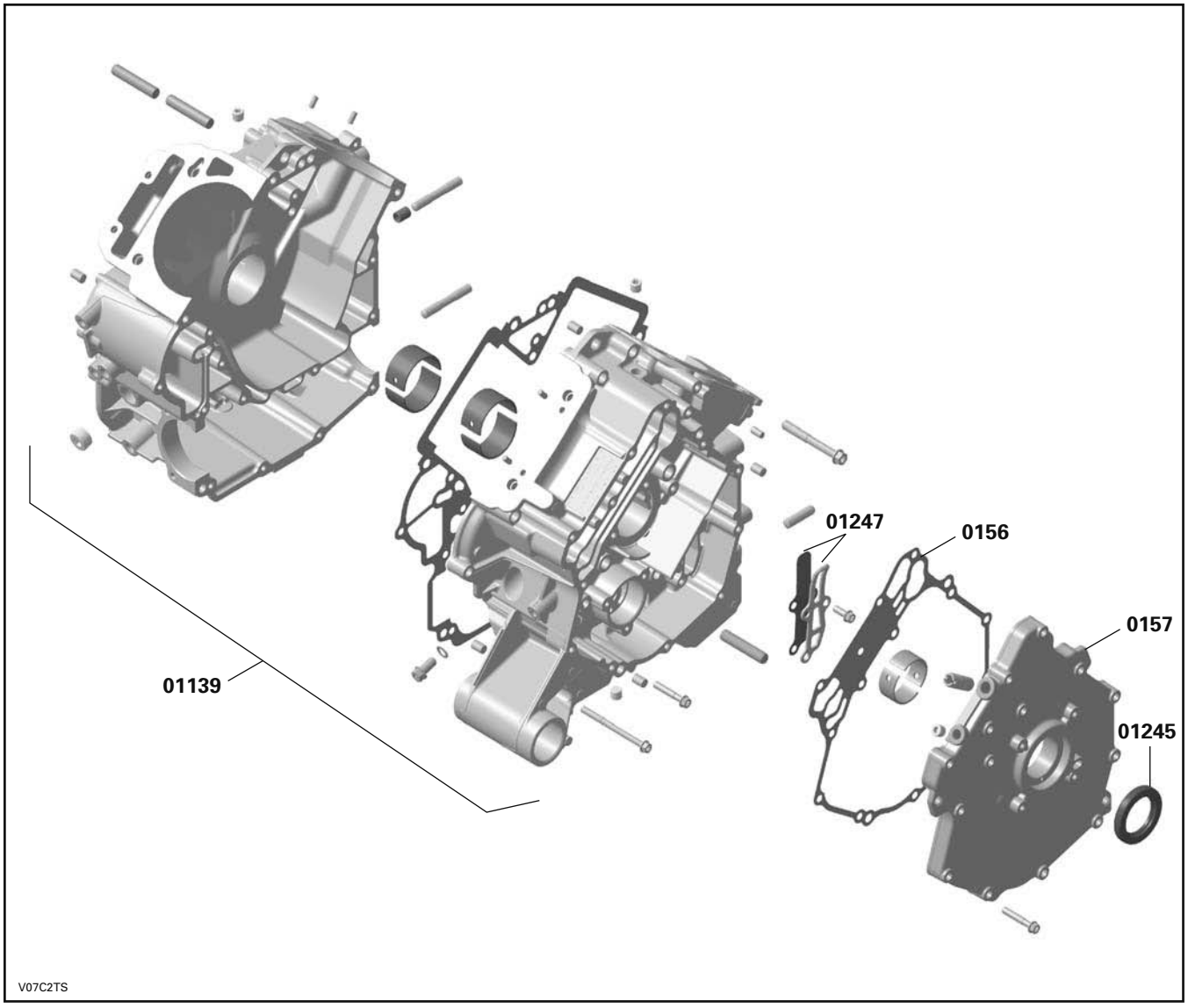
01247
0156
0157
01245
01139
V07C2TS

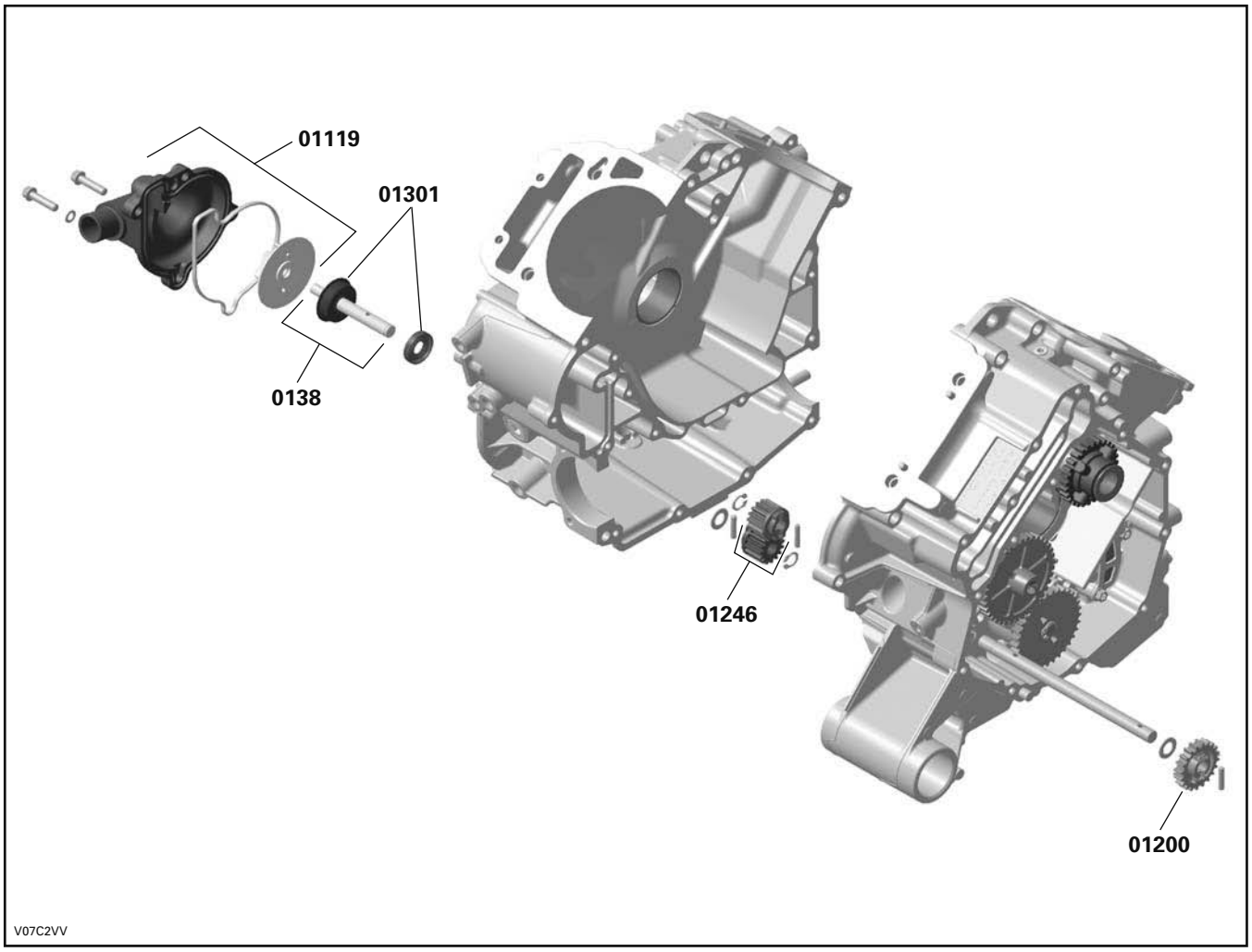
01119
01301
0138
01246
01200
V07C2VV

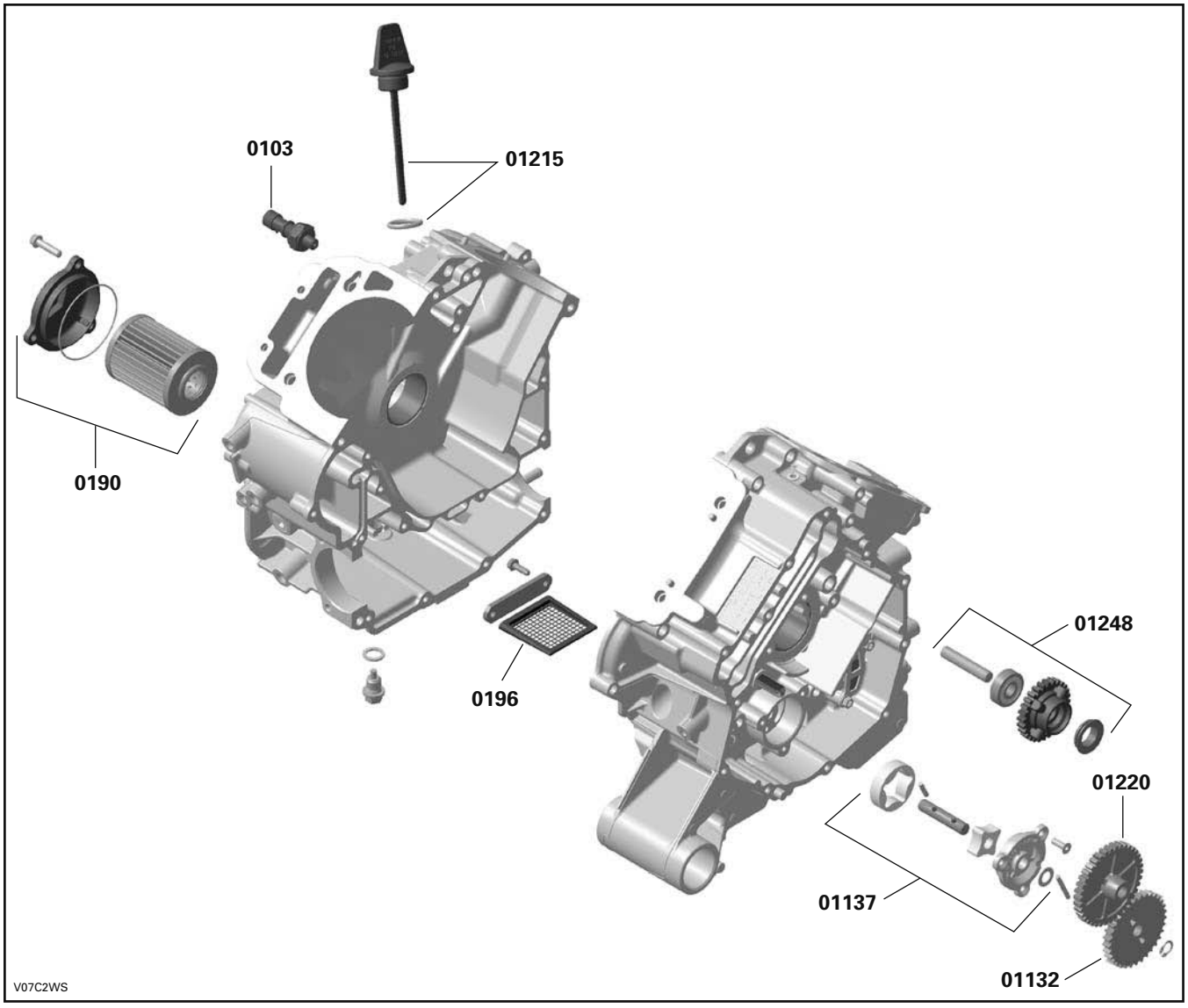
0103
01215
0190
0196
01248
01220
01137
01132
V07C2WS

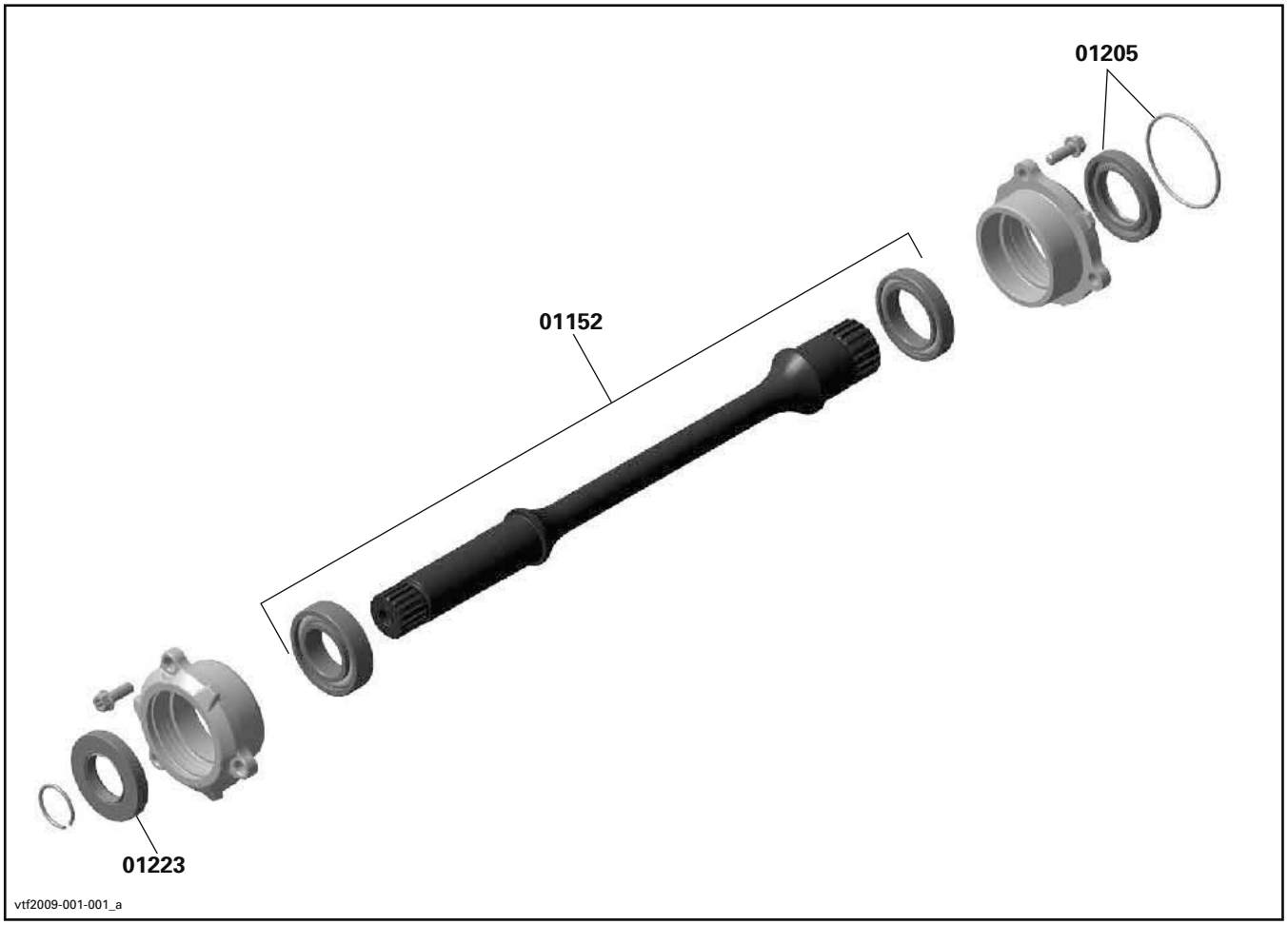
01205
01152
01223
vtf2009-001-001_a

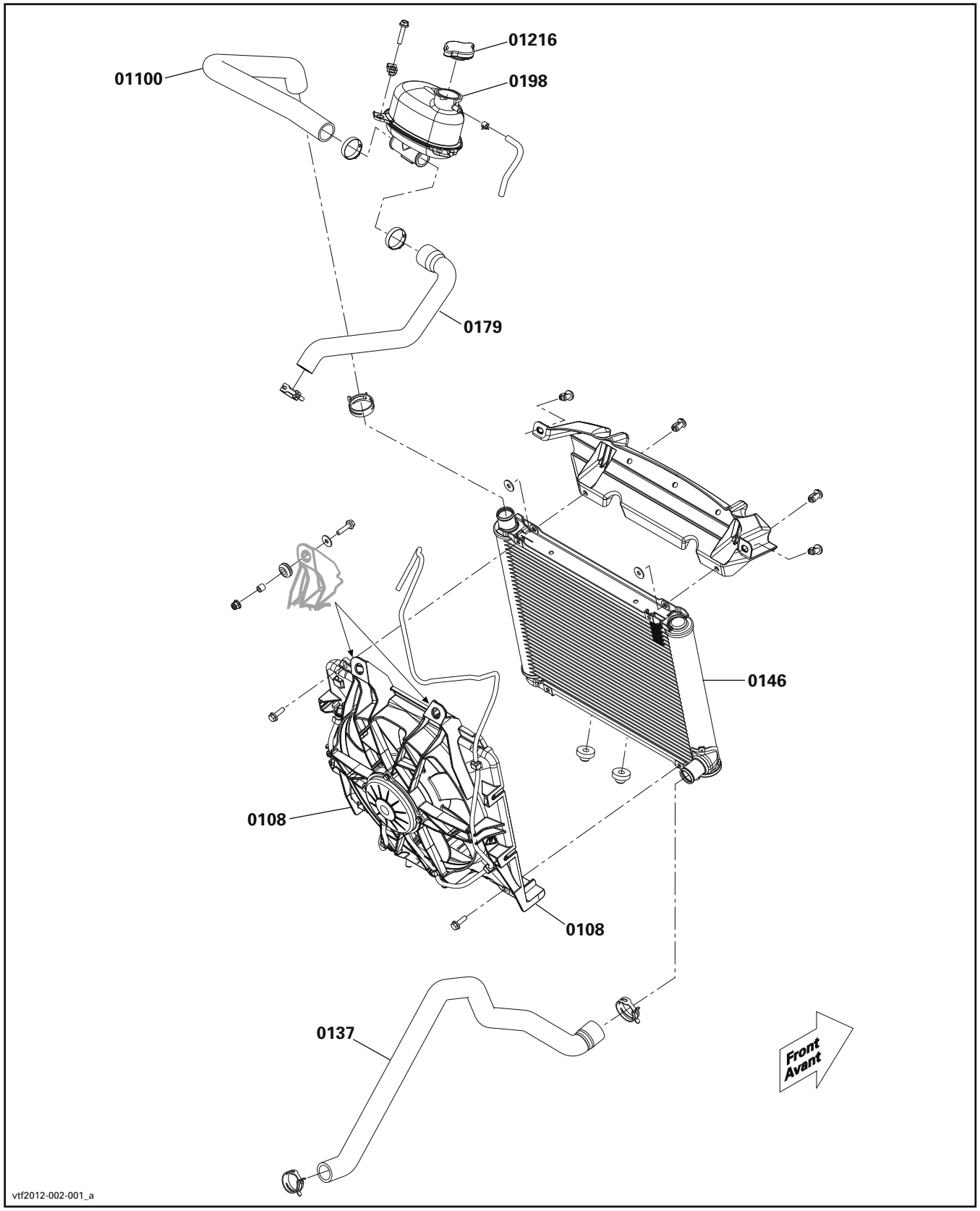
01216
01100
0198
0179
0146
0108
0108
0137
Front
Avant
vtf2012-002-001_a

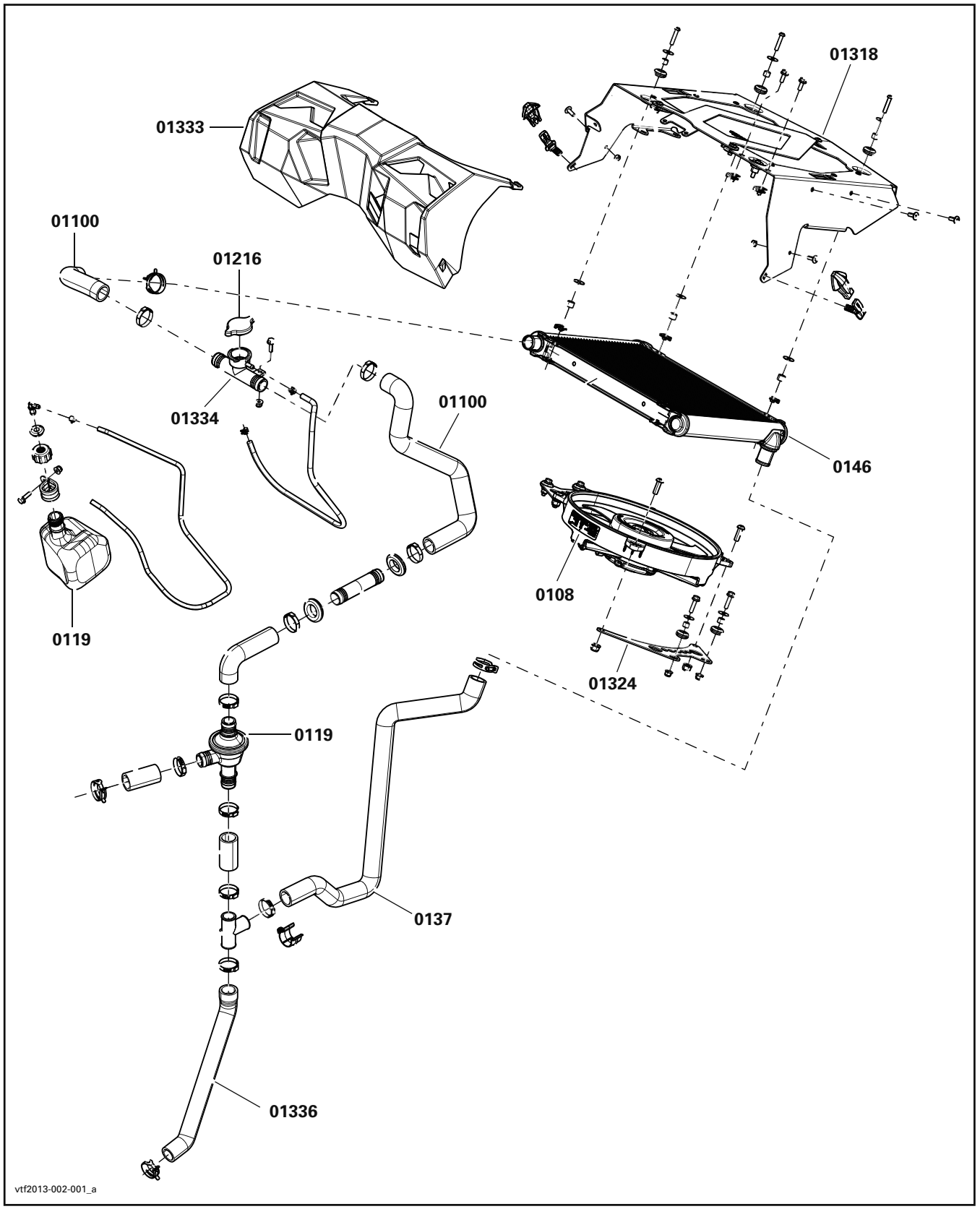
01318
01333
01100
01216
01334
01100
0146
0108
0119
01324
0119
0137
01336
vtf2013-002-001_a

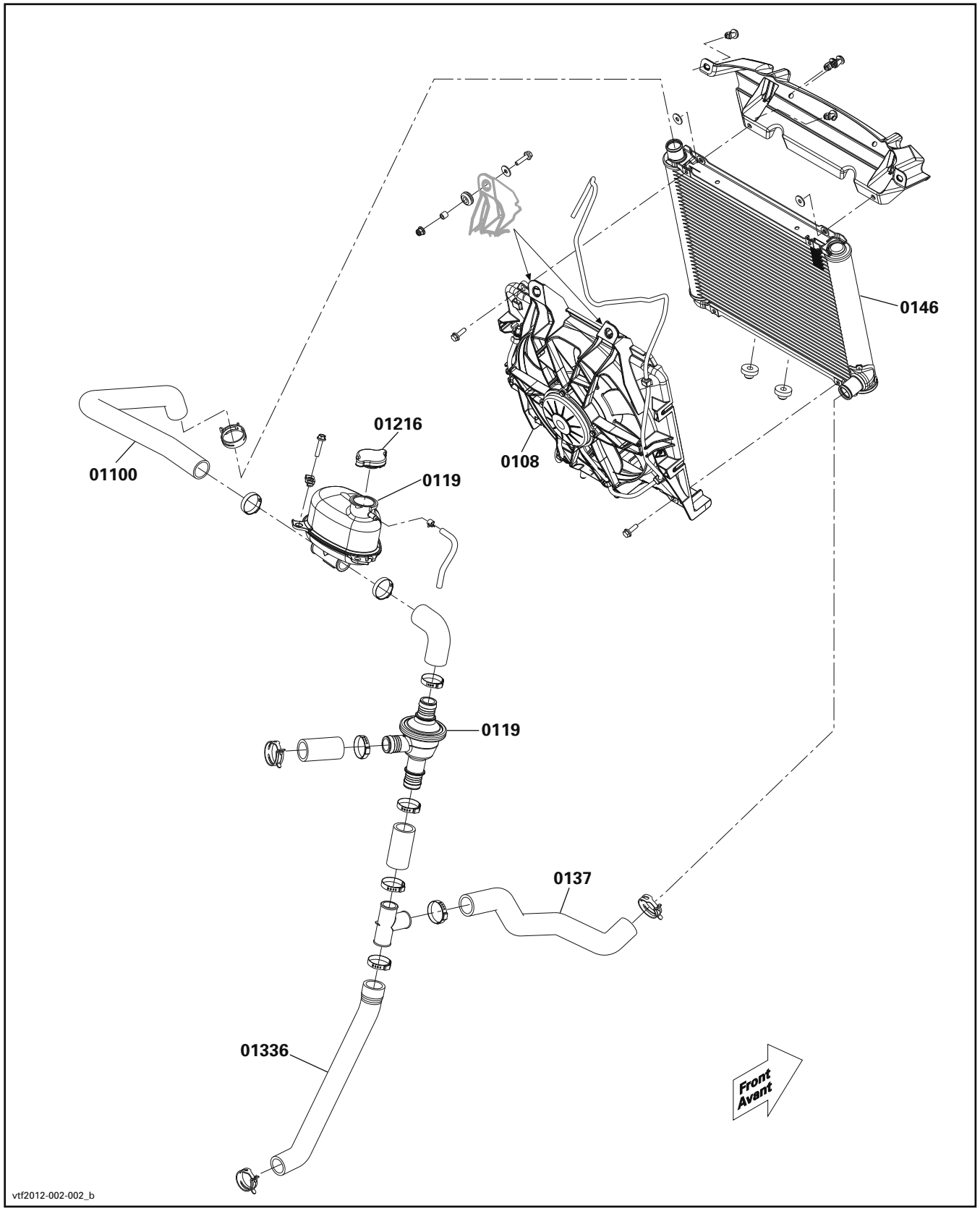
0146
01216
01100
0119
0108
0119
0137
01336
Front
Avant
vtf2012-002-002_b

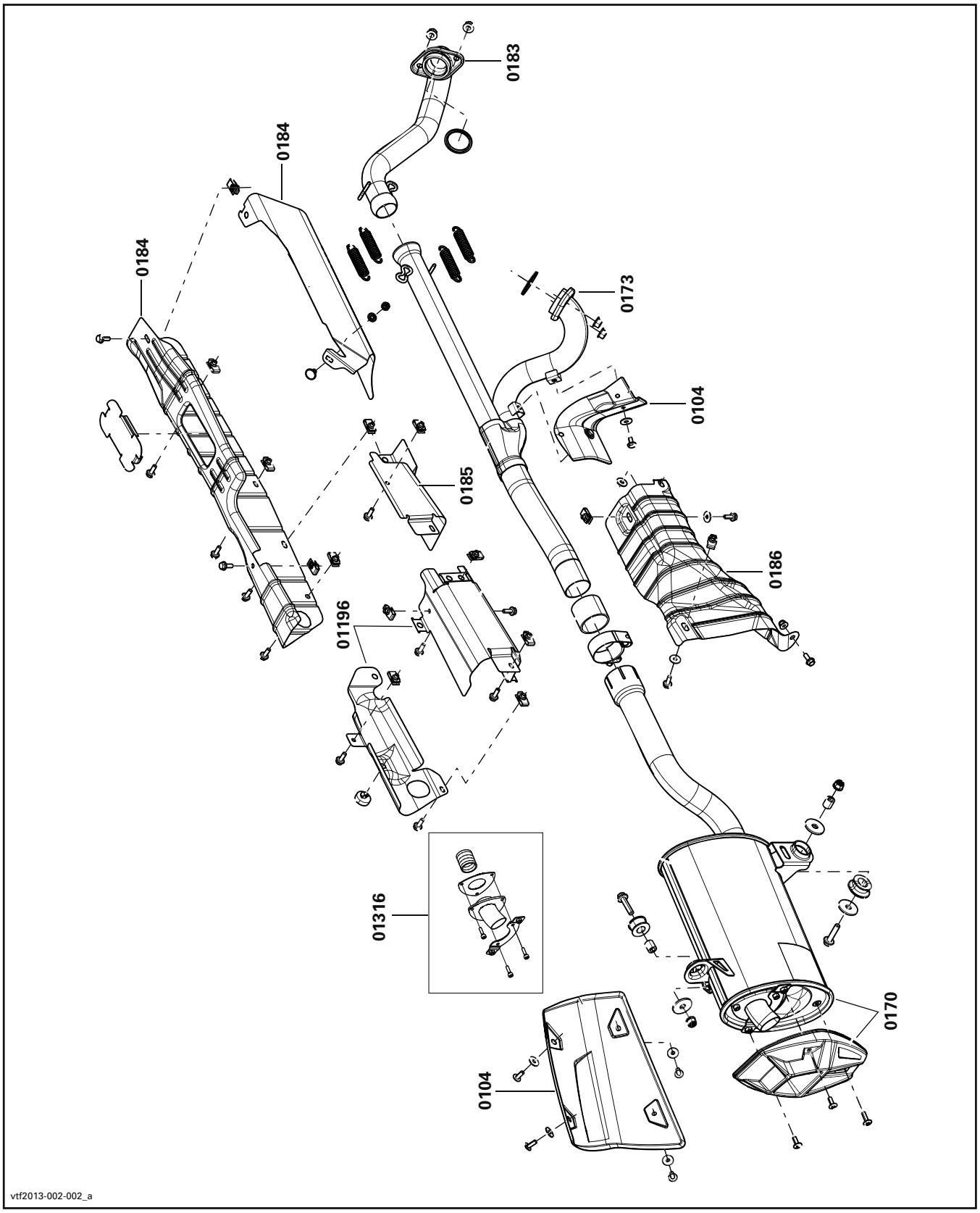
0183
0184
0184
0173
0104
0185
0186
01196
01316
0170
0104
vtf2013-002-002_a

SYSTEM SYSTÈME	CODE	DESCRIPTION	OUTLANDER	OUTLANDER MAX	OUTLANDER X MR	RENEGADE
			3	4	5	6
02	**00**	**NO LABOR INVOLVED AUCUNE MAIN D'OEUVRE**	**0**	**0**	**0**	**0**
02	01	AIR INTAKE SILENCER (ASS'Y) SILENCIEUX D'ADMISSION D'AIR (COMPLET)	1.8	1.8	1.8	1.5
02	06	THROTTLE CABLE CÂBLE D'ACCÉLÉRATEUR	0.6	0.6	0.6	0.6
02	16	INTAKE ADAPTOR ADAPTATEUR D'ADMISSION	1.0	1.0	1.0	1.0
02	19	AIR INTAKE TUBE TUYAU D'ADMISSION D'AIR	1.0	1.0	1.3	1.0
02	23	REAR AIR INTAKE TUBE AND/OR SLEEVE TUYAU D'ADMISSION D'AIR ARRIÈRE ET/OU DOUILLE	1.8	1.8	2.2	1.5
02	46	AIR TEMPERATURE SENSOR CAPTEUR DE TEMPÉRATURE D'AIR	0.3	0.3	0.3	0.3
02	57	FUEL FILTER FILTRE À ESSENCE	1.0	1.0	1.0	1.0
02	58	FUEL TANK RÉSERVOIR D'ESSENCE	1.6	1.6	1.6	1.6
02	59	INTAKE COVER AND/OR SEAL COUVERCLE D'ADMISSION ET/OU JOINT D'ÉTANCHÉITÉ	0.3	0.3	0.3	0.3
02	60	FUEL CAP BOUCHON DU RÉSERVOIR À ESSENCE	0.3	0.3	0.3	0.3
02	69	AIR FILTER FILTRE À AIR	0.3	0.3	0.3	0.3
02	72	INTAKE MANIFOLD CONNECTEUR D'ADMISSION	1.9	1.9	1.9	1.6
02	79	FUEL RAIL (1 OR 2) RAMPE D'ESSENCE (1 OU 2)	1.9	1.9	1.9	1.6
02	80	INJECTOR (ALL) INJECTEUR (TOUS)	1.9	1.9	1.9	1.6
02	81	THROTTLE BODY (ASS'Y) CARTER ACCÉLÉRATEUR (COMPLET)	1.7	1.7	2.0	1.4
02	82	THROTTLE SENSOR CAPTEUR POSITION D'ACCÉLÉRATEUR	1.5	1.5	1.5	1.2
02	84	IDLE BY-PASS VALVE VALVE DU RALENTI	1.5	1.5	1.5	1.2
02	89	FUEL PUMP MODULE MODULE POMPE À ESSENCE	1.0	1.0	1.0	1.0
02	94	FEMALE QUICK FITTING CONNECTEUR RAPIDE FEMELLE	0.4	0.4	0.4	0.4
02	99	FUEL INJECTION HOSE (ASS'Y) BOYAU À INJECTION D'ESSENCE (COMPLET)	0.4	0.4	0.4	0.4

CARBURETOR AND FUEL SYSTEM
CARBURATEUR ET SYSTÈME D'ALIMENTATION D'ESSENCE

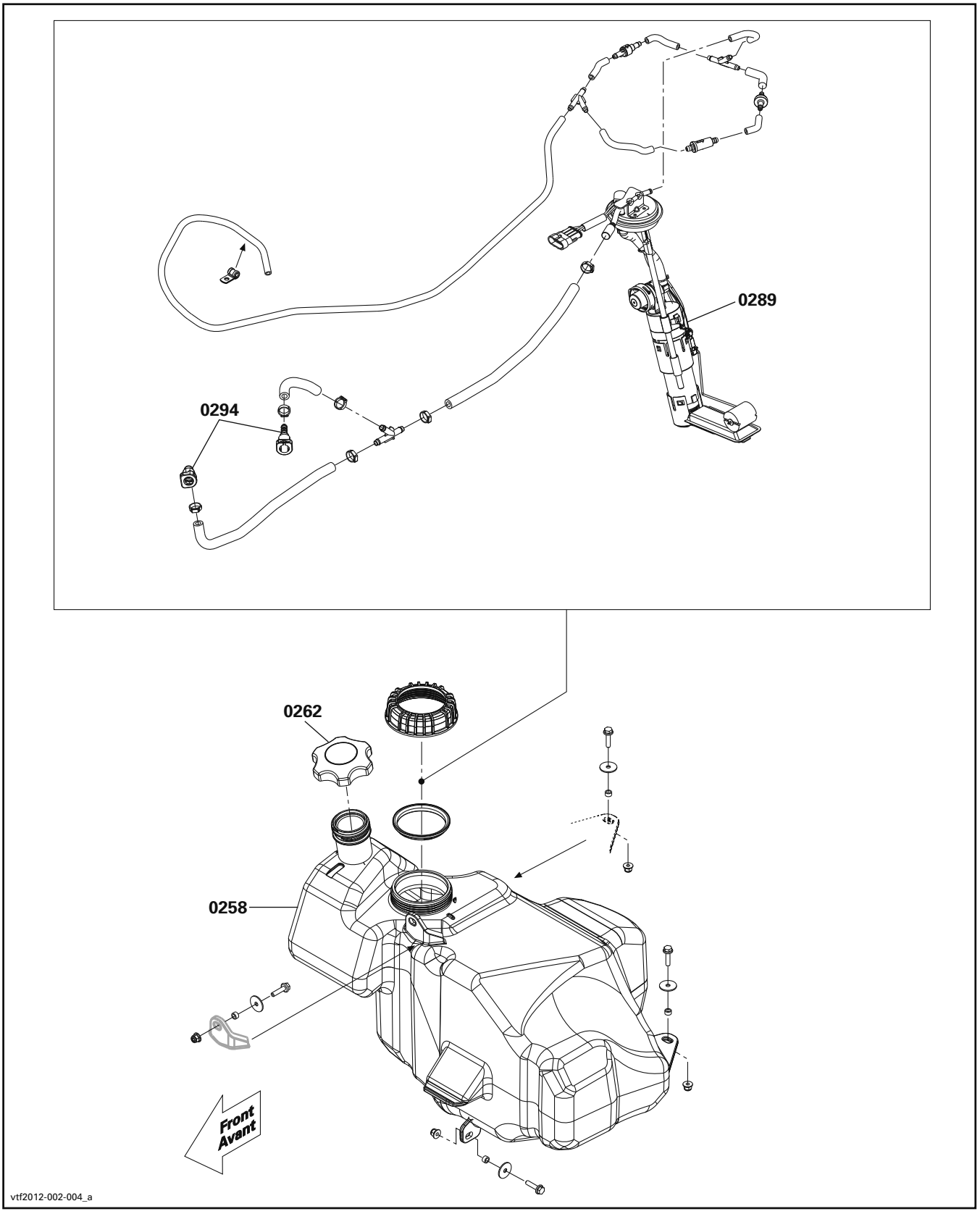

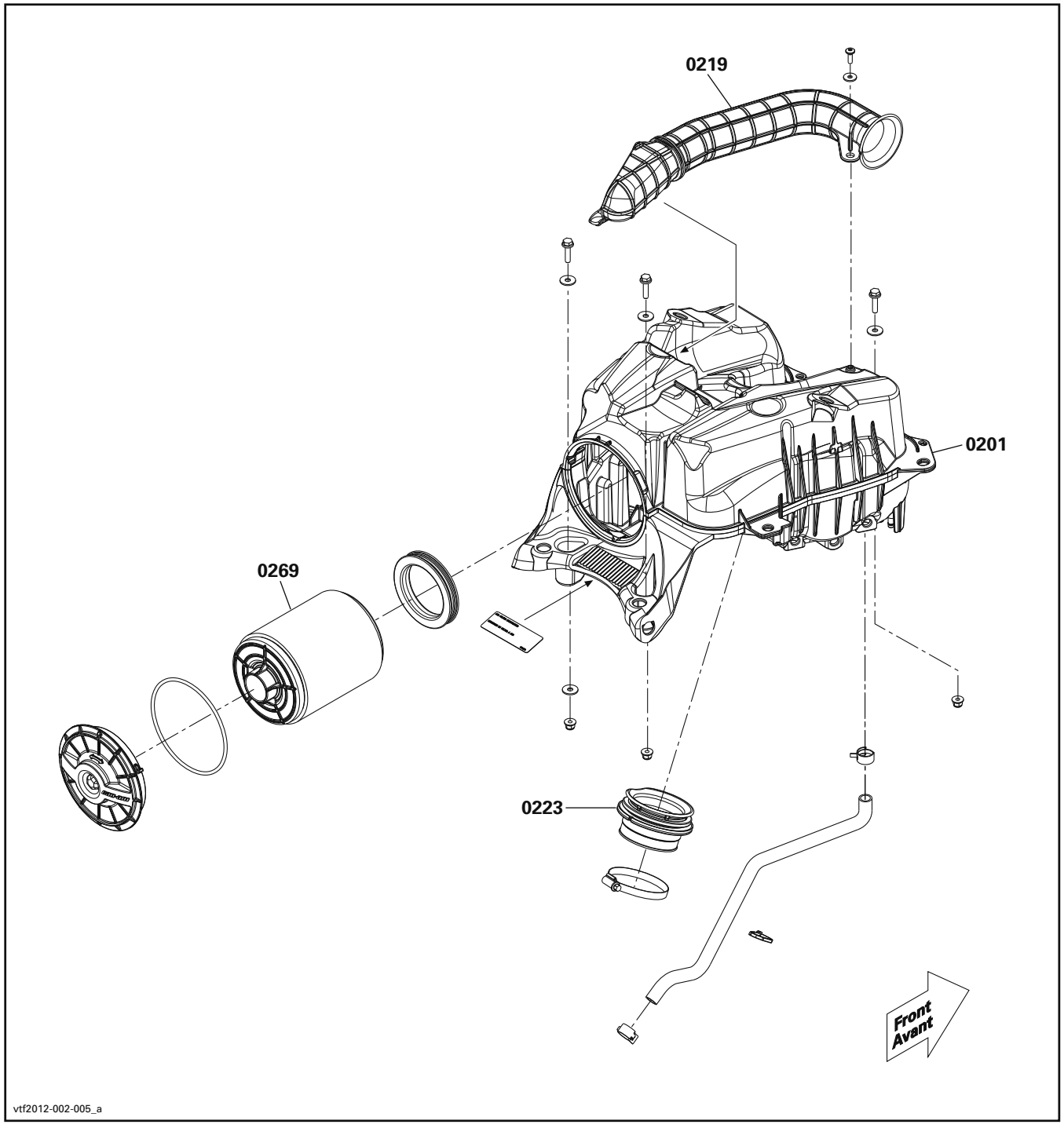
0219
0201
0269
0223
Front
Avant
vtf2012-002-005_a

IGNITION SYSTEM
SYSTÈME D'ALLUMAGE

SYSTEM SYSTÈME	CODE	DESCRIPTION	OUTLANDER	OUTLANDER MAX	OUTLANDER X MR	RENEGADE
			3	4	5	6
03	**00**	**NO LABOR INVOLVED AUCUNE MAIN D'OEUVRE**	**0**	**0**	**0**	**0**
03	02	MAGNETO (ASS'Y) MAGNÉTO (COMPLET)	2.3	2.3	2.3	2.3
03	08	IGNITION COIL (EACH) BOBINE D'ALLUMAGE (CHAQUE)	0.5	0.5	0.5	0.5
03	10	IGNITION CABLE CÂBLE D'ALLUMAGE	0.5	0.5	0.5	0.5
03	27	STATOR (ASS'Y) STATOR (COMPLET)	2.0	2.0	2.0	2.0
03	32	MAGNETO COVER COUVERCLE DE MAGNÉTO	2.1	2.1	2.1	2.1
03	33	MAGNETO COVER GASKET JOINT D'ÉTANCHÉITÉ COUVERCLE DE MAGNÉTO	2.0	2.0	2.0	2.0

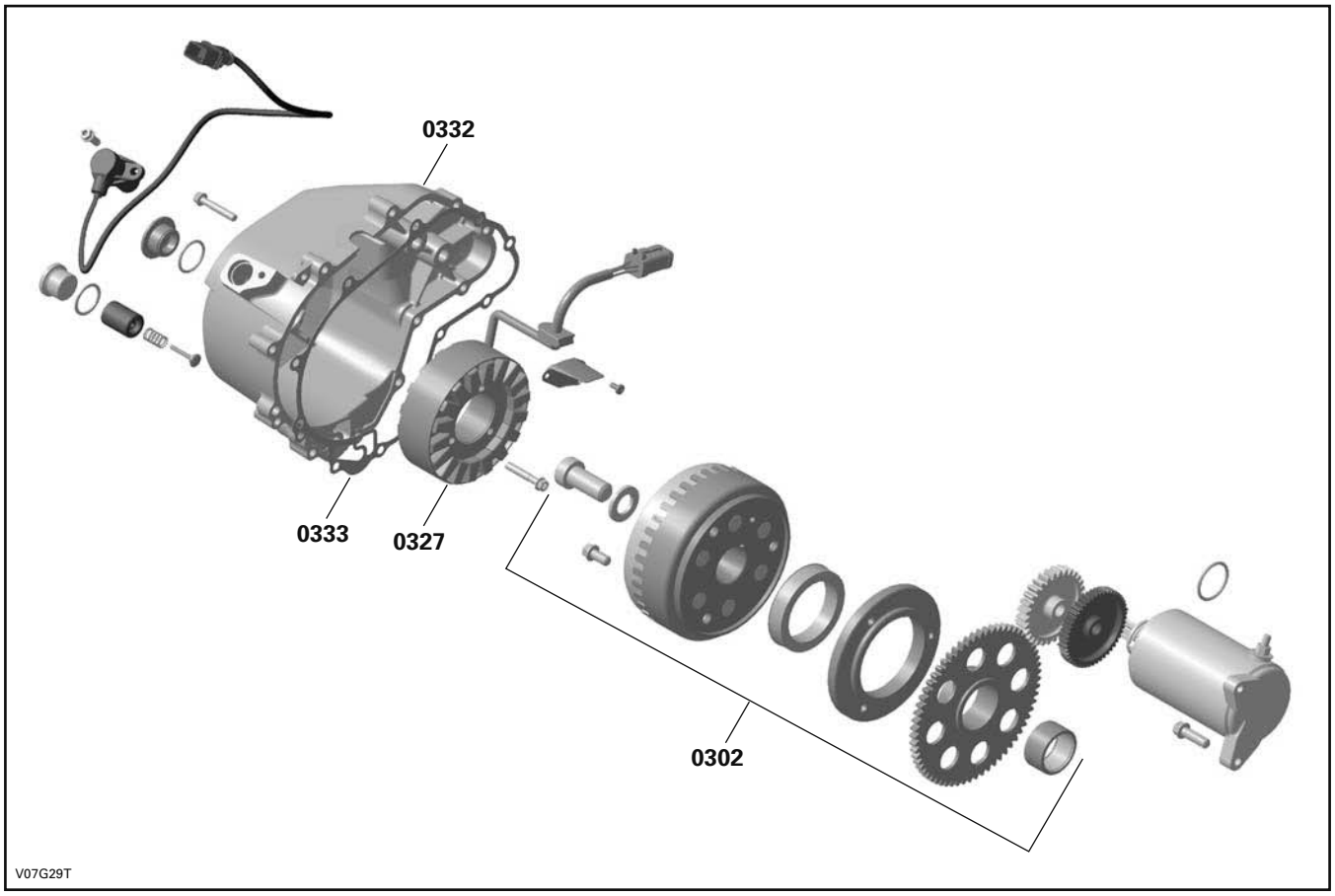
0332
0333
0327
0302
V07G29T

STARTER SYSTEM
SYSTÈME DE DÉMARREUR

SYSTEM SYSTÈME	CODE	DESCRIPTION	OUTLANDER	OUTLANDER MAX	OUTLANDER X MR	RENEGADE
			3	4	5	6
04	**00**	**NO LABOUR INVOLVED AUCUNE MAIN-D'OEUVRE**	**0**	**0**	**0**	**0**
04	02	ELECTRIC STARTER (ASS'Y) DÉMARREUR (COMPLET)	1.6	1.6	1.6	1.6
04	03	STARTER RELAY SOLÉNOÏDE DE DÉMARRAGE	0.3	0.3	0.3	0.3
04	19	STARTER DRIVE LANCEUR DÉMARREUR	1.9	1.9	1.9	1.9

SYSTEM SYSTÈME	CODE	DESCRIPTION	OUTLANDER	OUTLANDER MAX	OUTLANDER X MR	RENEGADE
			3	4	5	6
05	**00**	**NO LABOR INVOLVED AUCUNE MAIN-D'OEUVRE IMPLIQUÉE**	**0**	**0**	**0**	**0**
05	12	DRIVEN PULLEY SLIDING HALF DEMI-POULIE MENÉE COULISSANTE	0.5	0.6	0.6	0.5
05	19	BELT COURROIE	0.4	0.5	0.5	0.4
05	55	LEVER BUTTON BOUTON DE LEVIER	0.3	0.3	0.3	0.3
05	56	LEVER (ASS'Y) AND/OR LEVER SPRING LEVIER (COMPLET) ET/OU RESSORT DE LEVIER	0.3	0.3	0.3	0.3
05	59	SPEED SENSOR CAPTEUR DE VITESSE	0.3	0.3	0.3	0.3
05	77	LEVER LEVIER	0.7	0.7	0.7	0.7
05	78	CVT COVER COUVERCLE CVC	0.3	0.4	0.4	0.3
05	79	GASKET JOINT D'ÉTANCHÉITÉ	0.3	0.4	0.4	0.3
05	80	GOVERNOR CUP COUPOLE RÉGULATEUR	0.6	0.7	0.7	0.6
05	81	ONE WAY CLUTCH, FLANGE, RING, SPRING EMBRAYAGE À ROUE LIBRE, FLASQUE, ANNEAU, RESSORT	0.6	0.7	0.7	0.6
05	82	DRIVE PULLEY (ASS'Y) POULIE MOTRICE (COMPLET)	0.7	0.8	0.8	0.7
05	83	DRIVE PULLEY FIXED HALF POULIE MOTRICE FIXE	0.7	0.8	0.8	0.7
05	84	DRIVEN PULLEY OUTER CAM AND/OR SPRING CAME DE POULIE MENÉE EXTERNE ET/OU RESSORT	0.5	0.6	0.6	0.5
05	85	CENTRIFUGAL LEVER LEVIER CENTRIFUGE	0.8	0.9	0.9	0.8
05	86	SLIDER SHOES GLISSIÈRES	0.7	0.8	0.8	0.7
05	87	LEVER SPRING LEVIER À RESSORT	0.3	0.3	0.3	0.3
05	89	REMOVE AND REPLACE TRANSMISSION (ASS'Y) REMPLACEMENT DE LA TRANSMISSION (COMPLET)	5.1	5.1	5.4	4.8
05	91	MAIN SHAFT (ASS'Y) ARBRE DE RENVOI (COMPLET)	6.7	6.7	7.0	6.7
05	95	AIR INTAKE (CVT) ENTRÉE D'AIR (CVT)	0.3	0.3	0.4	0.3
05	96	AIR OUTLET (CVT) SORTIE D'AIR (CVT)	0.3	0.3	0.4	0.3

TRANSMISSION AND LINKAGE SYSTEM
SYSTÈME DE TRANSMISSION ET DE TRINGLERIE

SYSTEM SYSTÈME	CODE	DESCRIPTION	OUTLANDER	OUTLANDER MAX	OUTLANDER X MR	RENEGADE
			3	4	5	6
05	97	FLEXIBLE ADAPTOR ADAPTATEUR FLEXIBLE	0.3	0.3	0.3	0.3
05	98	CAM, PLATE, DRIVEN SHAFT, SPRING CAME, PLAQUE, ARBRE POULIE MENÉE, RESSORT	0.5	0.6	0.6	0.5
05	99	OUTPUT SHAFT ARBRE DE SORTIE	5.9	5.9	6.2	5.6
05	100	REAR OUTPUT SHAFT SEALS ANNEAUX ÉTANCHÉITÉ DE L'ARBRE DE SORTIE ARRIÈRE	2.2	2.2	2.2	2.2
05	101	GEARS KIT/MAIN SHAFT ENSEMBLE D'ENGRENAGES/ARBRE PRINCIPAL	6.0	6.0	6.3	5.7
05	102	SHIFT SHAFT (ASS'Y) ARBRE D'EMBRAYAGE (COMPLET)	6.0	6.0	6.3	5.7
05	103	SHIFT DRUM TAMBOUR D'EMBRAYAGE	6.0	6.0	6.3	5.7
05	104	INDEX LEVER (ASS'Y) LEVIER D'INDEXATION (COMPLET)	6.0	6.0	6.3	5.7
05	105	MAIN SHAFT SEAL JOINT D'ÉTANCHÉITÉ DE L'ARBRE PRINCIPAL	0.9	0.9	0.9	0.9
05	106	LH HOUSING GEAR AND/OR BEARINGS AND/OR GEAR LOGEMENT DE TRANSMISSION GAUCHE ET/OU ROULEMENT À BILLE ET/OU ENGRENAGE	6.0	6.0	6.3	5.7
05	107	SPACER AND/OR O-RING ENTRETOISE ET/OU JOINT TORIQUE	0.9	0.9	0.9	0.9
05	108	ACTUATOR AND/OR FORK AND/OR SEAL ACTUATEUR ET/OU FOURCHETTE ET/OU JOINT D'ÉTANCHÉITÉ	0.5	0.5	0.5	0.5
05	109	FORK AND/OR PIN FOURCHETTE ET/OU GOUPILLE	0.7	0.7	0.7	0.7
05	110	CENTER HOUSING GEAR AND/OR BEARING LOGEMENT DE TRANSMISSION CENTRE ET/OU ROULEMENT	6.0	6.0	6.3	5.7
05	111	RH HOUSING GEAR AND/OR BEARING LOGEMENT DE TRANSMISSION DROIT ET/OU ROULEMENT	5.9	5.9	6.2	5.6
05	113	SHIFTING SWITCH INTERRUPTEUR D'EMBRAYAGE	0.3	0.3	0.3	0.3
05	115	CVT AIR GUIDE AND/OR O-RINGS GUIDE D'AÉRATION ET/OU JOINT D'ÉTANCHÉITÉ	0.8	0.8	0.8	0.8
05	120	GEARBOX POSITION SENSOR CAPTEUR DE POSITION D'ENGRENAGE	0.4	0.4	0.4	0.4

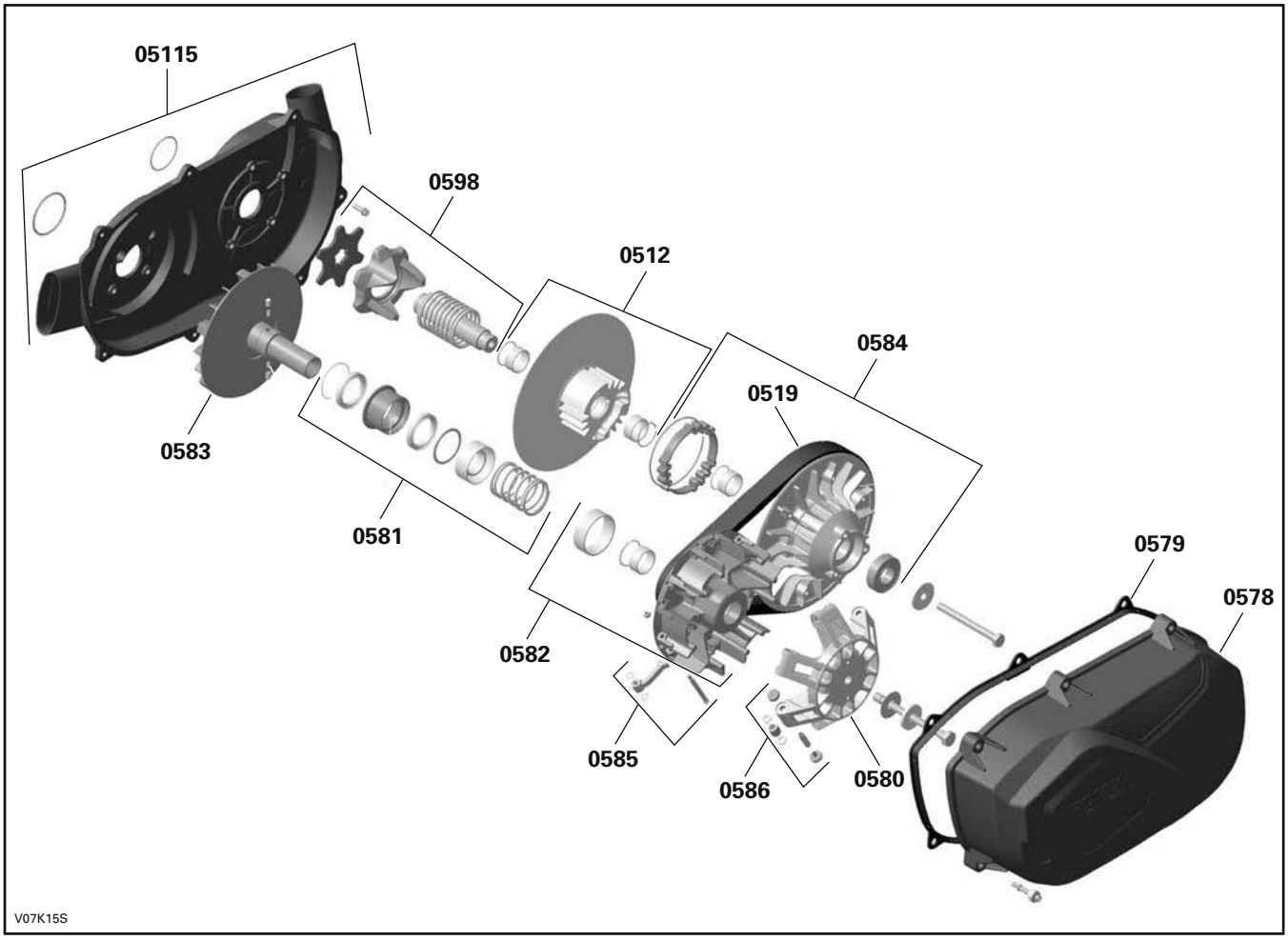
05115
0598
0512
0584
0519
0583
0581
0579
0578
0582
0585
0586
0580
V07K15S

TRANSMISSION AND LINKAGE SYSTEM
SYSTÈME DE TRANSMISSION ET DE TRINGLERIE

V500/650/800

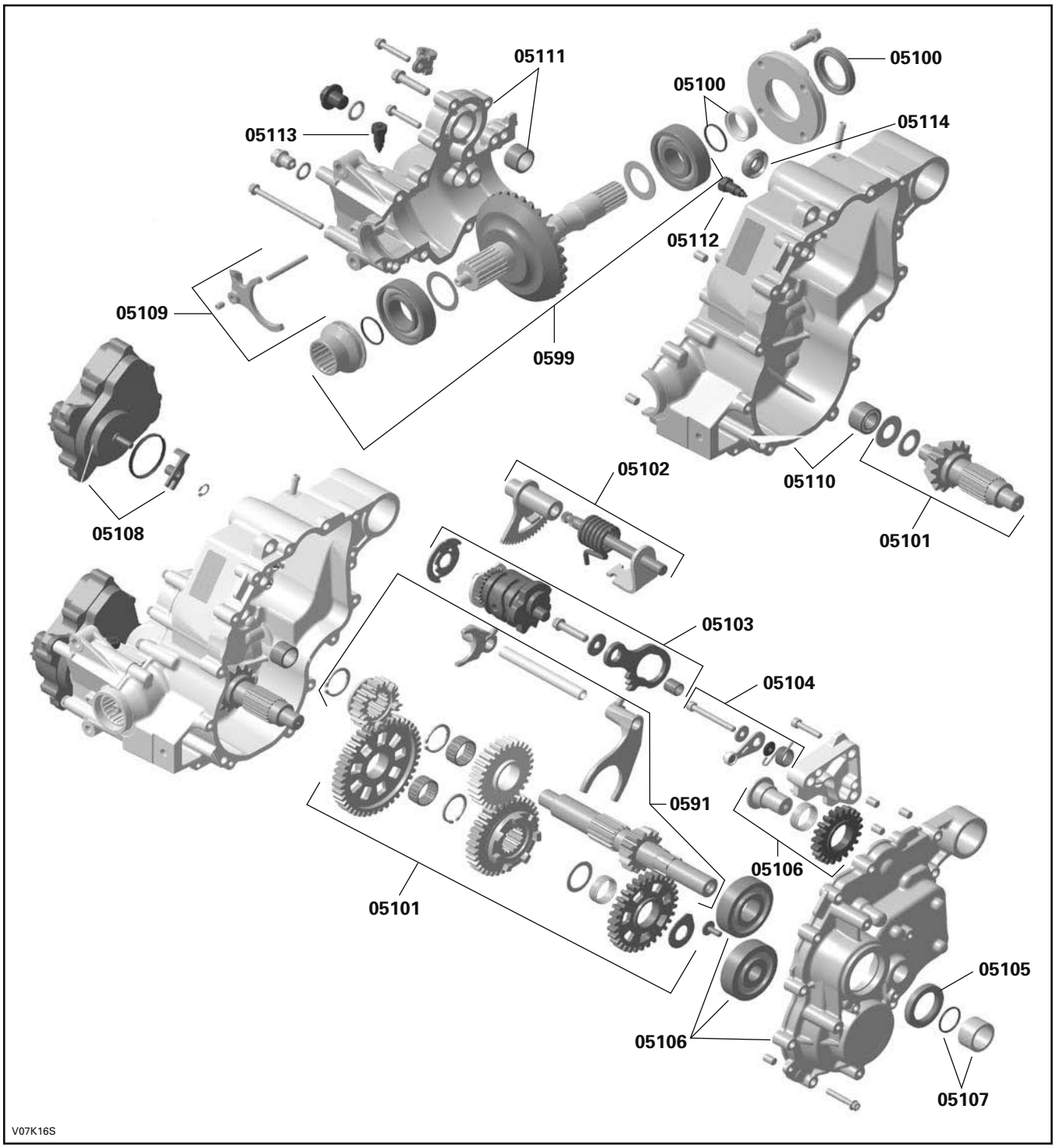

V1000

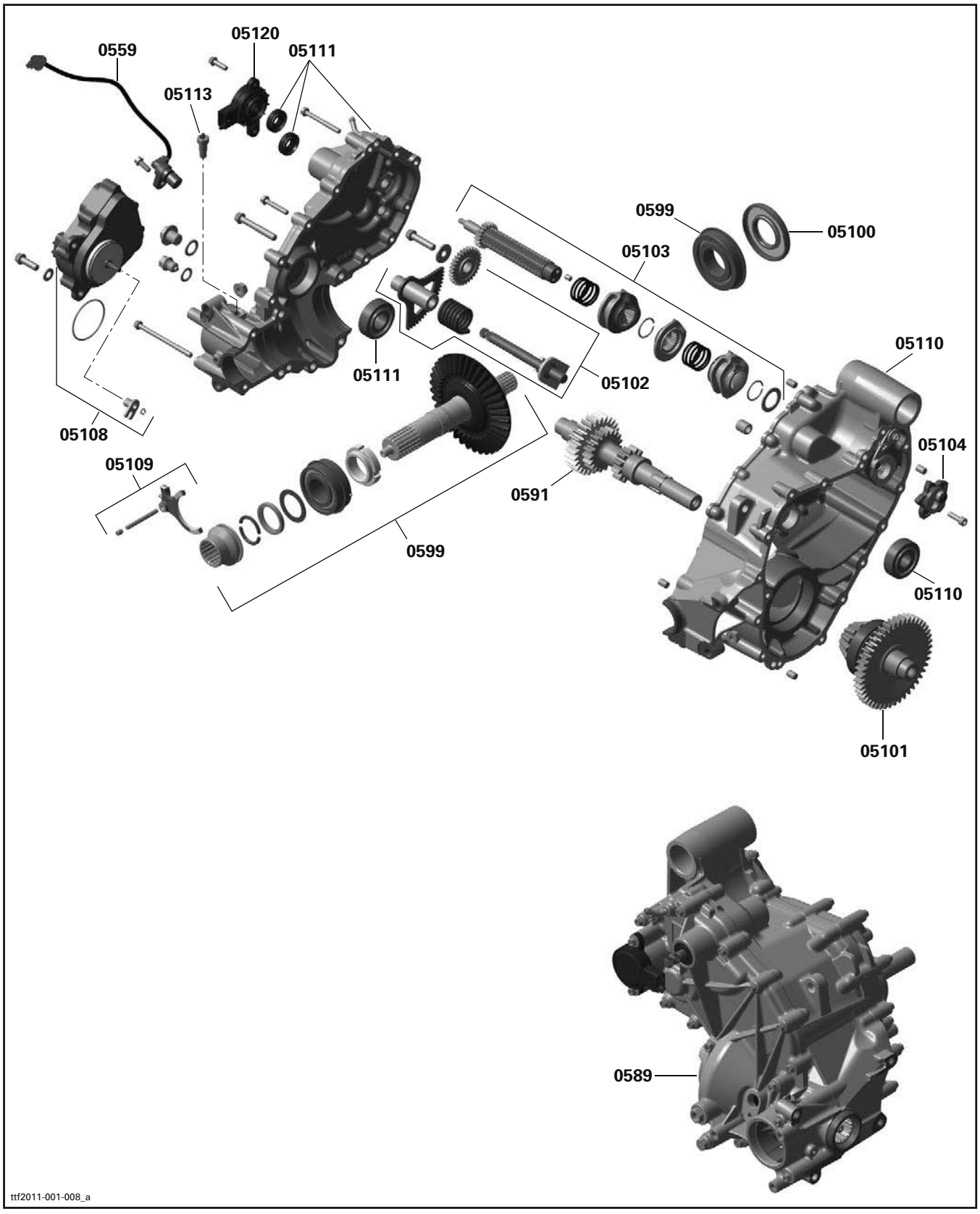
0559
05120
05111
05113
0599
05100
05103
05110
05111
05102
05108
05104
05109
0591
0599
05110
05101
0589
ttf2011-001-008_a

TRANSMISSION AND LINKAGE SYSTEM
SYSTÈME DE TRANSMISSION ET DE TRINGLERIE

V1000

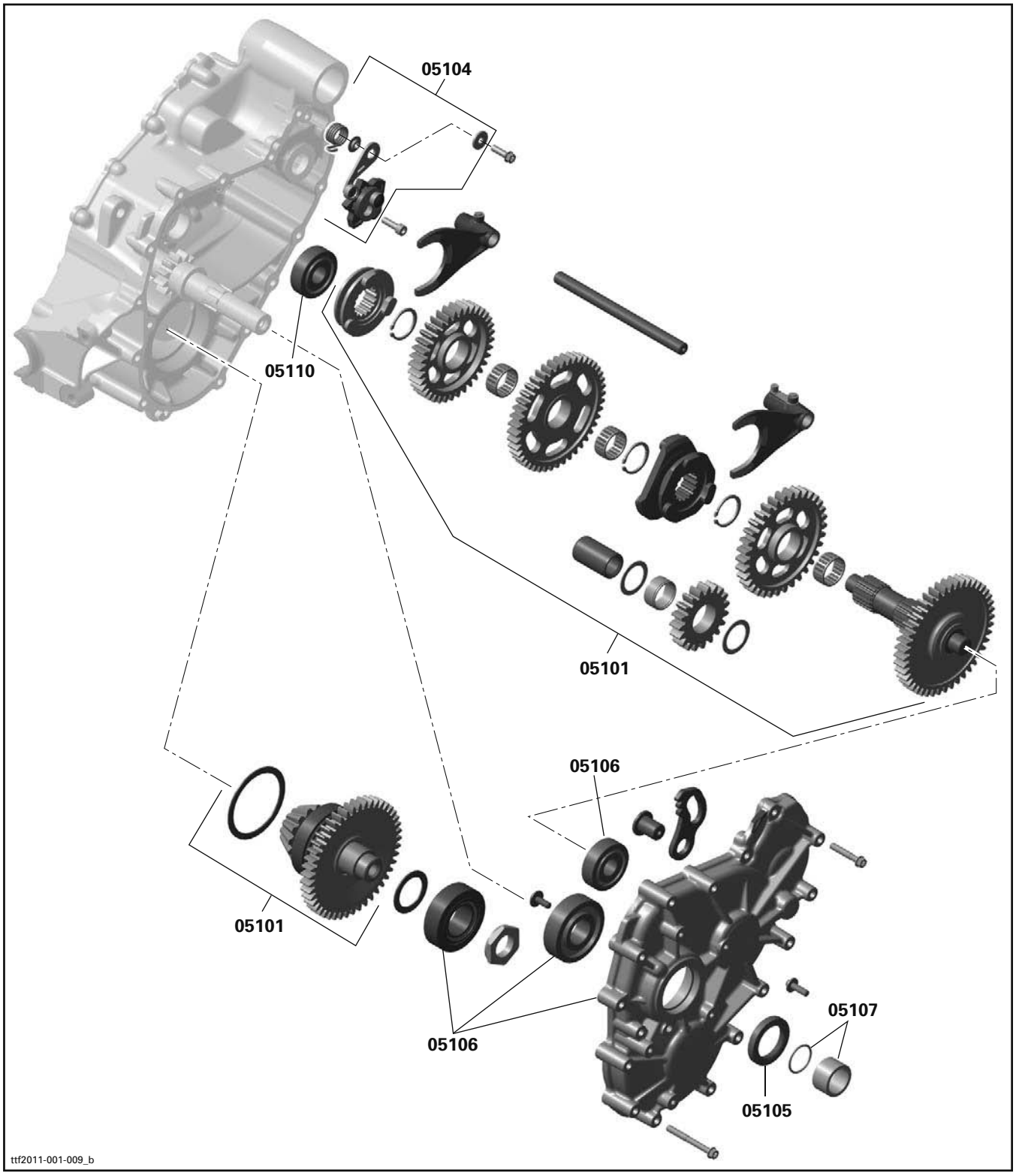

SYSTEM SYSTÈME	CODE	DESCRIPTION	OUTLANDER	OUTLANDER MAX	OUTLANDER X MR	RENEGADE
			3	4	5	6
06	**00**	**NO LABOR INVOLVED AUCUNE MAIN-D'OEUVRE**	**0**	**0**	**0**	**0**
06	06	MASTER CYLINDRE MAÎTRE-CYLINDRE	0.3	0.3	0.3	0.3
06	09	FRONT CALIPER (RH OR LH) ÉTRIER AVANT (DROIT OU GAUCHE)	0.4	0.4	0.4	0.4
06	10	FRONT BRAKE PAD (RH OR LH) PLAQUETTE DE FREIN AVANT (DROIT OU GAUCHE)	0.3	0.3	0.3	0.3
06	11	FRONT BRAKE DISC (RH OR LH) DISQUE DE FREIN AVANT (DROIT OU GAUCHE)	0.5	0.5	0.5	0.5
06	12	FRONT FLEXIBLE BRAKE HOSE BOYAU FLEXIBLE DE FREIN AVANT	0.6	0.6	0.6	0.6
06	15	FRONT BRAKE HANDLE HOSE BOYAU DE FREIN DE LA MANETTE AVANT	0.6	0.6	0.6	0.6
06	16	FRONT MASTER CYLINDER MAÎTRE-CYLINDRE AVANT	0.8	0.8	0.8	0.8
06	17	REAR BRAKE PEDAL PÉDALE DE FREIN ARRIÈRE	0.4	0.4	0.4	0.4
06	18	REAR BRAKE PEDAL SPRING RESSORT DE LA PÉDALE DE FREIN ARRIÈRE	0.3	0.3	0.3	0.3
06	19	BRAKE SWITCH INTERRUPTEUR DE FREIN	0.3	0.3	0.3	0.3
06	22	REAR MASTER CYLINDER MAÎTRE-CYLINDRE ARRIÈRE	0.7	0.7	0.7	0.7
06	23	REAR OIL HOUSING HOSE BOYAU CARTER D'HUILE ARRIÈRE	0.6	0.6	0.6	0.6
06	24	REAR OIL HOUSING CARTER D'HUILE ARRIÈRE	0.3	0.3	0.3	0.3
06	25	REAR BRAKE HOSE BOYAU DE FREIN ARRIÈRE	0.6	0.6	0.6	0.6
06	26	REAR CALIPER ÉTRIER ARRIÈRE	0.4	0.4	0.4	0.4
06	27	REAR BRAKE PAD PLAQUETTE DE FREIN ARRIÈRE	0.3	0.3	0.3	0.3
06	28	REAR BRAKE DISC AND/OR HUB DISQUE DE FREIN ARRIÈRE ET/OU MOYEU	0.5	0.5	0.5	0.5
06	30	BRAKE LINE BOYAU DE FREIN	3.5	3.5	3.8	3.5

BRAKE SYSTEM
SYSTÈME DE FREIN

Europe

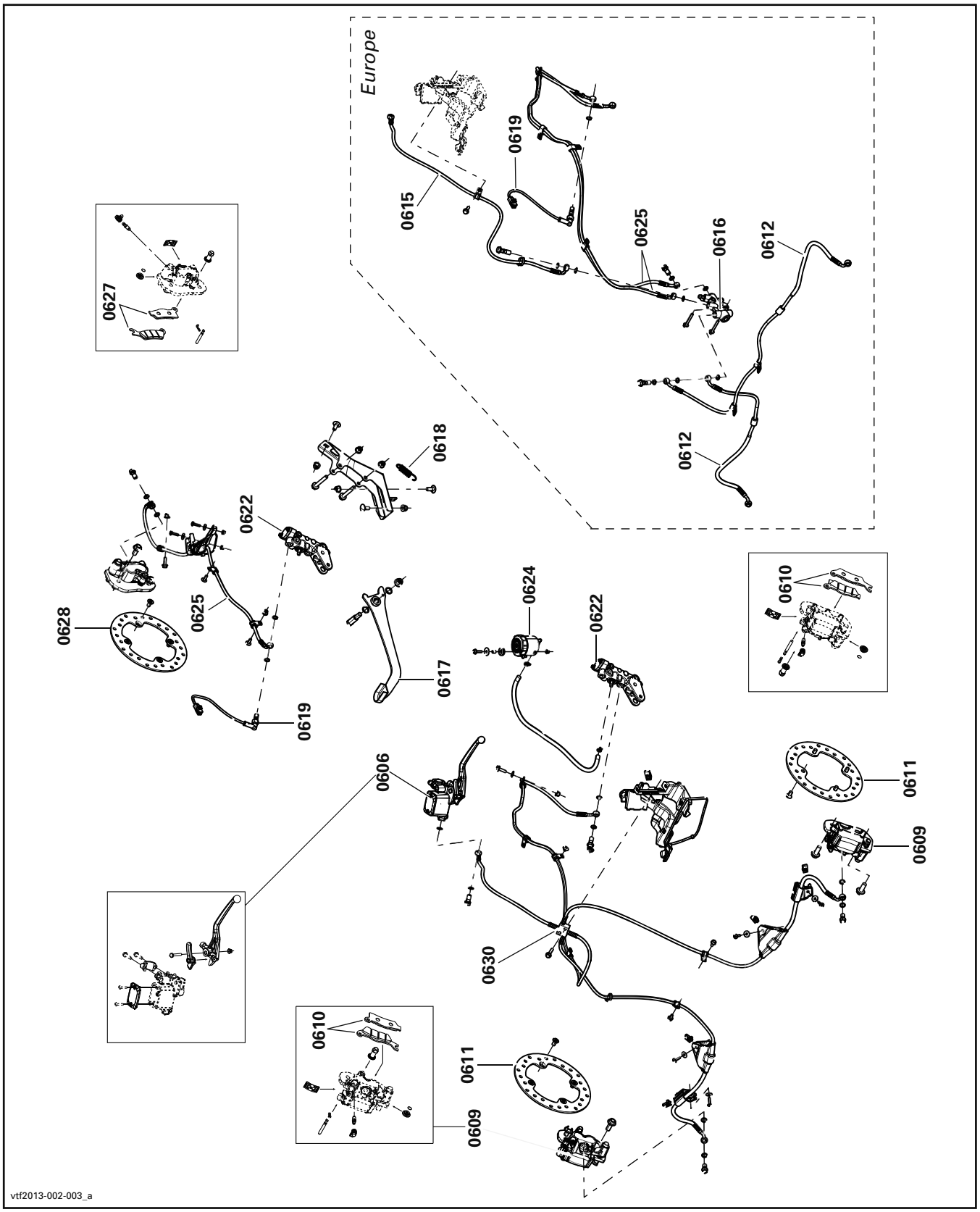

SYSTEM SYSTÈME	CODE	DESCRIPTION	OUTLANDER	OUTLANDER MAX	OUTLANDER X MR	RENEGADE
			3	4	5	6
07	**00**	**NO LABOR INVOLVED AUCUNE MAIN-D'OEUVRE**	**0**	**0**	**0**	**0**
07	04	ARM PROTECTOR (RH OR LH) PROTECTEUR DE BRAS (DROIT OU GAUCHE)	0.3	0.3	0.3	0.3
07	05	STEERING CLAMP AND/OR STEERING COVER SUPPORT BRIDE DE DIRECTION ET/OU SUPPORT DU COUVRE-GUIDON	0.4	0.4	0.4	0.4
07	12	INTERNAL BALL JOINT (RH OR LH) JOINT À ROTULE INTERNE (DROIT AU GAUCHE)	0.9	0.9	0.9	0.9
07	13	EXTERNAL BALL JOINT (RH OR LH) JOINT À ROTULE EXTERNE (DROIT OU GAUCHE)	0.8	0.8	0.8	0.8
07	19	TIE ROD (RH OR LH) BARRE D'ACCOUPLEMENT (DROIT OU GAUCHE)	0.9	0.9	0.9	0.9
07	24	MAIN TUBE TUBE PRINCIPAL	2.6	2.6	3.0	2.6
07	25	HANDLEBAR GUIDON	1.1	1.1	1.1	1.1
07	26	HANDLEBAR GRIP KIT (RH AND/OR LH) ENSEMBLE DE GAINE DE GUIDON (DROIT ET/OU GAUCHE)	0.3	0.3	0.3	0.3
07	27	STEERING COVER COUVRE-GUIDON	0.3	0.3	0.3	0.3
07	28	HALF HOUSING AND HOUSING BUSHING DEMI-LOGEMENT ET DOUILLE DE LOGEMENT	2.1	2.1	2.4	2.1
07	29	LOWER STEERING MAIN TUBE BUSHING DOUILLE INFÉRIEURE DE LA COLONNE DE DIRECTION	1.0	1.0	1.0	1.0
07	32	LOWER ARM AND/OR BALL JOINT (RH OR LH) BRAS INFÉRIEUR ET/OU JOINT À ROTULE (DROIT OU GAUCHE)	0.7	0.7	0.7	0.7
07	33	UPPER ARM (RH OR LH) BRAS DE SUSPENSION SUPÉRIEUR (DROIT OU GAUCHE)	0.8	0.8	0.8	0.8
07	35	HANDLE STEERING SUPPORT (ALL) SUPPORT DE GUIDON (TOUS)	0.3	0.3	0.3	0.3
07	37	FRONT SHOCK AND/OR SPRING AND/OR STOPPER AND/OR PROTECTOR AND/OR SEAT (RH OR LH) AMORTISSEUR AVANT ET/OU RESSORT ET/OU BUTÉE ET/OU SIÈGE ET/OU PROTECTEUR (DROIT OU GAUCHE)	0.7	0.7	0.7	0.7
07	40	FRONT DIFFERENTIEL (ASS'Y) DIFFÉRENTIEL AVANT (COMPLET)	2.4	2.4	2.4	2.4
07	42	FRONT PROPELLER SHAFT (ASS'Y) ARBRE DE PROPULSION AVANT (COMPLET)	1.3	1.3	1.3	1.3
07	45	CV JOINT (RH OR LH) JOINT HOMOCINÉTIQUE (DROIT OU GAUCHE)	0.8	0.8	0.8	0.8
07	46	FRONT WHEEL HUB (SEAL AND/OR BEARING) (RH OR LH) MOYEU DE ROUE AVANT (JOINT ET/OU ROULEMENT) (DROIT OU GAUCHE)	0.5	0.5	0.5	0.5
07	47	KNUCKLE (RH OR LH) PORTE-FUSÉE (DROIT OU GAUCHE)	0.8	0.8	0.8	0.8
07	50	FRONT RIM AND/OR TIRE JANTE AVANT ET/OU PNEU	0.4	0.4	0.4	0.4

STEERING - FRONT DRIVE SYSTEM AND SUSPENSION
DIRECTION - SYSTÈME D'ENTRAÎNEMENT AVANT ET SUSPENSION

SYSTEM SYSTÈME	CODE	DESCRIPTION	OUTLANDER	OUTLANDER MAX	OUTLANDER X MR	RENEGADE
			3	4	5	6
07	56	THROTTLE HANDLE MANETTE D'ACCÉLÉRATEUR	0.3	0.3	0.3	0.3
07	65	PITMAN ARM LEVIER DE DIRECTION	2.6	2.6	2.6	2.6
07	72	INTERNAL BUSHING AND/OR CUSHION (LOWER AND/OR UPPER ARM) (RH OR LH) DOUILLE INTERNE ET/OU COUSSIN (BRAS INFÉRIEUR ET/OU SUPÉRIEUR) (DROIT OU GAUCHE)	0.4	0.4	0.4	0.4
07	80	FRONT RIM JANTE AVANT	0.4	0.4	0.4	0.4
07	82	RADIAL BALL BEARINGS ROULEMENTS À BILLE RADIALES	0.8	0.8	0.8	0.8
07	85	RING GEAR AND/OR CARRIER AND/OR SHIM COURONNE DE LANCEMENT ET/OU SUPPORT ET/OU CALE	3.0	3.0	3.0	3.0
07	88	RING GEAR DRIVE GEAR AND/OR BEARING AND/OR SHIM PIGNON DE COMMANDE DE LA COURONNE ET/OU ROULEMENT À BILLE ET/OU CALE	2.7	2.7	2.7	2.7
07	89	COVER AND/OR PINION COVER AND/OR SEAL AND/OR BEARING COUVERCLE ET/OU COUVERCLE DE PIGNON ET/OU JOINT D'ÉTANCHÉITÉ ET/OU ROULEMENT À BILLE	3.0	3.0	3.0	3.0
07	90	BOOT WHEEL KIT AND/OR CV JOINT (RH OR LH) ENSEMBLE DE SOUFFLET DE ROUE ET/OU JOINT CV (DROIT OU GAUCHE)	0.8	0.8	0.8	0.8
07	91	BOOT DIFFERENTIAL KIT AND/OR PLUNGING JOINT (RH OR LH) ENSEMBLE DE SOUFFLET DE DIFFÉRENCIEL ET/OU JOINT PLONGEANT (DROIT OU GAUCHE)	0.8	0.8	0.8	0.8
07	92	SLEEVE AND/OR WEARRING MANCHON ET/OU BAGUE D'USURE	1.3	1.3	1.3	1.3
07	94	UNIT PACK KIT ENSEMBLE JOINT CARDAN	2.3	2.3	2.3	2.3
07	96	UPPER ARM BRACKET ATTACHE BRAS SUPÉRIEUR	2.2	2.2	2.2	2.2
07	99	POWER STEERING SERVODIRECTION	2.6	2.6	2.6	2.6
07	101	DEFLECTOR (LH OR RH) DÉFLECTEUR (GA OU DR)	0.3	0.3	0.3	0.3
07	103	DIFFERENTIAL SEAL (1) JOINT D'ÉTANCHÉITÉ DU DIFFÉRENTIEL (1)	0.8	0.8	0.8	0.8
07	104	DIFFERENTIAL SEALS (2) JOINTS D'ÉTANCHÉITÉ DU DIFFÉRENTIEL (2)	1.5	1.5	1.5	1.5
07	123	GPS SUPPORT SUPPORT DU GPS		0.3		

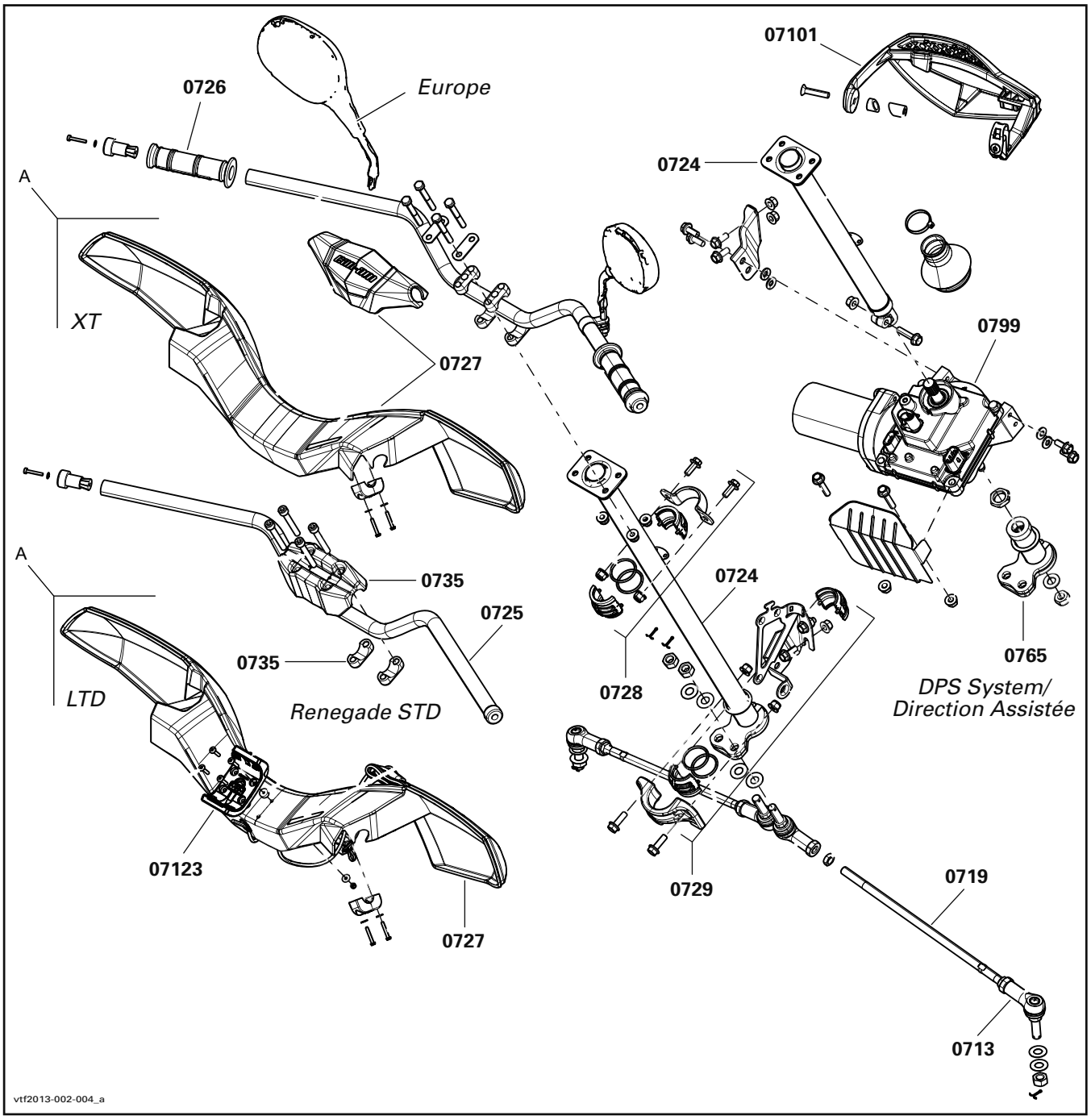
07101
0726
Europe
0724
A
XT
0727
0799
A
0735
0725
0724
0735
0765
LTD
Renegade STD
0728
DPS System/
Direction Assistée
07123
0729
0719
0727
0713
vtf2013-002-004_a

STEERING - FRONT DRIVE SYSTEM AND SUSPENSION
DIRECTION - SYSTÈME D'ENTRAÎNEMENT AVANT ET SUSPENSION

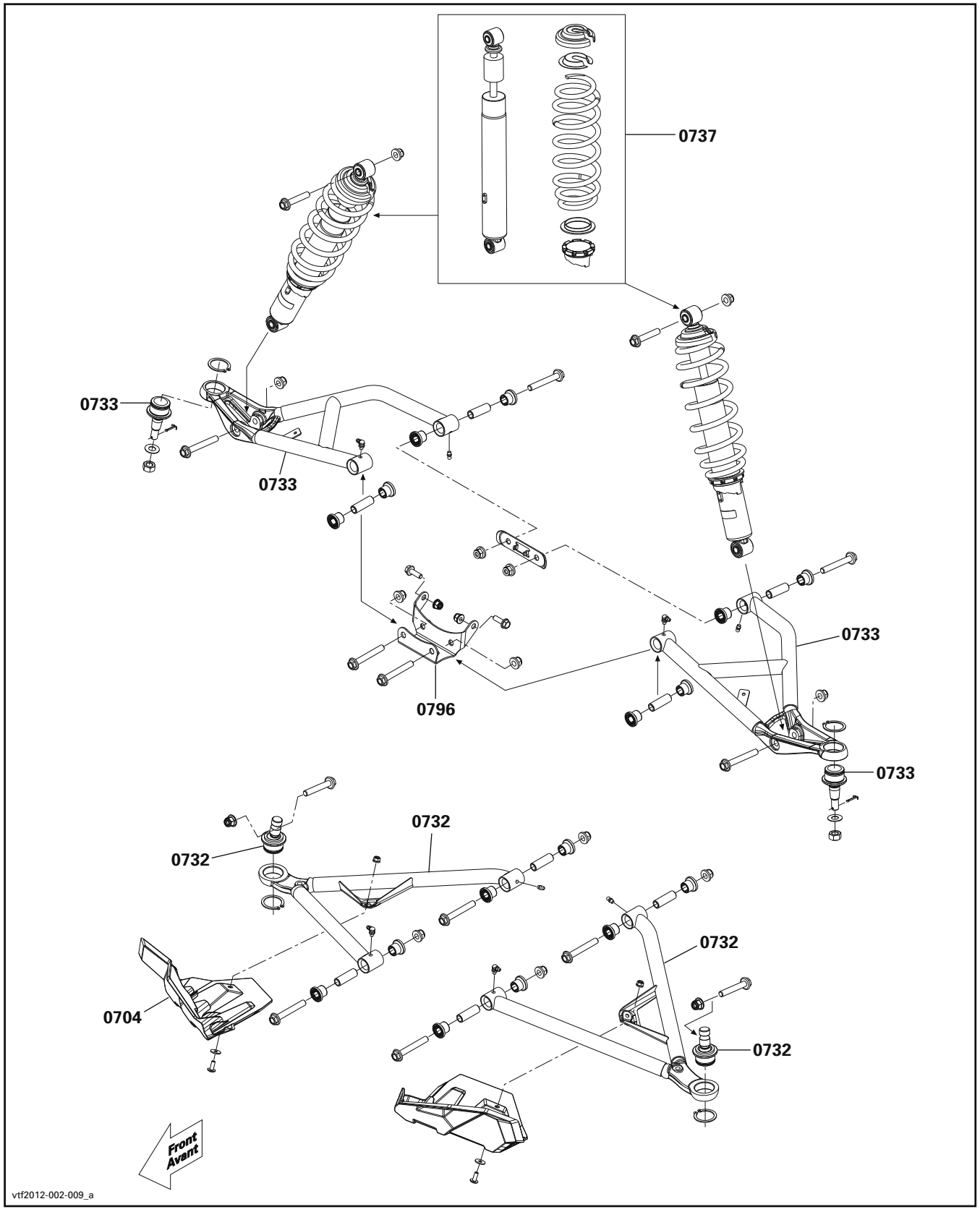

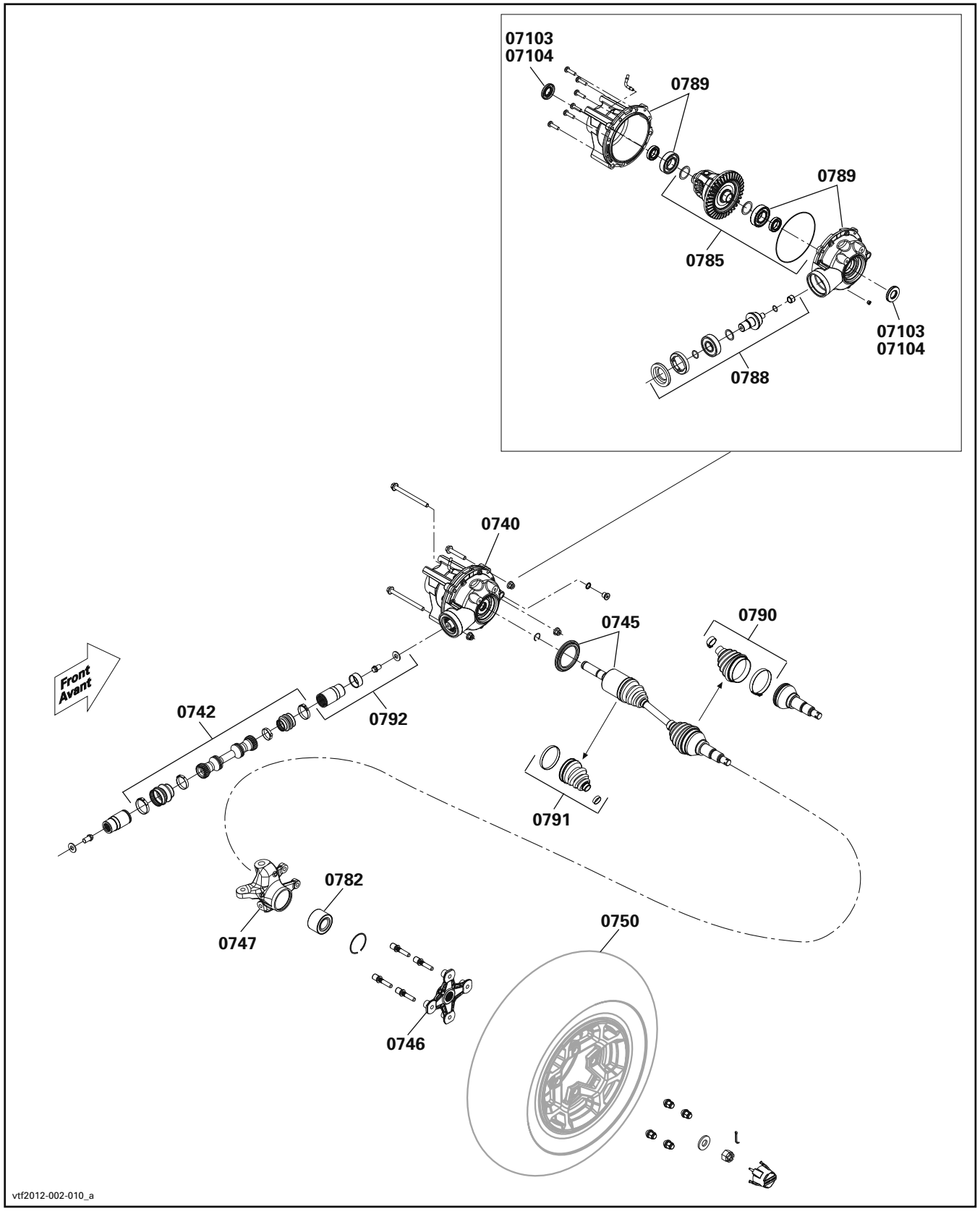
07103
07104
0789
0789
0785
07103
07104
0788
0740
0745
0790
Front
Avant
0742
0792
0791
0782
0747
0750
0746
vtf2012-002-010_a

REAR DRIVE SYSTEM AND SUSPENSION
SYSTÈME D'ENTRAÎNEMENT ARRIÈRE ET SUSPENSION

SYSTEM SYSTÈME	CODE	DESCRIPTION	OUTLANDER	OUTLANDER MAX	OUTLANDER X MR	RENEGADE
			3	4	5	6
08	**00**	**NO LABOR INVOLVED AUCUNE MAIN D'OEUVRE**	**0**	**0**	**0**	**0**
08	05	REAR WHEEL HUB (RH) MOYEU DE ROUE ARRIÈRE (DROIT)	0.5	0.5	0.5	0.5
08	21	COMPRESSOR COMPRESSEUR		1.3	1.3	
08	24	PNEUMATIC HOSE BOYAU PNEUMATIQUE		0.5	0.5	
08	07	REAR DIFFERENTIAL (ASS'Y) DIFFÉRENTIEL ARRIÈRE (COMPLET)	1.8	1.8	1.8	1.8
08	26	REAR PROPELLER SHAFT (ASS'Y) ARBRE DE PROPULSION ARRIÈRE (COMPLET)	1.5	1.5	1.5	1.5
08	62	SWING ARM BRAS OSCILLANT	1.2	1.2	1.2	1.2
08	101	LH PROTECTOR PROTECTEUR GAUCHE	0.3	0.3	0.3	0.3
08	102	RH PROTECTOR PROTECTEUR DROIT	0.3	0.3	0.3	0.3
08	109	REAR WHEEL HUB (LH) MOYEU DE ROUE ARRIÈRE (GAUCHE)	0.3	0.3	0.3	0.5
08	111	REAR SHOCK (RH OR LH) AMORTISSEUR ARRIÈRE (DROIT OU GAUCHE)	0.4	0.4	0.4	0.4
08	114	REAR RIM AND/OR TIRE JANTE ARRIÈRE ET/OU PNEU	0.4	0.4	0.4	0.4
08	120	CV JOINT (RH OR LH) JOINT HOMOCINÉTIQUE (DROIT OU GAUCHE)	0.8	0.8	0.8	0.8
08	121	STABILIZER BAR BARRE STABILISATRICE	0.7	0.7	0.7	0.7
08	122	RING GEAR AND/OR SHIM COURONNE DE LANCEMENT ET/OU CALE	3.1	3.1	3.1	3.1
08	123	RING GEAR DRIVE GEAR AND/OR BEARING AND/OR SHIM PIGNON DE COMMANDE DE LA COURONNE ET/OU ROULEMENT À BILLE ET/OU CALE	3.1	3.1	3.1	3.1
08	124	COVER AND/OR PINION COVER AND/OR SEAL AND/OR BEARING COUVERCLE ET/OU COUVERCLE DE PIGNON ET/OU JOINT D'ÉTANCHÉITÉ ET/OU ROULEMENT À BILLE	3.3	3.3	3.3	3.3
08	125	BOOT WHEEL KIT AND/OR CV JOINT (RH OR LH) ENSEMBLE DE SOUFFLET DE ROUE ET/OU JOINT CV (DROIT OU GAUCHE)	0.9	0.9	0.9	0.9
08	126	BOOT DIFFERENTIAL KIT AND/OR PLUNGING JOINT (RH OR LH) ENSEMBLE DE SOUFFLET DE DIFFÉRENTIEL ET/OU JOINT PLONGENT (DROIT OU GAUCHE)	0.9	0.9	0.9	0.9
08	127	RADIAL BALL BEARINGS ROULEMENTS À BILLE RADIALES	1.0	1.0	1.0	1.0

SYSTEM SYSTÈME	CODE	DESCRIPTION	OUTLANDER	OUTLANDER MAX	OUTLANDER X MR	RENEGADE
			3	4	5	6
08	128	UNIT PACK KIT ENSEMBLE DE JOINT CARDAN	1.2	1.2	1.2	1.2
08	129	UNIT PACK KIT (2) ENSEMBLE DE JOINT CARDAN (2)	1.5	1.5	1.5	1.5
08	134	DIFFERENTIAL SEAL (1) JOINT D'ÉTANCHÉITÉ DU DIFFÉRENTIEL (1)	0.9	0.9	0.9	0.9
08	137	PRESSURE COLLECTOR ASS'Y COLLECTEUR DE PRESSION COMPLET		0.6	0.6	
08	138	AIR SUSPENSION MODULE MODULE DE SUSPENSION À AIR		0.6	0.6	
08	139	AIR SUSPENSION SENSOR CAPTEUR DE LA SUSPENSION À AIR		0.4	0.4	
08	140	AUXILIARY FITTING AND SUPPORT RACCORD AUXILIAIRE ET SUPPORT		0.4	0.4	
08	148	DIFFERENTIAL OIL SEAL ANNEAU D'ÉTANCHÉITÉ DU DIFFÉRENTIEL	1.0	1.0	1.0	1.0
08	135	DIFFERENTIAL SEALS (2) JOINTS D'ÉTANCHÉITÉ DU DIFFÉRENTIEL (2)	1.8	1.8	1.8	1.8
08	149	AXIAL PIVOT AXE DE PIVOT	0.5	0.5	0.5	0.5

REAR DRIVE SYSTEM AND SUSPENSION
SYSTÈME D'ENTRAÎNEMENT ARRIÈRE ET SUSPENSION

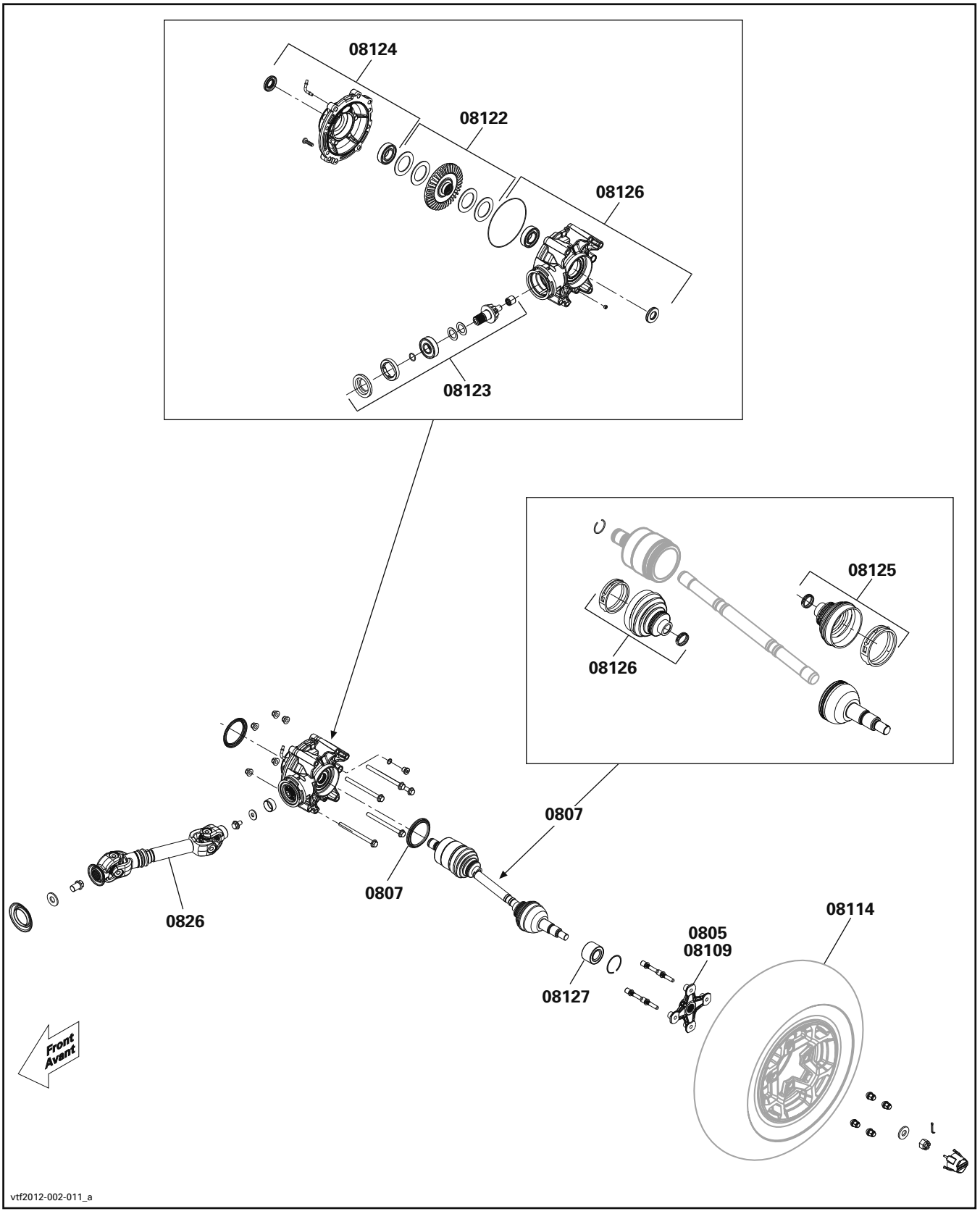

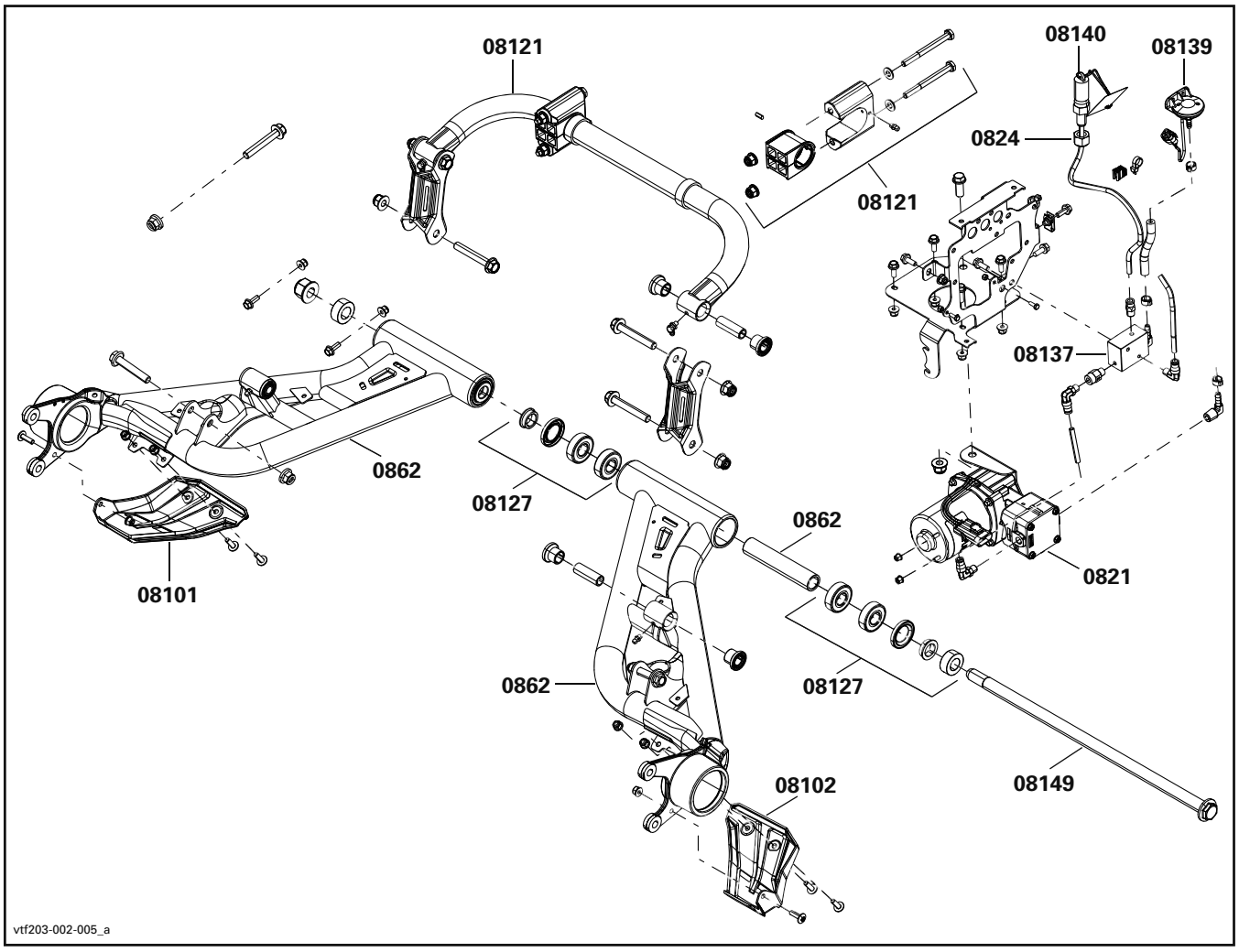
08121
08140
08139
0824
08121
08137
0862
08127
0862
0821
08101
0862
08127
08102
08149
vtf203-002-005_a

REAR DRIVE SYSTEM AND SUSPENSION
SYSTÈME D'ENTRAÎNEMENT ARRIÈRE ET SUSPENSION

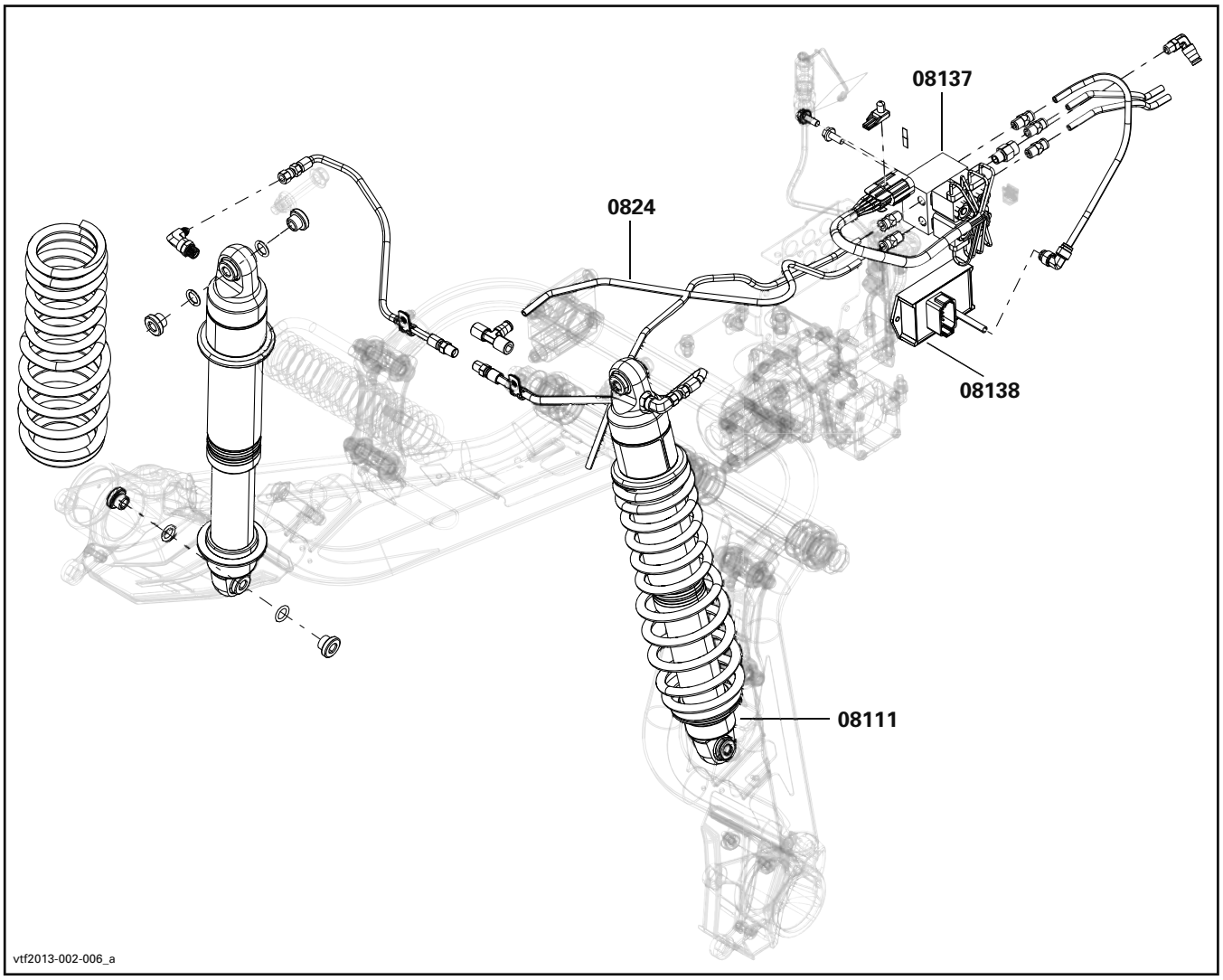

SYSTEM SYSTÈME	CODE	DESCRIPTION	OUTLANDER	OUTLANDER MAX	OUTLANDER X MR	RENEGADE
			3	4	5	6
09	**00**	**NO LABOR INVOLVED AUCUNE MAIN D'OEUVRE IMPLIQUÉE**	**0**	**0**	**0**	**0**
09	01	HOOD CAPOT	0.3	0.3	0.3	
09	13	LUGGAGE RACK KIT (FRONT OR REAR) ENSEMBLE DE PORTE-BAGAGES (AVANT OU ARRIÈRE)	0.5	0.5	0.5	
09	17	CONSOLE CONSOLE	0.3	0.3	0.3	0.3
09	21	SEAT SIÈGE	0.3	0.3	0.3	0.3
09	26	FRONT BUMPER PARE-CHOCS AVANT	0.9	0.9	0.9	0.7
09	27	WINCH LATCH ATTACHE DE TREUIL	0.3	0.3	0.3	0.3
09	28	FRONT FASCIA FASCIA AVANT	0.9	0.9	0.9	0.7
09	29	REAR FASCIA FASCIA ARRIÈRE	0.3	0.3	0.3	0.3
09	34	REAR BUMPER PARE-CHOCS ARRIÈRE	0.3	0.3	0.3	0.4
09	39	FRONT OR REAR MUDGUARD KIT (RH OR LH) GARDE DE BOUE AVANT/ARRIÈRE (DROIT OU GAUCHE)		0.3	0.3	
09	45	REAR HANDLE (RH OR LH) POIGNÉE ARRIÈRE (GAUCHE OU DROITE)		0.3		
09	48	FOOTREST (RH OR LH) MARCHEPIED (DROIT OU GAUCHE)	0.4	0.5	0.5	0.4
09 *	49	FRAME CHÂSSIS	13.0	14.0	14.0	12.5
09	52	SIDE BRACKET (RH OR LH) SUPPORT LATÉRAL (DROIT OU GAUCHE)	0.6	0.6	0.6	
09	56	REAR FENDER AILE ARRIÈRE	0.9	0.9	0.9	0.8
09	57	FRONT FENDER AND/OR SUPPORT (RH OR LH) AILE AVANT ET/OU SUPPORT (DROIT OU GAUCHE)	1.0	1.0	1.0	1.5
09	74	FOOTREST SUPPORT (RH OR LH) SUPPORT DE REPOSE PIED (DROIT OU GAUCHE)	0.4	0.5	0.5	0.4
09	84	AIR INTAKE DEFLECTOR DÉFLECTEUR ADMISSION AIR			0.3	
09	85	STORAGE SUPPORT SUPPORT DU COFFRE	0.7	0.7	0.7	
09	91	FOOTWELL (RH OR LH) REPOSE-PIED (DROIT OU GAUCHE)	0.3	0.4	0.4	0.3

SYSTEM SYSTÈME	CODE	DESCRIPTION	OUTLANDER	OUTLANDER MAX	OUTLANDER X MR	RENEGADE
			3	4	5	6
09	93	PROTECTION PLATE PLAQUE DE PROTECTION	0.5	0.5	0.5	
09	95	EACH DECAL (1) CHAQUE AUTOCOLLANT (1)	0.3	0.3	0.3	0.3
09	108	REAR SEAT ASS'Y SIÈGE ARRIÈRE ASS.		0.4		
09	120	FRONT LIGHT FASCIA FASCIA DE LUMIÈRE AVANT				0.4
09	138	HAND PROTECTOR PROTÈGE MAIN	0.3	0.3	0.3	0.3
09	149	ENGINE SIDE PANELS (2) PANNEAUX MOTEUR (2)	0.3	0.3	0.3	0.3
09	157	UPPER CONSOLE CONSOLE SUPÉRIEURE	0.3	0.3	0.3	0.3
09	158	FRONT FENDER SUPPORT SUPPORT D'AILE AVANT	1.0	1.0	1.0	1.6
09	161	REAR BUMPER (XT) PARE-CHOC ARRIÈRE (XT)	0.3	0.3	0.3	
09	162	FRONT BUMPER (XT) PARE-CHOC AVANT (XT)	0.3	0.3	0.3	
09	198	BACKREST PARTS PIÈCES DU DOSSIER		0.4		
09	199	REAR SEAT BASE A/O ALL PARTS BASE SIÈGE ARRIÈRE ET/OU TOUTES LES PIÈCES		1.0		
09	200	REAR FENDER SUPPORT SUPPORT D'AILE ARRIÈRE	1.9	1.9	1.9	1.5
09	210	FRONT FASCIA (RH OR LH) FASCIA AVANT (DROIT OU GAUCHE)				0.4
09	244	CONSOLE SUPPORT SUPPORT DE CONSOLE	0.5	0.5	0.8	0.5
09	283	REAR BOX COFFRE ARRIÈRE	1.1	1.1	1.1	
09	284	BOX DOOR PORTE DE COFFRE	0.3	0.3	0.3	
09	304	REAR SUPPORT SUPPORT ARRIÈRE	1.9	1.9	1.9	
09	305	INNER FENDER (RH OR LH) FAUSSE AILE (DROIT OU GAUCHE)	0.3	0.3	0.3	0.3
09	316	HITCH ATTACHE	0.3	0.3	0.3	
09	336	CENTRAL SKID PLAT PLAQUE DE PROTECTION CENTRALE	0.4	0.4	0.4	0.4

SYSTEM SYSTÈME	CODE	DESCRIPTION	OUTLANDER	OUTLANDER MAX	OUTLANDER X MR	RENEGADE
			3	4	5	6
09	367	LOCK VERROU	0.3	0.3	0.3	
09	389	REAR STORAGE COVER COUVERCLE DU COFFRE ARRIÈRE	0.7	0.7	0.7	
09	390	FOOTREST (RIGHT OR LEFT) APPUI-PIEDS (DROIT OU GAUCHE)			0.3	
09	398	BUMPER (RH OR LH) PARE-CHOC (DROIT OU GAUCHE)			0.4	

BODY AND ACCESSORIES
CARROSSERIE ET ACCESSOIRES

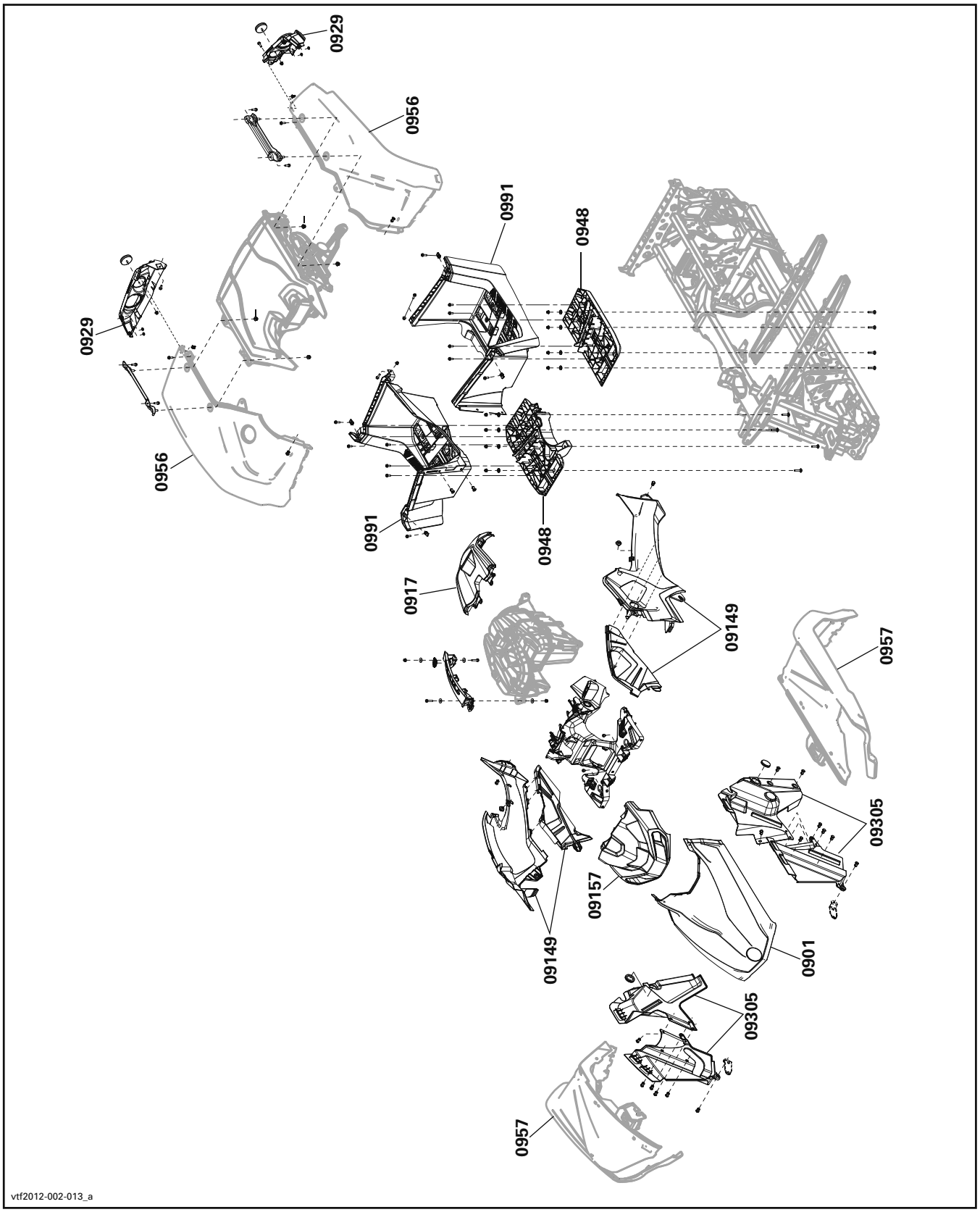

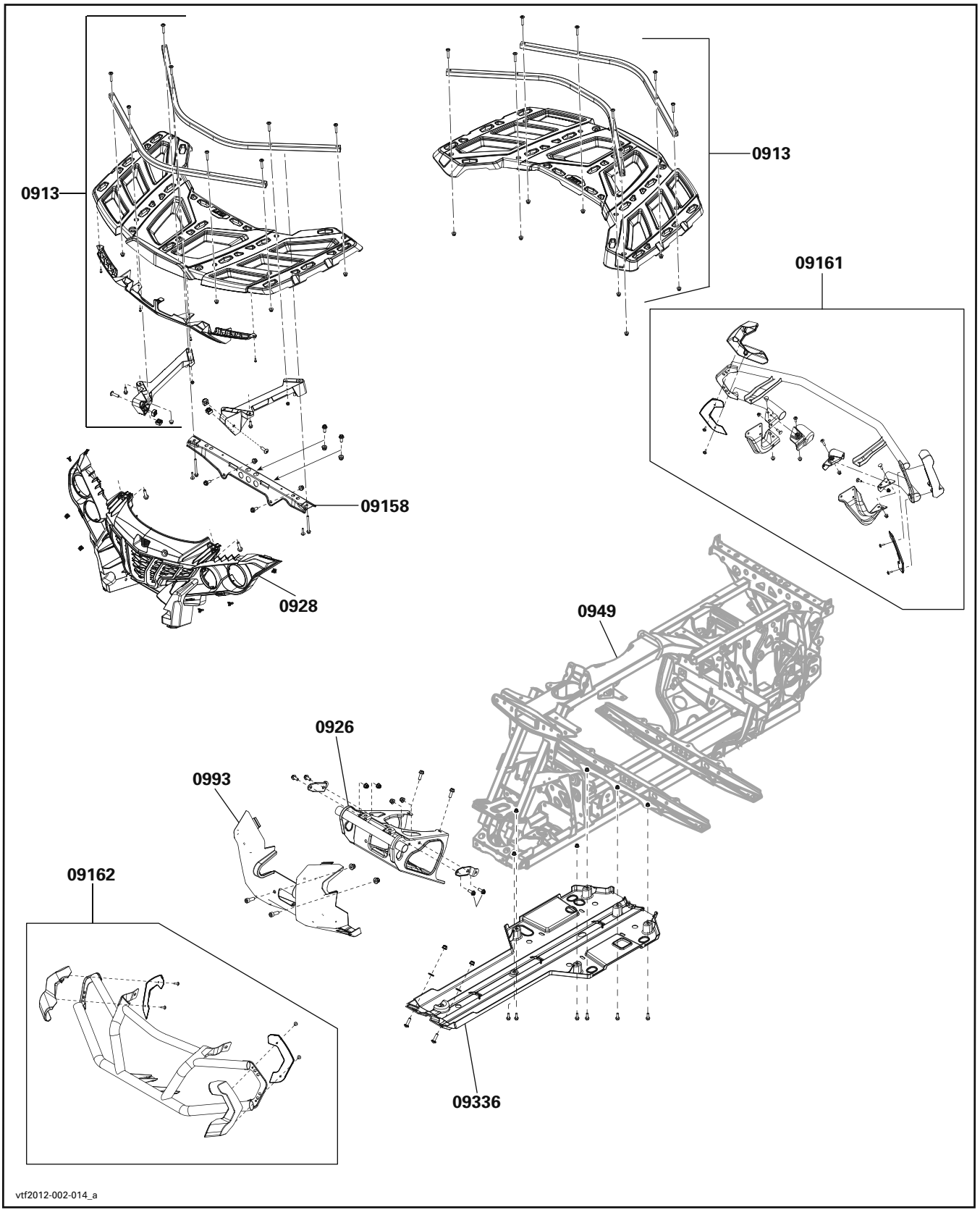
0913
0913
09161
09158
0928
0949
0926
0993
09162
09336
vtf2012-002-014_a

BODY AND ACCESSORIES
CARROSSERIE ET ACCESSOIRES

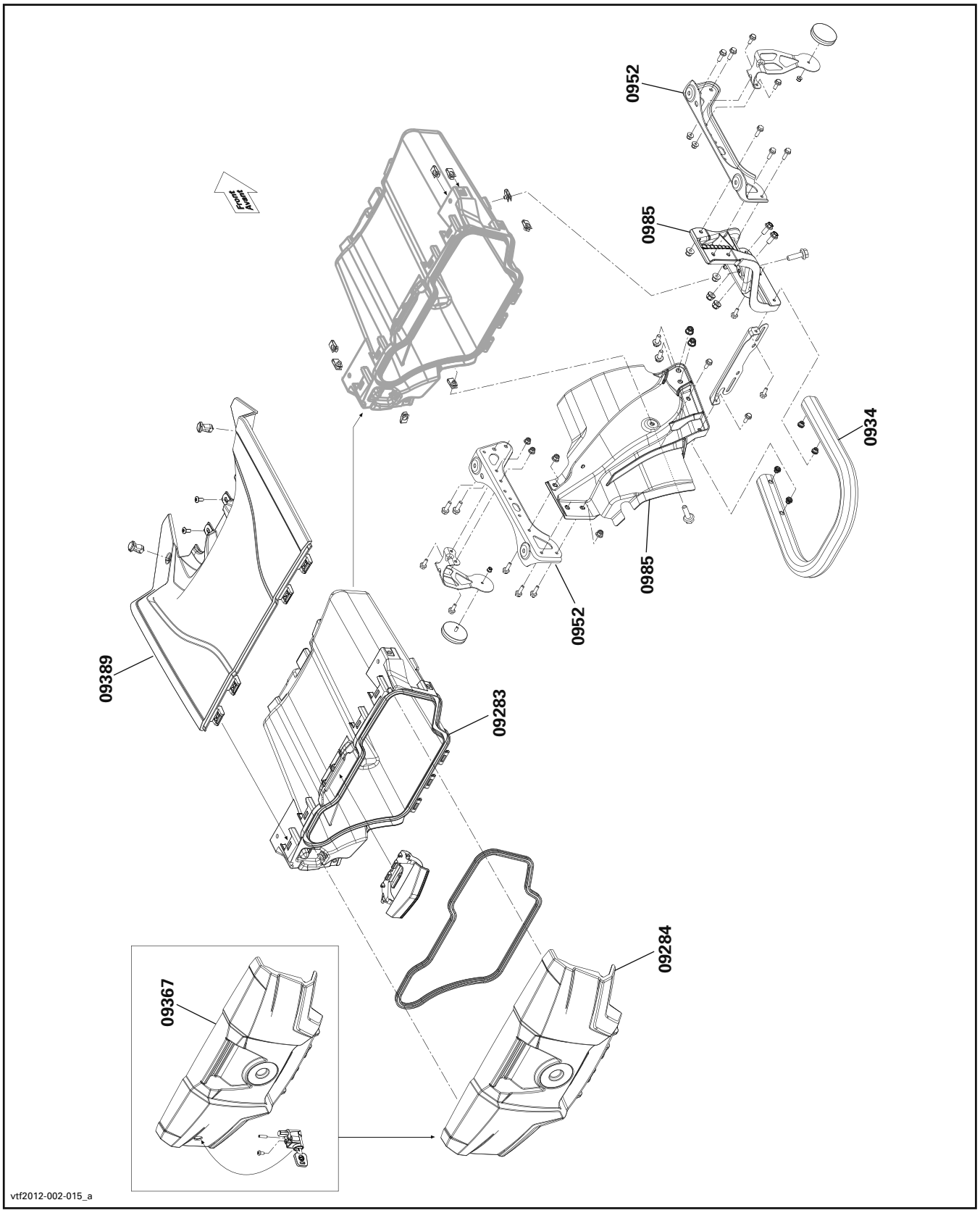

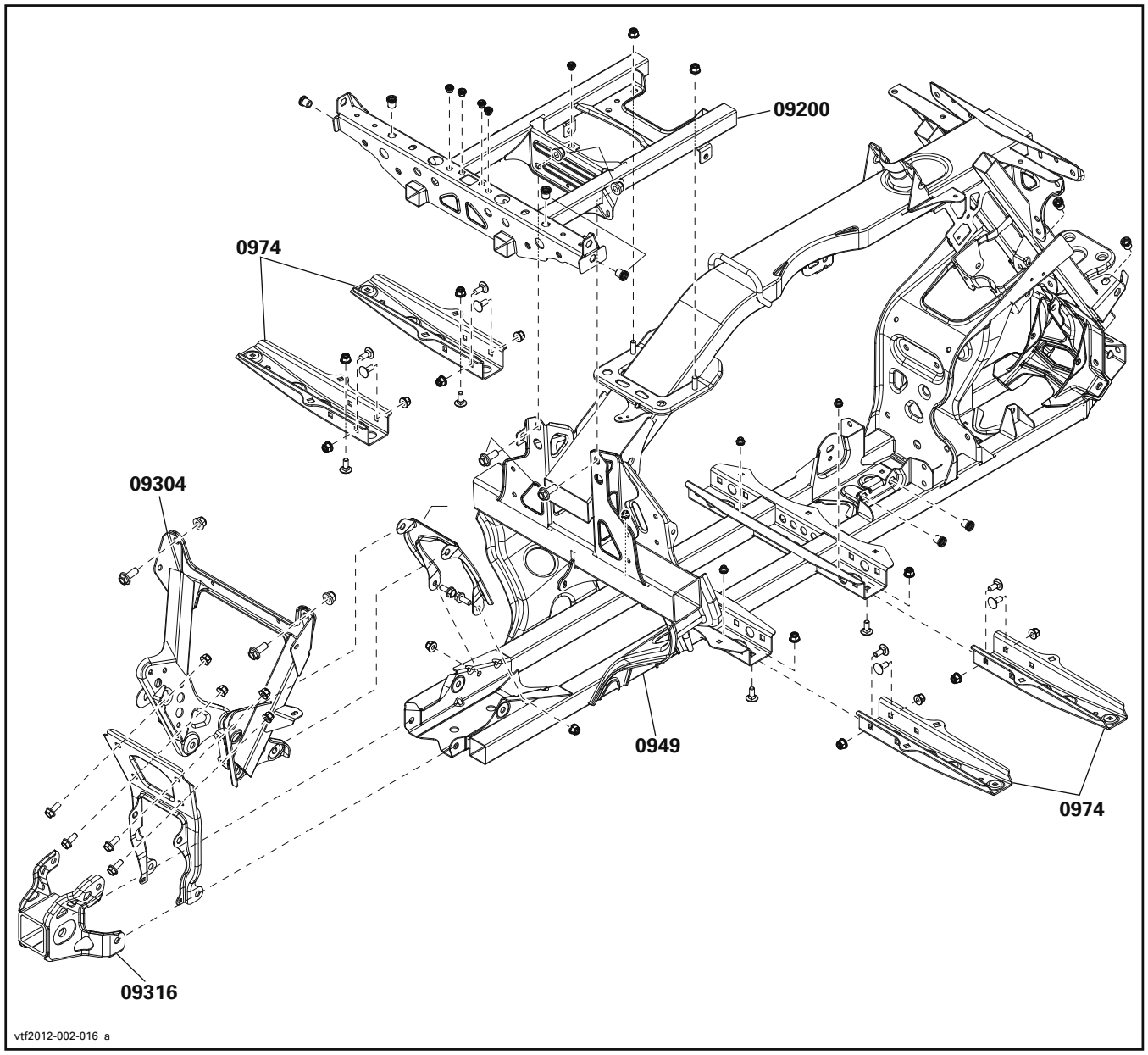
09200
0974
09304
0949
0974
09316
vtf2012-002-016_a

BODY AND ACCESSORIES
CARROSSERIE ET ACCESSOIRES

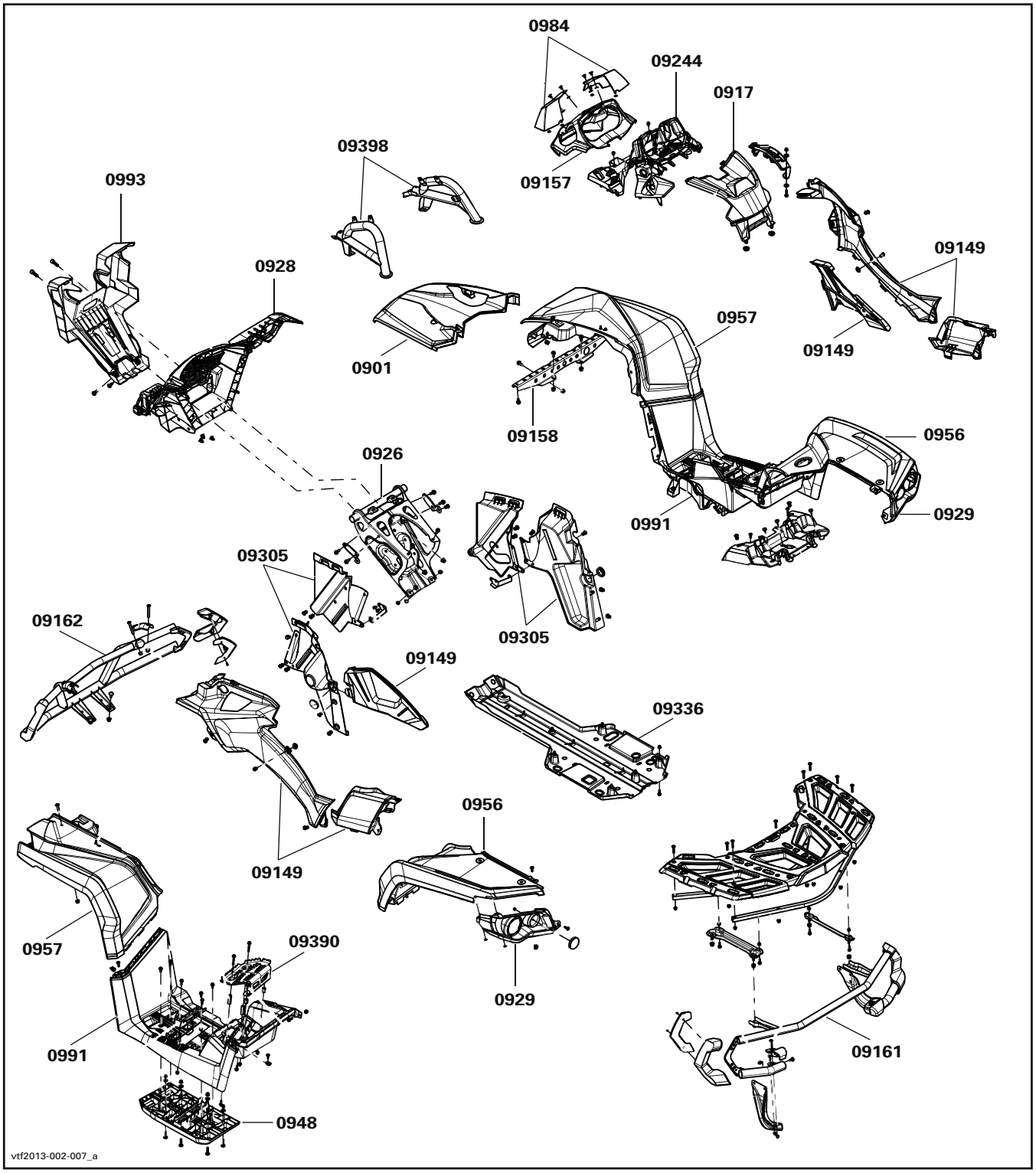

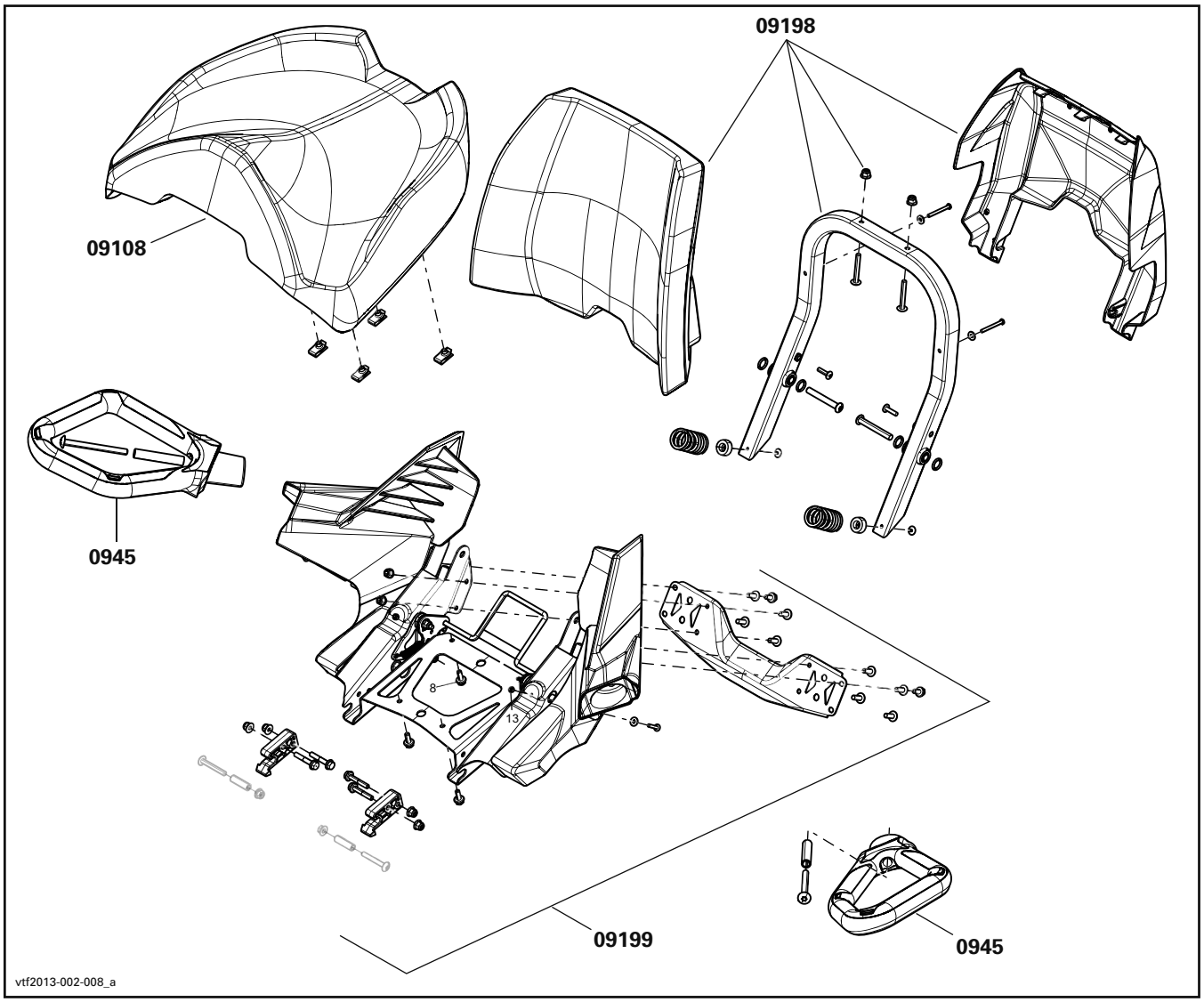
09198
09108
0945
8
13
09199
0945
vtf2013-002-008_a

BODY AND ACCESSORIES
CARROSSERIE ET ACCESSOIRES

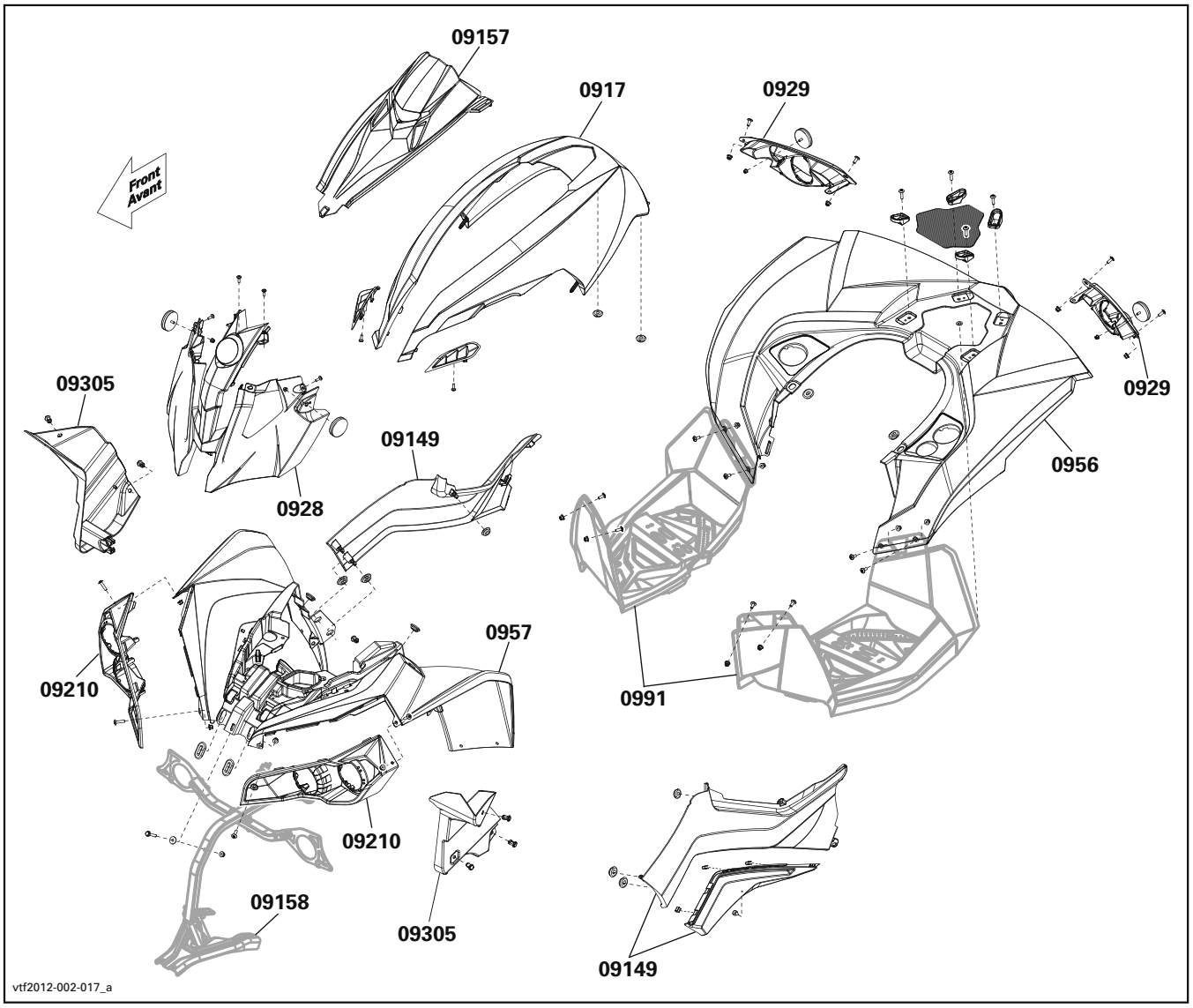

SYSTEM SYSTÈME	CODE	DESCRIPTION	OUTLANDER	OUTLANDER MAX	OUTLANDER X MR	RENEGADE
			3	4	5	6
10	**00**	**NO LABOR INVOLVED** **AUCUNE MAIN-D'OEUVRE**	**0**	**0**	**0**	**0**
10	01	IGNITION SWITCH INTERRUPTEUR D'ALLUMAGE	0.3	0.3	0.3	0.3
10	09	HEADLAMP AND/OR HEADLAMP SUPPORT (ASS'Y) (RH OR LH) PHARE AVANT ET/OU SUPPORT (COMPLET) (DROIT OU GAUCHE)	0.3	0.3	0.3	0.3
10	10	VOLTAGE REGULATOR RÉGULATEUR DE TENSION	0.3	0.3	0.3	0.3
10	13	BATTERY BATTERIE	0.3	0.3	0.3	0.3
10	21	MULTIFUNCTION SWITCH INTERRUPTEUR MULTIFONCTION	0.3	0.3	0.3	0.3
10	28	SPEEDOMETER/TACHOMETER INDICATEUR DE VITESSE/COMPTE-TOURS	0.3	0.3	0.3	0.3
10	29	TAIL LAMP HOUSING (ASS'Y) BOÎTIER DE FEU ARRIÈRE (COMPLET)	0.3	0.3	0.3	0.3
10	31	DC OUTLET PLUG PRISE D'ACCESSOIRE DC	0.3	0.3	0.3	0.3
10	34	ELECTRONIC MODULE MODULE ÉLECTRONIQUE	0.4	0.4	0.4	0.4
10	41	ENGINE HARNESS CÂBLAGE DU MOTEUR	1.4	1.4	1.4	1.3
10	45	WINCH (ASS'Y) (XT) TREUIL (COMPLET) (XT)	0.4		0.4	
10	46	WINCH SOLENOID (XT) SOLÉNOÏDE DE TREUIL (XT)	0.5		0.5	
10	47	WINCH SWITCH (XT) INTERRUPTEUR DE TREUIL (XT)	0.4		0.4	
10	51	MAIN WIRE HARNESS CÂBLAGE PRINCIPAL	2.5	2.7	3.0	2.2
10	52	STARTING RELAY RELAIS DE DÉMARRAGE	0.3	0.3	0.3	0.3
10	61	FRONT FLASHERS 1 OR 2 (**CE** ONLY) CLIGNOTANTS AVANT 1 OU 2 (**CE** SEULEMENT)	0.3	0.3		0.3
10	62	REAR FLASHERS 1 OR 2 (**CE** ONLY) CLIGNOTANTS ARRIÈRE 1 OU 2 (**CE** SEULEMENT)	0.3	0.3		0.3
10	65	12 VOLT RELAY (CE ONLY) RELAIS 12 VOLT (CE SEULEMENT)	0.3	0.3	0.3	0.3
10	66	HORN AVERTISSEUR	0.3	0.3	0.3	0.3
10	67	RELAY RELAIS	0.3	0.3	0.3	0.3

SYSTEM SYSTÈME	CODE	DESCRIPTION	OUTLANDER	OUTLANDER MAX	OUTLANDER X MR	RENEGADE
			3	4	5	6
10	68	ANY BULBS TOUTES LES AMPOULES	0.6	0.6	0.6	0.6
10	71	LICENSE LIGHT (ASS'Y) (**CE** ONLY) LUMIÈRE D'IMMATRICULATION (COMPLET) (**CE** SEULEMENT)	0.3	0.3		0.3
10	101	MULTIFONCTION SWITCH (RH) INTERRUPTEUR MULTIFONCTION (DR)	0.3	0.3	0.3	0.3
10	113	REMOTE CONTROL COMMENDE À DISTANCE	0.3	0.3	0.3	
10	114	WINCH CONNECTOR CONNECTEUR DE TREUIL	0.4	0.4	0.4	
10	122	BATTERY SUPPORT SUPPORT DE BATTERIE	0.5	0.5	0.5	0.5

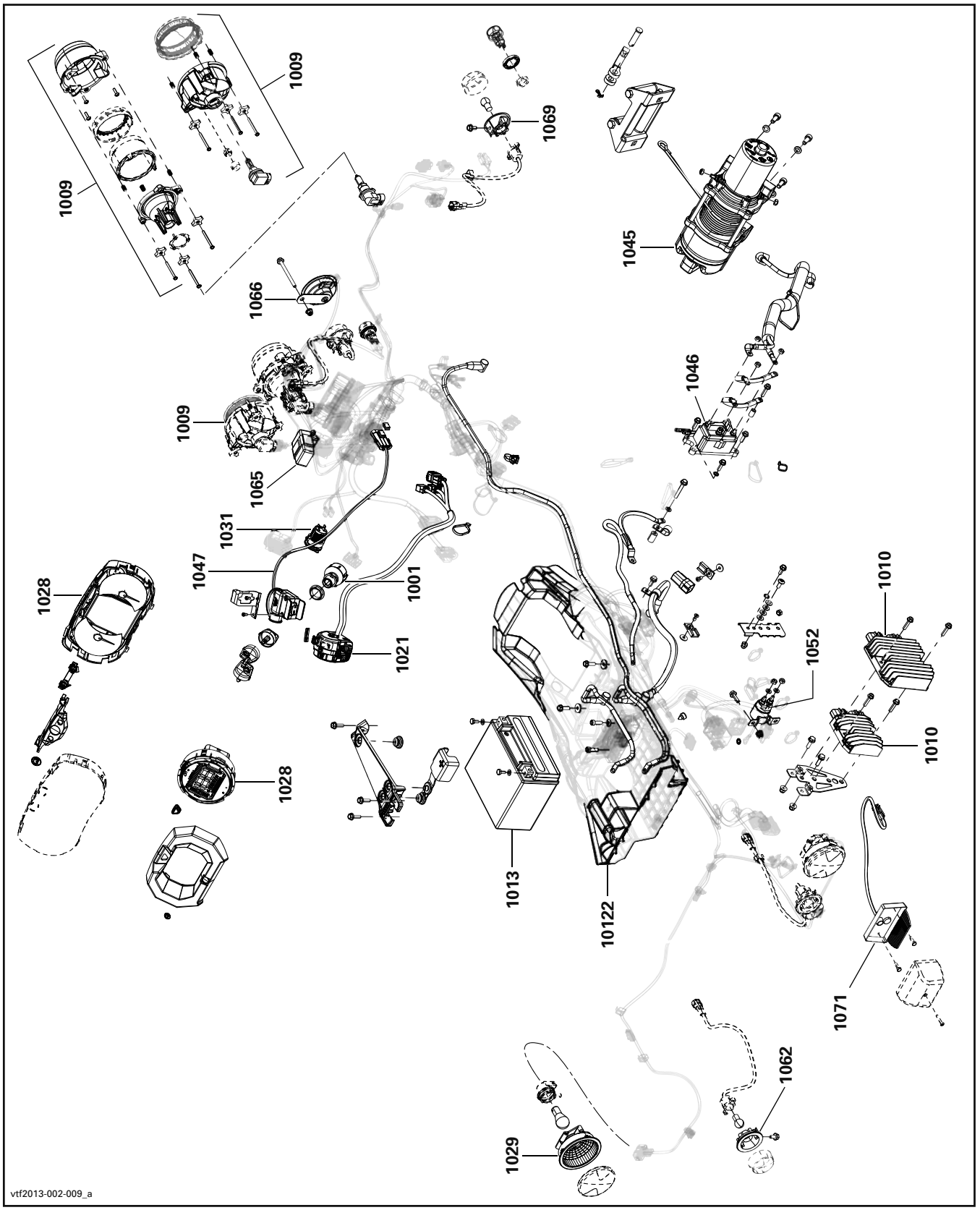
1009
1009
1069
1045
1066
1046
1009
1065
1031
1047
1001
1028
1021
1010
1052
1028
1010
1013
10122
1071
1062
1029
vtf2013-002-009_a

ATV
SERVICE
Bulletin

November 22, 2012 Subject: **Battery discharge- G2 with 400 watt charging system** No. **2013-11**

YEAR	MODELS	MODEL NUMBER	SERIAL NUMBER
2012	Renegade & Outlander (non DPS)	2HCA / 4BCA / 4BCB / 4BCC / 4GCA / 5LCA	All
2013		2EDA / 2HDA / 2NDA / 2RDA / 2RDB / 2TDA / 2TDD / 4BDA / 4BDB / 4BDC / 4EDA / 4EDF / 4EDG / 4GDA	All

Some cases of battery discharging on vehicles equipped with 400 watt stator (non DPS models) were reported. This event can occur when the vehicle is used for an extended period of time at low RPM with the front headlights used in high beam position.

These vehicles were designed to have only 2 of the 4 headlights illuminated when the high beam is selected. The above described vehicles were produced with a jumper fuse which allows all 4 headlights to be illuminated at the same time when the high beam is selected.

If a customer experiences this issue, simply remove the jumper fuse.

Normal warranty apply.

NOTE: From December, as a running change, vehicles will no longer have the jumper fuse.

IDENTIFICATION AND REMOVAL OF JUMPER FUSE

1. Remove the fuse block lid.
2. Remove and discard the jumper fuse 15 amp (JP1) as identified below.

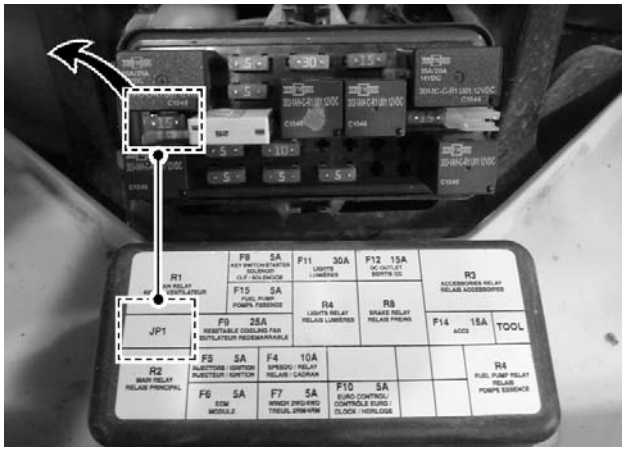

vbs2013-011-001_a

Printed in Canada. (vbs2013-011 en SC)
©2012 Bombardier Recreational Products Inc. and BRP US Inc. All rights reserved.
®™ and the BRP logo are trademarks of Bombardier Recreational Products Inc. or its affiliates.

ATV
SERVICE
Bulletin

June 5st, 2012 Subject: **Spring Chart** No. **2013-4**

YEAR	MODEL	MODEL NUMBER	SERIAL NUMBER
2013	All (except DS70, DS90 and DS250*)	All	All
* Springs are not available separately for these models.			

The information in this bulletin applies to above models.

For previous models, refer to *SERVICE BULLETIN 2012-2, SPRING CHARTKITS* .

This bulletin is divided into 3 main sections:

Spring Information

– Provides information about spring identification and spring type.

Spring Applications

– Provides information on spring application according to models.

Spring Specifications

– Provides spring specifications.

Printed in Canada. (vbs2013-002 en SH)
©2012 Bombardier Recreational Products Inc. and BRP US Inc. All rights reserved.
®™ and the BRP logo are trademarks of Bombardier Recreational Products Inc. or its affiliates.

SPRING INFORMATION

Spring Identification

Spring identification is done by color code stripes **or** by its part number.

Color code

Read color codes when spring is upright and stripes are down.

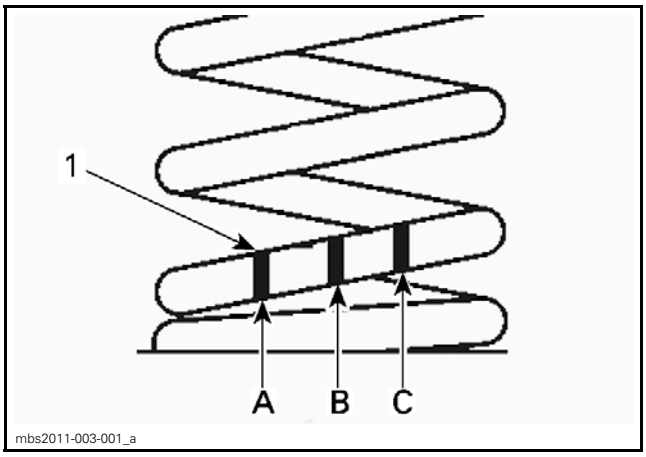

IDENTIFICATION BY COLOR STRIPES
1. Color stripes when spring is upright with the stripes down
A. 1st stripe
B. 2nd stripe
C. 3rd stripe

Part number

Part number is printed within the first 1-1/4 coils

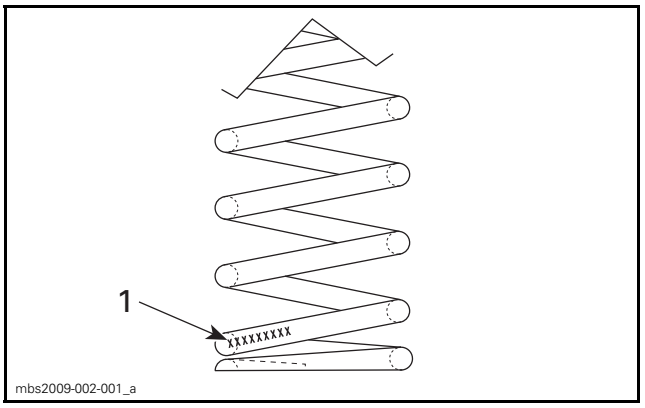

1. Part number ink marked

Color Code Legend

COLOR CODE					
BK	—	BLACK	PI	—	PINK
BL	—	BLUE	RD	—	RED
GD	—	GOLD	SI	—	SILVER
GN	—	GREEN	WH	—	WHITE
OR	—	ORANGE	YL	—	YELLOW

Spring Types

The call-outs on the spring illustrations that follow refer to:

1. Color code stripes or part number
2. Wire diameter
3. Spring free length.

Single Rate Spring

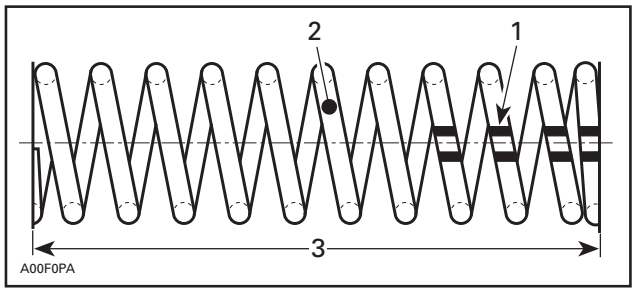

TYPE R – STRAIGHT AT BOTH ENDS

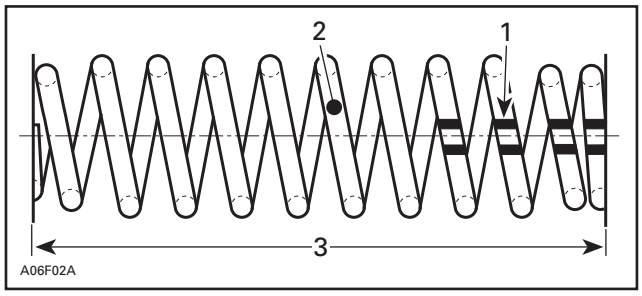

TYPE T OR V – BARREL SHAPE AT BOTH ENDS

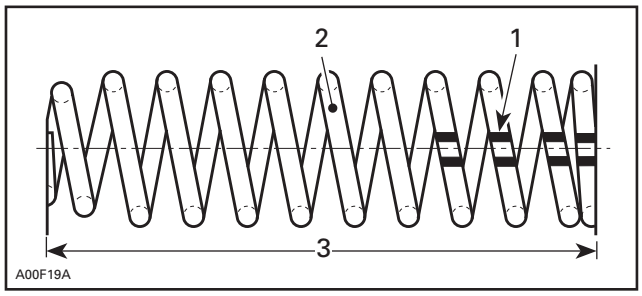

TYPE W OR 10 – BARREL SHAPE AT ONE END

Dual Rate Spring

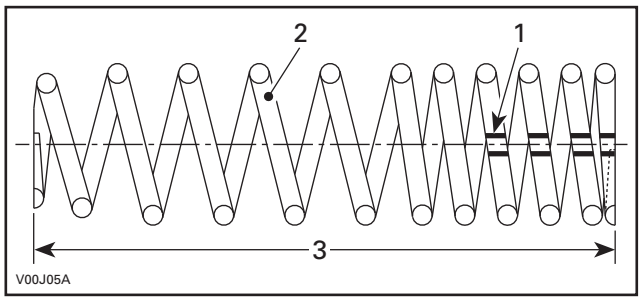

TYPE 1 – BARREL SHAPE AT ONE END

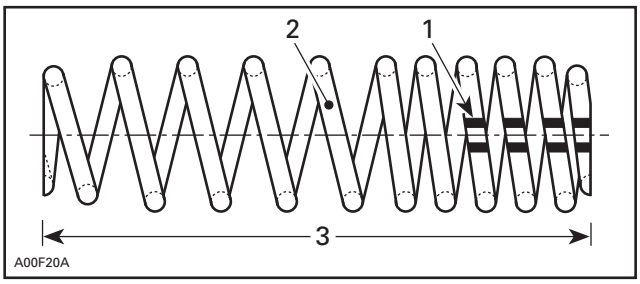

TYPE 2, 6, 7 – BARREL SHAPE AT BOTH ENDS

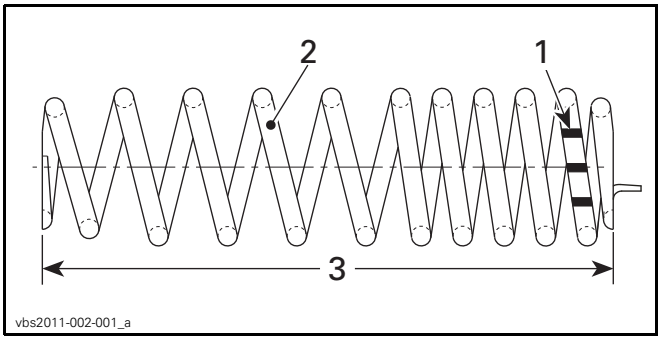

TYPE 4 – BARREL SHAPE AT BOTH ENDS WITH A HOOK ON ONE END

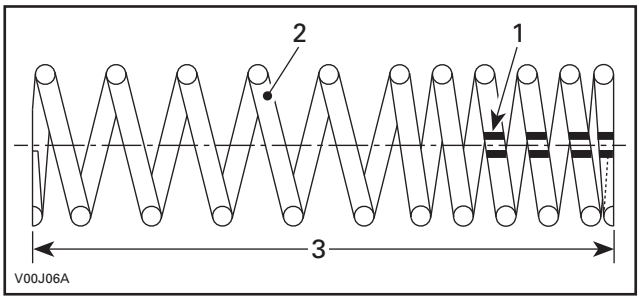

TYPE 5 – STRAIGHT ON BOTH ENDS

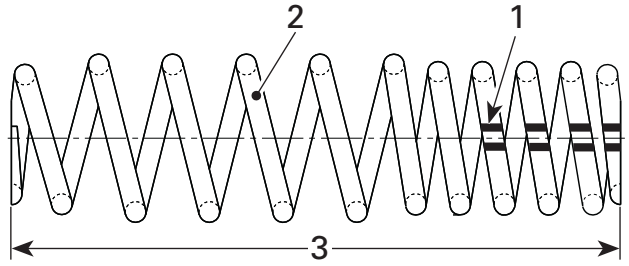

TYPE 8 – BARREL SHAPE AT BOTH ENDS

SPRING APPLICATIONS

MODEL	MODEL NUMBER	SPRING PART NUMBER	
		Front	Rear
450 Series			
DS 450 X mx	All	None	706 001 259 (long) 706 001 386 (short)
400 Series			
Outlander	All	706 200 819	706 000 649
Outlander MAX	All	706 200 818	706 000 650
500 Series			
Outlander Std, DPS	All	706 201 171	706 000 963
Outlander XT	All	706 201 173	706 000 963
Outlander MAX Std, DPS	All	706 201 649	706 000 971
Outlander MAX XT	All	706 201 251	706 000 971
Renegade Std	All	706 201 742	706 001 497
650 Series			
Outlander Std, DPS	All	706 201 171	706 000 963
Outlander XT	All	706 201 173	706 000 963
Outlander MAX Std, DPS	All	706 201 649	706 000 971
Outlander MAX XT	All	706 201 251	706 000 971
800 Series			
Outlander	All	706 201 171	706 000 963
Outlander XT	All	706 201 173	706 000 963
Outlander XT-P	All	706 201 637	706 001 362
Outlander MAX	All	706 201 649	706 000 971
Outlander MAX XT	All	706 201 251	706 000 971
Outlander MAX XT-P	All	706 201 637	706 001 362
Renegade	All	706 201 268	706 000 955
Renegade X xc	All	706 201 258	706 000 950

MODEL	MODEL NUMBER	SPRING PART NUMBER	
		Front	Rear
1000 Series			
Outlander DPS	All	706 201 171	706 000 963
Outlander XT	All	706 201 173	706 000 963
Outlander XT-P	All	706 201 637	706 001 362
Outlander X mr	All	706 201 541(camo) 706 201 510 (black)	706 000 836 (camo) 706 001 056 (black)
Outlander MAX DPS	All	706 201 649	706 000 971
Outlander MAX XT	All	706 201 251	706 000 971
Outlander MAX XT-P	All	706 201 637	706 001 362
Outlander MAX LIMITED	All	706 201 251	706 000 836
Renegade	All	706 201 268	706 000 955
Renegade X xc	All	706 201 258	706 000 950

SPRING SPECIFICATIONS

NOTE: The 4th digit of the spring part number indicates its mounting location.

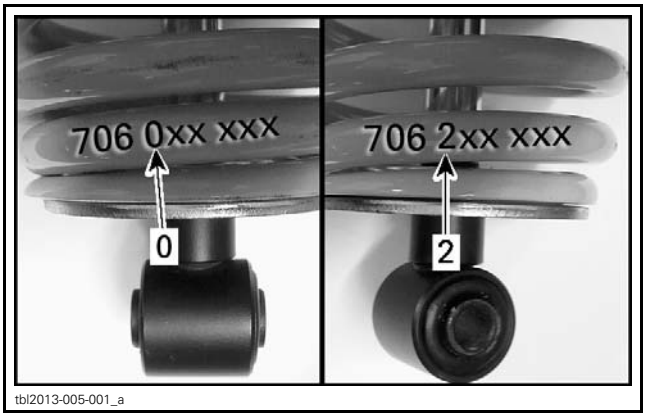

0 = Rear
2 = Front

P/N	TYPE	SPRING RATE (LB/IN) ± 10 (RATE 1 / RATE 2 WHERE APPLICABLE)	FREE LENGTH (MM) ± 3	WIRE DIAMETER (MM) ± .05	COLOR CODE STRIPES	COLOR OF SPRING
706 000 649	2	66 ± 5 / 106 ± 5	371	8.41	SI/YL/WH	DEEP BLACK
706 000 650	2	84 / 128.5	413	8.71	SI/GD/GD	Deep Black
706 000 651	8	74.2 ± 5 / 108.5 ± 5	354	8.83	SI/WH/GD	Deep Black
706 000 652	8	74.2 ± 5 / 108.5 ± 5	364	8.83	SI/SI/GD	Deep Black
706 000 653	8	74.2 ± 5 / 114.2 ± 5	380.8	8.83	WH/SI/GD	Yellow
706 000 659	6	187.3 / 250	286.4	9.98	RD/RD	Yellow
706 000 677	10	251.2 ± 5	272	10.31	BL/BL	Yellow
706 000 836	8	74.2 ± 5 / 108.5 ± 5	370	9.19	YL/RD	Deep Black
706 000 847	8	187.3 ± 5 / 250 ± 5	291	9.98	BL/RD	Yellow
706 000 922	8	74.2 ± 5 / 114.2 ± 5	380.8	8.83	BL/BL/BK	Full Moon
706 000 950	2	102.78 ± 5 / 159.88 ± 5	306	8.83	BL/WH	Yellow
706 000 955	2	74.2 ± 5 / 114.2 ± 5	311	8.71	BK/RD	Yellow
706 000 963	8	99.9 ± 5 / 159.88 ± 5	355.9	9.53	BK/GN	Deep Black
706 000 971	8	85 ± 5 / 154.2 ± 5	366.4	9.19	RD/YL/YL	Deep Black
706 001 056	8	74.2 ± 5 / 108.5 ± 5	370	9.19	BL/BL/BL	Yellow
706 001 259	5	225	203.2	9.2	FOX 0800-225--0225 (4.0 Kg)	Dark Red
706 001 362	2	102.78 ± 5 / 159.88 ± 5	306	8.83	YL/RD/YL	Deep Black
706 001 386	5	130.0	69.85	11	FOX 0275-250-1300 (23.2 Kg)	Dark Red
706 001 497	8	99.9 ± 5 / 159.88 ± 5	355.9	9.53	GN/RD/BK	Yellow
706 200 481	1	108.5 / 199.9	280	8.83	WH/RD/WH	Yellow
706 200 818	8	60 ± 5 / 114.2 ± 5	375	8.25	SI/GD/WH	Deep Black
706 200 819	2	60 ± 5 / 100 ± 5	354	8.25	SI/WH/WH	Deep Black
706 200 820	6	60 ± 5 / 114.2 ± 5	349	8.25	SI/YL/SI	Deep Black
706 200 821	6	60 ± 5 / 114.2 ± 5	358	8.41	WH/SI/WH	Deep Black
706 200 822	6	60 ± 5 / 159.9 ± 5	369.2	9.19	GD/SI/GD	Deep Black
706 200 823	6	60 ± 5 / 159.9 ± 5	359.2	8.83	SI/GD/SI	Deep Black
706 200 824	8	54.8 ± 5 / 125.6 ± 5	387	8.41	GD/RD/GD	Deep Black
706 200 825	8	54.8 ± 5 / 125.6 ± 5	372	8.41	SI/SI/SI	Deep Black
706 200 829	6	87.9 ± 5 / 131.3 ± 5	319	8.83	SI/BL/WH	Yellow

P/N	TYPE	SPRING RATE (LB/IN) ± 10 (RATE 1 / RATE 2 WHERE APPLICABLE)	FREE LENGTH (MM) ± 3	WIRE DIAMETER (MM) ± .05	COLOR CODE STRIPES	COLOR OF SPRING
706 200 830	6	127.9 / 222.7	226.8	8.83	RD/RD/BK	Yellow
706 200 833	8	101 ± 5 / 174.7	301.6	9.19	RD/BK/BK	Yellow
706 200 873	10	57 ± 4.5	51.5	2.87	GN/RD	Yellow
706 200 876	10	67 ± 0.7	50	4.5	GN/GN	Yellow
706 201 171	6	102.78 ± 5 / 148.46 ± 5	340	9.19	GN/WH	Deep Black
706 201 173	6	102.78 ± 5 / 148.46 ± 5	350	9.19	BL/WH	Deep Black
706 201 218	6	87.9 ± 5 / 131.3 ± 5	319	8.83	GN/BK	Full Moon
706 201 231	6	60 ± 5 / 117.1 ± 5	371.4	8.71	RD/GN/BK	Yellow
706 201 251	6	97 ± 5 / 146.75 ± 5	362	9.19	YL/GN/YL	Deep Black
706 201 258	2	102.78 ± 5 / 171.3 ± 5	320	9.53	BK/BL	Yellow
706 201 268	2	102.78 ± 5 / 171.3 ± 5	320	8.83	BK/WH	Yellow
706 201 510	V	94.2 ± 5	345.8	8.71	BK/BK/BK	Yellow
706 201 541	V	94.2 ± 5	345.8	8.71	YL/WH/YL	Deep Black
706 201 637	2	54.8 ± 5 / 125.6 ± 5	387	8.83	SI/YL/GN	Deep Black
706 201 649	6	97 ± 5 / 146.75 ± 5	354	9.19	RD/GN/YL	Deep Black
706 201 742	6	102.78 ± 5 / 148.46 ± 5	350	9.19	GN/BL/BK	Deep Black

HIGH ALTITUDE SPECIFICATIONS

Mini DS 70 / Mini DS 90

NOTE: Although there is no specific high altitude calibration for the DS 90 or the DS 70, parts to optimize vehicle performance at high altitudes have been made available. Refer to following table.

MAIN JET TYPE	P/N
68	V16104DGF000
70	V16105DGF000
72	V16106DGF000
78	V16107DGF000
80	V16103DGF000
82	V16109DGF000
85	V16110DGF000

PILOT JET TYPE	
35	V16101DGF000

DS 250

CALIBRATION	SEA LEVEL		1 200 M (4,000 FT)		2 400 M (8,000 FT)	
Country	North America	Europe	North America	Europe	North America	Europe
Main Jet	105	110	100	105	95	100
Needle Position	4	2	3	1		
Mixture Screw	2		1.5			
Idle RPM ±100	1700		1800			

DS 450 EFI Series

No high altitude calibration settings have to be done through B.U.D.S. The calibration features an automatic electronic fuel injection compensation allowing fuel injection mapping to be optimized at all altitudes.

There are different sprocket calibration available to fine tune vehicle.

SPROCKET KIT	PROVIDED PARTS		QTY
13-tooth Sprocket Kit (P/N 715 000 519)	Sprocket	(P/N 707 000 612)	1
	Retaining ring	(P/N 420 245 650)	1
14-tooth Sprocket Kit (P/N 715 000 591)	Sprocket	(P/N 420 236 061)	1
	Retaining ring	(P/N 420 245 650)	1
15-tooth Sprocket Kit (P/N 715 000 518)	Sprocket	(P/N 420 236 062)	1
	Retaining ring	(P/N 420 245 650)	1
39-tooth Sprocket Kit (P/N 715 000 527)	Sprocket	(P/N 705 500 872)	1
	Elastic flange nut	(P/N 233 201 414)	4
42-tooth Sprocket Kit (P/N 715 000 592)	Sprocket	(P/N 705 500 930)	1
	Elastic flange nut	(P/N 233 201 414)	4

SPROCKET KIT	PROVIDED PARTS		QTY
44-tooth Sprocket Kit (P/N 715 000 515)	Sprocket	(P/N 705 500 946)	1
	Elastic flange nut	(P/N 233 201 414)	4
	Bushing	(P/N 293 900 028)	2

CAUTION Changing sprocket ratio may affect performance, including maximum vehicle speed. If the vehicle is equipped with a speedometer, the speed indicated by the speedometer may be different than actual vehicle speed. Please refer to chart below. Any sprocket combination highlighted (shaded areas) in the chart below will result in a vehicle speed higher than speed indicated on speedometer.

WARNING

The use of any sprocket combination highlighted (shaded areas) in the following charts leads to a change of the maximum vehicle load allowed. To avoid exceeding the OEM tire manufacturer's recommendations, the new maximum load will be 91 kg (200 lb). The omission to comply with this request could cause tire bursting and severe injury or death could occur.

DS 450 X mx Models

SPEEDOMETER INDICATION CHANGE DUE TO SPROCKET COMBINATION				
		Rear sprocket		
		39 (1)	42	44
Front sprocket	13	92%	86%	83%
	14 (1)	100% (1)	92%	88%
	15	**106%**	100%	94%
(1) Factory Ratio				

DS 450 CE Models

SPEEDOMETER INDICATION CHANGE DUE TO SPROCKET COMBINATION					
		Rear sprocket			
		34 (1)	39	42	44
Front sprocket	13	86%	75%	70%	68%
	14	93%	82%	75%	73%
	15 (1)	100% (1)	86%	82%	77%
(1) Factory Ratio					

CAUTION Chain length may need to be adjusted with new sprocket sizes. See *ACCESSORY CATALOG* for replacement chain that can be installed with these kits. DO NOT ride the vehicle with a chain tension different than recommended.

Outlander and Renegade Series

No high altitude calibration settings have to be done through B.U.D.S. The calibration features an automatic electronic fuel injection compensation allowing fuel injection mapping to be optimized at all altitudes.

Remove all standard levers from the drive pulley and replace them with high altitude levers.

NOTE: Apply a drop of LOCTITE 243 (BLUE) (P/N 293 800 060) on threads of each centrifugal lever bolt.

⚠ WARNING

Failure to perform proper installation can cause damage to the vehicle and serious personal injuries to the rider.

400 AND 500 (4 LEVERS)	650, 800R AND 1000 (6 LEVERS)
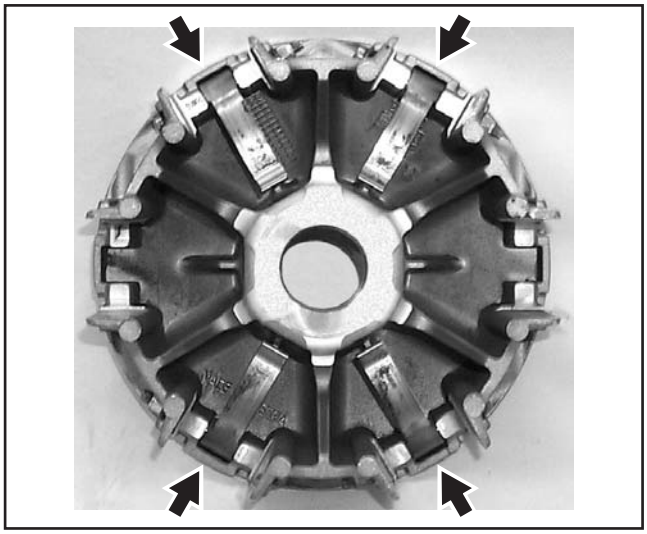	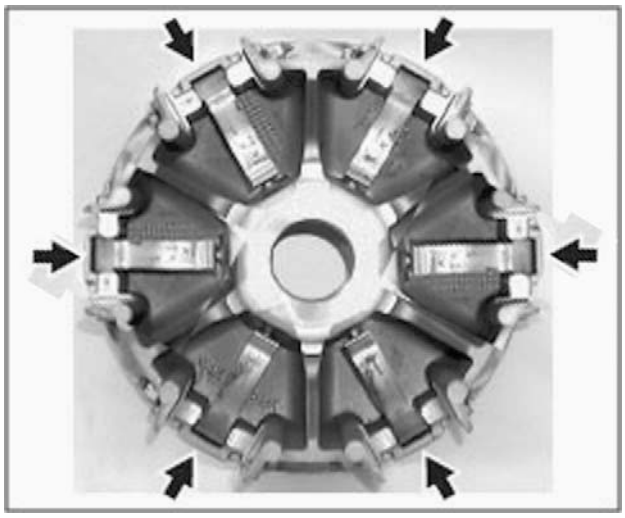

400 SERIES (OUTLANDER AND OUTLANDER MAX)				
ALTITUDE	SEA LEVEL	1 200 M (4,000 FT)	2 400 M (8,000 FT)	QTY
Centrifugal Lever	420 248 424	707 000 324 (10.5 mm (.413 in))	707 000 325 (9.5 mm (.374 in))	1 (set of 4)

500 SERIES (OUTLANDER, OUTLANDER MAX AND RENEGADE)				
ALTITUDE	SEA LEVEL	1 200 M (4,000 FT)	2 400 M (8,000 FT)	QTY
Centrifugal Lever	420 248 555	715 500 294 (10.75 mm (.423 in))	715 500 295 (9.75 mm (.384 in))	1 (set of 4)

650 SERIES (OUTLANDER AND OUTLANDER MAX)				
ALTITUDE	SEA LEVEL	1 200 M (4,000 FT)	2 400 M (8,000 FT)	QTY
Centrifugal Lever	420 248 558		715 500 285 (8.7 mm (.343 in))	1 (set of 6)

800R SERIES (OUTLANDER AND OUTLANDER MAX)				
ALTITUDE	SEA LEVEL	1 200 M (4,000 FT)	2 400 M (8,000 FT)	QTY
Centrifugal Lever	420 248 496	707 001 142 (10.3 mm (.406 in))		1 (set of 6)

800R SERIES (RENEGADE)				
ALTITUDE	SEA LEVEL	1 200 M (4,000 FT)	2 400 M (8,000 FT)	QTY
Centrifugal Lever	420 248 607	707 001 143 (11.2 mm (.441 in))	707 001 144 (10.3 mm (.406 in))	1 (set of 6)

1000 SERIES (OUTLANDER, OUTLANDER MAX AND RENEGADE)				
ALTITUDE	SEA LEVEL	1 200 M (4,000 FT)	2 400 M (8,000 FT)	QTY
Centrifugal Lever	420 248 606	707 001 141 (10.3 mm (.406 in))		1 (set of 6)

ATV
SERVICE
Bulletin

December 5, 2012 Subject: **G2 Renegade and Outlander - Metallic Brake Pads** No. **2013-12**

YEAR	MODEL	MODEL NUMBER	SERIAL NUMBER
2012-2013	All	All	All

During the G2 development lots of focus was applied around the vehicle dynamics. The braking system was totally redesigned to provide optimal braking efficiency with minimal noise and exceptional feel.

Equipped with dual piston calipers and 214 mm brake discs, the organic brake pads offered standard on all our G2 platforms provide this smooth, quiet, and exceptional braking performance

BRP is also now offering metallic brake pads for all G2 platform models. These metallic brake pads will provide increased robustness and longer life span when vehicle is used in:
- Heavy duty / Severe application
- Mud environment
- Dunes
- Aggressive / Sport riding conditions

These metallic brakes do not have the same smooth feeling and may generate more noise then the organic brakes. BRP will offer both the organic and metallic pads as service parts. Please explain to your customers the difference between the two executions in order to match their riding style and conditions.

NOTE: Brake pads are considered wear items, therefore warranty does not apply.

ITEM	PART NUMBER
Left Side Brake Pad Kit	715 900 248
Right Side Brake Pad Kit	715 900 249

Printed in Canada. (vbs2013-012 en ML)
©2012 Bombardier Recreational Products Inc. and BRP US Inc. All rights reserved.
®™ and the BRP logo are trademarks of Bombardier Recreational Products Inc. or its affiliates.

February, 15th, 2013 Subject: **Transmission Warranty Guideline** No. **2013-1**

YEAR	MODEL	MODEL NUMBER	SERIAL NUMBER
2012-2013	All 1000 engines	All	All

The new execution transmission launched in 2011 allows the driver to select the wanted gear in any field conditions when the vehicle is not moving. However, changing gears while the vehicle is moving will damage transmission components, as with previous transmissions. Damage due to shifting while moving **WILL NOT** be covered by BRP warranty.

IN ORDER TO COMPLETE SHIFTING PROCESS, THE SHIFT MECHANISM WORKS IN THE FOLLOWING STEPS:

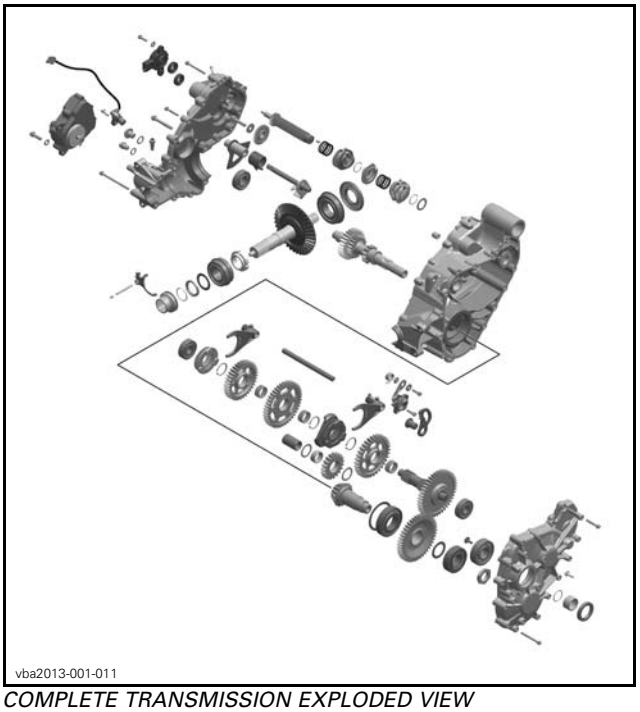

COMPLETE TRANSMISSION EXPLODED VIEW

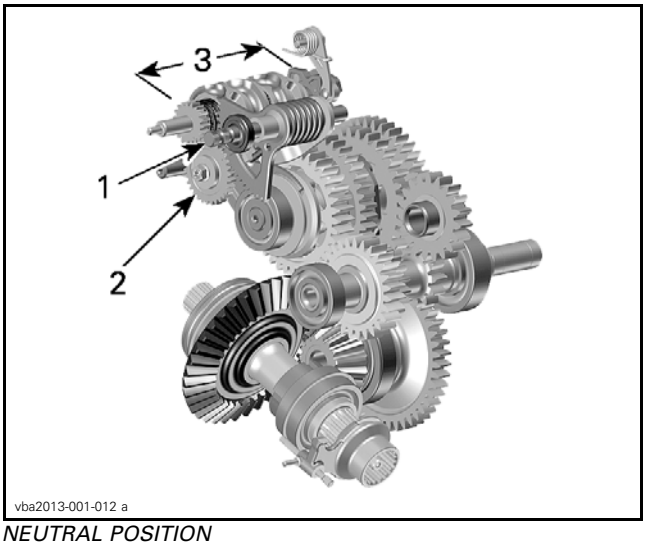

NEUTRAL POSITION
1. *Shift shaft*
2. *Intermediate gear*
3. *Shift drum assembly*

©2013 Bombardier Recreational Products Inc. and BRP US Inc. All rights reserved.
®™ and the BRP logo are trademarks of Bombardier Recreational Products Inc. or its affiliates.

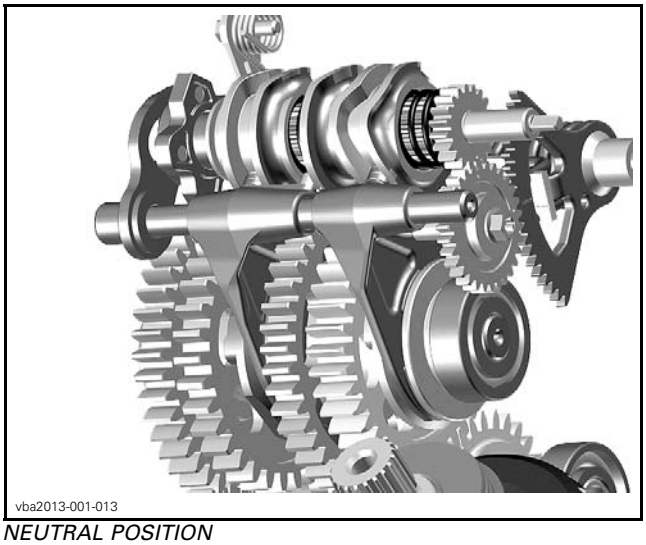

NEUTRAL POSITION

1. To shift the transmission, the shift shaft is rotated allowing the intermediate gear to turn the shift drum assembly.

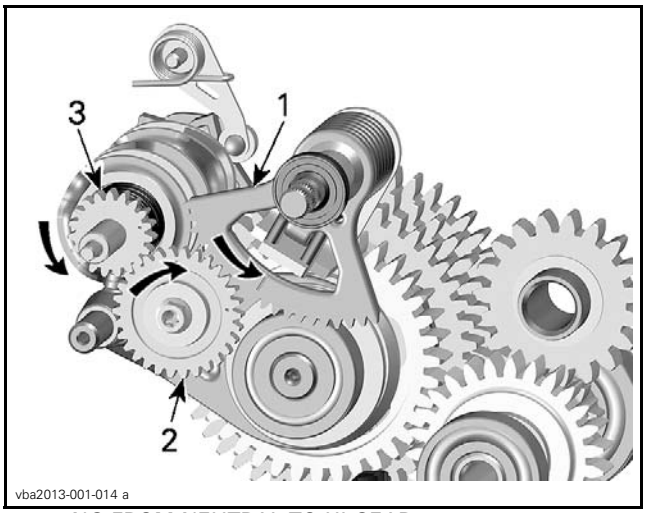

SHIFTING FROM NEUTRAL TO HI GEAR
1. *Shift shaft tooth segment*
2. *Shift shaft intermediate gear*
3. *Shift drum assembly*

2. When the gear selector is engaged in the shifter gate, and if the shifting sleeve cannot be fully engaged in the gear, the springs located on the shift shaft and the drum assembly will be compressed to apply pressure on the forks and shifting sleeves.

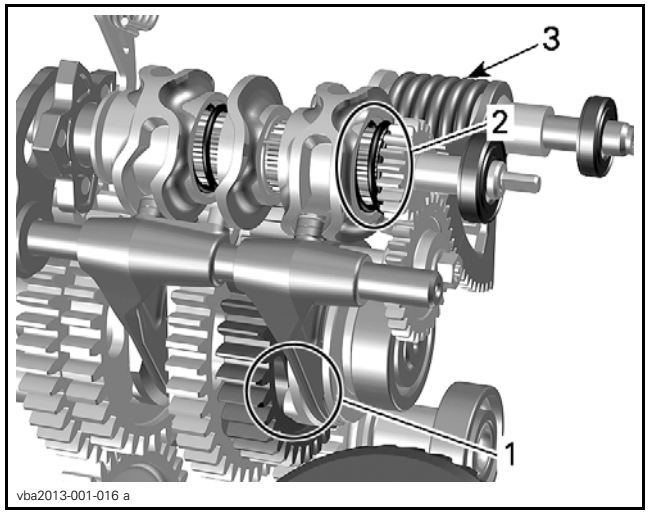

1. *Shifting sleeve not synchronized with gear*
2. *Shift drum assembly spring compressed*
3. *Shift shaft spring works in torsion*

3. When gears slowly start rotating in transmission the shifting sleeve will then engage.

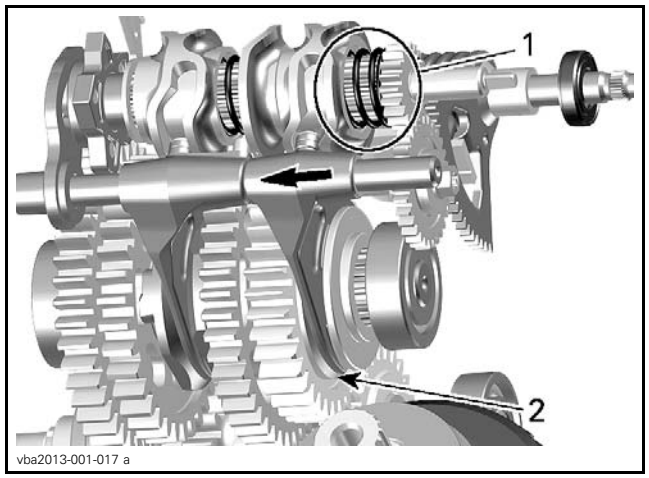

1. *Shift drum assembly spring apply pressure on the drum and the fork*
2. *Shifting sleeve well engaged.*

TRANSMISSION WARRANTY GUIDELINE

To this date multiple analysis have been made on parts received in warranty. The following chart has been developed to better identify the origin of transmission failures.

Refer to the charts in this bulletin to determine if the failure is covered or not. Apply warranty coverage accordingly.

If there is any doubt, contact our service department to validate coverage of the affected parts prior to repairing vehicle. Please make sure to have in hand:

– Clear digital pictures
– Vehicle B.U.D.S. file
– Complete vehicle information (ex: Gearbox type (6 digits), hours, type of usage, vehicle condition etc.)

Be ready to send the information by E-mail to the service representative you contacted.

NOTE: Beyond manufacturing defects, damage can still occur if the system is shifted when the vehicle is moving, is abused, or not maintained properly. In these cases, repairs will not be covered by normal warranty.

PART CONDITION	**POSSIBLE CAUSE**	**WARRANTY**
Fork/locator pin broken 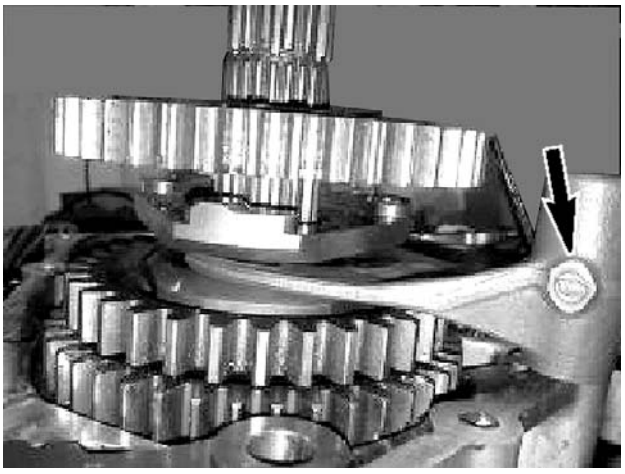	Result of shifting gearbox while vehicle was in motion.	NO
Exploded bevel bearing 	Lack of lubricant (if other bearings/components show similar damage).	NO
	Bearing failed with adequate lubrication and no contaminants.	YES

PART CONDITION	**POSSIBLE CAUSE**	**WARRANTY**
Bearing failures 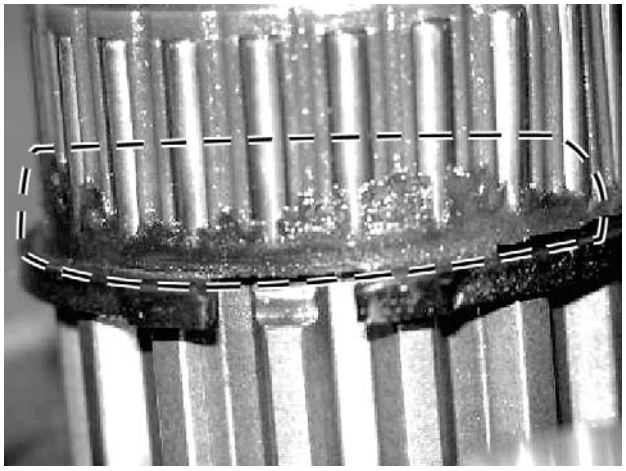	Lack of lubricant (if other bearings/components show similar damage).	NO
	Bearing failed with adequate lubrication and no contaminants.	YES
Broken park gear 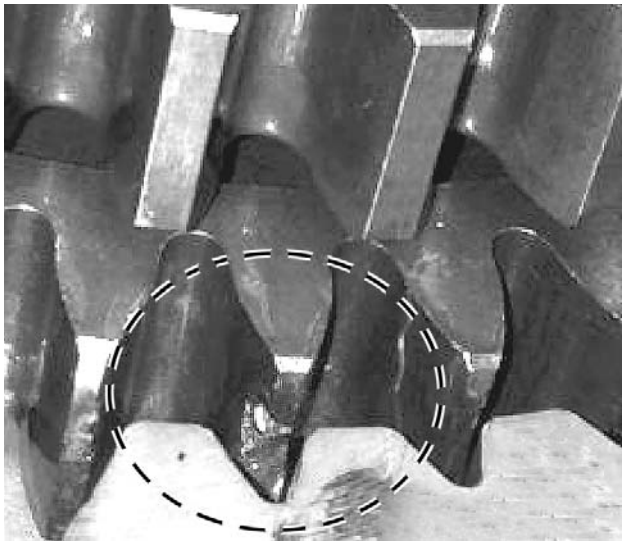	Result of shifting gearbox while vehicle was in motion.	NO

PART CONDITION	**POSSIBLE CAUSE**	**WARRANTY**
Broken transmission case 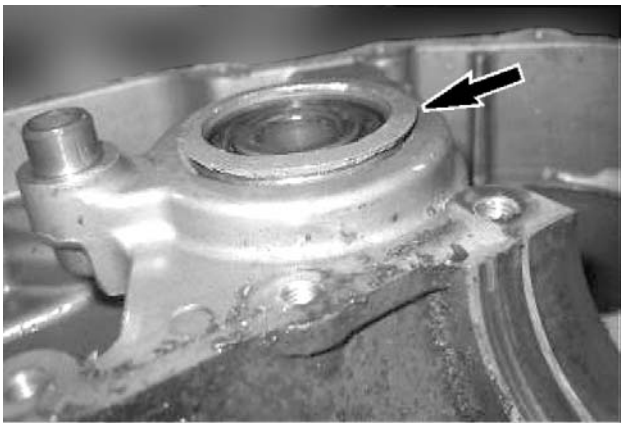 	Result of shifting gearbox while vehicle was in motion.	NO
Heavy marking on gear circlip 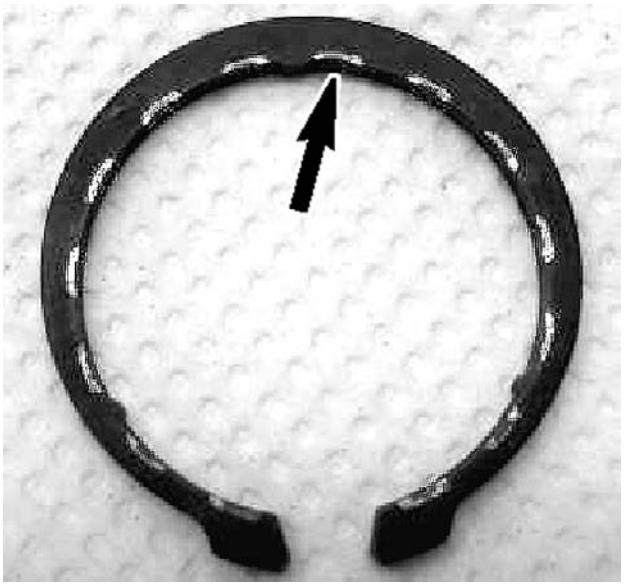	Indication that the gearbox was being shifted while vehicle was in motion (most likely other components of the gearbox will be damaged).	NO

PART CONDITION	**POSSIBLE CAUSE**	**WARRANTY**
Hammering marks on shift drum channel 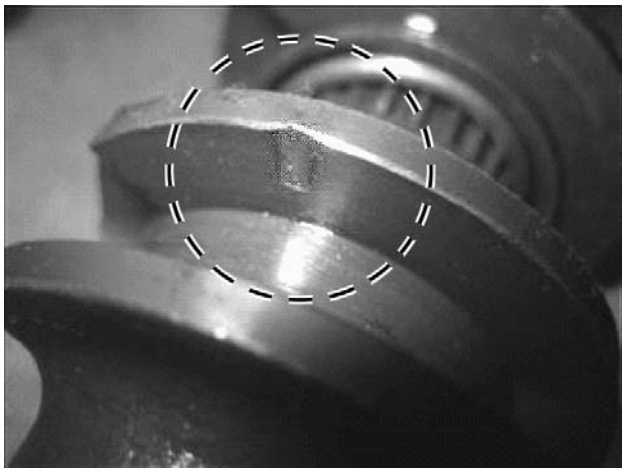	Result of shifting gearbox while vehicle was in motion.	NO

PART CONDITION	**POSSIBLE CAUSE**	**WARRANTY**
Damaged protrusion on shifting sleeve 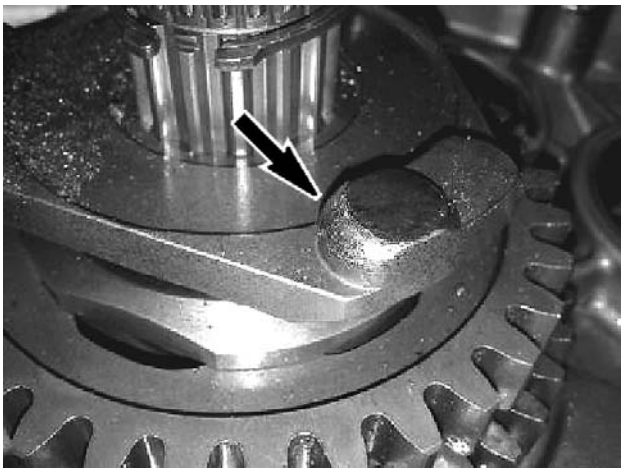	Result of shifting gearbox while vehicle was in motion.	NO
Damaged gear windows 	Result of shifting gearbox while vehicle was in motion.	NO
Seal leaking 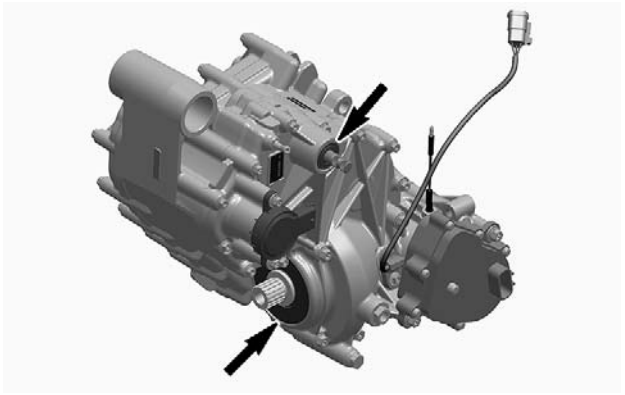 *EXAMPLE*	Defective component.	YES